State of Utah

JON M. HUNTSMAN, JR.
Governor

GARY R. HERBERT
Lieutenant Governor

Department of Administrative Services
KIMBERLY K. HOOD
Executive Director

Division of Facilities Construction and Management
DAVID G. BUXTON
Director

ADDENDUM NO. 6

Date: August 6, 2009

To: Contractors

From: Rick James, Project Manager, DFCM

Reference: Audio Visual Integration – Utah Museum of Natural History
University of Utah
DFCM Project No. 02243750

Subject: **Addendum No. 6**

Pages	Addendum Cover Sheet	3	pages
	Drawings and Specifications	315	pages
	Total	318	pages

Note: This Addendum shall be included as part of the Contract Documents. Items in this Addendum apply to all drawings and specification sections whether referenced or not involving the portion of the work added, deleted, modified, or otherwise addressed in the Addendum. Acknowledge receipt of this Addendum in the space provided on the Bid Form. Failure to do so may subject the Bidder to Disqualification.

While we contend that SB220 should only be potentially applicable to a contract issued after the effective date of said bill, this is to clarify that for purposes of this contract, regardless of the execution or effective dates of this contract, the status of Utah Law and remedies available to the State of Utah and DFCM, as it relates to any matter referred to or affected by said SB220, shall be the Utah law in effect at the time of the issuance of this Addendum.

6.1 **SCHEDULE CHANGES:** No Project Schedule changes.

6.2 **GENERAL ITEMS:** Questions/Answers/Clarifications

6.2.1 Is there a list of firms for LV cable installation?
Answer: No list of firms is available. See Item No. 6.2.8 below.

6.2.2 Who is the site electrician?
Answer: See Item No. 6.2.8 below

6.2.3 Should on site support be included in the 1 year warranty?
Answer: The 1 year warranty should cover repair and replacement of defective installation and materials. Site visits required under the warranty are the responsibility of the AVI.

6.2.4 Where is Control Room located?
Answer: The AV/ Control Room is located on Level 3 east of the Dry Cave Lab.

6.2.5 Who provides screens for Labs and should the AV system control the screens?
Answer: The Lab projection screens and controls will be provided and installed by the GC.

6.2.6 Does the Population Interactive have an audio component?
Answer: The Population Interactive should have a JBL25 speaker and associated amp installed above the ceiling cloud for navigation sounds.

6.2.7 Will a revised bid form be issued?
Answer: It is not anticipated that a revised bid form will be issued.

6.2.8 For access to the Subcontractors which are currently working on site, please contact the CM/GC at:

Leon Nelson – Sr. Project Manager
Big-D Construction
Phone 801-420-6305

6.2.9 Does the AV Integrator need to be licensed by the State of Utah, as listed/stated on the Bid Form?
Answer: It is not required that the AV Integrator be licensed in the State of Utah as a General Contractor. Tradesmen and craftsmen are required to be licensed in their respective trades where it is required (2006 IBC and other applicable building codes).

6.2.10 Should the installation costs be broken out from the hardware costs on a per exhibit basis, or summarized for the entire project separately?
Answer: Per exhibit

6.2.11 Has it been determined if the AV Integrator will be responsible for the shipping costs for AV hardware that needs to be shipped to the fabricator?
Answer: The AV Integrator is responsible for all shipping costs for delivery of AV hardware to the exhibit fabricator.

6.2.12 Is the AV integration for this project exempt from sales and/or use tax?
Answer: The AV integration package is exempt from sales tax. When the agreement is signed for this work, then Exemption Certificate TC-721 will issued for all purchases required.

6.2.13 Can you confirm that the client/GC/electrician will be responsible for all conduit needed for AV hardware?
Answer: Yes, it is in the General Contractor's scope of services to provide all conduit needed for the AV Hardware. Every effort has been made during design to include all of the required conduits. It is the intent of DFCM to hire the AV Integrator at this time so that the AV Integrator will be able to review construction documents to check that the design has included all requirements of the AV system. The conduits which are included in the General Contractor's scope can be reviewed primarily in two sets of documents: (1) The electrical drawings in the original documents and (2) PR15 which currently is being added to the General Contractor's scope and which includes additional conduit pathways. The work of PR 15 is not part of the AV Integrator's package. PR 15 is attached to this addendum for reference only. PR 15 also includes conduits for exhibits which are not part of the AV Integrator's package.

6.2.14 Are there any prevailing wage or organized labor rules that need to be observed?
Answer: There are no prevailing wage rates or required wage rates. All rules and laws required by the Utah Code are required for this project. Utah Labor Commission contact information is:

Utah Labor Commission
160 East 300 South, 3rd Floor
P O Box 146600
Salt Lake City UT 84114-6600
Phone: 801-530-6800
Fax: 801-530-6390
Web site: http://www.laborcommission.utah.gov

6.2.15 Can you provide us with the location of the central AV room(s) on the drawings? If there is more than one room, which room would contain the KVM switch and local monitoring?
Answer: See Item No. 6.2.4 above.

DFCM Division of Facilities Construction and Management 4110 State Office Building Salt Lake City, UT 84114 Telephone (801) 538-3018 FAX (801) 538-3267		**Proposal Request No. 15**	
		Date Requested	**6-23-09**
Owner	Division of Facilities and Construction Management	Contractor	Big-D Construction 404 West 400 South Salt Lake City, Utah 84101
Project	Utah Museum of Natural History	DFCM Project No.	02243750

This is NOT a Change Order nor a directive to proceed with the Work described herein.
Please submit an itemized quotation for changes in the Contract Sum and/or Contract Time incidental to proposed modifications to the Contract Documents described herein. Submit proposal within seven days, or notify the Architect in writing of the date on which you anticipate submitting your proposal.

Description:

Exhibit electrical lighting and A/V modifications per the attached documents.

Attachments:

Spectrum Engineers memo dated June 19, 2009 – 1 page

Revised drawing Sheets El-102b, EL-103b, EL-104b, EL-105b, EL-502, EL-603, EP-102b, EP-607,EP-608, EP-609, EP-610, EP-611, EP-612 – 13 Sheets (36x48)

Revised Base Building fixture schedule – 26 pages

Revised Exhibit fixture schedule – 36 pages

Base Building light fixture cutsheets – 111 pages

Exhibit light fixture cutsheets – 122 pages

ETC panel information – 4 pages

Pharos controller information – 1 page

Attribution:
[ ] DFCM Contingency
[ ] CM/GC Contingency
[ ] Agency Funds

Requested by:
GSBS Architects

John Branson, AIA, for Jennifer Whitburn RAA

Architect/Engineer
Project Manager

Distribution:			
	Owner	[X]	Rick James - DFCM
	Owner	[X]	Kari Astle – UMNH
	Owner	[X]	Jennifer Still – U of U
	Architect	[X]	File - GSBS Architects
	Consultant	[X]	John Majewski - PPA
	Consultant	[X]	Dave Wesemann – Spectrum
	Consultant	[X]	Jennifer Whitburn – RAA
	Consultant	[X]	Wai Mun Chui - Brandston
	Contractor	[X]	Rik McDonald - Big-D Construction

DFCM Form (Revised 2/9/06)

SPECTRUM
ENGINEERS

Memorandum

To:	John Branson	**Telephone:**	(801) 521-8600
Company:	GSBS Architects 375 West 200 South Salt Lake City, Utah 84101	**Email:**	JBranson@gsbsarchitects.com
		Copies to:	RAA, BPI, BBI
From:	Tyler Squire	**Telephone:**	801-401-8472
Job:	Utah Museum of Natural History	**Toll Free:**	800-678-7077
Re:	Exhibit Lighting Changes	**Fax:**	801-401-9472
Job Number:	20050145.dew	**E-mail:**	TDS@spectrum-engineers.com
Date:	June 19, 2009	**Page:**	1 of 1

DISTRIBUTED VIA:

- ☐ Pickup
- ☐ Delivery
- ☐ Mail/Express Mail
- ☐ Express Shipping
- ☑ e-Mail
- ☐ Enclosure
- ☐ Fax
- ☐ Other

Please issue the attached files in a Request for Proposal:

1. Revised exhibit lighting plans, schedules, details and panel schedules: 13 ea. full-size sheets with clouded changes.

2. Revised BPI fixture schedules (for both BPI designed base building lighting and exhibit lighting) and fixture cut sheets: 5 ea. PDF files of fixture schedule and cut sheets).

3. Change DMAV panel to be manufactured by ETC. Refer to attached cut sheets: 2 each PDF files of ETC dimmer panel and Pharos Lighting Playback Controller (Pharos controller will be furnished by the Exhibit Contractor; the ETC dimmer panel shall be provided by the building contractor to interface with the Pharos controller).

We trust this is the information you require.

Thank you,

Tyler Squire

DISCIPLINES
Mechanical Engineering
Electrical Engineering
Technology Design
Acoustical Engineering
Lighting Design
Theatre Design
Fire Protection Engineering
Building Commissioning

CENTERS OF
ENGINEERING EXCELLENCE
Healthcare
Higher Education
K-12 Education
Government
Houses of Worship
Special Projects

SALT LAKE CITY
324 S. State Street
Suite 400
Salt Lake City, UT 84111
phone: 801-328-5151
fax: 801-328-5155

PHOENIX
1501 W. Fountainhead Parkway
Suite 340
Tempe, AZ 85282
phone: 480-621-3444
fax: 480-621-3445

ST. GEORGE
2195 W. Stonebridge Dr.
St. George, UT 84770
phone: 435-656-2429
fax: 435-656-2519

www.spectrum-engineers.com
800-678-7077

$PROJECT$ $USER_ID$ $DATE$ $TIME$

$PROJECT$ $USER_ID$ $DATE$ $TIME$

PANEL "6QLA"

VOLTS/PHASE/WIRE: 120/208 V, 3 PH 4 WIRE | PANEL SIZE & TYPE: 22" W x 6" D, BOLT–ON | MAIN SIZE & TYPE: 100 AMPERE MAIN LUGS | LOCATION: | CABINET: | NOTES:

ACCESSORIES: PANEL DIRECTORY, IDENTIFICATION, GROUNDING BAR, INSULATED GROUND BAR, SUBFEED LUGS

CKT NO	OCP AMP	OCP POLE	LOAD (kVA) LTG	CO	PWR	DESCRIPTION	LCL kVA	PHASE LOAD A	B	C	LCL kVA	DESCRIPTION	LOAD (kVA) LTG	CO	PWR	OCP AMP	POLE	CKT NO
1	20	1				SPARE	0.0	0.0			0.0	SPARE				20	1	2
3	20	1				SPARE	0.0		0.0		0.0	SPARE				20	1	4
5	20	1			0.5	BOILER CONTROL	0.5			0.5	0.0	SPARE				20	1	6
7	20	1			0.5	BOILER CONTROL	0.5	0.5			0.0	SPARE				20	1	8
9	20	1			0.5	BMS CONTROL PANEL	0.5		0.5		0.0	SPARE				20	1	10
11	20	1	0.8	0.4		AH–5 LIGHTS/OULTETS	1.4			1.2	0.0	SPARE				20	1	12
13	20	1			0.2	UNIT HEATER	0.2	0.2			0.0	SPARE				20	1	14
15	20	1				SPARE	0.0		0.0		0.0	SPARE				20	1	16
17	20	1				SPARE	0.0			0.0	0.0	SPARE				20	1	18
19	20	1				SPARE	0.0	0.0			0.0	SPARE				20	1	20
21	20	1				SPARE	0.0		0.0		0.0	SPARE				20	1	22
23	20	1				SPARE	0.0			0.0	0.0	SPARE				20	1	24
25	20	1				SPARE	0.0	0.0			0.0	SPARE				20	1	26
27	20	1				SPARE	0.0		0.0		0.0	SPARE				20	1	28
29	20	1				SPARE	0.0			0.0	0.0	SPARE				20	1	30
31	20	1				SPARE	0.0	0.0			0.0	SPARE				20	1	32
33	20	1				SPARE	0.0		0.0		0.0	SPARE				20	1	34
35	20	1				SPARE	0.0			0.0	0.0	SPARE				20	1	36
37	20	1				SPARE	0.0	0.0			0.0	SPARE				20	1	38
39	20	1				SPARE	0.0		0.0		0.0	SPARE				20	1	40
41	20	1				SPARE	0.0			0.0	0.0	SPARE				20	1	42

TOTALS: CONNECTED kVA PER PHASE 1 1 2 — CONNECTED TOTAL kVA 3
CONNECTED AMPS PER PHASE 6 4 14 — CONNECTED AVERAGE AMPS PER PHASE 8

NEC DIVERSIFIED LOAD CALCULATIONS
LIGHTING 1kVA @125% = 1 kVA — ALL OTHER LOADS @100% = 2 kVA — DIVERSIFIED TOTAL kVA = 3
RECEPTACLES 0kVA @100% = 0 kVA — 25% OF LARGEST MOTOR = 0 kVA — AVERAGE AMPS PER PHASE = 9
REMAINDER 0kVA @ 50% = 0 kVA

FUSIBLE PANEL "LEL"

VOLTS/PHASE/WIRE: 120/208 V, 3 PH 4 WIRE | PANEL SIZE & TYPE: 22" W x 6" D, FUSIBLE | MAIN SIZE & TYPE: 60 AMPERE MAIN FUSE | LOCATION: | CABINET: | NOTES:

ACCESSORIES: PANEL DIRECTORY, IDENTIFICATION, GROUNDING BAR, INSULATED GROUND BAR, SUBFEED LUGS

CKT NO	OCP AMP	OCP POLE	LOAD (kVA) LTG	CO	PWR	DESCRIPTION	LCL kVA	PHASE LOAD A	B	C	LCL kVA	DESCRIPTION	LOAD (kVA) LTG	CO	PWR	OCP AMP	POLE	CKT NO
1	20	1			0.5	ELEVATOR CAB	0.5	0.5			0.0	FC–2				20	1	2
3	20	1			0.5	ELEVATOR CAB	0.5		0.8		0.3	ELEV EQUIP RM CO/LTG	0.1	0.2		20	1	4
5	20	1			0.5	ELEVATOR CAB	0.5			0.8	0.3	FREIGHT ELEV PIT CO/LTG	0.1	0.2		20	1	6
7	20	1	0.1	0.2		ELEV PIT OUTLET/LTG	0.3	0.3			0.0	SPARE				20	1	8
9	20	1	0.1	0.2		ELEV PIT OUTLET/LTG	0.3		0.3		0.0	SPARE				20	1	10
11	20	1				SPARE	0.0			0.0	0.0	SPARE				20	1	12
13	20	1				SPARE	0.0	0.0			0.0	SPARE				20	1	14
15	20	1				SPARE	0.0		0.0		0.0	SPARE				20	1	16
17	20	1				SPARE	0.0			0.0	0.0	SPARE				20	1	18
19	20	1				SPARE	0.0	0.0			0.0	SPARE				20	1	20
21	20	1				SPARE	0.0		0.0		0.0	SPARE				20	1	22
23	20	1				SPARE	0.0			0.0	0.0	SPARE				20	1	24
25	20	1				SPARE	0.0	0.0			0.0	SPARE				20	1	26
27	20	1				SPARE	0.0		0.0		0.0	SPARE				20	1	28
29	20	1				SPARE	0.0			0.0	0.0	SPARE				20	1	30
31	20	1				SPARE	0.0	0.0			0.0	SPARE				20	1	32
33	20	1				SPARE	0.0		0.0		0.0	SPARE				20	1	34
35	20	1				SPARE	0.0			0.0	0.0	SPARE				20	1	36
37	20	1				SPARE	0.0	0.0			0.0	SPARE				20	1	38
39	20	1				SPARE	0.0		0.0		0.0	SPARE				20	1	40
41	20	1				SPARE	0.0			0.0	0.0	SPARE				20	1	42

TOTALS: CONNECTED kVA PER PHASE 1 1 1 — CONNECTED TOTAL kVA 3
CONNECTED AMPS PER PHASE 7 9 7 — CONNECTED AVERAGE AMPS PER PHASE 8

NEC DIVERSIFIED LOAD CALCULATIONS
LIGHTING 0kVA @125% = 1 kVA — ALL OTHER LOADS @100% = 2 kVA — DIVERSIFIED TOTAL kVA = 3
RECEPTACLES 1kVA @100% = 1 kVA — 25% OF LARGEST MOTOR = 0 kVA — AVERAGE AMPS PER PHASE = 8
REMAINDER 0kVA @ 50% = 0 kVA

PANEL "2HB"

VOLTS/PHASE/WIRE: 277/480 V, 3 PH 4 WIRE | PANEL SIZE & TYPE: 22" W x 6" D, BOLT–ON | MAIN SIZE & TYPE: 125 AMPERE MAIN LUGS | LOCATION: | CABINET: | NOTES:

ACCESSORIES: PANEL DIRECTORY, IDENTIFICATION, GROUNDING BAR, SUBFEED LUGS

CKT NO	OCP AMP	OCP POLE	LOAD (kVA) LTG	CO	PWR	DESCRIPTION	LCL kVA	PHASE LOAD A	B	C	LCL kVA	DESCRIPTION	LOAD (kVA) LTG	CO	PWR	OCP AMP	POLE	CKT NO
1	20	1	2.2			LTG: LEARNING LAB	2.7	3.6			1.8	LTG: PALEO PREP LAB	1.4			20	1	2
3	20	1	0.9			LTG: EXHIBIT CORRIDOR	1.1		4.0		3.9	LTG: UTAH FUTURES – DMB	3.1			20	1	4
5	20	1	0.6			LTG: EXHIBIT CORRIDOR	0.8			1.7	1.4	LTG: UTAH FUTURES – DMB	1.1			20	1	6
7	20	1	0.5			LTG: EXHIBIT CORRIDOR	0.7	0.8			0.4	LTG: STORAGE/PREP	0.3			20	1	8
9	20	1	1.3			LTG: EXHIBIT CORRIDOR	1.6		3.3		2.5	LTG: LV TR PAST WORLD	2.0			20	1	10
11	20	1	0.9			LTG: LV TR PAST WORLDS	1.1			2.9	2.5	LTG: LV TR PAST WORLD	2.0			20	1	12
13	20	1	1.9			LTG: LV TR PAST WORLDS	2.3	4.2			2.9	LTG: CHILD. GALL. DMF–1,2,4	2.3			20	1	14
15	20	1	1.9			LTG: LV TR PAST WORLDS	2.3		4.7		3.5	LTG: CHILD. GALL. DMF–3	2.8			20	1	16
17	20	1	2.8			LTG: LV MONOPT PAST WLDS	3.5			2.8	0.0	SPARE				20	1	18
19	20	1				SPARE	0.0	0.8			1.0	LTG: LV TR PAST WORLD	0.8			20	1	20
21	20	1				SPARE	0.0		0.0		0.0	SPARE				20	1	22
23	20	1				SPARE	0.0			0.0	0.0	SPARE				20	1	24
25	20	1				SPARE	0.0	0.0			0.0	SPARE				20	1	26
27	20	1				SPARE	0.0		0.0		0.0	SPARE				20	1	28
29	20	1				SPARE	0.0			0.0	0.0	SPARE				20	1	30
31	20	1				SPARE	0.0	1.0			1.0	FILTER FU–2			1.0	15	3	32
33	20	1				SPARE	0.0		1.0		1.0	–			1.0	–	–	34
35	20	1				SPARE	0.0			1.0	1.0	–			1.0	–	–	36
37	20	1				SPARE	0.0	1.0			1.0	FILTER FU–3			1.0	15	3	38
39	20	1				SPARE	0.0		1.0		1.0	–			1.0	–	–	40
41	20	1				SPARE	0.0			1.0	1.0	–			1.0	–	–	42

TOTALS: CONNECTED kVA PER PHASE 11 14 9 — CONNECTED TOTAL kVA 35
CONNECTED AMPS PER PHASE 41 50 34 — CONNECTED AVERAGE AMPS PER PHASE 42

NEC DIVERSIFIED LOAD CALCULATIONS
LIGHTING 29kVA @125% = 36 kVA — ALL OTHER LOADS @100% = 6 kVA — DIVERSIFIED TOTAL kVA = 42
RECEPTACLES 0kVA @100% = 0 kVA — 25% OF LARGEST MOTOR = 0 kVA — AVERAGE AMPS PER PHASE = 51
REMAINDER 0kVA @ 50% = 0 kVA

PANEL "3HA"

VOLTS/PHASE/WIRE: 277/480 V, 3 PH 4 WIRE | PANEL SIZE & TYPE: 22" W x 6" D, BOLT–ON | MAIN SIZE & TYPE: 225 AMPERE MAIN LUGS | LOCATION: | CABINET: | NOTES:

ACCESSORIES: PANEL DIRECTORY, IDENTIFICATION, GROUNDING BAR, SUBFEED LUGS

CKT NO	OCP AMP	OCP POLE	LOAD (kVA) LTG	CO	PWR	DESCRIPTION	LCL kVA	PHASE LOAD A	B	C	LCL kVA	DESCRIPTION	LOAD (kVA) LTG	CO	PWR	OCP AMP	POLE	CKT NO
1	20	1	3.3			LTG: BATHROOMS, MECH RM	4.1	5.4			2.7	LTG: WORK AREAS	2.1			20	1	2
3	20	1	2.0			LTG: SHOP	2.5		4.0		2.5	LTG: WORK AREAS	2.0			20	1	4
5	20	1	2.0			LTG: STORAGE/ELEC RM	2.4			5.3	4.1	LTG: COLLECTIONS	3.3			20	1	6
7	20	1	0.7			LTG: LOBBY/HALLWAYS	0.8	4.0			4.2	LTG: COLLECTIONS	3.4			20	1	8
9	20	1	1.3			LTG: HALLWAYS	1.6		2.9		2.0	LTG: HALLWAY	1.6			20	1	10
11	20	1	0.3			OUTDOOR LTG: DOCK	0.3			0.3	0.0	SPARE				20	1	12
13	20	1	1.2			OUTDOOR PARKNG POLE LT	1.5	1.2			0.0	SPARE				20	1	14
15	20	1	1.2			OUTDOOR PARKNG POLE LT	1.5		1.2		0.0	SPARE				20	1	16
17	20	1	1.2			OUTDOOR PARKNG POLE LT	1.5			1.2	0.0	SPARE				20	1	18
19	20	1	0.4			OUDOOR PATH LTG–WEST	0.5	0.4			0.0	SPARE				20	1	20
21	20	1	0.4			OUDOOR PATH LTG–NW	0.5		0.4		0.0	SPARE				20	1	22
23	20	1	1.7			OUDOOR PATH LTG–WEST	2.1			1.7	0.0	SPARE				20	1	24
25	20	1				SPARE	0.0	0.0			0.0	SPARE				20	1	26
27	20	1				SPARE	0.0		0.0		0.0	SPARE				20	1	28
29	20	1				SPARE	0.0			0.0	0.0	SPARE				20	1	30
31	20	1				SPARE	0.0	0.5			0.5	EF–8			0.5	15	3	32
33	20	1				SPARE	0.0		0.5		0.5	–			0.5	–	–	34
35	20	1				SPARE	0.0			0.5	0.5	–			0.5	–	–	36
37	20	1				SPARE	0.0	2.1			2.1	EF–7			2.1	20	3	38
39	20	1				SPARE	0.0		2.1		2.1	–			2.1	–	–	40
41	20	1				SPARE	0.0			2.1	2.1	–			2.1	–	–	42

TOTALS: CONNECTED kVA PER PHASE 14 11 11 — CONNECTED TOTAL kVA 36
CONNECTED AMPS PER PHASE 49 40 40 — CONNECTED AVERAGE AMPS PER PHASE 43

NEC DIVERSIFIED LOAD CALCULATIONS
LIGHTING 28kVA @125% = 35 kVA — ALL OTHER LOADS @100% = 8 kVA — DIVERSIFIED TOTAL kVA = 43
RECEPTACLES 0kVA @100% = 0 kVA — 25% OF LARGEST MOTOR = 0 kVA — AVERAGE AMPS PER PHASE = 51
REMAINDER 0kVA @ 50% = 0 kVA

PANEL "6SLA"

VOLTS/PHASE/WIRE: 120/208 V, 3 PH 4 WIRE | PANEL SIZE & TYPE: 22" W x 6" D, FUSIBLE | MAIN SIZE & TYPE: 50 AMPERE MAIN FUSE | LOCATION: | CABINET: | NOTES:

ACCESSORIES: PANEL DIRECTORY, IDENTIFICATION, GROUNDING BAR, INSULATED GROUND BAR, SUBFEED LUGS

CKT NO	OCP AMP	OCP POLE	LOAD (kVA) LTG	CO	PWR	DESCRIPTION	LCL kVA	PHASE LOAD A	B	C	LCL kVA	DESCRIPTION	LOAD (kVA) LTG	CO	PWR	OCP AMP	POLE	CKT NO
1	20	1			0.5	SMOKE CONTROL PANEL	0.5	0.5			0.0	SPARE				20	1	2
3	20	1			0.2	SMOKE DAMPERS	0.2		0.2		0.0	SPARE				20	1	4
5	20	1				SPARE	0.0			0.0	0.0	SPARE				20	1	6
7	20	1				SPARE	0.0	0.0			0.0	SPARE				20	1	8
9	20	1				SPARE	0.0		0.0		0.0	SPARE				20	1	10
11	20	1				SPARE	0.0			0.0	0.0	SPARE				20	1	12
13	20	1				SPARE	0.0	0.0			0.0	SPARE				20	1	14
15	20	1				SPARE	0.0		0.0		0.0	SPARE				20	1	16
17	20	1				SPARE	0.0			0.0	0.0	SPARE				20	1	18
19	20	1				SPARE	0.0	0.0			0.0	SPARE				20	1	20
21	20	1				SPARE	0.0		0.0		0.0	SPARE				20	1	22
23	20	1				SPARE	0.0			0.0	0.0	SPARE				20	1	24
25	20	1				SPARE	0.0	0.0			0.0	SPARE				20	1	26
27	20	1				SPARE	0.0		0.0		0.0	SPARE				20	1	28
29	20	1				SPARE	0.0			0.0	0.0	SPARE				20	1	30
31	20	1				SPARE	0.0	0.0			0.0	SPARE				20	1	32
33	20	1				SPARE	0.0		0.0		0.0	SPARE				20	1	34
35	20	1				SPARE	0.0			0.0	0.0	SPARE				20	1	36
37	20	1				SPARE	0.0	0.0			0.0	SPARE				20	1	38
39	20	1				SPARE	0.0		0.0		0.0	SPARE				20	1	40
41	20	1				SPARE	0.0			0.0	0.0	SPARE				20	1	42

TOTALS: CONNECTED kVA PER PHASE 1 0 0 — CONNECTED TOTAL kVA 1
CONNECTED AMPS PER PHASE 4 2 0 — CONNECTED AVERAGE AMPS PER PHASE 2

NEC DIVERSIFIED LOAD CALCULATIONS
LIGHTING 0kVA @125% = 0 kVA — ALL OTHER LOADS @100% = 1 kVA — DIVERSIFIED TOTAL kVA = 1
RECEPTACLES 0kVA @100% = 0 kVA — 25% OF LARGEST MOTOR = 0 kVA — AVERAGE AMPS PER PHASE = 2
REMAINDER 0kVA @ 50% = 0 kVA

PANEL "1HA"

VOLTS/PHASE/WIRE: 277/480 V, 3 PH 4 WIRE | PANEL SIZE & TYPE: 22" W x 6" D, BOLT–ON | MAIN SIZE & TYPE: 125 AMPERE MAIN LUGS | LOCATION: | CABINET: | NOTES:

ACCESSORIES: PANEL DIRECTORY, IDENTIFICATION, GROUNDING BAR, SUBFEED LUGS

CKT NO	OCP AMP	OCP POLE	LOAD (kVA) LTG	CO	PWR	DESCRIPTION	LCL kVA	PHASE LOAD A	B	C	LCL kVA	DESCRIPTION	LOAD (kVA) LTG	CO	PWR	OCP AMP	POLE	CKT NO
1	20	1	0.2			LTG: ENTRY	0.3	1.3			1.4	LTG: ENTRY/HALL	1.1			20	1	2
3	20	1	0.3			LTG: ENTRY	0.4		1.1		1.0	LTG: BATHROOMS	0.8			20	1	4
5	20	1				SPARE	0.0			0.0	0.0	SPARE				20	1	6
7	20	1				SPARE	0.0	0.0			0.0	SPARE				20	1	8
9	20	1				SPARE	0.0		0.0		0.0	SPARE				20	1	10
11	20	1				SPARE	0.0			0.0	0.0	SPARE				20	1	12
13	20	1				SPARE	0.0	0.0			0.0	SPARE				20	1	14
15	20	1				SPARE	0.0		0.0		0.0	SPARE				20	1	16
17	20	1				SPARE	0.0			0.0	0.0	SPARE				20	1	18
19	20	1				SPARE	0.0	0.0			0.0	SPARE				20	1	20
21	20	1				SPARE	0.0		0.0		0.0	SPARE				20	1	22
23	20	1				SPARE	0.0			0.0	0.0	SPARE				20	1	24
25	20	1				SPARE	0.0	0.0			0.0	SPARE				20	1	26
27	20	1				SPARE	0.0		0.0		0.0	SPARE				20	1	28
29	20	1				SPARE	0.0			0.0	0.0	SPARE				20	1	30
31	15	3			0.6	P–15	0.6	0.6			0.0	SPARE				20	1	32
33	–	–			0.6	–	0.6		0.6		0.0	SPARE				20	1	34
35	–	–			0.6	–	0.6			0.6	0.0	SPARE				20	1	36
37	20	3			2.1	P–26	2.1	2.1			0.0	SPARE				20	1	38
39	–	–			2.1	–	2.1		2.1		0.0	SPARE				20	1	40
41	–	–			2.1	–	2.1			2.1	0.0	SPARE				20	1	42

TOTALS: CONNECTED kVA PER PHASE 4 4 3 — CONNECTED TOTAL kVA 11
CONNECTED AMPS PER PHASE 14 14 10 — CONNECTED AVERAGE AMPS PER PHASE 13

NEC DIVERSIFIED LOAD CALCULATIONS
LIGHTING 2kVA @125% = 3 kVA — ALL OTHER LOADS @100% = 8 kVA — DIVERSIFIED TOTAL kVA = 11
RECEPTACLES 0kVA @100% = 0 kVA — 25% OF LARGEST MOTOR = 0 kVA — AVERAGE AMPS PER PHASE = 13
REMAINDER 0kVA @ 50% = 0 kVA

PANEL "3EHA"

VOLTS/PHASE/WIRE: 277/480 V, 3 PH 4 WIRE | PANEL SIZE & TYPE: 22" W x 6" D, FUSIBLE | MAIN SIZE & TYPE: 225 AMPERE MAIN LUGS | LOCATION: | CABINET: | NOTES:

ACCESSORIES: PANEL DIRECTORY, IDENTIFICATION, GROUNDING BAR, SUBFEED LUGS

CKT NO	OCP AMP	OCP POLE	LOAD (kVA) LTG	CO	PWR	DESCRIPTION	LCL kVA	PHASE LOAD A	B	C	LCL kVA	DESCRIPTION	LOAD (kVA) LTG	CO	PWR	OCP AMP	POLE	CKT NO
1	20	1	1.9			LTG: FIRST FLOOR EM	2.4	10.7			9.1	PANEL 3ELA thru 3TEA	1.3	1.5	6.0	70	3	2
3	20	1	0.3			LTG: FIRST FLOOR ENTRY	0.4		5.7		5.5	–	0.3	0.4	4.7	–	–	4
5	20	1	0.4			LTG: STAIR C	0.5			8.3	7.9	–	0.1	2.0	5.8	–	–	6
7	20	1	2.1			LTG: N EM LIGHTS (2ND)	2.6	2.6			0.7	LTG: STAIR B	0.5			20	1	8
9	20	1	1.6			LTG: N EM LIGHTS (2ND)	2.0		2.1		0.7	LTG: CANYON AREA (2ND)	0.5			20	1	10
11	20	1	0.5			LTG: VESTIBULE C (2ND)	0.6			2.3	2.2	LTG: N CORRIDORS (3RD)	1.8			20	1	12
13	20	1	0.2			LTG: VESTIBULE A (2ND)	0.3	0.6			0.5	LTG: STAIR A	0.4			20	1	14
15	20	1	1.4			LTG: CANYON AREA (3RD)	1.8		2.1		0.8	LTG: BATHRMS/LOBBY (4TH)	0.7			20	1	16
17	20	1	1.2			LTG: COLLECTIONS (3RD)	1.5			2.7	1.9	LTG: CORRIDORS (4TH)	1.6			20	1	18
19	20	1	1.3			LTG: N EXHIBITS (3RD)	1.6	2.3			1.2	LTG: N COLLECTIONS	1.0			20	1	20
21	20	1			0.1	AREA 'A' ELEC RM 277V PWR	0.1		1.1		1.3	LTG: S COLLECTIONS	1.0			20	1	22
23	20	1			0.1	2ND FLR AREA 'A' 277V PWR	0.1			1.6	1.9	LTG: OPEN OFFICE (5TH)	1.5			20	1	24
25	20	1			0.1	2ND FLR AREA 'A' 277V PWR	0.1	0.9			1.0	LTG: BATHRMS/LOBBY (5TH)	0.8			20	1	26
27	20	1			0.1	2ND FLR AREA 'A' 277V PWR	0.1		0.7		0.7	LTG: MECH MEZZANINE	0.6			20	1	28
29	20	1	0.7			LTG: LOBBY	0.9			0.7	0.0	SPARE				20	1	30
31	20	1				SPARE	0.0	0.0			0.0	SPARE				20	1	32
33	20	1				SPARE	0.0		0.0		0.0	SPARE				20	1	34
35	20	1				SPARE	0.0			0.0	0.0	SPARE				20	1	36
37	20	1				SPARE	0.0	0.0			0.0	SPARE				20	1	38
39	20	1				SPARE	0.0		0.0		0.0	SPARE				20	1	40
41	20	1				SPARE	0.0			0.0	0.0	SPARE				20	1	42

TOTALS: CONNECTED kVA PER PHASE 17 12 16 — CONNECTED TOTAL kVA 44
CONNECTED AMPS PER PHASE 61 42 56 — CONNECTED AVERAGE AMPS PER PHASE 53

NEC DIVERSIFIED LOAD CALCULATIONS
LIGHTING 24kVA @125% = 29 kVA — ALL OTHER LOADS @100% = 17 kVA — DIVERSIFIED TOTAL kVA = 50
RECEPTACLES 4kVA @100% = 4 kVA — 25% OF LARGEST MOTOR = 0 kVA — AVERAGE AMPS PER PHASE = 60
REMAINDER 0kVA @ 50% = 0 kVA

PANEL "3HB"

VOLTS/PHASE/WIRE: 277/480 V, 3 PH 4 WIRE | PANEL SIZE & TYPE: 22" W x 6" D, BOLT–ON | MAIN SIZE & TYPE: 125 AMPERE MAIN LUGS | LOCATION: | CABINET: | NOTES:

ACCESSORIES: PANEL DIRECTORY, IDENTIFICATION, GROUNDING BAR, SUBFEED LUGS

CKT NO	OCP AMP	OCP POLE	LOAD (kVA) LTG	CO	PWR	DESCRIPTION	LCL kVA	PHASE LOAD A	B	C	LCL kVA	DESCRIPTION	LOAD (kVA) LTG	CO	PWR	OCP AMP	POLE	CKT NO
1	20	1	1.5			LTG: CANYON ACCENTS	1.9	1.5			0.0	SPARE				20	1	2
3	20	1	1.7			LTG: MECHANICAL ROOM	2.1		1.7		0.0	SPARE				20	1	4
5	20	1	2.0			LTG: CANYON ACCENTS	2.4			2.0	0.0	SPARE				20	1	6
7	20	1	1.3			LTG: LEARNING LAB – DMC	1.7	1.3			0.0	SPARE				20	1	8
9	20	1	3.2			LTG: LEARNING LAB – DMC	4.0		3.2		0.0	SPARE				20	1	10
11	20	1				SPARE	0.0			0.0	0.0	SPARE				20	1	12
13	20	1				SPARE	0.0	0.0			0.0	SPARE				20	1	14
15	20	1				SPARE	0.0		0.0		0.0	SPARE				20	1	16
17	20	1				SPARE	0.0			0.0	0.0	SPARE				20	1	18
19	20	1				SPARE	0.0	0.0			0.0	SPARE				20	1	20
21	20	1				SPARE	0.0		0.0		0.0	SPARE				20	1	22
23	20	1				SPARE	0.0			0.0	0.0	SPARE				20	1	24
25	20	1				SPARE	0.0	0.0			0.0	SPARE				20	1	26
27	20	1				SPARE	0.0		0.0		0.0	SPARE				20	1	28
29	20	1				SPARE	0.0			0.0	0.0	SPARE				20	1	30
31	20	1				SPARE	0.0	0.0			0.0	SPARE				20	1	32
33	20	1				SPARE	0.0		0.0		0.0	SPARE				20	1	34
35	20	1				SPARE	0.0			0.0	0.0	SPARE				20	1	36
37	20	1				SPARE	0.0	0.0			0.0	SPARE				20	1	38
39	20	1				SPARE	0.0		0.0		0.0	SPARE				20	1	40
41	20	1				SPARE	0.0			0.0	0.0	SPARE				20	1	42

TOTALS: CONNECTED kVA PER PHASE 3 5 2 — CONNECTED TOTAL kVA 10
CONNECTED AMPS PER PHASE 10 18 7 — CONNECTED AVERAGE AMPS PER PHASE 12

NEC DIVERSIFIED LOAD CALCULATIONS
LIGHTING 10kVA @125% = 12 kVA — ALL OTHER LOADS @100% = 0 kVA — DIVERSIFIED TOTAL kVA = 12
RECEPTACLES 0kVA @100% = 0 kVA — 25% OF LARGEST MOTOR = 0 kVA — AVERAGE AMPS PER PHASE = 14
REMAINDER 0kVA @ 50% = 0 kVA

GENERAL SHEET NOTES

1. PROVIDE 200% NEUTRAL BUS AND LUG CAPACITY FOR ALL 120/208V PANELBOARDS.

PANEL "K"

VOLTS/PHASE/WIRE: 120/208 V, 3 PH 4 WIRE | PANEL SIZE & TYPE: 22" W x 6" D, BOLT–ON | MAIN SIZE & TYPE: 400 AMPERE MAIN LUGS | LOCATION: | CABINET: | NOTES:

ACCESSORIES: PANEL DIRECTORY, IDENTIFICATION, GROUNDING BAR, INSULATED GROUND BAR, SUBFEED LUGS

CKT NO	OCP AMP	OCP POLE	LOAD (kVA) LTG	CO	PWR	DESCRIPTION	LCL kVA	PHASE LOAD A	B	C	LCL kVA	DESCRIPTION	LOAD (kVA) LTG	CO	PWR	OCP AMP	POLE	CKT NO
1	20	1		0.2		KITCHEN OUTLET	0.2	0.4			0.2	KITCHEN OUTLET		0.2		20	1	2
3	20	1		0.2		KITCHEN OUTLET	0.2		0.4		0.2	KITCHEN OUTLET		0.2		20	1	4
5	20	1		0.2		KITCHEN DROP CORD	0.2			0.4	0.2	KITCHEN OUTLET		0.2		20	1	6
7	20	1		0.2		KITCHEN DROP CORD	0.2	0.4			0.2	KITCHEN OUTLET		0.2		20	1	8
9	20	1		0.2		KITCHEN DROP CORD	0.2		0.4		0.2	KITCHEN OUTLET		0.2		20	1	10
11	20	1		0.2		KITCHEN DROP CORD	0.2			0.4	0.2	KITCHEN OUTLET		0.2		20	1	12
13	50	3			11.1	OVEN	11.1	22.2			11.1	OVEN			11.1	50	3	14
15	–	–			11.1	–	11.1		22.2		11.1	–			11.1	–	–	16
17	–	–			11.1	–	11.1			22.2	11.1	–			11.1	–	–	18
19	20	1		0.2		KITCHEN OUTLET	0.2	0.4			0.2	KITCHEN OUTLET		0.2		20	1	20
21	20	1		0.2		KITCHEN OUTLET	0.2		0.4		0.2	KITCHEN OUTLET		0.2		20	1	22
23	20	1		0.2		KITCHEN OUTLET	0.2			0.4	0.2	KITCHEN OUTLET		0.2		20	1	24
25	20	1		0.4		MAIN LOBBY OUTLETS	0.4	0.6			0.2	KITCHEN OUTLET		0.2		20	1	26
27	20	1		0.2		CAFÉ OUTLET	0.2		1.7		1.5	KITCHEN EQUPMENT			1.5	20	2	28
29	20	1		0.2		CAFÉ OUTLET	0.2			1.8	1.6	–			1.6	–	–	30
31	20	1		0.2		CAFÉ OUTLET	0.2	0.4			0.2	CAFÉ OUTLET		0.2		20	1	32
33	20	1		0.2		CAFÉ OUTLET	0.2		0.2		0.0	SPARE				20	1	34
35	20	1		0.2		CAFÉ OUTLET	0.2			0.2	0.0	SPARE				20	1	36
37	20	1		0.2		CAFÉ OUTLET	0.2	0.2			0.0	SPARE				20	1	38
39	20	1				SPARE	0.0		0.0		0.0	SPARE				20	1	40
41	20	1				SPARE	0.0			0.0	0.0	SPARE				20	1	42
43	20	1				SPARE	0.0	0.0			0.0	KITCHEN EQUIP				20	2	44
45	20	1				SPARE	0.0		0.0		0.0	–				–	–	46
47	20	1				SPARE	0.0			0.0	0.0	KITCHEN EQUIP				20	2	48
49	20	1				SPARE	0.0	0.0			0.0	–				–	–	50
51	20	1				SPARE	0.0		0.0		0.0	KITCHEN EQUIP				20	2	52
53	20	1				SPARE	0.0			0.0	0.0	–				–	–	54
55	20	1				SPARE	0.0	0.0			0.0	KITCHEN EQUIP				20	2	56
57	20	1				SPARE	0.0		0.0		0.0	–				–	–	58
59	20	1				SPARE	0.0			0.0	0.0	SPARE				20	1	60
61	20	1				SPARE	0.0	0.0			0.0	SPARE				20	1	62
63	20	1				SPARE	0.0		0.0		0.0	SPARE				20	1	64
65	20	1				SPARE	0.0			0.0	0.0	SPARE				20	1	66
67	20	1				SPARE	0.0	0.0			0.0	SPARE				20	1	68
69	20	1				SPARE	0.0		0.0		0.0	SPARE				20	1	70
71	20	1				SPARE	0.0			0.0	0.0	SPARE				20	1	72
73	20	1				SPARE	0.0	0.0			0.0	SPARE				20	1	74
75	20	1				SPARE	0.0		0.0		0.0	SPARE				20	1	76
77	20	1				SPARE	0.0			0.0	0.0	SPARE				20	1	78
79	20	1				SPARE	0.0	0.0			0.0	SPARE				20	1	80
81	20	1				SPARE	0.0		0.0		0.0	SPARE				20	1	82
83	20	1				SPARE	0.0			0.0	0.0	SPARE				20	1	84

TOTALS: CONNECTED kVA PER PHASE 25 25 25 — CONNECTED TOTAL kVA 75
CONNECTED AMPS PER PHASE 205 211 212 — CONNECTED AVERAGE AMPS PER PHASE 209

NEC DIVERSIFIED LOAD CALCULATIONS
LIGHTING 0kVA @125% = 0 kVA — ALL OTHER LOADS @100% = 70 kVA — DIVERSIFIED TOTAL kVA = 75
RECEPTACLES 6kVA @100% = 6 kVA — 25% OF LARGEST MOTOR = 0 kVA — AVERAGE AMPS PER PHASE = 209
REMAINDER 0kVA @ 50% = 0 kVA

PANEL "2HA"

VOLTS/PHASE/WIRE: 277/480 V, 3 PH 4 WIRE | PANEL SIZE & TYPE: 22" W x 6" D, BOLT–ON | MAIN SIZE & TYPE: 125 AMPERE MAIN LUGS | LOCATION: | CABINET: | NOTES:

ACCESSORIES: PANEL DIRECTORY, IDENTIFICATION, GROUNDING BAR, SUBFEED LUGS

CKT NO	OCP AMP	OCP POLE	LOAD (kVA) LTG	CO	PWR	DESCRIPTION	LCL kVA	PHASE LOAD A	B	C	LCL kVA	DESCRIPTION	LOAD (kVA) LTG	CO	PWR	OCP AMP	POLE	CKT NO
1	20	1	0.7			LTG: LOADING DOCK	0.9	2.0			1.6	LTG: STORAGE	1.3			20	1	2
3	20	1	0.6			LTG: RECEIVING	0.7		2.3		2.2	LTG: BATHROOMS/STORAGE	1.8			20	1	4
5	20	1	1.2			LTG: HALLWAYS	1.5			3.5	2.9	LTG: COMMUNITY RM, KITCH	2.3			20	1	6
7	20	1	0.8			LTG: BATHROOMS	1.0	2.1			1.3	EF–4			1.3	15	3	8
9	20	1	0.7			LTG: HALLWAY	0.8		2.1		1.4	–			1.4	–	–	10
11	20	1	1.2			LTG: MAIN LOBBY	1.5			2.5	1.3	–			1.3	–	–	12
13	20	1	1.4			LTG: STORE DOWNLIGHTS	1.7	1.7			0.3	EF–5			0.3	15	3	14
15	20	1	0.2			LTG: CAFÉ	0.2		0.5		0.3	–			0.3	–	–	16
17	20	1				SPARE	0.0			0.3	0.3	–			0.3	–	–	18
19	20	1				SPARE	0.0	0.3			0.3	AH–7			0.3	15	3	20
21	20	1				SPARE	0.0		0.3		0.3	–			0.3	–	–	22
23	20	1				SPARE	0.0			0.3	0.3	–			0.3	–	–	24
25	20	1				SPARE	0.0	0.3			0.3	RF–6			0.3	15	3	26
27	20	1				SPARE	0.0		0.3		0.3	–			0.3	–	–	28
29	20	1				SPARE	0.0			0.3	0.3	–			0.3	–	–	30
31	20	1				SPARE	0.0	0.0			0.0	SPARE				20	1	32
33	20	1				SPARE	0.0		0.0		0.0	SPARE				20	1	34
35	20	1				SPARE	0.0			0.0	0.0	SPARE				20	1	36
37	20	1				SPARE	0.0	0.0			0.0	SPARE				20	1	38
39	20	1				SPARE	0.0		0.0		0.0	SPARE				20	1	40
41	20	1				SPARE	0.0			0.0	0.0	SPARE				20	1	42

TOTALS: CONNECTED kVA PER PHASE 6 5 7 — CONNECTED TOTAL kVA 19
CONNECTED AMPS PER PHASE 23 20 25 — CONNECTED AVERAGE AMPS PER PHASE 23

NEC DIVERSIFIED LOAD CALCULATIONS
LIGHTING 12kVA @125% = 15 kVA — ALL OTHER LOADS @100% = 7 kVA — DIVERSIFIED TOTAL kVA = 22
RECEPTACLES 0kVA @100% = 0 kVA — 25% OF LARGEST MOTOR = 0 kVA — AVERAGE AMPS PER PHASE = 26
REMAINDER 0kVA @ 50% = 0 kVA

PANEL "3EHB"

VOLTS/PHASE/WIRE: 277/480 V, 3 PH 4 WIRE | PANEL SIZE & TYPE: 22" W x 6" D, FUSIBLE | MAIN SIZE & TYPE: 225 AMPERE MAIN LUGS | LOCATION: | CABINET: | NOTES:

ACCESSORIES: PANEL DIRECTORY, IDENTIFICATION, GROUNDING BAR, SUBFEED LUGS

CKT NO	OCP AMP	OCP POLE	LOAD (kVA) LTG	CO	PWR	DESCRIPTION	LCL kVA	PHASE LOAD A	B	C	LCL kVA	DESCRIPTION	LOAD (kVA) LTG	CO	PWR	OCP AMP	POLE	CKT NO
1	20	1	0.3			LTG: ENTRIES	0.4	8.0			9.0	PANEL 3ELB thru 3TEB	5.4	0.4	1.8	70	3	2
3	20	1	1.4			LTG: S. EM (2ND)	1.7		8.2		7.9	–	4.3	0.2	2.3	–	–	4
5	20	1	0.1			LTG: UTAH FUTURES	0.2			5.7	6.6	–	4.4	0.6	0.5	–	–	6
7	20	1	0.8			LTG: CHILDREN'S GALLERY	1.0	1.6			1.1	LTG: S. EM (4TH)	0.9			20	1	8
9	20	1	1.5			LTG: S. EM (3RD)	1.8		2.1		0.8	LTG: CANYON EM (5TH)	0.6			20	1	10
11	20	1	1.2			LTG: S. EM (5TH)	1.5			1.2	0.0	SPARE				20	1	12
13	20	1	1.4			OUTDOOR S. EM PATH LTG	1.8	1.4			0.0	SPARE				20	1	14
15	20	1	1.3			LTG: FUTURES FORUM	1.7		1.3		0.0	SPARE				20	1	16
17	20	1				SPARE	0.0			0.0	0.0	SPARE				20	1	18
19	20	1				SPARE	0.0	0.0			0.0	SPARE				20	1	20
21	20	1				SPARE	0.0		0.0		0.0	SPARE				20	1	22
23	20	1				SPARE	0.0			0.0	0.0	SPARE				20	1	24
25	20	1				SPARE	0.0	0.0			0.0	SPARE				20	1	26
27	20	1				SPARE	0.0		0.0		0.0	SPARE				20	1	28
29	20	1				SPARE	0.0			0.0	0.0	SPARE				20	1	30
31	20	1				SPARE	0.0	0.0			0.0	SPARE				20	1	32
33	20	1				SPARE	0.0		0.0		0.0	SPARE				20	1	34
35	20	1				SPARE	0.0			0.0	0.0	SPARE				20	1	36
37	20	1				SPARE	0.0	0.0			0.0	SPARE				20	1	38
39	20	1				SPARE	0.0		0.0		0.0	SPARE				20	1	40
41	20	1				SPARE	0.0			0.0	0.0	SPARE				20	1	42

TOTALS: CONNECTED kVA PER PHASE 11 12 7 — CONNECTED TOTAL kVA 29
CONNECTED AMPS PER PHASE 40 42 25 — CONNECTED AVERAGE AMPS PER PHASE 35

NEC DIVERSIFIED LOAD CALCULATIONS
LIGHTING 24kVA @125% = 30 kVA — ALL OTHER LOADS @100% = 5 kVA — DIVERSIFIED TOTAL kVA = 35
RECEPTACLES 1kVA @100% = 1 kVA — 25% OF LARGEST MOTOR = 0 kVA — AVERAGE AMPS PER PHASE = 42
REMAINDER 0kVA @ 50% = 0 kVA

PANEL "4HA"

VOLTS/PHASE/WIRE: 277/480 V, 3 PH 4 WIRE | PANEL SIZE & TYPE: 22" W x 6" D, BOLT–ON | MAIN SIZE & TYPE: 125 AMPERE MAIN LUGS | LOCATION: | CABINET: | NOTES:

ACCESSORIES: PANEL DIRECTORY, IDENTIFICATION, GROUNDING BAR, SUBFEED LUGS

CKT NO	OCP AMP	OCP POLE	LOAD (kVA) LTG	CO	PWR	DESCRIPTION	LCL kVA	PHASE LOAD A	B	C	LCL kVA	DESCRIPTION	LOAD (kVA) LTG	CO	PWR	OCP AMP	POLE	CKT NO
1	20	1	2.6			LTG: OFFICES	3.2	4.1			2.0	LTG: N. COLLECTIONS	1.6			20	1	2
3	20	1	1.4			LTG: CORRIDORS	1.8		3.3		2.4	LTG: N COLLECTIONS	1.9			20	1	4
5	20	1	2.6			LTG: WORK AREAS/LABS	3.3			4.2	2.0	LTG: N COLLECTIONS	1.6			20	1	6
7	20	1	2.3			LTG: BATHROOMS/LAB	2.9	4.1			2.3	LTG: S. COLLECTIONS	1.8			20	1	8
9	20	1	2.0			LTG: ANTHROPOLOGY LAB	2.6		4.2		2.7	LTG: S. COLLECTIONS	2.2			20	1	10
11	20	1	1.8			LTG: FLUID STORAGE	2.2			3.7	2.4	LTG: S. COLLECTIONS	1.9			20	1	12
13	20	1	0.5			LTG: LOBBY	0.6	0.5			0.0	SPARE				20	1	14
15	20	1				SPARE	0.0		0.0		0.0	SPARE				20	1	16
17	20	1				SPARE	0.0			0.0	0.0	SPARE				20	1	18
19	20	1				SPARE	0.0	0.0			0.0	SPARE				20	1	20
21	20	1				SPARE	0.0		0.0		0.0	SPARE				20	1	22
23	20	1				SPARE	0.0			0.0	0.0	SPARE				20	1	24
25	20	1				SPARE	0.0	0.0			0.0	SPARE				20	1	26
27	20	1				SPARE	0.0		0.0		0.0	SPARE				20	1	28
29	20	1				SPARE	0.0			0.0	0.0	SPARE				20	1	30
31	20	1				SPARE	0.0	0.0			0.0	SPARE				20	1	32
33	20	1				SPARE	0.0		0.0		0.0	SPARE				20	1	34
35	20	1				SPARE	0.0			0.0	0.0	SPARE				20	1	36
37	15	3			0.4	EF–19	0.4	0.4			0.0	SPARE				20	1	38
39	–	–			0.4	–	0.4		0.4		0.0	SPARE				20	1	40
41	–	–			0.4	–	0.4			0.4	0.0	SPARE				20	1	42

TOTALS: CONNECTED kVA PER PHASE 9 8 8 — CONNECTED TOTAL kVA 26
CONNECTED AMPS PER PHASE 33 29 30 — CONNECTED AVERAGE AMPS PER PHASE 31

NEC DIVERSIFIED LOAD CALCULATIONS
LIGHTING 24kVA @125% = 30 kVA — ALL OTHER LOADS @100% = 1 kVA — DIVERSIFIED TOTAL kVA = 32
RECEPTACLES 0kVA @100% = 0 kVA — 25% OF LARGEST MOTOR = 0 kVA — AVERAGE AMPS PER PHASE = 38
REMAINDER 0kVA @ 50% = 0 kVA

Project Title

UTAH MUSEUM OF NATURAL HISTORY

UNIVERSITY OF UTAH
SALT LAKE CITY, UTAH

State of Utah
Department of Administrative Services
Division of Facilities Construction & Management
4110 State Office Building
Salt Lake City, Utah 84114
Phone: (801) 538 - 3018
Fax: (801) 538 - 3267
www.dfcm.utah.gov

PROJ. NO. 02243750

Owner
UMNH
1390 East President's Circle
Salt Lake City, Utah 84112
801.581.6927 tel

Design Architect
Polshek Partnership Architects LLP
320 West 13th Street
New York, New York
212.807.7171 tel

Architect of Record
GSBS
375 West 200 South
Salt Lake City, Utah
801.521.8600 tel

Structural Engineer
Leslie E. Robertson Associates
30 Broad Street
New York, New York 10004
212.750.9000 tel

Structural Engineer
Dunn Associates, Inc.
380 West 800 South, Suite 100
Salt Lake City, Utah 84101
801.575.8877 tel

Mechanical/Plumbing/Fire Protection Engineer
Colvin Engineering Associates, Inc.
244 West 300 North
Salt Lake City, Utah 84103
801.322.2400 tel

Electrical/AV Engineer
Spectrum Engineers
175 South Main Street
Salt Lake City, Utah 84111
800.678.7077 tel

Civil Engineer
Stantec
3995 South 700 East Suite 300
Salt Lake City, Utah 84107
801.261.0090 tel

Landscape Architects
Design Workshop
224 South 200 West
Salt Lake City, UT 84101
801.359.4771 tel

Exhibit Design
Ralph Appelbaum Associates
88 Pine Street
New York, New York 10005
212.334.8200

Key Plan

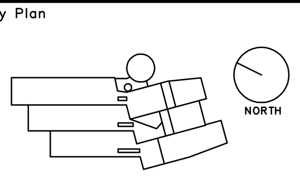

Seal

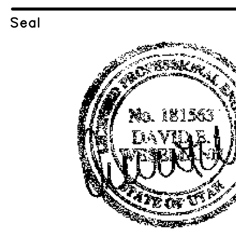

No.	Issue Name	Date
10	RFI 510	06/10/09
9	LIGHTING CHANGES	06/08/09
8	LEVEL ONE CHANGES	05/12/09
7	EXHIBIT POWER CHANGES	04/24/09
6	EQUIPMENT CHANGES	04/17/09
	CONFORMANCE SET	02/09/09
5	EXHIBIT & LTG CHANGES	12/19/08
4	CODE REVIEW	12/10/08
3	ADDENDUM #3	11/10/08
2	ADDENDUM #2	10/23/08
1	ADDENDUM #1	10/16/08
	CONSTRUCTION DOCUMENTS	09/30/08

Date 02/03/09 — Project No. 2004.076.00
Scale N.T.S. — PPA – 0423

Sheet Title
ELECTRICAL PANEL SCHEDULES

Sheet No.
EP–611

File Name: P:\2005\20050145\1Drawings\Sheet\45EP-611.dwg Last Plotted: 2009/06/18 @ 3:17 PM By: dlm

Copyright ? 2006 Polshek Partnership Architects, LLP

$PROJECT$ $USER_ID$ $DATE$ $TIME$

$PROJECT$ $USER_ID$ $DATE$ $TIME$

PANEL "4LB1"

VOLTS/PHASE/WIRE: 120/208 V, 3 PH 4 WIRE | PANEL SIZE & TYPE: 22" W x 6" D, BOLT–ON | MAIN SIZE & TYPE: 225 AMPERE MAIN LUGS | LOCATION: | CABINET: | NOTES:

ACCESSORIES: PANEL DIRECTORY, IDENTIFICATION, GROUNDING BAR, INSULATED GROUND BAR, SUBFEED LUGS

CKT NO	OCP AMP	OCP POLE	LOAD (kVA) LTG	CO	PWR	DESCRIPTION	LCL kVA	PHASE LOAD A	B	C	LCL kVA	DESCRIPTION	LOAD (kVA) LTG	CO	PWR	OCP AMP	POLE	CKT NO
1	20	1		1.2		CO: EXHIBIT	1.2	2.4			1.2	CO: EXHIBIT FB		1.2		20	1	2
3	20	1		0.8		CO: EXHIBIT	0.8		1.3		0.6	LTG: DNA	0.5			20	1	4
5	20	1		1.0		CO: EXHIBIT	1.0			1.4	0.4	CO: EXHIBIT FB		0.4		20	1	6
7	20	1		0.8		CO: EXHIBIT	0.8	1.6			1.0	LTG: EXHIBIT FB	0.8			20	1	8
9	20	1		0.8		CO: EXHIBIT	0.8		1.6		0.8	CO: EXHIBIT FB		0.8		20	1	10
11	20	1		0.6		CO: EXHIBIT	0.6			2.4	1.8	PWR: EXHIBIT PROJ.			1.8	20	1	12
13	20	1		1.2		CO: EXHIBIT	1.2	1.4			0.2	CO: EXHIBIT FB		0.2		20	1	14
15	20	1		1.2		CO: EXHIBIT	1.2		1.9		0.9	LTG: EXHIBIT FB	0.7			20	1	16
17	20	1		0.8		CO: EXHIBIT	0.8			2.0	1.2	CO: EXHIBIT FB		1.2		20	1	18
19	20	1		0.8		CO: EXHIBIT	0.8	1.0			0.2	CO: EXHIBIT FB		0.2		20	1	20
21	20	1		0.8		CO: LEARNING LAB	0.8		1.4		0.8	LTG: EXHIBIT FB	0.6			20	1	22
23	20	1		0.6		CO: LEARNING LAB	0.6			1.4	0.8	CO: EXHIBIT FB		0.8		20	1	24
25	20	1		1.0		CO: STORAGE	1.0	1.8			0.8	CO: EXHIBIT FB		0.8		20	1	26
27	20	1		0.4		CO: STORAGE COUNTERS	0.4		0.8		0.5	LTG: CASE LIGHTS	0.4			20	1	28
29	20	1		0.6		CO: LEARNING LAB	0.6			1.3	0.9	LTG: EXHIBIT FB	0.7			20	1	30
31	20	1		0.4		CO: LEARNING LAB CNTR	0.4	2.3			1.9	CO: EXHIBIT FB		1.0	0.9	20	1	32
33	20	1		0.4		CO: LEARNING LAB CNTR	0.4		1.3		0.9	PWR: LEARNING LAB PROJ.			0.9	20	1	34
35	20	1		0.4		CO: LEARNING LAB CNTR	0.4			0.6	0.2	LEARNING LAB BENCH CO			0.2	20	1	36
37	20	1		0.4		CO: LEARNING LAB CNTR	0.4	1.2			0.8	CO: EXHIBIT FB		0.8		20	1	38
39	20	1		0.2		CO: OUTDOOR WP	0.2		0.7		0.5	PWR: DNA MONITOR			0.5	20	1	40
41	20	1			0.5	PWR: AV MONITOR	0.5			0.5	0.0	SPARE				20	1	42
43	20	1	1.2			CANYON DISPLAY CASE	1.5	1.4			0.2	SMF–2 ROOF CO		0.2		20	1	44
45	20	1	0.8			LTG: DIORAMAS	1.0		1.3		0.5	BMS CONTROL XFMR			0.5	20	1	46
47	20	1	0.8			LTG: DIORAMAS	1.0			1.3	0.5	BMS CONTROL XFMR			0.5	20	1	48
49	20	1	0.8			LTG: DIORAMAS	1.0	1.4			0.6	SMOKE DAMPERS			0.6	20	1	50
51	20	1	0.8			LTG: DIORAMAS	1.0		0.8		0.0	SPARE				20	1	52
53	20	1				SPARE	0.0			0.0	0.0	SPARE				20	1	54
55	20	1				SPARE	0.0	0.0			0.0	SPARE				20	1	56
57	20	1				SPARE	0.0		0.0		0.0	SPARE				20	1	58
59	20	1				SPARE	0.0			0.0	0.0	SPARE				20	1	60
61	20	1				SPARE	0.0	0.0			0.0	SPARE				20	1	62
63	20	1				SPARE	0.0		0.0		0.0	SPARE				20	1	64
65	20	1				SPARE	0.0			0.0	0.0	SPARE				20	1	66
67	20	1				SPARE	0.0	0.0			0.0	SPARE				20	1	68
69	20	1				SPARE	0.0		0.0		0.0	SPARE				20	1	70
71	20	1				SPARE	0.0			0.0	0.0	SPARE				20	1	72
73	20	1				SPARE	0.0	0.0			0.0	SPARE				20	1	74
75	20	1				SPARE	0.0		0.0		0.0	SPARE				20	1	76
77	20	1				SPARE	0.0			0.0	0.0	SPARE				20	1	78
79	20	1				SPARE	0.0	0.0			0.0	SPARE				20	1	80
81	20	1				SPARE	0.0		0.0		0.0	SPARE				20	1	82
83	20	1				SPARE	0.0			0.0	0.0	SPARE				20	1	84

TOTALS: CONNECTED kVA PER PHASE 15 11 11 — CONNECTED TOTAL kVA 37
CONNECTED AMPS PER PHASE 121 93 91 — CONNECTED AVERAGE AMPS PER PHASE 102

NEC DIVERSIFIED LOAD CALCULATIONS
LIGHTING 8kVA @125% = 10 kVA — ALL OTHER LOADS @100% = 6 kVA — DIVERSIFIED TOTAL kVA = 33
RECEPTACLES 10kVA @100% = 10 kVA — 25% OF LARGEST MOTOR = 0 kVA — AVERAGE AMPS PER PHASE = 90
REMAINDER 12kVA @ 50% = 6 kVA

PANEL "4LB2"

VOLTS/PHASE/WIRE: 120/208 V, 3 PH 4 WIRE | PANEL SIZE & TYPE: 22" W x 6" D, BOLT–ON | MAIN SIZE & TYPE: 225 AMPERE MAIN LUGS | LOCATION: | CABINET: | NOTES:

ACCESSORIES: PANEL DIRECTORY, IDENTIFICATION, GROUNDING BAR, INSULATED GROUND BAR, SUBFEED LUGS

CKT NO	OCP AMP	OCP POLE	LOAD (kVA) LTG	CO	PWR	DESCRIPTION	LCL kVA	PHASE LOAD A	B	C	LCL kVA	DESCRIPTION	LOAD (kVA) LTG	CO	PWR	OCP AMP	POLE	CKT NO
1	20	1	0.9			LTG: WORK LIGHTS	1.1	2.0			1.3	LTG: EXHIBIT TRACK	1.1			20	1	2
3	20	1	0.7			LTG: WORK LIGHTS	0.9		1.5		1.0	LTG: EXHIBIT TRACK	0.8			20	1	4
5	20	1	0.6			LTG: WORK LIGHTS	0.8			1.5	1.1	LTG: EXHIBIT TRACK	0.9			20	1	6
7	20	1	1.4			LTG: EXHIBIT TRACK	1.7	2.3			1.1	LTG: EXHIBIT TRACK	0.9			20	1	8
9	20	1	1.4			LTG: EXHIBIT TRACK	1.7		1.5		0.1	LTG: DMD	0.1			20	1	10
11	20	1	1.2			LTG: EXHIBIT TRACK	1.5			1.2	0.0	SPARE				20	1	12
13	20	1	1.2			LTG: EXHIBIT TRACK	1.5	1.2			0.0	SPARE				20	1	14
15	20	1	0.5			LTG: EXHIBIT TRACK	0.6		0.5		0.0	SPARE				20	1	16
17	20	1	0.4			LTG: EXHIBIT TRACK	0.5			0.4	0.0	SPARE				20	1	18
19	20	1	0.8			LTG: EXHIBIT TRACK	1.0	0.8			0.0	SPARE				20	1	20
21	20	1	0.8			LTG: EXHIBIT TRACK	1.0		0.8		0.0	SPARE				20	1	22
23	20	1	0.8			LTG: EXHIBIT TRACK	1.0			0.8	0.0	SPARE				20	1	24
25	20	1	0.8			LTG: EXHIBIT TRACK	1.0	0.8			0.0	SPARE				20	1	26
27	20	1	1.1			LTG: EXHIBIT TRACK	1.4		1.1		0.0	SPARE				20	1	28
29	20	1	1.1			LTG: EXHIBIT TRACK	1.4			1.1	0.0	SPARE				20	1	30
31	20	1	1.4			LTG: EXHIBIT TRACK	1.8	1.4			0.0	SPARE				20	1	32
33	20	1	1.4			LTG: EXHIBIT TRACK	1.8		1.4		0.0	SPARE				20	1	34
35	20	1	0.9			LTG: EXHIBIT TRACK	1.1			0.9	0.0	SPARE				20	1	36
37	20	1	0.6			LTG: EXHIBIT TRACK	0.8	0.6			0.0	SPARE				20	1	38
39	20	1	1.6			LTG: EXHIBIT TRACK	2.0		1.6		0.0	SPARE				20	1	40
41	20	1	1.6			LTG: EXHIBIT TRACK	2.0			1.6	0.0	SPARE				20	1	42
43	20	1				SPARE	0.0	0.0			0.0	SPARE				20	1	44
45	20	1				SPARE	0.0		0.0		0.0	SPARE				20	1	46
47	20	1				SPARE	0.0			0.0	0.0	SPARE				20	1	48
49	20	1				SPARE	0.0	0.0			0.0	SPARE				20	1	50
51	20	1				SPARE	0.0		0.0		0.0	SPARE				20	1	52
53	20	1				SPARE	0.0			0.0	0.0	SPARE				20	1	54
55	20	1				SPARE	0.0	0.0			0.0	SPARE				20	1	56
57	20	1				SPARE	0.0		0.0		0.0	SPARE				20	1	58
59	20	1				SPARE	0.0			0.0	0.0	SPARE				20	1	60
61	20	1				SPARE	0.0	0.0			0.0	SPARE				20	1	62
63	20	1				SPARE	0.0		0.0		0.0	SPARE				20	1	64
65	20	1				SPARE	0.0			0.0	0.0	SPARE				20	1	66
67	20	1				SPARE	0.0	0.0			0.0	SPARE				20	1	68
69	20	1				SPARE	0.0		0.0		0.0	SPARE				20	1	70
71	20	1				SPARE	0.0			0.0	0.0	SPARE				20	1	72
73	20	1				SPARE	0.0	0.0			0.0	SPARE				20	1	74
75	20	1				SPARE	0.0		0.0		0.0	SPARE				20	1	76
77	20	1				SPARE	0.0			0.0	0.0	SPARE				20	1	78
79	20	1				SPARE	0.0	0.0			0.0	SPARE				20	1	80
81	20	1				SPARE	0.0		0.0		0.0	SPARE				20	1	82
83	20	1				SPARE	0.0			0.0	0.0	SPARE				20	1	84

TOTALS: CONNECTED kVA PER PHASE 9 8 7 — CONNECTED TOTAL kVA 25
CONNECTED AMPS PER PHASE 75 70 62 — CONNECTED AVERAGE AMPS PER PHASE 69

NEC DIVERSIFIED LOAD CALCULATIONS
LIGHTING 25kVA @125% = 31 kVA — ALL OTHER LOADS @100% = 0 kVA — DIVERSIFIED TOTAL kVA = 31
RECEPTACLES 0kVA @100% = 0 kVA — 25% OF LARGEST MOTOR = 0 kVA — AVERAGE AMPS PER PHASE = 86
REMAINDER 0kVA @ 50% = 0 kVA

PANEL "5LA1"

VOLTS/PHASE/WIRE: 120/208 V, 3 PH 4 WIRE | PANEL SIZE & TYPE: 22" W x 6" D, BOLT–ON | MAIN SIZE & TYPE: 225 AMPERE MAIN LUGS | LOCATION: | CABINET: | NOTES:

ACCESSORIES: PANEL DIRECTORY, IDENTIFICATION, GROUNDING BAR, INSULATED GROUND BAR, SUBFEED LUGS

CKT NO	OCP AMP	OCP POLE	LOAD (kVA) LTG	CO	PWR	DESCRIPTION	LCL kVA	PHASE LOAD A	B	C	LCL kVA	DESCRIPTION	LOAD (kVA) LTG	CO	PWR	OCP AMP	POLE	CKT NO
1	20	1		1.1		CONFERENCE 5201D CO'S	1.1	2.0			0.9	OPEN AREA 5121 CO'S		0.9		20	1	2
3	20	1		0.8		SM. MTG/SM. CONF CO'S	0.8		1.6		0.8	OPEN AREA 5121 CO'S		0.8		20	1	4
5	20	1		0.9		CONFERENCE 5103C CO'S	0.9			1.7	0.8	OPEN AREA 5121 CO'S		0.8		20	1	6
7	20	1		0.4		OPEN AREA 5121 FLR BOX	0.4	1.2			0.8	OPEN OFFICE 5201 CO'S		0.8		20	1	8
9	20	1		0.4		OPEN AREA 5121 FLR BOX	0.4		1.2		0.8	OPEN OFFICE 5201 CO'S		0.8		20	1	10
11	20	1		0.4		OPEN AREA 5121 FLR BOX	0.4			1.2	0.8	OPEN OFFICE 5201 CO'S		0.8		20	1	12
13	20	1		0.2		OPEN OFFICE 5201 CO'S	0.2	1.0			0.8	OPEN OFFICE 5201 CO'S		0.8		20	1	14
15	20	1		0.4		OPEN OFFICE 5201 CO'S	0.4		0.8		0.4	OPEN OFFICE 5201 FLR BOX		0.4		20	1	16
17	20	1		0.4		OPEN OFFICE 5201 CO'S	0.4			1.2	0.8	CONFERENCE 5103 CO'S		0.8		20	1	18
19	20	1		0.2		MAIL/COPY 5201A CO'S	0.2	1.0			0.8	MTG. ROOM 5103B CO'S		0.8		20	1	20
21	20	1		0.4		MAIL/COPY 5201A CO'S	0.4		0.4		0.0	SPARE				20	1	22
23	20	1		0.9		OPEN AREA 5121 CO'S	0.9			0.9	0.0	SPARE				20	1	24
25	20	1		0.4		WOMEN'S/MEN'S CO'S	0.4	0.4			0.0	SPARE				20	1	26
27	20	1			1.2	DRINKING FOUNTAINS	1.2		1.6		0.4	WAITING 5001 OUTLETS		0.4		20	1	28
29	20	1		0.8		ELEV. LOBBY OUTLETS	0.8			1.4	0.6	WC 5001D/E/F CO'S		0.6		20	1	30
31	20	1		0.8		OPEN OFFICE 5103 CO'S	0.8	1.7			0.9	WAITING 5001 OUTLETS		0.9		20	1	32
33	20	1		0.8		OPEN OFFICE 5103 CO'S	0.8		2.0		1.2	DRINKING FOUNTAINS			1.2	20	1	34
35	20	1		0.8		OPEN OFFICE 5103 CO'S	0.8			1.7	0.9	HALLWAY 5001M CO'S		0.9		20	1	36
37	20	1		0.2		OPEN OFFICE 5103 FLR BOX	0.2	1.0			0.8	STAFF LOUNGE/KIT 5103D		0.8		20	1	38
39	20	1		0.4		OPEN OFFICE 5103 FLR BOX	0.4		1.0		0.6	STAFF LOUNGE/KIT 5103D		0.6		20	1	40
41	20	1		0.4		OPEN OFFICE 5103 FLR BOX	0.4			1.3	0.9	OPEN OFFICE 5103 CO'S		0.9		20	1	42
43	20	1		0.8		OPEN OFFICE 5103 CO'S	0.8	1.4			0.6	OPEN OFFICE 5103 FLR BOX		0.6		20	1	44
45	20	1		0.8		OPEN OFFICE 5103 CO'S	0.8		1.2		0.4	OPEN OFFICE 5103 FLR BOX		0.4		20	1	46
47	20	1		0.8		OPEN OFFICE 5103 CO'S	0.8			1.2	0.4	OPEN OFFICE 5103 FLR BOX		0.4		20	1	48
49	20	1		0.4		STAFF LOUNGE CO'S	0.4	0.4			0.0	SPARE				20	1	50
51	20	1				SPARE	0.0		0.0		0.0	SPARE				20	1	52
53	20	1				SPARE	0.0			0.2	0.2	BREAK ROOM OUTLET		0.2		20	1	54
55	20	1		0.2		BREAK ROOM OUTLET	0.2	0.4			0.2	BREAK ROOM OUTLET		0.2		20	1	56
57	20	1		0.2		BREAK ROOM OUTLET	0.2		0.4		0.2	BREAK ROOM OUTLET		0.2		20	1	58
59	20	1		0.2		BREAK ROOM OUTLET	0.2			0.7	0.5	CONF 5103A PROJECTOR		0.5		20	1	60
61	20	1		0.2		BREAK ROOM OUTLET	0.2	0.2			0.0	SPARE				20	1	62
63	20	1		0.2		BREAK ROOM OUTLET	0.2		0.2		0.0	SPARE				20	1	64
65	20	1		0.2		BREAK ROOM OUTLET	0.2			0.2	0.0	SPARE				20	1	66
67	20	1				SPARE	0.0	0.0			0.0	SPARE				20	1	68
69	20	1				SPARE	0.0		0.0		0.0	SPARE				20	1	70
71	20	1				SPARE	0.0			0.0	0.0	SPARE				20	1	72
73	20	1				SPARE	0.0	0.0			0.0	SPARE				20	1	74
75	20	1				SPARE	0.0		0.0		0.0	SPARE				20	1	76
77	20	1				SPARE	0.0			0.0	0.0	SPARE				20	1	78
79	20	1				SPARE	0.0	0.0			0.0	SPARE				20	1	80
81	20	1				SPARE	0.0		0.0		0.0	SPARE				20	1	82
83	20	1				SPARE	0.0			0.0	0.0	SPARE				20	1	84

TOTALS: CONNECTED kVA PER PHASE 11 10 12 — CONNECTED TOTAL kVA 33
CONNECTED AMPS PER PHASE 89 87 98 — CONNECTED AVERAGE AMPS PER PHASE 91

NEC DIVERSIFIED LOAD CALCULATIONS
LIGHTING 0kVA @125% = 0 kVA — ALL OTHER LOADS @100% = 2 kVA — DIVERSIFIED TOTAL kVA = 23
RECEPTACLES 10kVA @100% = 10 kVA — 25% OF LARGEST MOTOR = 0 kVA — AVERAGE AMPS PER PHASE = 63
REMAINDER 20kVA @ 50% = 10 kVA

PANEL "5LA2"

VOLTS/PHASE/WIRE: 120/208 V, 3 PH 4 WIRE | PANEL SIZE & TYPE: 22" W x 6" D, BOLT–ON | MAIN SIZE & TYPE: 225 AMPERE MAIN LUGS | LOCATION: | CABINET: | NOTES:

ACCESSORIES: PANEL DIRECTORY, IDENTIFICATION, GROUNDING BAR, INSULATED GROUND BAR, SUBFEED LUGS

CKT NO	OCP AMP	OCP POLE	LOAD (kVA) LTG	CO	PWR	DESCRIPTION	LCL kVA	PHASE LOAD A	B	C	LCL kVA	DESCRIPTION	LOAD (kVA) LTG	CO	PWR	OCP AMP	POLE	CKT NO
1	20	1			0.6	SMOKE DAMPERS	0.6	0.8			0.3	LTG: KITCHEN	0.2			20	1	2
3	20	1			0.1	FIRE SPRINK. TEST PUMP	0.1		0.1		0.0	SPARE				20	1	4
5	20	1			0.1	FIRE SPRINK. TEST PUMP	0.1			0.1	0.0	SPARE				20	1	6
7	20	1			0.5	BMS CONTROL XFMR	0.5	0.5			0.0	SPARE				20	1	8
9	20	1			0.5	BMS CONTROL XFMR	0.5		0.5		0.0	SPARE				20	1	10
11	20	1			0.5	BMS CONTROL XFMR	0.5			0.5	0.0	SPARE				20	1	12
13	20	1			0.5	BMS CONTROL XFMR	0.5	0.5			0.0	SPARE				20	1	14
15	20	1				SPARE	0.0		0.0		0.0	SPARE				20	1	16
17	20	1				SPARE	0.0			0.0	0.0	SPARE				20	1	18
19	20	1				SPARE	0.0	0.0			0.0	SPARE				20	1	20
21	20	1				SPARE	0.0		0.0		0.0	SPARE				20	1	22
23	20	1				SPARE	0.0			0.0	0.0	SPARE				20	1	24
25	20	1				SPARE	0.0	0.0			0.0	SPARE				20	1	26
27	20	1				SPARE	0.0		0.0		0.0	SPARE				20	1	28
29	20	1				SPARE	0.0			0.0	0.0	SPARE				20	1	30
31	20	1				SPARE	0.0	0.0			0.0	SPARE				20	1	32
33	20	1				SPARE	0.0		0.0		0.0	SPARE				20	1	34
35	20	1				SPARE	0.0			0.0	0.0	SPARE				20	1	36
37	20	1				SPARE	0.0	0.0			0.0	SPARE				20	1	38
39	20	1				SPARE	0.0		0.0		0.0	SPARE				20	1	40
41	20	1				SPARE	0.0			0.0	0.0	SPARE				20	1	42

TOTALS: CONNECTED kVA PER PHASE 2 1 1 — CONNECTED TOTAL kVA 3
CONNECTED AMPS PER PHASE 15 5 5 — CONNECTED AVERAGE AMPS PER PHASE 8

NEC DIVERSIFIED LOAD CALCULATIONS
LIGHTING 0kVA @125% = 0 kVA — ALL OTHER LOADS @100% = 3 kVA — DIVERSIFIED TOTAL kVA = 3
RECEPTACLES 0kVA @100% = 0 kVA — 25% OF LARGEST MOTOR = 0 kVA — AVERAGE AMPS PER PHASE = 9
REMAINDER 0kVA @ 50% = 0 kVA

PANEL "5LB1"

VOLTS/PHASE/WIRE: 120/208 V, 3 PH 4 WIRE | PANEL SIZE & TYPE: 22" W x 6" D, BOLT–ON | MAIN SIZE & TYPE: 225 AMPERE MAIN LUGS | LOCATION: | CABINET: | NOTES:

ACCESSORIES: PANEL DIRECTORY, IDENTIFICATION, GROUNDING BAR, INSULATED GROUND BAR, SUBFEED LUGS

CKT NO	OCP AMP	OCP POLE	LOAD (kVA) LTG	CO	PWR	DESCRIPTION	LCL kVA	PHASE LOAD A	B	C	LCL kVA	DESCRIPTION	LOAD (kVA) LTG	CO	PWR	OCP AMP	POLE	CKT NO
1	20	1		1.2		CO: SKY LOUNGE	1.2	1.4			0.2	CO: SKY LOUNGE FB		0.2		20	1	2
3	20	1		1.2		CO: SKY LOUNGE	1.2		1.3		0.1	LTG: SKY LOUNGE FB	0.1			20	1	4
5	20	1		1.2		CO: SKY LOUNGE	1.2			2.1	0.9	PWR: SKY LOUNGE PROJ.			0.9	20	1	6
7	20	1		1.2		CO: SKY LOUNGE	1.2	1.7			0.5	PWR: HELIOSCOPE			0.5	20	1	8
9	20	1		0.8		CO: OUTDOOR WP	0.8		1.2		0.4	CO: SKY LOUNGE FB		0.4		20	1	10
11	20	1		0.4		CO: WEATHER EQUIP	0.4			0.6	0.2	PWR: WEATHER EQUIP			0.2	20	1	12
13	20	1		0.4		CO: FUTURES FORUM	0.4	0.8			0.4	CO: FUTURES FORUM FB		0.4		20	1	14
15	20	1		0.4		CO: FUTURES FORUM	0.4		0.8		0.4	CO: FUTURES FORUM FB		0.4		20	1	16
17	20	1		1.0		CO: FUTURES FORUM	1.0			1.4	0.4	CO: FUTURES FORUM FB		0.4		20	1	18
19	20	1		0.8		CO: FUTURES FORUM	0.8	1.2			0.4	CO: FUTURES FORUM FB		0.4		20	1	20
21	20	1		0.6		CO: FUTURES FORUM	0.6		1.5		0.9	PWR: FUT. FORUM PROJ.			0.9	20	1	22
23	20	1		0.8		CO: FUTURES FORUM	0.8			1.7	0.9	PWR: FUT. FORUM PROJ.			0.9	20	1	24
25	20	1		0.6		CO: MECHANICAL PENT.	0.6	0.8			0.2	CO: NATIVE VOICES FB		0.2		20	1	26
27	20	1		0.8		CO: NATIVE VOICES FOYER	0.8		1.0		0.2	CO: NATIVE VOICES FB		0.2		20	1	28
29	20	1		0.6		CO: NATIVE VOICES	0.6			1.6	1.2	LTG: NATIVE VOICES FB	1.0			20	1	30
31	20	1		0.6		CO: NATIVE VOICES	0.6	1.0			0.4	CO: NATIVE VOICES FB		0.4		20	1	32
33	20	1		0.6		CO: NATIVE VOICES	0.6		1.7		1.3	LTG: NATIVE VOICES FB	1.1			20	1	34
35	20	1		0.4		CO: OUTDOOR WP	0.4			0.8	0.4	CO: NATIVE VOICES FB		0.4		20	1	36
37	20	1		0.4		CO: NATIVE VOICES	0.4	1.5			1.3	LTG: NATIVE VOICES FB	1.1			20	1	38
39	20	1		0.4		CO: NATIVE VOICES JB	0.4		0.8		0.4	CO: NATIVE VOICES FB		0.4		20	1	40
41	20	1		0.6		CO: NATIVE VOICES JB	0.6			1.7	1.3	LTG: NATIVE VOICES FB	1.1			20	1	42
43	20	1		0.4		CO: KITCHEN	0.4	0.9			0.5	WEATHER POLE			0.5	20	1	44
45	20	1		0.2		CO: KITCHEN	0.2		0.7		0.5	WEATHER POLE			0.5	20	1	46
47	20	1		0.2		CO: KITCHEN	0.2			0.7	0.5	ELEC SHADES SKY LOUNGE			0.5	20	1	48
49	20	1			0.5	PWR: FRIDGE	0.5	1.0			0.5	ELEC SHADES SKY LOUNGE			0.5	20	1	50
51	20	1		0.2		CO: KITCHEN	0.2		0.7		0.5	ELEC SHADES FORUM			0.5	20	1	52
53	20	1		0.2		CO: KITCHEN	0.2			0.7	0.5	ELEC SHADES FORUM			0.5	20	1	54
55	20	1		0.2		CO: KITCHEN	0.2	0.7			0.5	WEATHER POLE			0.5	20	1	56
57	20	1		0.2		CO: KITCHEN	0.2		0.7		0.5	WEATHER POLE			0.5	20	1	58
59	20	1		0.2		CO: KITCHEN	0.2			0.7	0.5	FUTURES FORUM AV CAB.		0.5		20	1	60
61	20	1			0.5	PWR: DISPOSAL	0.5	1.0			0.5	FUTURES FORUM AV CAB.		0.5		20	1	62
63	20	1		0.2		CO: KITCHEN	0.2		0.7		0.5	FUTURES FORUM PROJ.		0.5		20	1	64
65	20	1		0.2		CO: KITCHEN	0.2			0.7	0.5	FUTURES FORUM PROJ.		0.5		20	1	66
67	20	1		0.2		CO: KITCHEN	0.2	0.7			0.5	PWR: NATIVE VOI. AV MON			0.5	20	1	68
69	20	1		0.2		CO: KITCHEN	0.2		1.4		1.2	PWR: NATIVE VOI. AV MON			1.2	20	1	70
71	20	1				SPARE	0.0			1.2	1.2	PWR: NATIVE VOI. AV MON			1.2	20	1	72
73	20	1				SPARE	0.0	0.6			0.6	PWR: NATIVE VOI. AV MON			0.6	20	1	74
75	20	1				SPARE	0.0		0.0		0.0	SPARE				20	1	76
77	20	1				SPARE	0.0			0.0	0.0	SPARE				20	1	78
79	20	1				SPARE	0.0	0.0			0.0	SPARE				20	1	80
81	20	1				SPARE	0.0		0.0		0.0	SPARE				20	1	82
83	20	1				SPARE	0.0			0.0	0.0	SPARE				20	1	84

TOTALS: CONNECTED kVA PER PHASE 13 12 14 — CONNECTED TOTAL kVA 40
CONNECTED AMPS PER PHASE 110 104 115 — CONNECTED AVERAGE AMPS PER PHASE 110

NEC DIVERSIFIED LOAD CALCULATIONS
LIGHTING 4kVA @125% = 5 kVA — ALL OTHER LOADS @100% = 12 kVA — DIVERSIFIED TOTAL kVA = 34
RECEPTACLES 10kVA @100% = 10 kVA — 25% OF LARGEST MOTOR = 0 kVA — AVERAGE AMPS PER PHASE = 94
REMAINDER 13kVA @ 50% = 7 kVA

PANEL "5LB2"

VOLTS/PHASE/WIRE: 120/208 V, 3 PH 4 WIRE | PANEL SIZE & TYPE: 22" W x 6" D, BOLT–ON | MAIN SIZE & TYPE: 225 AMPERE MAIN LUGS | LOCATION: | CABINET: | NOTES:

ACCESSORIES: PANEL DIRECTORY, IDENTIFICATION, GROUNDING BAR, INSULATED GROUND BAR, SUBFEED LUGS

CKT NO	OCP AMP	OCP POLE	LOAD (kVA) LTG	CO	PWR	DESCRIPTION	LCL kVA	PHASE LOAD A	B	C	LCL kVA	DESCRIPTION	LOAD (kVA) LTG	CO	PWR	OCP AMP	POLE	CKT NO
1	20	1	0.6			LTG: SKY LOUNGE WORK	0.8	1.4			1.0	LTG: SKY PENDANTS	0.8			20	1	2
3	20	1	1.5			LTG: SKY LOUNGE TRACK	1.9		1.5		0.0	SPARE				20	1	4
5	20	1	1.3			LTG: SKY LOUNGE TRACK	1.6			1.3	0.0	SPARE				20	1	6
7	20	1	1.3			LTG: SKY LOUNGE TRACK	1.6	1.3			0.0	SPARE				20	1	8
9	20	1				SPARE	0.0		0.0		0.0	SPARE				20	1	10
11	20	1				SPARE	0.0			0.0	0.0	SPARE				20	1	12
13	20	1				SPARE	0.0	0.2			0.3	LTG: FUTURES FORUM DME	0.2			20	1	14
15	20	1				SPARE	0.0		0.3		0.3	SMOKE DAMPERS			0.3	20	1	16
17	20	1	1.5			LTG: CANYON TWIST–LOCK	1.9			2.5	1.3	LTG: SKY CASES	1.0			20	1	18
19	20	1	1.5			LTG: CANYON TWIST–LOCK	1.9	2.0			0.6	LTG: SKY CASES	0.5			20	1	20
21	20	1	1.5			LTG: CANYON TWIST–LOCK	1.9		2.0		0.5	PWR: SKY AV MONITOR			0.5	20	1	22
23	20	1	1.5			LTG: CANYON TWIST–LOCK	1.9			1.5	0.0	SPARE				20	1	24
25	20	1			0.5	BMS CONTROL XFMR	0.5	0.5			0.0	SPARE				20	1	26
27	20	1			0.5	BMS CONTROL XFMR	0.5		0.5		0.0	SPARE				20	1	28
29	20	1			0.5	BMS CONTROL XFMR	0.5			0.5	0.0	SPARE				20	1	30
31	20	1				SPARE	0.0	0.0			0.0	SPARE				20	1	32
33	20	1				SPARE	0.0		0.0		0.0	SPARE				20	1	34
35	20	1				SPARE	0.0			0.0	0.0	SPARE				20	1	36
37	20	1				SPARE	0.0	0.0			0.0	SPARE				20	1	38
39	20	1				SPARE	0.0		0.0		0.0	SPARE				20	1	40
41	20	1				SPARE	0.0			0.0	0.0	SPARE				20	1	42
43	20	1				SPARE	0.0	0.0			0.0	SPARE				20	1	44
45	20	1				SPARE	0.0		0.0		0.0	SPARE				20	1	46
47	20	1				SPARE	0.0			0.0	0.0	SPARE				20	1	48
49	20	1				SPARE	0.0	0.0			0.0	SPARE				20	1	50
51	20	1				SPARE	0.0		0.0		0.0	SPARE				20	1	52
53	20	1				SPARE	0.0			0.0	0.0	SPARE				20	1	54
55	20	1				SPARE	0.0	0.0			0.0	SPARE				20	1	56
57	20	1				SPARE	0.0		0.0		0.0	SPARE				20	1	58
59	20	1				SPARE	0.0			0.0	0.0	SPARE				20	1	60
61	20	1				SPARE	0.0	0.0			0.0	SPARE				20	1	62
63	20	1				SPARE	0.0		0.0		0.0	SPARE				20	1	64
65	20	1				SPARE	0.0			0.0	0.0	SPARE				20	1	66
67	20	1				SPARE	0.0	0.0			0.0	SPARE				20	1	68
69	20	1				SPARE	0.0		0.0		0.0	SPARE				20	1	70
71	20	1				SPARE	0.0			0.0	0.0	SPARE				20	1	72
73	20	1				SPARE	0.0	0.0			0.0	SPARE				20	1	74
75	20	1				SPARE	0.0		0.0		0.0	SPARE				20	1	76
77	20	1				SPARE	0.0			0.0	0.0	SPARE				20	1	78
79	20	1				SPARE	0.0	0.0			0.0	SPARE				20	1	80
81	20	1				SPARE	0.0		0.0		0.0	SPARE				20	1	82
83	20	1				SPARE	0.0			0.0	0.0	SPARE				20	1	84

TOTALS: CONNECTED kVA PER PHASE 5 4 6 — CONNECTED TOTAL kVA 15
CONNECTED AMPS PER PHASE 45 36 48 — CONNECTED AVERAGE AMPS PER PHASE 43

NEC DIVERSIFIED LOAD CALCULATIONS
LIGHTING 13kVA @125% = 16 kVA — ALL OTHER LOADS @100% = 2 kVA — DIVERSIFIED TOTAL kVA = 19
RECEPTACLES 0kVA @100% = 0 kVA — 25% OF LARGEST MOTOR = 0 kVA — AVERAGE AMPS PER PHASE = 52
REMAINDER 0kVA @ 50% = 0 kVA

PANEL "5QLA"

VOLTS/PHASE/WIRE: 120/208 V, 3 PH 4 WIRE | PANEL SIZE & TYPE: 22" W x 6" D, BOLT–ON | MAIN SIZE & TYPE: 225 AMPERE MAIN LUGS | LOCATION: | CABINET: | NOTES:

ACCESSORIES: PANEL DIRECTORY, IDENTIFICATION, GROUNDING BAR, INSULATED GROUND BAR, SUBFEED LUGS

CKT NO	OCP AMP	OCP POLE	LOAD (kVA) LTG	CO	PWR	DESCRIPTION	LCL kVA	PHASE LOAD A	B	C	LCL kVA	DESCRIPTION	LOAD (kVA) LTG	CO	PWR	OCP AMP	POLE	CKT NO
1	20	1		0.2		GENETICS OUTLET	0.2	0.4			0.2	GENETICS OUTLET		0.2		20	1	2
3	20	1		0.2		GENETICS OUTLET	0.2		0.4		0.2	EM EYEWASH ALARM			0.2	20	1	4
5	20	1		0.2		GENETICS OUTLET	0.2			0.4	0.2	GENETICS OUTLET		0.2		20	1	6
7	20	1		0.2		GENETICS OUTLET	0.2	2.6			2.4	REMOTE COND UNIT			2.4	30	3	8
9	20	1		0.2		ROOM 4102A OUTLET	0.2		2.6		2.4	–			2.4	–	–	10
11	20	1		0.2		ROOM 4102A OUTLET	0.2			2.6	2.4	–			2.4	–	–	12
13	20	1			0.5	COLD ROOM EQUIPMENT	0.5	0.7			0.2	GENETICS OUTLET		0.2		20	1	14
15	20	1			0.1	ROOM 4102A PWR	0.1		0.3		0.2	FC–13			0.2	20	1	16
17	20	1		0.2		GENETICS OUTLET	0.2			0.4	0.2	FC–121			0.2	20	1	18
19	20	1			0.5	BMS CONTROL XFMR	0.5	1.3			0.8	4TH FL TELE/DATA RM CO'S		0.8		20	1	20
21	20	1				SECURITY DOOR POWER	0.0		0.8		0.8	4TH FL TELE/DATA RM CO'S		0.8		20	1	22
23	20	1				SPARE	0.0			0.8	0.8	4TH FL TELE/DATA RM CO'S		0.8		20	1	24
25	20	1				SPARE	0.0	0.8			0.8	5th FL TELE/DATA RM CO'S		0.8		20	1	26
27	20	1				SPARE	0.0		0.8		0.8	5th FL TELE/DATA RM CO'S		0.8		20	1	28
29	20	1				SPARE	0.0			0.8	0.8	5th FL TELE/DATA RM CO'S		0.8		20	1	30
31	20	1				SPARE	0.0	0.5			0.5	SECURITY POWER–LEVEL 4			0.5	20	1	32
33	20	1				SPARE	0.0		0.5		0.5	SECURITY POWER–LEVEL 4			0.5	20	1	34
35	20	1				SPARE	0.0			0.5	0.5	SECURITY POWER–LEVEL 5			0.5	20	1	36
37	20	1				SPARE	0.0	0.5			0.5	SECURITY POWER–LEVEL 5			0.5	20	1	38
39	20	1				SPARE	0.0		0.5		0.5	SECURITY POWER–LEVEL 6			0.5	20	1	40
41	20	1				SPARE	0.0			0.5	0.5	SECURITY POWER–LEVEL 6			0.5	20	1	42
43	20	2				LAB 4142 208V OUTLET	0.0	0.2			0.2	LAB 4142 OUTLETS		0.2		20	1	44
45	–	–				–	0.0		0.2		0.2	LAB 4142 OUTLETS		0.2		20	1	46
47	20	2				LAB 4142 208V OUTLET	0.0			0.2	0.2	LAB 4142 OUTLETS		0.2		20	1	48
49	–	–				–	0.0	0.0			0.0	SPARE				20	1	50
51	20	1				SPARE	0.0		0.0		0.0	SPARE				20	1	52
53	20	1				SPARE	0.0			0.0	0.0	SPARE				20	1	54
55	20	1				SPARE	0.0	0.0			0.0	SPARE				20	1	56
57	20	1				SPARE	0.0		0.0		0.0	SPARE				20	1	58
59	20	1				SPARE	0.0			0.0	0.0	SPARE				20	1	60
61	20	1				SPARE	0.0	0.0			0.0	SPARE				20	1	62
63	20	1				SPARE	0.0		0.0		0.0	SPARE				20	1	64
65	20	1				SPARE	0.0			0.0	0.0	SPARE				20	1	66
67	20	1				SPARE	0.0	0.0			0.0	SPARE				20	1	68
69	20	1				SPARE	0.0		0.0		0.0	SPARE				20	1	70
71	20	1				SPARE	0.0			0.0	0.0	SPARE				20	1	72
73	20	1				SPARE	0.0	0.0			0.0	SPARE				20	1	74
75	20	1				SPARE	0.0		0.0		0.0	SPARE				20	1	76
77	20	1				SPARE	0.0			0.0	0.0	SPARE				20	1	78
79	20	1				SPARE	0.0	0.0			0.0	SPARE				20	1	80
81	20	1				SPARE	0.0		0.0		0.0	SPARE				20	1	82
83	20	1				SPARE	0.0			0.0	0.0	SPARE				20	1	84

TOTALS: CONNECTED kVA PER PHASE 7 6 6 — CONNECTED TOTAL kVA 19
CONNECTED AMPS PER PHASE 58 51 52 — CONNECTED AVERAGE AMPS PER PHASE 54

NEC DIVERSIFIED LOAD CALCULATIONS
LIGHTING 0kVA @125% = 0 kVA — ALL OTHER LOADS @100% = 12 kVA — DIVERSIFIED TOTAL kVA = 19
RECEPTACLES 7kVA @100% = 7 kVA — 25% OF LARGEST MOTOR = 0 kVA — AVERAGE AMPS PER PHASE = 54
REMAINDER 0kVA @ 50% = 0 kVA

PANEL "6LA1"

VOLTS/PHASE/WIRE: 120/208 V, 3 PH 4 WIRE | PANEL SIZE & TYPE: 22" W x 6" D, BOLT–ON | MAIN SIZE & TYPE: 100 AMPERE MAIN LUGS | LOCATION: | CABINET: | NOTES:

ACCESSORIES: PANEL DIRECTORY, IDENTIFICATION, GROUNDING BAR, INSULATED GROUND BAR, SUBFEED LUGS

CKT NO	OCP AMP	OCP POLE	LOAD (kVA) LTG	CO	PWR	DESCRIPTION	LCL kVA	PHASE LOAD A	B	C	LCL kVA	DESCRIPTION	LOAD (kVA) LTG	CO	PWR	OCP AMP	POLE	CKT NO
1	20	1				SPARE	0.0	0.8			0.8	PENTHOUSE OUTLETS		0.8		20	1	2
3	20	1			0.2	BOILER CONTROL	0.2		1.0		0.8	PENTHOUSE OUTLETS		0.8		20	1	4
5	20	1		0.8		BIOLER RM CO'S	0.8			1.8	1.0	PENTHOUSE OUTLETS		1.0		20	1	6
7	20	1		0.6		BIOLER RM CO'S	0.6	1.4			0.8	PENTHOUSE OUTLETS		0.8		20	1	8
9	20	1		0.6		BIOLER RM CO'S	0.6		1.4		0.8	PENTHOUSE OUTLETS		0.8		20	1	10
11	20	1			1.2	EF–18	1.2			2.0	0.8	PENTHOUSE OUTLETS		0.8		20	1	12
13	20	1				GLYCOL FILL	0.0	1.0			1.0	DCP–1 CIRC PUMP			1.0	20	3	14
15	20	1			0.2	WATER HEATER	0.2		1.2		1.0	–			1.0	–	–	16
17	20	1			0.2	WATER HEATER	0.2			1.2	1.0	–			1.0	–	–	18
19	20	1			0.5	IRRIGATION CONTROLLER	0.5	1.5			1.0	RAD–1			1.0	20	1	20
21	30	1			1.7	P–24	1.7		2.9		1.2	EF–1			1.2	20	1	22
23	20	1			0.6	SMOKE DAMPERS	0.6			0.6	0.0	SPARE				20	1	24
25	20	1			0.1	FIRE SPINK. TEST PUMP	0.1	0.1			0.0	SPARE				20	1	26
27	20	1				SPARE	0.0		0.0		0.0	SPARE				20	1	28
29	20	1				SPARE	0.0			0.0	0.0	SPARE				20	1	30
31	20	1				SPARE	0.0	0.0			0.0	SPARE				20	1	32
33	20	1				SPARE	0.0		0.0		0.0	SPARE				20	1	34
35	20	1				SPARE	0.0			0.0	0.0	SPARE				20	1	36
37	20	1				SPARE	0.0	0.0			0.0	SPARE				20	1	38
39	20	1				SPARE	0.0		0.0		0.0	SPARE				20	1	40
41	20	1				SPARE	0.0			0.0	0.0	SPARE				20	1	42

TOTALS: CONNECTED kVA PER PHASE 5 7 6 — CONNECTED TOTAL kVA 17
CONNECTED AMPS PER PHASE 40 54 47 — CONNECTED AVERAGE AMPS PER PHASE 47

NEC DIVERSIFIED LOAD CALCULATIONS
LIGHTING 0kVA @125% = 0 kVA — ALL OTHER LOADS @100% = 10 kVA — DIVERSIFIED TOTAL kVA = 17
RECEPTACLES 7kVA @100% = 7 kVA — 25% OF LARGEST MOTOR = 0 kVA — AVERAGE AMPS PER PHASE = 47
REMAINDER 0kVA @ 50% = 0 kVA

GENERAL SHEET NOTES

1. PROVIDE 200% NEUTRAL BUS AND LUG CAPACITY FOR ALL 120/208V PANELBOARDS.

Project Title

UTAH MUSEUM OF NATURAL HISTORY

UNIVERSITY OF UTAH
SALT LAKE CITY, UTAH

State of Utah
Department of Administrative Services
Division of Facilities Construction & Management
4110 State Office Building
Salt Lake City, Utah 84114
Phone: (801) 538 - 3018
Fax: (801) 538 - 3267
www.dfcm.utah.gov

PROJ. NO. 02243750

Owner
UMNH
1390 East President's Circle
Salt Lake City, Utah 84112
801.581.6927 tel

Design Architect
Polshek Partnership Architects LLP
320 West 13th Street
New York, New York
212.807.7171 tel

Architect of Record
GSBS
375 West 200 South
Salt Lake City, Utah
801.521.8600 tel

Structural Engineer
Leslie E. Robertson Associates
30 Broad Street
New York, New York 10004
212.750.9000 tel

Structural Engineer
Dunn Associates, Inc.
380 West 800 South, Suite 100
Salt Lake City, Utah 84101
801.575.8877 tel

Mechanical/Plumbing/Fire Protection Engineer
Colvin Engineering Associates, Inc.
244 West 300 North
Salt Lake City, Utah 84103
801.322.2400 tel

Electrical/AV Engineer
Spectrum Engineers
175 South Main Street
Salt Lake City, Utah 84111
800.678.7077 tel

Civil Engineer
Stantec
3995 South 700 East Suite 300
Salt Lake City, Utah 84107
801.261.0090 tel

Landscape Architects
Design Workshop
224 South 200 West
Salt Lake City, UT 84101
801.359.4771 tel

Exhibit Design
Ralph Appelbaum Associates
88 Pine Street
New York, New York 10005
212.334.8200

Key Plan

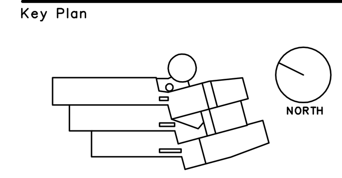

Seal

No.	Issue Name	Date
10	RFI 510	06/10/09
9	LIGHTING CHANGES	06/08/09
8	LEVEL ONE CHANGES	05/12/09
7	EXHIBIT POWER CHANGES	04/24/09
6	EQUIPMENT CHANGES	04/17/09
	CONFORMANCE SET	02/09/09
5	EXHIBIT & LTG CHANGES	12/19/08
4	CODE REVIEW	12/10/08
3	ADDENDUM #3	11/10/08
2	ADDENDUM #2	10/23/08
1	ADDENDUM #1	10/16/08
	CONSTRUCTION DOCUMENTS	09/30/08

Date 02/03/09 — Project No. 2004.076.00
Scale N.T.S. — PPA – 0423

Sheet Title
ELECTRICAL PANEL SCHEDULES

Sheet No.
EP–610

File Name: P:\2005\20050145\1Drawings\Sheet\45EP–610.dwg Last Plotted: 2009/06/18 @ 3:17 PM By: dlm
Copyright ? 2006 Polshek Partnership Architects, LLP

PANEL "3LB2"

VOLTS/PHASE/WIRE: 120/208 V, 3 PH 4 WIRE | PANEL SIZE & TYPE: 22" W x 6" D, BOLT–ON | MAIN SIZE & TYPE: 225 AMPERE MAIN LUGS | LOCATION: | CABINET: | NOTES:

ACCESSORIES: PANEL DIRECTORY, IDENTIFICATION, GROUNDING BAR, INSULATED GROUND BAR, SUBFEED LUGS

CKT	OCP		LOAD (kVA)			DESCRIPTION	LCL	PHASE LOAD			LCL	DESCRIPTION	LOAD (kVA)			OCP		CKT
NO	AMP	POLE	LTG	CO	PWR		kVA	A	B	C	kVA		LTG	CO	PWR	AMP	POLE	NO
1	20	1	1.5			LTG: TEMP CANYON REC.	1.9	3.0			1.9	LTG: TEMP CANYON REC.	1.5			20	1	2
3	20	1	1.5			LTG: TEMP CANYON REC.	1.9		3.0		1.9	LTG: TEMP CANYON REC.	1.5			20	1	4
5	20	1	1.5			LTG: TEMP CANYON REC.	1.9			3.0	1.9	LTG: TEMP CANYON REC.	1.5			20	1	6
7	20	1	1.5			LTG: TEMP CANYON REC.	1.9	3.0			1.9	LTG: TEMP CANYON REC.	1.5			20	1	8
9	20	1	1.5			LTG: TEMP CANYON REC.	1.9		2.3		0.8	CO: FIRST PEOPLES FB2		0.8		20	1	10
11	20	1	1.5			LTG: TEMP CANYON REC.	1.9			2.7	1.2	CO: FIRST PEOPLES FB2		1.2		20	1	12
13	20	1	1.5			LTG: TEMP CANYON REC.	1.9	2.5			1.0	PWR: LAND JB			1.0	20	1	14
15	20	1	1.5			LTG: TEMP CANYON REC.	1.9		2.0		0.5	PWR: LAND JB			0.5	20	1	16
17	20	1	1.5			LTG: TEMP CANYON REC.	1.9			1.9	0.4	CO: LAND FB		0.4		20	1	18
19	20	1	1.5			LTG: TEMP CANYON REC.	1.9	1.7			0.2	CO: EXPANSION INT.		0.2		20	1	20
21	20	1	1.5			LTG: TEMP CANYON REC.	1.9		1.9		0.4	PWR: EROSION TABLE PUMP			0.4	20	1	22
23	20	1	1.5			LTG: TEMP CANYON REC.	1.9			1.9	0.4	PWR: EARTHQUAKE SHAKER			0.4	20	2	24
25	20	1	1.5			LTG: TEMP CANYON REC.	1.9	1.9			0.4	–			0.4	–	–	26
27	20	1	1.5			LTG: TEMP CANYON REC.	1.9		1.5		0.0	SPARE				20	1	28
29	20	1	1.5			LTG: TEMP CANYON REC.	1.9			1.5	0.0	SPARE				20	1	30
31	20	1	1.5			LTG: TEMP CANYON REC.	1.9	1.5			0.0	SPARE				20	1	32
33	20	1	1.5			LTG: TEMP CANYON REC.	1.9		1.5		0.0	SPARE				20	1	34
35	20	1	1.5			LTG: TEMP CANYON REC.	1.9			1.5	0.0	SPARE				20	1	36
37	20	1	1.5			LTG: TEMP CANYON REC.	1.9	1.5			0.0	SPARE				20	1	38
39	20	1	1.5			LTG: TEMP CANYON REC.	1.9		1.5		0.0	SPARE				20	1	40
41	20	1		0.2		CO: FIRST PEOPLES FB	0.2			0.2	0.0	SPARE				20	1	42
43	20	1			0.5	ELEC SHADES –WEST	0.5	1.0			0.5	FC–17			0.5	20	1	44
45	20	1			0.5	ELEC SHADES –WEST	0.5		1.5		1.3	AH–2 LIGHTS	1.0			20	1	46
47	20	1			0.5	ELEC SHADES –WEST	0.5			0.7	0.2	SMF–1 ROOF OUTLET		0.2		20	1	48
49	20	1			0.5	ELEC SHADES –SOUTH	0.5	1.0			0.5	GLYCOL FILL STATION			0.5	20	1	50
51	20	1			0.5	ELEC SHADES –SOUTH	0.5		1.0		0.5	GLYCOL FILL STATION			0.5	20	1	52
53	20	1			0.5	ELEC SHADES –SOUTH	0.5			1.0	0.5	BMS CONTROL XFMR			0.5	20	1	54
55	20	1				SPARE	0.0	0.6			0.6	SMOKE DAMPERS			0.6	20	1	56
57	20	1				SPARE	0.0		0.0		0.0	SPARE				20	1	58
59	20	1				SPARE	0.0			0.0	0.0	SPARE				20	1	60
61	20	1				SPARE	0.0	0.0			0.0	SPARE				20	1	62
63	20	1				SPARE	0.0		0.0		0.0	SPARE				20	1	64
65	20	1				SPARE	0.0			0.0	0.0	SPARE				20	1	66
67	20	1				SPARE	0.0	0.0			0.0	SPARE				20	1	68
69	20	1				SPARE	0.0		0.0		0.0	SPARE				20	1	70
71	20	1				SPARE	0.0			0.0	0.0	SPARE				20	1	72
73	20	1				SPARE	0.0	0.0			0.0	SPARE				20	1	74
75	20	1				SPARE	0.0		0.0		0.0	SPARE				20	1	76
77	20	1				SPARE	0.0			0.0	0.0	SPARE				20	1	78
79	20	1				SPARE	0.0	0.0			0.0	SPARE				20	1	80
81	20	1				SPARE	0.0		0.0		0.0	SPARE				20	1	82
83	20	1				SPARE	0.0			0.0	0.0	SPARE				20	1	84

TOTALS: CONNECTED kVA PER PHASE 18 16 14 — CONNECTED TOTAL kVA 48
CONNECTED AMPS PER PHASE 148 135 120 — CONNECTED AVERAGE AMPS PER PHASE 134

NEC DIVERSIFIED LOAD CALCULATIONS
LIGHTING 37kVA @125% = 46 kVA — ALL OTHER LOADS @100% = 8 kVA — DIVERSIFIED TOTAL kVA = 58
RECEPTACLES 3kVA @100% = 3 kVA — 25% OF LARGEST MOTOR = 0 kVA — AVERAGE AMPS PER PHASE = 160
REMAINDER 0kVA @ 50% = 0 kVA — P

PANEL "3QLB"

VOLTS/PHASE/WIRE: 120/208 V, 3 PH 4 WIRE | PANEL SIZE & TYPE: 22" W x 6" D, BOLT–ON | MAIN SIZE & TYPE: 225 AMPERE MAIN CB | LOCATION: | CABINET: | NOTES:

ACCESSORIES: PANEL DIRECTORY, IDENTIFICATION, GROUNDING BAR, INSULATED GROUND BAR, SUBFEED LUGS

CKT	OCP		LOAD (kVA)			DESCRIPTION	LCL	PHASE LOAD			LCL	DESCRIPTION	LOAD (kVA)			OCP		CKT
NO	AMP	POLE	LTG	CO	PWR		kVA	A	B	C	kVA		LTG	CO	PWR	AMP	POLE	NO
1	20	1			0.5	FC–6	0.5	1.3			0.8	CO: TELE/DATA (2ND)		0.8		20	1	2
3	20	1			0.5	FC–7	0.5		1.3		0.8	CO: TELE/DATA (2ND)		0.8		20	1	4
5	20	1			0.5	FC–15	0.5			1.3	0.8	CO: TELE/DATA (2ND)		0.8		20	1	6
7	20	1			0.5	FC–14	0.5	1.3			0.8	CO: TELE/DATA (3RD)		0.8		20	1	8
9	20	1			0.5	FC–16	0.5		0.9		0.4	CO: TELE/DATA (3RD)		0.4		20	1	10
11	20	1	0.5			AH–3 LIGHTS	0.6			1.3	0.8	CO: TELE/DATA (3RD)		0.8		20	1	12
13	20	1		0.4		AH–3 OUTLETS	0.4	1.2			0.8	CO: TELE/DATA (4TH)		0.8		20	1	14
15	20	1				SPARE	0.0		0.8		0.8	CO: TELE/DATA (4TH)		0.8		20	1	16
17	20	1				SPARE	0.0			0.8	0.8	CO: TELE/DATA (4TH)		0.8		20	1	18
19	20	1			0.5	SECURITY POWER–LEVEL 2	0.5	1.3			0.8	CO: TELE/DATA (5TH)		0.8		20	1	20
21	20	1			0.5	SECURITY POWER–LEVEL 2	0.5		1.3		0.8	CO: TELE/DATA (5TH)		0.8		20	1	22
23	20	1			0.5	SECURITY POWER–LEVEL 3	0.5			1.7	1.2	CO: TELE/DATA (5TH)		1.2		20	1	24
25	20	1			0.5	SECURITY POWER–LEVEL 3	0.5	0.5			0.0	SPARE				20	1	26
27	20	1			0.5	SECURITY POWER–LEVEL 4	0.5		0.5		0.0	SPARE				20	1	28
29	20	1			0.5	SECURITY POWER–LEVEL 4	0.5			0.5	0.0	SPARE				20	1	30
31	20	1			0.5	SECURITY POWER–LEVEL 5	0.5	0.5			0.0	SPARE				20	1	32
33	20	1			0.5	SECURITY POWER–LEVEL 5	0.5		0.5		0.0	SPARE				20	1	34
35	20	1				SECURITY DOOR POWER	0.0			0.0	0.0	SPARE				20	1	36
37	20	1				SPARE	0.0	0.0			0.0	SPARE				20	1	38
39	20	1				SPARE	0.0		0.0		0.0	SPARE				20	1	40
41	20	1				SPARE	0.0			0.0	0.0	SPARE				20	1	42
43	20	1				SPARE	0.0	0.0			0.0	SPARE				20	1	44
45	20	1				SPARE	0.0		0.0		0.0	SPARE				20	1	46
47	20	1				SPARE	0.0			0.0	0.0	SPARE				20	1	48
49	20	1				SPARE	0.0	0.0			0.0	SPARE				20	1	50
51	20	1				SPARE	0.0		0.0		0.0	SPARE				20	1	52
53	20	1				SPARE	0.0			0.0	0.0	SPARE				20	1	54
55	20	1				SPARE	0.0	0.0			0.0	SPARE				20	1	56
57	20	1				SPARE	0.0		0.0		0.0	SPARE				20	1	58
59	20	1				SPARE	0.0			0.0	0.0	SPARE				20	1	60
61	20	1				SPARE	0.0	0.0			0.0	SPARE				20	1	62
63	20	1				SPARE	0.0		0.0		0.0	SPARE				20	1	64
65	20	1				SPARE	0.0			0.0	0.0	SPARE				20	1	66
67	20	1				SPARE	0.0	0.0			0.0	SPARE				20	1	68
69	20	1				SPARE	0.0		0.0		0.0	SPARE				20	1	70
71	20	1				SPARE	0.0			0.0	0.0	SPARE				20	1	72
73	20	1				SPARE	0.0	0.0			0.0	SPARE				20	1	74
75	20	1				SPARE	0.0		0.0		0.0	SPARE				20	1	76
77	20	1				SPARE	0.0			0.0	0.0	SPARE				20	1	78
79	20	1				SPARE	0.0	0.0			0.0	SPARE				20	1	80
81	20	1				SPARE	0.0		0.0		0.0	SPARE				20	1	82
83	20	1				SPARE	0.0			0.0	0.0	SPARE				20	1	84

TOTALS: CONNECTED kVA PER PHASE 6 5 6 — CONNECTED TOTAL kVA 17
CONNECTED AMPS PER PHASE 51 44 47 — CONNECTED AVERAGE AMPS PER PHASE 47

NEC DIVERSIFIED LOAD CALCULATIONS
LIGHTING 0kVA @125% = 1 kVA — ALL OTHER LOADS @100% = 7 kVA — DIVERSIFIED TOTAL kVA = 17
RECEPTACLES 10kVA @100% = 10 kVA — 25% OF LARGEST MOTOR = 0 kVA — AVERAGE AMPS PER PHASE = 47
REMAINDER 0kVA @ 50% = 0 kVA

PANEL "4LA1"

VOLTS/PHASE/WIRE: 120/208 V, 3 PH 4 WIRE | PANEL SIZE & TYPE: 22" W x 6" D, BOLT–ON | MAIN SIZE & TYPE: 225 AMPERE MAIN LUGS | LOCATION: | CABINET: | NOTES:

ACCESSORIES: PANEL DIRECTORY, IDENTIFICATION, GROUNDING BAR, INSULATED GROUND BAR, SUBFEED LUGS

CKT	OCP		LOAD (kVA)			DESCRIPTION	LCL	PHASE LOAD			LCL	DESCRIPTION	LOAD (kVA)			OCP		CKT
NO	AMP	POLE	LTG	CO	PWR		kVA	A	B	C	kVA		LTG	CO	PWR	AMP	POLE	NO
1	20	1		0.8		AREA 4119 OUTLETS	0.8	1.6			0.8	AREA 4129 OUTLETS		0.8		20	1	2
3	20	1		0.8		AREA 4119 OUTLETS	0.8		1.9		1.1	AREA 4129 OUTLETS		1.1		20	1	4
5	20	1		0.8		AREA 4119 OUTLETS	0.8			1.9	1.1	AREA 4129 OUTLETS		1.1		20	1	6
7	20	1		0.8		AREA 4137 OUTLETS	0.8	1.9			1.1	OFFICE 4149/4151 OUTLETS		1.1		20	1	8
9	20	1		0.6		OFFICE 4141 OUTLETS	0.6		1.4		0.8	AREA 4155 OUTLETS		0.8		20	1	10
11	20	1		1.1		OFFICE 4145/4147 OUTLETS	1.1			1.9	0.8	AREA 4155 OUTLETS		0.8		20	1	12
13	20	1		0.9		HALLWAY 4001 OUTLETS	0.9	1.5			0.6	WET LAB 4122 OUTLETS		0.6		20	1	14
15	20	1			1.2	DRINKING FOUNTAINS	1.2		1.8		0.6	WET LAB 4122 OUTLETS		0.6		20	1	16
17	20	1		1.1		HALLWAY 4001 OUTLETS	1.1			1.7	0.6	WET LAB 4122 OUTLETS		0.6		20	1	18
19	20	1		0.4		WET LAB 4122 OUTLETS	0.4	0.6			0.2	FUME HOOD			0.2	20	1	20
21	20	1		0.4		WET LAB 4122 OUTLETS	0.4		0.6		0.2	EMERGENCY EYEWASH			0.2	20	1	22
23	20	1		0.4		WET LAB 4122 OUTLETS	0.4			1.0	0.6	DRY LAB 4120 OUTLETS		0.6		20	1	24
25	20	1		0.6		DRY LAB 4120 OUTLETS	0.6	1.2			0.6	DRY LAB 4120 OUTLETS		0.6		20	1	26
27	20	1		0.6		DRY LAB 4120 OUTLETS	0.6		1.2		0.6	DRY LAB 4120 OUTLETS		0.6		20	1	28
29	20	1		0.6		DRY LAB 4120 OUTLETS	0.6			1.2	0.6	WORK AREA 4112 CO'S		0.6		20	1	30
31	20	1		0.6		WORK AREA 4114 OUTLETS	0.6	1.2			0.6	WORK AREA 4112 CO'S		0.6		20	1	32
33	20	1		0.6		WORK AREA 4114 OUTLETS	0.6		1.2		0.6	WORK AREA 4108 CO'S		0.6		20	1	34
35	20	1		0.6		WORK AREA 4114 OUTLETS	0.6			1.2	0.6	WORK AREA 4108 CO'S		0.6		20	1	36
37	20	1		0.6		WORK AREA 4108 OUTLETS	0.6	0.8			0.2	FUME HOOD			0.2	20	1	38
39	20	1		0.6		WORK AREA 4108 OUTLETS	0.6		1.2		0.6	AREA 4142 OUTLETS		0.6		20	1	40
41	20	1		0.6		WORK AREA 4108 OUTLETS	0.6			1.2	0.6	AREA 4142 OUTLETS		0.6		20	1	42
43	20	1		0.6		AREA 4142 OUTLETS	0.6	1.2			0.6	AREA 4142 OUTLETS		0.6		20	1	44
45	20	1		0.6		AREA 4142 OUTLETS	0.6		1.2		0.6	AREA 4142 OUTLETS		0.6		20	1	46
47	20	1		0.6		AREA 4142 OUTLETS	0.6			1.2	0.6	AREA 4142 OUTLETS		0.6		20	1	48
49	20	1		0.6		AREA 4142 OUTLETS	0.6	1.2			0.6	AREA 4142 OUTLETS		0.6		20	1	50
51	20	1		0.2		AREA 4142 OUTLETS	0.2		0.2		0.0	EF–19				20	1	52
53	20	1		0.2		AREA 4142 OUTLETS	0.2			0.2	0.0	EF–18				20	1	54
55	20	1		0.4		AREA 4142 OUTLETS	0.4	1.0			0.6	WOMEN'S/MEN'S 4000 CO'S		0.6		20	1	56
57	20	1		0.6		COLLECTIONS 4109 CO'S	0.6		1.8		1.2	DRINKING FOUNTAINS			1.2	20	1	58
59	20	1		0.8		COLLECTIONS 4109 CO'S	0.8			1.9	1.1	LOBBY 4000 OUTLETS		1.1		20	1	60
61	20	1		0.6		HUMAN REMAINS 4100A	0.6	1.2			0.6	LAB 4107 OUTLETS		0.6		20	1	62
63	20	1		0.8		COLLECTIONS 4100 CO'S	0.8		1.2		0.4	LAB 4107 OUTLETS		0.4		20	1	64
65	20	1		0.8		COLLECTIONS 4100 CO'S	0.8			1.2	0.4	LAB 4107 OUTLETS		0.4		20	1	66
67	20	1		0.8		COLLECTIONS 4109 CO'S	0.8	0.8			0.0	SPARE				20	1	68
69	20	2			0.5	AREA 4142 208V OUTLET	0.5		0.5		0.0	SPARE				20	1	70
71	–	–			0.5	–	0.5			0.5	0.0	SPARE				20	1	72
73	20	1				SPARE	0.0	0.0			0.0	SPARE				20	1	74
75	20	1				SPARE	0.0		0.0		0.0	SPARE				20	1	76
77	20	1				SPARE	0.0			0.0	0.0	SPARE				20	1	78
79	20	1				SPARE	0.0	0.0			0.0	SPARE				20	1	80
81	20	1				SPARE	0.0		0.0		0.0	SPARE				20	1	82
83	20	1				SPARE	0.0			0.0	0.0	SPARE				20	1	84

TOTALS: CONNECTED kVA PER PHASE 14 14 15 — CONNECTED TOTAL kVA 44
CONNECTED AMPS PER PHASE 118 118 126 — CONNECTED AVERAGE AMPS PER PHASE 121

NEC DIVERSIFIED LOAD CALCULATIONS
LIGHTING 0kVA @125% = 0 kVA — ALL OTHER LOADS @100% = 4 kVA — DIVERSIFIED TOTAL kVA = 29
RECEPTACLES 10kVA @100% = 10 kVA — 25% OF LARGEST MOTOR = 0 kVA — AVERAGE AMPS PER PHASE = 80
REMAINDER 30kVA @ 50% = 15 kVA

PANEL "3QLA"

VOLTS/PHASE/WIRE: 120/208 V, 3 PH 4 WIRE | PANEL SIZE & TYPE: 22" W x 6" D, BOLT–ON | MAIN SIZE & TYPE: 225 AMPERE MAIN LUGS | LOCATION: | CABINET: | NOTES:

ACCESSORIES: PANEL DIRECTORY, IDENTIFICATION, GROUNDING BAR, INSULATED GROUND BAR, SUBFEED LUGS

CKT	OCP		LOAD (kVA)			DESCRIPTION	LCL	PHASE LOAD			LCL	DESCRIPTION	LOAD (kVA)			OCP		CKT
NO	AMP	POLE	LTG	CO	PWR		kVA	A	B	C	kVA		LTG	CO	PWR	AMP	POLE	NO
1	20	1				FC–9	0.0	0.4			0.4	TEL./DATA 3001 CO'S		0.4		20	1	2
3	20	1				EM–3	0.0		0.8		0.8	TEL./DATA 3001 CO'S		0.8		20	1	4
5	20	1			0.2	CH–2 120V POWER	0.2			1.0	0.8	TEL./DATA 3001 CO'S		0.8		20	1	6
7	30	3			2.4	REMOTE COND. UNIT	2.4	2.6			0.2	FC–11			0.2	20	1	8
9	–	–			2.4	–	2.4		2.4		0.0	SPARE				20	1	10
11	–	–			2.4	–	2.4			2.4	0.0	SPARE				20	1	12
13	20	1	1.0			AH–3 LIGHTS	1.3	1.5			0.5	SECURITY POWER–LEVEL 3			0.5	20	1	14
15	20	1			0.5	BMS CONTROL PANEL	0.5		1.0		0.5	SECURITY POWER–LEVEL 3			0.5	20	1	16
17	20	1			0.5	BMS CONTROL PANEL	0.5			0.5	0.0	DOOR SECURITY POWER				20	1	18
19	20	1			1.2	SF–1A	1.2	1.2			0.0	DOOR SECURITY POWER				20	1	20
21	20	1			1.2	SF–1B	1.2		1.2		0.0	SPARE				20	1	22
23	20	1			1.2	SF–1C	1.2			1.2	0.0	SPARE				20	1	24
25	20	1			1.2	SF–1D	1.2	1.2			0.0	SPARE				20	1	26
27	20	1			0.1	CHILLER RM SHUT–DOWN	0.1		0.1		0.0	SPARE				20	1	28
29	20	1			0.2	CT–1 CONTROL	0.2			0.2	0.0	SPARE				20	1	30
31	20	1	0.2			COOLING TOWER LIGHTS	0.3	0.2			0.0	SPARE				20	1	32
33	20	1			0.2	CHILLER RM CONTROL PWR	0.2		0.2		0.0	SPARE				20	1	34
35	20	1			0.2	CHILLER RM CONTROL PWR	0.2			0.2	0.0	SPARE				20	1	36
37	20	1			0.2	CHILLER RM CONTROL PWR	0.2	0.2			0.0	SPARE				20	1	38
39	20	1				FLOW METER	0.0		0.0		0.0	SPARE				20	1	40
41	20	1				SPARE	0.0			0.0	0.0	SPARE				20	1	42
43	20	1				SPARE	0.0	0.0			0.0	SPARE				20	1	44
45	20	1				SPARE	0.0		0.0		0.0	SPARE				20	1	46
47	20	1				SPARE	0.0			0.0	0.0	SPARE				20	1	48
49	20	1				SPARE	0.0	0.0			0.0	SPARE				20	1	50
51	20	1				SPARE	0.0		0.0		0.0	SPARE				20	1	52
53	20	1				SPARE	0.0			0.0	0.0	SPARE				20	1	54
55	20	1				SPARE	0.0	0.0			0.0	SPARE				20	1	56
57	20	1				SPARE	0.0		0.0		0.0	SPARE				20	1	58
59	20	1				SPARE	0.0			0.0	0.0	SPARE				20	1	60
61	20	1				SPARE	0.0	0.0			0.0	SPARE				20	1	62
63	20	1				SPARE	0.0		0.0		0.0	SPARE				20	1	64
65	20	1				SPARE	0.0			0.0	0.0	SPARE				20	1	66
67	20	1				SPARE	0.0	0.0			0.0	SPARE				20	1	68
69	20	1				SPARE	0.0		0.0		0.0	SPARE				20	1	70
71	20	1				SPARE	0.0			0.0	0.0	SPARE				20	1	72
73	20	1				SPARE	0.0	0.0			0.0	SPARE				20	1	74
75	20	1				SPARE	0.0		0.0		0.0	SPARE				20	1	76
77	20	1				SPARE	0.0			0.0	0.0	SPARE				20	1	78
79	20	1				SPARE	0.0	0.0			0.0	SPARE				20	1	80
81	20	1				SPARE	0.0		0.0		0.0	SPARE				20	1	82
83	20	1				SPARE	0.0			0.0	0.0	SPARE				20	1	84

TOTALS: CONNECTED kVA PER PHASE 7 6 6 — CONNECTED TOTAL kVA 19
CONNECTED AMPS PER PHASE 61 48 46 — CONNECTED AVERAGE AMPS PER PHASE 52

NEC DIVERSIFIED LOAD CALCULATIONS
LIGHTING 1kVA @125% = 2 kVA — ALL OTHER LOADS @100% = 15 kVA — DIVERSIFIED TOTAL kVA = 19
RECEPTACLES 2kVA @100% = 2 kVA — 25% OF LARGEST MOTOR = 0 kVA — AVERAGE AMPS PER PHASE = 52
REMAINDER 0kVA @ 50% = 0 kVA

PANEL "3SLA"

VOLTS/PHASE/WIRE: 120/208 V, 3 PH 4 WIRE | PANEL SIZE & TYPE: 22" W x 6" D, FUSIBLE | MAIN SIZE & TYPE: 50 AMPERE MAIN LUGS | LOCATION: | CABINET: | NOTES:

ACCESSORIES: PANEL DIRECTORY, IDENTIFICATION, GROUNDING BAR, INSULATED GROUND BAR, SUBFEED LUGS

CKT	OCP		LOAD (kVA)			DESCRIPTION	LCL	PHASE LOAD			LCL	DESCRIPTION	LOAD (kVA)			OCP		CKT
NO	AMP	POLE	LTG	CO	PWR		kVA	A	B	C	kVA		LTG	CO	PWR	AMP	POLE	NO
1	20	1			0.1	SMOKE CONTROL PANEL	0.1	0.1			0.0	SPARE				20	1	2
3	20	1				SPARE	0.0		0.0		0.0	SPARE				20	1	4
5	20	1			0.5	FC–8	0.5			0.5	0.0	SPARE				20	1	6
7	20	1			0.1	EF–14	0.1	0.1			0.0	SPARE				20	1	8
9	20	1			1.0	MAIN SMOKE CONTROL PNL	1.0		1.0		0.0	SPARE				20	1	10
11	20	1				SPARE	0.0			0.0	0.0	SPARE				20	1	12
13	20	1				SPARE	0.0	0.0			0.0	SPARE				20	1	14
15	20	1				SPARE	0.0		0.0		0.0	SPARE				20	1	16
17	20	1				SPARE	0.0			0.0	0.0	SPARE				20	1	18
19	20	1				SPARE	0.0	0.0			0.0	SPARE				20	1	20
21	20	1				SPARE	0.0		0.0		0.0	SPARE				20	1	22
23	20	1				SPARE	0.0			0.0	0.0	SPARE				20	1	24
25	20	1				SPARE	0.0	0.0			0.0	SPARE				20	1	26
27	20	1				SPARE	0.0		0.0		0.0	SPARE				20	1	28
29	20	1				SPARE	0.0			0.0	0.0	SPARE				20	1	30
31	20	1				SPARE	0.0	0.0			0.0	SPARE				20	1	32
33	20	1				SPARE	0.0		0.0		0.0	SPARE				20	1	34
35	20	1				SPARE	0.0			0.0	0.0	SPARE				20	1	36
37	20	1				SPARE	0.0	0.0			0.0	SPARE				20	1	38
39	20	1				SPARE	0.0		0.0		0.0	SPARE				20	1	40
41	20	1				SPARE	0.0			0.0	0.0	SPARE				20	1	42

TOTALS: CONNECTED kVA PER PHASE 0 1 1 — CONNECTED TOTAL kVA 2
CONNECTED AMPS PER PHASE 2 8 4 — CONNECTED AVERAGE AMPS PER PHASE 5

NEC DIVERSIFIED LOAD CALCULATIONS
LIGHTING 0kVA @125% = 0 kVA — ALL OTHER LOADS @100% = 2 kVA — DIVERSIFIED TOTAL kVA = 2
RECEPTACLES 0kVA @100% = 0 kVA — 25% OF LARGEST MOTOR = 0 kVA — AVERAGE AMPS PER PHASE = 5
REMAINDER 0kVA @ 50% = 0 kVA

PANEL "4LA2"

VOLTS/PHASE/WIRE: 120/208 V, 3 PH 4 WIRE | PANEL SIZE & TYPE: 22" W x 6" D, BOLT–ON | MAIN SIZE & TYPE: 225 AMPERE MAIN LUGS | LOCATION: | CABINET: | NOTES:

ACCESSORIES: PANEL DIRECTORY, IDENTIFICATION, GROUNDING BAR, INSULATED GROUND BAR, SUBFEED LUGS

CKT	OCP		LOAD (kVA)			DESCRIPTION	LCL	PHASE LOAD			LCL	DESCRIPTION	LOAD (kVA)			OCP		CKT
NO	AMP	POLE	LTG	CO	PWR		kVA	A	B	C	kVA		LTG	CO	PWR	AMP	POLE	NO
1	20	1	0.5			LTG: GENETIC COOLER	0.6	1.3			0.8	ANTHROPOLOGY OUTLETS		0.8		20	1	2
3	20	1			0.2	ANTHROPOLOGY FUME HD	0.2		0.4		0.2	DROP CORD		0.2		20	1	4
5	20	1		0.6		ANTHROPOLOGY OUTLETS	0.6			0.8	0.2	DROP CORD		0.2		20	1	6
7	20	1		0.6		ANTHROPOLOGY OUTLETS	0.6	1.2			0.6	ANTHROPOLOGY OUTLETS		0.6		20	1	8
9	20	1		0.6		ANTHROPOLOGY OUTLETS	0.6		1.2		0.6	ANTHROPOLOGY OUTLETS		0.6		20	1	10
11	20	1		0.2		ANTHROPOLOGY OUTLET	0.2			0.8	0.6	ANTHROPOLOGY OUTLETS		0.6		20	1	12
13	20	1		0.6		GENETICS OUTLETS	0.6	1.2			0.6	ANTHROPOLOGY OUTLETS		0.6		20	1	14
15	20	1		0.6		GENETICS OUTLETS	0.6		1.2		0.6	ANTHROPOLOGY OUTLETS		0.6		20	1	16
17	20	1		0.6		GENETICS OUTLETS	0.6			1.2	0.6	ANTHROPOLOGY OUTLETS		0.6		20	1	18
19	20	1		0.6		GENETICS OUTLETS	0.6	1.6			1.0	GENETICS 208V OUTLET			1.0	20	2	20
21	20	1		0.6		GENETICS OUTLETS	0.6		1.6		1.0	–			1.0	–	–	22
23	20	1		0.6		GENETICS OUTLETS	0.6			1.6	1.0	GENETICS 208V OUTLET			1.0	20	2	24
25	20	1		0.2		WC 4001G/H OUTLETS	0.2	1.2			1.0	–			1.0	–	–	26
27	20	1		0.6		GENETICS OUTLETS	0.6		1.6		1.0	GENETICS 208V OUTLET			1.0	20	2	28
29	20	1		0.6		GENETICS OUTLETS	0.6			1.6	1.0	–			1.0	–	–	30
31	20	1		0.6		GENETICS OUTLETS	0.6	1.6			1.0	GENETICS 208V OUTLET			1.0	20	2	32
33	20	1		0.6		GENETICS OUTLETS	0.6		1.6		1.0	–			1.0	–	–	34
35	20	1		0.6		GENETICS OUTLETS	0.6			1.6	1.0	GENETICS 208V OUTLET			1.0	20	2	36
37	20	1		0.6		GENETICS OUTLETS	0.6	1.6			1.0	–			1.0	–	–	38
39	20	2			1.0	GENETICS 208V OUTLET	1.0		2.0		1.0	GENETICS 208V OUTLET			1.0	20	2	40
41	–	–			1.0	–	1.0			2.0	1.0	–			1.0	–	–	42
43	20	1			0.5	FU–1	0.5	1.5			1.0	LAB 208V OUTLET			1.0	20	2	44
45	20	1		0.2		LAB CEILING OUTLET	0.2		1.2		1.0	–			1.0	–	–	46
47	20	1			0.2	FUME HOOD	0.2			1.2	1.0	LAB 208V OUTLET			1.0	20	2	48
49	20	1		0.4		LAB FLOOR BOXES	0.4	1.4			1.0	–			1.0	–	–	50
51	20	1		0.4		LAB FLOOR BOXES	0.4		1.2		0.8	LAB OUTLETS		0.8		20	1	52
53	20	1		0.4		OUTDOOR OUTLETS	0.4			1.4	1.0	LAB OUTLETS		1.0		20	1	54
55	20	1		0.6		OUTDOOR OUTLETS	0.6	1.2			0.6	LAB OUTLETS		0.6		20	1	56
57	20	1		0.6		LAB OUTLETS	0.6		1.2		0.6	LAB OUTLETS		0.6		20	1	58
59	20	1		0.6		LAB OUTLETS	0.6			1.2	0.6	LAB OUTLETS		0.6		20	1	60
61	20	1		0.6		LAB OUTLETS	0.6	0.8			0.2	CO: GENETICS		0.2		20	1	62
63	20	1		0.4		ARCHEOLOGY AV CABINET	0.4		1.0		0.6	CO: ARCHAELOGY		0.6		20	1	64
65	20	1		0.4		ARCHEOLOGY AV CABINET	0.4			0.4	0.0	SPARE				20	1	66
67	20	1		0.5		DF OUTLETS	0.5	0.5			0.0	SPARE				20	1	68
69	20	1				SPARE	0.0		0.0		0.0	SPARE				20	1	70
71	20	1				SPARE	0.0			0.0	0.0	SPARE				20	1	72
73	20	1				SPARE	0.0	0.0			0.0	SPARE				20	1	74
75	20	1				SPARE	0.0		0.0		0.0	SPARE				20	1	76
77	20	1				SPARE	0.0			0.0	0.0	SPARE				20	1	78
79	20	1				SPARE	0.0	0.0			0.0	SPARE				20	1	80
81	20	1				SPARE	0.0		0.0		0.0	SPARE				20	1	82
83	20	1				SPARE	0.0			0.0	0.0	SPARE				20	1	84

TOTALS: CONNECTED kVA PER PHASE 15 14 14 — CONNECTED TOTAL kVA 43
CONNECTED AMPS PER PHASE 126 118 115 — CONNECTED AVERAGE AMPS PER PHASE 120

NEC DIVERSIFIED LOAD CALCULATIONS
LIGHTING 1kVA @125% = 1 kVA — ALL OTHER LOADS @100% = 19 kVA — DIVERSIFIED TOTAL kVA = 36
RECEPTACLES 10kVA @100% = 10 kVA — 25% OF LARGEST MOTOR = 0 kVA — AVERAGE AMPS PER PHASE = 101
REMAINDER 14kVA @ 50% = 7 kVA

PANEL "3QLA2"

VOLTS/PHASE/WIRE: 120/208 V, 3 PH 4 WIRE | PANEL SIZE & TYPE: 22" W x 6" D, BOLT–ON | MAIN SIZE & TYPE: 225 AMPERE MAIN LUGS | LOCATION: | CABINET: | NOTES:

ACCESSORIES: PANEL DIRECTORY, IDENTIFICATION, GROUNDING BAR, INSULATED GROUND BAR, SUBFEED LUGS

CKT	OCP		LOAD (kVA)			DESCRIPTION	LCL	PHASE LOAD			LCL	DESCRIPTION	LOAD (kVA)			OCP		CKT
NO	AMP	POLE	LTG	CO	PWR		kVA	A	B	C	kVA		LTG	CO	PWR	AMP	POLE	NO
1	20	1		1.2		SERVER ROOM OUTLETS	1.2	2.4			1.2	SERVER ROOM OUTLETS		1.2		20	1	2
3	20	1		1.2		SERVER ROOM OUTLETS	1.2		2.4		1.2	SERVER ROOM OUTLETS		1.2		20	1	4
5	20	1		1.2		SERVER ROOM OUTLETS	1.2			2.4	1.2	SERVER ROOM OUTLETS		1.2		20	1	6
7	20	1		1.2		SERVER ROOM OUTLETS	1.2	2.4			1.2	SERVER ROOM OUTLETS		1.2		20	1	8
9	20	1		1.2		SERVER ROOM OUTLETS	1.2		2.4		1.2	SERVER ROOM OUTLETS		1.2		20	1	10
11	20	1		1.2		SERVER ROOM OUTLETS	1.2			2.4	1.2	SERVER ROOM OUTLETS		1.2		20	1	12
13	20	1				SPARE	0.0	0.0			0.0	SPARE				20	1	14
15	20	1				SPARE	0.0		0.0		0.0	SPARE				20	1	16
17	20	1				SPARE	0.0			0.0	0.0	SPARE				20	1	18
19	20	1				SPARE	0.0	0.0			0.0	SPARE				20	1	20
21	20	1				SPARE	0.0		0.0		0.0	SPARE				20	1	22
23	20	1				SPARE	0.0			0.0	0.0	SPARE				20	1	24
25	20	1				SPARE	0.0	0.0			0.0	SPARE				20	1	26
27	20	1				SPARE	0.0		0.0		0.0	SPARE				20	1	28
29	20	1				SPARE	0.0			0.0	0.0	SPARE				20	1	30
31	20	1				SPARE	0.0	0.0			0.0	SPARE				20	1	32
33	20	1				SPARE	0.0		0.0		0.0	SPARE				20	1	34
35	20	1				SPARE	0.0			0.0	0.0	SPARE				20	1	36
37	20	1				SPARE	0.0	0.0			0.0	SPARE				20	1	38
39	20	1				SPARE	0.0		0.0		0.0	SPARE				20	1	40
41	20	1			1.2	FC–10	1.2			1.2	0.0	SPARE				20	1	42

TOTALS: CONNECTED kVA PER PHASE 5 5 6 — CONNECTED TOTAL kVA 16
CONNECTED AMPS PER PHASE 40 40 50 — CONNECTED AVERAGE AMPS PER PHASE 43

NEC DIVERSIFIED LOAD CALCULATIONS
LIGHTING 0kVA @125% = 0 kVA — ALL OTHER LOADS @100% = 1 kVA — DIVERSIFIED TOTAL kVA = 13
RECEPTACLES 10kVA @100% = 10 kVA — 25% OF LARGEST MOTOR = 0 kVA — AVERAGE AMPS PER PHASE = 37
REMAINDER 4kVA @ 50% = 2 kVA

PANEL "3SLB"

VOLTS/PHASE/WIRE: 120/208 V, 3 PH 4 WIRE | PANEL SIZE & TYPE: 22" W x 6" D, FUSIBLE | MAIN SIZE & TYPE: 50 AMPERE MAIN FUSE | LOCATION: | CABINET: | NOTES:

ACCESSORIES: PANEL DIRECTORY, IDENTIFICATION, GROUNDING BAR, INSULATED GROUND BAR, SUBFEED LUGS

CKT	OCP		LOAD (kVA)			DESCRIPTION	LCL	PHASE LOAD			LCL	DESCRIPTION	LOAD (kVA)			OCP		CKT
NO	AMP	POLE	LTG	CO	PWR		kVA	A	B	C	kVA		LTG	CO	PWR	AMP	POLE	NO
1	20	1			0.5	SMOKE DAMPERS	0.5	0.5			0.0	SPARE				20	1	2
3	20	1			0.5	SMOKE DAMPERS	0.5		0.5		0.0	SPARE				20	1	4
5	20	1			0.5	SMOKE CONTROL PANEL	0.5			0.5	0.0	SPARE				20	1	6
7	20	1			0.5	SMOKE DAMPERS	0.5	0.5			0.0	SPARE				20	1	8
9	20	1			0.5	SMOKE DAMPERS	0.5		0.5		0.0	SPARE				20	1	10
11	20	1				SPARE	0.0			0.0	0.0	SPARE				20	1	12
13	20	1				SPARE	0.0	0.0			0.0	SPARE				20	1	14
15	20	1				SPARE	0.0		0.0		0.0	SPARE				20	1	16
17	20	1				SPARE	0.0			0.0	0.0	SPARE				20	1	18
19	20	1				SPARE	0.0	0.0			0.0	SPARE				20	1	20
21	20	1				SPARE	0.0		0.0		0.0	SPARE				20	1	22
23	20	1				SPARE	0.0			0.0	0.0	SPARE				20	1	24
25	20	1				SPARE	0.0	0.0			0.0	SPARE				20	1	26
27	20	1				SPARE	0.0		0.0		0.0	SPARE				20	1	28
29	20	1				SPARE	0.0			0.0	0.0	SPARE				20	1	30
31	20	1				SPARE	0.0	0.0			0.0	SPARE				20	1	32
33	20	1				SPARE	0.0		0.0		0.0	SPARE				20	1	34
35	20	1				SPARE	0.0			0.0	0.0	SPARE				20	1	36
37	20	1				SPARE	0.0	0.0			0.0	SPARE				20	1	38
39	20	1				SPARE	0.0		0.0		0.0	SPARE				20	1	40
41	20	1				SPARE	0.0			0.0	0.0	SPARE				20	1	42

TOTALS: CONNECTED kVA PER PHASE 1 1 1 — CONNECTED TOTAL kVA 3
CONNECTED AMPS PER PHASE 8 8 4 — CONNECTED AVERAGE AMPS PER PHASE 7

NEC DIVERSIFIED LOAD CALCULATIONS
LIGHTING 0kVA @125% = 0 kVA — ALL OTHER LOADS @100% = 3 kVA — DIVERSIFIED TOTAL kVA = 3
RECEPTACLES 0kVA @100% = 0 kVA — 25% OF LARGEST MOTOR = 0 kVA — AVERAGE AMPS PER PHASE = 7
REMAINDER 0kVA @ 50% = 0 kVA

PANEL "4LA3"

VOLTS/PHASE/WIRE: 120/208 V, 3 PH 4 WIRE | PANEL SIZE & TYPE: 22" W x 6" D, BOLT–ON | MAIN SIZE & TYPE: 225 AMPERE MAIN LUGS | LOCATION: | CABINET: | NOTES:

ACCESSORIES: PANEL DIRECTORY, IDENTIFICATION, GROUNDING BAR, INSULATED GROUND BAR, SUBFEED LUGS

CKT	OCP		LOAD (kVA)			DESCRIPTION	LCL	PHASE LOAD			LCL	DESCRIPTION	LOAD (kVA)			OCP		CKT
NO	AMP	POLE	LTG	CO	PWR		kVA	A	B	C	kVA		LTG	CO	PWR	AMP	POLE	NO
1	20	1			0.9	EF–17	0.9	1.9			1.0	DC–3			1.0	20	3	2
3	20	1				SPARE	0.0		1.0		1.0	–			1.0	–	–	4
5	20	1			0.5	BMS CONTROL TRANSFMR	0.5			1.5	1.0	–			1.0	–	–	6
7	20	1			0.5	BMS CONTROL TRANSFMR	0.5	1.0			0.5	LAB 4120 208V OUTLET			0.5	20	2	8
9	20	1			0.5	BMS CONTROL TRANSFMR	0.5		1.0		0.5	–			0.5	–	–	10
11	20	1			0.5	BMS CONTROL TRANSFMR	0.5			1.0	0.5	LAB 4120 208V OUTLET			0.5	20	2	12
13	20	1			0.5	BMS CONTROL TRANSFMR	0.5	1.0			0.5	–			0.5	–	–	14
15	20	1			0.6	SMOKE DAMPERS	0.6		1.1		0.5	LAB 4120 208V OUTLET			0.5	20	2	16
17	20	1			0.6	SMOKE DAMPERS	0.6			1.1	0.5	–			0.5	–	–	18
19	20	1			0.1	FIRE SPRINK. TEST PUMP	0.1	0.7			0.6	4102 OUTLETS		0.6		20	1	20
21	20	1				SPARE	0.0		0.6		0.6	4102 OUTLETS		0.6		20	1	22
23	20	1				SPARE	0.0			0.6	0.6	4102 OUTLETS		0.6		20	1	24
25	20	1				SPARE	0.0	0.5			0.5	LAB 4108 208V OUTLET			0.5	20	2	26
27	20	1				SPARE	0.0		0.5		0.5	–			0.5	–	–	28
29	20	1				SPARE	0.0			0.5	0.5	LAB 4108 208V OUTLET			0.5	20	2	30
31	20	1				SPARE	0.0	0.5			0.5	–			0.5	–	–	32
33	20	1				SPARE	0.0		0.0		0.0	SPARE				20	1	34
35	20	1				SPARE	0.0			0.0	0.0	SPARE				20	1	36
37	20	1				SPARE	0.0	0.0			0.0	SPARE				20	1	38
39	20	1				SPARE	0.0		0.0		0.0	SPARE				20	1	40
41	20	1				SPARE	0.0			0.0	0.0	SPARE				20	1	42
43	20	1				SPARE	0.0	0.0			0.0	SPARE				20	1	44
45	20	1				SPARE	0.0		0.0		0.0	SPARE				20	1	46
47	20	1				SPARE	0.0			0.0	0.0	SPARE				20	1	48
49	20	1				SPARE	0.0	0.0			0.0	SPARE				20	1	50
51	20	1				SPARE	0.0		0.0		0.0	SPARE				20	1	52
53	20	1				SPARE	0.0			0.0	0.0	SPARE				20	1	54
55	20	1				SPARE	0.0	0.0			0.0	SPARE				20	1	56
57	20	1				SPARE	0.0		0.0		0.0	SPARE				20	1	58
59	20	1				SPARE	0.0			0.0	0.0	SPARE				20	1	60
61	20	1				SPARE	0.0	0.0			0.0	SPARE				20	1	62
63	20	1				SPARE	0.0		0.0		0.0	SPARE				20	1	64
65	20	1				SPARE	0.0			0.0	0.0	SPARE				20	1	66
67	20	1				SPARE	0.0	0.0			0.0	SPARE				20	1	68
69	20	1				SPARE	0.0		0.0		0.0	SPARE				20	1	70
71	20	1				SPARE	0.0			0.0	0.0	SPARE				20	1	72
73	20	1				SPARE	0.0	0.0			0.0	SPARE				20	1	74
75	20	1				SPARE	0.0		0.0		0.0	SPARE				20	1	76
77	20	1				SPARE	0.0			0.0	0.0	SPARE				20	1	78
79	20	1				SPARE	0.0	0.0			0.0	SPARE				20	1	80
81	20	1				SPARE	0.0		0.0		0.0	SPARE				20	1	82
83	20	1				SPARE	0.0			0.0	0.0	SPARE				20	1	84

TOTALS: CONNECTED kVA PER PHASE 6 4 5 — CONNECTED TOTAL kVA 15
CONNECTED AMPS PER PHASE 47 35 39 — CONNECTED AVERAGE AMPS PER PHASE 40

NEC DIVERSIFIED LOAD CALCULATIONS
LIGHTING 0kVA @125% = 0 kVA — ALL OTHER LOADS @100% = 13 kVA — DIVERSIFIED TOTAL kVA = 15
RECEPTACLES 2kVA @100% = 2 kVA — 25% OF LARGEST MOTOR = 0 kVA — AVERAGE AMPS PER PHASE = 40
REMAINDER 0kVA @ 50% = 0 kVA

GENERAL SHEET NOTES

1. PROVIDE 200% NEUTRAL BUS AND LUG CAPACITY FOR ALL 120/208V PANELBOARDS.

Project Title

UTAH MUSEUM OF NATURAL HISTORY

UNIVERSITY OF UTAH
SALT LAKE CITY, UTAH

State of Utah
Department of Administrative Services
Division of Facilities Construction & Management
4110 State Office Building
Salt Lake City, Utah 84114
Phone: (801) 538 - 3018
Fax: (801) 538 - 3267
www.dfcm.utah.gov

PROJ. NO. 02243750

Owner
UMNH
1390 East President's Circle
Salt Lake City, Utah 84112
801.581.6927 tel

Design Architect
Polshek Partnership Architects LLP
320 West 13th Street
New York, New York
212.807.7171 tel

Architect of Record
GSBS
375 West 200 South
Salt Lake City, Utah
801.521.8600 tel

Structural Engineer
Leslie E. Robertson Associates
30 Broad Street
New York, New York 10004
212.750.9000 tel

Structural Engineer
Dunn Associates, Inc.
380 West 800 South, Suite 100
Salt Lake City, Utah 84101
801.575.8877 tel

Mechanical/Plumbing/Fire Protection Engineer
Colvin Engineering Associates, Inc.
244 West 300 North
Salt Lake City, Utah 84103
801.322.2400 tel

Electrical/AV Engineer
Spectrum Engineers
175 South Main Street
Salt Lake City, Utah 84111
800.678.7077 tel

Civil Engineer
Stantec
3995 South 700 East Suite 300
Salt Lake City, Utah 84107
801.261.0090 tel

Landscape Architects
Design Workshop
224 South 200 West
Salt Lake City, UT 84101
801.359.4771 tel

Exhibit Design
Ralph Appelbaum Associates
88 Pine Street
New York, New York 10005
212.334.8200

Key Plan

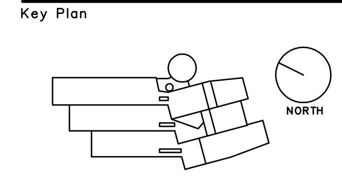

Seal

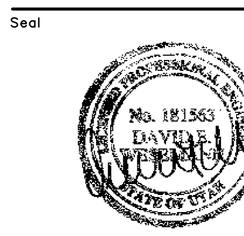

No.	Issue Name	Date
10	RFI 510	06/10/09
9	LIGHTING CHANGES	06/08/09
8	LEVEL ONE CHANGES	05/12/09
7	EXHIBIT POWER CHANGES	04/24/09
6	EQUIPMENT CHANGES	04/17/09
	CONFORMANCE SET	02/09/09
5	EXHIBIT & LTG CHANGES	12/19/08
4	CODE REVIEW	12/10/08
3	ADDENDUM #3	11/10/08
2	ADDENDUM #2	10/23/08
1	ADDENDUM #1	10/16/08
	CONSTRUCTION DOCUMENTS	09/30/08

Date 02/03/09 — Project No. 2004.076.00
Scale N.T.S. — PPA – 0423

Sheet Title
ELECTRICAL PANEL SCHEDULES

Sheet No.
EP–609

File Name: P:\2005\20050145\1Drawings\Sheet\45EP–609.dwg Last Plotted: 2009/06/18 @ 3:17 PM By: dlm
Copyright ? 2006 Polshek Partnership Architects, LLP
$PROJECT$ $USER_ID$ $DATE$ $TIME$
$PROJECT$ $USER_ID$ $DATE$ $TIME$

$PROJECT$ $USER_ID$ $DATE$ $TIME$

$PROJECT$ $USER_ID$ $DATE$ $TIME$

PANEL "2LB5"

VOLTS/PHASE/WIRE: 120/208 V, 3 PH 4 WIRE | PANEL SIZE & TYPE: 22" W x 6" D, BOLT–ON | MAIN SIZE & TYPE: 225 AMPERE MAIN LUGS | LOCATION: | CABINET: | NOTES:

ACCESSORIES: PANEL DIRECTORY, IDENTIFICATION, GROUNDING BAR, INSULATED GROUND BAR, SUBFEED LUGS

CKT NO	OCP AMP	OCP POLE	LOAD (kVA) LTG	CO	PWR	DESCRIPTION	LCL kVA	PHASE LOAD A	B	C	LCL kVA	DESCRIPTION	LOAD (kVA) LTG	CO	PWR	OCP AMP	POLE	CKT NO
1	20	1	1.4			LTG: EXHIBIT CASE	1.8	2.6			1.2	CO: PAST WORLDS		1.2		20	1	2
3	20	1		0.4		CO: EXHIBIT CASE	0.4		1.6		1.2	CO: PAST WORLDS		1.2		20	1	4
5	20	1	1.4			LTG: EXHIBIT CASE	1.8			2.4	1.0	CO: PAST WORLDS		1.0		20	1	6
7	20	1		0.4		CO: EXHIBIT CASE	0.4	1.2			0.8	CO: PAST WORLDS		0.8		20	1	8
9	20	1	0.7			LTG: EXHIBIT CASE	0.9		1.9		1.2	CO: PAST WORLDS		1.2		20	1	10
11	20	1		0.4		CO: EXHIBIT CASE	0.4			1.6	1.2	CO: PAST WORLDS		1.2		20	1	12
13	20	1		0.2		CO: PAST WORLDS	0.2	1.0			0.8	CO: PAST WORLDS		0.8		20	1	14
15	20	1			0.3	PWR: AV MONITOR	0.3		0.9		0.6	CO: PAST WORLDS		0.6		20	1	16
17	20	1	0.6			LTG: FO ILLUMINATORS	0.8			1.2	0.6	CO: PAST WORLDS		0.6		20	1	18
19	20	1		0.8		CO: PAST WORLDS FB	0.8	2.0			1.2	CO: PAST WORLDS		1.2		20	1	20
21	20	1				SPARE	0.0		1.2		1.2	CO: PAST WORLDS		1.2		20	1	22
23	20	1			0.3	PWR: AV MONITOR	0.3			0.7	0.4	CO: OUTDOOR		0.4		20	1	24
25	20	1			1.2	PWR: LEARNING LAB PROJ	1.2	2.1			0.9	CO/LTG: LEARNING LAB CNTR	0.3	0.6		20	1	26
27	20	1			0.5	PWR: LEARNING LAB DOOR	0.5		1.1		0.6	CO: LEARNING LAB CNTR		0.6		20	1	28
29	20	1			0.5	PWR: PALEO LAB	0.5			1.1	0.6	CO: LEARNING LAB CNTR		0.6		20	1	30
31	20	1			0.5	PWR: PALEO LAB	0.5	1.1			0.6	CO: LEARNING LAB CNTR		0.6		20	1	32
33	20	1		0.8		CO: PALEO LAB	0.8		1.4		0.6	CO: LEARNING LAB CNTR		0.6		20	1	34
35	20	1		0.4		CO: PALEO LAB DROPS	0.4			1.2	0.8	CO: LEARNING LAB CNTR		0.8		20	1	36
37	20	1		0.4		CO: PALEO LAB DROPS	0.4	1.2			0.8	CO: LEARNING LAB		0.8		20	1	38
39	20	1		0.4		CO: PALEO LAB DROPS	0.4		1.2		0.8	CO: PALEO LAB		0.8		20	1	40
41	20	1			1.0	PWR: PAST WRLDS AV MONS	1.0			1.0	0.0	SPARE				20	1	42
43	20	1		0.4		CO: PALEO LAB DROPS	0.4	1.0			0.6	CO: PALEO LAB COUNTER		0.6		20	1	44
45	20	1		0.4		CO: PALEO LAB DROPS	0.4		1.0		0.6	CO: PALEO LAB COUNTER		0.6		20	1	46
47	20	1		0.4		CO: PALEO LAB DROPS	0.4			1.1	0.8	CO/LTG: PALEO LAB CNTR	0.3	0.4		20	1	48
49	20	2		1.0		CO: PALEO LAB DROP	1.0	1.4			0.4	CO: PALEO LAB COUNTER		0.4		20	1	50
51	–	–		1.0		–	1.0		1.4		0.4	CO: PALEO LAB COUNTER		0.4		20	1	52
53	20	1			0.5	PWR: FC–7	0.5			0.9	0.4	CO: PALEO LAB COUNTER		0.4		20	1	54
55	20	1				SPARE	0.0	0.4			0.4	CO: PALEO LAB COUNTER		0.4		20	1	56
57	20	1				SPARE	0.0		0.6		0.6	CO: PALEO LAB COUNTER		0.6		20	1	58
59	20	1				SPARE	0.0			0.6	0.6	CO: PALEO LAB COUNTER		0.6		20	1	60
61	20	1	1.5			LTG: EXHIBIT SPOTS	1.9	2.3			0.8	CO/LTG: PALEO LAB CNTR	0.2	0.6		20	1	62
63	20	1	1.5			LTG: EXHIBIT SPOTS	1.9		2.5		1.3	LTG: EXHIBIT CASE FB	1.0			20	1	64
65	20	1	1.0			LTG: EXHIBIT TRACK	1.3			1.4	0.4	CO: EXHIBIT CASE FB		0.4		20	1	66
67	20	1	1.0			LTG: EXHIBIT TRACK	1.3	1.2			0.2	PWR: EF–20			0.2	20	1	68
69	20	1	1.0			LTG: N–S TRACK	1.3		2.0		1.0	PWR: PAST WRLDS AV MONS			1.0	20	1	70
71	20	1	1.0			LTG: N–S TRACK	1.3			1.0	0.0	SPARE				20	1	72
73	20	1				SPARE	0.0	0.0			0.0	SPARE				20	1	74
75	20	1				SPARE	0.0		0.0		0.0	SPARE				20	1	76
77	20	1				SPARE	0.0			0.0	0.0	SPARE				20	1	78
79	20	1				SPARE	0.0	0.0			0.0	SPARE				20	1	80
81	20	1				SPARE	0.0		0.0		0.0	SPARE				20	1	82
83	20	1				SPARE	0.0			0.0	0.0	SPARE				20	1	84

TOTALS: CONNECTED kVA PER PHASE 17 17 14 — CONNECTED TOTAL kVA 48
CONNECTED AMPS PER PHASE 146 140 118 — CONNECTED AVERAGE AMPS PER PHASE 134

NEC DIVERSIFIED LOAD CALCULATIONS
LIGHTING 13kVA @125% = 16 kVA | ALL OTHER LOADS @100% = 6 kVA | DIVERSIFIED TOTAL kVA = 42
RECEPTACLES 10kVA @100% = 10 kVA | 25% OF LARGEST MOTOR = 0 kVA | AVERAGE AMPS PER PHASE = 116
REMAINDER 20kVA @ 50% = 10 kVA

PANEL "2LB6"

VOLTS/PHASE/WIRE: 120/208 V, 3 PH 4 WIRE | PANEL SIZE & TYPE: 22" W x 6" D, BOLT–ON | MAIN SIZE & TYPE: 225 AMPERE MAIN LUGS | LOCATION: | CABINET: | NOTES:

ACCESSORIES: PANEL DIRECTORY, IDENTIFICATION, GROUNDING BAR, INSULATED GROUND BAR, SUBFEED LUGS

CKT NO	OCP AMP	OCP POLE	LOAD (kVA) LTG	CO	PWR	DESCRIPTION	LCL kVA	PHASE LOAD A	B	C	LCL kVA	DESCRIPTION	LOAD (kVA) LTG	CO	PWR	OCP AMP	POLE	CKT NO
1	20	1			0.5	BMS CONTROL TRANSFMR	0.5	1.3			1.0	LTG: N–S TRACK	0.8			20	1	2
3	20	1			0.5	BMS CONTROL TRANSFMR	0.5		1.3		1.0	LTG: N–S TRACK	0.8			20	1	4
5	20	1				SPARE	0.0			0.8	1.0	LTG: N–S TRACK	0.8			20	1	6
7	20	1				SPARE	0.0	0.8			1.0	LTG: N–S TRACK	0.8			20	1	8
9	20	1				SPARE	0.0		0.8		1.0	LTG: N–S TRACK	0.8			20	1	10
11	20	1				SPARE	0.0			0.8	1.0	LTG: N–S TRACK	0.8			20	1	12
13	20	1				SPARE	0.0	0.0			0.0	SPARE				20	1	14
15	20	1				SPARE	0.0		0.0		0.0	SPARE				20	1	16
17	20	1				SPARE	0.0			0.0	0.0	SPARE				20	1	18
19	20	1				SPARE	0.0	0.0			0.0	SPARE				20	1	20
21	20	1				SPARE	0.0		0.0		0.0	SPARE				20	1	22
23	20	1				SPARE	0.0			0.0	0.0	SPARE				20	1	24
25	20	1				SPARE	0.0	0.0			0.0	SPARE				20	1	26
27	20	1				SPARE	0.0		0.0		0.0	SPARE				20	1	28
29	20	1				SPARE	0.0			0.0	0.0	SPARE				20	1	30
31	20	1				SPARE	0.0	0.0			0.0	SPARE				20	1	32
33	20	1				SPARE	0.0		0.0		0.0	SPARE				20	1	34
35	20	1				SPARE	0.0			0.0	0.0	SPARE				20	1	36
37	20	1				SPARE	0.0	0.0			0.0	SPARE				20	1	38
39	20	1				SPARE	0.0		0.0		0.0	SPARE				20	1	40
41	20	1				SPARE	0.0			0.0	0.0	SPARE				20	1	42
43	20	1				SPARE	0.0	0.0			0.0	SPARE				20	1	44
45	20	1				SPARE	0.0		0.0		0.0	SPARE				20	1	46
47	20	1				SPARE	0.0			0.0	0.0	SPARE				20	1	48
49	20	1				SPARE	0.0	0.0			0.0	SPARE				20	1	50
51	20	1				SPARE	0.0		0.0		0.0	SPARE				20	1	52
53	20	1				SPARE	0.0			0.0	0.0	SPARE				20	1	54
55	20	1				SPARE	0.0	0.0			0.0	SPARE				20	1	56
57	20	1				SPARE	0.0		0.0		0.0	SPARE				20	1	58
59	20	1				SPARE	0.0			0.0	0.0	SPARE				20	1	60
61	20	1				SPARE	0.0	0.0			0.0	SPARE				20	1	62
63	20	1				SPARE	0.0		0.0		0.0	SPARE				20	1	64
65	20	1				SPARE	0.0			0.0	0.0	SPARE				20	1	66
67	20	1				SPARE	0.0	0.0			0.0	SPARE				20	1	68
69	20	1				SPARE	0.0		0.0		0.0	SPARE				20	1	70
71	20	1				SPARE	0.0			0.0	0.0	SPARE				20	1	72
73	20	1				SPARE	0.0	0.0			0.0	SPARE				20	1	74
75	20	1				SPARE	0.0		0.0		0.0	SPARE				20	1	76
77	20	1				SPARE	0.0			0.0	0.0	SPARE				20	1	78
79	20	1				SPARE	0.0	0.0			0.0	SPARE				20	1	80
81	20	1				SPARE	0.0		0.0		0.0	SPARE				20	1	82
83	20	1				SPARE	0.0			0.0	0.0	SPARE				20	1	84

TOTALS: CONNECTED kVA PER PHASE 2 2 2 — CONNECTED TOTAL kVA 6
CONNECTED AMPS PER PHASE 18 18 13 — CONNECTED AVERAGE AMPS PER PHASE 16

NEC DIVERSIFIED LOAD CALCULATIONS
LIGHTING 5kVA @125% = 6 kVA | ALL OTHER LOADS @100% = 1 kVA | DIVERSIFIED TOTAL kVA = 7
RECEPTACLES 0kVA @100% = 0 kVA | 25% OF LARGEST MOTOR = 0 kVA | AVERAGE AMPS PER PHASE = 19
REMAINDER 0kVA @ 50% = 0 kVA

GENERAL SHEET NOTES

1. PROVIDE 200% NEUTRAL BUS AND LUG CAPACITY FOR ALL 120/208V PANELBOARDS.

PANEL "2QLA"

VOLTS/PHASE/WIRE: 120/208 V, 3 PH 4 WIRE | PANEL SIZE & TYPE: 22" W x 6" D, BOLT–ON | MAIN SIZE & TYPE: 225 AMPERE MAIN LUGS | LOCATION: | CABINET: | NOTES:

ACCESSORIES: PANEL DIRECTORY, IDENTIFICATION, GROUNDING BAR, INSULATED GROUND BAR, SUBFEED LUGS

CKT NO	OCP AMP	OCP POLE	LOAD (kVA) LTG	CO	PWR	DESCRIPTION	LCL kVA	PHASE LOAD A	B	C	LCL kVA	DESCRIPTION	LOAD (kVA) LTG	CO	PWR	OCP AMP	POLE	CKT NO
1	20	1	0.3			LTG: ISOLATION ROOM	0.4	1.1			0.8	AREA 'A' COMM RM CO'S		0.8		20	1	2
3	20	1		1.1		1ST FLR AREA 'A' OUTLETS	1.1		2.2		1.1	AREA 'A' COMM RM CO'S		1.1		20	1	4
5	20	1		0.8		1ST FLR AREA 'A' OUTLETS	0.8			0.8	0.0	2FC–1				20	1	6
7	20	1				4FC–1	0.0	0.5			0.5	ISOLATION 2112 EQUIP			0.5	20	1	8
9	20	1		0.4		ISOLATION 2112 OUTLETS	0.4		0.9		0.5	ISOLATION 2112 EQUIP			0.5	20	1	10
11	20	1		0.4		ISOLATION 2112 OUTLETS	0.4			0.8	0.4	TELE/DATA 2001 CO'S		0.4		20	1	12
13	20	1		0.9		SECURITY 2106 CO'S	0.9	1.3			0.4	TELE/DATA 2001 CO'S		0.4		20	1	14
15	20	1		0.9		BUILDING MNGR 2110 CO'S	0.9		1.3		0.4	TELE/DATA 2001 CO'S		0.4		20	1	16
17	20	1		0.4		TELE/DATA 2001 CO'S	0.4			0.8	0.4	TELE/DATA 2001 CO'S		0.4		20	1	18
19	20	1		0.4		TELE/DATA 2001 CO'S	0.4	0.8			0.4	TELE/DATA 2001 CO'S		0.4		20	1	20
21	20	1		0.4		TELE/DATA 2001 CO'S	0.4		0.8		0.4	TELE/DATA 2001 CO'S		0.4		20	1	22
23	20	1				FC–3	0.0			0.0	0.0	SPARE				20	1	24
25	20	1				SPARE	0.0	0.0			0.0	SPARE				20	1	26
27	20	1				SPARE	0.0		0.0		0.0	SPARE				20	1	28
29	20	1				SPARE	0.0			0.0	0.0	SPARE				20	1	30
31	20	1				SPARE	0.0	0.0			0.0	SPARE				20	1	32
33	20	2			1.0	STOR. 2108B 208V OUTLET	1.0		1.0		0.0	SPARE				20	1	34
35	–	–			1.0	–	1.0			1.0	0.0	SPARE				20	1	36
37	20	2			1.0	STOR. 2108B 208V OUTLET	1.0	1.0			0.0	SPARE				20	1	38
39	–	–			1.0	–	1.0		1.0		0.0	SPARE				20	1	40
41	20	1				SPARE	0.0			0.0	0.0	SPARE				20	1	42
43	20	1			0.5	SECURITY POWER–LEVEL 1	0.5	1.0			0.5	SITE SECURITY CAMERAS			0.5	20	1	44
45	20	1			0.5	SECURITY POWER–LEVEL 2	0.5		1.0		0.5	SITE SECURITY CAMERAS			0.5	20	1	46
47	20	1			0.5	SECURITY POWER–LEVEL 2	0.5			1.0	0.5	SITE SECURITY CAMERAS			0.5	20	1	48
49	20	1			0.5	SECURITY POWER–LEVEL 2	0.5	0.5			0.0	SPARE				20	1	50
51	20	1				SPARE	0.0		0.0		0.0	SPARE				20	1	52
53	20	1				SPARE	0.0			0.0	0.0	SPARE				20	1	54
55	20	1				SPARE	0.0	0.0			0.0	SPARE				20	1	56
57	20	1				SPARE	0.0		0.0		0.0	SPARE				20	1	58
59	20	1				SPARE	0.0			0.0	0.0	SPARE				20	1	60
61	20	1				SPARE	0.0	0.0			0.0	SPARE				20	1	62
63	20	1				SPARE	0.0		0.0		0.0	SPARE				20	1	64
65	20	1				SPARE	0.0			0.0	0.0	SPARE				20	1	66
67	20	1				SPARE	0.0	0.0			0.0	SPARE				20	1	68
69	20	1				SPARE	0.0		0.0		0.0	SPARE				20	1	70
71	20	1				SPARE	0.0			0.0	0.0	SPARE				20	1	72
73	20	1				SPARE	0.0	0.0			0.0	SPARE				20	1	74
75	20	1				SPARE	0.0		0.0		0.0	SPARE				20	1	76
77	20	1				SPARE	0.0			0.0	0.0	SPARE				20	1	78
79	20	1				SPARE	0.0	0.0			0.0	SPARE				20	1	80
81	20	1				SPARE	0.0		0.0		0.0	SPARE				20	1	82
83	20	1				SPARE	0.0			0.0	0.0	SPARE				20	1	84

TOTALS: CONNECTED kVA PER PHASE 6 8 4 — CONNECTED TOTAL kVA 19
CONNECTED AMPS PER PHASE 52 68 37 — CONNECTED AVERAGE AMPS PER PHASE 52

NEC DIVERSIFIED LOAD CALCULATIONS
LIGHTING 0kVA @125% = 0 kVA | ALL OTHER LOADS @100% = 9 kVA | DIVERSIFIED TOTAL kVA = 19
RECEPTACLES 10kVA @100% = 10 kVA | 25% OF LARGEST MOTOR = 0 kVA | AVERAGE AMPS PER PHASE = 52
REMAINDER 0kVA @ 50% = 0 kVA

PANEL "3ELA"

VOLTS/PHASE/WIRE: 120/208 V, 3 PH 4 WIRE | PANEL SIZE & TYPE: 22" W x 6" D, FUSIBLE | MAIN SIZE & TYPE: 200/150A MAIN FUSE SWITCH | LOCATION: | CABINET: | NOTES:

ACCESSORIES: PANEL DIRECTORY, IDENTIFICATION, GROUNDING BAR, INSULATED GROUND BAR, SUBFEED LUGS

CKT NO	OCP AMP	OCP POLE	LOAD (kVA) LTG	CO	PWR	DESCRIPTION	LCL kVA	PHASE LOAD A	B	C	LCL kVA	DESCRIPTION	LOAD (kVA) LTG	CO	PWR	OCP AMP	POLE	CKT NO
1	20	1	0.6			LTG: LED STEP LIGHTS	0.7	0.7			0.1	1ST FLR AREA 'A' PWR			0.1	20	1	2
3	20	1		0.2		1ST FLR AREA 'A' OUTLET	0.2		0.3		0.1	1ST FLR AREA 'A' PWR			0.1	20	1	4
5	20	1		0.8		SMOKE CONTROL RM CO'S	0.8			0.9	0.1	1ST FLR AREA 'A' PWR			0.1	20	1	6
7	20	1			0.5	FACP	0.5	0.8			0.3	ELEV. EQUIP RM CO/LTG	0.1	0.2		20	1	8
9	20	1			0.1	HANDICAP PUSH PLATES	0.1		0.6		0.5	ELEVATOR CAB			0.5	20	1	10
11	20	1		0.6		XFRM/GENERATOR CO'S	0.6			0.9	0.3	ELEVATOR PIT OUTLET/LTG	0.1	0.2		20	1	12
13	20	1			0.5	FIRE ALARM PWR SUPPLY	0.5	0.6			0.1	2ND FLR AREA 'A' PWR			0.1	20	1	14
15	20	1			0.1	HANDICAP PUSH PLATES	0.1		0.2		0.1	2ND FLR AREA 'A' PWR			0.1	20	1	16
17	20	1			0.2	COLLECTION 3103 PWR	0.2			0.3	0.1	2ND FLR AREA 'A' PWR			0.1	20	1	18
19	20	1			0.2	COLLECTION 3103 PWR	0.2	1.1			0.9	ELECTRICAL ROOM OUTLETS		0.9		20	1	20
21	20	1			0.2	COLLECTION 3103 PWR	0.2		0.4		0.2	WATER SVC 3001Q CO'S		0.2		20	1	22
23	20	1			1.2	OVERHEAD DOOR	1.2			1.4	0.2	ELECTRICAL RM OUTLET		0.2		20	1	24
25	20	1			0.5	SHELVING SYSTEM	0.5	1.0			0.5	SHELVING SYSTEM			0.5	20	1	26
27	20	1			0.5	SHELVING SYSTEM	0.5		1.0		0.5	SHELVING SYSTEM			0.5	20	1	28
29	20	1			0.5	SHELVING SYSTEM	0.5			1.0	0.5	SHELVING SYSTEM			0.5	20	1	30
31	20	1		0.2		5TH FLR ELEC RM CO	0.2	0.8			0.8	LTG: STORE TRACK	0.6			20	1	32
33	20	1			0.2	COLLECTION 3103 PWR	0.2		0.5		0.4	LTG: STORE TRACK	0.3			20	1	34
35	20	1			1.2	COLLECTION 3103 OH DR	1.2			1.4	0.2	2ND FL ELEC RM CO		0.2		20	1	36
37	20	1			1.2	COLLECTIONS 4100 OH DR	1.2	1.2			0.0	SPARE				20	1	38
39	20	1				SPARE	0.0		0.0		0.0	SPARE				20	1	40
41	20	1				FIRE ALARM BELL	0.0			0.0	0.0	SPARE				20	1	42
43	20	1			0.5	FIRE ALARM PWR – LEVEL 1	0.5	1.4			0.9	LAB 4107 PRE–ACT. COMPR			0.9	20	2	44
45	20	1			0.5	FIRE ALARM PWR – LEVEL 2	0.5		1.4		0.9	–			0.9	–	–	46
47	20	1			0.5	FIRE ALARM PWR – LEVEL 3	0.5			1.0	0.5	PRE–ACTION PANEL 4107			0.5	20	1	48
49	20	1			0.5	FIRE ALARM PWR – LEVEL 4	0.5	1.0			0.5	AIR SAMPLING PANLE 3103			0.5	20	1	50
51	20	1			0.5	FIRE ALARM PWR – LEVEL 5	0.5		1.0		0.5	AIR SAMPLING PANLE 4109			0.5	20	1	52
53	20	1			0.5	FIRE ALARM PWR – LEVEL 6	0.5			1.0	0.5	AIR SAMPLING PANLE 4100			0.5	20	1	54
55	20	1				GENERATOR AUXILIARIES	0.0	0.2			0.2	CO: L4 ELEC ROOM		0.2		20	1	56
57	20	1				GENERATOR AUXILIARIES	0.0		0.0		0.0	SPARE				20	1	58
59	20	1				GENERATOR AUXILIARIES	0.0			0.0	0.0	SPARE				20	1	60
61	20	1				SPARE	0.0	0.0			0.0	SPARE				20	1	62
63	20	1				SPARE	0.0		0.0		0.0	SPARE				20	1	64
65	20	1				SPARE	0.0			0.0	0.0	SPARE				20	1	66
67	20	1				SPARE	0.0	0.0			0.0	SPARE				20	1	68
69	20	1				SPARE	0.0		0.0		0.0	SPARE				20	1	70
71	20	1				SPARE	0.0			0.0	0.0	SPARE				20	1	72
73	20	1				SPARE	0.0	0.0			0.0	SPARE				20	1	74
75	20	1				SPARE	0.0		0.0		0.0	SPARE				20	1	76
77	20	1				SPARE	0.0			0.0	0.0	SPARE				20	1	78
79	20	1				SPARE	0.0	0.0			0.0	SPARE				20	1	80
81	20	1				SPARE	0.0		0.0		0.0	SPARE				20	1	82
83	20	1				SPARE	0.0			0.0	0.0	SPARE				20	1	84

TOTALS: CONNECTED kVA PER PHASE 9 5 8 — CONNECTED TOTAL kVA 22
CONNECTED AMPS PER PHASE 73 45 66 — CONNECTED AVERAGE AMPS PER PHASE 61

NEC DIVERSIFIED LOAD CALCULATIONS
LIGHTING 2kVA @125% = 2 kVA | ALL OTHER LOADS @100% = 17 kVA | DIVERSIFIED TOTAL kVA = 22
RECEPTACLES 4kVA @100% = 4 kVA | 25% OF LARGEST MOTOR = 0 kVA | AVERAGE AMPS PER PHASE = 62
REMAINDER 0kVA @ 50% = 0 kVA

PANEL "3ELB"

VOLTS/PHASE/WIRE: 120/208 V, 3 PH 4 WIRE | PANEL SIZE & TYPE: 22" W x 6" D, FUSIBLE | MAIN SIZE & TYPE: 200/150 AMPERE MAIN FUSE SWITCH | LOCATION: | CABINET: | NOTES:

ACCESSORIES: PANEL DIRECTORY, IDENTIFICATION, GROUNDING BAR, INSULATED GROUND BAR, SUBFEED LUGS

CKT NO	OCP AMP	OCP POLE	LOAD (kVA) LTG	CO	PWR	DESCRIPTION	LCL kVA	PHASE LOAD A	B	C	LCL kVA	DESCRIPTION	LOAD (kVA) LTG	CO	PWR	OCP AMP	POLE	CKT NO
1	20	1	0.2			LTG: CANYON ACCENTS	0.3	0.7			0.6	LTG: EXHIBIT EM (3RD)	0.5			20	1	2
3	20	1	0.1			LTG: CANYON ACCENTS	0.1		0.6		0.6	LTG: EXHIBIT EM (3RD)	0.5			20	1	4
5	20	1	1.2			LTG: CANYON EM	1.5			1.6	0.5	LTG: EXHIBIT EM (3RD)	0.4			20	1	6
7	20	1	1.2			LTG: CANYON EM	1.5	1.7			0.6	LTG: EXHIBIT EM (3RD)	0.5			20	1	8
9	20	1	1.2			LTG: CANYON EM	1.5		1.7		0.6	LTG: EXHIBIT EM (3RD)	0.5			20	1	10
11	20	1	0.1			LTG: BRIDGE (4TH)	0.1			0.5	0.5	LTG: EXHIBIT EM (3RD)	0.4			20	1	12
13	20	1	0.6			LTG: SKY LOUNGE EM	0.8	1.1			0.6	LTG: EXHIBIT EM (3RD)	0.5			20	1	14
15	20	1	0.1			LTG: PATIO (5TH)	0.1		0.6		0.6	LTG: EXHIBIT EM (3RD)	0.5			20	1	16
17	20	1	0.1			LTG: BRIDGE (5TH)	0.1			0.6	0.6	LTG: EXHIBIT EM (3RD)	0.5			20	1	18
19	20	1	0.1			LTG: BRIDGE (2ND)	0.2	0.4			0.4	LTG: EXHIBIT EM (3RD)	0.3			20	1	20
21	20	1			0.4	PWR: ADA DOORS (2ND)	0.4		0.9		0.6	LTG: EXHIBIT EM (3RD)	0.5			20	1	22
23	20	1				SPARE	0.0			0.5	0.6	LTG: EXHIBIT EM (3RD)	0.5			20	1	24
25	20	1		0.4		CO: ELEC ROOMS (2ND)	0.4	0.9			0.6	LTG: EXHIBIT EM (3RD)	0.5			20	1	26
27	20	1			0.4	PWR: ADA DOORS (3RD)	0.4		0.8		0.5	LTG: EXHIBIT EM (3RD)	0.4			20	1	28
29	20	1		0.4		CO: ELEC ROOMS (3RD,4TH)	0.4			0.9	0.6	LTG: EXHIBIT EM (4TH)	0.5			20	1	30
31	20	1			0.4	PWR: ADA DOORS (4TH,5TH)	0.4	0.7			0.4	LTG: EXHIBIT EM (4TH)	0.3			20	1	32
33	20	1		0.2		CO: ELEC ROOM (5TH)	0.2		0.6		0.5	LTG: EXHIBIT EM (4TH)	0.4			20	1	34
35	20	1		0.2		SMOKE FAN CO	0.2			0.8	0.8	LTG: EXHIBIT EM (4TH)	0.6			20	1	36
37	20	1			0.4	ADA DOOR (5TH)	0.4	0.9			0.6	LTG: EXHIBIT EM (4TH)	0.5			20	1	38
39	20	1				SPARE	0.0		0.0		0.0	SPARE				20	1	40
41	20	1				SPARE	0.0			0.0	0.0	SPARE				20	1	42
43	20	1			0.5	FIRE ALARM PWR – LEVEL 2	0.5	0.7			0.3	LTG: S. OUTDOOR PATH	0.2			20	1	44
45	20	1			0.5	FIRE ALARM PWR – LEVEL 3	0.5		0.7		0.3	LTG: S. OUTDOOR PATH	0.2			20	1	46
47	20	1			0.5	FIRE ALARM PWR – LEVEL 4	0.5			0.7	0.3	LTG: S. OUTDOOR PATH	0.2			20	1	48
49	20	1			0.5	FIRE ALARM PWR – LEVEL 5	0.5	0.5			0.0	SPARE				20	1	50
51	20	1			1.0	VESDA PANELS – LEVEL 5	1.0		1.0		0.0	SPARE				20	1	52
53	20	1				SPARE	0.0			0.0	0.0	SPARE				20	1	54
55	20	1				SPARE	0.0	0.0			0.0	SPARE				20	1	56
57	20	1				SPARE	0.0		0.0		0.0	SPARE				20	1	58
59	20	1				SPARE	0.0			0.0	0.0	SPARE				20	1	60
61	20	1				SPARE	0.0	0.0			0.0	SPARE				20	1	62
63	20	1				SPARE	0.0		0.0		0.0	SPARE				20	1	64
65	20	1				SPARE	0.0			0.0	0.0	SPARE				20	1	66
67	20	1				SPARE	0.0	0.0			0.0	SPARE				20	1	68
69	20	1				SPARE	0.0		0.0		0.0	SPARE				20	1	70
71	20	1				SPARE	0.0			0.0	0.0	SPARE				20	1	72
73	20	1				SPARE	0.0	0.0			0.0	SPARE				20	1	74
75	20	1				SPARE	0.0		0.0		0.0	SPARE				20	1	76
77	20	1				SPARE	0.0			0.0	0.0	SPARE				20	1	78
79	20	1				SPARE	0.0	0.0			0.0	SPARE				20	1	80
81	20	1				SPARE	0.0		0.0		0.0	SPARE				20	1	82
83	20	1				SPARE	0.0			0.0	0.0	SPARE				20	1	84

TOTALS: CONNECTED kVA PER PHASE 8 7 6 — CONNECTED TOTAL kVA 20
CONNECTED AMPS PER PHASE 64 57 46 — CONNECTED AVERAGE AMPS PER PHASE 56

NEC DIVERSIFIED LOAD CALCULATIONS
LIGHTING 14kVA @125% = 18 kVA | ALL OTHER LOADS @100% = 5 kVA | DIVERSIFIED TOTAL kVA = 24
RECEPTACLES 1kVA @100% = 1 kVA | 25% OF LARGEST MOTOR = 0 kVA | AVERAGE AMPS PER PHASE = 65
REMAINDER 0kVA @ 50% = 0 kVA

PANEL "3LA1"

VOLTS/PHASE/WIRE: 120/208 V, 3 PH 4 WIRE | PANEL SIZE & TYPE: 22" W x 6" D, BOLT–ON | MAIN SIZE & TYPE: 225 AMPERE MAIN LUGS | LOCATION: | CABINET: | NOTES:

ACCESSORIES: PANEL DIRECTORY, IDENTIFICATION, GROUNDING BAR, INSULATED GROUND BAR, SUBFEED LUGS

CKT NO	OCP AMP	OCP POLE	LOAD (kVA) LTG	CO	PWR	DESCRIPTION	LCL kVA	PHASE LOAD A	B	C	LCL kVA	DESCRIPTION	LOAD (kVA) LTG	CO	PWR	OCP AMP	POLE	CKT NO
1	20	1		1.3		OFFICE 3122/3124 OUTLETS	1.3	1.5			0.2	EXTERIOR OUTLET		0.2		20	1	2
3	20	1		1.1		OFFICE 3126/3128 CO'S	1.1		1.9		0.8	HALLWAY 3001W CO'S		0.8		20	1	4
5	20	1		0.8		WORK AREA 3130 CO'S	0.8			1.6	0.8	OFFICE 3125B OUTLETS		0.8		20	1	6
7	20	1		0.8		REGISTAR 3125 OUTLETS	0.8	1.6			0.8	FILES 3125A OUTLETS		0.8		20	1	8
9	20	1		0.6		REGISTAR 3125 OUTLETS	0.6		1.5		0.9	FILES 3125A OUTLETS		0.9		20	1	10
11	20	1		0.6		REGISTAR 3125 OUTLETS	0.6			1.5	0.9	CLEAN WK SPACE CO'S		0.9		20	1	12
13	20	1		0.4		RESTROOM OUTLETS	0.4	1.3			0.9	CLEAN WK SPACE CO'S		0.9		20	1	14
15	20	1			1.2	DRINKING FOUNTAINS	1.2		2.0		0.8	CLEAN WK SPACE CO'S		0.8		20	1	16
17	20	1		0.6		HALLWAY OUTLETS	0.6			0.6	0.0	EF–15,16				20	1	18
19	20	1		0.8		CLASSROOM 3123 OUTLETS	0.8	1.4			0.6	WORK AREA 3107 CO'S		0.6		20	1	20
21	20	1		0.6		CLASSROOM 3123 OUTLETS	0.6		1.2		0.6	WORK AREA 3107 CO'S		0.6		20	1	22
23	20	1		0.4	0.1	CLASSROOM 3123 OUTLETS	0.5			1.1	0.6	WORK AREA 3107 CO'S		0.6		20	1	24
25	20	1		0.2		PROJECTOR OUTLET	0.2	0.4			0.2	WORK AREA 3107 CO'S		0.2		20	1	26
27	20	1		0.8		MINERALOGY 3120 CO'S	0.8		1.0		0.2	WORK AREA FUME HOOD			0.2	20	1	28
29	20	1		0.6		MINERALOGY 3120 CO'S	0.6			1.6	1.0	WORK AREA 208V OUTLET			1.0	20	2	30
31	20	1		0.4	0.1	WORK AREA 3107 CO'S	0.5	1.5			1.0	–			1.0	–	–	32
33	20	1		0.4		WORK AREA 3107 CO'S	0.4		1.4		1.0	WORK AREA 208V OUTLET			1.0	20	2	34
35	20	1			0.5	3123 AV CABINET	0.5			1.5	1.0	–			1.0	–	–	36
37	20	1			0.5	3123 AV CABINET	0.5	0.5			0.0	SPARE				20	1	38
39	20	1			0.4	3125 AV MONITOR	0.4		0.4		0.0	SPARE				20	1	40
41	20	1				SPARE	0.0			0.0	0.0	SPARE				20	1	42
43	40	3				IRRIGATION BOOSTER PUMP	0.0	0.1			0.1	LTG: W. OUTDOOR PATH	0.1			20	1	44
45	–	–				–	0.0		0.1		0.1	LTG: W. OUTDOOR PATH	0.1			20	1	46
47	–	–				–	0.0			0.0	0.0	SPARE				20	1	48
49	20	1			0.5	BMS CONTROL TRANSMFR	0.5	0.5			0.0	SPARE				20	1	50
51	20	1			0.5	BMS CONTROL TRANSMFR	0.5		0.5		0.0	SPARE				20	1	52
53	20	1			0.5	BMS CONTROL TRANSMFR	0.5			0.5	0.0	SPARE				20	1	54
55	20	1				SPARE	0.0	0.0			0.0	SPARE				20	1	56
57	20	1				SPARE	0.0		0.0		0.0	SPARE				20	1	58
59	20	1				SPARE	0.0			0.0	0.0	SPARE				20	1	60
61	20	1				SPARE	0.0	0.0			0.0	SPARE				20	1	62
63	20	1				SPARE	0.0		0.0		0.0	SPARE				20	1	64
65	20	1				SPARE	0.0			0.0	0.0	SPARE				20	1	66
67	20	1				SPARE	0.0	0.0			0.0	SPARE				20	1	68
69	20	1				SPARE	0.0		0.0		0.0	SPARE				20	1	70
71	20	1				SPARE	0.0			0.0	0.0	SPARE				20	1	72
73	20	1				SPARE	0.0	0.0			0.0	SPARE				20	1	74
75	20	1				SPARE	0.0		0.0		0.0	SPARE				20	1	76
77	20	1				SPARE	0.0			0.0	0.0	SPARE				20	1	78
79	20	1				SPARE	0.0	0.0			0.0	SPARE				20	1	80
81	20	1				SPARE	0.0		0.0		0.0	SPARE				20	1	82
83	20	1				SPARE	0.0			0.0	0.0	SPARE				20	1	84

TOTALS: CONNECTED kVA PER PHASE 9 10 8 — CONNECTED TOTAL kVA 27
CONNECTED AMPS PER PHASE 73 83 70 — CONNECTED AVERAGE AMPS PER PHASE 76

NEC DIVERSIFIED LOAD CALCULATIONS
LIGHTING 0kVA @125% = 0 kVA | ALL OTHER LOADS @100% = 9 kVA | DIVERSIFIED TOTAL kVA = 23
RECEPTACLES 10kVA @100% = 10 kVA | 25% OF LARGEST MOTOR = 0 kVA | AVERAGE AMPS PER PHASE = 64
REMAINDER 9kVA @ 50% = 4 kVA

PANEL "3LA3"

VOLTS/PHASE/WIRE: 120/208 V, 3 PH 4 WIRE | PANEL SIZE & TYPE: 22" W x 6" D, BOLT–ON | MAIN SIZE & TYPE: 400 AMPERE MAIN LUGS | LOCATION: | CABINET: | NOTES:

ACCESSORIES: PANEL DIRECTORY, IDENTIFICATION, GROUNDING BAR, INSULATED GROUND BAR, SUBFEED LUGS

CKT NO	OCP AMP	OCP POLE	LOAD (kVA) LTG	CO	PWR	DESCRIPTION	LCL kVA	PHASE LOAD A	B	C	LCL kVA	DESCRIPTION	LOAD (kVA) LTG	CO	PWR	OCP AMP	POLE	CKT NO
1	20	1		0.2		SHOP 3108 OUTLET	0.2	0.4			0.2	SHOP 3108 OUTLET		0.2		20	1	2
3	20	1		0.2		SHOP 3108 OUTLET	0.2		0.4		0.2	SHOP 3108 OUTLET		0.2		20	1	4
5	20	1		0.2		SHOP 3108 OUTLET	0.2			0.4	0.2	SHOP 3108 OUTLET		0.2		20	1	6
7	20	1		0.2		SHOP 3108 OUTLET	0.2	0.4			0.2	SHOP 3108 OUTLET		0.2		20	1	8
9	20	1		0.2		SHOP 3108 OUTLET	0.2		0.4		0.2	SHOP 3108 OUTLET		0.2		20	1	10
11	20	1		0.2		SHOP 3108 OUTLET	0.2			0.6	0.4	SHOP 3108 OUTLET		0.4		20	1	12
13	20	1		0.4		SHOP 3108 OUTLET	0.4	0.8			0.4	SHOP 3108 OUTLET		0.4		20	1	14
15	20	1		0.4		SHOP 3108 OUTLET	0.4		0.8		0.4	SHOP 3108 OUTLET		0.4		20	1	16
17	20	1		0.4		SHOP 3108 OUTLET	0.4			0.6	0.2	CORD REELS		0.2		20	1	18
19	20	2			1.3	TABLE SAW	1.3	1.5			0.2	CORD REELS		0.2		20	1	20
21	–	–			1.3	–	1.3		1.5		0.2	CORD REELS		0.2		20	1	22
23	20	1		0.2		CORD REELS	0.2			0.4	0.2	CORD REELS		0.2		20	1	24
25	20	1		0.2		CORD REELS	0.2	0.8			0.6	STORAGE 3108C CO'S		0.6		20	1	26
27	20	1		0.2		CORD REELS	0.2		1.0		0.8	STORAGE 3108C CO'S		0.8		20	1	28
29	20	1		0.2		CORD REELS	0.2			2.2	2.0	PAINT BOOTH			2.0	30	3	30
31	20	1		0.2		CORD REELS	0.2	2.2			2.0	–			2.0	–	–	32
33	20	1		0.2		CORD REELS	0.2		2.2		2.0	–			2.0	–	–	34
35	20	1			0.2	PAINT BOOTH 120V PWR	0.2			1.2	1.0	SHOP 3108 208V OUTLET			1.0	20	2	36
37	20	1			0.2	PAINT BOOTH 120V PWR	0.2	1.2			1.0	–			1.0	–	–	38
39	20	1		0.2		CORD REELS	0.2		1.2		1.0	SHOP 3108 208V OUTLET			1.0	20	2	40
41	20	1		0.2		CORD REELS	0.2			1.2	1.0	–			1.0	–	–	42
43	20	1		0.2		SHOP 3108 OUTLET	0.2	0.4			0.2	SHOP 3108 OUTLET		0.2		20	1	44
45	20	1		0.2		SHOP 3108 OUTLET	0.2		0.4		0.2	SHOP 3108 OUTLET		0.2		20	1	46
47	20	1		0.2		SHOP 3108 OUTLET	0.2			0.4	0.2	SHOP 3108 OUTLET		0.2		20	1	48
49	20	1		0.2		SHOP 3108 OUTLET	0.2	0.4			0.2	SHOP 3108 OUTLET		0.2		20	1	50
51	20	1		0.2		SHOP 3108 OUTLET	0.2		0.4		0.2	SHOP 3108 OUTLET		0.2		20	1	52
53	20	2			1.0	SHOP 3108 208V OUTLET	1.0			1.2	0.2	SHOP 3108 OUTLET		0.2		20	1	54
55	–	–			1.0	–	1.0	1.0			0.0	SPARE						56
57	20	2			1.0	SHOP 3108 208V OUTLET	1.0		1.0		0.0	SPARE						58
59	–	–			1.0	–	1.0			1.0	0.0	SPARE						60
61	50	2			4.0	WELDER	4.0	4.2			0.2	WELDING 3108A OUTLET		0.2		20	1	62
63	–	–			4.0	–	4.0		4.2		0.2	WELDING 3108A OUTLET		0.2		20	1	64
65	50	2			4.0	WELDER	4.0			4.2	0.2	WELDING 3108A OUTLET		0.2		20	1	66
67	–	–			4.0	–	4.0	4.0			0.0	SPARE				20	1	68
69	50	2			4.0	WELDER	4.0		4.0		0.0	SPARE				20	1	70
71	–	–			4.0	–	4.0			4.0	0.0	SPARE				20	1	72
73	50	2			4.0	WELDER	4.0	4.0			0.0	SPARE				20	1	74
75	–	–			4.0	–	4.0		4.0		0.0	SPARE				20	1	76
77	20	1		0.2		SHOP 3108 OUTLET	0.2			0.2	0.0	SPARE				20	1	78
79	20	1		0.2		SHOP 3108 OUTLET	0.2	0.2			0.0	SPARE				20	1	80
81	20	1		0.2		SHOP 3108 OUTLET	0.2		0.2		0.0	SPARE				20	1	82
83	20	1				SPARE	0.0			0.0	0.0	SPARE				20	1	84

TOTALS: CONNECTED kVA PER PHASE 22 22 18 — CONNECTED TOTAL kVA 61
CONNECTED AMPS PER PHASE 179 181 147 — CONNECTED AVERAGE AMPS PER PHASE 169

NEC DIVERSIFIED LOAD CALCULATIONS
LIGHTING 0kVA @125% = 0 kVA | ALL OTHER LOADS @100% = 49 kVA | DIVERSIFIED TOTAL kVA = 60
RECEPTACLES 10kVA @100% = 10 kVA | 25% OF LARGEST MOTOR = 0 kVA | AVERAGE AMPS PER PHASE = 166
REMAINDER 2kVA @ 50% = 1 kVA

PANEL "3LA4"

VOLTS/PHASE/WIRE: 120/208 V, 3 PH 4 WIRE | PANEL SIZE & TYPE: 22" W x 6" D, BOLT–ON | MAIN SIZE & TYPE: 225 AMPERE MAIN LUGS | LOCATION: | CABINET: | NOTES:

ACCESSORIES: PANEL DIRECTORY, IDENTIFICATION, GROUNDING BAR, INSULATED GROUND BAR, SUBFEED LUGS

CKT NO	OCP AMP	OCP POLE	LOAD (kVA) LTG	CO	PWR	DESCRIPTION	LCL kVA	PHASE LOAD A	B	C	LCL kVA	DESCRIPTION	LOAD (kVA) LTG	CO	PWR	OCP AMP	POLE	CKT NO
1	20	1				SPARE	0.0	0.0			0.0	LTG: CEILING CONNECTOR				20	1	2
3	20	1				SPARE	0.0		0.0		0.0	LTG: CEILING CONNECTOR				20	1	4
5	20	1		0.6		COLLECTION 3103 OUTLETS	0.6			1.8	1.2	OVERHEAD DOOR			1.2	20	1	6
7	20	1		0.8		COLLECTION 3103 OUTLETS	0.8	1.6			0.8	HALLWAY 3001Z/W CO'S		0.8		20	1	8
9	20	1			1.2	OVERHEAD DOOR	1.2		2.0		0.8	HALLWAY 3001 OUTLETS		0.8		20	1	10
11	20	1		0.8		UNCRATING 3121 CO'S	0.8			1.4	0.6	SIGN SHOP 3104 OUTLETS		0.6		20	1	12
13	20	1		0.6		SIGN SHOP 3104 OUTLETS	0.6	1.2			0.6	SIGN SHOP 3104 OUTLETS		0.6		20	1	14
15	20	1		0.6		SIGN SHOP 3104 OUTLETS	0.6		1.0		0.4	SIGN SHOP 3104 OUTLETS		0.4		20	1	16
17	20	1		0.6		SIGN SHOP 3104 OUTLETS	0.6			0.8	0.2	SIGN SHOP 3104 OUTLETS		0.2		20	1	18
19	20	1		0.6		ASSEMBLY 3102 OUTLETS	0.6	1.2			0.6	ASSEMBLY 3102 OUTLETS		0.6		20	1	20
21	20	1		0.6		ASSEMBLY 3102 OUTLETS	0.6		1.2		0.6	ASSEMBLY 3102 OUTLETS		0.6		20	1	22
23	20	1		0.6		ASSEMBLY 3102 OUTLETS	0.6			1.2	0.6	ASSEMBLY 3102 OUTLETS		0.6		20	1	24
25	20	1		0.6		WOMEN'S/MEN'S CO'S	0.6	1.2			0.6	ASSEMBLY 3102 OUTLETS		0.6		20	1	26
27	20	1			1.2	DRINKING FOUNTAIN	1.2		2.0		0.8	MECHANICAL 3001D CO'S		0.8		20	1	28
29	20	1		1.0		ELEV. LOBBY/HALL CO'S	1.0			1.8	0.8	HALLWAY 3100C CO'S		0.8		20	1	30
31	20	1		0.6		CHILLER ROOM 3001F CO'S	0.6	1.5			0.9	HALLWAY 3000H CO'S		0.9		20	1	32
33	20	1		0.6		CHILLER ROOM 3001F CO'S	0.6		0.8		0.2	CH–1 120V POWER			0.2	20	1	34
35	20	1		0.6		CHILLER ROOM 3001F CO'S	0.6			1.0	0.4	ROOM 3001E OUTLETS		0.4		20	1	36
37	20	1		0.6		MAIN HALL	0.6	1.0			0.4	ROOM 3001E OUTLETS		0.4		20	1	38
39	20	1				SPARE	0.0		0.0		0.0	SPARE				20	1	40
41	20	1				SPARE	0.0			0.0	0.0	SPARE				20	1	42
43	20	1			1.0	AH–4 LIGHTS	1.0	1.0			0.0	SPARE				20	1	44
45	20	1			0.2	WATER SOFTENER	0.2		0.2		0.0	SPARE				20	1	46
47	20	1		0.8		COOLING TOWER CO'S	0.8			0.8	0.0	SPARE				20	1	48
49	20	1			0.2	CT–2 CONTROL POWER	0.2	0.2			0.0	SPARE				20	1	50
51	20	1			0.5	BMS CONTROL TRANSMFR	0.5		0.5		0.0	SPARE				20	1	52
53	20	1			0.6	SMOKE DAMPERS	0.6			0.6	0.0	SPARE				20	1	54
55	20	1			0.4	SMOKE DAMPERS	0.4	0.4			0.0	SPARE				20	1	56
57	20	1			0.1	FIRE SPINK. TEST PUMP	0.1		0.1		0.0	SPARE				20	1	58
59	20	1				FLOW METER	0.0			0.0	0.0	SPARE				20	1	60
61	20	1			1.1	RWC–2	1.1	1.1			0.0	SPARE				20	1	62
63	20	1				CP–1	0.0		0.0		0.0	SPARE				20	1	64
65	30	1			1.6	P–22	1.6			1.6	0.0	SPARE				20	1	66
67	20	1				SPARE	0.0	0.0			0.0	SPARE				20	1	68
69	20	1				SPARE	0.0		0.0		0.0	SPARE				20	1	70
71	20	1				SPARE	0.0			0.0	0.0	SPARE				20	1	72
73	20	1				SPARE	0.0	0.0			0.0	SPARE				20	1	74
75	20	1				SPARE	0.0		0.0		0.0	SPARE				20	1	76
77	20	1				SPARE	0.0			0.0	0.0	SPARE				20	1	78
79	20	1				SPARE	0.0	0.0			0.0	SPARE				20	1	80
81	20	1				SPARE	0.0		0.0		0.0	SPARE				20	1	82
83	20	1				SPARE	0.0			0.0	0.0	SPARE				20	1	84

TOTALS: CONNECTED kVA PER PHASE 10 8 11 — CONNECTED TOTAL kVA 29
CONNECTED AMPS PER PHASE 87 65 92 — CONNECTED AVERAGE AMPS PER PHASE 81

NEC DIVERSIFIED LOAD CALCULATIONS
LIGHTING 0kVA @125% = 0 kVA | ALL OTHER LOADS @100% = 10 kVA | DIVERSIFIED TOTAL kVA = 24
RECEPTACLES 10kVA @100% = 10 kVA | 25% OF LARGEST MOTOR = 0 kVA | AVERAGE AMPS PER PHASE = 68
REMAINDER 10kVA @ 50% = 5 kVA

PANEL "3LB1"

VOLTS/PHASE/WIRE: 120/208 V, 3 PH 4 WIRE | PANEL SIZE & TYPE: 22" W x 6" D, BOLT–ON | MAIN SIZE & TYPE: 225 AMPERE MAIN LUGS | LOCATION: | CABINET: | NOTES:

ACCESSORIES: PANEL DIRECTORY, IDENTIFICATION, GROUNDING BAR, INSULATED GROUND BAR, SUBFEED LUGS

CKT NO	OCP AMP	OCP POLE	LOAD (kVA) LTG	CO	PWR	DESCRIPTION	LCL kVA	PHASE LOAD A	B	C	LCL kVA	DESCRIPTION	LOAD (kVA) LTG	CO	PWR	OCP AMP	POLE	CKT NO
1	20	1	0.2			LTG: DMC PANEL	0.2	1.4			1.2	CO: FIRST PEOPLES		1.2		20	1	2
3	20	1		1.2		CO: GREAT SALT LAKE	1.2		2.2		1.0	CO: FIRST PEOPLES		1.0		20	1	4
5	20	1		0.8		CO: GREAT SALT LAKE	0.8			1.8	1.0	CO: FIRST PEOPLES		1.0		20	1	6
7	20	1		0.8		CO: GREAT SALT LAKE	0.8	1.6			0.8	CO: FIRST PEOPLES		0.8		20	1	8
9	20	1		0.8		CO: GREAT SALT LAKE	0.8		1.4		0.6	CO: FIRST PEOPLES		0.6		20	1	10
11	20	1	0.2			LTG: GREAT SALT LAKE FB	0.3			0.6	0.4	CO: FIRST PEOPLES FB		0.4		20	1	12
13	20	1			0.4	PWR: GREAT SL AV MON.	0.4	1.3			1.2	LTG: FIRST PEOPLES FB	1.0			20	1	14
15	20	1	0.1			LTG: GREAT SALT LAKE FB	0.1		0.5		0.4	CO: FIRST PEOPLES FB		0.4		20	1	16
17	20	1			0.5	PWR: GREAT SL AV MON.	0.5			1.9	1.8	LTG: FIRST PEOPLES FB	1.4			20	1	18
19	20	1	0.1			LTG: GREAT SALT LAKE FB	0.1	0.5			0.4	CO: FIRST PEOPLES FB		0.4		20	1	20
21	20	1			0.5	PWR: GREAT SL AV MON.	0.5		1.9		1.8	LTG: FIRST PEOPLES FB	1.4			20	1	22
23	20	1		1.2		CO: LAND	1.2			1.6	0.4	CO: FIRST PEOPLES FB		0.4		20	1	24
25	20	1		1.2		CO: LAND	1.2	2.6			1.8	LTG: FIRST PEOPLES FB	1.4			20	1	26
27	20	1		0.8		CO: LAND	0.8		1.2		0.4	PWR: FIRST PEOP. AV MON			0.4	20	1	28
29	20	1		1.2		CO: LAND	1.2			1.6	0.4	PWR: FIRST PEOPLES JB			0.4	20	1	30
31	20	1		1.2		CO: LAND	1.2	1.6			0.4	PWR: LAND AV MONITOR			0.4	20	1	32
33	20	1		0.8		CO: LAND	0.8		1.3		0.5	PWR: LAND AV MONITOR			0.5	20	1	34
35	20	1		0.4		CO: LAND FB	0.4			2.2	1.8	PWR: LAND PROJ.			1.8	20	1	36
37	20	1	0.7			LTG: LAND FB	0.9	0.8			0.1	LTG: LAND LEDs	0.1			20	1	38
39	20	1		0.4		CO: LAND	0.4		0.6		0.2	CO: OUTSIDE		0.2		20	1	40
41	20	1		0.4		CO: LAND	0.4			1.4	1.0	PWR: CANYON EXHIBIT			1.0	20	1	42
43	20	1		0.4		CO: LEARNING LAB	0.4	1.0			0.6	CO: MECH ROOM		0.6		20	1	44
45	20	1		0.8		CO: LEARNING LAB	0.8		1.4		0.6	CO: MECH ROOM		0.6		20	1	46
47	20	1		0.6		CO: LEARNING LAB	0.6			1.2	0.6	CO: MECH ROOM		0.6		20	1	48
49	20	1		0.8		CO: STORAGE	0.8	2.0			1.2	CO: MECH ROOM		1.2		20	1	50
51	20	1		0.8		CO: STORAGE	0.8		1.3		0.5	PWR: LEARNING LAB PROJ			0.5	20	1	52
53	20	1		0.4		CO: STORAGE	0.4			0.8	0.5	LTG: INSET CASE	0.4			20	1	54
55	20	1		0.4		CO: STORAGE	0.4	0.6			0.3	LTG: LAKE FORMATION FB	0.2			20	1	56
57	20	1				SPARE	0.0		0.2		0.2	CO: LAKE FORMATION FB		0.2		20	1	58
59	20	1	0.5			LTG: LAND FB	0.6			1.0	0.5	PWR: EROSION TABLE PUMP			0.5	20	1	60
61	20	1			0.5	PWR: LAND FB	0.5	1.3			1.1	LTG: LAND JB	0.9			20	1	62
63	20	1			0.2	PWR: LAND JB	0.2		1.1		1.1	LTG: LAND JB	0.9			20	1	64
65	20	1	0.4			LTG: LAND JB	0.5			1.0	0.8	LTG: GREAT SL JB	0.6			20	1	66
67	20	1	0.1			LTG: LAND FB	0.1	0.5			0.4	CO: GREAT SL JB		0.4		20	1	68
69	20	1			1.8	PWR: LAND FB	1.8		2.3		0.5	PWR: LAND AV MONITOR			0.5	20	1	70
71	20	1			0.5	PWR: LAND PUMP	0.5			0.5	0.0	SPARE				20	1	72
73	20	1			0.2	PWR: LAND JB	0.2	0.2			0.0	SPARE				20	1	74
75	20	1				SPARE	0.0		0.0		0.0	SPARE				20	1	76
77	20	1				SPARE	0.0			0.0	0.0	SPARE				20	1	78
79	20	1				SPARE	0.0	0.0			0.0	SPARE				20	1	80
81	20	1				SPARE	0.0		0.0		0.0	SPARE				20	1	82
83	20	1				SPARE	0.0			0.0	0.0	SPARE				20	1	84

TOTALS: CONNECTED kVA PER PHASE 15 15 16 — CONNECTED TOTAL kVA 46
CONNECTED AMPS PER PHASE 128 127 130 — CONNECTED AVERAGE AMPS PER PHASE 129

NEC DIVERSIFIED LOAD CALCULATIONS
LIGHTING 11kVA @125% = 13 kVA | ALL OTHER LOADS @100% = 10 kVA | DIVERSIFIED TOTAL kVA = 41
RECEPTACLES 10kVA @100% = 10 kVA | 25% OF LARGEST MOTOR = 0 kVA | AVERAGE AMPS PER PHASE = 114
REMAINDER 15kVA @ 50% = 8 kVA

Project Title

UTAH MUSEUM OF NATURAL HISTORY

UNIVERSITY OF UTAH
SALT LAKE CITY, UTAH

State of Utah
Department of Administrative Services
Division of Facilities Construction & Management
4110 State Office Building
Salt Lake City, Utah 84114
Phone: (801) 538 - 3018
Fax: (801) 538 - 3267
www.dfcm.utah.gov

PROJ. NO. 02243750

Owner
UMNH
1390 East President's Circle
Salt Lake City, Utah 84112
801.581.6927 tel

Design Architect
Polshek Partnership Architects LLP
320 West 13th Street
New York, New York
212.807.7171 tel

Architect of Record
GSBS
375 West 200 South
Salt Lake City, Utah
801.521.8600 tel

Structural Engineer
Leslie E. Robertson Associates
30 Broad Street
New York, New York 10004
212.750.9000 tel

Structural Engineer
Dunn Associates, Inc.
380 West 800 South, Suite 100
Salt Lake City, Utah 84101
801.575.8877 tel

Mechanical/Plumbing/Fire Protection Engineer
Colvin Engineering Associates, Inc.
244 West 300 North
Salt Lake City, Utah 84103
801.322.2400 tel

Electrical/AV Engineer
Spectrum Engineers
175 South Main Street
Salt Lake City, Utah 84111
800.678.7077 tel

Civil Engineer
Stantec
3995 South 700 East Suite 300
Salt Lake City, Utah 84107
801.261.0090 tel

Landscape Architects
Design Workshop
224 South 200 West
Salt Lake City, UT 84101
801.359.4771 tel

Exhibit Design
Ralph Appelbaum Associates
88 Pine Street
New York, New York 10005
212.334.8200

Key Plan

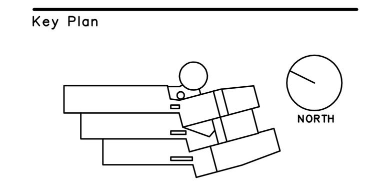

Seal

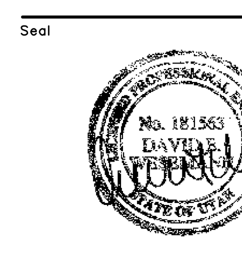

No.	Issue Name	Date
10	RFI 510	06/10/09
9	LIGHTING CHANGES	06/08/09
8	LEVEL ONE CHANGES	05/12/09
7	EXHIBIT POWER CHANGES	04/24/09
6	EQUIPMENT CHANGES	04/17/09
	CONFORMANCE SET	02/09/09
5	EXHIBIT & LTG CHANGES	12/19/08
4	CODE REVIEW	12/10/08
3	ADDENDUM #3	11/10/08
2	ADDENDUM #2	10/23/08
1	ADDENDUM #1	10/16/08
	CONSTRUCTION DOCUMENTS	09/30/08

Date 02/03/09 | Project No. 2004.076.00
Scale N.T.S. | PPA – 0423

Sheet Title
ELECTRICAL PANEL SCHEDULES

Sheet No.
EP–608

File Name: P:\2005\20050145\1Drawings\Sheet\45EP–608.dwg Last Plotted: 2009/06/18 @ 3:17 PM By: dlm

Copyright ? 2006 Polshek Partnership Architects, LLP

$PROJECT$ $USER_ID$ $DATE$ $TIME$
$PROJECT$ $USER_ID$ $DATE$ $TIME$
File Name: P:\2005\20050145\1Drawings\Sheet\45EP-607.dwg Last Plotted: 2009/06/18 @ 3:18 PM By: dlm
Copyright ? 2006 Polshek Partnership Architects, LLP

PANEL "1LA1"

VOLTS/PHASE/WIRE: 120/208 V, 3 PH 4 WIRE | PANEL SIZE & TYPE: 22" W x 6" D, BOLT-ON | MAIN SIZE & TYPE: 225 AMPERE MAIN LUGS | LOCATION: | CABINET: | NOTES:

ACCESSORIES: PANEL DIRECTORY, IDENTIFICATION, GROUNDING BAR, INSULATED GROUND BAR, SUBFEED LUGS

CKT NO	OCP AMP	OCP POLE	LOAD (kVA) LTG	CO	PWR	DESCRIPTION	LCL kVA	PHASE LOAD A	B	C	LCL kVA	DESCRIPTION	LOAD (kVA) LTG	CO	PWR	OCP AMP	OCP POLE	CKT NO
1	20	1	1.5			LTG: ENTRY	1.9	2.1			0.6	HALL/STAIRWELL CO'S		0.6		20	1	2
3	20	1	0.1			LTG: ENTRY	0.1		1.3		1.2	DRINKING FOUNTAINS			1.2	20	1	4
5	20	1	0.1			LTG: ENTRY	0.1			0.9	0.8	RESTROOM OUTLETS		0.8		20	1	6
7	20	1			0.6	EF-11	0.6	1.0			0.4	1ST FLR AREA 'A' FLRBX		0.4		20	1	8
9	20	1			0.6	EF-9	0.6		0.8		0.2	OUTDOOR OUTLET		0.2		20	1	10
11	20	1		0.8		1ST FLR AREA 'A' CO'S	0.8			1.6	0.8	MECHANICAL RM OUTLETS		0.8		20	1	12
13	20	1		0.6		1ST FLR AREA 'A' CO'S	0.6	0.8			0.2	UNIT HEATER			0.2	20	1	14
15	20	1		0.8		CIRCULATION DESK CO'S	0.8		1.0		0.2	GLYCOL SYSTEM			0.2	20	1	16
17	20	1		0.8		CIRCULATION DESK CO'S	0.8			1.0	0.2	P-18			0.2	20	1	18
19	20	1			0.5	RWC-2	0.5	1.0			0.5	BMS CONTROL TRANSFMR			0.5	20	1	20
21	20	1			0.7	ADT-1	0.7		1.3		0.6	CO: ENTRY LOBBY/VEST		0.6		20	1	22
23	20	1			0.8	FLAT PNL MONITOR	0.8			1.0	0.2	OUTDOOR OUTLET		0.2		20	1	24
25	20	1				SPARE	0.0	0.0			0.0	SPARE				20	1	26
27	20	1				SPARE	0.0		0.0		0.0	SPARE				20	1	28
29	20	1				SPARE	0.0			0.0	0.0	SPARE				20	1	30
31	20	1				SPARE	0.0	0.0			0.0	SPARE				20	1	32
33	20	1				SPARE	0.0		0.0		0.0	SPARE				20	1	34
35	20	1				SPARE	0.0			0.0	0.0	SPARE				20	1	36
37	20	1				SPARE	0.0	0.0			0.0	SPARE				20	1	38
39	20	1				SPARE	0.0		0.0		0.0	SPARE				20	1	40
41	20	1				SPARE	0.0			0.0	0.0	SPARE				20	1	42
TOTALS:						CONNECTED kVA PER PHASE		**5**	**4**	**4**		CONNECTED TOTAL kVA **14**						
						CONNECTED AMPS PER PHASE		**41**	**37**	**37**		CONNECTED AVERAGE AMPS PER PHASE **38**						

NEC DIVERSIFIED LOAD CALCULATIONS
LIGHTING 2kVA @125% = **2** kVA | ALL OTHER LOADS @100% = **6** kVA | DIVERSIFIED TOTAL kVA = **14**
RECEPTACLES 7kVA @100% = **7** kVA | 25% OF LARGEST MOTOR = **0** kVA | AVERAGE AMPS PER PHASE = **39**
REMAINDER 0kVA @ 50% = **0** kVA

PANEL "2LA3"

VOLTS/PHASE/WIRE: 120/208 V, 3 PH 4 WIRE | PANEL SIZE & TYPE: 22" W x 6" D, BOLT-ON | MAIN SIZE & TYPE: 225 AMPERE MAIN LUGS | LOCATION: | CABINET: | NOTES:

ACCESSORIES: PANEL DIRECTORY, IDENTIFICATION, GROUNDING BAR, INSULATED GROUND BAR, SUBFEED LUGS

CKT NO	OCP AMP	OCP POLE	LOAD (kVA) LTG	CO	PWR	DESCRIPTION	LCL kVA	PHASE LOAD A	B	C	LCL kVA	DESCRIPTION	LOAD (kVA) LTG	CO	PWR	OCP AMP	OCP POLE	CKT NO
1	20	1		0.2		LARGE 3100A FLORBX	0.2	0.4			0.2	LARGE 3100A FLORBX		0.2		20	1	2
3	20	1		0.2		LARGE 3100A FLORBX	0.2		0.4		0.2	LARGE 3100A FLORBX		0.2		20	1	4
5	20	1		0.2		LARGE 3100A FLORBX	0.2			0.4	0.2	LARGE 3100A FLORBX		0.2		20	1	6
7	20	1		0.2		LARGE 3100A FLORBX	0.2	0.4			0.2	LARGE 3100A FLORBX		0.2		20	1	8
9	20	1		0.2		LARGE 3100A FLORBX	0.2		0.4		0.2	LARGE 3100A FLORBX		0.2		20	1	10
11	20	1		0.2		LARGE 3100A FLORBX	0.2			0.4	0.2	LARGE 3100A FLORBX		0.2		20	1	12
13	20	1		0.2		LARGE 3100A FLORBX	0.2	0.4			0.2	LARGE 3100A FLORBX		0.2		20	1	14
15	20	1		0.2		LARGE 3100A FLORBX	0.2		0.4		0.2	LARGE 3100A FLORBX		0.2		20	1	16
17	20	1		0.2		LARGE 3100A FLORBX	0.2			0.4	0.2	LARGE 3100A FLORBX		0.2		20	1	18
19	20	1		0.2		LARGE 3100A FLORBX	0.2	0.4			0.2	LARGE 3100A FLORBX		0.2		20	1	20
21	20	1		0.2		LARGE 3100A FLORBX	0.2		0.4		0.2	LARGE 3100A FLORBX		0.2		20	1	22
23	20	1		0.2		LARGE 3100A FLORBX	0.2			0.4	0.2	LARGE 3100A FLORBX		0.2		20	1	24
25	20	1		0.2		LARGE 3100A FLORBX	0.2	0.4			0.2	LARGE 3100A FLORBX		0.2		20	1	26
27	20	1		0.2		LARGE 3100A FLORBX	0.2		0.4		0.2	LARGE 3100A FLORBX		0.2		20	1	28
29	20	1		0.2		LARGE 3100A FLORBX	0.2			0.4	0.2	LARGE 3100A FLORBX		0.2		20	1	30
31	20	1		0.2		LARGE 3100A FLORBX	0.2	0.4			0.2	LARGE 3100A FLORBX		0.2		20	1	32
33	20	1		0.2		LARGE 3100A FLORBX	0.2		0.4		0.2	LARGE 3100A FLORBX		0.2		20	1	34
35	20	1		0.2		LARGE 3100A FLORBX	0.2			0.4	0.2	LARGE 3100A FLORBX		0.2		20	1	36
37	20	1		0.8		LARGE 3100A OUTLETS	0.8	1.6			0.8	LARGE 3100A OUTLETS		0.8		20	1	38
39	20	1		0.8		LARGE 3100A OUTLETS	0.8		1.6		0.8	LARGE 3100A OUTLETS		0.8		20	1	40
41	20	1		0.8		LARGE 3100A OUTLETS	0.8			1.6	0.8	LARGE 3100A OUTLETS		0.8		20	1	42
43	20	1		0.2		LARGE 3100A FLORBX	0.2	0.6			0.4	LARGE 3100A OUTLETS		0.4		20	1	44
45	20	1		0.2		LARGE 3100A FLORBX	0.2		1.3		1.1	LARGE 3100A OUTLETS		1.1		20	1	46
47	20	1		0.2		LARGE 3100A FLORBX	0.2			1.0	0.8	LARGE 3100A OUTLETS		0.8		20	1	48
49	20	1		0.2		LARGE 3100A FLORBX	0.2	1.0			0.8	LARGE 3100A OUTLETS		0.8		20	1	50
51	20	1		0.2		LARGE 3100A FLORBX	0.2		1.0		0.8	LARGE 3100A OUTLETS		0.8		20	1	52
53	20	1		0.2		LARGE 3100A FLORBX	0.2			1.0	0.8	LARGE 3100A OUTLETS		0.8		20	1	54
55	30	2			1.0	CANYON 30A 208V OUTLET	1.0	1.0			0.0	SPARE				20	1	56
57	–	–			1.0	–	1.0		1.0		0.0	SPARE				20	1	58
59	30	2			1.0	CANYON 30A 208V OUTLET	1.0			1.0	0.0	SPARE				20	1	60
61	–	–			1.0	–	1.0	1.0			0.0	SPARE				20	1	62
63	20	1				SPARE	0.0		0.0		0.0	SPARE				20	1	64
65	20	1				SPARE	0.0			0.0	0.0	SPARE				20	1	66
67	20	1				SPARE	0.0	0.0			0.0	SPARE				20	1	68
69	20	1				SPARE	0.0		0.0		0.0	SPARE				20	1	70
71	20	1				SPARE	0.0			0.0	0.0	SPARE				20	1	72
73	20	1				SPARE	0.0	0.0			0.0	SPARE				20	1	74
75	20	1				SPARE	0.0		0.0		0.0	SPARE				20	1	76
77	20	1				SPARE	0.0			0.0	0.0	SPARE				20	1	78
79	20	1				SPARE	0.0	0.0			0.0	SPARE				20	1	80
81	20	1				SPARE	0.0		0.0		0.0	SPARE				20	1	82
83	20	1				SPARE	0.0			0.0	0.0	SPARE				20	1	84
TOTALS:						CONNECTED kVA PER PHASE		**8**	**7**	**7**		CONNECTED TOTAL kVA **22**						
						CONNECTED AMPS PER PHASE		**63**	**61**	**58**		CONNECTED AVERAGE AMPS PER PHASE **61**						

NEC DIVERSIFIED LOAD CALCULATIONS
LIGHTING 0kVA @125% = **0** kVA | ALL OTHER LOADS @100% = **4** kVA | DIVERSIFIED TOTAL kVA = **18**
RECEPTACLES 10kVA @100% = **10** kVA | 25% OF LARGEST MOTOR = **0** kVA | AVERAGE AMPS PER PHASE = **50**
REMAINDER 8kVA @ 50% = **4** kVA

PANEL "2LB2"

VOLTS/PHASE/WIRE: 120/208 V, 3 PH 4 WIRE | PANEL SIZE & TYPE: 22" W x 6" D, BOLT-ON | MAIN SIZE & TYPE: 225 AMPERE MAIN LUGS | LOCATION: | CABINET: | NOTES:

ACCESSORIES: PANEL DIRECTORY, IDENTIFICATION, GROUNDING BAR, INSULATED GROUND BAR, SUBFEED LUGS

CKT NO	OCP AMP	OCP POLE	LOAD (kVA) LTG	CO	PWR	DESCRIPTION	LCL kVA	PHASE LOAD A	B	C	LCL kVA	DESCRIPTION	LOAD (kVA) LTG	CO	PWR	OCP AMP	OCP POLE	CKT NO
1	20	1	0.1			LTG: LEARNING LAB DMA	0.1	0.9			1.0	LTG: CANYON TRACK	0.8			20	1	2
3	20	1				SPARE	0.0		1.0		1.3	LTG: CANYON CASE	1.0			20	1	4
5	20	1	1.0			LTG: DMB	1.2			1.1	0.1	LTG: CHILDREN'S GALLERY	0.1			20	1	6
7	20	1	1.0			LTG: DMB	1.2	1.2			0.3	LTG: CHILDREN'S GALLERY	0.2			20	1	8
9	20	1				SPARE	0.0		0.8		0.8	CO: CHILDREN'S GALLERY		0.8		20	1	10
11	20	1				SPARE	0.0			1.0	1.3	LTG: UTAH FUTURES	1.0			20	1	12
13	20	1	1.5			LTG: CHILD. GALL DMF	1.9	2.5			1.3	LTG: UTAH FUTURES	1.0			20	1	14
15	20	1				SPARE	0.0		0.0		0.0	SPARE				20	1	16
17	20	1				SPARE	0.0			0.0	0.0	SPARE				20	1	18
19	20	1				SPARE	0.0	0.0			0.0	SPARE				20	1	20
21	20	1				SPARE	0.0		0.0		0.0	SPARE				20	1	22
23	20	1				SPARE	0.0			0.0	0.0	SPARE				20	1	24
25	20	1				SPARE	0.0	0.0			0.0	SPARE				20	1	26
27	20	1				SPARE	0.0		0.0		0.0	SPARE				20	1	28
29	20	1				SPARE	0.0			0.0	0.0	SPARE				20	1	30
31	20	1				SPARE	0.0	0.0			0.0	SPARE				20	1	32
33	20	1				SPARE	0.0		0.0		0.0	SPARE				20	1	34
35	20	1				SPARE	0.0			0.0	0.0	SPARE				20	1	36
37	20	1				SPARE	0.0	0.0			0.0	SPARE				20	1	38
39	20	1				SPARE	0.0		0.0		0.0	SPARE				20	1	40
41	20	1				SPARE	0.0			0.0	0.0	SPARE				20	1	42
TOTALS:						CONNECTED kVA PER PHASE		**5**	**2**	**2**		CONNECTED TOTAL kVA **8**						
						CONNECTED AMPS PER PHASE		**38**	**15**	**17**		CONNECTED AVERAGE AMPS PER PHASE **24**						

NEC DIVERSIFIED LOAD CALCULATIONS
LIGHTING 8kVA @125% = **10** kVA | ALL OTHER LOADS @100% = **0** kVA | DIVERSIFIED TOTAL kVA = **10**
RECEPTACLES 1kVA @100% = **1** kVA | 25% OF LARGEST MOTOR = **0** kVA | AVERAGE AMPS PER PHASE = **29**
REMAINDER 0kVA @ 50% = **0** kVA

9

PANEL "2LA1"

VOLTS/PHASE/WIRE: 120/208 V, 3 PH 4 WIRE | PANEL SIZE & TYPE: 22" W x 6" D, BOLT-ON | MAIN SIZE & TYPE: 400 AMPERE MAIN LUGS | LOCATION: | CABINET: | NOTES:

ACCESSORIES: PANEL DIRECTORY, IDENTIFICATION, GROUNDING BAR, INSULATED GROUND BAR, SUBFEED LUGS

CKT NO	OCP AMP	OCP POLE	LOAD (kVA) LTG	CO	PWR	DESCRIPTION	LCL kVA	PHASE LOAD A	B	C	LCL kVA	DESCRIPTION	LOAD (kVA) LTG	CO	PWR	OCP AMP	OCP POLE	CKT NO
1	20	1	0.8			LTG: TRACK-Changing Exhibit	1.0	1.9			1.3	LTG: TRACK-Changing Exhibit	1.1			20	1	2
3	20	1	0.9			LTG: TRACK-Changing Exhibit	1.1		2.0		1.3	LTG: TRACK-Changing Exhibit	1.1			20	1	4
5	20	1	0.8			LTG: TRACK-Changing Exhibit	1.0			1.9	1.3	LTG: TRACK-Changing Exhibit	1.1			20	1	6
7	20	1	0.8			LTG: TRACK-Changing Exhibit	0.9	1.8			1.3	LTG: TRACK-Changing Exhibit	1.1			20	1	8
9	20	1	0.8			LTG: TRACK-Changing Exhibit	1.0		1.9		1.3	LTG: TRACK-Changing Exhibit	1.1			20	1	10
11	20	1	1.4			LTG: TRACK-Changing Exhibit	1.7			2.8	1.8	LTG: TRACK-Changing Exhibit	1.4			20	1	12
13	20	1	1.4			LTG: TRACK-Changing Exhibit	1.7	2.8			1.8	LTG: TRACK-Changing Exhibit	1.4			20	1	14
15	20	1	1.4			LTG: TRACK-Changing Exhibit	1.7		2.8		1.8	LTG: TRACK-Changing Exhibit	1.4			20	1	16
17	20	1	1.4			LTG: TRACK-Changing Exhibit	1.7			2.8	1.8	LTG: TRACK-Changing Exhibit	1.4			20	1	18
19	20	1	1.4			LTG: TRACK-Changing Exhibit	1.7	2.8			1.8	LTG: TRACK-Changing Exhibit	1.4			20	1	20
21	20	1	1.4			LTG: TRACK-Changing Exhibit	1.7		2.8		1.8	LTG: TRACK-Changing Exhibit	1.4			20	1	22
23	20	1	1.4			LTG: TRACK-Changing Exhibit	1.8			2.8	1.7	LTG: TRACK-Changing Exhibit	1.4			20	1	24
25	20	1	1.4			LTG: TRACK-Changing Exhibit	1.8	2.8			1.7	LTG: TRACK-Changing Exhibit	1.4			20	1	26
27	20	1	1.4			LTG: TRACK-Changing Exhibit	1.8		2.8		1.7	LTG: TRACK-Changing Exhibit	1.4			20	1	28
29	20	1	1.4			LTG: TRACK-Changing Exhibit	1.8			2.8	1.7	LTG: TRACK-Changing Exhibit	1.4			20	1	30
31	20	1	1.4			LTG: TRACK-Changing Exhibit	1.8	2.8			1.7	LTG: TRACK-Changing Exhibit	1.4			20	1	32
33	20	1	1.4			LTG: TRACK-Changing Exhibit	1.8		2.8		1.7	LTG: TRACK-Changing Exhibit	1.4			20	1	34
35	20	1	1.4			LTG: TRACK-Changing Exhibit	1.7			2.3	1.2	LTG: TRACK-Changing Exhibit	1.0			20	1	36
37	20	1				SPARE	0.0	1.0			1.2	LTG: TRACK-Changing Exhibit	1.0			20	1	38
39	20	1	1.0			LTG: TRACK-Changing Exhibit	1.2		1.0		0.0	SPARE				20	1	40
41	20	1	1.0			LTG: TRACK-Changing Exhibit	1.2			1.0	0.0	SPARE				20	1	42
43	20	1	1.0			LTG: HALLWAY TRACK	1.3	1.5			0.6	LTG: CANYON CASE	0.5			20	1	44
45	20	1	1.0			LTG: HALLWAY TRACK	1.3		1.5		0.5	PWR: CANYON CASE			0.5	20	1	46
47	20	1			0.5	PWR: CANYON CASE	0.5			1.0	0.6	LTG: CANYON CASE	0.5			20	1	48
49	20	1	0.5			LTG: CANYON CASE	0.6	1.0			0.6	LTG: CANYON CASE	0.5			20	1	50
51	20	1				SPARE	0.0		0.5		0.6	LTG: CANYON CASE	0.5			20	1	52
53	20	1				SPARE	0.0			0.5	0.6	LTG: CANYON CASE	0.5			20	1	54
55	20	1	0.9			LTG: LOBBY TRACK	1.1	2.0			1.4	LTG: STORE TRACK	1.1			20	1	56
57	20	1	0.9			LTG: LOBBY TRACK	1.1		2.0		1.4	LTG: STORE TRACK	1.1			20	1	58
59	20	1	0.8			LTG: LOBBY TRACK	1.0			2.0	1.4	LTG: STORE TRACK	1.1			20	1	60
61	20	1	0.8			LTG: LOBBY TRACK	1.0	2.0			1.4	LTG: STORE TRACK	1.1			20	1	62
63	20	1	1.1			LTG: STORE TRACK	1.3		2.3		1.5	LTG: STORE TRACK	1.2			20	1	64
65	20	1	1.1			LTG: STORE TRACK	1.3			2.3	1.5	LTG: STORE TRACK	1.2			20	1	66
67	20	1	1.1			LTG: STORE TRACK	1.3	2.1			1.3	LTG: STORE	1.1			20	1	68
69	20	1	1.1			LTG: STORE TRACK	1.3		1.1		0.0	SPARE				20	1	70
71	20	1	0.8			LTG: STORE TRACK	0.9			0.8	0.0	SPARE				20	1	72
73	20	1	0.8			LTG: STORE TRACK	0.9	0.8			0.0	SPARE				20	1	74
75	20	1				SPARE	0.0		0.0		0.0	SPARE				20	1	76
77	20	1				SPARE	0.0			0.0	0.0	SPARE				20	1	78
79	20	1				SPARE	0.0	0.0			0.0	SPARE				20	1	80
81	20	1				SPARE	0.0		0.0		0.0	SPARE				20	1	82
83	20	1				SPARE	0.0			0.0	0.0	SPARE				20	1	84
TOTALS:						CONNECTED kVA PER PHASE		**25**	**23**	**23**		CONNECTED TOTAL kVA **71**						
						CONNECTED AMPS PER PHASE		**209**	**194**	**189**		CONNECTED AVERAGE AMPS PER PHASE **197**						

NEC DIVERSIFIED LOAD CALCULATIONS
LIGHTING 70kVA @125% = **88** kVA | ALL OTHER LOADS @100% = **1** kVA | DIVERSIFIED TOTAL kVA = **89**
RECEPTACLES 0kVA @100% = **0** kVA | 25% OF LARGEST MOTOR = **0** kVA | AVERAGE AMPS PER PHASE = **246**
REMAINDER 0kVA @ 50% = **0** kVA

PANEL "2LA4"

VOLTS/PHASE/WIRE: 120/208 V, 3 PH 4 WIRE | PANEL SIZE & TYPE: 22" W x 6" D, BOLT-ON | MAIN SIZE & TYPE: 225 AMPERE MAIN LUGS | LOCATION: | CABINET: | NOTES:

ACCESSORIES: PANEL DIRECTORY, IDENTIFICATION, GROUNDING BAR, INSULATED GROUND BAR, SUBFEED LUGS

CKT NO	OCP AMP	OCP POLE	LOAD (kVA) LTG	CO	PWR	DESCRIPTION	LCL kVA	PHASE LOAD A	B	C	LCL kVA	DESCRIPTION	LOAD (kVA) LTG	CO	PWR	OCP AMP	OCP POLE	CKT NO
1	20	1				SPARE	0.0	0.0			0.0	SPARE				20	1	2
3	20	1				SPARE	0.0		0.0		0.0	SPARE				20	1	4
5	20	1				SPARE	0.0			0.0	0.0	SPARE				20	1	6
7	20	1				SPARE	0.0	0.0			0.0	SPARE				20	1	8
9	20	1				SPARE	0.0		0.0		0.0	SPARE				20	1	10
11	20	1				SPARE	0.0			0.0	0.0	SPARE				20	1	12
13	20	1				SPARE	0.0	0.0			0.0	SPARE				20	1	14
15	20	1				SPARE	0.0		0.0		0.0	SPARE				20	1	16
17	20	1				SPARE	0.0			0.0	0.0	SPARE				20	1	18
19	20	1				SPARE	0.0	0.0			0.0	SPARE				20	1	20
21	20	1				SPARE	0.0		0.0		0.0	SPARE				20	1	22
23	20	1				SPARE	0.0			0.0	0.0	SPARE				20	1	24
25	20	1				SPARE	0.0	0.0			0.0	SPARE				20	1	26
27	20	1				SPARE	0.0		0.0		0.0	SPARE				20	1	28
29	20	1				SPARE	0.0			0.0	0.0	SPARE				20	1	30
31	20	1				SPARE	0.0	0.0			0.0	SPARE				20	1	32
33	20	1				SPARE	0.0		0.0		0.0	SPARE				20	1	34
35	20	1				SPARE	0.0			0.0	0.0	SPARE				20	1	36
37	20	1				SPARE	0.0	0.0			0.0	SPARE				20	1	38
39	20	1				SPARE	0.0		0.0		0.0	SPARE				20	1	40
41	20	1				SPARE	0.0			0.0	0.0	SPARE				20	1	42
TOTALS:						CONNECTED kVA PER PHASE		**0**	**0**	**0**		CONNECTED TOTAL kVA **0**						
						CONNECTED AMPS PER PHASE		**0**	**0**	**0**		CONNECTED AVERAGE AMPS PER PHASE **0**						

NEC DIVERSIFIED LOAD CALCULATIONS
LIGHTING 0kVA @125% = **0** kVA | ALL OTHER LOADS @100% = **0** kVA | DIVERSIFIED TOTAL kVA = **0**
RECEPTACLES 0kVA @100% = **0** kVA | 25% OF LARGEST MOTOR = **0** kVA | AVERAGE AMPS PER PHASE = **0**
REMAINDER 0kVA @ 50% = **0** kVA

PANEL "2LB3"

VOLTS/PHASE/WIRE: 120/208 V, 3 PH 4 WIRE | PANEL SIZE & TYPE: 22" W x 6" D, BOLT-ON | MAIN SIZE & TYPE: 400 AMPERE MAIN LUGS | LOCATION: | CABINET: | NOTES:

ACCESSORIES: PANEL DIRECTORY, IDENTIFICATION, GROUNDING BAR, INSULATED GROUND BAR, SUBFEED LUGS

CKT NO	OCP AMP	OCP POLE	LOAD (kVA) LTG	CO	PWR	DESCRIPTION	LCL kVA	PHASE LOAD A	B	C	LCL kVA	DESCRIPTION	LOAD (kVA) LTG	CO	PWR	OCP AMP	OCP POLE	CKT NO
1	20	1	1.0			LTG: FIRST PEOPLES	1.3	2.0			1.3	LTG: WORK LIGHTS	1.0			20	1	2
3	20	1	1.0			LTG: FIRST PEOPLES	1.3		1.7		0.9	LTG: WORK LIGHTS	0.7			20	1	4
5	20	1	1.0			LTG: FIRST PEOPLES	1.3			2.0	1.3	LTG: WORK LIGHTS	1.0			20	1	6
7	20	1	1.0			LTG: FIRST PEOPLES	1.3	2.0			1.3	LTG: WORK LIGHTS	1.0			20	1	8
9	20	1	1.0			LTG: FIRST PEOPLES	1.3		1.8		1.0	LTG: WORK LIGHTS	0.8			20	1	10
11	20	1	1.0			LTG: FIRST PEOPLES	1.3			2.0	1.3	LTG: WORK LIGHTS	1.0			20	1	12
13	20	1	1.0			LTG: FIRST PEOPLES	1.3	1.8			1.0	LTG: WORK LIGHTS	0.8			20	1	14
15	20	1	1.0			LTG: FIRST PEOPLES	1.3		2.1		1.3	LTG: LANDS	1.1			20	1	16
17	20	1	1.0			LTG: FIRST PEOPLES	1.3			2.1	1.3	LTG: LANDS	1.1			20	1	18
19	20	1	1.0			LTG: FIRST PEOPLES	1.3	2.1			1.3	LTG: LANDS	1.1			20	1	20
21	20	1	1.0			LTG: FIRST PEOPLES	1.3		2.1		1.3	LTG: LANDS	1.1			20	1	22
23	20	1	1.0			LTG: FIRST PEOPLES	1.3			2.1	1.3	LTG: LANDS	1.1			20	1	24
25	20	1	1.0			LTG: FIRST PEOPLES	1.3	2.1			1.3	LTG: LANDS	1.1			20	1	26
27	20	1	1.0			LTG: FIRST PEOPLES	1.3		2.1		1.3	LTG: LANDS	1.1			20	1	28
29	20	1	1.0			LTG: LANDS	1.3			2.1	1.3	LTG: LANDS	1.1			20	1	30
31	20	1	1.0			LTG: LANDS	1.3	2.1			1.3	LTG: LANDS	1.1			20	1	32
33	20	1	1.0			LTG: LANDS	1.3		2.1		1.3	LTG: LANDS	1.1			20	1	34
35	20	1	1.0			LTG: LANDS	1.3			2.1	1.3	LTG: LANDS	1.1			20	1	36
37	20	1	1.0			LTG: LANDS	1.3	2.1			1.3	LTG: LANDS	1.1			20	1	38
39	20	1	1.0			LTG: LANDS	1.3		1.0		0.0	SPARE				20	1	40
41	20	1	1.0			LTG: LANDS	1.3			2.1	1.3	LTG: GREAT SALT LAKE	1.1			20	1	42
43	20	1	1.0			LTG: LANDS	1.3	2.1			1.3	LTG: GREAT SALT LAKE	1.1			20	1	44
45	20	1	1.0			LTG: LANDS	1.3		2.1		1.3	LTG: GREAT SALT LAKE	1.1			20	1	46
47	20	1	1.0			LTG: LANDS	1.3			2.1	1.3	LTG: GREAT SALT LAKE	1.1			20	1	48
49	20	1	1.0			LTG: LANDS	1.3	2.1			1.3	LTG: GREAT SALT LAKE	1.1			20	1	50
51	20	1	1.0			LTG: LANDS	1.3		2.1		1.3	LTG: GREAT SALT LAKE	1.1			20	1	52
53	20	1	1.0			LTG: LANDS	1.3			2.1	1.3	LTG: GREAT SALT LAKE	1.1			20	1	54
55	20	1	1.0			LTG: LANDS	1.3	2.1			1.3	LTG: GREAT SALT LAKE	1.1			20	1	56
57	20	1	1.1			LTG: FIRST PEOPLES	1.3		2.1		1.3	LTG: GREAT SALT LAKE	1.1			20	1	58
59	20	1	1.1			LTG: FIRST PEOPLES	1.3			2.1	1.3	LTG: GREAT SALT LAKE	1.1			20	1	60
61	20	1	1.1			LTG: FIRST PEOPLES	1.3	2.1			1.3	LTG: GREAT SALT LAKE	1.1			20	1	62
63	20	1	1.1			LTG: FIRST PEOPLES	1.3		2.1		1.3	LTG: GREAT SALT LAKE	1.1			20	1	64
65	20	1	1.1			LTG: FIRST PEOPLES	1.3			2.1	1.3	LTG: GREAT SALT LAKE	1.1			20	1	66
67	20	1	1.1			LTG: FIRST PEOPLES	1.3	2.1			1.3	LTG: GREAT SALT LAKE	1.1			20	1	68
69	20	1	1.1			LTG: FIRST PEOPLES	1.3		1.1		0.0	SPARE				20	1	70
71	20	1	1.1			LTG: FIRST PEOPLES	1.3			1.1	0.0	SPARE				20	1	72
73	20	1	1.1			LTG: FIRST PEOPLES	1.3	1.1			0.0	SPARE				20	1	74
75	20	1	1.1			LTG: FIRST PEOPLES	1.3		1.1		0.0	SPARE				20	1	76
77	20	1	1.1			LTG: FIRST PEOPLES	1.3			1.1	0.0	SPARE				20	1	78
79	20	1	1.1			LTG: FIRST PEOPLES	1.3	1.1			0.0	SPARE				20	1	80
81	20	1	1.1			LTG: FIRST PEOPLES	1.3		1.1		0.0	SPARE				20	1	82
83	20	1	1.1			LTG: FIRST PEOPLES	1.3			1.1	0.0	SPARE				20	1	84
TOTALS:						CONNECTED kVA PER PHASE		**26**	**24**	**26**		CONNECTED TOTAL kVA **76**						
						CONNECTED AMPS PER PHASE		**221**	**201**	**214**		CONNECTED AVERAGE AMPS PER PHASE **212**						

NEC DIVERSIFIED LOAD CALCULATIONS
LIGHTING 76kVA @125% = **95** kVA | ALL OTHER LOADS @100% = **0** kVA | DIVERSIFIED TOTAL kVA = **95**
RECEPTACLES 0kVA @100% = **0** kVA | 25% OF LARGEST MOTOR = **0** kVA | AVERAGE AMPS PER PHASE = **265**
REMAINDER 0kVA @ 50% = **0** kVA

7

GENERAL SHEET NOTES

1. PROVIDE 200% NEUTRAL BUS AND LUG CAPACITY FOR ALL 120/208V PANELBOARDS.

PANEL "2LA2"

VOLTS/PHASE/WIRE: 120/208 V, 3 PH 4 WIRE | PANEL SIZE & TYPE: 22" W x 6" D, BOLT-ON | MAIN SIZE & TYPE: 225 AMPERE MAIN LUGS | LOCATION: | CABINET: | NOTES:

ACCESSORIES: PANEL DIRECTORY, IDENTIFICATION, GROUNDING BAR, INSULATED GROUND BAR, SUBFEED LUGS

CKT NO	OCP AMP	OCP POLE	LOAD (kVA) LTG	CO	PWR	DESCRIPTION	LCL kVA	PHASE LOAD A	B	C	LCL kVA	DESCRIPTION	LOAD (kVA) LTG	CO	PWR	OCP AMP	OCP POLE	CKT NO
1	20	1		0.8		LOADING DOCK OUTLETS	0.8	2.0			1.2	OVERHEAD DOOR			1.2	20	1	2
3	20	1			1.2	OVERHEAD DOOR	1.2		2.3		1.1	DOCK LEVELER			1.1	20	2	4
5	20	2			1.1	DOCK LEVELER	1.1			2.2	1.1	–			1.1	–	–	6
7	–	–			1.1	–	1.1	1.7			0.6	LOADING DOCK OUTLETS		0.6		20	1	8
9	20	1			0.5	PLUG-IN CHARGER	0.5		1.1		0.6	RECEIVING OUTLETS		0.6		20	1	10
11	20	2			0.5	PLUG-IN CHARGER	0.5			1.1	0.6	HALLWAY 2001D CO'S		0.6		20	1	12
13	–	–			0.5	–	0.5	1.3			0.8	FIELD EQUIP STR 2108A CO'S		0.8		20	1	14
15	20	1			0.5	PLUG-IN CHARGER	0.5		1.3		0.8	FIELD EQUIP STR 2108A CO'S		0.8		20	1	16
17	20	2			0.5	PLUG-IN CHARGER	0.5			1.4	0.9	STORAGE 2108B CO'S		0.9		20	1	18
19	–	–			0.5	–	0.5	0.7			0.2	EF-21			0.2	20	1	20
21	20	1		0.4		MEN'S 2001H CO'S	0.4		0.9		0.5	EVENT STORAGE A/V			0.5	20	1	22
23	20	1		0.4		WOMEN'S 2001K CO'S	0.4			0.9	0.5	EVENT STORAGE A/V			0.5	20	1	24
25	20	1		1.1		EVENT STOR 2116 CO'S	1.1	2.3			1.2	DRINKING FOUNTAINS			1.2	20	1	26
27	20	1		0.9		HALLWAY/STAIR CO'S	0.9		1.7		0.8	HALL/STAIR OUTLETS		0.8		20	1	28
29	20	1		1.1		HALLWAY 2001F CO'S	1.1			1.7	0.6	MEN'S/WOMEN'S JAN CO'S		0.6		20	1	30
31	20	1		0.4		HALLWAY 2001F CO'S	0.4	1.7			1.3	STORE 2012 OUTLETS		1.3		20	1	32
33	20	1			1.2	MOTORIZED GATE	1.2		1.8		0.6	STORE 2012 OUTLETS		0.6		20	1	34
35	20	1		0.6		STORE OFFICE/CASH RM CO'S	0.6			1.4	0.8	STORE 2012 OUTLETS		0.8		20	1	36
37	20	1		0.6		STORE OFFICE/CASH RM CO'S	0.6	1.5			0.9	VOLUNTEER LOUNG CO'S		0.9		20	1	38
39	20	1		0.2		RESTROOM OUTLET	0.2		0.4		0.2	VOLUNTEER LOUNG CO'S		0.2		20	1	40
41	20	1		0.4		FIRST AID 2004 CO'S	0.4			0.6	0.2	VOLUNTEER LOUNG CO'S		0.2		20	1	42
43	20	1				EF-12	0.0	0.2			0.2	COMMUNITY ROOM CO'S		0.2		20	1	44
45	20	1		0.2		COMMUNITY ROOM CO'S	0.2		0.4		0.2	COMMUNITY ROOM CO'S		0.2		20	1	46
47	20	1		0.2		COMMUNITY ROOM CO'S	0.2			0.4	0.2	COMMUNITY ROOM CO'S		0.2		20	1	48
49	20	1		0.2		COMMUNITY ROOM CO'S	0.2	0.2			0.0	FC-4				20	1	50
51	20	1		0.8		COMMUNITY ROOM CO'S	0.8		2.0		1.2	OH DOOR – LOBBY 2001			1.2	20	1	52
53	20	1		0.8		COMMUNITY ROOM CO'S	0.8			2.0	1.2	EF-1			1.2	20	1	54
55	20	1		0.8		MAIN LOBBY 2001B CO'S	0.8	1.7			0.9	EF-10			0.9	20	1	56
57	20	1		0.8		MAIN LOBBY 2001B CO'S	0.8		1.3		0.5	BMS CONTROL TRANSFMR			0.5	20	1	58
59	20	1		0.9		EXTERIOR OUTLETS	0.9			2.4	1.5	BMS CONTROL TRANSFMR			1.5	20	1	60
61	20	1			0.2	IRRIGATION CONTROLLER	0.2	2.7			2.5	BMS CONTROL TRANSFMR			2.5	20	1	62
63	20	1			0.2	P-19	0.2		1.0		0.8	PROJECTOR CO: 2002			0.8	20	1	64
65	20	1			0.2	P-20	0.2			1.0	0.8	AV CABINET 2002			0.8	20	1	66
67	20	1				SPARE	0.0	0.8			0.8	AV CABINET 2002			0.8	20	1	68
69	20	1				SPARE	0.0		0.0		0.0	SPARE				20	1	70
71	20	1			0.1	FIRE SPRINK. TEST PUMP	0.1			0.1	0.0	SPARE				20	1	72
73	20	1			0.7	SMOKE DAMPERS	0.7	0.7			0.0	SPARE				20	1	74
75	20	1				SPARE	0.0		0.0		0.0	SPARE				20	1	76
77	20	1				SPARE	0.0			0.0	0.0	SPARE				20	1	78
79	20	1				SPARE	0.0	0.0			0.0	SPARE				20	1	80
81	20	1				SPARE	0.0		0.0		0.0	SPARE				20	1	82
83	20	1				SPARE	0.0			0.0	0.0	SPARE				20	1	84
TOTALS:						CONNECTED kVA PER PHASE		**18**	**14**	**15**		CONNECTED TOTAL kVA **47**						
						CONNECTED AMPS PER PHASE		**146**	**118**	**127**		CONNECTED AVERAGE AMPS PER PHASE **130**						

NEC DIVERSIFIED LOAD CALCULATIONS
LIGHTING 0kVA @125% = **0** kVA | ALL OTHER LOADS @100% = **25** kVA | DIVERSIFIED TOTAL kVA = **41**
RECEPTACLES 10kVA @100% = **10** kVA | 25% OF LARGEST MOTOR = **0** kVA | AVERAGE AMPS PER PHASE = **114**
REMAINDER 12kVA @ 50% = **6** kVA

PANEL "2LB1"

VOLTS/PHASE/WIRE: 120/208 V, 3 PH 4 WIRE | PANEL SIZE & TYPE: 22" W x 6" D, BOLT-ON | MAIN SIZE & TYPE: 225 AMPERE MAIN LUGS | LOCATION: | CABINET: | NOTES:

ACCESSORIES: PANEL DIRECTORY, IDENTIFICATION, GROUNDING BAR, INSULATED GROUND BAR, SUBFEED LUGS

CKT NO	OCP AMP	OCP POLE	LOAD (kVA) LTG	CO	PWR	DESCRIPTION	LCL kVA	PHASE LOAD A	B	C	LCL kVA	DESCRIPTION	LOAD (kVA) LTG	CO	PWR	OCP AMP	OCP POLE	CKT NO
1	20	1		0.8		CO: LEVEL 2 HALLWAY	0.8	1.2			0.4	CO: CHILDREN'S GALLERY		0.4		20	1	2
3	20	1		0.8		CO: LEVEL 2 HALLWAY	0.8		1.3		0.5	CO/LTG: CHILD. GALLERY	0.1	0.4		20	1	4
5	20	1		0.6		CO: CHILDREN'S GALLERY	0.6			0.8	0.2	CO: PREP		0.2		20	1	6
7	20	1		0.6		CO: CHILDREN'S GALLERY	0.6	1.6			1.0	PWR: CANYON SCREENS			1.0	20	1	8
9	20	1		0.8		CO: STORAGE/PREP	0.8		1.2		0.4	CO: CHILDREN'S GALLERY		0.4		20	1	10
11	20	1		0.6		CO: UTAH FUTURES	0.6			1.0	0.4	PWR: CHILDREN'S GALL. PUMP			0.4	20	1	12
13	20	1		0.6		CO: UTAH FUTURES	0.6	1.2			0.6	CO: CANYON		0.6		20	1	14
15	20	1			1.8	PWR: UTAH FUTURES PROJ.	1.8		2.2		0.4	CO: CANYON		0.4		20	1	16
17	20	1			1.0	PWR: CANYON SCREENS	1.0			1.4	0.4	CO: CANYON FB		0.4		20	1	18
19	20	1			1.8	PWR: CANYON PROJ.	1.8	2.2			0.4	CO: CANYON FB		0.4		20	1	20
21	20	1			1.8	PWR: CANYON PROJ.	1.8		2.2		0.4	CO: CANYON FB		0.4		20	1	22
23	20	1			1.0	PWR: CANYON SCREENS	1.0			1.4	0.4	CO: CANYON FB		0.4		20	1	24
25	20	1			1.8	PWR: CANYON PROJ.	1.8	2.2			0.4	CO: CANYON FB		0.4		20	1	26
27	20	1		0.4	0.5	PWR: CORRIDOR AV	0.9		1.3		0.4	CO: CANYON FB		0.4		20	1	28
29	20	1		0.4		CO: UTAH FUTURES FB	0.4			0.8	0.4	CO: CANYON FB		0.4		20	1	30
31	20	1	0.7			LTG: UTAH FUTURES FB	0.9	1.1			0.4	CO: CANYON FB		0.4		20	1	32
33	20	1			0.9	PWR: HALLWAY PROJECTOR	0.9		1.3		0.4	CO: CANYON FB		0.4		20	1	34
35	20	1				SPARE	0.0			0.4	0.4	CO: CANYON FB		0.4		20	1	36
37	20	1		0.2		OUTDOOR OUTLET	0.2	0.6			0.4	CO: CANYON FB		0.4		20	1	38
39	20	1			0.5	BMS CONTROL TRANSFMR	0.5		0.9		0.4	CO: CANYON		0.4		20	1	40
41	20	1			0.1	SMOKE DAMPERS	0.1			0.5	0.4	CO: CANYON		0.4		20	1	42
43	20	1	0.6			LTG: UTAH FUTURES FB	0.8	1.1			0.5	CANYON SPEAKER			0.5	20	1	44
45	20	1			0.5	PWR: UT FUT MON	0.5		1.0		0.5	CANYON SPEAKER			0.5	20	1	46
47	20	1			0.2	PWR: UT FUT CAM	0.2			0.2	0.0	SPARE				20	1	48
49	20	1				SPARE	0.0	0.0			0.0	SPARE				20	1	50
51	20	1				SPARE	0.0		0.0		0.0	SPARE				20	1	52
53	20	1				SPARE	0.0			0.0	0.0	SPARE				20	1	54
55	20	1				SPARE	0.0	0.0			0.0	SPARE				20	1	56
57	20	1				SPARE	0.0		0.0		0.0	SPARE				20	1	58
59	20	1				SPARE	0.0			0.0	0.0	SPARE				20	1	60
61	20	1				SPARE	0.0	0.0			0.0	SPARE				20	1	62
63	20	1				SPARE	0.0		0.0		0.0	SPARE				20	1	64
65	20	1				SPARE	0.0			0.0	0.0	SPARE				20	1	66
67	20	1				SPARE	0.0	0.0			0.0	SPARE				20	1	68
69	20	1				SPARE	0.0		0.0		0.0	SPARE				20	1	70
71	20	1				SPARE	0.0			0.0	0.0	SPARE				20	1	72
73	20	1				SPARE	0.0	0.0			0.0	SPARE				20	1	74
75	20	1				SPARE	0.0		0.0		0.0	SPARE				20	1	76
77	20	1				SPARE	0.0			0.0	0.0	SPARE				20	1	78
79	20	1				SPARE	0.0	0.0			0.0	SPARE				20	1	80
81	20	1				SPARE	0.0		0.0		0.0	SPARE				20	1	82
83	20	1				SPARE	0.0			0.0	0.0	SPARE				20	1	84
TOTALS:						CONNECTED kVA PER PHASE		**11**	**11**	**6**		CONNECTED TOTAL kVA **29**						
						CONNECTED AMPS PER PHASE		**94**	**95**	**54**		CONNECTED AVERAGE AMPS PER PHASE **81**						

NEC DIVERSIFIED LOAD CALCULATIONS
LIGHTING 1kVA @125% = **2** kVA | ALL OTHER LOADS @100% = **14** kVA | DIVERSIFIED TOTAL kVA = **28**
RECEPTACLES 10kVA @100% = **10** kVA | 25% OF LARGEST MOTOR = **0** kVA | AVERAGE AMPS PER PHASE = **77**
REMAINDER 3kVA @ 50% = **2** kVA

7

PANEL "2LB4"

VOLTS/PHASE/WIRE: 120/208 V, 3 PH 4 WIRE | PANEL SIZE & TYPE: 22" W x 6" D, BOLT-ON | MAIN SIZE & TYPE: 400 AMPERE MAIN LUGS | LOCATION: | CABINET: | NOTES:

ACCESSORIES: PANEL DIRECTORY, IDENTIFICATION, GROUNDING BAR, INSULATED GROUND BAR, SUBFEED LUGS

CKT NO	OCP AMP	OCP POLE	LOAD (kVA) LTG	CO	PWR	DESCRIPTION	LCL kVA	PHASE LOAD A	B	C	LCL kVA	DESCRIPTION	LOAD (kVA) LTG	CO	PWR	OCP AMP	OCP POLE	CKT NO
1	20	1	1.1			LTG: PAST WORLDS	1.3	2.0			1.2	LTG: PAST WORLDS	0.9			20	1	2
3	20	1	1.1			LTG: PAST WORLDS	1.3		2.0		1.2	LTG: PAST WORLDS	0.9			20	1	4
5	20	1	1.1			LTG: PAST WORLDS	1.3			2.0	1.2	LTG: PAST WORLDS	1.0			20	1	6
7	20	1	1.1			LTG: PAST WORLDS	1.3	2.0			1.2	LTG: PAST WORLDS	1.0			20	1	8
9	20	1	1.1			LTG: PAST WORLDS	1.3		2.0		1.2	LTG: PAST WORLDS	1.0			20	1	10
11	20	1	1.1			LTG: PAST WORLDS	1.3			2.0	1.2	LTG: PAST WORLDS	1.0			20	1	12
13	20	1	1.1			LTG: PAST WORLDS	1.3	1.9			1.1	LTG: PAST WORLDS	0.9			20	1	14
15	20	1	1.1			LTG: PAST WORLDS	1.3		1.9		1.1	LTG: PAST WORLDS	0.9			20	1	16
17	20	1	1.1			LTG: PAST WORLDS	1.3			1.9	1.1	LTG: PAST WORLDS	0.9			20	1	18
19	20	1	1.1			LTG: PAST WORLDS	1.3	1.9			1.1	LTG: PAST WORLDS	0.9			20	1	20
21	20	1	1.1			LTG: PAST WORLDS	1.3		1.8		1.0	LTG: PAST WORLDS	0.8			20	1	22
23	20	1	1.1			LTG: PAST WORLDS	1.3			1.8	1.0	LTG: PAST WORLDS	0.8			20	1	24
25	20	1	1.1			LTG: PAST WORLDS	1.3	1.8			1.0	LTG: PAST WORLDS	0.8			20	1	26
27	20	1	1.1			LTG: PAST WORLDS	1.3		1.8		1.0	LTG: PAST WORLDS	0.8			20	1	28
29	20	1	0.8			LTG: GREAT SALT LAKE	0.9			1.5	0.9	LTG: PAST WORLDS	0.8			20	1	30
31	20	1	0.8			LTG: GREAT SALT LAKE	0.9	1.5			0.9	LTG: PAST WORLDS	0.8			20	1	32
33	20	1	1.0			LTG: GREAT SALT LAKE	1.2		1.7		0.9	LTG: PAST WORLDS	0.8			20	1	34
35	20	1	1.0			LTG: GREAT SALT LAKE	1.2			1.7	0.9	LTG: PAST WORLDS	0.8			20	1	36
37	20	1	1.0			LTG: GREAT SALT LAKE	1.2	2.3			1.6	LTG: PAST WORLDS	1.3			20	1	38
39	20	1	1.0			LTG: GREAT SALT LAKE	1.2		2.3		1.6	LTG: PAST WORLDS	1.3			20	1	40
41	20	1	1.0			LTG: GREAT SALT LAKE	1.2			1.6	0.8	LTG: PAST WORLDS	0.6			20	1	42
43	20	1	1.0			LTG: GREAT SALT LAKE	1.2	1.7			0.9	LTG: N-S TRACK	0.8			20	1	44
45	20	1	1.0			LTG: GREAT SALT LAKE	1.2		1.7		0.9	LTG: N-S TRACK	0.8			20	1	46
47	20	1	1.0			LTG: GREAT SALT LAKE	1.2			1.7	0.9	LTG: N-S TRACK	0.8			20	1	48
49	20	1	0.9			LTG: GREAT SALT LAKE	1.2	1.7			0.9	LTG: N-S TRACK	0.8			20	1	50
51	20	1	0.9			LTG: GREAT SALT LAKE	1.2		1.7		0.9	LTG: N-S TRACK	0.8			20	1	52
53	20	1	0.9			LTG: GREAT SALT LAKE	1.2			1.7	0.9	LTG: N-S TRACK	0.8			20	1	54
55	20	1	0.9			LTG: GREAT SALT LAKE	1.2	1.7			0.9	LTG: N-S TRACK	0.8			20	1	56
57	20	1	1.1			LTG: PAST WORLDS	1.3		1.8		0.9	LTG: N-S TRACK	0.8			20	1	58
59	20	1	1.1			LTG: PAST WORLDS	1.3			1.8	0.9	LTG: N-S TRACK	0.8			20	1	60
61	20	1	1.1			LTG: PAST WORLDS	1.3	1.8			0.9	LTG: N-S TRACK	0.8			20	1	62
63	20	1	1.1			LTG: PAST WORLDS	1.3		1.8		0.9	LTG: N-S TRACK	0.8			20	1	64
65	20	1	1.1			LTG: PAST WORLDS	1.3			1.8	0.9	LTG: N-S TRACK	0.8			20	1	66
67	20	1	1.1			LTG: PAST WORLDS	1.3	1.8			0.9	LTG: N-S TRACK	0.8			20	1	68
69	20	1	1.1			LTG: PAST WORLDS	1.3		1.8		0.9	LTG: N-S TRACK	0.8			20	1	70
71	20	1	1.1			LTG: PAST WORLDS	1.3			1.8	0.9	LTG: N-S TRACK	0.8			20	1	72
73	20	1				SPARE	0.0	0.0			0.0	SPARE				20	1	74
75	20	1				SPARE	0.0		0.8		0.9	LTG: N-S TRACK	0.8			20	1	76
77	20	1				SPARE	0.0			0.0	0.0	SPARE				20	1	78
79	20	1				SPARE	0.0	0.0			0.0	SPARE				20	1	80
81	20	1				SPARE	0.0		0.0		0.0	SPARE				20	1	82
83	20	1				SPARE	0.0			0.0	0.0	SPARE				20	1	84
TOTALS:						CONNECTED kVA PER PHASE		**22**	**23**	**21**		CONNECTED TOTAL kVA **67**						
						CONNECTED AMPS PER PHASE		**184**	**193**	**179**		CONNECTED AVERAGE AMPS PER PHASE **185**						

NEC DIVERSIFIED LOAD CALCULATIONS
LIGHTING 67kVA @125% = **83** kVA | ALL OTHER LOADS @100% = **0** kVA | DIVERSIFIED TOTAL kVA = **83**
RECEPTACLES 0kVA @100% = **0** kVA | 25% OF LARGEST MOTOR = **0** kVA | AVERAGE AMPS PER PHASE = **231**
REMAINDER 0kVA @ 50% = **0** kVA

Project Title

UTAH MUSEUM OF NATURAL HISTORY

UNIVERSITY OF UTAH
SALT LAKE CITY, UTAH

State of Utah
Department of Administrative Services
Division of Facilities Construction & Management
4110 State Office Building
Salt Lake City, Utah 84114
Phone: (801) 538 - 3018
Fax: (801) 538 - 3267
www.dfcm.utah.gov

PROJ. NO. 02243750

Owner
UMNH
1390 East President's Circle
Salt Lake City, Utah 84112
801.581.6927 tel

Design Architect
Polshek Partnership Architects LLP
320 West 13th Street
New York, New York
212.807.7171 tel

Architect of Record
GSBS
375 West 200 South
Salt Lake City, Utah
801.521.8600 tel

Structural Engineer
Leslie E. Robertson Associates
30 Broad Street
New York, New York 10004
212.750.9000 tel

Structural Engineer
Dunn Associates, Inc.
380 West 800 South, Suite 100
Salt Lake City, Utah 84101
801.575.8877 tel

Mechanical/Plumbing/Fire Protection Engineer
Colvin Engineering Associates, Inc.
244 West 300 North
Salt Lake City, Utah 84103
801.322.2400 tel

Electrical/AV Engineer
Spectrum Engineers
175 South Main Street
Salt Lake City, Utah 84111
800.678.7077 tel

Civil Engineer
Stantec
3995 South 700 East Suite 300
Salt Lake City, Utah 84107
801.261.0090 tel

Landscape Architects
Design Workshop
224 South 200 West
Salt Lake City, UT 84101
801.359.4771 tel

Exhibit Design
Ralph Appelbaum Associates
88 Pine Street
New York, New York 10005
212.334.8200

Key Plan

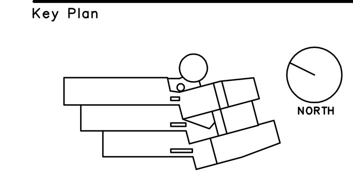

Seal

No.	Issue Name	Date
10	RFI 510	06/10/09
9	LIGHTING CHANGES	06/08/09
8	LEVEL ONE CHANGES	05/12/09
7	EXHIBIT POWER CHANGES	04/24/09
6	EQUIPMENT CHANGES	04/17/09
	CONFORMANCE SET	02/09/09
5	EXHIBIT & LTG CHANGES	12/19/08
4	CODE REVIEW	12/10/08
3	ADDENDUM #3	11/10/08
2	ADDENDUM #2	10/23/08
1	ADDENDUM #1	10/16/08
	CONSTRUCTION DOCUMENTS	09/30/08

Date 02/03/09 | Project No. 2004.076.00
Scale N.T.S. | PPA – 0423

Sheet Title
ELECTRICAL PANEL SCHEDULES

Sheet No.
EP-607

A1 PARTIAL POWER PLAN LEVEL 2 – SOUTH
1/8" = 1'-0"

GENERAL SHEET NOTES

1. VERIFY AND COORDINATE EXACT LOCATION OF LIGHTING FIXTURES, FLOORBOXES, AND ALL OTHER DEVICES WITH THE ARCHITECT, EXHIBIT DESIGNER, EXHIBIT INSTALLER AND ALL OTHER TRADES PRIOR TO INSTALLATION.

SHEET KEYNOTES

1. PROVIDE C-4000 DIVIDED RACEWAY WITH POWER AND DATA OUTLETS INDICATED. CONNECT OUTLETS TO ALTERNATING CIRCUITS. REFER TO ARCHITECTURAL ELEVATIONS FOR EXACT LOCATIONS AND COORDINATE WITH FURNITURE AND MILLWORK INSTALLERS.
2. PROVIDE ELECTRICAL CONNECTIONS TO EMERGENCY EYEWASH ALARM PER MANUFACTURER'S WRITTEN INSTRUCTIONS.
3. PROVIDE ELECTRICAL CONNECTIONS TO WALK-IN FREEZER EQUIPMENT PER MANUFACTURER'S WRITTEN INSTRUCTIONS. VERIFY REQUIREMENTS WITH ARCHITECT, SHOP DRAWINGS AND FREEZER INSTALLER.
4. REFER TO ARCHITECTURAL ELEVATIONS AT BREAK ROOM COUNTERS FOR PLACEMENT OF OUTLETS AT COUNTER AND FOR EQUIPMENT ITEMS ABOVE AND BELOW.
5. INSTALL OUTLETS IN MILLWORK. COORDINATE WITH ARCHITECTURAL DETAILS AND MILLWORK.
6. EXACT KITCHEN/CAFE EQUIPMENT INFORMATION WAS NOT AVAILABLE AT TIME OF DESIGN. PRIOR TO ROUGH-IN, VERIFY EQUIPMENT REQUIREMENTS AND LOCATIONS OF ALL ELECTRICAL DEVICES WITH ARCHITECT/OWNER.
7. PROVIDE ELECTRICAL CONNECTIONS TO DOCK-LEVELERS PER MANUFACTURER'S WRITTEN INSTRUCTIONS INCLUDING ALL POWER AND CONTROL WIRING FOR COMPLETE OPERATION.
8. PROVIDE ELECTRICAL CONNECTIONS TO ADA DOOR OPERATORS WITH ALL POWER AND CONTROL WIRING PER MANUFACTURER'S WRITTEN INSTRUCTIONS.
9. FLUSH CEILING OUTLET FOR A/V PROJECTOR. COORDINATE EXACT LOCATION OF OUTLET WITH A/V INSTALLER.
10. MOUNT CANYON WALL OUTLETS HORIZONTALLY IN CONCRETE BASE BELOW FACETED WALLS. REFER TO ARCHITECTURAL DETAILS.
11. FLOOR BOXES IN THIS ROOM REQUIRE FRAMED, THICKENED CONCRETE AROUND BOX TO MAINTAIN FIRE RATING OF FLOOR. REFER TO ARCHITECTURAL AND STRUCTURAL DETAILS AND COORDINATE WITH OTHER TRADES.
12. PROVIDE ELECTRICAL CONNECTION TO MOTORIZED SCREEN WITH ASSOCIATED POWER AND CONTROL WIRING PER MANUFACTURER'S WRITTEN INSTRUCTIONS.
13. PROVIDE OUTLET OR J-BOX FOR A/V MONITOR, DEPENDING ON ACTUAL FIELD CONDITIONS. COORDINATE WITH ARCHITECTURAL DETAILS, EXHIBIT DESIGNER AND A/V INSTALLER PROVIDE FINAL CONNECTIONS.
14. RUN BOTH SWITCHED POWER (FOR HARD-WIRED LED CASE LIGHTS) AND UN-SWITCHED POWER (FOR CONVENIENCE OUTLET) TO EACH FLOORBOX. MAKE FINAL CONNECTIONS TO CASE LIGHTS.
15. MAKE FINAL CONNECTIONS TO EXHIBIT LIGHTING.
16. 1" CND FOR FIBER OPTIC CABLING. COORDINATE WITH EXHIBIT DETAILS.
17. PROVIDE OUTLET OR J-BOX FOR WATER PUMP. COORDINATE EXACT LOCATION WITH EXHIBIT INSTALLER.
18. COORDINATE MOUNTING OF OUTLETS AND FLOORBOXES AT CLERKS COUNTER WITH MILLWORK AND ARCHITECTURAL DETAILS.
19. PROVIDE ELECTRICAL CONNECTIONS TO IRRIGATION CONTROLLER. STUB 2" CND OUT FOR CONTROL WIRING. REFER TO LANDSCAPE/IRRIGATION PLANS AND COORDINATE WITH IRRIGATION INSTALLER.
20. J-BOX IN CEILING FOR BMS CONTROL TRANSFORMER. COORDINATE QUANTITIES AND LOCATIONS WITH BMS INSTALLER AND MAKE FINAL CONNECTIONS.
21. PROVIDE ELECTRICAL CONNECTIONS TO SPEAKER. COORDINATE EXACT LOCATION WITH AV INSTALLER AND ARCHITECTURAL ELEVATIONS.
22. TRAP PRIMER.
23. FIBER OPTIC ILLUMINATORS IN ACCESS PANEL.
24. ADD FIBER OPTIC LIGHTING AS ADD-ALTERNATE.

Project Title

UTAH MUSEUM OF NATURAL HISTORY

UNIVERSITY OF UTAH
SALT LAKE CITY, UTAH

State of Utah
Department of Administrative Services
Division of Facilities Construction & Management
4110 State Office Building
Salt Lake City, Utah 84114
Phone: (801) 538 - 3018
Fax: (801) 538 - 3267
www.dfcm.utah.gov

PROJ. NO. 02243750

Owner
UMNH
1390 East President's Circle
Salt Lake City, Utah 84112
801.581.6927 tel

Design Architect
Polshek Partnership Architects LLP
320 West 13th Street
New York, New York
212.807.7171 tel

Architect of Record
GSBS
375 West 200 South
Salt Lake City, Utah
801.521.8600 tel

Structural Engineer
Leslie E. Robertson Associates
30 Broad Street
New York, New York 10004
212.750.9000 tel

Structural Engineer
Dunn Associates, Inc.
380 West 800 South, Suite 100
Salt Lake City, Utah 84101
801.575.8877 tel

Mechanical/Plumbing/Fire Protection Engineer
Calvin Engineering Associates, Inc.
244 West 300 North
Salt Lake City, Utah 84103
801.322.2400 tel

Electrical/AV Engineer
Spectrum Engineers
175 South Main Street
Salt Lake City, Utah 84111
800.678.7077 tel

Civil Engineer
Stantec
3995 South 700 East Suite 300
Salt Lake City, Utah 84107
801.261.0090 tel

Landscape Architects
Design Workshop
224 South 200 West
Salt Lake City, UT 84101
801.359.4771 tel

Exhibit Design
Ralph Appelbaum Associates
88 Pine Street
New York, New York 10005
212.334.8200

Key Plan

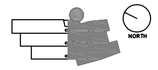

Seal

No.	Issue Name	Date
7	RFI 510	06/10/09
6	LIGHTING CHANGES	06/05/09
5	LEVEL ONE CHANGES	05/12/09
4	EXHIBIT POWER CHANGES	04/24/09
3	EQUIPMENT CHANGES	04/17/09
	CONFORMANCE SET	02/09/09
2	EXHIBIT & LTG CHANGES	12/19/08
1	CODE REVIEW	12/10/08
	ADDENDUM #3	11/10/08
	ADDENDUM #2	10/23/08
	ADDENDUM #1	10/16/08
	CONSTRUCTION DOCUMENTS	09/30/08

Date 02/03/09
Project No. 2004.076.00
Scale 1/8" = 1'-0"
PPA – 0423

Sheet Title
PARTIAL POWER PLAN LEVEL 2 – SOUTH

Sheet No.
EP–102b

File Name: P:\2005\20050145\Drawings\Sheet\45EP-102b.dwg Last Plotted: 2009/06/18 @ 3:15 PM By: jjm

RELAY PANEL SCHEDULE

RELAY CABINET: "3RA"

RELAY #	PANEL CIRCUIT #	CONTROL GROUP	CONTROL METHOD	WALL STATION	LOAD DESCRIPTION
1	3HA–6	3–A	WO		COLLECTIONS
2	3HA–7	3	TC–W		ELEV LOBBY/CORRIDOR
3	3HA–8	3–A	WO		COLLECTIONS
4	3HA–9	3–A	TC–W		ADMIN CORRIDOR
5	3HA–10	3	TC–W		CANYON CORRIDOR
6	3HA–11	O–NL	TC–W		OUTDOOR LTG: DOCK
7	3HA–13	O	PC/TC		OUTDOOR PARKNG POLE LT
8	3HA–15	O	PC/TC		OUTDOOR PARKNG POLE LT
9	3HA–17	O–NL	PC/PC		OUTDOOR PARKNG POLE LT
10	3HA–19	O–NL	PC/PC		OUDOOR PATH LTG–WEST
11	3HA–21	O–NL	PC/PC		OUDOOR PATH LTG–NW
12	3HA–23	O–NL	PC/PC		OUDOOR PATH LTG–WEST
13	3LA1–44	O–NL	PC/PC		OUDOOR PATH LTG–WEST
14	3LA1–46	O–NL	PC/PC		OUDOOR PATH LTG–WEST
15					SPARE RELAY
16					SPARE RELAY
17					SPARE RELAY
18					SPARE RELAY
19					SPARE RELAY
20					SPARE RELAY
21					SPARE RELAY
22					SPARE RELAY
23					SPARE RELAY
24					SPARE RELAY
25					SPACE
26					SPACE
27					SPACE
28					SPACE
29					SPACE
30					SPACE
31					SPACE
32					SPACE
33					SPACE
34					SPACE
35					SPACE
36					SPACE

RELAY PANEL SCHEDULE

RELAY CABINET: "3ERA"

RELAY #	PANEL CIRCUIT #	CONTROL GROUP	CONTROL METHOD	WALL STATION	LOAD DESCRIPTION
1	3ELA–1	O–EM	PC/PC–E		WALL LEDs
2	3EHA–3	O–EM	PC/PC–E		VESTIBULE EM
3	3EHA–11	O–EM	PC/PC–E		VESTIBULE 2001C
4	3EHA–13	O–EM	PC/PC–E		VESTIBULE 2001A
5	3EHA–19	I–EM	TC–W–E		EXHIBIT EM
6					SPARE RELAY
7					SPARE RELAY
8					SPARE RELAY
9					SPARE RELAY
10					SPARE RELAY
11					SPARE RELAY
12					SPARE RELAY
13					SPARE RELAY
14					SPARE RELAY
15					SPARE RELAY
16					SPARE RELAY

RELAY PANEL SCHEDULE

RELAY CABINET: "3RB"

RELAY #	PANEL CIRCUIT #	CONTROL GROUP	CONTROL METHOD	WALL STATION	LOAD DESCRIPTION
1	3HB–1	C	TC–W–D		CANYON TRACK
2	3HB–5	C	TC–W		CANYON TRACK
3	3HB–7	3–M	TC–W		LEARNING LAB – DMC
4	3HB–9	3–M	TC–W		LEARNING LAB – DMC
5	3LB1–1	3–M	TC–W		LEARNING LAB – DMC
6	3LB1–11	3–MF	TC–W		GREAT SALT LAKE FB
7	3LB1–14	3–MF	TC–W		FIRST PEOPLES FB
8	3LB1–15	3–MF	TC–W		GREAT SALT LAKE FB
9	3LB1–18	3–MF	TC–W		FIRST PEOPLES FB
10	3LB1–19	3–MF	TC–W		GREAT SALT LAKE FB
11	3LB1–22	3–MF	TC–W		FIRST PEOPLES FB
12	3LB1–26	3–MF	TC–W		FIRST PEOPLES FB
13	3LB1–37	3–MF	TC–W		LAND FB
14	3LB1–38	3–M	TC–W		LAND LEDs
15	3LB1–42	3–MF	TC–W		CANYON JB
16	3LB1–54	3–MF	TC–W		WALL CASE JB
17	3LB1–56	3–MF	TC–W		LAKE FORMATION FB
18	3LB1–59	3–MF	TC–W		LAND FB
19	3LB1–62	3–MF	TC–W		LAND JB
20	3LB1–63	3–MF	TC–W		LAND JB
21	3LB1–64	3–MF	TC–W		LAND JB
22	3LB1–65	3–MF	TC–W		LAND JB
23	3LB1–66	3–MF	TC–W		GREAT SALT LAKE FB
24	3LB1–67	3–MF	TC–W		LAND FB
25	3LB1–72	3–MF	TC–W		LAND FB
26	3LB1–74	3–MF	TC–W		LAND FB
27	3LB2–1	CB	TBD		CANYON TWIST–LOCK REC.
28	3LB2–2	CB	TBD		CANYON TWIST–LOCK REC.
29	3LB2–3	CB	TBD		CANYON TWIST–LOCK REC.
30	3LB2–4	CB	TBD		CANYON TWIST–LOCK REC.
31	3LB2–5	CB	TBD		CANYON TWIST–LOCK REC.
32	3LB2–6	CB	TBD		CANYON TWIST–LOCK REC.
33	3LB2–7	CB	TBD		CANYON TWIST–LOCK REC.
34	3LB2–8	CB	TBD		CANYON TWIST–LOCK REC.
35	3LB2–9	CB	TBD		CANYON TWIST–LOCK REC.
36	3LB2–11	CB	TBD		CANYON TWIST–LOCK REC.
37	3LB2–12	3–MF	TC–W		FIRST PEOPLES FB
38	3LB2–13	CB	TBD		CANYON TWIST–LOCK REC.
39	3LB2–14	3–MF	TC–W		LAND JB
40	3LB2–15	CB	TBD		CANYON TWIST–LOCK REC.
41	3LB2–16	3–MF	TC–W		LAND JB
42	3LB2–17	CB	TBD		CANYON TWIST–LOCK REC.
43	3LB2–18	3–MF	TC–W		LAND FB
44	3LB2–19	CB	TBD		CANYON TWIST–LOCK REC.
45	3LB2–21	CB	TBD		CANYON TWIST–LOCK REC.
46	3LB2–23	CB	TBD		CANYON TWIST–LOCK REC.
47	3LB2–25	CB	TBD		CANYON TWIST–LOCK REC.
48	3LB2–27	CB	TBD		CANYON TWIST–LOCK REC.
49	3LB2–29	CB	TBD		CANYON TWIST–LOCK REC.
50	3LB2–31	CB	TBD		CANYON TWIST–LOCK REC.
51	3LB2–33	CB	TBD		CANYON TWIST–LOCK REC.
52	3LB2–35	CB	TBD		CANYON TWIST–LOCK REC.
53	3LB2–37	CB	TBD		CANYON TWIST–LOCK REC.
54	3LB2–39	CB	TBD		CANYON TWIST–LOCK REC.
55					SPARE RELAY
56					SPARE RELAY
57					SPARE RELAY
58					SPARE RELAY
59					SPARE RELAY
60					SPARE RELAY
61					SPARE RELAY
62					SPARE RELAY
63					SPARE RELAY
64					SPARE RELAY

RELAY PANEL SCHEDULE

RELAY CABINET: "3ERB"

RELAY #	PANEL CIRCUIT #	CONTROL GROUP	CONTROL METHOD	WALL STATION	LOAD DESCRIPTION
1	3EHB–1	O–EM	PC/PC–E		VESTIBULES
2	3ELB–15	O–EM	PC/PC–E		ROOF WALL LIGHTS
3	3EHB–13	O–EM	PC/PC–E		OUTDOOR SOUTH PATH LTG
4	3ELB–44	O–EM	PC/PC–E		OUTDOOR SOUTH PATH LTG
5	3ELB–46	O–EM	PC/PC–E		OUTDOOR SOUTH PATH LTG
6	3ELB–48	O–EM	PC/PC–E		OUTDOOR SOUTH PATH LTG
7					SPARE RELAY
8	3ELB–1	I–EM–O	EO		LTG: CANYON ACCENTS
9	3ELB–3	I–EM–O	EO		LTG: CANYON ACCENTS
10	3ELB–5	I–EM–O	EO		LTG: CANYON EM
11	3ELB–7	I–EM–O	EO		LTG: CANYON EM
12	3ELB–9	I–EM–O	EO		LTG: CANYON EM
13	3ELB–2	I–EM–O	EO		LTG: EXHIBIT EM (3RD)
14	3ELB–4	I–EM–O	EO		LTG: EXHIBIT EM (3RD)
15	3ELB–6	I–EM–O	EO		LTG: EXHIBIT EM (3RD)
16	3ELB–8	I–EM–O	EO		LTG: EXHIBIT EM (3RD)
17	3ELB–10	I–EM–O	EO		LTG: EXHIBIT EM (3RD)
18	3ELB–12	I–EM–O	EO		LTG: EXHIBIT EM (3RD)
19	3ELB–13	I–EM–O	EO		LTG: SKY LOUNGE
20	3ELB–14	I–EM–O	EO		LTG: EXHIBIT EM (3RD)
21	3ELB–16	I–EM–O	EO		LTG: EXHIBIT EM (3RD)
22	3ELB–18	I–EM–O	EO		LTG: EXHIBIT EM (3RD)
23	3ELB–20	I–EM–O	EO		LTG: EXHIBIT EM (3RD)
24	3ELB–22	I–EM–O	EO		LTG: EXHIBIT EM (3RD)
25	3ELB–24	I–EM–O	EO		LTG: EXHIBIT EM (3RD)
26	3ELB–26	I–EM–O	EO		LTG: EXHIBIT EM (3RD)
27	3ELB–28	I–EM–O	EO		LTG: EXHIBIT EM (3RD)
28	3ELB–30	I–EM–O	EO		LTG: EXHIBIT EM (4TH)
29	3ELB–32	I–EM–O	EO		LTG: EXHIBIT EM (4TH)
30	3ELB–34	I–EM–O	EO		LTG: EXHIBIT EM (4TH)
31	3ELB–36	I–EM–O	EO		LTG: EXHIBIT EM (4TH)
32	3ELB–38	I–EM–O	EO		LTG: EXHIBIT EM (4TH)
33					SPARE RELAY
34					SPARE RELAY
35					SPARE RELAY
36					SPARE RELAY
37					SPARE RELAY
38					SPARE RELAY
39					SPARE RELAY
40					SPARE RELAY
41					SPARE RELAY
42					SPARE RELAY
43					SPARE RELAY
44					SPARE RELAY
45					SPARE RELAY
46					SPARE RELAY
47					SPARE RELAY
48					

RELAY PANEL SCHEDULE

RELAY CABINET: "4RA"

RELAY #	PANEL CIRCUIT #	CONTROL GROUP	CONTROL METHOD	WALL STATION	LOAD DESCRIPTION
1	4HA–2	4–A	WO		COLLECTIONS
2	4HA–3	4–A	TC–W		ADMIN CORRIDORS
3	4HA–4	4–A	WO		COLLECTIONS
4	4HA–6	4–A	WO		COLLECTIONS
5	4HA–8	4–A	WO		COLLECTIONS
6	4HA–10	4–A	WO		COLLECTIONS
7	4HA–12	4–A	WO		COLLECTIONS
8	4HA–13	4	TC–W		ELEV LOBBY
9					SPARE RELAY
10					SPARE RELAY
11					SPARE RELAY
12					SPARE RELAY
13					SPARE RELAY
14					SPARE RELAY
15					SPARE RELAY
16					SPARE RELAY

RELAY PANEL SCHEDULE

RELAY CABINET: "4RB"

RELAY #	PANEL CIRCUIT #	CONTROL GROUP	CONTROL METHOD	WALL STATION	LOAD DESCRIPTION
1	4HB–1	4–M	TC–W		EXHIBIT LIGHTING
2	4HB–2	4–M	TC–W		EXHIBIT LIGHTING
3	4HB–3	4–M	TC–W		EXHIBIT LIGHTING
4	4HB–4	4–M	TC–W		EXHIBIT LIGHTING
5	4HB–5	4–M	TC–W		EXHIBIT LIGHTING
6	4HB–6	4–M	TC–W		EXHIBIT LIGHTING
7	4HB–7	4–M	TC–W		EXHIBIT LIGHTING
8	4HB–8	4–M	TC–W		EXHIBIT LIGHTING
9	4HB–9	4–M	TC–W		EXHIBIT LIGHTING
10	4HB–10	4–M	TC–W		EXHIBIT LIGHTING
11	4HB–11	4–M	TC–W		EXHIBIT LIGHTING
12	4HB–12	4–M	TC–W		LEARNING LAB – DMD
13	4HB–13	4–M	TC–W		EXHIBIT LIGHTING
14	4HB–14	4–M	TC–W		LEARNING LAB – DMD
15	4HB–15	4–M	TC–W		EXHIBIT LIGHTING
16	4HB–16	4–M	TC–W		LEARNING LAB – DMD
17	4HB–17	4–M	TC–W		EXHIBIT LIGHTING
18	4HB–18	4–M	TC–W		EXHIBIT LIGHTING
19	4HB–19	4–M	TC–W		EXHIBIT LIGHTING
20	4HB–21	4–M	TC–W		EXHIBIT LIGHTING
21	4LB1–4	4–M	TC–W		CASE LIGHTING
22	4LB1–8	4–MF	TC–W		EXHIBIT FB
23	4LB1–16	4–MF	TC–W		EXHIBIT FB
24	4LB1–22	4–MF	TC–W		EXHIBIT FB
25	4LB1–30	4–MF	TC–W		CASE LIGHTING
26	4LB1–45	4–MF	TC–W		DIORAMA LIGHTING
27	4LB1–47	4–MF	TC–W		DIORAMA LIGHTING
28	4LB1–49	4–MF	TC–W		DIORAMA LIGHTING
29	4LB1–51	4–M	TC–W		DIORAMA LIGHTING
30	4LB2–1	4–M	TC–W		EXHIBIT WORK TRACK
31	4LB2–2	4–M	TC–W		EXHIBIT TRACK
32	4LB2–3	4–M	TC–W		EXHIBIT WORK TRACK
33	4LB2–4	4–M	TC–W		EXHIBIT TRACK
34	4LB2–5	4–M	TC–W		EXHIBIT WORK TRACK
35	4LB2–6	4–M	TC–W		EXHIBIT TRACK
36	4LB2–7	4–M	TC–W		EXHIBIT TRACK
37	4LB2–8	4–M	TC–W		EXHIBIT TRACK
38	4LB2–9	4–M	TC–W		EXHIBIT TRACK
39	4LB2–10	4–M	TC–W		LEARNING LAB – DMD
40	4LB2–11	4–M	TC–W		EXHIBIT TRACK
41	4LB2–12	4–M	TC–W		EXHIBIT SPOTS
42	4LB2–13	4–M	TC–W		EXHIBIT TRACK
43	4LB2–14	4–M	TC–W		EXHIBIT SPOTS
44	4LB2–15	4–M	TC–W		EXHIBIT TRACK
45	4LB2–16	4–M	TC–W		EXHIBIT SPOTS
46	4LB2–17	4–M	TC–W		EXHIBIT TRACK
47	4LB2–18	4–M	TC–W		EXHIBIT SPOTS
48	4LB2–19	4–M	TC–W		EXHIBIT TRACK
49	4LB2–20	4–M	TC–W		EXHIBIT SPOTS
50	4LB2–21	4–M	TC–W		EXHIBIT TRACK
51	4LB2–22	4–M	TC–W		EXHIBIT SPOTS
52	4LB2–23	4–M	TC–W		EXHIBIT TRACK
53	4LB2–25	4–M	TC–W		EXHIBIT TRACK
54	4LB2–27	4–M	TC–W		EXHIBIT TRACK
55	4LB2–29	4–M	TC–W		EXHIBIT TRACK
56	4LB2–31	4–M	TC–W		EXHIBIT TRACK
57	4LB2–33	4–M	TC–W		EXHIBIT TRACK
58	4LB2–35	4–M	TC–W		EXHIBIT TRACK
59	4LB2–37	4–M	TC–W		EXHIBIT TRACK
60	4LB2–39	4–M	TC–W		EXHIBIT TRACK
61	4LB2–41	4–M	TC–W		EXHIBIT TRACK
62	4LB1–43	C–M	TC–W		CANYON DISPLAY CASE
63	4LB1–45	4–MF	TC–W		DIORAMA LIGHTING
64	4LB1–47	4–MF	TC–W		DIORAMA LIGHTING
65	4LB1–49	4–MF	TC–W		DIORAMA LIGHTING
66	4LB1–51	4–MF	TC–W		DIORAMA LIGHTING
67					SPARE RELAY
68					SPARE RELAY
69					SPARE RELAY
70					SPARE RELAY
71					SPARE RELAY
72					SPARE RELAY

RELAY PANEL SCHEDULE

RELAY CABINET: "5RA"

RELAY #	PANEL CIRCUIT #	CONTROL GROUP	CONTROL METHOD	WALL STATION	LOAD DESCRIPTION
1	5HA–2	5	TC–W		ELEV. LOBBY
2					SPARE RELAY
3					SPARE RELAY
4					SPARE RELAY
5					SPARE RELAY
6					SPARE RELAY
7					SPARE RELAY
8					SPARE RELAY
9					SPACE
10					SPACE
11					SPACE
12					SPACE
13					SPACE
14					SPACE
15					SPACE
16					SPACE

RELAY PANEL SCHEDULE

RELAY CABINET: "5RB"

RELAY #	PANEL CIRCUIT #	CONTROL GROUP	CONTROL METHOD	WALL STATION	LOAD DESCRIPTION
1	5HB–1	5–M	TC–W		SKY LOUNGE
2	5HB–5	5–M	TC–W		FUTURES FORUM – DME
3	5HB–7	5–M	TC–W		FUTURES FORUM – DME
4	5HB–9	5	TC–W		CANYON TRACK
5	5HB–11	O	TC–W		ROOF SPOTLIGHT
6	5LB1–4	5–MF	TC–W		SKY FB
7	5LB1–30	5–MF	TC–W		NATIVE VOICES FB
8	5LB1–34	5–MF	TC–W		NATIVE VOICES FB
9	5LB1–38	5–MF	TC–W		NATIVE VOICES FB
10	5LB1–42	5–MF	TC–W		NATIVE VOICES FB
11	5LB2–1	5–M	TC–W		SKY LOUNGE WORK TRACK
12	5LB2–2	5–M	TC–W		SKY LOUNGE PENDANTS
13	5LB2–3	5–M	TC–W		SKY LOUNGE TRACK
14	5LB2–5	5–M	TC–W		SKY LOUNGE TRACK
15	5LB2–6	5–M	TC–W		NATIVE VOICES CASES
17	5LB2–7	5–M	TC–W		SKY LOUNGE TRACK
18	5LB2–8	5–M	TC–W		NATIVE VOICES CASES
19	5LB2–10	5–M	TC–W		NATIVE VOICES CASES
20	5LB2–12	5–M	TC–W		NATIVE VOICES CASES
21	5LB2–13	5–M	TC–W		NATIVE VOICES ENTRY
22	5LB2–14	5–M	TC–W		FUTURES FORUM – DME
23	5LB2–17	CB	TBD		CANYON TWIST LOCK
24	5LB2–18	5–M	TC–W		SKY CASES
25	5LB2–19	CB	TBD		CANYON TWIST LOCK
26	5LB2–20	5–M	TC–W		SKY CASES
27	5LB2–21	CB	TBD		CANYON TWIST LOCK
28	5LB2–23	CB	TBD		CANYON TWIST LOCK
29					SPARE RELAY
30					SPARE RELAY
31					SPARE RELAY
32					SPARE RELAY
33					SPARE RELAY
34					SPARE RELAY
35					SPARE RELAY
36					SPARE RELAY
37					SPARE RELAY
38					SPACE
39					SPACE
40					SPACE
41					SPACE
42					SPACE
43					SPACE
44					SPACE
45					SPACE
46					SPACE
47					SPACE
48					SPACE
49					SPACE
50					SPACE
51					SPACE
52					SPACE
53					SPACE
54					SPACE
55					SPACE
56					SPACE
57					SPACE
58					SPACE
59					SPACE
60					SPACE

DIMMING SCHEDULE (DMH)

NATIVE VOICES 5000H

PANEL ID: DMH | LOCATION: 5000K | PAGE 1 | MAIN CB: NONE | JOB #200501450W | 6/18/2009

MOUNT: FLOOR | FEEDER: 3P4W 4/0 THHN | LUGS: INDIVIDUAL | FEEDER: NONE

ACCESSORIES: LOCKING DOOR, CIRCUIT DIRECTORY, PANEL ID TAG, GROUND BAR, CONTROL DECODER, INDIVIDUAL NEUTRALS

SLOT NO.	TYPE	AMPS	CONTROL POLE	CONTROL Ckt#	LOAD LIGHTING	LOAD OUTLETS	ID	LOCATION	TOTAL WATTS	PANEL LOADING A	PANEL LOADING B	PANEL LOADING C	WATTS	LOCATION	ID	LOAD OUTLETS	LOAD LIGHTING	CONTROL Ckt#	CONTROL POLE	AMPS	TYPE	SLOT NO.
1	Dimmer	20	1	P 1	250	0	DMH 1	INNER RING	312.5	1687.5			1375	INN. MID. RING	DMH 2	0	1100	P 2	1	20	Dimmer	2
3	Dimmer	20	1	P 17	600	0	DMH 17	SPARE	750		1500		750	SPARE	DMH 18	0	600	P 18	1	20	Dimmer	4
5	Dimmer	20	1	P 19	600	0	DMH 19	SPARE	750			937.5	187.5	CNTR DWNLTS	DMH 3	0	150	P 3	1	20	Dimmer/ET	6
7	Dimmer	20	1	P 21	1550	0	DMH 4	S. GRAZERS	1937.5	4062.5			2125	GRAZERS	DMH 5a	0	1700	P 5	1	20	Dimmer	8
9	Dimmer	20	1	P 5	1500	0	DMH 5b	GRAZERS	1875		4000		2125	GRAZERS	DMH 5c	0	1700	P 5	1	20	Dimmer	10
11	Dimmer	20	1	P 5	1700	0	DMH 5d	GRAZERS	2125			3375	1250	ACCENTS	DMH 6	0	1000	P 6	1	20	Dimmer	12
13	Dimmer	20	1	P 7	975	0	DMH 7a	ENTRY TR.	1218.75	2468.75			1250	ENTRY TR.	DMH 7b	0	1000	P 7	1	20	Dimmer	14
15	Dimmer	20	1	P 8	850	0	DMH 8a	ENTRY TR.	1062.5		1500		437.5	ENTRY TR.	DMH 8b	0	350	P 8	1	20	Dimmer/ET	16
17	Dimmer	20	1	P 9	600	0	DMH 11	SPARE	750			1500	750	SPARE	DMH 12	0	600	P 10	1	20	Dimmer	18
19	Dimmer	20	1	P 11	600	0	DMH 13	SPARE	750	1500			750	SPARE	DMH 14	0	600	P 12	1	20	Dimmer	20
21	Dimmer/ET	20	1	P 13	100	0	DMH 9	ENTRY SPOT	125		225		100	ENTRY DWNLT	DMH 10	0	80	P 14	1	20	Non Dim/ET	22
23	Dimmer	20	1	P 15	600	0	DMH 15	SPARE	750			1500	750	SPARE	DMH 16	0	600	P 16	1	20	Dimmer	24

100% | LIGHTING DIVERSITY: 125%

	TOTAL A	TOTAL B	TOTAL C
WATTS	9,719	7,225	7,313
AMPS	35	26	26

9

DMH

2 LOAD SCHEDULE

NTS

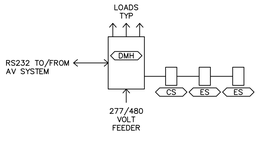

CONTROL WIRING PER MANUFACTURER'S WRITTEN REQUIREMENTS.
REF. SPEC 260933–1.2.A.2

DMH

1 ONELINE DIAGRAM

NTS

LOAD SCHEDULE

SKY 5004

DEVICE	CIRCUIT	LIGHTING ID	LOAD (WATTS)	CONTROL CHANNEL	COMMENTS
DMG	5HB–1	HELIOSCOPE SPOTS (LV)	250	DMG–1	2KW LV DIMMER
	5HB–1	NORTH SPOTS (LV)	100	DMG–2	2KW LV DIMMER
	5HB–1	DOWNLIGHTS (LV)	450	DMG–3	2KW LV DIMMER
	5LB2–3	NORTH TRACK	1500	DMG–4a	2KW–120V INC. DIMMER
	5LB2–5	SOUTH TRACK	1275	DMG–4b	2KW–120V INC. DIMMER
	5LB2–7	SOUTH TRACK	1275	DMG–4c	2KW–120V INC. DIMMER
	5LB2–2	PENDANTS (I)	600	DMG–5a	2KW–120V INC. DIMMER
	5LB2–2	PENDANTS (I)	200	DMG–5b	2KW–120V INC. DIMMER ET
		SPARE		DMG–6	

9

DMG

5 LOAD SCHEDULE

NTS

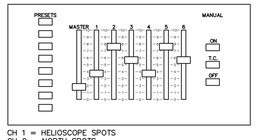

CH 1 = HELIOSCOPE SPOTS
CH 2 = NORTH SPOTS
CH 3 = DOWNLIGHTS
CH 4 = TRACK LIGHTS
CH 5 = PENDANTS
CH 6 = SPARE

SILKSCREEN INFORMATION WILL BE PROVIDED WITH SUBMITTAL RETURN.
ALLOW 6 LABELS.
MOUNT AT +42" AFF

DMG

3 CONTROL STATION

NTS

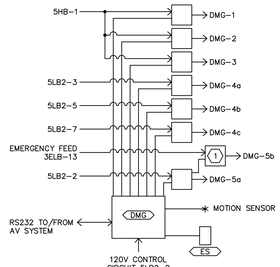

CONTROL WIRING PER MANUFACTURER'S WRITTEN REQUIREMENTS.
REF. SPEC 260923–1.2.A.2

DMG

4 ONELINE DIAGRAM

NTS

Project Title

UTAH MUSEUM OF NATURAL HISTORY

UNIVERSITY OF UTAH
SALT LAKE CITY, UTAH

State of Utah
Department of Administrative Services
Division of Facilities Construction & Management
4110 State Office Building
Salt Lake City, Utah 84114
Phone: (801) 538 - 3018
Fax: (801) 538 - 3267
www.dfcm.utah.gov

PROJ. NO. 02243750

Owner
UMNH
1390 East President's Circle
Salt Lake City, Utah 84112
801.581.6927 tel

Design Architect
Polshek Partnership Architects LLP
320 West 13th Street
New York, New York
212.807.7171 tel

Architect of Record
GSBS
375 West 200 South
Salt Lake City, Utah
801.521.8600 tel

Structural Engineer
Leslie E. Robertson Associates
30 Broad Street
New York, New York 10004
212.750.9000 tel

Structural Engineer
Dunn Associates, Inc.
380 West 800 South, Suite 100
Salt Lake City, Utah 84101
801.575.8877 tel

Mechanical/Plumbing/Fire Protection Engineer
Colvin Engineering Associates, Inc.
244 West 300 North
Salt Lake City, Utah 84103
801.322.2400 tel

Electrical/AV Engineer
Spectrum Engineers
175 South Main Street
Salt Lake City, Utah 84111
800.678.7077 tel

Civil Engineer
Stantec
3995 South 700 East Suite 300
Salt Lake City, Utah 84107
801.261.0090 tel

Landscape Architects
Design Workshop
224 South 200 West
Salt Lake City, UT 84101
801.359.4771 tel

Exhibit Design
Ralph Appelbaum Associates
88 Pine Street
New York, New York 10005
212.334.8200

Key Plan

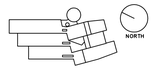

Seal

No.	Issue Name	Date
4	RFI 510	06/10/09
3	LIGHTING CHANGES	06/08/09
2	LEVEL ONE CHANGES	05/12/09
1	EXHIBIT POWER CHANGES	04/24/09
	EQUIPMENT CHANGES	04/17/09
	CONFORMANCE SET	02/09/09
4	EXHIBIT & LTG CHANGES	12/19/08
3	CODE REVIEW	12/10/08
2	ADDENDUM #3	11/10/08
1	ADDENDUM #2	10/23/08
	ADDENDUM #1	10/16/08
	CONSTRUCTION DOCUMENTS	09/30/08

Date	Project No.
02/03/09	2004.076.00
Scale	PPA – 0423
N.T.S.	

Sheet Title

LIGHTING SCHEDULES

Sheet No.

EL–603

File Name: P:\2005\20050145\1Drawings\Sheet\45EL–603.dwg Last Plotted: 2009/06/18 @ 3:15 PM By: jjm
Copyright © 2008 Polshek Partnership Architects LLP

LOAD SCHEDULE

CHILDREN'S GALLERY 2022

DEVICE	CIRCUIT	LIGHTING ID	LOAD (WATTS)	CONTROL CHANNEL	COMMENTS
DMF	2HB–14	AMBIENT LIGHTS (F)	775	DMF–1	2KW FLUORESCENT DIMMER (F) ET
	2HB–14	TRACK (LV)	1350	DMF–2	2KW LV DIMMER
	2HB–16	TRACK (LV)	1400	DMF–3a	2KW LV DIMMER
	2HB–16	TRACK (LV)	1400	DMF–3b	2KW LV DIMMER
	2HB–18	LINEAR FIXTURES (F)	165	DMF–4	2KW FLUORESCENT DIMMER (F)
	2LB2–11	CASE LIGHTING (LED)	1500	DMF–5	2KW–120V LED NON DIM
	2LB2–13	CASE LIGHTING (LED)	1500	DMF–6	2KW–120V LED NON DIM
	2HB–18	CABINET LIGHTING (LED)	64	DMF–7	2KW–277V LV LED DIMMER
		SPARE		DMF–8	

9

DMF **16** LOAD SCHEDULE
NTS

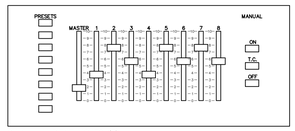

CH 1 = AMBIENT LIGHTS (F)
CH 2 = TRACK (LV)
CH 3 = ENTRY
CH 4 = LINEAR FIXTURES (F)
CH 5 = LED WALLWASH (LV)
CH 6 = CASE LIGHTING (LV)
CH 7 = CABINET LIGHTING (LV)
CH 8 = SPARE

9

SILKSCREEN INFORMATION WILL BE PROVIDED WITH SUBMITTAL RETURN.
ALLOW 6 LABELS.
MOUNT AT +42" AFF

DMF **15** CONTROL STATION
NTS

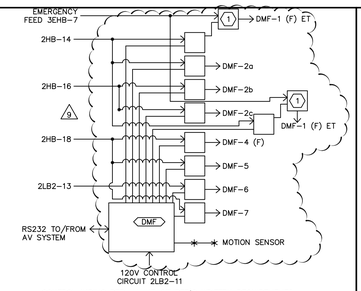

CONTROL WIRING PER MANUFACTURER'S WRITTEN REQUIREMENTS.
REF. SPEC 260923–1.2.A.2

DMF **14** ONELINE DIAGRAM
NTS

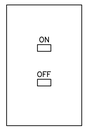

LOCKING COVERS AS SPECIFIED.
CONFIGURE TO TURN ON SELECTED CIRCUITS ONLY.
MOUNT AT +42" AFF.
TYPICAL.

ES **7** ENTRY STATION
NTS

GENERAL SHEET NOTES

1. DIMMING INTERFACE TO BE CONPATIBLE WITH LOAD AS SCHEDULED. IF FLUORESCENT LOAD, USE DIMMING BALLAST ON FIXTURE SCHEDULE. CONTRACTOR TO COORDINATE AND PROVIDE REQUIRED WIRING.
2. ALL LOW VOLTAGE LOADS ARRANGED FOR MAGNETIC LOW VOLTAGE TRANSFORMERS.
3. DIMMERS FOR LED LOADS SCHEDULED AS INCANDESCENT. CHANGE IF NESSICARY TO ASSURE COMPATIBILITY WITH LED DRIVER PROVIDED.

⬡SHEET KEYNOTES

1. ET = CIRCUIT LEVEL EMERGENCY BYPASS DEVICE.
2. (F) = 277 VOLT FLUORESCENT DIMMING BALLAST INTERFACE.

DIMMING SCHEDULE (DMAV)

LIFE DIORAMAS

PANEL ID: DMAV | LOCATION: ROOM # | PAGE 1 | MAIN CB: NONE | JOB #200501450W | 6/9/2009
MOUNT: FLOOR | FEEDER: 3P4W 4#0 THHN | LUGS: INDIVIDUAL | FEEDER: NONE
ACCESSORIES: LOCKING DOOR, CIRCUIT DIRECTORY, PANEL ID TAG, GROUND BAR, CONTROL DECODER, INDIVIDUAL NEUTRALS

SLOT NO.	TYPE	AMPS	CONTROL POLE	CONTROL CH#	LOAD LIGHTING	LOAD OUTLETS	ID	LOCATION	TOTAL WATTS	PANEL LOADING A	PANEL LOADING B	PANEL LOADING C	TOTAL WATTS	LOCATION	ID	LOAD OUTLETS	LOAD LIGHTING	CONTROL CH#	CONTROL POLE	AMPS	TYPE	SLOT NO.
1	Flu/IF	20	1	P 1	1000	0	DMAV 1	COVE (F)	1250	2500			1250	COVE (F)	DMAV 2	0	1000	P 2	1	20	Flu/IF	2
3	Dimmer	20	1	P 3	900	0	DMAV 3	TRACK (I)	1125		2250		1125	TRACK (I)	DMAV 4	0	900	P 4	1	20	Dimmer	4
5	Flu/IF	20	1	P 5	1000	0	DMAV 5	COVE (F)	1250			2500	1250	COVE (F)	DMAV 6	0	1000	P 6	1	20	Flu/IF	6
7	Dimmer	20	1	P 7	750	0	DMAV 7	TRACK (I)	937.5	1875			937.5	TRACK (I)	DMAV 8	0	750	P 8	1	20	Dimmer	8
9	Flu/IF	20	1	P 9	1000	0	DMAV 9	COVE (F)	1250		2500		1250	COVE (F)	DMAV 10	0	1000	P 10	1	20	Flu/IF	10
11	Dimmer	20	1	P 11	750	0	DMAV 11	TRACK (I)	937.5			1875	937.5	TRACK (I)	DMAV 12	0	750	P 12	1	20	Dimmer	12
13	Flu/IF	20	1	P 13	1000	0	DMAV 13	COVE (F)	1250	2500			1250	COVE (F)	DMAV 14	0	1000	P 14	1	20	Flu/IF	14
15	Dimmer	20	1	P 15	1500	0	DMAV 15	TRACK (I)	1875		3750		1875	TRACK (I)	DMAV 16	0	1500	P 16	1	20	Dimmer	16
17	Dimmer	20	1	P 17	400	0	DMAV 17	FIRST PEOP.	500			1437.5	937.5	LIFE GOBO	DMAV 18	0	750	P 18	1	20	Dimmer	18
19	Dimmer	20	1	P 19	750	0	DMAV 19	LIFE GOBO	937.5	1875			937.5	LIFE GOBO	DMAV 20	0	750	P 20	1	20	Dimmer	20
21	Dimmer	20	1	P 21	750	0	DMAV 21	LIFE GOBO	937.5		1875		937.5	LIFE GOBO	DMAV 22	0	750	P 22	1	20	Dimmer	22
23	Dimmer	20	1	P 23	750	0	DMAV 23	LIFE GOBO	937.5			1875	937.5	LIFE GOBO	DMAV 24	0	750	P 24	1	20	Dimmer	24
25	Dimmer	20	1	P 25	750	0	DMAV 25	LIFE GOBO	937.5	1875			937.5	LIFE GOBO	DMAV 26	0	750	P 26	1	20	Dimmer	26
27	Dimmer	20	1	P 27	750	0	DMAV 27	LIFE GOBO	937.5		1875		937.5	LIFE GOBO	DMAV 28	0	750	P 28	1	20	Dimmer	28
29	Dimmer	20	1	P 29	750	0	DMAV 29	LIFE GOBO	937.5			2062.5	1125	TRACK (I)	DMAV 30	0	900	P 30	1	20	Dimmer	30
31	Dimmer	20	1	P 31	900	0	DMAV 31	TRACK (I)	1125	2250			1125	TRACK (I)	DMAV 32	0	900	P 32	1	20	Dimmer	32
33	Dimmer	20	1	P 33	900	0	DMAV 33	TRACK (I)	1125		2250		1125	TRACK (I)	DMAV 34	0	900	P 34	1	20	Dimmer	34
35	Dimmer	20	1	P 35	900	0	DMAV 35	TRACK (I)	1125			1612.5	487.5	COVE (F)	DMAV 36	0	390	P 36	1	20	Flu/IF	36
37	Dimmer	20	1	P 37	600	0	DMAV 37	spare	750	1500			750	spare	DMAV 38	0	600	P 38	1	20	Dimmer	38
39	Dimmer	20	1	P 39	600	0	DMAV 39	spare	750		1500		750	spare	DMAV 40	0	600	P 40	1	20	Dimmer	40
41	Dimmer	20	1	P 41	600	0	DMAV 41	spare	750			1500	750	spare	DMAV 42	0	600	P 42	1	20	Dimmer	42
43	Dimmer	20	1	P 43	600	0	DMAV 43	spare	750	1500			750	spare	DMAV 44	0	600	P 44	1	20	Dimmer	44
45	Dimmer	20	1	P 45	600	0	DMAV 45	spare	750		1500		750	spare	DMAV 46	0	600	P 46	1	20	Dimmer	46
47	Dimmer	20	1	P 47	600	0	DMAV 47	spare	750			1500	750	spare	DMAV 48	0	600	P 48	1	20	Dimmer	48
		100%								TOTAL A	TOTAL B	TOTAL C									LIGHTING DIVERSITY:	125%
									WATTS	15,875	17,500	14,363										
									AMPS	132	146	120										

9

21 LOAD SCHEDULE
NTS

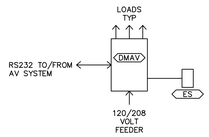

CONTROL WIRING PER MANUFACTURER'S WRITTEN REQUIREMENTS.
REF. SPEC 260933–1.2.A.2

DMAV **20** ONELINE DIAGRAM
NTS

LOAD SCHEDULE

NATURALIST LAB 4010A

DEVICE	CIRCUIT	LIGHTING ID	LOAD (WATTS)	CONTROL CHANNEL	COMMENTS
DMD	4HB–12	NORTH AMBIENT LIGHTS (F)	325	DMD–1a	2KW FLUORESCENT DIMMER (F)
	4HB–12	NORTH AMBIENT LIGHTS (F)	65	DMD–1b	2KW FLUORESCENT DIMMER (F) ET
	4HB–12	SOUTH AMBIENT LIGHTS (F)	325	DMD–2a	2KW FLUORESCENT DIMMER (F)
	4HB–12	SOUTH AMBIENT LIGHTS (F)	65	DMD–2b	2KW FLUORESCENT DIMMER (F) ET
	4HB–12	CENTRAL AMBIENT LIGHTS (F)	975	DMD–3a	2KW FLUORESCENT DIMMER (F)
	4HB–12	CENTRAL AMBIENT LIGHTS (F)	65	DMD–3b	2KW FLUORESCENT DIMMER (F) ET
	4HB–14	ACCENT LIGHTS (LV)	1200	DMD–4a	2KW LV DIMMER
	4HB–14	ACCENT LIGHTS (LV)	1400	DMD–4b	2KW LV DIMMER
	4HB–16	ACCENT LIGHTS (LV)	1400	DMD–4c	2KW LV DIMMER
	4HB–16	COVE (LED)	720	DMD–5	2KW LED DIMMER
	4HB–16	CABINET LIGHTS (LV)	344	DMD–6	2KW–277V LED LV DIMMER
		SPARE		DMD–7	
		SPARE		DMD–8	

9

DMD **13** LOAD SCHEDULE
NTS

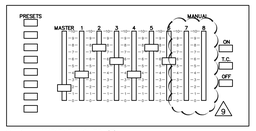

CH 1 = AMBIENT LIGHTS (F)
CH 2 = AMBIENT LIGHTS (F)
CH 3 = AMBIENT LIGHTS (F)
CH 4 = ACCENT LIGHTS (LV)
CH 5 = COVE (LV)
CH 6 = CABINET LIGHTS (LV)
CH 7 = SPARE
CH 8 = SPARE

9

SILKSCREEN INFORMATION WILL BE PROVIDED WITH SUBMITTAL RETURN.
ALLOW 6 LABELS.
MOUNT AT +42" AFF

DMD **12** CONTROL STATION
NTS

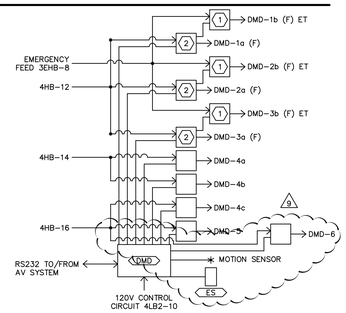

CONTROL WIRING PER MANUFACTURER'S WRITTEN REQUIREMENTS.
REF. SPEC 260923–1.2.A.2

DMD **11** ONELINE DIAGRAM
NTS

LOAD SCHEDULE

UTAH FUTURES 2018

DEVICE	CIRCUIT	LIGHTING ID	LOAD (WATTS)	CONTROL CHANNEL	COMMENTS
DMB	2HB–6	HALLWAY ACCENTS (LV)	300	DMB–1	2KW LV DIMMER
	2HB–6	HALLWAY WALLWASHERS (I)	450	DMB–2	2KW–277V INC. DIMMER
	2HB–6	HALLWAY GINBALS (LV)	300	DMB–3	2KW LV DIMMER
	2HB–4	TRACK (LV)	1350	DMB–4	2KW LV DIMMER
	2LB2–12	TRACK (LV)	1000	DMB–5a	2KW–120V LV DIMMER
	2LB2–14	TRACK (LV)	1000	DMB–5b	2KW–120V LV DIMMER
	2HB–4	DOWNLIGHTS (F)	120	DMB–6	2KW FLUORESCENT NON DIM (F) ET
	2LB2–5	CASE LIGHTING (LED)	925	DMB–7a	2KW–277V LED NON DIM
	2LB2–7	CASE LIGHTING (LED)	925	DMB–7b	2KW–277V LED NON DIM
		SPARE		DMB–8	

9

DMB **6** LOAD SCHEDULE
NTS

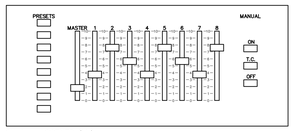

CH 1 = ACCENTS (LV)
CH 2 = WALWASHERS
CH 3 = GINBALS (LV)
CH 4 = TRACK (LV)
CH 5 = TRACK (LV)
CH 6 = DOWNLIGHTS (F)
CH 7 = CASE LIGHTING
CH 8 = SPARE

SILKSCREEN INFORMATION WILL BE PROVIDED WITH SUBMITTAL RETURN.
ALLOW 6 LABELS.
MOUNT AT +42" AFF

DMB **5** CONTROL STATION
NTS

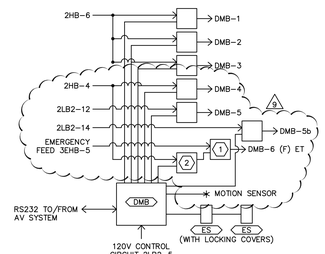

CONTROL WIRING PER MANUFACTURER'S WRITTEN REQUIREMENTS.
REF. SPEC 260923–1.2.A.2

DMB **4** ONELINE DIAGRAM
NTS

LOAD SCHEDULE

FUTURES FORUM 5008

DEVICE	CIRCUIT	LIGHTING ID	LOAD (WATTS)	CONTROL CHANNEL	COMMENTS
DME	5HB–5	SOUTH DOWNLIGHTS (LV)	900	DME–1	2KW LV DIMMER
	5HB–5	CENTER DOWNLIGHTS (LV)	900	DME–2	2KW LV DIMMER
	5HB–7	NORTH DOWNLIGHTS (LV)	900	DME–3	2KW LV DIMMER
	5HB–7	SOUTH WALLWASHERS (F)	730	DME–4	2KW FLUORESCENT DIMMER (F) ET
	5HB–7	NORTH WALLWASHERS (F)	600	DME–5	2KW FLUORESCENT DIMMER (F) ET
	5HB–5	COVE (F)	140	DME–6	2KW FLUORESCENT NON DIM (F)
		SPARE		DME–7	
		SPARE		DME–8	

DME **19** LOAD SCHEDULE
NTS

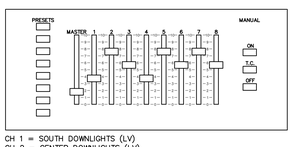

CH 1 = SOUTH DOWNLIGHTS (LV)
CH 2 = CENTER DOWNLIGHTS (LV)
CH 3 = NORTH DOWNLIGHTS (LV)
CH 4 = SOUTH WALLWASHERS (F)
CH 5 = NORTH WALLWASHERS (F)
CH 6 = COVE (F)
CH 7 = SPARE
CH 8 = SPARE

SILKSCREEN INFORMATION WILL BE PROVIDED WITH SUBMITTAL RETURN.
ALLOW 6 LABELS.
MOUNT AT +42" AFF

DME **18** CONTROL STATION
NTS

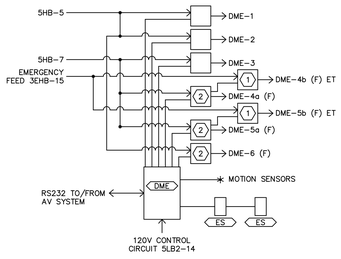

CONTROL WIRING PER MANUFACTURER'S WRITTEN REQUIREMENTS.
REF. SPEC 260923–1.2.A.2

DME **17** ONELINE DIAGRAM
NTS

LOAD SCHEDULE

DANGER CAVE 3040

DEVICE	CIRCUIT	LIGHTING ID	LOAD (WATTS)	CONTROL CHANNEL	COMMENTS
DMC	3HB–7	AMBIENT LIGHTS (F)	195	DMC–1a	2KW FLUORESCENT DIMMER (F)
	3HB–7	AMBIENT LIGHTS (F)	65	DMC–1b	2KW FLUORESCENT DIMMER (F) ET
	3HB–7	AMBIENT LIGHTS (F)	195	DMC–2a	2KW FLUORESCENT DIMMER (F)
	3HB–7	AMBIENT LIGHTS (F)	65	DMC–2b	2KW FLUORESCENT DIMMER (F) ET
	3HB–7	ACCENT LIGHTS (LV)	400	DMC–3	2KW LV DIMMER
	3HB–9	ACCENT LIGHTS (LV)	1600	DMC–4a	2KW LV DIMMER
	3HB–9	ACCENT LIGHTS (LV)	1600	DMC–4b	2KW LV DIMMER
	3LB1–1	CASE LIGHTING (LED)	200	DMC–5	2KW–277V LED NON DIM
	3HB–7	CABINET LIGHTS (LV)	80	DMC–6	2KW–277V LED LV DIMMER
		SPARE		DMC–7	
		SPARE		DMC–8	

9

DMC **10** LOAD SCHEDULE
NTS

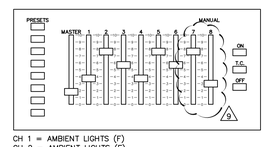

CH 1 = AMBIENT LIGHTS (F)
CH 2 = AMBIENT LIGHTS (F)
CH 3 = ACCENT LIGHTS (LV)
CH 4 = ACCENT LIGHTS (LV)
CH 5 = CASE LIGHTING
CH 6 = CABINET LIGHTS (LV)
CH 7 = SPARE
CH 8 = SPARE

9

SILKSCREEN INFORMATION WILL BE PROVIDED WITH SUBMITTAL RETURN.
ALLOW 6 LABELS.
MOUNT AT +42" AFF

DMC **9** CONTROL STATION
NTS

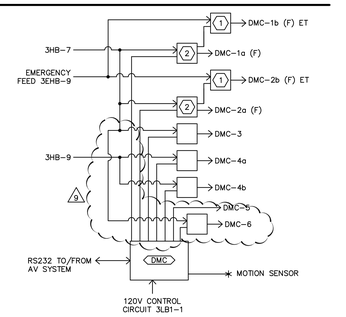

CONTROL WIRING PER MANUFACTURER'S WRITTEN REQUIREMENTS.
REF. SPEC 260923–1.2.A.2

DMC **8** ONELINE DIAGRAM
NTS

LOAD SCHEDULE

LEARNING LAB 2028

DEVICE	CIRCUIT	LIGHTING ID	LOAD (WATTS)	CONTROL CHANNEL	COMMENTS
DMA	2HB–1	AMBIENT LIGHTS (F)	650	DMA–1a	2KW FLUORESCENT DIMMER (F)
	2HB–1	AMBIENT LIGHTS (F)	65	DMA–1b	2KW FLUORESCENT DIMMER (F) ET
	2HB–1	AMBIENT LIGHTS (F)	975	DMA–2a	2KW FLUORESCENT DIMMER (F)
	2HB–1	AMBIENT LIGHTS (F)	130	DMA–2b	2KW FLUORESCENT DIMMER (F) ET
	2HB–1	ACCENT LIGHTS (LV)	150	DMA–3	2KW LV DIMMER
	2HB–1	ACCENT LIGHTS (LV)	225	DMA–4	2KW LV DIMMER
	2HB–1	CABINET LIGHTS (LV)	196	DMA–5	2KW–277V LV LED DIMMER
		SPARE		DMA–6	

9

DMA **3** LOAD SCHEDULE
NTS

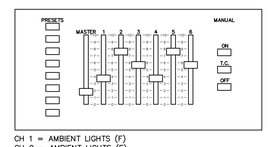

CH 1 = AMBIENT LIGHTS (F)
CH 2 = AMBIENT LIGHTS (F)
CH 3 = ACCENT LIGHTS (LV)
CH 4 = ACCENT LIGHTS (LV)
CH 5 = CABINET LIGHTS (LV)
CH 6 = SPARE

9

SILKSCREEN INFORMATION WILL BE PROVIDED WITH SUBMITTAL RETURN.
ALLOW 6 LABELS.
MOUNT AT +42" AFF

DMA **2** CONTROL STATION
NTS

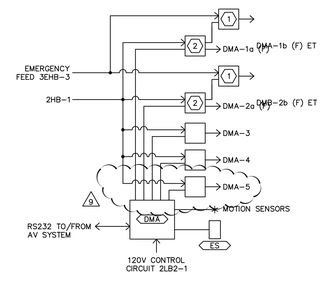

CONTROL WIRING PER MANUFACTURER'S WRITTEN REQUIREMENTS.
REF. SPEC 260923–1.2.A.2

DMA **1** ONELINE DIAGRAM
NTS

Project Title

UTAH MUSEUM OF NATURAL HISTORY

UNIVERSITY OF UTAH
SALT LAKE CITY, UTAH

State of Utah
Department of Administrative Services
Division of Facilities Construction & Management
4110 State Office Building
Salt Lake City, Utah 84114
Phone: (801) 538 - 3018
Fax: (801) 538 - 3267
www.dfcm.utah.gov

PROJ. NO. 02243750

Owner
UMNH
1390 East President's Circle
Salt Lake City, Utah 84112
801.581.6927 tel

Design Architect
Polshek Partnership Architects LLP
320 West 13th Street
New York, New York
212.807.7171 tel

Architect of Record
GSBS
375 West 200 South
Salt Lake City, Utah
801.521.8600 tel

Structural Engineer
Leslie E. Robertson Associates
30 Broad Street
New York, New York 10004
212.750.9000 tel

Structural Engineer
Dunn Associates, Inc.
380 West 800 South, Suite 100
Salt Lake City, Utah 84101
801.575.8877 tel

Mechanical/Plumbing/Fire Protection Engineer
Colvin Engineering Associates, Inc.
244 West 300 North
Salt Lake City, Utah 84103
801.322.2400 tel

Electrical/AV Engineer
Spectrum Engineers
175 South Main Street
Salt Lake City, Utah 84111
800.678.7077 tel

Civil Engineer
Stantec
3995 South 700 East Suite 300
Salt Lake City, Utah 84107
801.261.0090 tel

Landscape Architects
Design Workshop
224 South 200 West
Salt Lake City, UT 84101
801.359.4771 tel

Exhibit Design
Ralph Appelbaum Associates
88 Pine Street
New York, New York 10005
212.334.8200

Key Plan

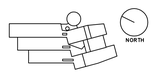

Seal

No.	Issue Name	Date
1	RFI 510	06/10/09
2	LIGHTING CHANGES	06/08/09
3	LEVEL ONE CHANGES	05/12/09
4	EXHIBIT POWER CHANGES	04/24/09
5	EQUIPMENT CHANGES	04/17/09
	CONFORMANCE SET	02/09/09
6	EXHIBIT & LTG CHANGES	12/19/08
7	CODE REVIEW	12/10/08
8	ADDENDUM #3	11/10/08
9	ADDENDUM #2	10/23/08
10	ADDENDUM #1	10/16/08
	CONSTRUCTION DOCUMENTS	09/30/08

Date	Project No.
02/03/09	2004.076.00
Scale	PPA – 0423
N.T.S.	

Sheet Title
LIGHTING DETAILS

Sheet No.
EL–502

File Name: P:\2005\20050145\1Drawings\Sheet\45EL-502.dwg Last Plotted: 2009/06/18 @ 3:15 PM By: jjm
Copyright © 2008 Polshek Partnership Architects, LLP

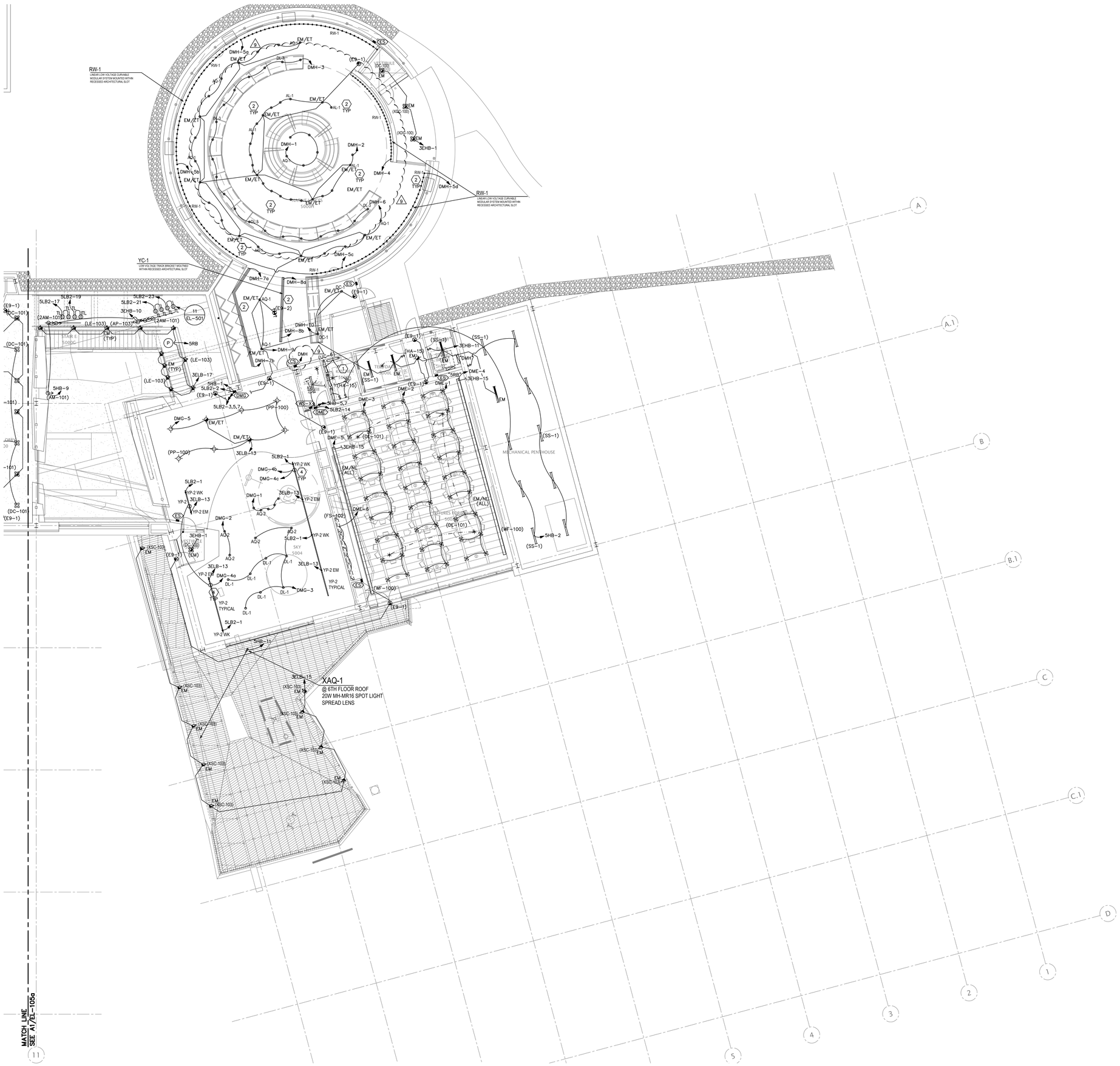

A1 PARTIAL LIGHTING PLAN LEVEL 5 – SOUTH
1/8" = 1'-0"

SHEET KEYNOTES

1. CIRCUIT UNDERCABINET LIGHTS WITH COUNTER OUTLETS, THROUGH ROOM OCCUPANCY SENSOR RELAY.
2. CIRCUIT LV LIGHTS THROUGH REMOTE TRANSFORMERS TO CIRCUIT INDICATED. PROVIDE ONE 300W LOW-VOLTAGE TRANSFORMER FOR EACH 4' OR LESS OF TRACK. LOCATE TRANSFORMERS IN CONCEALED BUT ACCESSIBLE LOCATION AS APPROVED BY ARCHITECT. COMPLY WITH MANUFACTURER'S WRITTEN INSTRUCTIONS FOR MAXIMUM DISTANCES. PROVIDE WIRE SIZE AS RECOMMENDED BY MANUFACTURER BASED ON ACTUAL CIRCUIT LENGTH.
3. LOCATE FIBER OPTIC ILLUMINATORS IN VENTILATED ACCESSIBLE COMPARTMENT. COORDINATE EXACT LOCATIONS WITH ARCHITECT AND EXHIBIT DESIGNER.
4. DIVIDE NORMAL CIRCUITS SHOWN EQUALLY FOR ENTIRE LENGTH OF TRACK. BREAK TRACK FOR 12" SECTIONS OF "EM" AND "WK" CIRCUITS (ON SEPARATE CIRCUITS INDICATED) THEN RE-CONTINUE TRACK WITH ORIGINAL CIRCUITS(S).

Project Title

UTAH MUSEUM OF NATURAL HISTORY

UNIVERSITY OF UTAH
SALT LAKE CITY, UTAH

State of Utah
Department of Administrative Services
Division of Facilities Construction & Management
4110 State Office Building
Salt Lake City, Utah 84114
Phone: (801) 538 - 3018
Fax: (801) 538 - 3267
www.dfcm.utah.gov

PROJ. NO. 02243750

Owner
UMNH
1390 East President's Circle
Salt Lake City, Utah 84112
801.581.6927 tel

Design Architect
Polshek Partnership Architects LLP
320 West 13th Street
New York, New York
212.807.7171 tel

Architect of Record
GSBS
375 West 200 South
Salt Lake City, Utah
801.521.8600 tel

Structural Engineer
Leslie E. Robertson Associates
30 Broad Street
New York, New York 10004
212.750.9000 tel

Structural Engineer
Dunn Associates, Inc.
380 West 800 South, Suite 100
Salt Lake City, Utah 84101
801.575.8877 tel

Mechanical/Plumbing/Fire Protection Engineer
Colvin Engineering Associates, Inc.
244 West 300 North
Salt Lake City, Utah 84103
801.322.2400 tel

Electrical/AV Engineer
Spectrum Engineers
175 South Main Street
Salt Lake City, Utah 84111
800.678.7077 tel

Civil Engineer
Stantec
3995 South 700 East Suite 300
Salt Lake City, Utah 84107
801.261.0090 tel

Landscape Architects
Design Workshop
224 South 200 West
Salt Lake City, UT 84101
801.359.4771 tel

Exhibit Design
Ralph Appelbaum Associates
88 Pine Street
New York, New York 10005
212.334.8200

Key Plan

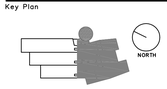

Seal

No.	Issue Name	Date
7	RFI 510	06/10/09
6	LIGHTING CHANGES	06/08/09
5	LEVEL ONE CHANGES	05/12/09
4	EXHIBIT POWER CHANGES	04/24/09
3	EQUIPMENT CHANGES	04/17/09
	CONFORMANCE SET	02/09/09
2	EXHIBIT & LTG CHANGES	12/19/08
1	CODE REVIEW	12/10/08
3	ADDENDUM #3	11/10/08
2	ADDENDUM #2	10/23/08
1	ADDENDUM #1	10/16/08
	CONSTRUCTION DOCUMENTS	09/30/08

Date 02/03/09
Project No. 2004.076.00
Scale 1/8" = 1'-0"
PPA – 0423

Sheet Title
PARTIAL LIGHTING PLAN LEVEL 5 – SOUTH

Sheet No.
EL–105b

File Name: P:\2005\20050145\1Drawings\Sheet\45EL-105b.dwg Last Plotted: 2009/06/18 @ 3:16 PM By: jjm
Copyright © 2006 Polshek Partnership Architects, LLP

A1 PARTIAL LIGHTING PLAN LEVEL 4 – SOUTH
1/8" = 1'-0"

SHEET KEYNOTES

1. PROVIDE UV FILTER TUBE SLEEVES FOR ALL FIXTURES IN THESE ROOMS.
2. CIRCUIT UNDERCABINET LIGHTS WITH COUNTER OUTLETS, THROUGH ROOM OCCUPANCY SENSOR RELAY.
3. WHERE TRACK LIGHT IS SHOWN CONTINUOUS, BREAK TRACK FOR DIFFERENT CIRCUITS SHOWN.
4. CIRCUIT LV LIGHTS THROUGH REMOTE TRANSFORMERS TO CIRCUIT INDICATED. PROVIDE ONE 300W LOW-VOLTAGE TRANSFORMER FOR EACH 4' OR LESS OF TRACK. LOCATE TRANSFORMERS IN CONCEALED BUT ACCESSIBLE LOCATION AS APPROVED BY ARCHITECT. COMPLY WITH MANUFACTURER'S WRITTEN INSTRUCTIONS FOR MAXIMUM DISTANCES. PROVIDE WIRE SIZE AS RECOMMENDED BY MANUFACTURER BASED ON ACTUAL CIRCUIT LENGTH.
5. LAB 4107 AND STORAGE 4109A ARE CLASS 1, DIVISION 2 HAZARDOUS LOCATIONS. COMPLY WITH NEC ARTICLES 500 AND 501 FOR EQUIPMENT AND WIRING METHODS IN THESE ROOMS.
6. PROVIDE (LE-6) LIGHT FIXTURE WITHIN COLLECTION WALL CASE. REFER TO ARCHITECTURAL ELEVATIONS AND DETAILS (AS431 AND AE432) FOR LOCATIONS AND QUANTITIES. CONNECT NO MORE THAN 1500 VA PER CIRCUIT.
7. DIVIDE NORMAL CIRCUITS SHOWN EQUALLY FOR ENTIRE LENGTH OF TRACK. BREAK TRACK FOR 12" SECTIONS OF "EM" AND "WK" CIRCUITS (ON SEPARATE CIRCUITS INDICATED) THEN RE-CONTINUE TRACK WITH ORIGINAL CIRCUITS(S).
8. CIRCUIT LV LIGHTS THROUGH REMOTE POWER SUPPLY TO CIRCUIT INDICATED. LOCATE POWER SUPPLIES IN CONCEALED BUT ACCESSIBLE LOCATION AS APPROVED BY ARCHITECT. COMPLY WITH MANUFACTURER'S WRITTEN INSTRUCTIONS FOR MAXIMUM DISTANCES. PROVIDE WIRE SIZE AS RECOMMENDED BY MANUFACTURER BASED ON ACTUAL CIRCUIT LENGTH.

Project Title

UTAH MUSEUM OF NATURAL HISTORY

UNIVERSITY OF UTAH
SALT LAKE CITY, UTAH

State of Utah
Department of Administrative Services

Division of Facilities Construction & Management
4110 State Office Building
Salt Lake City, Utah 84114
Phone: (801) 538 - 3018
Fax: (801) 538 - 3267

www.dfcm.utah.gov

PROJ. NO. 02243750

Owner
UMNH
1390 East President's Circle
Salt Lake City, Utah 84112
801.581.6927 tel

Design Architect
Polshek Partnership Architects LLP
320 West 13th Street
New York, New York
212.807.7171 tel

Architect of Record
GSBS
375 West 200 South
Salt Lake City, Utah
801.521.8600 tel

Structural Engineer
Leslie E. Robertson Associates
30 Broad Street
New York, New York 10004
212.750.9000 tel

Structural Engineer
Dunn Associates, Inc.
380 West 800 South, Suite 100
Salt Lake City, Utah 84101
801.575.8877 tel

Mechanical/Plumbing/Fire Protection Engineer
Colvin Engineering Associates, Inc.
244 West 300 North
Salt Lake City, Utah 84103
801.322.2400 tel

Electrical/AV Engineer
Spectrum Engineers
175 South Main Street
Salt Lake City, Utah 84111
800.678.7077 tel

Civil Engineer
Stantec
3995 South 700 East Suite 300
Salt Lake City, Utah 84107
801.261.0090 tel

Landscape Architects
Design Workshop
224 South 200 West
Salt Lake City, UT 84101
801.359.4771 tel

Exhibit Design
Ralph Appelbaum Associates
88 Pine Street
New York, New York 10005
212.334.8200

Key Plan

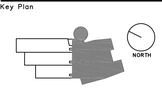

Seal

No.	Issue Name	Date
1	RFI 510	06/10/09
2	LIGHTING CHANGES	06/08/09
1	LEVEL ONE CHANGES	05/12/09
1	EXHIBIT POWER CHANGES	04/24/09
1	EQUIPMENT CHANGES	04/17/09
	CONFORMANCE SET	02/09/09
2	EXHIBIT & LTG CHANGES	12/19/08
1	CODE REVIEW	12/10/08
1	ADDENDUM #3	11/10/08
1	ADDENDUM #2	10/23/08
1	ADDENDUM #1	10/16/08
	CONSTRUCTION DOCUMENTS	09/30/08

Date 02/03/09
Project No. 2004.076.00
Scale 1/8" = 1'-0"
PPA – 0423

Sheet Title
PARTIAL LIGHTING PLAN LEVEL 4 – SOUTH

Sheet No.
EL–104b

File Name: P:\2005\20050145\1Drawings\Sheet\45EL-104b.dwg Last Plotted: 2009/06/19 @ 4:09 PM By: dlm
Copyright © 2008 Polshek Partnership Architects LLP

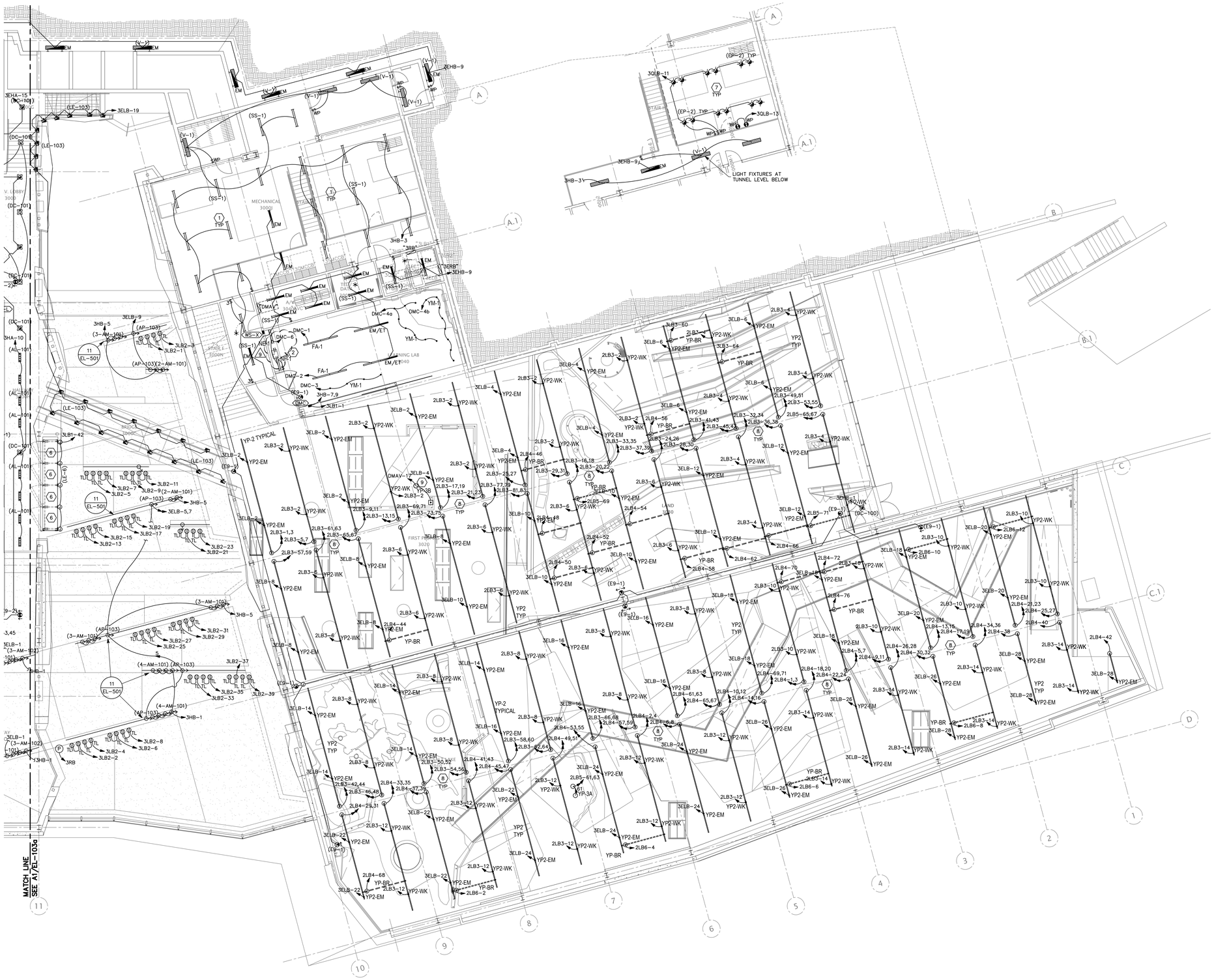

A1 PARTIAL LIGHTING PLAN LEVEL 3 – SOUTH
1/8" = 1'-0"

SHEET KEYNOTES

1. COORDINATE EXACT LOCATIONS OF LIGHT FIXTURES IN MECHANICAL ROOM WITH PIPING AND DUCTWORK SO THAT LIGHTING IS NOT OBSTRUCTED.
2. CIRCUIT UNDERCABINET LIGHTS WITH COUNTER OUTLETS, THROUGH ROOM OCCUPANCY SENSOR RELAY.
3. WHERE TRACK LIGHT IS SHOWN CONTINUOUS, BREAK TRACK FOR DIFFERENT CIRCUITS SHOWN.
4. CIRCUIT LV LIGHTS THROUGH REMOTE POWER SUPPLY TO CIRCUIT INDICATED. LOCATE POWER SUPPLIES IN CONCEALED BUT ACCESSIBLE LOCATION AS APPROVED BY ARCHITECT. COMPLY WITH MANUFACTURER'S WRITTEN INSTRUCTIONS FOR MAXIMUM DISTANCES. PROVIDE WIRE SIZE AS RECOMMENDED BY MANUFACTURER BASED ON ACTUAL CIRCUIT LENGTH.
5. PROVIDE UV FILTERS FOR ALL FIXTURES IN THESE ROOMS.
6. PROVIDE (LE-6) LIGHT FIXTURE WITHIN COLLECTION WALL CASE. REFER TO ARCHITECTURAL ELEVATIONS AND DETAILS (AS431 AND AE432) FOR LOCATIONS AND QUANTITIES. CONNECT NO MORE THAN 1500 VA PER CIRCUIT.
7. PROVIDE LIGHT FIXTURES, SWITCHES AND OUTLETS INSIDE AIR HANDLER AT EACH LEVEL OF 2-LEVEL AIR HANDLER (QUANTITY SHOWN REPRESENTS TOTAL FOR TWO LEVELS). COORDINATE EXACT PLACEMENT WITH MECHANICAL INSTALLER.
8. DIVIDE NORMAL CIRCUITS SHOWN EQUALLY FOR ENTIRE LENGTH OF TRACK. BREAK TRACK FOR 12" SECTIONS OF "EM" AND "WK" CIRCUITS (ON SEPARATE CIRCUITS INDICATED) THEN RE-CONTINUE TRACK WITH ORIGINAL CIRCUITS(S).
9. PROVIDE WIRING FROM EXHIBIT SWITCH BELOW TO YP-3B FIXTURE ABOVE. COORDINATE INSTALLATION WITH EXHIBIT INSTALL.

Project Title

UTAH MUSEUM OF NATURAL HISTORY

UNIVERSITY OF UTAH
SALT LAKE CITY, UTAH

State of Utah
Department of Administrative Services

Division of Facilities Construction & Management
4110 State Office Building
Salt Lake City, Utah 84114
Phone: (801) 538 - 3018
Fax: (801) 538 - 3267

www.dfcm.utah.gov

PROJ. NO. 02243750

Owner
UMNH
1390 East President's Circle
Salt Lake City, Utah 84112
801.581.6927 tel

Design Architect
Polshek Partnership Architects LLP
320 West 13th Street
New York, New York
212.807.7171 tel

Architect of Record
GSBS
375 West 200 South
Salt Lake City, Utah
801.521.8600 tel

Structural Engineer
Leslie E. Robertson Associates
30 Broad Street
New York, New York 10004
212.750.9000 tel

Structural Engineer
Dunn Associates, Inc.
380 West 800 South, Suite 100
Salt Lake City, Utah 84101
801.575.8877 tel

Mechanical/Plumbing/Fire Protection Engineer
Colvin Engineering Associates, Inc.
244 West 300 North
Salt Lake City, Utah 84103
801.322.2400 tel

Electrical/AV Engineer
Spectrum Engineers
175 South Main Street
Salt Lake City, Utah 84111
800.678.7077 tel

Civil Engineer
Stantec
3995 South 700 East Suite 300
Salt Lake City, Utah 84107
801.261.0090 tel

Landscape Architects
Design Workshop
224 South 200 West
Salt Lake City, UT 84101
801.359.4771 tel

Exhibit Design
Ralph Appelbaum Associates
88 Pine Street
New York, New York 10005
212.334.8200

Key Plan

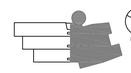

Seal

No.	Issue Name	Date
7	RFI 510	06/10/09
6	LIGHTING CHANGES	06/08/09
5	LEVEL ONE CHANGES	05/12/09
4	EXHIBIT POWER CHANGES	04/24/09
3	EQUIPMENT CHANGES	04/17/09
	CONFORMANCE SET	02/09/09
2	EXHIBIT & LTG CHANGES	12/19/08
1	CODE REVIEW	12/10/08
4	ADDENDUM #3	11/10/08
3	ADDENDUM #2	10/23/08
2	ADDENDUM #1	10/16/08
	CONSTRUCTION DOCUMENTS	09/30/08

Date 02/03/09
Project No. 2004.076.00
Scale 1/8" = 1'-0"
PPA – 0423

Sheet Title
PARTIAL LIGHTING PLAN LEVEL 3 – SOUTH

Sheet No.
EL-103b

File Name: P:\2005\20050145\1Drawings\Sheet\45EL-103b.dwg Last Plotted: 2009/06/18 @ 3:16 PM By: jjm
Copyright © 2008 Polshek Partnership Architects LLP

A1 PARTIAL LIGHTING PLAN LEVEL 2 – SOUTH
1/8" = 1'-0"

SHEET KEYNOTES

1. COORDINATE LIGHTING LAYOUT WITH OVERHEAD CRANE AND SNORKEL EXHAUST SYSTEMS.
2. CIRCUIT WITH PIT OUTLET.
3. CIRCUIT WITH MACHINE ROOM OUTLET.
4. CIRCUIT LV LIGHTS THROUGH REMOTE TRANSFORMERS TO CIRCUIT INDICATED. PROVIDE ONE 300W LOW–VOLTAGE TRANSFORMER FOR EACH 4' OR LESS OF TRACK. LOCATE TRANSFORMERS IN CONCEALED BUT ACCESSIBLE LOCATION AS APPROVED BY ARCHITECT. COMPLY WITH MANUFACTURER'S WRITTEN INSTRUCTIONS FOR MAXIMUM DISTANCES. PROVIDE WIRE SIZE AS RECOMMENDED BY MANUFACTURER BASED ON ACTUAL CIRCUIT LENGTH.
5. CIRCUIT UNDERCABINET LIGHTS WITH COUNTER OUTLETS, THROUGH ROOM OCCUPANCY SENSOR RELAY.
6. CONNECT LIGHT FIXTURES THAT ARE FURNISHED WITH WALK–IN FREEZER.
7. PROVIDE (LE–6) LIGHT FIXTURE WITHIN COLLECTION WALL CASE. REFER TO ARCHITECTURAL ELEVATIONS AND DETAILS (AS431 AND AE432) FOR LOCATIONS AND QUANTITIES. CONNECT NO MORE THAN 1500 VA PER CIRCUIT.
8. NETWORK RELAY SYSTEM LIGHTING CONTROL PORT MOUNTED LOW IN WALL BELOW FACETED WALL.
9. FIBER OPTIC ILLUMINATORS IN ACCESS PANEL. REFER TO EP–102b FOR CIRCUITING INFORMATION.
10. CIRCUIT LV LIGHTS THROUGH REMOTE POWER SUPPLY TO CIRCUIT INDICATED. LOCATE POWER SUPPLIES IN CONCEALED BUT ACCESSIBLE LOCATION AS APPROVED BY ARCHITECT. COMPLY WITH MANUFACTURER'S WRITTEN INSTRUCTIONS FOR MAXIMUM DISTANCES. PROVIDE WIRE SIZE AS RECOMMENDED BY MANUFACTURER BASED ON ACTUAL CIRCUIT LENGTH.

Project Title

UTAH MUSEUM OF NATURAL HISTORY

UNIVERSITY OF UTAH
SALT LAKE CITY, UTAH

State of Utah
Department of Administrative Services
Division of Facilities Construction & Management
4110 State Office Building
Salt Lake City, Utah 84114
Phone: (801) 538 - 3018
Fax: (801) 538 - 3267
www.dfcm.utah.gov

PROJ. NO. 02243750

Owner
UMNH
1390 East President's Circle
Salt Lake City, Utah 84112
801.581.6927 tel

Design Architect
Polshek Partnership Architects LLP
320 West 13th Street
New York, New York
212.807.7171 tel

Architect of Record
GSBS
375 West 200 South
Salt Lake City, Utah
801.521.8600 tel

Structural Engineer
Leslie E. Robertson Associates
30 Broad Street
New York, New York 10004
212.750.9000 tel

Structural Engineer
Dunn Associates, Inc.
380 West 800 South, Suite 100
Salt Lake City, Utah 84101
801.575.8877 tel

Mechanical/Plumbing/Fire Protection Engineer
Colvin Engineering Associates, Inc.
244 West 300 North
Salt Lake City, Utah 84103
801.322.2400 tel

Electrical/AV Engineer
Spectrum Engineers
175 South Main Street
Salt Lake City, Utah 84111
800.678.7077 tel

Civil Engineer
Stantec
3995 South 700 East Suite 300
Salt Lake City, Utah 84107
801.261.0090 tel

Landscape Architects
Design Workshop
224 South 200 West
Salt Lake City, UT 84101
801.359.4771 tel

Exhibit Design
Ralph Appelbaum Associates
88 Pine Street
New York, New York 10005
212.334.8200

Key Plan

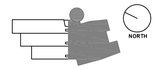

Seal

No.	Issue Name	Date
1	RFI 510	06/10/09
2	LIGHTING CHANGES	06/08/09
3	LEVEL ONE CHANGES	05/12/09
4	EXHIBIT POWER CHANGES	04/24/09
5	EQUIPMENT CHANGES	04/17/09
	CONFORMANCE SET	02/09/09
6	EXHIBIT & LTG CHANGES	12/19/08
7	CODE REVIEW	12/10/08
8	ADDENDUM #3	11/10/08
9	ADDENDUM #2	10/23/08
10	ADDENDUM #1	10/16/08
	CONSTRUCTION DOCUMENTS	09/30/08

Date 02/03/09
Project No. 2004.076.00
Scale 1/8" = 1'-0"
PPA – 0423

Sheet Title
PARTIAL LIGHTING PLAN LEVEL 2 – SOUTH

Sheet No.
EL–102b

File Name: P:\2005\20050145\1Drawings\Sheet\45EL-102b.dwg Last Plotted: 2009/06/18 @ 3:16 PM By: jjm
Copyright © 2008 Polshek Partnership Architects, LLP

PANEL "4HB"

VOLTS/PHASE/WIRE:	PANEL SIZE & TYPE:	MAIN SIZE & TYPE:	LOCATION:	CABINET:	NOTES:
277/480 V, 3 PH 4 WIRE	22" W x 6" D, BOLT–ON	125 AMPERE MAIN LUGS			

ACCESSORIES: PANEL DIRECTORY, IDENTIFICATION, GROUNDING BAR, SUBFEED LUGS

CKT	OCP		LOAD (kVA)			DESCRIPTION	LCL	PHASE LOAD			LCL	DESCRIPTION	LOAD (kVA)			OCP		CKT
NO	AMP	POLE	LTG	CO	PWR		kVA	A	B	C	kVA		LTG	CO	PWR	AMP	POLE	NO
1	20	1	2.1			LTG: EXHIBIT TRACK	2.7	4.1			2.5	LTG: EXHIBITS	2.0			20	1	2
3	20	1	1.5			LTG: EXHIBIT TRACK	1.9		3.2		2.1	LTG: EXHIBIT TRACK	1.7			20	1	4
5	20	1	1.5			LTG: EXHIBIT TRACK	1.9			3.2	2.0	LTG: EXHIBIT TRACK	1.6			20	1	6
7	20	1	1.4			LTG: EXHIBIT TRACK	1.7	3.0			2.0	LTG: EXHIBIT TRACK	1.6			20	1	8
9	20	1	1.4			LTG: EXHIBIT TRACK	1.7		3.1		2.2	LTG: EXHIBIT TRACK	1.8			20	1	10
11	20	1	1.6			LTG: EXHIBITS	2.0			3.4	2.3	LTG: DMD	1.8			20	1	12
13	20	1	1.9			LTG: EXHIBIT TRACK	2.3	4.5			3.3	LTG: DMD	2.6			20	1	14
15	20	1	1.9			LTG: EXHIBIT TRACK	2.3		4.0		2.7	LTG: DMD	2.1			20	1	16
17	20	1	1.9			LTG: EXHIBIT TRACK	2.3			4.3	3.0	LTG: EXHIBITS	2.4			20	1	18
19	20	1	1.6			LTG: EXHIBIT TRACK	1.9	1.9			0.4	LTG: STORAGE	0.3			20	1	20
21	20	1	1.6			LTG: EXHIBIT TRACK	1.9		1.6		0.0	SPARE				20	1	22
23	20	1				SPARE	0.0			0.0	0.0	SPARE				20	1	24
25	20	1				SPARE	0.0	0.0			0.0	SPARE				20	1	26
27	20	1				SPARE	0.0		0.0		0.0	SPARE				20	1	28
29	20	1				SPARE	0.0			0.0	0.0	SPARE				20	1	30
31	20	1				SPARE	0.0	0.0			0.0	SPARE				20	1	32
33	20	1				SPARE	0.0		0.0		0.0	SPARE				20	1	34
35	20	1				SPARE	0.0			0.0	0.0	SPARE				20	1	36
37	20	1				SPARE	0.0	0.0			0.0	SPARE				20	1	38
39	20	1				SPARE	0.0		0.0		0.0	SPARE				20	1	40
41	20	1				SPARE	0.0			0.0	0.0	SPARE				20	1	42
TOTALS:						CONNECTED kVA PER PHASE		13	12	11		CONNECTED TOTAL kVA				36		
						CONNECTED AMPS PER PHASE		48	43	39		CONNECTED AVERAGE AMPS PER PHASE				43		

NEC DIVERSIFIED LOAD CALCULATIONS

LIGHTING 36kVA @125% =	45 kVA	ALL OTHER LOADS @100% =	0 kVA	DIVERSIFIED TOTAL kVA =	45
RECEPTACLES 0kVA @100% =	0 kVA	25% OF LARGEST MOTOR =	0 kVA	AVERAGE AMPS PER PHASE =	54
REMAINDER 0kVA @ 50% =	0 kVA				

9

PANEL "5HA"

VOLTS/PHASE/WIRE:	PANEL SIZE & TYPE:	MAIN SIZE & TYPE:	LOCATION:	CABINET:	NOTES:
277/480 V, 3 PH 4 WIRE	22" W x 6" D, BOLT–ON	125 AMPERE MAIN LUGS			

ACCESSORIES: PANEL DIRECTORY, IDENTIFICATION, GROUNDING BAR, SUBFEED LUGS

CKT	OCP		LOAD (kVA)			DESCRIPTION	LCL	PHASE LOAD			LCL	DESCRIPTION	LOAD (kVA)			OCP		CKT
NO	AMP	POLE	LTG	CO	PWR		kVA	A	B	C	kVA		LTG	CO	PWR	AMP	POLE	NO
1	20	1	1.8			LTG: E. OPEN OFFICE	2.2	2.4			0.8	LTG: LOBBY	0.6			20	1	2
3	20	1	2.5			LTG: W. OPEN OFFICE	3.2		5.0		3.1	LTG: MECH MEZZANINE	2.5			20	1	4
5	20	1	2.0			LTG: CONF ROOMS	2.4			3.4	1.8	LTG: ADMIN LOBBY/BATH	1.4			20	1	6
7	20	1				SPARE	0.0	0.0			0.0	SPARE				20	1	8
9	20	1				SPARE	0.0		0.0		0.0	SPARE				20	1	10
11	20	1				SPARE	0.0			0.0	0.0	SPARE				20	1	12
13	20	1				SPARE	0.0	0.0			0.0	SPARE				20	1	14
15	20	1				SPARE	0.0		0.0		0.0	SPARE				20	1	16
17	20	1				SPARE	0.0			0.0	0.0	SPARE				20	1	18
19	20	1				SPARE	0.0	0.0			0.0	SPARE				20	1	20
21	20	1				SPARE	0.0		0.0		0.0	SPARE				20	1	22
23	20	1				SPARE	0.0			0.0	0.0	SPARE				20	1	24
25	20	1				SPARE	0.0	0.0			0.0	SPARE				20	1	26
27	20	1				SPARE	0.0		0.0		0.0	SPARE				20	1	28
29	20	1				SPARE	0.0			0.0	0.0	SPARE				20	1	30
31	20	1				SPARE	0.0	0.0			0.0	SPARE				20	1	32
33	20	1				SPARE	0.0		0.0		0.0	SPARE				20	1	34
35	20	1				SPARE	0.0			0.0	0.0	SPARE				20	1	36
37	20	1				SPARE	0.0	0.0			0.0	SPARE				20	1	38
39	20	1				SPARE	0.0		0.0		0.0	SPARE				20	1	40
41	20	1				SPARE	0.0			0.0	0.0	SPARE				20	1	42
TOTALS:						CONNECTED kVA PER PHASE		2	5	3		CONNECTED TOTAL kVA				11		
						CONNECTED AMPS PER PHASE		9	18	12		CONNECTED AVERAGE AMPS PER PHASE				13		

NEC DIVERSIFIED LOAD CALCULATIONS

LIGHTING 11kVA @125% =	13 kVA	ALL OTHER LOADS @100% =	0 kVA	DIVERSIFIED TOTAL kVA =	13
RECEPTACLES 0kVA @100% =	0 kVA	25% OF LARGEST MOTOR =	0 kVA	AVERAGE AMPS PER PHASE =	16
REMAINDER 0kVA @ 50% =	0 kVA				

PANEL "5HB"

VOLTS/PHASE/WIRE:	PANEL SIZE & TYPE:	MAIN SIZE & TYPE:	LOCATION:	CABINET:	NOTES:
277/480 V, 3 PH 4 WIRE	22" W x 6" D, BOLT–ON	125 AMPERE MAIN LUGS			

ACCESSORIES: PANEL DIRECTORY, IDENTIFICATION, GROUNDING BAR, SUBFEED LUGS

CKT	OCP		LOAD (kVA)			DESCRIPTION	LCL	PHASE LOAD			LCL	DESCRIPTION	LOAD (kVA)			OCP		CKT
NO	AMP	POLE	LTG	CO	PWR		kVA	A	B	C	kVA		LTG	CO	PWR	AMP	POLE	NO
1	20	1	0.8			LTG: SKY LOUNGE	1.0	1.7			1.1	LTG: MECH PENTHOUSE	0.9			20	1	2
3	20	1				SPARE	0.0		0.0		0.0	SPARE				20	1	4
5	20	1	1.9			LTG: DME	2.4			1.9	0.0	SPARE				20	1	6
7	20	1	2.2			LTG: DME	2.8	2.2			0.0	SPARE				20	1	8
9	20	1	0.8			LTG: CANYON ACCENTS	0.9		0.8		0.0	SPARE				20	1	10
11	20	1	0.1			LTG: OUTDOOR SPOT	0.1			0.1	0.0	SPARE				20	1	12
13	20	1				SPARE	0.0	0.0			0.0	SPARE				20	1	14
15	20	1				SPARE	0.0		0.0		0.0	SPARE				20	1	16
17	20	1				SPARE	0.0			0.0	0.0	SPARE				20	1	18
19	20	1				SPARE	0.0	0.0			0.0	SPARE				20	1	20
21	20	1				SPARE	0.0		0.0		0.0	SPARE				20	1	22
23	20	1				SPARE	0.0			0.0	0.0	SPARE				20	1	24
25	20	1				SPARE	0.0	0.0			0.0	SPARE				20	1	26
27	20	1				SPARE	0.0		0.0		0.0	SPARE				20	1	28
29	20	1				SPARE	0.0			0.0	0.0	SPARE				20	1	30
31	20	1				SPARE	0.0	0.0			0.0	SPARE				20	1	32
33	20	1				SPARE	0.0		0.0		0.0	SPARE				20	1	34
35	20	1				SPARE	0.0			0.0	0.0	SPARE				20	1	36
37	20	1				SPARE	0.0	8.4			10.5	DMH	8.4			50	30	38
39	20	1				SPARE	0.0		8.0		10.0	–	8.0			–	–	40
41	20	1				SPARE	0.0			7.0	8.7	–	7.0			–	–	42
TOTALS:						CONNECTED kVA PER PHASE		12	9	9		CONNECTED TOTAL kVA				30		
						CONNECTED AMPS PER PHASE		44	32	32		CONNECTED AVERAGE AMPS PER PHASE				36		

NEC DIVERSIFIED LOAD CALCULATIONS

LIGHTING 30kVA @125% =	37 kVA	ALL OTHER LOADS @100% =	0 kVA	DIVERSIFIED TOTAL kVA =	37
RECEPTACLES 0kVA @100% =	0 kVA	25% OF LARGEST MOTOR =	0 kVA	AVERAGE AMPS PER PHASE =	45
REMAINDER 0kVA @ 50% =	0 kVA				

GENERAL SHEET NOTES

1. PROVIDE 200% NEUTRAL BUS AND LUG CAPACITY FOR ALL 120/208V PANELBOARDS.

Project Title

UTAH MUSEUM OF NATURAL HISTORY

UNIVERSITY OF UTAH
SALT LAKE CITY, UTAH

State of Utah
Department of Administrative Services
Division of Facilities Construction & Management
4110 State Office Building
Salt Lake City, Utah 84114
Phone: (801) 538 - 3018
Fax: (801) 538 - 3267
www.dfcm.utah.gov

PROJ. NO. 02243750

Owner
UMNH
1390 East President's Circle
Salt Lake City, Utah 84112
801.581.6927 tel

Design Architect
Polshek Partnership Architects LLP
320 West 13th Street
New York, New York
212.807.7171 tel

Architect of Record
GSBS
375 West 200 South
Salt Lake City, Utah
801.521.8600 tel

Structural Engineer
Leslie E. Robertson Associates
30 Broad Street
New York, New York 10004
212.750.9000 tel

Structural Engineer
Dunn Associates, Inc.
380 West 800 South, Suite 100
Salt Lake City, Utah 84101
801.575.8877 tel

Mechanical/Plumbing/Fire Protection Engineer
Colvin Engineering Associates, Inc.
244 West 300 North
Salt Lake City, Utah 84103
801.322.2400 tel

Electrical/AV Engineer
Spectrum Engineers
175 South Main Street
Salt Lake City, Utah 84111
800.678.7077 tel

Civil Engineer
Stantec
3995 South 700 East Suite 300
Salt Lake City, Utah 84107
801.261.0090 tel

Landscape Architects
Design Workshop
224 South 200 West
Salt Lake City, UT 84101
801.359.4771 tel

Exhibit Design
Ralph Appelbaum Associates
88 Pine Street
New York, New York 10005
212.334.8200

Key Plan

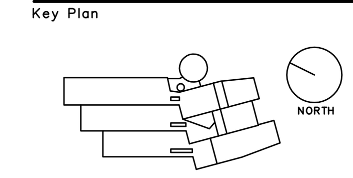

Seal

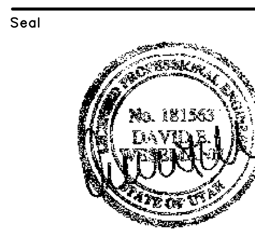

No.	Issue Name	Date
10	RFI 510	06/10/09
9	LIGHTING CHANGES	06/08/09
8	LEVEL ONE CHANGES	05/12/09
7	EXHIBIT POWER CHANGES	04/24/09
6	EQUIPMENT CHANGES	04/17/09
	CONFORMANCE SET	02/09/09
5	EXHIBIT & LTG CHANGES	12/19/08
4	CODE REVIEW	12/10/08
3	ADDENDUM #3	11/10/08
2	ADDENDUM #2	10/23/08
1	ADDENDUM #1	10/16/08
	CONSTRUCTION DOCUMENTS	09/30/08

Date 02/03/09
Project No. 2004.076.00
PPA – 0423
Scale N.T.S.

Sheet Title
ELECTRICAL PANEL SCHEDULES

Sheet No.
EP–612

File Name: P:\2005\20050145\1Drawings\Sheet\45EP–612.dwg Last Plotted: 2009/06/18 @ 3:16 PM By: dlm

Copyright ? 2006 Polshek Partnership Architects, LLP

$PROJECT$ $USER_ID$ $DATE$ $TIME$

$PROJECT$ $USER_ID$ $DATE$ $TIME$

UMNH – BASE BUILDING

Light Fixture Schedule – Post Bid Issue 2

Type	Location	Description	Manufacturer	Lamp	Remarks
EXHIBIT LIGHTING FIXTURE TO BE PROVDED, INSTALLED AND FOCUSED BY GENERAL CONTRACTOR (GC)					
AL-100	Level 1 Entry Lobby	Recessed nominal 4" aperture low voltage MR16 adjustable accent	Lightolier C4MRA-CCD-flnage*-C4ALVMU-lens Gotham Portfolio Prescolite Lighting A4S series	(1) 37W Max. IR MR16 lamp, beam TBD	▪ Integral transformer, 277V/12V ▪ Small profile housing required. Housing dimensions shall not exceed 12" long X 9" wide X 5" deep ▪ Clear diffuse reflector ▪ 360° X 45° Max. lockable aiming required ▪ *Flange finish as per Architect ▪ Provide (1) optical lens (Type TBD) ▪ Focusing required after installation is completed
AL-101	Level 3 Hallway	Recessed 4-lamp low voltage MR16 adjustable accent	RSA Lighting LV416-finish*-50-277 Modular Multiple series Lightolier B series	(4) 37W Max. IR MR16 lamp, beam TBD	▪ Integral transformer, 277V/12V ▪ Nominal 4" x 17" aperture ▪ *Housing interior and overlap flange finish as per Architect ▪ 360° X 45° Max. lockable aiming required ▪ Provide snoot, prismatic spread lens, and linear spread lens for each lamp holder ▪ Focusing required after installation is completed

BOLD indicate revision since last issue

Light Fixture Schedule – Post Bid Issue 2

Type	Location	Description	Manufacturer	Lamp	Remarks
AL-102	Level 5 Conference Room	Recessed nominal 3-1/2" aperture low voltage MR16 adjustable accent	RSA Lighting TZ3002 Zumtobel Spec-3 series	(1) 37W Max. IR MR16 lamp, NFL beam	▪ Integral transformer, 277V/12V ▪ Fixture shall be compatible with the specified Armstrong Techzone ceiling system ▪ Trim finish to match Armstrong Techzone ceiling system ▪ Adjustable gimbal with maximum 30 degree tilt ▪ Provide hexcell louver and prismatic spread lens ▪ Focusing required after installation is completed
AM-101	Level 3 Canyon Level 5 Canyon	Clamp-mounted to pipe metal halide T6 adjustable accent	ETC Source Four PAR HID PAR-EA-D-400SC-400CC-400LS4-400XBTH-finish* Altman Lighting SPA Series	(1) Philips Lighting CDM150/T6/830	▪ Integral electronic ballast, 277V ▪ Fixture shall be permanently wired for normal use circuit ▪ Die-cast housing with adjustable yoke ▪ *Finish as per Architect ▪ Provide safety cable and C-clamp for mounting ▪ Provide cross baffle shield and a complete set of lenses (VNSP, NSP,MFL, WFL) ▪ Positive lockable aiming ▪ Refer to Architectural Drawings for mounting details ▪ Coordinate mounting details with field conditions ▪ Provide all necessary mounting and power components as required ▪ Focusing required after installation is completed

BOLD indicate revision since last issue

Light Fixture Schedule – Post Bid Issue 2

Type	Location	Description	Manufacturer	Lamp	Remarks
AM-102	Level 3 Canyon	Clamp-mounted to pipe metal halide PAR30 adjustable accent	Lighting Services Inc MHLN303-3G-finish*-WL-Louver A-(1) lens	(1) Philips Lighting CDM35/PAR30L/M/FL	▪ Integral electronic ballast, 277V ▪ Fixture shall be permanently wired for normal use circuit ▪ *Standard finish as per Architect ▪ Provide safety cable and C-clamp for mounting ▪ Provide louver shield and (1) optical lens (exact type TBD) ▪ All accessories shall be integral within housing when installed ▪ Wrench locking ▪ Refer to Architectural Drawings for mounting details ▪ Coordinate mounting details with field conditions ▪ Provide all necessary mounting and power components as required ▪ Focusing required after installation is completed

BOLD indicate revision since last issue

Light Fixture Schedule – Post Bid Issue 2

Type	Location	Description	Manufacturer	Lamp	Remarks
AM-103	Level 1 Entry Lobby	Recessed nominal 4" aperture metal halide PAR20 adjustable accent	Gotham DPH-P20-39MHC-4-AC-T30-277HEB-flange finish*-accessory holder-prismatic lens-solite lens Lightolier C4P20MHA series Portfolio MA4 series Edison Price Lighting Darklite 20/4AA series Prescolite A4MHP20 series	(1) Philips Lighting CDM35/PAR20/M/FL	▪ Integral electronic ballast, 277V ▪ Semi-diffuse low iridescent clear finish reflector ▪ *Overlap flange finish as per Architect ▪ Provide accessory holder, prismatic spread lens and solite lens ▪ Adjustable lamp holder with 360° X 35° lockable aiming adjustment ▪ Focusing required after installation is completed

BOLD indicate revision since last issue

Light Fixture Schedule – Post Bid Issue 2

Type	Location	Description	Manufacturer	Lamp	Remarks
AP-101	Level 3 Canyon	Clamp-mounted to pipe PAR38 adjustable accent for Emergency Use	Lighting Services Inc 238-3G-finish*-WL-C998	(1) General Electric 100PAR/HIR/FL25	▪ 120V ▪ Fixture shall be permanently wired for normally off emergency circuit or normal-emergency circuit used for events only ▪ *Standard finish as per Architect ▪ Provide safety cable and C-clamp for mounting ▪ Provide beam softener ▪ All accessories shall be integral within housing when installed ▪ Wrench locking ▪ Refer to Architectural Drawings for mounting details ▪ Coordinate mounting details with field conditions ▪ Provide all necessary mounting and power components as required ▪ Focusing required after installation is completed
AP-102	Level 2 Store and Cafe	Track-mounted MR16 adjustable accent	Lighting Services Inc 260-00-finish*-AAA998 LiteLab J13MR16	(1) 37W Max. IR MR16 lamp, FL beam	▪ Low profile, integral electronic transformer, 120V ▪ *Standard finish as per Architect ▪ Provide beam softener ▪ All accessories shall be integral within housing when installed ▪ Focusing required after installation is completed

BOLD indicate revision since last issue

Light Fixture Schedule – Post Bid Issue 2

Type	Location	Description	Manufacturer	Lamp	Remarks
AP-103	Level 3 Canyon Level 5 Canyon	Clamp-mounted to pipe halogen adjustable accent for Emergency Use	ETC Source Four PAR EA PAR-EA-D-400SC-400CC-400LS4-400XBTH-finish* Altman Lighting SPA series	(1) 575W T6 halogen lamp	▪ 120V ▪ Fixture shall be permanently wired for normally off emergency circuit or normal-emergency circuit used for events only ▪ Die-cast housing with adjustable yoke ▪ *Standard finish as per Architect ▪ Provide safety cable and C-clamp for mounting ▪ Provide cross baffle shield and a complete set of lenses (VNSP, NSP,MFL, WFL) ▪ Positive lockable aiming ▪ Refer to Architectural Drawings for mounting details ▪ Coordinate mounting details with field conditions ▪ Provide all necessary mounting and power components as required ▪ Focusing required after installation is completed
BC-100	Small Restrooms	Surface linear fluorescent T8 lensed mirror light	Alkco TAB series AAMSCO Lighting Alinea 9200 series Duray Hanover series	(1) 17W/25W/32W T8, 3000K	▪ Integral electronic ballast, 277V ▪ Translucent opal white acrylic diffuser ▪ Standard finish as per Architect ▪ No integral switch ▪ Refer to Architectural Drawings for mounting details and fixture length as required. Fixture length may vary from location to location ▪ Submit fixture length in all location for approval

BOLD indicate revision since last issue

Light Fixture Schedule – Post Bid Issue 2

Type	Location	Description	Manufacturer	Lamp	Remarks
CC-100	Level 5 Break Area	Surface decorative single-lamp compact fluorescent wall sconce	Lightolier FW201Q-PW132QSA Schmitz-Leuchten Public series	(1) 13W Quad Tube CFL, 3000K	▪ Integral electronic ballast, 277V ▪ White cylindrical blown glass diffuser with aluminum plate with brushed and clear lacquer finish ▪ Refer to Architectural Drawings for mounting height
CF-100	Level 5 Kitchen	Surface single-lamp side-socket fluorescent T8 striplight	Legion 350 series Bartco Lighting BFL800 series Lightolier SM series Prudential Lighting PSM-101 series H.E. Williams SM75 series	(1) 25W/32W T8 3000K	▪ Integral electronic ballast, 120V ▪ White finish ▪ Fixtures shall be tandem mounted with thru wiring in continuous run ▪ Refer to Architectural Drawings for millwork details and fixture run lengths
DC-100	Various Locations	Recessed nominal 6” aperture single-lamp compact fluorescent lensed downlight	Gotham AF-1/32TRT-6AR-T73-277-flange finish* Lightolier 8091 series Portfolio C6142 series Prescolite Lighting CFT6 series	(1) 32W Triple CFL, 3000K	▪ Integral electronic ballast, 277V ▪ Damp location listed ▪ Horizontal lamp position ▪ Prismatic glass diffuser ▪ Semi-diffuse low iridescent clear finish reflector ▪ *Overlap flange finish as per Architect

BOLD indicate revision since last issue

Light Fixture Schedule – Post Bid Issue 2

Type	Location	Description	Manufacturer	Lamp	Remarks
DC-101	Various Locations	Recessed nominal 6" aperture single-lamp compact fluorescent open downlight	Gotham AFV-32TRT-6AR-LD-277-flange finish* Lightolier 8021 series Portfolio C6042 series Edison Price Lighting Triples-V series Prescolite Lighting CFT6 series Kirlin Lighting FRR series	(1) 32W Triple CFL, 3000K	▪ Integral electronic ballast, 277V ▪ Vertical lamp position ▪ Semi-diffuse low iridescent clear finish reflector ▪ *Overlap flange finish as per Architect
DC-102	Level 3 Changing Exhibits	Recessed nominal 7" aperture single-lamp compact fluorescent open downlight	Gotham AFV-42TRT-8AR-LD-277-flange finish* Lightolier 8022 series Portfolio C7042 series Edison Price Lighting Triples-V series Prescolite Lighting CFT8 series Kirlin Lighting FRR series	(1) 42W Triple CFL, 3000K	▪ Integral electronic ballast, 277V ▪ Vertical lamp position ▪ Semi-diffuse low iridescent clear finish reflector ▪ *Overlap flange finish as per Architect

BOLD indicate revision since last issue

Light Fixture Schedule – Post Bid Issue 2

Type	Location	Description	Manufacturer	Lamp	Remarks
DC-103	Level 5 Reception	Semi-recessed nominal 8” aperture single-lamp compact fluorescent decorative downlight	Gotham PDGF-1/32-8AR-WHT-277 Wila	(1) 32W Triple CFL, 3000K	▪ Integral electronic ballast, 277V ▪ Semi-diffuse clear inner reflector with white outer surface ▪ White outer reflector with white diffuser acrylic lens on top
DL-100	Level 1 Entry Lobby	Recessed nominal 4” aperture low voltage MR16 downlight	Gotham DLV-DWN-MR16-4AC-277-flange finish*-Prismatic lens Or approved equal by: Lightolier Portfolio Prescolite D4MR series	(1) 37W IR MR16, FL beam	▪ Integral transformer, 277V/12V ▪ Semi-diffuse low iridescent clear finish reflector ▪ *Overlap flange finish as per Architect ▪ Prismatic glass lens
DL-101	Level 5 Futures Forum	Recessed nominal 3-1/2” aperture low voltage MR16 downlight	RSA Lighting TZ3003 Zumtobel Spec-3 series	(1) 37W Max. IR MR16 lamp, beam TBD	▪ Integral transformer, 277V/12V ▪ Fixture shall be compatible with the specified Armstrong Techzone ceiling system ▪ Trim finish to match Armstrong Techzone ceiling system ▪ Provide hexcell louver and prismatic spread lens

BOLD indicate revision since last issue

Light Fixture Schedule – Post Bid Issue 2

Type	Location	Description	Manufacturer	Lamp	Remarks
DL-102	Level 2 Store	Recessed adjustable low voltage MR16 downlight	Lucifer Lighting Trim-DL15Z-2 Housing-DHI/ZF Lens-SGL-1, FGL-1 Lightolier C3MRPD USA Illumination 7870 series	(1) 37W Max. IR MR16 lamp, beam TBD	▪ Integral transformer, 277V/12V ▪ Nominal 2" aperture and 4" overlap trim with regressed black baffle ▪ Overlap trim finish as per Architect ▪ Provide frosted lens and prismatic lens
FP-100	Level 2 Community Room	Suspended 2-lamp linear fluorescent T8 direct/indirect pendant	Ledalite 7606-TO2-Q-N-12-7-2-Lutron ECO-finish Linear Lighting SP27 series Focal Point Lighting Twelve series	(6) 32W T8/28W T5 3000K	▪ Integral Lutron ECO series 100% - 10% electronic dimming ballast, 277V ▪ *Standard finish as per Architect ▪ Provide air-craft cable mounting hardwares ▪ Refer to Architectural Drawings for mounting height ▪ Coordinate mounting details with specified ceiling system
FP-101	Level 5 Open Office	Suspended 2-lamp T8 direct/indirect pendant	Ledalite 7606-TO2-Q-N-8-1-2-E-C Linear Lighting SP27 series Focal Point Lighting Twelve series	(4) 32W T8/28W T5 3000K	▪ Integral electronic ballast, 277V ▪ Standard finish as per Architect ▪ Provide air-craft cable mounting hardwares ▪ Refer to Architectural Drawings for mounting height ▪ Coordinate mounting details with specified ceiling system

BOLD indicate revision since last issue

Light Fixture Schedule – Post Bid Issue 2

Type	Location	Description	Manufacturer	Lamp	Remarks
FP-102	Level 5 Open Office	Suspended 2-lamp T8 direct/indirect pendant	Ledalite 7606-TO2-Q-N-16-1-2-E-C Litecontrol LC-82 series Focal Point Lighting Twelve series	(8) 32W T8/28W T5 3000K	▪ Integral electronic ballast, 277V ▪ Standard finish as per Architect ▪ Provide air-craft cable mounting hardwares ▪ Refer to Architectural Drawings for mounting height ▪ Coordinate mounting details with specified ceiling system
FR-100	Level 2 First Aid and Volunteer Lounge Level 5 Offices	Recessed 2x2 lensed fluorescent troffer	Ledalite 9422-version*-ST-H224-S-1-2-E Focal Point Lighting FEQ series Mark Lighting Whisper 3D series	(2) 24W T5HO 3000K	▪ Integral electronic ballast, 277V ▪ *Coordinate trim and mounting requirement with specified ceiling system
FR-102	Level 5 Meeting and Conference Room	Recessed 2x2 lensed fluorescent troffer	Ledalite 9422-ST-H224-S-7-2-Lutron FDB+drywall kit Focal Point Lighting FEQ series Mark Lighting Whisper 3D series	(2) 24W T5HO 3000K	▪ Integral Lutron FDB series 100% -1% electronic dimming ballast, 277V ▪ Provide drywall mounting kit

BOLD indicate revision since last issue

Light Fixture Schedule – Post Bid Issue 2

Type	Location	Description	Manufacturer	Lamp	Remarks
FS-101	Level 1 Entry Lobby Restrooms	Wall mounted linear 2-lamp profile fluorescent T8 uplight cove system	Electrix Illumination LLSR-FR7-length* GTS-7-lamp*-2-E-length*-SC	(2) 17W/25W/32W T8 3000K Allow 16W per linear ft	▪ Integral electronic ballast, 277V ▪ Cove system shall include extruded bracket and drop-in staggered lamp/ballast tray ▪ Cove system (including gypsum board) shall be nominal 3” high and 7” wide ▪ *Lamp lengths as required for continuous line of light to within 6” of cove ends, and centered in cove ▪ Refer to Architectural Drawings for cove dimensions ▪ Submit run length and lamp configuration in all locations for approval
FS-102	Various Locations Level 5 Futures Forum	Surface 1-lamp profile diagonal staggered fluorescent T8 striplight	Electrix Illumination TX-DS-lamp*-2-E-length* Bartco Lighting BDS850 series Legion 2425 series	(1) 17W/25W/32W T8 3000K Allow 8W per linear ft	▪ Integral electronic ballast, 277V ▪ Fixture (including lamp) shall be nominal 3” wide and 2-1/2” high ▪ *Lamp lengths as required for continuous line of light to within 6” of cove ends, and centered in cove ▪ Refer to Architectural Drawings for cove dimensions ▪ Submit run length (with cove dimensions) and lamp configuration in all locations for approval

BOLD indicate revision since last issue

Light Fixture Schedule – Post Bid Issue 2

Type	Location	Description	Manufacturer	Lamp	Remarks
FW-101	Restrooms	Recessed linear 1-lamp profile fluorescent T8 perimeter wall slot system	Litecontrol 20-lamp*-length*-T8-CWM-ELB-PR-277V Linear Lighting Wall Wash 4 series Focal Point Focal 4 series Day-O-Lite PNR series	(1) 17W/25W/32W T8 3000K Allow 8W per linear ft	▪ Integral electronic ballast, 277V ▪ Parabolic specular hammerton reflector ▪ *Lamp lengths as required for continuous line of light to within 9" of cove ends, and centered in cove ▪ Refer to Architectural Drawings for cove dimensions ▪ Submit run length (with cove dimensions) and lamp configuration in all locations for approval
FW-102	Level 3 Geology/Anthropology Collections	Pendant mounted linear fluorescent T5 wall wash	Elliptipar F140-T21/28-mounting*-99-2-00-0-hangers* Winona Lighting Wind Direct series	(1) 21/28W T5 3000K	▪ Integral electronic ballast, 277V ▪ Custom finish color as per Architect ▪ Provide end plates with matching finish ▪ Refer to Architectural Drawings for mounting height and details ▪ Fixtures shall be tandem mounted with thru wiring ▪ *Provide all necessary mounting and power accessories (e.g. feed, hangers) ▪ Coordinate mounting details with field conditions ▪ Focusing required after installation is completed

BOLD indicate revision since last issue

Light Fixture Schedule – Post Bid Issue 2

Type	Location	Description	Manufacturer	Lamp	Remarks
FX-100	Level 2 First Aid and Community Room Level 5 Kitchen	Surface linear fluorescent T5 lensed undercabinet light	Alkco SFHP-121/28-BW Lithonia N2S series Legion Lighting MY-T-LITE series Fail-Safe MSS series H.E. Williams 1SF series Duray Solid Front Task series	(1) T5 3000K Allow 8W per linear ft	▪ Integral electronic ballast, 120V ▪ Lateral prism acrylic lens ▪ No integral switch ▪ Fixtures shall be tandem mounted with thru wiring in continuous straight run to within 6" of cabinet ends, and centered in cabinet ▪ Refer to Architectural Drawings for cabinet dimensions and details
LE-101	Level 1 Entry Lobby	Surface flexible, field cuttable LED modular strip	GE Lumination GEWWMX6 series SGF Associates Fexible LED modular system	Proprietary 3200K warm white LED	▪ Provide remote power supply, 120V ▪ LED light points to be wired in parallel ▪ LED light points shall be equally spaced in continuous run ▪ Refer to Architectural Drawings for mounting details ▪ Provide all necessary mounting and power accessories for a complete operational system
LE-103	Canyon Stairs and Bridges	Recessed LED step light	Lucifer Lighting ISL-LED-5K-finish*-LK MP Lighting LED13 series BK Lighting Core Drill Vertical series	Proprietary 3W 5000K white LED	▪ Provide remote power supply, 120V ▪ *Aluminum faceplate finish as per Architect ▪ Refer to Architectural Drawings for mounting details ▪ Provide all necessary mounting and power accessories for a complete operational system

BOLD indicate revision since last issue

Light Fixture Schedule – Post Bid Issue 2

Type	Location	Description	Manufacturer	Lamp	Remarks
LE-104	Level 1 Entry	Exterior surface linear high output LED uplight	IO Lighting Line 1.5 - 10-E-3KHO-10-100-1-length*-feed**-2 Winona Lighting V-Line series Electrix Illumination L series	3000K high output LEDs Allow 8W/linear foot of fixture	▪ Wet location listed ▪ Remote power supply, 277V ▪ Nominal 1.5” X 1.5” in profile ▪ 10° beam distribution ▪ *Refer to Architectural Drawings for for run lengths and configurations, and mounting details ▪ Fixtures shall be mounted to within 6” of wall ends and gaps between fixtures in the same run shall be equal ▪ **Coordinate mounting with field conditions and provide all necessary mounting and power connection components ▪ Submit run length (with field dimensions) and fixture configuration for approval
LE-105	Canyon Bench	Recessed LED downlight	Bega 8698LED Modular Glazed Uplight series Design Plan CE4 series Bruck Lighting Ledra series FC Lighting FCLED series	Proprietary 3W 2850K warm white LED	▪ Remote power supply, 120V ▪ Coordinate with Architect and Electrical Engineer for remote power supply locations ▪ Nominal 4” diameter and 4” deep ▪ Stainless steel faceplate with white glass diffuser

BOLD indicate revision since last issue

Light Fixture Schedule – Post Bid Issue 2

Type	Location	Description	Manufacturer	Lamp	Remarks
LE-106	Collection Wall	Integrated in casework single-circuit low voltage track system	Bruck Lighting V/A Track Series	N/A (Maximum load 300W per circuit)	▪ Remote magnetic transformers, 277V/12V ▪ Finish of track and all components as per Architect ▪ Track shall be rigid extruded cooper and not bendable in field ▪ Refer to Architectural Drawings for track layouts and mounting details ▪ Track system shall include single-circuit tracks, modified mounting brackets/supports, and power feed/connectors for all runs and mounting configurations as shown in Architectural Drawings for a complete operable low voltage track system ▪ Submit the following for approval: o drawings showing complete layout and mounting details o sample of typical mounting and feed components

BOLD indicate revision since last issue

Light Fixture Schedule – Post Bid Issue 2

Type	Location	Description	Manufacturer	Lamp	Remarks
PC-100	Level 2 Main Lobby	Suspended nominal 6" aperture single-lamp compact fluorescent cylindrical downlight	Lightolier CS6132VUCCL-FACSA36 Kirlin Lighting FSR series	(1) 32W Triple CFL, 3000K	▪ Integral electronic ballast, 277V ▪ Maximum 6-1/2" diameter housing ▪ Housing and all mounting components shall have matching finish as per Architect ▪ Diffuse comfort clear finish reflector ▪ Refer to Architectural Drawings for mounting height and details ▪ Coordinate mounting details with field conditions ▪ Provide all necessary mounting and power components as required
PC-101	Level 5 Break Area	Suspended single-lamp compact fluorescent decorative glass pendant	Lightolier FP02-PM32SA Schmitz-Leuchten Public series	(1) 32W Triple CFL, 3000K	▪ Integral electronic ballast, 277V ▪ Refer to Architectural Drawings for mounting height ▪ Coordinate mounting details with field conditions ▪ Provide all necessary mounting and power components (cable/cord) as required

BOLD indicate revision since last issue

Light Fixture Schedule – Post Bid Issue 2

Type	Location	Description	Manufacturer	Lamp	Remarks
PP-100	Level 5 Sky	Suspended nominal 6" aperture single-lamp PAR38 halogen cylindrical downlight	Lightolier 7018AO + stem mounting kit Kirlin Lighting ISR series	(1) 100W HIR PAR38, 40 deg beam	▪ 120V ▪ Maximum 6-1/2" diameter housing ▪ Housing and all mounting components shall have matching finish as per Architect ▪ Diffuse comfort clear finish reflector ▪ Refer to Architectural Drawings for mounting height and details ▪ Coordinate mounting details with field conditions ▪ Provide all necessary mounting and power components as required
PQ-100	Level 2 Cafe	Suspended decorative glass pendant	TBD (provide $300 allowance)	Allow 50W	▪ Provide all necessary mounting and power components as required
TP-100	Level 2 Store and Cafe	Pendant 1-circuit lighting track system	Lighting Services Inc Surface 1-circuit lighting track system + mounting system LiteLab	N/A	▪ 1-circuit, 120V ▪ Finish for all components shall be black ▪ Refer to Architectural Drawings for track lengths and mounting details ▪ Coordinate mounting details with field conditions ▪ Provide all necessary mounting (stem) and power components (joiner/feeder) as required for a complete operable track system

BOLD indicate revision since last issue

Light Fixture Schedule – Post Bid Issue 2

Type	Location	Description	Manufacturer	Lamp	Remarks
TR-100	Level 3 Hallway	Recessed 1-circuit lighting track system	Lighting Services Inc Recessed 1-circuit flanged lighting track system Edison Price Lighting LiteLab	N/A	▪ 1-circuit, 120V ▪ Flange finish as per Architect ▪ Provide all necessary mounting and power components (joiner/feeder) as required for a complete operable track system
TR-102	Level 3 Changing Exhibits	Recessed 2-circuit lighting track system	Lighting Services Inc Recessed 2-circuit flanged lighting track system Edison Price Lighting LiteLab	N/A	▪ 2-circuit, 120V ▪ Flange finish as per Architect ▪ Provide all necessary mounting and power components (joiner/feeder) as required for a complete operable track system
WF-100	Level 5 Futures Forum	Suspended adjustable single-lamp fluorescent T5HO wall washer	Elliptipar F109-T154-X-black-V-black baffle shield-0-hangers* Winona Lighting Wind Direct series	(1) 54W T5HO, 3000K Allow 16W per linear ft	▪ Integral Lutron FDB series 100% - 1% electronic dimming ballast, 277V ▪ MOD for black finish and black snap-in black baffle shield ▪ Fixture shall be tandem mounted in continuous row. Provide clips for row alignment ▪ Refer to Architectural Drawings for mounting details ▪ all necessary power and mounting components (hangers) as required ▪ Coordinate mounting details with field conditions ▪ Focusing required after installation is completed

BOLD indicate revision since last issue

Light Fixture Schedule – Post Bid Issue 2

Type	Location	Description	Manufacturer	Lamp	Remarks
WQ-100	Level 1 Entry Lobby	Semi-recessed adjustable single-lamp halogen wall washer	Elliptipar T200-0150-T-custom finish*-A-"Optivex" permanent UV filter-0 Winona Lighting Wind Direct series	(1) 150W frosted DC bayonet base halogen lamp	▪ 120V ▪ MOD for "Optivex" permanent UV filter ▪ *Housing and overlap trim custom finish as per Architect ▪ Lockable aiming ▪ Focusing required after installation is completed
XBC-100	Level 2 Bike Rack	Exterior wall surface single-lamp compact fluorescent direct/indirect light	Bega 3231P Gardco 113 Series Prisma Mask Series	(1) 26W, 2-pin quad-tube CFL, 3000K	▪ Integral magnetic HPF ballast, 277V and 0°F starting temperature ▪ Wet location listed ▪ Die cast aluminum housing with opal glass diffuser ▪ Lamp fully shielded ▪ Standard finish as per Architect ▪ Refer to Architectural Drawings for mounting height
XBE-100	Exhibition Building Terrace	Exterior nominal 5" diameter and 20" high LED bollard	Erco 33333.023 Winona Tioga LED series	Proprietary 3500K warm white LED	▪ Integral electronic driver, 120V ▪ MOD for 180 deg distribution ▪ Cast aluminum housing ▪ Wet location listed ▪ Light source fully shielded ▪ Standard finish as per Architect ▪ Provide all necessary foundation and mounting components (anchorage kit) as required

BOLD indicate revision since last issue

Light Fixture Schedule – Post Bid Issue 2

Type	Location	Description	Manufacturer	Lamp	Remarks
XBM-100	Parking Pedestrian Circulation	**Exterior nominal 32" high single-lamp metal halide bollard**	**<u>ERCO</u>** **Midipoll Bollard** **33338.0**	**20W T4 ceramic metal halide lamp, 3000K**	▪ **Integral electronic ballast, 277V and 0°F starting temperature** ▪ **Cast aluminum housing** ▪ **Wet location listed** ▪ **Lamp fully shielded** ▪ **Standard finish as per Architect** ▪ **Provide all necessary foundation and mounting components (anchor plate and bolts) as required**
XBM-101	Plaza	**Exterior nominal 32" high single-lamp metal halide bollard**	**<u>ERCO</u>** **Midipoll Bollard** **33338.0**	**20W T4 ceramic metal halide lamp, 3000K**	▪ **Integral electronic ballast, 277V and 0°F starting temperature** ▪ **Cast aluminum housing** ▪ **Wet location listed** ▪ **Lamp fully shielded** ▪ **Standard finish as per Architect** ▪ **Provide all necessary foundation and mounting components (anchor plate and bolts) as required**
XBM-100	Parking Pedestrian Circulation	Exterior nominal 42" high single-lamp compact fluorescent pathlight	<u>Kim Lighting</u> SL1-42PL	(1) 42W Triple CFL, 3000K	▪ Integral magnetic HPF ballast, 277V and 0°F starting temperature ▪ Wet location listed ▪ Standard finish as per Architect ▪ Lamp fully shielded ▪ Provide all necessary foundation and mounting components (stainless steel anchor bolts) as required ▪ Recess foundation 6" minimum below finish grade

BOLD indicate revision since last issue

UMNH – BASE BUILDING

Light Fixture Schedule – Post Bid Issue 2

Type	Location	Description	Manufacturer	Lamp	Remarks
XBM-101	Plaza	Exterior nominal 40” high square profile single-lamp metal halide bollard	Bega 8645MH-895A Kim Lighting VSB series	39W T4 ceramic metal halide lamp, 3000K	▪ Integral electronic ballast, 277V and 0°F starting temperature ▪ Wet location listed ▪ Standard finish as per Architect ▪ Lamp fully shielded ▪ Provide all necessary foundation and mounting components (anchorage kit) as required
XDC-100	Various Locations	Exterior recessed nominal 7” aperture single-lamp compact fluorescent downlight	Erco 81029.023 Kirlin Lighting	(1) 18W Triple CFL, 3000K	▪ Integral electronic ballast, 277V and 0°F starting temperature ▪ Wet location listed ▪ Die cast aluminum housing with specular aluminum reflector
XPM-100	Parking	Exterior single-lamp metal halide cutoff pole light	Kim Lighting 1SA-SAR3-100MH277 PRA16-4188-SA Poulsen LP-HINT-PT series, Type III, Mod 100W Lithonia AS1 series, Type III, 100W	(1) 100W ceramic metal halide ED17 lamp, 3000K	▪ Integral magnetic HPF ballast, 277V and 0°F starting temperature ▪ Wet location listed ▪ Type III optics ▪ House-side shield ▪ 16’ high, 4” diameter non-tapered aluminum pole ▪ Standard finish as per Architect ▪ Provide all necessary foundation and mounting components (stainless steel anchor bolts) as required

BOLD indicate revision since last issue

Light Fixture Schedule – Post Bid Issue 2

Type	Location	Description	Manufacturer	Lamp	Remarks
XSC-100	Site stairs	Exterior recessed single-lamp compact fluorescent louvered step light	**Bega** **2286P-MOD for 9W lamp** **FC Lighting**	**(1) 9W, 2-pin twin-tube CFL, 3000K**	▪ **Integral magnetic ballast, 120V and 0°F starting temperature** ▪ **Wet location listed** ▪ **Nominal faceplate dimension 12"L X 2-1/2"H** ▪ **Die cast louvered aluminum faceplate with etched tempered glass diffuser** ▪ **Standard finish as per Architect** ▪ **Coordinate with Architect for mounting height**
XSC-101	Parking Pedestrian Circulation	Exterior recessed single-lamp compact fluorescent louvered step light	**Bega** **2286P** **FC Lighting**	**(1) 13W, 2-pin twin-tube CFL, 3000K**	▪ **Integral magnetic ballast, 277V and 0°F starting temperature** ▪ **Wet location listed** ▪ **Nominal faceplate dimension 12"L X 2-1/2"H** ▪ **Die cast louvered aluminum faceplate with etched tempered glass diffuser** ▪ **Standard finish as per Architect** ▪ **Coordinate with Architect for mounting height**

BOLD indicate revision since last issue

Light Fixture Schedule – Post Bid Issue 2

Type	Location	Description	Manufacturer	Lamp	Remarks
XSC-103	Plaza Stair and Ramps	**Exterior recessed single-lamp compact fluorescent louvered step light**	**Bega** **2286P-MOD for 9W lamp** **FC Lighting**	**(1) 9W, 2-pin twin-tube CFL, 3000K**	▪ **Integral magnetic ballast, 120V and 0°F starting temperature** ▪ **Wet location listed** ▪ **Nominal faceplate dimension 12"L X 2-1/2"H** ▪ **Die cast louvered aluminum faceplate with etched tempered glass diffuser** ▪ **Standard finish as per Architect** ▪ **Coordinate with Architect for mounting height**
XSC-103	Plaza Stair and Ramps	Exterior recessed LED louvered step light	Bega 2046LED Winona Lighting Step01 Square Series FC Lighting FCSL170 series	Proprietary 3000K LED	▪ Integral electronic driver, 120V ▪ Wet location listed ▪ Stainless steel louvered faceplate ▪ Refer to Architectural Drawings for mounting height
XSM-100	Loading Dock	Exterior recessed single-lamp compact fluorescent area light	Bega 2852P Gardco 946 Series	(1) 42W Triple CFL, 3000K	▪ Integral electronic ballast, 277V and 0°F starting temperature ▪ Wet location listed ▪ Die cast baffled aluminum faceplate ▪ Standard finish as per Architect ▪ Lamp fully shielded with louver ▪ Refer to Architectural Drawings for mounting height

BOLD indicate revision since last issue

Type	Location	Description	Manufacturer	Lamp	Remarks

TRACK FIXTURES AND ACCESSORIES TO BE PROVIDED BY OWNER, INSTALLED AND FOCUSED BY EXHIBIT CONTRACTOR (XC)

LE-106	Collection Wall	Track mounted low voltage LED track fixture	Bruck Lighting Ledra Series LED track fixtures	Proprietary 1W/3W 3000K warm white, 80+ CRI, LED	▪ LED fixtures shall be compatible with LE-106 low voltage track system ▪ Integral dimmer with dimming range from 100% to 15% ▪ Finish of fixture and all components as per Architect ▪ Modified with integrated track clip for overall dimension from track to front of fixture to be 2-3/4”. ▪ Provide both 1W and 3W LED (exact quantity TBD) ▪ Provide (5) types of exchangeable front lens assembly with various beam distribution (exact beam angle and quantity TBD) ▪ Provide removable snoot shield (exact quantity TBD) ▪ Submit working sample of all fixtures, lens assemblies, snoot shield for approval ▪ Focusing required after installation is completed

REMARK:

Below is estimated track fixture quantity in Collection Wall. Quantity is estimation for focusing budget purpose only. Final track fixture quantity is to be determined at focusing after installation of all exhibition displays is completed.

1. Allow (450) LE-106 track fixtures in Collection Wall

BOLD indicate revision since last issue

Type	Location	Description	Manufacturer	Lamp	Remarks

TRACK FIXTURES AND ACCESSORIES TO BE PROVIDED BY OWNER, INSTALLED AND FOCUSED BY GENERAL CONTRACTOR (GC)

TQ-1	Refer to Exhibit Space Lighting Fixture Schedule
TQ-2	Refer to Exhibit Space Lighting Fixture Schedule
TQ-3	Refer to Exhibit Space Lighting Fixture Schedule
TQ-4	Refer to Exhibit Space Lighting Fixture Schedule
TM-1	Refer to Exhibit Space Lighting Fixture Schedule

REMARK:

Below are estimated track fixture quantities in Base Building. These quantities are estimation for focusing budget purpose only. Final track fixture quantities are to be determined at focusing after installation of all exhibition displays is completed.

1. Allow (15) track fixtures for TR series track system in LEVEL 3 HALLWAY
2. Allow (150) track fixtures for TR series track system in LEVEL 3 CHANGING EXHIBIT

BOLD indicate revision since last issue

UMNH – EXHIBIT SPACE

Light Fixture Schedule – Post Bid Issue 2

Type	Location	Description	Manufacturer	Lamp	Remarks

PART 1 - EXHIBIT LIGHTING FIXTURE TO BE PROVDED, INSTALLED AND FOCUSED BY GENERAL CONTRACTOR (GC)

AL-201	**AL-1**	**Level 5 Native Voice**	**Recessed nominal 4" aperture low voltage MR16 adjustable accent**	**<u>Gotham</u> DLV-ADJ-MR16-4AC-T30-277-flange finish*- prismatic lens-frosted lens <u>Lightolier</u> C4MRA series <u>Portfolio</u> HARM3 series <u>Prescolite Lighting</u> A4S series**	**(1) 37W IR MR16, beam TBD**	▪ **Integral transformer, 277V/12V** ▪ **Semi-diffuse low iridescent clear finish reflector** ▪ ***Overlap flange finish as per Architect** ▪ **Adjustable lamp holder with 360° X 45° lockable aiming adjustment** ▪ **Provide prismatic spread lens and frosted lens** ▪ **Focusing required after installation is completed** ▪ **Submit reflector for approval**
AL-202	AL-2	Level 2 Utah Future	Recessed nominal 7" square gimbal single-lamp low voltage AR111 adjustable accent	<u>RSA</u> LV1010-finish*-100-277 <u>Modular</u> Multiple series <u>Lightolier</u> B series	(1) Osram 100W AR111, beam TBD	▪ Integral transformer, 277V/12V ▪ Trimless flange ▪ *Housing interior finish as per Architect ▪ Adjustable lamp holder with 360° X 45° lockable aiming adjustment ▪ Provide snoot, prismatic spread lens, and linear spread lens ▪ Focusing required after installation is completed

BOLD indicate revision since last issue

Light Fixture Schedule – Post Bid Issue 2

Type		Location	Description	Manufacturer	Lamp	Remarks
AP-201	AP-1	Level 2 Earth Lab	Recessed nominal 4" aperture low voltage MR16 adjustable accent	Gotham DLV-ADJ-MR16-4AC-T30-277-flange finish*-prismatic lens-frosted lens Lightolier C4MRA series Portfolio HARM3 series Prescolite Lighting A4S series	(1) 37W IR MR16, beam TBD	▪ Integral transformer, 277V/12V ▪ Semi-diffuse low iridescent clear finish reflector ▪ *Overlap flange finish as per Architect ▪ Adjustable lamp holder with 360° X 45° lockable aiming adjustment ▪ Provide prismatic spread lens and frosted lens ▪ Focusing required after installation is completed
AQ-201	AQ-1	Level 5 Native Voice	Recessed nominal 4" aperture low voltage MR16 adjustable accent	Gotham DLV-ADJ-MR16-4AC-T30-277-flange finish*-prismatic lens-frosted lens Lightolier C4MRA series Portfolio HARM3 series Prescolite Lighting A4S series	(1) 37W IR MR16, beam TBD	▪ Integral transformer, 277V/12V ▪ Semi-diffuse low iridescent clear finish reflector ▪ *Overlap flange finish as per Architect ▪ Adjustable lamp holder with 360° X 45° lockable aiming adjustment ▪ Provide prismatic spread lens and frosted lens ▪ Focusing required after installation is completed
AQ-201A	AQ-1A	Deleted				

BOLD indicate revision since last issue

UMNH – EXHIBIT SPACE

Light Fixture Schedule – Post Bid Issue 2

Type		Location	Description	Manufacturer	Lamp	Remarks
AQ-202	AQ-2	Level 5 Sky	Recessed nominal 4" aperture low voltage MR16 adjustable accent	Gotham DLV-ADJ-MR16-4BC-T30-277-flange finish*-UV filer-prismatic lens-frosted lens Lightolier C4MRA series Portfolio HARM3 series Prescolite Lighting A4S series	(1) 37W IR MR16, beam TBD	▪ Integral transformer, 277V/12V ▪ Semi-diffuse low iridescent black finish reflector ▪ *Overlap flange finish as per Architect ▪ Adjustable lamp holder with 360° X 45° lockable aiming adjustment ▪ Provide UV filer, prismatic spread lens and frosted lens ▪ Focusing required after installation is completed ▪ Submit reflector for approval
CF-201	CF-1	Level 4 Life (Diorama)	Surface 2-lamp fluorescent striplight	Legion 2410 series Bartco Lighting BFL257 Lightolier SW Srip series	(2) 17W/25W/32W T8, 3000K	▪ Integral Lutron Hi-Lume 100% -1% electronic dimming ballasts, 120V ▪ White finish ▪ **Provide (3) UV-safe rigid color sleeve (exact colors TBD) per lamp** ▪ Refer to Exhibit Drawings for mounting details ▪ Provide all necessary mounting accessories as required
CF-202	CF-2	Level 2 Our Backyard	Recessed nominal 24" diameter 2-lamp T8 lensed fixture	Prudential lighting P-8920-2T8-CWA-finish*-SC-277-ceiling** Focal Point Lighting Skydome series Mark Lighting Magellan Series Columbia Lighting M46 series	(4) 17W T8, 3000K	▪ Integral electronic ballast, 277V ▪ *Flange finish as per Architect ▪ Concave white acrylic diffuser ▪ **Refer to Architectural/Exhibit Drawings and Specifications for ceiling system

BOLD indicate revision since last issue

Light Fixture Schedule – Post Bid Issue 2

Type		Location	Description	Manufacturer	Lamp	Remarks
CZ-201	**CZ-1**	**Level 2 Utah Future**	**Yoke mounted low voltage pattern framing projector**	**<u>Altman Lighting</u>** **Micro Ellipse** **ME-pattern holder** **<u>Time Square Lighting</u>** **MR75 series**	**(1) 37W IR MR16, SP beam**	▪ **Electronic transformer, 120V/12V** ▪ **Projector shall be permanently wired** ▪ **Extruded and die-cast aluminum housing with adjustable yoke, (4) steel shutters, and color frame** ▪ **Black finish** ▪ **Allow pattern holder for gobo (coordinate gobo patterns requirement with Exhibit Contractor)** ▪ **Cover at slot to accept pattern holder to prevent light leak** ▪ **Positive lockable aiming** ▪ **Refer to Architectural Drawings for mounting details** ▪ **Coordinate mounting details with field conditions** ▪ **Provide all necessary mounting and power components as required** ▪ **Submit working sample and accessories specified for approval** ▪ **Focusing required after installation is completed**

BOLD indicate revision since last issue

UMNH – EXHIBIT SPACE

Light Fixture Schedule – Post Bid Issue 2

Type		Location	Description	Manufacturer	Lamp	Remarks
DC-201	DC-1	Various Locations	Recessed nominal 6" aperture single-lamp compact fluorescent open downlight	Gotham AFV-32TRT-6AR-277-flange finish* Lightolier 8021 series Portfolio C6042 series Edison Price Lighting Triples-V series Prescolite Lighting CFT6 series Kirlin Lighting FRR series	(1) 32W Triple CFL, 3000K	▪ Integral electronic ballast, 277V ▪ Vertical lamp position ▪ Semi-diffuse low iridescent clear finish reflector ▪ *Overlap flange finish as per Architect
DL-201	DL-1	Level 5 Sky	Recessed nominal 4" aperture low voltage MR16 downlight	Gotham DLV-DWN-MR16-4BC-277-flange finish*-Prismatic lens Lightolier C4MRD series Portfolio HD3MR series Prescolite D4MR series	(1) 37W IR MR16, FL beam	▪ Integral transformer, 277V/12V ▪ Semi-diffuse low iridescent black finish reflector ▪ *Overlap flange finish as per Architect ▪ Prismatic glass lens

BOLD indicate revision since last issue

Light Fixture Schedule – Post Bid Issue 2

Type		Location	Description	Manufacturer	Lamp	Remarks
DL-202	DL-2	Level 5 Native Voice	Recessed nominal 4" aperture low voltage MR16 downlight	Gotham DLV-DWN-MR16-4AC-277-flange finish*-Prismatic lens Lightolier C4MRD series Portfolio HD3MR series Prescolite D4MR series	(1) 37W IR MR16, FL beam	▪ Integral transformer, 277V/12V ▪ Semi-diffuse low iridescent clear finish reflector ▪ *Overlap flange finish as per Architect ▪ Prismatic glass lens
DL-203	**DL-3**	**Level 5 Native Voice**	**Recessed pin-hole low voltage MR16 fixed downlight**	**Gotham** **DLV-DWN-MR16-2B-277-flange finish*-linear spread lens and and frosted lens** **Lightolier** **C3MRPD series** **Prescolite** **A4MR series**	**(1) 37W IR MR16, FL beam**	▪ **Integral transformer, 277V/12V** ▪ **Nominal 1-1/4" pinhole aperture with black opening edge** ▪ **Overlap faceplate finish as per Architect** ▪ **Black interior housing finish** ▪ **Provide linear spread lens and and frosted lens** ▪ **Submit working sample and accessories specified for approval**
FA-201	FA-1	Level 2 Earth Lab Level 3 Dry Cave Level 4 Naturalist Lab	Recessed nominal 2.5" wide x 4" deep linear single-lamp fluorescent T5HO lensed fixture	Xenon Light Frame 70 Opal Series Selux M60 series Mark Lighting Slot 2C series Alera Lighting MMR series	(1) 54W T5HO, 3000K	▪ Integral Lutron FDB series 100% -1% electronic dimming ballast, 277V ▪ Dimming ballast must be compatible with dimming system ▪ Flat opal diffuse lens ▪ Refer to Architectural/Exhibit Drawings and Specifications for specified ceiling system details ▪ Coordinate trim and mounting requirement with specified ceiling system

BOLD indicate revision since last issue

UMNH – EXHIBIT SPACE

Light Fixture Schedule – Post Bid Issue 2

Type		Location	Description	Manufacturer	Lamp	Remarks
FA-202	FA-2	Level 2 Our Backyard	Recessed nominal 2.5” wide x 4” deep x 3’ long linear single-lamp fluorescent T5 lensed fixture	Xenon Light Frame 70 Opal Series Selux M60 series Mark Lighting Slot 2C series Alera Lighting MMR series	(1) 21W T5, 3000K	▪ Integral electronic ballast, 277V ▪ Flat opal diffuse lens ▪ Coordinate trim and mounting requirement with specified ceiling system

BOLD indicate revision since last issue

UMNH – EXHIBIT SPACE

Light Fixture Schedule – Post Bid Issue 2

Type		Location	Description	Manufacturer	Lamp	Remarks
FO2-200	FO2-PW	Level 2 Canyon Level 2 Past World NOTE: Lighting in the Topo model at Canyon shall be Add Alternate	Fiber optic lighting system with side emitting fiber optic cable and metal halide illuminator	Drama Lighting Illuminator – LGP250-4-28-W-D-D-MVOLT Cable - F-DL-DSL-LC-6019 linear side-emitting fiber with 60° beam distribution + continuous mounting channel and continuous clip-on diffuser Fiberstar Lumenyte	(1) 250W ceramic metal halide lamp per illuminator 4200K, 5000 hour lamp life, 96 CRI	▪ Illuminator is nominal 6 1/2" wide x 10" long x 4 1/4" high with ceramic metal halide lamp and electronic ballast, 277V ▪ 6-position douser wheel (Blackout, 6%, 12%, 25%, 50%, Clear) ▪ 3/4" diameter linear side-emitting optical fiber cable with 60° beam distribution ▪ Provide continuous clip-on diffuser for wider beam distribution ▪ Provide continuous linear clear mounting channel ▪ Refer to Architectural/Exhibit Drawings for cable run configurations, illumionator location, and mounting details ▪ Coordinate with manufacturer for installation requirement ▪ Coordinate mounting with field conditions and provide all necessary mounting and power connection components ▪ Submit for complete layout with field dimensions and equipment list for approval

BOLD indicate revision since last issue

Light Fixture Schedule – Post Bid Issue 2

Type		Location	Description	Manufacturer	Lamp	Remarks
NE-200	**NE-1**	**Level 2 Earth Lab Level 2 Our Backyard Level 3 Dry Cave Level 4 Naturalist Lab**	**Surface mounted linear high output white LED channel**	**<u>IO Lighting</u> Line 0.75 Series-high output white LEDs <u>Winona Lighting</u> V-Line series <u>Electrix Illumination</u> L series**	**Proprietary white LED Color Temperature: 3000K Power Consumption: 7.6W per ft Lumen Output: For 3000K LEDs - 170 lumen per watt CRI: 80+**	▪ **Remote power supply (100W max.), 277V/24V** ▪ **Extruded aluminum housing with standard matte finish** ▪ **Nominal 3/4" x 3/4" housing profile x lengths as required** ▪ **60 degree beam distribution** ▪ **Refer to Architectural/Millwork Drawings for fixture layout and mounting details** ▪ **Fixtures shall be tandem mounted for continuous run with no gap between** ▪ **Contractor to coordinate fixture length and quantity as required to maximize length of light within case** ▪ **Provide all necessary mounting and power components as required** ▪ **Coordinate remote power supply location with Exhibit Designer and field conditions and verify requirement with fixture manufacturer** ▪ **Submit the following for approval:** o **drawings showing complete case detail with fixture layout and mounting in all cabinets** o **sample of working fixture and typical mounting and power feed components**

BOLD indicate revision since last issue

UMNH – EXHIBIT SPACE

Light Fixture Schedule – Post Bid Issue 2

Type		Location	Description	Manufacturer	Lamp	Remarks
NF-200	NF-1	Level 2 Earth Lab Level 2 Our Backyard Level 3 Dry Cave Level 4 Naturalist Lab	Surface linear fluorescent T5 lensed undercabinet light	Alkco SFHP-121/28-BW Lithonia N2S series Legion Lighting MY-T-LITE series Fail-Safe MSS series H.E. Williams 1SF series Duray Solid Front Task series	(1) T5 3000K Allow 8W per linear ft	▪ Integral electronic ballast, 120V ▪ Lateral prism acrylic lens ▪ No integral switch ▪ Fixtures shall be tandem mounted with thru wiring in continuous straight run to within 6” of cabinet ends, and centered in cabinet ▪ Refer to Architectural/Exhibit Drawings for cabinet dimensions and details
LE201	LE-2	Deleted				
LE-200	LE-1	Deleted				
RW-201	RW-1	Level 5 Native Voice	Surface field curvable modular low voltage ALR lamp wall grazing system	Belfer Lighting 2791-FX2-6 Series Starfire Lighting Celestial Lighting Channelite series Primus Lighting Alumext series	Philips Lighting 20ALR12/FL32 GBF Frosted	▪ Remote transformer required, 277V/12V ▪ ALR lamps at 6” on center ▪ Fixtures shall be mounted to within 6” of cove ends ▪ Refer to Architectural/Exhibit Drawings for cove dimensions and details ▪ Coordinate exact length and mounting with field condition ▪ Submit fixture layout and run configuration (with cove dimensions) in all locations for approval

BOLD indicate revision since last issue

UMNH – EXHIBIT SPACE

Light Fixture Schedule – Post Bid Issue 2

Type		Location	Description	Manufacturer	Lamp	Remarks
WE-201	WE-1	Level 4 Naturalist Lab	Surface linear high output LED uplight	<u>IO Lighting</u> Line 0.75 - 03-I-3KHO-65-100-1-length*-feed**-4-dimming module <u>Winona Lighting</u> V-Line series <u>Electrix Illumination</u> L series	3000K high output LEDs Allow 8W/linear foot of fixture	▪ Remote dimming module and power supply, 277V ▪ Nominal 3/4" X 3/4" in profile ▪ 65° beam distribution ▪ *Refer to Architectural/Exhibit Drawings for run lengths and configurations, and millwork dimensions and details ▪ Fixtures shall be mounted to within 6" of millwork ends and gaps between fixtures in the same run shall be minimized and equal ▪ **Coordinate mounting with field conditions and provide all necessary mounting and power connection components ▪ Submit run length (with millwork dimensions) and fixture configuration in all locations for approval

BOLD indicate revision since last issue

Light Fixture Schedule – Post Bid Issue 2

Type		Location	Description	Manufacturer	Lamp	Remarks
WE-202	WE-2	Level 2 Utah Future	Surface linear high output LED wall glazer	IO Lighting Line 2.0 - 05-I-3K-5G-100-finish*-length**-2 Winona Lighting V-Line series Electrix Illumination L series	3000K high output LEDs Allow 18W/linear foot of fixture	▪ Remote power supply, 277V ▪ Nominal 2.5” X 2.5” in profile ▪ *Finish as per Architect ▪ Wall glazing optic ▪ **Refer to Architectural/Exhibit Drawings for for run lengths and configurations, and cove dimensions and details ▪ Coordinate mounting with field conditions and provide all necessary mounting and power connection components ▪ Submit run length (with cove dimensions) and fixture configuration in all locations for approval
WE-203	WE-3	Level 2 Our Backyard	Surface linear standard output LED wall glazer	IO Lighting Line 2.0 - 04-I-3K-5G-100-finish*-length**-2 Winona Lighting V-Line series Electrix Illumination L series	3000K standard output LEDs Allow 12W/linear foot of fixture	▪ Remote power supply, 277V ▪ Nominal 2.5” X 2.5” in profile ▪ *Finish as per Architect ▪ Wall glazing optic ▪ **Refer to Architectural/Exhibit Drawings for for run lengths and configurations, and cove dimensions and details ▪ Coordinate mounting with field conditions and provide all necessary mounting and power connection components ▪ Submit run length (with cove dimensions) and fixture configuration in all locations for approval

BOLD indicate revision since last issue

UMNH – EXHIBIT SPACE

Light Fixture Schedule – Post Bid Issue 2

Type		Location	Description	Manufacturer	Lamp	Remarks
WP-201	WP-1	Level 2 Utah Future	Recessed 6" aperture halogen PAR30 lensed wall washer	Gotham DLW-6AR-SDT-flange finish*- Lightolier Evolution C6P30L series Portfolio HLW6 series Kurt Versen E7528 series Prescolite 1269 series	(1) General Electric 75PAR30/H/FL35	▪ Integral step-down transformer, 277V/120V ▪ Semi-diffuse low iridescent clear finish reflector ▪ *Overlap flange finish as per Architect
WP-201	WP-2	Level 2 Earth Lab	Recessed nominal 4" low voltage MR16 wall wash	Gotham DLV-WSH-MR16-4AC-277-flange finish* Lightolier C4MRL series Portfolio HARM3 series	(1) 37W IR MR16, beam TBD	▪ Integral transformer, 277V/12V ▪ Semi-diffuse low iridescent clear finish reflector ▪ *Overlap flange finish as per Architect

BOLD indicate revision since last issue

UMNH – EXHIBIT SPACE

Light Fixture Schedule – Post Bid Issue 2

Type		Location	Description	Manufacturer	Lamp	Remarks
YB-201	YB-1	Level 2 Past World	Surface mounted single-circuit low voltage straight rigid track system	Bruck Lighting VA Track Series – MOD for 2" dual rod power canopy and ceiling clip Translite Sonoma Basis Track series Tech Lighting Monorail series	N/A (Maximum load 300W per circuit)	▪ Remote magnetic transformer, 277V/12V ▪ Single-circuit ▪ Track system shall be compatible with YL series track fixtures ▪ Track shall be rigid extruded cooper and not bendable in field ▪ Finish of track and all components as per Architect ▪ Track system shall include rigid track, connectors, mounting supports, and power feed components for all run layouts and mounting configurations as shown in Architectural/Exhibit Drawings ▪ Modify components (power feed and mounting clips) as necessary so bottom of track is no more than 2" from mounting surface ▪ Provide all necessary mounting and power feed components for a complete operable low voltage track system ▪ Provide (1) track fixture per track for operation test ▪ Submit the following for approval: o drawings showing complete layout and mounting details in all locations o sample of typical mounting and feed components

BOLD indicate revision since last issue

Light Fixture Schedule – Post Bid Issue 2

Type		Location	Description	Manufacturer	Lamp	Remarks
YC-201	YC-1	Level 2 Past World Level 5 Native Voice	Surface mounted single-circuit low voltage straight rigid track system	Bruck Lighting VA Track Series – MOD for 2" dual rod power canopy and ceiling clip Translite Sonoma Basis Track series Tech Lighting Monorail series	N/A (Maximum load 300W per circuit)	▪ Remote magnetic transformer, 277V/12V ▪ Single-circuit ▪ Track system shall be compatible with YL series track fixtures ▪ Track shall be rigid extruded cooper and not bendable in field ▪ Finish of track and all components as per Architect ▪ Track system shall include rigid track, connectors, mounting supports, and power feed components for all run layouts and mounting configurations as shown in Architectural/Exhibit Drawings ▪ Modify components (power feed and mounting clips) as necessary so bottom of track is no more than 2" from mounting surface ▪ Provide all necessary mounting and power feed components for a complete operable low voltage track system ▪ Provide (1) track fixture per track for operation test ▪ Submit the following for approval: o drawings showing complete layout and mounting details in all locations o sample of typical mounting and feed components

BOLD indicate revision since last issue

Light Fixture Schedule – Post Bid Issue 2

Type		Location	Description	Manufacturer	Lamp	Remarks
YK-201	YK-1	Level 4 Life	Surface mounted or suspended single-circuit low voltage rigid curved track system	Bruck Lighting VA Track Series – MOD for 2” dual rod power canopy and ceiling clip Translite Sonoma Basis Track series Tech Lighting Monorail series	N/A (Maximum load 300W per circuit)	▪ Remote magnetic transformer, 277V/12V ▪ Single-circuit ▪ Track system shall be compatible with YL series track fixtures ▪ Track shall be rigid extruded cooper and not bendable in field ▪ Finish of track and all components as per Architect ▪ Track system shall include rigid track, connectors, mounting supports, and power feed components for all run layouts and mounting configurations as shown in Architectural/Exhibit Drawings ▪ Modify components (power feed and mounting clips) as necessary so bottom of track is no more than 2” from mounting surface ▪ All curved tracks shall be factory curved (Do not field curve track) ▪ Provide all necessary mounting and power feed components for a complete operable low voltage track system ▪ Provide (1) track fixture per track for operation test ▪ Submit the following for approval: o drawings showing complete layout and mounting details in all locations o sample of typical mounting and feed components

BOLD indicate revision since last issue

Light Fixture Schedule – Post Bid Issue 2

Type		Location	Description	Manufacturer	Lamp	Remarks
YL-201	YL-1	Level 2 Utah Future ~~**Level 5 Native Voice**~~	Surface mounted single-circuit low voltage rigid curved track system	Bruck Lighting VA Track Series – MOD for 2" dual rod power canopy and ceiling clip Translite Sonoma Basis Track series Tech Lighting Monorail series	N/A (Maximum load 300W per circuit)	▪ Remote magnetic transformer, 277V/12V ▪ Single-circuit ▪ Track system shall be compatible with YL series track fixtures ▪ Track shall be rigid extruded cooper and not bendable in field ▪ Finish of track and all components as per Architect ▪ Track system shall include rigid track, connectors, mounting supports, and power feed components for all run layouts and mounting configurations as shown in Architectural/Exhibit Drawings ▪ Modify components (power feed and mounting clips) as necessary so bottom of track is no more than 2" from mounting surface ▪ All curved tracks shall be factory curved (Do not field curve track) ▪ Provide all necessary mounting and power feed components for a complete operable low voltage track system ▪ Provide (1) track fixture per track for operation test ▪ Submit the following for approval: o drawings showing complete layout and mounting details in all locations o sample of typical mounting and feed components

BOLD indicate revision since last issue

Light Fixture Schedule – Post Bid Issue 2

Type		Location	Description	Manufacturer	Lamp	Remarks
YM-201	YM-1	Level 2 Past World Level 3 Dry Cave Level 4 Naturalist Lab Level 4 Life	Recessed 2-1/2" diameter low voltage mono-point system	Bruck Lighting For accessible ceiling - 2" Surface Mounted Canopy For non-accessible ceiling - Flush mounted plug-in canopy Translite Sonoma Port Alone series Tech Lighting	N/A (Maximum load 200W)	▪ Remote magnetic transformer, 277V/12V ▪ Track system shall be compatible with YM-BR track and YL series track fixtures ▪ Track system shall include power feed canopy with a single insertion point for accepting YM-BR track and YL series track fixtures ▪ Provide cover cap for insertion point ▪ Finish all components as per Architect ▪ Refer to Architectural/Exhibit Drawings for mounting details ▪ Provide all necessary mounting and power feed components for a complete operable low voltage system ▪ Provide (1) track fixture per space for operation test
YP-201	YP-2	Level 3 Throughout Level 4 Life Level 5 Sky	Pendant mounted single-circuit lighting track system with extruded aluminum unitrack housing	Lighting Services Inc. Single-circuit lighting track system with unitrack housing Edison Price Lighting LiteLab	N/A	▪ 1-circuit, 120V ▪ Track system shall be compatible with TM and TQ series track fixtures ▪ Standard finish as per Architect ▪ Refer to Architectural/Exhibit Drawings for track layouts and mounting details ▪ Provide all necessary mounting and power components as required for a complete operable track system ▪ Provide (1) track fixture per track for operation test ▪ Submit working sample for approval

BOLD indicate revision since last issue

Type		Location	Description	Manufacturer	Lamp	Remarks
YP-202	YP-BR	Level 3 Throughout	Single-circuit bridge lighting track system	Lighting Services Inc. Single-circuit bridge lighting track system Edison Price Lighting LiteLab	N/A	▪ 1-circuit, 120V ▪ Track system shall be compatible with TM and TQ series track fixtures ▪ Track to be securely mounted between (2) YP-2 runs ▪ Standard finish as per Architect ▪ Provide all necessary mounting and power components as required for a complete operable track system ▪ Provide (1) track fixture per track for operation test
YP-203	YP-2-EM	Level 3 Throughout Level 4 Life Level 5 Sky	Pendant mounted 15" long single-circuit lighting track system with extruded aluminum unitrack housing and permanently mounted emergency track fixture	Lighting Services Inc. Emergence track system with unitrack housing and emergency fixture (EF) - 238 Edison Price Lighting LiteLab	(1) GE 100W HIR PAR38, beam TBD	▪ 1-circuit, 120V ▪ Standard finish as per Architect ▪ Track shall be integrated in YP-2 runs ▪ Track to be connected to emergency circuit and electrically isolated from YP-2 track system ▪ All accessories shall be integral within housing when installed ▪ Provide all necessary mounting and power components as required for a complete operable track system ▪ Fixture shall be permanently mounted to track ▪ Fixture shall be factory locked to aim straight down and shall not be adjustable in field ▪ Fixture shall not have on/off switch

BOLD indicate revision since last issue

UMNH – EXHIBIT SPACE

Light Fixture Schedule – Post Bid Issue 2

Type		Location	Description	Manufacturer	Lamp	Remarks
YP-204	YP-2-WK	Level 3 Throughout Level 4 Life Level 5 Sky	Pendant mounted 15" long single-circuit lighting track system with extruded aluminum unitrack housing and permanently mounted worklite track fixture	Lighting Services Inc. Worklite track system with unitrack housing and worklite fixture (EF) – M2901 Edison Price Lighting LiteLab	(1) Philips 100W ceramic metal halide PAR38 lamp, beam TBD, 3000K	▪ 1-circuit, 120V ▪ Standard finish as per Architect ▪ Track shall be integrated in YP-2 runs ▪ Track to be connected to utility & maintenance circuit and electrically isolated from YP-2 track system ▪ Allow (1) spread lens (exact lens TBD) ▪ All accessories shall be integral within housing when installed ▪ Side mounted extruded ballast housing shall be less than 6-1/2" deep ▪ Provide all necessary mounting and power components as required for a complete operable track system ▪ Fixture shall be permanently mounted to track ▪ Fixture shall be factory locked to aim straight down and shall not be adjustable in field ▪ Fixture shall not have on/off switch

BOLD indicate revision since last issue

UMNH – EXHIBIT SPACE

Light Fixture Schedule – Post Bid Issue 2

Type		Location	Description	Manufacturer	Lamp	Remarks
YP-301	**YP-3A**	**Level 3 Past World**	**C-clamp/yoke mounted metal halide water rippling effect projector**	**<u>ROSCO</u>** **X24 X-Effects Projector**	**(1) Ushio 200W E-Mark SMR202 DC metal halide lamp**	▪ **120V** ▪ **Fixture shall be permanently wired** ▪ **Provide safety cable, C-clamp, iron pipe for mounting** ▪ **Analog control** ▪ **(2) glass gobos rotates off-center to create projection with no visible direction and pattern** ▪ **Allow (2) dichroic color/pattern glass lens (coordinate exact color and pattern requirement with Exhibit Contractor)** ▪ **Allow (2) interexchangeable lenses (beam angles TBD)** ▪ **Positive lockable aiming** ▪ **Refer to Architectural Drawings for mounting details** ▪ **Coordinate mounting details with field conditions** ▪ **Provide all necessary mounting and power components as required** ▪ **Contractor is responsible to customized lighting effect per instructions by Exhibit Designer/Lighting Consultant.** ▪ **Focusing required after installation is completed**

BOLD indicate revision since last issue

Light Fixture Schedule – Post Bid Issue 2

Type		Location	Description	Manufacturer	Lamp	Remarks
YP-302	YP-3B	Level 3 First People	C-clamp mounted gobo projector	ETC Source Four series Altman Lihting 360Q series	(1) 575W HPL lamp, 2000 hour life Allow 750W	▪ 120V ▪ Fixture shall be permanently wired ▪ Die-cast housing with adjustable yoke and stainless steel shutters ▪ Provide safety cable, C-clamp, iron pipe for mounting ▪ *Standard finish as per Architect ▪ Allow (1) custom gobo and (1) color glass lens **(coordinate gobo and color glass requirement with Exhibit Contractor)** ▪ (2) accessories slots for gobo and lens ▪ Allow (2) interexchangeable enhanced definition lens tubes (angles TBD) ▪ Positive lockable aiming ▪ Refer to Architectural Drawings for mounting details ▪ Coordinate mounting details with field conditions ▪ Provide all necessary mounting and power components as required ▪ Focusing required after installation is completed

BOLD indicate revision since last issue

UMNH – EXHIBIT SPACE

Light Fixture Schedule – Post Bid Issue 2

Type		Location	Description	Manufacturer	Lamp	Remarks
YS-201	YS-1	Level 4 Life (Diorama)	Surface mounted single-circuit lighting track system	Lighting Services Inc. Surface single-circuit lighting track system + mounting system Edison Price Lighting LiteLab	N/A	▪ Single-circuit, 120V ▪ Track system shall be compatible with TQ series track fixtures ▪ Standard finish as per Architect ▪ Refer to Architectural Drawings for track layouts and mounting details ▪ Provide all necessary mounting and power components (hanger clips/joiner/feeder) as required for a complete operable track system

BOLD indicate revision since last issue

Light Fixture Schedule – Post Bid Issue 2

Type		Location	Description	Manufacturer	Lamp	Remarks
YZ-201	YZ-1	Level 4 Life Lab	C-clamp mounted gobo projector	ETC Source Four series Altman Lihting 360Q series	(1) 575W HPL lamp, 2000 hour life Allow 750W	▪ 120V ▪ Fixture shall be permanently wired ▪ Die-cast housing with adjustable yoke and stainless steel shutters ▪ Provide safety cable, C-clamp, iron pipe for mounting ▪ *Standard finish as per Architect ▪ Allow (1) custom glass gobo and (1) color glass lens **(coordinate gobo and color glass requirement with Exhibit Contractor)** ▪ (2) accessories slots for gobo and lens ▪ Allow (2) interexchangeable enhanced definition lens tubes (angles TBD) ▪ Positive lockable aiming ▪ Refer to Architectural Drawings for mounting details ▪ Coordinate mounting details with field conditions ▪ Provide all necessary mounting and power components as required ▪ Focusing required after installation is completed

BOLD indicate revision since last issue

Type	Location	Description	Manufacturer	Lamp	Remarks

PART 2 - TRACK HEADS AND ACCESSORIES TO BE PROVIDED BY OWNER, INSTALLED AND FOCUSED BY GENERAL CONTRACTOR (GC)

TQ-1	TBD	Track mounted low voltage halogen MR16 adjustable accent	Lighting Services Inc. 260-00-finish*-WL-cross baffle-(3) lens accessories- wall washer assembly Edison Price Lighting Maxima series LiteLab Museum Collection series	(1) Osram 37W IR MR16, beam TBD	▪ Low profile integral electronic transformer, 120V ▪ *Standard finish as per Architect ▪ Provide (3) lens accessories (exact lens TBD) ▪ All accessories shall be integral within housing when installed ▪ Wrench locking ▪ Track fixture must be compatible with YP series and YS-1 track system ▪ Provide exchangeable wall washer assembly (exact quantity TBD) ▪ Submit working sample for approval ▪ Focusing required after installation is completed
TQ-2	TBD	Track mounted low voltage halogen AR111 adjustable accent	Lighting Services Inc. 236-00-finish*-WL-(3) lens accessories Edison Price Lighting Maxima series LiteLab Museum Collection series	(1) 75W AR111, beam TBD	▪ Low profile integral electronic transformer, 120V ▪ *Standard finish as per Architect ▪ Provide cross baffle and (3) lens accessories (exact lens TBD) ▪ All accessories shall be integral within housing when installed ▪ Wrench locking ▪ Track fixture must be compatible with YP series and YS-1 track system ▪ Submit working sample for approval ▪ Focusing required after installation is completed

BOLD indicate revision since last issue

Light Fixture Schedule – Post Bid Issue 2

Type	Location	Description	Manufacturer	Lamp	Remarks
TQ-3	TBD	Track mounted halogen PAR38 adjustable accent	Lighting Services Inc 238-00-finish*-WL-(3) lens accessories-wall washer assembly Edison Price Lighting Maxima series LiteLab Museum Collection series	(1) 100W HIR PAR38, beam TBD	▪ 120V ▪ *Standard finish as per Architect ▪ Provide (3) lens accessories (exact lens TBD) ▪ All accessories shall be integral within housing when installed ▪ Wrench locking ▪ Track fixture must be compatible with YP series and YS-1 track system ▪ Provide exchangeable wall washer front (exact quantity TBD) ▪ Submit working sample for approval ▪ Focusing required after installation is completed
TQ-4	TBD	Track mounted PAR56 adjustable accent	Lighting Services Inc 300-00-finish*-WL-cross baffle-(2) lens accessories Edison Price Lighting Artima series LiteLab Museum Collection series	(1) 300W PAR56, beam TBD	▪ 120V ▪ *Standard finish as per Architect ▪ Provide cross baffle and (2) lens accessories (exact lens TBD) ▪ Wrench locking ▪ Track fixture must be compatible with YP series track system ▪ Submit working sample for approval ▪ Focusing required after installation is completed

BOLD indicate revision since last issue

UMNH – EXHIBIT SPACE

Light Fixture Schedule – Post Bid Issue 2

Type	Location	Description	Manufacturer	Lamp	Remarks
TM-1	TBD	Track mounted metal halide MR16 adjustable accent	Lighting Services Inc. MHLN1620-00-finish*-WL-louver-(2) lens accessories Edison Price Lighting LiteLab	(1) 20W metal halide MR16, beam TBD	▪ Integral electronic ballast, 120V ▪ *Standard finish as per Architect ▪ Provide louver and (2) lens accessories (exact lens TBD) ▪ Side mounted extruded ballast housing shall be less than 5” deep ▪ All accessories shall be integral within housing when installed ▪ Wrench locking ▪ Track fixture shall be compatible with YP series track system ▪ Submit working sample for approval ▪ Focusing required after installation is completed
YL-A	TBD	Track mounted low voltage halogen MR16 adjustable track fixture	Bruck Lighting Malibu Spot Series + accessories Translite Sonoma Retro series Tech Lighting John series	(1) Osram 37W IR MR16, beam TBD	▪ Track fixture shall be compatible with YB-1, YC-1, YK-1, YL-1, YM-1 Mono Point System and YM-BR track systems ▪ Provide track adaptor as required ▪ Finish of all components as per Architect ▪ Provide accessory holder that holds two accessories ▪ Provide (1) lamp shield, (1) hexcell louver and (2) lens (exact lens TBD) ▪ Submit working sample and all accessories for approval ▪ Focusing required after installation is completed

BOLD indicate revision since last issue

Light Fixture Schedule – Post Bid Issue 2

Type	Location	Description	Manufacturer	Lamp	Remarks
YL-B	TBD	Track mounted low voltage halogen MR16 adjustable track fixture	Bruck Lighting Pero Spot Series + accessories Translite Sonoma Micro Spot G series Tech Lighting Spot series	(1) Osram 37W IR MR16, beam TBD	▪ Track fixture shall be compatible with YB-1, YC-1, YK-1, YL-1, YM-1 Mono Point System and YM-BR track systems ▪ Provide track adaptor as required ▪ Finish of all components as per Architect ▪ Provide accessory holder that holds two accessories ▪ Provide (1) lamp shield, (1) hexcell louver and (2) lens (exact lens TBD) ▪ Submit working sample and all accessories for approval ▪ Focusing required after installation is completed
YL-C	TBD	Track mounted low voltage halogen MR16 adjustable track fixture	Bruck Lighting Clareo Spot Series + accessories Tech Lighting Sportster series	(1) Osram 37W IR MR16, beam TBD	▪ Track fixture shall be compatible with YB-1, YC-1, YK-1, YL-1, YM-1 Mono Point System and YM-BR track systems ▪ Provide track adaptor as required ▪ Finish of all components as per Architect ▪ Provide accessory holder that holds two accessories ▪ Provide (1) glare reduction ring, (1) lamp shield, hexcell louver and (2) lens (exact lens TBD) ▪ Submit working sample and all accessories for approval ▪ Focusing required after installation is completed

BOLD indicate revision since last issue

Light Fixture Schedule – Post Bid Issue 2

Type	Location	Description	Manufacturer	Lamp	Remarks
YM-BR	TBD	Low voltage rigid straight track with plug-in adapter for use with YM-1 mono-point track system	Bruck Lighting VA Track Series – MOD 18" long straight track and power connector Translite Sonoma Basis Track series Tech Lighting Monorail series	N/A (maximum 200W)	▪ Track shall be compatible with mono-point track system YM-1 and YL Series track fixtures ▪ Track shall be rigid extruded cooper and not bendable in field ▪ Finish of track and all components as per Architect ▪ Track system shall include a 18" long straight track with a stem at center for connection to YM-1 mono point track for both power and support ▪ Track system shall accept maximum of (4) YL Series track fixtures ▪ Bottom of track shall be no more than 1-1/2" from mounting surface when inserted in mono-point system ▪ Submit working sample for approval

REMARK:

Below are estimated track fixture quantities in Exhibit Space. These quantities are estimation for focusing budget purpose only. Final track fixture quantities are to be determined at focusing after installation of all exhibition displays is completed.

1. Allow (350) track fixtures for YP series track system in PAST WORLD and LAKE
2. Allow (275) track fixtures for YP series track system in FIRST PEOPLE and LAND
3. Allow (75) track fixtures for YP series track system in LIFE
4. Allow (25) track fixtures for YP series track system in SKY
5. Allow (330) YL series track fixtures throughout

BOLD indicate revision since last issue

UMNH – EXHIBIT SPACE

Light Fixture Schedule – Post Bid Issue 2

Type	Location	Description	Manufacturer	Lamp	Remarks

NOTE: FIXTURES LISTED BELOW ARE FOR POWER COORDINATION AND REFERENCE ONLY AND ARE NOT INCLUDED IN GC SCOPE OF WORK

PART A - EXHIBIT LIGHTING FIXTURES TO BE PROVDED, INSTALLED AND FOCUSED BY EXHIBIT CONTRACTOR (XC)

C-CF-1	Deleted from XC scope				
C-CF-2	Level 3 Mineral Hall - Fluorescent Cases	Surface mounted two-lamp fluorescent striplight	Legion 1510 series Bartco Lighting BFL257 series CJ Lighting Estimated Quantity: 8 ft.	(2) blacklight T8 lamps with UVA General Electric - F115T8/BL NOTE: Exhibit Contractor to verify exact lamp specifications per case requirement	▪ Integral electronic ballast, 120V ▪ 20 gauge steel housing with standard white finish ▪ Refer to Exhibit Drawings for fixture layout and mounting details ▪ Fixture shall be tandem mounted with through wiring for continuous run ▪ Exhibit Contractor to coordinate fixture length and quantity as required to maximize length of light within case (overall length of light shall not be less than length of case glass) ▪ Provide all necessary mounting and power components as required ▪ Submit drawings showing complete case details with fixture layout and mounting in all cases for approval
C-CF-3	Level 3 First People - Homestead and Human Interaction Table Cases Level 3 Land - Pack Rat Table Case Level 4 Life - Ant Colony	Surface mounted single lamp compact fluorescent module	Belfer Lighting 2880 NX2 series Celestial Lighting Channelite series Starfire Lighting Estimated Quantity: 9 units	(1) 26W Quad-tube CFL, 3000K, 80+ CRI	▪ Integral electronic ballast, 120V ▪ Aluminum housing with white finish ▪ Refer to Exhibit Drawings for fixture layout and mounting details ▪ Provide all necessary mounting and power components as required ▪ Submit drawings showing complete case details with fixture layout and mounting in all cases for approval

BOLD indicate revision since last issue

UMNH – EXHIBIT SPACE

Light Fixture Schedule – Post Bid Issue 2

Type	Location	Description	Manufacturer	Lamp	Remarks
C-CF-4	Level 2 Our Backyard - Terrariums and Live Display Cases NOTE: Exhibit Contractor to verify if Terrariums include integrated lighting system	Surface mounted single lamp fluorescent striplight	Legion 1500 series Bartco Lighting MIT8 series CJ Lighting NOTE: Exact fixture specifications to be confirmed by Live Display Consultant Estimated Quantity: 30 ft.	(1) full spectrum T8 lamp (lamp shall be specifically listed for Terrarium application) General Electric - F14T8/SR or F115T8/SR NOTE: Exact lamp specifications to be confirmed by Live Display Consultant	▪ Integral electronic ballast, 120V ▪ 20 gauge steel housing with standard white finish ▪ Refer to Exhibit Drawings for fixture layout and mounting details ▪ Exhibit Contractor to coordinate fixture length and quantity as required to maximize length of light in all locations ▪ Exhibit Contractor to coordinate fixture mounting details in Crawl Space structuure ▪ Provide all necessary mounting and power components as required ▪ Submit drawings showing complete case details with fixture layout and mounting in all cases for approval

BOLD indicate revision since last issue

Light Fixture Schedule – Post Bid Issue 2

Type	Location	Description	Manufacturer	Lamp	Remarks
C-LE-1	Typical Wall Inset Case	Surface mounted linear high output white LED channel	IO Lighting Line 0.75 Series-high output white LEDs Winona Lighting V-Line series Electrix Illumination L series Estimated Quantity: 100 ft.	Proprietary white LED Color Temperature: 3000K Power Consumption: 7.6W per ft Lumen Output: For 3000K LEDs - 170 lumen per watt CRI: 80+	▪ Remote power supply (100W max.), 120V/24V ▪ Extruded aluminum housing with standard matte finish ▪ Nominal 3/4” x 3/4” housing profile x lengths as required ▪ 60 degree beam distribution ▪ Refer to Exhibit Drawings for fixture layout and mounting details ▪ Fixtures shall be tandem mounted for continuous run with no gap between ▪ Exhibit Contractor to coordinate fixture length and quantity as required to maximize length of light within case (overall length of light shall not be less than length of case glass) ▪ Provide all necessary mounting and power components as required ▪ Coordinate remote power supply location with Exhibit Designer and field conditions and verify requirement with fixture manufacturer ▪ Submit the following for approval: o drawings showing complete case detail with fixture layout and mounting in all cases o sample of working fixture and typical mounting and power feed components

BOLD indicate revision since last issue

Light Fixture Schedule – Post Bid Issue 2

Type	Location	Description	Manufacturer	Lamp	Remarks
C-LE-2	Level 3 Mineral Hall (Wall Case)	Surface mounted linear high output white LED channel	IO Lighting Line 0.75 Series-high output white LEDs Winona Lighting V-Line series Electrix Illumination L series Estimated Quantity: 50 ft.	Proprietary white LED Color Temperature: 3000K Power Consumption: 7.6W per ft Lumen Output: For 3000K LEDs - 170 lumen per watt CRI: 80+	▪ Remote power supply (100W max.), 120V/24V ▪ Extruded aluminum housing with standard matte finish ▪ Nominal 3/4” x 3/4” housing profile x lengths as required ▪ 10 degree beam distribution ▪ Refer to Exhibit Drawings for fixture layout and mounting details ▪ Fixtures shall be tandem mounted for continuous run with no gap between ▪ Exhibit Contractor to coordinate fixture length and quantity as required to maximize length of light within case (overall length of light shall not be less than length of case glass) ▪ Provide all necessary mounting and power components as required ▪ Coordinate remote power supply location with Exhibit Designer and field conditions and verify requirement with fixture manufacturer ▪ Submit the following for approval: o drawings showing complete case detail with fixture layout and mounting in all cases o sample of working fixture and typical mounting and power feed components

BOLD indicate revision since last issue

Light Fixture Schedule – Post Bid Issue 2

Type	Location	Description	Manufacturer	Lamp	Remarks
C-LE-3	Typical Wall Inset Case Level 3 First People - Homestead and Human Interaction Table Cases Level 3 First People - Exhibit Cases	Surface mounted linear standard output white LED channel	IO Lighting Line 0.75 Series-standard output white LEDs Winona Lighting V-Line series Electrix Illumination L series Estimated Quantity: 60 ft.	Proprietary white LED Color Temperature: 3000K Power Consumption: 2.1W per ft Lumen Output: For 3000K LEDs - 34 lumen per watt CRI: 80+	▪ Remote power supply (100W max.), 120V/24V ▪ Extruded aluminum housing with standard matte finish ▪ Nominal 3/4” x 3/4” housing profile x lengths as required ▪ 60 degree beam distribution ▪ Refer to Exhibit Drawings for fixture layout and mounting details ▪ Fixtures shall be tandem mounted for continuous run with no gap between ▪ Exhibit Contractor to coordinate fixture length and quantity as required to maximize length of light within case (overall length of light shall not be less than length of case glass) ▪ Provide all necessary mounting and power components as required ▪ Coordinate remote power supply location with Exhibit Designer and field conditions and verify requirement with fixture manufacturer ▪ Submit the following for approval: o drawings showing complete case detail with fixture layout and mounting in all cases o sample of working fixture and typical mounting and power feed components
C-LE-4 to C-LE-8	Deleted from project				

BOLD indicate revision since last issue

Light Fixture Schedule – Post Bid Issue 2

Type	Location	Description	Manufacturer	Lamp	Remarks
C-LV	Typical Exhibit Case	Integrated in casework single-circuit low voltage track system with dimmable LED track fixtures	<u>Bruck Lighting</u> VA Track Series + Ledra Series LED track fixtures MOD with shorter stem with compartible track mounting clip Estimated Quantity: Track - 1750 ft. Track Heads - 1040 units	Proprietary 1W/3W white LED Color Temperature: 3000K Power Consumption: 4.0W for 1W LED 6.5W for 3W LED CRI: 80+	▪ Remote magnetic transformers, 120V/12V ▪ Integral dimmer with dimming range from 100% to 15% at LED track fixture ▪ Track shall be rigid extruded cooper and not bendable in field ▪ Standard track finish as per Exhibit Designer ▪ Refer to Exhibit Drawings for track layouts and mounting details ▪ Track system shall include tracks, mounting brackets/supports, and power feed/connectors for all runs and configurations as shown in Exhibit Drawings for a complete operable low voltage track system ▪ Provide track fixtures with 1W and 3W LED (exact quantity TBD) ▪ Provide (5) types of exchangeable front lens assembly with various beam distribution (exact beam angle and quantity TBD) and removable snoot glare shield (exact quantity TBD) ▪ Submit the following for approval: o drawings showing complete case detail with fixture layout and mounting in all cases o sample of working fixture and typical mounting and power feed components o sample of all lens and snoot shield ▪ Focusing required after installation is completed

BOLD indicate revision since last issue

Type	Location	Description	Manufacturer	Lamp	Remarks
C-TQ-1 to C-TQ-3	Deleted from XC scope				
C-YS-1	Deleted from XC scope				

PART B - EXHIBIT LIGHTING FIXTURES TO BE PROVDED, INSTALLED AND FOCUSED BY GENERAL CONTRACTOR (GC) AND COORDINATED WITH EXHIBIT CONTRACTOR (XC)

CZ-1	Level 2 Utah Future	C-clamp mounted gobo projector	Altman Lighting Micro Ellipse ME-pattern holder	(1) 37W IR MR16	▪ Exhibit Contractor to coordinate gobo patterns requirement with General Contractor
YP-3A	Level 3 Past World	C-clamp mounted gobo projector	ROSCO X24 X-Effects Projector	(1) 200W E-Mark SMR202 DC metal halide lamp	▪ Exhibit Contractor to coordinate dichroic color/pattern glass lens requirement with General Contractor
YP-3B	Level 3 First People	C-clamp mounted gobo projector	ETC Source Four series	(1) 575W HPL lamp	▪ Exhibit Contractor to coordinate gobo and color glass requirement with General Contractor
YZ-1	Level 4 Life Lab	C-clamp mounted gobo projector	ETC Source Four series	(1) 575W HPL lamp	▪ Exhibit Contractor to coordinate gobo and color glass requirement with General Contractor

REMARK:

1. Except for C-LV track head, all estimated quantities listed are based on 100% FD layout. Exhibit Contractor is responsible to verify exact quantities with exhibit case design and details.

2. Estimated quantity for C-LV track head is for estimation purpose only. Actual quantity required shall be determined at focusing after installation of all displays is completed.

BOLD indicate revision since last issue

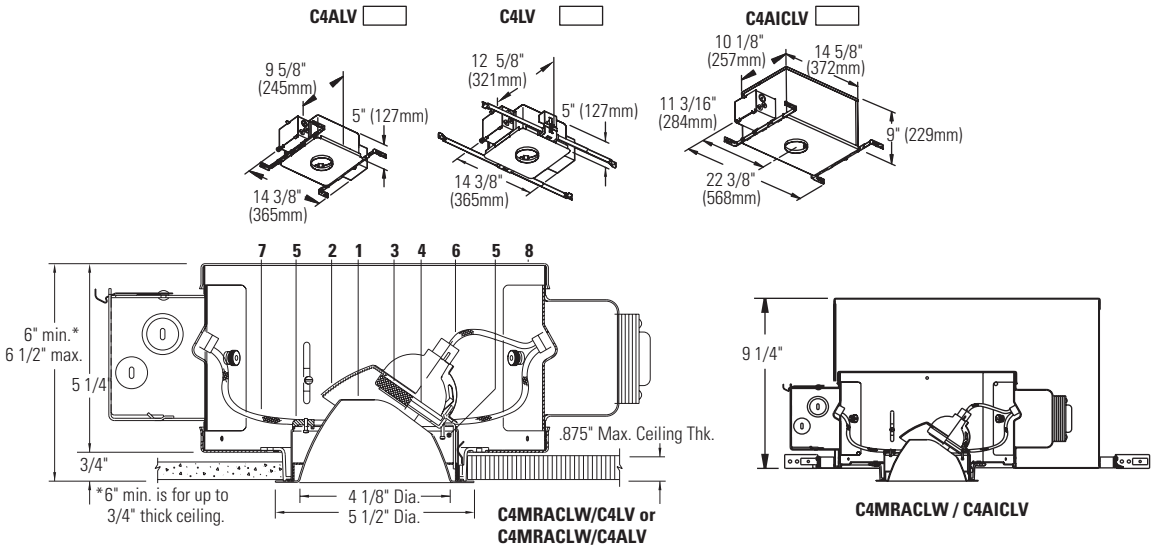

Ceiling Cutout: 5 1/16" (129 mm) Dia.

Reflector Trim

C4MRA CLW	Specular Clear, White Flange
C4MRA CLP	Specular Clear, Polished Flange
C4MRA ☐	Add suffix. See options for other finishes.

Frame-In Kit

Non-IC 120V/277V		Non-IC AirSeal® 120V/277V		IC AirSeal® 120V	
C4LVMU	Magnetic 120/277V	**C4ALVMU**	Magnetic 120/277V	**C4AICLVM1**	Magnetic 120V
C4LVE1	Electronic 120V	**C4ALVE1**	Electronic 120V	**C4AICLVE1**	Electronic 120V
C4LVE2 42-75W MR16(12V)	Electronic 277V	42-75W MR16(12V)	Lensed, Horizontal Lamping	20-50W MR16(12V)	

Remodel Frame-In Kit

Non-IC 120V	
C4LVE1RM 50W Max. MR16 (12V)	See separate specification sheet for more information

Note: Magnetic transformers may produce audible sound when used with dimmers, which may be objectionable in acoustically critical areas.

Features

1. **Aperture Cone:** 16 ga. aluminum. Slot cut cone opening minimizes view into fixture. Keyed to lampholder assembly for true aiming of lamp through aperture center and to prevent incorrect installation of cone. Hinged, snaps onto adjustable lampholder for easy tool-less installation. Interchangeable with other Evolution 4 1/2" low voltage trims.
2. **Adjustable Lampholder:** Die-cast aluminum. Built-in aperture shield blocks view into fixture. 45° vertical tilt (35° max. with remodel frame-in kit), 358° horizontal rotation; lockable. Hot aiming is possible using a phillips screwdriver. Matte black finish. Lamp shield keeps interior of fixture dark.
3. **Lamp Support:** Die-formed aluminum with knurled surface for easy gripping during relamping. Spring tension clips hold lamp and lens and allow fast snap-in, snap-out relamping. Matte black finish. Accepts up to two 2" dia. accessories.
4. **Cover Glass:** High temperature, tempered soft focus lens.
5. **Vertical /Horizontal Locking:** Single screw adjustment; independent locking system.
6. **Socket Harness:** Porcelain bi-pin socket. Pre-wired with No. 18 Teflon® leads.
7. **Power Harness:** Provides power to transformers.
8. **Frame-In Kit:** Compatible frame-in kits are listed above. See separate frame-in kit specification sheets for details.
   Non-IC and Non-IC AirSeal® - Insulation must be kept 3" away from fixture sides and wiring compartments and must not be placed above fixture in a manner which will entrap heat.
   IC-AirSeal® - Fixture may be in direct contact with insulation.
9. **Maximum Ceiling Thickness:** .875", 1.75" with C4TCA2 accessory (see C4TCA2 specification sheet for details.)

Options & Accessories

Clear: CL Gold: GD White: WH
Black: BK Comfort Clear Diffuse: CCD Champagne Bronze: CCZ
Specify desired flange: **W** White; **P** Polished

Evolution 4" Trims with Non-IC Frames
C4MRA 1 Secondary Color Lens *or* 1 Mixing Color Lens *and* 1 Specialty Filter
Evolution 4" Trims with AIC Frames
C4MRA 1 Secondary Color Lens *or* 1 Mixing Color Lens *or* 1 Specialty Filter

Labels

UL Listed (Suitable for damp locations), I.B.E.W

Teflon® is a registered trademark of E.I. DuPont.
US Patent No. 5,957,573. Other US and Foreign Patents Pending.

Job Information	**Type:**
Job Name:	
Cat. No.:	
Lamp(s):	
Notes:	

631 Airport Road, Fall River, MA 02720 • (508) 679-8131 • Fax (508) 674-4710
We reserve the right to change de nish.
www.lightolier.com © 2008 Philip

UMNH
AL-100

Accent Lighting Performance Data

(FC) is initial footcandles at center of beam. Beam length **(L)** and beam width **(W)** are to where the candlepower is reduced to 50% of the center beam candlepower.

CBCP is center beam candlepower.
(C) is distance to the center of the beam.

Lamp data shown is typical, and is based on bare lamp photometrics. Contact lamp manufacturers for availability and performance.

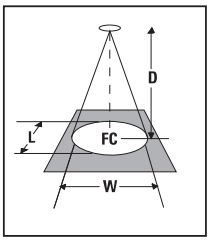

0° Aiming Angle

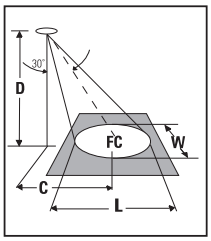

30° Aiming Angle

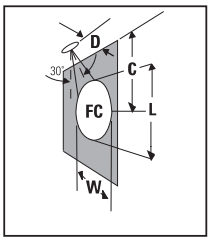

30° Aiming Angle

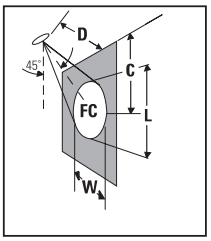

45° Aiming Angle

MR16 Low Voltage Halogen Bi-Pin Lamps

Lamps	Beam Spread (To 50% CBCP)	CBCP	Rated Life (Hrs.)	D	FC	L	W	D	C	FC	L	W	D	C	FC	L	W	D	C	FC	L	W
20W MR16 VNSP (EZX)	7°	8200	3000	7′	167	0.9′	0.9′	6′	3.5′	148	1.0′	0.8′	2′	3.5	256	1.0′	0.5′	4′	4.0′	181	1.0	0.7′
				10′	82	1.2′	1.2′	9′	5.2′	66	1.5′	1.3′	3′	5.2′	114	1.5′	0.7′	6′	6.0′	81	1.5	1.0′
				13′	49	1.6′	1.6′	12′	6.9′	37	2.0′	1.7′	4′	6.9′	64	2.0′	1.0′	8′	8.0′	45	2.0	1.4′
				16′	32	2.0′	2.0′	15′	8.7′	24	2.3′	2.1′	5′	8.7′	41	2.5′	1.2′	10′	10.0′	29	2.5	1.7′
20W MR16 NSP (ESX)	13°	3600	5000	6′	100	1.4′	1.4′	5′	2.9′	94	1.5′	1.3′	2′	3.5′	113	1.9′	0.9′	3′	3.0	141	1.4′	1.0′
				8′	56	1.8′	1.8′	7′	4.0′	48	2.1′	1.8′	3′	5.2′	50	2.8′	1.4′	5′	5.0	51	2.3′	1.6′
				10′	36	2.3′	2.3′	9′	5.2′	29	2.7′	2.4′	4′	6.9′	28	3.8′	1.8′	7′	7.0′	26	3.2′	2.3′
				12′	25	2.7′	2.7′	11′	6.4′	19	3.4′	2.9′	5′	8.7′	18	4.7′	2.3′	9′	9.0′	16	4.2′	2.9′
20W MR16 FL (BAB)	40°	525	5000	2′	131	1.5′	1.5′	2′	1.2′	85	2.0′	1.7′	1′	1.7′	66	4.8′	1.5′	2′	2.0′	46	3.4′	2.1′
				3′	58	2.2′	2.2′	3′	1.7′	38	3.0′	2.5′	2′	3.5′	16	9.7′	2.9′	3′	3.0′	21	5.0′	3.1′
				4′	33	2.9′	2.9′	4′	2.3′	21	4.1′	3.4′	3′	5.2′	7	14.5′	4.4′	4′	4.0′	12	6.7′	4.1′
				5′	21	3.6′	3.6′	5′	2.9′	14	5.1′	4.2′	4′	6.9′	4	19.3′	5.8′	5′	5.0′	7	8.4′	5.1′
35W MR16 NSP (FRB)	12°	8700	4000	7′	178	1.5′	1.5′	6′	3.5′	157	1.7′	1.5′	2′	3.5′	272	1.7′	0.8′	4′	4.0′	192	1.7′	1.2′
				10′	87	2.1′	2.1′	9′	5.2′	70	2.5′	2.2′	3′	5.2′	121	2.6′	1.3′	6′	6.0′	85	2.6′	1.8′
				13′	51	2.7′	2.7′	12′	6.9′	39	3.4′	2.9′	4′	6.9′	68	3.5′	1.7′	8′	8.0′	48	3.4′	2.4′
				16′	34	3.4′	3.4′	15′	8.7′	25	4.2′	3.6′	5′	6.7′	44	4.3′	2.1′	10′	10.0′	31	4.3′	3.0′
35W MR16 SP (FRA)	20°	3900	4000	6′	108	2.1′	2.1′	5′	2.9	101	2.4′	2.0′	2′	3.5′	122	3.1′	1.4′	3′	3.0′	153	2.2′	1.5′
				8′	61	2.8′	2.8′	7′	4.0′	52	3.3′	2.9′	3′	5.2′	54	4.7′	2.1′	5′	5.0′	55	3.6′	2.5′
				10′	39	3.5′	3.5′	9′	5.2′	31	4.3′	3.7′	4′	6.9′	30	6.2′	2.8′	7′	7.0′	28	5.1′	3.5′
				12′	27	4.2′	4.2′	11′	6.4′	21	5.2′	4.5′	5′	8.7′	20	7.8′	3.5′	9′	9.0′	17	6.6′	4.5′
35W MR16 FL (FMW)	40°	1600	4000	4′	100	2.9′	2.9′	3′	1.7′	115	3.0′	2.5′	1′	1.7′	200	4.8′	1.5′	3′	3.0′	63	5.0′	3.1′
				6′	44	4.4′	4.4′	5′	2.9′	42	5.1′	4.2′	2′	3.5′	50	9.7′	2.9′	4′	4.0′	35	6.7′	4.1′
				8′	25	5.8′	5.8′	7′	4.0′	21	7.1′	5.8′	3′	5.2′	22	14.5′	4.4′	5′	5.0′	23	8.4′	5.1′
				10′	16	7.3′	7.3′	9′	5.2′	13	9.1′	7.6′	4′	6.9′	13	19.3′	5.8′	6′	6.0′	16	10.1′	6.2′
37W MR16 IR NSP	10°	11500	4000	6′	180	1.4′	1.4′	7′	4.0′	152	1.6′	1.4′	3′	5.2′	160	2.1′	1.0′	5′	5.0′	163	1.8′	1.2′
				12′	80	2.1′	2.1′	10′	5.8′	75	2.3′	2.0′	4′	6.9′	90	2.9′	1.4′	7′	7.0	83	2.5′	1.7′
				16′	45	2.8′	2.8′	13′	7.5′	44	3.0′	2.8′	5′	8.7′	58	3.6′	1.7′	9′	9.0′	50	3.2′	2.2′
				20′	29	3.5′	3.5′	16′	9.2′	29	3.7′	3.2′	6′	10.4′	40	4.3′	2.1′	11′	11.0′	34	3.9′	2.7′
37W MR16 IR NFL	25°	3500	4000	6′	97	2.7′	2.7′	5′	2.9′	91	3.0′	2.6′	2′	3.5′	109	4.2′	1.8′	3′	3.0′	137	2.8′	1.9′
				8′	55	3.5′	3.5′	7′	4.0′	46	4.2′	3.6′	3′	5.2′	49	6.2′	2.7′	5′	5.0′	49	4.7′	3.1′
				10′	35	4.4′	4.4′	9′	5.2′	28	5.4′	4.6′	4′	6.9′	27	8.3′	3.5′	7′	7.0′	25	6.5′	4.4′
				12′	24	5.3′	5.3′	11′	6.4′	19	6.6′	5.6′	5′	8.7′	18′	10.4′	4.4′	9′	9.0′	15	8.4′	5.6′
37W MR16 IR FL	40°	2050	4000	4′	128	2.9′	2.9′	3′	1.7′	148	3.0′	2.5′	1′	1.7′	258	4.8′	1.5′	3′	3.0′	61	5.0′	3.1′
				6′	57	4.4′	4.4′	5′	2.9′	53	5.1′	4.2′	2′	3.5′	64	9.7′	2.9′	4′	4.0′	45	6.7′	4.1′
				8′	32	5.8′	5.8′	7′	4.0′	27	7.1′	5.9′	3′	5.2′	28	14.5′	4.4′	5′	5.0′	29	8.4′	5.1′
				10′	21	7.3′	7.3′	9′	5.2′	16	9.1′	7.6′	4′	6.9′	16	19.3	5.8′	6′	6.0′	20	10.1′	6.2′
42W MR16 VNSP (EZY)	9°	13100	3500	8′	205	1.3′	1.3′	7′	4.0	174	1.5′	1.3′	3′	5.2′	182	1.9′	0.9′	5′	5.0′	185	1.6′	1.1′
				12′	91	1.9′	1.9′	10′	5.8′	85	2.1′	1.8′	4′	6.9′	102	2.6′	1.3′	7′	7.0	95	2.2′	1.6′
				16′	51	2.5′	2.5′	13′	7.5′	50	2.7′	2.4′	5′	8.7′	66	3.2′	1.6′	9′	9.0′	57	2.8′	2.0′
				20′	33	3.1′	3.1′	16′	9.2′	33	3.4′	2.9′	6′	10.4	45	3.8′	1.9′	11′	11.0′	38	3.5′	2.4′
50W MR16 NSP (EXT)	14°	10200	4000	8′	159	2.0′	2.0′	7′	4.0′	135	2.3′	2.0′	3′	5.2′	142	3.1′	1.5′	5′	5.0′	144	2.5′	1.7′
				12′	71	2.9′	2.9′	10′	5.8′	66	3.3′	2.8′	4′	6.9′	80	4.1′	2.0′	7′	7.0′	74	3.5′	2.4′
				16′	40	3.8′	3.9′	13′	7.5′	39	4.3′	3.7′	5′	8.7′	51	5.1′	2.5′	9′	9.0′	45	4.5′	3.1′
				20′	26	4.9′	4.9′	15′	9.2′	28	5.3′	4.5′	6′	10.4′	35	6.2′	2.9′	11′	11.0′	30	5.5′	3.8′
50W MR16 NFL (EXZ)	27°	3400	6000	6′	94	2.9′	2.9′	5′	2.9′	88	3.3′	2.8′	2′	3.5′	106	4.6′	1.9′	3′	3.0′	134	3.1′	2.0′
				8′	53	3.8′	3.8′	7′	4.0′	45	4.6′	3.9′	3′	5.2′	47	7.0′	2.9′	5′	5.0′	48	5.1′	3.4′
				10′	34	4.8′	4.8′	9′	5.2′	27	5.9′	5.0′	4′	6.9′	27	9.3′	3.6′	7′	7.0′	25	7.1′	4.8′
				12′	24	5.8′	5.8′	11′	6.4′	18	7.2′	6.1′	5′	8.7′	17	11.6′	4.8′	9′	9.0′	15	9.2′	6.1′
50W MR16 FL (EXN)	40°	1850	6000	4′	116	2.9′	2.9′	3′	1.7′	134	3.0′	2.5′	1′	1.7′	231	4.8′	1.5′	3′	3.0′	73	5.0′	3.1′
				6′	51	4.4′	4.4′	5′	2.9	48	5.1′	4.2′	2′	3.5′	58	9.7′	2.9′	4′	4.0′	41	6.7′	4.1′
				8′	29	5.8′	5.8′	7′	4.0′	25	7.1′	5.9′	3′	5.2′	26	14.5′	4.4′	5′	5.0′	26	8.4′	5.1′
				10′	19	7.3′	7.3′	9′	5.2′	15	9.1′	7.6′	4′	6.9′	14	19.3′	5.8′	6′	6.0′	18	10.1′	6.2′
50W MR16 WFL (FNV)	55°	1150	4000	3′	128	3.1′	3.1′	3′	1.7′	83	4.6′	3.6′	1′	1.7′	144	22.3′	2.1′	2′	2.0′	102	5.7′	2.9′
				5′	46	5.2′	5.2′	5′	2.9′	30	7.6′	6.0′	2′	3.5′	36	44.5′	4.2′	3′	3.0′	45	8.6′	4.4′
				7′	23	7.3′	7.3′	7′	4.0′	15	10.7′	8.4′	3′	5.2′	16	66.8′	6.2′	4′	4.0′	25	11.4′	5.9′
				9′	14	9.4′	9.4′	9′	5.2′	9	13.7′	10.8′	4′	6.9′	9	89.1′	8.3′	5′	5.0′	16	14.3′	7.4′
73W MR16 SP	10°	14000	4000	8′	219	1.4′	1.4′	7′	4.0′	186	1.6′	1.4′	3′	5.2′	194	2.1′	1.0′	5′	5.0′	198	1.8′	1.2′
				12′	97	2.1′	2.1′	10′	5.8′	91	2.3′	2.0′	4′	8.9′	109	2.9′	1.4′	7′	7.0′	101	2.5′	1.7′
				16′	55	2.8′	2.9′	13′	7.5′	54	3.0′	2.6′	5′	8.7′	70	3.6′	1.7′	9′	9.0′	61	3.2′	2.5′
				20′	35	3.5′	3.5′	16′	8.2′	36	3.7′	3.2′	6′	10.4′	49	43′	2.1′	11′	11.0′	41	3.8′	2.7′
73W MR16 FL	36°	2500	4000	4′	156	2.5′	2.6′	3′	1.7′	180	2.7′	2.3′	1′	1.7′	313	3.8′	1.3′	3′	3.0′	98	4.4′	2.8′
				6′	59	3.8′	3.8′	5′	2.9′	65	4.5′	3.8′	2′	3.5′	78	7.5′	2.6′	4′	4.0′	55	5.8′	3.7′
				8′	39	5.2′	5.2′	7′	4.0′	33	6.3′	5.3′	3′	5.2′	35	11.4′	3.9′	5′	5.0′	35	7.3′	4.6′
				10′	25	6.5′	6.5′	9′	5.2′	20	6.1′	6.6′	4′	6.9′	20	15.2′	5.2′	6′	6.0′	25	6.7′	5.5′

Job Information **Type:**

631 Airport Road, Fall River, MA 02720 • (508) 679-8131 • Fax (508) 674-4710
We reserve the right to change de[illegible] finish.
www.lightolier.com © 2008 Philip[illegible]

UMNH
AL-100

RECESSED MR16 LV TRIMLESS

Catalog #

Type

Project

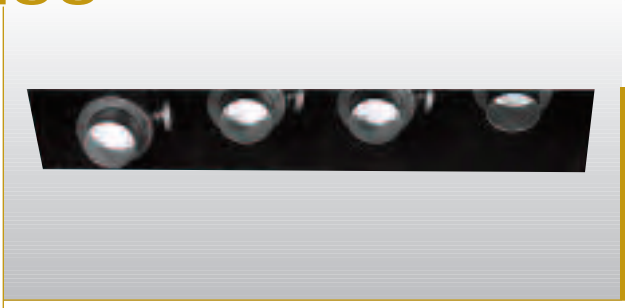

COMBOLIGHT® LV Series

FOUR (4) Light Recessed
Next Generation Trimless
Multi-Lamp Luminaire
Low Voltage MR16

DESCRIPTION:
An adjustable MR16 fixture suitable for multiple downlighting applications with one point of electrical entry. Powder coat finish on housing & lamp assembly. Housing suitable for new construction applications.

CONSTRUCTION:
All aluminum construction. Perforated mesh plaster frame adheres to ceiling compound for seamless trimless mounting. Beveled fixture opening provides easy mudding compound application. Can accommodate 0.50" or 0.625" drywall. Includes butterfly brackets for black iron commercial mounting.

LAMP ASSEMBLY:
4 - MR16 lamps mounted in adjustable bezels. Each lamp can accept up to two optical accessories. 380º x 45º locking adjustment. Fixture provides 45º visual cut-off. Lamp holders retract for added internal adjustment.

SYSTEM PROTECTION:
Thermal protection provided to guard against overheating, and misuse of insulation over and around fixture. Vent holes in housing provide cooler operation

ELECTRICAL:
Integral electronic transformer. Secondary lead is 11.5V. Primary lead is 120V. Dimmable. Junction box is UL listed for through branch wiring, (access above ceiling not required) for 8 #12, 90°C supply conductors or 60°C for end of run. Fused and short circuit protection. Transformers and electrical accessible through ceiling opening via access door on housing sidewall.

ALL RSA COMBOLIGHT PRODUCTS ARE MADE IN THE U.S.A.

Dimensions	A Housing Length	B Housing Height	C Aperture Length	D Aperture Width	E Plaster Frame Width	F Plaster Frame Length	G Above Ceiling Width	Ceiling Cut-Out
	22.77"	6.80"	17.00"	4.00"	9.75"	22.75"	11.75"	20.13" x 7.46"

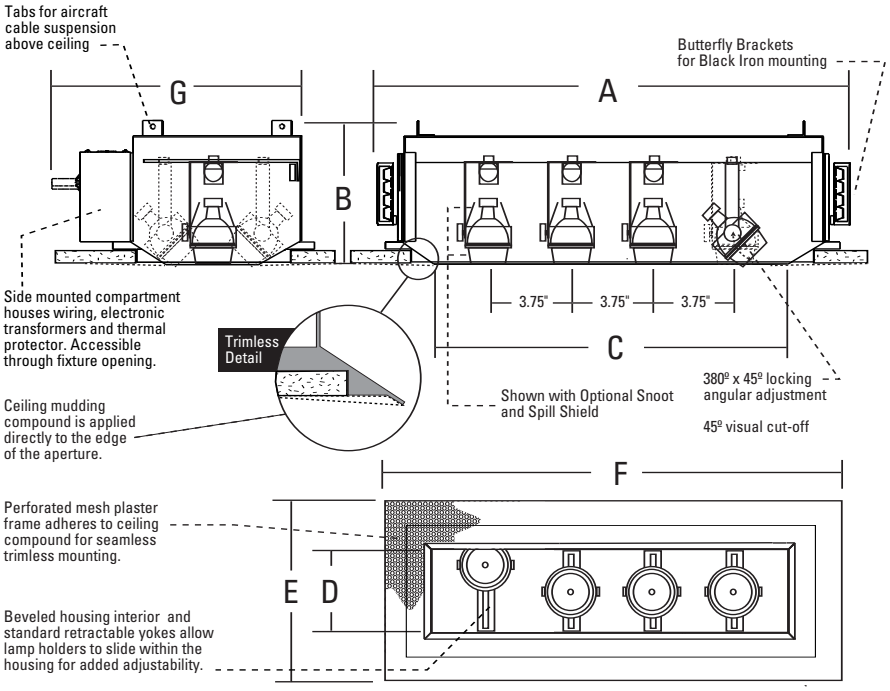

Other Adders
CC - Two Circuit
CP - Chicago Plenum

ORDERING EXAMPLE:

LV416	WH	50	120

= Four Light Trimless Recessed MR16 - White Interior - 50 watt lamps - 120 Volt

Optional Accessories - Details on Other Side

Baffle	Snoots	Louvers	Lenses

Cat. # / Description	Interior Finish	Lamp Wattage	Voltage
LV416 : 4 Light Recessed Next Generation Trimless Combo Fixture 12V MR16	**BK -** Black	**50 -** 50 Watt MR16	**120 -** 120 Volt (Standard)
	WH - White	**75 -** 75 Watt MR16	**277 -** 277 Volt
	S - Silver		
TBD	**PT -** Custom (Specify)		

SPECIFY -	LV416	____	____	

RSA LIGHTING

DESCRIPTION

3.5″ Round Downlight MR16 trim with 30º adjustable gimbal. For use with Armstrong® TechZone™ Ceiling products.

Trim face has Armstrong White finish with flat black internal finish

Catalog #	Type
Project	
Comments	
Prepared by	Date

SPECIFICATION / FEATURES

A ...Housing
All aluminum construction with 18″ of flexible conduit attached to a cylindrical transformer/wiring enclosure. Mounting hardware suited for TechZone™ ceilings exclusively.

B ...Trim:
3.5″ o.d. round trim with adjustable gimbal (30º tilt). Finished in Armstrong® white..

C ...System Protection:
Thermal protection inside housing. Vent holes in housing provide cooler operation. All aluminum construction provides overall reduced temperatures.

D ...Electrical
Electronic transformer housed in a separate metal enclosure. Enclosure includes a separated wiring compartment and entry for primary leads.

E ...Lamp
12V MR16 37 watts max. (not included)
"POSI-GRIP" bi-pin lamp socket for firm, mechanical lamp connection. Can accept up to two (2) optical accessories.

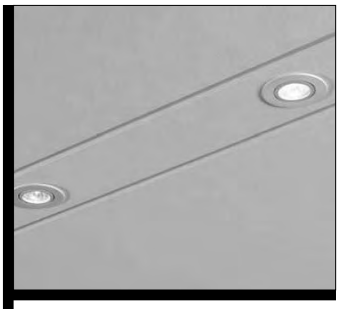

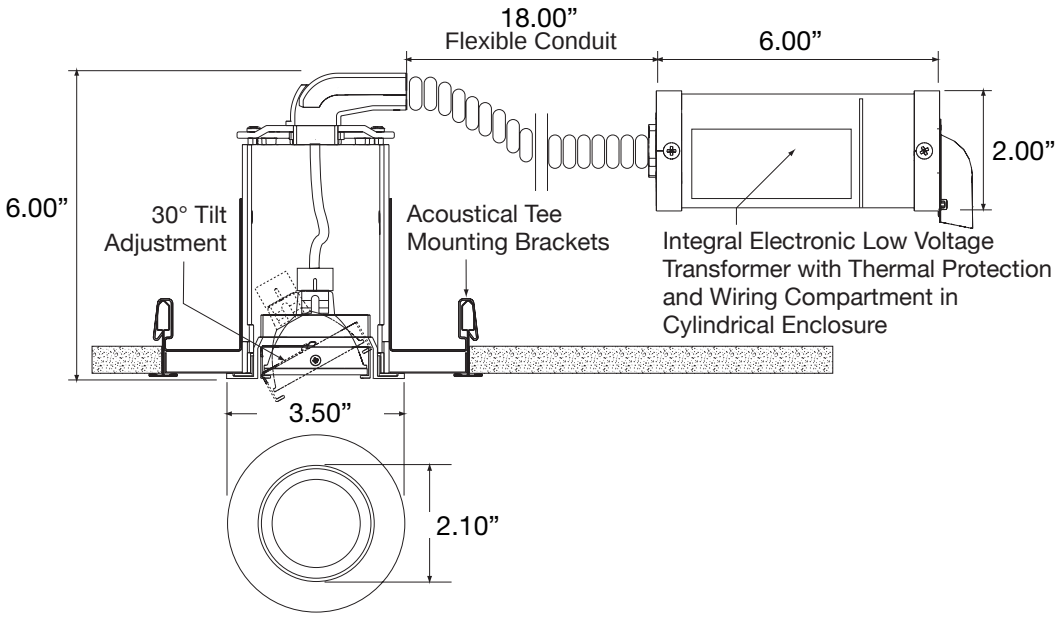

LYNX

Armstrong® TechZone™
Compatible

TZ3002
3.5″ Round Downlight Adjustable Gimbal

FOR 12V MR16 37 watts max.

ORDERING INFORMATION

TZ3002

TZ3002
3.5″ Round Adjustable Gimbal Trim
Includes Housing with Integral Electronic Transformer and J-box - Trim face has Armstrong White finish
12V MR16 37W max.

Source Four® HID PAR

HID Series

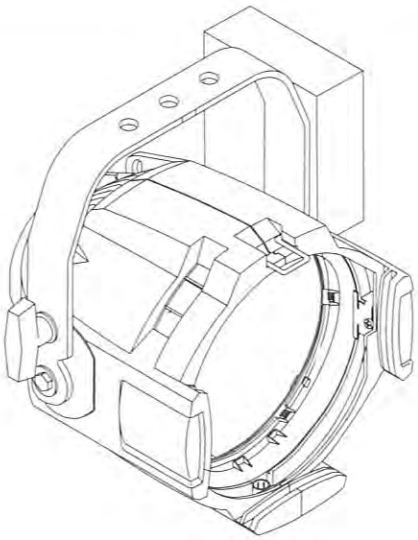

SPECIFICATIONS

High intensity discharge open reflector lighting fixture

PHYSICAL
- Yoke mounted electronic ballast
- Die-cast aluminum
- Tool free access to the reflector and lens
- High-impact, thermally insulated knobs
- Sealed reflector housing
- Reflector temperature control through integral heat sink fins
- Gel frame holders with two accessory slots
- Top-mounted, gel-frame retainer
- Steel yoke with two mounting positions
- Positive locking yoke clutch
- UL and cUL LISTED

ELECTRICAL
- 150W electronic ballast (yoke mounted)
- <14 Amps inrush current
- <10% Harmonic distortion
- >95% Power Factor
- 90% Ballast Efficiency
- 120 V Ballast:
  - 120V±10%, 60Hz
  - 1.5 Amps operating current
- 277 V Ballast:
  - 277V±10%, 60Hz
  - 0.61 Amps operating current

LAMP
- 150W Ceramic metal halide
- ETC Source Four HID is shipped with a 150W Philips MasterColor™ CDM
- 3000°K color temperature
  - 9000 hrs. lamp life
  - CRI-85
- Optional 150W Philips MasterColor™ CDM 4,000°K color temperature lamp available

LENSES
- Four heat resistant, molded borosilicate glass lenses supplied with each unit: Very Narrow Spot (VNSP), Narrow Spot (NSP), Medium Flood (MFL) and Wide Flood (WFL).
- Round beam for VNSP and NSP, oblong beam shape for MFL and WFL
- Tool free lens changing
- Thermally insulated lens ring

OPTICAL
- Modified parabolic and multifaceted reflector
- Computer designed reflector facets molded directly into heat sink casting, finished with an enhanced aluminum deposition process, and polished for maximum reflectance

ORDERING INFORMATION

TBD

Source Four HID PAR

Model#	Description
PAR-EA	Source Four HID PAR Enhanced Aluminum (Black)
PAR-EA-1	Source Four HID PAR Enhanced Aluminum (White)

Note: ETC Source Four HID PAR are supplied with Philips CDM master color 150W ceramic metal halide lamp, color frame and 6' (1.8 meter) leads as standard

Connector Designation

Use suffixes below to specify factory-fitted connector type	
Suffix	**Description**
A	Parallel-blade U-ground connector (120V only)
B	Two-pin and ground, 20 amp connector (120V only)
C	Grounded, 20 amp, twistlock connector (120V only)
D	Twistlock NEMA L7-20P (277V only)

Source Four HID PAR Accessories

Model#	Description
407CF	Color frame (7.5") (included)
400SC	Safety Cable
400CC	C-clamp
400–VNSP	Very Narrow Spot lens
400–NSP	Narrow Spot lens
400–MFL	Medium Flood lens
400–WFL	Wide Flood lens
400–LS4	Set of four Source Four PAR lenses (VNSP, NSP, MFL, WFL)
400PTH3	Top hat, 3"
400PTH6	Top hat, 6"
400PHH	Half hat
400XBTH	Cross baffle top hat
400PGE3	Gel extender, 3"
400PGE6	Gel extender, 6"
400BD	Barn door
400L	Egg crate louver
400WB	Weighted base

Note: For colors other than black or white, please call ETC

TBD

UMNH
AM-101

PHYSICAL

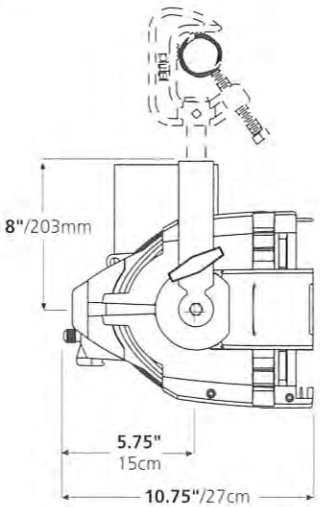

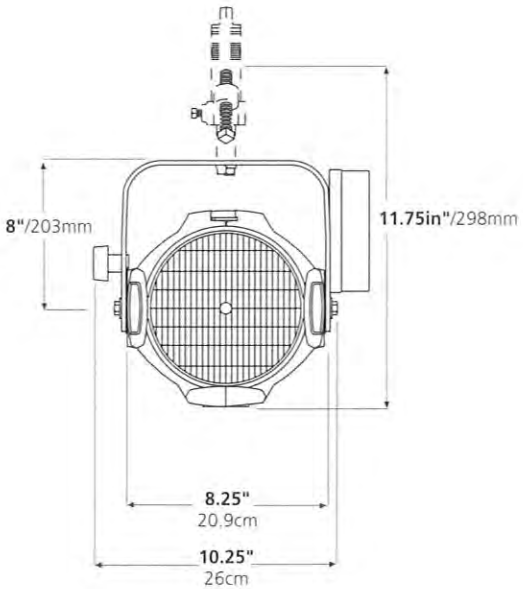

Ballast Dimensions

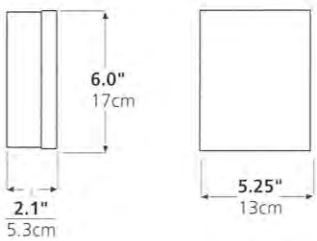

WEIGHTS

Source Four HID PAR Weights

Model	Weight		Shipping Weight	
	lbs	kgs	lbs	kgs
HID PAR	10.4	4.7	15.6	7.1

*Add 2.3 lbs for C-clamp

UMNH
AM-101

Americas 3030 Laura Lane, P.O. Box 620979, Middleton, WI 53562-0979 USA Tel: +1 608 831 4116 Fax: +1 608 836 1736 Toll free: 800 688 4116 Toll free fax: 800 555 8912
Europe Unit 5, Victoria Industrial Estate, Victoria Road, London W3 6UU, UK Tel: +44 (0)20 8896 1000 Fax: +44 (0)20 8896 2000
Asia Room 605-606, Tower III Enterprise Square, 9 Sheung Yuet Road, Kowloon Bay, Kowloon, Hong Kong Tel: +852 2799 1220 Fax: +852 2799 9325
Web: www.etcconnect.com **Email:** (US) mail@etcconnect.com (UK) mail@etceurope.com (Asia) mail@etcasia.com

Source Four® products protected by U.S. Patent Numbers 5,268,613, 5,345,371, 5,544,029, 5,446,637 and 5,775,799; Japanese Patent Number 2,501,772; US and International Patents Pending.
Copyright © 2002 ETC, Inc. All Rights Reserved. All product information and specifications subject to change. 7061L1010 Rev. A Printed in USA 08/02

Job Name: Type: Order Number:

MHLN303 Series 120/277V PAR30

MHLN303-00 (120V)
VMHLN303-00 (277V)

The MHLN303 Spotlight Series is a specification grade medium and long throw, high intensity unit specifically designed for the 39 watt PAR30 ceramic Metal Halide medium screw base lamps, which are highly efficient and long lived. Its light weight and functional styling also make it the perfect unit for all retail, display and exhibit, architectural, and residential environments.

UL and CUL Listed
USA Manufactured/IBEW

Features include rugged steel and aluminum construction, on/off switch on most mounting types, and multiple accessory clips for Size A accessories which include: Color Filters and Spread Lens, Louver, Light Blocking Screens and UV Blocking Filter. Unit available with 120 volt or 277 volt ballast.

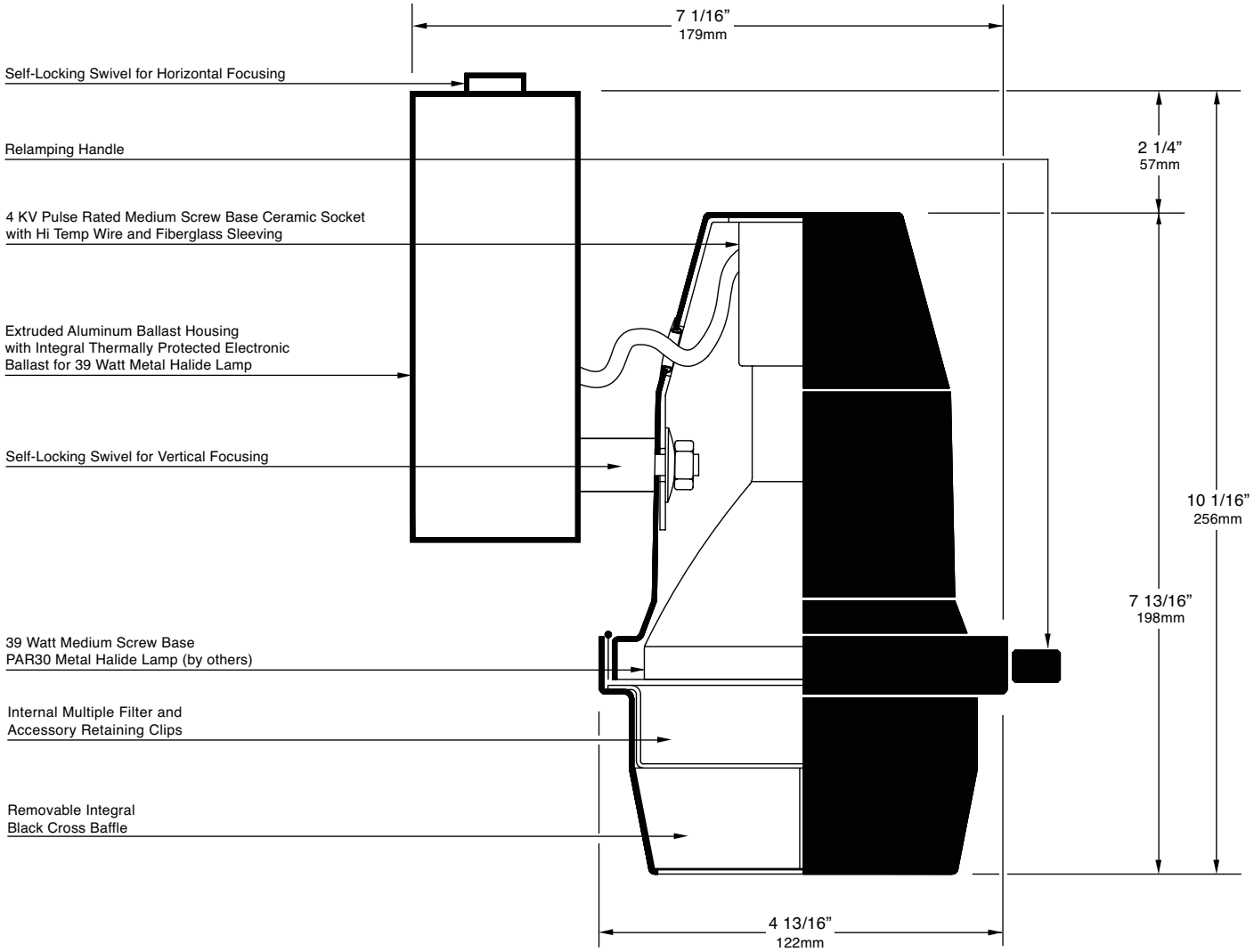

© 2005 Lighting Services Inc

UMNH
AM-102

Job Name: Type: Order Number:

MHLN303 Series 120/277V PAR30

Photometric Data [4]

CDM35/PAR30L/M/SP 39 watt, Spot

Beam Spread to 50% of CBCP	10°
Center Beam Candlepower	44000

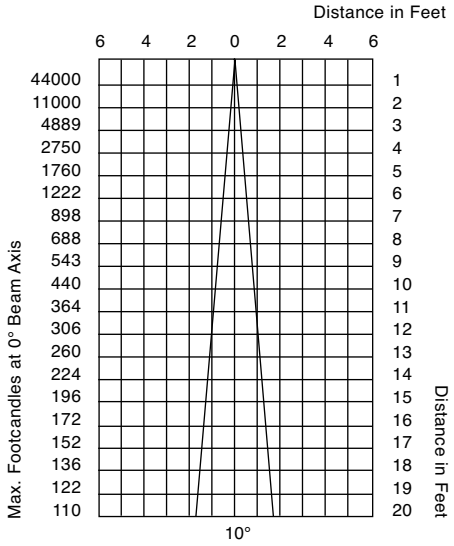

CDM35/PAR30L/M/FL 39 watt, Flood

Beam Spread to 50% of CBCP	30°
Center Beam Candlepower	7400

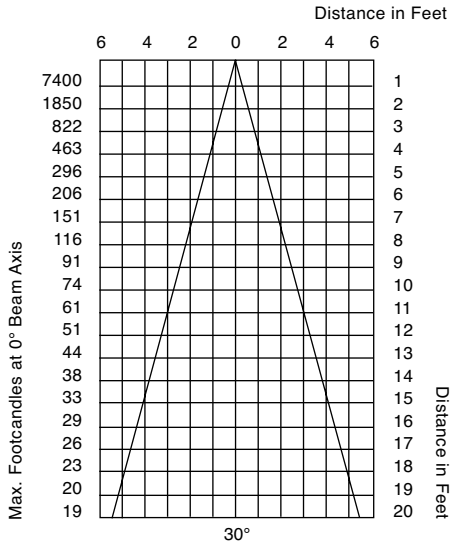

Lamp Types

CDM35/PAR30L/M/SP 39 watt, 9000 hours

Beam Spread to 50% of CBCP	10°
Center Beam Candlepower	44000
Color Temperature	3000K
Color Rendering Index	81

CDM35/PAR30L/M/FL 39 watt, 9000 hours

Beam Spread to 50% of CBCP	30°
Center Beam Candlepower	7400
Color Temperature	3000K
Color Rendering Index	81

CMH39/PAR30L/830/SP10 39 watt, 10000 hrs

Beam Spread to 50% of CBCP	10°
Center Beam Candlepower	39600
Color Temperature	3000K
Color Rendering Index	>80

CMH39/PAR30L/830/SP15 39 watt, 10000 hrs

Beam Spread to 50% of CBCP	15°
Center Beam Candlepower	29000
Color Temperature	3000K
Color Rendering Index	>80

CMH39/PAR30L/830/FL25 39 watt, 10000 hrs

Beam Spread to 50% of CBCP	25°
Center Beam Candlepower	11600
Color Temperature	3000K
Color Rendering Index	>80

Ballast Type (Electronic)

ANSI Specification	M130
Maximum Input Current	120/.37, 277/.17
Input Power	120/44W, 277/46W
Power Factor	>95%
THD	<10%, Nominal 6%

Accessories

Louver A
1/2" cellular metal louver, controls spill light and glare, 45° cutoff.

Glass Color Filters, Size A
Selection of 95 permanent rimmed dichroic and rimmed and slotted standard colors.

Spread Lens A990
Permanent glass for spreading light beam in one axis, 5°X 50°.

Spread Lens A992
Permanent molded glass lens for spreading light beam in one axis—nominal 5°X 30°.

Spread Lens A995
Permanent molded glass lens for spreading light beam in all directions — nominal 50°X 50°.

Spread Lens A996
Permanent molded glass lens for spreading light beam in one direction slightly more than the other — nominal 45°X 50°.

Beam Softener A998
Permanent glass lens for conditioning light to create a softer beam.

OPTIVEX™ UV Blocking Filter A962
Eliminates ultra-violet wavelengths below 410±10nm. Especially useful for conservation of artworks and to help prevent fading.

Light Blocking Screens, Size A
A801S-20% Light Blocking, A802S-30% Light Blocking, A803S-40% Light Blocking Stainless Steel Screens. Used individually or in combination to reduce transmitted light without changing its color temperature.

Coiled Cord
18/3 105°C, 18" retracted, 6 foot extended. Specify by adding suffix **CC** to model number. White fixture supplied with white cord, all other finishes supplied with black cord.

Wrench Locking
For permanent locking of fixture position, add suffix "WL" to model number.

Ordering Information

Model Number
add prefix **V** for **277 Volt**
add suffix letters for finish

MHLN303-00
Lexan Fitting for 1 and 2 circuit LSI Track. With switch.

MHLN303-00F
Same as above, with fuse.

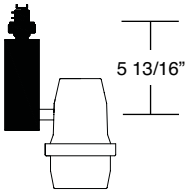

MHLN303-2G
Universal fitting for Unistrut Systems and any screw or bolt-up applications. With switch, 6-foot 3-wire grounding cord and plug.

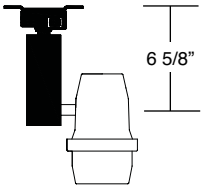

MHLN303-3G
C-clamp for pipes from 5/8" to 2" O.D. With switch, 6-foot 3-wire grounding cord and plug.

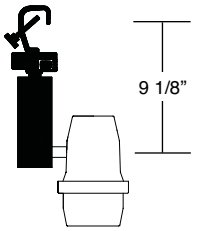

* **MHLN303-4G**
Cushioned weighted base for floor or table use. With switch, 6-foot 3-wire grounding cord and plug.

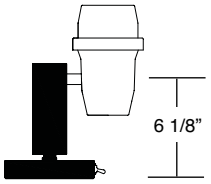

MHLN303-5A
Canopy for permanent mounting on standard 4" octagonal outlet box.

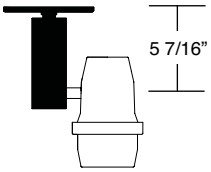

Finishes (Paint)

Black	(suffix B)
White	(suffix W)
Silver	(suffix S)
Graphite	(suffix G)
Platinum	(suffix P)

UMNH
AM-102

Notes:
1. CBCP = Center Beam Candlepower
2. K = Color Temperature in Kelvin degrees
3. OPTIVEX™ glass is a trademark of Bausch & Lomb Inc.
4. Lamp manufacturers published data

* Non-UL and Non-CUL

FEATURES

OPTICAL SYSTEM

- Center Beam optical system centers the lamp relative to the true aperture, optimizing lamp efficiency.
- Tool-less 0° - 40° vertical and 360° horizontal lamp adjustments made with the trim assembly removed for simple focusing. Lockable adjustment mechanisms maintain focus during relamping and are visible from below the ceiling with trim assembly removed.
- Designed to allow hot aiming.
- Self-flanged, specular clear, semi-diffuse or highly specular anodized cone designed to minimize backflash. Contour cut reduces visibility of inner housing.
- Trim assembly retained by self-aligning torsion springs.
- Internal housing components painted black.

MECHANICAL SYSTEM

- Black painted housing features tool-less top access and accommodates a maximum 1-1/2" ceiling thickness.
- Re-lamp capability from above or below ceiling.
- Mounting bars are 16-gauge galvanized steel with continuous 4" vertical adjustment, held in place with tool-less, integral cam-action locking. Post installation adjustment possible without the use of tools from above or below the ceiling. Shipped pre-installed.
- Secondary housing adjustment system for precise, final ceiling to flange alignment.
- Galvanized steel junction box with bottom-hinged access covers and spring latches. Two combination 1/2" - 3/4" and three 1/2" knockouts for straight-through conduit runs. Capacity: 8 (4 in, 4 out) No. 12 AWG conductors, rated for 90°C.

ELECTRICAL SYSTEM

- Tool-less access door provides access to junction box through the aperture.
- Medium base porcelain socket with nickel-plated screw shell.
- Pre-wired, encased-and-potted, electromagnetic, 120/277V or 120/347V ballast tray module is standard. Module can be attached before or after mounting of mounting/plaster frame, but before drywall installation. Ballast maintenance through aperture requires removal of housing.
- Thermally-activated insulation detector is replaceable without the use of tools.•

LISTING

- Fixtures are UL Listed for thru-branch wiring, recessed mounting and damp locations. Listed and labeled to comply with Canadian Standards.

Type ..... Catalog number .....

Line Voltage HID

4" DPH

PAR Directional

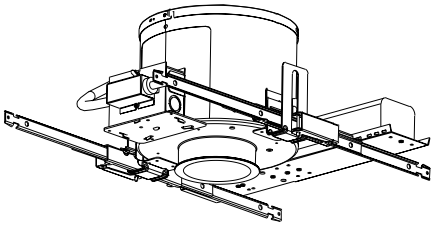

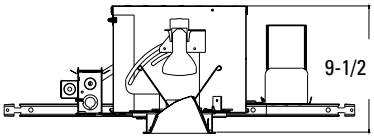

Aperture:	4-3/8 (11.1)
Ceiling opening:	5-1/16 (12.9
Overlap trim:	5-7/16 (13.8)

All dimensions are inches (centimeters).

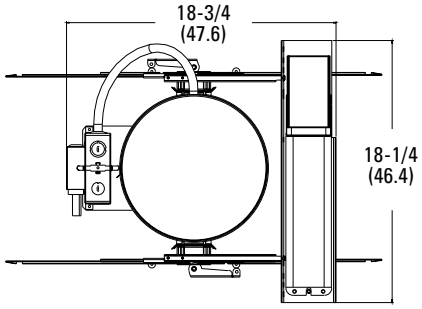

ORDERING INFORMATION

Example: **DPH P2039MHC 4ACT30 120 TRW**

Choose the boldface catalog nomenclature that best suits your needs and write it on the appropriate line.
Order accessories as separate catalog numbers (shipped separately).

DPH

Series: DPH

Size: P20

Aperture: 4

Lamp designation: **39MHC** 39W PAR20

Cone/Color

AC	Clear
BC[1]	Black
PC	Pewter
WTC	Wheat
UBC	Umber
GC[2]	Gold
CC[2]	Champagne gold
WC[1]	White
MB[1]	Contoured black baffle
WB[1]	Contoured white baffle

Type

T30	Cut for angles 25°-40°
T20	Cut for angles 15°-25°
T00	Cut for angles 0°-15°

Finish

(blank)	Specular low iridescent
LD	Semi-diffuse low iridescent
LS	Highly specular

Voltage: **120** **277** **347**

Ballast

(blank)	Electromagnetic ballast
HEB[3]	Electronic ballast

Options

TRW	White painted flange. (Standard with WC, MB, and WB.)
LRC[4]	Provides compatibility with Lithonia Reloc System.
QRS[5,6,7]	Quartz restrike system (uses 100W max. DC base quartz lamp by others)
QRSTD[5,6,7]	Quartz restrike system with time delay.
EC	Emergency circuit (DC socket with leads for connection to external emergency power source; 100W max. lamp).
SF	Single fuse.
CP	Chicago Plenum.
LPFL	Flood lamp (shipped separately).
LPSP	Spot lamp (shipped separately).

NOTES

1 Not available with finishes.
2 Not recommended for use with metal halide lamps; consult factory.
3 Available in 120V or 277V only.
4 For compatible Reloc systems, refer to options and accessories tab.
5 Not available with HEB.
6 QRS, QRSTD and EC not available in combination or with filter holders.
7 Above ceiling access required for ballast maintenance.
8 Refer to Options & Accessories tab for lens color availability.

Accessories

LFH300	Locking Filter Holder for use with PAR20.
LTWFH400 DBL	Filter Holder for use with PAR20 lamps.
F300[8]	Lens for use with 300 series filter holder.
F400[8]	Lens for use with 400 series filter holder.

gotham®
An Acuity Brands Company

GOTHAM ARCHITECTURAL DOWNLIGHTING
A DIVISION OF ACUITY LIGHTING GROUP, INC.
1400 Lester Road Conyers Georgia 30012
P 800 315 4982 F 770 860 3129
www.gothamlighting.com

UMNH
AM-103

4" DPH HID, PAR Directional

LAMP PERFORMANCE DATA

The lighting performance data charts shown provide lighting levels (footcandles), beam pattern (in feet), rated lamp life (hours).

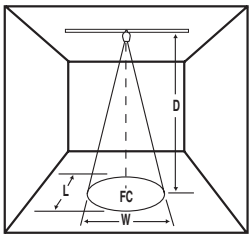

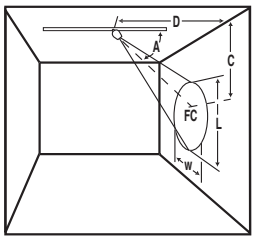

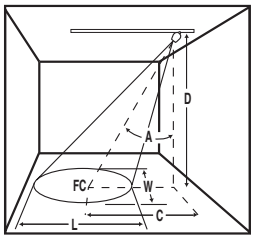

			0° Aiming					30° Aiming					45° Aiming					60° Aiming				
	Rated Life	Beam Spread	D	FC	W	L	C	D	FC	W	L	C	D	FC	W	L	C	D	FC	W	L	C
CDM35/PAR20/M/FL	9000	30	6	139	3.2	3.2	N/A	6	90	3.7	4.4	3.5	4	110	3.0	4.6	4.0	2	156	2.1	5.5	3.5
CBCP = 5000			8	78	4.3	4.3	N/A	8	51	5.0	5.9	4.6	6	49	4.5	6.9	6.0	4	39	4.3	10.9	6.9
			10	50	5.4	5.4	N/A	10	32	6.2	7.3	5.8	8	28	6.1	9.2	8.0	6	17	6.4	16.4	10.4
CDM35/PAR20/M/SP	9000	10	10	230	1.7	1.7	N/A	10	149	2.0	2.3	5.8	10	81	2.5	3.5	10.0	4	180	1.4	2.9	6.9
CBCP = 23,000			15	102	2.6	2.6	N/A	12	104	2.4	2.8	6.9	12	56	3.0	4.2	12.0	6	80	2.1	4.3	10.4
			20	58	3.5	3.5	N/A	14	76	2.8	3.3	8.1	14	41	3.5	4.9	14.0	8	45	2.8	5.7	13.9

NOTES

1 For electrical characteristics refer to the Technical Data tab.

2 Tested to current IES and NEMA standards under stabilized laboratory conditions. Various operating factors can cause differences between laboratory data and actual field measurements. Dimensions and specifications are based on the most current available data and are subject to change without notice.

©2003 Gotham, Rev. 01/03

gotham
An Acuity Brands Company

GOTHAM ARCHITECTURAL
A DIVISION OF ACUITY LIGHT
1400 Lester Road Conyer
P 800 315 4982
www.got

UMNH
AM-103

238 SERIES • 120V • PAR38

This medium and long throw unit is perfect for areas requiring visually quiet, high intensity light.

- Designed for all PAR38 medium screw base lamps up to 250 watts
- Sturdy aluminum housing
- Rugged steel self-locking yoke allows for horizontal and vertical focusing
- On/off safety switch (on most mounting types)
- Equipped with beam rotation and relamping handle for easy lamp changing
- Front rotation lock for alignment of directional accessories
- Has beam rotation lock for applications that require positive focus locking
- Removable front hinge assembly allows fixture to be transformed from spotlight to wallwash in seconds
- Internal accessory cartridge holds up to three size C LSI filters and accessories
- Removable cross-baffle eliminates glare (45 degree cutoff)
- Integral dimmer is available
- Finishes: LSI Black, White, Silver and Graphite
- Fixture weight: 1.5 lbs.
- c UL us IBEW

MOUNTING OPTIONS

238-00
Lexan fitting for 1 and 2 circuit LSI Track. With On/Off switch.

238-00F
Same as above, with fuse.

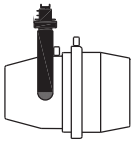

238-2G
Universal fitting for Unistrut Systems and any screw or bolt-up applications. With switch, straight 6-foot 3-wire grounding cord and NEMA 5-15P plug.

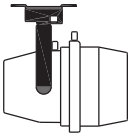

238-3G
C-clamp for pipes from 5/8" to 2" O.D. With switch, straight 6-foot 3-wire grounding cord and NEMA 5-15P plug.

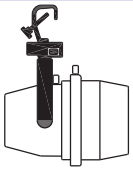

*** 238-4G**
Cushioned weighted base for floor or table use. With straight 6-foot 3-wire grounding cord and NEMA 5-15P plug.

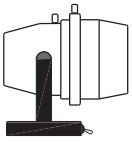

238-5A
Canopy for permanent mounting on standard 4" octagonal outlet boxes.

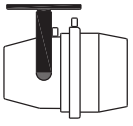

Other Options (Consult Factory):
- Stems, specify length
- Custom color, RAL palette
- Emergency Fixture, add suffix **EF** (for use with 00 Track fitting only)

* Non-UL and Non-CUL

UMNH

AP-101

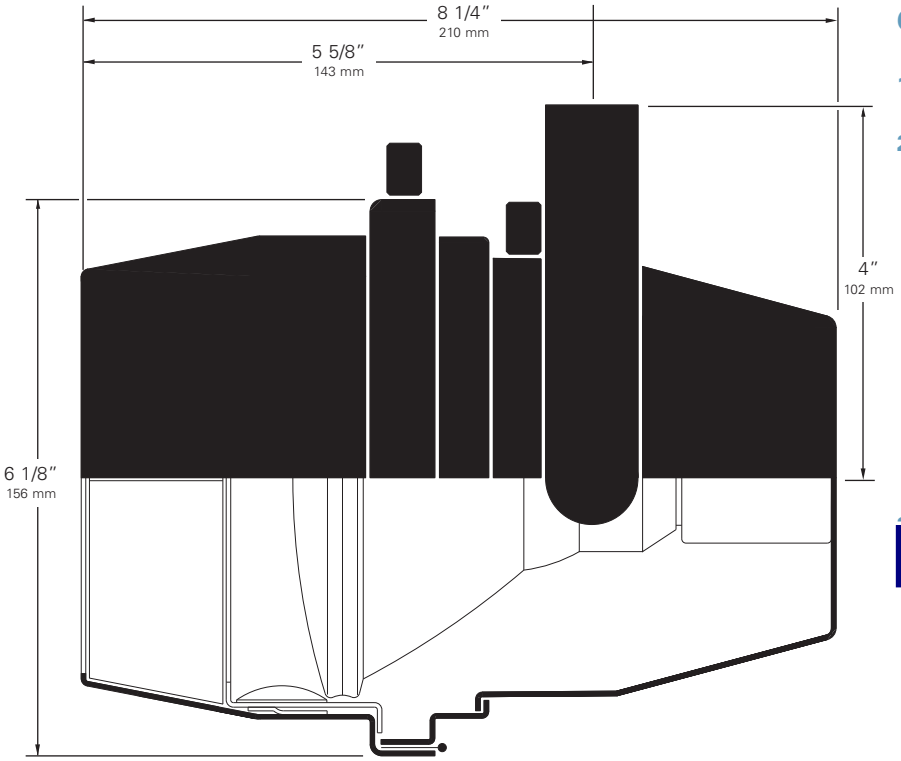

ORDERING INFORMATION

1. Select your **Mounting Option.**

2. Choose other fixture **Options** (add suffix):
   - For Coiled Cord, add **CC**

   Coiled Cord is 18/3 105°C, 18″ retracted, 6 foot extended. White fixtures are supplied with white cord, all other finishes are supplied with black cord. Available only with **2G**, **3G** and **4G** mounting options. (When a coiled cord is not specified, a straight cord is provided.)
   - For Wrench Locking, add **WL**
   - For Integral Dimmer, add **FD**

TBD

3. Choose a **Finish** for your fixture:
   Black (**B**) White (**W**) Silver (**S**) Graphite (**G**)

   Example: **238** — **2G** **CC** **WL** **FD** **B**
   FIXTURE FITTING COILED CORD WRENCH LOCKING DIMMER FINISH

   Blue fields are optional. Leave blank if not required.

4. Don't forget your **Accessories!**
   LSI features the widest range of accessories in the industry to help you modify the light's intensity, color, texture and pattern.

PAR38 LAMPS

Watts	Spread	CBCP	
50	10°	14000	50PAR/HIR/SP10
50	30°	3000	50PAR/HIR/FL30
60	10°	20000	60PAR/HIR/SP10
60	30°	3600	60PAR/HIR/FL30
60	40°	2000	60PAR/HIR/FL40
80	10°	25000	80PAR/HIR/SP10
80	25°	5500	80PAR/HIR/FL25
90	10°	16000	90PAR/H/SP10
90	12°	12000	90PAR/HIR/SP12/XL
90	25°	4100	90PAR/H/FL25
90	25°	4100	90PAR/H/CB/FL25
90	40°	2800	90PAR/HIR/FL40/XL
100	10°	29000	100PAR/HIR/SP10
100	25°	6300	100PAR/HIR/FL25
100	40°	3400	100PAR/HIR/FL40
250	10°	40000	Q250PAR/SP10
250	30°	9000	Q250PAR/FL30

Click for detailed photometrics

ACCESSORIES

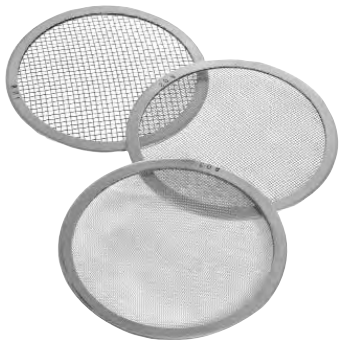

Light Blocking Screens C801S, C802S, C803S

Stainless steel screens, used to reduce transmitted light without changing its color temperature.

Other accessories:

- **Louver C**
- **Glass Color Filters C**
- **Spread Lenses C990, C992, C995, C996**
- **Beam Softener C998**
- **OPTIVEX™ UV Filter C962**

239FR Entire Wall Wash Front Assembly *includes sla ca ler*

UMNH

AP-101

Click for complete accessories and descriptions

260 SERIES • 12V • MR16

The miniaturized 260 series spotlight is integrated with a low profile fitting that houses an electronic transformer.

- Designed for Tungsten Halogen 2-pin base MR16 lamps up to 75 watts
- Can be configured for use on 120V or 277V systems
- Sturdy aluminum housing
- Removable front hinge assembly allows fixture to be transformed from a spotlight to wall wash fixture in seconds
- Self-locking yoke for horizontal and vertical focusing
- On/off safety switch (on -00 Track fitting)
- Hinged front with relamping handle for easy lamp changing
- Internal multiple accessory clips accept any double combination of size-AAA LSI filters and accessories
- Removable cross-baffle eliminates frontal spill light and glare
- Front rotation lock for alignment of directional accessories
- Lexan track fitting with recessed transformer with Integral 75VA 120V electronic transformer
- Integral clear Pyrex safety shield
- Finishes: LSI Black, White, Silver and Graphite
- Fixture weight: 1.5 lbs.
- c UL us IBEW

MOUNTING OPTIONS

*** 260-00**
Lexan Fitting for
1 and 2 circuit
LSI Track.
With On/Off switch.

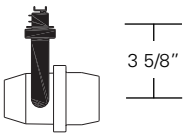

260-5E
Canopy for permanent
mounting on standard 4"
octagonal outlet boxes.
With transformer.

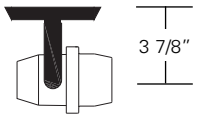

Other Options (Consult Factory):
- Stems, specify length
- Custom color, RAL palette

* Not for use with Unimount or Emergency/Worklite track.

UMNH
AP-102

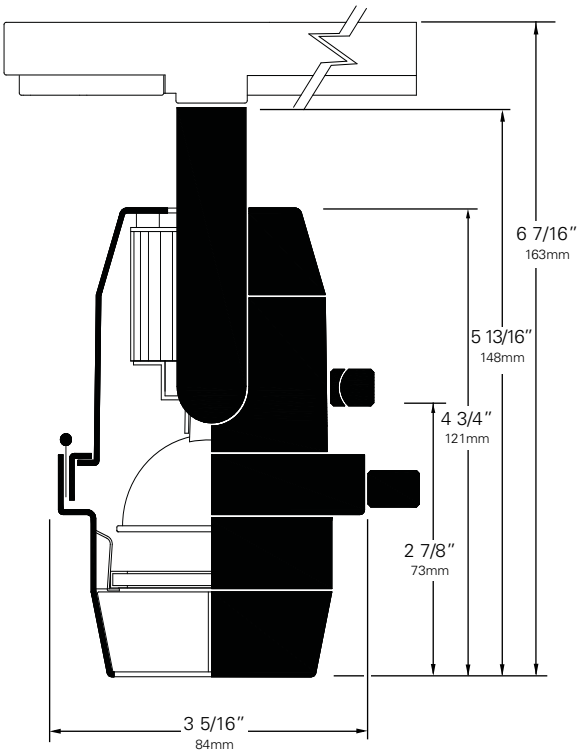

ORDERING INFORMATION

1. Select your **Mounting Option.**
2. If a 277V unit is required, add a **V** before the unit number. Track fitting dimensions slightly larger for 277V.
3. For Wrench Locking, add **WL.**
4. Choose a **Finish** for your fixture:
   Black (**B**) White (**W**) Silver (**S**) Graphite (**G**)

   Example: **V** (277V UNIT) **260** (FIXTURE) — **00** (FITTING) **WL** (WRENCH LOCKING) **B** (FINISH)

   Blue fields are optional. Leave blank if not required.
5. Don't forget your **Accessories!**
   LSI features the widest range of accessories in the industry to help you modify the light's intensity, color, texture and pattern.

MR16 LAMPS

Watts	Spread	CBCP	
20	7°	7400	Q20MR16/C/VNSP7
20	15°	3750	Q20MR16/C/NSP15
20	40°	525	Q20MR16/C/FL40
35	8°	11000	35MR16/NSP/8
35	20°	3900	Q35MR16/C/SP20
35	40°	1000	Q35MR16/C/NFL40
42	9°	12300	Q42MR16/C/VNSP9
50	15°	9100	Q50MR16/C/NSP15
50	25°	3200	Q50MR16/C/NFL25
50	30°	2500	Q50MR16/C/NFL/30
50	40°	1700	Q50MR16/C/FL40
50	55°	900	Q50MR16/C/WFL55
71	15°	11500	Q71MR16/C/NSP15
71	25°	5500	Q71MR16/C/NFL25
71	40°	2200	Q71MR16/C/FL40

Click for detailed photometrics

ACCESSORIES

Spread Lenses AAA990, AAA992, AAA995, AAA996

Other accessories:

- **Louver Hex AAA**
- **Glass Color Filters AAA**
- **Beam Softener AAA998**
- **Light Blocking Screens AAA801S, AAA802S, AAA803S**
- **OPTIVEX™ UV Blocking Filter AAA962**
- **261FR Entire Wall Wash Front Assembly** includes slash front, accessory cartridge, spread lens and kicker reflector.

Click for complete accessories and descriptions

UMNH
AP-102

ETC

Source Four® PAR EA

100V 115/120V 230/240V

PAR Series

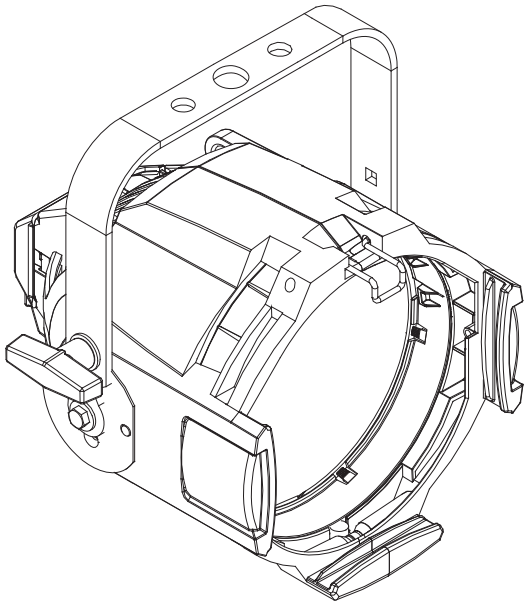

SPECIFICATIONS

PHYSICAL

- Rugged die-cast aluminum construction
- Tool free access to the reflector and lens
- High-impact, thermally insulated knobs
- Sealed reflector housing
- Reflector temperature control through integral heat sink fins
- Gel frame holders with two accessory slots
- Top-mounted, gel-frame retainer
- Steel yoke with two mounting positions
- Positive locking yoke clutch
- UL and cUL Listed

ELECTRICAL

- 115-240V, 50/60Hz
- High-temperature three-conductor 36" leads in a glass fiber outer sleeve
- Supports ETC Dimmer Doubling™ technology

LAMP

- Compact tungsten filament contained in a krypton/xenon-filled quartz envelope (see table for suitable lamp types)
- 750W maximum
- Patented filament geometry makes for extremely efficient light collection and transmission
- Integral die-cast aluminum heat sink lamp base

LENSES

- Four heat resistant, molded borosilicate glass lenses supplied with each unit: Very Narrow Spot (VNSP), Narrow Spot (NSP), Medium Flood (MFL) and Wide Flood (WFL).
- Round beam for VNSP and NSP, oblong beam shape for MFL and WFL
- Optional Extra Wide Flood lens (XWFL) also available
- Tool free lens changing
- Thermally insulated lens ring

SPECIFICATIONS

OPTICAL

- Modified parabolic and multifaceted reflector
- Computer designed reflector facets molded directly into heat sink casting, finished with an enhanced aluminum deposition process, and polished for maximum reflectance
- Metal Cold Mirror (MCM) also available

ORDERING INFORMATION

TBD

Source Four PAR EA

MODEL	DESCRIPTION
PAR-EA	Source Four PAR Enhanced Aluminum (Black)
PAR-EA-1	Source Four PAR Enhanced Aluminum (White)

ETC Source Four PAR EA are supplied with 4 lens set: VNSP, NSP, MFL, WFL; color frame and 3' (96cm) lead as standard

Connector Designation

Use Suffixes below to specify Factory–Fitted Connector type

MODEL	DESCRIPTION
-A	Parallel-blade U-ground connector
-B	Two-pin and ground, 20 amp connector
-C	Grounded, 20 amp, twistlock connector
-M	Dimmer Doubling Connector (NEMA L515P)

See back page for Source Four PAR Accessories

UMNH
AP-103

PHOTOMETRICS

Photometric data below is measured with an HPL 750W/115V 300 hr lamp. To convert data when using any other HPL lamp, use the lumen or candela multiplying factors (Lm MF or Cd MF) for that specific lamp. These multiplying factors are listed in the Lamps table in this datasheet. For lumen data, multiply by the Lm MF. For candela or footcandle data, multiply by the Cd MF.

Source Four PAR EA with VNSP lens

Degree	Candela	Field Lumens	Beam Lumens	Efficiency	Lumens per watt
VNSP	382,145	9,640	5,395	44%	12.9

For Field diameter at any distance, multiply distance by 0.29

For Beam diameter at any distance, multiply distance by 0.16

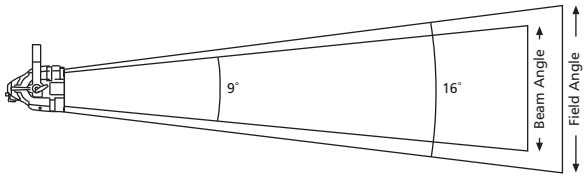

Throw Distance (d)	30′ 9.1m	50′ 15.2m	70′ 21.3m	85′ 25.9m
Field Diameter	8.6′ 2.6m	14.4′ 4.4m	20.2′ 6.1m	24.5′ 7.5m
Illuminance (fc)	425	153	78	53
Illuminance (lux)	4,570	1,645	839	569

Source Four PAR EA with NSP lens

Degree	Candela	Field Lumens	Beam Lumens	Efficiency	Lumens per watt
NSP	336,740	9,504	5,280	43.4%	12.7

For Field diameter at any distance, multiply distance by 0.30

For Beam diameter at any distance, multiply distance by 0.16

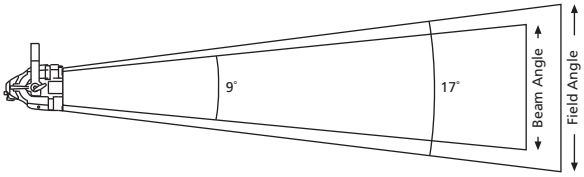

Throw Distance (d)	25′ 7.6m	45′ 13.7m	65′ 19.8m	80′ 24.4m
Field Diameter	7.4′ 2.3m	13.3′ 4.1m	19.3′ 5.9m	23.7′ 7.2m
Illuminance (fc)	539	166	80	53
Illuminance (lux)	5,799	1,790	858	566

Iso-Illuminance Diagram
(Flat Surface Distribution)

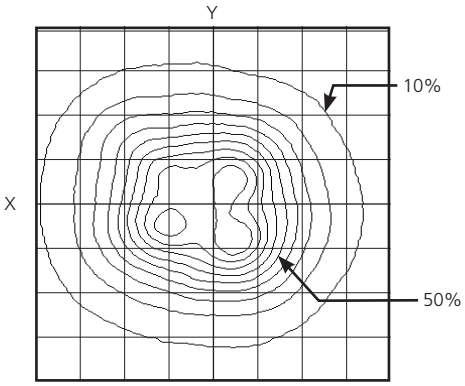

Iso-Illuminance Diagram
(Flat Surface Distribution)

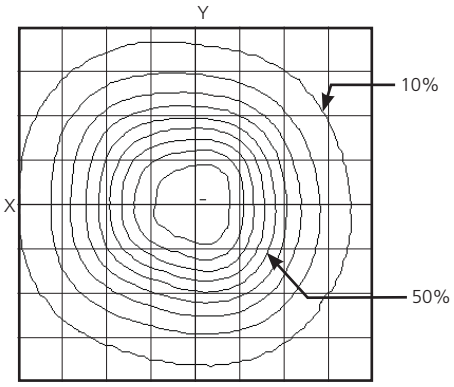

Candela Plot

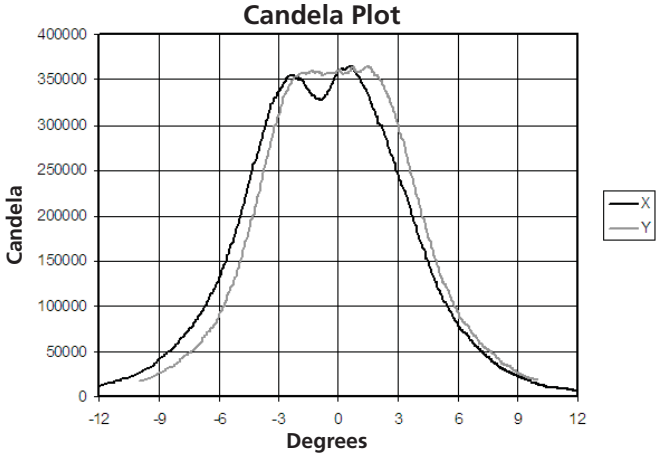

Candela Plot

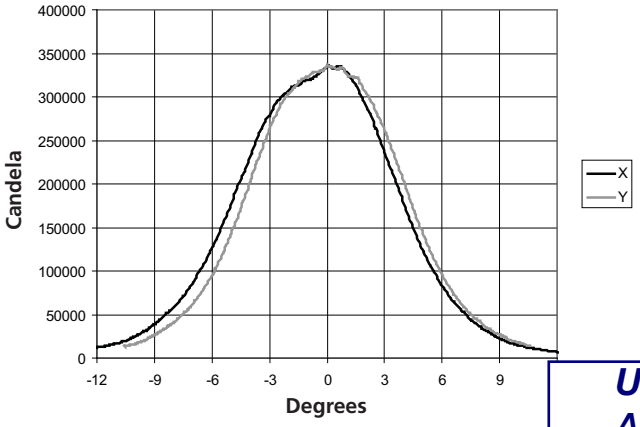

UMNH
AP-103

Metric Conversions: For Meters multiply feet by .3048
For Lux multiply footcandles by 10.76

PHOTOMETRICS

Source Four PAR EA with MFL lens

Degree	Candela	Field Lumens	Beam Lumens	Efficiency	Lumens per watt
MFL	135,225	9,890	5,580	45.2%	13.2

For Field diameter at any distance, multiply distance by 0.41V / .56H

For Beam diameter at any distance, multiply distance by 0.22V / .32H

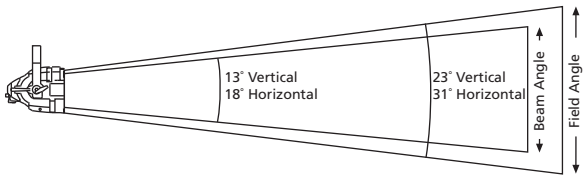

Throw Distance (d)	15′ 4.6m	25′ 7.6m	40′ 12.2m	50′ 15.2m
Field Diameter	6.2′/8.4′ 1.9m/2.6m	10.3′/14.0′ 3.2m/4.3m	16.6′/22.5′ 5.0m/6.9m	20.7′/28.1′ 6.3m/8.6m
Illuminance (fc)	601	216	85	54
Illuminance (lux)	6,467	2,329	910	582

Source Four PAR EA with WFL lens

Degree	Candela	Field Lumens	Beam Lumens	Efficiency	Lumens per watt
WFL	47,270	9,220	5,240	42.1%	12.3

For Field diameter at any distance, multiply distance by 0.66V / 0.95H

For Beam diameter at any distance, multiply distance by 0.35V / 0.55H

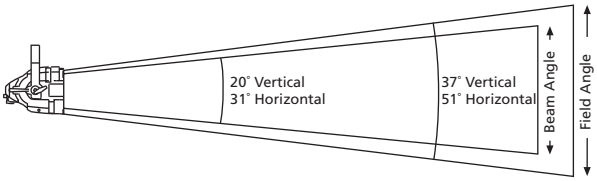

Throw Distance (d)	8.0′ 2.4m	16.0′ 4.9m	24.0′ 7.3m	30.0′ 9.1m
Field Diameter	5.3′/7.6′ 1.6m/2.3m	10.6′/15.3′ 3.2m/4.7m	15.8′/22.9′ 4.8m/7.0m	19.8′/28.6′ 6.0m/8.7m
Illuminance (fc)	739	185	82	53
Illuminance (lux)	7,950	1,987	883	565

Iso-Illuminance Diagram
(Flat Surface Distribution)

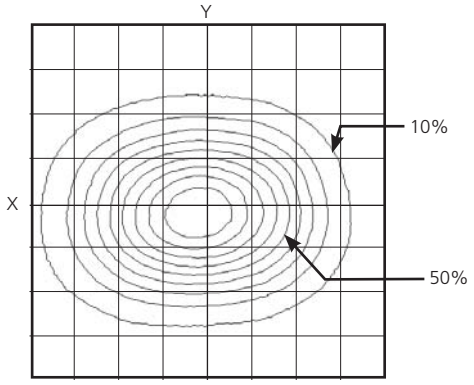

Iso-Illuminance Diagram
(Flat Surface Distribution)

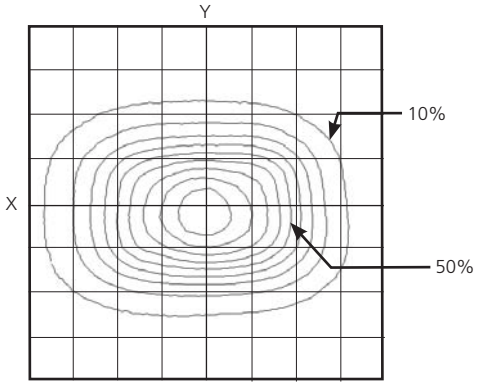

Candela Plot

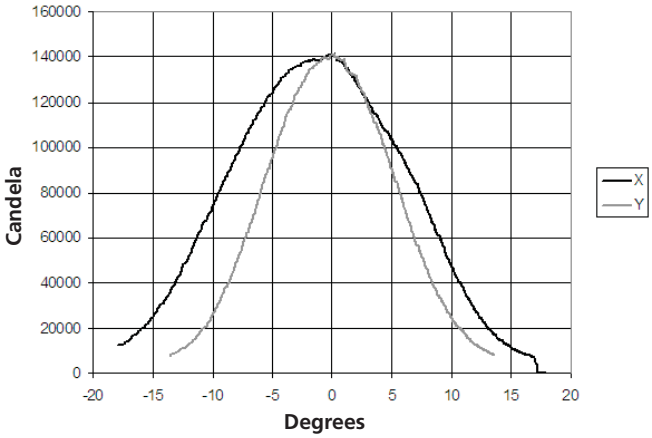

Candela Plot

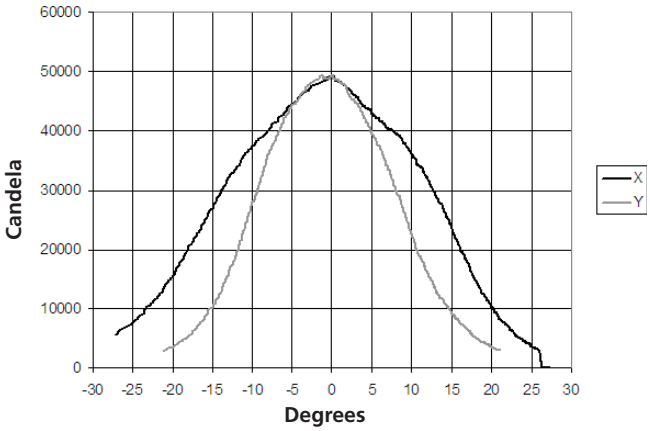

Complete IES photometry data files (LM-63-02 format) may be downloaded from the ETC website.

Go to http://www.etcconnect.com/downloads.asp

UMNH
AP-103

PHYSICAL

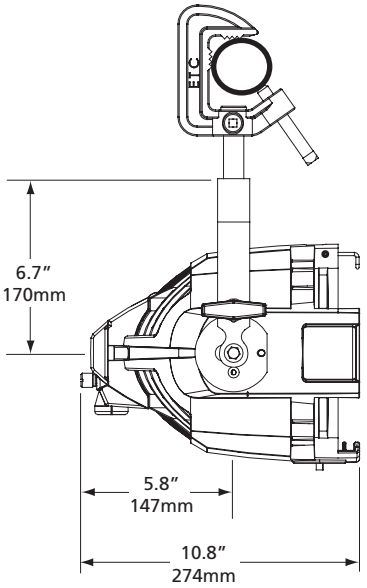

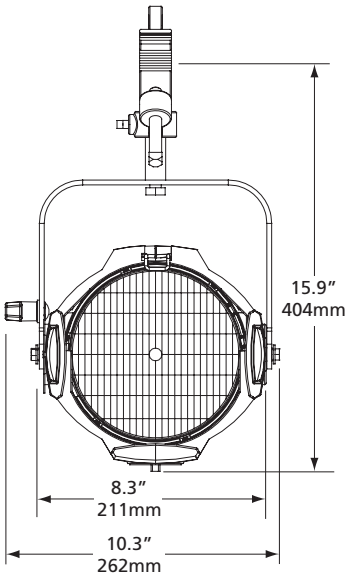

Source Four PAR Weights*

MODEL	WEIGHT		SHIPPING WEIGHT	
	lbs	kgs	lbs	kgs
S4PAR-EA	7.5	3.4	12.8	5.8

*Add 2.3 lbs for C-clamp

ORDERING INFORMATION

Continued from front page...

Source Four PAR Accessories

MODEL	DESCRIPTION
407CF	Color frame (7.5") (included)
400SC	Safety Cable
400CC	C-Clamp
400–VNSP	Very Narrow Spot lens
400–NSP	Narrow Spot lens
400–MFL	Medium Flood lens
400–WFL	Wide Flood lens
400–LS4	Set of four Source Four PAR lenses (VNSP, NSP, MFL, WFL)
400-XWFL	Extra Wide Flood lens (optional - not included with fixtures)
400PTH3	Top hat, 3"
400PTH6	Top hat, 6"
400PHH	Half hat
400XBTH	Cross baffle top hat
400PGE3	Gel extender, 3"
400PGE6	Gel extender, 6"
400BD	Barn door
400L	Egg crate louver
400WB	Weighted base

Note: For colors other than black and white, please call ETC.

TBD

Source Four products are protected by one or more of the following patents:

U.S.	USRE36,3316, US5,345,371, US5,446,637, US5,544,029, US6,092,914 and US5,775,799
U.K.	GB0592589, GB0673488, 99930527.9*
Germany	DE0592589, GB0673488, 99930527.9*
Japan	JP2,501,772

* European patent application number

UMNH AP-103

TABLEAU™
LINEAR ADJUSTABLE FLUORESCENT TAB SERIES

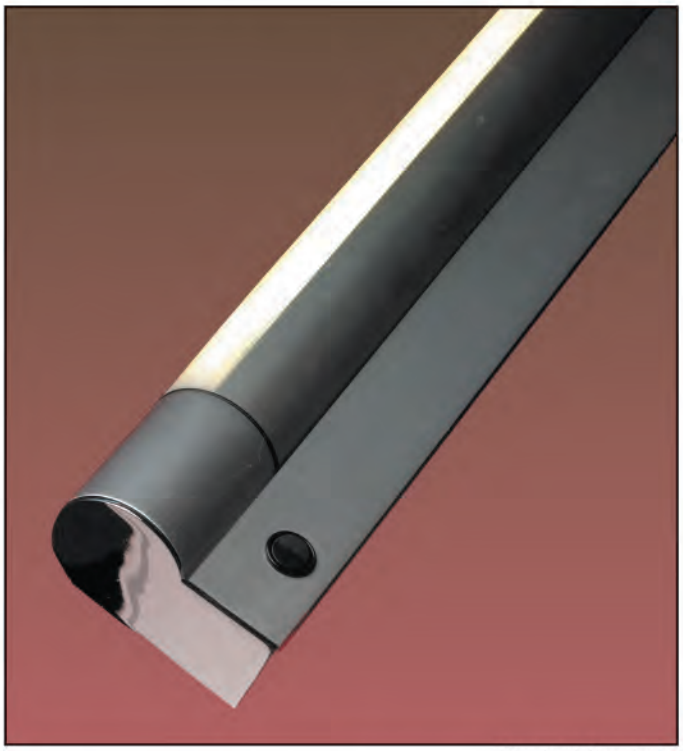

Brushed Aluminum

- Elegant styling, energy efficient lamping and durable construction make Tableau ideal for bathroom and task light applications in hotels, dormitories, offices and hospitals.
- Tableau can also be mounted on ceilings to provide vertical illumination on walls, art or message boards.
- Smooth, low glare opal diffuser or clear linear prism lens rotates to direct light as needed.
- Tri-phosphor T8, T5 or High Output T5 lamps included.
- Premium electronic ballast with soft-start circuit maximizes lamp life and provides flicker-free-performance.

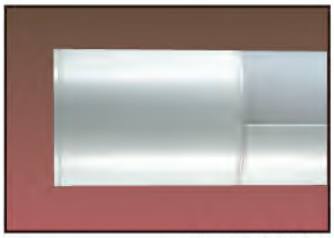

Painted White

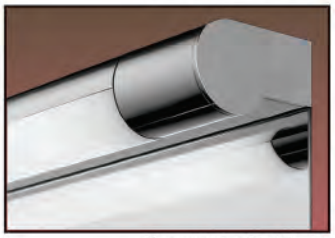

Top right of tableau

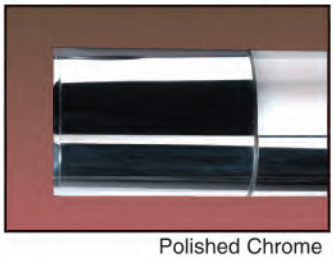

Polished Chrome

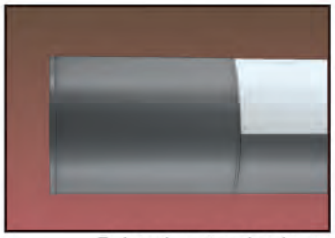

Painted matte aluminum

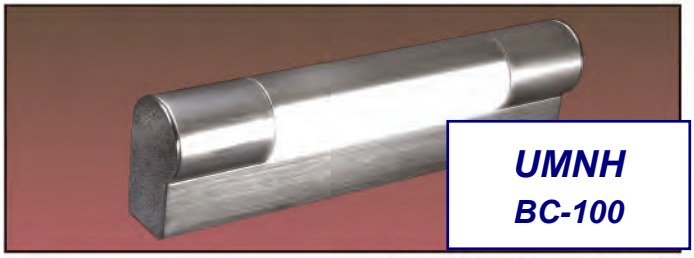

TAB 126 in Brushed Aluminum

UMNH
BC-100

TABLEAU™
LINEAR ADJUSTABLE FLUORESCENT TAB SERIES

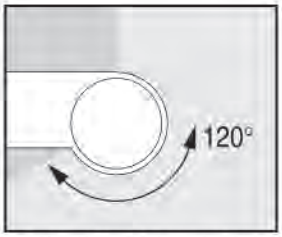

120 degree lamp housing rotation

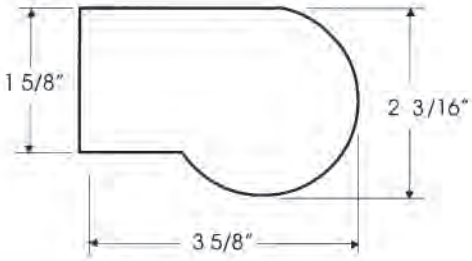

MOUNTING PLATE DETAIL

7/8" knock out (7 3/32" to left of center on TAB117, 114 & 124, as you face installation location).

29 5/8" for T8
27 5/8" for T5

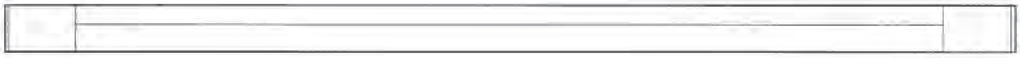

41 5/8" for T8
39 7/16" for T5

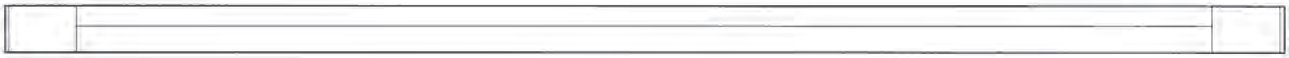

53 11/16" for T8
51 1/4" for T5

SPECIFICATIONS

CONSTRUCTION
.090 extruded aluminum housing with die-cast metal ends.

DIFFUSER
Snap-in translucent opal acrylic diffuser standard, with clear linear prism acrylic diffuser optional.

FINISHES
Fixtures may be specified with a variety of painted, anodized or plated finishes.

ELECTRICAL
Premium grade high frequency electronic ballast with pre-heat start circuit to facilitate long lamp life with frequent on-off operation. Lamps start in less than 1 second without flicker. Rocker switch is supplied as standard equipment (no switch supplied with 277 volt option).

LAMPS
One CFQ (26 watt, supplied by others), T8 (17, 25, or 32 watt), T5 (14, 21 or 28 watt) or High Output T5 (24, 39 or 54 watt) 3000K tri-phosphor fluorescent lamp included (CFQ lamp must be supplied by others). 3500K and 4100K tri-phosphor lamps available in place of standard 3000K.

INSTALLATION FEATURES
Rear mounting plate secures to wall. Fixture snaps onto mounting plate and locks into position with 2 screws. 7/8" knockout in mounting plate, per diagram above, for attaching trade-size electrical fitting.

LABELS
U.L. CUL Damp

ORDERING INFORMATION

CATALOG #	LAMPS	L	W	D
CFQ				
TAB126-RSW	1/F26CFQ	13 1/4"	3 3/8"	3 3/8"
T8				
TAB117-RSW	1/F17T8	29 5/8"	2 3/16"	3 5/8"
TAB125-RSW	1/F25T8	41 5/8"	2 3/16"	3 5/8"
TAB132-RSW	1/F32T8	53 11/16"	2 3/16"	3 5/8"
T5				
TAB114-RSW	1/F14T5	27 5/8"	2 3/16"	3 5/8"
TAB121-RSW	1/F21T5	39 7/16"	2 3/16"	3 5/8"
TAB128-RSW	1/F28T5	51 1/64"	2 3/16"	3 5/8"
High Output T5				
TAB124-RSW	1/F24T5/HO	27 5/8"	2 3/16"	3 5/8"
TAB139-RSW	1/F39T5/HO	39 7/16"	2 3/16"	3 5/8"
TAB154-RSW	1/F54T5/HO	51 1/64"	2 3/16"	3 5/8"

Note: Specify lamp if other than standard 3000K (CFQ lamp supplied by others)

FINISHES (must add as suffix)

/BA	Brushed Anodized Aluminum
/MA	Painted Matte Aluminum
/PC	Plated Polished Chrome
/PS	Anodized Polished Silver
/WH	Painted White

TBD

OPTIONS (must add as suffix)

/CL	Clear Lens
/CO-W	Convenience Outlet (for 120 volt only)
/LESS SWITCH	Shipped less switch

Note: Consult factory for 277 volt availability (not available with RSW)

ELECTRICAL DATA

	17W T8	25W T8	32W T8	14W T5	21W T5	28W T5	24W T5/HO	39W T5/HO	54W T5/HO
Input Watts	24	31	35	18	25	33	28	41	64
Max. Amps	.21	.28	.32	.15	.21	.28	.23	.34	.54
Power Factor	.95	.92	.91	.98	.98	.98	.98	.98	.98
THD	<20%	<25%	<15%	<10%	<10%	<10%	<10%	<10%	<10%

UMNH
BC-100

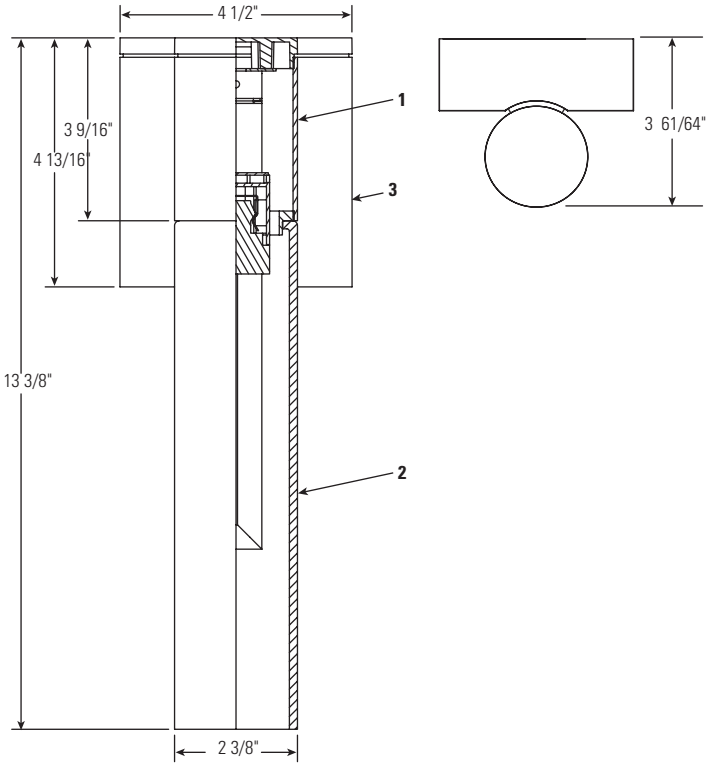

Complete Fixture Minus Suspension Kit:

Spec ID	Powerhead	Inner Glass	Outer Glass	Lamp	Volts
FW02	**PW13SA**	SG01	NA	4-Pin Elect. Twin Tube 13W	120V
FW202	**PW132SA**	SG01	NA	4-Pin Elect. Twin Tube 13W	277V
FW02Q	**PW13QSA**	SG01	NA	4-Pin Quad Tube 13W	120V
FW201Q	**PW132QSA**	SG02	NA	4-Pin Quad Tube 13W	277V
IW02	**PW50SA**	SG01	NA	T-4 Mini-Can 50W	120V

***All suspension kits can be shortened to length in field with the execption of SMK and CTC.**

Features

1. **Power Compartment:** Die Cast and Machined Aluminum Components. Brushed and Clear Lacquer Finish.
2. **Primary Glass:** Triplex Hand Blown Glass.
3. **Backplate:** Die Cast Aluminum, Brushed and Clear Lacquer Finish.

Lamping (by others)

Incandescent: 50W Max. T-4 Mini Candelabra

Compact Fluorescent:

General Electric	Osram/Sylvania	Philips
(1) 13W Twin Tube 4-Pin Compact Fluorescent Lamp		
N/A	CF13DS/E/*	N/A
(1) 13W Quad Tube 4-Pin Compact Fluorescent Lamp		
F13DBX/SPX*/4P	CF13DD/E/*	PL-CL3W/*/4P/ALTO

*Manufacturers Color Temperature Designation

Electrical

Lampholders

Incandescent: E11 Base, Porcelain, Plated Copper Alloy Screw Shell

Compact Fluorescent: 13W Twin: 2GX7 Base, High Impact Thermoset Polymer with Brass Contacts.

13W Quad: GX24Q-1 Base, High Impact Thermoset Polymer with Brass Contacts.

Ballasts: Fluorescent: Electronic	**13 Watts**	
Voltage	120	277
Total Imput Watts	35	28
Max. Line Current (Amps)	.33	.18

Labels

cULus Listed. Suitable for Damp Locations.

Job Information Type:

Job Name:

Cat. No.:

Lamp(s):

Notes:

Lightolier a Genlyte company
631 Airport Road, Fall River, MA 02720 • (508) 679-813
www.lightolier.com
We reserve the right to change details of design, materi
© 2007 Genlyte Group LLC • C1207

UMNH
CC-100

LIGHTOLIER®

Catalog No. FW02, 13W 4 Pin Twin Tube, 800 Lumens.

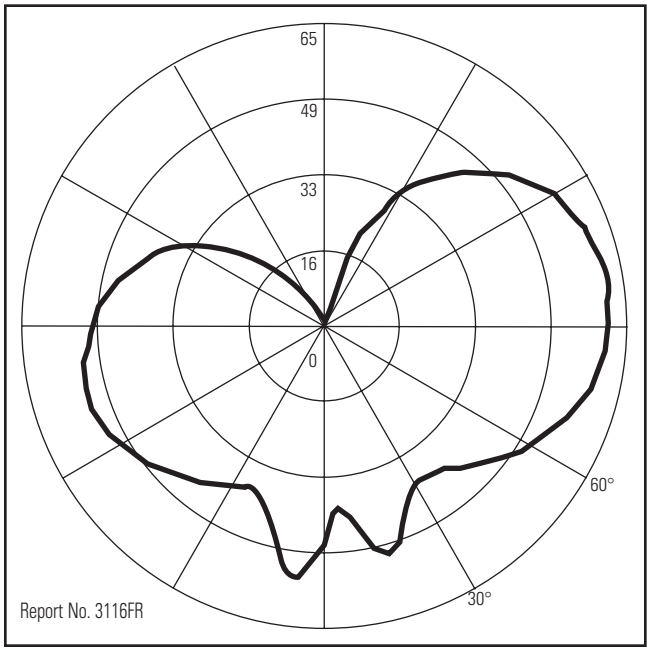

CANDLEPOWER SUMMARY

Angle	0°	45°	90°
0	45	45	45
5	40	42	51
10	47	50	56
15	51	55	53
20	47	50	47
25	42	45	43
30	39	42	41
39	39	41	42
40	40	43	44
45	43	46	47
50	46	48	49
55	48	51	52
60	51	54	54
65	54	57	56
70	56	59	58
75	58	61	60
80	60	63	61
85	61	64	61
90	61	64	61
95	61	65	61
100	62	65	61
105	61	65	60
110	60	64	58
115	59	62	56
120	57	60	53
125	54	57	50
130	51	53	46
135	47	50	42
140	43	46	37
145	39	41	31
150	33	35	24
155	27	28	16
160	19	19	9
165	11	10	4
170	4	4	2
175	2	2	1
180	1	1	1

ZONAL LUMENS AND PERCENTAGES

Zone	Lumens	%Lamp	%Fixt
0-30	38.44	4.8	6.5
0-40	64.77	8.1	10.9
0-60	146.09	18.3	24.6
0-90	325.97	40.7	55
90-120	173.56	21.7	29.3
90-130	213.56	26.7	36
90-150	258.21	32.3	36
90-180	267.22	33.4	45
0-180	593.19	74.1	100

** Efficiency = 74.1% **

COEFFICIENTS OF UTILIZATION

Ceiling	80%				70%		50%		30%		
Wall	70	50	30	10	50	10	50	10	50	10	0
RCR	Zonal Cavity Method - Effective Floor Reflectance = 20%										
Room Cavity Ratio 0	80	80	80	80	75	75	64	64	45	45	41
1	69	64	60	56	59	52	50	44	34	30	26
2	62	54	48	43	50	40	42	34	27	23	19
3	55	46	40	34	43	32	36	27	23	18	15
4	50	40	33	28	37	26	31	22	20	14	12
5	46	36	29	23	33	22	27	18	18	12	9
6	42	32	25	20	29	18	24	16	16	10	8
7	39	28	22	17	26	16	22	13	14	9	7
8	36	26	19	15	24	14	20	12	13	8	6
9	33	23	17	13	22	12	18	10	12	7	5
10	31	21	16	12	20	11	17	9	11	6	5

Determined In Accordance With Current IES Published Procedures
Luminaire Imput Watts =

Job Information Type:

Lightolier a Genlyte company
631 Airport Road, Fall River, MA 02720 • (508) 679-813
We reserve the right to change details of design, mater
© 2007 Genlyte Group LLC • C1207

UMNH
CC-100

LIGHTOLIER®

APPLICATIONS

Specifiers choice for a variety of display and utility lighting needs. Compact design occupies minimum space. Quality components, welded construction assuring long trouble free life. Broad range of types and lengths to provide the right light for the job.

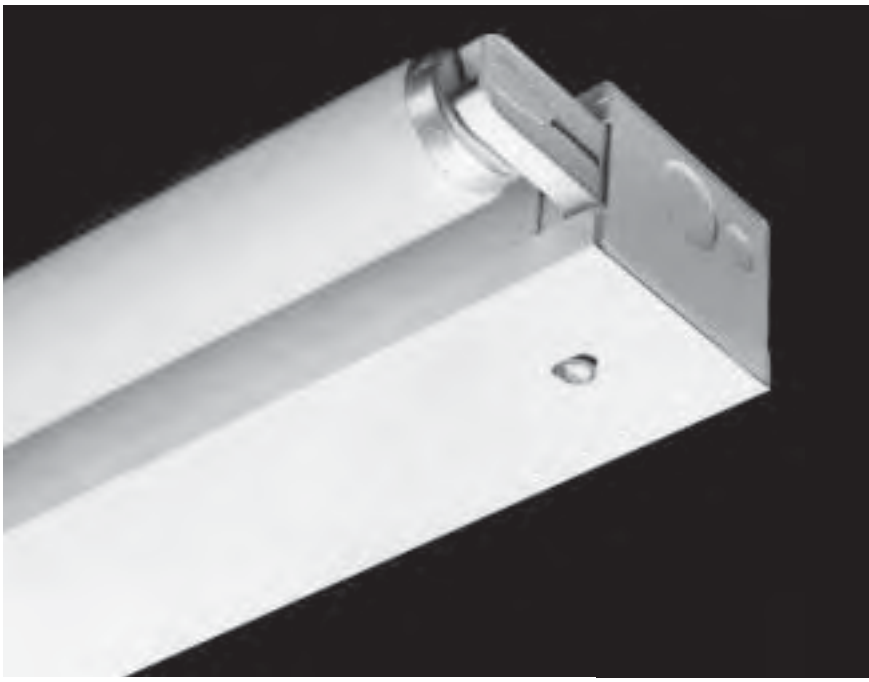

SPECIFICATIONS

CONSTRUCTION: Die formed of 20 gauge cold rolled prime steel, rigidly fabricated, and electrically welded to insure true and perfect alignment.

MOUNTING: Installed flush with ceiling surface or stem mounted, singly or in continuous rows. For continuous mounting, end knockouts may be removed and units joined together. Adequate knockouts and holes are provided for mounting and feeds.

ELECTRICAL: Thermally protected Class "P" Energy Saving 265MA-T8 electronic ballasts, 430MA Rapid Start HPF, Trigger Start LPF-T12 magnetic ballasts for 118 volt 60 Hz operation standard. Other electronic ballasts, other voltages and frequencies available, consult factory. (See Options listing).

FINISH: All steel components parts are completely protected against rust and discoloration after fabrication through an automated conveyorized multi-stage phosphate bonding process. Finished with an electrostatic baked white polyester thermosetting powder coating. This electronic computer controlled integrated system assures consistent 88%+ reflectance efficiency and maximum durability.

CERTIFICATION: The Series 350 luminaire is U.L. and C.U.L. listed and bears the label of the I.B.E.W./AFL-CIO, Local #3.

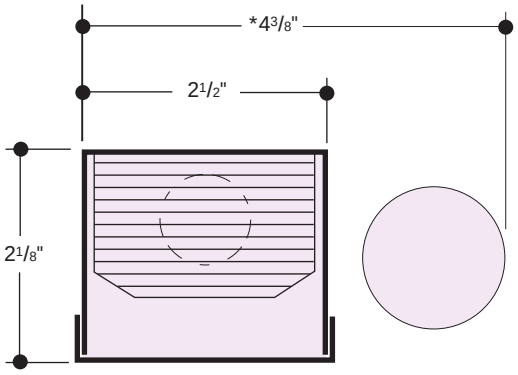

Dimensions shown are with T12 lamp.
*Minus 1/4" for OCTRON T8 lamp.

LEGION® is a registered trademark of LEGION LIGHTING CO., INC.

12/00

LEGION® LIGHTING CO., INC. 221 Glenmore Ave., Brooklyn, NY 11207 • Tel: 718/498-1770 • Fax:
Toll Free Fax: 8

UMNH
CF-100

ORDERING DATA

Catalog No.	No. and Type Lamps	Nominal Dimensions	Weight
350-114	1-14W-TS-T12	2-1/2" x 15"	3
350-115	1-15W-TS-T12	2-1/2" x 18"	3
350-120	1-20W-TS-T12	2-1/2" x 24"	4
350-117 EBO	1-FO17-OCT-T8		
350-130	1-30W-RS-T12	2-1/2" x 36"	7
350-125 EBO	1-FO25-OCT-T8		
350-140	1-40W-RS-T12	2-1/2" x 48"	8
350-132 EBO	1-FO32-OCT-T8		
350-160	1-FO40-OCT-T8	2-1/2" x 60"	11
350-130-6T	2-30W-RS-T12	2-1/2" x 72"	14
350-125-6T EBO	2-FO25-OCT-T8		
350-140-8T	2-40W-RS-T12	2-1/2" x 96"	16
350-132-8T EBO	2-FO32-OCT-T8		
350-196SL EBO	1-FO96-OCT-T8	2-1/2" x 96"	16

OPTIONS

Suffix "LT" after catalog number for Cold Weather ballast.
Suffix "EM" after catalog number for Emergency Battery Pack and see price list for types.
Suffix "DL" after catalog number for Damp Location.
Suffix "WG" after catalog number for Wire Guard.
Suffix "XTA" after catalog number for XTRALUME® reflector standard with 85% reflectance, for 95% reflectance please specify your requirements.

ENERGY SAVING BALLASTS: Where applicable (consult factory).
Suffix "ESB" after catalog number then / and one of the following:

MAGNETIC
"SLH"- Super Low Heat T12 Ballast.
"MM-I"- Maxi Miser I T12 Ballast
"PRE"- Premium III T12 Ballast.
"OCT"- Octron T8 Ballast.
"OPT"- Optimiser Ballast.
"DIM"- Magnetic T12 Dimming Ballast.

ELECTRONIC
"EB"- Electronic T12 Ballast.
"EBO"- Electronic T8 Octron Ballast.
"EBD"- Electronic T12 Dimming Ballast.
"EBDO"- Electronic T8 Octron Dimming Ballast.

BACK PLANS

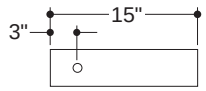

14 WATT

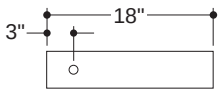

15 WATT

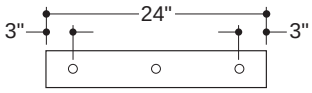

25 WATT & FO17

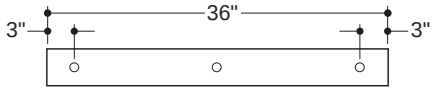

30 WATT & FO25

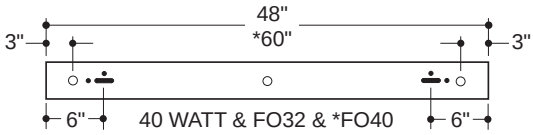

40 WATT & FO32 & *FO40

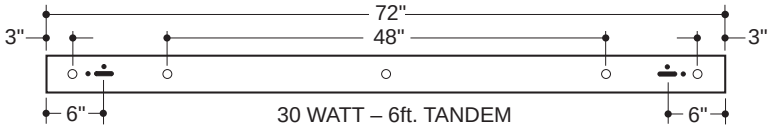

30 WATT – 6ft. TANDEM
F025 – 6ft. TANDEM

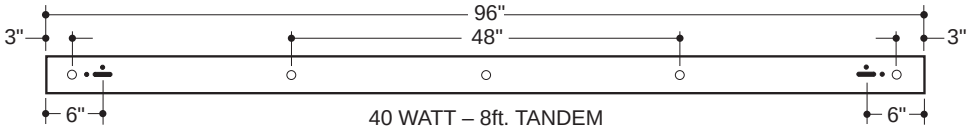

40 WATT – 8ft. TANDEM
F032 – 8ft. TANDEM

○ 7/8" dia. Knockout
Chain slot

FOR PHOTOMETRIC DATA CONSULT FACTORY
Information supplied primarily for illustrative purposes, subject to change.
Consult factory for verification and minimum quantity orders.

LEGION® LIGHTING CO

UMNH
CF-100

Type	Catalog number
.....	.....
.....	.....

Compact Fluorescent Downlighting

6" AF

Lensed Reflector

Horizontal Lamp
Triple-Tube

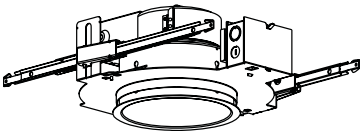

FEATURES

OPTICAL SYSTEM

- Reflector - Self-flanged, semi-specular clear or matte-diffuse reflector. Fluted vertical upper section works in conjunction with Patented Bounding Ray™ Optical Principle design (U.S. Patent No. 5,800, 050) provides lamp before lamp image and smooth transition from top of reflector to bottom. Minimum flange matches reflector finish.
- Lens position at optical break provides optimal visual comfort and improved aperture aesthetics.
- Baffle/cone - Semi-specular upper reflector. Microgroove baffle with white painted flange or specular black cone with flange that matches cone finish.
- Hinged lampdoor seals upper trim for optimal fixture efficiency and the reduction of stray light in the plenum.

MECHANICAL SYSTEM

- 16-gauge galvanized steel mounting/plaster frame with integral yoke to retain optical system. Maximum 1-1/2" ceiling thickness.
- 16-gauge galvanized steel mounting bars with continuous 4" vertical adjustment are shipped pre-installed. Post installation adjustment possible without the use of tools from above or below the ceiling.
- Galvanized steel junction box with hinged access covers and spring latch. Two combination 1/2"–3/4" and three 1/2" knockouts for straight-through conduit runs. Capacity: 8 (4 in, 4 out) No. 12 AWG conductors, rated for 90°C.

ELECTRICAL SYSTEM

- Horizontally-mounted, positive-latch, thermoplastic socket.
- Class P, thermally-protected high power factor electronic ballast mounted to the junction box.
- Simply5™ technology available. SIMPLY5™ LIGHTING INTELLIGENCE

LISTING

- Fixtures are UL Listed for thru-branch wiring, Non-IC recessed mounting and damp locations. Listed and labeled to comply with Canadian Standards.

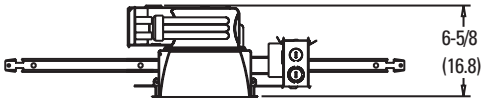

Aperture:	6-1/4 (15.9)
Ceiling Opening:	7-1/8 (18.1)
Overlap Trim:	7-1/2 (19.1)

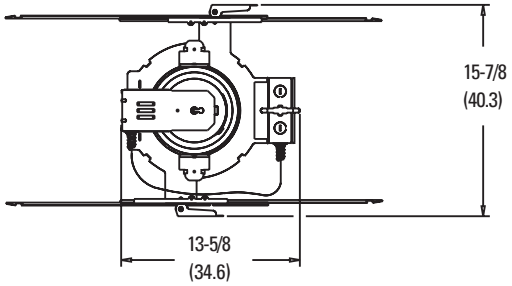

All dimensions are inches (centimeters)

ORDERING INFORMATION

Example: **AF 1/26TRT 6AR CGL MVOLT**

Choose the boldface catalog nomenclature that best suits your needs and write it on the appropriate line. Order accessories as separate catalog number (shipped separately).

AF

Series	Wattage/ Lamp	Aperture/Trim color	Finish	Lens type	Voltage	Ballast[4]	Options
AF	**1/18TRT** **1/26TRT** **1/32TRT** **1/42TRT**	**6AR** Clear **6PR** Pewter **6UBR** Umber **6WTR** Wheat **6MB**[1,2] Black Baffle **6WB**[1,2] White Baffle **6BC**[1,2] Black Cone	(blank) Semi-specular **LD** Matte-diffuse	**CGL** Clear glass lens **PCL**[2] Clear polycarbonate lens **T73** Tempered prismatic lens **PPC**[2] Prismatic polycarbonate lens	**MVOLT**[3] **120** **277** **347**	(blank) Electronic ballast **DMHL**[5] Lutron Compact SE® electronic dimming ballast. Minimum dimming level 5% **ADEZ**[5] Advance Mark 10™ electronic dimming ballast. Minimum dimming level 5% **S5**[6] SIMPLY5™ system ballast	**ELR**[7] Emergency battery pack. Remote test switch provided **GMF** Single, slow-blow fuse **GLR** Single, fast-blow fuse **TRW** White painted flange **TRBL** Black painted flange **WLP** With 3500°K lamp (shipped separately) **LRC**[8] Provides compatibility with Lithonia Reloc® System. Lithonia Reloc System can be installed less this option with connectors provided by others. Access above ceiling required **CP**[9] Chicago Plenum (consult factory) **CSA** CSA Certified **BDP**[10] Ballast disconnect plug **HW** Hardwire for S5 system; replaces Reloc **ELRHL**[7] High lumen output emergency battery pack. Remote test switch provided

NOTES
1 Not available with finishes.
2 Lens positioned below optical break.
3 Multi-volt electronic ballast capable of operating on any line voltage from 120V through 277V, 50 or 60Hz.
4 For additional ballast types, refer to Technical Bulletins tab.
5 Available in 120V or 277V only.
6 Simply5™ includes 9' S5 MLC Reloc wiring system (shipped separately). Available in 120V or 277V only. Not available in 18W. See simply5.net for more information.
7 For dimensional changes, refer to Technical Bulletins tab.
8 For compatible Reloc systems, refer to Technical Bulletins tab.
9 Not available with EL or ELR option.
10 Meets codes that require in-fixture disconnect.

Accessories

Order as separate catalog number.

SCA6 Sloped ceiling adapter. Degree of slope must be specified (10D, 15D, 20D, 25D, 30D). Ex: SCA6 **10D**

gotham®
An Acuity Brands Company

GOTHAM ARCHITECTURAL DOWNLIGHTING
1400 Lester Road Conyers Georgia 30012
P 800 315 4982 F 770 860 3129
www.gothamlighting.com

UMNH
DC-100

6" AF Lensed Reflector

Distribution curve | **Distribution data** | **Output data** | **Coefficient of utilization** | **Illuminance Data at 30" Above Floor for a Single Luminaire**

AF 1/26TRT 6AR CGL, (1) CF26DT/E/IN/835, 1800 lumens per lamp, 1.2 s/mh, Test no. LTL9474

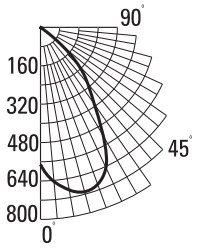

From 0°	cp.	Lumens
0°	571	
5°	645	57
15°	709	167
25°	644	246
35°	391	213
45°	227	141
55°	16	22
65°	3	4
75°	1	1
85°	0	0
90°	0	

Zone	Lumens	%lamp
0°-30°	469.9	26.1
0°-40°	682.4	37.9
0°-60°	845.3	47.0
0°-90°	850.8	47.3
90°-180°	0.0	0.0
0°-180°	850.8	47.3*

*Efficiency

ρf / ρc / ρw	80% 50%	80% 30%	20% 70% 50%	20% 70% 30%	50% 50%	50% 30%
1	52	51	51	50	49	48
2	48	46	47	45	45	44
3	44	41	43	41	42	40
4	40	37	40	37	39	36
5	37	34	37	34	36	33
6	35	31	34	31	33	31
7	32	29	32	29	31	28
8	30	27	30	26	29	26
9	28	25	28	25	27	24
10	26	23	26	23	25	23

Mount height	Initial fc at beam center	50% beam angle 59.9° Beam diameter	50% beam angle 59.9° fc at beam edge	10% beam angle 91.6° Beam diameter	10% beam angle 91.6° fc at beam edge
8'	18.9	6.3	9.4	11.3	1.9
10'	10.2	8.7	5.1	15.4	1.0
12'	6.3	11.0	3.2	19.5	0.6
14'	4.3	13.3	2.2	23.6	0.4
16'	3.1	15.6	1.6	27.7	0.3

AF 1/32TRT 6AR CGL, (1) CF32DT/E/IN/835, 2400 lumens per lamp, 1.2 s/mh, Test no. LTL9506

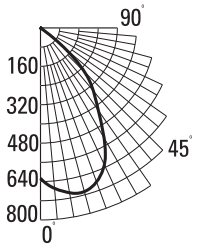

From 0°	cp.	Lumens
0°	626	
5°	671	63
15°	706	188
25°	629	274
35°	420	242
45°	261	164
55°	19	25
65°	4	4
75°	1	1
85°	0	0
90°	0	

Zone	Lumens	%lamp
0°-30°	524.9	21.9
0°-40°	767.0	32.0
0°-60°	955.9	39.8
0°-90°	961.1	40.0
90°-180°	0.0	0.0
0°-180°	961.1	40.0*

*Efficiency

ρf / ρc / ρw	80% 50%	80% 30%	20% 70% 50%	20% 70% 30%	50% 50%	50% 30%
1	44	43	43	42	41	41
2	40	39	40	38	38	37
3	37	35	37	35	35	34
4	34	32	34	31	33	31
5	32	29	31	29	30	28
6	29	26	29	26	28	26
7	27	24	27	24	26	24
8	25	22	25	22	24	22
9	23	21	23	21	23	21
10	22	19	22	19	21	19

Mount height	Initial fc at beam center	50% beam angle 60.7° Beam diameter	50% beam angle 60.7° fc at beam edge	10% beam angle 92.3° Beam diameter	10% beam angle 92.3° fc at beam edge
8'	20.7	6.4	10.3	11.4	2.1
10'	11.1	8.8	5.6	15.6	1.1
12'	6.9	11.1	3.5	19.8	0.7
14'	4.7	13.5	2.4	23.9	0.5
16'	3.4	15.8	1.7	28.1	0.3

AF 1/26TRT 6AR T73, (1) CF26DT/E/IN/835, 1800 lumens per lamp, 1.1 s/mh, Test no. LTL9473

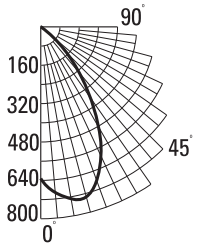

From 0°	cp.	Lumens
0°	632	
5°	693	60
15°	734	170
25°	594	222
35°	361	188
45°	151	109
55°	19	24
65°	2	3
75°	1	1
85°	0	0
90°	0	

Zone	Lumens	%lamp
0°-30°	452.7	25.1
0°-40°	640.7	35.6
0°-60°	773.6	43.0
0°-90°	777.8	43.2
90°-180°	0.0	0.0
0°-180°	777.8	43.2*

*Efficiency

ρf / ρc / ρw	80% 50%	80% 30%	20% 70% 50%	20% 70% 30%	50% 50%	50% 30%
1	48	46	47	46	45	44
2	44	42	43	41	42	40
3	40	38	40	38	39	37
4	37	35	37	34	36	34
5	35	32	34	32	33	31
6	32	29	32	29	31	29
7	30	27	30	27	29	27
8	28	25	28	25	27	25
9	26	23	26	23	25	23
10	24	22	24	22	24	21

Mount height	Initial fc at beam center	50% beam angle 54.5° Beam diameter	50% beam angle 54.5° fc at beam edge	10% beam angle 86.7° Beam diameter	10% beam angle 86.7° fc at beam edge
8'	20.9	5.7	10.4	10.4	2.1
10'	11.2	7.7	5.6	14.2	1.1
12'	7.0	9.8	3.5	17.9	0.7
14'	4.8	11.8	2.4	21.7	0.5
16'	3.5	13.9	1.7	25.5	0.3

AF 1/32TRT 6AR T73, (1) CF32DT/E/IN/835, 2400 lumens per lamp, 1.1 s/mh, Test no. LTL9505

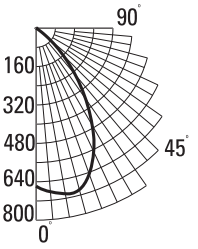

From 0°	cp.	Lumens
0°	658	
5°	684	63
15°	697	177
25°	568	233
35°	359	199
45°	158	115
55°	19	25
65°	2	3
75°	1	1
85°	1	0
90°	0	

Zone	Lumens	%lamp
0°-30°	472.5	19.7
0°-40°	671.6	28.0
0°-60°	811.5	33.8
0°-90°	815.3	34.0
90°-180°	0.0	0.0
0°-180°	815.3	34.0*

*Efficiency

ρf / ρc / ρw	80% 50%	80% 30%	20% 70% 50%	20% 70% 30%	50% 50%	50% 30%
1	37	36	37	36	35	35
2	34	33	34	32	33	32
3	32	30	31	30	30	29
4	29	27	29	27	28	27
5	27	25	27	25	26	24
6	25	23	25	23	24	23
7	23	21	23	21	23	21
8	22	20	22	20	21	19
9	20	18	20	18	20	18
10	19	17	19	17	19	17

Mount height	Initial fc at beam center	50% beam angle 54.7° Beam diameter	50% beam angle 54.7° fc at beam edge	10% beam angle 87.0° Beam diameter	10% beam angle 87.0° fc at beam edge
8'	21.8	5.7	10.9	10.4	2.2
10'	11.7	7.8	5.8	14.2	1.2
12'	7.3	9.8	3.6	18.0	0.7
14'	5.0	11.9	2.5	21.8	0.5
16'	3.6	14.0	1.8	25.6	0.4

ENERGY (Calculated in accordance with NEMA standard LE-5A)

LER.DLL	Annual* Energy Cost	Lamps	Lamp Lumens	Ballast Factor	Input Watts
35	$6.90	(1) 18W DTT	1200	1.00	20
40	$5.96	(1) 26W DTT	1800	1.00	28
36	$6.75	(2) 32W TRT	2400	0.98	36
39	$6.11	(2) 42W TRT	3200	1.00	46

*Comparative yearly lighting energy cost per 1000 lumens

NOTES:

1. For electrical characteristics, consult Technical Bulletins tab.
2. Tested to current IES and NEMA standards under stabilized laboratory conditions. Various operating factors can cause differences between laboratory data and actual field measurements. Dimensions and specifications are based on the most current available data and are subject to change without notice.
3. Consult factory or IES file for microgroove baffle, black cone and other photometric reports.

©2005 Gotham, Rev. 01/08

gotham
An AcuityBrands Company

GOTHAM ARCHITECTUR
A DIVISION OF ACUITY LIG
1400 Lester Road Cony
P 800 315 4982
www.g

UMNH
DC-100

Type ..... Catalog number .....

FEATURES

OPTICAL SYSTEM

- Self-flanged, semi-specular or matte-diffuse reflector.
- Patented Vertisys® - Bounding Ray™ Optical Principle design (US Patent #5,800,050) provides lamp before lamp image. Lamp image that reflects smoothly from the top of the reflector to the aperture, providing optimal fixture performance and efficiency.

MECHANICAL SYSTEM

- 16-gauge galvanized steel mounting/plaster frame with friction support clips to retain optical system. Maximum 7/8" ceiling thickness.
- 16-gauge galvanized steel mounting bars with continuous 4" vertical adjustment are shipped pre-installed. Post installation adjustment possible without the use of tools from above or below ceiling.
- Galvanized steel junction box with hinged access covers and spring latch. Two combination 1/2"–3/4" and three 1/2" knockouts for straight-through conduit runs. Capacity: 8 (4 in, 4 out) No. 12 AWG conductors, rated for 90°C.

ELECTRICAL SYSTEM

- Rugged aluminum lampholder housing.
- Vertically-mounted, positive-latch, thermoplastic socket.
- Class P, thermally protected, high power factor electronic ballast mounted to the junction box.
- Simply5™ technology available. SIMPLY5™ LIGHTING INTELLIGENCE

LISTING

- Fixtures are UL Listed for thru-branch wiring, Non-IC recessed mounting and damp locations. Listed and labeled to comply with Canadian Standards.

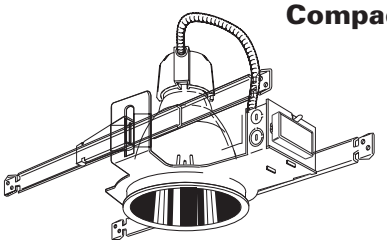

Compact Fluorescent Downlights

6" AFV

Open Reflector

Vertical Double Twin-Tube or Triple-Tube Lamp

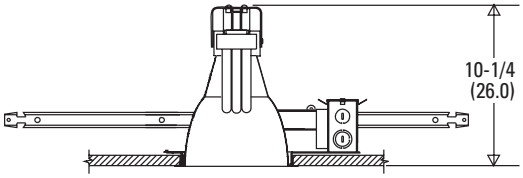

Aperture:	6-1/4 (15.9)
Ceiling opening:	7-1/8 (18.1)
Overlap trim:	7-1/2 (19.1)

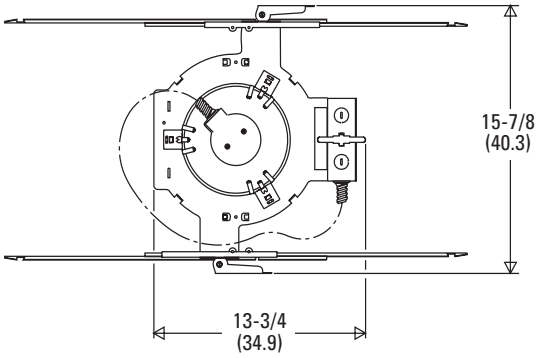

All dimensions are inches (centimeters)

*Maximum height depends on lamp wattage/type, dimensions range from 10-3/4" for 18DTT, 26DTT and 42 TRT; 9-3/8" for 13DTT, 18TRT, 26TRT and 32TRT

ORDERING INFORMATION

Example: **AFV 32TRT 6AR MVOLT WLP**

Choose the boldface catalog nomenclature that best suits your needs and write it on the appropriate line. Order accessories as separate catalog numbers (shipped separately).

AFV

Series	Wattage/Lamp	Aperture/Trim color	Finish	Voltage	Ballast[3]	Options
AFV	**13DTT** **18DTT** **26DTT** **18TRT** **26TRT** **32TRT** **42TRT**	**6AR** Clear **6PR** Pewter **6UBR** Umber **6WTR** Wheat **6WR**[1] White painted **6MB**[1] Black baffle **6WB**[1] White baffle	(blank) Semi-specular **LD** Matte-diffuse	**MVOLT**[2] **120** **277** **347**	(blank) Electronic ballast **DMHL**[4] Lutron Compact-SE™ electronic dimming ballast. Minimum dimming level 5% **ADEZ**[4] Advance Mark10® electronic dimming ballast. Minimum dimming level 5% **S5**[5] SIMPLY5™ system ballast	**EL**[6] Emergency battery pack with integral test switch **ELR**[6] Emergency battery pack. Remote test switch **GMF**[7] Single, slow-blow fuse **GLR**[7] Single, fast-blow fuse **TRW** White painted flange (standard on MB and WB) **TRBL** Black painted flange **GSKT** Foam gasketing **WLP** With 3500°K lamp (shipped separately) **LRC**[8] Provides compatibility with Lithonia Reloc System. Reloc System can be installed less this option with connectors provided by others. Access above ceiling required **CP**[9] Chicago Plenum **CSA** CSA Certified **BDP**[10] Ballast disconnect plug **HW** Hardwire for S5 system; replaces Reloc **ELHL**[6] High lumen output emergency battery pack. Integral test switch provided **ELRHL**[6] High lumen output emergency battery pack. Remote test switch provided

NOTES
1 Not available with finishes.
2 Multi-volt electronic ballast capable of operating on any line voltage from 120V through 277V, 50 or 60 Hz.
3 For additional ballast types, refer to Technical Bulletins tab.
4 Available in 120V or 277V only. Not available with 13DTT.
5 Simply5™ includes 9' S5 MLC Reloc wiring system (shipped separately). Available in 120V or 277V only. Not available in 13W or 18W. See simply5.net for more information.
6 For dimensional changes, refer to Technical Bulletins tab.
7 Not available with MVOLT.
8 For compatible Reloc systems, refer to Technical Bulletins tab.
9 Not available with EL or ELR options.
10 Meets codes that require in-fixture disconnect.

Accessories

Order as separate catalog numbers.

SCA6 Sloped ceiling adapter. Degree of slope must be specified (10D, 15D, 20D, 25D, 30D). Ex: SCA6 10D

CTA4-8 YK Ceiling thickness adapter. (Extends mounting frame to accommodate ceiling thickness up to 4-1/4" DTT and 3-1/4" TRT)

UMNH
DC-101

6" AFV Open Reflector

Distribution curve | **Distribution data** | **Output data** | **Coefficient of utilization** | **Illuminance Data at 30" Above Floor for a Single Luminaire**

AFV 26TRT 6AR, (1) PL-T 26W/30/4P lamp, 1800 rated lumens, 1.3 s/mh, Test no. 2194021601

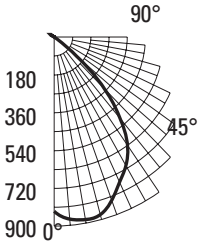

From 0°	cp.	Lumens
0°	830	
5°	870	84
15°	876	247
25°	762	353
35°	630	390
45°	354	255
55°	5	24
65°	0	1
75°	0	1
85°	0	1
90°	0	

Zone	Lumens	%lamp
0°-30°	682	37.9
0°-40°	1071	59.5
0°-60°	1349	75.0
0°-90°	1349	75.0
90°-180°	0	0.0
0°-180°	1349	75.0*

*Efficiency

ρf / ρc / ρw	80% 50%	80% 30%	20% 70% 50%	20% 70% 30%	50% 50%	50% 30%
1	83	81	82	80	78	77
2	78	75	76	74	74	72
3	72	68	71	68	69	66
4	67	63	66	63	65	62
5	63	58	62	58	60	57
6	58	54	58	53	56	53
7	54	49	53	49	52	48
8	50	45	49	45	48	44
9	46	41	45	43	45	40
10	42	37	42	37	41	37

Mount height	Initial fc at beam center	50% beam angle 64.0° Beam diameter	50% beam angle 64.0° fc at beam edge	10% beam angle 93.8° Beam diameter	10% beam angle 93.8° fc at beam edge
8'	27.5	6.9'	13.7	11.8'	2.7
10'	14.8	9.4'	7.4	16.0'	1.5
12'	9.2	11.9'	4.6	20.3'	0.9
14'	6.3	14.4'	3.1	24.6'	0.6
16'	4.6	16.9'	2.3	28.9'	0.5

AFV 32TRT 6AR, (1) PL-T 32W/30/4P lamp, 2400 rated lumens, 1.1 s/mh, Test no. 2194021402

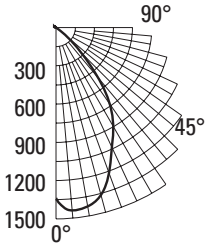

From 0°	cp.	Lumens
0°	1344	
5°	1440	137
15°	1360	382
25°	1036	481
35°	737	460
45°	280	219
55°	4	7
65°	1	1
75°	0	1
85°	0	1
90°	0	

Zone	Lumens	%lamp
0°-30°	998	41.6
0°-40°	1457	60.7
0°-60°	1682	70.1
0°-90°	1683	70.1
90°-180°	0	0.0
0°-180°	1683	70.1*

*Efficiency

ρf / ρc / ρw	80% 50%	80% 30%	20% 70% 50%	20% 70% 30%	50% 50%	50% 30%
1	78	77	77	75	74	73
2	73	71	72	70	70	68
3	69	66	68	65	66	64
4	65	61	64	61	63	60
5	61	57	60	56	59	56
6	57	53	57	53	55	52
7	53	49	53	49	52	49
8	50	46	49	46	49	45
9	47	43	46	42	46	42
10	43	39	43	39	43	39

Mount height	Initial fc at beam center	50% beam angle 55.3° Beam diameter	50% beam angle 55.3° fc at beam edge	10% beam angle 87.6° Beam diameter	10% beam angle 87.6° fc at beam edge
8'	44.5	5.8'	22.2	10.5'	4.4
10'	23.9	7.9'	12.0	14.4'	2.4
12'	14.9	9.9'	7.4	18.2'	1.5
14'	10.2	12.0'	5.1	22.1'	1.0
16'	7.4	14.1'	3.7	25.9'	0.7

AFV 42TRT 6AR, (1) PL-T 42W/30/4P lamp, 3200 rated lumens, 1.0 s/mh, Test no. 2195121902

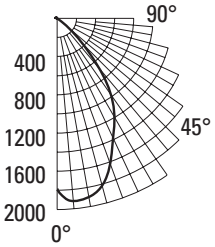

From 0°	cp.	Lumens
0°	1568	
5°	1705	162
15°	1467	407
25°	1145	527
35°	821	505
45°	244	198
55°	10	8
65°	4	4
75°	2	3
85°	2	2
90°	0	

Zone	Lumens	%lamp
0°-30°	1097	34.3
0°-40°	1602	50.1
0°-60°	1808	56.5
0°-90°	1817	56.8
90°-180°	0	0.0
0°-180°	1817	56.8*

*Efficiency

ρf / ρc / ρw	80% 50%	80% 30%	20% 70% 50%	20% 70% 30%	50% 50%	50% 30%
1	63	61	61	60	59	58
2	58	55	57	55	55	53
3	54	51	53	50	51	49
4	50	46	49	46	48	45
5	46	43	46	42	45	42
6	43	40	43	39	42	39
7	40	37	40	36	39	36
8	38	34	37	34	37	34
9	35	32	35	32	34	31
10	33	30	33	30	32	29

Mount height	Initial fc at beam center	50% beam angle 53.7° Beam diameter	50% beam angle 53.7° fc at beam edge	10% beam angle 85.6° Beam diameter	10% beam angle 85.6° fc at beam edge
8'	51.8	5.6'	25.9	10.2'	5.2
10'	27.9	7.6'	13.9	13.9'	2.8
12'	17.4	9.6'	8.7	17.6'	1.7
14'	11.9	11.7'	5.9	21.3'	1.2
16'	8.6	13.7	4.3	25.0'	0.9

AFV 32TRT 6MB, (1) PL-T 32W/30/4P lamp, 2400 rated lumens, 1.0 s/mh, Test no. 2196071102

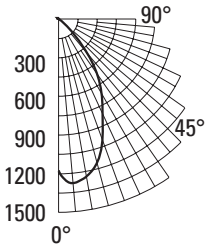

From 0°	cp.	Lumens
0°	1182	
5°	1279	120
15°	1157	322
25°	812	378
35°	525	329
45°	176	141
55°	2	4
65°	0	1
75°	0	1
85°	0	1
90°	0	

Zone	Lumens	%lamp
0°-30°	819	34.1
0°-40°	1147	47.8
0°-60°	1291	53.8
0°-90°	1291	53.8
90°-180°	0	0.0
0°-180°	1291	53.8*

*Efficiency

ρf / ρc / ρw	80% 50%	80% 30%	20% 70% 50%	20% 70% 30%	50% 50%	50% 30%
1	60	59	59	58	57	56
2	57	55	56	54	54	53
3	53	51	53	50	51	49
4	50	48	50	47	49	47
5	47	44	47	44	46	44
6	45	42	44	42	44	41
7	42	39	42	39	41	38
8	39	37	39	36	39	36
9	37	34	37	34	36	34
10	35	32	35	32	34	31

Mount height	Initial fc at beam center	50% beam angle 50.8° Beam diameter	50% beam angle 50.8° fc at beam edge	10% beam angle 84.2° Beam diameter	10% beam angle 84.2° fc at beam edge
8'	39.1	5.2'	19.5	9.9'	3.9
10'	21.0	7.1'	10.5	13.6'	2.1
12'	13.1	9.0'	6.6	17.2'	1.3
14'	8.9	10.9'	4.5	20.8'	0.9
16'	6.5	12.8'	3.2	24.4'	0.6

ENERGY (Calculated in accordance with NEMA standard LE-5A)

LER.DOH	Annual* Energy Cost	Lamps	Lamp Lumens	Ballast Factor	Input Watts
32	$7.44	(1) 26W DTT	1800	1.0	20
39	$6.12	(1) 26W TRT	1800	1.0	28
38	$6.34	(1) 32W TRT	2400	0.98	36

*Comparative yearly lighting energy cost per 1000 lumens

NOTES:
1. For electrical characteristics consult Technical Bulletins tab.
2. Tested to current IES and NEMA standards under stabilized laboratory conditions. Various operating factors can cause differences between laboratory data and actual field measurements. Dimensions and specifications are based on the most current available data and are subject to change without notice.

©2007 Gotham, Rev. 01/08

gotham
An AcuityBrands Company

GOTHAM ARCHITECTURAL
A DIVISION OF ACUITY LIGHT
1400 Lester Road Conyers
P 800 315 4982 F
www.goth

UMNH
DC-101

FEATURES

OPTICAL SYSTEM

- Self-flanged, semi-specular or matte-diffuse reflector.
- Patented Vertisys® - Bounding Ray™ Optical Principle design (US Patent #5,800,050) provides lamp before lamp image. Lamp image that reflects smoothly from the top of the reflector to the aperture, providing optimal fixture performance and efficiency.

MECHANICAL SYSTEM

- 16-gauge galvanized steel mounting/plaster frame with friction support clips to retain optical system. Maximum 7/8" ceiling thickness.
- 16-gauge galvanized steel mounting bars with continuous 4" vertical adjustment are shipped pre-installed. Post installation adjustment possible without the use of tools from above or below ceiling.
- Galvanized steel junction box with hinged access covers and spring latch. Two combination 1/2"–3/4" and three 1/2" knockouts for straight-through conduit runs. Capacity: 8 (4 in, 4 out) No. 12 AWG conductors, rated for 90°C.

ELECTRICAL SYSTEM

- Rugged aluminum lampholder housing.
- Vertically-mounted, positive-latch, thermoplastic socket.
- Class P, thermally-protected, high power factor electronic ballast mounted to the junction box.
- Simply5™ technology available. SIMPLY5™ LIGHTING INTELLIGENCE

LISTING

- Fixtures are UL Listed for thru-branch wiring, Non-IC recessed mounting and damp locations. Listed and labeled to comply with Canadian Standards.

Type ..... Catalog number .....

Compact Fluorescent Downlights

8" AFV

Open Reflector

Vertical Double Twin-Tube or Triple-Tube Lamp

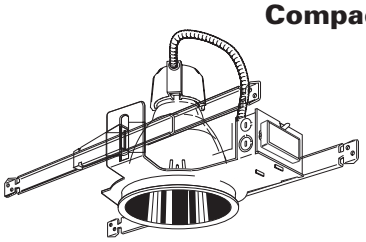

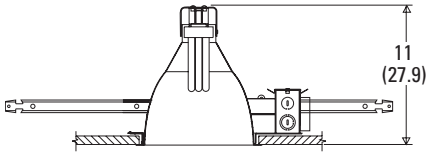

Aperture:	7-7/8 (20.1)
Ceiling opening:	8-7/8 (21.5)
Overlap trim:	9-1/4 (23.5)

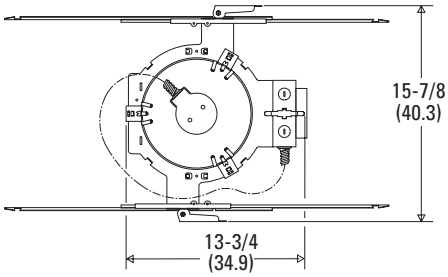

All dimensions are inches (centimeters)

*Maximum height depends on lamp wattage/type, dimensions range from 11" for 18DTT, 26DTT, 42 TRT; 10-1/8" for 13DTT, 18TRT, 26TRT and 32TRT

ORDERING INFORMATION

Example: **AFV 32TRT 8AR MVOLT WLP**

Choose the boldface catalog nomenclature that best suits your needs and write it on the appropriate line. Order accessories as separate catalog numbers (shipped separately).

AFV

Series	Wattage/Lamp	Aperture/Trim color	Finish	Voltage	Ballast[3]	Options
AFV	**13DTT**	**8AR** Clear	(blank) Semi-specular	**MVOLT**[2]	(blank) Electronic ballast	**EL**[6] Emergency battery pack with integral test switch
	18DTT	**8PR** Pewter	**LD** Matte-diffuse	**120**	**DMHL**[4] Lutron Compact-SE™ electronic dimming ballast. Minimum dimming level 5%	**ELR**[6] Emergency battery pack with remote test switch
	26DTT	**8UBR** Umber		**277**	**ADEZ**[4] Advance Mark10® electronic dimming ballast. Minimum dimming level 5%	**GMF**[7] Single, slow-blow fuse
	18TRT	**8WTR** Wheat		**347**	**S5**[5] SIMPLY5™ system ballast	**GLR**[7] Single, fast-blow fuse
	26TRT	**8WR**[1] White painted				**TRW** White painted flange (standard on WR)
	32TRT	**8MB**[1] Black baffle				**TRBL** Black painted flange
	42TRT	**8WB**[1] White baffle				**GSKT** Foam gasketing
						WLP 3500° K Lamp (shipped separately)
						LRC[8] Provides compatibility with Lithonia Reloc system. Lithonia Reloc System can be installed less this option with connectors provided by others. Access above ceiling required
						CP Chicago Plenum
						HW Hardwire for S5 system replaces Reloc
						ELHL[6] High lumen output emergency battery pack. Integral test switch provided
						ELRHL[6] High lumen output emergency battery pack. Remote test switch

NOTES

1 Not available with finishes.
2 Multi-volt electronic ballast capable of operating on any line voltage from 120V through 277V, 50 or 60Hz.
3 For additional ballast types, refer to Technical Bulletins tab.
4 Available in 120V or 277V only. Not available with 13DTT.
5 Simply5™ includes 9' S5 MLC Reloc wiring system (shipped separately). Available in 120V or 277V only. Not available in 13W or 18W. See simply5.net for more information.
6 For dimensional changes, refer to Technical Bulletins tab.
7 Not available with MVOLT. Must specify voltage.
8 For compatible Reloc systems, refer to Technical Bulletins tab.

Accessories

Order as separate catalog numbers.

SCA8 Sloped ceiling adapter. Degree of slope must be specified (10D, 15D, 20D, 25D, 30D). Ex: SCA8 10D

CTA860 Ceiling thickness adapter. (Extends mounting frame to accommodate ceiling thickness up to 2")

UMNH
DC-102

8" AFV Open Reflector

Distribution curve	Distribution data	Output data	Coefficient of utilization	Illuminance Data at 30" Above Floor for a Single Luminaire

AFV 26TRT 8AR, (1) PL-T 26W/30/4P lamp, 1800 rated lumens, 1.3 s/mh, test no. 2194021601

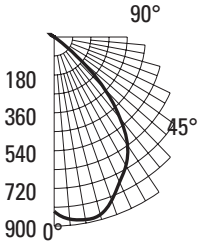

From 0°	cp.	Lumens
0°	830	
5°	870	84
15°	876	247
25°	762	353
35°	630	390
45°	354	255
55°	5	24
65°	0	1
75°	0	1
85°	0	1
90°	0	

Zone	Lumens	%lamp
0°-30°	682	37.9
0°-40°	1071	59.5
0°-60°	1349	75.0
0°-90°	1349	75.0
90°-180°	0	0.0
0°-180°	1349	75.0*

*Efficiency

ρf / ρc / ρw	80% 50%	80% 30%	20% 70% 50%	20% 70% 30%	50% 50%	50% 30%
1	83	81	82	80	78	77
2	78	75	76	74	74	72
3	72	68	71	68	69	66
4	67	63	66	63	65	62
5	63	58	62	58	60	57
6	58	54	58	53	56	53
7	54	49	53	49	52	48
8	50	45	49	45	48	44
9	46	41	45	43	45	40
10	42	37	42	37	41	37

Mount height	Initial fc at beam center	50% beam angle 64.0° Beam diameter	50% beam angle 64.0° fc at beam edge	10% beam angle 93.8° Beam diameter	10% beam angle 93.8° fc at beam edge
8'	27.5	6.9'	13.7	11.8'	2.7
10'	14.8	9.4'	7.4	16.0'	1.5
12'	9.2	11.9'	4.6	20.3'	0.9
14'	6.3	14.4'	3.1	24.6'	0.6
16'	4.6	16.9'	2.3	28.9'	0.5

AFV 32TRT 8AR, (1) PL-T 32W/30/4P lamp, 2400 rated lumens, 1.1 s/mh, test no. 2194021402

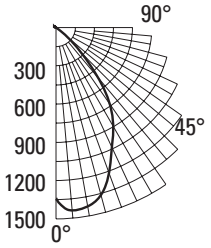

From 0°	cp.	Lumens
0°	1344	
5°	1440	137
15°	1360	382
25°	1036	481
35°	737	460
45°	280	219
55°	4	7
65°	1	1
75°	0	1
85°	0	1
90°	0	

Zone	Lumens	%lamp
0°-30°	998	41.6
0°-40°	1457	60.7
0°-60°	1682	70.1
0°-90°	1683	70.1
90°-180°	0	0.0
0°-180°	1683	70.1*

*Efficiency

ρf / ρc / ρw	80% 50%	80% 30%	20% 70% 50%	20% 70% 30%	50% 50%	50% 30%
1	78	77	77	75	74	73
2	73	71	72	70	70	68
3	69	66	68	65	66	64
4	65	61	64	61	63	60
5	61	57	60	56	59	56
6	57	53	57	53	55	52
7	53	49	53	49	52	49
8	50	46	49	46	49	45
9	47	43	46	42	46	42
10	43	39	43	39	43	39

Mount height	Initial fc at beam center	50% beam angle 55.3° Beam diameter	50% beam angle 55.3° fc at beam edge	10% beam angle 87.6° Beam diameter	10% beam angle 87.6° fc at beam edge
8'	44.5	5.8'	22.2	10.5'	4.4
10'	23.9	7.9'	12.0	14.4'	2.4
12'	14.9	9.9'	7.4	18.2'	1.5
14'	10.2	12.0'	5.1	22.1'	1.0
16'	7.4	14.1'	3.7	25.9'	0.7

AFV 42TRT 8AR, (1) PL-T 42W/30/4P lamp, 3200 rated lumens, 1.0 s/mh, test no. 2195121902

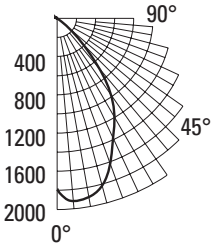

From 0°	cp.	Lumens
0°	1568	
5°	1705	162
15°	1467	407
25°	1145	527
35°	821	505
45°	244	198
55°	10	8
65°	4	4
75°	2	3
85°	2	2
90°	0	

Zone	Lumens	%lamp
0°-30°	1097	34.3
0°-40°	1602	50.1
0°-60°	1808	56.5
0°-90°	1817	56.8
90°-180°	0	0.0
0°-180°	1817	56.8*

*Efficiency

ρf / ρc / ρw	80% 50%	80% 30%	20% 70% 50%	20% 70% 30%	50% 50%	50% 30%
1	63	61	61	60	59	58
2	58	55	57	55	55	53
3	54	51	53	50	51	49
4	50	46	49	46	48	45
5	46	43	46	42	45	42
6	43	40	43	39	42	39
7	40	37	40	36	39	36
8	38	34	37	34	37	34
9	35	32	35	32	34	31
10	33	30	33	30	32	29

Mount height	Initial fc at beam center	50% beam angle 53.7° Beam diameter	50% beam angle 53.7° fc at beam edge	10% beam angle 85.6° Beam diameter	10% beam angle 85.6° fc at beam edge
8'	51.8	5.6'	25.9	10.2'	5.2
10'	27.9	7.6'	13.9	13.9'	2.8
12'	17.4	9.6'	8.7	17.6'	1.7
14'	11.9	11.7'	5.9	21.3'	1.2
16'	8.6	13.7	4.3	25.0'	0.9

AFV 32TRT 8MB, (1) PL-T 32W/30/4P lamp, 2400 rated lumens, 1.0 s/mh, test no. 2196071102

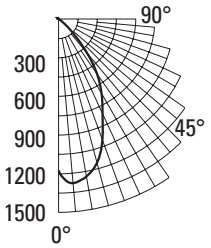

From 0°	cp.	Lumens
0°	1182	
5°	1279	120
15°	1157	322
25°	812	378
35°	525	329
45°	176	141
55°	2	4
65°	0	1
75°	0	1
85°	0	1
90°	0	

Zone	Lumens	%lamp
0°-30°	819	34.1
0°-40°	1147	47.8
0°-60°	1291	53.8
0°-90°	1291	53.8
90°-180°	0	0.0
0°-180°	1291	53.8*

*Efficiency

ρf / ρc / ρw	80% 50%	80% 30%	20% 70% 50%	20% 70% 30%	50% 50%	50% 30%
1	60	59	59	58	57	56
2	57	55	56	54	54	53
3	53	51	53	50	51	49
4	50	48	50	47	49	47
5	47	44	47	44	46	44
6	45	42	44	42	44	41
7	42	39	42	39	41	38
8	39	37	39	36	39	36
9	37	34	37	34	36	34
10	35	32	35	32	34	31

Mount height	Initial fc at beam center	50% beam angle 50.8° Beam diameter	50% beam angle 50.8° fc at beam edge	10% beam angle 84.2° Beam diameter	10% beam angle 84.2° fc at beam edge
8'	39.1	5.2'	19.5	9.9'	3.9
10'	21.0	7.1'	10.5	13.6'	2.1
12'	13.1	9.0'	6.6	17.2'	1.3
14'	8.9	10.9'	4.5	20.8'	0.9
16'	6.5	12.8'	3.2	24.4'	0.6

ENERGY (Calculated in accordance with NEMA standard LE-5A)

LER.DOH	Annual* Energy Cost	Lamps	Lamp Lumens	Ballast Factor	Input Watts
40	$5.99	(1) 26W DTT	1800	1.00	28
48	$4.98	(1) 26W DTT	1800	1.00	28
46	$5.24	(2) 32W TRT	2400	0.98	36
40	$6.07	(2) 42W TRT	3200	1.00	46

*Comparative yearly lighting energy cost per 1000 lumens

NOTES:
1. For electrical characteristics consult Technical Bulletins tab.
2. Tested to current IES and NEMA standards under stabilized laboratory conditions. Various operating factors can cause differences between laboratory data and actual field measurements. Dimensions and specifications are based on the most current available data and are subject to change without notice.

©2007 Gotham, Rev. 01/08

gotham
An Acuity Brands Company

GOTHAM ARCHITECTUR
A DIVISION OF ACUITY LIG
1400 Lester Road Cony
P 800 315 4982
www.g

UMNH
DC-102

FEATURES

OPTICAL SYSTEM

- Reflector System - Self flanged highly reflective/diffuse white painted cone. Outside of inner reflector is white with specular clear or semi-diffuse inner surface finish. Bounding Ray Optical Principle provides lamp before lamp image and smooth transition from top of reflector to bottom.
- Inner reflector is field adjustable to three settings that place the reflector flush with the ceiling, 3/8" or 3/4" below the ceiling.
- Acrylic diffuser retains inner reflector.
- Clear (WHT - Snow) diffuser provides direct/indirect luminaire performance. Optional blue (BLU - Sky), green (GRN - Sea) or tan (TAN - Sand) diffusers add visual interest.
- Hinged lampdoor seals upper trim for optimal fixture efficiency and the reduction of stray light in the plenum.

MECHANICAL

- 16-gauge galvanized steel mounting/plaster frame with integral yoke to retain optical system. Maximum 1-1/2" ceiling thickness.
- Mounting bars are 16-gauge galvanized steel with continuous 4" vertical adjustment, held in place with toolless, cam-action locking system. Post installation adjustment possible without the use of tools from above or below the ceiling. Shipped pre-installed.
- Galvanized steel junction box with bottom-hinged access covers and spring latches. Two combination 1/2"-3/4" and three 1/2" knockouts for straight-through conduit runs. Capacity: 8 (4 in, 4 out) No. 12 AWG conductors rated for 90°C.

ELECTRICAL SYSTEM

- Horizontally-mounted, four-pin, positive-latch, thermoplastic socket(s).
- Class P, thermally-protected high power factor electronic ballast mounted to the junction box.

LISTING

- Fixtures are UL listed for thru-branch wiring, recessed mounting and damp locations. Listed and labeled to comply with Canadian Standards (see Options).

Type ..... Catalog number .....

Compact Fluorescent Downlights

8" PDGF

Open Reflector

Horizontal Lamp

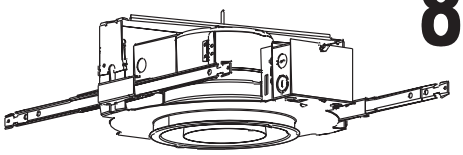

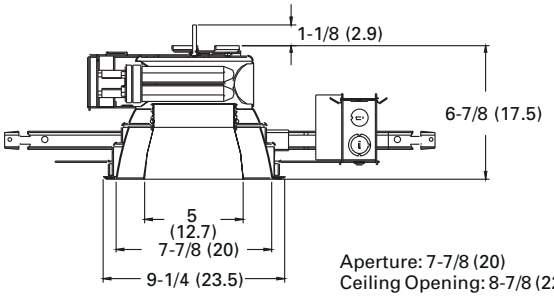

Aperture: 7-7/8 (20)
Ceiling Opening: 8-7/8 (22.5)
Overlap Trim: 9-1/4 (23.5)

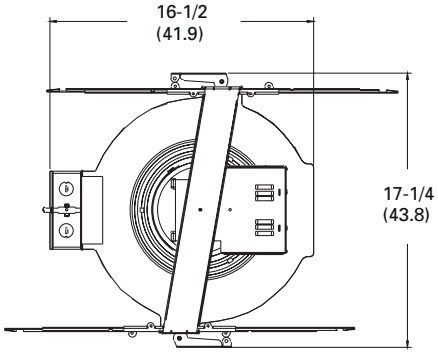

All dimensions are inches (centimeters).

ORDERING INFORMATION

Example: **PDGF 1/18TRT 8AR WHT MVOLT**

Choose the boldface catalog nomenclature that best suits your needs and write it on the appropriate line. Order accessories as separate catalog number (shipped separately).

PDGF _____ _____ _____ _____ _____ _____ _____ _____

Series	Lamp/Wattage	Reflector Type	Finish	Color	Voltage	Ballast[3]	Options
PDGF	**1/18TRT** **1/26TRT** **1/32TRT** **1/42TRT** **1/57TRT**[1] **2/18TRT** **2/26TRT** **2/32TRT** **2/42TRT**	**8AR** Clear	(blank) Specular low iridescent **LD** Semi-diffuse low iridescent	**WHT** Snow **GRN** Sea **BLU** Sky **TAN** Sand	**MVOLT**[2] **120** **277** **347**	(blank) GEB10 standard. Electronic ballast **DMHL** Lutron Hi-Lume electronic dimming ballast. **ADEZ** Advance Mark X electronic dimming ballast.	**WLP** With 35°K lamp (shipped separately). **LRC**[4] Provides compatibility with Lithonia Reloc System. **GMF** Single, slow-blow fuse (not available with MVOLT). **GLR** Single, fast-blow fuse (not available with MVOLT). **RIF** Radio Interference Filter. **ELR**[5,6] Emergency battery pack. Remote test switch provided. **QDS** Quick Disconnect for easy ballast replacement. Not available with ELR option. **DS** Dual switching. **GSKT** 1/8" X 3/8" foam gasketing. **CSA** Listed and labeled to comply with Canadian Standards. **CP**[6] Chicago Plenum. **CAL** Clear acrylic lens. Covers opening of inner cone for use where an enclosed fixture is required.

NOTES:

1 Available with Osram Sylvania lamp only.
2 Multi-volt electronic ballast capable of operating on any line voltage from 120 through 277V, 50 or 60 HZ.
3 Consult factory for specific availability.
4 For compatible reloc systems, refer to Technical Bulletins tab.
5 For dimensional changes, refer to Technical Bulletins tab.
6 CP & ELR not available in combination.

UMNH
DC-103

gotham®
An AcuityBrands Company

GOTHAM ARCHITECTURAL DOWNLIGHTING
A DIVISION OF ACUITY LIGHTING GROUP, INC.
1400 Lester Road Conyers Georgia 30012
P 800 315 4982 F 770 860 3129
www.gothamlighting.com

8" PDGF Open Reflector

Distribution curve | **Distribution data** | **Output data** | **Coefficient of utilization** | **Illuminance Data at 30" Above Floor for a Single Luminaire**

PDGF 2/42TRT 8AR WHT "CANDEO" CLEAR LENS, (2) CF42DT/E/IN/835, 3200 lumens per lamp, pos #1 (flush), test no. LTL11452

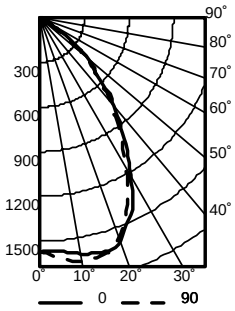

From 0°	Ave	Lumens
0	1573	
5	1609	155
15	1632	458
25	1380	627
35	923	578
45	530	419
55	180	176
65	49	51
75	25	26
85	7	8
90	0	

Zone	Lumens	% Lamp
0° - 30°	1239.2	19.4
0° - 40°	1817.0	28.4
0° - 60°	2411.4	37.7
0° - 90°	2496.2	39.0
90° - 180°	0.0	0.0
0° - 180°	2496.2	*39.0

*Efficiency

pf / pc / pw	80% 50%	80% 30%	20% 70% 50%	20% 70% 30%	50% 50%	50% 30%
1	.42	.41	.42	.41	.40	.39
2	.39	.37	.38	.36	.37	.35
3	.35	.33	.35	.33	.34	.32
4	.32	.30	.32	.29	.31	.29
5	.30	.27	.29	.27	.28	.26
6	.27	.24	.27	.24	.26	.24
7	.25	.22	.25	.22	.24	.22
8	.23	.21	.23	.21	.23	.20
9	.22	.19	.22	.19	.21	.19
10	.20	.18	.20	.18	.20	.17

Mount height	Inital fc at beam center	50% beam angle 58.5° Beam diameter	fc at beam edge	10% beam angle 93.3° Beam diameter	fc at beam edge
8	52.0	6.2	26.0	11.7	5.2
10	28.0	8.4	14.0	15.9	2.8
12	17.4	10.6	8.7	20.1	1.7
14	11.9	12.9	5.9	24.4	1.2
16	8.6	15.1	4.3	28.6	0.9

PDGF 1/42TRT 8AR WHT "CANDEO" CLEAR LENS, (1) CF42DT/E/IN/835, 3200 lumens per lamp, pos #1 (flush), test no. LTL11461

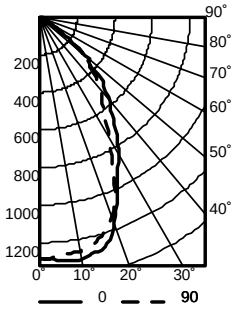

From 0°	Ave	Lumens
0	1284	
5	1291	123
15	1251	348
25	956	437
35	629	399
45	420	317
55	133	132
65	36	37
75	18	19
85	4	5
90	0	

Zone	Lumens	% Lamp
0° - 30°	908.6	28.4
0° - 40°	1307.6	40.9
0° - 60°	1757.3	54.9
0° - 90°	1818.0	56.8
90° - 180°	0.0	0.0
0° - 180°	1818.0	*56.8

*Efficiency

pf / pc / pw	80% 50%	80% 30%	20% 70% 50%	20% 70% 30%	50% 50%	50% 30%
1	.62	.60	.61	.59	.58	.57
2	.56	.54	.55	.53	.53	.51
3	.51	.48	.51	.47	.49	.46
4	.47	.43	.46	.43	.45	.42
5	.43	.39	.43	.39	.42	.38
6	.40	.36	.39	.36	.38	.35
7	.37	.33	.36	.33	.36	.32
8	.34	.30	.34	.30	.33	.30
9	.32	.28	.32	.28	.31	.28
10	.30	.26	.30	.26	.29	.26

Mount height	Inital fc at beam center	50% beam angle 53.1° Beam diameter	fc at beam edge	10% beam angle 92.4° Beam diameter	fc at beam edge
8	42.4	5.5	21.2	11.5	4.2
10	22.8	7.5	11.4	15.6	2.3
12	14.2	9.5	7.1	19.8	1.4
14	9.7	11.5	4.9	24.0	1.0
16	7.0	13.5	3.5	28.1	0.7

PDGF 1/42TRT 8AR WHT "CANDEO" CLEAR LENS, (1) CF42DT/E/IN/835, 3200 lumens per lamp, pos #3 (drop), test no. LTL11462

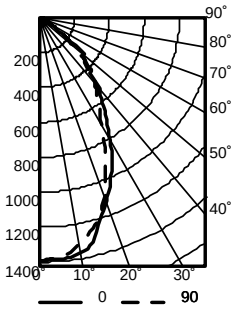

From 0°	Ave	Lumens
0	1394	
5	1386	131
15	1235	344
25	931	424
35	604	382
45	384	300
55	147	142
65	52	54
75	29	31
85	13	14
90	7	

Zone	Lumens	% Lamp
0° - 30°	899.4	28.1
0° - 40°	1281.4	40.0
0° - 60°	1723.1	53.8
0° - 90°	1822.1	56.9
90° - 180°	3.9	0.1
0° - 180°	1826.1	*57.1

*Efficiency

pf / pc / pw	80% 50%	80% 30%	20% 70% 50%	20% 70% 30%	50% 50%	50% 30%
1	.62	.60	.60	.59	.58	.57
2	.56	.53	.55	.52	.53	.51
3	.51	.48	.50	.47	.49	.46
4	.47	.43	.46	.42	.45	.42
5	.43	.39	.42	.39	.41	.38
6	.40	.35	.39	.35	.38	.35
7	.37	.33	.36	.32	.35	.32
8	.34	.30	.34	.30	.33	.29
9	.32	.28	.31	.28	.31	.27
10	.30	.26	.29	.26	.29	.25

Mount height	Inital fc at beam center	50% beam angle 49.8° Beam diameter	fc at beam edge	10% beam angle 89.5° Beam diameter	fc at beam edge
8	46.1	5.1	23.0	10.9	4.6
10	24.8	7.0	12.4	14.9	2.5
12	15.4	8.8	7.7	18.9	1.5
14	10.5	10.7	5.3	22.8	1.1
16	7.6	12.5	3.8	26.8	0.8

PDGF 1/32TRT 8AR WHT "CANDEO" CLEAR LENS, (1) CF42DT/E/IN/835, 2400 lumens per lamp, pos #1 (flush), test no. LTL11473

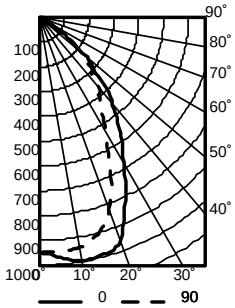

From 0°	Ave	Lumens
0	949	
5	955	91
15	919	255
25	687	314
35	456	289
45	309	230
55	95	95
65	26	27
75	13	13
85	3	4
90	0	

Zone	Lumens	% Lamp
0° - 30°	661.2	27.6
0° - 40°	950.2	39.6
0° - 60°	1275.6	53.2
0° - 90°	1319.2	55.0
90° - 180°	0.0	0.0
0° - 180°	1319.2	*55.0

*Efficiency

pf / pc / pw	80% 50%	80% 30%	20% 70% 50%	20% 70% 30%	50% 50%	50% 30%
1	.60	.58	.59	.57	.56	.55
2	.55	.52	.54	.51	.52	.50
3	.50	.46	.49	.46	.47	.45
4	.46	.42	.45	.42	.44	.41
5	.42	.38	.41	.38	.40	.37
6	.39	.35	.38	.34	.37	.34
7	.36	.32	.35	.32	.35	.31
8	.33	.29	.33	.29	.32	.29
9	.31	.27	.31	.27	.30	.27
10	.29	.25	.29	.25	.28	.25

Mount height	Inital fc at beam center	50% beam angle 52.2° Beam diameter	fc at beam edge	10% beam angle 92.1° Beam diameter	fc at beam edge
8	31.4	5.4	15.7	11.4	3.1
10	16.9	7.4	8.4	15.6	1.7
12	10.5	9.3	5.3	19.7	1.1
14	7.2	11.3	3.6	23.9	0.7
16	5.2	13.2	2.6	28.0	0.5

To calculate colored lens efficiencies, multiply the standard white efficiency by these factors:

Sky (BLU)	*.709*
Sea (GRN)	*.720*
Sand (TAN)	*.864*

UMNH
DC-103

NOTES:
1 For electrical characteristics, refer to electrical data tab.
2 Tested to current IES and NEMA standards under stabilized laboratory conditions. Various operating factors can cause differences between laboratory data and actual field measurements. Dimensions and specifications are based on the most current available data and are subject to change without notice.
3 Consult factory or IES file for other photometric reports.

©2003 Gotham, 4/03

gotham
An Acuity Brands Company

GOTHAM ARCHITECTURAL DOWNLIGHTING
A DIVISION OF ACUITY LIGHTING GROUP, INC.
1400 Lester Road Conyers Georgia 30012
P 800 315 4982 F 770 860 3129
www.gothamlighting.com

FEATURES

Type	Catalog number
.....	.....
.....	.....

OPTICAL SYSTEM

- Internal housing components painted matte black. Lamp snoot minimizes stray light in housing.
- Finishing trim is microgroove black baffle with white painted flange or specular, semi-diffuse or highly specular cone with flange that matches cone finish. White painted flange optional.
- Optical system retained by self-aligning butterfly support springs.
- Accommodates up to two lenses, filters or louvers.
- Softening lens standard (supplied).

MECHANICAL SYSTEM

- Black painted housing features tool-less top access and accommodates a maximum 2" ceiling thickness.
- Re-lamp capability from above or below ceiling.
- Mounting bars are 16-gauge galvanized steel with continuous 4" vertical adjustment, held in place with tool-less, integral cam-action locking. Post installation adjustment possible without the use of tools from above or below the ceiling. Shipped pre-installed.
- Secondary housing adjustment system for precise, final flange to ceiling alignment.
- Painted steel junction box with bottom-hinged access covers and spring latches. Four combination 1/2"-3/4" knockouts for straight-through conduit runs. Capacity: 8(4 in, 4 out) No. 12 AWG conductors, rated for 90°C.

ELECTRICAL SYSTEM

- Tool-less access door provides access to junction box through the aperture.
- Replaceable socket assembly. MR16 socket assembly standard (20W - 75W).
- Magnetic step-down transformer (replaceable without the use of tools).
- Thermally-activated insulation detector (replaceable without the use of tools).

LISTING

- Fixtures are UL listed for thru-branch wiring, recessed mounting and damp locations. Listed and labeled to comply with Canadian Standards.

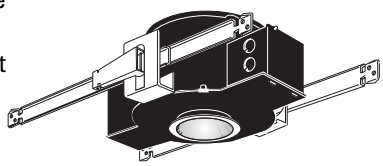

Low Voltage Downlights

4" DLV

Downlight

Open Cone

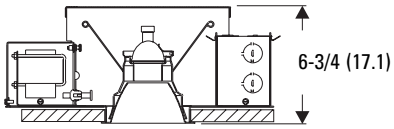

Aperture:	4-5/16 (11.0)
Ceiling opening:	4-7/8 (12.4)
Overlap trim:	5-7/16 (13.8)

All dimensions are inches (centimeters).

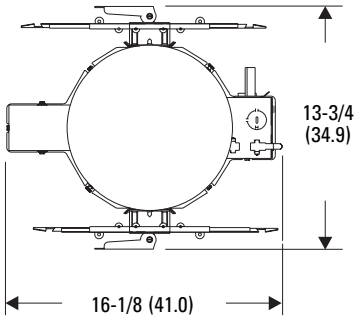

ORDERING INFORMATION

Example: **DLV DWN MR16 4AC 120**

Choose the boldface catalog nomenclature that best suits your needs and write it on the appropriate line.
Order accessories as separate catalog numbers (shipped separately).

DLV DWN

Series

DLV

Configuration

DWN

Lamp designation

MR16	MR16 capability (Standard)
MR11	MR11 capability
ALR12	ALR12 capability
ALR18	ALR18 capability
AR70[1]	AR70 capability

Cone/Color

4BC[2]	Black
4AC	Clear
4PC	Pewter
4WTC	Wheat
4UBC	Umber
4GC	Gold
4CC	Champagne gold
4WC[2]	White
4MB[2]	Contoured black baffle
4WB[2]	Contoured white baffle

Finish

(blank)	Specular low iridescent
LD	Semi-diffuse low iridescent
LS	Highly specular

Volt

120
277
347

Options

TRW	White painted flange. (Standard with WC, MB, and WB.)
LRC[3]	Provides compatibility with Lithonia Reloc System.

NOTES
1 Clear safety lens standard with AR70 lamp designation.
2 Not available with finishes.
3 For compatible Reloc systems, refer to options and accessories tab.

Accessories

- For lens accessories, refer to options and accessories tab.
- For lamp options, refer to options and accessories tab.

UMNH
DL-100

4" DLV Downlight, Gotham Series

Distribution curve | Distribution data | Output data | Coefficient of utilization | Single luminaire data 30" above floor

DLV DWN MR16 4AC, Q50MR16/C/NSP15 (EXT) lamp, 0.3 s/mh, 880 rated lumens, test no. 2198043004

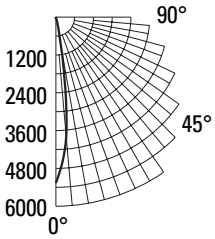

From 0°	cp.	Lumens
0°	5263	
5°	3805	301
15°	936	262
25°	114	58
35°	12	8
45°	3	2
55°	4	5
65°	8	6
75°	5	5
85°	3	5
90°	0	

Zone	Lumens	%lamp
0°-30°	622	70.7
0°-40°	630	71.6
0°-60°	637	72.4
0°-90°	654	74.3
90°-180°	0	0.0
0°-180°	654	74.3*

* Efficiency

ρf / ρc / ρw	80% 50%	80% 30%	20% 70% 50%	20% 70% 30%	50% 50%	50% 30%
1	84	82	82	81	79	78
2	80	78	79	77	76	75
3	77	74	76	73	74	72
4	74	71	73	71	72	70
5	72	69	71	68	70	68
6	70	67	69	66	68	66
7	68	65	67	65	67	64
8	66	63	66	63	65	63
9	65	62	64	62	64	61
10	63	61	63	60	63	60

Mount height	Initial fc at beam center	50% beam angle 15.6° Beam diameter	50% beam angle 15.6° fc at beam edge	10% beam angle 35.1° Beam diameter	10% beam angle 35.1° fc at beam edge
8'	174.0	1.5'	87.0	3.5'	17.4
10'	93.6	2.1'	46.8	4.8'	9.4
12'	58.3	2.6'	29.2	6.0'	5.8
14'	39.8	3.2'	19.9	7.3'	4.0
16'	28.9	3.7'	14.4	8.6'	2.9

DLV DWN MR16 4AC, 65MR16Q/10/NSP (FPA) lamp, 0.3 s/mh, 1100 rated lumens, test no. 2198040602

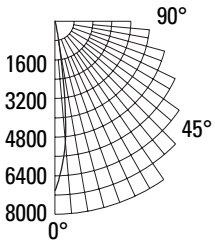

From 0°	cp.	Lumens
0°	7027	
5°	5017	398
15°	1182	334
25°	126	74
35°	15	11
45°	0	0
55°	0	0
65°	0	0
75°	0	0
85°	0	0
90°	0	

Zone	Lumens	%lamp
0°-30°	806	73.2
0°-40°	817	74.2
0°-60°	817	74.2
0°-90°	817	74.2
90°-180°	0	0.0
0°-180°	817	74.2*

* Efficiency

ρf / ρc / ρw	80% 50%	80% 30%	20% 70% 50%	20% 70% 30%	50% 50%	50% 30%
1	84	83	83	82	80	79
2	81	79	80	78	77	76
3	78	76	77	75	75	74
4	76	73	75	73	73	72
5	73	71	73	70	72	70
6	72	69	71	69	70	68
7	70	67	69	67	69	66
8	68	66	68	65	67	65
9	67	64	66	64	66	64
10	65	63	65	63	65	62

Mount height	Initial fc at beam center	50% beam angle 15.3° Beam diameter	50% beam angle 15.3° fc at beam edge	10% beam angle 34.2° Beam diameter	10% beam angle 34.2° fc at beam edge
8'	232.3	1.5'	116.1	3.4'	23.2
10'	124.9	2.0'	62.5	4.6'	12.5
12'	77.9	2.6'	38.9	5.8'	7.8
14'	53.1	3.1'	26.6	7.1'	5.3
16'	38.6	3.6'	19.3	8.3'	3.9

DLV DWN MR16 4AC, 50MR16Q/40/FL (EXN) lamp, 0.5 s/mh, 880 rated lumens, test no. 2198040605

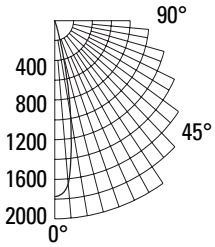

From 0°	cp.	Lumens
0°	1773	
5°	1646	147
15°	962	262
25°	291	139
35°	43	29
45°	1	1
55°	0	0
65°	0	0
75°	0	0
85°	0	0
90°	0	

Zone	Lumens	%lamp
0°-30°	548	62.3
0°-40°	577	65.6
0°-60°	578	65.7
0°-90°	578	65.7
90°-180°	0	0.0
0°-180°	578	65.7*

* Efficiency

ρf / ρc / ρw	80% 50%	80% 30%	20% 70% 50%	20% 70% 30%	50% 50%	50% 30%
1	74	73	73	71	70	69
2	70	68	69	67	67	65
3	67	64	66	64	64	62
4	64	61	63	61	62	60
5	61	58	61	58	60	57
6	59	56	58	56	57	55
7	57	54	56	53	55	53
8	54	52	54	51	54	51
9	53	50	52	49	52	49
10	51	48	51	48	50	48

Mount height	Initial fc at beam center	50% beam angle 29.5° Beam diameter	50% beam angle 29.5° fc at beam edge	10% beam angle 52.1° Beam diameter	10% beam angle 52.1° fc at beam edge
8'	58.6	2.9'	29.3	5.4'	5.9
10'	31.5	4.0'	15.8	7.3'	3.2
12'	19.6	5.0'	9.8	9.3'	2.0
14'	13.4	6.1'	6.7	11.2'	1.3
16'	9.7	7.1'	4.9	13.2'	1.0

DLV DWN MR16 4AC, Q71MR16/C/FL40 (EYC) lamp, 0.5 s/mh, 1100 rated lumens, test no. 2198043005

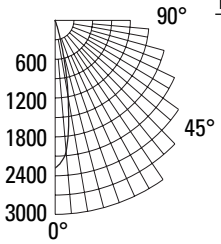

From 0°	cp.	Lumens
0°	2280	
5°	2027	182
15°	1190	325
25°	405	189
35°	62	42
45°	0	1
55°	1	1
65°	1	1
75°	1	1
85°	1	1
90°	0	

Zone	Lumens	%lamp
0°-30°	696	63.3
0°-40°	738	67.1
0°-60°	741	67.3
0°-90°	744	67.6
90°-180°	0	0.0
0°-180°	744	67.6*

* Efficiency

ρf / ρc / ρw	80% 50%	80% 30%	20% 70% 50%	20% 70% 30%	50% 50%	50% 30%
1	76	75	74	73	72	71
2	72	70	71	69	69	67
3	68	66	68	65	66	64
4	65	62	65	62	63	61
5	63	59	62	59	61	58
6	60	57	59	57	59	56
7	58	54	57	54	56	54
8	55	52	55	52	54	52
9	53	50	53	50	53	50
10	52	48	51	48	51	48

Mount height	Initial fc at beam center	50% beam angle 28.6° Beam diameter	50% beam angle 28.6° fc at beam edge	10% beam angle 52.9° Beam diameter	10% beam angle 52.9° fc at beam edge
8'	75.4	2.8'	37.7	5.5'	7.5
10'	40.5	3.8'	20.3	7.5'	4.1
12'	25.3	4.8'	12.6	9.5'	2.5
14'	17.2	5.9'	8.6	11.4'	1.7
16'	12.5	6.9'	6.3	13.4'	1.3

NOTES

1 Tested to current IES and NEMA standards under stabilized laboratory conditions. Various operating factors can cause differences between laboratory data and actual field measurements. Dimensions and specifications are based on the most current available data and are subject to change without notice.

©2003 Gotham, Rev. 01/03

gotham
An Acuity Brands Company

GOTHAM ARCHITECTUR
A DIVISION OF ACUITY LIG
1400 Lester Road Cony
P 800 315 4982
www.g

UMNH
DL-100

RSA LIGHTING

DESCRIPTION

3.5″ Round Downlight MR16 trim with smooth splay regress. For use with Armstrong® TechZone™ Ceiling products.

Trim face has Armstrong White finish with flat black internal finish

Catalog #	Type
Project	
Comments	
Prepared by	Date

SPECIFICATION / FEATURES

A ...Housing
All aluminum construction with 18″ of flexible conduit attached to a cylindrical transformer/wiring enclosure. Mounting hardware suited for TechZone™ ceilings exclusively.

B ...Trim:
3.5″ o.d. round trim with smooth splay regress. Finished in Armstrong® white.

C ...System Protection:
Thermal protection inside housing. Vent holes in housing provide cooler operation. All aluminum construction provides overall reduced temperatures.

D ...Electrical
Electronic transformer housed in a separate metal enclosure. Enclosure includes a separated wiring compartment and entry for primary leads.

E ...Lamp
12V MR16 37 watts max. (not included)
"POSI-GRIP" bi-pin lamp socket for firm, mechanical lamp connection. Can accept up to two (2) optical accessories.

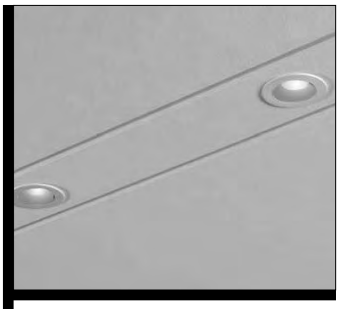

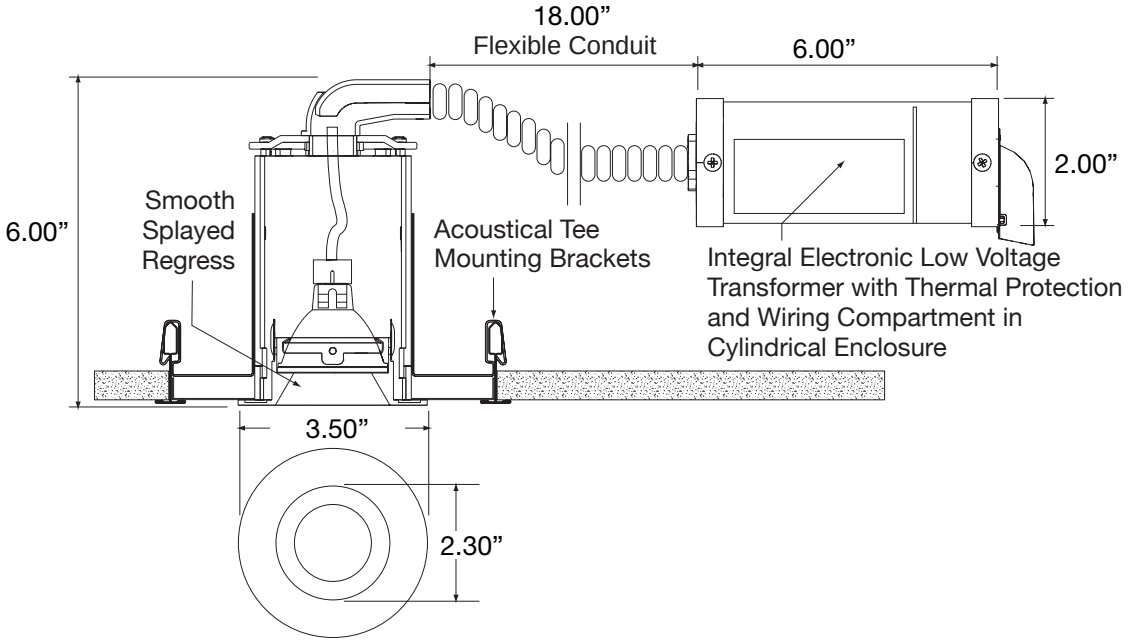

LYNX

Armstrong® TechZone™
Compatible

TZ3003

3.5″ Round Downlight Smooth Splay Regress

FOR 12V MR16 37 watts max.

ORDERING INFORMATION

TZ3003

TZ3003
3.5″ Round Trim with Smooth Splay Regress
Includes Housing with Integral Electronic Transformer and J-box - Trim face has Armstrong White finish
12V MR16 37W max.

UMNH
DL-101

DL15Z-1 - Fixed Zero Sight Line
DL15Z-2 - Fixed Flange Overlay

RECESSED DOWNLIGHT - REGRESSED BAFFLE

PRODUCT SPECIFICATION

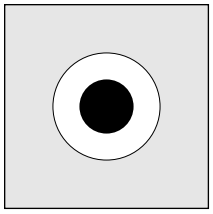

Cat. No.		Finish
DL15Z-1W	DL15Z-2W	Matte White
DL15Z-1B	DL15Z-2B	Matte Black
DL15Z-1C	DL15Z-2C	Polished Chrome
DL15Z-1G	DL15Z-2G	Polished Brass

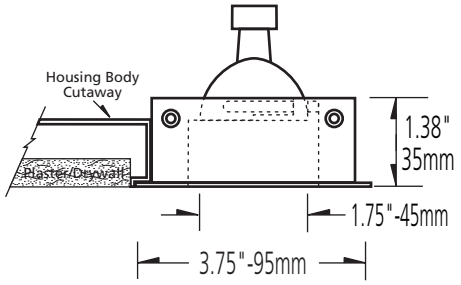

DL15Z-1 TRIM
(Use with Model DHT/ZO Housing)

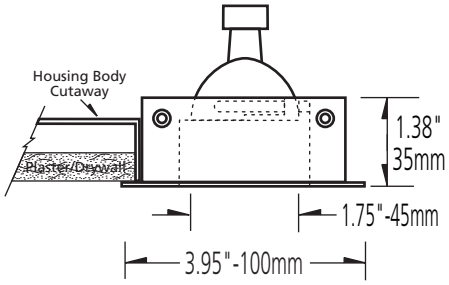

DL15Z-2 TRIM
(Use with Model DHT/ZF Housing)

GENERAL DESCRIPTION

Recessed downlight is a fixed low voltage fixture with round aperture and **flush trim plate**. Fixture has a regressed black baffle (shallow lamp recess on DL11Z-1/2 Trim) in a round removable lamp retainer. Lamp retainer allows easy relamping from room side of downlight trim without having to remove trim from housing. Trim is offered in two variations: **Model DL15Z-1** is for mounting, typically, in plaster or drywall ceilings with plaster stop for zero sight line; **Model DL15Z-2** is for mounting in drywall ceilings and incorporates standard flush trim with minimal protrusion over ceiling line. Both models use a quartz halogen lamp for superior color rendition and beam control. Frosted glass lens is supplied with fixture.

MOUNTING

Use DL15Z-1 with **DHT/ZO** housing, and DL15Z-2 with **DHT/ZF** housing, for non-IC, accessible and non-accessible ceilings which do not exceed 1 inch thickness. Housing butterfly brackets can be adjusted by loosening thumb-turn posts within housing to align housing neck with finish ceiling line. Model ZOIK drywall installation kit is included with Model DHT/ZO. It contains a reinforcing screen for applying joint compound when used in drywall ceilings.

MATERIAL

Trim is constructed of steel. Fixture housing is riveted aluminum.

ACCESSORIES

Trim may be accessorized with Honeycomb Louvre (HCL-1), Spread Glass Lens (SGL-1), Frosted Glass Lens (FGL-1), Linear Spread Lens (LSL-1), and Ultra Violet Glass Lens (UVL-1).

LABEL

U.L. Listed trim and housings for dry and damp, non-IC locations. File No. E115025.

ELECTRICAL

Trim is pre-wired for use in housing assembly.

TRANSFORMER

DHT/ZO and DHT/ZF housings are powered by 120v primary, 12v secondary integral electronic transformers (50w maximum), which are dimmable.

LAMP

12v MR-16 halogen lamp, 50w maximum (order separately). Specify lamp beam spread. Consult factory regarding availability of new MR-16 IR energy savings lamp series with 37w rated lamp equivalent to 50w output and 50w rated lamp at or near 65w output.

ENERGY CONSERVATION

Manufacturer recommends use of Osram Sylvania's energy saving 37w Tru-Aim® IR halogen lamps which convert more energy into light than conventional 50w MR-16 lamps. Tru-Aim® IR halogen lamps can be ordered from Lucifer Lighting for use in fixture. See luciferlighting.com for lamp specification guide.

WARRANTY

Manufacturer's one year warranty of product is conditioned on use of manufacturer supplied transformers.

LUCIFER LIGHTING COMPANY
414 Live Oak Street
San Antonio, Texas 78202
Phone 210 227-7329
FAX 210 227-4967
www.luciferlighting.com

©2004 Lucifer Lighting Company
As part of its policy of continuous research and produc
Company reserves the right to change or withdraw spe
prior notice.

UMNH
DL-102

DHI/Z - Insulated Airtight Housing

RECESSED DOWNLIGHT HOUSING

PROVISIONAL PRODUCT SPECIFICATION

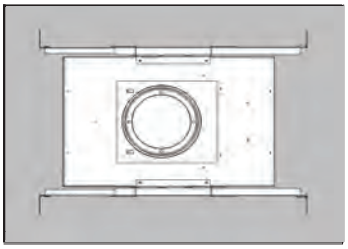

Cat. No.	Description
DHIZF-MR16-50-120E	MR-16 - 50w Max
DHIZO-MR16-50-120E	Same as above, for zero sightline

DHI/ZO

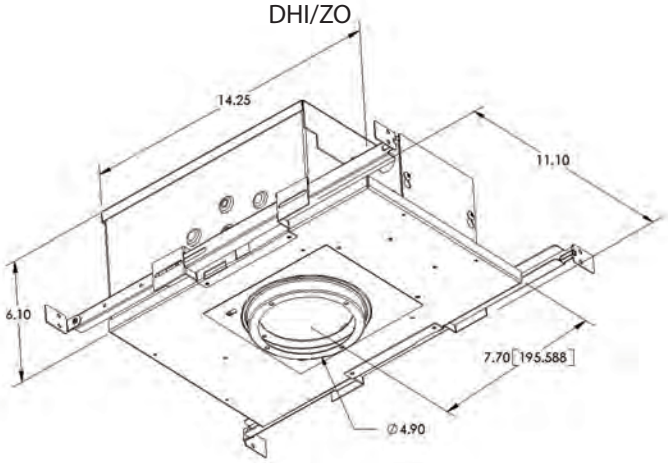

ZERO SIGHTLINE APPLIQUÉS

ROUND SQUARE

DHI/ZF

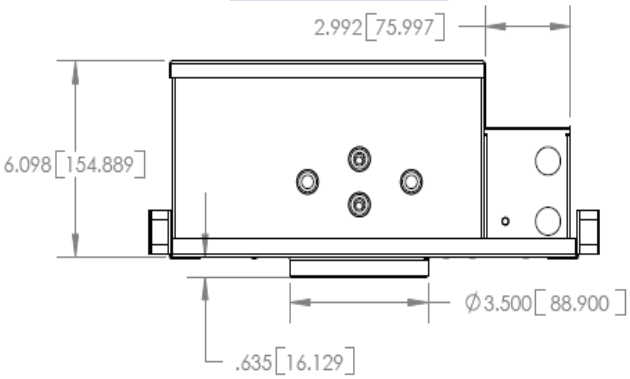

GENERAL DESCRIPTION

Recessed housing for use with recessed downlight trims in insulated, accessible and non-accessible ceilings up to 1.25 inch thickness, maximum 50w MR-16. Transformer compartment and all splice connections may be serviced from room side. Adjustable zero sightline adapter kit, included with DHI/ZO housing, allows for zero sightline upon downlight trim installation. It incorporates a reinforcing screen for applying joint compound when used in a drywall ceiling. Hanger bars are also included. Use small diameter trim models: DL2DGZ, DL31Z, DL32DGZ, and DL35Z.

ELECTRICAL

Housing is pre-wired for use with recessed downlight trims. Minimum 90C supply wiring required to power housing.

MATERIAL

Fixture housing is riveted aluminum.

ACCESSORIES

Applique for use with -2 trims in zero sightline applications (DHI/ZO).
DLA-APP-Z-RD for use with round trims.
DLA-APP-Z-SQ for use with square trims.

TRANSFORMER

Powered by UL Recognized integral 120V primary, 12V secondary electronic transformer (50W maximum), which is dimmable. The transformer in this housing includes RFI protection as a standard feature.

LAMP

12v MR-16 halogen lamp, 50w maximum (order seperately.) Specify lamp beam spread. Consult factory regarding availability of new MR-16 IR energy savings lamp series with 37w rated lamp equivalent to 50W output and 50W rated lamp at or near 65w output.

LABEL

UL Listed housing for use in direct contact with insulation in dry and damp locations. Restricted airflow meets Washington State Air Tight requirements and ASTM-283-84.

WARRANTY

Manufacturer's one year warranty of product is conditioned on use of manufacturer supplied transformer or ballast.

LUCIFER LIGHTING COMPANY
3750 IH-35 North
San Antonio, Texas 78202
Phone. 210 227-7329
FAX 210 227-4967
www.luciferlighting.com

©2007 Lucifer Lighting Company
As part of its policy of continuous research and product development, the Company reserves the right to change or withdraw specifications without prior notice.

UMNH
DL-102

Verge™

LEDALITE

Suspended

Direct/Indirect

2 T8

RESPONSE READY

mesoOptics®

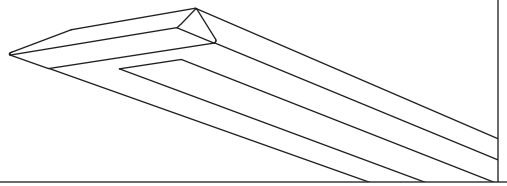

Project Name

Spec Type

Notes

Order Guide

Some combinations of product options may not be available. Consult factory for assistance with your specification.

7606	T02	Q	N	–		–		–		–		–	
Product Series & Type	Lamping	Lower Optics	Upper Optics		Run Length		Wiring		Voltage		Ballast		Color & Finish
Verge Direct/Indirect	2 T8	**Q** MesoOptics® Lens	**N** None **G** 80% Down Kit **J** 100% Down Kit		*Enter the total run length in feet (4ft increments)* 12'		**1** 1 cct **2** 2 cct **3** 1 cct w/ Emergency cct **4** 2 cct w/ Emergency cct **5** 1 cct w/ Battery Pack **6** 2 cct w/ Battery Pack **7** 1 cct Dimming		**1** 120V **2** 277V		**E** Standard Ballast		**W** Standard White **C** Factory Color **X** Custom Color
			See details on reverse		See details on reverse		Consult website for complete list of standard wiring options				Consult website for ballast manufacturer information		Consult website for color and finish options

Mounting Hardware

Mount Type	Suspension Length
Consult separate mounting spec sheet for mount type options	*Enter distance from ceiling to top of fixture in inches*

Upgrades & Accessories

Please indicate with check mark.

- ☐ Lamps Included
- ☐ Response Daylight (Integrated Controls)
  For details visit www.ledalite.com/response
- ☐ Dust Cover

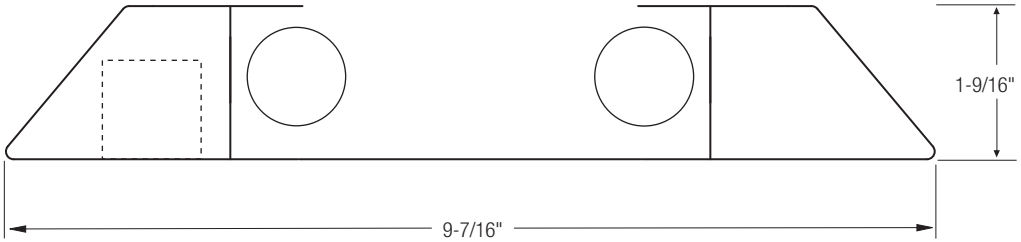

UMNH
FP-100

Verge™

Suspended

Direct/Indirect

2 T8

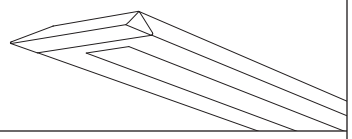

Photometry

Optics QN MesoOptics® Lens

Report Summary

Report # 9901147
Filename 7606T02QN.ies
Efficiency 78.2%

Peak Candela Value* 798 @ 160°
Peak to Zenith Ratio* 1.0 : 1

* Between 90-180° vertical angle

Meets RP-1-04 recommendations for VDT-Intensive spaces

Candela Distribution

Vertical Angle	Horizontal Angle 0	22.5	45	67.5	90	Zonal Lumens
0	471	471	471	471	471	
5	468	470	473	475	477	47
15	454	465	484	503	514	137
25	425	449	495	538	556	227
35	371	401	445	487	488	273
45	284	300	309	328	321	239
55	182	191	186	201	193	172
65	108	109	105	112	109	109
75	45	47	43	49	45	50
85	6	7	7	9	7	10
90	0	0	0	0	0	
95	54	140	186	161	187	166
105	176	342	519	532	575	457
115	306	416	602	714	758	558
125	432	500	637	747	783	558
135	543	591	681	751	777	518
145	633	666	727	770	785	450
155	713	724	762	789	796	350
165	758	764	782	795	797	220
175	784	785	788	791	790	76
180	788	788	788	788	788	

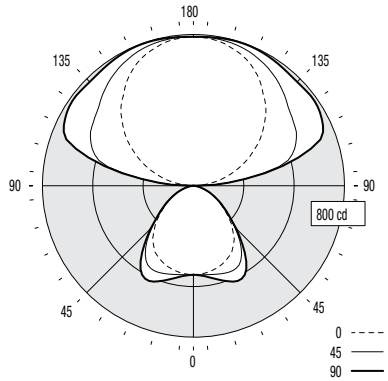

72.6% Up / 27.4% Down

Coefficients of Utilization (%)

Ceiling:	80				70			50			0
Wall:	70	50	30	10	70	50	30	50	30	10	0
0 RCR	79	79	79	79	71	71	71	55	55	55	21
1	73	69	67	64	65	62	60	48	47	45	18
2	66	61	56	52	59	54	51	43	40	38	15
3	60	53	48	44	54	48	43	38	35	32	13
4	55	47	41	37	49	42	38	33	30	27	11
5	51	42	36	32	45	38	33	30	26	23	10
6	47	38	32	27	41	34	29	27	23	20	9
7	43	34	28	24	38	30	25	24	20	18	8
8	40	31	25	21	35	28	23	22	18	16	7
9	37	28	22	18	33	25	20	20	16	14	6
10	34	25	20	16	31	23	18	18	15	12	6

Based on a floor reflectance of 0.2

Avg. Luminance (cd/m²)

Vertical Angle	Horizontal Angle 0	45	90
55	2943	3008	3121
65	2370	2305	2392
75	1613	1541	1613
85	639	745	745

IES files for this and other photometric options can be downloaded online at www.ledalite.com

Additional Information

Modules

Module length excludes endcaps. Nominal mount spacing for individually mounted modules.

Module	Mount Spacing*
4ft	4' 0"
8ft	8' 0"

* Refer to installation instructions for exact mount spacing

Endcap

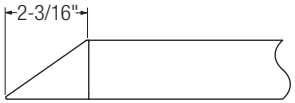

Upper Optics

G 80% Down Kit

J 100% Down Kit

Switching Options

Cross-section view of distribution

2 cct A/B switching (module to module)*

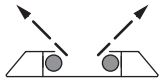

Symmetric distribution. Every other lens is illuminated.

2 cct left/right (L/R) switching

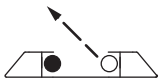

Asymmetric distribution. Lenses are not evenly illuminated and ceiling distribution is uneven.

1 cct step dimming*

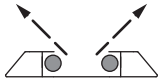

Symmetric distribution. Lenses are uniform and evenly illuminated.

Bottom view of 8ft module

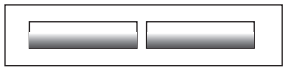

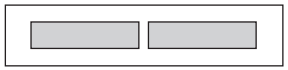

** consult factory for ordering information*

** consult factory for ordering information*

Specifications

Due to continuing product improvements, Ledalite reserves the right to change specifications without notice.

Housing
Die-formed 18 gauge cold-rolled steel.

Weight
3.5 lb/ft.

Optical System
High efficiency optical system providing an optimal direct/indirect distribution. Lower optics consist of a flat acrylic panel with a layer of MesoOptics® film that provides a controlled distribution in the lower hemisphere.

T5/T5HO upper optics include high performance Miro IV® specular reflectors that provide a wide-spread batwing to evenly illuminate the ceiling (T8 upper optics are painted high reflective white).

Standard distribution is 70% up / 30% down. Optional field-installable variable optics kits provide additional downlight as required.

Endcaps
Die-cast endcaps.

Joints
Self-aligning joining system with hands-free pre-joining wire access.

Mounting
Aircraft cable gripper is tamper-resistant and provides infinite vertical adjustment capability. Aircraft cable, crimp and cable gripper independently tested to meet stringent safety requirements.

Electrical
Factory pre-wired to section ends with quick-wire connectors.

Ballast
Electronic. Supplied with pre-installed ballast disconnects as per changes to the National Electrical Code.

Approvals
Certified to UL and CSA standards.

Finish
High-quality powder coat. Available in Ledalite Standard White (textured matte finish), and a selection of other factory and customer-specified colors. Consult factory for details.

UMNH
FP-100

Verge™

LEDALITE

Suspended

Direct/Indirect

2 T8

RESPONSE READY

mesoOptics®

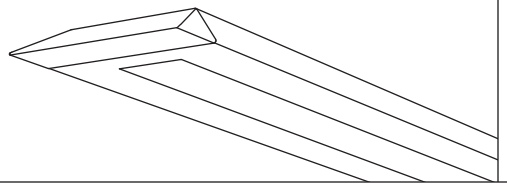

Project Name

Spec Type

Notes

Order Guide

Some combinations of product options may not be available. Consult factory for assistance with your specification.

7606	T02	Q	N	–		–		–		–		–	
Product Series & Type	Lamping	Lower Optics	Upper Optics		Run Length		Wiring		Voltage		Ballast		Color & Finish
Verge Direct/Indirect	2 T8	**Q** MesoOptics® Lens	**N** None **G** 80% Down Kit **J** 100% Down Kit		*Enter the total run length in feet (4ft increments)*		**1** 1 cct **2** 2 cct **3** 1 cct w/ Emergency cct **4** 2 cct w/ Emergency cct **5** 1 cct w/ Battery Pack **6** 2 cct w/ Battery Pack **7** 1 cct Dimming		**1** 120V **2** 277V		**E** Standard Ballast		**W** Standard White **C** Factory Color **X** Custom Color
			See details on reverse		See details on reverse		Consult website for complete list of standard wiring options				Consult website for ballast manufacturer information		Consult website for color and finish options

FP-101 8'
FP-102 16'

Mounting Hardware

Mount Type	Suspension Length
Consult separate mounting spec sheet for mount type options	*Enter distance from ceiling to top of fixture in inches*

Upgrades & Accessories

Please indicate with check mark.

- ☐ Lamps Included
- ☐ Response Daylight (Integrated Controls)
  For details visit www.ledalite.com/response
- ☐ Dust Cover

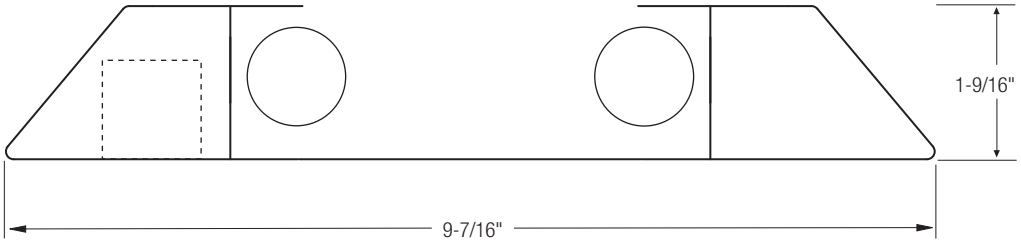

UMNH
FP-101
FP-102

Verge™

Suspended

Direct/Indirect

2 T8

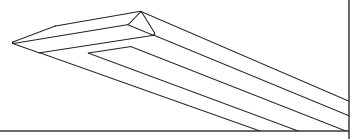

Photometry

Optics QN MesoOptics® Lens

Report Summary

Report # 9901147
Filename 7606T02QN.ies
Efficiency 78.2%

Peak Candela Value* 798 @ 160°
Peak to Zenith Ratio* 1.0 : 1

* Between 90-180° vertical angle

Meets RP-1-04 recommendations for VDT-Intensive spaces

Candela Distribution

Vertical Angle	Horizontal Angle 0	22.5	45	67.5	90	Zonal Lumens
0	471	471	471	471	471	
5	468	470	473	475	477	47
15	454	465	484	503	514	137
25	425	449	495	538	556	227
35	371	401	445	487	488	273
45	284	300	309	328	321	239
55	182	191	186	201	193	172
65	108	109	105	112	109	109
75	45	47	43	49	45	50
85	6	7	7	9	7	10
90	0	0	0	0	0	
95	54	140	186	161	187	166
105	176	342	519	532	575	457
115	306	416	602	714	758	558
125	432	500	637	747	783	558
135	543	591	681	751	777	518
145	633	666	727	770	785	450
155	713	724	762	789	796	350
165	758	764	782	795	797	220
175	784	785	788	791	790	76
180	788	788	788	788	788	

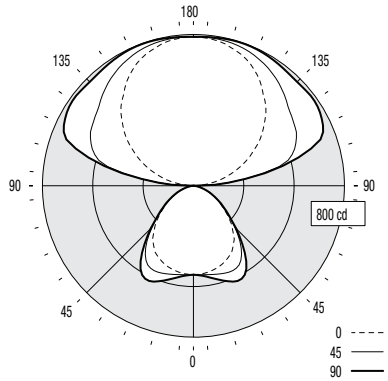

72.6% Up / 27.4% Down

Coefficients of Utilization (%)

Ceiling:	80				70			50			0
Wall:	70	50	30	10	70	50	30	50	30	10	0
0 RCR	79	79	79	79	71	71	71	55	55	55	21
1	73	69	67	64	65	62	60	48	47	45	18
2	66	61	56	52	59	54	51	43	40	38	15
3	60	53	48	44	54	48	43	38	35	32	13
4	55	47	41	37	49	42	38	33	30	27	11
5	51	42	36	32	45	38	33	30	26	23	10
6	47	38	32	27	41	34	29	27	23	20	9
7	43	34	28	24	38	30	25	24	20	18	8
8	40	31	25	21	35	28	23	22	18	16	7
9	37	28	22	18	33	25	20	20	16	14	6
10	34	25	20	16	31	23	18	18	15	12	6

Based on a floor reflectance of 0.2

Avg. Luminance (cd/m²)

Vertical Angle	Horizontal Angle 0	45	90
55	2943	3008	3121
65	2370	2305	2392
75	1613	1541	1613
85	639	745	745

IES files for this and other photometric options can be downloaded online at www.ledalite.com

Additional Information

Modules

Module length excludes endcaps. Nominal mount spacing for individually mounted modules.

Module	Mount Spacing*
4ft	4' 0"
8ft	8' 0"

* Refer to installation instructions for exact mount spacing

Endcap

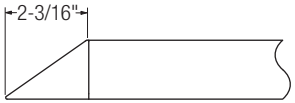

Upper Optics

G 80% Down Kit

J 100% Down Kit

Switching Options

Cross-section view of distribution

2 cct A/B switching (module to module)*

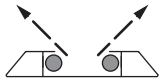

Symmetric distribution. Every other lens is illuminated.

2 cct left/right (L/R) switching

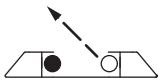

Asymmetric distribution. Lenses are not evenly illuminated and ceiling distribution is uneven.

1 cct step dimming*

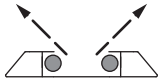

Symmetric distribution. Lenses are uniform and evenly illuminated.

Bottom view of 8ft module

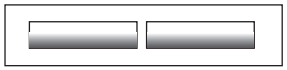

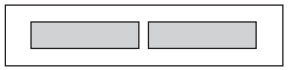

** consult factory for ordering information*

** consult factory for ordering information*

Specifications

Due to continuing product improvements, Ledalite reserves the right to change specifications without notice.

Housing
Die-formed 18 gauge cold-rolled steel.

Weight
3.5 lb/ft.

Optical System
High efficiency optical system providing an optimal direct/indirect distribution. Lower optics consist of a flat acrylic panel with a layer of MesoOptics® film that provides a controlled distribution in the lower hemisphere.

T5/T5HO upper optics include high performance Miro IV® specular reflectors that provide a wide-spread batwing to evenly illuminate the ceiling (T8 upper optics are painted high reflective white).

Standard distribution is 70% up / 30% down. Optional field-installable variable optics kits provide additional downlight as required.

Endcaps
Die-cast endcaps.

Joints
Self-aligning joining system with hands-free pre-joining wire access.

Mounting
Aircraft cable gripper is tamper-resistant and provides infinite vertical adjustment capability. Aircraft cable, crimp and cable gripper independently tested to meet stringent safety requirements.

Electrical
Factory pre-wired to section ends with quick-wire connectors.

Ballast
Electronic. Supplied with pre-installed ballast disconnects as per changes to the National Electrical Code.

Approvals
Certified to UL and CSA standards.

Finish
High-quality powder coat. Available in Ledalite Standard White (textured matte finish), and a selection of other factory and customer-specified colors. Consult factory for details.

UMNH
FP-101
FP-102

PureFX®

LEDALITE

Recessed

2'x2'

2 T5HO

mesoOptics®

RESPONSE READY

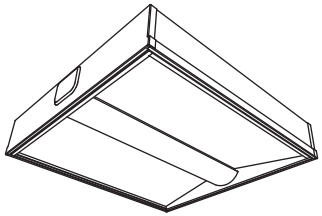

Project Name

Spec Type

Notes

Order Guide

Some combinations of product options may not be available. Consult factory for assistance with your specification.

9422			H224	–		–		–		–	

Product Series & Size	Version	Configuration	Lamping	Housing	Wiring	Voltage	Ballast
PureFX 2'x2'	**D1** Standard T-Grid **D2** Slot T-Grid **A1** Air Return on Standard T-Grid **A2** Air Return on Slot T-Grid See details on reverse	**ST** Standalone **CR** Continuous Row	2 T5HO (24W)	**S** Standard (22qa.) **N** New York (20qa.) **C** Chicago Plenum **T** Standard w/ Frame Restraint	**1** 1 cct **5** 1 cct w/ Battery Pack **7** 1 cct Dimming Consult website for complete list of standard wiring options	**1** 120V **2** 277V **3** 347V	**E** Standard Ballast Consult website for ballast manufacturer information

Upgrades & Accessories

Please indicate with check mark.

- ☐ Lamps Included
- ☐ Lamps Included & Installed
- ☐ Job Pack
- ☐ Drywall Kit

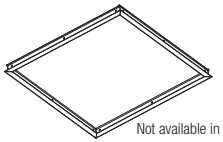

Not available in continuous row

Can be mounted to wood frame or with hanger wire

Wood Frame

Hanger Wire

- ☐ Response Daylight
  For details visit www.ledalite.com/response

Cross Section

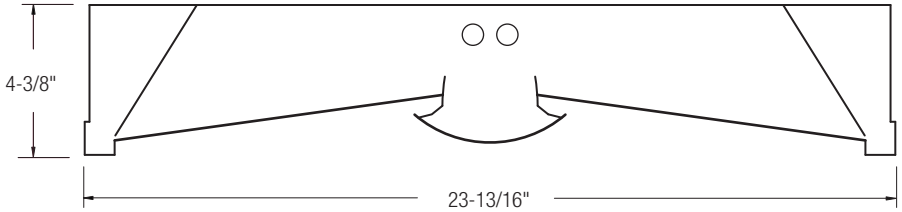

Side View

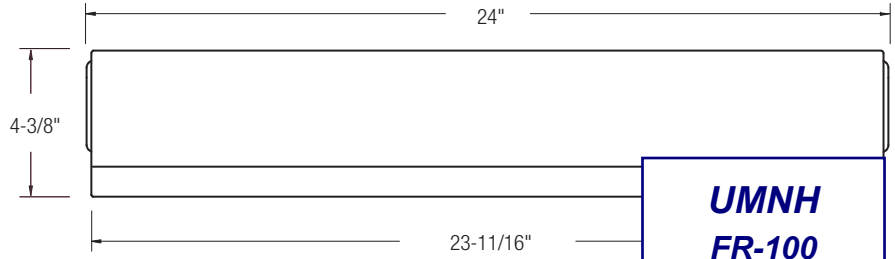

UMNH
FR-100

PureFX®

Recessed

2'x2'

2 T5HO

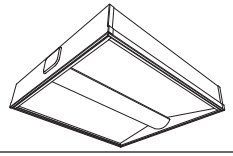

Photometry

Report Summary

Report # 2101758
Filename 9422D1H224.ies
Efficiency 74.1%

Spacing Criteria 1.3 @ 0˚ along
1.4 @ 90˚ across

Meets RP-1-04 recommendations for VDT-Normal spaces

Candela Distribution

Vertical Angle	Horizontal Angle 0	22.5	45	67.5	90	Zonal Lumens
0	1143	1143	1143	1143	1143	
5	1137	1141	1149	1162	1162	112
15	1101	1125	1187	1254	1268	338
25	1031	1088	1222	1317	1349	552
35	907	970	1080	1073	1085	639
45	722	714	734	705	718	555
55	460	426	444	439	450	396
65	229	216	242	248	261	237
75	76	79	110	117	129	110
85	10	11	24	25	34	26
90	1	1	1	0	0	

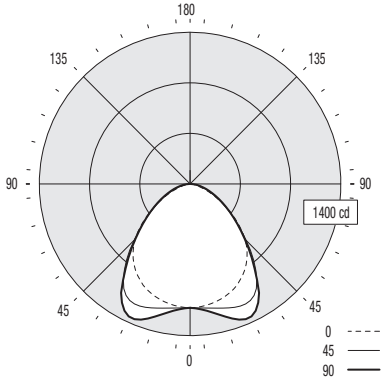

Coefficients of Utilization (%)

Ceiling:	80				70			50			0
Wall:	70	50	30	10	70	50	30	50	30	10	0
0 RCR	88	88	88	88	86	86	86	82	82	82	74
1	81	78	76	73	79	77	74	74	72	70	64
2	75	69	65	61	73	68	64	66	62	59	55
3	69	62	56	52	67	61	56	59	54	51	47
4	63	55	49	45	62	54	49	53	48	44	41
5	59	50	44	39	57	49	43	47	42	39	36
6	54	45	39	34	53	44	39	43	38	34	32
7	50	41	35	31	49	40	35	39	34	30	29
8	47	38	32	27	46	37	31	36	31	27	26
9	44	35	29	25	43	34	29	33	28	25	23
10	41	32	26	22	40	31	26	31	26	22	21

Based on a floor reflectance of 0.2

Avg. Luminance (cd/m²)

Vertical Angle	Horizontal Angle 0	45	90
55	2341	2259	2290
65	1582	1671	1803
75	857	1241	1455
85	335	804	1139

IES files for this and other photometric options can be downloaded online at www.ledalite.com

Additional Information

Mounting

Integrates with most common T-bar ceiling types.

If applicable, consult factory for air return mounting details.

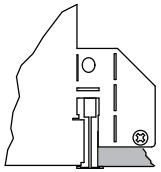

D1 Standard T-Grid

Option D1 works with 9/16" and 15/16" flat T-grid ceilings. It can also be used with slot T-grid ceilings, but it will not sit flush with the bottom of the T-bar.

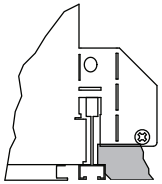

D2 Slot T-Grid

Option D2 is designed to sit flush with slot T-grid ceilings and some tegular tile ceiling types.

Ceiling Types

Integrated mounting tabs can be field-adjusted to various T-bar ceiling heights for fastening directly to the T-bar grid and/or tied-off to the building structure.

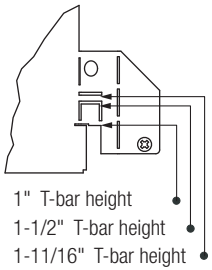

Air Return

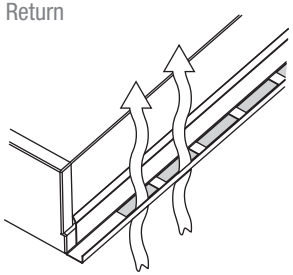

Specifications

Due to continuing product improvements, Ledalite reserves the right to change specifications without notice.

Housing
Die-formed, post-painted, 22 gauge cold-rolled steel (New York City version is 20 gauge). Wire entrances are positioned on the side of the housing to allow easy wiring access for the installer. Multiple wire entrances are available (top or side, except only top in 6"x4') to allow continuous row mounting of fixtures. Optional frame restraint is available to provide additional support to the optical frame.

Weight
Maximum 23 lbs.

Optical System
Optical assembly consists of flat acrylic panels and extruded curved acrylic lens. The optical frame ends are constructed from die-formed cold-rolled steel assembled together with extruded aluminum profiles in a sturdy frame. The frame is hinged to allow easy access to the inside of the fixture. Maintenance can be performed from below the ceiling without the need of tools. No hardware is visible.

Mounting
Fixture is compatible with most ceiling types. Integrated bend-out tabs are provided for different T-grid heights. Optional drywall kit is available for non-accessible ceilings. Use screws or hanger wire (supplied by others) to secure fixture.

Ballast
Ballasts are electronic and available in 120V, 277V or 347V.

Wiring
Flexible cable whips supplied in 9' or 12' lengths for standard master/satellite configurations.

Air Return
Air return option available in 2'x2' and 2'x4' sizes. Side rails are finished in black.

Approvals
Certified to UL & CSA Standards.
City of Chicago Approved CCEA (housing option C).
Designed to comply with NYC code requirements (Housing Option N).

Finish
Housing and Frame: Post-painted, high quality powder coat. Available in white only.

UMNH
FR-100

PureFX®

LEDALITE

Recessed

2'x2'

2 T5HO

mesoOptics®

RESPONSE READY

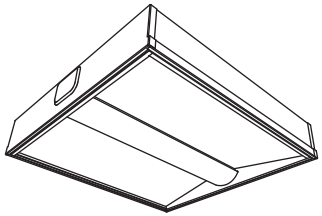

Project Name

Spec Type

Notes

Order Guide

Some combinations of product options may not be available. Consult factory for assistance with your specification.

9422			H224	–		–		–		–	

Product Series & Size	Version	Configuration	Lamping	Housing	Wiring	Voltage	Ballast
PureFX 2'x2'	**D1** Standard T-Grid **D2** Slot T-Grid **A1** Air Return on Standard T-Grid **A2** Air Return on Slot T-Grid See details on reverse	**ST** Standalone **CR** Continuous Row	2 T5HO (24W)	**S** Standard (22qa.) **N** New York (20qa.) **C** Chicago Plenum **T** Standard w/ Frame Restraint	**1** 1 cct **5** 1 cct w/ Battery Pack **7** 1 cct Dimming ***Lutron FDB series 100%-1%*** Consult website for complete list of standard wiring options	**1** 120V **2** 277V **3** 347V	**E** Standard Ballast Consult website for ballast manufacturer information

Upgrades & Accessories

Please indicate with check mark.

- ☐ Lamps Included
- ☐ Lamps Included & Installed
- ☐ Job Pack
- ☐ Drywall Kit

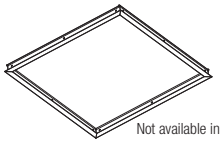

Not available in continuous row

Can be mounted to wood frame or with hanger wire

Wood Frame

Hanger Wire

- ☐ Response Daylight
  For details visit www.ledalite.com/response

Cross Section

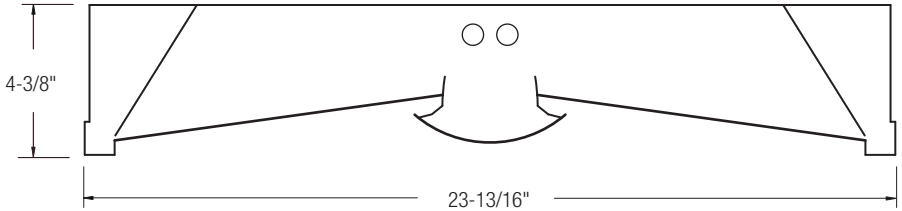

Side View

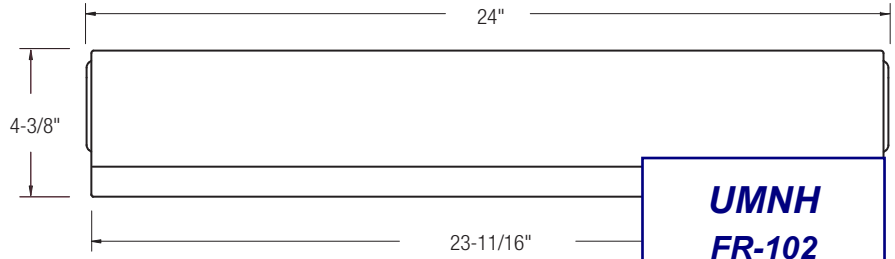

UMNH FR-102

PureFX®

Recessed

2'x2'

2 T5HO

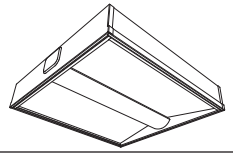

Photometry

Report Summary

Report # 2101758
Filename 9422D1H224.ies
Efficiency 74.1%

Spacing Criteria 1.3 @ 0˚ along
1.4 @ 90˚ across

Meets RP-1-04 recommendations for VDT-Normal spaces

Candela Distribution

Vertical Angle	Horizontal Angle 0	22.5	45	67.5	90	Zonal Lumens
0	1143	1143	1143	1143	1143	
5	1137	1141	1149	1162	1162	112
15	1101	1125	1187	1254	1268	338
25	1031	1088	1222	1317	1349	552
35	907	970	1080	1073	1085	639
45	722	714	734	705	718	555
55	460	426	444	439	450	396
65	229	216	242	248	261	237
75	76	79	110	117	129	110
85	10	11	24	25	34	26
90	1	1	1	0	0	

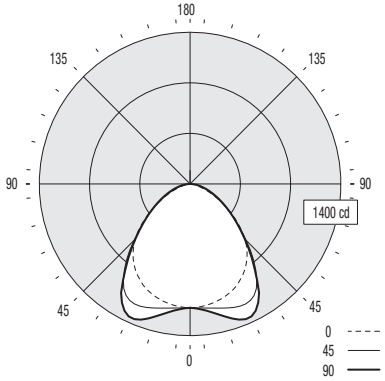

Coefficients of Utilization (%)

Ceiling:	80				70			50			0
Wall:	70	50	30	10	70	50	30	50	30	10	0
0 RCR	88	88	88	88	86	86	86	82	82	82	74
1	81	78	76	73	79	77	74	74	72	70	64
2	75	69	65	61	73	68	64	66	62	59	55
3	69	62	56	52	67	61	56	59	54	51	47
4	63	55	49	45	62	54	49	53	48	44	41
5	59	50	44	39	57	49	43	47	42	39	36
6	54	45	39	34	53	44	39	43	38	34	32
7	50	41	35	31	49	40	35	39	34	30	29
8	47	38	32	27	46	37	31	36	31	27	26
9	44	35	29	25	43	34	29	33	28	25	23
10	41	32	26	22	40	31	26	31	26	22	21

Based on a floor reflectance of 0.2

Avg. Luminance (cd/m²)

Vertical Angle	Horizontal Angle 0	45	90
55	2341	2259	2290
65	1582	1671	1803
75	857	1241	1455
85	335	804	1139

IES files for this and other photometric options can be downloaded online at www.ledalite.com

Additional Information

Mounting

Integrates with most common T-bar ceiling types.

If applicable, consult factory for air return mounting details.

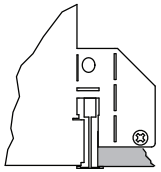

D1 Standard T-Grid

Option D1 works with 9/16" and 15/16" flat T-grid ceilings. It can also be used with slot T-grid ceilings, but it will not sit flush with the bottom of the T-bar.

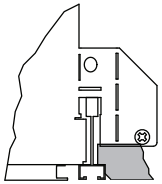

D2 Slot T-Grid

Option D2 is designed to sit flush with slot T-grid ceilings and some tegular tile ceiling types.

Ceiling Types

Integrated mounting tabs can be field-adjusted to various T-bar ceiling heights for fastening directly to the T-bar grid and/or tied-off to the building structure.

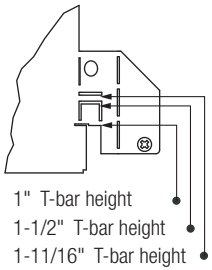

Air Return

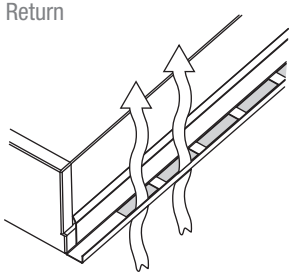

Specifications

Due to continuing product improvements, Ledalite reserves the right to change specifications without notice.

Housing
Die-formed, post-painted, 22 gauge cold-rolled steel (New York City version is 20 gauge). Wire entrances are positioned on the side of the housing to allow easy wiring access for the installer. Multiple wire entrances are available (top or side, except only top in 6"x4') to allow continuous row mounting of fixtures. Optional frame restraint is available to provide additional support to the optical frame.

Weight
Maximum 23 lbs.

Optical System
Optical assembly consists of flat acrylic panels and extruded curved acrylic lens. The optical frame ends are constructed from die-formed cold-rolled steel assembled together with extruded aluminum profiles in a sturdy frame. The frame is hinged to allow easy access to the inside of the fixture. Maintenance can be performed from below the ceiling without the need of tools. No hardware is visible.

Mounting
Fixture is compatible with most ceiling types. Integrated bend-out tabs are provided for different T-grid heights. Optional drywall kit is available for non-accessible ceilings. Use screws or hanger wire (supplied by others) to secure fixture.

Ballast
Ballasts are electronic and available in 120V, 277V or 347V.

Wiring
Flexible cable whips supplied in 9' or 12' lengths for standard master/satellite configurations.

Air Return
Air return option available in 2'x2' and 2'x4' sizes. Side rails are finished in black.

Approvals
Certified to UL & CSA Standards.
City of Chicago Approved CCEA (housing option C).
Designed to comply with NYC code requirements (Housing Option N).

Finish
Housing and Frame: Post-painted, high quality powder coat. Available in white only.

UMNH
FR-102

electrix
ILLUMINATION

PROJECT NAME :

TYPE :

MODEL : GTS-7 2 SC

SUBMITTAL APPROVED BY :

DATE :

Set Field To Current Date

PATENT PENDING

PROPRIETARY AND CONFIDENTIAL
The information contained in this document is the sole property of Electrix, Inc. Any further reproduction in part or as a whole without written permission from Electrix, Inc. is strictly prohibited.

PRODUCT | LL SERIES

LumiLedge® Sheet Rock Gear Tray S-7

GTS Two Lamp Parallel Staggered Cove Luminaire

Reset Product Code | Reset Entire Form

HOW TO SPECIFY | Gear Tray

GTS-7

PRODUCT
Gear Tray S-7

LAMP
54 - 54 watt T5 HO
39 - 39 watt T5 HO
24 - 24 watt T5 HO

28 - 28 watt T5
21 - 21 watt T5
14 - 14 watt T5

32 - 32 watt T8
25 - 25 watt T8
17 - 17 watt T8

2

VOLTAGE
U - Universal 120 through 277V
Please Specify Voltage For Dimming
1 - 120V
2 - 277V

BALLAST
E - Electronic HPF
D1 - Digital Dimming (**not** for 39 or 24 W)
D2 - 0 to 10 volt control system (54 watt only)
D3 - Lutron Eco-10™ (T5 HO only)
D4 - Lutron Hi-Lume® (T5 HO & T8 only)

LUMINAIRE LENGTH
52 - 54 or 28 watt / 52 in.
40 - 39 or 21 watt / 40 in.
28 - 24 or 14 watt / 28 in.

54 - 32 watt / 54 in.
42 - 25 watt / 42 in.
30 - 17 watt / 30 in.

SC

OPTIONS
EM - Emergency Ballast
SC - Single Circuit
DC - Dual Circuit

NOTE: LL-SR7 GEAR TRAYS FIT WITHIN ELECTRIX PREFABRICATED COVE SYSTEM. COVE SYSTEM INSTALLED BY OTHERS - SEE ARCHITECTURAL DRAWINGS FOR DETAILS.

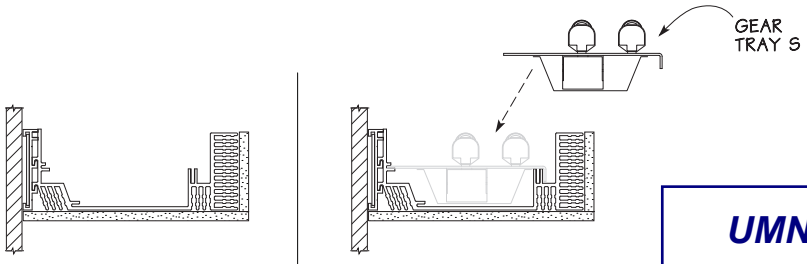

COVE SYSTEM - INSTALLED BY OTHERS

LL-SR7 GEAR TRAY- FITS WITHIN COVE SYSTEM

UMNH
FS-101

electrix
ILLUMINATION

PATENT PENDING

PROPRIETARY AND CONFIDENTIAL
The information contained in this document is the sole property of Electrix, Inc. Any further reproduction in part or as a whole without written permission from Electrix, Inc. is strictly prohibited.

PRODUCT | LL SERIES

LumiLedge® Sheet Rock Gear Tray S-7

GTS Two Lamp Parallel Staggered Cove Luminaire

LUMINAIRE DIMENSIONS

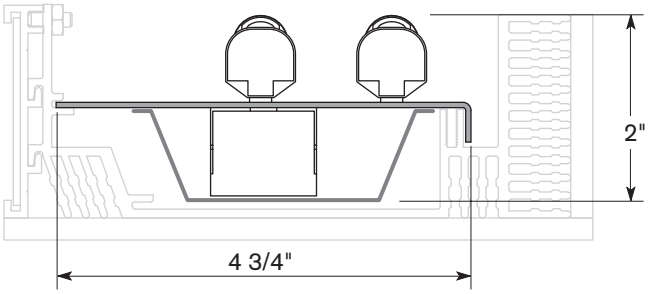

ADDITIONAL PROJECT NOTES:

T5 GEAR TRAY LENGTHS

Plan View

T5HO - 54 watt (or) **T5 - 28** watt

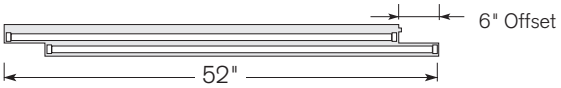

T5HO - 39 watt (or) **T5 - 21** watt

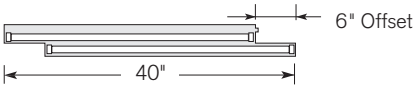

T5HO - 24 watt (or) **T5 - 14** watt

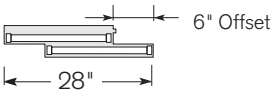

T8 GEAR TRAY LENGTHS

Plan View

T8 - 32 watt

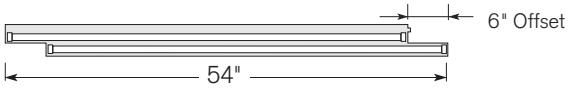

T8 - 25 watt

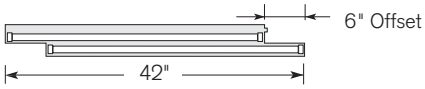

T8 - 17 watt

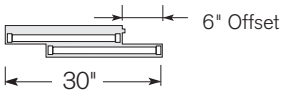

UMNH
FS-101

electrix
ILLUMINATION

PATENT PENDING

PROPRIETARY AND CONFIDENTIAL
The information contained in this document is the sole property of Electrix, Inc. Any further reproduction in part or as a whole without written permission from Electrix, Inc. is strictly prohibited.

PRODUCT | LL SERIES

LumiLedge® Sheet Rock Gear Tray S-7

GTS Two Lamp Parallel Staggered Cove Luminaire

PRODUCT SPECIFICATIONS

ELECTRICAL
Integral electronic HPF Class P ballast; Thermally protected and has end of life protection for T5 lamps; Sound Rating - Class A

Supplied with 12 gauge through wires

Use 90°C for supply wire

Gear tray removes for easy access to ballast

Consult sales representative or factory for dimming and emergency ballast options

Compatible dimming controls provided by others

MATERIALS & HOUSING
Die-formed 20 gauge cold rolled steel gear tray

FINISH
Standard finish is electrostatically applied white powder coat; Thermally cured to an enamel finish with 88%+ reflectivity

LISTINGS
UL & CUL listed damp locations

ADDITIONAL PROJECT NOTES:

UMNH
FS-101

INSTALLATION OVERVIEW

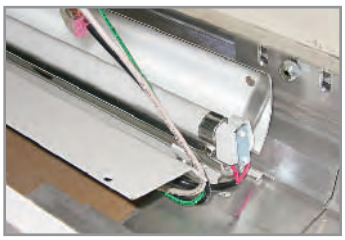

1. insert preassembled luminaire

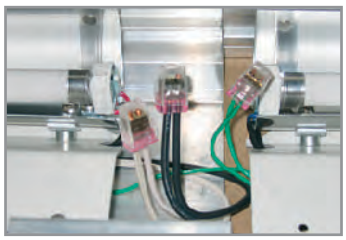

2. make appropriate connections

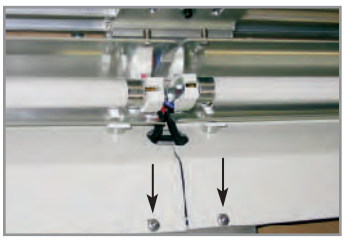

3. fasten to extrusion

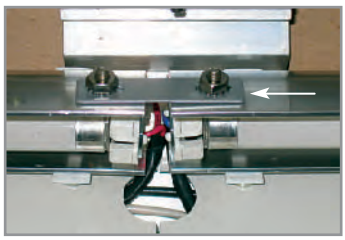

4. connect link bracket for consistent lamp alignment

electrix
ILLUMINATION

PROJECT NAME :

TYPE :

MODEL : **GTS-7** **LENGTH:**

SUBMITTAL APPROVED BY :

DATE :

Set Field To Current Date

Reset Entire Form

PATENT PENDING

PROPRIETARY AND CONFIDENTIAL
The information contained in this document is the sole property of Electrix, Inc. Any further reproduction in part or as a whole without written permission from Electrix, Inc. is strictly prohibited.

PRODUCT | LL SERIES

LumiLedge® Sheet Rock Cove System

LLSR-FR7 Prefabricated Performance Cove System

HOW TO SPECIFY | Product Code

LLSR-FR7

PRODUCT
LLSR-FR7

COVE LENGTH
Please specify run length.

Prefabricated cove is packaged in the following increments:
— 40 ft per carton
— 16 ft per carton

ADDITONAL PROJECT NOTES:

COVE DIMENSIONS

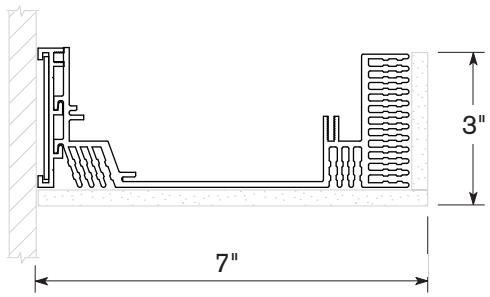

*(cove dimensions represent the use of 5/8 in. gypsum board)

MATERIALS

SUPPLIED MATERIALS INCLUDE:
extruded aluminum cove system which improves cove quality and reduces installation time

die-formed link brackets to ensure horizontal and vertical alignment

SUPPLIED BY OTHERS:
not included - gypsum board, metal screws, corner bead for top and bottom corner or other cove enclosure materials must be supplied by others

screw requirements:
1/2 in. gypsum board - requires 1 in. screw **(max.)**
5/8 in. gypsum board - requires 1 1/4 in. screw **(max.)**

UMNH
FS-101

INSTALLATION OVERVIEW

1. mount wall extrusion using no. 8 screws

2. link next extrusion

3. attach support bracket

4. fasten bottom horizontal gypsum

5. fasten face vertical gypsum

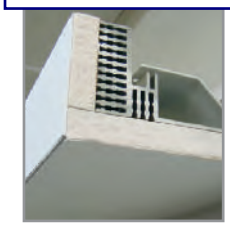

6. compound and apply corner beads

electrix ILLUMINATION

PROJECT NAME :

TYPE :

MODEL : GTS 2 SC

SUBMITTAL APPROVED BY :

DATE :

Set Field To Current Date

PRODUCT | TX SERIES

Linear Fluorescent

TX-DS T8 Diagonal Staggered Fluorescent Light Strip - Integral Ballast

Reset Product Code | Reset Entire Form

HOW TO SPECIFY | Product Code

TX-DS

PRODUCT
TX-DS - T8

LAMP
32 - 32 watt T8
25 - 25 watt T8
17 - 17 watt T8

2

VOLTAGE
U - Universal 120 through 277V

Please Specify Voltage For Dimming

1 - 120V
2 - 277V

BALLAST
E - Electronic High Power Factor
D1 - Digital Dimming DALI compatible
D2 - 0 to 10 volt control system
D3 - Lutron Eco-10™
D4 - Lutron Hi-Lume®

LUMINAIRE LENGTH
92 - 32 watt / 92 in.
68 - 25 watt / 66 in.
48 - 32 watt / 48 in.
36 - 25 watt / 36 in.
24 - 17 watt / 24 in.

SC

OPTIONS
EM - Emergency Ballast

LUMINAIRE DIMENSIONS

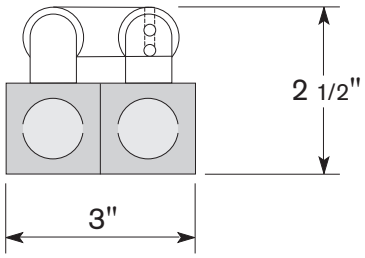

LUMINAIRE LENGTHS

Plan View

T5 - 32 watt
(2-lamp)

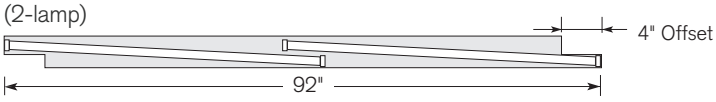

(1-lamp)

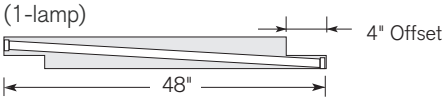

T8 - 25 watt
(2-lamp)

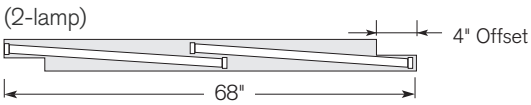

(1-lamp)

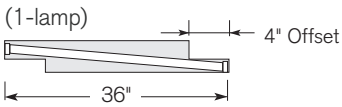

T8 - 17 watt (1-lamp)

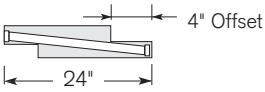

UMNH
FS-102

LITECONTROL

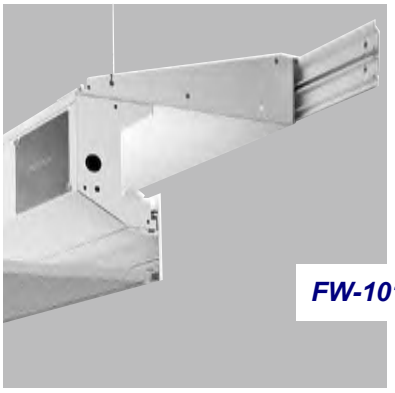

Type:
Project:

FW-101

Wall/Slot®-2000
Wall/Slot®-2000PR

2000 or 2000PR

Recessed Perimeter

Specifications

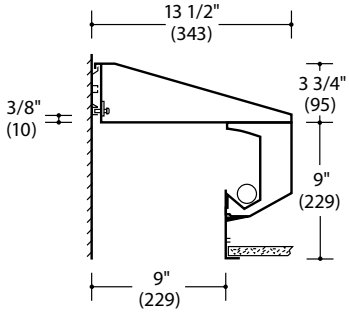

Wall/Slot-2000

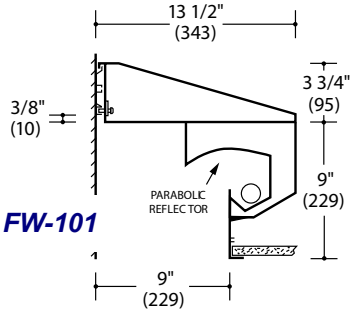

FW-101

Wall/Slot-2000PR

FIXTURE SUPPORT RAIL. Extruded white aluminum, wall-mounted rail provides continuous support and true alignment of fixtures and components. Rail is designed to provide a reveal at the wall to compensate for irregularities in wall construction. Galvanized splines are included for continuous alignment.
FIXTURE HOUSING. Die-formed and welded steel. Plenum cover/wall bracket is a one-piece assembly of 20-gauge steel and heavy-gauge steel brackets with leveling screws to provide adjustment. Brackets are spaced approximately every two feet for 2-, 4-, and 8-foot fixtures, and 1 1/2 feet for 3-foot and 6-foot fixtures. Plenum cover has a continuous hook-and-lock feature for quick installation.
REFLECTOR. 2000 curved reflector is die-formed specular hammertone aluminum, precisely shaped for maximum downward light projection. Straight reflector portions are steel, finished in high-reflectance white for uniform light distribution. **2000PR** uses a larger parabolic reflector (**PR**), die-formed, hammertone, low-iridescence semi-specular aluminum, precisely shaped for maximum downward light projection. It is shielded from all viewing angles from 0° to 60° below horizontal. Straight reflector portions are steel, finished in high-reflectance white for uniform light distribution.
CEILING TRIM/LUMINANCE CONTROL DEFLECTOR. Extruded aluminum with internal aligner splines.
LCD shields lamps from direct view and eliminates socket shadows on wall. Paint finish is Matte White (**CWM**) baked enamel.
LAMPING. Available in one-lamp T5, T5HO, or T8, or one-lamp twin-tube compact fluorescent.
BALLAST. Electronic Ballast (**ELB** - for T8 or BX lamping) or Low-profile Electronic Ballast (**LP/ELB** - for T5 or T5HO lamping), high power factor, thermally protected Class P, Sound Rated A, manufactured by a UL Listed manufacturer, as available, determined by Litecontrol. Ballasts with a voltage range of 120 to 277 will be used when fixture configuration and ballast availability allow. The minimum number of ballasts will be used.
CEILING TYPE. Compatible with most types of ceiling systems, including grid and plaster. Fixture system must be installed prior to installation of ceiling. Finish of wall should extend 13" above finished ceiling height. See Wall/Slot-2000 Pre-Installation Manual for specific ceiling type details.
CERTIFICATION. Fixture and electrical components shall be UL and/or CUL Listed and shall bear the I.B.E.W., A.F. of L. label.

Note: Litecontrol reserves the right to change specifications without notice for product development and improvement.

Ordering guide

Product, lamping, & length

20	1	4	T8 -
Series	Lamp Count	Nominal Length(ft)	Lamp Type
20	1 →	2,3,4 →	T8
	2 →	6,8 →	
	1 →	3,4 →	T5HO
	2 →	6,8 →	T5
	1 →	2 →	BX40
	2 →	4 →	
	4 →	8 →	
	2 →	3 →	BX39
	4 →	6 →	
	see **notes**		

Options

CWM -	ELB -	PR -	120
Finish	Ballast	Other options	Volts
CWM (Matte White is standard	**ELB** is std. for T8 or BX **LP/ELB** is std. for T5 or T5HO **DA/ELB** **HEL/ELB** **ECO/ELB** see **Ballast options**	**EF** **F** **PR** **SDS** see **Other options**	**120** **277**

Cross-section lamping

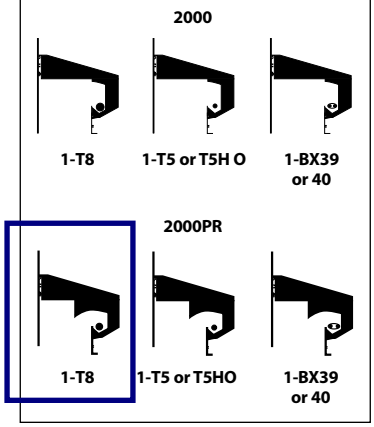

2014T8-CWM-ELB-1CWQ-PR-120 is a typical catalog number for a 1-lamp (1 lamp in cross-section), 4-foot long T8 fixture, Matte White finish, electronic b pre-wired with single-circuit branch-wiring, parabolic reflector, 120 volts.

UMNH
FW-101

Questions to Ask
1. 120 or 277 volt? **2.** Row information, including desired fixture lengths?
3. Verify ceiling type? **4.** Other options?

Photometric data

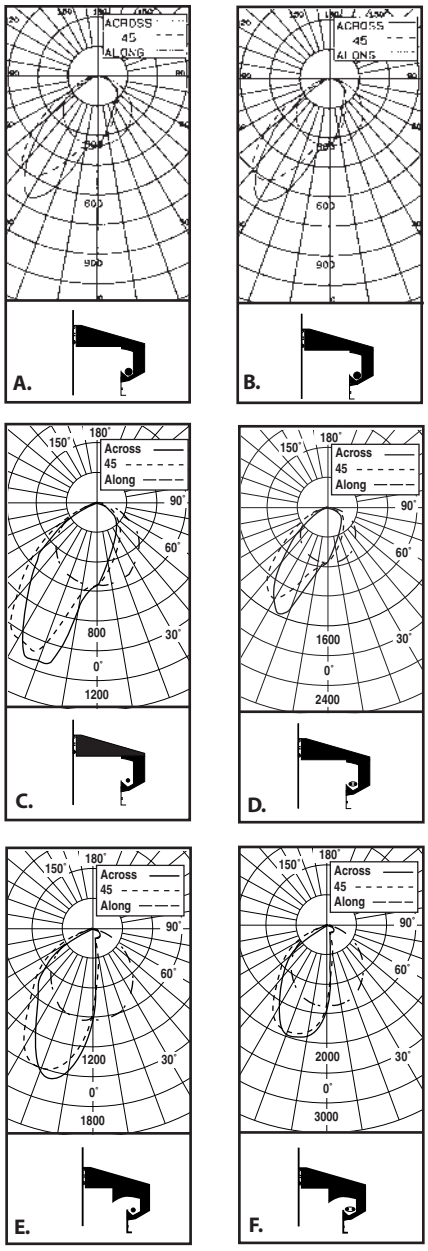

A. 2014T8 70% wall reflectance
Litecontrol Certified Test Report #14711001

B. 2014T8 50% wall reflectance
Litecontrol Certified Test Report #14711000

C. 2014T5HO 50% wall reflectance
Litecontrol Certified Test Report #14716000

D. 2024BX40 50% wall reflectance
Litecontrol Certified Test Report #14720000

E. 2014T5HO-PR 50% wall reflectance
Litecontrol Certified Test Report #24316000

F. 2024BX40-PR 50% wall reflectance
Litecontrol Certified Test Report #24320000

For complete photometric information, see website.

Ballast options

Specify in place of **ELB** or **LP/ELB**, contact factory for availability:

DA/ELB Advance Mark VII Dimming Ballast.
HEL/ELB Osram Sylvania Helios Dimming Ballast.
ECO/ELB Lutron ECO-10 Dimming Ballast.

Other options

EF Emergency Fluorescent Ballast. Battery-powered ballast from a UL Listed manufacturer will operate one T8 lamp for 1 1/2 hours.

FW-101

F Fuse. Slow or fast blow, determined by Litecontrol.

PR Parabolic Reflector. Larger specular hammertone aluminum reflector for additional downward light projection.

SDS Special Depth Shield. A shallow-depth fixture of 10 1/2" height is available for areas where obstructions occur. Contact factory.

System connectors

Catalog Number

Series	- Connector	- Finish	Description (Minimum-Maximum along wall in parenthesis)
2000	**EC**	**CWM**	End Cap
2000	**SE**	**CWM**	Straight Extension (2"-12")
2000	**IC**	**CWM**	Inside Corner - 90° (14"-21")
2000	**OC**	**CWM**	Outside Corner - 90° (2"-11")
2000	**ASE**	**CWM**	Angular Straight Extension - 135° (2"-11")
2000	**AIC**	**CWM**	Angular Inside Corner - 135° (6"-15")
2000	**AOC**	**CWM**	Angular Outside Corner - 135° (2"-11")

2000-AOC-CWM is a typical catalog number for an angular outside corner connector. Corners, extensions, and end caps, when added to fixtures, permit continuous wall-to-wall installation. Lengths are field cut.
Finish: CWM (Matte White)

NOTE: Parabolic reflector is positioned above lamps only, and does not extend through system connectors.

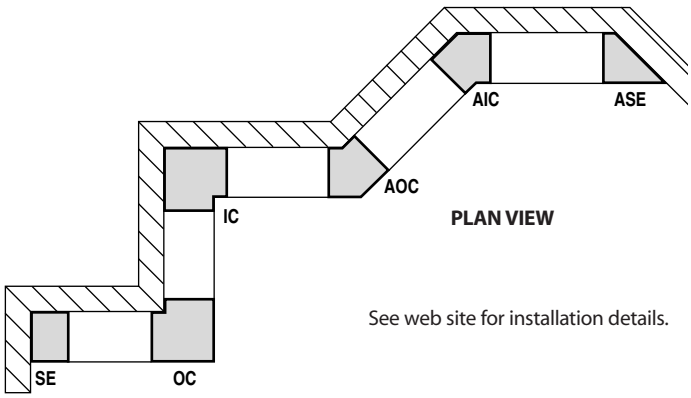

See web site for installation details.

Clic
Qu

UMNH
FW-101

LITECONTROL . . . an employee owned company
100 Hawks Avenue Hanson MA 02341 781 294 0100 FAX 781 293 2849 info@litecontrol.com litecontrol.com

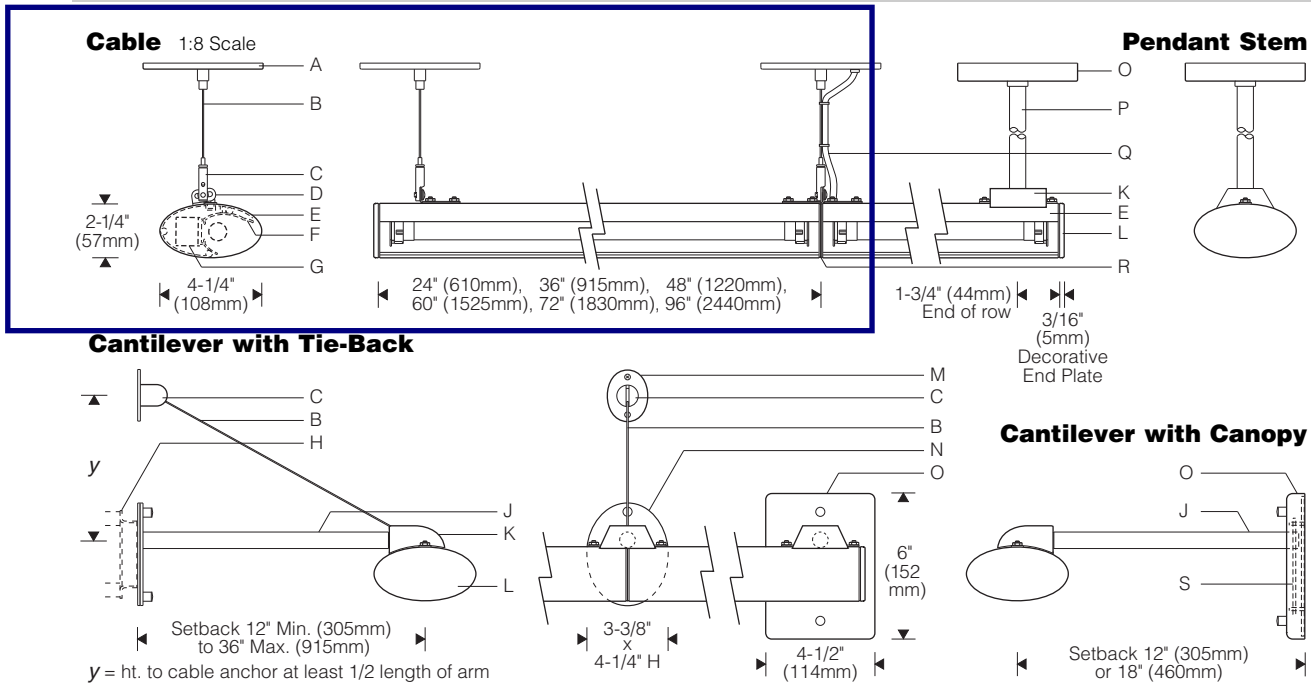

Specifications

A	1/4" aluminum canopy	**F**	Specular extruded aluminum reflector	**K**	Formed aluminum fitting	**P**	Tubular aluminum stem
B	1/16" dia. 7x7 cable	**G**	Electronic ballast	**L**	Aluminum decorative end plates (order separately)	**Q**	18/3 cord with clips
C	Adjustable cable glider	**H**	Recessed outlet box w/ plaster ring (by others)	**M**	Aluminum anchor plate	**R**	Aluminum joiner/ reveal plates (black)
D	Leveling bracket (cable)	**J**	Tubular steel arm	**N**	Aluminum cover plate	**S**	Steel wall and leveling plates (under canopy)
E	Extruded aluminum housing			**O**	Aluminum canopy		

Finish:
Semi-gloss white housing. Black joiner/reveal plates.

Painted surfaces - 6 stage pretreatment and electrostatically owder coat for stable, long lasting and nish.

high purity aluminum with clear anodized uminaire hardware - stainless steel.

cantilevers hangers **ordered separately**.

ify starter/individual module (**X** mount). add intermediate/end modules (**Y** mount). align and bolt together.

6" O.D. aluminum, internally threaded. nopy. For swivel - consult factory.

7 aircraft cable, field adjustable length. stud, coupling with slipring, 5" dia. canopy.

Cantilever - 11/16" O.D. steel arm ; suitable support structure required. Choice of: **Rectangular canopy** with adjustable interface plate allows leveling of arms +/- 5°, or **Oval wall plates** with adjustable cable tieback.

Electrical:
Prewired with modular through wiring with quick connectors.

X mount - starter/individual module furnished with 18/3 cord for connection to supply at recessed outlet box (by others). Cord is clipped alongside cable or managed through cantilever arm or pendant stem. Note: cantilever with tieback requires recessed plaster ring (Raco #727 or equal by others).

Y mount - intermediate/end module plugs into adjacent unit.

Integral electronic HPF thermally protected class P ballast with end-of-life protection. Remove reflector to service ballast.

Optional electronic dimming ballast; compatible dimmer switch required (by others). Consult sales representative for compatibility and specifications.

Optional integral emergency battery operates one lamp. Separate unswitched supply is required. Note: first battery pack in row must be located in starter module (**X** mount).

Standard:
UL listed or CSA certified.

FW-102

UMNH

8/07 **U.S. Patent 6,860,618 and other patents pending**

Features

- *Small classic form - full oval end plates; articulated reveals*
- *Powerful T5/T5HO fluorescent wall lighting - low energy*
- *Unequaled uniformity from minimal setbacks - ideal for conference rooms, markerboards, art walls, displays, signs*
- *Versatile - cable, pendant or two styles of cantilevers*
- *Integral electronic ballast - modular quick connect wiring*

W 19.0

Performance

Two parabolic reflector sections drive light to the bottom of the wall. An elliptical section shields the lamp from normal viewing angles and redirects its light to a parabola. Glare is minimized and asymmetry of the beam is maximized resulting in high beam efficiency and superior surface uniformity.

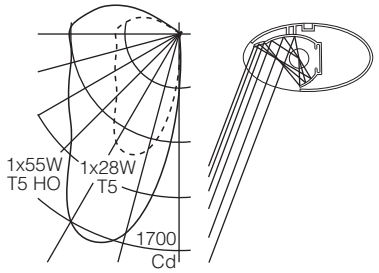

For complete photometrics, see www.elliptipar.com.

elliptipar

To form a Catalog Number

F 1 4 0 - T [ ] - [ ] - [ ] - [ ] - [ ] [ ]

1 2 3 4 5 6 7 8

1 Source

F = Linear fluorescent

2 Style

140 = Xtra small enclosed oval, **integral** ballast

3 Lamp

T [ ] [ ] = **T5 Fluorescent Lamp Code**

Lamp Wattage (see chart below)

Number of Lamps in Length, specify **1** or **2**

Example: **T155** = 4' (1.2m) housing with one 54W T5HO lamp

*Length**	*T5*		*T5HO*	
	Code	*Lamp(s)*	*Code*	*Lamp(s)*
T5 Fluorescent				
24" (610mm)	**T114**	1 x F14T5	**T124**	1 x F24T5/HO
36" (915mm)	**T121**	1 x F21T5	**T139**	1 x F39T5/HO
48" (1220mm)	**T128**	1 x F28T5	**T155**	1 x F54T5/HO
60" (1525mm)	**T135**	1 x F35T5	**T180**	1 x F80T5/HO
72" (1830mm)	**T221**	2 x F21T5	**T239**	2 x F39T5/HO
96" (2440mm)	**T228**	2 x F28T5	**T255**	2 x F54T5/HO

For complete lamp and ballast information see Accessories Section.
Standard T5 lamp color is 3000K / 80+ CRI.

* Add 3/8" (10mm) to row or single unit for **ADE** Decorative End Plates

4 Mounting

X = Starter/individual module with electrical feed (18/3 cord)
Note: units with dimming or battery will be provided with 18/4 or two (2) 18/3 cords as required.

Y = Intermediate/end module with modular through wiring with quick connectors

Note: Order cable, pendant, or cantilever hangers separately.

5 Finish

02 = Semi-gloss white
99 = Custom RAL or computer matche specified, consult sales represen

TBD

FW-102

UMNH

W 19.1

8/07

Project:

6 Voltage/Ballast

Electronic
1 = 120V
2 = 277V
3 = 347V (Canada)
Note: Not available for use with cable hangers.

*Dimming**
T = 120V
V = 277V

* Consult sales representative for dimming 5' lamps (lamp codes **T135**, **T180**). Availability for wattages and voltages varies with ballast manufacturer and control type - see **www.elliptipar.com** for additional dimming specifications and limitations.

Consult factory when dimming units with cable supports. The quantity of electrical feed cable hangers to accommodate the control circuit varies with ballast manufacturer and control type.

7 Option (See Accessories Section for specifications)

00 = No option
0E = Integral emergency battery pack with indicator lamp and test button. Operates one lamp. Available in 4', 5', 6' and 8' lengths (lamp codes **T128**, **T135**, **T221**, **T228**, **T155**, **T239** and **T255**).
Note: For **rows**, 0E option must be specified for the starter/individual module (**X** mount). Additional battery packs may be specified on intermediate/end modules.
XX = For modification not listed, include detailed description. Consult factory prior to specification.

8 Standard

0 = UL, Underwriters Laboratories
J = CSA, Canadian Standards Association

Example

F140 - T155 - X - 02 - 2 - 000

Xtra small enclosed oval series for use with one 4' F54T5HO lamp, 48" long housing (not including decorative end plates). For use with cable, pendant or cantilever hangers (order separately). Semi-gloss white. Integral 277V ballast. UL. Order decorative end plates and hangers separately.

Accessories

Order separately. See Accessories Section for specifications.

ADE40 [ ] **0** = **Decorative end plates**, pair, white, or custom color to match housing
Note: adds 3/8" (10mm) to length

5

elliptipar
114 Boston Post Road, West Haven, Connecticut 06516, USA
Voice 203.931.4455 • Fax 203.931.4464 • **www.elliptipar.com**

Type:

Hangers

Order separately. See Accessories Section for specifications.

Cable supports
Order one non-electrical and one electrical feed cable support for each starter/individual module (**X** mount). Order one non-electrical cable support for each additional intermediate/end module (**Y** mount) in a row.

Note: For dimming (voltage/ballast code **T** or **V**), an additional electrical feed cable support may be required depending on ballast manufacturer and control type - consult factory.

Pendant and Cantilevers
Order one hanger for each module (**X** or **Y** mount) plus one hanger for the end of each row. At location with outlet box, prewired cord on starter/individual module (**X** mount) is managed through stem or arm.

Electrical feed can be located at ends or intermediate joints.

VX [ ] [ ] [ ] **0** = **Cable support**, field adjustable

48 = up to 48" (1.2m)
96 = up to 96" (2.4m)

5 Finish
Note: canopy is white unless specified other

R = Non-electrical
S = Electrical feed, white or black 18/3 cord

VXF [ ] [ ] **0** = **Pendant stem**, 11/16" O.D. aluminum

Length in inches, up to 60" (1.5m), 6" minimum

Length ceiling to top of housing

5 Finish

VXV [ ] [ ] **0** = **Cantilever** with cable tieback, oval wall plates

Setback in inches, 12" (305mm) min. 36" (915mm) max.

5 Finish

VXC [ ] [ ] **0** = **Cantilever** with rectangular canopy, levels +/- 5°

Setback in inches,
12 = 12" (305mm)
18 = 18" (460mm)

5 Finish

The external shapes of the asymmetric reflectors are trademarks of **elliptipar**. *Certain products illustrated may be covered by applicable patents and patents pending. For a list of patents, see Contents pages. These specifications supersede all prior publications and are subject to change without notice.* © 2007 **elliptipar**.

SOLID FRONT LITTLE INCH
MINIATURE FLUORESCENT UNDERCABINET FIXTURE SFHP 100/200 SERIES

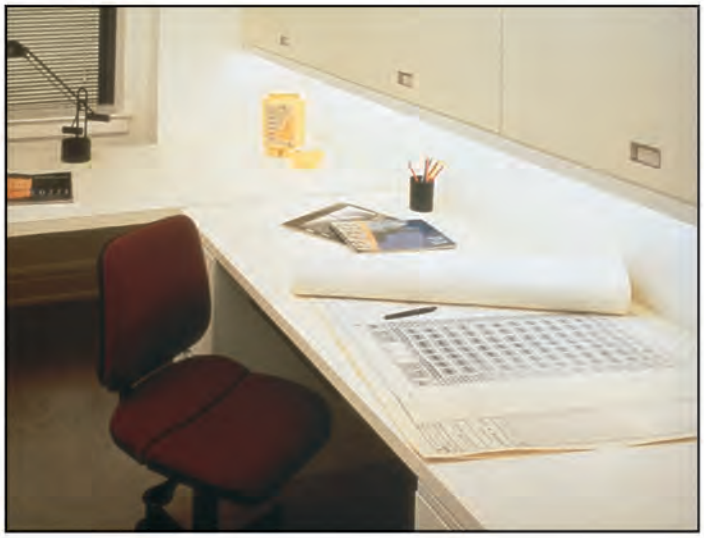

- Solid metal front with lay-in diffuser design.
- Post fabrication painting eliminates raw edges which can rust or cause injury.
- Industry exclusive life-time guarantee.
- Extremely thin 1" profile.
- Quick installation and easy maintenance with hinged wireway.
- Flush ends allow row mounting for continuous illumination.
- Choose from prismatic diffuser for diffused light spread, 45˚ lateral prism lens to reduce veiling reflections and glare or low brightness hex-cell mini-louver.
- SF models allow for easy lens removal when mounted flush to the front of a cabinet or when fully recessed into a pocket.

Prismatic diffuser

Hinged wireway

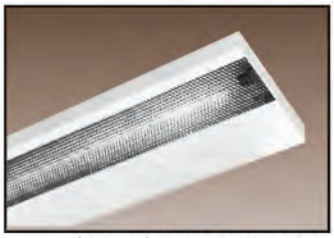
(optional) Hex-cell mini-louver

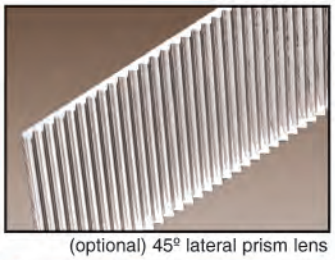
(optional) 45º lateral prism lens

(optional) Rocker switch and convenience outlet

Greenfield/romex connector

ALKCO LIFETIME WARRANTY Little Inch

UMNH
FX-100

SOLID FRONT LITTLE INCH
MINIATURE FLUORESCENT UNDERCABINET FIXTURE SFHP 100/200 SERIES

TYPICAL CROSS SECTION (Convenience outlet & rocker switch shown)

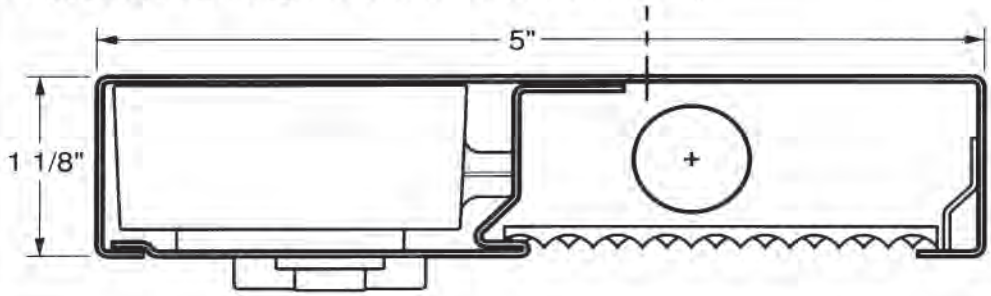

KNOCKOUTS AND MOUNTING HOLES

Unit Length	A	B
12 5/16"	8 1/16"	3"
21 5/16"	17 1/16"	3"
24 1/2"	20 1/4"	3"
33 1/2"	29 1/4"	3"
42 1/2"	38 1/4"	3"

Center back knockout for premium T5 and T5 HO units is 5/8", 1/2" and 1 7/8" off center (to the left as you face installed fixture) for SFHP114/124, SFHP121/139 and SFHP128/154 respectively.

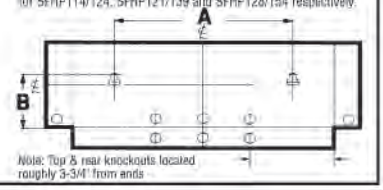

Note: Top & rear knockouts located roughly 3-3/4" from ends

PHOTOMETRIC DATA

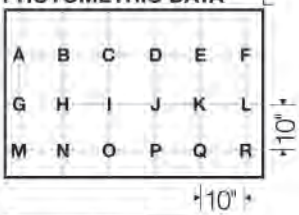

Cat No.	Distance to Work Surface	Footcandles on Worksurface																	
		A	B	C	D	E	F	G	H	I	J	K	L	M	N	O	P	Q	R
SFHP-108	15"	3	13	36	36	13	3	2	5	11	11	5	2	1	2	2	2	2	1
SFHP-113	15"	9	32	68	68	32	9	4	11	20	20	11	4	2	3	5	5	3	2
SFHP-116	15"	9	32	62	62	32	9	4	11	19	19	11	4	2	3	5	5	3	2
SFHP-138	15"	20	56	83	83	56	20	8	8	26	26	18	8	3	5	6	6	5	3
SFHP-213	15"	37	77	96	96	77	37	13	25	30	30	25	13	5	7	8	8	7	5

Data from ITL report numbers: 30274A15-78A15

Contact ALKCO Engineering for premium T5 and T5 high output photometrics.

SPECIFICATIONS

CONSTRUCTION
20 gauge cold rolled steel housing with corners neatly formed and knockouts flattened. All exposed edges deburred.

ELECTRICAL/LAMPS
for standard T5 lamps
Fully electronic ballast. 120 volt only. Warm White lamps included. Cool White and 3000K tri phosphor lamps available in place of standard Warm White. 7,500 hour average life, 60-70 LPW.
for premium T5 lamps
High frequency electronic rapid start ballast. 3000K tri-phosphor lamps included. 3500K and 4100K tri-phosphor lamps available in place of standard 3000K. 20,000 hour average life, 96-104 LPW.
for T5 high output lamps
High frequency electronic rapid start ballast. 3000K tri-phosphor lamps included. 3500K and 4100K tri-phosphor lamps available in place of standard 3000K. 20,000 hour average life, 83-92 LPW.

DIFFUSER
Prismatic lay-in diffuser standard. Optional 45° lateral prism lens or low brightness black hex-cell mini-louver.

FINISH
Baked-on polyester resin powder-coat finish applied after fabrication over a bonderizing iron phosphate coating.

INSTALLATION FEATURES
UL recognized electrical fitting accepts 3/8" flexible metal conduit (greenfield) or romex (supplied in units without cordsets). 3/16" dia. keyhole mounting slots and hinged wireway with concealed fasteners for simplified mounting/wiring. Wirenuts and mounting screws provided.

LABELS
U.L. and IBEW CSA available on request.

FIXTURE WARRANTY
All fixture components, except lamps, warrantied against defects during the life of the original installation (reference Alkco buying guide for details).

ORDERING INFORMATION

CATALOG #	DESCRIPTION	LAMPS	L	W	D
Standard Warm White T5 lamps with Electronic ballast					
SFHP-108	12" Solid Front Little Inch	1/T5 8W	12-1/4"	5"	11/8"
SFHP-113	21" Solid Front Little Inch	1/T5 13W	21-1/4"	5"	1 1/8"
SFHP-116	24" Solid Front Little Inch	2/T5 8W	24-1/2"	5"	1 1/8"
SFHP-138	33" Solid Front Little Inch	1/T5 8W 1/T5 13W	33-1/2"	5"	1 1/8"
SFHP-213	42" Solid Front Little Inch	2/T5 13W	42-1/2"	5"	1 1/8"
Premium T5 3000K lamp with Electronic High Frequency Ballast					
SFHP-114	premium T5	1/T5 14W	22 1/2"	5"	1 1/8"
SFHP-121	premium T5	1/T5 21W	34 3/8"	5"	1 1/8"
SFHP-128	premium T5	1/T5 28W	46 1/4"	5"	1 1/8"
High Output T5 3000K lamp with Electronic High Frequency Ballast					
SFHP-124	T5 high output	1/T5 24W	22 1/2"	5"	1 1/8"
SFHP-139	T5 high output	1/T5 39W	34 3/8"	5"	1 1/8"
SFHP-154	T5 high output	1/T5 54W	46 1/4"	5"	1 1/8"

Note: Specify lamp if other than standard. Above units are white baked enamel over cold rolled steel. For stainless steel construction, prefix catalog number with "SS". Example: SSSFHP-138

OPTIONAL EQUIPMENT (must add suffix)	
/BW	45° Lateral prism lens
/CO-W	White grounded convenience outlet
/CS-3W	6' White U.L. labeled 3-wire cordset
/CSA	Built to Canadian CSA standards
/DIM	Dimming ballast for premium T5 or T5 high output lamped fixtures only (use with analog 0-10 volt fluorescent dim
/Fuse Plug	6' White U.L. labeled cordset with re
/HCL	Hex-cell mini-louver
/RSW	Fixture mounted rocker switch
/SLO-BLO	GMF slow-blow fuse and fuse holde
/SPF	Special paint finish (supply paint chip and reference number)
/XBX	Extra Greenfield/Romex connector

NOTE: Consult factory for 277 volt availability

UMNH
FX-100

GE
Lumination

Tetra® **MAX**

LED Lighting System

for Channel Letters

Maximum **reliability**
is *easier* than ever

imagination at work

UMNH
LE-101

Tetra® **MAX**
Maximizing your ease of installation

With the Tetra MAX LED Lighting System from GE Lumination, achieving maximum reliability in channel letter applications is easier than ever. Working closely with sign builders, installers and owners, we've focused on the simplicity of the entire system by reducing the complexity and number of parts to install—saving customers time and money every step of the way. Utilizing GE Six Sigma quality standards for development and testing, Tetra MAX delivers maximum reliability and affordability.

Light more LEDs from one single power supply

The same GEPS12-60 Power Supply is used for all colors of the Tetra MAX system and allows loads of up to 54 ft. (16.46 m) for 2 LED modules and 80 ft. (24.38 m) for 3 LED modules. The ability to power more LED modules from a single supply reduces the total number of power supplies needed, lowering material costs and cutting install labor.

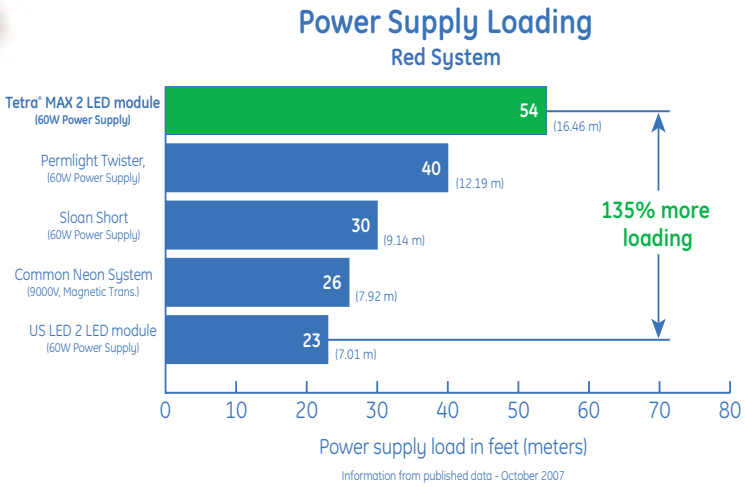

Maximum Convenience

Designed with installers in mind

Patent-pending Tetra MAX is incredibly easy to install. This low-voltage 12VDC design saves time and labor costs by reducing complex wiring and eliminating binning, dip switches and load balancing. This system uses off-the-shelf components, such as wire and wire connectors, and includes 3M VHB™ industrial-grade mounting tape for greater convenience and savings.

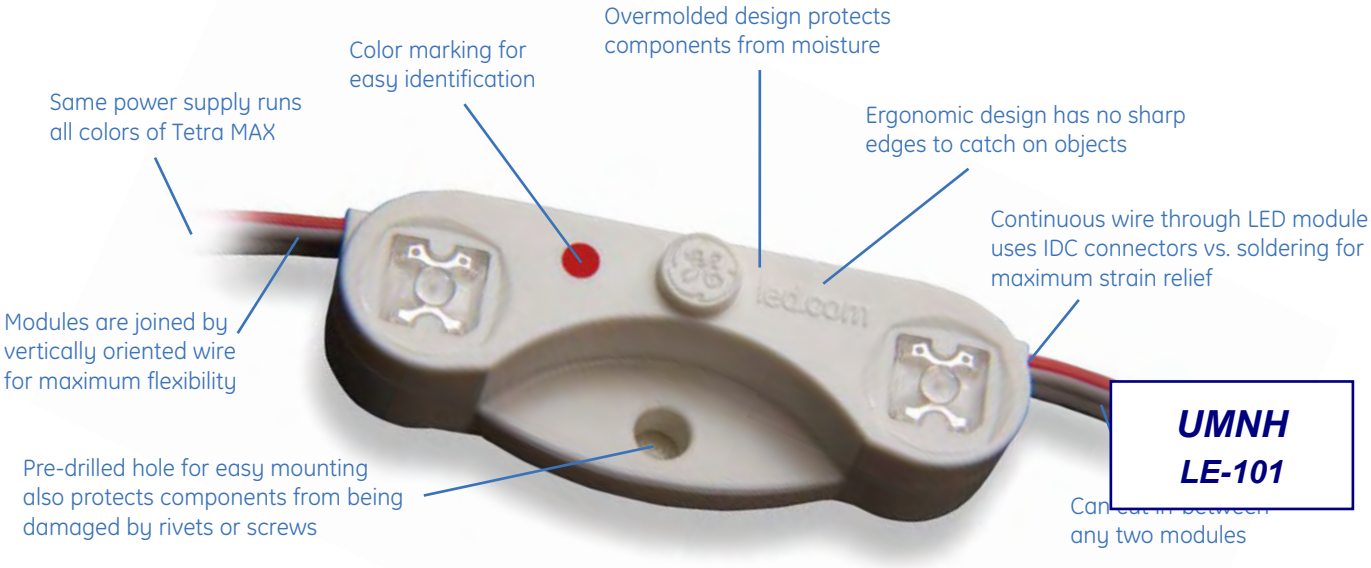

UMNH
LE-101

a product of
ecomagination℠

Even estimating is simple

Tetra MAX makes estimating the right amount of product you need less time consuming. The number of strokes required is based on the width of your channel letter.

Stroke Width	# Strokes
< 5 inches (127 mm)	1
5-8 inches (127-203 mm)	2
8-12 inches (203-305 mm)	3

Based on channel letter depth of 5 inches (127 mm)

Packaging that works for you

Even Tetra MAX packaging has been improved with your convenience in mind. Highly visible color markings have been added to the LED modules and product packages for instant recognition of the LED color. Easy-to-read labels on interior and exterior packaging make product identification faster than before. Plus, key product information is printed on all interior packaging trays for quick reference.

Maximum Reliability

Over 57 million Tetra® LEDs installed worldwide

Only GE Lumination has the depth of experience that comes from supplying more than 57 million LEDs of Tetra products across the globe. With a failure rate less than 0.05 percent,* every Tetra strip is backed with a reputation for reliability that is unsurpassed in the industry.

*Warranty return rate through October 2007

Built to last

Building on that remarkable tradition of performance, Tetra MAX has a long-life of up to 50,000 hours—slashing ongoing maintenance costs. Robust, overmolded design keeps damaging moisture out to protect the LED components from failure. It all adds up to a greater degree of assurance you can count on for years to come.

Maximum Energy Savings

Designed with your operating budget in mind

Tetra MAX delivers up to 81% energy savings over neon and up to 52% energy savings over other LED systems—substantially lowering operating costs. It complies with RoHS standards and is UL recognized. This environmentally responsible system contains no lead, mercury or glass, so handling and disposal are less of a concern.

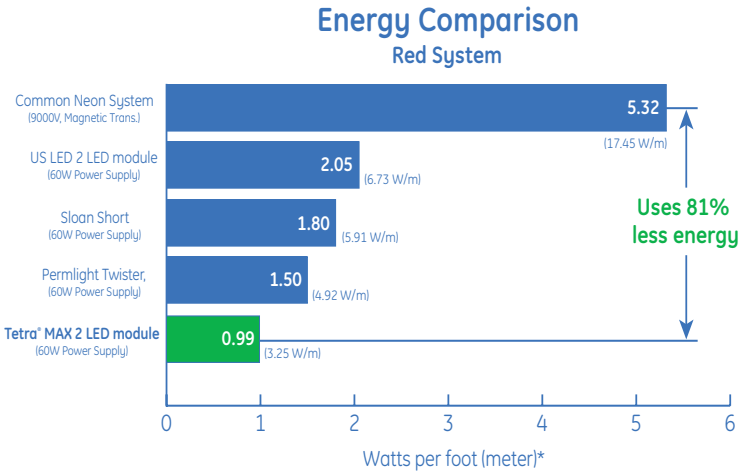

*Based off of LED strip power consumption. Information from published data - October 2007

Maximum Brand Protection

Brilliant, uniform light

With Tetra MAX, sign owner reputation is protected from the embarrassment of unsightly dim or burned-out signs that threaten positive brand perception. Even in cold weather, this robust Tetra system keeps brilliant, uniform light shining across the entire sign face, providing the reliability every reta
commercial building owner expec
signage solution.

UMNH
LE-101

Components

SKU	Description	Package
GERDMXS6	Tetra® MAX Red 2 LED Module, 6 LEDs/ft (~20 LEDs/m)	100 ft (30.48 m)/box
GEGLMXS6	Tetra® MAX Green 2 LED Module, 6 LEDs/ft (~20 LEDs/m)	100 ft (30.48 m)/box
GEBLMXS6	Tetra® MAX Blue 2 LED Module, 6 LEDs/ft (~20 LEDs/m)	100 ft (30.48 m)/box
GEWHMXS6	Tetra® MAX White 2 LED Module, 6500K, 6 LEDs/ft (~20 LEDs/m)	100 ft (30.48 m)/box
GEWWMXS6	Tetra® MAX Warm White 2 LED Module, 3200K, 6 LEDs/ft (~20 LEDs/m)	100 ft (30.48 m)/box
GERDMXL6	Tetra® MAX Red 3 LED Module, 6 LEDs/ft (~20 LEDs/m)	100 ft (30.48 m)/box
GEPS12-60	Power Supply: 12VDC/60W	10/box
GETMEC1	18 AWG Wire End Caps (0.82 mm^2)	100/bag
9409	18 AWG Supply Wire (0.82 mm^2)	500 ft (152.40 m)/spool
191600041	22-14 AWG Twist-on Wire Connector (0.33-2.08 mm^2)	500/bag
192160004	18-14 AWG In-line Splice Connector (0.82-2.08 mm^2)	500/bag

Product samples are available in each color. Contact your sales rep for further details.

Technical Specifications

Specification Item	Specification
Typical Brightness (lumens/linear unit)	Red (2 & 3 LED Modules): 21 lm/ft (68.90 lm/m), Green: 42 lm/ft (137.80 lm/m), Blue: 12 lm/ft (39.37 lm/m), White: 42 lm/ft (137.80 lm/m), Warm White: 36 lm/ft (118.11 lm/m)
Wavelength & Color Temperature	Red: 625nm, Blue: 467nm, Green: 530nm, White: 6500K, Warm White: 3200K
Power Supply (GEPS12-60)	Input: 90-265VAC, Output: 12VDC/60W, Damp Rated, Self-Contained, Remote or Raceway, 1 Output Bank, Class 2
Viewing Angle	Red, Green, Blue: 100°, White: 105°, Warm White: 110°
Cutting Resolution	Cut in-between any two modules: 2 inches (51 mm) for 2 LED Module, 3 inches (76 mm) for 3 LED Module
Operating Environment	-40°C to +60°C
Loading per Power Supply	54 ft (16.46 m) for 2 LED Module, 80 ft (24.38 m) for 3 LED Module
Supply Wire Limits	1-30 ft (0.30-9.14 m)
Sign Dimensions	For best results, recommended sign depth is 5-8 inches (127-203 mm)
Energy Consumption	2 LED Module - Strip: 0.99 W/ft (3.25 W/m), System: 1.20 W/ft (3.94 W/m) 3 LED Module - Strip: 0.66 W/ft (2.17 W/m), System: 0.80 W/ft (2.62 W/m)
Warranty	GE offers a limited system warranty of up to five (5) years
System Certifications	UL Recognized #E219167, UL Classified #E229508, CSA Approved #216319, CE, C-tick, RoHS, IP66 rated: separate enclosure required, damp location rated

E219167 1YA1 Retrofit Sign Conversion E229508 6NA2 216319

Compliments of:

6180 Halle Drive • Valley View, Ohio 44125-4635 • USA
P: 216.606.6612 • F: 216.606.6599 • www.led.com • info@led.com

Lumination, LLC is a subsidiary of GE Consumer & Industrial. Tetra® is a trademark of Lumination, LLC. The GE brand, logo and ecomagination are trade
©2007 Lumination, LLC. Information provided is subject to change without notice. All values are design or typical values when measured under labo

UMNH
LE-101

GE
Lumination

Installation Guide

12 Volt

Tetra® LED Systems Power Supply

(GEPS12-60)

Step 1: Power Supply Features

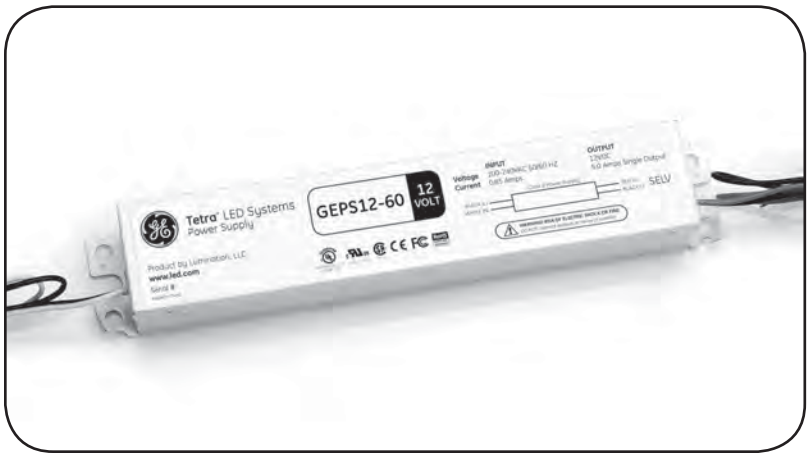

- Supports all colors of Tetra® MAX LED Lighting System
- Class 2 wiring per NEC Article 725 (SELV)
- Damp location rated
- IP66 rated: separate enclosure required

Step 2: Power Supply Installation

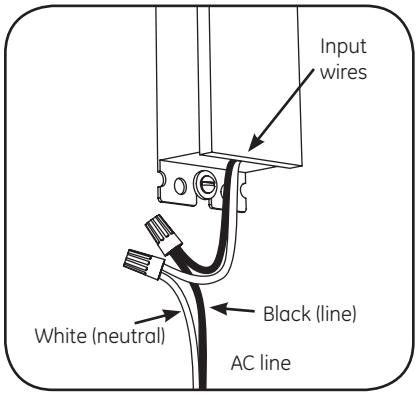

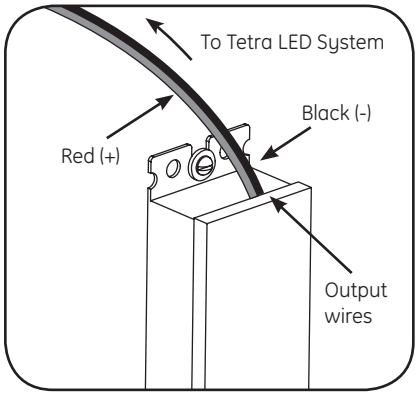

1. Connect the AC line to the black (line) and white (neutral) input wires of the power supply using 18-14 AWG (0.82-2.08 mm^2) twist-on wire connectors.

2. Connect the supply wire that is attached to the Tetra LED System to the red (+) and black (-) output wires of the power supply as outlined in the "**Electrical Connections**" section of your LED system's Installation Instructions

NOTE: Power Supply Loads

Exceeding maximum load will cause the power supply to shut down. Once the excess load is removed, cycle the input power to restart the power supply.

Specific load information for the supported LED systems can be found in the "**Power Supply Specifications**" section on the next page.

UMNH
LE-101

imagination at work

WARNING! RISK OF ELECTRICAL SHOCK:
Turn power OFF before inspection, installation or removal

Note: For CSA approval, a disconnect/toggle switch of appropriate rating needs to be placed within 29 ft. (8.84 m) of primary side of the power supply. The minimum rating of the switch must be either 120 or 220 Volts AC. The switch must also support twice the amount of input current.

Note: When installing power supply, connect to the appropriate sized building breaker or disconnect device for line and neutral connections, in accordance with local, state or country regulations.

Step 3: Power Supply Specifications

	Min	Typical	Max
Input Voltage (VAC) 120/240	90	120/240	265
Input Frequency (HZ)	47	–	63
Input Current (A)	–	–	0.85
Output Voltage (VDC)	11.7	–	12.4
Output Current (ADC)	–	–	5.0
Output Power (W)	–	–	60
Environmental Operating Temperature Range	-40°C	+25°C	+60°C
Environmental Humidity (non-condensing)	0%	–	95%
Environmental Storage Temperature Range	-40°C	–	+85°C

Enclosure Specification	GEPS12-60 Dimensions
Damp Location Rated	9.5 inches (241 mm) x 1.7 inches (43 mm) x 1.2 inches (30 mm)

Load-Lineal ft. (m)	Min	Max	Remote Mounting Distance
Tetra MAX - GERDMXS6, GEGLMXS6, GEBLMXS6, GEWHMXS6, GEWWMXS6	-	54 ft. (16.46 m)	1-30 ft. (0.30-9.14 m)
Tetra MAX - GERDMXL6	-	80 ft. (24.38 m)	1-30 ft. (0.30-9.14 m)

⚠ WARNING!

RISK OF ELECTRIC SHOCK:

- Turn power OFF before inspection, installation or removal.
- Properly ground Tetra Power Supply enclosure.

RISK OF FIRE:

- Follow all NEC and local codes.
- Use only UL approved wire for input/output connections. Minimum size 18 AWG (0.82 mm^2)

Conforms to the following standards:

E219167 1YA1 Retrofit Sign Conversion E229508 6NA2 216319

UMNH
LE-101

6180 Halle Drive • Valley View, Ohio 44125-4635 • USA
P: 216.606.6612 • F: 216.606.6599 • www.led.com • info@led.com

Lumination, LLC is a subsidiary of GE Consumer & Industrial. Tetra® is a trademark of Lumination, LLC. The GE brand and logo are trademarks of the General Electric Company.
©2007 Lumination, LLC. Information provided is subject to change without notice. All values are design or typical values when measured under laboratory conditions.

ISL-LED

IMPACT® PATHLIGHT

RECESSED LED LUMINAIRE

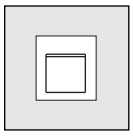

PRODUCT SPECIFICATION

Cat. No.*

Body	Lamp	Color Temp.	Finish	Locking Type

See Reverse for Ordering Details

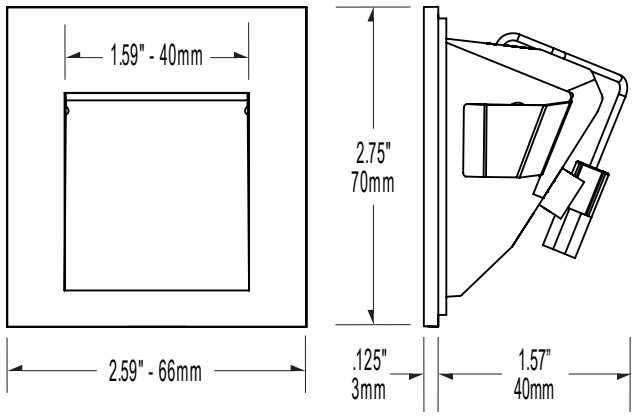

ISL-LED IMPACT PATHLIGHT

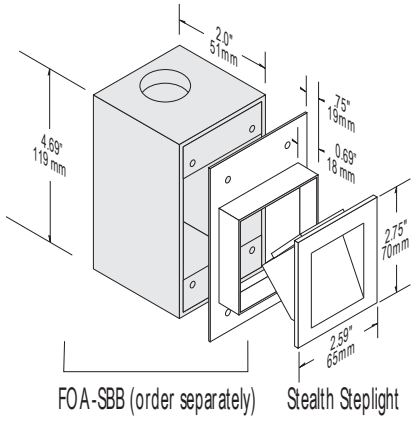

BACK BOX / MOUNTING PLATE ASSEMBLY

GENERAL DESCRIPTION

Impact Pathlight configured for LED use, is a recessed square luminaire with a regressed slot aperture to control glare. The light source is a single three watt (3W) dimmable white light emitting diode with heat sink module.

Fixture must be specified for use with Model FOASBB-LED Back Box which can be roughed in drywall or plaster, then to receive fixture, which is easily removable and its LED/heat sink module, replaceable. Fixture is suitable for use in dry, damp and wet locations.

MATERIAL

Fixture body is aluminum.

FINISH

Available in brushed aluminum, natural aluminum, white powder coat, black powder coat, chrome plated, industrial grey, natural bronze, brushed stainless, and brushed bronze.

MOUNTING

Optimum Impact fixture mounting height is 18-inches above grade, 36-inches on center. Typical mounting height range is six-inches to three feet above walking surface.

ELECTRICAL

The light emitting diode (LED) is a solid state semiconductor. The system requires a proprietary remote driver assembly (PSA-60-12H *dimmable power supply with hardwire transformer* or PSA-60-12P *plug-in transformer*, each ordered separately). The power supply assembly may be installed up to 40 feet from the luminaries. Each power supply is capable of powering up to 18 luminaries.

LED

The standard three watt (3W) LED has a color temperature of 3000 kelvin and 5000 kelvin. Data supplied by the manufacturer suggest useful life of 50,000+ hours. The LED flux in white is 132 lumens. Lumen depreciation based on accelerated testing averages 10-35% at 25,000 hours.

LISTING

ETL Listed, Class 2 Luminaire System, File #3084654DAL-001.

PHOTOMETRY

Consult factory for availability of photometric data.

UMNH
LE-103

LUCIFER LIGHTING COMPANY
3750 IH 35 North
San Antonio, Texas 78219
Phone 210 227-7329
FAX 210 227-4967
www.luciferlighting.com

©2008 Lucifer Lighting Company
As part of its policy of continuous research and product development, the Company reserves the right to change or withdraw specifications without prior notice.

ISL-LED
IMPACT® PATHLIGHT
RECESSED LED LUMINAIRE

PRODUCT ORDERING DETAILS

Cat. No.

ISL – ALED – 3K – NA – NL

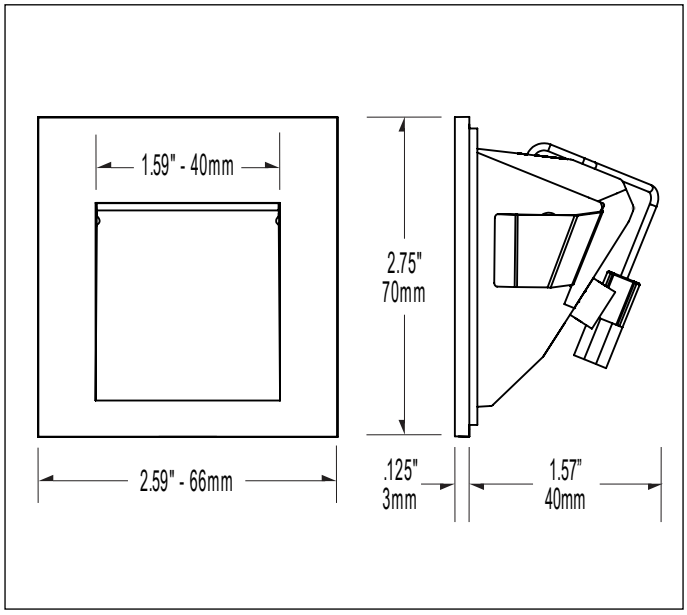

To Specify

BODY (A)	LAMP (B)	COLOR TEMP. (C)	FINISH (D)	LOCKING TYPE (E)

A:
ISL Impact Pathlight

B:
ALED A/C LED

C:
~~3K 3000 kelvin~~
5K 5000 kelvin

D: TBD
A Brushed Aluminum
NA Natural Aluminum
W White Powder Coat
B Black Powder Coat
C Chrome Plated
IG Industrial Grey
NBR Natural Bronze
SS Brushed Stainless
BR Brushed Bronze

E:
~~NL Non-Locking~~
LK Locking

UMNH
LE-103

LUCIFER LIGHTING COMPANY
3750 IH 35 North
San Antonio, Texas 78219
Phone 210 227-7329
FAX 210 227-4967
www.luciferlighting.com

©2008 Lucifer Lighting Company
As part of its policy of continuous research and product development, the Company reserves the right to change or withdraw specifications without prior notice.

line™ 1.5

Application

io Lighting's **line series 1.5** is approximately 1.5" in diameter. UL listed for wet locations, this LED-based linear floodlight produces functional luminous intensities for lighting bridges and building facades. Ideal for grazing and accent illumination, individual units may be placed end to end to create continuous rows without obvious shadows between fixtures. LEDs are similar to halogen light sources in that they are point sources that can reveal superior definition to textural surfaces and sparkle to reflective surfaces.

series 1.5 is a low voltage linear luminaire that may be ordered in incremental nominal lengths that include: 18" and 36". Optional beam spreads along the perpendicular axis of the fixture include 10°, 45° and 65°. **io** ensures that each LED is driven with the proper current and voltage, which enables the average rated life to be 50,000 hours at 70% of lamp lumen output. To ensure proper performance, *interior* architectural details should allow for ventilation and air flow around the fixture. Ambient temperature surrounding the fixture shall not exceed 120˚F *(48.9˚C).*

Light Output

line series 1.5 is available with two lumen outputs for white light only. Red, green and blue are available in high output only. IES format files may be obtained from the factory or downloaded from **www.iolighting.com**.

Standard Output:
3000K White: 34 lms/ft
5000K White: 40 lms/ft

High Output:
3000K White: 170 lms/ft
5000K White: 230 lms/ft

Refer to light output tables for footcandle values at various distances. IES files will be available third quarter '07.

Construction

The light weight, yet durable extruded aluminum housing provides recommended heat sink requirements for LEDs. Patented precision optic assembly is composed of a customized acrylic material that offers very high transmissivity, UV stability and excellent longevity. **series 1.5** is UL listed for wet locations.

Electrical

8'-0' 18 AWG, 600 volt TFFN rated power cords are supplied with plug connector. Injection molded end cap is designed to receive both the plug electrical connector and an interconnect for daisy chain. 24 volt 100 watt power supply will be provided as a standard. See daisy chain and remote distance requirements in chart on the lower left corner of this specification sheet.

Power supply and dimming module must be specified separately. For detailed information, consult **io** website or **io** representative for specification sheets.

Power Consumption

Standard Output : 2.1 w/ft **High Output: 7.6 w/ft**

Power consumption does not include power supply losses. Consult **io** driver specification sheets (at **www.iolighting.com**) for losses associated with each driver option.

Finish

Anodized aluminum finish is standard. Custom finishes may be available upon request.

Dimensions

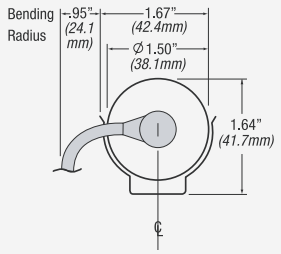

Beam Spreads

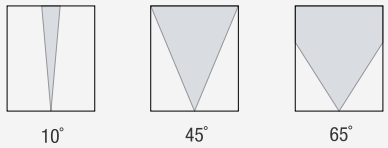

Lengths

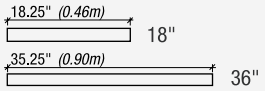

Power Supply (100 W DRIVER)

Standard Output

TYPE	SUPPLIES	REMOTE DISTANCE	
24v100w	up to 35'-0"*(10.7m)* (2) RUNS UP TO 49' *(14.9m)* w/(1) RUN NTE 35'-0"*(10.7m)*	18'-0" *(5.5m)*	w/18AWG
		46'-0" *(14m)*	w/14AWG
		71'-0" *(21.6m)*	w/12AWG

High Output

TYPE	SUPPLIES	REMOTE DISTANCE	
24v100w	up to 12'-0"*(3.6m)*	18'-0" *(5.5m)*	w/18AWG
		46'-0" *(14m)*	w/14AWG
		71'-0" *(21.6m)*	w/12AWG

io Lighting 370 Corporate Woods Parkway Vernon Hills, IL 60061-3107 T 847.735.7000 F 847.735.7001 E info@iolighting.com W iolighting.com

UMNH
LE-104

Light Output

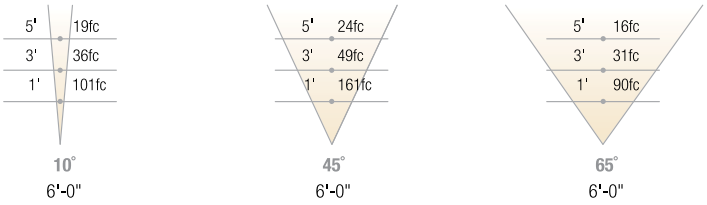

NOTE: Footcandle values based on Warm White H.O.

For Metric Conversion	1"	3"	5"	6"
	0.3m	0.9m	1.5m	1.8m

LIGHT OUTPUT CONVERSION TABLE

White Light Output	3000K S.O.	5000K S.O.	3000K H.O.	5000K H.O.
Light Output Multiplier	0.20[1]	0.24[1]	1.0[1]	1.35[1]

Color Light Output	RED	GREEN	BLUE
Light Output Multiplier	0.47	0.71	0.24

IES format photometrics may be downloaded from **www.iolighting.com**

Electrical Feeds

2. End Feed

3. Right Side Feed

Interconnector
(For continuous row mounting)

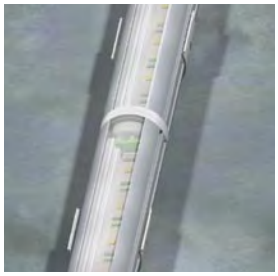

Interconnect plug connection is used for daisy chaining.

Mounting Options

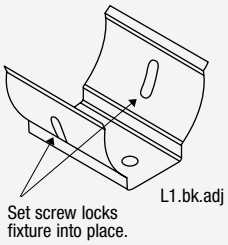

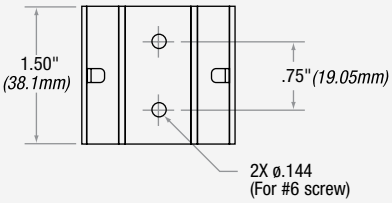

1.5 may be rotated within the bracket for field adjustable aiming.

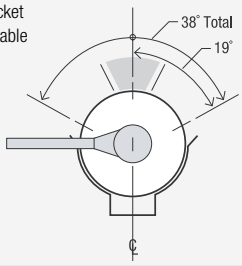

IP55, IP56 and UL Listed for wet locations.

line series 1.5 is not rated for submersible applications. **line 1.5** should not be mounted in conditions where there is any standing water whatsoever.

Order Code

0	.	10	.	E	.		.		.		.		.		.		.		.	
io		1		2		3		4		5		6		7		8		9		10

1. LIGHT OUTPUT
10 1.5 S.O. or H.O.

2. LOCATION
E Exterior

3. COLOR
3K White 3000K(Standard)[1]
3KHO White 3000K (High Output)[1]
5K White 5000K(Standard)[1]
5KHO White 5000K (High Output)[1]
R Red[2]
G Green[2]
B Blue[2]

4. DISTRIBUTION
10 10 Degree
45 45 Degree
65 65 Degree

5. MOUNTING
100 Surface
Note: Universal mounting bracket may be used for all mounting orientations. Set screw locks in aim angle.

6. FINISH
1 Anodized Aluminum
2 Anodized Custom Color

7. LENGTH
UNITS (ACTUAL)
18 18" (18.25")
IP56 Lens face up or down[3]
36 36" (35.25")
IP55 Lens face down[3]

FOR CONTINUOUS ROW
Specify length (e.g., 96'-0")
Note: Overall length must be divisible by 18"

8. ELECTRICAL FEED
2 End Feed
3 Right Side Feed
Note: For straight continuous rows fed by one driver, interconnects will be supplied as required

9. VOLTAGE / DIMMING
1 120v
2 277v
3 120v w/dim
4 277v w/dim
5 Other

10. SPECIFY DRIVER / DIMMING
Note: If left blank, **io** will supply 100 watt drivers. Download Power Supply specification sheet from **www.iolighting.com**

Footnotes

Footnotes
1. White light variance between LEDs within a single fixture will not exceed +/- 200k.
2. Refer to conversion table for output. High Output only (7.6 w/ft).
3. 18" lengths may be installed in face up or face down applications. 36" lengths may be installed in face down applications only.

For Metric Conversion	1"	1"	1'
	25.4mm	2.54cm	0.3m

io Lighting 370 Corporate Woods Parkway Vernon Hills, IL 60061-3107 T 847.735.7000 F 847.735.7001 E info@iolighting.com W iolighting.com

UMNH
LE-104

ADVANCE

XITANIUM
LED Drivers

Universal Outdoor Drivers for 12V and 24V LED systems

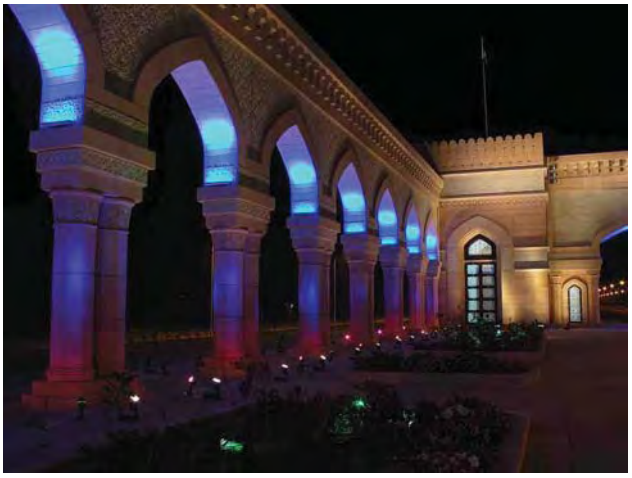

Applications

Orientation/Step Lighting

Architectural Lighting

Channel Letters

Contour Lighting

Edge Lighting

LEDs have evolved into a practical, flexible light source for a wide variety of illumination applications. Common LED products available in the market today are configured in a series-parallel array – designed to be powered by a suitable 24vdc driver – which allows flexibility to connect variable load levels. These operating voltages have become the standard in the industry.

The Brain Behind the Bright Idea

Xitanium LED drivers from Advance are designed specifically for 24V LED systems and incorporate features that enable broad commercialization of end-use solid-state lighting products.

Features	Benefits
UL Class 2	Limited output voltage and current plus isolation for safe operation
UL Outdoor Damp location rated - IP 66	Fully potted for moisture resistance and thermal benefits
Ultra small, compact size	Facilitates new, low-profile fixture design
Extreme low temperature Performance (-40°C)	Allows use in any outdoor application
Generous high temperature capability (+60°C)	Margin flexibility to facilitate fixture design
Tightly regulated output (1% line, 5% load)	Consistent light output across line and load levels
5 year warranty	Peace of mind for your new products and for end users…from the industry's most trusted component maker
Powered by Advance	Advance is preferred by end users – Enhance the value of your product

Quick Selection Table

Catalog Number	Description	Application
LEDINTA0024V41FO	Intellivolt 100 Watt 24Vdc Outdoor	• 24Vdc LED Systems

LED Driver Specifications

Description	Catalog Number	Input			Output			Case Temp Max (°C)	Figure	Weight (Grams)
		Volts (V)	Power Max (W)	Current Max (A)	Power Max (W)	Voltage Nom (V)	Current Max (A)			
100 Watt	LEDINTA0024V41FO	120	117.0	0.98	100.0	24.0	4.1	90	A	640
		230		0.51						
		277		.042						

Total Harmonic Distortion: 20% max
Power Factor: 90% min
Line Regulation: 1% output variation across input voltage range
Load Regulation: 5% output variation across input voltage range
Current Crest Factor: 1.5 max
Environmental Protection: IP66 outdoor rated
EMI: FCC47 SubPart15, CISPR15 and CISPR22 Class A
Protection: Meet UL1310 for Class 2; Inherent short-circuit protection, self-limited; overload protected; 3.2KV output insulation
AC Input and DC Output: 2 (0.78mm²) Solid Copper Wires, 15cm long

Dimensions

Fig. A

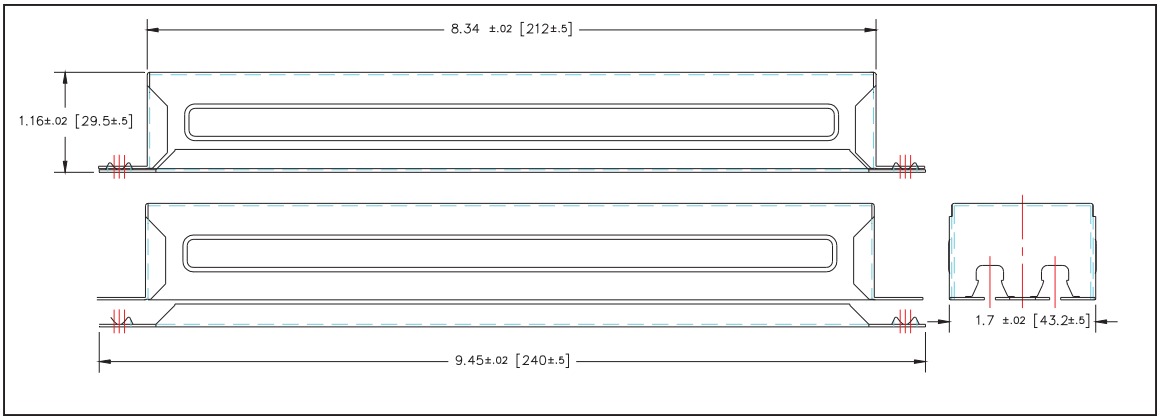

Advance, A Division of Philips Electronics North America · 10275 W Higgins Road · Rosemont, IL 60018 · USA
Tel: + 1 847 390-5205 · Fax: + 1 847 390-5264 · Revised 09/05PJJ

UMNH
LE-104

line

100W driver enclosure

100 Watt driver
Catalog number: 250ENC2.011x4x4

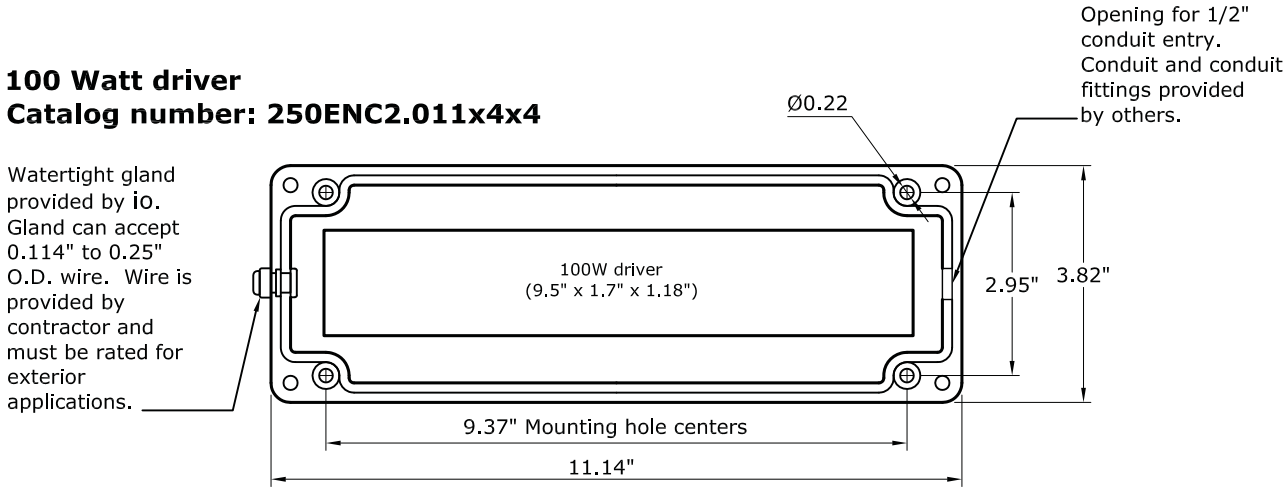

Front view without cover

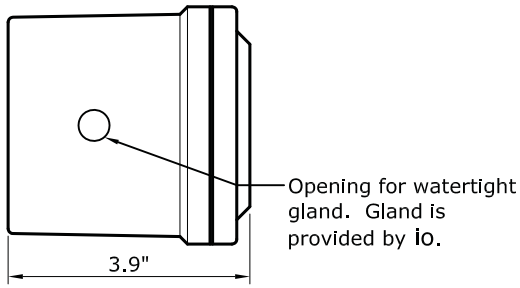

Left end view with cover

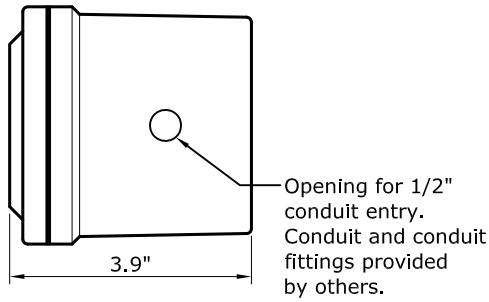

Right end view with cover

Enclosure Construction

Enclosure material is a molded fiberglass reinforced polyester (thermoset). The gasket is poured polyurethane seamless gasket that provides watertight, dust-tight environmental seal. The cover screws are recessed, captive and stainless steel.

Enclosure Industry Standards

UL/cUL 50	File E64358 type 1, 3, 4X, 6P, 12
NEMA 250	Type 1, 3, 4X, 6P, 12
CSA Std 22.2	File LR069014 type 1, 3, 4X, 6P, 12
Temp rating	(-40°C to +120°C)
Flammability rating	UL94-5V

io Lighting LLC, 370 Corporate Woods Pkwy, Vernon Hills, Illinois 60061-3107
T: 847 735 7000 F: 847 735 7001 info@iolighting.com www.iolighting.com

Small scale in-grade luminaires ·
STAINLESS STEEL for LEDs

Housing: Constructed of .125" thick, machined stainless steel welded to a stainless steel bottom mounting plate. Trim/Clamping ring is heavy, machined bronze.

Enclosure: .250" thick tempered white safety glass, machined to be flush with .125" thick machined stainless steel trim ring. Trim ring is secured by four (4) captive flat head stainless steel screws. Trim may be rotated after installation for precise alignment. One piece molded U-channel, high temperature silicone rubber gasket.

Electrical: Provided with a single 3 watt white (5500 K) LED. Luminaires require a remote, 24 V DC, Class 2 power supply. They are pre-wired with ten (10) feet of 12 AWG wire and a waterproof cable gland entry into housing.

Note: Lamps supplied with luminaire. A separate waterproof wiring box for power supply must be provided (by contractor). Due to the dynamic nature of LED technology, LED luminaire data in this catalog is subject to change at the discretion of BEGA/US. For the most current technical data, please refer to www.bega-us.com.

Finish: Machined #4 stainless steel. Custom colors are not available.

U.L. listed, suitable for wet locations and vehicle drive over.
Protection class: IP 67.

Temperature caution: The column 'T' in this chart indicates the temperature in degrees Celsius which is reached on the center of the glass surface during operation. Surface temperatures are for exterior applications. For interior applications add 10° C to temperatures shown.

Note: A foundation must be supplied by the customer. These luminaires are designed to bear pressure loads up to 4400 lbs. from vehicles with pneumatic tires. The luminaires must not be used for traffic lanes where they are subject to horizontal pressure from vehicles braking, accelerating and changing direction.

Type:
BEGA Product:
Project:
Voltage:
Color:
Options:
Modified:

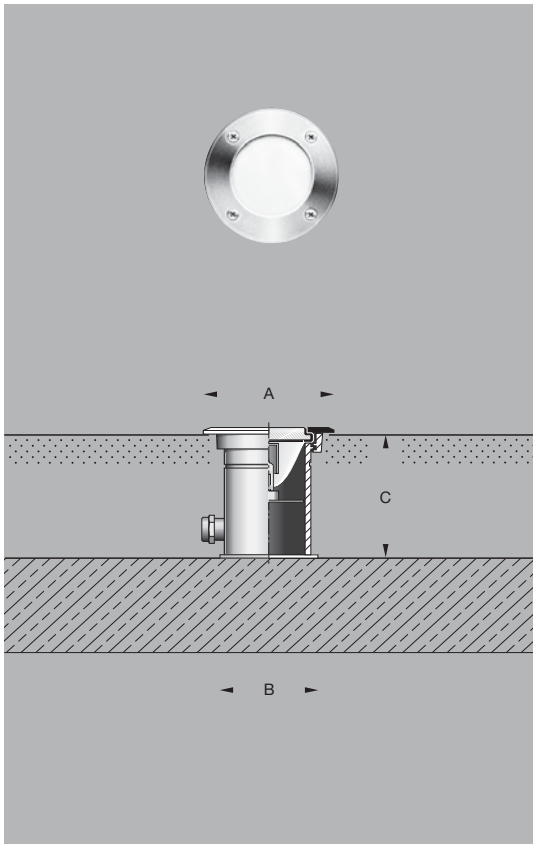

	Lamp		T	A	B	C
8698 LED	1	3 W LED, 24 V DC	25°	3 9/16	3 1/2	3 7/8

BEGA-US 1000 BEGA Way, Carpinteria, CA 93013 (805) 684-0533 FAX (805) 566-9474 www.bega-us.com
©copyright BEGA-US 2008 Updated 2/08

UMNH
LE-105

V/A TRACK

STRAIGHT TRACK

The V/A track consists of 2 extruded copper pipes with galvanized surface in chrome, bronze, gold or matte chrome. The plastic insulation is either black or grey.

Art.-Nr.	
160031bz	bronze and black, 39"
160031ch	chrome and black, 39"
160031g	gold and black, 39"
160031mcgy	matte chrome, 39"
160032bz	bronze and black, 78"
160032ch	chrome and black, 78"
160032g	gold and black, 78"
160032mcgy	matte chrome, 78"
160033bz	bronze and black, 102"
160033ch	chrome and black, 102"
160033mcgy	matte chrome, 102"

CURVED TRACK

copper tube track 2 x 3/8". Custom curved V/A track bent horizontally or vertically in any radius from 2' 6" to 100'.

Art.-Nr.	
horizontal curve	
160019-1bz	bronze and black, 67"
160019-1ch	chrome and black, 67"
160019-1mcgy	matte chrome, 67"
160019-2bz	bronze and black, 94"
160019-2ch	chrome and black, 94"
160019-2mcgy	matte chrome, 94"
vertical curve	
160019-3bz	bronze and black, 67"
160019-3ch	chrome and black, 67"
160019-3mcgy	matte chrome, 67"
160019-4bz	bronze and black, 94"
160019-4ch	chrome and black, 94"
160019-4mcgy	matte chrome, 94"

END CAP

for V/A tracks

Art.-Nr.	
160020mcgy	matte chrome
160020blk	black

DEBURRING TOOL

Art.-Nr.	
160400	

CONNECTORS

TRACK CONNECTOR / ISO TRACK CONNECTOR

for copper tube tracks, suitable for both straight and curved tracks. (not visible after assembly)

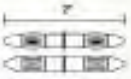

Art.-Nr.	
160402	chrome internal connector
160409blk	black plastic, iso
160409mcgy	matte chrome, iso

FLEXIBLE TRACK CONNECTOR

Art.-Nr.	
160501bz	bronze, flexible from 55° - 130°
160501ch	chrome, flexible from 55° - 130°
160501g	gold, flexible from 55° - 130°
160501mcgy	matte chrome, flexible from 55° - 130°

VERTICAL ANGLE CONNECTOR

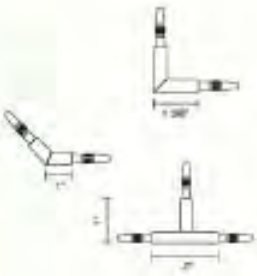

Art.-Nr.	
160407ch	chrome and black, 90°
160407g	gold and black, 90°
160407mcgy	matte chrome, 90°
160410ch	chrome and black, 135°
160410g	gold and black, 135°
160410mcgy	matte chrome, 135°
160403ch	chrome and black, T-Connector
160403g	gold and black, T-Connector
160403mcgy	matte chrome, T-Connector

UMNH
LE-106

HORIZONTAL ANGLE CONNECTOR

Art.-Nr.	
160411ch	chrome and black, 45°
160411g	gold and black, 45°
160411mcgy	matte chrome, 45°
160420ch	chrome and black, 60°
160420g	gold and black, 60°
160420mcgy	matte chrome, 60°
160406bz	bronze and black, 90°
160406ch	chrome and black, 90°
160406g	gold and black, 90°
160406mcgy	matte chrome, 90°
160421ch	chrome and black, 120°
160421g	gold and black, 120°
160421mcgy	matte chrome, 120°
160408ch	chrome and black, 135°
160408g	gold and black, 135°
160408mcgy	matte chrome, 135°
160414ch	chrome and black, T-Connector
160414g	gold and black, T-Connector
160414mcgy	matte chrome, T-Connector
160404ch	chrome and black, Cross Connector
160404g	gold and black, Cross Connector
160404mcgy	matte chrome, Cross Connector

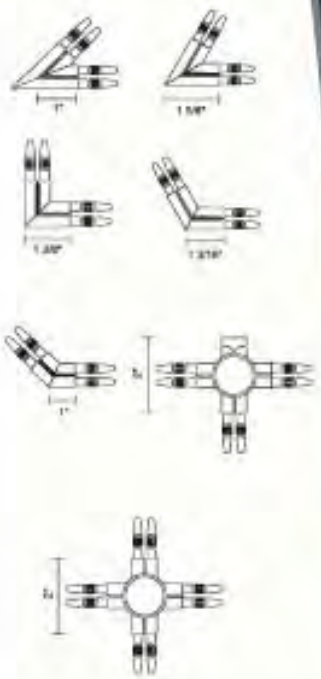

CUSTOM HORIZONTAL ANGLE CONNECTOR

Art.-Nr.	
160830ch	chrome and black, 45° - 180°*
160830g	gold and black, 45° - 180°*
160830mcgy	matte chrome, 45° - 180°*

*custom angle in 5° increments between 45° - 180°; specify when ordering

TRACK SPACER

Art.-Nr.	
160210bz	bronze and black
160210ch	chrome and black
160210mcgy	matte chrome

SUPPORTS

CORD SUSPENSION CLIP

aircraft cable with clamp adaptor

Art.-Nr.	
160600bz	bronze and black, 78"
160600ch	chrome and black, 78"
160600g	gold and black, 78"
160600mcgy	matte chrome, 78"

CORD SUSPENSION CROSS CONNECTOR

insulated connection at any angle

Art.-Nr.	
160206ch	chrome and black, 40"
160206g	chrome and black, 40"
160206mcgy	matte chrome, 40"

WALL AND CEILING ATTACHMENT CLIP

Art.-Nr.	
160519mcgy	matte chrome, 1/2"
160519blk	black, 1/2"
160518bz	bronze, 1"
160518ch	chrome and black, 1"
160518blk-g	gold and black, 1"
160518mcgy	matte chrome, 1"

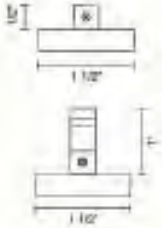

UMNH
LE-106

WALL EXTENSION ARM CLIP
with clip and plate disc, cannot be shortened

Art.-Nr.	
160560ch	chrome and black, 12"
160560g	gold and black, 12"
160560mcgy	matte chrome, 12"
160561ch	chrome and black, 20"
160561g	gold and black, 20"
160561mcgy	matte chrome, 20"

TRACK END FASTENER
2 parts, with mounting material

Art.-Nr.	
160215blk	black
160215mcgy	matte chrome

WALL COVER PLATE
set of 2, plastic, cutout 6/8"

Art.-Nr.	
160204mcgy	matte chrome
160204blk	black
160204wh	white

MOUNTING ACCESSORIES

SPACER
for use with 160519,
cannot be shortened

Art.-Nr.	
160430ch	chrome and black, 5/8"
160430g	gold and black, 5/8"
160430mcgy	matte chrome, 5/8"
160530ch	chrome and black, 1 3/8"
160530g	gold and black, 1 3/8"
160530mcgy	matte chrome, 1 3/8"
160531bz	bronze and black, 2 3/4"
160531ch	chrome and black, 2 3/4"
160531g	gold and black, 2 3/4"
160531mcgy	matte chrome, 2 3/4"
160532bz	chrome and black, 5 3/8"
160532ch	chrome and black, 5 3/8"
160532g	gold and black, 5 3/8"
160532mcgy	matte chrome, 5 3/8"

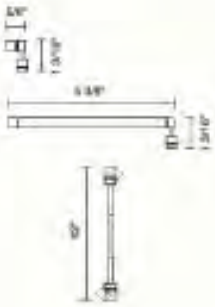

WALL SUSPENSION
cannot be shortened, for use with 160519

Art.-Nr.	
160565ch	chrome and black, 5/8"
160565mcgy	matte chrome, 5/8"
160566ch	chrome and black, 5 3/8"
160566mcgy	matte chrome, 5 3/8"
160580ch	chrome and black, 42"
160580mcgy	matte chrome, 42"

PLATE DISC
for all V/A mounting elements, for increasing the support surface particularly with lightweight ceilings

Art.-Nr.	
160533bz	bronze and black
160533ch	chrome and black
160533g	gold and black
160533mcgy	matte chrome

BASE PLATE
for all V/A mounting elements, for increasing the support surface

Art.-Nr.	
160534ch	chrome and black
160534g	gold and black
160534mcgy	matte chrome

UMNH
LE-106

POWER SUPPLY

PLUG-IN POWER FEED
for 8 and 10 gauge cable

Art.-Nr.		300W	15A
160413blk	black		
160401mcgy	matte chrome		

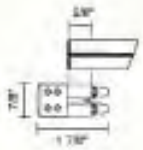

MID-SPAN POWER FEED
2 parts, for 8 and 10 gauge cable

Art.-Nr.		300W	15A
160528bz	bronze and black		
160528ch	chrome and black		
160528g	gold and black		
160528mcgy	matte chrome		

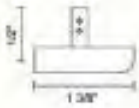

DUAL ROD POWER FEED
covers 4" j-box,
for 8 and 10 gauge cable

Art.-Nr.		300W	15A
160306bz	bronze and black		
160306ch	chrome and black		
160306mcgy	matte chrome		

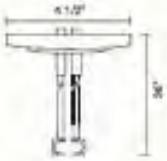

2" DUAL ROD POWER FEED
with integral 2" j-box,
for 8 and 10 gauge cable

Art.-Nr.		300W	15A
160308bz	bronze and black		
160308ch	chrome and black		
160308mcgy	matte chrome		

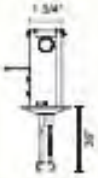

POWER FEED CANOPIES

POWER FEED COVER I
for mounting to standard j-box, may be field cut,
consult factory for custom lengths,
accepts 2 sets of power feed cables,
power feeds not included

Art.-Nr.	
240100bz	bronze
240100ch	chrome
240100mc	matte chrome

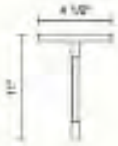

SLOPED CEILING FEED COVER
for sloped ceiling mounting to standard j-box,
may be field cut,
power feeds not included

Art.-Nr.	
240120bz	bronze
240120ch	chrome
240120mc	matte chrome

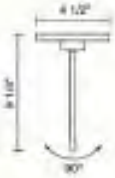

POWER SUPPLY CABLE (not shown)
tin-plated, transparent insulated power cable

Art.-Nr.	
150118	10 gauge
150121	8 gauge

ADAPTOR

Art.-Nr.		15W
160050bz	bronze and black	
160050ch	chrome and black	
160050g	gold and black	
160050mcgy	matte chrome	

UMNH
LE-106

TC2 ELECTRONIC TRANSFORMER

Class II with 5A breakers included

TC2-150/120v	3 x 50W, 120V
TC2-300/120v	6 x 50W, 120V

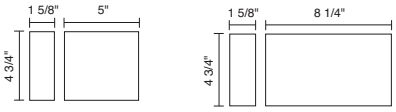

T-60 PLUG-IN TRANSFORMER

electronic transformer for standard wall sockets

70403	60W, 120V	BLK

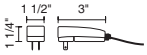

PLUG-IN TRANSFORMER FOR LEDRA FIXTURES

short circuit and overload protected, output DC 12V 700mA max, UL listed

70423	120V/250V	BLK

T REMOTE TRANSFORMER

2 secondary taps with circuit breaker included in housing, for separate switching separate transformers should be used, choke optional

T-150/120v	150W, 120V	BLK
T-300/120v	300W, 120V	MC
T-300/277v	300W, 277V	MC
T-600/120v	2 x 300W, 120V	MC
T-600/277v	2 x 300W, 277V	MC
TCK-300	choke for 300W transformer	
TCK-600	choke for 600W transformer	

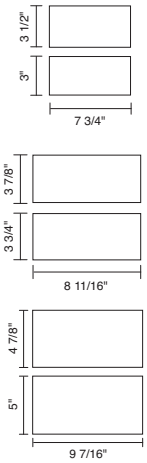

TQ REMOTE/SURFACE TRANSFORMER

4 secondary taps with primary and secondary circuit breaker included, zero clearance requirement, choke optional for dimming

TQ-150/120v	150W, 120V	WH
TQ-300/120v	300W, 120V	WH
TQ-300/277v	300W, 277V	WH
TQ-600/120v	2 x 300W, 120V	WH
TQ-600/277v	2 x 300W, 277V	WH
TCK-300	choke for 300W transformer	
TCK-600	choke for 600W transformer	

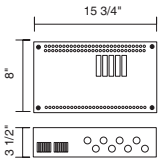

UMNH
LE-106

BRUCK.

LEDRA™ II

Description:
The Ledra II is a fully adjustable Uni-Light fixture. Integral AC/DC converter allows fixture to work on all Bruck tracks with standard 12VAC transformers. Fixture works with electronic transformer but, must meet minimum 20% load. Internal dimming, through integral 32-step switching, controls on each fixture for precise setting. The small size, long life, lack of UV, and cool beam makes the Ledra II ideal for displays, casework, difficult to maintain locations, and applications requiring efficient rich color accents. Ledra II may only be used with a magnetic transformer.

Technical Specs:
Finish: matte chrome and bronze
Power consumption: 6.5 Watts
Drive current: 700mA
Lumen output: 65 at 700mA
Lamp life: 70% at 50,000hrs
5500 White with Luxeon III Star LED
3200 Warm White with Z- Power LED

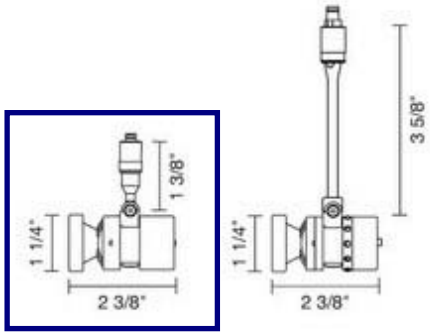

Part Numbers:

135711/s	white 5000K, 10° lens, 1 3/8" stem
135711/m	white 5000K, 30° lens, 1 3/8" stem
135711/fl	white 5000K, 45° lens, 1 3/8" stem
135711bz/s	bronze, white 5000K, 10° lens, 1 3/8" stem
135711bz/m	bronze, white 5000K, 30° lens, 1 3/8" stem
135711bz/fl	bronze, white 5000K, 45° lens, 1 3/8" stem
135711-1/s	white 3000K, 10° lens, 1 3/8" stem
135711-1/m	white 3000K, 30° lens, 1 3/8" stem
135711-1/fl	white 3000K, 45° lens, 1 3/8" stem
135711-1bz/s	bronze, white 3000K, 10° lens, 1 3/8" stem
135711-1bz/m	bronze, white 3000K, 30° lens, 1 3/8" stem

15774 Gateway Circle Tustin, CA 92780 ph: (714) 259-9959 fax: (714) 259-9969 www.brucklighti

Calculite® Compact Fluorescent Surface Cylinder **CS6132**

6" Aperture Triple Tube (4-Pin) Ceiling & Wall Mount

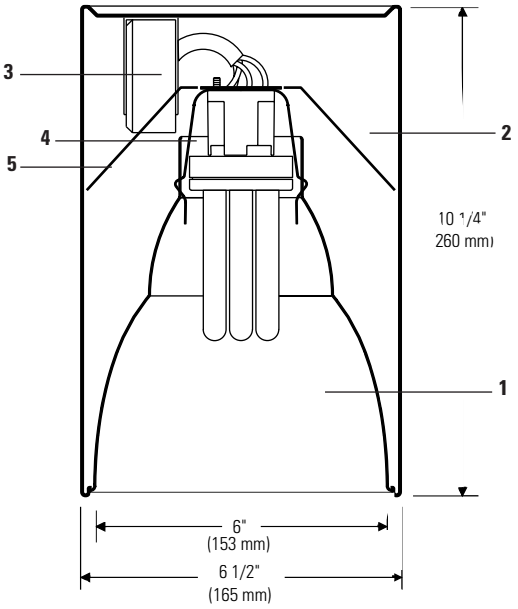

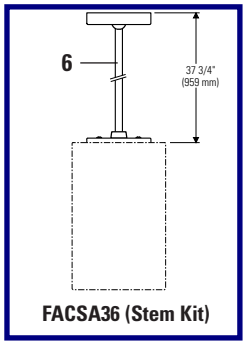

FACSA36 (Stem Kit)

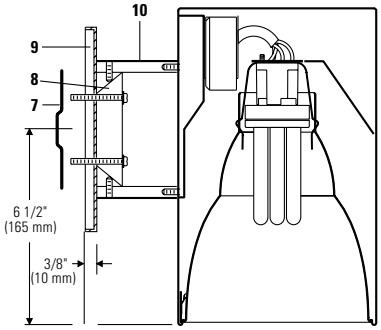

CW6132 (Wall Mount)

Complete Fixture Ceiling Mount		Complete Fixture Wall Mount	
CS6132VUCCL	Electronic, 120V - 277V	**CW6132VUCCL**	Electronic, 120V - 277V
CS6132VJUM7CCL	Advanced Mark VII Dim., 120V - 277V	**CW6132VJUM7CCL**	Advanced Mark VII Dim., 120V - 277V
CS6132VJ1MXCCL	Advanced Mark X Dim., 120V	**CW6132VJ1MXCCL**	Advanced Mark X Dim., 120V
CS6132VJ2MXCCL	Advanced Mark X Dim., 277V	**CW6132VJ2MXCCL**	Advanced Mark X Dim., 277V
Finish		**Finish**	
Comfort Clear™ Reflector, White Housing		Comfort Clear™ Reflector, White Housing	
Lamp		**Lamp**	
26 / 32W Triple Tube, 4 Pin		26 / 32W Triple Tube, 4 Pin	

Features

1. **Reflector:** 16 ga. Alzak® aluminum, 50° visual cutoff to lamp and lamp image, medium distribution. Comfort Clear™ low iridescence finish.
2. **Housing:** One piece 16 ga. spun aluminum with returned bottom edge to seat reflector; no visible hardware. Matte white baked enamel finish.
3. **Ballast:** Mounted on support bracket, can be easily removed for service.
4. **Socket Bracket:** Snaps onto reflector neck to assure consistently correct optical alignment.
5. **Retaining Springs:** Precision-tooled steel friction springs secure reflector to housing for quick, tool-less installation.
6. **Stem Kit:** Cat. No. **FA CSA36**: Provided with 1/2" dia. stem and 5 1/2" dia. canopy. Self aligning swivel provides maximum 38° vertical adjustment. Installs over 4" octagonal outlet box. Stem can be cut to length on site. Matte white baked enamel finish.
7. **Crossbar:** Installs over 3" or 4" octagonal or rectangular outlet box.
8. **Cleat:** Cast aluminum; allows mounting to mullion or post without backplate.
9. **Backplate:** Die-cast aluminum; 6 1/4" high by 4" wide; matte white.
10. **Bracket:** Extruded aluminum; matte white finish. Secured to cleat by set screws.

Electrical

Note: For ballast electrical data and latest lamp/ballast compatibility refer to **"Ballast"** specification sheet for complete electrical data.

UL listed for 90°C supply conductors.

Options and Accessories

Other Reflector and Housing Finishes

Consult factory

Fuse (Slow Blow) Add Suffix **F** (non-dim. only, all others consult factory)

Labels

UL listed for damp locations, I.B.E.W.

Alzak® is a registered trademark of ALCOA.

US Patent Pending.

Job Information	Type:
Job Name:	
Cat. No.:	
Lamp(s):	
Notes:	

Lightolier a Genlyte Thomas Company
631 Airport Road, Fall River, MA 02720 • (508) 6
We reserve the right to change details of design,
© 2004 Genlyte Thomas Group LLC (Lightolier Di

UMNH
PC-100

LIGHTOLIER®

26W

Spacing Ratio = 1.0

Report No: LSI 14025
Lightolier Recessed Fluorescent Luminaire, With Comfort Clear™ Reflector
One 26 Watt CPFL GE Lamp,
Cat# F26TBX/SPX35-835.
Lumen Rating = 1800 Lms.

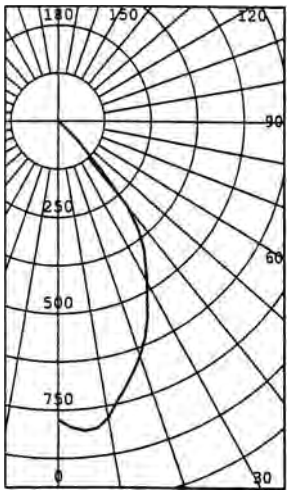

Efficiency=48.1%
Date: 4-23-99
CIE Type Direct
Luminous Diameter: 6.000
This Report Based On LM-1 And
Other Pertinent IES Procedures.

ZONAL SUMMARY

ANGLE	CP	LUMENS
0	775	
5	806	77
10	780	
15	708	199
20	646	
25	566	258
30	478	
35	402	245
40	285	
45	78	81
50	13	
55	4	4
60	2	
65	1	2
70	1	
75	1	1
80	0	
85	0	0
90	0	

ZONAL LUMENS AND PERCENTAGES

ZONE	LUMENS	%LAMP	%LUMINAIRE
0-30	533	29.66	61.66
0-40	778	43.25	89.92
0-60	863	47.98	99.75
0-90	865	48.10	100.00
40-90	87	4.85	10.08
60-90	2	.12	.25
90-180	0	.00	.00
0-180	865	48.10	100.00

32W

Spacing Ratio = 1.1

Report Prepared For: Lightolier 04-27-1999
Report No: LRL 499-9G
Lamps: 1 PLT-32 Lumens: 2400
Descrip.: 6" Dia X 10" Ht Recessed Downlight
With Comfort Clear™ Reflector. Vertical Lamp.

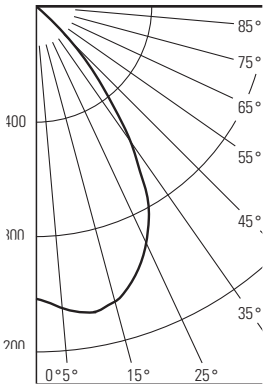

Efficiency=52.7%
Date: 4-27-99
CIE Type Direct
Luminous Diameter: 6.000
This Report Based On LM-1 And
Other Pertinent IES Procedures.

ZONAL SUMMARY

ZONE DEG.	AVG* C.P.	ZONAL LUMENS
180	0	
175	0	0
165	0	0
155	0	0
145	0	0
135	0	0
125	0	0
115	0	0
105	0	0
95	0	0
90	0	0
85	1	1
75	1	1
65	3	3
55	9	8
45	99	77
35	563	354
25	904	418
15	1063	301
5	1066	102
0	1035	

ZONAL LUMENS AND PERCENTAGES

ZONE	LUMENS	% LAMP	%LUMINAIRE
0–30	821	34.2	64.9
0–40	1175	49.0	92.9
0–60	1260	52.5	99.6
0–90	1265	52.7	100.0
40–90	90	3.8	7.1
60–90	5	0.2	0.4
90–120	0	0.0	0.0
90–150	0	0.0	0.0
90–180	0	0.0	0.0
0–180	1265	52.7	100.0

Coefficients of Utilization

Effective Floor Cavity Reflectance = .20

Room Cavity Ratio	80			70			50			30			10			
Wall Reflectance	50	30	10	50	30	10	50	30	10	50	30	10	50	30	10	0
1	.54	.53	.52	.53	.52	.51	.51	.50	.49	.49	.48	.48	.47	.47	.46	.46
2	.50	.49	.47	.50	.48	.47	.48	.47	.46	.47	.46	.45	.45	.45	.44	.43
3	.47	.45	.44	.47	.45	.43	.46	.44	.43	.44	.43	.42	.43	.42	.41	.41
4	.45	.42	.40	.44	.42	.40	.43	.41	.40	.42	.41	.39	.41	.40	.39	.38
5	.42	.39	.37	.42	.39	.37	.41	.39	.37	.40	.38	.37	.39	.38	.36	.36
6	.40	.37	.35	.39	.37	.35	.39	.36	.35	.38	.36	.34	.37	.36	.34	.34
7	.37	.34	.33	.37	.34	.32	.36	.34	.32	.36	.34	.32	.35	.33	.32	.31
8	.35	.32	.30	.34	.32	.30	.34	.32	.30	.34	.31	.30	.33	.31	.30	.29
9	.33	.30	.28	.32	.30	.28	.32	.30	.28	.32	.29	.28	.31	.29	.28	.27
10	.31	.28	.26	.30	.28	.26	.30	.28	.26	.30	.27	.26	.29	.27	.26	.25

Coefficients of Utilization

Effective Floor Cavity Reflectance = .20

Room Cavity Ratio	80			70			50			30			10			
Wall Reflectance	50	30	10	50	30	10	50	30	10	50	30	10	50	30	10	0
1	.59	.58	.57	.58	.57	.56	.56	.55	.54	.54	.53	.53	.52	.52	.51	.50
2	.56	.54	.53	.55	.54	.52	.54	.52	.51	.52	.51	.50	.51	.50	.49	.48
3	.53	.51	.50	.53	.51	.49	.51	.50	.49	.50	.49	.48	.49	.48	.47	.46
4	.51	.48	.47	.50	.48	.46	.49	.47	.46	.48	.46	.45	.47	.46	.45	.44
5	.48	.46	.44	.48	.45	.44	.47	.45	.43	.46	.44	.43	.45	.44	.43	.42
6	.46	.43	.42	.46	.43	.41	.45	.43	.41	.44	.42	.41	.44	.42	.41	.40
7	.44	.41	.39	.43	.41	.39	.43	.41	.39	.42	.40	.39	.42	.40	.39	.38
8	.41	.39	.37	.41	.39	.37	.41	.38	.37	.40	.38	.37	.40	.38	.36	.36
9	.39	.36	.35	.39	.36	.35	.38	.36	.35	.38	.36	.34	.38	.36	.34	.34
10	.35	.32	.31	.35	.32	.31	.35	.32	.30	.34	.32	.30	.34	.32	.30	.30

LIGHTOLIER®

Job Information	Type:

Lightolier a Genlyte Thomas Company
631 Airport Road, Fall River, MA 02720 • (508) 6
We reserve the right to change details of design,
© 2004 Genlyte Thomas Group LLC (Lightolier Di

UMNH
PC-100

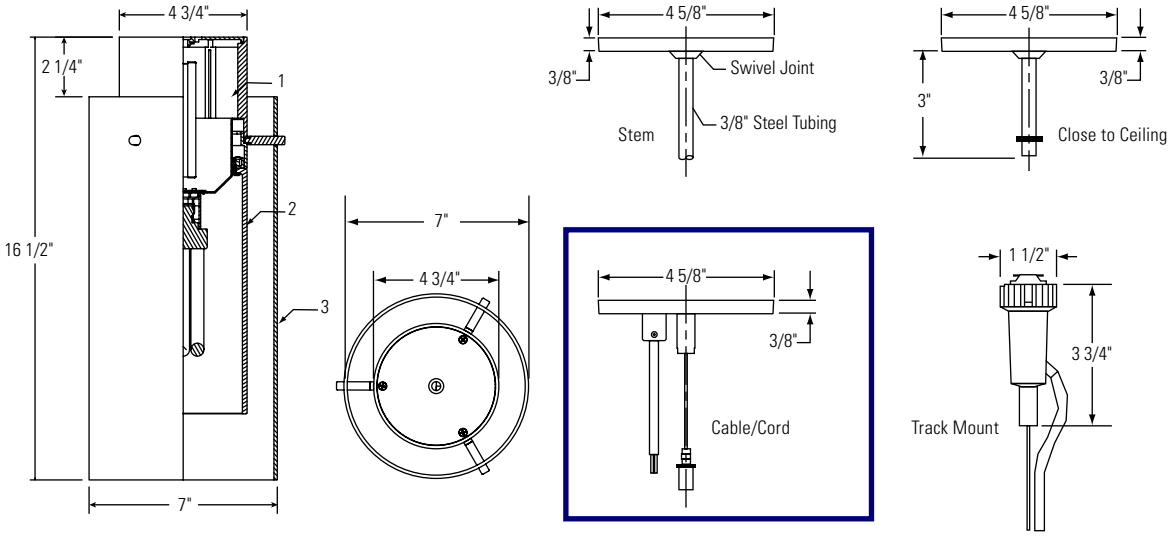

Complete Fixture Minus Suspension Kit:

Spec ID	Powerhead	Inner Glass	Outer Glass	Suspension Kit	Lamp	Volts
FP02	**PM32SA**	PG01	GL01	*See suspensions below	CFL, 26/32	120/277V
FP02MX1	**PM32MX1SA**	PG01	GL01		Mark X Dimming 26/32W	120V
FP02MX2	**PM32MX2SA**	PG01	GL01		Mark X Dimming 26/32W	227V
IP02	**PM150SA**	PG01	GL01		T-4 Mini-Can 150W	120V

Suspension

Cat. No	Finish	Description
SK01	Satin Aluminum	Clear Metallic Straight Cord/Cable, 120" Length, (10') with canopy
SK02	Satin Aluminum	Clear Metallic Straight Cord/Cable, 300" Length, (25') with canopy
ST01	Satin Aluminum	36" Length 3/8" Stem with canopy
ST02	Satin Aluminum	60" Length 3/8" Stem with canopy
CTC	Satin Aluminum	Close To Ceiling Kit with canopy
TM01	Satin Aluminum	Silver Track Mounting Kit with Clear Metallic Straight Cord/Cable, 120" Length, (10') (120V only)
SMK	Satin Aluminum	Flush Mounting Kit

Features

1. **Power Compartment:** Die Cast and Machined Aluminum Components. Brushed and Clear Lacquer Finish.
2. **Primary Glass:** Triplex Hand Blown Glass.
3. **Decorative Glass Assembly:** A Straight section of Hand Blown Glass. Die Cast Aluminum Holder Ring and Stainless Steel Support Pins.

Lamping (by others)

Incandescent: 50W Max. T-4 Mini Candelabra

Compact Fluorescent:

General Electric	Osram/Sylvania	Philips
(1) 26W Triple Tube 4-Pin (Amalgam) Compact Fluorescent Lamp		
F26TBX/*/A/4P	CF26DT/E/IN/*	PL-T26W/*/4P/Alto
(1) 32W Triple Tube 4-Pin (Amalgam) Compact Fluorescent Lamp		
F32TBX/*/A/4P	CF32DT/E/IN/*	PL-T32W/*/4P/Alto

*Manufacturers Color Temperature Designation

Electrical

Lampholders

Incandescent: E11 Base, Porcelain, Copper Nickel Plated Screw Shell.

Compact Fluorescent: 4-Pin, 26/32 watt base: GX24q-3

Ballasts: Fluorescent: Electronic	**26 Watts**		**32 Watts**	
Voltage	120	277	120	277
Total Imput Watts	28	28	38	36
Max. Line Current (Amps)	.25	.11	.30	.13

Labels

cULus Listed. Suitable for Damp Locations.

Job Information Type:

Job Name:

Cat. No.:

Lamp(s):

Notes:

UMNH
PC-101

Lightolier a Genlyte company www.lightolier.com
631 Airport Road, Fall River, MA 02720 • (508) 679-8131 • Fax (508) 674-4710
We reserve the right to change details of design, materials and finish.
© 2007 Genlyte Group LLC • B0507

LIGHTOLIER®

Calculite® Incandescent Surface Cylinder **7018AO**

6" Aperture A Lamp / BR30 / PAR38

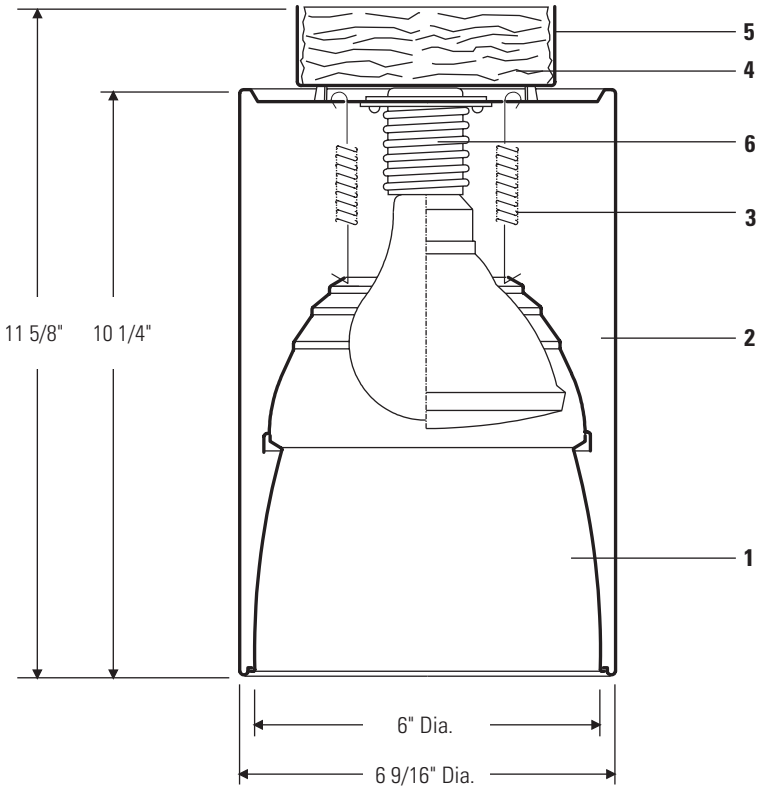

Catalog Number		Lamp
7018AO	Matte white housing with specular clear reflector	**BR30**, 85W max. **A21**, 150W max. **PAR38**, 150W max.

Features

1. **Reflector:** 16 ga. Specular clear Alzak® aluminum. 50° visual cut-off to lamp and lamp image.
2. **Housing:** One piece spun 16 ga. aluminum with returned bottom edge to seat reflector, no visible hardware.Matte white baked enamel finish.
3. **Retaining Springs:** Coil steel springs secure reflector to housing.
4. **Heat Insulltor:** Fiberglass bulk insulation.
5. **Collar:** One piece 16 ga. spun aluminum. Matte black finish
6. **Socket:** Medium base porcelain, nickel plated screw shell.

Options & Accessories

Stem Kit: 7249 Matte white

Permits surface units to be stem mounted. Supplied with 1/2" dia. and 5 1/2" dia. canopy. 37 5/8" O.A. Length. Stem can be cut to length at the job site. Self aligning swivel provides up to 38° vertical adjustment.

Other reflector and housing finishes consult factory.

Electrical

Requires 60°C Supply wires. No.18 SF-1 leads to porcelain socket.

Labels

UL Listed for damp locations, I.B.E.W.

Alzak® is a registered trademark of ALCOA.

Job Information	Type:
Job Name:	
Cat. No.:	
Lamp(s):	
Notes:	

Lightolier a Genlyte Thomas Company
631 Airport Road, Fall River, MA 02720 • (508) 679
www.lightolier.com

We reserve the right to change details of design, m
© 2004 Genlyte Thomas Group LLC (Lightolier Divis

UMNH
PP-100

LIGHTOLIER®

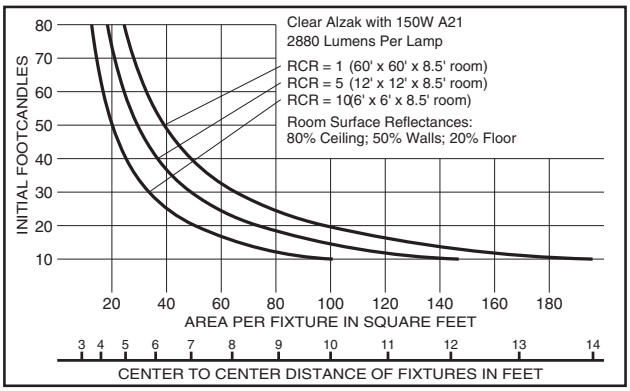

Use quick calculator chart to determine spacing of luminaires for desired level of illumination.
Conversion Factors:
100W A21, F.C. X 0.6

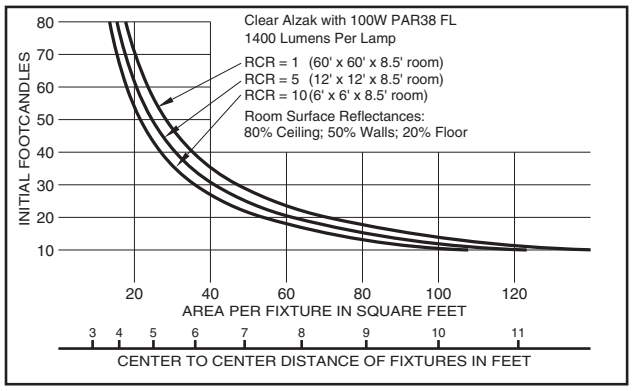

Use quick calculator chart to determine spacing of luminaires for desired level of illumination.
Conversion Factors:
PAR38 FL: 100W(IR), F.C. X 1.5; 120W, F.C. X 1.4; 90W, F.C. X 0.
70W/60W(IR), F.C. X 0.8
BR30 FL: 85W, F.C. X 0.6 (S.R.=0.9); 75W, F.C. X 0.5 (S.R.=0.9);

Spacing Ratio = 1.1

150W A21

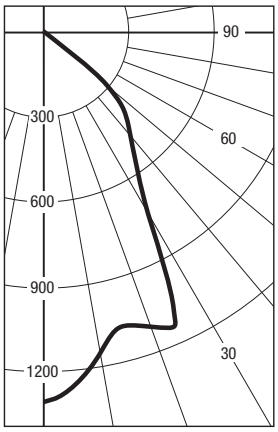

ITL, Inc. report No. 21590
Date: 2-9-77

Efficiency: 61.2%

CANDLEPOWER SUMMARY

DEG	CP	ZONAL FLUX
0	1319	0
5	1266	120
15	1080	306
25	1130	523
35	588	369
45	421	326
55	123	110
65	6	6
75	2	2
85	0	0
90	0	0

ZONAL SUMMARY

ZONE	LUMENS	LAMP	FIXT
0-30	949	32.9	53.8
0-40	1318	45.8	74.8
0-60	1754	60.9	99.5
0-90	1763	61.2	100.0
90-180	0.0	0.0	0.0
0-180	1763	61.2	100.0

Spacing Ratio = 0.4

150W A21

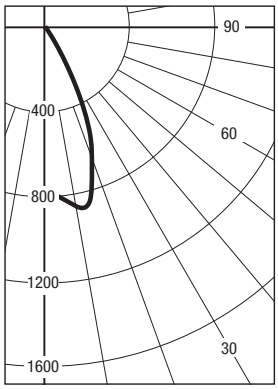

Tested According to IES procedures. Test distance exceeds five times the greatest luminous opening of Luminaire.

Certified test report No. 0847FR
Computed by LSI program

Efficiency = 89.3%

CANDLEPOWER SUMMARY

DEG	CP	ZONAL FLUX
0	4932	
5	4382	404
10	3249	
15	1805	541
20	777	
25	373	196
30	173	
35	72	57
40	45	
45	38	30
50	34	
55	29	20
60	0	
65	0	0
70	0	
75	0	0
80	0	
85	0	0
90	0	

ZONAL SUMMARY

ZONE	LUMENS	LAMP	FIXT
0-30	1141	81.56	91.37
0-40	1198	85.64	95.94
0-60	1249	89.25	99.99
0-90	1249	89.26	100.00
40-90	50	3.63	4.06
60-90	0	.01	.01
90-180	0	.00	.00
0-180	1249	89.26	100.00

COEFFICIENTS OF UTILIZATION

% EFFECTIVE CEILING CAVITY REFLECTANCE

ROOM CAVITY RATIO	80			70			50			30			10			0
% WALL REFLECTANCE	50	30	10	50	30	10	50	30	10	50	30	10	50	30	10	0
1	.68	.66	.65	.66	.65	.64	.64	.63	.62	.62	.61	.60	.59	.59	.58	.57
2	.63	.61	.58	.62	.60	.58	.60	.58	.57	.58	.57	.55	.56	.55	.54	.53
3	.59	.56	.53	.58	.55	.53	.56	.54	.52	.55	.53	.51	.53	.52	.50	.49
4	.55	.51	.49	.54	.51	.48	.53	.50	.48	.51	.49	.47	.50	.48	.47	.46
5	.51	.47	.44	.50	.47	.44	.49	.46	.44	.48	.45	.43	.47	.45	.43	.42
6	.47	.43	.41	.47	.43	.41	.46	.43	.40	.45	.42	.40	.44	.42	.40	.39
7	.44	.40	.37	.43	.40	.37	.42	.39	.37	.42	.39	.37	.41	.38	.36	.35
8	.41	.37	.34	.40	.36	.34	.39	.36	.34	.39	.36	.34	.38	.35	.33	.33
9	.37	.34	.31	.37	.33	.31	.37	.33	.31	.36	.33	.31	.35	.33	.31	.30
10	.35	.31	.28	.35	.31	.28	.34	.31	.28	.34	.30	.28	.33	.30	.28	.27

20% FLOOR CAVITY REFLECTANCE

COEFFICIENTS OF UTILIZATION

% EFFECTIVE CEILING CAVITY REFLECTANCE

ROOM CAVITY RATIO	80			70			50			30			10			0
% WALL REFLECTANCE	50	30	10	50	30	10	50	30	10	50	30	10	50	30	10	0
1	1.01	1.00	.99	1.00	.98	.97	.96	.95	.94	.93	.92	.91	.90	.89	.89	.87
2	.97	.95	.93	.96	.94	.92	.93	.92	.90	.91	.89	88	.88	.87	.86	.85
3	.94	.91	.89	.93	.90	.88	.91	89	.87	.89	.87	86	.87	.86	.85	.84
4	.91	.88	.86	.90	.88	.85	.89	.86	.84	.87	.85	.83	.85	.84	.83	.82
5	.88	.85	.83	.87	.84	.82	.86	.84	.82	.85	.83	.81	.84	.82	.80	.79
6	.86	.83	.81	.85	.82	.80	.84	.82	.80	.83	.81	.79	.82	.80	.79	.78
7	. 83	.80	.78	.83	.80	.78	.82	.79	.78	.81	.79	.77	.80	.78	.77	.76
8	.81	.78	.76	.81	.78	.76	.80	.77	.76	.79	.77	.75	.79	.77	.75	.74
9	.79	.76	.74	.79	.76	.74	.78	.76	.74	.78	.75	.73	.77	.75	.76	.73
10	.77	.75	.72	.77	.75	.72	.77	74.	72	.76	.74	.72	.76	.73	.72	.71

20% FLOOR CAVITY REFLECTANCE

Conversion Factor: 45W TO 120W PAR 38 FL, C.U. X 1.0. 65W TO 85W BR30 FL, C.U. X 0.85

Job Information | Type:

Lightolier a Genlyte Thomas Company
631 Airport Road, Fall River, MA 02720 • (508) 679
We reserve the right to change details of design, m
© 2004 Genlyte Thomas Group LLC (Lightolier Divi

UMNH
PP-100

LIGHTOLIER®

GENERAL Lighting Track shall allow fixtures to be located anywhere along the track length. Fixtures shall be easily focused, switched, dimmed, accessorized and removed as desired. Track system shall have a five year warranty from date of shipment.

MECHANICAL Lighting Track shall be constructed of .070 (2mm) extruded aluminum with overall height of 1.42 (36mm) and overall width of 1.812 (46mm). Track shall have same overall dimensions and physical appearance for both one and two circuit models.

Track shall be available in nominal 4 foot (1.2m), 8 foot (2.4m), and 12 foot (3.7m) lengths, in Silver, Black, White, or Graphite high temperature baked paint finish. Track shall be field cuttable to any length with a single cut.

Track system shall be available with End Feed, End Cap, Straight Mini-Joiner, Straight Joiner/Feeder, Flexible Joiner and L, T, and X Joiner/Feeders as standard components.

Track shall have the ability to be directly surface mounted. Track shall have pre-punched mounting slots for direct mounting to any surface. Track shall have the ability to: be mounted 1/2 inch (13mm) from a surface by extruded aluminum mounting clips, be suspended from a surface by a field cuttable stainless steel cable system, be suspended from a surface by a field cuttable steel stem system, and be mounted into UniTrack housing.

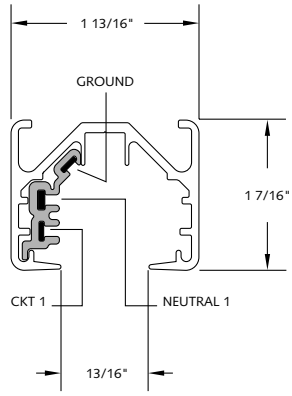

One Ckt 120/250V Track

ELECTRICAL Lighting Track and components shall be UL and CUL listed, CE Certified, and comply with the National Electric Code standards for Lighting Track. One and two circuit Lighting Track shall be rated at 120/250 volt, 50/60 Hz. 2400 watts maximum each circuit. Each 20 amp/120 volt circuit shall be comprised of flat copper busbars and have a separate neutral busbar for each circuit busbar. The neutral busbar shall be oversized to be comparable to #10 gauge 30 amp wire to reduce the possibility of overheating due to non-linear loads and harmonics. **Track shall have integral wiring channels for six (6) additional #12 THHN wires to create three (3) additional 20 amp/120 volt circuits, which can be dropped into any Joiner/Feeder, for a total track power capacity of 100 amps.** A separate grounding busbar shall be integral in all track lengths. All busbars shall be insulated to prevent contact with aluminum extrusion.

Track shall have electric feed capability through all Joiner/Feeders (except Flexible Joiner and Straight Mini-Joiner) using either 1/2 or 3/4 U.S. trade size knock-outs (.875 diameter [22mm] or 1.125 diameter [29mm]). Joiner/Feeders can be electrically field modified by removing the Lexan™ cover and rerouting internal pre-wired jumpers. All Joiner/Feeders shall be available in Black, White, Silver, and Graphite GE fiber reinforced Lexan™.

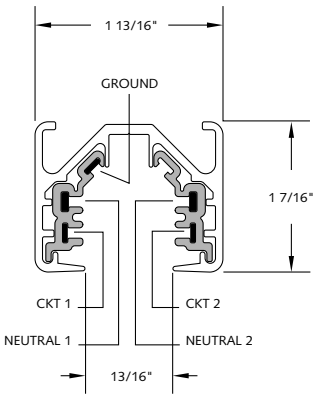

Two Ckt 120/250V Track

One and two circuit Lighting Track with separate neutral busbars shall have the ability to have each circuit separately dimmed as required when using standard voltage and low voltage fixtures with either magnetic or electronic transformers. Track shall have the ability to be dimmed or switched in selected sections in addition to dimming or switching an entire track configuration or track run.

FIXTURE FITTING INTERFACE Track shall accept GE fiber reinforced Lexan™ fixture fittings which positively lock into track and cannot be energized by the integral switch until safety interlock handle is in the closed position. Safety interlock shall also prevent fixture fitting removal from track unless the switch is in the "off" position. Upon insertion of fixture fitting into track, grounding connection from fixture fitting to track shall be automatically completed before any electrical contact is made with busbars. When removing fixture fitting from track, the grounding connection shall automatically be disconnected last. The fixture fitting shall recess into the track, creating a minimal profile below the track. Fixture fittings for magnetic low voltage fixtures shall be furnished with fuse of the correct ampere rating for integral transformer protection, and shall not be fused as a branch circuit.

UMNH
TP-100

UL and CUL listed, CE Certified, Dry Location • IBEW union made at LSI plant in USA • Specification grade heavy duty .070 (2mm) extruded aluminum track • 4 foot (1.2m), 8 foot (2.4m) and 12 foot (3.7m) field cuttable lengths • One circuit 20 amp or two circuit 40 amp capacity/120/250 volt • 100 amp total capacity when using integral wireways • Copper busbars equivalent to #12 AWG wire used as circuit and ground track conductors • Oversized copper busbars equivalent to #10 AWG wire used as neutral track conductors • Separate neutral track conductor used for each circuit • Separate copper grounding busbar used throughout track system • Black, White, Silver, and Graphite finishes • All Joiner/Feeders, Flexible Joiners, Mini-Joiners, End Feeds and End Caps are injection molded of GE fiber reinforced Lexan™ • All Joiner/Feeders and Flexible Joiners are prewired and simply couple into track • All Joiner/Feeder circuits can be easily field modified by changing internal jumper wires • Fixture fitting recesses into track for minimum profile • LSI surface track can be mounted directly to any surface 5'-0" above finished floor.

Surface Track Sections

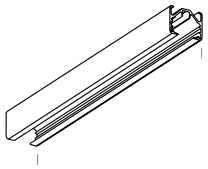

120/250V Surface Track Sections are used in conjunction with an End Feed, End Cap and a variety of Joiner/Feeders to form track runs and configurations. Track Section lengths are nominal 4 foot (1.2m), 8 foot (2.4m) and 12 foot (3.7m) which are field cuttable.

Finish		Nominal length 4 Ft	8 Ft	12 Ft
Silver	One Ckt	31010	31020	31030
	Two Ckt	32010	32020	32030
Black	One Ckt	31210	31220	31230
	Two Ckt	32210	32220	32230
White	One Ckt	31310	31320	31330
	Two Ckt	32310	32320	32330
Graphite	One Ckt	31410	31420	31430
	Two Ckt	32410	32420	32430

Bridge Track

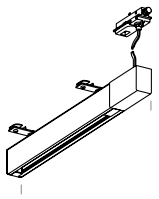

120/250V Bridge Track is a complete, portable, field cuttable, surface UniTrack system that mechanically and electrically mounts to and spans parallel runs of LSI Track. Bridge Track provides an additional range of striking angles for track lighting fixtures or for centering a fixture over a target located between parallel runs of track up to 8 foot (2.4m) on center.

Finish		9 Ft
Silver	One Ckt	31025
Black	One Ckt	31225
White	One Ckt	31325
Graphite	One Ckt	31425

Emergency/Worklite Track

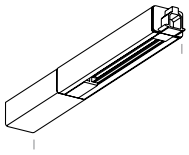

120/250V Emergency/Worklite Track is a separately fed one circuit Track Section, suitable for most LSI track fixtures, that integrates into any LSI Track run or configuration at any location. Consult fixture cutsheet. LSI fixtures (add suffix EF) mechanically lock into Emergency/Worklite Track by means of special hardware and do not have on/off switches.

Finish	All One Ckt			
	15" Joiner Section	15" End Feed Section	15" End Cap Section	15" Conduit End Feed Section
Silver	31050	31051	31052	31053
Black	31250	31251	31252	31253
White	31350	31351	31352	31353
Graphite	31450	31451	31452	31453

Unimount

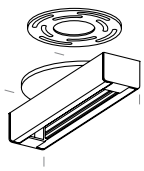

120/250V Unimount is a compact canopy mount Track section which will accept most single LSI Track fixtures up to 500 watts. Consult fixture cutsheet.

Finish		
Silver	One Ckt	31161
Black	One Ckt	31261
White	One Ckt	31361
Graphite	One Ckt	31461

End Feed

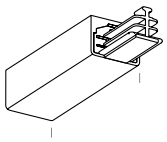

120/250V End Feed is used in conjunction with a Canopy Kit for top feeding from a recessed outlet box and can also be top fed directly with cable.

Finish		
Silver	One Ckt	31100
	Two Ckt	32100
Black	One Ckt	31200
	Two Ckt	32200
White	One Ckt	31300
	Two Ckt	32300
Graphite	One	
	Two	

UMNH
TP-100

End Feed for Conduit Connector

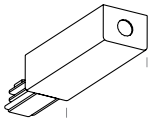

120/250V End Feed for Conduit Connector is used when feeding directly into the end of an End Feed. Connector supplied with 1/2" US trade size hole.

Finish		
Silver	One Ckt	**31102**
	Two Ckt	**32102**
Black	One Ckt	**31202**
	Two Ckt	**32202**
White	One Ckt	**31302**
	Two Ckt	**32302**
Graphite	One Ckt	**31402**
	Two Ckt	**32402**

Portable Feed

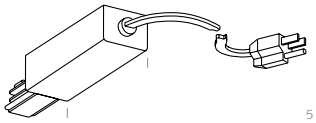

120/250V Portable Feed is used when a portable or temporary track hookup is desired. Supplied with 15 foot #16 AWG-10 Amp/125 Volt 3 wire flexible cord with NEMA 5-15P grounding plug. Non-UL listed.

Finish		
Silver	One Ckt	**31101**
Black	One Ckt	**31201**
White	One Ckt	**31301**
Graphite	One Ckt	**31401**

Straight Joiner/Feeder

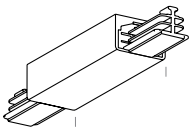

120/250V Straight Joiner/Feeder is used to mechanically and electrically couple any two lengths of track in a straight line. Straight Joiner/Feeder can also be top fed to energize the track from a recessed outlet box when used in conjunction with appropriate Canopy Kit or can be top fed directly with cable.

Finish		
Silver	One Ckt	**31104**
	Two Ckt	**32104**
Black	One Ckt	**31204**
	Two Ckt	**32204**
White	One Ckt	**31304**
	Two Ckt	**32304**
Graphite	One Ckt	**31404**
	Two Ckt	**32404**

Straight Mini-Joiner

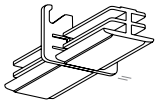

120/250V Straight Mini-Joiner is used to mechanically and electrically couple any two lengths of track in a straight line. Add .125 (3mm) for Straight Mini-Joiner when calculating overall lengths of straight runs or configurations (overall lengths are not the same as when using Straight Joiner/Feeder). Not for use as feeder.

Finish		
Silver	One Ckt	**31111**
	Two Ckt	**32111**
Black	One Ckt	**31211**
	Two Ckt	**32211**
White	One Ckt	**31311**
	Two Ckt	**32311**
Graphite	One Ckt	**31411**
	Two Ckt	**32411**

L Joiner/Feeder

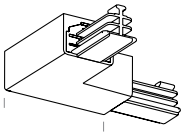

120/250V L Joiner/Feeder is used to mechanically and electrically couple any two lengths of track in an L right angle configuration. This L Joiner/Feeder can also be top fed to energize the track from a recessed outlet box when used in conjunction with appropriate Canopy Kit or can be top fed directly with cable.

Finish		
Silver	One Ckt	**31105**
	Two Ckt	**32105**
Black	One Ckt	**31205**
	Two Ckt	**32205**
White	One Ckt	**31305**
	Two Ckt	**32305**
Graphite	One Ckt	**31405**
	Two Ckt	**32405**

T Joiner/Feeder

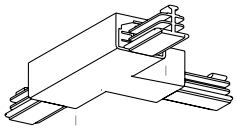

120/250V T Joiner/Feeder is used to mechanically and electrically couple any three lengths of track in a T configuration. This T Joiner/Feeder can also be top fed to energize the track from a recessed outlet box when used in conjunction with appropriate Canopy Kit or can be top fed directly with cable. Internal Joiner wiring can be field modified. Note that in the one circuit version, a right or a left T must be ordered and must be used directly opposite each other when used in a configuration so that busbar continuity is maintained. For two circuit track, a left and right T is not necessary.

Finish		Left Joiner	Right Joiner
Silver	One Ckt	**31106**	**31107**
	Two Ckt	**32108**	**32108**
Black	One Ckt	**31206**	**31207**
	Two Ckt	**32208**	**32208**
White	One Ckt	**31306**	**31307**
	Two Ckt	**32308**	**32308**
Graphite	One Ckt	**31406**	**31407**
	Two Ckt	**32408**	**32408**

UMNH
TP-100

MOUNTING SYSTEMS • SPECIFICATIONS

GENERAL Mounting Systems shall allow Track Systems to be fastened to or from various surfaces in a wide range of safe and approved methods. Mounting Systems shall have a ten year warranty from date of shipment.

MECHANICAL Mounting stems shall be made from .50 (13mm) diameter steel. All mounting canopies shall be made from either 20 gauge steel (1mm) or .080 (2mm) aluminum. All Mounting Systems shall be available in either Black, White, Silver, or Graphite high temperature baked paint finish.

Mounting stems shall be capable of being cut to length in the field. All hang-straight stems shall have a 30° swivel from plumb in all directions.

All stem systems shall be available in either 18 inch (457mm), 48 inch (1.2m) or 96 inch (2.4m) standard lengths.

All cable systems shall be available in either 48 inch (1.2m) or 144 inch (3.7m) standard lengths.

Cables shall be constructed of .062 (1.6mm) stainless steel cable and be capable of being cut to length in the field.

Stem and cable mounting systems shall have a safety collar to ensure proper tightening of locking hardware for all field cuttable systems.

Mounting systems shall be capable of being mounted to T-bar ceiling structures either parallel or perpendicular to the T-bar by means of galvanized mounting clips.

ELECTRICAL Mounting Systems shall be UL and CUL listed, CE Certified, and comply with the National Electric Code standards for Lighting Track. Mounting Systems shall have provisions for feeding Track System through feed stems or flexible tubing with a maximum of 5 #12 THHN wires and with Stainless Steel Cable Feed Kit a maximum of 9 #12 THHN wires.

FIXTURE FITTING INTERFACE Mounting Systems used in conjunction with Track shall accept GE fiber reinforced Lexan™ fixture fittings which positively lock into track and cannot be energized by integral switch until safety interlock handle is in closed position. Safety interlock shall also prevent fixture fitting removal from track unless the switch is in the "off" position. Upon insertion of fixture fitting into track, grounding connection from fixture fitting to track shall be automatically completed before any electrical contact is made with busbars. When removing fixture fitting from track, the grounding connection shall automatically be disconnected only after the electrical contact with busbars are disconnected. The fixture fitting shall recess into track creating a minimal intrusion into space. Fixture fittings for magnetic low voltage fixtures shall be furnished with fuse of the correct ampere rating for integral transformer protection, and shall not be fused as a branch circuit.

Surface Hanger Clip

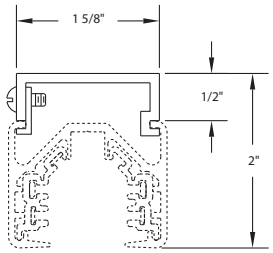

Stainless Steel Cable Support

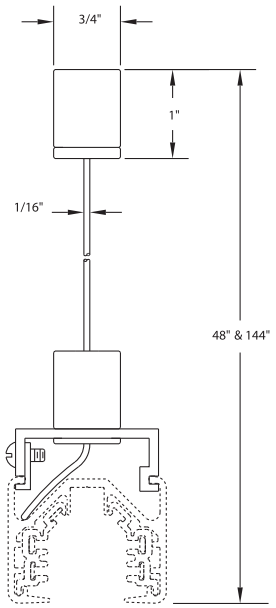

Canopy Stem Support

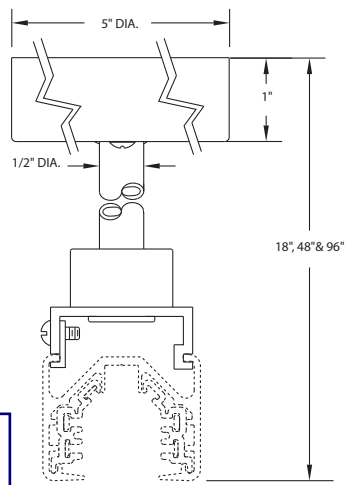

UMNH
TP-100

Surface Hanger Clip Application

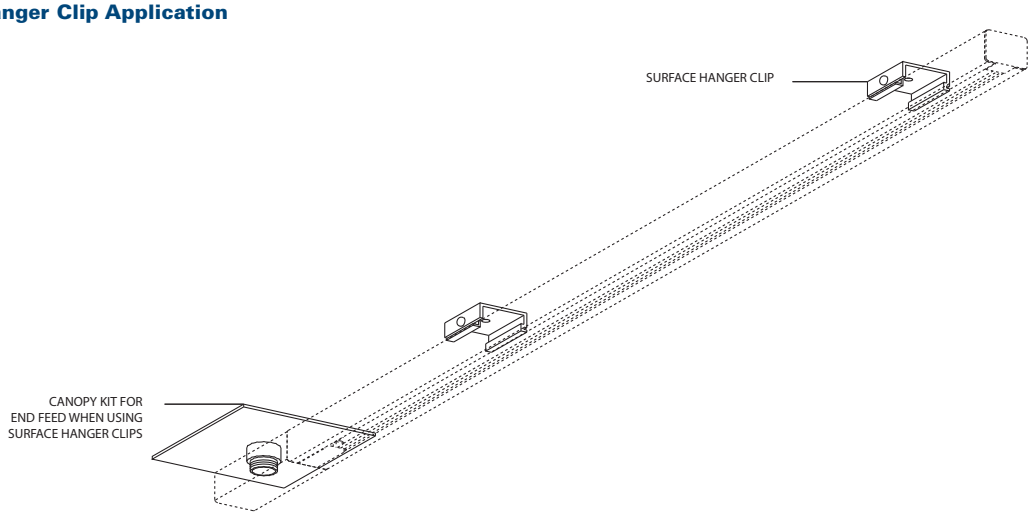

Stem Application

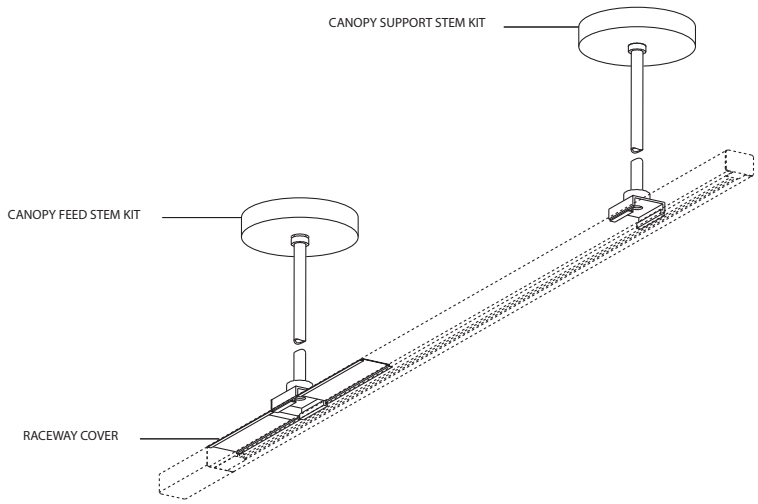

Stainless Steel Cable Application

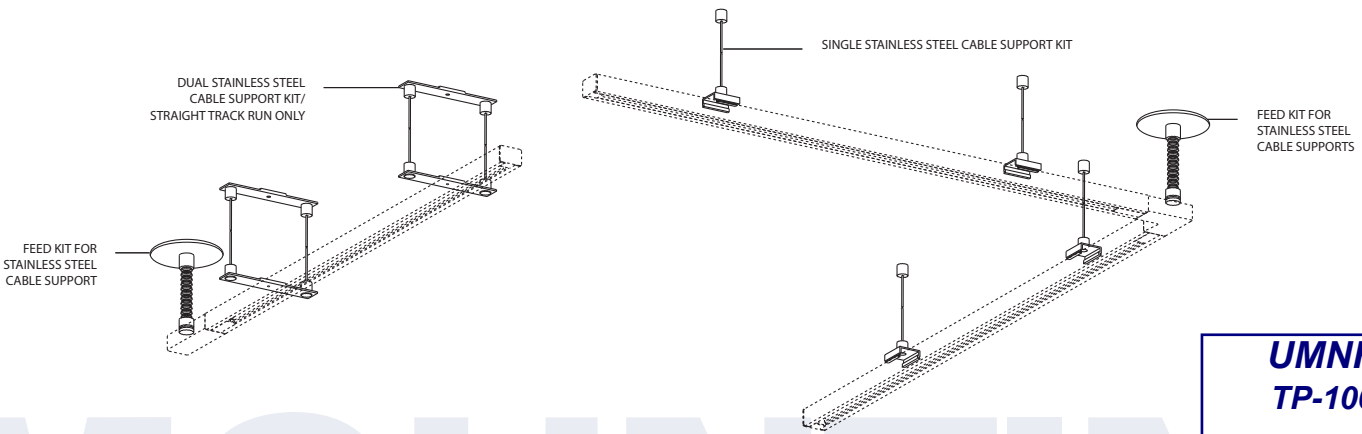

UMNH
TP-100

GENERAL Recessed track shall be approved by the NEC for flush – mounting into ceiling or any flat surface. Recessed Track shall allow fixtures to be easily focused, switched, dimmed, accessorized, and removed as desired. Recessed Track shall have a five year warranty from date of shipment.

MECHANICAL Recessed Track shall be constructed of .125 inch (3mm) extruded aluminum. Recessed Track shall have the same overall dimensions and physical appearance for both one and two circuit models. Recessed Track shall be available in Flanged and Flangeless configurations with high temperature white baked paint finish on all exposed surfaces.

Flanged Recessed Track shall have an overall height of 1.63 inches (42mm) and overall width of 2.81 inches (72mm).

Flangeless Recessed Track shall have an overall height of 1.63 inches (42mm) and overall width of 2.81 inches (72mm). Flangeless Track available with 5/8 inch (16mm) height mounting fin to accommodate 5/8 inch sheet rock, or plaster.

Recessed Track shall be available in nominal 4 foot (1.2m), 8 foot (2.4m), and 12 foot (3.7m) lengths and come complete with all necessary hardware and components. Recessed Track shall be field cuttable to any length with a single cut.

Recessed Track system shall be available with End Feed, End Cap, Straight Mini – Joiner, Straight Joiner/Feeder, X Joiner/Feeder, L Joiner/Feeder, and T Joiner/ Feeder as standard components.

Recessed Track shall have integral side mounting channels to accept perforated mounting straps.

ELECTRICAL Recessed Track and components shall be UL and CUL listed, CE Certified, and comply with the National Electric Code standards for Lighting Track. One and two circuit Recessed Track shall be rated at 120 / 250 volt, 50/60 Hz, 2400 watts maximum each circuit. Each 20 amp/120/250 volt circuit shall be comprised of flat copper busbars and have a separate neutral busbar for each circuit. The neutral busbar shall be oversized to be comparable to #10 gauge 30 amp wire to reduce the possibility of overheating due to non – linear loads and harmonics. Track shall have integral wiring channels for six (6) additional #12 THHN wires to create three (3) additional 20 amp/120/250 volt circuits, which can be dropped into any Joiner/Feeder, for a total track power capacity of 100 amps. A separate grounding busbar shall be integral in all track lengths. All busbars shall be insulated to prevent contact with aluminum extrusion.

Recessed Track shall have electrical feed capability through all Joiners/Feeders using either 1/2" or 3/4" U. S. trade size knock – outs (.875 inch diameter, 22mm or 1.125 inch, 29mm). Joiner/Feeders can be electrically field modified by removing the Lexan™ cover and rerouting internal pre – wired jumpers. All Joiner /Feeder covers shall be available in White GE fiber reinforced Lexan™.

One and two circuit Recessed track lighting with separate neutral busbars shall have the ability to have each circuit separately dimmed as required when using standard voltage and low voltage fixtures with either magnetic or electronic transformers. Recessed Track shall have the ability to be dimmed or switched in selected sections in addition to dimming or switching an entire recessed track configuration or recessed track run.

FIXTURE FITTING INTERFACE Recessed Track shall accept only GE fiber reinforced Lexan™ fixture fittings which positively lock into recessed track and cannot be energized by integral switch until safety interlock handle is in the closed position. Safety interlock shall also prevent fixture fitting removal from recessed track unless the switch is in the "off" position. Upon insertion of fixture fitting into recessed track, grounding connection from fixture fitting to track shall be automatically completed before any electrical contact is made with busbars. When removing fixture fitting from track, the grounding connection shall automatically be disconnected last. The fixture fitting shall recess into the track, creating a minimal profile below the track.

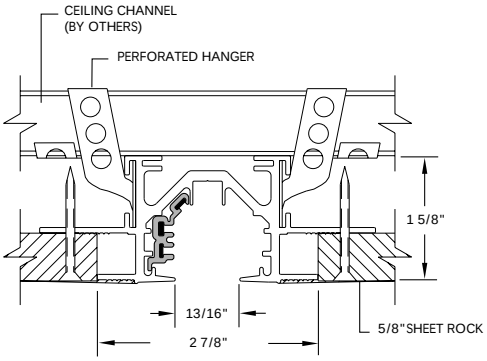

One Ckt 120V Recessed Flangeless Track

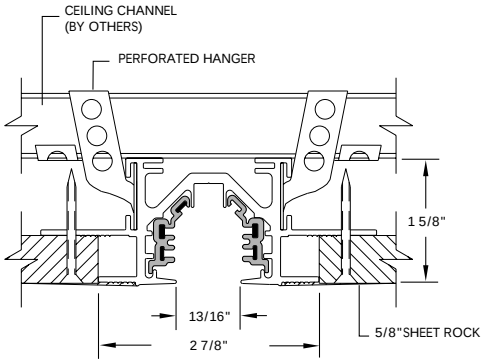

Two Ckt 120V Recessed Flangeless Track

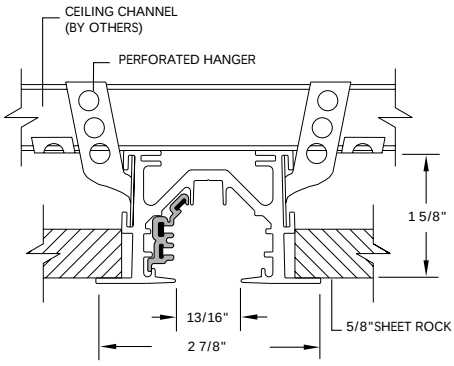

One Ckt 120V Recessed Flanged Track

1 cct

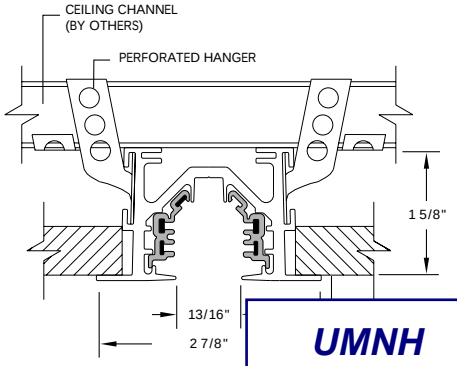

Two Ckt 120V Recesse

UMNH
TR-100

Track Sections-Recessed Flanged

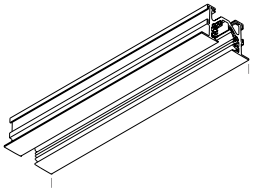

3'-6 13/16"
7'-6 13/16"
11'-6 13/16"

120V Recessed Flanged Track Sections are open ended extrusions used to form track runs or configurations to be used in conjunction with an End Feed, End Cap, Straight Joiner/Feeder, Straight Mini Joiner, L Joiner/Feeder, T Joiner/Feeder, and X Joiner/Feeder. Track Section lengths are nominal 4 foot (1.2m), 8 foot (2.4m) and 12 foot (3.7m) and are supplied complete with galvanized perforated straps for mounting. Track is field cuttable.

Finish		Nominal length 4 Ft	8 Ft	12 Ft
White	One Ckt	**91310**	**91320**	**91330**
	Two Ckt	**92310**	**92320**	**92330**

Emergency/Worklite Track Recessed Flanged

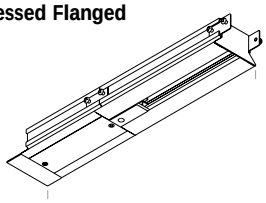

14 3/4"

120V Recessed Flanged Emergency/ Worklite Track is a separately fed one circuit Track Section, suitable for most LSI track fixtures, that integrates into any LSI Track run or configuration at any location. Consult fixture cutsheet. LSI fixtures (add suffix EF) mechanically lock into Emergency/ Worklite Track by means of special hardware and do not have on/off switches.

Finish	All One Ckt		
	15" Joiner Section	15" End Feed Section	15" End Cap Section
White	**91350**	**91351**	**91352**

Unimount-Recessed Flanged

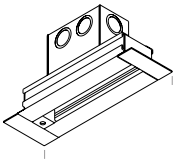

9 1/16"

120V Recessed Flanged Unimount is a compact Recessed Track assembly which will accept most single LSI track fixtures up to 500 watts. Consult fixture cutsheet. Cutout size is 7 3/16” x 2 3/16”.

Finish		
White	One Ckt	**91361**

End Feed-Recessed Flanged

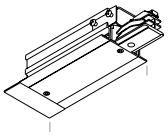

6 3/16"

120V Recessed Flanged End Feed is used when track run is to be fed from the end of a run. The end feed is top fed directly from electrical cable to energize the track.

Finish		
White	One Ckt	**91300**
	Two Ckt	**92300**

End Cap-Recessed Flanged

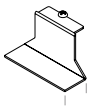

1/2"

120V Recessed Flanged End Cap is used for mechanically ending any straight run, individual Track Section, or open configuration Track Section. End cap is insulated on inside only.

Finish		
White	One & Two Ckt	**90303**

Straight Joiner-Recessed Flanged

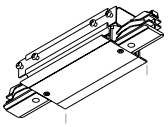

5 3/16"

120V Recessed Flanged Straight Joiner/Feeder is used to mechanically and electrically couple any two lengths of track in a straight line. The Straight Joiner/Feeder is top fed directly from cable to energize the track. Internal joiner wiring can be modified in the field.

Finish		
White	One Ckt	**91304**
	Two Ckt	**92304**

UMNH
TR-100

Straight Mini-Joiner-Recessed Flanged

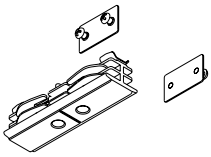

0"

120V Recessed Flanged Straight Mini-Joiner is used to mechanically and electrically couple any two lengths of track in a straight line. Not for use as feeder. Alignment bars with screws included.

Finish		
White	One Ckt	**91311**
	Two Ckt	**92311**

L Joiner/Feeder-Recessed Flanged

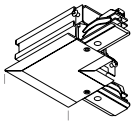

3 1/2"

120V Recessed Flanged L Joiner/Feeder is used to mechanically and electrically couple any two lengths of track in an L right angle configuration. This L Joiner/Feeder can also be top fed directly from electrical cable to energize the track. Internal joiner wiring can be modified in the field.

Finish		
White	One Ckt	**91305**
	Two Ckt	**92305**

T Joiner/Feeder-Recessed Flanged

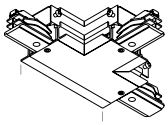

5 3/16"

120V Recessed Flanged T Joiner/Feeder is used to mechanically and electrically couple any three lengths of track in a T configuration. This T Joiner/Feeder can also be top fed directly from electrical cable to energize the track. Internal Joiner wiring can be field modified. Note that in the one circuit version, a right or a left T must be ordered and must be used directly opposite each other when used in a configuration so that busbar continuity is maintained. For two circuit track, a left and right T is not necessary.

Finish		Left Joiner	Right Joiner
White	One Ckt	**91306**	**91307**
	Two Ckt	**92308**	**92308**

X Joiner/Feeder-Recessed Flanged

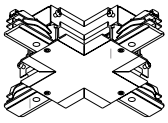

5 3/16"

120V Recessed Flanged X Joiner/Feeder is used to mechanically and electrically couple any four lengths of track in an X configuration. This X Joiner/Feeder can also be top fed directly from electrical cable to energize the track. Internal joiner wiring can be modified in the field.

Finish		
White	One Ckt	**91309**
	Two Ckt	**92309**

UMNH
TR-100

GENERAL Recessed track shall be approved by the NEC for flush – mounting into ceiling or any flat surface. Recessed Track shall allow fixtures to be easily focused, switched, dimmed, accessorized, and removed as desired. Recessed Track shall have a five year warranty from date of shipment.

MECHANICAL Recessed Track shall be constructed of .125 inch (3mm) extruded aluminum. Recessed Track shall have the same overall dimensions and physical appearance for both one and two circuit models. Recessed Track shall be available in Flanged and Flangeless configurations with high temperature white baked paint finish on all exposed surfaces.

Flanged Recessed Track shall have an overall height of 1.63 inches (42mm) and overall width of 2.81 inches (72mm).

Flangeless Recessed Track shall have an overall height of 1.63 inches (42mm) and overall width of 2.81 inches (72mm). Flangeless Track available with 5/8 inch (16mm) height mounting fin to accommodate 5/8 inch sheet rock, or plaster.

Recessed Track shall be available in nominal 4 foot (1.2m), 8 foot (2.4m), and 12 foot (3.7m) lengths and come complete with all necessary hardware and components. Recessed Track shall be field cuttable to any length with a single cut.

Recessed Track system shall be available with End Feed, End Cap, Straight Mini – Joiner, Straight Joiner/Feeder, X Joiner/Feeder, L Joiner/Feeder, and T Joiner/ Feeder as standard components.

Recessed Track shall have integral side mounting channels to accept perforated mounting straps.

ELECTRICAL Recessed Track and components shall be UL and CUL listed, CE Certified, and comply with the National Electric Code standards for Lighting Track. One and two circuit Recessed Track shall be rated at 120 / 250 volt, 50/60 Hz, 2400 watts maximum each circuit. Each 20 amp/120/250 volt circuit shall be comprised of flat copper busbars and have a separate neutral busbar for each circuit. The neutral busbar shall be oversized to be comparable to #10 gauge 30 amp wire to reduce the possibility of overheating due to non – linear loads and harmonics. Track shall have integral wiring channels for six (6) additional #12 THHN wires to create three (3) additional 20 amp/120/250 volt circuits, which can be dropped into any Joiner/Feeder, for a total track power capacity of 100 amps. A separate grounding busbar shall be integral in all track lengths. All busbars shall be insulated to prevent contact with aluminum extrusion.

Recessed Track shall have electrical feed capability through all Joiners/Feeders using either 1/2" or 3/4" U. S. trade size knock – outs (.875 inch diameter, 22mm or 1.125 inch, 29mm). Joiner/Feeders can be electrically field modified by removing the Lexan™ cover and rerouting internal pre – wired jumpers. All Joiner /Feeder covers shall be available in White GE fiber reinforced Lexan™.

One and two circuit Recessed track lighting with separate neutral busbars shall have the ability to have each circuit separately dimmed as required when using standard voltage and low voltage fixtures with either magnetic or electronic transformers. Recessed Track shall have the ability to be dimmed or switched in selected sections in addition to dimming or switching an entire recessed track configuration or recessed track run.

FIXTURE FITTING INTERFACE Recessed Track shall accept only GE fiber reinforced Lexan™ fixture fittings which positively lock into recessed track and cannot be energized by integral switch until safety interlock handle is in the closed position. Safety interlock shall also prevent fixture fitting removal from recessed track unless the switch is in the "off" position. Upon insertion of fixture fitting into recessed track, grounding connection from fixture fitting to track shall be automatically completed before any electrical contact is made with busbars. When removing fixture fitting from track, the grounding connection shall automatically be disconnected last. The fixture fitting shall recess into the track, creating a minimal profile below the track.

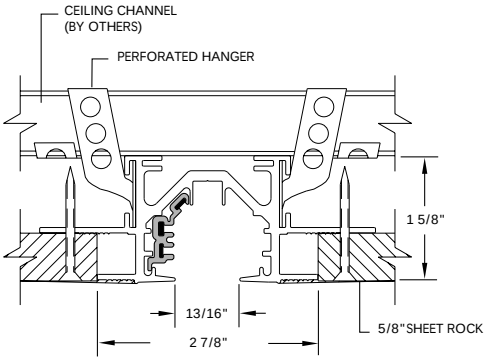

One Ckt 120V Recessed Flangeless Track

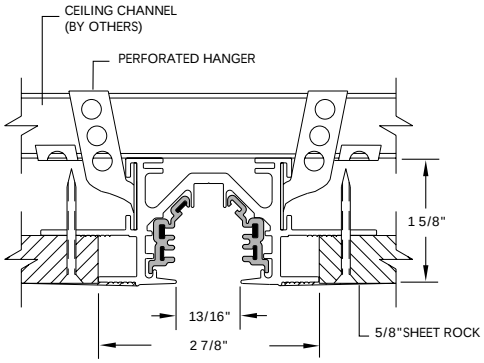

Two Ckt 120V Recessed Flangeless Track

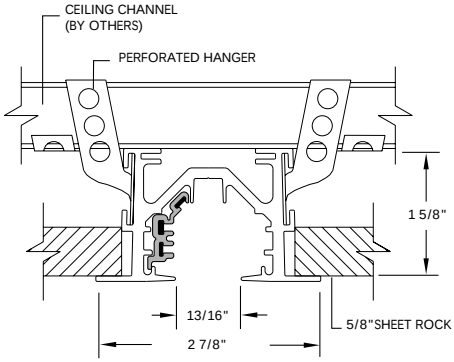

One Ckt 120V Recessed Flanged Track

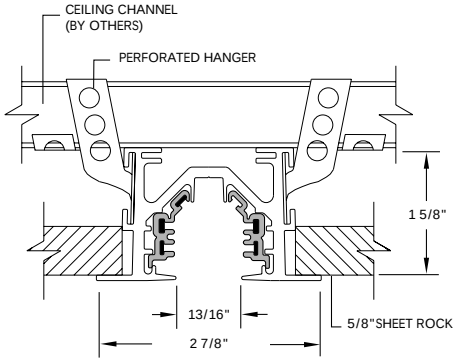

Two Ckt 120V Recessed Flanged Track

2 cct

UMNH
TR-102

Track Sections-Recessed Flanged

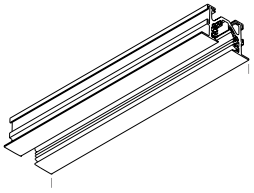

3'-6 13/16"
7'-6 13/16"
11'-6 13/16"

120V Recessed Flanged Track Sections are open ended extrusions used to form track runs or configurations to be used in conjunction with an End Feed, End Cap, Straight Joiner/Feeder, Straight Mini Joiner, L Joiner/Feeder, T Joiner/Feeder, and X Joiner/Feeder. Track Section lengths are nominal 4 foot (1.2m), 8 foot (2.4m) and 12 foot (3.7m) and are supplied complete with galvanized perforated straps for mounting. Track is field cuttable.

Finish		Nominal length 4 Ft	8 Ft	12 Ft
White	One Ckt	**91310**	**91320**	**91330**
	Two Ckt	**92310**	**92320**	**92330**

Emergency/Worklite Track Recessed Flanged

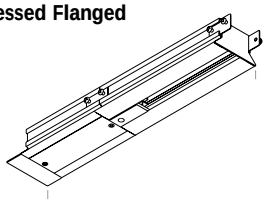

14 3/4"

120V Recessed Flanged Emergency/ Worklite Track is a separately fed one circuit Track Section, suitable for most LSI track fixtures, that integrates into any LSI Track run or configuration at any location. Consult fixture cutsheet. LSI fixtures (add suffix EF) mechanically lock into Emergency/ Worklite Track by means of special hardware and do not have on/off switches.

Finish	All One Ckt		
	15" Joiner Section	15" End Feed Section	15" End Cap Section
White	**91350**	**91351**	**91352**

Unimount-Recessed Flanged

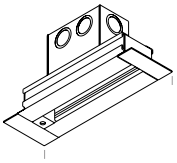

9 1/16"

120V Recessed Flanged Unimount is a compact Recessed Track assembly which will accept most single LSI track fixtures up to 500 watts. Consult fixture cutsheet. Cutout size is 7 3/16” x 2 3/16”.

Finish		
White	One Ckt	**91361**

End Feed-Recessed Flanged

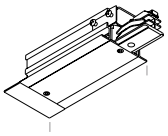

6 3/16"

120V Recessed Flanged End Feed is used when track run is to be fed from the end of a run. The end feed is top fed directly from electrical cable to energize the track.

Finish		
White	One Ckt	**91300**
	Two Ckt	**92300**

End Cap-Recessed Flanged

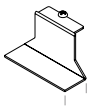

1/2"

120V Recessed Flanged End Cap is used for mechanically ending any straight run, individual Track Section, or open configuration Track Section. End cap is insulated on inside only.

Finish		
White	One & Two Ckt	**90303**

Straight Joiner-Recessed Flanged

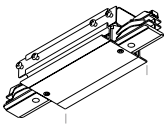

5 3/16"

120V Recessed Flanged Straight Joiner/Feeder is used to mechanically and electrically couple any two lengths of track in a straight line. The Straight Joiner/Feeder is top fed directly from cable to energize the track. Internal joiner wiring can be modified in the field.

Finish		
White	One Ckt	**91304**
	Two Ckt	**92304**

UMNH
TR-102

Straight Mini-Joiner-Recessed Flanged

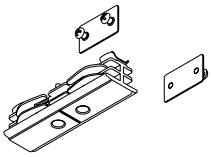

0"

120V Recessed Flanged Straight Mini-Joiner is used to mechanically and electrically couple any two lengths of track in a straight line. Not for use as feeder. Alignment bars with screws included.

Finish		
White	One Ckt	**91311**
	Two Ckt	**92311**

L Joiner/Feeder-Recessed Flanged

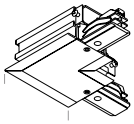

3 1/2"

120V Recessed Flanged L Joiner/Feeder is used to mechanically and electrically couple any two lengths of track in an L right angle configuration. This L Joiner/Feeder can also be top fed directly from electrical cable to energize the track. Internal joiner wiring can be modified in the field.

Finish		
White	One Ckt	**91305**
	Two Ckt	**92305**

T Joiner/Feeder-Recessed Flanged

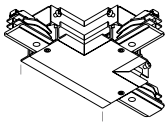

5 3/16"

120V Recessed Flanged T Joiner/Feeder is used to mechanically and electrically couple any three lengths of track in a T configuration. This T Joiner/Feeder can also be top fed directly from electrical cable to energize the track. Internal Joiner wiring can be field modified. Note that in the one circuit version, a right or a left T must be ordered and must be used directly opposite each other when used in a configuration so that busbar continuity is maintained. For two circuit track, a left and right T is not necessary.

Finish		Left Joiner	Right Joiner
White	One Ckt	**91306**	**91307**
	Two Ckt	**92308**	**92308**

X Joiner/Feeder-Recessed Flanged

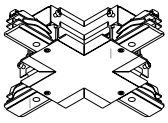

5 3/16"

120V Recessed Flanged X Joiner/Feeder is used to mechanically and electrically couple any four lengths of track in an X configuration. This X Joiner/Feeder can also be top fed directly from electrical cable to energize the track. Internal joiner wiring can be modified in the field.

Finish		
White	One Ckt	**91309**
	Two Ckt	**92309**

UMNH
TR-102

Ceiling Mount: 1:8 Scale

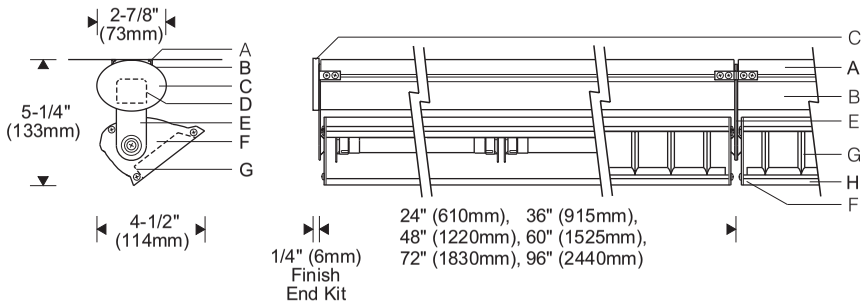

Hangers (X mount)
Pendant Stems

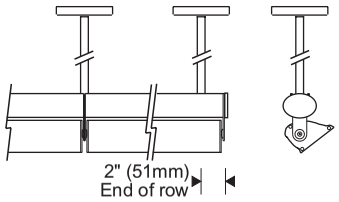

Cables

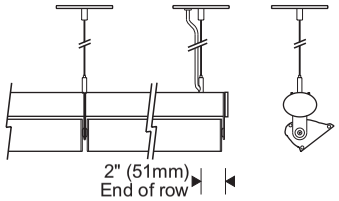

Cantilevers

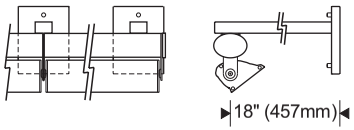

Mounting Plate
(**S** mount)

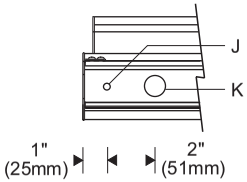

Installation (S mount)

1. Secure mounting plate to ceiling
2. Hang housing, connect supply
3. Hinge up, secure with screws

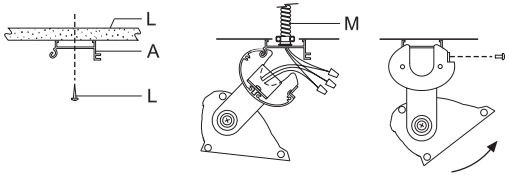

Specifications

- **A** Extruded aluminum mounting plate
- **B** Extruded aluminum ballast housing
- **C** **AFE** finish end kit (aluminum end plates for ballast housing)
- **D** Electronic ballast
- **E** Aluminum sidearm
- **F** Contoured aluminum end plate
- **G** Snap-in specular parabolic baffle (optional)
- **H** Specular extruded aluminum reflector
- **J** Mounting hole, (3) 9/32" (7mm) dia.
- **K** Knockout, (2) 7/8" (22mm) dia.
- **L** Support structure and fasteners (by others)
- **M** Conduit and connector (by others)

Finish:
Semi-gloss white housing and end plates or bright clear anodized aluminum reflector with semi-gloss black end plates, sidearms and ballast housing.

Painted surfaces - 6 stage pretreatment and electrostatically applied thermoset powder coat for stable, long lasting and corrosion resistant finish.

Reflector - extruded high purity aluminum with clear anodized specular finish. All luminaire hardware - stainless steel.

Mounting:

unting plate fastens flush to ceiling. Unit hinges ands-free access to wiring.

ms, cables or cantilevers **ordered separately**

- 11/16" O.D. aluminum, internally threaded.

dia. 7x7 aircraft cable, field adjustable length.

x 2" steel arm. Interface plate (under canopy) eveling, **suitable support structure required**.

d in rows, clips are provided to align and space plates.

Electrical:
Use 90°C wire for supply connections and through wire.

S mount - 7/8" (22mm) dia. knockouts at ends of mounting plate for conduit feed (by others). Accessory end feed kit provides entry for surface conduit at end of ballast housing.

X mount - electrical feed hanger mounts over recessed outlet box (by others) and **must be located at end of row**.

Housing hinges down for access to ballast and wiring. Optional #12 AWG prewired modular through wiring with quick connectors.

Integral electronic HPF thermally protected class P ballast with end-of-life protection.

Optional electronic dimming ballast; compatible dimmer switch required (by others). Consult sales representative for compatibility and specifications.

Optional integral emergency battery operates one lamp. Separate unswitched supply is required.

Standard:
UL listed or CSA certified for damp locations. (Style 124 painted model with lens recommended for damp locations.)

U.S. Patent D468,473 and other U.S. and foreign patents pending

UMNH
WF-100

Features

- **KO Series** - *unequalled T5 fluorescent wall lighting for cost and energy conscious projects*
- *Ideal for retail perimeters, displays, corridors, chalkboards*
- *Adjustable - accommodates setback and height of wall*
- *Versatile - surface, cantilever, stem or cable mounting*
- *Integral electronic ballast - dimming, emergency optional*

W 8.0

Performance

Two parabolic reflector sections drive light to the bottom of the wall. An elliptical section shields the lamp from normal viewing angles and redirects its light to a parabola. Glare is minimized and asymmetry of the beam is maximized resulting in high beam efficiency and superior surface uniformity.

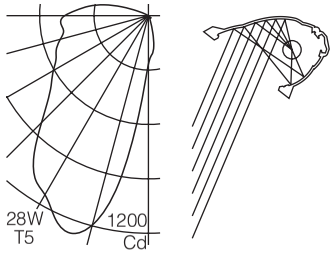

For complete photometrics, see www.elliptipar.com.

elliptipar

To Order

To form a Catalog Number

F 1 0 9 - T [ ] [ ] - [ ] - [ ] - [ ] [ ]

1 2 3 4 5 6 7 8

1 Source

F = Linear fluorescent

2 Style

109 = Small **KO Series** contoured, **integral** ballast

3 Lamp

Note: To order by overall row length, enter **ROW CODE** (see Row Chart on page W-8.2) in place of Lamp Code below. Row Codes specify a row complete with all necessary luminaires and end plates. **Hangers are ordered separately.**

T [ ] [ ] = **T5 Fluorescent Lamp Code**

Lamp Wattage (see chart below)

Number of Lamps in Length, specify **1** or **2**

Example: **T121** = 3' (915mm) housing with one 21W T5 lamp

*Length**	*T5*		*T5HO*	
	Code	*Lamp(s)*	*Code*	*Lamp(s)*
T5 Fluorescent				
24" (610mm)	**T114**	1 x F14T5	**T124**	1 x F24T5/HO
36" (915mm)	**T121**	1 x F21T5	**T139**	1 x F39T5/HO
48" (1220mm)	**T128**	1 x F28T5	**T155**	1 x F54T5/HO
60" (1525mm)	**T135**	1 x F35T5	**T180**	1 x F80T5/HO
72" (1830mm)	**T221**	2 x F21T5	**T239**	2 x F39T5/HO
96" (2440mm)	**T228**	2 x F28T5	**T255**	2 x F54T5/HO

For complete lamp and ballast information, see Accessories Section. Standard T5 lamp color is 3000K / 80+ CRI.

* Add 1/2" (13mm) to row or single unit for **AFE** Finish End Kit.

W 8.1

4 Mounting

S = Ceiling (surface) mount

X = For use with pendant stem, cable or cantilever hangers (**order separately**)

5 Finish

02 = Semi-gloss white

81 = Bright clear anodized reflector with semi-gloss black end plates, side arms and ballast housing

99 = Custom RAL or computer matched color to be specified, consult sales representative

Project: [ ]

6 Voltage/Ballast

Electronic

1 = 120V

2 = 277V

3 = 347V (Canada)
Note: Not available for use with cable hangers.

*Dimming**

T = 120V

V = 277V

* Consult sales representative for dimming 5' lamps (lamp codes **Tx35**, **Tx80**). Availability for wattages and voltages varies with ballast manufacturer and control type - see **www.elliptipar.com** for additional dimming specifications and limitations.
Note: When dimming **X** mount luminaires, order two (2) electrical feed stems, cables or cantilevers for each single unit or row to accommodate the control circuit.

7 Option (See Accessories Section for specifications)

00 = No option

0B = Snap-in parabolic cross baffles, specular finish, provides 35° lengthwise shielding

0E = Integral emergency battery pack with indicator lamp and test button. Available in 4', 5', 6' and 8' units (lamp codes **T128**, **T135**, **T221**, **T228**, **T155**, **T239** and **T255**). Operates one lamp.

0K = Prewired modular #12 AWG through wiring with quick connectors

EK = Combination of emergency battery pack and prewired modular through wiring as described above

BE = Combination of parabolic baffle and emergency battery

BK = Combination of parabolic baffle and modular wiring

BC = Combination of parabolic baffle, emergency battery and modular wiring

XX = For modification not listed, include detailed description. Consult factory prior to specification.

8 Standard

0 = UL, Underwriters Laboratories

J = CSA, Canadian Standards Association

Example

F109 - T121 - X - 81 - 2 - 0B0

Small KO Series contoured model for use with one 3' F21T5 lamp, 36" long housing (not including **AFE** finish end kit, order separately). For use with pendant stem, cable supports or cantilever (order separately). Bright reflector with semi-gloss [illegible]tes, side arms and ballast housing. Integral [illegible]ic ballast. Snap-in parabolic cross baffle. UL.

Type: [ ]

Hangers

Order separately. See Accessories Section for specifications.

Singles - order one non-electrical and one electrical feed hanger for each module (**X** mount).

Rows - order one non-electrical hanger for each module (**X** mount) plus one electrical feed for each row.

Note: For each single or row with dimming (voltage/ballast code **T** or **V**), order one additional electrical feed and subtract one non-electrical hanger.

Electrical feed(s) must be located at an end of row.

VE [ ] [ ] [ ] **0** = **Pendant stem**, 11/16" O.D.

Length in inches, up to 60" (1.5m), 6" minimum

02 = White
08 = Black

F = Non-electrical
G = Electrical feed, with (4) #14 AWG leads

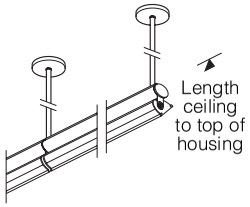

VE [ ] [ ] [ ] **0** = **Cable support**, field adjustable

48 = up to 48" (1.2m)
96 = up to 96" (2.4m)

02 = White canopy and cord
08 = Black canopy and cord

R = Non-electrical
S = Electrical feed, white or black 18/4 cord

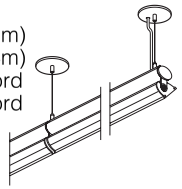

VE [ ] [ ] **18 0** = **Cantilever**, 18" (460mm) setback

02 = White
08 = Black

C = Non-electrical
D = Electrical feed, with (4) #14 AWG leads

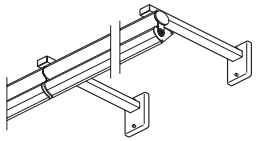

Accessories

Order separately. See Accessories Section for specifications.

AFE09 [ ] **0** = **Finish end kit**, one required for each row or single unit. Adds 1/2" (13mm) to length.

02 = White
08 = Black

ASC06000 = **End feed kit**, bracket with 7/8" dia. entry to secure surface conduit

The external shapes of the asymmetric reflectors are trademarks of **elliptipar**. *Certain products illustrated may be covered by applicable patents and patents pending. For a list of patents, see Contents pages. These specifications supersede all prior publications and are subject to change without notice.* © 2007 **elliptipar**.

elliptipa[illegible] Road, West Haven, Connecticut 06516, USA
[illegible]455 • Fax 203.931.4464 • **www.elliptipar.com**

WF-100 UMNH

To order by Row Code - T5 Lamps

When the Style 109 small **KO Series** integral T5 fluorescent is run continuously in a **straight** row, **elliptipar** offers the option of specifying and ordering the entire row as one catalog number. Ordering by row eliminates the need to calculate length, type and quantity of reflectors and end plates.

Steps to specify Row Code:

1. Determine lamp type and select corresponding lamp code (**S**=T5, **V**=T5HO).
2. Determine maximum available length for row and round up to nearest foot. Find nominal row length in chart (col. 1).
3. Determine what lengths/wattages of lamps will be used and select the corresponding lamp combination codes (col. 2).

   Example: If only 3' and 4' lamps are to be used on the project, specify row codes ending with **A**, **B** and/or **D** only.
4. If for a given nominal row length a preferred lamp combination is not listed, select the next shorter row that is available in the desired lamp combination.
5. Once the nominal row length and lamp combination has been found in the chart, note the actual overall row length (last column). Also consider if the quantity and lengths of the individual luminaires suit the installation.
6. Enter the four character Row Code in place of the Lamp Code described on page W-8.1. The remainder of the catalog number is formed as shown on page W-8.1.

   Note: Stem, cable or cantilever hangers for use with X mount luminaires MUST be ordered separately.

3 Row Code

Note: Enter row code in place of Lamp Code on page W-8.1.

[ ][ ][ ] = **Row Code**

Lamp Combination(s)*
- **A** = All nominal 3' lamps
- **B** = All nominal 4' lamps
- **D** = Nominal 3' and 4' lamps
- **F** = Nominal 3' and 5' lamps
- **G** = Nominal 4' and 5' lamps

Nominal Row Length in feet, between 3' and 50' **

S = T5 fluorescent
V = T5 HO fluorescent

* Not all lamp combinations are available for each nominal row length (see chart)

** Row lengths over 50' can be formed by combining shorter row lengths. (Example: a 60' row can be ordered as two 30' rows.)

Example

9 - S36B - S - 02 - 2 - 000

ng row of Style 109 small contoured **KO Series** using only nominal 4' (28W) lamps. Row nominal 8' reflectors with two 4' lamps, one ector with one 4' lamp, one **AFE** finish end kit 77V ballasts. Overall row length is 36' 0-1/2".

Nominal Row Length (feet)	Lamp Combination	Nominal 3' Luminaire (1 x nominal 3' lamp)	Nominal 4' Luminaire (1 x nominal 4' lamp)	Nominal 5' Luminaire (1 x nominal 5' lamp)	Nominal 6' Luminaire (2 x nominal 3' lamps)	Nominal 8' Luminaire (2 x nominal 4' lamps)	AFE Finish End Kit	Overall Row Length
3	**A**	1					1	3' 0-1/2"
4	**B**		1				1	4' 0-1/2"
5	**G**			1			1	5' 0-1/2"
6	**A**				1		1	6' 0-1/2"
7	**D**	1	1				1	7' 0-1/2"
8	**B**					1	1	8' 0-1/2"
9	**A**	1			1		1	9' 0-1/2"
9	**G**		1	1			1	9' 0-1/2"
10	**D**		1		1		1	10' 0-1/2"
11	**D**	1				1	1	11' 0-1/2"
11	**F**			1	1		1	11' 0-1/2"
12	**A**				2		1	12' 0-1/2"
12	**B**		1			1	1	12' 0-1/2"
13	**D**	1	1		1		1	13' 0-1/2"
13	**G**			1		1	1	13' 0-1/2"
14	**D**				1	1	1	14' 0-1/2"
15	**A**	1			2		1	15' 0-1/2"
15	**D**	1	1			1	1	15' 0-1/2"
16	**B**					2	1	16' 0-1/2"
17	**D**	1			1	1	1	17' 0-1/2"
17	**F**			1	2		1	17' 0-1/2"
17	**G**		1	1		1	1	17' 0-1/2"
18	**A**				3		1	18' 0-1/2"
18	**D**		1		1	1	1	18' 0-1/2"
19	**D**	1				2	1	19' 0-1/2"
20	**B**		1			2	1	20' 0-1/2"
21	**A**	1			3		1	21' 0-1/2"
21	**G**			1		2	1	21' 0-1/2"
22	**D**		1		3		1	22' 0-1/2"
23	**D**	1	1			2	1	23' 0-1/2"
23	**F**			1	3		1	23' 0-1/2"
24	**A**				4		1	24' 0-1/2"
24	**B**					3	1	24' 0-1/2"
25	**D**	1			1	2	1	25' 0-1/2"
25	**G**		1	1		2	1	25' 0-1/2"
26	**D**		1		1	2	1	26' 0-1/2"
27	**D**	1				3	1	27' 0-1/2"
28	**B**		1			3	1	28' 0-1/2"
29	**D**	1	1		1	2	1	29' 0-1/2"
29	**G**			1		3	1	29' 0-1/2"
30	**A**				5		1	30' 0-1/2"
30	**D**				1	3	1	30' 0-1/2"
31	**D**	1	1			3	1	31' 0-1/2"
32	**B**					4	1	32' 0-1/2"
33	**A**	1			5		1	33' 0-1/2"
33	**G**		1	1		3	1	33' 0-1/2"
34	**D**		1		1	3	1	34' 0-1/2"
35	**D**	1				4	1	35' 0-1/2"
36	**A**				6		1	36' 0-1/2"
36	**B**		1			4	1	36' 0-1/2"
37	**D**	1	1		1	3	1	37' 0-1/2"
37	**G**			1		4	1	37' 0-1/2"
38	**D**				1	4	1	38' 0-1/2"
39	**D**	1	1			4	1	39' 0-1/2
40	**B**					5	1	40' 0-1/2"
41	**D**	1			1	4	1	41' 0-1/2"
41	**G**		1	1		4	1	41' 0-1/2"
42	**A**				7		1	42' 0-1/2"
42	**D**		1		1	4	1	42' 0-1/2"
43	**D**	1				5	1	43' 0-1/2"
44	**B**		1			5	1	44' 0-1/2"
45	**A**	1			7		1	45' 0-1/2"
45	**D**	1	1		1	4	1	45' 0-1/2"
45	**G**			1		5	1	45' 0-1/2"
46	**D**				1	5	1	46' 0-1/2"
47	**D**	1	1			5	1	47' 0-1/2"
48	**A**				8		1	48' 0-1/2"
48	**B**					6	1	48' 0-1/2
49	**D**	1			1	5	1	49' 0-1/2"
49	**G**		1	1		5	1	49' 0-1/2"
50	**D**				3	4	1	50' 0-1/2"

Features

- *Time saving - simplifies specification and ordering*
- *One catalog number - includes all necessary reflectors to install row plus **AFE** finish end kit (**X** mount stem, cable or cantilever hangers are ordered separately)*
- *Assured fit - all you need is the maximum available length of the ceiling*

elliptipar

Style T200 1:8 Scale (Halogen)

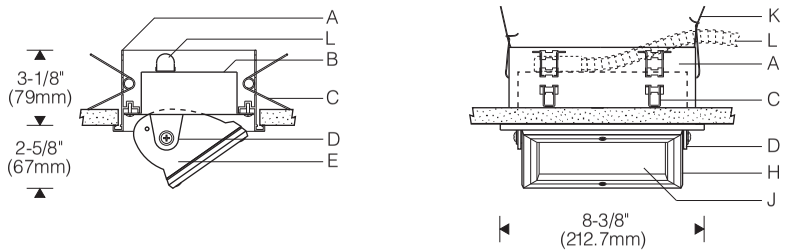

Profile (below ceiling)

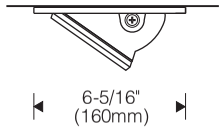

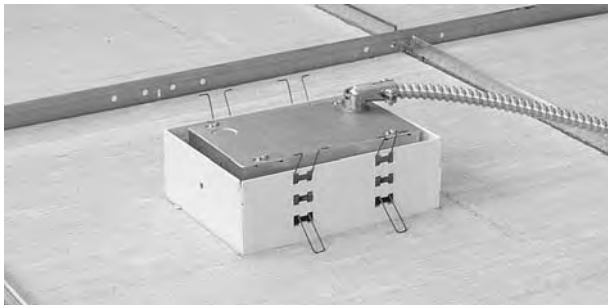

Style M200 1:8 Scale (Integral ceramic metal halide)

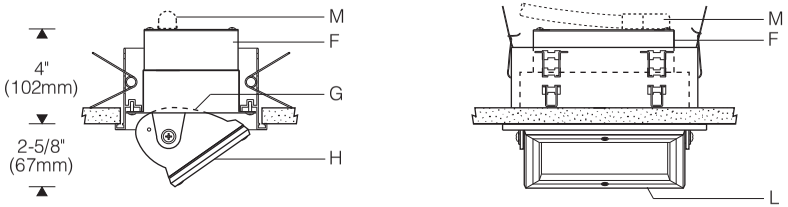

Ceiling Cutout

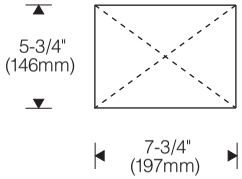

Specifications

- **A** Extruded aluminum mounting/trim frame
- **B** Aluminum back box
- **C** Spring mounting clips (4 included)
- **D** Aluminum yoke arms
- **E** Die-cast aluminum end plates
- **F** Integral ballast with splice compartment (CMH only)
- **G** Specular extruded aluminum reflector
- **H** Mitred extruded aluminum door frame, silicone gasket
- **J** Micro-prismatic tempered glass lens
- **K** Supplemental wire supports (by others)
- **L** 5' leads in flexible metal conduit (remote j-box by others - halogen only)
- **M** Conduit entry (connector and conduit by others - CMH only)

Finish:
Semi-gloss white reflector, door, end plates, yoke arms and ceiling trim, with black back box.

Painted surfaces - 6 stage pretreatment and electrostatically applied thermoset powder coat.

Reflector - extruded high purity aluminum with clear anodized specular finish. All luminaire hardware - stainless steel.

Mounting:
Mounting/trim frame installs from below finished ceiling. [illegible] existing non-accessible ceilings.

[illegible] provided for ceilings up to 1-3/4" (44mm) thick.

[illegible] support wires, bar hangers, etc. (by others) [illegible] ccessible ceilings. Where wire suspension is [illegible] der accessory universal mounting brackets for [illegible] EMT, 1-1/2" lathing or C channel (by others).

Electrical:
Use 90°C wire for supply connections.

Tungsten halogen - DC bayonet lampholder in patented clamping supports for maximum heat dissipation. 5' (1.5m) wire leads in flexible conduit (included) exit back box for connection to accessible junction box (by others - installation prior to finished ceiling recommended).

Ceramic Metal Halide - G12 (G8.5 for 20W) lampholder for use with single ended lamp. Integral electronic HPF ballast offers improved voltage regulation and color stability. Automatic shutoff feature eliminates end-of-life lamp cycling. Splice compartment with two 7/8" diameter conduit entries - connector(s) and conduit supplied by others.

For complete ballast specifications, see Accessories Section.

Standard:
UL listed or CSA certified for damp locations.

Features

- *Adjustable aiming - tailor distribution to the wall height and setback distance; scaled for walls 8' - 12' high*
- *Shallow recessed depth - easily fits in stud construction*
- *Small yet powerful - up to 150W halogen; 35W CMH*
- *Ceramic metal halide - warm color, high CRI, long life*
- *Integral electronic ballast - simplifies installation*

W 23.0

Performance

Two parabolic reflector sections drive light to the bottom of the wall. An elliptical section shields the lamp from normal viewing angles and redirects its light to a parabola. Glare is minimized and asymmetry of the beam is maximized resulting in high beam efficiency and superior surface uniformity.

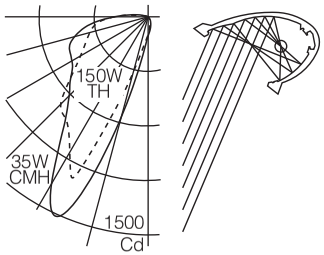

For complete photometrics, see www.elliptipar.com.

elliptipar

WQ-100

UMNH

To form a Catalog Number

1	2	3	4	5	6	7	8
	2 0 0		T	0 2			

1 Source

M = Metal halide
T = Tungsten halogen

2 Style

200 = Small semi-recessed adjustable (**integral** ballast for ceramic metal halide)

3 Lamp

Lamp Code	*Wattage*	*Lamp Number*	*Volt-age(s)*	*Ballast*
Ceramic Metal Halide *				
020G	20	CMH20/T4.5/G8.5	**1**	Electronic
035G	35	CMH35/T6/G12	**1, 2**	Electronic
Tungsten Halogen				
0100	100	Q100DC	**A**	
0150	150	Q150DC	**A**	

For complete lamp and ballast information, see Accessories Section.
* Metal halide lamps using ceramic arc tubes yield higher light output than lamps with quartz arc tubes. They offer improved lamp-to-lamp color consistency and a more stable color temperature over their life (±200K). Standard lamp color is 3000K / 80+ CRI.

W 23.1

4 Mounting

T = Overlapping trim

5 Finish

02 = Semi-gloss white

Project:

6 Voltage/Ballast

Tungsten Halogen
A = 120V

Metal Halide Electronic
1 = 120V
2 = 277V

7 Option (See Accessories Section for specifications)

00 = No options
0C = Modified to comply with Chicago plenum code.
0Y = Style T200 (halogen) modified to comply with New York City code. (Style M200 integral complies as is without modification.)
V0 = Cutoff visor (recommended when wall mounted for uplighting)
XX = For modification not listed, include detailed description. Consult factory prior to specification.

8 Standard

0 = UL, Underwriters Laboratories
J = CSA, Canadian Standards Association

Example

M200 - 035G - T - 02 - 1 - 000

Small semi-recessed adjustable unit for use with 35W ceramic metal halide lamp. Overlapping ceiling trim. Semi-gloss white. Integral 120V electronic ballast. UL.

Type:

Accessories

Order separately. See Accessories Section for specifications.

ASRBKT00 = Universal **mounting brackets** (set of two), accepts 1/2" EMT, 1-1/2" lathing, C channel or bar hangers (by others)

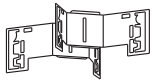

AFK000X = Ballast **fuse** kit
0 = UL
J = CSA

Mod "Optivex" permanent UV filter
Mod custom finish color

elliptipar
elliptipar
114 Boston Post Road, West Haven, Connecticut 06516, USA
Voice 203.931.4455 • Fax 203.931.4464 • **www.elliptipar.com**

The external shapes of the asymmetric reflectors are trademarks of **elliptipar**. *Certain products illustrated may be covered by applicable patents and patents pending. For a list of patents, see Contents pages. These specifications supersede all prior publications and are subject to change without notice.* © 2007 **elliptipar**.

Wall luminaires with shielded light sources

Type:
BEGA Product #:
Project:
Voltage:
Color:
Options:
Modified:

Housing: One piece die cast aluminum supplied with universal mounting bracket for direct attachment to 3½" or 4" octagonal wiring box.
Enclosure: One piece die cast aluminum cover frame, secured by captive socket head, stainless steel, screws threaded into stainless steel inserts. Interior of lamp compartment painted gloss white. One piece, hand blown three-ply opal glass.

Electrical: Lampholders: Fluorescent are type G24d-3 (26W) rated 75W, 250V.
Ballasts: Compact fluorescent are magnetic HPF available in 120V or 277V - specify.

Finish: These luminaires are available in five standard BEGA colors: Black (BLK); White (WHT); Bronze (BRZ); Silver (SLV); Eurocoat™ (URO). To specify, add appropriate suffix to catalog number. For complete description of BEGA finishing process, refer to technical information section at end of catalog. Custom colors supplied on special order.

U.L. listed, suitable for wet locations. Protection class: IP 54.

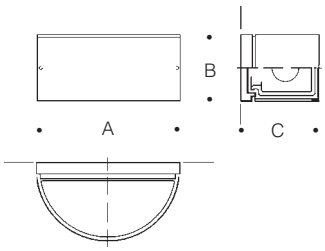

Wall mounted sconces for direct/indirect illumination from a fully shielded light source. One piece, three-ply opal glass diffuser under die cast aluminum shield. U.L. listed, suitable for wet locations. IP 54.
Color: Standard BEGA finishes.

		Lamp	Lumen	A	B	C
3231P	Wall	1 26W CF quad-2p	1800	13¾	6¼	7½

BEGA/US 1000 BEGA Way, Carpinteria, CA 93013 [P] 805·684·0533 [F] 805·684·6682
©Copyright BEGA/US 2005 updated 4/05

ERCO

Midipoll Bollard luminaire

with LED

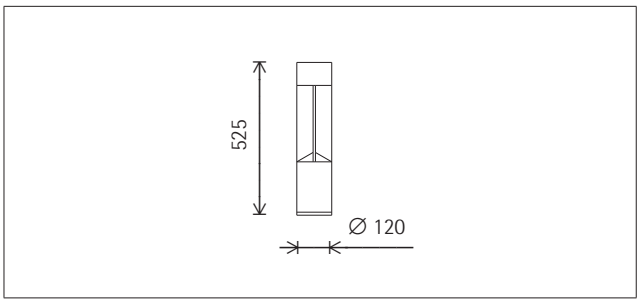

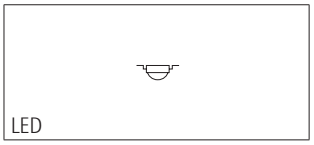

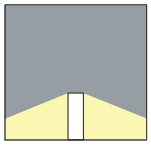

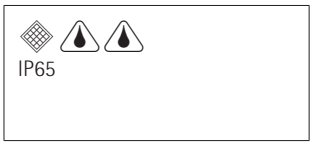

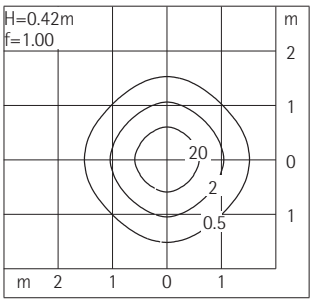

33333.000 Graphit m LED warm white
LED 10W 320lm 3500K

Product description
For mounting on accessories.
Cross-shaped aluminium profile and cylindrical housing: corrosion-resistant cast aluminium, No-Rinse surface treatment. Double powder-coated. Optimised surface for reduced accumulation of dirt.
Electronic control gear. 2 cable entries. Through-wiring possible. 3-pole terminal block.
Version 1
Replaceable LED module: high-power LEDs on metal-core PCB with spot reflector-lens system.
Cylindrical luminaire head with lower prism lens: corrosion-resistant cast aluminium, double powder-coated.
Mounting accessories to be ordered separately.
Protection mode IP65: dust-proof and water jet-proof.
Weight 3.30kg
Housing temperature 46°C
Temperature on the light aperture 37°C
Maximum wind load area 0.06m²

MOD FOR 180 DEGREE LIGHT DISTRIBUTION

ERCO Leuchten GmbH
Postfach 2460
58505 Lüdenscheid
Germany
Tel.: +49 2351 551 0
Fax: +49 2351 551 300
info@erco.com

UMNH
XBE-100

Technical Region: 230V/50Hz
We reserve the right to make technical and design changes.
Edition: 13.11.2007
Please download the current version from
www.erco.com/33333.000

ERCO

Midipoll Bollard luminaire

Accessories

33975.000
Ground socket
Metal, hot-dip galvanised.
Cable entry.
Weight 1.75kg

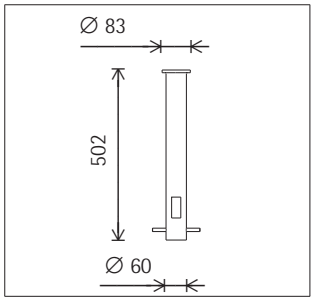

33980.000
Concrete anchor
Mounting plates with threaded bar and fixing screws. Individual parts to be assembled on-site.
Weight 0.30kg

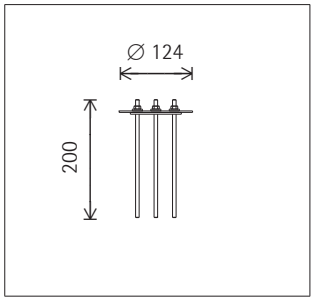

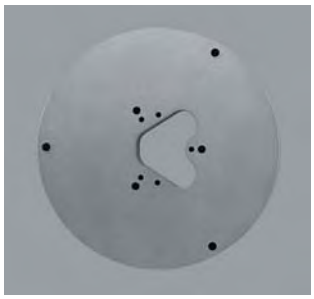

33982.000
Mounting plate
Corrosion-resistant cast aluminium, No-Rinse surface treatment.
Graphit m, double powder-coated.
Weight 1.70kg

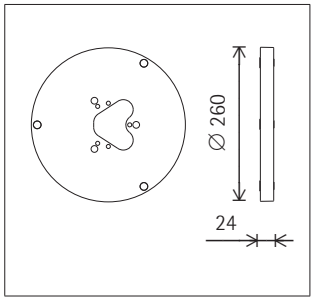

UMNH
XBE-100

ERCO

Midipoll Bollard luminaire

for metal halide lamps

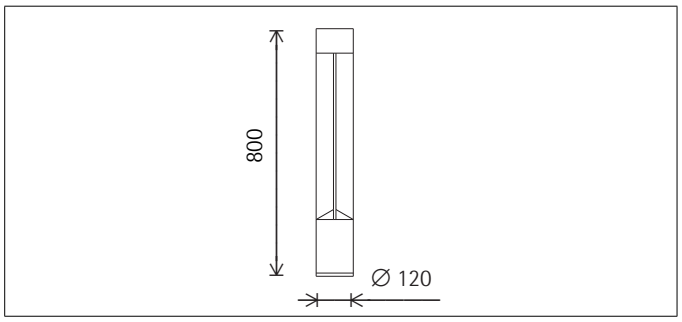

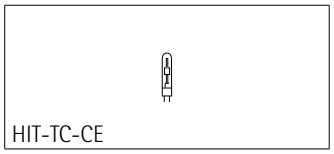

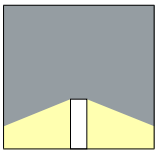

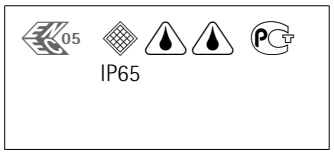

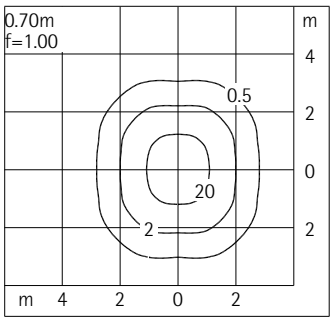

33338.000 Graphit m
HIT-TC-CE 20W G8.5 1700lm
ECG

Product description
For mounting on accessories.
Cross-shaped aluminium profile and cylindrical housing: corrosion-resistant cast aluminium, No-Rinse surface treatment. Double powder-coated. Optimised surface for reduced accumulation of dirt.
Electronic control gear. 2 cable entries. Through-wiring possible. 3-pole terminal block.
Upper reflector: aluminium, silver anodised.
Cylindrical luminaire head with lower flood lens: corrosion-resistant cast aluminium, double powder-coated. Removed from base for lamp replacement. Screw fixing.
Mounting accessories to be ordered separately.
Protection mode IP65: dust-proof and water jet-proof.
Weight 4.80kg
Housing temperature 49°C
Temperature on the light aperture 57°C
Maximum wind load area 0.1m²

ERCO GmbH
Postfach 2460
58505 Lüdenscheid
Germany
Tel.: +49 2351 551 0
Fax: +49 2351 551 300
info@erco.com

Technical Region: 230V/50Hz
We reserve the right to make technical and design changes.
Edition: 05.12.2008
Please download the current version from
www.erco.com/

UMNH
XBM-100
XBM-101

ERCO

Midipoll Bollard luminaire

Planning data

Cleaning (a)	1				2				3			
Ambient conditions	P	C	N	D	P	C	N	D	P	C	N	D
LMF	0.96	0.94	0.90	0.86	0.93	0.91	0.86	0.81	0.92	0.90	0.84	0.79
RSMF	0.96	0.92	0.87	0.81	0.96	0.92	0.87	0.81	0.96	0.92	0.87	0.81

Hours of operation (h)	1000	2000	4000	6000	8000	9000
LLMF	0.94	0.86	0.82	0.75	0.69	0.66
LSF	1	1	1	1	1	1

MF	LMFxRSMFxLLMFxLSF
MF	Maintainance Factor
LMF	Lumiaire Maintenance Factor
RSMF	Room Surface Maintenance Factor
LLMF	Lamp Lumens Maintenance Factor
LSF	Lamp Survival Factor
P	Room pure
C	Room clean
N	Room normal
D	Room dirty

UMNH
XBM-100
XBM-101

ERCO

Midipoll Bollard luminaire

Accessories

34974.000
Distribution box, IP68
With four cable entries, 7-25mm.
Plastic.
ø 95mm, L 240mm.
Weight 0.47kg
3m
IP68

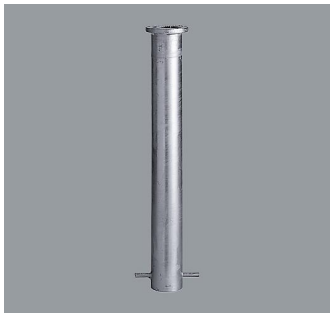

33975.000
Ground socket
Metal, hot-dip galvanised.
Cable entry.
Weight 1.75kg

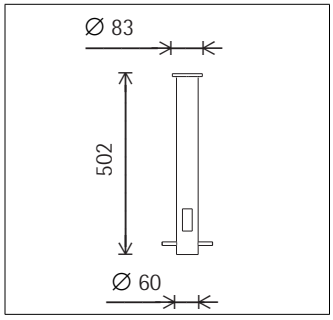

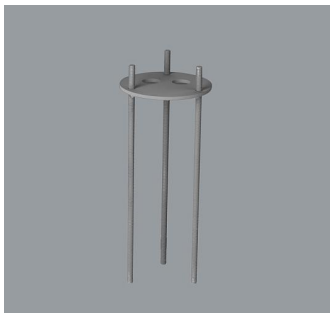

33980.000
Concrete anchor
Mounting plates with threaded bar and fixing screws. Individual parts to be assembled on-site.
Weight 0.30kg

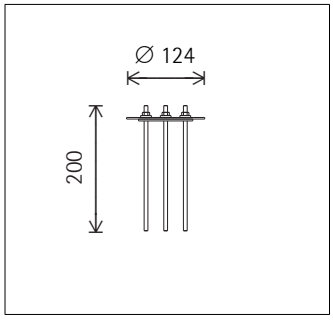

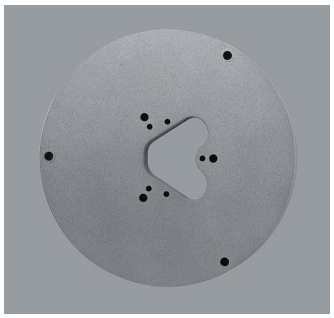

33982.000
Mounting plate
Corrosion-resistant cast aluminium, No-Rinse surface treatment.
Graphit m, double powder-coated.
Weight 1.70kg

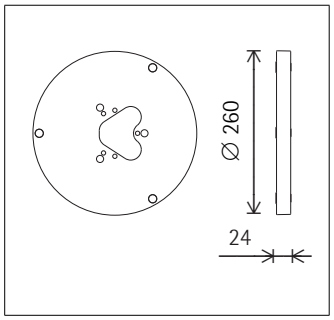

UMNH
XBM-100
XBM-101

ERCO

LC Downlight

for compact fluorescent lamps

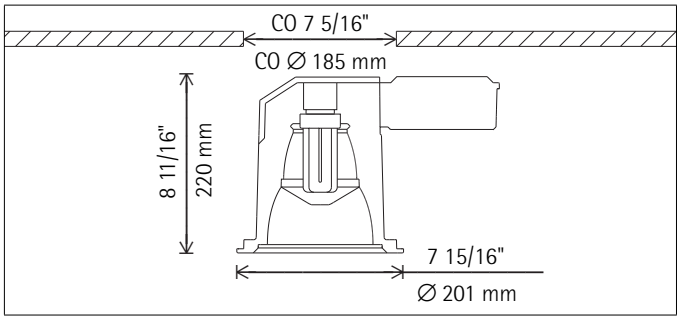

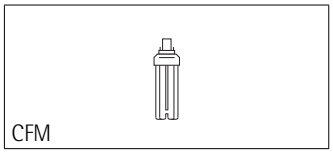

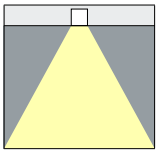

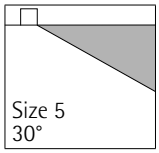

81029.023 Reflector silver
CFM 18W GX24q-2 1200lm
ECG

Product description
Housing: cast aluminum, silver powder-coated. Mounting with 3-point support and screw-tightening. Side-mounted control gear: plastic, black.
Electronic control gear 120V/277V, 60Hz. Through-wiring possible.
Low brightness reflector: aluminum, specular anodized. Cut-off angle 30° from horizontal. Diffuser as lamp cover: plastic, translucent.
Screw-fastened cover ring with safety glass: corrosion-resistant, cast aluminum, No-rinse surface treatment. Silver, double powder-coated. To be removed together with low-brightness reflector for lamp replacement.
Suitable for wet location (IP65): dust-proof and water jet-proof.
Max. ceiling thickness 1 3/16".
Weight 5.29lbs / 2.40kg

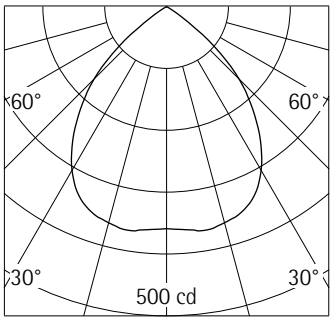

CFM 18W GX24q-2 1200lm

h(ft)	E(fc)	D
		87°
3	40	5'8"
6	10	11'5"
9	4	17'1"
12	2	22'9"
15	2	28'6"

UMNH
XDC-100

ERCO Lighting, Inc.
160 Raritan Center Parkway
Suite 10
Edison, NJ 08837
USA
Tel.: +1 732 225 8856
Fax: +1 732 225 8857
info.us@erco.com

Technical Region: 120V/277V, 60Hz
Edition: 11.15.2007
Please download latest version from
www.erco.com/81029.023

Reset Form

KIM LIGHTING

SAR

The Archetype®

revision 3/17/03 • sar.pdf

Type:
Job:
Catalog number:

/ / / / /

Mtg. | Fixture | Electrical Module | Finish | Options | Optional Vertical Slipfitter Mount

See page 2 — See pages 3-4 — See page 5

Select pole from Kim Pole Catalog. If pole is provided by others indicate O.D. for arm fitting.

Approvals:

Date:

Specifications

70 to 175 watt
Medium Base Lamps
Maximum Fixture weight (150HPS) = 25 lb

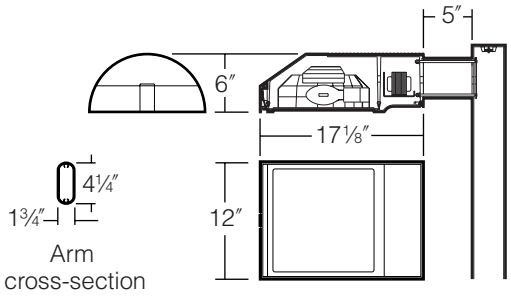

Housing: One piece low copper (less than .6%) die-cast aluminum alloy with integral cooling ribs over the optical chamber and electrical compartment. Solid barrier wall separates optical and electrical compartments. Double-thick wall with gussets on the support-arm mounting end. The fixture's housing forms a half cylinder with 58° front face plane providing a recess to allow a flush single-latch detail. All hardware is stainless steel or electro-zinc plated steel.

Lens Frame: One piece low copper (less than .6%) die-cast aluminum alloy lens frame with 1″ minimum depth around the gasket flange. Integral hinges with stainless steel pins provide no-tool mounting and removal from housing. Single die-cast aluminum cam-latch provides positive locking and sealing of the optical chamber by a one piece extruded and vulcanized silicone gasket. Clear 3⁄16″ thick tempered glass lens retained by eight steel clips with full silicone gasketing around the perimeter.

Reflector Module: Specular Alzak® optical segments are rigidly mounted within a die-cast aluminum enclosure that attaches to the housing as a one-piece module. Reflector module is field rotatable in 90° increments. MH and HPS sockets are porcelain 4KV pulse rated medium base. All reflector modules are factory prewired with quick-disconnect plug and include silicone seal at the penetration of the internal barrier wall in the luminaire housing.

Electrical Module: All electrical components are UL and CSA recognized, mounted on a single plate and factory prewired with quick-disconnect plugs. Electrical module attaches to housing with no-tool hinges and latches, accessible by opening the lens frame only. All ballasts are high power factor rated -20°F. starting.

Support Arm: One piece extruded aluminum with internal bolt guides and fully radiussed top and bottom. Luminaire-to-pole attachment is by internal draw bolts, and includes a pole reinforcing plate with wire strain relief. Arm is circular cut for specified round pole.

Optional Wall Mounting: Fixture mounts to 3″ or 4″ Junction Boxes by a cast aluminum adapter plate with fixture mounting bolts.

NOTE: Junction Box in wall must provide adequate fixture support. See NEC sections 370-13, 17 and 410-14, 16. Quick-disconnect plug and wiring are provided to allow field connections prior to fixture mounting.

Finish: Super TGIC thermoset polyester powder coat paint, 2.5 mil nominal thickness, applied over a chromate conversion coating; 2500 hour salt spray test endurance rating. Standard colors are Black, Dark Bronze, Light Gray, Platinum Silver, or White. Custom colors are available and subject to additional charges, minimum quantities and longer lead times. Consult representative.

Certification: UL Listed to U.S. and Canadian safety standards for wet locations. Fixture manufacturer shall employ a quality program that is certified to meet the ISO 9001:2000 standard.

CAUTION: Fixtures must be grounded in acco
or the National Electrical Code. Failure to do
personal injury.

UMNH
XPM-100

HUBBELL®
Hubbell Lighting, Inc.

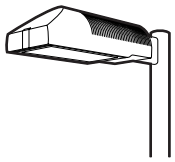

Standard Features

Mounting

3SY configuration is available for round poles only.

Plan View:

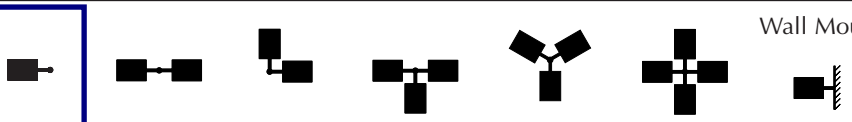

							Wall Mount
EPA:	0.7	1.4	1.2	1.9	1.9	2.5	
Cat. No.:	☐ **1SA**	☐ **2SB**	☐ **2SL**	☐ **3ST**	☐ **3SY**	☐ **4SC**	☐ **1W**

Fixture

Cat. No. designates fixture and light distribution.

See the Kim Site/Roadway Optical Systems Catalog for detailed information on reflector design and application.

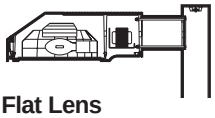

Flat Lens

Light Distribution:	Type II Full Cutoff	Type III Full Cutoff	Type IV Forward Throw Full Cutoff	Type V Square Full Cutoff
Cat. No.:	☐ **SAR2**	☐ **SAR3**	☐ **SAR4**	☐ **SAR5**

Electrical Module

HPS = High Pressure Sodium
MH = Metal Halide

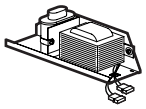

Lamp Watts	Lamp Type	Line Volts
150	**HPS**	**120**

Cat. Nos. for Electrical Modules available:

	☐ **70HPS120** ☐ **70HPS208** ☐ **70HPS240** ☐ **70HPS277** ☐ **70HPS347**	☐ **100HPS120** ☐ **100HPS208** ☐ **100HPS240** ☐ **100HPS277** ☐ **100HPS347**	☐ **150HPS120** ☐ **150HPS208** ☐ **150HPS240** ☐ **150HPS277** ☐ **150HPS347**
Lamp	ED-17, Clear	ED-17, Clear	ED-17, Clear
Socket	Medium Base	Medium Base	Medium Base
ANSI Ballast Type	S-62	S-54	S-55

	☐ **70MH120** ☐ **70MH208** ☐ **70MH240** ☐ **70MH277** ☐ **70MH347**	☐ **100MH120** ☐ **100MH208** ☐ **100MH240** ☐ **100MH277** ☐ **100MH347**	☐ **150MH120** ☐ **150MH208** ☐ **150MH240** ☐ **150MH277** ☐ **150MH347**	☐ **175MH120** ☐ **175MH208** ☐ **175MH240** ☐ **175MH277** ☐ **175MH347**
Lamp	ED-17, Clear	ED-17, Clear	ED-17, Clear	ED-17, Clear
Socket	Medium Base	Medium Base	Medium Base	Medium Base
ANSI Ballast Type	M-98	M-90	M-102	M-57

Wattage TBD

Finish

Super TGIC powder coat paint over a chromate conversion coating.

Color:	Black	Dark Bronze	Light Gray	Platinum Silver	White	Custom Color[1]
Cat. No.:	☐ **BL-P**	☐ **DB-P**	☐ **LG-P**	☐ **PS-P**	☐ **WH-P**	☐ **CC-P**

[1]Custom colors subject to additional charges, minimum quantities and Consult representative. Custom color description: _____

UMNH
XPM-100

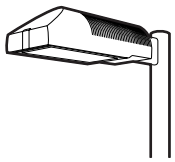

Optional Features

Houseside Shield

Cat. No. **(See right)**
☐ **No Option**

(Types II, III, and IV only). Fixtures with the standard flat glass lens are available with stamped aluminum louvers that pass streetside light and block houseside light, and a blackened panel added to the reflector to reduce houseside reflections. Fixtures with the optional convex glass lens are available with a formed aluminum shield that passes streetside light and blocks houseside light, and a black anodized panel added to the reflector to reduce houseside reflections. Use with clear lamps only, as coated lamps reduce effectiveness.

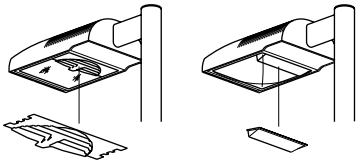

HS for **flat** lens

HSC for **convex** lens or polycarbonate lens

Cat. No.

☐ **HS** Recommended for use with clear lamps only. Effectiveness is reduced for coated lamps. Not for use with Type V light distributions.

☐ **HSC** For use with all fixtures with convex glass lens. Not for use with Type V light distributions.

Tamper-Resistant Latch

Cat. No. ☐ **TL**
☐ **No Option**

Standard die-cast latch is provided with a captive 10-32 stainless steel flat socket-head screw to prevent unauthorized opening.

NOTE: Required only for vandal protection in locations where fixtures can be reached by unauthorized persons.

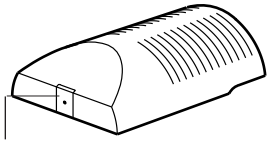

Tamper-Resistant Latch

Horizontal Slipfitter Mount

Cat. No. ☐ **HSF**
☐ **No Option**

Replaces standard mounting arm with a slipfitter which allows fixture to be mounted to a horizontal pole davit-arm with 2″ pipe-size mounting end (2⅜″ O.D.). Cast aluminum clamp-type slipfitter with set screw anti-rotation lock. Bolts to housing from inside the electrical compartment using mounting holes for the standard support arm. Davit-arm must be field drilled at a set screw location to insure against fixture rotation. Finished to match fixture and arm.

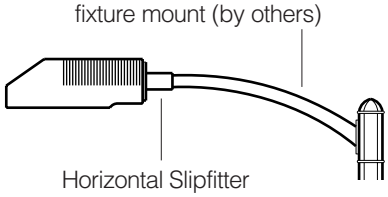

Special Options for Street Lighting

Cat. No. ☐ **AF**
☐ **No Option**

Air Filter (AF): Allows for ventilation through the optical chamber, filtering all air particles above 500 microns. Multi-layer disc assembly mounted on solid wall between optical compartment and latch cavity.

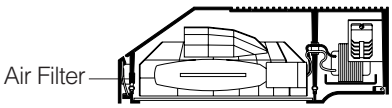

UMNH
XPM-100

Reset Form

KIM LIGHTING

PRA

SAR, SET fixtures only

Round Aluminum Non-Tapered Pole

revision 8/1/99 • prasar.pdf

Type:
Job:
Catalog number:

Pole Cat. No.	/ Mounting	/ Pole Finish	/ Optional Hinged Base	/ Optional Duplex Receptacle
See page 2			See page 3	

Approvals:

Date:

Specifications

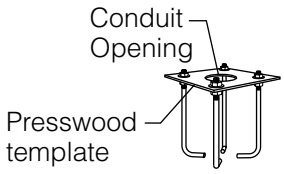

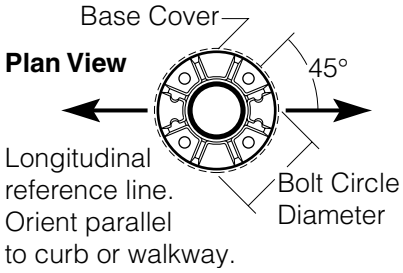

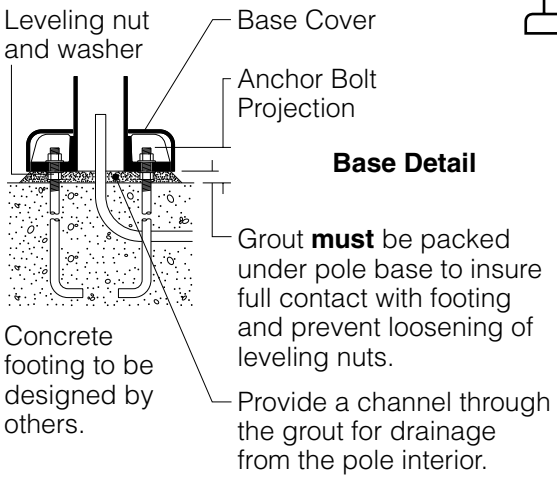

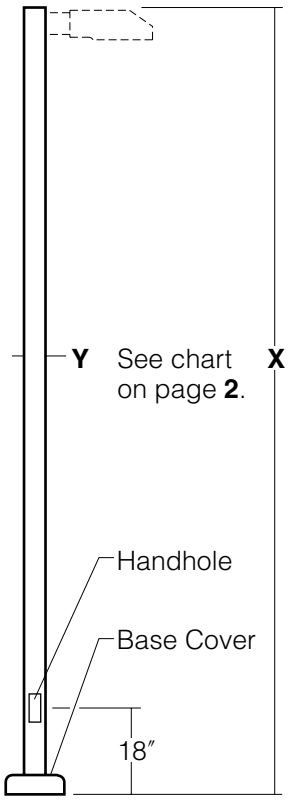

Pole Construction: Seamless round extruded aluminum tube of alloy 6063-T6, welded at top and bottom of aluminum base casting of alloy 356.

Base Cover: Base has a two piece cast aluminum full cover of 319 alloy, secured by stainless steel screws.

Pole Cap: A flush-sided cast aluminum pole cap is provided.

Handhole: 18″ up from base, with a gasketed cover and ground lug. Poles with a 3⅜″ O.D. include a handhole reinforcement casting welded in place.

Anchor Bolts: Four galvanized anchor bolts provided, complete with eight nuts, eight flat washers, and a presswood template.

Strength: Poles will withstand wind loads as listed in chart (see page **2**) when luminaires are mounted per fixture installation instructions.

Finish: Super TGIC thermoset polyester powder coat paint applied over a chromate conversion coating. Standard colors are Black (**BL-P**), Dark Bronze (**DB-P**), Light Gray (**LG-P**), Platinum Silver (**PS-P**), and White (**WH-P**). Custom colors are available.

CAUTION: Do not install poles without luminaires or strength guarantee is voided. Any unauthorized accessories secured to pole shall void strength guarantee.

Maintenance: A regularly scheduled maintenance program must be established to insure the protective paint coating is intact, corrosion or structural damage has not occurred, and anchor bolt nuts are tight. Failure to do so could lead to eventual pole collapse and serious personal injury.

UMNH
XPM-100

© 1999 KIM LIGHTING INC. • P.O. BOX 60080, CITY OF INDUSTRY, CA 91716-0080 • TEL: 626/968-5666 • FAX: 626/369-2695

Standard Features

NOTE: All allowable pole and fixture EPAs (Effective Projected Area, which is Fixture Area x Drag Factor) are derived from the AASHTO standard (American Association of State Highway and Transportation Officials). Responsibility lies with the specifier for correct pole selection based on local codes and standards for the job location (See page **4**).

Pole Catalog No. **Allowable Pole EPA**

Pole Catalog Number	X	Y	Bolt Circle Dia.	Anchor Bolt Projection	Anchor Bolts	Base Cover Size	Conduit Opening	Wind Map Steady Wind **70**/91	**80**/104	**90**/117	Gusting Wind Equivalent **100**/130	**110**/143
☐ **PRA10-34125****	10′	3⅜″ x .125	7″	3⅛″	¾″ x 15″ + 3″	9½″ dia.	2½″ dia.	5.6	3.9	2.8	1.7	1.3
☐ **PRA12-34188****	12′	3⅜″ x .188	7″	3⅛″	¾″ x 15″ + 3″	9½ ″ dia.	2½″ dia.	7.4	5.3	3.8	2.7	1.9
☐ **PRA14-34188****	14′	3⅜″ x .188	7″	3⅛″	¾″ x 15″ + 3″	9½″ dia.	2½″ dia.	5.8	3.9	2.7	1.7	0.8
☐ **PRA14-4188****	14′	4″ x .188	8½″	3¼″	¾″ x 15″ + 3″	11⅞″ dia.	3″ dia.	8.9	6.2	4.4	3.2	2.5
☐ **PRA16-4188**	16′	4″ x .188	8½″	3¼″	¾″ x 30″ + 4″	11⅞″ dia.	3″ dia.	6.9	4.6	3.1	2.1	1.6
☐ **PRA20-4188**	19.5′	4″ x .188	8½″	3¼″	¾″ x 30″ + 4″	11⅞″ dia.	3″ dia.	4.0	2.3	1.1	—	—
☐ **PRA20-5188**	19.5′	5″ x .188	8½″	3¼″	¾″ x 30″ + 4″	11⅞″ dia.	3″ dia.	7.6	5.1	3.7	2.8	2.2

Optional hinged base available for selected poles up to 14 feet (see page **3).

*

Mounting Arrangements

*Allowable pole EPA for jobsite wind conditions must be equal to or greater than fixture mount EPA.

Plan Views

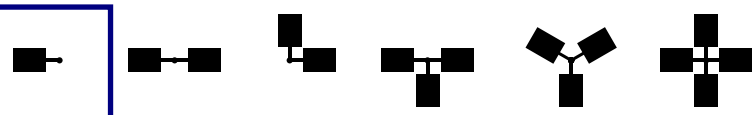

Mounting:	☐ **SA**	☐ **SB**	☐ **SL**	☐ **ST**	☐ **SY**	☐ **SC**
Kim Fixture and EPA:						
SAR	0.7	1.4	1.2	1.9	1.9	2.5
SET	1.0	2.0	1.5	2.4	2.2	2.7

Finish

Super TGIC powder coat paint over a chromate conversion coating.

Finish to match fixture, TBD

Color:	Black	Dark Bronze	Light Gray	Platinum Silver	White
Cat. No.:	☐ **BL-P**	☐ **DB-P**	☐ **LG-P**	☐ **PS-P**	☐ **WH-P**

Color: *Custom Color

Cat. No.: ☐ **CC-P**

* Custom colors subject to additional charges, minimum quantities and extended lead times. Consult representative. Custom color description: _____

UMNH
XPM-100

Housing: Constructed of die-cast and extruded aluminum with integral wiring compartment. Mounting tabs provided.

Enclosure: One piece die-cast aluminum faceplate. ⅛" thick, clear tempered glass with translucent white ceramic coating. Faceplate is secured by two (2) socket head, stainless steel, captive screws threaded into stainless steel inserts in the housing casting. Continuous high temperature O-ring gasket for weather tight operation.

Electrical: (Fluorescent) Lampholder; GX23 (13 W) rated 75 W, 250 V. Ballasts are magnetic, available 120 V or 277 V - specify. Through Wiring: All units are suitable for a maximum of four (4) No. 12 AWG conductors (plus ground) suitable for 75° C. Two ⅞" knockouts provided for ½" conduit.

Finish: Available in five standard BEGA colors: Black (BLK); White (WHT); Bronze (BRZ); Silver (SLV); Eurocoat™ (URO). To specify, add appropriate suffix to catalog number. Custom colors supplied on special order.

U.L. listed, suitable for wet locations and for installation within 3 feet of ground. Suitable for all types of construction including poured concrete. Protection class: IP 64.

Type:
BEGA Product:
Project:
Voltage:
Color:
Options:
Modified:

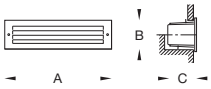

MOD XSC-100 and XSC-103 for 9W lamp

Recessed luminaires · **shielded**

					Lumen	A	B	C
2286 P	ADA	1	13 W	CF twin-2p	825	11 13/16	2 9/16	4 1/4

BEGA-US 1000 BEGA Way, Carpinteria, CA 93013 (805) 684-0533 FAX (805) 566-9474 www.bega-us.com
©copyright BEGA-US 2008 Updated 2/08

UMNH
XSC-100
XSC-101
XSC-103

Recessed wall luminaires

Type:
BEGA Product #:
Project:
Voltage:
Color:
Options:
Modified:

Housing: Die cast aluminum with integral wiring compartment.

Enclosure: One piece die cast aluminum faceplate, 1/8" thick, tempered glass. Faceplate is secured by four (4) socket head, stainless steel, captive screws threaded into stainless steel inserts in the housing casting. Continuous high temperature O-ring gasket for weather tight operation.

Electrical: Compact fluorescent socket (26, 32, and 42W multiwatt socket) G24q-3, Gx24q-3, Gx24q-4 rotary lock lampholder rated 75W, 600V. Compact fluorescent ballasts are electronic universal voltage 120V through 277V.

Through Wiring: Maximum of four (4) No. 12 AWG conductors (plus ground) suitable for 75°C. Two 7/8" knockouts provided for 1/2" conduit.

Finish: These luminaires are available in five standard BEGA colors: Black (BLK); White (WHT); Bronze (BRZ); Silver (SLV); Eurocoat™ (URO). To specify, add appropriate suffix to catalog number. For complete description of BEGA finishing process, refer to technical information section at end of catalog. Custom colors supplied on special order.

U.L. listed, suitable for wet locations and for installation within 3 feet of ground. Fluorescent luminaires suitable for all types of construction including poured concrete. Type non-IC. Protection class: IP 64.

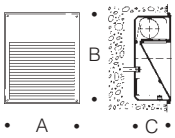

Recessed luminaires with fully shielded light source.
Clear tempered glass behind die cast aluminum louver/guard.
U.L. listed, suitable for wet locations. IP 64.
Color: Standard BEGA finishes.

	Lamp	Lumen	A	B	C
2852P	ADA 1 26/32/42W CF triple-4p	1800/2400/3200	9	9 7/8	6 5/8

UMNH
XSM-100

BEGA/US 1000 BEGA Way, Carpinteria, CA 93013 [P] 805·684·0533 [F] 805·684·6682
©Copyright BEGA/US 2005 updated 4/05

FEATURES

OPTICAL SYSTEM

- Internal housing components painted matte black. Lamp snoot minimizes stray light in housing.
- Self-flanged, semi-specular, matte-diffuse or specular cone with flange that matches cone finish.
- Optical system is retained by self-aligning, torsion support springs.
- Tool-less, 0° - 45° vertical adjustment and 360° horizontal adjustment.
- Designed to allow hot aiming.
- Adjustment mechanism is lockable to maintain aiming during relamping.
- Accommodates up to two lenses, filters or louvers.
- Softening lens standard.

MECHANICAL SYSTEM

- Black painted housing features tool-less top access and accommodates a maximum 1-1/2" ceiling thickness.
- Re-lamp capability from above or below ceiling.
- 16-gauge galvanized steel mounting bars with continuous 4" vertical adjustment are shipped pre-installed. Post installation adjustment possible without the use of tools above or below ceiling.
- Secondary housing adjustment system for precise, final flange to ceiling alignment.
- Galvanized steel junction box with hinged access covers and spring latch. Four combination 1/2"-3/4" knockouts for straight-through conduit runs. Capacity: 8 (4 in, 4 out) No.12 AWG conductors, rated for 90°C.

ELECTRICAL SYSTEM

- Tool-less access door provides access to junction box through the aperture.
- Replaceable socket assembly. MR16 socket assembly standard
- 12-volt electronic transformer is replaceable without the use of tools.
- Thermally-activated insulation detector is replaceable without the use of tools.

LISTING

- Fixtures are UL Listed for thru-branch wiring, Non-IC recessed mounting and damp locations. Listed and labeled to comply with Canadian Standards.

Type	Catalog number

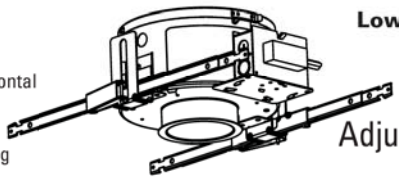

Low Voltage Downlights

4" DLV

Adjustable Downlight

Open Cone
Max 75 Watt

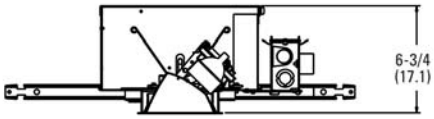

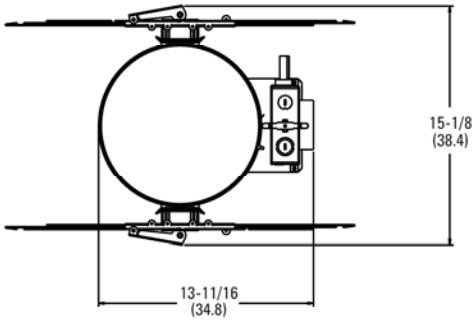

All dimensions are inches (centimeters)

Aperture:	4-5/16 (11.0)
Ceiling opening:	4-7/8 (12.4)
Overlap trim:	5-1/2 (14.0)

ORDERING INFORMATION

Example: **DLV ADJ MR16 4BCT30 120**

Choose the boldface catalog nomenclature that best suits your needs and write it on the appropriate line. Order accessories as separate catalog numbers (shipped separately).

DLV ADJ

Series

DLV

Configuration

ADJ

Lamp designation

MR16	MR16 capability (standard)
MR11	MR11 capability
ALR12	ALR12 capability
ALR18	ALR18 capability
AR70[1]	AR70 capability

Aperture/Trim color

4BC[2]	Black
4AC	Clear
4PC	Pewter
4UBC	Umber
4WTC	Wheat
4GC	Gold
4WC[2]	White painted
4MB[2]	Contoured black baffle
4WB[2]	Contoured white baffle

Type

T30	Cut for angles 25° - 45°
T20	Cut for angles 15° - 25°
T00	Cut for angles 0° - 15°

Finish

(blank)	Semi-specular
LD	Matte-diffuse
LS	Specular

Voltage

120
277
347

Options

TRW	White painted flange. (Standard with WC, MB, and WB)
TRBL	Black painted flange
LRC[3]	Provides compatibility with Lithonia Reloc System. Lithonia Reloc System can be installed less this option with connectors provided by others. Access above ceiling required
SF	Single Fuse

NOTES

1 Clear safety glass standard with AR70 lamp designation.
2 Not available with finishes.
3 For compatible Reloc systems, refer to Technical Bulletins tab.

Accessories

Order as separate catalog numbers.

- For lens accessories, refer to Technical Bulletins tab.
- For lamp options, refer to Technical Bulletins tab.

gotham®
An Acuity Brands Company

GOTHAM ARCHITECTURAL DOWNLIGHTING
1400 Lester Road Conyers Georgia 30012
P 800 315 4982 F 770 860 3129
www.gothamlighting.com

DLV ADJ 4 **ALV-170**

bpi

brandston partnership inc.

Lighting design

122 West 26th Street 5th floor
New York New York 10001
T. 212.924.4050 F. 212.691.5418

Utah Museum of Natural History
Salt Lake City, UT

AL-1

LAMP PERFORMANCE DATA

All data was calculated from each lamp manufacturer's published data and is subject to normal lamp variations. Maximum footcandle is usually at the aiming point, but not always on wider spread lamps. Lamp data supplied by manufacturers is approximate, and individual lamp performance may vary.

ACCENT LIGHTING ANGLE PERFORMANCE DATA

DISTANCE LAMP TO LIGHTED SURFACE — **2 FEET** — **4 FEET**
DISTANCE DOWN TO AIMING POINT — V1 (FT) **2** — V2 (FT) **7**

Lamp No.	Watts	Type	MFG.	Beam Width (°) to 50% MBCP	MBCP	Aiming Angle 45° FT-CANDLES	Beam Length	Beam Width	Aiming Angle 60° FT-CANDLES	Beam Length	Beam Width
MR-16											
ESX	20	NSP	GE/SY/PH	15	3600	**318**	1.1	0.7	**28**	4.4	2.1
BAB	20	FL	GE/SY/PH	40	525	**46**	3.4	2.1	**4**	19.3	5.8
EXT	50	NSP	GE/SY/PH	13	10200	**902**	0.9	0.6	**80**	3.8	1.8
EXZ	50	NFL	GE/SY	26	3400	**301**	2.0	1.3	**27**	8.8	3.7
EXN	50	FL	GE/SY/PH	40	1850	**164**	3.4	2.1	**14**	19.3	5.8
EYJ	71/65	MFL	GE/SY	24	4900	**433**	1.8	1.2	**38**	7.9	3.4
EYC	71/65	FL	GE/SY	36	2100	**186**	2.9	1.8	**16**	15.2	5.2
MR-11											
FTB	20	SP	SY/PM	10	5000	**442**	0.7	0.5	**39**	2.9	1.4
FTD	20	NFL	SY/PM	30	600	**53**	2.3	1.5	**5**	10.9	4.3
FTE	35	SP	SY	10	6500	**575**	0.4	0.5	**51**	2.9	1.4
FTH	35	NFL	SY/PM	30	1300	**115**	2.3	1.5	**10**	10.9	4.3
ALR-12											
GBD	20	NSP	PH	6	7000	**619**	0.4	0.3	**55**	1.7	0.8
GBE	20	SP	PH	18	1500	**133**	1.3	0.9	**12**	5.5	2.5
GBF	20	FL	PH	32	750	**66**	2.5	1.6	**6**	12.2	4.6
ALR-18											
GBJ	50	SP	PH	10	13000	**1149**	0.7	0.5	**102**	2.9	1.4
GBK	50	NFL	PH	25	1900	**468**	1.9	1.3	**15**	8.3	3.5
AR-70											
20AR70/8/SP	20	SP	SY	8	7000	**619**	0.6	0.4	**55**	2.3	1.1
20AR70/25/FL	20	FL	SY	25	850	**75**	1.9	1.3	**7**	8.3	3.5
50AR70/8/SP	50	SP	SY	8	15000	**1326**	0.6	0.4	**117**	2.3	1.1
50AR70/25/FL	50	FL	SY	25	2000	**177**	1.9	1.3	**16**	8.3	3.5

LOCATION OF ACCENT LUMINAIRE TO PROVIDE AIMING PT. 5.5' ABOVE THE FLOOR

Clg. Ht. (ft)	60° Aiming Angle Out (H)	60° Aiming Angle Down (V2)	45° Aiming Angle Out (H)	45° Aiming Angle Down (V1)
8	1.5	2.5	2.5	2.5
9	2.0	3.5	3.5	3.5
10	2.5	4.5	4.5	4.5

NOTES
1. IES indicates 5.5' above the floor is an ideal viewing height.
2. Tested to current IES and NEMA standards under stabilized laboratory conditions. Various operating factors can cause differences between laboratory data and actual field measurements. Dimensions and specifications are based on the most current available data and are subject to change without notice.

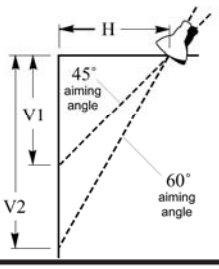

Formula for other distances and aiming angles.

$$fc = \frac{\text{MBCP} \times \cos^3(\text{aiming angle})}{H^2 \text{ (distance from wall squared)}}$$

Aiming angle	$\cos^3$	Feet **out** from wall (H): 6	7	8	9	10
		Feet **down** from ceiling (V)				
45°	.354	6	7	8	9	10
50°	.266	7	8	10	11	12
55°	.189	9	10	11	13	14
60°	.125	10	12	14	16	17
65°	.076	13	15	18	19	21
70°	.040	17	19	22	25	28
75°	.017	22	26	30	34	37

ALV-170

©2007 Gotham, Rev. 11/08
ALV-170.P65

gotham
An AcuityBrands Company

GOTHAM ARCHITECTURAL DOWNLIGHTING
A DIVISION OF ACUITY LIGHTING GROUP, INC.
1400 Lester Road Conyers Georgia 30012
P 800 315 4982 F 770 860 3129
www.gothamlighting.com

bpi
brandston partnership inc.
Lighting design
122 West 26th Street 5th floor
New York New York 10001
T. 212.924.4050 F. 212.691.5418

Utah Museum of Natural History
Salt Lake City, UT

AL-1

RECESSED AR111 LV TRIMLESS

Catalog #

Type

Project

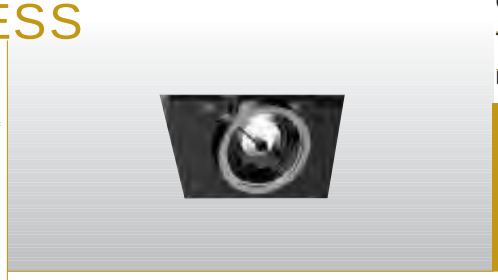

COMBOLIGHT® LV Series

ONE (1) Light Recessed
Next generation Trimless
Single-Lamp Luminaire
Low Voltage AR111

DESCRIPTION:
An adjustable AR111 fixture suitable for multiple downlighting applications with one point of electrical entry. Powder coat finish on housing & lamp assembly. Housing suitable for new construction applications.

CONSTRUCTION:
All aluminum construction. Perforated mesh plaster frame adheres to ceiling compound for seamless trimless mounting. Beveled fixture opening provides easy mudding compound application. Can accommodate 0.50" or 0.625" drywall. Includes butterfly brackets for black iron commercial mounting.

LAMP ASSEMBLY:
1 - AR111 lamp mounted in adjustable bezel. Each lamp can accept up to two optical accessories. 380º x 45º locking adjustment. Fixture provides 45º visual cut-off. Lamp holders retract for added internal adjustment.

SYSTEM PROTECTION:
Thermal protection provided to guard against overheating, and misuse of insulation over and around fixture. Vent holes in housing provide cooler operation

ELECTRICAL:
Integral electronic transformer. Secondary lead is 11.5V. Primary lead is 120V. Dimmable. Junction box is UL listed for through branch wiring, (access above ceiling not required) for 8 #12, 90°C supply conductors or 60°C for end of run. Fused and short circuit protection. Transformers and electrical accessible through ceiling opening via access door on housing sidewall.

ALL RSA COMBOLIGHT PRODUCTS ARE MADE IN THE U.S.A.

Dimensions	A Housing Length	B Housing Height	C Aperture Length	D Aperture Width	E Plaster Frame Width	F Plaster Frame Length	G Above Ceiling Width	Ceiling Cut-Out
	12.77"	8.40"	7.00"	7.00"	12.75"	12.75"	14.95"	10.25" x 10.25"

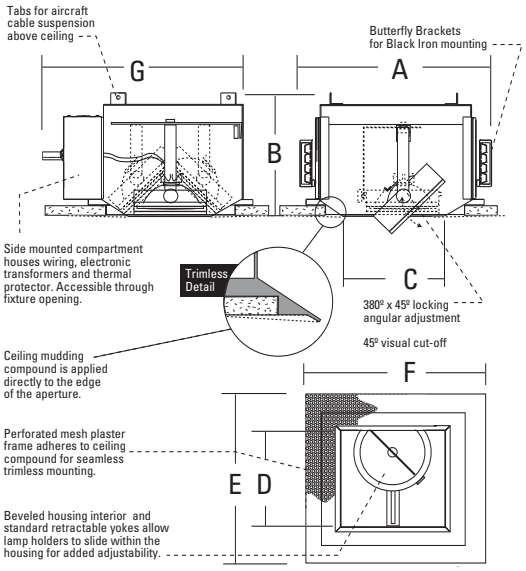

Other Adders
CC - Two Circuit
CP - Chicago Plenum

ORDERING EXAMPLE:

LV1010	WH	50	120

= One Light Trimless Recessed AR111 - White Interior - 50 watt lamps - 120 Volt

Optional Accessories - Details on Other Side

Baffle	Snoots	Louvers	Lenses

Cat. # / Description	Interior Finish	Lamp Wattage	Voltage
LV1010 : 1 Light Recessed Next Generation Trimless Combo Fixture 12V AR111	**BK -** Black	**35 -** 35 Watt AR111	**120 -** 120 Volt (Standard)
	WH - White	**50 -** 50 Watt AR111	**277 -** 277 Volt
	S - Silver	**75 -** 75 Watt AR111	
	PT - Custom (Specify)	**100 -** 100 Watt AR111	

SPECIFY -	LV1010	____	____	____

COOPER Lighting

Specifications and Dimensions subject to change without notice.
RSA Lighting • 7945 Orion Ave. • Van Nuys, CA 91406 • 818-349-3030 • FAX 818-349-3031

RSA LIGHTING

bpi

brandston partnership inc.

Lighting design

122 West 26th Street 5th floor
New York New York 10001
T. 212.924.4050 F. 212.691.5418

Utah Museum of Natural History
Salt Lake City, UT

AL-2

FEATURES

OPTICAL SYSTEM

- Internal housing components painted matte black. Lamp snoot minimizes stray light in housing.
- Self-flanged, semi-specular, matte-diffuse or specular cone with flange that matches cone finish.
- Optical system is retained by self-aligning, torsion support springs.
- Tool-less, 0° - 45° vertical adjustment and 360° horizontal adjustment.
- Designed to allow hot aiming.
- Adjustment mechanism is lockable to maintain aiming during relamping.
- Accommodates up to two lenses, filters or louvers.
- Softening lens standard.

MECHANICAL SYSTEM

- Black painted housing features tool-less top access and accommodates a maximum 1-1/2" ceiling thickness.
- Re-lamp capability from above or below ceiling.
- 16-gauge galvanized steel mounting bars with continuous 4" vertical adjustment are shipped pre-installed. Post installation adjustment possible without the use of tools above or below ceiling.
- Secondary housing adjustment system for precise, final flange to ceiling alignment.
- Galvanized steel junction box with hinged access covers and spring latch. Four combination 1/2"-3/4" knockouts for straight-through conduit runs. Capacity: 8 (4 in, 4 out) No.12 AWG conductors, rated for 90°C.

ELECTRICAL SYSTEM

- Tool-less access door provides access to junction box through the aperture.
- Replaceable socket assembly. MR16 socket assembly standard
- 12-volt electronic transformer is replaceable without the use of tools.
- Thermally-activated insulation detector is replaceable without the use of tools.

LISTING

- Fixtures are UL Listed for thru-branch wiring, Non-IC recessed mounting and damp locations. Listed and labeled to comply with Canadian Standards.

Type ..... Catalog number .....

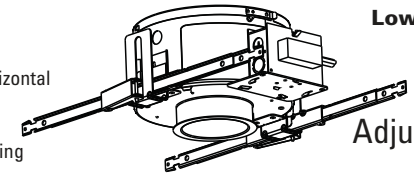

Low Voltage Downlights

4" DLV

Adjustable Downlight

Open Cone
Max 75 Watt

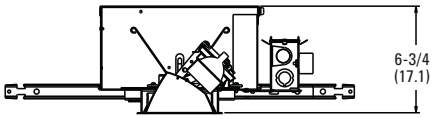

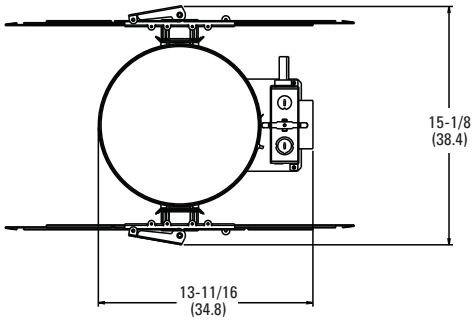

All dimensions are inches (centimeters)

Aperture:	4-5/16 (11.0)
Ceiling opening:	4-7/8 (12.4)
Overlap trim:	5-1/2 (14.0)

ORDERING INFORMATION

Example: **DLV ADJ MR16 4BCT30 120**

Choose the boldface catalog nomenclature that best suits your needs and write it on the appropriate line. Order accessories as separate catalog numbers (shipped separately).

DLV ADJ

Series

DLV

Configuration

ADJ

Lamp designation

MR16	MR16 capability (standard)
MR11	MR11 capability
ALR12	ALR12 capability
ALR18	ALR18 capability
AR70[1]	AR70 capability

Aperture/Trim color

4BC[2]	Black
4AC	Clear
4PC	Pewter
4UBC	Umber
4WTC	Wheat
4GC	Gold
4WC[2]	White painted
4MB[2]	Contoured black baffle
4WB[2]	Contoured white baffle

Type

T30	Cut for angles 25° - 45°
T20	Cut for angles 15° - 25°
T00	Cut for angles 0° - 15°

Finish

(blank)	Semi-specular
LD	Matte-diffuse
LS	Specular

Voltage

120
277
347

Options

TRW	White painted flange. (Standard with WC, MB, and WB)
TRBL	Black painted flange
LRC[3]	Provides compatibility with Lithonia Reloc System. Lithonia Reloc System can be installed less this option with connectors provided by others. Access above ceiling required
SF	Single Fuse

NOTES

1 Clear safety glass standard with AR70 lamp designation.
2 Not available with finishes.
3 For compatible Reloc systems, refer to Technical Bulletins tab.

Accessories

Order as separate catalog numbers.

- For lens accessories, refer to Technical Bulletins tab.
- For lamp options, refer to Technical Bulletins tab.

gotham®
An AcuityBrands Company

GOTHAM ARCHITECTURAL DOWNLIGHTING
1400 Lester Road Conyers Georgia 30012
P 800 315 4982 F 770 860 3129
www.gothamlighting.com

DLV ADJ 4 **ALV-170**

bpi

brandston partnership inc.

Lighting design

122 West 26th Street 5th floor
New York New York 10001
T. 212.924.4050 F. 212.691.5418

Utah Museum of Natural History
Salt Lake City, UT

AP-1

LAMP PERFORMANCE DATA

All data was calculated from each lamp manufacturer's published data and is subject to normal lamp variations. Maximum footcandle is usually at the aiming point, but not always on wider spread lamps. Lamp data supplied by manufacturers is approximate, and individual lamp performance may vary.

ACCENT LIGHTING ANGLE PERFORMANCE DATA

DISTANCE LAMP TO LIGHTED SURFACE — **2 FEET** — **4 FEET**
DISTANCE DOWN TO AIMING POINT — V1 (FT) **2** — V2 (FT) **7**

Lamp No.	Watts	Type	MFG.	Beam Width (°) to 50% MBCP	MBCP	Aiming Angle 45° **FT-CANDLES**	Beam Length	Beam Width	Aiming Angle 60° **FT-CANDLES**	Beam Length	Beam Width
MR-16											
ESX	20	NSP	GE/SY/PH	15	3600	**318**	1.1	0.7	**28**	4.4	2.1
BAB	20	FL	GE/SY/PH	40	525	**46**	3.4	2.1	**4**	19.3	5.8
EXT	50	NSP	GE/SY/PH	13	10200	**902**	0.9	0.6	**80**	3.8	1.8
EXZ	50	NFL	GE/SY	26	3400	**301**	2.0	1.3	**27**	8.8	3.7
EXN	50	FL	GE/SY/PH	40	1850	**164**	3.4	2.1	**14**	19.3	5.8
EYJ	71/65	MFL	GE/SY	24	4900	**433**	1.8	1.2	**38**	7.9	3.4
EYC	71/65	FL	GE/SY	36	2100	**186**	2.9	1.8	**16**	15.2	5.2
MR-11											
FTB	20	SP	SY/PM	10	5000	**442**	0.7	0.5	**39**	2.9	1.4
FTD	20	NFL	SY/PM	30	600	**53**	2.3	1.5	**5**	10.9	4.3
FTE	35	SP	SY	10	6500	**575**	0.4	0.5	**51**	2.9	1.4
FTH	35	NFL	SY/PM	30	1300	**115**	2.3	1.5	**10**	10.9	4.3
ALR-12											
GBD	20	NSP	PH	6	7000	**619**	0.4	0.3	**55**	1.7	0.8
GBE	20	SP	PH	18	1500	**133**	1.3	0.9	**12**	5.5	2.5
GBF	20	FL	PH	32	750	**66**	2.5	1.6	**6**	12.2	4.6
ALR-18											
GBJ	50	SP	PH	10	13000	**1149**	0.7	0.5	**102**	2.9	1.4
GBK	50	NFL	PH	25	1900	**468**	1.9	1.3	**15**	8.3	3.5
AR-70											
20AR70/8/SP	20	SP	SY	8	7000	**619**	0.6	0.4	**55**	2.3	1.1
20AR70/25/FL	20	FL	SY	25	850	**75**	1.9	1.3	**7**	8.3	3.5
50AR70/8/SP	50	SP	SY	8	15000	**1326**	0.6	0.4	**117**	2.3	1.1
50AR70/25/FL	50	FL	SY	25	2000	**177**	1.9	1.3	**16**	8.3	3.5

LOCATION OF ACCENT LUMINAIRE TO PROVIDE AIMING PT. 5.5' ABOVE THE FLOOR

Clg. Ht. (ft)	60° Aiming Angle Out (H)	60° Aiming Angle Down (V2)	45° Aiming Angle Out (H)	45° Aiming Angle Down (V1)
8	1.5	2.5	2.5	2.5
9	2.0	3.5	3.5	3.5
10	2.5	4.5	4.5	4.5

NOTES
1 IES indicates 5.5' above the floor is an ideal viewing height.
2 Tested to current IES and NEMA standards under stabilized laboratory conditions. Various operating factors can cause differences between laboratory data and actual field measurements. Dimensions and specifications are based on the most current available data and are subject to change without notice.

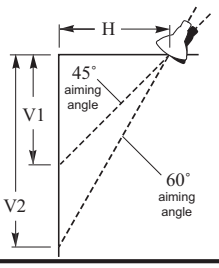

Formula for other distances and aiming angles.

$$fc = \frac{MBCP \times \cos^3 (\text{aiming angle})}{H^2 \text{ (distance from wall squared)}}$$

Aiming angle	$\cos^3$	Feet **out** from wall (H): 6	7	8	9	10
		Feet **down** from ceiling (V)				
45°	.354	6	7	8	9	10
50°	.266	7	8	10	11	12
55°	.189	9	10	11	13	14
60°	.125	10	12	14	16	17
65°	.076	13	15	18	19	21
70°	.040	17	19	22	25	28
75°	.017	22	26	30	34	37

ALV-170

©2007 Gotham, Rev. 11/08
ALV-170.P65

gotham
An Acuity Brands Company

GOTHAM ARCHITECTURAL DOWNLIGHTING
A DIVISION OF ACUITY LIGHTING GROUP, INC.
1400 Lester Road Conyers Georgia 30012
P 800 315 4982 F 770 860 3129
www.gothamlighting.com

bpi
brandston partnership inc.
Lighting design
122 West 26th Street 5th floor
New York New York 10001
T. 212.924.4050 F. 212.691.5418

Utah Museum of Natural History
Salt Lake City, UT

AP-1

FEATURES

OPTICAL SYSTEM

- Internal housing components painted matte black. Lamp snoot minimizes stray light in housing.
- Finishing trim is microgroove black baffle with white painted flange or specular, semi-diffuse or highly specular cone with flange that matches cone finish. White painted flange optional. Straight or tapered cut.
- Seamless cast faceplate is retained by self-aligning butterfly support springs.
- Tool-less, 0° - 45° vertical adjustment and 360° horizontal adjustment.
- Designed to allow hot aiming.
- Adjustment mechanism is lockable to maintain aiming during relamping.
- Position indicators allow consistent aiming from fixture to fixture.
- Accommodates up to two lenses, filters or louvers.
- Softening lens standard.

MECHANICAL SYSTEM

- Black painted housing features tool-less top access and accommodates a maximum 2" ceiling thickness.
- Re-lamp capability from above or below ceiling.
- Mounting bars are 16-gauge galvanized steel with continuous 4" vertical adjustment, held in place with tool-less, integral cam-action locking. Post installation adjustment possible without the use of tools from above or below the ceiling. Shipped pre-installed.
- Secondary housing adjustment system for precise, final flange to ceiling alignment.
- Painted steel junction box with bottom-hinged access covers and spring latches. Four combination 1/2"-3/4" knockouts for straight-through conduit runs. Capacity: 8(4 in, 4 out) No.12 AWG conductors, rated for 90°C.

ELECTRICAL SYSTEM

- Tool-less access door provides access to junction box through the aperture.
- Replaceable socket assembly. MR16 socket assembly standard (20W - 75W).
- Magnetic step-down transformer (replaceable without the use of tools).
- Thermally-activated insulation detector (replaceable without the use of tools).

LISTING

- Fixtures are UL listed for thru-branch wiring, recessed mounting and damp locations. Listed and labeled to comply with Canadian Standards.

Type ..... Catalog number .....

....

Low Voltage Downlights

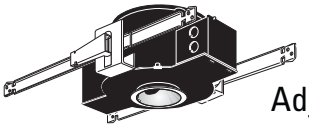

4" DLV

Adjustable Downlight

Open Cone

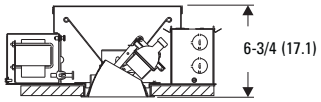

Aperture:	4-5/16 (11.0)
Ceiling opening:	4-7/8 (12.4)
Overlap trim:	5-7/16 (13.8)

All dimensions are inches (centimeters).

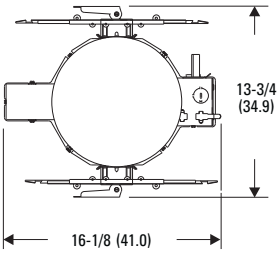

ORDERING INFORMATION

Example: **DLV ADJ MR164BCT30120**

Choose the boldface catalog nomenclature that best suits your needs and write it on the appropriate line. Order accessories as separate catalog numbers (shipped separately).

DLV ADJ

Series

DLV

Configuration

ADJ

Lamp designation

MR16	MR16 capability (Standard)
MR11	MR11 capability
ALR12	ALR12 capability
ALR18	ALR18 capability
AR70[1]	AR70 capability

Cone/Color

4BC[2]	Black
4AC	Clear
4PC	Pewter
4WTC	Wheat
4UBC	Umber
4GC	Gold
4CC	Champagne gold
4WC[2]	White
4MB[2]	Contoured black baffle
4WB[2]	Contoured white baffle

Type

T30	Tapered cut, for angles 25° - 45°.
T20	Tapered cut, for angles 15° - 25°.
T00	Straight cut, for angles 0° - 15°.

Finish

(blank)	Specular low iridescent
LD	Semi-diffuse low iridescent
LS	Highly specular

Voltage

120
277
347

Options

TRW	White painted flange. (Standard with WC, MB, and WB.)
LRC[3]	Provides compatibility with Lithonia Reloc System.

NOTES

1 Clear safety glass standard with AR70 lamp designation.
2 Not available with finishes.
3 For compatible Reloc systems, refer to options and accessories tab.

Accessories

- For lens accessories, refer to options and accessories tab.
- For lamp options, refer to options and accessories tab.

gotham®
An Acuity Brands Company

GOTHAM ARCHITECTURAL DOWNLIGHTING
A DIVISION OF ACUITY LIGHTING GROUP, INC.
1400 Lester Road Conyers Georgia 30012
P 800 315 4982 F 770 860 3129
www.gothamlighting.com

DLV ADJ 4 ALV-170

bpi

brandston partnership inc.

Lighting design

122 West 26th Street 5th floor
New York New York 10001
T. 212.924.4050 F. 212.691.5418

Utah Museum of Natural History
Salt Lake City, UT

AQ-1/AQ-2

LAMP PERFORMANCE DATA

All data was calculated from each lamp manufacturer's published data and is subject to normal lamp variations. Maximum footcandle is usually at the aiming point, but not always on wider spread lamps. Lamp data supplied by manufacturers is approximate, and individual lamp performance may vary.

ACCENT LIGHTING ANGLE PERFORMANCE DATA

DISTANCE LAMP TO LIGHTED SURFACE — 2 FEET — 4 FEET
DISTANCE DOWN TO AIMING POINT — V1 (FT) 2 — V2 (FT) 7

Lamp No.	Watts	Type	MFG.	Beam Width (°) to 50% MBCP	MBCP	Aiming Angle 45° FT-CANDLES	Beam Length	Beam Width	Aiming Angle 60° FT-CANDLES	Beam Length	Beam Width
MR-16											
EZX	20	VNSP	GE	7	8200	725	0.5	0.3	64	2.0	1.0
EZY	20	VNSP	GE	7	13100	1158	0.5	0.3	102	2.0	1.0
ESX	20	NSP	GE/SY/PH	15	3600	318	1.1	0.7	28	4.4	2.1
BAB	20	FL	GE/SY/PH	40	525	46	3.4	2.1	4	19.3	5.8
EYS	42	SP	GE	20	2400	212	1.5	1.0	19	6.2	2.8
EXT	50	NSP	GE/SY/PH	13	10200	902	0.9	0.6	80	3.8	1.8
EXZ	50	NFL	GE/SY/PH	26	3400	301	2.0	1.3	27	8.8	3.7
EXN	50	FL	GE/SY/PH	40	1850	164	3.4	2.1	14	19.3	5.8
EYJ	71/65	MFL	GE/SY	24	4900	433	1.8	1.2	38	7.9	3.4
EYC	71/65/75	FL	GE/SY/PH	36	2100	186	2.9	1.8	16	15.2	5.2
MR-11											
FTB	20	SP	SY	10	5000	442	0.7	0.5	39	2.9	1.4
FTC	20	MFL	SY	25	1450	128	1.9	1.3	11	8.3	3.5
FTD	20	NFL	SY	30	600	53	2.3	1.5	5	10.9	4.3
FTE	35	SP	SY	10	6500	575	0.4	0.5	51	2.9	1.4
FTF	35	SP	SY	20	3000	265	1.5	1.0	23	6.2	2.8
FTH	35	NFL	SY	30	1300	115	2.3	1.5	10	10.9	4.3
ALR-12											
GBD	20	NSP	PH	6	7000	619	0.4	0.3	55	1.7	0.8
GBE	20	SP	PH	18	1500	133	1.3	0.9	12	5.5	2.5
GBF	20	FL	PH	32	750	66	2.5	1.6	6	12.2	4.6
ALR-18											
GBJ	50	SP	PH	10	13000	1149	0.7	0.5	102	2.9	1.4
GBK	50	NFL	PH	25	1900	468	1.9	1.3	15	8.3	3.5
AR-70											
20AR70/8/SP	20	SP	SY	8	7000	619	0.6	0.4	55	2.3	1.1
20AR70/25/FL	20	FL	SY	25	850	75	1.9	1.3	7	8.3	3.5
50AR70/8/SP	50	SP	SY	8	15000	1326	0.6	0.4	117	2.3	1.1
50AR70/25/FL	50	FL	SY	25	2000	177	1.9	1.3	16	8.3	3.5

LOCATION OF ACCENT LUMINAIRE TO PROVIDE AIMING PT. 5.5' ABOVE THE FLOOR

Clg. Ht. (ft)	60° Aiming Angle Out (H)	60° Aiming Angle Down (V2)	45° Aiming Angle Out (H)	45° Aiming Angle Down (V1)
8	1.5	2.5	2.5	2.5
9	2.0	3.5	3.5	3.5
10	2.5	4.5	4.5	4.5

NOTES
1 IES indicates 5.5' above the floor is an ideal viewing height.
2 Tested to current IES and NEMA standards under stabilized laboratory conditions. Various operating factors can cause differences between laboratory data and actual field measurements. Dimensions and specifications are based on the most current available data and are subject to change without notice.

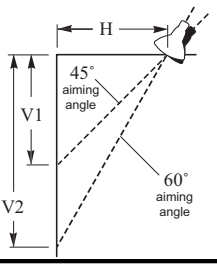

Formula for other distances and aiming angles.

$$fc = \frac{MBCP \times \cos^3 (\text{aiming angle})}{H^2 \text{ (distance from wall squared)}}$$

Aiming angle	$\cos^3$	Feet out from wall (H) 6	7	8	9	10
		Feet down from ceiling (V)				
45°	.354	6	7	8	9	10
50°	.266	7	8	10	11	12
55°	.189	9	10	11	13	14
60°	.125	10	12	14	16	17
65°	.076	13	15	18	19	21
70°	.040	17	19	22	25	28
75°	.017	22	26	30	34	37

ALV-170

©2003 Gotham, Rev. 01/03
ALV-170.P65

gotham
An Acuity Brands Company

GOTHAM ARCHITECTURAL DOWNLIGHTING
A DIVISION OF ACUITY LIGHTING GROUP, INC.
1400 Lester Road Conyers Georgia 30012
P 800 315 4982 F 770 860 3129
www.gothamlighting.com

bpi

brandston partnership inc.
Lighting design
122 West 26th Street 5th floor
New York New York 10001
T. 212.924.4050 F. 212.691.5418

Utah Museum of Natural History
Salt Lake City, UT

AQ-1/AQ-2

NARROW CHANNELS

Series **2410**

APPLICATIONS

Specifiers choice for a variety of display and utility lighting needs. Compact design occupies minimum space. Quality components, welded construction assuring long trouble free life. Broad range of types and lengths to provide the right light for the job.

SPECIFICATIONS

CONSTRUCTION: Die formed of 20 gauge cold rolled prime steel, rigidly fabricated, and electrically welded to insure true and perfect alignment.

MOUNTING: Installed flush with ceiling surface or stem mounted, singly or in continuous rows. For continuous mounting, end knockouts may be removed and units joined together. Adequate knockouts and holes are provided for mounting and feeds.

ELECTRICAL: Thermally protected Class “P” Energy Saving 265MA-T8 electronic ballasts, 430MA Rapid Start HPF, Trigger Start LPF-T12 magnetic ballasts for 118 volt 60 Hz operation standard. Other electronic ballasts, other voltages and frequencies available, consult factory. (see Options listing).

FINISH: All steel component parts are completely protected against rust and discoloration after fabrication through an automated conveyorized multi-stage phosphate bonding process. Finished with an electrostatic baked white polyester thermosetting powder coating. This electronic computer controlled integrated system assures consistent 88%+ reflectance efficiency and maximum durability.

CERTIFICATION: The Series 2410 is U.L. and C.U.L. listed and bears the label of the I.B.E.W./AFL-CIO, Local #3.

Due to the very nature of coves and enclosed areas, the heat ambiance temperature must be considered when designing and installing in confined spaces, so that the spaces are adequately ventilated to provide heat dissipation and air circulation to prevent ballast cycling, failure, or reduced ballast and lamp life.

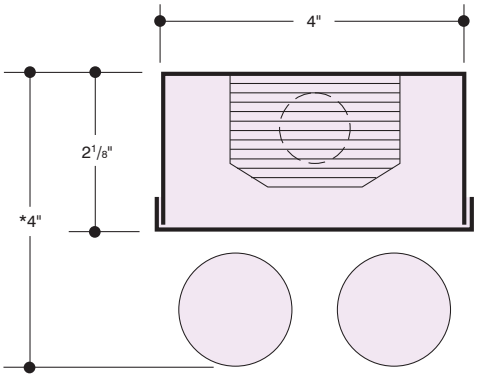

Dimensions shown are with T-12 lamps.
* Minus 1/4" for OCTRON T-8 lamp.

XTRALUME® and LEGION® are registered trademarks of LEGION LIGHTING CO., INC.

LEGION® LIGHTING CO., INC.
221 Glenmore Ave., Brooklyn, NY 11207 • Tel: 718/498-1770 • Fax: 718/498-0128
Toll Free Fax: 800/4-LEGION

bpi

brandston partnership inc.

Lighting design

122 West 26th Street 5th floor
New York New York 10001
T. 212.924.4050 F. 212.691.5418

Utah Museum of Natural History
Salt Lake City, UT

CF-1

Type
Job Name
Catalog Number

Transcendent » **P-8900**

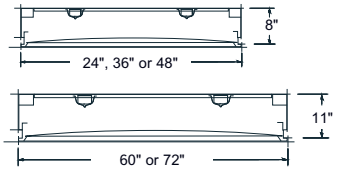

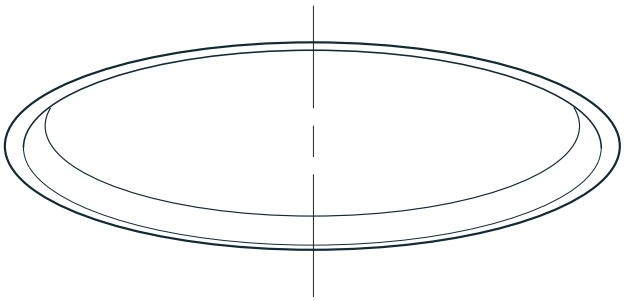

ordering

series	lamp rows	shielding	color/finish*	circuiting	voltage	ceiling system	options
P-8920 2' diameter	(2' diameter) (2) T8,T8U6 2BX_w* 3BX_w* 4BX_w*	CWA* concave white acrylic VWA convex white acrylic FWA† flat white acrylic *standard †2', 3', 4' & 5' diameters only	TMW† textured matte white YGW gloss white Y__ premium color CC custom color *indicates color of outer ring only †standard	SC single circuit DC dual circuit	120 277 347* 120-277 *T8, biax & T5HO only	X1 exposed T-bar X3B* hard ceiling *standard	EML* EMH* DM RSE† 10THD† B__ FH *consult factory for fixture lengths < 4' †T8 & biax only
P-8930 3' diameter	(3' diameter) (4) T8, T5, T5HO (6) T8, T5, T5HO						
P-8940 4' diameter	(4' diameter) (4) T8, T5, T5HO (6) T8, T5, T5HO (8) T8, T5, T5HO						
P-8950 5' diameter	(5' diameter) (6) T8, T5, T5HO (8) T8, T5, T5HO (10) T8, T5, T5HO						
P-8960 6' diameter	(6' diameter) (8) T8, T5, T5HO (10) T8, T5, T5HO (12) T8, T5, T5HO *biax, specify 39w, 40w, 50w or 55w						

Applications Offices, lobbies, retail, schools, libraries, themed spaces.

Features A round, recessed luminaire with a housing depth that ensures even lens illumination. Designed for T5/HO, T8 or biax lamps, this fixture is ideal for spaces where non-traditional fixtures are desired to amplify the architectural design. The extruded aluminum doorframe gives the fixture strength and clean architectural detailing. Concave, convex or flat lenses are available.

Construction The housing, available in 2-, 3-, 4-, 5- or 6-foot diameter, is made of die-formed, 20-gauge steel.

Finish The standard housing color is gloss white (YGW) while the standard exterior trim color is textured matte white (TMW) using polyester powder paint. Refer to **Defining Section** for optional paint colors.

Electrical T8 and biax fixtures have instant-start electronic ballasts with less than 20% THD. T5/HO fixtures have programmed-start electronic ballasts with less than 10% THD. Fixtures are U.L. Damp labeled (non-emergency) and I.B.E.W. manufactured. Maximum ballast size available: 2 3/8" width x 1 1/2" height.

Mounting Fixture is to be recess-mounted into exposed T-bar or hard ceiling application(s).

Options **EML**: emergency battery (T5/HO=600-700 lumens; T8=600-700 lumens; BX=600-700 lumens); **EMH**: emergency battery (T5/HO=1100-1400 lumens; T8=1100-1400; lumens; BX=1100-1200 lumens); **DM**: dimming (consult factory); **RSE**: rapid-start electronic, (T8 and biax only); **10THD**: ballast with < 10% total harmonic distortion, (T8 and biax only); **B_**: specific ballast, specify manufacturer and catalog number (consult factory); **FH**: fixture fusing (slow blow).

bpi

brandston partnership inc.

Lighting design

122 West 26th Street 5th floor
New York New York 10001
T. 212.924.4050 F. 212.691.5418

Utah Museum of Natural History
Salt Lake City, UT

CF-2

photometric data

P-8920-2BX40W-CWA-YGW

Report # LSI15522 D=100.0% I=0.0%
Spacing Criteria: Along 1.2; Across 1.2
Lamp Lumens: 6300 Input Watts: 70

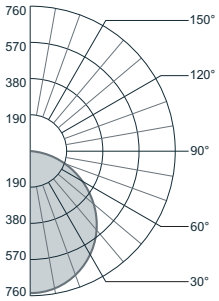

Candlepower Summary

Angle	Mean CP	Lumens
0	746	
5	742	72
10	732	
15	715	201
20	691	
25	661	304
30	626	
35	585	365
40	539	
45	487	375
50	431	
55	373	333
60	312	
65	251	248
70	191	
75	130	137
80	72	
85	22	30
90	0	

Zonal Lumen Summary

Zone	% Lamp	% Luminaire
0-90	32.78	100.00
90-180	0.00	0.00

Efficiency = 32.8%

Luminance Summary (cd/m²)

Angle	Mean cd/m²
45	2820
55	2660
65	2429
75	2052
85	1051

Coefficients of Utilization (%)

effective floor cavity reflectance = .20

Floor	80				70				50		
Ceiling	80	70	50	30	10	70	50	30	10	50	30	10
Wall	70	50	30	10		70	50	30	10	50	30	10
RCR **0**	39	39	39	39		38	38	38	38	36	36	36
1	36	35	33	32		35	34	33	32	32	31	31
2	33	31	29	27		32	30	28	26	29	27	26
3	30	27	25	23		29	27	24	22	26	24	22
4	28	24	22	20		27	24	21	19	23	21	19
5	26	22	19	17		25	21	19	17	21	18	17
6	24	19	17	15		23	19	16	15	19	16	14
7	22	17	15	13		21	17	15	13	17	14	13
8	20	16	13	11		20	16	13	11	15	13	11
9	19	14	12	10		18	14	12	10	14	11	10
10	17	13	10	09		17	13	10	09	13	10	09

photometric data

P-8940-8T8-CWA-YGW

Report # LSI16393 D=100.0% I=0.0%
Spacing Criteria: Along 1.3; Across 1.3
Lamp Lumens: 3000 Input Watts: 235

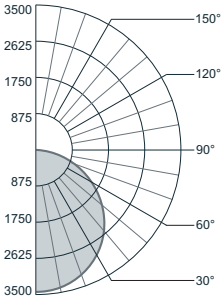

Candlepower Summary

Angle	Mean CP	Lumens
0	3430	
5	3415	330
10	3375	
15	3303	931
20	3205	
25	3078	1416
30	2929	
35	2754	1718
40	2549	
45	2321	1786
50	2068	
55	1816	1619
60	1541	
65	1258	1244
70	976	
75	691	728
80	418	
85	166	193
90	0	

Zonal Lumen Summary

Zone	% Lamp	% Luminaire
0-90	41.52	100.00
90-180	0.00	0.00

Efficiency = 41.5%

Luminance Summary (cd/m²)

Angle	Mean cd/m²
45	3141
55	3029
65	2847
75	2554
85	1820

Coefficients of Utilization (%)

effective floor cavity reflectance = .20

Floor	80				70				50		
Ceiling	80	70	50	30	10	70	50	30	10	50	30	10
Wall	70	50	30	10		70	50	30	10	50	30	10
RCR **0**	49	49	49	49		48	48	48	48	46	46	46
1	45	44	42	40		44	43	41	40	41	40	38
2	41	38	36	33		40	37	35	33	36	34	32
3	38	34	31	28		37	33	30	28	32	29	27
4	35	30	27	24		34	29	26	24	28	26	23
5	32	27	23	20		31	26	23	20	25	22	20
6	29	24	20	17		28	23	20	17	23	19	17
7	27	21	18	15		26	21	18	15	20	17	15
8	25	19	16	13		24	19	15	13	18	15	13
9	23	17	14	11		22	17	14	11	16	13	11
10	21	16	12	10		21	15	12	10	15	12	10

installation

Mounting Locations

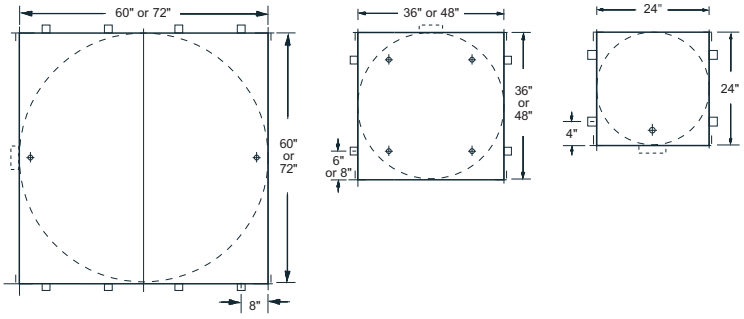

Fixture must be installed prior to ceiling installation

Ceiling Systems

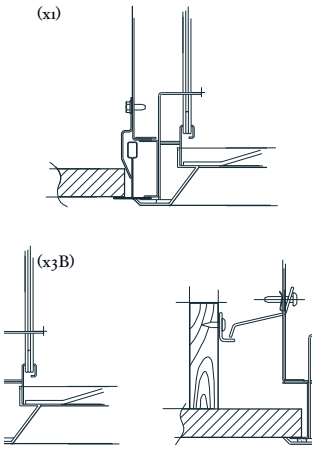

In an effort to continually provide the highest quality products, Prudential reserves the right to change design specifications and/or materials, without notice.

 Prudential Lighting 1737 E. 22nd St. Los Angeles, CA 90058 phone 213.746.0360 fax 213.741.8590 **www.prulite.com**

bpi

brandston partnership inc.

Lighting design

122 West 26th Street 5th floor
New York New York 10001
T. 212.924.4050 F. 212.691.5418

Utah Museum of Natural History
Salt Lake City, UT

CF-2

Catalog Number
ME

Fixture Type:

The Micro Ellipse is a lightweight framing spotlight with variable focus ability. Beam angles range approximately from 10˚ to 35˚ and field angles from 25˚ to 50˚. Utilizing the long life, low wattage and cost efficient family of MR-16 dichroic reflector lamps these lighting units are ideal for architectural and display applications. Included with each unit are four steel framing shutters to provide beam shaping capability. Integral to the unit is a slot which will accept the pattern holder, the optional dual gobo rotator, or the optional drop-in iris. This slot does have an adjustable cover to prevent light leak.

Specifications subject to change without notice

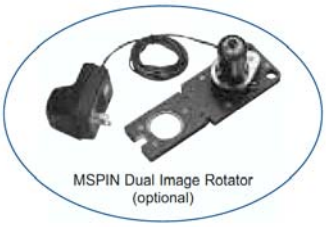

MSPIN Dual Image Rotator
(optional)

20-75 WATT
MICRO ELLIPSE
MR-16

Features

- Die-cast aluminum components
- Attractive extruded aluminum housing
- Push-on type two-pin ceramic socket
- Dimmable 75W, 12V short circuit and thermal protected electronic transformer
- Tool free lamp centering
- Adaptable to most track systems
- Color fame & safety cable with spring clip included
- U.L., c.U.L. and CE listed for 75 watts
- Made in the USA

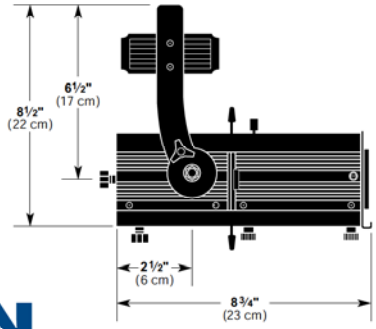

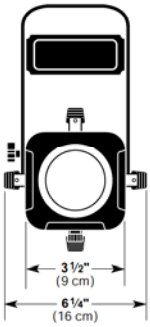

ALTMAN Lighting, Inc.
BRINGING IMAGINATION TO LIGHT

bpi

brandston partnership inc.

Lighting design

122 West 26th Street 5th floor
New York New York 10001
T. 212.924.4050 F. 212.691.5418

Utah Museum of
Natural History
Salt Lake City, UT

CZ-1

Specifications

Housing: Ribbed aluminum extrusion and die-cast aluminum construction.

Materials: Construction employs corrosion-resistant materials and SAE hardware. All handles are heat resistant phenolic.

Yoke: 1" x ⅛" aluminum yoke with clearance hole for ½ inch bolt.

Lens: Crown glass (white plate) lenses. Movable lenses mounted on lens carriers with teflon glide bearing.

Socket: GX5.3, with heat shield.

Rating: 120 volts A/C operation, .625 amps, 75 watts maximum (220–240 VAC, 50/60 Hz unit available).

Transformer: 75W, 12V dimmable electronic transformer. Short circuit and thermal protected. Electronic internal resettable protection. Patent pending auto heat regulation that also acts as overload protection. Thermal auto-reset 125°C switch.

Cable: 6' total length with molded male edison plug (unless track adapter specified).

Shutters: Galvanized steel, fully adjustable and removable with heat resistant handles.

Focusing Lamp: Fully adjustable in 3 axis without tools, each axis independent of the others.

Focusing Fixture: Lens movements contained within body, adjustable with heat resistant knob.

Accessories: Accepts beam reducing circle template, pattern holder for glass/metal gobo and 3⅜" dia. accessories. Pattern slot shall be provided with a cover. Provision shall be made in the pattern slot for gobo rotators.

Finish: Black epoxy sandtex, electrostatic application.

Weight: Approx; 4.5 lbs. (2 kg.)

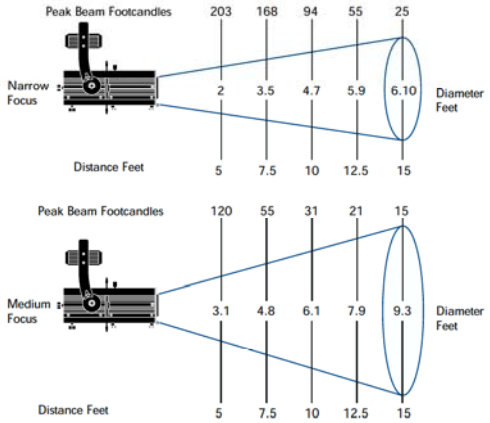

PHOTOMETRIC DATA FOR EYC LAMP

Actual Photometrics Differ Slightly Among Lamp Manufacturers

LAMP DATA

Lamp Type	Watts	Volts	Rated Life (Hours)	Correction Factor
EYJ	75	12	4000	1.00
EYC	75	12	4000	1.00
EXT	50	12	5000	.79
EXN	50	12	5000	.79
EZX	20	12	4000	.22
BAB	20	12	4000	.22

ACCESSORIES SUPPLIED WITH LUMINAIRE	
MCF	Color Frame 3⅜" x 3⅜"
MAC-SC	Safety Cable, 18"

ADDITIONAL ACCESSORIES	
510-M	Flat Steel Pipe Clamp
MBD	4-way Barn Doors
MEPH	Pattern Holder, 1¼" diameter opening
MECT	Beam Reducing Circle Template
MAPH-G	Pattern Holder, 1¼" Dia. Opening Accepts Glass and Metal Patterns
MSPIN-110	MasterSpin Variable Speed Bi-Directional Dual Gobo-Rotator, 120 VAC
MSPIN-220	MasterSpin Variable Speed Bi-Directional Dual Gobo-Rotator, 220 VAC
MADii	Drop-in Iris
54-SVT183-24CC	Coiled Cord w/Edison Connector, Factory Installed
TLA-J	Juno Track Adapter Installed
TLA-H	Halo Track Adapter installed
TLA-L	Lightolier Track Adapter installed
TLA-E166	Nordic Eco 1 Circuit, Factory Installed
TLA-TEK67	Nordic Spec Grade 2 Circuit, Factory Installed
TLA-XTSA66	Nordic Spec Grade 3 Circuit, Factory Installed

ALTMAN Lighting, Inc.
BRINGING IMAGINATION TO LIGHT

57 Alexander Street, Yonkers, NY 10701 Tel: 914.476.7987, 212.569.7777, Fax: 914.963.7304, Toll free: 800.4.ALTMAN or Visit our website at http://www.altmanltg.com © 2003 Altman Stage Lighting Company, Inc.
Altman Lighting, Inc. is a subsidiary of Altman Stage Lighting Company, Inc.

111103

FEATURES

OPTICAL SYSTEM

- Self-flanged, semi-specular or matte-diffuse reflector.
- Patented Vertisys® - Bounding Ray™ Optical Principle design (US Patent #5,800,050) provides lamp before lamp image. Lamp image that reflects smoothly from the top of the reflector to the aperture, providing optimal fixture performance and efficiency.

MECHANICAL SYSTEM

- 16-gauge galvanized steel mounting/plaster frame with friction support clips to retain optical system. Maximum 7/8" ceiling thickness.
- 16-gauge galvanized steel mounting bars with continuous 4" vertical adjustment are shipped pre-installed. Post installation adjustment possible without the use of tools from above or below ceiling.
- Galvanized steel junction box with hinged access covers and spring latch. Two combination 1/2"–3/4" and three 1/2" knockouts for straight-through conduit runs. Capacity: 8 (4 in, 4 out) No. 12 AWG conductors, rated for 90°C.

ELECTRICAL SYSTEM

- Rugged aluminum lampholder housing.
- Vertically-mounted, positive-latch, thermoplastic socket.
- Class P, thermally protected, high power factor electronic ballast mounted to the junction box.
- Simply5™ technology available. SIMPLY5 LIGHTING INTELLIGENCE

LISTING

- Fixtures are UL Listed for thru-branch wiring, Non-IC recessed mounting and damp locations. Listed and labeled to comply with Canadian Standards.

Type ..... Catalog number .....

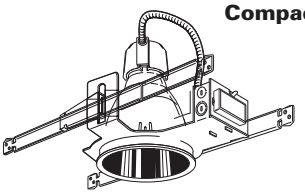

Compact Fluorescent Downlights

6" AFV

Open Reflector

Vertical Double Twin-Tube or Triple-Tube Lamp

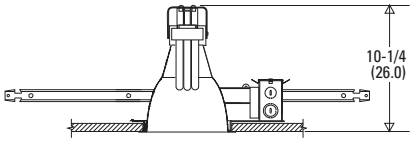

Aperture:	6-1/4 (15.9)
Ceiling opening:	7-1/8 (18.1)
Overlap trim:	7-1/2 (19.1)

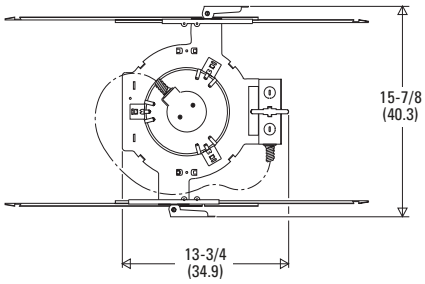

All dimensions are inches (centimeters)

*Maximum height depends on lamp wattage/type, dimensions range from 10-3/4" for 18DTT, 26DTT and 42 TRT; 9-3/8" for 13DTT, 18TRT, 26TRT and 32TRT

ORDERING INFORMATION

Example: **AFV 32TRT 6AR MVOLT WLP**

Choose the boldface catalog nomenclature that best suits your needs and write it on the appropriate line. Order accessories as separate catalog numbers (shipped separately).

AFV

Series	Wattage/Lamp	Aperture/Trim color	Finish	Voltage	Ballast[3]	Options
AFV	**13DTT**	**6AR** Clear	(blank) Semi-specular	**MVOLT**[2]	(blank) Electronic ballast	**EL**[6] Emergency battery pack with integral test switch
	18DTT	**6PR** Pewter	**LD** Matte-diffuse	**120**	**DMHL**[4] Lutron Compact-SE™ electronic dimming ballast. Minimum dimming level 5%	**ELR**[6] Emergency battery pack. Remote test switch
	26DTT	**6UBR** Umber		**277**	**ADEZ**[4] Advance Mark10® electronic dimming ballast. Minimum dimming level 5%	**GMF**[7] Single, slow-blow fuse
	18TRT	**6WTR** Wheat		**347**	**S5**[5] SIMPLY5™ system ballast	**GLR**[7] Single, fast-blow fuse
	26TRT	**6WR**[1] White painted				**TRW** White painted flange (standard on MB and WB)
	32TRT	**6MB**[1] Black baffle				**TRBL** Black painted flange
	42TRT	**6WB**[1] White baffle				**GSKT** Foam gasketing
						WLP With 3500°K lamp (shipped separately)
						LRC[8] Provides compatibility with Lithonia Reloc System. Reloc System can be installed less this option with connectors provided by others. Access above ceiling required
						CP[9] Chicago Plenum
						CSA CSA Certified
						BDP[10] Ballast disconnect plug
						HW Hardwire for S5 system; replaces Reloc
						ELHL[6] High lumen output emergency battery pack. Integral test switch provided
						ELRHL[6] High lumen output emergency battery pack. Remote test switch provided

NOTES

1 Not available with finishes.
2 Multi-volt electronic ballast capable of operating on any line voltage from 120V through 277V, 50 or 60 Hz.
3 For additional ballast types, refer to Technical Bulletins tab.
4 Available in 120V or 277V only. Not available with 13DTT.
5 Simply5™ includes 9' S5 MLC Reloc wiring system (shipped separately). Available in 120V or 277V only. Not available in 13W or 18W. See simply5.net for more information.
6 For dimensional changes, refer to Technical Bulletins tab.
7 Not available with MVOLT.
8 For compatible Reloc systems, refer to Technical Bulletins tab.
9 Not available with EL or ELR options.
10 Meets codes that require in-fixture disconnect.

Accessories

Order as separate catalog numbers.

SCA6 Sloped ceiling adapter. Degree of slope must be specified (10D, 15D, 20D, 25D, 30D). Ex: SCA6 10D

CTA4-8 YK Ceiling thickness adapter. (Extends mounting frame to accommodate ceiling thickness up to 4-1/4" DTT and 3-1/4" TRT)

gotham® An AcuityBrands Company

GOTHAM ARCHITECTURAL DOWNLIGHTING
1400 Lester Road Conyers Georgia 30012
P 800 315 4982 F 770 860 3129
www.gothamlighting.com

AFV 6 OPEN **DCF-370**

bpi

brandston partnership inc.

Lighting design

122 West 26th Street 5th floor
New York New York 10001
T. 212.924.4050 F. 212.691.5418

Utah Museum of Natural History
Salt Lake City, UT

DC-1

Type ..... Catalog number .....

FEATURES

OPTICAL SYSTEM

- Self-flanged, semi-specular or matte-diffuse reflector.
- Patented Vertisys® - Bounding Ray™ Optical Principle design (US Patent #5,800,050) provides lamp before lamp image. Lamp image that reflects smoothly from the top of the reflector to the aperture, providing optimal fixture performance and efficiency.

MECHANICAL SYSTEM

- 16-gauge galvanized steel mounting/plaster frame with friction support clips to retain optical system. Maximum 7/8" ceiling thickness.
- 16-gauge galvanized steel mounting bars with continuous 4" vertical adjustment are shipped pre-installed. Post installation adjustment possible without the use of tools from above or below ceiling.
- Galvanized steel junction box with hinged access covers and spring latch. Two combination 1/2"–3/4" and three 1/2" knockouts for straight-through conduit runs. Capacity: 8 (4 in, 4 out) No. 12 AWG conductors, rated for 90°C.

ELECTRICAL SYSTEM

- Rugged aluminum lampholder housing.
- Vertically-mounted, positive-latch, thermoplastic socket.
- Class P, thermally protected, high power factor electronic ballast mounted to the junction box.
- Simply5™ technology available. SIMPLY5 LIGHTING INTELLIGENCE

LISTING

- Fixtures are UL Listed for thru-branch wiring, Non-IC recessed mounting and damp locations. Listed and labeled to comply with Canadian Standards.

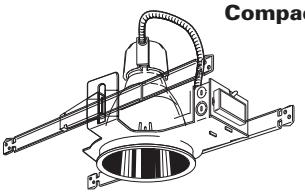

Compact Fluorescent Downlights

6" AFV

Open Reflector

Vertical Double Twin-Tube or Triple-Tube Lamp

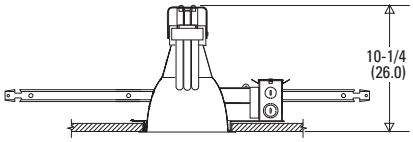

Aperture:	6-1/4 (15.9)
Ceiling opening:	7-1/8 (18.1)
Overlap trim:	7-1/2 (19.1)

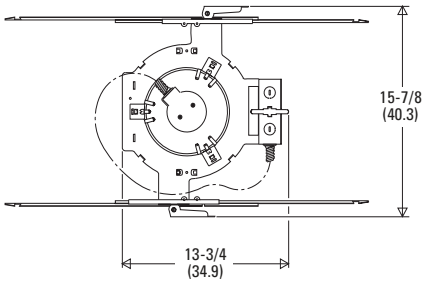

All dimensions are inches (centimeters)

*Maximum height depends on lamp wattage/type, dimensions range from 10-3/4" for 18DTT, 26DTT and 42 TRT; 9-3/8" for 13DTT, 18TRT, 26TRT and 32TRT

ORDERING INFORMATION

Example: **AFV 32TRT 6AR MVOLT WLP**

Choose the boldface catalog nomenclature that best suits your needs and write it on the appropriate line. Order accessories as separate catalog numbers (shipped separately).

AFV

Series	Wattage/Lamp	Aperture/Trim color	Finish	Voltage	Ballast[3]	Options
AFV	**13DTT**	**6AR** Clear	(blank) Semi-specular	**MVOLT**[2]	(blank) Electronic ballast	**EL**[6] Emergency battery pack with integral test switch
	18DTT	**6PR** Pewter	**LD** Matte-diffuse	**120**	**DMHL**[4] Lutron Compact-SE™ electronic dimming ballast. Minimum dimming level 5%	**ELR**[6] Emergency battery pack. Remote test switch
	26DTT	**6UBR** Umber		**277**	**ADEZ**[4] Advance Mark10® electronic dimming ballast. Minimum dimming level 5%	**GMF**[7] Single, slow-blow fuse
	18TRT	**6WTR** Wheat		**347**	**S5**[5] SIMPLY5™ system ballast	**GLR**[7] Single, fast-blow fuse
	26TRT	**6WR**[1] White painted				**TRW** White painted flange (standard on MB and WB)
	32TRT	**6MB**[1] Black baffle				**TRBL** Black painted flange
	42TRT	**6WB**[1] White baffle				**GSKT** Foam gasketing
						WLP With 3500°K lamp (shipped separately)
						LRC[8] Provides compatibility with Lithonia Reloc System. Reloc System can be installed less this option with connectors provided by others. Access above ceiling required
						CP[9] Chicago Plenum
						CSA CSA Certified
						BDP[10] Ballast disconnect plug
						HW Hardwire for S5 system; replaces Reloc
						ELHL[6] High lumen output emergency battery pack. Integral test switch provided
						ELRHL[6] High lumen output emergency battery pack. Remote test switch provided

NOTES

1 Not available with finishes.
2 Multi-volt electronic ballast capable of operating on any line voltage from 120V through 277V, 50 or 60 Hz.
3 For additional ballast types, refer to Technical Bulletins tab.
4 Available in 120V or 277V only. Not available with 13DTT.
5 Simply5™ includes 9' S5 MLC Reloc wiring system (shipped separately). Available in 120V or 277V only. Not available in 13W or 18W. See simply5.net for more information.
6 For dimensional changes, refer to Technical Bulletins tab.
7 Not available with MVOLT.
8 For compatible Reloc systems, refer to Technical Bulletins tab.
9 Not available with EL or ELR options.
10 Meets codes that require in-fixture disconnect.

Accessories

Order as separate catalog numbers.

SCA6 Sloped ceiling adapter. Degree of slope must be specified (10D, 15D, 20D, 25D, 30D). Ex: SCA6 10D

CTA4-8 YK Ceiling thickness adapter. (Extends mounting frame to accommodate ceiling thickness up to 4-1/4" DTT and 3-1/4" TRT)

gotham® An AcuityBrands Company

GOTHAM ARCHITECTURAL DOWNLIGHTING
1400 Lester Road Conyers Georgia 30012
P 800 315 4982 F 770 860 3129
www.gothamlighting.com

AFV 6 OPEN **DCF-370**

bpi

brandston partnership inc.

Lighting design

122 West 26th Street 5th floor
New York New York 10001
T. 212.924.4050 F. 212.691.5418

Utah Museum of Natural History
Salt Lake City, UT

DC-1

FEATURES

OPTICAL SYSTEM

- Internal housing components painted matte black. Lamp snoot minimizes stray light in housing.
- Finishing trim is microgroove black baffle with white painted flange or specular, semi-diffuse or highly specular cone with flange that matches cone finish. White painted flange optional.
- Optical system retained by self-aligning butterfly support springs.
- Accommodates up to two lenses, filters or louvers.
- Softening lens standard (supplied).

MECHANICAL SYSTEM

- Black painted housing features tool-less top access and accommodates a maximum 2" ceiling thickness.
- Re-lamp capability from above or below ceiling.
- Mounting bars are 16-gauge galvanized steel with continuous 4" vertical adjustment, held in place with tool-less, integral cam-action locking. Post installation adjustment possible without the use of tools from above or below the ceiling. Shipped pre-installed.
- Secondary housing adjustment system for precise, final flange to ceiling alignment.
- Painted steel junction box with bottom-hinged access covers and spring latches. Four combination 1/2"-3/4" knockouts for straight-through conduit runs. Capacity: 8(4 in, 4 out) No. 12 AWG conductors, rated for 90°C.

ELECTRICAL SYSTEM

- Tool-less access door provides access to junction box through the aperture.
- Replaceable socket assembly. MR16 socket assembly standard (20W - 75W).
- Magnetic step-down transformer (replaceable without the use of tools).
- Thermally-activated insulation detector (replaceable without the use of tools).

LISTING

- Fixtures are UL listed for thru-branch wiring, recessed mounting and damp locations. Listed and labeled to comply with Canadian Standards.

Type ..... Catalog number .....

....

Low Voltage Downlights

4" DLV

Downlight

Open Cone

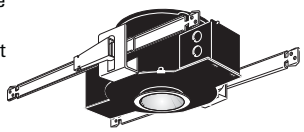

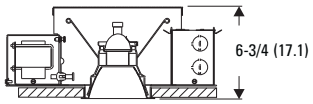

Aperture:	4-5/16 (11.0)
Ceiling opening:	4-7/8 (12.4)
Overlap trim:	5-7/16 (13.8)

All dimensions are inches (centimeters).

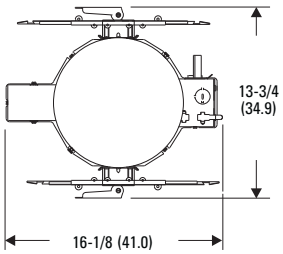

ORDERING INFORMATION

Example: **DLV DWN MR164AC 120**

Choose the boldface catalog nomenclature that best suits your needs and write it on the appropriate line.
Order accessories as separate catalog numbers (shipped separately).

DLV **DWN**

Series

DLV

Configuration

DWN

Lamp designation

MR16	MR16 capability (Standard)
MR11	MR11 capability
ALR12	ALR12 capability
ALR18	ALR18 capability
AR70[1]	AR70 capability

Cone/Color

4BC[2]	Black
4AC	Clear
4PC	Pewter
4WTC	Wheat
4UBC	Umber
4GC	Gold
4CC	Champagne gold
4WC[2]	White
4MB[2]	Contoured black baffle
4WB[2]	Contoured white baffle

Finish

(blank)	Specular low iridescent
LD	Semi-diffuse low iridescent
LS	Highly specular

Volt

120
277
347

Options

TRW	White painted flange. (Standard with WC, MB, and WB.)
LRC[3]	Provides compatibility with Lithonia Reloc System.

NOTES

1 Clear safety lens standard with AR70 lamp designation.
2 Not available with finishes.
3 For compatible Reloc systems, refer to options and accessories tab.

Accessories

- For lens accessories, refer to options and accessories tab.
- For lamp options, refer to options and accessories tab.

gotham®
An Acuity Brands Company

GOTHAM ARCHITECTURAL DOWNLIGHTING
A DIVISION OF ACUITY LIGHTING GROUP, INC.
1400 Lester Road Conyers Georgia 30012
P 800 315 4982 F 770 860 3129
www.gothamlighting.com

DLV 4 DLV-140

bpi

brandston partnership inc.

Lighting design

122 West 26th Street 5th floor
New York New York 10001
T. 212.924.4050 F. 212.691.5418

Utah Museum of Natural History
Salt Lake City, UT

DL-1/DL-2

4" DLV Downlight, Gotham Series

Distribution curve | Distribution data | Output data | Coefficient of utilization | Single luminaire data 30" above floor

DLV DWN MR16 4AC, Q50MR16/C/NSP15 (EXT) lamp, 0.3 s/mh, 880 rated lumens, test no. 2198043004

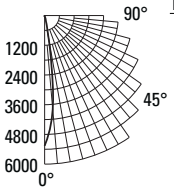

From 0°	cp.	Lumens
0°	5263	
5°	3805	301
15°	936	262
25°	114	58
35°	12	8
45°	3	2
55°	4	5
65°	8	6
75°	5	5
85°	3	5
90°	0	

Zone	Lumens	%lamp
0°-30°	622	70.7
0°-40°	630	71.6
0°-60°	637	72.4
0°-90°	654	74.3
90°-180°	0	0.0
0°-180°	654	74.3*

* Efficiency

ρf / ρc / ρw	80% 50%	80% 30%	20% 70% 50%	20% 70% 30%	50% 50%	50% 30%
1	84	82	82	81	79	78
2	80	78	79	77	76	75
3	77	74	76	73	74	72
4	74	71	73	71	72	70
5	72	69	71	68	70	68
6	70	67	69	66	68	66
7	68	65	67	65	67	64
8	66	63	66	63	65	63
9	65	62	64	62	64	61
10	63	61	63	60	63	60

Mount height	Initial fc at beam center	50% beam angle 15.6° Beam diameter	fc at beam edge	10% beam angle 35.1° Beam diameter	fc at beam edge
8'	174.0	1.5'	87.0	3.5'	17.4
10'	93.6	2.1'	46.8	4.8'	9.4
12'	58.3	2.6'	29.2	6.0'	5.8
14'	39.8	3.2'	19.9	7.3'	4.0
16'	28.9	3.7'	14.4	8.6'	2.9

DLV DWN MR16 4AC, 65MR16Q/10/NSP (FPA) lamp, 0.3 s/mh, 1100 rated lumens, test no. 2198040602

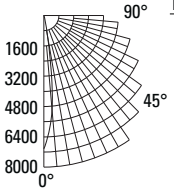

From 0°	cp.	Lumens
0°	7027	
5°	5017	398
15°	1182	334
25°	126	74
35°	15	11
45°	0	0
55°	0	0
65°	0	0
75°	0	0
85°	0	0
90°	0	

Zone	Lumens	%lamp
0°-30°	806	73.2
0°-40°	817	74.2
0°-60°	817	74.2
0°-90°	817	74.2
90°-180°	0	0.0
0°-180°	817	74.2*

* Efficiency

ρf / ρc / ρw	80% 50%	80% 30%	20% 70% 50%	20% 70% 30%	50% 50%	50% 30%
1	84	83	83	82	80	79
2	81	79	80	78	77	76
3	78	76	77	75	75	74
4	76	73	75	73	73	72
5	73	71	73	70	72	70
6	72	69	71	69	70	68
7	70	67	69	67	69	66
8	68	66	68	65	67	65
9	67	64	66	64	66	64
10	65	63	65	63	65	62

Mount height	Initial fc at beam center	50% beam angle 15.3° Beam diameter	fc at beam edge	10% beam angle 34.2° Beam diameter	fc at beam edge
8'	232.3	1.5'	116.1	3.4'	23.2
10'	124.9	2.0'	62.5	4.6'	12.5
12'	77.9	2.6'	38.9	5.8'	7.8
14'	53.1	3.1'	26.6	7.1'	5.3
16'	38.6	3.6'	19.3	8.3'	3.9

DLV DWN MR16 4AC, 50MR16Q/40/FL (EXN) lamp, 0.5 s/mh, 880 rated lumens, test no. 2198040605

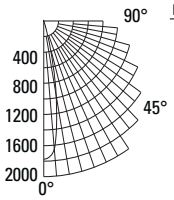

From 0°	cp.	Lumens
0°	1773	
5°	1646	147
15°	962	262
25°	291	139
35°	43	29
45°	1	1
55°	0	0
65°	0	0
75°	0	0
85°	0	0
90°	0	

Zone	Lumens	%lamp
0°-30°	548	62.3
0°-40°	577	65.6
0°-60°	578	65.7
0°-90°	578	65.7
90°-180°	0	0.0
0°-180°	578	65.7*

* Efficiency

ρf / ρc / ρw	80% 50%	80% 30%	20% 70% 50%	20% 70% 30%	50% 50%	50% 30%
1	74	73	73	71	70	69
2	70	68	69	67	67	65
3	67	64	66	64	64	62
4	64	61	63	61	62	60
5	61	58	61	58	60	57
6	59	56	58	56	57	55
7	57	54	56	53	55	53
8	54	52	54	51	54	51
9	53	50	52	49	52	49
10	51	48	51	48	50	48

Mount height	Initial fc at beam center	50% beam angle 29.5° Beam diameter	fc at beam edge	10% beam angle 52.1° Beam diameter	fc at beam edge
8'	58.6	2.9'	29.3	5.4'	5.9
10'	31.5	4.0'	15.8	7.3'	3.2
12'	19.6	5.0'	9.8	9.3'	2.0
14'	13.4	6.1'	6.7	11.2'	1.3
16'	9.7	7.1'	4.9	13.2'	1.0

DLV DWN MR16 4AC, Q71MR16/C/FL40 (EYC) lamp, 0.5 s/mh, 1100 rated lumens, test no. 2198043005

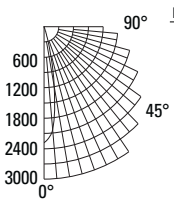

From 0°	cp.	Lumens
0°	2280	
5°	2027	182
15°	1190	325
25°	405	189
35°	62	42
45°	0	1
55°	1	1
65°	1	1
75°	1	1
85°	1	1
90°	0	

Zone	Lumens	%lamp
0°-30°	696	63.3
0°-40°	738	67.1
0°-60°	741	67.3
0°-90°	744	67.6
90°-180°	0	0.0
0°-180°	744	67.6*

* Efficiency

ρf / ρc / ρw	80% 50%	80% 30%	20% 70% 50%	20% 70% 30%	50% 50%	50% 30%
1	76	75	74	73	72	71
2	72	70	71	69	69	67
3	68	66	68	65	66	64
4	65	62	65	62	63	61
5	63	59	62	59	61	58
6	60	57	59	57	59	56
7	58	54	57	54	56	54
8	55	52	55	52	54	52
9	53	50	53	50	53	50
10	52	48	51	48	51	48

Mount height	Initial fc at beam center	50% beam angle 28.6° Beam diameter	fc at beam edge	10% beam angle 52.9° Beam diameter	fc at beam edge
8'	75.4	2.8'	37.7	5.5'	7.5
10'	40.5	3.8'	20.3	7.5'	4.1
12'	25.3	4.8'	12.6	9.5'	2.5
14'	17.2	5.9'	8.6	11.4'	1.7
16'	12.5	6.9'	6.3	13.4'	1.3

NOTES

1 Tested to current IES and NEMA standards under stabilized laboratory conditions. Various operating factors can cause differences between laboratory data and actual field measurements. Dimensions and specifications are based on the most current available data and are subject to change without notice.

DLV-140

©2003 Gotham, Rev. 01/03

DLV-140.P65

gotham

An AcuityBrands Company

GOTHAM ARCHITECTURAL DOWNLIGHTING
A DIVISION OF ACUITY LIGHTING GROUP, INC.
1400 Lester Road Conyers Georgia 30012
P 800 315 4982 F 770 860 3129
www.gothamlighting.com

bpi

brandston partnership inc.

Lighting design

122 West 26th Street 5th floor
New York New York 10001
T. 212.924.4050 F. 212.691.5418

Utah Museum of Natural History
Salt Lake City, UT

DL-1/DL-2

FEATURES

OPTICAL SYSTEM

- Internal housing components painted matte black. Lamp snoot minimizes stray light in housing.
- Etched, black, anodized tube from faceplate to lampholder minimizes sight lines into fixture for black hole appearance.
- Seamless cast faceplate is retained by self-aligning, torsion support springs.
- Accommodates up to two lenses, filters or louvers.
- Softening lens standard.

MECHANICAL SYSTEM

- Black painted housing features tool-less top access and accommodates a maximum 1-1/2" ceiling thickness.
- Re-lamp capability from above or below ceiling.
- 16-gauge galvanized steel mounting bars with continuous 4" vertical adjustment are shipped pre-installed. Post installation adjustment possible without the use of tools above or below ceiling.
- Secondary housing adjustment system for precise, final flange to ceiling alignment.
- Galvanized steel junction box with hinged access covers and spring latch. Four combination 1/2"-3/4" knockouts for straight-through conduit runs. Capacity: 8 (4 in, 4 out) No. 12 AWG conductors, rated for 90°C.

ELECTRICAL SYSTEM

- Tool-less access door provides access to junction box through the aperture.
- Replaceable socket assembly. MR16 socket assembly standard.
- 12-volt electronic transformer is replaceable without the use of tools.
- Thermally-activated insulation detector is replaceable without the use of tools.

LISTING

- Fixtures are UL Listed for thru-branch wiring, Non-IC recessed mounting and damp locations. Listed and labeled to comply with Canadian Standards.

Type ..... Catalog number .....

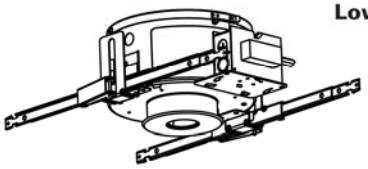

Low Voltage Downlights

2" DLV

Fixed Pinhole

Seamless Cast Faceplate
Max 75 Watt

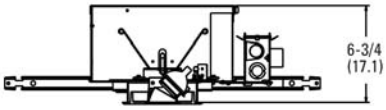

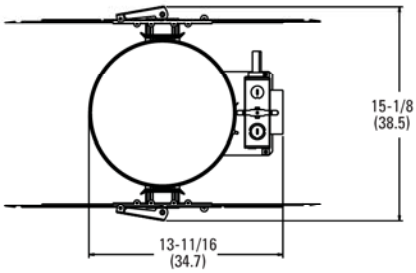

All dimensions are inches (centimeters)

Aperture:	1 (2.54)
Ceiling opening:	4-7/8 (12.4)
Overlap trim:	5-1/2 (14.0)

ORDERING INFORMATION

Example: **DLV DWN MR16 1P 120 DWHG**

Choose the boldface catalog nomenclature that best suits your needs and write it on the appropriate line.
Order accessories as separate catalog numbers (shipped separately).

DLV **DWN** **2B**

Series

DLV

Configuration

DWN

Lamp designation

MR16 MR16 capability (standard)
MR11 MR11 capability
ALR12 ALR12 capability

Aperture/Trim color

2B Black

Voltage

120
277
347

Options

LRC[1] Provides compatibility with Lithonia Reloc System. Lithonia Reloc System can be installed less this option with connectors provided by others. Access above ceiling required

SHHSG HSG height reduced to 5-3/4" (14.6).

Architectural Colors
(powder finish)[2]

DWHG Matte white (standard)
DDB Dark bronze
DBL Black
DWH Gloss white
DMB Medium bronze
DNA Natural aluminum
DSS Sandstone
DGC Charcoal gray
DTG Tennis green
DBR Bright red
DSB Steel blue

Accessories

- For lens accessories, refer to Technical Bulletins tab.
- For lamp options, refer to Technical Bulletins tab.

NOTES

1 For compatible Reloc systems, refer to Technical Bulletins tab.
2 Colors available for faceplate. Additional architectural colors available; please see brochure 794.3.

gotham®
An Acuity Brands Company

GOTHAM ARCHITECTURAL DOWNLIGHTING
1400 Lester Road Conyers Georgia 30012
P 800 315 4982 F 770 860 3129
www.gothamlighting.com

DLV 2P **DLV-120**

bpi

brandston partnership inc.

Lighting design

122 West 26th Street 5th floor
New York New York 10001
T. 212.924.4050 F. 212.691.5418

Utah Museum of Natural History
Salt Lake City, UT

DL-3

2" DLV Fixed Pinhole

Distribution curve	Distribution data	Output data	Coefficient of utilization	Single luminaire data 30" above floor

DLV DWN MR16 1P, Q50MR16/C/NSP15 (EXT) lamp, 0.2 s/mh, 880 rated lumens, Test no. 2198042002

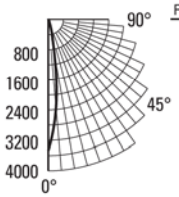

From 0°	cp.	Lumens
0°	3485	
5°	2357	174
15°	315	90
25°	0	7
35°	0	0
45°	0	0
55°	0	0
65°	0	0
75°	0	0
85°	0	0
90°	0	

Zone	Lumens	%lamp
0°-30°	271	30.8
0°-40°	271	30.8
0°-60°	271	30.8
0°-90°	271	30.8
90°-180°	0	0.0
0°-180°	271	30.8*

*Efficiency

ρf / ρc / ρw	80% 50%	80% 30%	20% 70% 50%	20% 70% 30%	50% 50%	50% 30%
1	35	35	35	34	33	33
2	34	33	33	33	33	32
3	33	32	33	32	32	31
4	32	31	32	31	31	31
5	31	30	31	30	31	30
6	31	30	31	30	30	29
7	30	29	30	29	30	29
8	30	29	30	29	29	29
9	29	28	29	28	29	28
10	29	28	29	28	29	28

Mount height	Initial fc at beam center	50% beam angle 13.3° Beam diameter	fc at beam edge	10% beam angle 27.7° Beam diameter	fc at beam edge
8'	115.2	1.3'	57.6	2.7'	11.5
10'	62.0	1.8'	31.0	3.7'	6.2
12'	38.6	2.2'	19.3	4.7'	3.9
14'	26.4	2.7'	13.2	5.7'	2.6
16'	19.1	3.2'	9.6	6.6'	1.9

DLV DWN MR16 1P, 65MR16Q/10/NSP (FPA) lamp, 0.3 s/mh, 1100 rated lumens, Test no. 2198041705

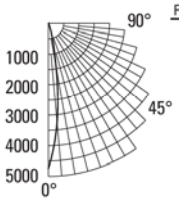

From 0°	cp.	Lumens
0°	4746	
5°	3271	250
15°	527	156
25°	24	18
35°	0	1
45°	0	0
55°	0	0
65°	0	0
75°	0	0
85°	0	0
90°	0	

Zone	Lumens	%lamp
0°-30°	424	38.5
0°-40°	425	38.6
0°-60°	425	38.6
0°-90°	425	38.6
90°-180°	0	0.0
0°-180°	425	38.6*

*Efficiency

ρf / ρc / ρw	80% 50%	80% 30%	20% 70% 50%	20% 70% 30%	50% 50%	50% 30%
1	44	43	43	43	42	41
2	42	41	42	41	41	40
3	41	40	41	40	40	39
4	40	39	40	39	39	38
5	39	38	39	38	38	37
6	38	37	38	37	37	36
7	37	36	37	36	37	36
8	37	36	37	35	36	35
9	36	35	36	35	36	35
10	36	34	35	34	35	34

Mount height	Initial fc at beam center	50% beam angle 14.0° Beam diameter	fc at beam edge	10% beam angle 30.0° Beam diameter	fc at beam edge
8'	156.9	1.4'	78.4	2.9'	15.7
10'	84.4	1.8'	42.2	4.0'	8.4
12'	52.6	2.3'	26.3	5.1'	5.3
14'	35.9	2.8'	17.9	6.2'	3.6
16'	26.0	3.3'	13.0	7.2'	2.6

DLV DWN MR16 1P, 50MR16Q/40/FL/T (EXN) lamp, 0.5 s/mh, 880 rated lumens, Test no. 2198042001

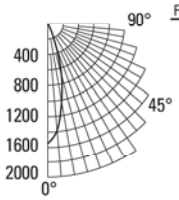

From 0°	cp.	Lumens
0°	1547	
5°	1382	120
15°	683	179
25°	82	46
35°	0	1
45°	0	0
55°	0	0
65°	0	0
75°	0	0
85°	0	0
90°	0	

Zone	Lumens	%lamp
0°-30°	345	39.2
0°-40°	346	39.3
0°-60°	346	39.3
0°-90°	346	39.3
90°-180°	0	0.0
0°-180°	346	39.3*

*Efficiency

ρf / ρc / ρw	80% 50%	80% 30%	20% 70% 50%	20% 70% 30%	50% 50%	50% 30%
1	44	44	44	43	42	42
2	43	41	42	41	41	40
3	41	39	40	39	39	38
4	39	38	39	38	38	37
5	38	36	38	36	37	36
6	37	35	37	35	36	35
7	36	34	35	34	35	34
8	35	33	35	33	34	33
9	34	32	34	32	33	32
10	33	31	33	31	32	31

Mount height	Initial fc at beam center	50% beam angle 25.6° Beam diameter	fc at beam edge	10% beam angle 43.8° Beam diameter	fc at beam edge
8'	51.1	2.5'	25.6	4.4'	5.1
10'	27.5	3.4'	13.8	6.0'	2.8
12'	17.1	4.3'	8.6	7.6'	1.7
14'	11.7	5.2'	5.8	9.3'	1.2
16'	8.5	6.1'	4.2	10.9'	0.8

DLV DWN MR16 1P, Q71MR16/C/FL40 (EYC) lamp, 0.5 s/mh, 1100 rated lumens, Test no. 2198042003

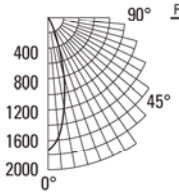

From 0°	cp.	Lumens
0°	1731	
5°	1559	137
15°	789	211
25°	149	73
35°	2	3
45°	0	0
55°	0	0
65°	0	0
75°	0	0
85°	0	0
90°	0	

Zone	Lumens	%lamp
0°-30°	421	38.3
0°-40°	424	38.5
0°-60°	424	38.5
0°-90°	424	38.5
90°-180°	0	0.0
0°-180°	424	38.5*

*Efficiency

ρf / ρc / ρw	80% 50%	80% 30%	20% 70% 50%	20% 70% 30%	50% 50%	50% 30%
1	44	43	43	42	41	41
2	42	40	41	40	40	39
3	40	38	39	38	38	37
4	38	37	38	37	37	36
5	37	35	37	35	36	35
6	36	34	35	34	35	34
7	35	33	34	33	34	33
8	34	32	33	32	33	32
9	33	31	32	31	32	31
10	32	30	31	30	31	30

Mount height	Initial fc at beam center	50% beam angle 26.3° Beam diameter	fc at beam edge	10% beam angle 46.0° Beam diameter	fc at beam edge
8'	57.2	2.6'	28.6	4.7'	5.7
10'	30.8	3.5'	15.4	6.4'	3.1
12'	19.2	4.4'	9.6	8.1'	1.9
14'	13.1	5.4'	6.5	9.8'	1.3
16'	9.5	6.3'	4.7	11.5'	0.9

NOTES

1 Tested to current IES and NEMA standards under stabilized laboratory conditions. Various operating factors can cause differences between laboratory data and actual field measurements. Dimensions and specifications are based on the most current available data and are subject to change without notice.

2 For increased efficiencies, clear lens is recommended. NOTE: Clear lens does not provide beam-smoothing effect.

ENERGY (Calculated in accordance eith NEMA standard LE-5A)

LER.DOH	Annual* Energy Cost	Lamps	Lamp Lumens	Ballast Factor	Input Watts
5	$21.47	(1) 50W MR16	880	n/a	50
6	$29.34	(1) 65W MR16	1100	n/a	71
7	$23.72	(1) 50W MR16	880	n/a	50
6	$25.86	(1) 71W MR16	1100	n/a	71

*Comparative yearly lighting energy cost per 1000 lumens

DLV-120

©2007Gotham, Rev. 11/08
DLV-110

gotham
An Acuity Brands Company

GOTHAM ARCHITECTURAL DOWNLIGHTING
A DIVISION OF ACUITY LIGHTING GROUP, INC.
1400 Lester Road Conyers Georgia 30012
P 800 315 4982 F 770 860 3129
www.gothamlighting.com

bpi
brandston partnership inc.
Lighting design
122 West 26th Street 5th floor
New York New York 10001
T. 212.924.4050 F. 212.691.5418

Utah Museum of Natural History
Salt Lake City, UT

DL-3

FRAME 50

Extruded profile made of aluminium, powder coated white or black
Special edges for gap-free installation in plasterboad
Electronic ballast integrated in fixture housing
Snap in cover for installation in ceiling and wall
Dimming ballasts available where indicated
All models available in HE flourescent versions

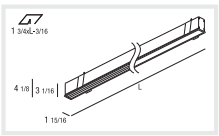

FRAME 50 OPAL | CLEAR T5 G5 120|277V

CAPACITY	L (INCH)	CODE
1x24W HO	23 1/16	**635-2610#_**
1x39W HO	34 7/8	**635-2710#_**
1x54W HO	46 11/16	**635-2810#_**
1x80W HO	58 1/2	**635-2910#_**
2x1x54W HO	92 13/16	**635-2820#_**

635-2610#
635-26106 anodized alu. **635-2610#**Q opal
7 white C clear

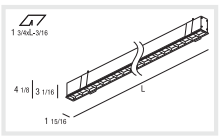

FRAME 50 LOUVER T5 G5 120|277V UNV

CAPACITY	L (INCH)	CODE
1x24W HO	23 1/16	**635-2610#L**
1x39W HO	34 7/8	**635-2710#L**
1x54W HO	46 11/16	**635-2810#L**
1x80W HO	58 1/2	**635-2910#L**
2x1x54W HO	92 13/16	**635-2820#L**

_1# HI-LUME 120V
_2# HI-LUME 277V
_3# ECO-10 120V
_4# ECO-10 277V

FRAME 70

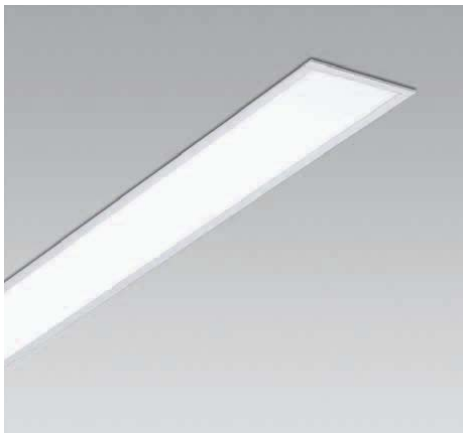

Extruded profile made of aluminium, powder coated white or black
Special edges for gap-free installation in plasterboad
Electronic ballast integrated in fixture housing
Snap in cover for installation in ceiling and wall
Dimming ballasts available where indicated
All models available in HE flourescent versions

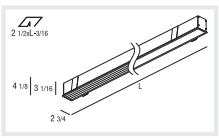

FRAME 70 OPAL | CLEAR T5 G5 120|277V

CAPACITY	L (INCH)	CODE
1x24W HO	23 1/16	**635-6610#_**
1x39W HO	34 7/8	**635-6710#_**
1x54W HO	46 11/16	**635-6810#_**
1x80W HO	58 1/2	**635-6910#_**
2x1x54W HO offset	88 3/8	**635-6820#_**

635-6610#
635-66106 anodized alu. **635-6610#**Q opal
7 white C clear

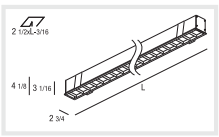

FRAME 70 LOUVER T5 G5 120|277V UNV

CAPACITY	L (INCH)	CODE
1x24W HO	23 1/16	**635-6610#L**
1x39W HO	34 7/8	**635-6710#L**
1x54W HO	46 11/16	**635-6810#L**
1x80W HO	58 1/2	**635-6910#L**
2x1x54W HO	92 13/16	**635-6820#L**

_1# HI-LUME 120V
_2# HI-LUME 277V
_3# ECO-10 120V
_4# ECO-10 277V

FRAME 110

Extruded profile made of aluminium, powder coated white or black
Special edges for gap-free installation in plasterboad
Electronic ballast integrated in fixture housing
Snap in cover for installation in ceiling and wall
Dimming ballasts available where indicated
All models available in HE flourescent versions

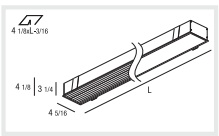

FRAME 110 OPAL | CLEAR T5 G5 120|277V

CAPACITY	L (INCH)	CODE
2x24W HO	23 1/16	**635-5620#_**
2x39W HO	34 7/8	**635-5720#_**
2x54W HO	46 11/16	**635-5820#_**
2x2x54W HO offset	97 9/16	**635-5840#_**

635-5620#
635-56206 anodized alu. **635-5620#**Q opal
7 white C clear

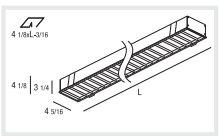

FRAME 110 LOUVER T5 G5 120|277V UNV

CAPACITY	L (INCH)	CODE
2x24W HO	23 1/16	**635-5620#L**
2x39W HO	34 7/8	**635-5720#L**
2x54W HO	46 11/16	**635-5820#L**
2x2x54W HO	92 13/16	**635-5840#L**

_1# HI-LUME 120V
_2# HI-LUME 277V
_3# ECO-10 120V
_4# ECO-10 277V

bpi
brandston partnership inc.
Lighting design
122 West 26th Street 5th floor
New York New York 10001
T. 212.924.4050 F. 212.691.5418

Utah Museum of Natural History
Salt Lake City, UT

FA-1/FA-2

DRAMA® LIGHTING

Diamond Line

Figure 1

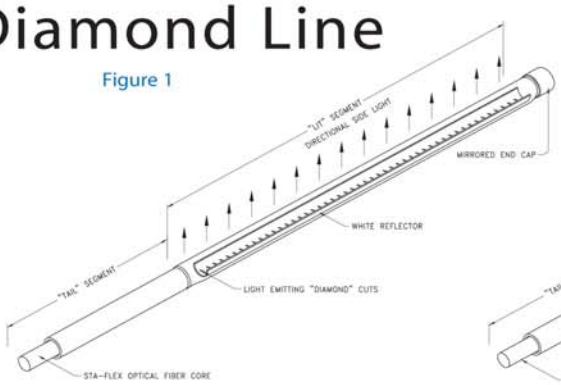

Directional Side Light Fiber

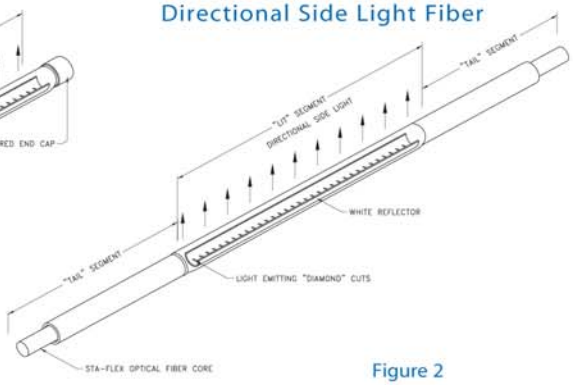

Figure 2

Diamond Line is a unique large core fiber which extracts light directionally in a 30° or 60° linear beam. Because light is actually projected out of the fiber, Diamond Line is the ideal choice for applications requiring more light than conventional 360° radiating fiber optics. Whether for indirect applications such as cove lighting, or when viewed directly, as in architectural perimeters, the results will be extraordinarily bright with Diamond Line. And when you combine Diamond Line's brilliance with the color-changing ability of fiber optics, you have the perfect zero-maintenance alternative to linear LEDs.

One Fiber…Two Distinct Segments

Although Diamond Line is one continuous piece of fiber, it is actually composed of two segments with differing purposes and composition. The Tail Segment works as a light guide, transmitting the maximum amount of uninterrupted light to the Lit Segment. The Lit Segment itself incorporates a reflector, along with light-emitting "diamond" cuts, to extract bright, even light along the Lit length.

Customized Light Extraction

Although Diamond Line is designed to emit high levels of light regardless of length, shorter lengths do produce higher intensity than longer lengths. When multiple pieces of Diamond Line are used in one application, the "diamond" cuts along the Lit Segment can be adjusted to match the light output from piece to piece. This customization is done during our state-of-the-art production process and should be discussed with our lighting designers prior to order placement.

Specifying and Ordering

Due to the different functions of Tail Segments and Lit Segments, orders for Diamond Line must provide separate measurements for each segment. For single-ended configurations (see Figure 1) your order must include a specified Tail length and a specified Lit length (a mirrored end seal will be added automatically.) For double-ended or looped configurations (see Figure 2) your order must include a specified Lit length as well as two specified Tail lengths.

Additional Uses

In addition to its superior performance in cove lighting and architectural perimeters, Diamond Line is also great for use under counters or toe-kicks, or in underwater applications such as pools and fountains. When specifying Diamond Line for use in a submersible application, please select a fiber with the WR designation at the end of the catalog number. The WR version includes the extra protection of a water resistant Teflon jacket for years of extraordinary brilliance.

FIBEROPTICS • AUTOMATED SEARCHLIGHTS • COLOR CHANGE • SPECIALIZED LIGHTING FIXTURES • LED

Special Effect Presentation Lighting for Architecture, Museums, Monuments, Landscape, Retail & Entertainment

49 AYER RD.
AMHERST, NEW YORK 14221
716-626-9300
FAX 716-276-1038

211 WEST 92 STREET #26
NEW YORK, NEW YORK 10025
212-799-1300
FAX 212-799-5683

www.dramalighting.com • info@dramalighting.com

DRAMA® LIGHTING

Diamond Line Directional Side Light Fiber

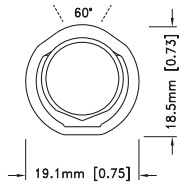

Outer Diameter:	19.3mm (.76")
Rec. Min. Bend Radius:	232mm (9.13")
Beam Spread:	60°
Jacket Type:	Clear PVC
Weight Per Foot:	100 g. (3.47 oz.)
Operating Temp.:	Up to 90°C (194°F)
Tracking Size:	19mm

Catalog No. F-DL-DSL-LC-6019

Description
19mm Diamond Line directional large core side light fiber with 19.3mm outer diameter and a clear PVC jacket with UV inhibitors; includes "diamond" cuts and integral reflector producing a 60° beam of light evenly extracted across the fiber's length; for indoor and outdoor use.

Max Tails 9mm: N/A
Max Tails 28mm: 2

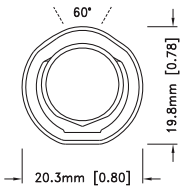

Outer Diameter:	19.8mm (.779")
Rec. Min. Bend Radius:	238mm (9.37")
Beam Spread:	60°
Jacket Type:	Teflon
Weight Per Foot:	100 g. (3.47 oz.)
Operating Temp.:	Up to 90°C (194°F)
Tracking Size:	20mm

Catalog No. F-DL-DSL-LC-6019WR

Description
19mm Diamond Line directional large core side light fiber with 19.8mm outer diameter and a clear Teflon jacket for water resistance; includes "diamond" cuts and integral reflector producing a 60° beam of light evenly extracted across the fiber's length; for indoor, outdoor and submersible use.

Max Tails 9mm: N/A
Max Tails 28mm: 2

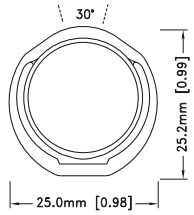

Outer Diameter:	25.5mm (1.00")
Rec. Min. Bend Radius:	306mm (12.05")
Beam Spread:	30°
Jacket Type:	Clear PVC
Weight Per Foot:	190 g. (6.78 oz.)
Operating Temp.:	Up to 90°C (194°F)
Tracking Size:	25mm

Catalog No. F-DL-DSL-LC-3025

Description
25mm Diamond Line directional large core side light fiber with 25.5mm outer diameter and a clear PVC jacket with UV inhibitors; includes "diamond" cuts and integral reflector producing a 30° beam of light evenly extracted across the fiber's length; for indoor and outdoor use.

Max Tails 9mm: N/A
Max Tails 28mm: 1

FIBEROPTICS • AUTOMATED SEARCHLIGHTS • COLOR CHANGE • SPECIALIZED LIGHTING FIXTURES • LED

Special Effect Presentation Lighting for Architecture, Museums, Monuments, Landscape, Retail & Entertainment

49 AYER RD.
AMHERST, NEW YORK 14221
716-626-9300
FAX 716-276-1038

211 WEST 92 STREET #26
NEW YORK, NEW YORK 10025
212-799-1300
FAX 212-799-5683

www.dramalighting.com • info@dramalighting.com

bpi

brandston partnership inc.

Lighting design

122 West 26th Street 5th floor
New York New York 10001
T. 212.924.4050 F. 212.691.5418

Utah Museum of Natural History
Salt Lake City, UT

FO2-PW

DRAMA® LIGHTING

Diamond Line Directional Side Light Fiber

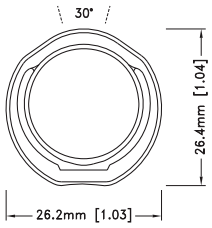

Outer Diameter:	26.4mm (1.03")
Rec. Min. Bend Radius:	317mm (12.48")
Beam Spread:	30°
Jacket Type:	Teflon
Weight Per Foot:	190 g. (6.78 oz.)
Operating Temp.:	Up to 90°C (194°F)
Tracking Size:	25mm

Catalog No. F-DL-DSL-LC-3025WR

Description

25mm Diamond Line directional large core side light fiber with 26.4mm outer diameter and a clear Teflon jacket for water resistance; includes "diamond" cuts and integral reflector producing a 30° beam of light evenly extracted across the fiber's length; for indoor, outdoor and submersible use.

Max Tails 9mm: N/A
Max Tails 28mm: 1

Diamond Line Application Notes

1. The recommended maximum length for a Diamond Line directional side light application is dependent on illuminator type and configuration. Double-ended and looped configurations (refer to Figures 1 and 2) can have much longer fiber lengths than single-ended configurations (refer to Figure 3.)
2. With some fiber sizes, multiple double-ended lengths of fiber can be "daisy-chained" together to create longer effects. In a daisy-chain configuration, illuminators should be spaced evenly along the total length to ensure uniform light output across the entire line. Daisy-chaining does reduce light output by as much as 40% compared to double-ended systems (refer to Figure 4.)
3. When calculating fiber lengths, allow for an extra one foot service loop of cable per illuminated end of fiber. This service loop will allow for slight changes in illuminator location or orientation, and also allows the cable to be re-harnessed in the future, if required.
4. Straight, uninterrupted fiber runs are best for optimum light output. The minimum bending radius for each fiber is shown in the individual product details, but larger bends are recommended if the application permits.
5. Diamond Line directional side light fiber is most effective in environments with medium to low ambient light levels, depending on the application.
6. Due to the rigidity of Diamond Line fiber, the use of side-by-side mounting track is strongly advised for creating both straight lines and curves. (Mounting track must be field-cut into smaller segments to create curves.)
7. Fiber exiting the illuminator must remain straight for a minimum of 18" to avoid significantly reduced light transmission. (Refer to Figure 5.)
8. Fiber optic cable is not plenum rated. Please consult local codes to determine installation requirements, which may include routing of all fibers through metal conduit.
9. When using conduit to route fiber runs between the illuminator and visible application, conduit must be large enough to allow the fiber (and end seal, where applicable) to move freely. Electrical sweeps or bends of 8 – 12" minimum radius must be used at all turns. No hard 90° angles may be used.
10. The Diamond Line fiber core must be protected from water/moisture and sunlight intrusion. Mirrored-End Seals are factory installed on all single-ended fibers.

FIBEROPTICS • AUTOMATED SEARCHLIGHTS • COLOR CHANGE • SPECIALIZED LIGHTING FIXTURES • LED

Special Effect Presentation Lighting for Architecture, Museums, Monuments, Landscape, Retail & Entertainment

49 AYER RD.
AMHERST, NEW YORK 14221
716-626-9300
FAX 716-276-1038

www.dramalighting.com • info@dramalighting.com

211 WEST 92 STREET #2
NEW YORK, NEW YORK 1002
212-799-130
FAX 212-799-568

bpi

brandston partnership inc.

Lighting design

122 West 26th Street 5th floor
New York New York 10001
T. 212.924.4050 F. 212.691.5418

Utah Museum of Natural History
Salt Lake City, UT

FO2-PW

DRAMA® LIGHTING

Diamond Line Directional Side Light Fiber

IGURE 1. Fiber Lengths in Double-Ended Configuration

150w / 250w Metal Halide

	Tail	Lit	Tail
3025	10'	80'	10'
6019	10'	60'	10'
6015	10'	40'	10'
6011	10'	15'	10'

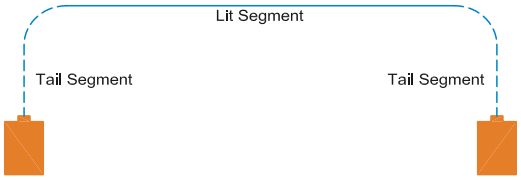

250w Halogen

	Tail	Lit	Tail
3025	10'	60'	10'
6019	10'	45'	10'
6015	10'	25'	10'
6011	10'	10'	10'

FIGURE 2. Fiber Lengths in Looped Configuration

150w / 250w Metal Halide

	Tail	Lit	Tail
3025	NOT APPLICABLE		
6019	10'	50'	10'
6015	10'	30'	10'
6011	10'	15'	10'

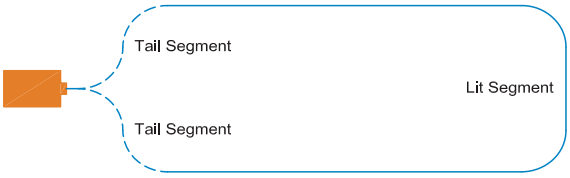

250w Halogen

	Tail	Lit	Tail
3025	NOT APPLICABLE		
6019	10'	35'	10'
6015	10'	20'	10'
6011	10'	10'	10'

FIGURE 3. Fiber Lengths in Single-Ended Configuration

150w / 250w MH

	Tail	Lit
3025	20'	35'
6019	20'	25'
6015	20'	15'
6011	20'	8'

250w Halogen

	Tail	Lit
3025	20'	30'
6019	20'	20'
6015	20'	15'
6011	20'	8'

FIGURE 4. "Daisy-Chained" Configuration vs. Double-Ended Configuration

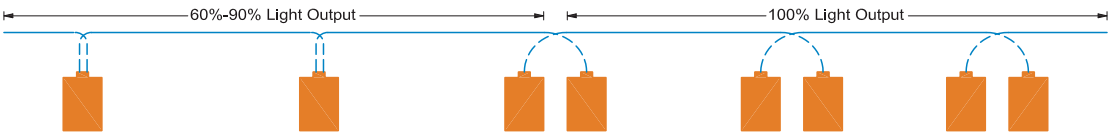

FIGURE 5. Fiber Exiting the Illuminator

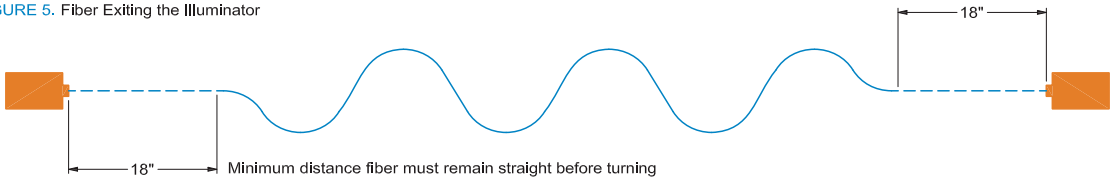

FIBEROPTICS • AUTOMATED SEARCHLIGHTS • COLOR CHANGE • SPECIALIZED LIGHTING FIXTURES • LED

Special Effect Presentation Lighting for Architecture, Museums, Monuments, Landscape, Retail & Entertainment

49 AYER RD.
AMHERST, NEW YORK 14221
716-626-9300
FAX 716-276-1038

www.dramalighting.com • info@dramalighting.com

211 WEST 92 STREET #26
NEW YORK, NEW YORK 10025
212-799-1300
FAX 212-799-5683

bpi

brandston partnership inc.

Lighting design

122 West 26th Street 5th floor
New York New York 10001
T. 212.924.4050 F. 212.691.5418

Utah Museum of Natural History
Salt Lake City, UT

FO2-PW

DRAMA® LIGHTING

250 Watt

Metal Halide Illuminator

5,000+ hour lamp life

Neon-like brightness with side light fiber

Advanced fiber cooling system with quiet fan

Control Features Available in White Light, Continuous Color and DMX* models.

Continuous Color Wheel Includes 1 rpm motor for twinkle wheel or 6-part standard color wheel (Clear, Yellow, Red, Blue, Orange, Green).

DMX512 Single Wheel Fully rotating color or douser wheel with variable speed and direction control; two (2) channel operation with individual control of wheel and lamp strike; optional master/slave function for synchronizing multiple units from one master unit; DMX connection via 5-pin XLR connector.

DMX512 Dual Wheel Fully rotating color and douser wheels with independent speed and direction control; three (3) channel operation with individual control of color wheel, douser wheel and lamp strike; DMX connection via 5-pin XLR connector.

6-position color wheel (Clear, Green, Orange, Blue, Red, Yellow) (custom available)
6-position douser wheel (Blackout, 6%, 12%, 25%, 50%, Clear)

Lamp 250 watt Ushio MHR250 metal halide with 5,000 hour lamp life; 72 CRI, 4200° K color temperature; 3 minute re-strike delay.

Replacement Lamp Catalog #AC-LMP-250MHR-4K

Electrical Electronic ballast; 100-240v, 50/60Hz; 6' detachable IEC power cord with integral fuse; 2.5 amps continuous load, 5.0 amps start-up load at 120 volts; auto-reset thermal protection.

Enclosure IP20 rating for dry or damp operating environment; aluminum housing with black powder coat finish; advanced forced-air fiber cooling system; 38 dB(A) quiet fan; weight 4.6 kilograms (10 lbs.).

Fiber Capacity 1000 – 0.75mm; accepts stranded PMMA/ glass or large core fiber; PMMA and glass fiber only with RCP harnessing.

Harness 28mm

Mounting and Ventilation 12" all sides recommended clearance; -30°C min/+40°C max (-22°F min/104°F max) operating temperature.

Listings UL, cUL Listed; CE marked.

MOUNTING GUIDE

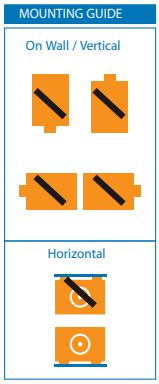

AIRFLOW GUIDE

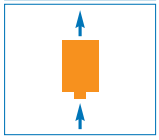

FIBEROPTICS • LED • AUTOMATED SEARCH LIGHTS • COLOR CHANGE • SPECIALIZED LIGHTING FIXTURES

49 AYER Rd
AMHERST, NEW YORK 14221
716-626-9300
FAX 716-276-1038

Special Effect and Presentation Lighting for
Exhibits, Museums, Displays, Retail & Entertainment
www.dramalighting.com
info@ dramalighting.com

211 WEST 92 STREET #26
NEW YORK, NEW YORK 10025
212-799-1300
FAX 212-799-5683

bpi

brandston partnership inc.

Lighting design

122 West 26th Street 5th floor
New York New York 10001
T. 212.924.4050 F. 212.691.5418

Utah Museum of Natural History
Salt Lake City, UT

FO2-PW

DRAMA® LIGHTING

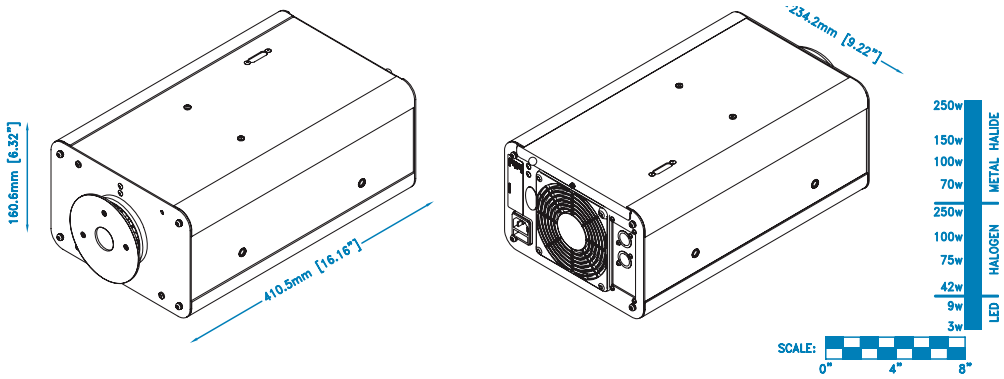

LGP250 – 4 – 28 – _____ / _____ – D – MVOLT

Illuminator
Roblon Platinum Series 250w

Color Temperature
4 4,200°K

Port Size
28 28mm(1,000-0.75mm fibers)

Control Options
W White
N Continuous Wheel
D1 DMX Single Wheel
D2 DMX Dual Wheels

Wheel Options
W White
S Standard Colors
D Standard Douser
S2 Standard Colors & Douser (D2 only)
T Standard Twinkle

Enclosure
D Dry/Damp Location

Voltage
MVOLT Electronic 100-240v / 50-60Hz

Modifiers & Accessories

PC Permanent Color Filter (refer to pg. 51 for selection)
CW/E Extended Palette Color Wheel (refer to pg. 53 for selection)
CW/C Custom Color Wheel(specify any colors, may require long lead time; use form on pg. 53 to specify custom choices)
TW/B Twinkle Wheel with Bars (refer to pg. 56 for details)
TW/SS Twinkle Wheel for Shooting Star (refer to pg. 56 for details)
TW/CW Twinkle / Color Wheel(refer to pg. 53 for selection)
TW/CD Twinkle / Color Wheel w/ Crushed Dichroics (refer to pg. 53 for selection)

MS3 3.6rpm Continuous Wheel Motor
MS5 5.0rpm Continuous Wheel Motor
2LCN Dual Line Cord for Continuous Wheel Control
WLE/SS Wet Location Enclosure, Stainless Steel (refer to pg. 59 for details)
WLE/AL Wet Location Enclosure, Powder Coated Aluminum (refer to pg. 59 for details)

*For DMX controls and other system accessories, please refer to the Accessories section of this binder.

FIBEROPTICS • LED • AUTOMATED SEARCH LIGHTS • COLOR CHANGE • SPECIALIZED LIGHTING FIXTURES

49 AYER Rd
AMHERST, NEW YORK 14221
716-626-9300
FAX 716-276-1038

Special Effect and Presentation Lighting for
Exhibits, Museums, Displays, Retail & Entertainment
www.dramalighting.com
info@ dramalighting.com

211 WEST 92 STREET #26
NEW YORK, NEW YORK 10025
212-799-1300
FAX 212-799-5683

line™ .75
SYMMETRIC

io

Application
io Lighting's **line series .75** is approximately .75" x .75" in cross section. UL Listed for damp locations, its low profile housing enables functional luminous intensities from "tight" architectural details such as niches, coves & casework. Similar to halogen light sources, LEDs are point sources that offer superior definition to three dimensional objects and sparkle to reflective surfaces.

series .75 is a low voltage linear accent luminaire that may be ordered in incremental nominal lengths that range from 6" to 96". Optional beam spreads along the perpendicular axis of the fixture include 10°, 45°, and 65°. For details on the asymmetric beam spread, see dedicated specification sheet. **io** ensures that each LED is driven with the proper current and voltage which enables the average rated life to be 50,000 hours at 70% of the lamp lumen output. To ensure proper performance, architectural details should allow for ventilation and air flow around the fixture. Ambient temperature surrounding the fixture shall not exceed 120˚F.

Light Output
line series .75 is available with two lumen outputs for white light only. Red, green and blue are available in high output only. IES format files may be obtained from the factory or downloaded from **www.iolighting.com.**

Standard Output	High Output
3000K White: 34 lms/ft	3000K White: 170 lms/ft
5000K White: 40 lms/ft	5000K White: 230 lms/ft

Construction
The light weight, yet durable, extruded aluminum housing provides recommended heat sink requirements for LEDs. Patented optical assembly is composed of a customized acrylic material that offers very high transmisivity, UV stability, and excellent longevity. **series .75** is UL Listed for damp locations only.

Electrical
4'-0" 22 AWG, 600 volt TFFN rated power cords are supplied with strain reliefs. 24 volt 100 watt power supply will be provided as a standard. See daisy chain and remote distance requirements in chart on the lower left hand corner of this specification sheet. Alternate power supply options are available. Consult **io** website or **io** representative for **io** driver specification sheets.

Power supply and dimming module must be specified separately. For detailed information, see the **LED Linear** brochure or download the Power Supply specification sheet from **www.iolighting.com**.

Power Consumption
Standard Output: 2.1 w/ft **High Output: 7.6 w/ft**

Power consumption does not include power supply losses. Consult **io** driver specification sheets for losses associated with each driver option.

Finish
Anodized aluminum finish is standard. Custom finishes may be available upon request.

Dimensions

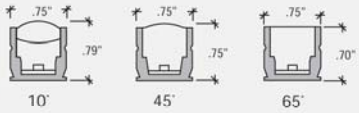

Beam Spreads

Power Supply

Standard Output		
TYPE	SUPPLIES	REMOTE DISTANCE
24v100w	up to 35'-0"	7'-0" (w/22AWG)
	(2) RUNS UP TO	18'-0" (w/18AWG)
	49' WITH (1) RUN	46'-0" (w/14AWG)
	NTE 35'-0"	71'-0" (w/12AWG)
High Output		
TYPE	SUPPLIES	REMOTE DISTANCE
24v100w	up to 12'-0"	7'-0" (w/22AWG)
		18'-0" (w/18AWG)
		46'-0" (w/14AWG)
		71'-0" (w/12AWG)

io Lighting
370 Corporate Woods Pkwy Vernon Hills, IL 60061-3107
T 847.735.7000 F 847.735.7001 E info@iolighting.com W iolighting.com

2007 - io Lighting reserves the right to change specifications for product improvement without notification.

bpi

brandston partnership inc.

Lighting design

122 West 26th Street 5th floor
New York New York 10001
T. 212.924.4050 F. 212.691.5418

Utah Museum of Natural History
Salt Lake City, UT

NE-1

io line™ .75
SYMMETRIC

Light Output / Distributions / Electrical Feed Options

STANDARD OUTPUT

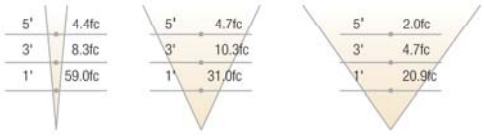

10°	45°	65°
3000K	3000K	3000K
8'-0"	8'-0"	8'-0"

HIGH OUTPUT

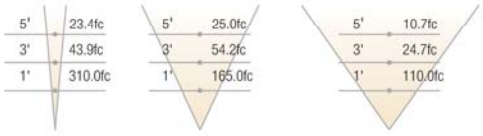

10°	45°	65°
3000K	3000K	3000K
8'-0"	8'-0"	8'-0"

ELECTRICAL END FEED OPTIONS

2 End feed | 3 Right side feed | 4 Left side feed | 5 Bottom feed

LIGHT OUTPUT CONVERSION TABLE

White Light Output	3000K S.O.	5000K S.O.	3000K H.O.	5000K H.O.
Light Output Multiplier	0.2(2)	0.24(2)	1.0(2)	1.35(2)

Color Light Output	RED	GREEN	BLUE
Light Output Multiplier	0.47(1)	0.71(1)	0.24(1)

IES format photometrics may be downloaded from **www.iolighting.com**

Mounting Options

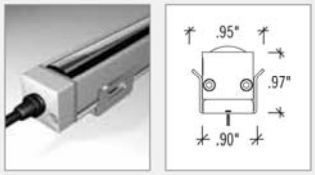

100 Surface (**io** part #: SA.BK.SURF)

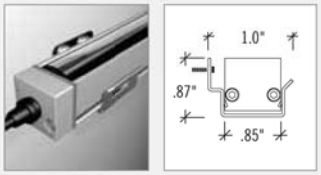

101 Side surface (**io** part #: SA.BK.WALL)

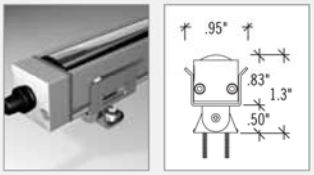

102 Field adjustable (**io** part #: SA.BK.ADJUST)

Order Code

0	.	03	.		.		.		.		.		.		.		.		.	
io		1		2		3		4		5		6		7		8		9		10

1. LINE SERIES
03 .75 S.O. or H.O.

2. LOCATION
I Interior
E Exterior (Note: Rated for damp locations face down only)

3. COLOR
3K White 3000K (Standard)(2)
3KHO White 3000K (High Output)(2)
5K White 5000K (Standard)(2)
5KHO White 5000K (High Output)(2)
R Red(1)
G Green(1)
B Blue(1)

4. DISTRIBUTION
10 10 degree
45 45 degree
65 65 degree

5. MOUNTING
100 Surface
101 Side surface
102 Field adjustable

6. FINISH
1 Anodized Aluminum
2 Anodized Custom Color

7. LENGTH

	UNITS	(ACTUAL)
01	6"	(6.26")(3)
02	12"	(11.95")(3)
03	18"	(17.7")(3)
04	24"	(23.26")(3)
05	30"	(28.95")(3)
06	36"	(34.7")(3)
07	42"	(40.26")(3)
08	48"	(45.95")(3)
09	54"	(51.7")(3)
10	60"	(57.26")(3)
11	66"	(62.95")(3)
12	72"	(68.7")(3)
13	78"	(79.95")(3)
14	84"	(85.7")(3)
15	90"	(91.26")(3)
16	96"	(96.95")(3)

8. ELECTRICAL FEED
2 End feed
3 Right side feed
4 Left side feed
5 Bottom feed
FOR CONTINUOUS ROW
2-2 Right end feed
Left end feed
3-4 Right side feed
Left side feed
5-5 Right bottom feed
Left bottom feed

9. VOLTAGE / DIMMING
1 120v
2 277v
3 120v w/dim
4 277v w/dim
5 Other

10. SPECIFY DRIVER / DIMMING
Note: Reference **io** power supply specification sheet for driver and dimming options. If left blank, **io** will supply 100 watt drivers. Download Power Supply specification sheet from **www.iolighting.com**

Footnotes

Footnotes
1. Refer to conversion table for output.
2. White light variance between LED's within a single fixture will not exceed +/- 200k.
3. "Actual" length provided includes end feed and non-feed endcaps. Add .27 to each length when electrical feeds occur on both endcaps (for continuous row mounting).

2007 - io Lighting reserves the right to change specifications for product improvement without notification.

brandston partnership inc.
Lighting design
122 West 26th Street 5th floor
New York New York 10001
T. 212.924.4050 F. 212.691.5418

Utah Museum of Natural History
Salt Lake City, UT

NE-1

ADVANCE

XITANIUM
LED Drivers

Universal Outdoor Drivers for 12V and 24V LED systems

Applications

Orientation/Step Lighting

Architectural Lighting

Channel Letters

Contour Lighting

Edge Lighting

LEDs have evolved into a practical, flexible light source for a wide variety of illumination applications. Common LED products available in the market today are configured in a series-parallel array – designed to be powered by a suitable 24vdc driver – which allows flexibility to connect variable load levels. These operating voltages have become the standard in the industry.

The Brain Behind the Bright Idea

Xitanium LED drivers from Advance are designed specifically for 24V LED systems and incorporate features that enable broad commercialization of end-use solid-state lighting products.

Features	Benefits
UL Class 2	Limited output voltage and current plus isolation for safe operation
UL Outdoor Damp location rated - IP 66	Fully potted for moisture resistance and thermal benefits
Ultra small, compact size	Facilitates new, low-profile fixture design
Extreme low temperature Performance (-40°C)	Allows use in any outdoor application
Generous high temperature capability (+60°C)	Margin flexibility to facilitate fixture design
Tightly regulated output (1% line, 5% load)	Consistent light output across line and load levels
5 year warranty	Peace of mind for your new products and for end users…from the industry's most trusted component maker
Powered by Advance	Advance is preferred by end users – Enhance the value of your product

bpi

brandston partnership inc.

Lighting design

122 West 26th Street 5th floor
New York New York 10001
T. 212.924.4050 F. 212.691.5418

Utah Museum of Natural History
Salt Lake City, UT

NE-1

Quick Selection Table

Catalog Number	Description	Application
LEDINTA0024V41FO	Intellivolt 100 Watt 24Vdc Outdoor	• 24Vdc LED Systems

LED Driver Specifications

Description	Catalog Number	Input			Output			Case Temp Max (°C)	Figure	Weight (Grams)
		Volts (V)	Power Max (W)	Current Max (A)	Power Max (W)	Voltage Nom (V)	Current Max (A)			
100 Watt	LEDINTA0024V41FO	120	117.0	0.98	100.0	**24.0**	4.1	90	A	640
		230		0.51						
		277		.042						

Total Harmonic Distortion: 20% max
Power Factor: 90% min
Line Regulation: 1% output variation across input voltage range
Load Regulation: 5% output variation across input voltage range
Current Crest Factor: 1.5 max
Environmental Protection: IP66 outdoor rated
EMI: FCC47 SubPart15, CISPR15 and CISPR22 Class A
Protection: Meet UL1310 for Class 2; Inherent short-circuit protection, self-limited; overload protected; 3.2KV output insulation
AC Input and DC Output: 2 (0.78mm²) Solid Copper Wires, 15cm long

Dimensions

Fig. A

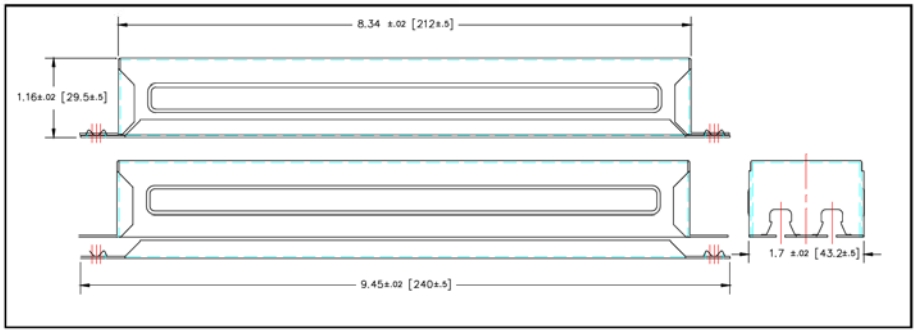

Advance, A Division of Philips Electronics North America · 10275 W Higgins Road · Rosemont, IL 60018 · USA
Tel: + 1 847 390-5205 · Fax: + 1 847 390-5264 · Revised 09/05PJJ

line

100W driver enclosure

100 Watt driver
Catalog number: 250ENC2.011x4x4

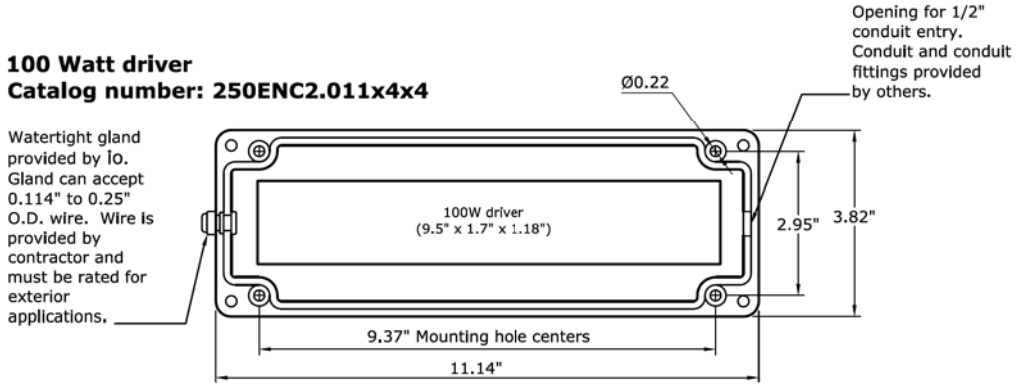

Front view without cover

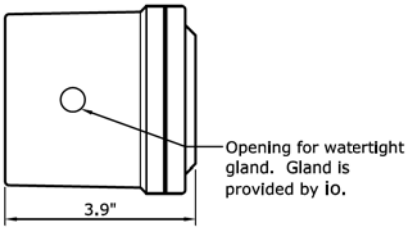

Left end view with cover

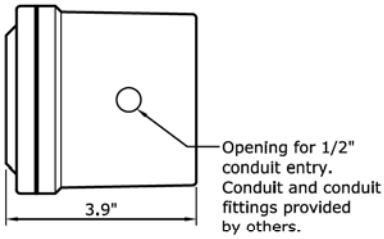

Right end view with cover

Enclosure Construction

Enclosure material is a molded fiberglass reinforced polyester (thermoset). The gasket is poured polyurethane seamless gasket that provides watertight, dust-tight environmental seal. The cover screws are recessed, captive and stainless steel.

Enclosure Industry Standards

UL/cUL 50	File E64358 type 1, 3, 4X, 6P, 12
NEMA 250	Type 1, 3, 4X, 6P, 12
CSA Std 22.2	File LR069014 type 1, 3, 4X, 6P, 12
Temp rating	(-40°C to +120°C)
Flammability rating	UL94-5V

io Lighting LLC, 370 Corporate Woods Pkwy, Vernon Hills, Illinois 60061-3107
T: 847 735 7000 F: 847 735 7001 info@iolighting.com www.iolighting.com

SOLID FRONT LITTLE INCH
MINIATURE FLUORESCENT UNDERCABINET FIXTURE SFHP 100/200 SERIES

- Solid metal front with lay-in diffuser design.
- Post fabrication painting eliminates raw edges which can rust or cause injury.
- Industry exclusive life-time guarantee.
- Extremely thin 1" profile.
- Quick installation and easy maintenance with hinged wireway.
- Flush ends allow row mounting for continuous illumination.
- Choose from prismatic diffuser for diffused light spread, 45˚ lateral prism lens to reduce veiling reflections and glare or low brightness hex-cell mini-louver.
- SF models allow for easy lens removal when mounted flush to the front of a cabinet or when fully recessed into a pocket.

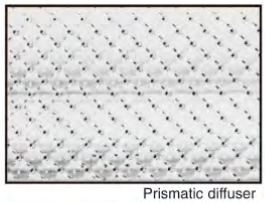

Prismatic diffuser

Hinged wireway

(optional) Hex-cell mini-louver

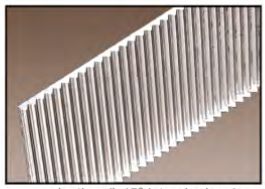

(optional) 45º lateral prism lens

(optional) Rocker switch and convenience outlet

Greenfield/romex connector

ALKCO LIFETIME WARRANTY Little Inch

bpi

brandston partnership inc.

Lighting design

122 West 26th Street 5th floor
New York New York 10001
T. 212.924.4050 F. 212.691.5418

Utah Museum of Natural History
Salt Lake City, UT

NF-1

SOLID FRONT LITTLE INCH

MINIATURE FLUORESCENT UNDERCABINET FIXTURE SFHP 100/200 SERIES

TYPICAL CROSS SECTION (Convenience outlet & rocker switch shown)

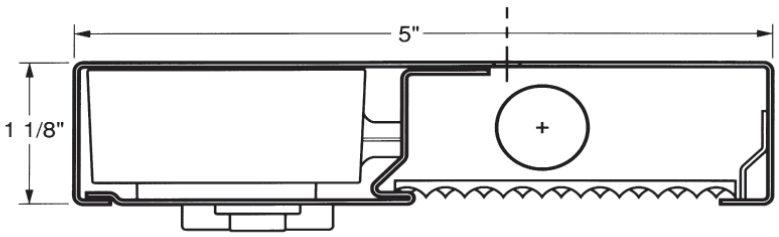

KNOCKOUTS AND MOUNTING HOLES

Unit Length	A	B
12 5/16"	8 1/16"	3"
21 5/16"	17 1/16"	3"
24 1/2"	20 1/4"	3"
33 1/2"	29 1/4"	3"
42 1/2"	38 1/4"	3"

Center back knockout for premium T5 and T5 HO units is 5/8", 1/2" and 1 7/8" off center (to the left as you face installed fixture) for SFHP114/124, SFHP121/139 and SFHP128/154 respectively.

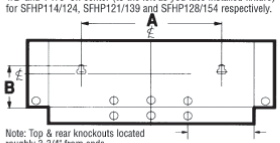

Note: Top & rear knockouts located roughly 3-3/4" from ends

PHOTOMETRIC DATA

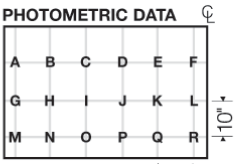

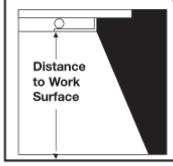

Cat No.	Distance to Work Surface	Footcandles on Worksurface																		
		A	B	C	D	E	F	G	H	I	J	K	L	M	N	O	P	Q	R
SFHP-108	15"	3	13	36	36	13	3	2	5	11	11	5	2	1	2	2	2	2	1
SFHP-113	15"	9	32	68	68	32	9	4	11	20	20	11	4	2	3	5	5	3	2
SFHP-116	15"	9	32	62	62	32	9	4	11	19	19	11	4	2	3	5	5	3	2
SFHP-138	15"	20	56	83	83	56	20	8	8	26	26	18	8	3	5	6	6	5	3
SFHP-213	15"	37	77	96	96	77	37	13	25	30	30	25	13	5	7	8	8	7	5

Data from ITL report numbers: 30274A15-78A15

Contact ALKCO Engineering for premium T5 and T5 high output photometrics.

SPECIFICATIONS

CONSTRUCTION
20 gauge cold rolled steel housing with corners neatly formed and knockouts flattened. All exposed edges deburred.

ELECTRICAL/LAMPS
for standard T5 lamps
Fully electronic ballast. 120 volt only. Warm White lamps included. Cool White and 3000K tri phosphor lamps available in place of standard Warm White. 7,500 hour average life, 60-70 LPW.
for premium T5 lamps
High frequency electronic rapid start ballast. 3000K tri-phosphor lamps included. 3500K and 4100K tri-phosphor lamps available in place of standard 3000K. 20,000 hour average life, 96-104 LPW.
for T5 high output lamps
High frequency electronic rapid start ballast. 3000K tri-phosphor lamps included. 3500K and 4100K tri-phosphor lamps available in place of standard 3000K. 20,000 hour average life, 83-92 LPW.

DIFFUSER
Prismatic lay-in diffuser standard. Optional 45° lateral prism lens or low brightness black hex-cell mini-louver.

FINISH
Baked-on polyester resin powder-coat finish applied after fabrication over a bonderizing iron phosphate coating.

INSTALLATION FEATURES
UL recognized electrical fitting accepts 3/8" flexible metal conduit (greenfield) or romex (supplied in units without cordsets). 3/16" dia. keyhole mounting slots and hinged wireway with concealed fasteners for simplified mounting/wiring. Wirenuts and mounting screws provided.

LABELS
U.L. and IBEW CSA available on request.

FIXTURE WARRANTY
All fixture components, except lamps, warrantied against defects during the life of the original installation (reference Alkco buying guide for details).

ORDERING INFORMATION

CATALOG #	DESCRIPTION	LAMPS	L	W	D
Standard Warm White T5 lamps with Electronic ballast					
SFHP-108	12" Solid Front Little Inch	1/T5 8W	12-1/4"	5"	11/8"
SFHP-113	21" Solid Front Little Inch	1/T5 13W	21-1/4"	5"	1 1/8"
SFHP-116	24" Solid Front Little Inch	2/T5 8W	24-1/2"	5"	1 1/8"
SFHP-138	33" Solid Front Little Inch	1/T5 8W 1/T5 13W	33-1/2"	5"	1 1/8"
SFHP-213	42" Solid Front Little Inch	2/T5 13W	42-1/2"	5"	1 1/8"
Premium T5 3000K lamp with Electronic High Frequency Ballast					
SFHP-114	premium T5	1/T5 14W	22 1/2"	5"	1 1/8"
SFHP-121	premium T5	1/T5 21W	34 3/8"	5"	1 1/8"
SFHP-128	premium T5	1/T5 28W	46 1/4"	5"	1 1/8"
High Output T5 3000K lamp with Electronic High Frequency Ballast					
SFHP-124	T5 high output	1/T5 24W	22 1/2"	5"	1 1/8"
SFHP-139	T5 high output	1/T5 39W	34 3/8"	5"	1 1/8"
SFHP-154	T5 high output	1/T5 54W	46 1/4"	5"	1 1/8"

Note: Specify lamp if other than standard. Above units are white baked enamel over cold rolled steel.
For stainless steel construction, prefix catalog number with "SS". Example: SSSFHP-138

OPTIONAL EQUIPMENT (must add suffix)

/BW	45° Lateral prism lens
/CO-W	White grounded convenience outlet
/CS-3W	6' White U.L. labeled 3-wire cordset
/CSA	Built to Canadian CSA standards
/DIM	Dimming ballast for premium T5 or T5 high output lamped fixtures only (use with analog 0-10 volt fluorescent dimming control supplied by others)
/Fuse Plug	6' White U.L. labeled cordset with resettable fuse built into plug
/HCL	Hex-cell mini-louver
/RSW	Fixture mounted rocker switch
/SLO-BLO	GMF slow-blow fuse and fuse holder
/SPF	Special paint finish (supply paint chip and reference number)
/XBX	Extra Greenfield/Romex connector

NOTE: Consult factory for 277 volt availability

bpi

brandston partnership inc.

Lighting design

122 West 26th Street 5th floor
New York New York 10001
T. 212.924.4050 F. 212.691.5418

Utah Museum of Natural History
Salt Lake City, UT

NF-1

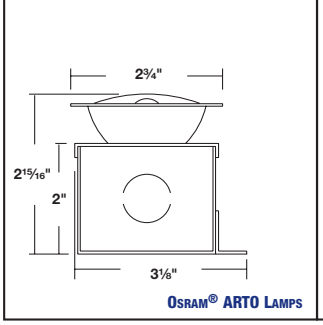

OSRAM® ARTO LAMPS

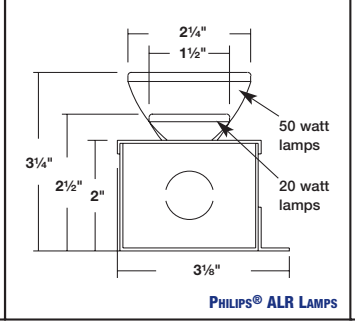

PHILIPS® ALR LAMPS

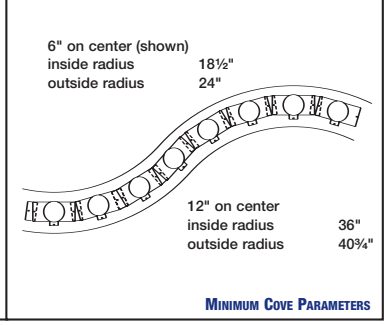

MINIMUM COVE PARAMETERS

2791 NX2™ & FX2™

HALOGEN STAR™ FIXED POSITION SEAMLESS STRAIGHT AND FIELD CURVABLE LIGHT STRIP

- Fixed Position 12 Volt Halogen Reflector Lamps
- Lamp Spacing Options:
  - 6" On Center
  - 12" On Center
- Constructed of Satin Anodized Formed Aluminum
- 12 volt 20 watt to 50 watt Aluminum Reflector, Double Contact Bayonet Base Lamps *(refer to pages 5-12 to 5-13)*
- 12 volt Low Voltage Power Supply required *(see Belfer Group Power Supply Brochure)*
- Custom Baffles can be manufactured to your specifications. *(refer to page 5-15)*
- Belfer Group Inc. Power Supply UL and CUL Listed Damp Location

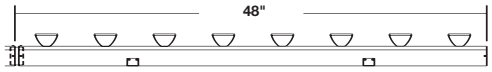

6" ON CENTER SHOWN

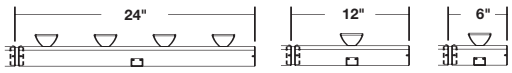

6" ON CENTER SHOWN 12" MODULE 6" MODULE

CAUTION: *Reflectorized lamps can generate significant heat. Be sure to maintain adequate clearance between lamp and combustible materials.*

Ordering Format for 2791 NX2 & FX2

Choose one from each category

SERIES	LAMP CONFIGURATION	LAMP SPACING	LENGTH
2791 fixed position lamp	**NX2** seamless straight lamps up or down	**6** 6" on center	**48** 48" length
	FX2 field curvable lamps up or down	**12** 12" on center	**24** 24" length
			12 12" length *(12" on center)*
			6 6" length *(6" on center)*

CSA UL US LISTED

DAMP LOCATION

These products protected by one or more of the following U.S. Patent Numbers 5,448,460 5,221,139 & 5,452,187. Other patents pending. Modifications and custom configurations are available. Please contact our Sales Department.

bpi

brandston partnership inc.

Lighting design

122 West 26th Street 5th floor
New York New York 10001
T. 212.924.4050 F. 212.691.5418

Utah Museum of Natural History
Salt Lake City, UT

RW-1

Curved Applications Fabrication Sheet

2791, 2793 and 2245 Low Voltage Series

Select Lamp Orientation:

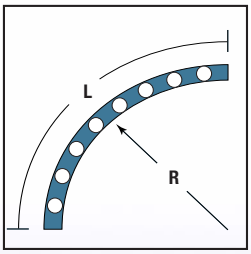

❑ Lamp Up

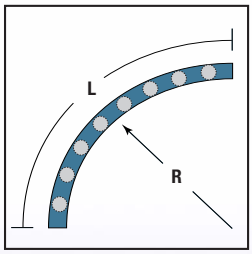

❑ Lamp Down

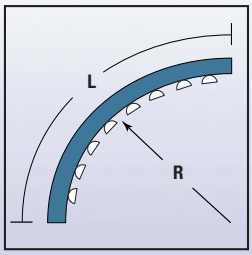

❑ Lamp In

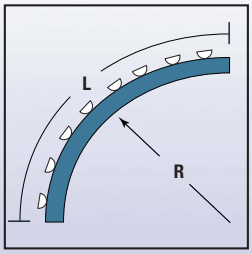

❑ Lamp Out

Supply Radius:

Specify Inside Radius and Length

R (radius) = _____

L (length) = _____

2791 minimum radius is 24"

2793 minimum radius is 24"

2245 minimum radius is 24"

Job Plans or Drawings are Required

Select Fixture:

Product Code	U/M	Description
2791 SERIES		
❑ **2791**6FC*	ft	6" o.c. Fixed Lamp Position Curved per foot
❑ **2791**12FC*	ft	12" o.c. Fixed Lamp Position Curved per foot
2793 SERIES		
❑ **2793**6FC*	ft	6" o.c. Directional Lamp Position Curved per foot
❑ **2793**12FC*	ft	12" o.c. Directional Lamp Position Curved per foot
2245 SERIES		
❑ **2245**LP6FC*	ft	LP Extrusion 6" o.c. Curved Lamp In/Out only
❑ **2245**LP12FC*	ft	LP Extrusion 12" o.c. Curved Lamp In/Out only
❑ **2245**MP6FC*	ft	MP Extrusion 6" o.c. Curved Lamp In/Out only
❑ **2245**MP12FC*	ft	MP Extrusion 12" o.c. Curved Lamp In/Out only
❑ **2245**SP6FC*	ft	SP Extrusion 6" o.c. Curved Lamp In/Out/Up/Down
❑ **2245**SP12FC*	ft	SP Extrusion 12" o.c. Curved Lamp In/Out/Up/Down

bpi

brandston partnership inc.

Lighting design

122 West 26th Street 5th floor
New York New York 10001
T. 212.924.4050 F. 212.691.5418

Utah Museum of Natural History
Salt Lake City, UT

RW-1

line™ .75

SYMMETRIC

Application

io Lighting's **line series .75** is approximately .75" x .75" in cross section. UL Listed for damp locations, its low profile housing enables functional luminous intensities from "tight" architectural details such as niches, coves & casework. Similar to halogen light sources, LEDs are point sources that offer superior definition to three dimensional objects and sparkle to reflective surfaces.

series .75 is a low voltage linear accent luminaire that may be ordered in incremental nominal lengths that range from 6" to 96". Optional beam spreads along the perpendicular axis of the fixture include 10°, 45°, and 65°. For details on the asymmetric beam spread, see dedicated specification sheet. **io** ensures that each LED is driven with the proper current and voltage which enables the average rated life to be 50,000 hours at 70% of the lamp lumen output. To ensure proper performance, architectural details should allow for ventilation and air flow around the fixture. Ambient temperature surrounding the fixture shall not exceed 120˚F.

Light Output

line series .75 is available with two lumen outputs for white light only. Red, green and blue are available in high output only. IES format files may be obtained from the factory or downloaded from **www.iolighting.com.**

Standard Output	High Output
3000K White: 34 lms/ft	**3000K White: 170 lms/ft**
5000K White: 40 lms/ft	**5000K White: 230 lms/ft**

Construction

The light weight, yet durable, extruded aluminum housing provides recommended heat sink requirements for LEDs. Patented optical assembly is composed of a customized acrylic material that offers very high transmisivity, UV stability, and excellent longevity. **series .75** is UL Listed for damp locations only.

Electrical

4'-0" 22 AWG, 600 volt TFFN rated power cords are supplied with strain reliefs. 24 volt 100 watt power supply will be provided as a standard. See daisy chain and remote distance requirements in chart on the lower left hand corner of this specification sheet. Alternate power supply options are available. Consult **io** website or **io** representative for **io** driver specification sheets.

Power supply and dimming module must be specified separately. For detailed information, see the **LED Linear** brochure or download the Power Supply specification sheet from **www.iolighting.com**.

Power Consumption

Standard Output: 2.1 w/ft **High Output: 7.6 w/ft**

Power consumption does not include power supply losses. Consult **io** driver specification sheets for losses associated with each driver option.

Finish

Anodized aluminum finish is standard. Custom finishes may be available upon request.

Dimensions

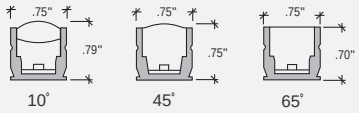

Beam Spreads

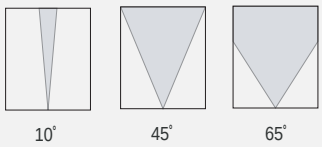

Power Supply

Standard Output

TYPE	SUPPLIES	REMOTE DISTANCE
24v100w	up to 35'-0"	7'-0" (w/22AWG)
	(2) RUNS UP TO	18'-0" (w/18AWG)
	49' WITH (1) RUN	46'-0" (w/14AWG)
	NTE 35'-0"	71'-0" (w/12AWG)

High Output

TYPE	SUPPLIES	REMOTE DISTANCE
24v100w	up to 12'-0"	7'-0" (w/22AWG)
		18'-0" (w/18AWG)
		46'-0" (w/14AWG)
		71'-0" (w/12AWG)

io Lighting
370 Corporate Woods Pkwy Vernon Hills, IL 60061-3107
T 847.735.7000 F 847.735.7001 E info@iolighting.com W iolighting.com

2007 - io Lighting reserves the right to change specifications for product improvement without notification.

bpi

brandston partnership inc.

Lighting design

122 West 26th Street 5th floor
New York New York 10001
T. 212.924.4050 F. 212.691.5418

Utah Museum of Natural History
Salt Lake City, UT

WE-1

io line™ .75
SYMMETRIC

Light Output / Distributions / Electrical Feed Options

STANDARD OUTPUT

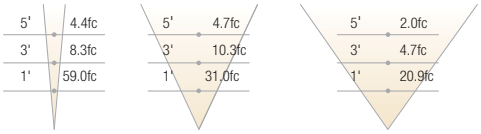

10°	45°	65°
3000K	3000K	3000K
8'-0"	8'-0"	8'-0"

HIGH OUTPUT

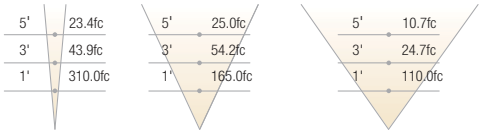

10°	45°	65°
3000K	3000K	3000K
8'-0"	8'-0"	8'-0"

ELECTRICAL END FEED OPTIONS

2 End feed | 3 Right side feed | 4 Left side feed | 5 Bottom feed

LIGHT OUTPUT CONVERSION TABLE

White Light Output	3000K S.O.	5000K S.O.	3000K H.O.	5000K H.O.
Light Output Multiplier	0.2(2)	0.24(2)	1.0(2)	1.35(2)

Color Light Output	RED	GREEN	BLUE
Light Output Multiplier	0.47(1)	0.71(1)	0.24(1)

IES format photometrics may be downloaded from **www.iolighting.com**

Mounting Options

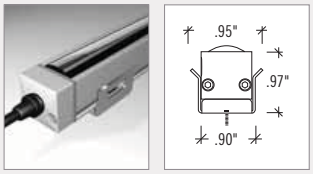

100 Surface (**io** part #: SA.BK.SURF)

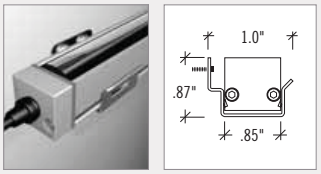

101 Side surface (**io** part #: SA.BK.WALL)

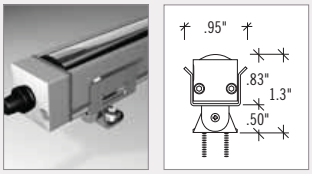

102 Field adjustable (**io** part #: SA.BK.ADJUST)

Order Code

io	1	2	3	4	5	6	7	8	9	10
0	03									

1. LINE SERIES
03 .75 S.O. or H.O.

2. LOCATION
I Interior
E Exterior (Note: Rated for damp locations face down only)

3. COLOR
3K White 3000K (Standard)(2)
3KHO White 3000K (High Output)(2)
5K White 5000K (Standard)(2)
5KHO White 5000K (High Output)(2)
R Red(1)
G Green(1)
B Blue(1)

4. DISTRIBUTION
10 10 degree
45 45 degree
65 65 degree

5. MOUNTING
100 Surface
101 Side surface
102 Field adjustable

6. FINISH
1 Anodized Aluminum
2 Anodized Custom Color

7. LENGTH

	UNITS	(ACTUAL)
01	6"	(6.26")(3)
02	12"	(11.95")(3)
03	18"	(17.7")(3)
04	24"	(23.26")(3)
05	30"	(28.95")(3)
06	36"	(34.7")(3)
07	42"	(40.26")(3)
08	48"	(45.95")(3)
09	54"	(51.7")(3)
10	60"	(57.26")(3)
11	66"	(62.95")(3)
12	72"	(68.7")(3)
13	78"	(79.95")(3)
14	84"	(85.7")(3)
15	90"	(91.26")(3)
16	96"	(96.95")(3)

8. ELECTRICAL FEED
2 End feed
3 Right side feed
4 Left side feed
5 Bottom feed
FOR CONTINUOUS ROW
2-2 Right end feed
Left end feed
3-4 Right side feed
Left side feed
5-5 Right bottom feed
Left bottom feed

9. VOLTAGE / DIMMING
1 120v
2 277v
3 120v w/dim
4 277v w/dim
5 Other

10. SPECIFY DRIVER / DIMMING
Note: Reference **io** power supply specification sheet for driver and dimming options. If left blank, **io** will supply 100 watt drivers. Download Power Supply specification sheet from **www.iolighting.com**

Footnotes

Footnotes
1. Refer to conversion table for output.
2. White light variance between LED's within a single fixture will not exceed +/- 200k.
3. "Actual" length provided includes end feed and non-feed endcaps. Add .27 to each length when electrical feeds occur on both endcaps (for continuous row mounting).

2007 - io Lighting reserves the right to change specifications for product improvement without notification.

bpi
brandston partnership inc.
Lighting design
122 West 26th Street 5th floor
New York New York 10001
T. 212.924.4050 F. 212.691.5418

Utah Museum of Natural History
Salt Lake City, UT

WE-1

OPTOTRONIC® OTDIM Module

OT DIM

Item Number	Description	Nominal Input Voltage (VDC)	Nominal Input Current (A)	Control Voltage (VDC)	Output Power (W)	Max. Output Current (A)
51516	OTDIM	10.5 24	5.3 5.3	0-10VDC 0-10VDC	0-52.5 0-120	5 5

Performance Guide

Dim module shall be an LED OPTOTRONIC electronic dimming module with 10 - 24 VDC input, with 0 –10 VDC control voltage.

Specifications

Dimensions:
6.77" L x 1.65" W x 0.79" H
(172mm L x 42mm W x 20mm H)

Lead Lengths:
Non-leaded

Wiring Requirements:
Input, load and control wires: 14AWG solid or stranded Cu only

Packaging:
Quantity: 20 pieces/carton
Weight: 0.165 lbs ea. (approx.)
3.3 lbs/carton

Dim Module
Input Voltage Range: 9.5-25VDC
Input Current: 5.3 Amps max.
Output Frequency: 135 Hz
Output Current: 5 Amps max.
Dimming Range: 0 – 100%
Control Voltage: 0 – 10 VDC, 0.6 ma max.
Temp. Range: -20°C through +50°C
Max. Case Temperature: 70°C
Color Mixing: Yes*

* For compatibility information with color mixing protocols/1-10V dimming controls, contact OSRAM SYLVANIA.

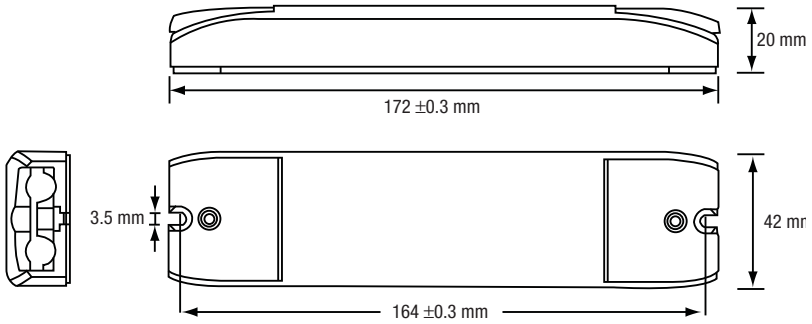

Wiring Diagram:

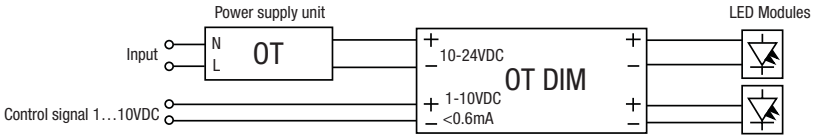

System Life / Warranty

OPTOTRONIC OTDIM are warranted for 5 years. OPTOTRONIC and QUICKTRONIC Products are covered by our QUICK 60+ system warranty, a comprehensive light source, ballast and power supply system warranty. For additional details, refer to our latest version of the QUICK 60+ warranty bulletin.

Ordering Guide

Specifications subject to change without notice.

Item Number — **51516 OT DIM**
OPTOTRONIC
Dimming Module

OSRAM SYLVANIA National Customer Support Center
1-800-LIGHTBULB (1-800-544-4828)
www.sylvania.com

the system solution™

bpi

brandston partnership inc.

Lighting design

122 West 26th Street 5th floor
New York New York 10001
T. 212.924.4050 F. 212.691.5418

Utah Museum of Natural History
Salt Lake City, UT

WE-1

line™ 2.0

SYMMETRIC

io

Application

io Lighting's **line series 2.0** is approximately 2"x 2" in cross section, which allows for luminous accents to be delivered from "tight" architectural details. This low voltage linear luminaire utilizes high brightness LEDs and may be specified for interior or exterior applications. Nominal lengths include 18", 36", 54" and 72". Precise beam spreads of 5°, 30° and 60° along the perpendicular axis of the fixture are well suited for accent or general illumination. **io's** proprietary "grazing" option allows the luminaire to be placed right next to a vertical surface and wash it uniformly. Individual units may be placed end to end to create continuous rows without obvious shadows between fixtures. **series 2.0**'s patented optical assembly is designed to practically eliminate stray light, making it perfect for applications where light pollution and/or light trespass are important design considerations.

LEDs are similar to halogen light sources in that they are point sources that can reveal superior definition to three-dimensional objects and sparkle to reflective surfaces.

io ensures that each LED is driven with the proper current and voltage which enables the average rated life to be 50,000 hours at 70% of lamp lumen output. To ensure proper performance, architectural details should allow for ventilation and air flow around the fixture. Ambient temperature surrounding the fixture shall not exceed 120˚F *(48.9˚C)*.

Light Output

series 2.0's patented optical assemblies offer fixture efficiencies that range between 74% and 85%. Refer to light output tables for footcandle values at various distances. Two luminous intensities are available for white light. IES format files may be obtained from the factory or downloaded from **www.iolighting.com**.

Standard Output	High Output
3000K White: 213 lms/ft	3000K White: 320 lms/ft
5000K White: 300 lms/ft	5000K White: 450 lms/ft

Construction

Heavy-duty aluminum housing provides recommended heat sink requirements for LEDs. Precision optics are composed of a customized acrylic material offering excellent light transmission and UV stability. High strength adhesive bonds the housing and patented optical assembly. **series 2.0** is UL listed for wet locations. **series 2.0** may be specified for interior and exterior applications. Fabrication methods differ for each application.

Exterior rated fixtures are sealed for life while interior rated fixtures are designed with a quick disconnect to enable the printed circuit board to be changed in the field.

Mounting Options

series 2.0 may be surface mounted, side surface mounted or surface mounted with field adjustability and lockable aiming.

Electrical

All fixtures are pre-wired and pre-assembled for easy installation. 8'-0", 14 AWG electrical feed is side mounted to enable continuous row mounting. Universal 120v - 277v supply required for remote driver. Driver enclosures for interior or exterior applications may be provided by **io.** 100W drivers may be remotely located up to 46'-0" (w/14 AWG), 71'-0" (w/12 AWG) and 120'-0" (w/10 AWG).

Power supply and dimming module must be specified separately. For detailed information, consult **io** website or **io** representative for specification sheets.

Power Consumption

Standard Output: 12 w/ft **High Output: 17.8 w/ft**

Power consumption does not include power supply losses. Consult **io** driver specification sheets (at **www.iolighting.com**) for losses associated with each driver option.

Finish

Anodized aluminum finish is standard. Custom finishes may be available upon request.

Dimensions

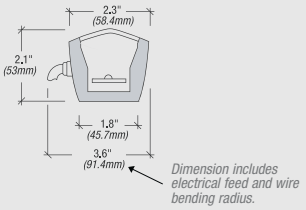

Beam Spreads

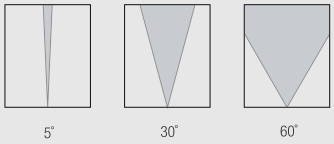

Lengths

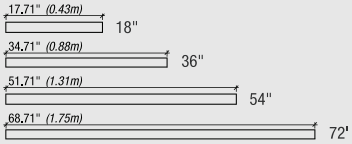

io Lighting 370 Corporate Woods Parkway Vernon Hills, IL 60061-3107 T 847.735.7000 F 847.735.7001 E info@iolighting.com W iolighting.com

2007 - io Lighting reserves the right to change specifications for product improvement without notification

bpi

brandston partnership inc.

Lighting design

122 West 26th Street 5th floor
New York New York 10001
T. 212.924.4050 F. 212.691.5418

Utah Museum of Natural History
Salt Lake City, UT

WE-2/WE-3

Light Output

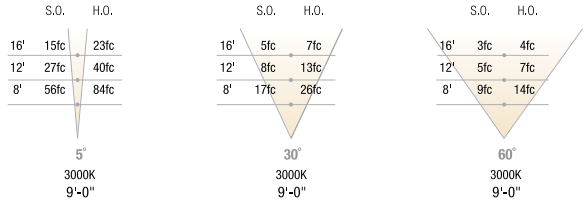

LIGHT OUTPUT CONVERSION TABLE

White Light Output	3000K S.O.	5000K S.O.	3000K H.O.	5000K H.O.
Light Output Multiplier	0.67(2)	0.94(2)	1.0(2)	1.4(2)

Color Light Output	RED	GREEN	BLUE
Light Output Multiplier	.83(1)	1.08 (1)	0.88 (1)

IES format photometrics may be downloaded from **www.iolighting.com**

Distributions

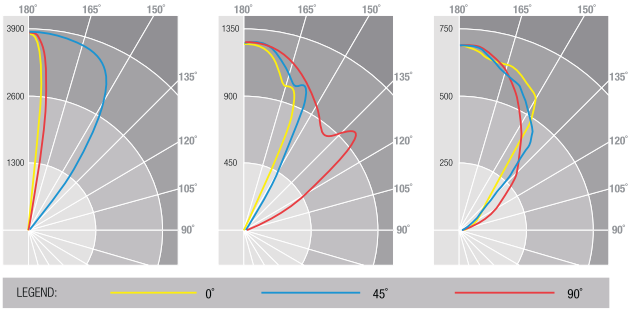

*Candlepower Distribution curves are based on 54" fixture lengths, 5000K High Output.

For Metric Conversion	8'	9'	12'	16'
	2.4m	2.7m	3.7m	4.9m

line series 2.0 is UL listed for wet locations. It is not rated for submersible applications. **line 2.0** should not be mounted in conditions where there is any standing water whatsoever.

Grazing Option

Edge of optic employs a diffuser to distribute fill light at lower angles. The grazing option may be specified with all three beam spread options (5°, 30°, 60°).

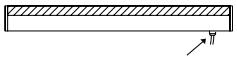

Note: Electrical feed is located on opposing side of the grazed portion of the optic.

Mounting Options

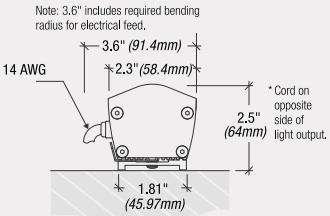

100 Surface (**io** part #: LA.BK.SURFMT)

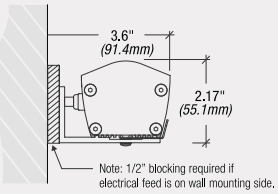

101 Side surface (**io** part #: LA.BK.WALLMT)

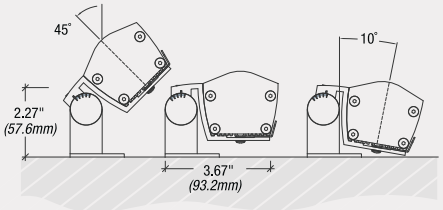

102 Field adjustable with lockable aiming (**io** part #: LA.BK.ADJMT)

Order Code

0	.		.		.		.		.		.		.		.	
io		1		2		3		4		5		6		7		8		9

1. LIGHT OUTPUT
04 2.0 S.O. (Standard Output)
05 2.0 H.O. (High Output)

2. LOCATION
I Interior
E Exterior

3. COLOR
3K White 3000K (2)
5K White 5000K (2)
R Red (1)
G Green (1)
B Blue (1)

4. DISTRIBUTION
5 5°
5g 5° w/grazing
30 30°
30g 30° w/grazing
60 60°
60g 60° w/grazing

5. MOUNTING
100 Surface
101 Side surface
102 Field adjustable

6. FINISH
1 Anodized Aluminum
2 Anodized Custom Color

7. LENGTH
UNITS
18 18" (17.71" actual)
36 36" (34.71" actual)
54 54" (51.71" actual)
72 72" (68.71" actual)

FOR CONTINUOUS ROW
Specify length (e.g., 96'-0")
Note: Overall length must be divisible by 18"

8. VOLTAGE / DIMMING
SIDE FEED STANDARD
1 120v
2 277v
3 120v w/dim
4 277v w/dim
5 Other

9. SPECIFY DRIVER / DIMMING
Note: If left blank, **io** will supply 100 watt drivers. Download Power Supply specification sheet from **www.iolighting.com**

Footnotes

Footnotes
1. Colors are available in Standard Output only (12w/ft).
2. White light variance between LEDs within a single fixture will not exceed +/- 200k.

For Metric Conversion	1"	1"	1'
	25.4mm	2.54cm	0.3m

io Lighting 370 Corporate Woods Parkway Vernon Hills, IL 60061-3107 T 847.735.7000 F 847.735.7001 E info@iolighting.com W iolighting.com

2007 - io Lighting reserves the right to change specifications for product improvement without notification

bpi

brandston partnership inc.

Lighting design

122 West 26th Street 5th floor
New York New York 10001
T. 212.924.4050 F. 212.691.5418

Utah Museum of Natural History
Salt Lake City, UT

WE-2/WE-3

FEATURES

OPTICAL SYSTEM

- Self-flanged, semi-specular, matte-diffuse or specular compound contour finishing trim in combination with keyed, proprietary Gotham spread lens delivers a uniform distribution of light to the wall.
- Retained by two self-aligning torsion springs. Relamping capability from above or below ceiling.
- Internal housing components painted black.
- Optical assembly rotates 360°.

MECHANICAL SYSTEM

- Rolled steel housing wrap with junction box access door allows for easy maintenance through the aperture.
- Black painted steel mounting frame features tool-less top access and accommodates a maximum 1-1/2" ceiling thickness.
- 16-gauge galvanized steel mounting bars with continuous 4" vertical adjustment are shipped pre-installed. Post installation adjustment possible without the use of tools from above or below ceiling.
- Secondary housing adjustment system for precise, final ceiling to flange alignment.
- Galvanized steel junction box with bottom hinged access covers and spring latch. Three combination 1/2"-3/4" and one 1/2" knockouts for straight-through conduit runs. Capacity: 8 (4 in, 4 out) No. 12 AWG conductors rated for 90°C.

ELECTRICAL SYSTEM

- Medium-base porcelain socket with nickel-plated screw shell.
- Thermally-activated insulation detector is replaceable without the use of tools.

LISTING

- Fixtures are UL Listed for thru-branch wiring, Non-IC recessed mounting and damp locations. Listed and labeled to comply with Canadian Standards.

Type ..... Catalog number .....

Incandescent Downlights

6" DLW

Lensed Wallwash

PAR30 or PAR38 Lamp

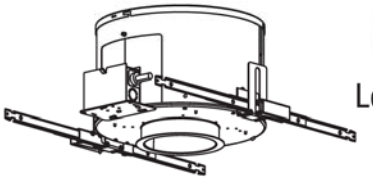

Aperture:	6-1/4 (15.9)
Ceiling opening:	6-7/8 (17.5)
Overlap trim:	7-5/8 (19.4)

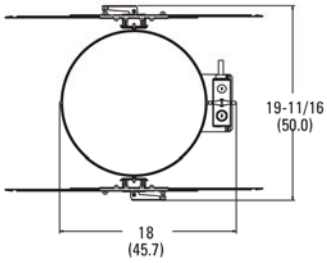

All dimensions are inches (centimeters)

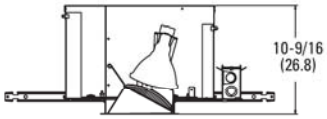

ORDERING INFORMATION

Example: **DLW 6AR**

Choose the boldface catalog nomenclature that best suits your needs and write it on the appropriate line.

DLW

Series[1]	Aperture/ Trim color	Finish	Options
DLW	**6AR** Clear	**(blank)** Semi-specular	**SDT** 277V to 120V stepdown transformer
	6BR[2] Black	**LD** Matte-diffuse	**SDT347** 347V to 120V stepdown transformer. (75W Max.)
	6PR Pewter	**LS** Specular	**SF** Single fuse
	6UBR Umber		**TRW** White painted flange
	6WTR Wheat		**TRBL** Black painted flange
	6CR Champagne Gold		**GSKT** Foam gasketing
	6GR Gold		**LRC**[3] Provides compatibility with Lithonia Reloc® System. Lithonia Reloc System can be installed less this option with connectors provided by others. Access above ceiling required
			CP Chicago Plenum

NOTES:
1 Maximum wattage: 250W PAR38
2 Not available with finishes.
3 For compatible Reloc systems, refer to Technical Bulletins tab.

gotham®
An Acuity Brands Company

GOTHAM ARCHITECTURAL DOWNLIGHTING
1400 Lester Road Conyers Georgia 30012
P 800 315 4982 F 770 860 3129
www.gothamlighting.com

DLW 6 **AINC-200**

bpi

brandston partnership inc.

Lighting design

122 West 26th Street 5th floor
New York New York 10001
T. 212.924.4050 F. 212.691.5418

Utah Museum of Natural History
Salt Lake City, UT

WP-1

6" DLW Lensed Wallwash

TECHNICAL INFORMATION

Footcandle values are initial and tables are based on minimum of six units. For fixture-to-wall distance other than those shown, use maximum of one-to-one spacing (distance between fixtures not more than distance to wall) for best results.

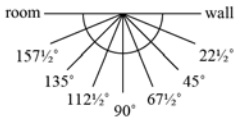

Fixture/lamp — **Candlepower data** — **Footcandle values**

DLW 6AR
250W PAR38 FL Lamp
3100 rated lumens
Test No. LTL15303

Vertical Angle	Plane Angle: Room Side Room	157.5°	135°	112.5°	90°	Wall Side 67.5°	45°	22.5°	Wall
0°	1608	1608	1608	1608	1608	1608	1608	1608	1608
5°	1173	1207	1278	1400	1542	1695	1828	1943	1996
15°	508	546	676	938	1294	1665	2023	2239	2290
25°	238	259	345	558	938	1390	1731	1825	1762
35°	103	117	168	330	669	1082	1194	1118	981
45°	34	42	71	157	317	554	625	526	454
55°	6	8	22	49	95	162	212	221	223
65°	0	0	2	14	29	57	95	123	133
75°	0	1	2	2	8	20	37	54	59
85°	0	0	2	1	1	1	4	7	8
90°	0	0	0	0	0	0	0	0	0

	3 ft. from wall on 3 ft. centers			3 ft. from wall on 4 ft. centers		
1	10	9	10	9	6	9
2	20	18	20	16	13	16
3	28	28	28	22	19	22
4	37	38	37	28	28	28
5	40	40	40	29	30	29
6	38	37	38	28	28	28
7	33	33	33	25	25	25
8	28	29	28	21	22	21
9	24	24	24	18	18	18
10	20	20	20	15	15	15

DLW 6AR
75W PAR30LN WFL Lamp
1130 rated lumens
Test No. LTL15304

Vertical Angle	Plane Angle: Room Side Room	157.5°	135°	112.5°	90°	Wall Side 67.5°	45°	22.5°	Wall
0°	519	519	519	519	519	519	519	519	519
5°	396	407	432	467	508	553	592	621	634
15°	200	216	265	348	460	578	668	721	724
25°	99	111	153	240	377	522	619	634	598
35°	44	51	80	152	268	410	466	424	368
45°	11	14	29	68	127	202	247	205	180
55°	2	3	6	17	41	71	95	87	85
65°	0	1	1	4	9	20	34	44	48
75°	0	0	1	1	3	7	13	19	21
85°	0	1	1	1	1	1	2	3	3
90°	0	0	0	0	0	0	0	0	0

	3 ft. from wall on 3 ft. centers			3 ft. from wall on 4 ft. centers		
1	3	3	3	3	2	3
2	7	7	7	6	5	6
3	11	11	11	9	8	9
4	15	15	15	11	12	11
5	15	15	15	11	12	11
6	14	14	14	10	10	10
7	12	12	12	9	9	9
8	10	10	10	7	8	7
9	8	8	8	6	6	6
10	7	7	7	5	5	5

DLW 6AR
100W PAR38 FL Lamp
1500 rated lumens
Test No. LTL15306

Vertical Angle	Plane Angle: Room Side Room	157.5°	135°	112.5°	90°	Wall Side 67.5°	45°	22.5°	Wall
0°	881	881	881	881	881	881	881	881	881
5°	620	652	705	781	876	974	1051	1110	1128
15°	254	282	372	550	788	1044	1250	1326	1333
25°	109	123	183	328	577	848	1052	1059	991
35°	49	55	83	165	344	556	641	602	547
45°	17	21	35	80	176	265	283	272	255
55°	3	5	10	28	63	99	111	113	116
65°	0	1	2	6	15	30	47	61	66
75°	0	1	1	1	3	9	18	26	29
85°	0	0	1	1	1	1	2	3	3
90°	0	0	0	0	0	0	0	0	0

	3 ft. from wall on 3 ft. centers			3 ft. from wall on 4 ft. centers		
1	5	4	5	4	3	4
2	10	9	10	8	6	8
3	15	15	15	12	10	12
4	20	20	20	15	14	15
5	21	21	21	16	15	16
6	20	19	20	15	15	15
7	18	17	18	13	13	13
8	15	15	15	11	11	11
9	13	13	13	10	10	10
10	11	11	11	8	8	8

NOTES:
1. Tested to current IES and NEMA standards under stabilized laboratory conditions. Various operating factors can cause differences between laboratory data and actual field measurements. Dimensions and specifications are based on the most current available data and are subject to change without notice.

AINC-200

©2006 Gotham, Rev. 8/06
AINC-200.p65

gotham
An Acuity Brands Company

GOTHAM ARCHITECTURAL DOWNLIGHTING
A DIVISION OF ACUITY LIGHTING GROUP, INC.
1400 Lester Road Conyers Georgia 30012
P 800 315 4982 F 770 860 3129
www.gothamlighting.com

bpi
brandston partnership inc.
Lighting design
122 West 26th Street 5th floor
New York New York 10001
T. 212.924.4050 F. 212.691.5418

Utah Museum of Natural History
Salt Lake City, UT

WP-1

FEATURES

OPTICAL SYSTEM

- Internal housing components painted matte black. Lamp snoot minimizes stray light in housing.
- Self-flanged, semi-specular, matte-diffuse or specular cone with spread lens. Minimum flange matches cone finish.
- Optical system is retained by self-aligning, torsion support springs.
- Optical system designed for spot lamps.
- Tool-less 360° horizontal aiming adjustments are made with optical system removed.
- Adjustment mechanism is lockable to maintain focus during relamping.
- Accommodates up to two lenses, filters or louvers.
- Clear safety lens standard.

MECHANICAL SYSTEM

- Black painted housing features tool-less top access and accommodates a maximum 1-1/2" ceiling thickness.
- Re-lamp capability from above or below ceiling.
- 16-gauge galvanized steel mounting bars with continuous 4" vertical adjustment are shipped pre-installed. Post installation adjustment possible without the use of tools above or below ceiling.
- Secondary housing adjustment system for precise, final flange to ceiling alignment.
- Galvanized steel junction box with hinged access covers and spring latch. Four combination 1/2"-3/4" knockouts for straight-through conduit runs. Capacity: 8 (4 in, 4 out) No. 12 AWG conductors, rated for 90°C.

ELECTRICAL SYSTEM

- Tool-less access door provides access to junction box through the aperture.
- Replaceable socket assembly. MR16 socket assembly standard.
- 12-volt electronic transformer is replaceable without the use of tools.
- Thermally-activated insulation detector is replaceable without the use of tools.

LISTING

- Fixtures are UL Listed for thru-branch wiring, Non-IC recessed mounting and damp locations. Listed and labeled to comply with Canadian Standards.

Type ..... Catalog number .....

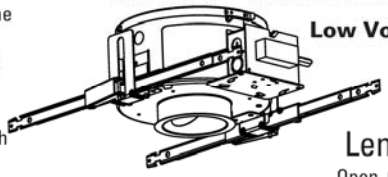

Low Voltage Downlights

4" DLV

Lensed Wallwash

Open Cone with Spread Lens
Max 75 Watt

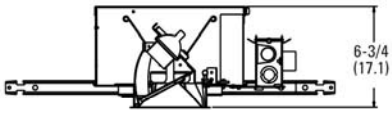

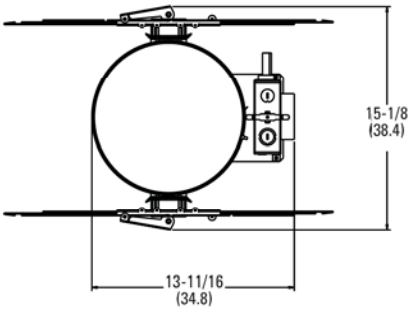

All dimensions are inches (centimeters)

Aperture:	4-5/16 (11.0)
Ceiling opening:	4-7/8 (12.4)
Overlap trim:	5-1/2 (14.0)

ORDERING INFORMATION

Example: **DLV WSH MR16 4AC 120**

Choose the boldface catalog nomenclature that best suits your needs and write it on the appropriate line. Order accessories as separate catalog numbers (shipped separately).

DLV WSH

Series
DLV

Configuration
WSH

Lamp designation

MR16	MR16 capability (standard)
MR11	MR11 capability
ALR12	ALR12 capability
ALR18	ALR18 capability
AR70	AR70 capability

Aperture/Trim color

4AC	Clear
4BC[1]	Black
4PC	Pewter
4UBC	Umber
4WTC	Wheat
4GC	Gold
4WC[1]	White painted

Finish

(blank)	Semi-specular
LD	Matte-diffuse
LS	Specular

Voltage

120
277
347

Options

TRW	White painted flange. (Standard with WC)
TRBL	Black flange
LRC[2]	Provides compatibility with Lithonia Reloc System. Lithonia Reloc System can be installed less this option with connectors provided by others. Access above ceiling required

Accessories

- For lens accessories, refer to Technical Bulletins tab.
- For lamp options, refer to Technical Bulletins tab.

NOTES

1 Not available with finishes.
2 For compatible Reloc systems, refer to Technical Bulletins tab.

gotham®
An Acuity Brands Company

GOTHAM ARCHITECTURAL DOWNLIGHTING
1400 Lester Road Conyers Georgia 30012
P 800 315 4982 F 770 860 3129
www.gothamlighting.com

DLV WSH 4 **ALV-180**

4" DLV Lensed Wallwash

TECHNICAL INFORMATION

For fixture-to-wall distance other than those shown, use maximum of one-to-one spacing (distance between fixtures not more than distance to wall) for best results.

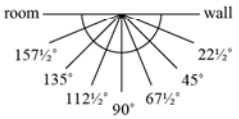

Candlepower data

DLV WSH MR16 4AC , Q50MR16/C/NSP15 (EXT) lamp, 880 rated lumens, Test no. 2198060402

Vertical angle	Plane angle: Room side					Wall side			
	Room	157½°	135°	112½°	90°	67½°	45°	22½°	Wall
0°	226	226	226	226	226	226	226	226	226
5°	124	125	151	175	214	224	226	222	220
15°	38	37	50	74	113	178	245	280	290
25°	18	19	23	37	66	124	230	349	407
35°	5	8	13	17	43	92	207	364	458
45°	0	3	4	11	22	59	161	325	433
55°	0	0	2	6	11	35	108	243	340
65°	0	0	0	0	1	16	66	151	222
75°	0	0	0	0	0	0	12	48	88
85°	0	0	0	0	0	0	0	0	0
90°	0	0	0	0	0	0	0	0	0

Single luminaire footcandle values

Distance from ceiling	Fixture 1' from wall				Fixture 2' from wall				Fixture 3' from wall				
Distance along wall:	0'	1'	2'	3'	0'	1'	2'	3'	0'	1'	2'	3'	4'
1'	153	30	4	0	43	20	4	1	13	7	2	0	0
2'	38	20	6	2	38	23	8	3	21	14	7	3	1
3'	10	9	5	2	19	14	7	3	17	13	7	3	2
4'	4	4	3	2	9	8	5	3	11	9	6	3	2
5'	2	2	2	1	5	4	3	2	7	6	4	3	2
6'	1	1	1	1	3	3	2	2	4	4	3	2	2
7'	1	1	1	1	2	2	2	1	3	3	2	2	1
8'	0	1	1	1	1	1	1	1	2	2	2	1	1
9'	0	0	1	1	1	1	1	1	1	1	1	1	1
10'	0	0	0	0	0	1	1	1	1	1	1	1	1

DLV WSH MR16 4AC , 65MR16Q/10/NSP (FPA) lamp, 1100 rated lumens, Test no. 2198060404

Vertical angle	Plane angle: Room side					Wall side			
	Room	157½°	135°	112½°	90°	67½°	45°	22½°	Wall
0°	258	258	258	258	258	258	258	258	258
5°	153	151	183	213	251	251	240	234	230
15°	41	46	54	77	123	198	261	293	299
25°	23	18	25	35	67	133	247	392	452
35°	11	10	13	21	45	97	228	445	577
45°	0	4	5	8	27	68	189	429	597
55°	0	0	2	3	16	48	137	333	487
65°	0	0	0	0	3	23	80	212	321
75°	0	0	0	0	2	1	23	79	135
85°	0	0	0	0	0	0	0	0	0
90°	0	0	0	0	0	0	0	0	0

Distance from ceiling	Fixture 1' from wall				Fixture 2' from wall				Fixture 3' from wall				
Distance along wall:	0'	1'	2'	3'	0'	1'	2'	3'	0'	1'	2'	3'	4'
1'	211	38	4	0	62	27	5	1	19	11	4	1	0
2'	43	22	7	2	53	30	10	4	30	20	10	3	1
3'	11	10	5	2	24	17	8	4	23	17	10	4	2
4'	4	5	3	2	11	9	5	3	14	11	8	4	2
5'	2	3	2	1	5	5	4	3	8	7	5	3	2
6'	1	2	1	1	3	3	2	2	5	4	4	2	2
7'	1	1	1	1	2	2	2	1	3	3	2	2	1
8'	0	1	1	1	1	1	1	1	2	2	2	1	1
9'	0	0	1	1	1	1	1	1	1	1	1	1	1
10'	0	0	0	0	0	1	1	1	1	1	1	1	1

NOTES

1 Tested to current IES and NEMA standards under stabilized laboratory conditions. Various operating factors can cause differences between laboratory data and actual field measurements. Dimensions and specifications are based on the most current available data and are subject to change without notice.

ALV-180

©2007 Gotham, Rev. 10/08
ALV-180

gotham
An Acuity Brands Company

GOTHAM ARCHITECTURAL DOWNLIGHTING
A DIVISION OF ACUITY LIGHTING GROUP, INC.
1400 Lester Road Conyers Georgia 30012
P 800 315 4982 F 770 860 3129
www.gothamlighting.com

bpi

brandston partnership inc.

Lighting design

122 West 26th Street 5th floor
New York New York 10001
T. 212.924.4050 F. 212.691.5418

Utah Museum of Natural History
Salt Lake City, UT

WP-2

V/A TRACK

STRAIGHT TRACK

The V/A track consists of 2 extruded copper pipes with galvanized surface in chrome, bronze, gold or matte chrome. The plastic insulation is either black or grey.

Art.-Nr.	
160031bz	bronze and black, 39"
160031ch	chrome and black, 39"
160031g	gold and black, 39"
160031mcgy	matte chrome, 39"
160032bz	bronze and black, 78"
160032ch	chrome and black, 78"
160032g	gold and black, 78"
160032mcgy	matte chrome, 78"
160033bz	bronze and black, 102"
160033ch	chrome and black, 102"
160033mcgy	matte chrome, 102"

CURVED TRACK

copper tube track 2 x 3/8". Custom curved V/A track bent horizontally or vertically in any radius from 2' 6" to 100'.

Art.-Nr.	
horizontal curve	
160019-1bz	bronze and black, 67"
160019-1ch	chrome and black, 67"
160019-1mcgy	matte chrome, 67"
160019-2bz	bronze and black, 94"
160019-2ch	chrome and black, 94"
160019-2mcgy	matte chrome, 94"
vertical curve	
160019-3bz	bronze and black, 67"
160019-3ch	chrome and black, 67"
160019-3mcgy	matte chrome, 67"
160019-4bz	bronze and black, 94"
160019-4ch	chrome and black, 94"
160019-4mcgy	matte chrome, 94"

END CAP

for V/A tracks

Art.-Nr.	
160020mcgy	matte chrome
160020blk	black

DEBURRING TOOL

Art.-Nr.
160400

CONNECTORS

TRACK CONNECTOR / ISO TRACK CONNECTOR

for copper tube tracks, suitable for both straight and curved tracks. (not visible after assembly)

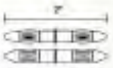

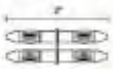

Art.-Nr.	
160402	chrome internal connector
160409blk	black plastic, iso
160409mcgy	matte chrome, iso

FLEXIBLE TRACK CONNECTOR

Art.-Nr.	
160501bz	bronze, flexible from 55° - 130°
160501ch	chrome, flexible from 55° - 130°
160501g	gold, flexible from 55° - 130°
160501mcgy	matte chrome, flexible from 55° - 130°

VERTICAL ANGLE CONNECTOR

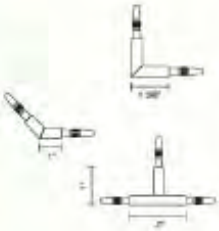

Art.-Nr.	
160407ch	chrome and black, 90°
160407g	gold and black, 90°
160407mcgy	matte chrome, 90°
160410ch	chrome and black, 135°
160410g	gold and black, 135°
160410mcgy	matte chrome, 135°
160403ch	chrome and black, T-Connector
160403g	gold and black, T-Connector
160403mcgy	matte chrome, T-Connector

HORIZONTAL ANGLE CONNECTOR

Art.-Nr.	
160411ch	chrome and black, 45°
160411g	gold and black, 45°
160411mcgy	matte chrome, 45°
160420ch	chrome and black, 60°
160420g	gold and black, 60°
160420mcgy	matte chrome, 60°
160406bz	bronze and black, 90°
160406ch	chrome and black, 90°
160406g	gold and black, 90°
160406mcgy	matte chrome, 90°
160421ch	chrome and black, 120°
160421g	gold and black, 120°
160421mcgy	matte chrome, 120°
160408ch	chrome and black, 135°
160408g	gold and black, 135°
160408mcgy	matte chrome, 135°
160414ch	chrome and black, T-Connector
160414g	gold and black, T-Connector
160414mcgy	matte chrome, T-Connector
160404ch	chrome and black, Cross Connector
160404g	gold and black, Cross Connector
160404mcgy	matte chrome, Cross Connector

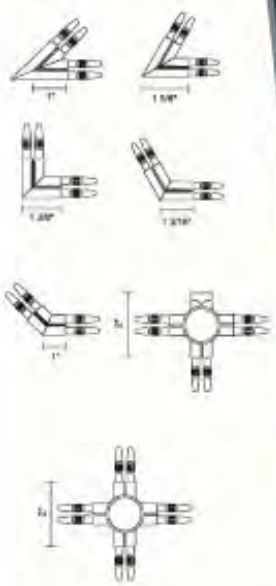

CUSTOM HORIZONTAL ANGLE CONNECTOR

Art.-Nr.	
160830ch	chrome and black, 45° - 180°*
160830g	gold and black, 45° - 180°*
160830mcgy	matte chrome, 45° - 180°*

*custom angle in 5° increments between 45° - 180°; specify when ordering

TRACK SPACER

Art.-Nr.	
160210bz	bronze and black
160210ch	chrome and black
160210mcgy	matte chrome

SUPPORTS

CORD SUSPENSION CLIP

aircraft cable with clamp adaptor

Art.-Nr.	
160600bz	bronze and black, 78"
160600ch	chrome and black, 78"
160600g	gold and black, 78"
160600mcgy	matte chrome, 78"

CORD SUSPENSION CROSS CONNECTOR

insulated connection at any angle

Art.-Nr.	
160206ch	chrome and black, 40"
160206g	chrome and black, 40"
160206mcgy	matte chrome, 40"

WALL AND CEILING ATTACHMENT CLIP

Art.-Nr.	
160519mcgy	matte chrome, 1/2"
160519blk	black, 1/2"
160518bz	bronze, 1"
160518ch	chrome and black, 1"
160518blk-g	gold and black, 1"
160518mcgy	matte chrome, 1"

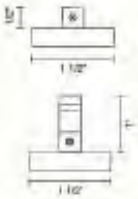

bpi

brandston partnership inc.

Lighting design

122 West 26th Street 5th floor
New York New York 10001
T. 212.924.4050 F. 212.691.5418

Utah Museum of Natural History
Salt Lake City, UT

YB-1/YC-1/YK-1/YL-1

WALL EXTENSION ARM CLIP
with clip and plate disc, cannot be shortened

Art.-Nr.	
160560ch	chrome and black, 12"
160560g	gold and black, 12"
160560mcgy	matte chrome, 12"
160561ch	chrome and black, 20"
160561g	gold and black, 20"
160561mcgy	matte chrome, 20"

TRACK END FASTENER
2 parts, with mounting material

Art.-Nr.	
160215blk	black
160215mcgy	matte chrome

WALL COVER PLATE
set of 2, plastic, cutout 6/8"

Art.-Nr.	
160204mcgy	matte chrome
160204blk	black
160204wh	white

MOUNTING ACCESSORIES

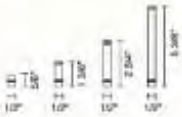

SPACER
for use with 160519,
cannot be shortened

Art.-Nr.	
160430ch	chrome and black, 5/8"
160430g	gold and black, 5/8"
160430mcgy	matte chrome, 5/8"
160530ch	chrome and black, 1 3/8"
160530g	gold and black, 1 3/8"
160530mcgy	matte chrome, 1 3/8"
160531bz	bronze and black, 2 3/4"
160531ch	chrome and black, 2 3/4"
160531g	gold and black, 2 3/4"
160531mcgy	matte chrome, 2 3/4"
160532bz	chrome and black, 5 3/8"
160532ch	chrome and black, 5 3/8"
160532g	gold and black, 5 3/8"
160532mcgy	matte chrome, 5 3/8"

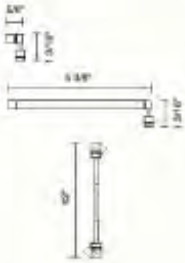

WALL SUSPENSION
cannot be shortened, for use with 160519

Art.-Nr.	
160565ch	chrome and black, 5/8"
160565mcgy	matte chrome, 5/8"
160566ch	chrome and black, 5 3/8"
160566mcgy	matte chrome, 5 3/8"
160580ch	chrome and black, 42"
160580mcgy	matte chrome, 42"

PLATE DISC
for all V/A mounting elements, for increasing the support surface particularly with lightweight ceilings

Art.-Nr.	
160533bz	bronze and black
160533ch	chrome and black
160533g	gold and black
160533mcgy	matte chrome

BASE PLATE
for all V/A mounting elements, for increasing the support surface

Art.-Nr.	
160534ch	chrome and black
160534g	gold and black
160534mcgy	matte chrome

bpi

brandston partnership inc.

Lighting design

122 West 26th Street 5th floor
New York New York 10001
T. 212.924.4050 F. 212.691.5418

Utah Museum of
Natural History
Salt Lake City, UT

YB-1/YC-1/YK-1/YL-1

POWER SUPPLY

PLUG-IN POWER FEED
for 8 and 10 gauge cable

Art.-Nr.		300W	25A
160413blk	black		
160401mcgy	matte chrome		

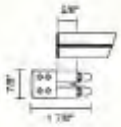

MID-SPAN POWER FEED
2 parts, for 8 and 10 gauge cable

Art.-Nr.		300W	25A
160528bz	bronze and black		
160528ch	chrome and black		
160528g	gold and black		
160528mcgy	matte chrome		

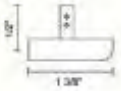

DUAL ROD POWER FEED
covers 4" j-box,
for 8 and 10 gauge cable

Art.-Nr.		300W	25A
160306bz	bronze and black		
160306ch	chrome and black		
160306mcgy	matte chrome		

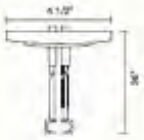

2" DUAL ROD POWER FEED
with integral 2" j-box,
for 8 and 10 gauge cable

Art.-Nr.		300W	25A
160308bz	bronze and black		
160308ch	chrome and black		
160308mcgy	matte chrome		

POWER FEED CANOPIES

POWER FEED COVER I
for mounting to standard j-box, may be field cut,
consult factory for custom lengths,
accepts 2 sets of power feed cables,
power feeds not included

Art.-Nr.	
240100bz	bronze
240100ch	chrome
240100mc	matte chrome

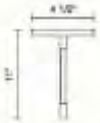

SLOPED CEILING FEED COVER
for sloped ceiling mounting to standard j-box,
may be field cut,
power feeds not included

Art.-Nr.	
240120bz	bronze
240120ch	chrome
240120mc	matte chrome

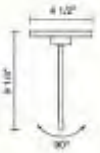

POWER SUPPLY CABLE (not shown)
tin-plated, transparent insulated power cable

Art.-Nr.	
150118	10 gauge
150121	8 gauge

ADAPTOR

Art.-Nr.		300W
160050bz	bronze and black	
160050ch	chrome and black	
160050g	gold and black	
160050mcgy	matte chrome	

bpi

brandston partnership inc.

Lighting design

122 West 26th Street 5th floor
New York New York 10001
T. 212.924.4050 F. 212.691.5418

Utah Museum of
Natural History
Salt Lake City, UT

YB-1/YC-1/YK-1/YL-1

TC2 ELECTRONIC TRANSFORMER

Class II with 5A breakers included

TC2-150/120v	3 x 50W, 120V	
TC2-300/120v	6 x 50W, 120V	

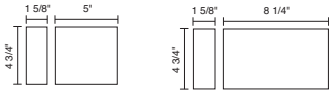

T-60 PLUG-IN TRANSFORMER

electronic transformer for standard wall sockets

70403	60W, 120V	BLK

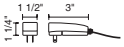

PLUG-IN TRANSFORMER FOR LEDRA FIXTURES

short circuit and overload protected, output DC 12V 700mA max, UL listed

70423	120V/250V	BLK

T REMOTE TRANSFORMER

2 secondary taps with circuit breaker included in housing, for separate switching separate transformers should be used, choke optional

T-150/120v	150W, 120V	BLK
T-300/120v	300W, 120V	MC
T-300/277v	300W, 277V	MC
T-600/120v	2 x 300W, 120V	MC
T-600/277v	2 x 300W, 277V	MC
TCK-300	choke for 300W transformer	
TCK-600	choke for 600W transformer	

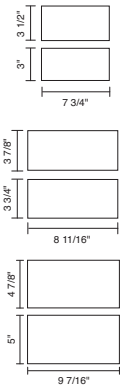

TQ REMOTE/SURFACE TRANSFORMER

4 secondary taps with primary and secondary circuit breaker included, zero clearance requirement, choke optional for dimming

TQ-150/120v	150W, 120V	WH
TQ-300/120v	300W, 120V	WH
TQ-300/277v	300W, 277V	WH
TQ-600/120v	2 x 300W, 120V	WH
TQ-600/277v	2 x 300W, 277V	WH
TCK-300	choke for 300W transformer	
TCK-600	choke for 600W transformer	

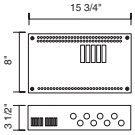

bpi

brandston partnership inc.

Lighting design

122 West 26th Street 5th floor
New York New York 10001
T. 212.924.4050 F. 212.691.5418

Utah Museum of Natural History
Salt Lake City, UT

YB-1/YC-1/YK-1/YL-1

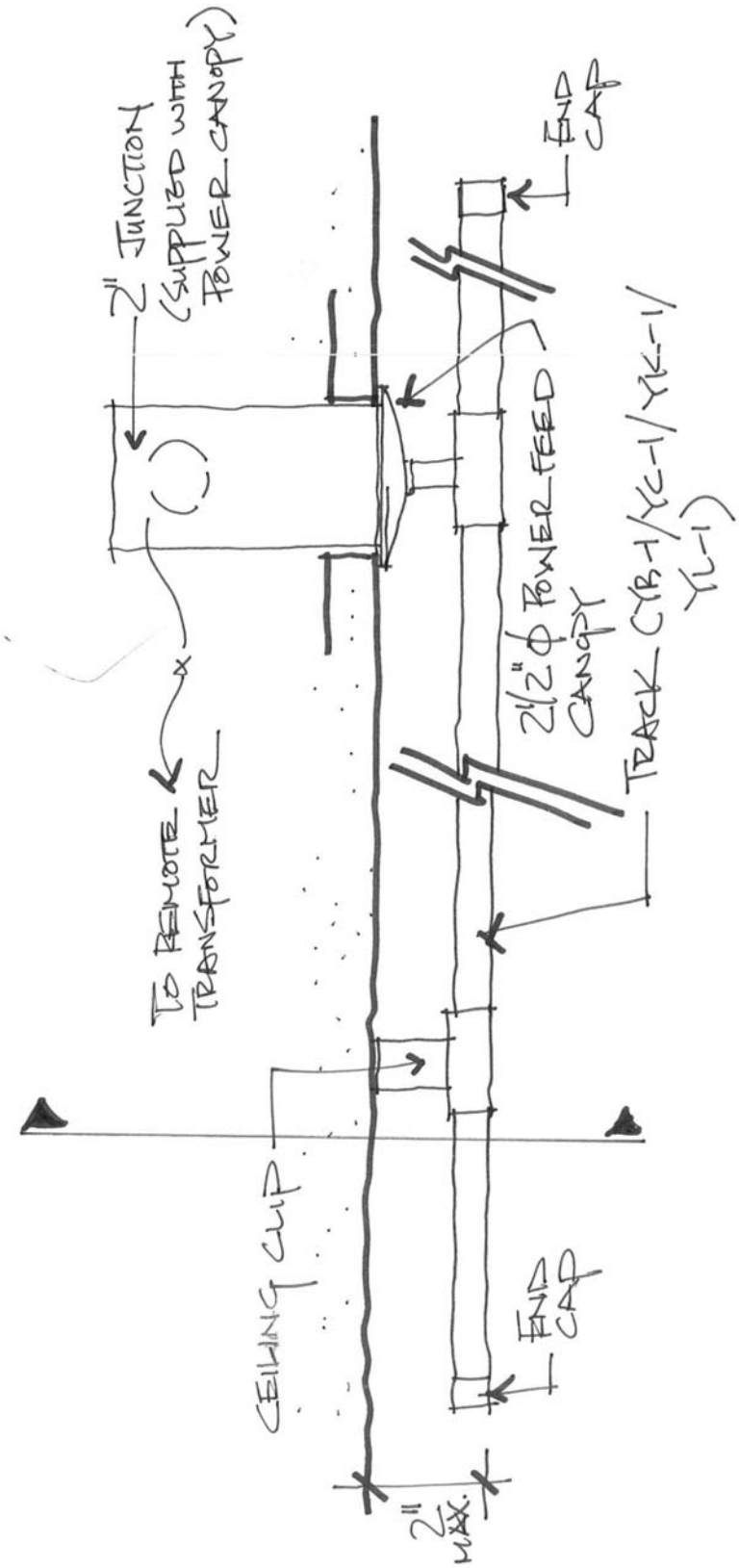

brandston partnership inc.

Lighting design

122 West 26th Street 5th floor
New York New York 10001
T. 212.924.4050 F. 212.691.5418

Utah Museum of Natural History
Salt Lake City, UT

YB-1/YC-1/YK-1/YL-1

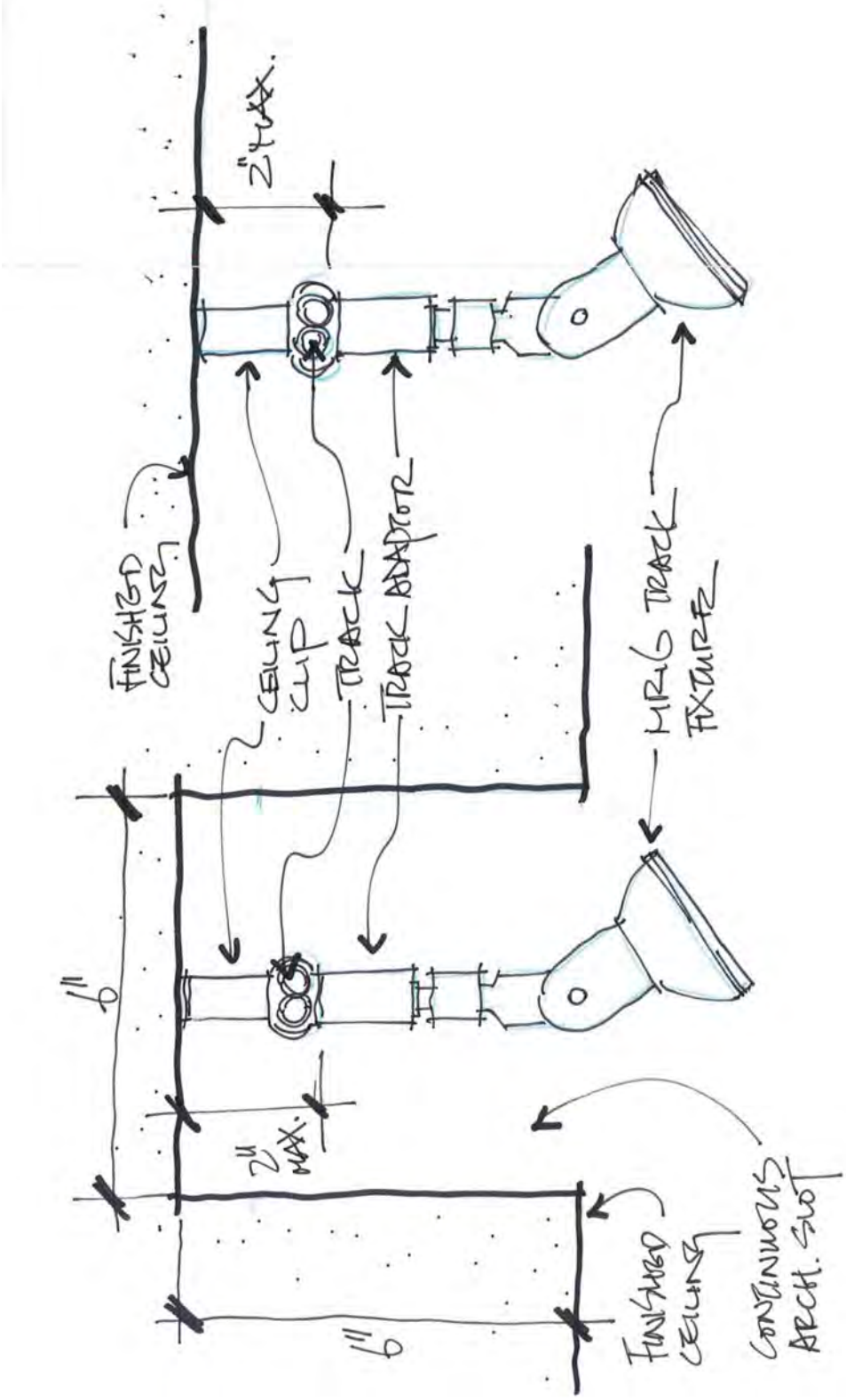

bpi

brandston partnership inc.

Lighting design

122 West 26th Street 5th floor
New York New York 10001
T. 212.924.4050 F. 212.691.5418

Utah Museum of
Natural History
Salt Lake City, UT

YB-1/YC-1/YK-1/YL-1

MONO-POINT CANOPIES

4" SURFACE MOUNT CANOPY

with integral 75W transformer, for mounting to standard j-box, compatible with all uni-lights and pendants

Extension Ring

see pg. 7

Art.-Nr.	
canopy with transformer	
240200bz	bronze, 75W xfmr
240200ch	chrome, 75W xfmr
240200ch/mc	chrome outer canopy, matte chrome inner canopy, 75W xfmr
240200mc	matte chrome, 75W xfmr
240200mc/ch	matte chrome outer canopy, chrome inner canopy, 75W xfmr
240200wh	white, 75W xfmr
canopy only	
240000bz	bronze, no xfmr
240000ch	chrome, no xfmr
240000ch/mc	chrome outer canopy, matte chrome inner canopy, no xfmr
240000mc	matte chrome, no xfmr
240000mc/ch	matte chrome outer canopy, chrome inner canopy, no xfmr
240000wh	white, no xfmr

4" SURFACE MOUNT CANOPY II

with integral 75W transformer, for mounting to standard j-box, compatible with all uni-lights and pendants

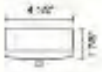

Art.-Nr.	
canopy with transformer	
240205bz	bronze, 75W xfmr
240205ch	chrome, 75W xfmr
240205ch/mc	chrome outer canopy, matte chrome inner canopy, 75W xfmr
240205mc	matte chrome, 75W xfmr
240205mc/ch	matte chrome outer canopy, chrome inner canopy, 75W xfmr
240205wh	white, 75W xfmr

CEILING PLUG 65

with integral 75W transformer, for mounting to standard j-box, compatible with all uni-lights and pendants

Extension Ring

see pg. 7

Art.-Nr.	
240121bz	bronze, 75W xfmr
240121ch	chrome, 75W xfmr
240121mc	matte chrome, 75W xfmr
240121wh	white, 75W xfmr

For non-accessible ceiling

2" SURFACE MOUNT CANOPY

with integral transformer and 2" j-box, compatible with all uni-lights and pendants

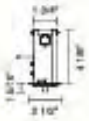

Art.-Nr.	
240230bz/120v	bronze, 120v, 60W xfmr
240230bz/277v	bronze, 277v, 75W xfmr
240230ch/120v	chrome, 120v, 60W xfmr
240230ch/277v	chrome, 277v, 75W xfmr
240230mc/120v	matte chrome, 120v, 60W xfmr
240230mc/277v	matte chrome, 277v, 75W xfmr
240230wh/120v	white, 120v, 60W xfmr
240230wh/277v	white, 277v, 75W xfmr

FLUSH MOUNTED CANOPY

for use with remote transformers, class 2 wiring only, 1 1/4" cutout diameter

Art.-Nr.	
156000ch	chrome
156000mc	matte chrome
156000wh	white

For accessible ceiling

FLUSH MOUNTED PLUG-IN CANOPY ISO

class 2 wiring only, 1/2" cutout diameter

Art.-Nr.	
156030mc	matte chrome

bpi

brandston partnership inc.

Lighting design

122 West 26th Street 5th floor
New York New York 10001
T. 212.924.4050 F. 212.691.5418

Utah Museum of Natural History
Salt Lake City, UT

YM-1

SURFACE TRACK (120/250V) • SPECIFICATIONS

GENERAL Lighting Track shall allow fixtures to be located anywhere along the track length. Fixtures shall be easily focused, switched, dimmed, accessorized and removed as desired. Track system shall have a ten year warranty from date of shipment.

MECHANICAL Lighting Track shall be constructed of .070 (2mm) extruded aluminum with overall height of 1.42 (36mm) and overall width of 1.812 (46mm). Track shall have same overall dimensions and physical appearance for both one and two circuit models.

Track shall be available in nominal 4 foot (1.2m), 8 foot (2.4m), and 12 foot (3.7m) lengths, in Silver, Black, White, or Graphite high temperature baked paint finish. Track shall be field cuttable to any length with a single cut.

Track system shall be available with End Feed, End Cap, Straight Mini-Joiner, Straight Joiner/Feeder, Flexible Joiner and L, T, and X Joiner/Feeders as standard components.

Track shall have the ability to be directly surface mounted. Track shall have pre-punched mounting slots for direct mounting to any surface. Track shall have the ability to: be mounted 1/2 inch (13mm) from a surface by extruded aluminum mounting clips, be suspended from a surface by a field cuttable stainless steel cable system, be suspended from a surface by a field cuttable steel stem system, and be mounted into UniTrack housing.

ELECTRICAL Lighting Track and components shall be UL and CUL listed, CE Certified, and comply with the National Electric Code standards for Lighting Track. One and two circuit Lighting Track shall be rated at 120/250 volt, 50/60 Hz. 2400 watts maximum each circuit. Each 20 amp/120 volt circuit shall be comprised of flat copper busbars and have a separate neutral busbar for each circuit busbar. The neutral busbar shall be oversized to be comparable to #10 gauge 30 amp wire to reduce the possibility of overheating due to non-linear loads and harmonics. **Track shall have integral wiring channels for six (6) additional #12 THHN wires to create three (3) additional 20 amp/120 volt circuits, which can be dropped into any Joiner/Feeder, for a total track power capacity of 100 amps.** A separate grounding busbar shall be integral in all track lengths. All busbars shall be insulated to prevent contact with aluminum extrusion.

Track shall have electric feed capability through all Joiner/Feeders (except Flexible Joiner and Straight Mini-Joiner) using either 1/2 or 3/4 U.S. trade size knock-outs (.875 diameter [22mm] or 1.125 diameter [29mm]). Joiner/Feeders can be electrically field modified by removing the Lexan™ cover and rerouting internal pre-wired jumpers. All Joiner/Feeders shall be available in Black, White, Silver, and Graphite GE fiber reinforced Lexan™.

One and two circuit Lighting Track with separate neutral busbars shall have the ability to have each circuit separately dimmed as required when using standard voltage and low voltage fixtures with either magnetic or electronic transformers. Track shall have the ability to be dimmed or switched in selected sections in addition to dimming or switching an entire track configuration or track run.

FIXTURE FITTING INTERFACE Track shall accept GE fiber reinforced Lexan™ fixture fittings which positively lock into track and cannot be energized by the integral switch until safety interlock handle is in the closed position. Safety interlock shall also prevent fixture fitting removal from track unless the switch is in the "off" position. Upon insertion of fixture fitting into track, grounding connection from fixture fitting to track shall be automatically completed before any electrical contact is made with busbars. When removing fixture fitting from track, the grounding connection shall automatically be disconnected last. The fixture fitting shall recess into the track, creating a minimal profile below the track. Fixture fittings for magnetic low voltage fixtures shall be furnished with fuse of the correct ampere rating for integral transformer protection, and shall not be fused as a branch circuit.

One Ckt 120/250V Track

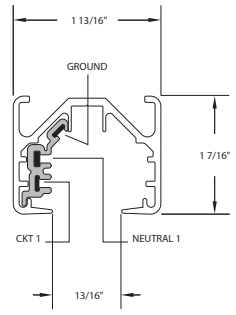

Two Ckt 120/250V Track

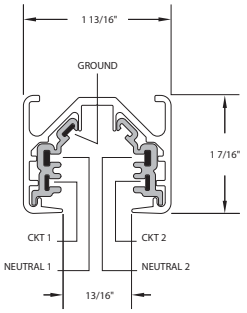

bpi

brandston partnership inc.

Lighting design

122 West 26th Street 5th floor
New York New York 10001
T. 212.924.4050 F. 212.691.5418

Utah Museum of
Natural History
Salt Lake City, UT

YP-2/YP-BR/YP2-EM/YP2-WK

Bridge Track Application

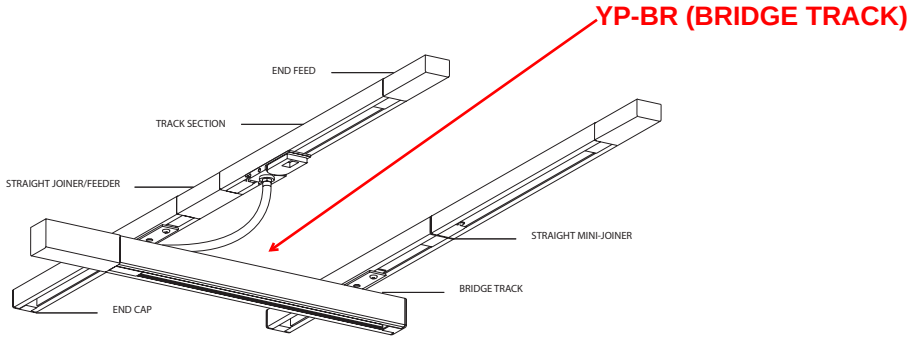

Ceiling Application/Horizontal Mount

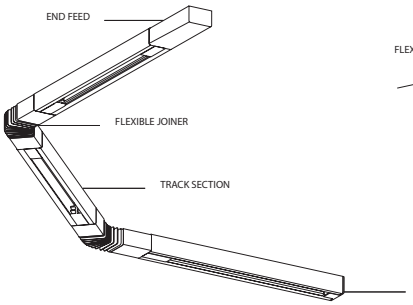

Ceiling to Wall Application/Vertical Mount

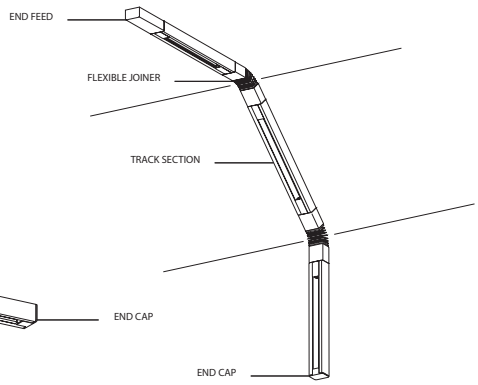

One Circuit Configuration

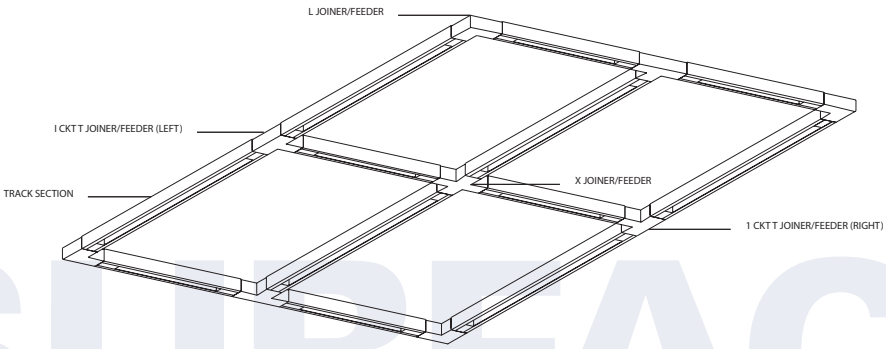

bpi

brandston partnership inc.

Lighting design

122 West 26th Street 5th floor
New York New York 10001
T. 212.924.4050 F. 212.691.5418

Utah Museum of
Natural History
Salt Lake City, UT

YP-2/YP-BR/YP2-EM/YP2-WK

SURFACE TRACK (120/250V) • COMPONENTS

Key Features / Applications

UL and CUL listed, CE Certified, Dry Location • IBEW union made at LSI plant in USA • Specification grade heavy duty .070 (2mm) extruded aluminum track • 4 foot (1.2m), 8 foot (2.4m) and 12 foot (3.7m) field cuttable lengths • One circuit 20 amp or two circuit 40 amp capacity/120/250 volt • 100 amp total capacity when using integral wireways • Copper busbars equivalent to #12 AWG wire used as circuit and ground track conductors • Oversized copper busbars equivalent to #10 AWG wire used as neutral track conductors • Separate neutral track conductor used for each circuit • Separate copper grounding busbar used throughout track system • Black, White, Silver, and Graphite finishes • All Joiner/Feeders, Flexible Joiners, Mini-Joiners, End Feeds and End Caps are injection molded of GE fiber reinforced Lexan™ • All Joiner/Feeders and Flexible Joiners are prewired and simply couple into track • All Joiner/Feeder circuits can be easily field modified by changing internal jumper wires • Fixture fitting recesses into track for minimum profile • LSI surface track can be mounted directly to any surface 5'-0" above finished floor.

Surface Track Sections

YP-2

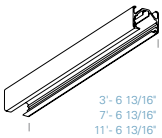

120/250V Surface Track Sections are used in conjunction with an End Feed, End Cap and a variety of Joiner/Feeders to form track runs and configurations. Track Section lengths are nominal 4 foot (1.2m), 8 foot (2.4m) and 12 foot (3.7m) which are field cuttable.

ENCLOSED WITH UNI-TRACK HOUSING

		Nominal Length		
Finish		4 ft	8 ft	12 ft
Silver	One Ckt	31010	31020	31030
	Two Ckt	32010	32020	32030
Black	One Ckt	31210	31220	31230
	Two Ckt	32210	32220	32230
White	One Ckt	31310	31320	31330
	Two Ckt	32310	32320	32330
Graphite	One Ckt	31410	31420	31430
	Two Ckt	32410	32420	32430

Bridge Track

YP-BR

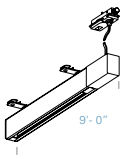

120/250V Bridge Track is a complete, portable, field cuttable, surface UniTrack system that mechanically and electrically mounts to and spans parallel runs of LSI Track. Bridge Track provides an additional range of striking angles for track lighting fixtures or for centering a fixture over a target located between parallel runs of track up to 8 foot (2.4m) on center.

ENCLOSED WITH UNI-TRACK HOUSING TO EXTEND LENGTH

Finish		9 ft
Silver	One Ckt	31025
Black	One Ckt	31225
White	One Ckt	31325
Graphite	One Ckt	31425

Emergency/Worklite Track

YP-2-EM

YP2-WK

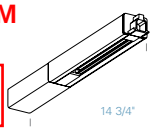

120/250V Emergency/Worklite Track is a separately fed one circuit Track Section, suitable for most LSI track fixtures, that integrates into any LSI Track run or configuration at any location. Consult fixture cutsheet. LSI fixtures (add suffix EF) mechanically lock into Emergency/Worklite Track by means of special hardware and do not have on/off switches.

	All One Ckt			
Finish	15" Joiner Section	15" End Feed Section	15" End Cap Section	15" Conduit End Feed Section
Silver	31050	31051	31052	31053
Black	31250	31251	31252	31253
White	31350	31351	31352	31353
Graphite	31450	31451	31452	31453

Unimount

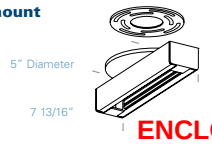

120/250V Unimount is a compact canopy mount Track section which will accept most single LSI Track fixtures up to 500 watts.

ENCLOSED WITH UNI-TRACK HOUSING

Finish		
Silver	One Ckt	31161
Black	One Ckt	31261
White	One Ckt	31361
Graphite	One Ckt	31461

End Feed

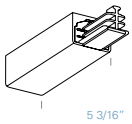

120/250V End Feed is used in conjunction with a Canopy Kit for top feeding from a recessed outlet box and can also be top fed directly with cable.

AS REQUIRED

Finish		
Silver	One Ckt	31100
	Two Ckt	32100
Black	One Ckt	31200
	Two Ckt	32200
White	One Ckt	31300
	Two Ckt	32300
Graphite	One Ckt	31400
	Two Ckt	32400

bpi

brandston partnership inc.

Lighting design

122 West 26th Street 5th floor
New York New York 10001
T. 212.924.4050 F. 212.691.5418

Utah Museum of Natural History
Salt Lake City, UT

YP-2/YP-BR/YP2-EM/YP2-WK

SURFACE TRACK (120/250V) • COMPONENTS

End Feed for Conduit Connector

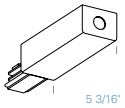

120/250V End Feed for Conduit Connector is used when feeding directly into the end of an End Feed. Connector supplied with 1/2" US trade size hole.

Finish		
Silver	One Ckt Two Ckt	**31102** **32102**
Black	One Ckt Two Ckt	**31202** **32202**
White	One Ckt Two Ckt	**31302** **32302**
Graphite	One Ckt Two Ckt	**31402** **32402**

Portable Feed

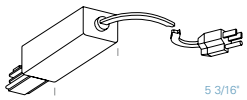

120/250V Portable Feed is used when a portable or temporary track hookup is desired. Supplied with 15 foot #16 AWG-10 Amp/125 Volt 3 wire flexible cord with NEMA 5-15P grounding plug. Non-UL listed.

Finish		
Silver	One Ckt	**31101**
Black	One Ckt	**31201**
White	One Ckt	**31301**
Graphite	One Ckt	**31401**

Straight Joiner/Feeder

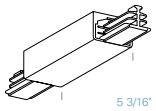

120/250V Straight Joiner/Feeder is used to mechanically and electrically couple any two lengths of track in a straight line. Straight Joiner/Feeder can also be top fed to energize the track from a recessed outlet box when used in conjunction with appropriate Canopy Kit or can be top fed directly with cable.

AS REQUIRED

Finish		
Silver	One Ckt Two Ckt	**31104** **32104**
Black	One Ckt Two Ckt	**31204** **32204**
White	One Ckt Two Ckt	**31304** **32304**
Graphite	One Ckt Two Ckt	**31404** **32404**

Straight Mini-Joiner

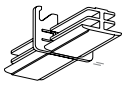

120/250V Straight Mini-Joiner is used to mechanically and electrically couple any two lengths of track in a straight line. Add .125 (3mm) for Straight Mini-Joiner when calculating overall lengths of straight runs or configurations (overall lengths are not the same as when using Straight Joiner/Feeder). Not for use as feeder.

AS REQUIRED

Finish		
Silver	One Ckt Two Ckt	**31111** **32111**
Black	One Ckt Two Ckt	**31211** **32211**
White	One Ckt Two Ckt	**31311** **32311**
Graphite	One Ckt Two Ckt	**31411** **32411**

L Joiner/Feeder

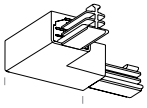

120/250V L Joiner/Feeder is used to mechanically and electrically couple any two lengths of track in an L right angle configuration. This L Joiner/Feeder can also be top fed to energize the track from a recessed outlet box when used in conjunction with appropriate Canopy Kit or can be top fed directly with cable.

Finish		
Silver	One Ckt Two Ckt	**31105** **32105**
Black	One Ckt Two Ckt	**31205** **32205**
White	One Ckt Two Ckt	**31305** **32305**
Graphite	One Ckt Two Ckt	**31405** **32405**

T Joiner/Feeder

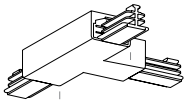

120/250V T Joiner/Feeder is used to mechanically and electrically couple any three lengths of track in a T configuration. This T Joiner/Feeder can also be top fed to energize the track from a recessed outlet box when used in conjunction with appropriate Canopy Kit or can be top fed directly with cable. Internal Joiner wiring can be field modified. Note that in the one circuit version, a right or a left T must be ordered and must be used directly opposite each other when used in a configuration so that busbar continuity is maintained. For two circuit track, a left and right T is not necessary.

Finish		Left Joiner	Right Joiner
Silver	One Ckt Two Ckt	**31106** **32108**	**31107** **32108**
Black	One Ckt Two Ckt	**31206** **32208**	**31207** **32208**
White	One Ckt Two Ckt	**31306** **32308**	**31307** **32308**
Graphite	One Ckt Two Ckt	**31406** **32408**	**31407** **32408**

SURFACE

bpi

brandston partnership inc.

Lighting design

122 West 26th Street 5th floor
New York New York 10001
T. 212.924.4050 F. 212.691.5418

Utah Museum of Natural History
Salt Lake City, UT

YP-2/YP-BR/YP2-EM/YP2-WK

UNITRACK HOUSING • SPECIFICATIONS

GENERAL UniTrack Housing shall support Track with fewer mounting positions when large spans of track are needed which cannot be supported at normal four foot intervals. In addition, the extra compartment shall be able to be used for a multitude of electrical or mechanical purposes. UniTrack Housings shall have a ten year warranty from date of shipment.

MECHANICAL UniTrack Housing shall be constructed of .105 thick (3mm) extruded aluminum with overall height of 3.31 (84mm) and overall width of 2.03 (52mm). UniTrack Housing shall accept both one and two circuit Track.

UniTrack Housing shall have two separate compartments. One compartment shall accept Track and shall be supplied with all necessary hardware for mounting Track into UniTrack Housing. Non-track compartment will accept all Unistrut type hardware suitable for use with P1000™ type channel in 7/8 inch (22mm) slot, as well as raceway covers for enclosing all wiring.

UniTrack Housings shall be available in nominal 4 foot (1.2m), 8 foot (2.4m), and 12 foot (3.7m) lengths, in Silver, Black, White, or Graphite high temperature baked paint finish. UniTrack Housings shall be field cuttable to any length with a single cut.

UniTrack Housing System shall have Straight, L, T, and X Joiners as standard components and shall have the ability to be suspended from any surface with 3/8 inch threaded rods (by contractor), rigid stems or cables, through .406 diameter (10mm) pre-punched holes.

ELECTRICAL UniTrack Housings and components shall be UL and CUL listed, CE Certified, and comply with the National Electric Code standards for Lighting Track. UniTrack Housings will be suitable to be used as an electrical raceway for additional electrical, emergency, security, audio, video or data circuits with a maximum capacity of 28 #12 THHN AWG wires, when used with UniTrack Raceway Covers. Raceway Covers for UniTrack Housing System shall be made from .040 inch(1mm) steel available in Black, White, Silver, or Graphite high temperature baked paint finish.

UniTrack Housings shall be fed through 1/2 (13mm) or 3/4 (22mm) U.S. trade size conduit connector assemblies which can be positioned anywhere along the Non-track side of the UniTrack Housing.

FIXTURE FITTING INTERFACE Lighting Track used in conjunction with UniTrack Housings shall accept GE fiber reinforced fixture fittings which positively lock into track and cannot be energized by integral switch until safety interlock handle is in closed position. Safety interlock shall also prevent fixture fitting removal from track unless the switch is in the "off" position. Upon insertion of fixture fitting into track, grounding connection from fixture fitting to track shall be automatically completed before any electrical contact is made with busbars. When removing fixture fitting from track, the grounding connection shall automatically be disconnected only after the electrical contact with busbars are disconnected. The fixture fitting shall recess into track creating a minimal intrusion into space. Fixture fittings for magnetic low voltage fixtures shall be furnished with fuse of the correct size and ampere rating for the lamp used in order to protect the integral fixture transformer and shall not be fused as a branch circuit.

UniTrack Housing

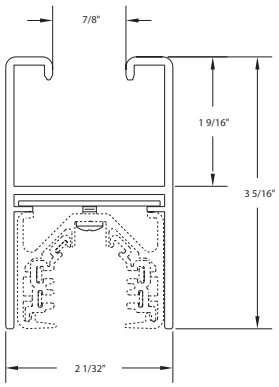

bpi

brandston partnership inc.

Lighting design

122 West 26th Street 5th floor
New York New York 10001
T. 212.924.4050 F. 212.691.5418

Utah Museum of
Natural History
Salt Lake City, UT

YP-2/YP-BR/YP2-EM/YP2-WK

UNITRACK HOUSING • CONFIGURATIONS

Straight Run Configuration

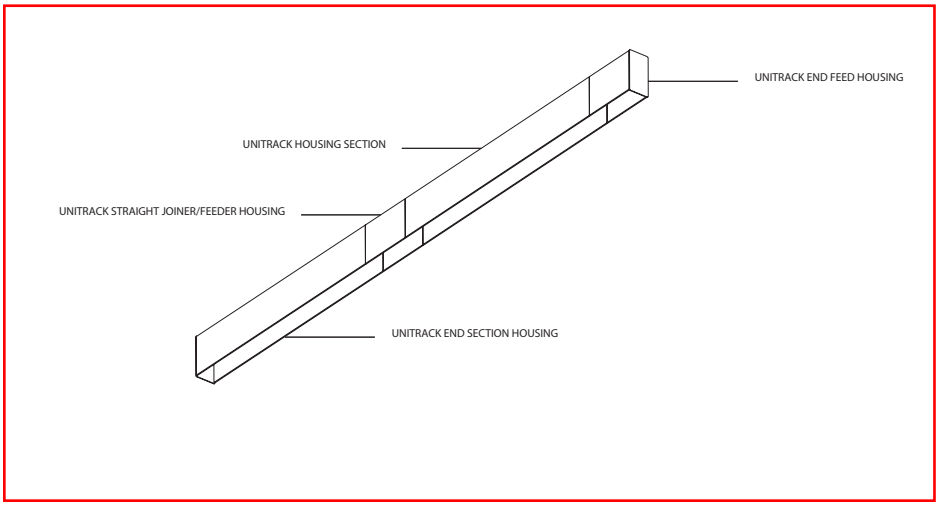

Grid Configuration

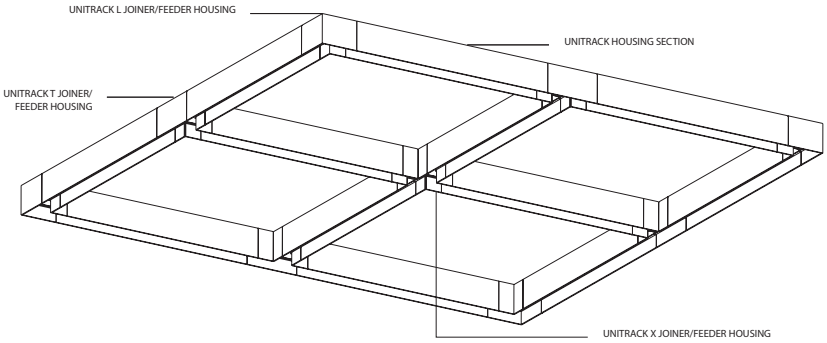

bpi

brandston partnership inc.

Lighting design

122 West 26th Street 5th floor
New York New York 10001
T. 212.924.4050 F. 212.691.5418

Utah Museum of
Natural History
Salt Lake City, UT

YP-2/YP-BR/YP2-EM/YP2-WK

Job Name Here	Component Type Here	Ordering Information Here

UNITRACK HOUSING • COMPONENTS

Key Features / Applications

UL and CUL listed, CE Certified • IBEW union made at LSI plant in USA • Combination two compartment suspended housing for standard LSI surface track and other mechanical or electrical requirements • Specification grade heavy duty .105 (2.6mm) thick extruded two compartment aluminum track • 4 foot (1.2m), 8 foot (2.4m) and 12 foot (3.7m) field cuttable lengths to match standard surface track lengths complete with mounting hardware for surface track • Black, White, Silver, and Graphite finishes • Separate housing sections for all LSI Joiner/Feeders (except Flexible Joiner and Straight Mini-Joiner) • Non-track compartment will accept all Unistrut™ hardware for P1000™ type channel (7/8 inch (22mm) slot opening) • UniTrack can be used as a support channel for other electrical and non-electrical items • UniTrack is stronger and requires less support (greater centers on mounting distances) than track alone • Non-track compartment can be used as electrical raceway for emergency, security, audio, video or other circuits (28 #12 THHN AWG capacity).

UniTrack Housing Section

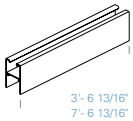

UniTrack Housing Section is an open ended extrusion used to form track runs or configurations utilizing the appropriate joiners for interconnection. UniTrack Housing Section is supplied complete with all required hardware for installation of LSI track. Housing is field cuttable.

	Nominal Length		
Finish	4 Ft	8 Ft	12 Ft
Silver	50070	50071	50072
Black	50270	50271	50272
White	50370	50371	50372
Graphite	50470	50471	50472

UniTrack End Feed Housing

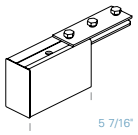

UniTrack End Feed Housing is used when track run is to be end fed from top. Supplied complete with mounting hole, coupling bars and hardware to interconnect to any Housing Section.

AS REQUIRED

Finish	
Silver	50100
Black	50200
White	50300
Graphite	50400

UniTrack Conduit End Feed Housing

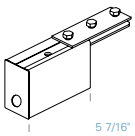

UniTrack Conduit End Feed Housing is used when track run is to be end fed from side with conduit. Supplied complete with mounting hole, coupling bars and hardware to inter-connect to any Housing Section.

Finish	
Silver	50102
Black	50202
White	50302
Graphite	50402

UniTrack End Section Housing

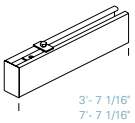

UniTrack End Section Housing is used to end a run. Supplied open on one end for interconnection purposes. Housing End Sections when joined with End Feed Housings will mathematically be the correct size to hold complete 4 foot (1.2m), 8 foot (2.4m) or 12 foot (3.7m) track. UniTrack End Section Housing is supplied complete with all required hardware for installation of LSI track. Housing End Section is field cuttable.

AS REQUIRED

	Nominal Length		
Finish	4 Ft	8 Ft	12 Ft
Silver	50079	50080	50081
Black	50279	50280	50281
White	50379	50380	50381
Graphite	50479	50480	50481

UniTrack Straight Joiner Housing

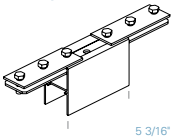

UniTrack Straight Joiner Housing is used when interconnecting UniTrack Housings in a straight line. Supplied complete with mounting hole, coupling bars and hardware for all Housing Sections.

AS REQUIRED

Finish	
Silver	50104
Black	50204
White	50304
Graphite	50404

YP-BR (BRIDGE TRACK) ENCLOSED WITH 11' LONG UNI-TRACK HOUSING

bpi

brandston partnership inc.

Lighting design

122 West 26th Street 5th floor
New York New York 10001
T. 212.924.4050 F. 212.691.5418

Utah Museum of Natural History
Salt Lake City, UT

YP-2/YP-BR/YP2-EM/YP2-WK

UNITRACK HOUSING • COMPONENTS

UniTrack L Joiner Housing

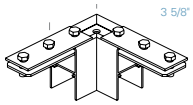

UniTrack L Joiner Housing is used when interconnecting two UniTrack Housings at a right angle (90°). Supplied complete with mounting hole, coupling bars and hardware to interconnect all Housing Sections. Accepts 3/8" threaded rod or LSI Single Stainless Steel Cable Support Kit.

Finish	
Silver	50105
Black	50205
White	50305
Graphite	50405

UniTrack T Joiner Housing

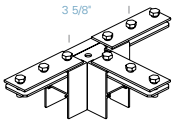

UniTrack T Joiner Housing is used when interconnecting three UniTrack Housings in a T configuration. Supplied complete with mounting hole, coupling bars and hardware to interconnect all Housing Sections. Accepts 3/8" threaded rod or LSI Single Stainless Steel Cable Support Kit.

Finish	
Silver	50106
Black	50206
White	50306
Graphite	50406

UniTrack X Joiner Housing

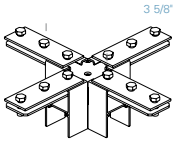

UniTrack X Joiner Housing is used when interconnecting four UniTrack Housings in an X configuration. Supplied complete with mounting hole, coupling bars and hardware to interconnect all Housing Sections. Accepts 3/8" threaded rod or LSI Single Stainless Steel Cable Support Kit.

Finish	
Silver	50109
Black	50209
White	50309
Graphite	50409

UniTrack Conduit Connector

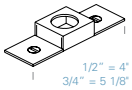

UniTrack 1/2" or 3/4" Conduit Connector is used for feeding anywhere along the length of the Housing Section. Supplied complete with hardware for fastening to Housing Section.

Finish	1/2"	3/4"
Silver	50123	50101
Black	50223	50201
White	50323	50301
Graphite	50423	50401

UniTrack Raceway Cover

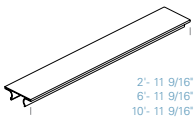

UniTrack Raceway Cover is a snap in steel cover that creates a raceway for running additional wires in one of the compartments of the Housing Section. Raceway Cover is field cuttable.

AS REQUIRED

	Nominal Length		
Finish	4 Ft	8 Ft	12 Ft
Silver	50165	50166	50167
Black	50265	50266	50267
White	50365	50366	50367
Graphite	50465	50466	50467

UniTrack Mounting Kit

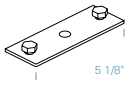

UniTrack Mounting Kit for suspending UniTrack Housing Sections from locations other than End or Joiner Housings. Kit supplied with .406 diameter mounting holes and hardware for fastening anywhere along the length of Housing Section. Accepts 3/8" threaded rod or LSI Single Stainless Steel Cable Support Kit.

Finish	
Silver	50173
Black	50273
White	50373
Graphite	50473

AS REQUIRED

UniTrack Housing End Cap

UniTrack Housing End Cap is used when needed for mechanically ending an open end of housing after cutting.

AS REQUIRED

Finish	
Silver	50103
Black	50203
White	50303
Graphite	50403

UniTrack Closure Cover Kit

UniTrack Closure Cover Kit is used in conjunction with UniTrack Conduit Connector, Hang Straight stem mounting kit and stainless steel cable mounting kit in order to isolate feed point wiring from the rest of the UniTrack Raceway.

Finish	
Silver	50107
Black	50207
White	50307
Graphite	50407

bpi

brandston partnership inc.

Lighting design

122 West 26th Street 5th floor
New York New York 10001
T. 212.924.4050 F. 212.691.5418

Utah Museum of Natural History
Salt Lake City, UT

YP-2/YP-BR/YP2-EM/YP2-WK

UNITRACK HOUSING • COMPONENTS

Single Stainless Steel Cable Support Kit

Use single field cuttable cable complete with mounting devices for Unitrack configurations only. Kit mounts into any housing or mounting kit.

Finish		Nominal Length 48"	144"
Silver	One Ckt Two Ckt	50111	50113
Black	One Ckt Two Ckt	50211	50213
White	One Ckt Two Ckt	50311	50313
Graphite	One Ckt Two Ckt	50411	50413

Dual Stainless Steel Cable Support Kit/ Straight Unitrack Only

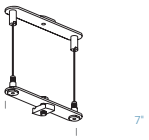

Dual field cuttable cables complete with mounting device for straight run Unitrack installation. Used to keep Unitrack from twisting after fixtures are mounted.

Finish		Nominal Length 48"	144"
Silver	One Ckt Two Ckt	50115	50117
Black	One Ckt Two Ckt	50215	50217
White	One Ckt Two Ckt	50315	50317
Graphite	One Ckt Two Ckt	50415	50417

1/2" Feed Kit for Stainless Steel Cable

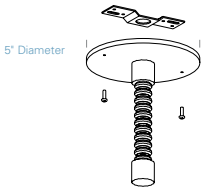

Flexible conduit canopy kit for mounting to standard flush outlet box, supplied complete with flexible conduit for feeding into UniTrack 3/4" conduit connector. Field cuttable. (Max. 16 #12 THHN wires in flexible conduit.)

Finish		Nominal Length 48"	144"
Silver	One Ckt Two Ckt	73110	73129
Black	One Ckt Two Ckt	73210	73229
White	One Ckt Two Ckt	73310	73329
Graphite	One Ckt Two Ckt	73410	73429

3/4" Feed Kit for Stainless Steel Cable

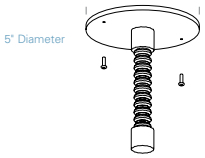

Flexible conduit canopy kit for mounting to standard flush outlet box, supplied complete with flexible conduit for feeding into UniTrack 3/4" conduit connector. Field cuttable. (Max. 16 #12 THHN wires in flexible conduit.)

Finish		Nominal Length 48"	144"
Silver	One Ckt Two Ckt	73131	73133
Black	One Ckt Two Ckt	73231	73233
White	One Ckt Two Ckt	73331	73333
Graphite	One Ckt Two Ckt	73431	73433

Hang Straight Support/Feed Stem Kit

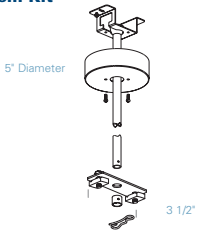

Allows Feed/Support Stem to swivel 45° from vertical in all directions. Field cuttable. (Max. 5 #12 THHN wires in stem)

Finish		Nominal Length 18"	48"	96"
Silver	One & Two Ckt	50118	50119	50120
Black	One & Two Ckt	50218	50219	50220
White	One & Two Ckt	50318	50319	50320
Graphite	One & Two Ckt	50418	50419	50420

AS REQUIRED

bpi

brandston partnership inc.

Lighting design

122 West 26th Street 5th floor
New York New York 10001
T. 212.924.4050 F. 212.691.5418

Utah Museum of Natural History
Salt Lake City, UT

YP-2/YP-BR/YP2-EM/YP2-WK

UNITRACK HOUSING • INSTALLATION

General Notes

When installing or using this track system, basic safety precautions should always be followed, including the following: Read all instructions. Do not install this track in damp or wet locations. Do not install any part of the track system less than five feet from floor. Do not install any fixture assembly closer than six inches from any curtain or similar combustible material. Disconnect electrical power before adding to or changing the configuration of the track. Check with a qualified electrician. Do not attempt to energize anything other than lighting track fixtures on the track. To reduce the risk of fire and electric shock, do not attempt to connect power tools, extension cords, appliances and the like to the track. Install per NEC and local codes. Save these instructions.

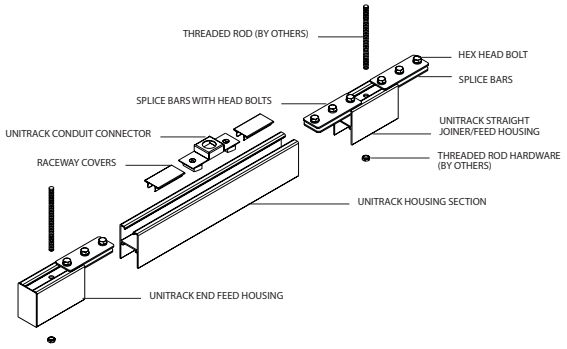

Assembling

Insert End Feed Housing or any Joiner/Feeder Housing completely into UniTrack Housing Section and tighten hex head bolts on the splice bars which align the top of the UniTrack Housings.

Threaded Rod Mounting

Suspend Housings using 3/8" threaded rod (by others). Threaded rod can be inserted through .406" dia. (10mm) holes provided in all End Feed, End Section, and Joiner Housings or into UniTrack Mounting Kit which can be installed at any point along the UniTrack Housing Section. Note: Non-track compartment of UniTrack™ Housing is compatible with Unistrut P1000™ channel and hardware.

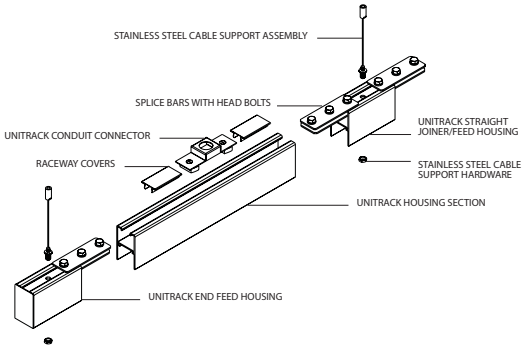

Single Stainless Steel Cable Mounting Kit

Suspend Housings using Single Stainless Steel Cable (ordered separately). The Cable Holders with field cuttable stainless steel cable can be inserted through the .406" dia. (10mm) holes provided in all End Feed, End Section and Joiner Housings or into UniTrack™ Mounting Kit which can be installed at any point along the UniTrack Housing Section. The cable can be easily field cut to adjust height. Note: Non-track compartments of UniTrack Housing is compatible with Unistrut P1000™ channel and hardware.

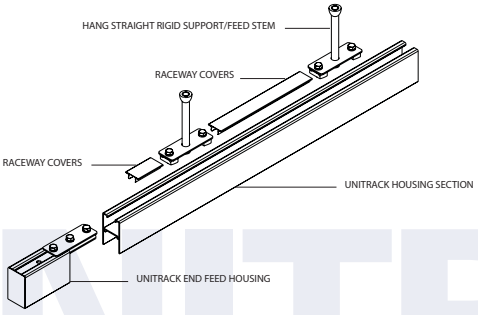

Hang Straight Rigid Support/Feed Stem Mounting Kit

Suspend Housings using 5/8" dia. steel tubing. The Hang Straight Stem can be installed at any point along the UniTrack Housing. The stem is easily field cuttable and has a drill guide sleeve to field drill new hole in stem for steel bow-tie (included). This Hang Straight kit can also be used as a Feed Stem (maximum five (5) #12 THHN wire for two (2) circuit track.) When using this as a Feed Stem, you must use raceway covers. Use Closure Cover Kit to block off a non-feed section. (Not shown).

bpi

brandston partnership inc.

Lighting design

122 West 26th Street 5th floor
New York New York 10001
T. 212.924.4050 F. 212.691.5418

Utah Museum of Natural History
Salt Lake City, UT

YP-2/YP-BR/YP2-EM/YP2-WK

Field Cutting

UniTrack Housings can be easily field cut using a sharp hacksaw or a chop saw with a non-ferrous blade. Cut the aluminum housing with one straight cut to match the length of the previously field cut track. Remove any burrs on the aluminum as this may affect the mechanical connection of components to Housings.

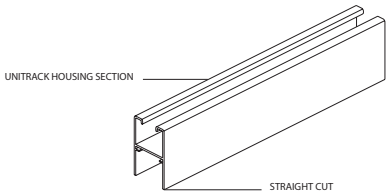

Mounting Data

UniTrack Housing System supports can be mounted on 4 foot (1.2m), 8 foot (2.4m) or 12 foot (3.7m) centers, or any location where a Mounting Kit is used. Use the following chart as a guideline for loading requirements. LSI does not recommend mounting centers greater than 12 foot (3.7m). LSI recommends a minimum of two mounting points per section of UniTrack.

Maximum Uniform Fixture Load per 12' Span of UniTrack

Mounting Centers	4'	8'	12'
Max. Fixture Load	140 lbs	70 lbs.	30 lbs.

Note: UniTrack housing with 2 circuit track is 2 lb./ft.

Single Stainless Steel Cable Support Mounting Kit

Do not cut cable prior to assembling. Mount Cable Mount with 1/4-20 hardware (by others), capable of withstanding a 50 lb. pull. Thread the cable through the Cable Mount with ball of Cable bottoming in Cable Mount. Loosen knurled nut on Cable Holder. Thread the cable through the knurled nut and into the Cable Holder and exit out of bottom. Leave excess hanging out of Cable Holder. Tighten knurled nut. Assemble Cable Holder into any Feeder Section of UniTrack. Attach nut and tighten. Once UniTrack has been attached, loosen knurled nut of cable holder and adjust cable to required length. Cut off excess.

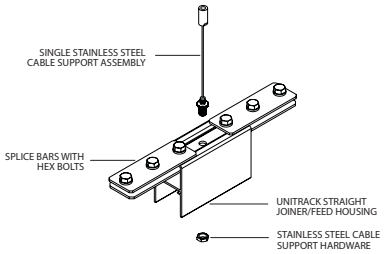

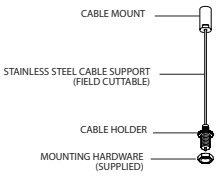

Dual Stainless Steel Cable Support Kit

Use for straight track runs only to prevent track from twisting when fixtues are installed. Do not cut cable prior to assembling. Mount Top Mounting Plate with 1/4" hardware (by others), capable of withstanding a 50 lb. pull. Thread the cable through the Cable Mount with ball of Cable bottoming in Cable Mount. Loosen knurled nut on Cable Holder. Thread the cable through the knurled nut and into the Cable Holder and exit out of bottom. Leave excess hanging out of Cable Holder. Tighten knurled nut. Attach UniTrack Mounting Plate to UniTrack and tighten. Once UniTrack has been attached, loosen knurled nut of cable holder and adjust cable to required length. Cut off excess.

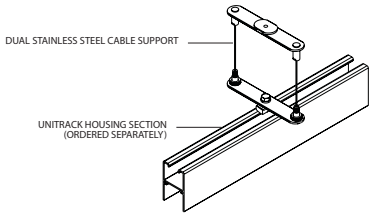

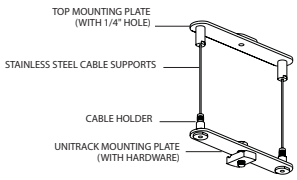

bpi

brandston partnership inc.

Lighting design

122 West 26th Street 5th floor
New York New York 10001
T. 212.924.4050 F. 212.691.5418

Utah Museum of Natural History
Salt Lake City, UT

YP-2/YP-BR/YP2-EM/YP2-WK

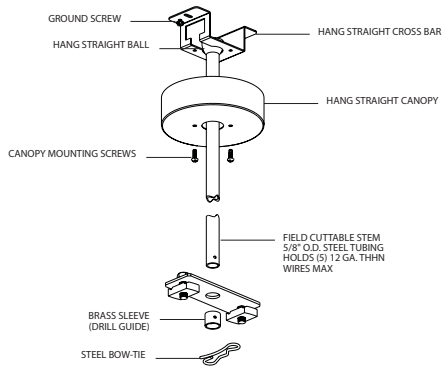

Hang Straight Support and Feed Stem Mounting Kit

Feed Stem: Mount hang straight crossbar to junction box in ceiling with hardware (by others) capable of withstanding a 50 lb. pull. To field cut stem, determine the length of the stem desired. Remove steel bow-tie from stem sleeve. Slide sleeve off stem. Separate all components of kit. Cut stem to desired length. Align steel sleeve with end of stem and use as drill guide to drill 3/16" hole, then reassemble. Replace bow-tie and feed wires through stem to six inches (6") beyond hang straight ball. Loosen hang straight ball from stem, this will allow ball to pass through slot on hang straight crossbar. Slide ball through slot, align notch on ball with tab on crossbar. Once in place, turn stem clockwise to tighten in ball. Once Hang Straight Kit is fully assembled and secured, attach UniTrack to UniTrack mounting plate and finish wiring.

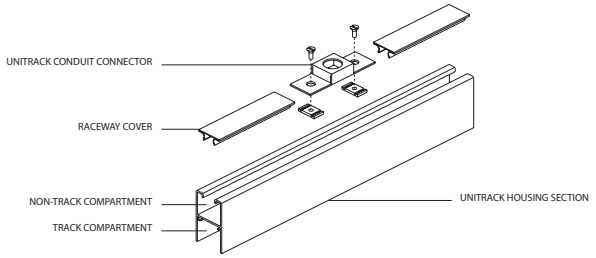

Electrical

Non-track compartment can be used for running additional conductors (max. 28 #12 THHN). Install Conduit Connector at any desired location along the UniTrack Housing to accept incoming conductors for energizing track. Conductors are fed through 1/2" or 3/4" UniTrack Conduit Connector and are run to an End Feed Housing or Joiner/Feeder Housing location. Conductors are then run to track End Feed or Joiner/Feeder through pre-punched .812 (20mm) x 2.0 (51mm) slots in Housings and into knock-out in Track End Feed or Joiner/Feeder conduit plate. Raceway covers and/or closure cover kits must be used when running conductors through non-track compartment. Remove the Lexan™ cover from any End Feed or Joiner/Feeder, bring conductors through combination 1/2, 3/4 U.S. trade size knock-out (.875 diameter 22mm,.1.125 diameter 29mm) in conduit plate and attach wires to identified terminal screws.

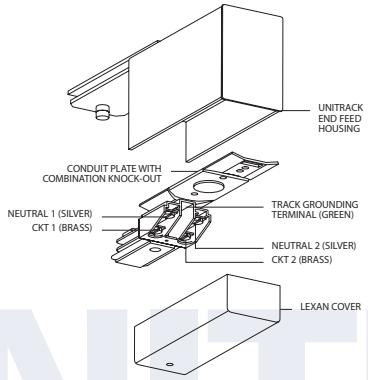

Additional Circuits

LSI Track has integral wiring channels for six additional #12 THHN wires to create three additional 20 amp circuits with separate neutrals. UniTrack Housings act as raceway covers.

Installing LSI Fixtures

To insert a fixture fitting into the track, the switch must be in the off position, with the handle open. Insert the fixture fitting straight up into the track until it seats evenly, close handle completely, switch on. If using one circuit track, make sure that the brass contacts which protrude from the side of the fixture fittings are inserted facing the copper busbars. If using two circuit track, inserting the fixture fitting in one direction will energize circuit one. Removing and reversing the direction of the fitting will energize circuit two.

bpi

brandston partnership inc.

Lighting design

122 West 26th Street 5th floor
New York New York 10001
T. 212.924.4050 F. 212.691.5418

Utah Museum of
Natural History
Salt Lake City, UT

YP-2/YP-BR/YP2-EM/YP2-WK

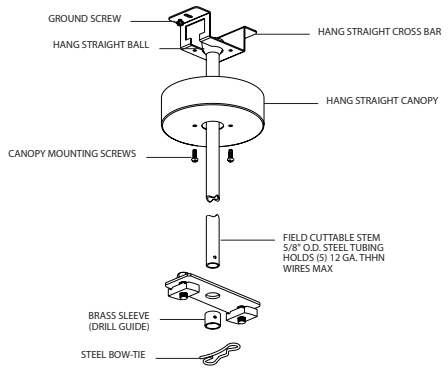

Hang Straight Support and Feed Stem Mounting Kit

Feed Stem: Mount hang straight crossbar to junction box in ceiling with hardware (by others) capable of withstanding a 50 lb. pull. To field cut stem, determine the length of the stem desired. Remove steel bow-tie from stem sleeve. Slide sleeve off stem. Separate all components of kit. Cut stem to desired length. Align steel sleeve with end of stem and use as drill guide to drill 3/16" hole, then reassemble. Replace bow-tie and feed wires through stem to six inches (6") beyond hang straight ball. Loosen hang straight ball from stem, this will allow ball to pass through slot on hang straight crossbar. Slide ball through slot, align notch on ball with tab on crossbar. Once in place, turn stem clockwise to tighten in ball. Once Hang Straight Kit is fully assembled and secured, attach UniTrack to UniTrack mounting plate and finish wiring.

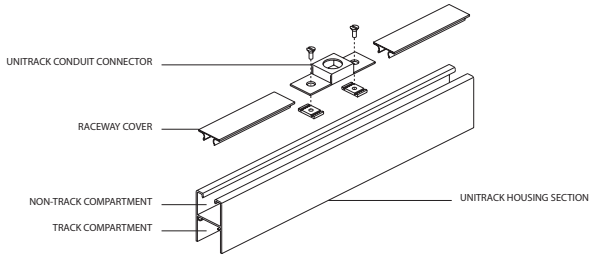

Electrical

Non-track compartment can be used for running additional conductors (max. 28 #12 THHN). Install Conduit Connector at any desired location along the UniTrack Housing to accept incoming conductors for energizing track. Conductors are fed through 1/2" or 3/4" UniTrack Conduit Connector and are run to an End Feed Housing or Joiner/Feeder Housing location. Conductors are then run to track End Feed or Joiner/Feeder through pre-punched .812 (20mm) x 2.0 (51mm) slots in Housings and into knock-out in Track End Feed or Joiner/Feeder conduit plate. Raceway covers and/or closure cover kits must be used when running conductors through non-track compartment. Remove the Lexan™ cover from any End Feed or Joiner/Feeder, bring conductors through combination 1/2, 3/4 U.S. trade size knock-out (.875 diameter 22mm,.1.125 diameter 29mm) in conduit plate and attach wires to identified terminal screws.

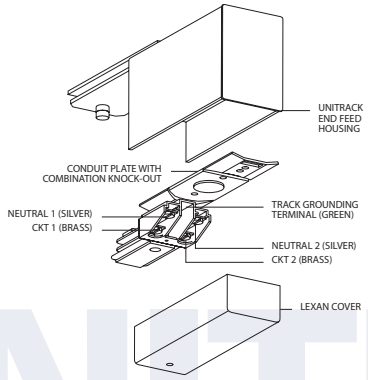

Additional Circuits

LSI Track has integral wiring channels for six additional #12 THHN wires to create three additional 20 amp circuits with separate neutrals. UniTrack Housings act as raceway covers.

Installing LSI Fixtures

To insert a fixture fitting into the track, the switch must be in the off position, with the handle open. Insert the fixture fitting straight up into the track until it seats evenly, close handle completely, switch on. If using one circuit track, make sure that the brass contacts which protrude from the side of the fixture fittings are inserted facing the copper busbars. If using two circuit track, inserting the fixture fitting in one direction will energize circuit one. Removing and reversing the direction of the fitting will energize circuit two.

bpi

brandston partnership inc.

Lighting design

122 West 26th Street 5th floor
New York New York 10001
T. 212.924.4050 F. 212.691.5418

Utah Museum of
Natural History
Salt Lake City, UT

YP-2/YP-BR/YP2-EM/YP2-WK

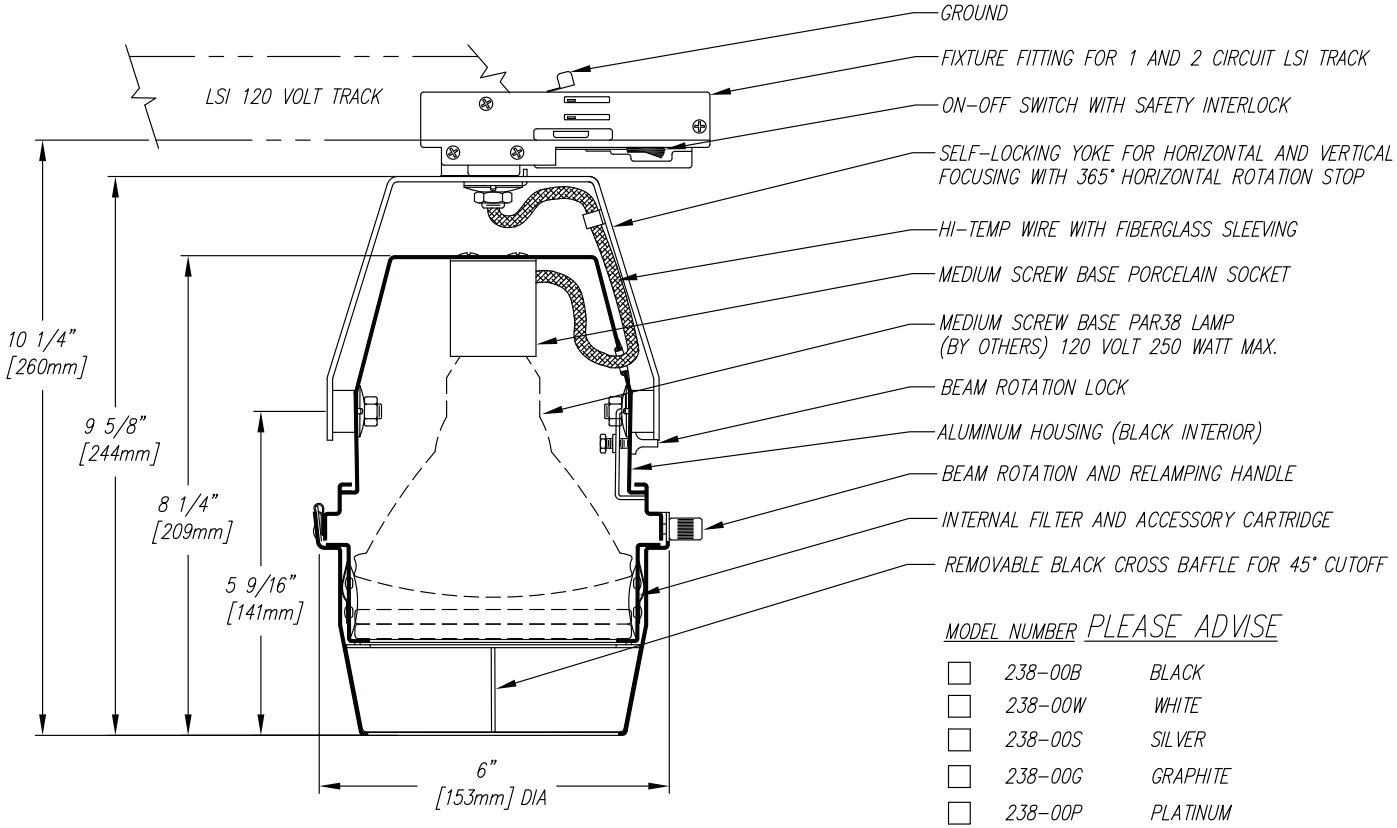

MODEL NUMBER PLEASE ADVISE

☐	238-00B	BLACK
☐	238-00W	WHITE
☐	238-00S	SILVER
☐	238-00G	GRAPHITE
☐	238-00P	PLATINUM

CONFIDENTIAL–PROPRIETARY INFORMATION. THE INFORMATION HEREIN IS PROTECTED UNDER COPYRIGHT AND IS OF A PROPRIETARY NATURE AND IS SUBMITTED IN CONFIDENCE FOR USE BY OUR CLIENTS ONLY. UNAUTHORIZED REPRODUCTION, PUBLICATION, DISTRIBUTION OR DISSEMINATION IN WHOLE OR IN PART, IS EXPRESSLY PROHIBITED. THE INFORMATION CONTAINED HEREIN IS AND REMAINS THE PROPERTY OF LIGHTING SERVICES INC AND RECEIPT OR POSSESSION OF THIS INFORMATION CONFERS NO RIGHT IN OR LICENSE TO USE OR TO DISCLOSE TO OTHERS THE SUBJECT MATTER CONTAINED HEREIN FOR ANY BUT AUTHORIZED PURPOSES. COPYRIGHT 2008 LIGHTING SERVICES INC. ALL RIGHTS RESERVED.

Lighting Services Inc • Stony Point Industrial Park • 2 Kay Fries Drive • Stony Point, NY 10980-1996 • Tel: 845-942-2800 • Fax: 845-942-2177

Title	Type	Description
X		238 SERIES 120V/PAR38 SPOTLIGHT WITH TAPERED FRONT AND INTERNAL ACCESSORIES
X		

Drawn by	Date	Approved by	Date	Scale	Sheet	Drawing No.	Rev.
VG	10/18/02	KK	10/22/02	1/2	1 OF 1	238-00	~

bpi
brandston partnership inc.
Lighting design
122 West 26th Street 5th floor
New York New York 10001
T. 212.924.4050 F. 212.691.5418

Utah Museum of Natural History
Salt Lake City, UT

YP-EM

Rev.	ECO#	By	Date	Chk.	Description
~	1411	WA	8/11/08	RD	RELEASED
A	1415	WA	8/12/08	RD	BLST & LAMP WERE FOR PAR30

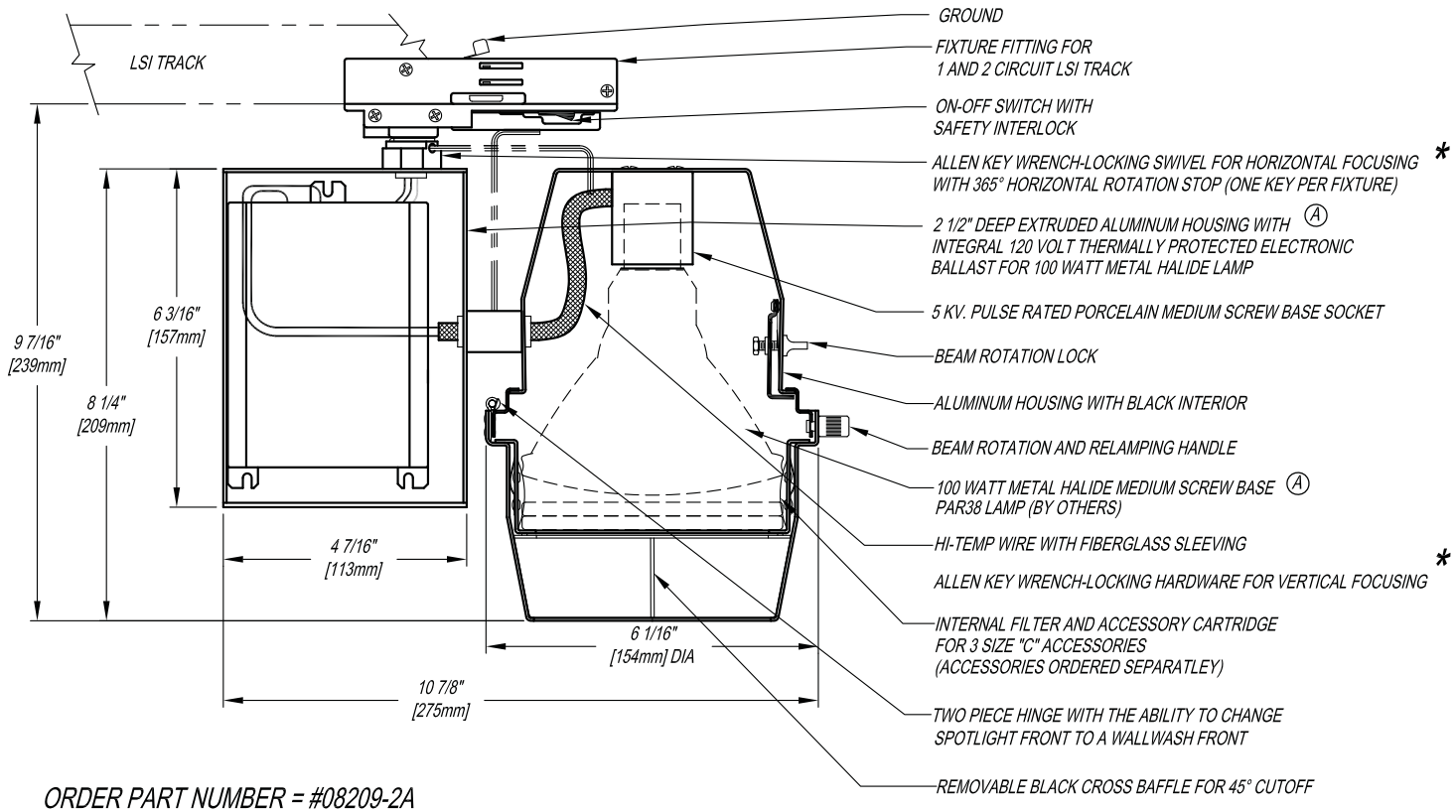

ORDER PART NUMBER = #08209-2A

PLEASE ADVISE
FINISH: (PAINT)

- ☐ BLACK
- ☐ WHITE
- ☐ SILVER
- ☐ GRAPHITE
- ☐ PLATINUM

CONFIDENTIAL—PROPRIETARY INFORMATION. THE INFORMATION HEREIN IS PROTECTED UNDER COPYRIGHT AND IS OF A PROPRIETARY NATURE AND IS SUBMITTED IN CONFIDENCE FOR USE BY OUR CLIENTS ONLY. UNAUTHORIZED REPRODUCTION, PUBLICATION, DISTRIBUTION OR DISSEMINATION IN WHOLE OR IN PART, IS EXPRESSLY PROHIBITED. THE INFORMATION CONTAINED HEREIN IS AND REMAINS THE PROPERTY OF LIGHTING SERVICES INC AND RECEIPT OR POSSESSION OF THIS INFORMATION CONFERS NO RIGHT IN OR LICENSE TO USE OR TO DISCLOSE TO OTHERS THE SUBJECT MATTER CONTAINED HEREIN FOR ANY BUT AUTHORIZED PURPOSES. COPYRIGHT 2008 LIGHTING SERVICES INC. ALL RIGHTS RESERVED.

Lighting Services Inc • Stony Point Industrial Park • 2 Kay Fries Drive • Stony Point, NY 10980-1996 • Tel: 845-942-2800 • Fax: 845-942-2177

Title	Type	Description			
UTAH MUSEUM OF NATURAL HISTORY	~	M2901-00X MOD SERIES 120 VOLT 100 WATT 38 PAR METAL HALIDE SPOTLIGHT			
Drawn by: WA — Date: 8/06/08	Approved by: RD — Date: 8/11/08	Scale: 1 : 2	Sheet: 1 OF 1	Drawing No.: 08209-2	Rev: A

bpi
brandston partnership inc.
Lighting design
122 West 26th Street 5th floor
New York New York 10001
T. 212.924.4050 F. 212.691.5418

Utah Museum of Natural History
Salt Lake City, UT

YP-WK

X24 X-EFFECTS PROJECTOR

PRODUCT DESCRIPTION

The X24 X-Effects Projector provides large scale rippling light effects previously unavailable to lighting designers. The device utilizes a 200-watt Enhanced Metal Arc source, whose short arc allows for an output of 5000 lumens, and a 7000 hour lamp life. The color temperature is similar to a Xenon source at 6000°K.

The effect itself is created by rotating two "X" size glass gobos off-center of the optical path. This results in a projection that does not appear to have a visible direction or pattern. Speed and direction of both gobos are controlled from on-board potentiometers or via DMX. Dichroic color and patterns can be inserted into the lens trains.

Lens trains are available in 19, 30, 50 and 70-degree configurations. Due to the efficiency of the lamp and the design of the optics, all images have crisp edges, even for long throws of 100 feet or more.

X24 X-Effects Projectors are supplied equipped with a 200-watt Enhanced Metal Arc source and a customer-chosen lens train.

The X24 X-Effects Projector is available in two configurations. For Theatrical entertainment lighting specify the model with DMX on board. Using five DMX channels, the unit has full control of each effect gobo, lamp strike, and light output. The DMX-controlled douser, also initiated through your lighting control board, directs not only the light output but blackouts and fades as well.

For such permanent installations as retail or museum display, or where DMX is not available or required, the analog X24 X-Effects Projector is a good choice. It includes onboard potentiometers to control the speed and direction of both gobos.

PRODUCT NUMBERS

No. 205-37015-0120	X24 X-Effects/Projector - DMX
No. 205-37020-0120	X24 Effects Projector - Analog
No. 205-37119-0000	19º lens
No. 205-37130-0000	30º lens
No. 205-37150-0000	50º lens
No. 205-37170-0000	70º lens

ACCESSORIES/REPLACEMENTS

No. 205-37510-0495	X-Filter-Water
No. 205-37520-0495	X-Filter-Fire
No. 205-36101-0000	SMR202 200 watt lamp
No. 205-37212-1114	X24 Std. Water Effect-Set of 2

rosco
www.rosco.com
52 Harbor View Avenue, Stamford, CT 06902 • (203)708-8900 • 1(800)ROSCO NY • Fax: (203)708-8919
1265 Los Angeles Street, Glendale, CA 91204 • (818)543-6700 • 1(800)ROSCO LA • Fax: (818)662-9470
Also in: Toronto, London, Madrid, São Paulo and Sydney

bpi
brandston partnership inc.
Lighting design
122 West 26th Street 5th floor
New York New York 10001
T. 212.924.4050 F. 212.691.5418

Utah Museum of Natural History
Salt Lake City, UT

YP-3A

PRODUCT SPECIFICATIONS

Physical:
- Finish: Black
- Weight: 19 lbs.
- Width: 12"
- Length: 14"
- Height: 7"
- Yoke mounted

Electrical:
- Supply voltage: 90-264 VAC 47-63hz and 90-340VDC/3 Amps
- 16/3 IEC cord set
- Ushio E-mark SMR202 Lamp, 200 Watt DC
  - Metal Halide: 7000 hour lamp life; 5000 initial lumen output

Optical:
- Elliptical glass dichroic coated reflector
- 4 element lens system
- 19, °30°, 50° and 70° replaceable beam spread barrels
- Tool-free lens replaceable
- Lockable focus
- Tool-free removable effect wheels
- Glass dichroic color filter holder: 1.95" (49.53mm)

DMX FEATURES

Onboard DMX addressing
DMX Pass-through
Utilizes 5 DMX channels
100% to 0% light fade w/ full blackout
Ultra quiet
Long lamp life – 7000 plus hours MTBF*

* Mean Time Between Failure – Average lamp life estimated under constant use conditions. Frequent re-striking of the lamp may significantly reduce lifespan.

Channel Assignments:
1 – Lamp Strike – 50 - 54%=on 55 - 59% off
2 – Dowser – Closed to Open
3 – Wheel 1 Speed (0-100%)
4 – Wheel 2 Speed (0-100%)
5 – Wheel 1 & 2 Direction
- 0 - 25% Gobo 1 CW; Gobo 2 CCW
- 26 - 50% Gobo 1 CCW; Gobo 2 CW
- 51 - 75% Gobo 1 & Gobo 2 CW
- 76 - 100% Gobo 1 & Gobo 2 CCW

rosco
www.rosco.com

52 Harbor View Avenue, Stamford, CT 06902 • (203)708-8900 • 1(800)ROSCO NY • Fax: (203)708-8919
1265 Los Angeles Street, Glendale, CA 91204 • (818)543-6700 • 1(800)ROSCO LA • Fax: (818)662-9470
Also in: Toronto, London, Madrid, São Paulo and Sydney

ETC

Source Four® 26°

Ellipsoidal Series

100V 115/120V 230/240V

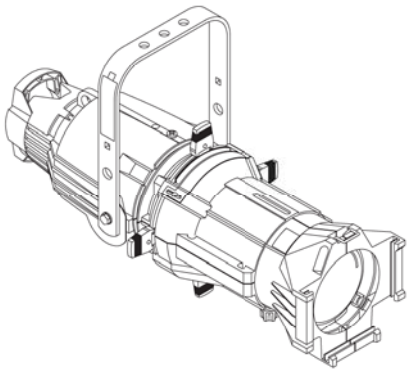

SPECIFICATIONS

PHYSICAL

- Rugged, die cast aluminum construction
- Rotating shutter assembly ±25°
- 20 gauge stainless steel shutters in a tri-plane assembly
- Interchangeable lens tubes with smooth-running teflon guides provide nine user-fit field angle options
- Thermally insulated rear handle
- High impact. thermally insulated knobs and shutter handles
- Two accessory slots and a top mounted, gel frame retainer
- Steel yoke with two mounting positions
- Positive locking single-clutch fixture body
- Slot for glass or stainless steel patterns
- Wide accessory slot with sliding cover for motorized pattern devices or optional iris
- UL and cUL Listed

ELECTRICAL

- 115-240V, 50/60Hz
- High temperature 3-conductor 36" leads in a glass fiber outer sleeve ™ technology

LAMP Supports ETC Dimmer Doubling

- 750W maximum
- HPL – compact tungsten filament contained in a krypton-filled quartz envelope (see table for available lamp options)
- Patented filament geometry makes for extremely efficient light collection and transmission
- Integral die cast aluminum heat sink lamp base

SPECIFICATIONS

OPTICAL

- Re-optimized optical system for improved photometric performance and field uniformity
- Projector-quality, high contrast aspheric lens
- Optional enhanced definition lens tube available for even higher image quality
- Faceted borosilicate reflector with dichroic cold mirror coating removes greater than 90% infrared radiation (heat) and reflects greater than 95% of visible light
- Reflector secured with anti-vibration shock mounts
- Lens(es) secured with anti-vibration shock mounts
- Tool free, positive locking X, Y and Z lamp centering adjustments, unaffected by relamping
- Beam edge continually adjustable hard-to-soft
- Interchangeable lens barrels permit selection of 5°, 10°, 14°, 19°, 26°, 36°, 50°, 70°, and 90° field angles as well as 19°, 26°, 36°, and 50° EDLT lenses

ORDERING INFORMATION

Source Four

MODEL	DESCRIPTION
426	26° ellipsoidal (black)
426-1	26° ellipsoidal (white)

ETC Source Four are supplied with C-clamp, color frame and 3' (96cm) leads as standard

Connector Designation

Use Suffixes below to specify Factory–Fitted Connector type

MODEL	DESCRIPTION
-A	Parallel-blade U-ground connector
-B	Two-pin and ground, 20 amp connector
-C	Grounded, 20 amp, twistlock connector
-M	Dimmer Doubling Connector (NEMA L515P)

See back page for Source Four Accessories

bpi

brandston partnership inc.

Lighting design

122 West 26th Street 5th floor
New York New York 10001
T. 212.924.4050 F. 212.691.5418

Utah Museum of Natural History
Salt Lake City, UT

YP-3B/YZ-1

PHOTOMETRICS

Photometric data below is measured with an HPL 750W/115V 300 hr lamp. To convert data when using any other HPL lamp, use the lumen or candela multiplying factors (Lm MF or Cd MF) for that specific lamp, listed in the Lamps table in this datasheet. For lumen data, multiply by the Lm MF. For candela or footcandle data, multiply by the Cd MF.

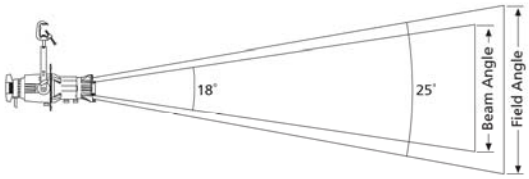

Throw Distance (d)	15′ 4.6m	30′ 9.1m	45′ 13.7m	60′ 18.1m
Field Diameter	6.7′ 2.0m	13.4′ 4.1m	20.1′ 6.1m	26.8′ 8.2m
Illuminance (fc)	783	196	87	49
Illuminance (lux)	8,432	2,108	937	527

To determine center beam illumination in footcandles at any throw distance, divide candela by the throw distance squared.

For Field diameter at any throw distance, multiply the throw distance by .45

For Beam diameter at any throw distance, multiply the throw distance by .32

Source Four 26°(cosine)

Degree	Candela	Field Lumens	Beam Lumens	Efficiency	Lumens per watt
26°	176,255	13,690	9,040	62.5%	18.3

Metric Conversions: For meters, multiply feet by .3048
For Lux multiply footcandles by 10.76

Iso-Illuminance Diagram
(Flat Surface Distribution)

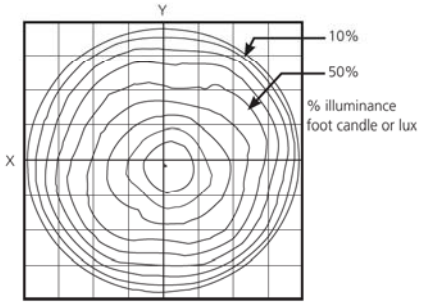

Cosine Candela Plot

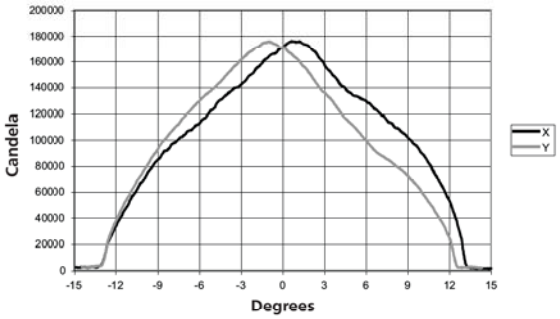

Complete IES photometry data files (LM-63-02 format) may be downloaded from the ETC website.

Go to http://www.etcconnect.com/downloads.asp

bpi

brandston partnership inc.

Lighting design

122 West 26th Street 5th floor
New York New York 10001
T. 212.924.4050 F. 212.691.5418

Utah Museum of
Natural History
Salt Lake City, UT

YP-3B/YZ-1

LAMPS

To determine Candela (Cd) or Lumens (Lm) for any other HPL lamp, multiply the Candela or Lumen value by the appropriate multiplying factor (CdMF or LmMF) shown for that lamp in the table below.

ETC Part #	Lamp Code	Watts	Volts	Initial Lumens	Color Temp. K	Average Rated Life	26° Cd MF	26° Lm MF
RT116	HPL 750/115**	750	115	21,900	3,250	300	1.00	1.00
RT196	HPL 750/115X	750	115	16,400	3,050	1,500	.64	.74
RT113	HPL 575/115**	575	115	16,520	3,250	300	.78	.82
RT114	HPL 575/115X	575	115	12,360	3,050	2,000	.56	.56
RT142	HPL 375/115	375	115	10,540	3,250	300	.66	.52
RT143	HPL 375/115X	375	115	8,500	3,050	1,000	.45	.40
N/A	HPL 750/120	750	120	21,900	3,250	300	1.00	1.00
N/A	HPL 750/120X	750	120	16,400	3,050	1,500	.64	.74
RT115	HPL 575/120	575	120	16,520	3,250	300	.78	.82
RT171	HPL 575/120X	575	120	12,360	3,050	2,000	.56	.56
RT112	HPL 550/77*	550	77	16,170	3,250	300	.77	.77
RT117	HPL 550/77X*	550	77	12,160	3,050	2,000	.59	.56
RT160	HPL 750/230**	750	230	19,750	3,200	300	.64	.75
N/A	HPL 750/230X	750	230	15,600	3,050	1,500	.40	.59
RT129	HPL 575/230**	575	230	14,900	3,200	400	.53	.61
RT138	HPL 575/230X	575	230	11,780	3,050	1,500	.38	.45
RT154	HPL 375/230X	375	230	7,800	3,050	1,000	.29	.32
N/A	HPL 750/240	750	240	19,750	3,200	300	.64	.75
N/A	HPL 750/240X	750	240	15,600	3,050	1,500	.40	.59
RT130	HPL 575/240	575	240	14,900	3,200	400	.50	.61
RT139	HPL 575/240X	575	240	11,780	3,050	1,500	.36	.45
RT155	HPL 375/240X	375	240	7,800	3,050	1,000	.29	.32

Source Four is rated for 750W maximum.

*77 Volt HPL lamps are for use with ETC Dimmer Doubling technology only.

**Photometric data was prepared using a production fixture and the Prometric CCD measurement system. Fixture adjusted for cosine distribution and tested with calibrated lamp at rated voltage. All data normalized to nominal lamp lumens in accordance with IES LM-73-04. Testing performed at ETC West, Hollywood, CA. All other multiplying factors extrapolated from primary test data.

For links to photometry file downloads (IES LM-63-02 format) go to www.etcconnect.com.

HPL Specified Tolerances: Watts +/- 5%, Lumens +/-7%, Average life +/-10%, Color Temperature +/- 50K

bpi

brandston partnership inc.

Lighting design

122 West 26th Street 5th floor
New York New York 10001
T. 212.924.4050 F. 212.691.5418

Utah Museum of Natural History
Salt Lake City, UT

YP-3B/YZ-1

PHYSICAL

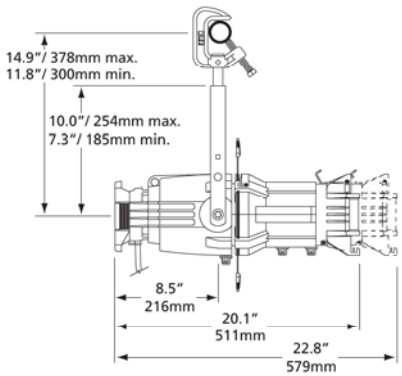

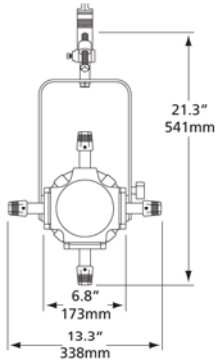

Source Four Weights*

MODEL	WEIGHT		SHIPPING WEIGHT	
	lbs	kgs	lbs	kgs
26°	14	6.4	20	9.1

*Includes 2.3 lbs for C-clamp

ORDERING INFORMATION

Continued from front page...

Source Four Accessories

MODEL	DESCRIPTION
426LT	26° lens tube complete (black)
426LT-1	26° lens tube complete (white)
426EDLT	26° Enhanced Definition Lens Tube complete (black)
426EDLT-1	26° Enhanced Definition Lens Tube complete (white)
400CC	C–clamp (included)
400PH-A	Pattern holder (A size)
400PH-B	Pattern holder (B size)
400PH-G	Glass pattern holder
400SC	Safety cable
400RS	Drop-in iris
400CF	Colorframe (6.25") (included)
400DN	Donut (6.25")
400TH	Top hat
400HH	Half hat
400GE	Gel extender (Recommended for 19° and 26° only)
407GE	Conical gel extender (requires 407CF below)
407CF	7.5" Square color frame (required for 14°, 70°, 90° and 407GE)
400FB	Source Four fixture body, single clutch

Note: For colors other than black or white, please call ETC.

Source Four products are protected by one or more of the following patents:

U.S.	USRE36,3316, US5,345,371, US5,446,637, US5,544,029, US6,092,914 and US5,775,799
U.K.	GB0592589, GB0673488, 99930527.9*
Germany	DE0592589, GB0673488, 99930527.9*
Japan	JP2,501,772

* European patent application number

Corporate Headquarters • 3031 Pleasant View Rd, PO Box 620979, Middleton WI 53562 0979 USA • Tel +1 608 831 4116 • Fax +1 608 836 1736
London, UK • Unit 26-28, Victoria Industrial Estate, Victoria Road, London W3 6UU, UK • Tel +44 (0)20 8896 1000 • Fax +44 (0)20 8896 2000
Rome, IT • Via Ennio Quirino Visconti, 11, 00193 Rome, Italy • Tel +39 (06) 32 111 683 • Fax +39 (06) 32 656 990
Holzkirchen, DE • Ohmstrasse 3, 83607 Holzkirchen, Germany • Tel +49 (80 24) 47 00-0 • Fax +49 (80 24) 47 00-3 00
Hong Kong • Room 1801, 18/F, Tower 1 Phase 1, Enterprise Square, 9 Sheung Yuet Road, Kowloon Bay, Kowloon, Hong Kong • Tel +852 2799 1220 • Fax +852 2799 9325
Web • www.etcconnect.com • Copyright©2007 ETC. All Rights Reserved. All product information and specifications subject to change. 7060L1008 Rev. F Printed in USA 12/07

brandston partnership inc.

Lighting design

122 West 26th Street 5th floor
New York New York 10001
T. 212.924.4050 F. 212.691.5418

Utah Museum of Natural History
Salt Lake City, UT

YP-3B/YZ-1

GENERAL Lighting Track shall allow fixtures to be located anywhere along the track length. Fixtures shall be easily focused, switched, dimmed, accessorized and removed as desired. Track system shall have a five year warranty from date of shipment.

MECHANICAL 277V Lighting Track shall be constructed of .070 (2mm) extruded aluminum with overall height of 1.42 (36mm) and overall width of 1.812 (46mm). Track shall have same overall dimensions and physical appearance for both one and two circuit models.

277V Track shall be available in nominal 4 foot (1.2m), 8 foot (2.4m), and 12 foot (3.7m) lengths, in Silver, Black, White, or Graphite high temperature baked paint finish. Track shall be field cuttable to any length with a single cut.

277V Track system shall be available with End Feed, End Cap, Straight Mini-Joiner, Straight Joiner/Feeder, Flexible Joiner and L, T, and X Joiner/Feeders as standard components.

277V Track shall have the ability to be directly surface mounted. Track shall have pre-punched mounting slots for direct mounting to any surface. Track shall have the ability to: be mounted 1/2 inch (13mm) from a surface by extruded aluminum mounting clips, be suspended from a surface by a field cuttable stainless steel cable system, be suspended from a surface by a field cuttable steel stem system, and be mounted into UniTrack housing.

ELECTRICAL 277V Lighting Track and components shall be UL and CUL listed, CE Certified, and comply with the National Electric Code standards for Lighting Track. One and two circuit Lighting Track shall be rated at 277 volt, 60 Hz. 5540 watts maximum each circuit. Each 20 amp/277 volt circuit shall be comprised of flat copper busbars and have a separate neutral busbar for each circuit busbar. The neutral busbar shall be oversized to be comparable to #10 gauge 30 amp wire to reduce the possibility of overheating due to non-linear loads and harmonics. Track shall have integral wiring channels for six (6) additional #12 THHN wires to create three (3) additional 20 amp/277 volt circuits, which can be dropped into any Joiner/Feeder, for a total track power capacity of 100 amps. A separate grounding busbar shall be integral in all track lengths. All busbars shall be insulated to prevent contact with aluminum extrusion.

277V Track shall have electric feed capability through all Joiner/Feeders (except Flexible Joiner and Straight Mini-Joiner) using either 1/2 or 3/4 U.S. trade size knock-outs (.875 diameter [22mm] or 1.125 diameter [29mm]). Joiner/Feeders can be electrically field modified by removing the Lexan™ cover and rerouting internal pre-wired jumpers. All Joiner/Feeders shall be available in Black, White, Silver, and Graphite GE fiber reinforced Lexan™.

One and two circuit 277V Lighting Track with separate neutral busbars shall have the ability to have each circuit separately dimmed as required when using standard voltage and low voltage fixtures with either magnetic or electronic transformers. Track shall have the ability to be dimmed or switched in selected sections in addition to dimming or switching an entire track configuration or track run.

FIXTURE FITTING INTERFACE 277V Track shall accept GE fiber reinforced Lexan™ fixture fittings which positively lock into track and cannot be energized by the integral switch until safety interlock handle is in the closed position. Safety interlock shall also prevent fixture fitting removal from track unless the switch is in the “off” position. Upon insertion of fixture fitting into track, grounding connection from fixture fitting to track shall be automatically completed before any electrical contact is made with busbars. When removing fixture fitting from track, the grounding connection shall automatically be disconnected last. The fixture fitting shall recess into the track, creating a minimal profile below the track. 277V Track fixture fittings shall be identified by a red rotor and a 277 volt label.

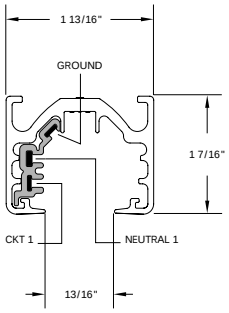

One Ckt 277V Track

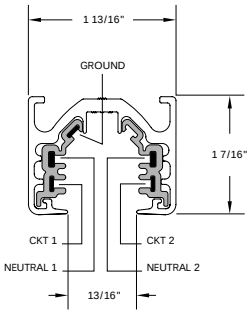

Two Ckt 277V Track

brandston partnership inc.

Lighting design

122 West 26th Street 5th floor
New York New York 10001
T. 212.924.4050 F. 212.691.5418

Utah Museum of Natural History
Salt Lake City, UT

YS-1

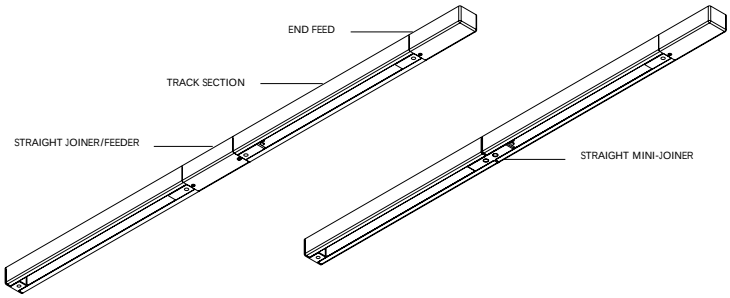

Straight Track Application

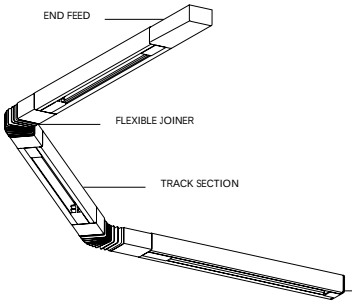

Ceiling Application/Horizontal Mount

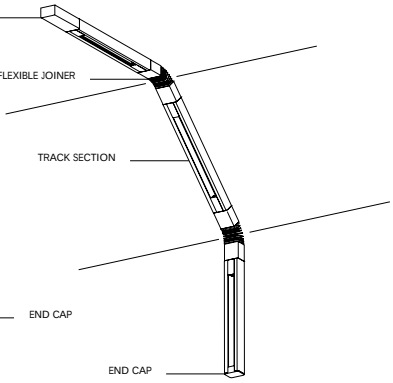

Ceiling to Wall Application/Vertical Mount

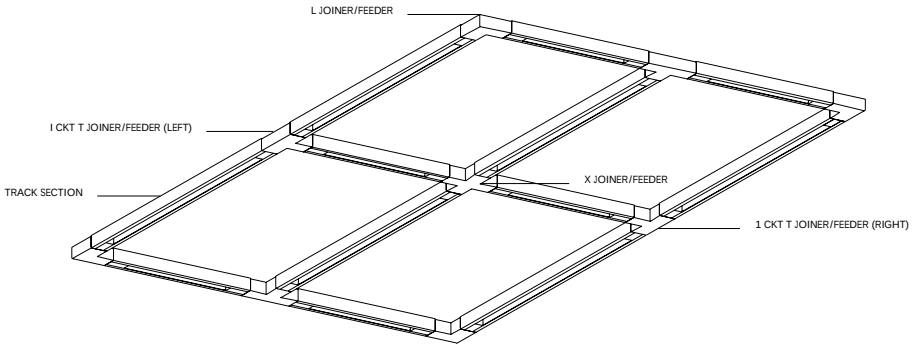

One Circuit Configuration

bpi

brandston partnership inc.

Lighting design

122 West 26th Street 5th floor
New York New York 10001
T. 212.924.4050 F. 212.691.5418

Utah Museum of Natural History
Salt Lake City, UT

YS-1

UL and CUL listed, CE Certified, Dry Location • IBEW union made at LSI plant in USA • Specification grade heavy duty .070 (2mm) extruded aluminum track • 4 foot (1.2m), 8 foot (2.4m) and 12 foot (3.7m) field cuttable lengths • One circuit 20 amp or two circuit 40 amp capacity/277 volt • 100 amp total capacity when using integral wireways • Copper busbars equivalent to #12 AWG wire used as circuit and ground track conductors • Oversized copper busbars equivalent to #10 AWG wire used as neutral track conductors • Separate neutral track conductor used for each circuit track conductor • Separate copper grounding busbar used throughout track system • Black, White, Silver, and Graphite finishes • All Joiner/Feeders, Flexible Joiners, Mini-Joiners, End Feeds and End Caps are injection molded of GE fiber reinforced Lexan™ • All Joiner/Feeders and Flexible Joiners are prewired and simply couple into track • All Joiner/Feeder circuits can be easily field modified by changing internal jumper wires • Fixture fitting recesses into track for minimum profile • LSI surface track can be mounted directly to any surface 5'-0" above finished floor.

Surface Track Sections

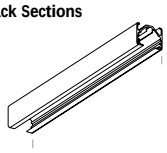

277V Surface Track Sections are used in conjunction with an End Feed, End Cap and a variety of Joiner/Feeders to form track runs and configurations. Track Section lengths are nominal 4 foot (1.2m), 8 foot (2.4m) and 12 foot (3.7m) which are field cuttable.

Finish		Nominal length 4 Ft	8 Ft	12 Ft
Silver	One Ckt	**61010**	**61020**	**61030**
	Two Ckt	**62010**	**62020**	**62030**
Black	One Ckt	**61210**	**61220**	**61230**
	Two Ckt	**62210**	**62220**	**62230**
White	One Ckt	**61310**	**61320**	**61330**
	Two Ckt	**62310**	**62320**	**62330**
Graphite	One Ckt	**61410**	**61420**	**61430**
	Two Ckt	**62410**	**62420**	**62430**

Emergency/Worklite Track

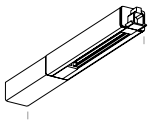

277V Emergency/Worklite Track is a separately fed one circuit Track Section, suitable for most LSI track fixtures, that integrates into any LSI Track run or configuration at any location. Consult fixture cutsheet. LSI fixtures (add suffix EF) mechanically lock into Emergency/Worklite Track by means of special hardware and do not have on/off switches.

Finish	All One Ckt			
	15" Joiner Section	15" End Feed Section	15" End Cap Section	15" Conduit End Feed Section
Silver	**61050**	**61051**	**61052**	**61053**
Black	**61250**	**61251**	**61252**	**61253**
White	**61350**	**61351**	**61352**	**61353**
Graphite	**61450**	**61451**	**61452**	**61453**

Unimount

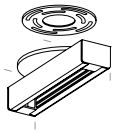

277V Unimount is a compact canopy mount Track Section which will accept most single LSI Track fixtures up to 500 watts. Consult fixture cutsheet.

Finish		
Silver	One Ckt	**61161**
Black	One Ckt	**61261**
White	One Ckt	**61361**
Graphite	One Ckt	**61461**

End Feed

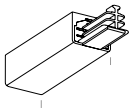

277V End Feed is used in conjunction with a Canopy Kit for top feeding from a recessed outlet box and can also be top fed directly with cable.

Finish		
Silver	One Ckt	**61100**
	Two Ckt	**62100**
Black	One Ckt	**61200**
	Two Ckt	**62200**
White	One Ckt	**61300**
	Two Ckt	**62300**
Graphite	One Ckt	**61400**
	Two Ckt	**62400**

End Feed for Conduit Connector

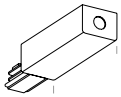

277V End Feed for Conduit Connector is used when feeding directly into the end of an End Feed. Connector supplied with 1/2" US trade size hole.

Finish		
Silver	One Ckt	**61102**
	Two Ckt	**62102**
Black	One Ckt	**61202**
	Two Ckt	**62202**
White	One Ckt	**61302**
	Two Ckt	**62302**
Graphite	One Ckt	**61402**
	Two Ckt	**62402**

bpi

brandston partnership inc.

Lighting design

122 West 26th Street 5th floor
New York New York 10001
T. 212.924.4050 F. 212.691.5418

Utah Museum of Natural History
Salt Lake City, UT

YS-1

End Cap

1/8"

277V End Cap is used for mechanically ending any straight run, individual Track Section, or open configuration Track Section.

Finish		
Silver	One & Two Ckt	**60103**
Black	One & Two Ckt	**60203**
White	One & Two Ckt	**60303**
Graphite	One & Two Ckt	**60403**

Straight Joiner/Feeder

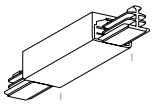

5 3/16"

277V Straight Joiner/Feeder is used to mechanically and electrically couple any two lengths of track in a straight line. Straight Joiner/Feeder can also be top fed to energize the track from a recessed outlet box when used in conjunction with appropriate Canopy Kit or can be top fed directly with cable.

Finish		
Silver	One Ckt	**61104**
	Two Ckt	**62104**
Black	One Ckt	**61204**
	Two Ckt	**62204**
White	One Ckt	**61304**
	Two Ckt	**62304**
Graphite	One Ckt	**61404**
	Two Ckt	**62404**

Straight Mini-Joiner

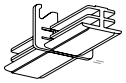

1/8"

277V Straight Mini-Joiner is used to mechanically and electrically couple any two lengths of track in a straight line. Add .125 (3mm) for Straight Mini-Joiner when calculating overall lengths of straight runs or configurations (overall lengths are not the same as when using Straight Joiner/Feeder). Not for use as feeder.

Finish		
Silver	One Ckt	**61111**
	Two Ckt	**62111**
Black	One Ckt	**61211**
	Two Ckt	**62211**
White	One Ckt	**61311**
	Two Ckt	**62311**
Graphite	One Ckt	**61411**
	Two Ckt	**62411**

L Joiner/Feeder

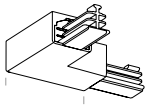

3 1/2"

277V L Joiner/Feeder is used to mechanically and electrically couple any two lengths of track in an L right angle configuration. This L Joiner/Feeder can also be top fed to energize the track from a recessed outlet box when used in conjunction with appropriate Canopy Kit or can be top fed directly with cable.

Finish		
Silver	One Ckt	**61105**
	Two Ckt	**62105**
Black	One Ckt	**61205**
	Two Ckt	**62205**
White	One Ckt	**61305**
	Two Ckt	**62305**
Graphite	One Ckt	**61405**
	Two Ckt	**62405**

T Joiner/Feeder

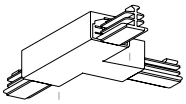

5 3/16"

277V T Joiner/Feeder is used to mechanically and electrically couple any three lengths of track in a T configuration. This T Joiner/Feeder can also be top fed to energize the track from a recessed outlet box when used in conjunction with appropriate Canopy Kit or can be top fed directly with cable. Internal Joiner wiring can be field modified. Note that in the one circuit version, a right or a left T must be ordered and must be used directly opposite each other when used in a configuration so that busbar continuity is maintained. For two circuit track, a left and right T is not necessary.

Finish		Left Joiner	Right Joiner
Silver	One Ckt	**61106**	**61107**
	Two Ckt	**62108**	**62108**
Black	One Ckt	**61206**	**61207**
	Two Ckt	**62208**	**62208**
White	One Ckt	**61306**	**61307**
	Two Ckt	**62308**	**62308**
Graphite	One Ckt	**61406**	**61407**
	Two Ckt	**62408**	**62408**

X Joiner/Feeder

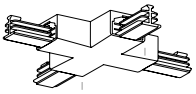

5 3/16"

277V X Joiner/Feeder is used to mechanically and electrically couple any four lengths of surface track in an X configuration. This X Joiner/Feeder can also be top fed to energize the track from a recessed outlet box when used in conjunction with appropriate Canopy Kit or can be top fed directly with cable.

Finish		
Silver	One Ckt	**61109**
	Two Ckt	**62109**
Black	One Ckt	**61209**
	Two Ckt	**62209**
White	One Ckt	**61309**
	Two Ckt	**62309**
Graphite	One Ckt	**61409**
	Two Ckt	**62409**

bpi

brandston partnership inc.

Lighting design

122 West 26th Street 5th floor
New York New York 10001
T. 212.924.4050 F. 212.691.5418

Utah Museum of Natural History
Salt Lake City, UT

YS-1

Flexible Joiner

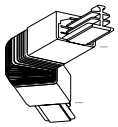

7 1/8"

277V Flexible Joiner is used to mechanically and electrically couple any two lengths of surface mount track to create angles from 0° (straight) through 90° (right angle). The Flexible Joiner can be flexed in either horizontal or vertical planes. Not for use as feeder.

Finish		
Silver	One Ckt	**61112**
	Two Ckt	**62112**
Black	One Ckt	**61212**
	Two Ckt	**62212**
White	One Ckt	**61312**
	Two Ckt	**62312**
Graphite	One Ckt	**61412**
	Two Ckt	**62412**

Adjustable Angle Bracket

5 1/4"

The Adjustable Angle Bracket for Flex Joiner is designed to attach to cable mounted track. This assembly locks the set angle of a Flex Joiner when there is no rigid mounting means.

Finish		
Silver	One & Two Ckt	**30116**
Black	One & Two Ckt	**30216**
White	One & Two Ckt	**30316**
Graphite	One & Two Ckt	**30416**

Raceway Cover

3'-6 3/4"
7'-6 3/4"
11'-6 3/4"

Field cuttable Raceway Covers are used to enclose additional lay-in circuit wiring in top section of track.

Finish	Nominal length 4 Ft	8 Ft	12 Ft
Galvanized	**30613**	**30614**	**30615**

Display Hook

Display Hook is used to mechanically hang an item from the track without electrifying it. Do not exceed 20 lbs. at minimum spacing of two feet.

Finish	
Silver One & Two Ckt	**30761**

Weight Support Bar

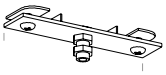

4 7/8"

Weight Support Bar provides threaded nipple and nuts to mount an item to track without electrifying it. Do not exceed 20 lbs. at minimum spacing of two feet. Nipple size 1/8-27 NPS.

Finish	
Silver One & Two Ckt	**30762**

Track Closure Cover

3'-4"
7'-4"
11'-4"

Field cuttable Noryl Track™ Closure Covers are used to enclose the open face of the track, and simply snap into place.

Finish	Nominal length 4 Ft	8 Ft	12 Ft
Silver	**30165**	**30166**	**30167**
Black	**30265**	**30266**	**30267**
White	**30365**	**30366**	**30367**
Graphite	**30465**	**30466**	**30467**

bpi

brandston partnership inc.

Lighting design

122 West 26th Street 5th floor
New York New York 10001
T. 212.924.4050 F. 212.691.5418

Utah Museum of Natural History
Salt Lake City, UT

YS-1

GENERAL Mounting Systems shall allow Track Systems to be fastened to or from various surfaces in a wide range of safe and approved methods. Mounting Systems shall have a five year warranty from date of shipment.

MECHANICAL Mounting stems shall be made from .50 (13mm) diameter steel. All mounting canopies shall be made from either 20 gauge steel (1mm) or .080 (2mm) aluminum. All Mounting Systems shall be available in either Silver, Galvanized, Stainless Steel, or Black, White, Silver, or Graphite high temperature baked paint finish.

Mounting stems shall be capable of being cut to length in the field. All hang-straight stems shall have a 30° swivel from plumb in all directions.

All stem systems shall be available in either 18 inch (457mm), 48 inch (1.2m) or 96 inch (2.4m) standard lengths.

All cable systems shall be available in either 18 inch (457mm), 48 inch (1.2m), 96 inch (2.4m), or 144" (3.7m) standard lengths.

Cables shall be constructed of .062 (1.6mm) stainless steel cable and be capable of being cut to length in the field.

Stem and cable mounting systems shall have a safety collar to ensure proper tightening of locking hardware for all field cuttable systems.

Mounting systems shall be capable of being mounted to T-bar ceiling structures either parallel or perpendicular to the T-bar by means of galvanized mounting clips.

ELECTRICAL Mounting Systems shall be UL and CUL listed, CE Certified, and comply with the National Electric Code standards for Lighting Track. Mounting Systems shall have provisions for feeding Track System through feed stems or flexible tubing with a maximum of 5 #12 THHN wires and with Stainless Steel Cable Feed Kit a maximum of 9 #12 THHN wires.

FIXTURE FITTING INTERFACE Mounting Systems used in conjunction with Track shall accept GE fiber reinforced Lexan™ fixture fittings which positively lock into track and cannot be energized by integral switch until safety interlock handle is in closed position. Safety interlock shall also prevent fixture fitting removal from track unless the switch is in the "off" position. Upon insertion of fixture fitting into track, grounding connection from fixture fitting to track shall be automatically completed before any electrical contact is made with busbars. When removing fixture fitting from track, the grounding connection shall automatically be disconnected only after the electrical contact with busbars are disconnected. The fixture fitting shall recess into track creating a minimal intrusion into space. Fixture fittings for magnetic low voltage fixtures shall be furnished with fuse of the correct ampere rating for integral transformer protection, and shall not be fused as a branch circuit.

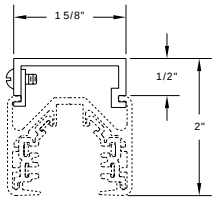

Surface Hanger Clip

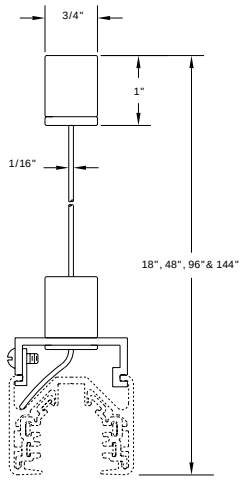

Stainless Steel Cable Support

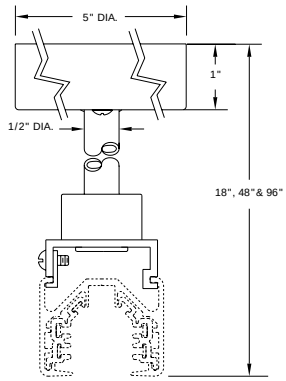

Canopy Stem Support

brandston partnership inc.

Lighting design

122 West 26th Street 5th floor
New York New York 10001
T. 212.924.4050 F. 212.691.5418

Utah Museum of Natural History
Salt Lake City, UT

YS-1

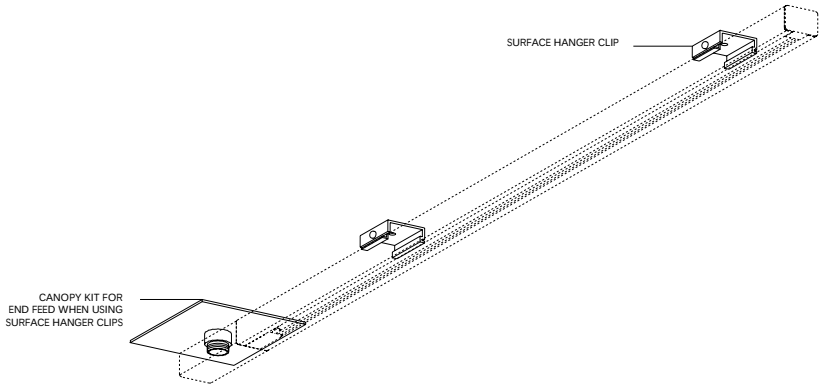

Surface Hanger Clip Application

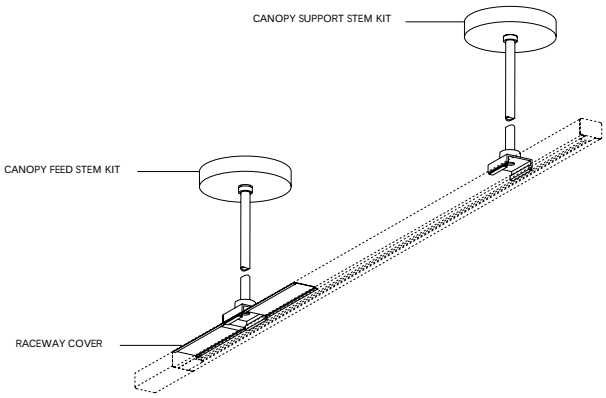

Stem Application

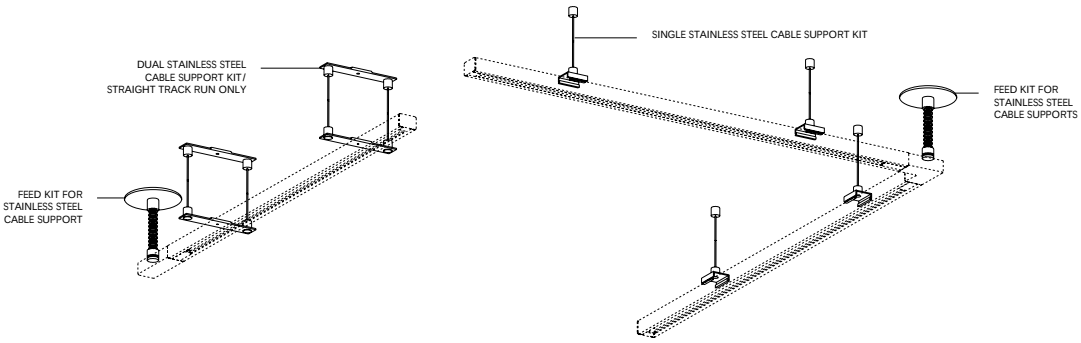

Stainless Steel Cable Application

brandston partnership inc.

Lighting design

122 West 26th Street 5th floor
New York New York 10001
T. 212.924.4050 F. 212.691.5418

Utah Museum of
Natural History
Salt Lake City, UT

YS-1

UL and CUL listed, CE Certified • IBEW union made at LSI plant in USA • LSI surface track can be spaced 1/2 inch (13mm) from any surface with extruded surface hanger clips • LSI surface track can be mounted directly to T-bar ceilings either parallel or at right angle to T-bar with T-bar hanger clips • LSI surface track can be suspended from ceiling with 18 inch (457mm), 48 inch (1.2m), 96 inch (2.4m) or 144 inch (3.7m) field cuttable 1/16 inch (1.6mm) braided stainless steel cables complete with hardware and flexible conduit for feeding • LSI surface track can be suspended from ceiling with 18 inch (457mm), 48 inch (1.2m) or 96 inch (2.4m) field cuttable tubular 1/2 inch (13mm) steel stems complete with canopy and hardware • Black, White, Silver, and Graphite finishes • Steel stems can be supplied with 60º hang straight device (30º from vertical in all directions).

Canopy Kit for End Feed

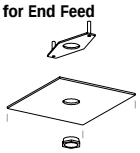

The Canopy Kit for End Feed is used when flush mounting track to a surface and feeding from a recessed outlet box.

Finish		
Silver	One & Two Ckt	**30011**
Black	One & Two Ckt	**30211**
White	One & Two Ckt	**30311**
Graphite	One & Two Ckt	**30411**

Canopy Kit for Straight, L, T and X Joiner/Feeder

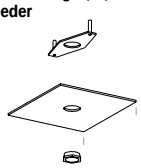

The Canopy Kit for Straight, L, T and X Joiner/Feeder is used when flush mounting track to a surface and feeding into joiners from a recessed outlet box.

Finish		
Silver	One & Two Ckt	**30012**
Black	One & Two Ckt	**30212**
White	One & Two Ckt	**30312**
Graphite	One & Two Ckt	**30412**

Surface Hanger Clip Kit

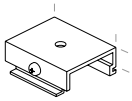

Extruded Surface Hanger Clips space track .50 (13mm) from a surface to create a floating look or when mounting to an uneven surface. For normal usage, LSI recommends two hanger clips per 4 foot (1.2m) length, two hanger clips per 8 foot (2.4m) length and three hanger clips per 12 foot (3.7m) length. Two clips per package. 1/4" diameter hole.

Finish		
Silver	One & Two Ckt	**30025**
Black	One & Two Ckt	**30225**
White	One & Two Ckt	**30325**
Graphite	One & Two Ckt	**30425**

Canopy Kit for End Feed when using Surface Hanger Clips.

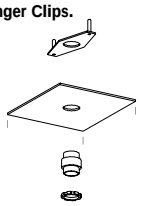

The Canopy Kit for End Feed is required when using Surface Hanger Clips to enclose wiring to track End Feed which is spaced .50 (13mm) from recessed outlet box.

Finish		
Silver	One & Two Ckt	**30026**
Black	One & Two Ckt	**30226**
White	One & Two Ckt	**30326**
Graphite	One & Two Ckt	**30426**

Canopy Kit for Straight, L, T, and X Joiner/Feeder when using Surface Hanger Clips

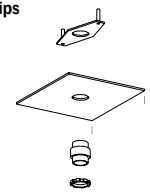

The Canopy Kit for Straight, L, T and X Joiner/Feeder is required when using Surface Hanger Clips to enclose wiring to track joiners which are spaced .50 (13mm) from recessed outlet box.

Finish		
Silver	One & Two Ckt	**30027**
Black	One & Two Ckt	**30227**
White	One & Two Ckt	**30327**
Graphite	One & Two Ckt	**30427**

Closure Cover Kit

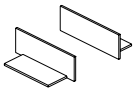

Closure Cover Kits are used in conjunction with raceway covers when enclosing additional lay-in circuit wiring in top section of cable, stem or surface hanger clip mounted track. Two pairs of covers per package.

Finish		
Silver	One & Two Ckt	**30030**
Black	One & Two Ckt	**30230**
White	One & Two Ckt	**30330**
Graphite	One & Two Ckt	**30430**

bpi

brandston partnership inc.

Lighting design

122 West 26th Street 5th floor
New York New York 10001
T. 212.924.4050 F. 212.691.5418

Utah Museum of Natural History
Salt Lake City, UT

YS-1

Rev.	ECO#	By	Date	Chk.	Description

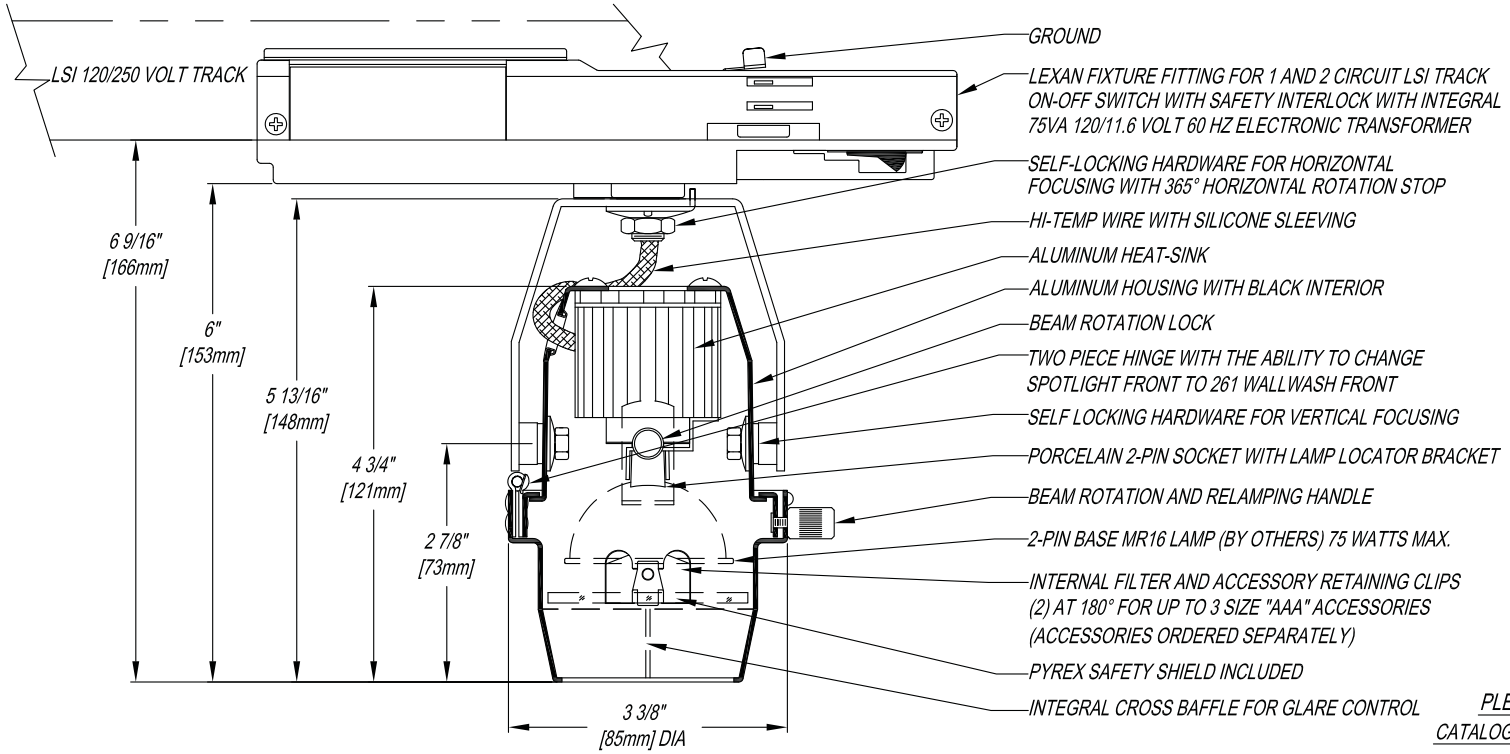

PLEASE ADVISE

CATALOG NUMBER	FINISH
☐ 260-00B	BLACK
☐ 260-00W	WHITE
☐ 260-00S	SILVER
☐ 260-00G	GRAPHITE
☐ 260-00P	PLATINUM

CONFIDENTIAL–PROPRIETARY INFORMATION. THE INFORMATION HEREIN IS PROTECTED UNDER COPYRIGHT AND IS OF A PROPRIETARY NATURE AND IS SUBMITTED IN CONFIDENCE FOR USE BY OUR CLIENTS ONLY. UNAUTHORIZED REPRODUCTION, PUBLICATION, DISTRIBUTION OR DISSEMINATION IN WHOLE OR IN PART, IS EXPRESSLY PROHIBITED. THE INFORMATION CONTAINED HEREIN IS AND REMAINS THE PROPERTY OF LIGHTING SERVICES INC AND RECEIPT OR POSSESSION OF THIS INFORMATION CONFERS NO RIGHT IN OR LICENSE TO USE OR TO DISCLOSE TO OTHERS THE SUBJECT MATTER CONTAINED HEREIN FOR ANY BUT AUTHORIZED PURPOSES. COPYRIGHT 2008 LIGHTING SERVICES INC. ALL RIGHTS RESERVED.

Lighting Services Inc • Stony Point Industrial Park • 2 Kay Fries Drive • Stony Point, NY 10980-1996 • Tel: 845-942-2800 • Fax: 845-942-2177

Title	Type	Description			
		260 SERIES 120 / 12 VOLT MR16 75 WATT SPOTLIGHT			
Drawn by: VG	Date: 12/19/06	Approved by:	Date:	Scale: 3/4	Sheet: 1 OF 1	Drawing No.: 260–00	Rev: ~

bpi
brandston partnership inc.
Lighting design
122 West 26th Street 5th floor
New York New York 10001
T. 212.924.4050 F. 212.691.5418

Utah Museum of Natural History
Salt Lake City, UT

TQ-1

Rev.	ECO#	By	Date	Chk.	Description

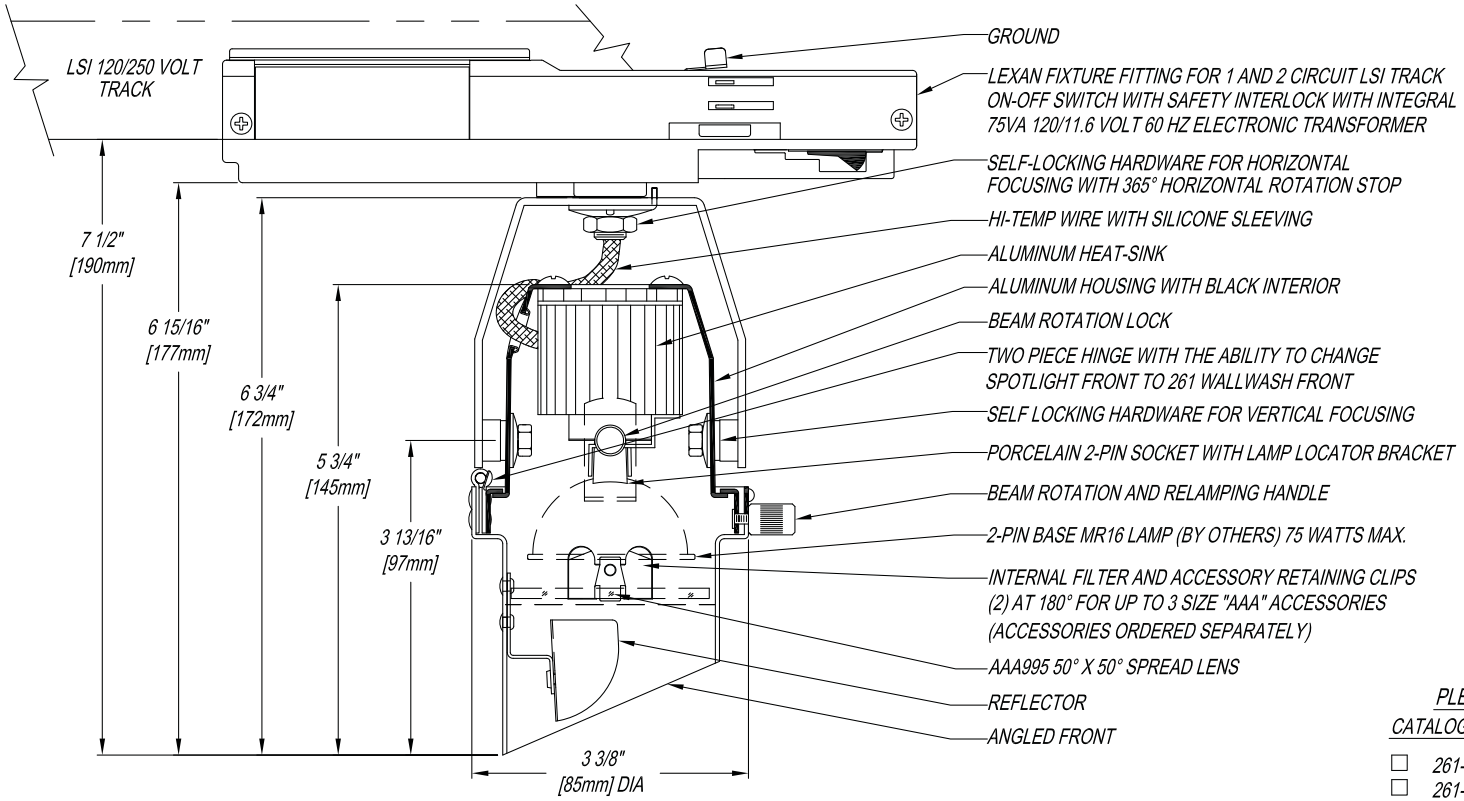

PLEASE ADVISE

CATALOG NUMBER	FINISH
☐ 261-00B	BLACK
☐ 261-00W	WHITE
☐ 261-00S	SILVER
☐ 261-00G	GRAPHITE
☐ 261-00P	PLATINUM

CONFIDENTIAL—PROPRIETARY INFORMATION. THE INFORMATION HEREIN IS PROTECTED UNDER COPYRIGHT AND IS OF A PROPRIETARY NATURE AND IS SUBMITTED IN CONFIDENCE FOR USE BY OUR CLIENTS ONLY. UNAUTHORIZED REPRODUCTION, PUBLICATION, DISTRIBUTION OR DISSEMINATION IN WHOLE OR IN PART, IS EXPRESSLY PROHIBITED. THE INFORMATION CONTAINED HEREIN IS AND REMAINS THE PROPERTY OF LIGHTING SERVICES INC AND RECEIPT OR POSSESSION OF THIS INFORMATION CONFERS NO RIGHT IN OR LICENSE TO USE OR TO DISCLOSE TO OTHERS THE SUBJECT MATTER CONTAINED HEREIN FOR ANY BUT AUTHORIZED PURPOSES. COPYRIGHT 2008 LIGHTING SERVICES INC. ALL RIGHTS RESERVED.

Lighting Services Inc • Stony Point Industrial Park • 2 Kay Fries Drive • Stony Point, NY 10980-1996 • Tel: 845-942-2800 • Fax: 845-942-2177

Title	Type	Description			
~	~	261 SERIES 120/12 VOLT MR16 75 WATT WALL WASH			
Drawn by: SM	Date: 05/01/03	Approved by	Date	Scale	Sheet: 1 OF 1	Drawing No.: 261-00	Rev: ~

brandston partnership inc.
Lighting design
122 West 26th Street 5th floor
New York New York 10001
T. 212.924.4050 F. 212.691.5418

Utah Museum of Natural History
Salt Lake City, UT

TQ-1

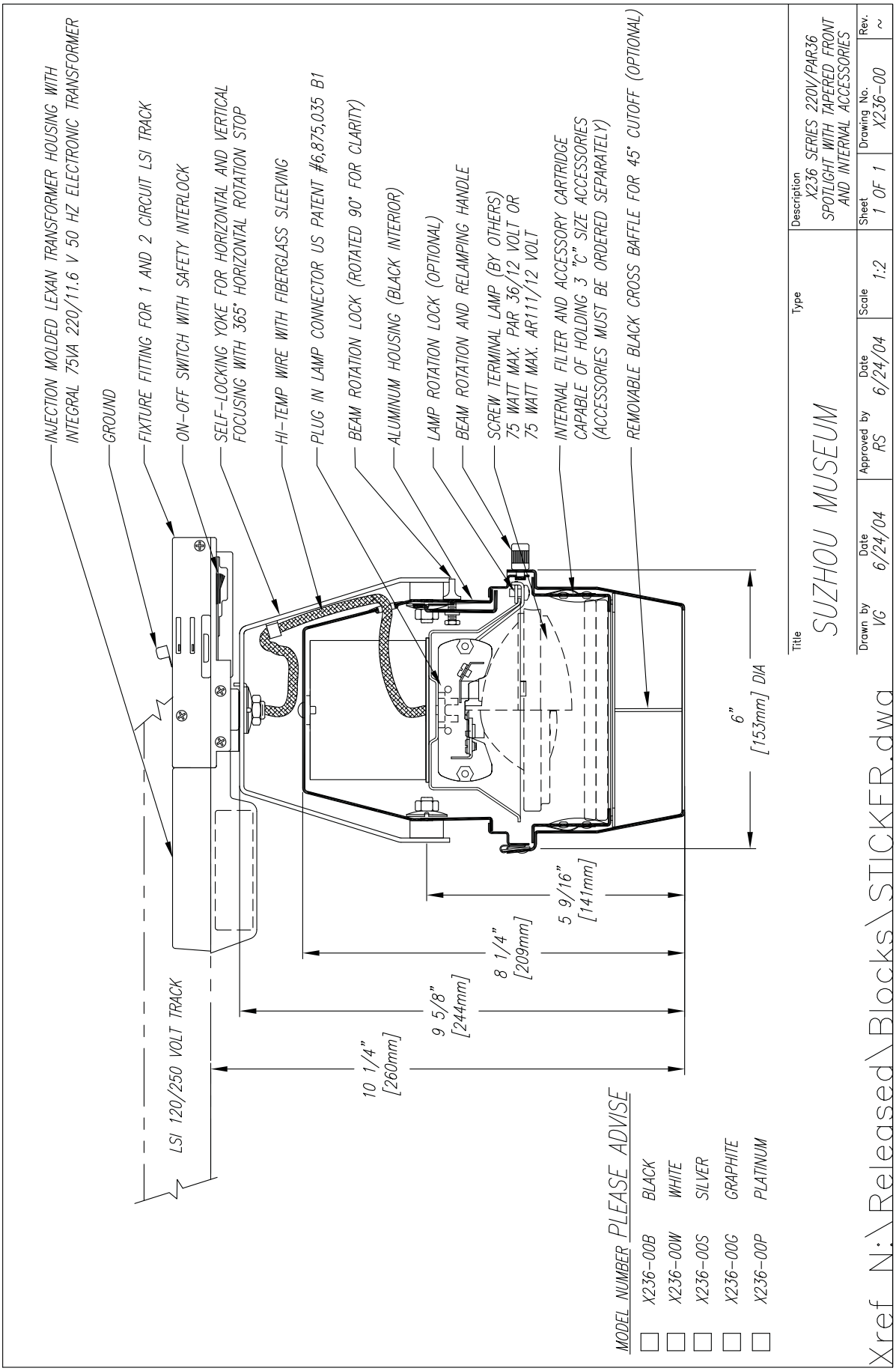

brandston partnership inc.

Lighting design

122 West 26th Street 5th floor
New York New York 10001
T. 212.924.4050 F. 212.691.5418

Utah Museum of Natural History
Salt Lake City, UT

TQ-2

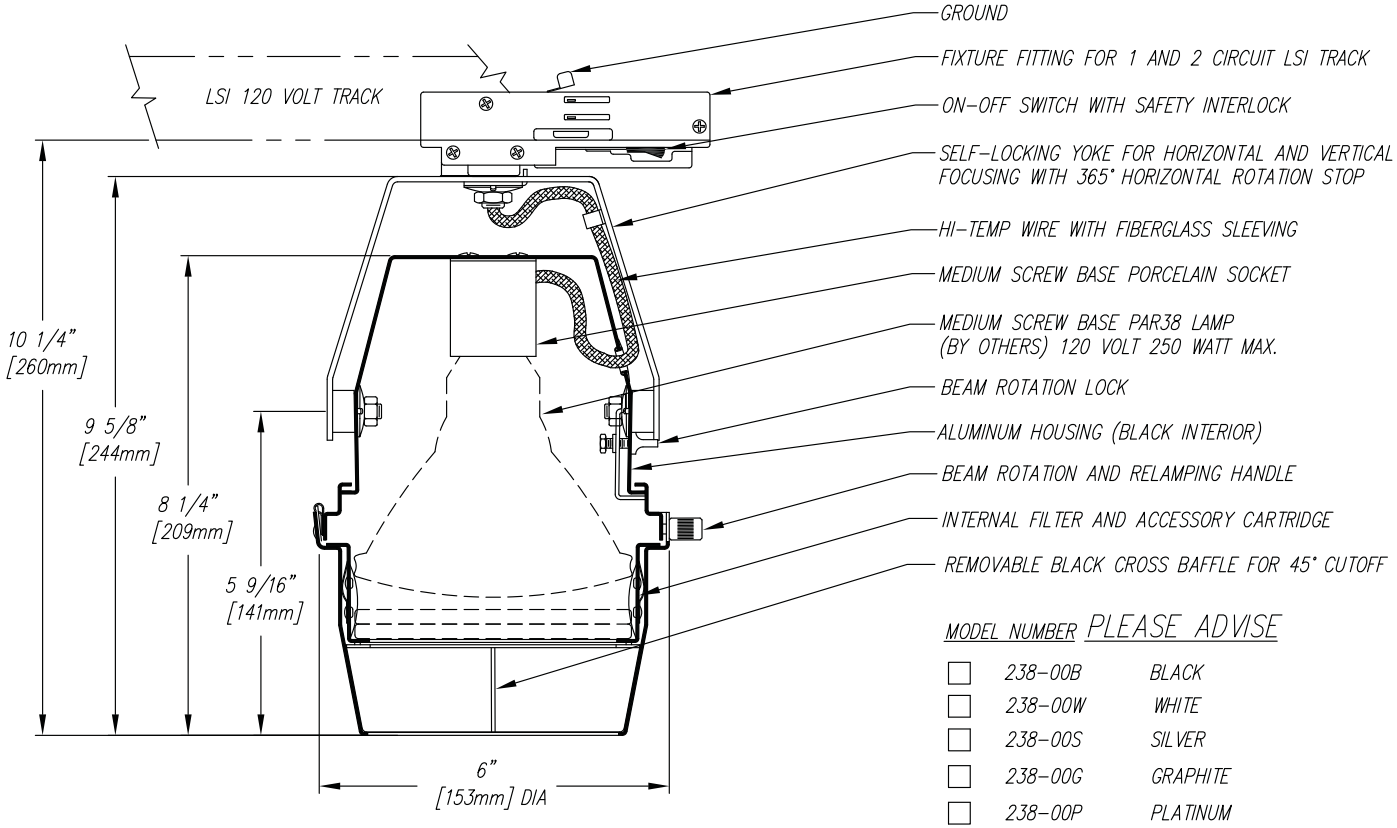

MODEL NUMBER PLEASE ADVISE

☐	238-00B	BLACK
☐	238-00W	WHITE
☐	238-00S	SILVER
☐	238-00G	GRAPHITE
☐	238-00P	PLATINUM

CONFIDENTIAL–PROPRIETARY INFORMATION. THE INFORMATION HEREIN IS PROTECTED UNDER COPYRIGHT AND IS OF A PROPRIETARY NATURE AND IS SUBMITTED IN CONFIDENCE FOR USE BY OUR CLIENTS ONLY. UNAUTHORIZED REPRODUCTION, PUBLICATION, DISTRIBUTION OR DISSEMINATION IN WHOLE OR IN PART, IS EXPRESSLY PROHIBITED. THE INFORMATION CONTAINED HEREIN IS AND REMAINS THE PROPERTY OF LIGHTING SERVICES INC AND RECEIPT OR POSSESSION OF THIS INFORMATION CONFERS NO RIGHT IN OR LICENSE TO USE OR TO DISCLOSE TO OTHERS THE SUBJECT MATTER CONTAINED HEREIN FOR ANY BUT AUTHORIZED PURPOSES. COPYRIGHT 2008 LIGHTING SERVICES INC. ALL RIGHTS RESERVED.

Lighting Services Inc • Stony Point Industrial Park • 2 Kay Fries Drive • Stony Point, NY 10980-1996 • Tel: 845-942-2800 • Fax: 845-942-2177

Title	Type	Description
X		238 SERIES 120V/PAR38 SPOTLIGHT WITH TAPERED FRONT AND INTERNAL ACCESSORIES
X		

Drawn by	Date	Approved by	Date	Scale	Sheet	Drawing No.	Rev.
VG	10/18/02	KK	10/22/02	1/2	1 OF 1	238-00	~

bpi
brandston partnership inc.
Lighting design
122 West 26th Street 5th floor
New York New York 10001
T. 212.924.4050 F. 212.691.5418

Utah Museum of Natural History
Salt Lake City, UT

TQ-3

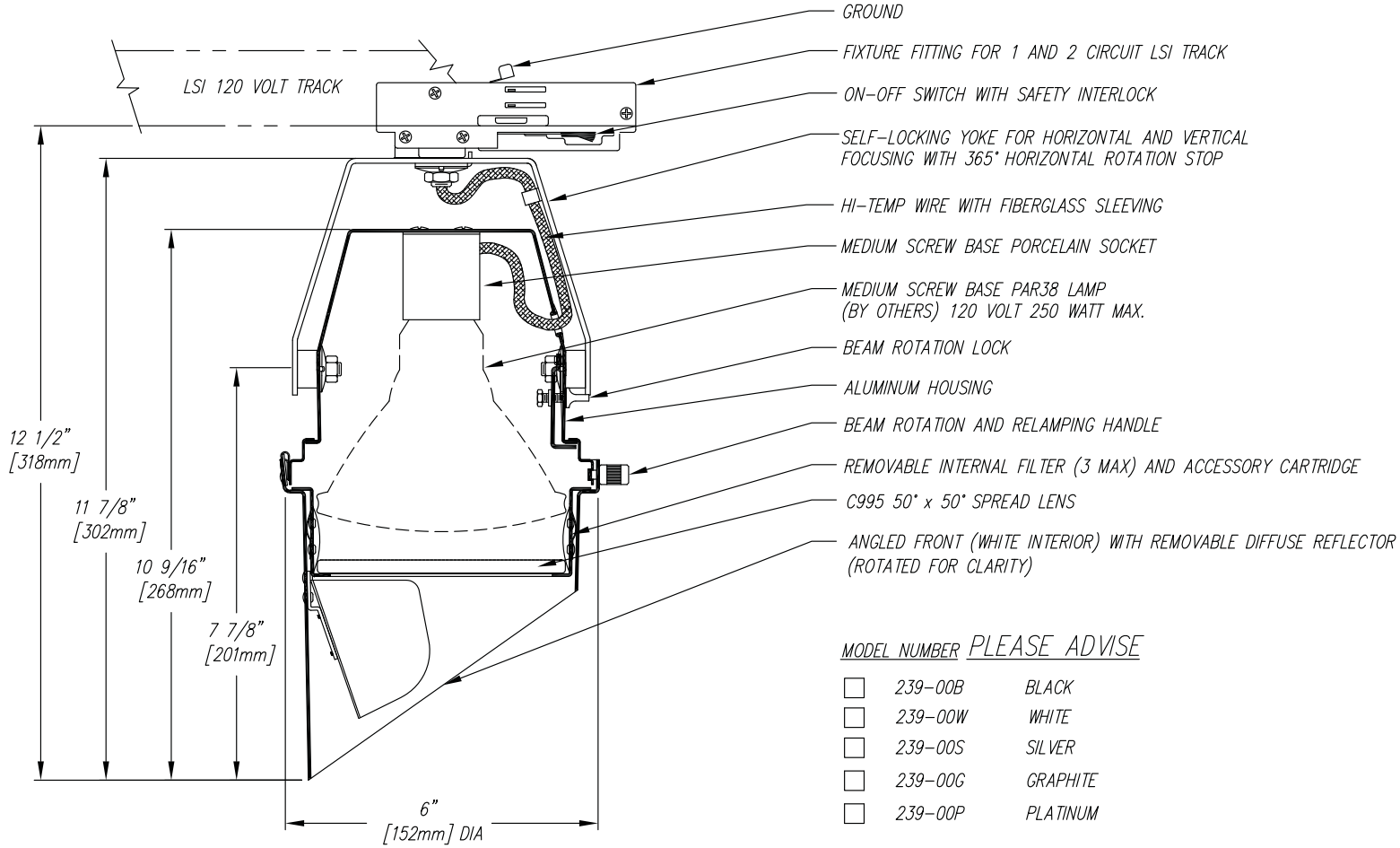

MODEL NUMBER PLEASE ADVISE

- ☐ 239–00B BLACK
- ☐ 239–00W WHITE
- ☐ 239–00S SILVER
- ☐ 239–00G GRAPHITE
- ☐ 239–00P PLATINUM

CONFIDENTIAL–PROPRIETARY INFORMATION. THE INFORMATION HEREIN IS PROTECTED UNDER COPYRIGHT AND IS OF A PROPRIETARY NATURE AND IS SUBMITTED IN CONFIDENCE FOR USE BY OUR CLIENTS ONLY. UNAUTHORIZED REPRODUCTION, PUBLICATION, DISTRIBUTION OR DISSEMINATION IN WHOLE OR IN PART, IS EXPRESSLY PROHIBITED. THE INFORMATION CONTAINED HEREIN IS AND REMAINS THE PROPERTY OF LIGHTING SERVICES INC AND RECEIPT OR POSSESSION OF THIS INFORMATION CONFERS NO RIGHT IN OR LICENSE TO USE OR TO DISCLOSE TO OTHERS THE SUBJECT MATTER CONTAINED HEREIN FOR ANY BUT AUTHORIZED PURPOSES. COPYRIGHT 2008 LIGHTING SERVICES INC. ALL RIGHTS RESERVED.

Lighting Services Inc • Stony Point Industrial Park • 2 Kay Fries Drive • Stony Point, NY 10980-1996 • Tel: 845-942-2800 • Fax: 845-942-2177

Title	Type	Description
		239 SERIES 120V/PAR 38 WALL WASH WITH KICKER/REFLECTOR

Drawn by	Date	Approved by	Date	Scale	Sheet	Drawing No.	Rev.
VG	10/18/02			1/2	1 OF 1	239–00	~

bpi
brandston partnership inc.
Lighting design
122 West 26th Street 5th floor
New York New York 10001
T. 212.924.4050 F. 212.691.5418

Utah Museum of Natural History
Salt Lake City, UT

TQ-3

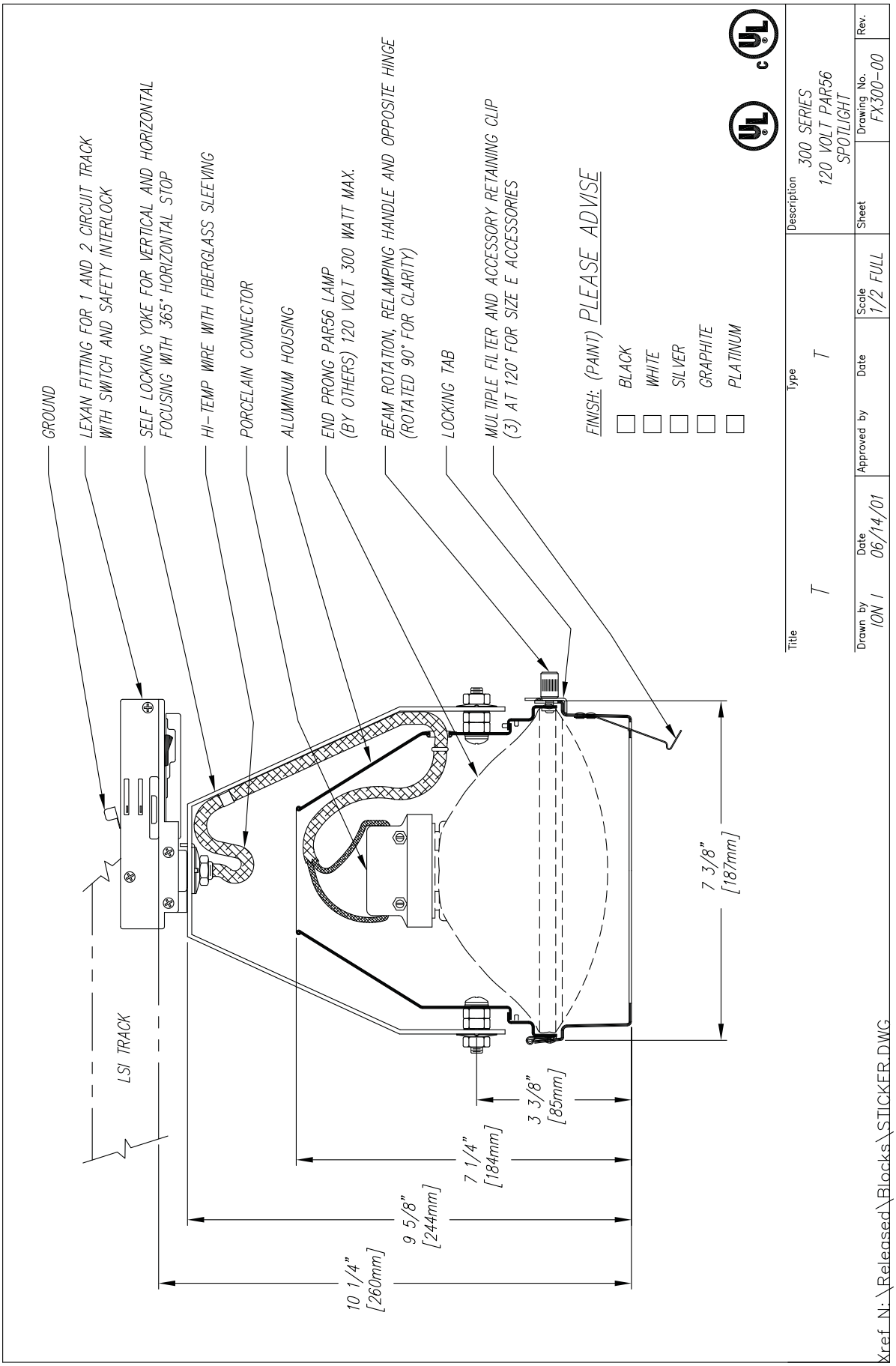

brandston partnership inc.

Lighting design

122 West 26th Street 5th floor
New York New York 10001
T. 212.924.4050 F. 212.691.5418

Utah Museum of Natural History
Salt Lake City, UT

TQ-4

Rev.	ECO#	By	Date	Chk.	Description

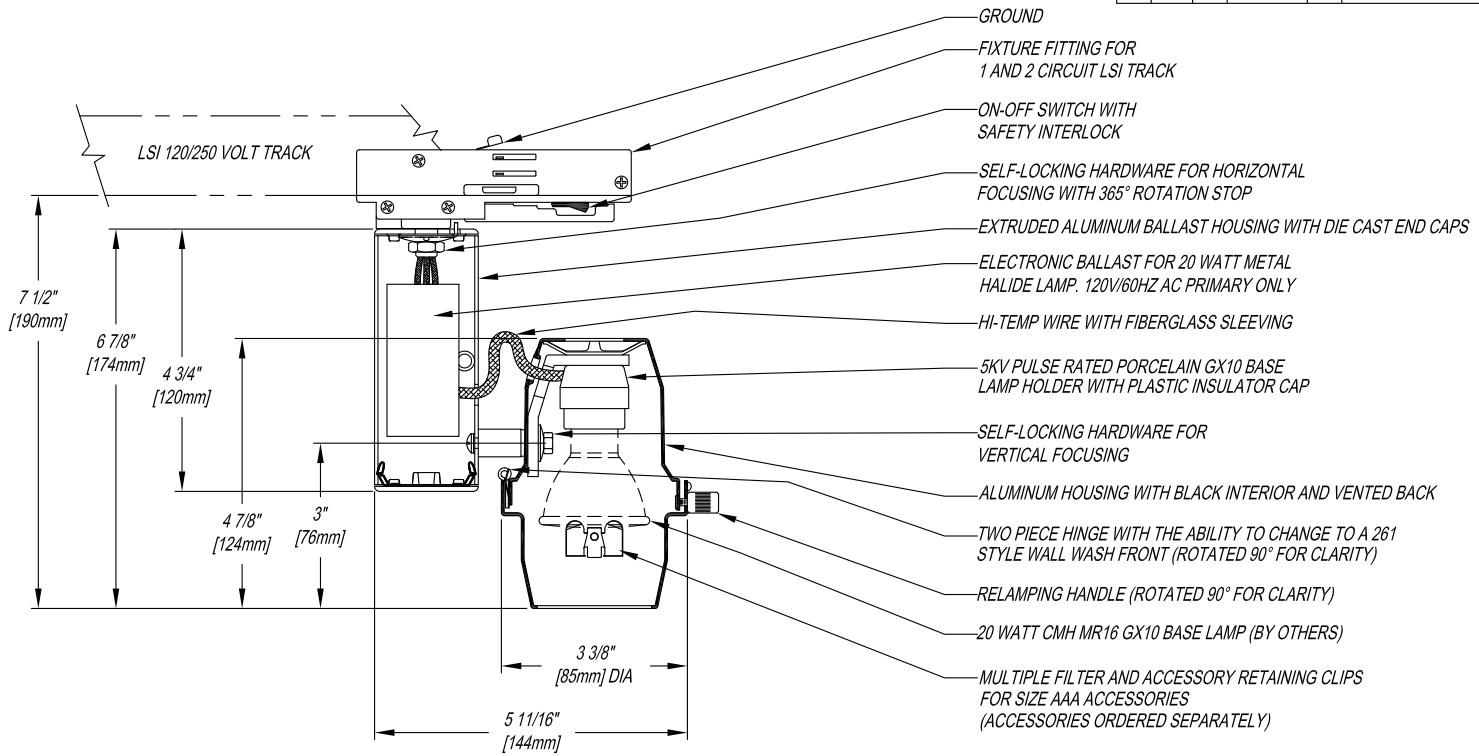

FINISH: (PAINT) PLEASE ADVISE

- ☐ MHLN1620-00B BLACK
- ☐ MHLN1620-00W WHITE
- ☐ MHLN1620-00S SILVER
- ☐ MHLN1620-00G GRAPHITE
- ☐ MHLN1620-00P PLATINUM

CONFIDENTIAL–PROPRIETARY INFORMATION. THE INFORMATION HEREIN IS PROTECTED UNDER COPYRIGHT AND IS OF A PROPRIETARY NATURE AND IS SUBMITTED IN CONFIDENCE FOR USE BY OUR CLIENTS ONLY. UNAUTHORIZED REPRODUCTION, PUBLICATION, DISTRIBUTION OR DISSEMINATION IN WHOLE OR IN PART, IS EXPRESSLY PROHIBITED. THE INFORMATION CONTAINED HEREIN IS AND REMAINS THE PROPERTY OF LIGHTING SERVICES INC AND RECEIPT OR POSSESSION OF THIS INFORMATION CONFERS NO RIGHT IN OR LICENSE TO USE OR TO DISCLOSE TO OTHERS THE SUBJECT MATTER CONTAINED HEREIN FOR ANY BUT AUTHORIZED PURPOSES. COPYRIGHT 2008 LIGHTING SERVICES INC. ALL RIGHTS RESERVED.

Lighting Services Inc • Stony Point Industrial Park • 2 Kay Fries Drive • Stony Point, NY 10980-1996 • Tel: 845-942-2800 • Fax: 845-942-2177

Title	Type	Description			
	~	MHLN1620 SERIES 120 VOLT 20 WATT METAL HALIDE MR16 SPOTLIGHT			
Drawn by: DS	Date: 12/4/06	Approved by	Date	Scale: 1 : 2	Sheet: 1 OF 1
Drawing No.: MHLN1620–00	Rev: ~				

bpi

brandston partnership inc.

Lighting design

122 West 26th Street 5th floor
New York New York 10001
T. 212.924.4050 F. 212.691.5418

Utah Museum of Natural History
Salt Lake City, UT

TM-1

BRUCK.

PERO SPOT

Description:
The Pero Spot fixture can be tilted a full 360° due to its side mounted design. Uni-plug design allows fixture to be mounted on any lighting system or ceiling canopy through the use of an appropriate adaptor, not included.

Technical Specs:
50W Max.
Lamp not included
GU5.3 socket type

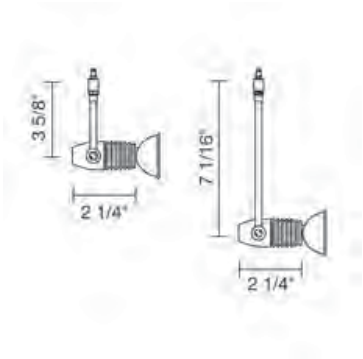

Part Numbers:

220670mc	matte chrome, 3 5/8"
220675mc	matte chrome, 7 1/16"

15774 Gateway Circle Tustin, CA 92780 ph: (714) 259-9959 fax: (714) 259-9969 www.brucklighting.com

BRUCK.

MALIBU SPOT

Description:
The Malibu Spot can be angled approximately 60°. As with all of Bruck's Uni-Plug fixtures, the twist and lock mechanism enables it to rotate continuously through 360°. A stainless steel clip in the fixture mount holds the MR16 in place and makes lamp replacement simple. Bruck's Uni-Plug design allows this fixture to be mounted on any of our track lighting systems or ceiling canopies through the use of an appropriate adaptor, not included.

Technical Specs:
50W Max.
Lamp not included
GU5.3 socket type

Part Numbers:

220420ch	chrome
220420mc	matte chrome

15774 Gateway Circle Tustin, CA 92780 ph: (714) 259-9959 fax: (714) 259-9969 www.brucklighting.com

BRUCK.

CLAREO SPOT

Description:
The Calreo Spot has swivel action, an a rotation of 360°. Uni-plug design allows fixture to be mounted on any lighting system or ceiling canopy through the use of an appropriate adaptor, not included.

Technical Specs:
50W Max.
Lamp not included
GU5.3 socket type

Part Numbers:

220671ch	chrome, 1 5/8"
220671mc	matte chrome, 1 5/8"
220672ch	chrome, 4 1/8"
220672mc	matte chrome, 4 1/8"

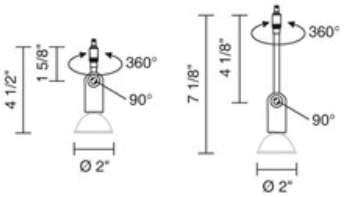

15774 Gateway Circle Tustin, CA 92780 ph: (714) 259-9959 fax: (714) 259-9969 www.brucklighting.com

bpi

brandston partnership inc.

Lighting design

122 West 26th Street 5th floor
New York New York 10001
T. 212.924.4050 F. 212.691.5418

Utah Museum of Natural History
Salt Lake City, UT

YL-C

BRUCK.

CLAREO SPOT

Description:
The Calreo Spot has swivel action, an a rotation of 360°. Uni-plug design allows fixture to be mounted on any lighting system or ceiling canopy through the use of an appropriate adaptor, not included.

Technical Specs:
50W Max.
Lamp not included
GU5.3 socket type

Part Numbers:

220671ch	chrome, 1 5/8"
220671mc	matte chrome, 1 5/8"
220672ch	chrome, 4 1/8"
220672mc	matte chrome, 4 1/8"

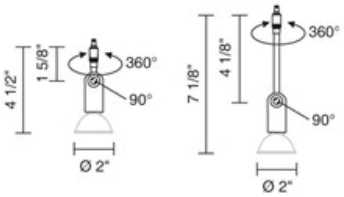

15774 Gateway Circle Tustin, CA 92780 ph: (714) 259-9959 fax: (714) 259-9969 www.brucklighting.com

bpi

brandston partnership inc.

Lighting design

122 West 26th Street 5th floor
New York New York 10001
T. 212.924.4050 F. 212.691.5418

Utah Museum of
Natural History
Salt Lake City, UT

YL-C

BRUCK.

V/A TRACK

Description:
The V/A Track is a low-voltage copper tube track. The V/A Track consists of 2 copper pipes with galvanized surface finish in chrome, gold or matte chrome. Center plastic insulations is dyed black or grey. Factory curved track available.

Part Numbers:

160031bz	bronze and black, 39"
160031ch	chrome and black, 39"
160031g	gold and black, 39"
160031mcgy	matte chrome, 39"
160032bz	bronze and black, 78"
160032ch	chrome and black, 78"
160032g	gold and black, 78"
160032mcgy	matte chrome, 78"
160033bz	bronze and black, 102"
160033ch	chrome and black, 102"
160033mcgy	matte chrome, 102"

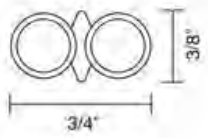

Bridge Track (3 or 4 feet segment Supplied by XC)

Color selected by Exhibit Designer

15774 Gateway Circle Tustin, CA 92780 ph: (714) 259-9959 fax: (714) 259-9969 www.brucklighting.com

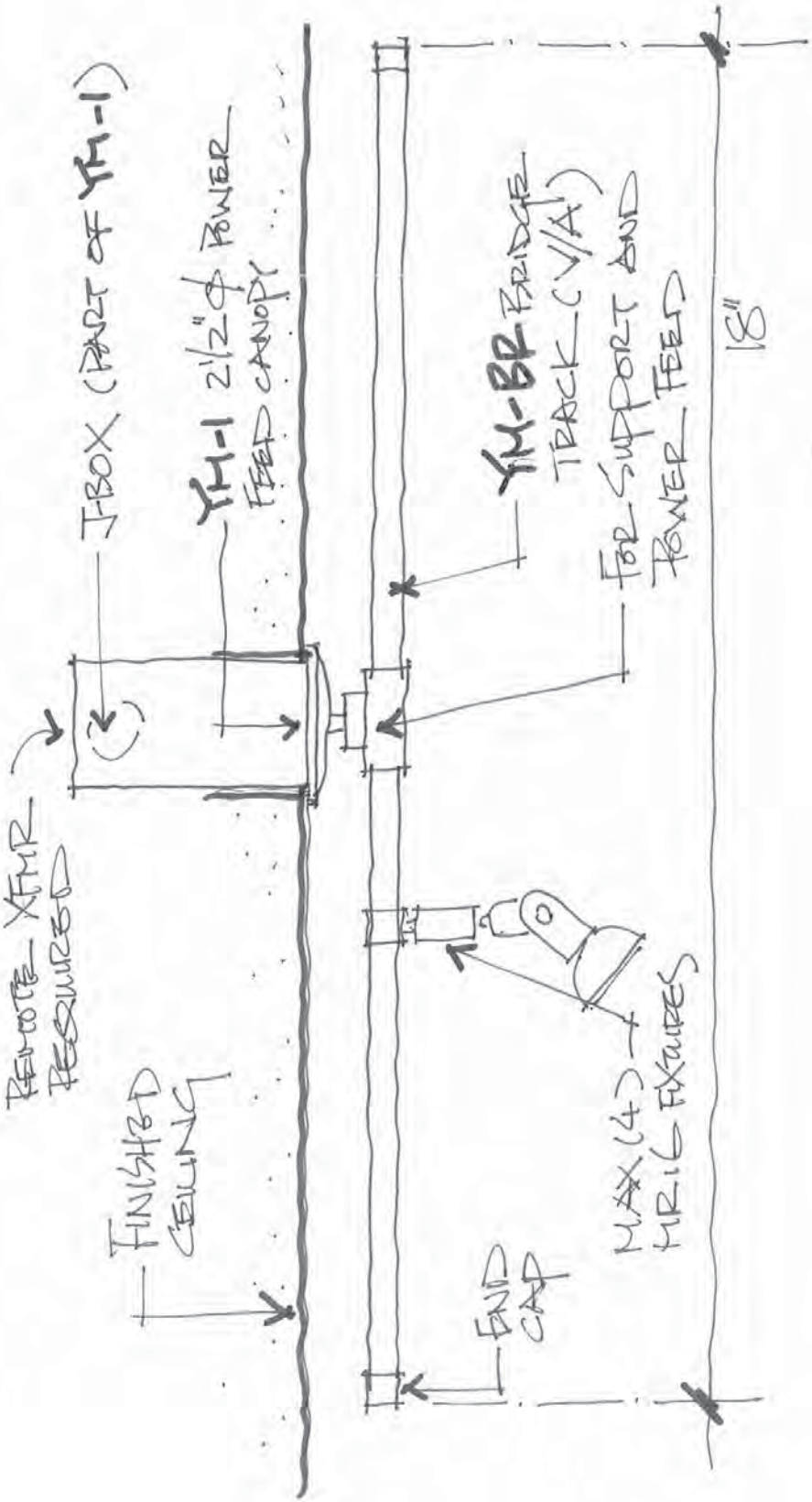

bpi

brandston partnership inc.

Lighting design

122 West 26th Street 5th floor
New York New York 10001
T. 212.924.4050 F. 212.691.5418

Utah Museum of Natural History
Salt Lake City, UT

YM-BR

MINI-CHANNEL®

Series **1510**

APPLICATIONS

MINI-CHANNEL® offers the specifier for the first time, the smallest electronic octic ballasted channel. This Low Profile design opens new vistas and allows greater flexibility for the designer heretofore only accomplished with channels with remote ballast. The compact design occupies minimum space providing high lumen output, energy and installation saving, and impressive color rendering availability. Quality components, welded construction, post powder coated finish, assuring a long trouble free life.

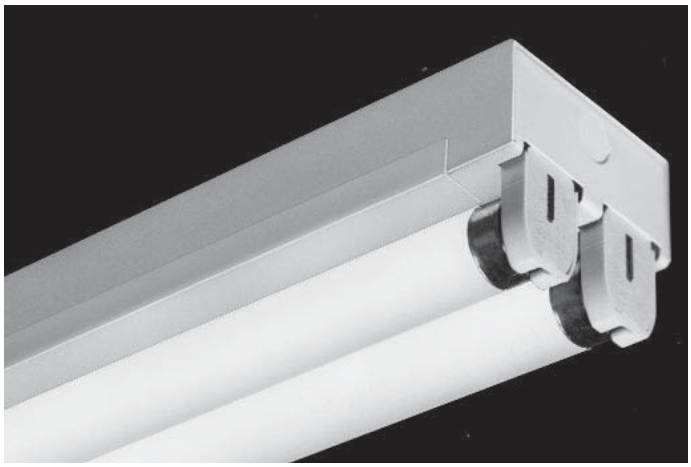

SPECIFICATIONS

CONSTRUCTION: Die formed of 20 gauge cold rolled prime steel, rigidly fabricated, and electrically welded to insure true and perfect alignment.

MOUNTING: Installed flush with ceiling surface or stem mounted, singly or in continuous rows. For continuous mounting, *5/8" dia. end knockouts may be removed and units joined together. Adequate knockouts and holes are provided for mounting and feeds. *Optional 3/8" greenfield conduit connection fitting available, see OPTIONS.

ELECTRICAL: 2 and/or *4 lamp octic T8, 265MA Electronic High Power Factor, class A sound rated, <10% THD (less than 10% Total Harmonic Distortion) U.L. listed Type 1 for 118 volt 60 Hz operation. Other voltages and frequencies available. CONSULT FACTORY. *(Subject to manufacturers availability).

FINISH: All steel component parts are completely protected against rust and discoloration after fabrication through an automated conveyorized multi-stage phosphate bonding process. Finished with an electrostatic baked white polyester thermosetting powder coating. This electronic computer controlled integrated system assures consistent high reflectance efficiency and maximum durability.

CERTIFICATION: The MINI-CHANNEL® Series 1510 is U.L. and C.U.L. listed and bears the label of the I.B.E.W./AFL-CIO, Local #3. Optionally U.L. and C.U.L. listed for damp locations "DL".

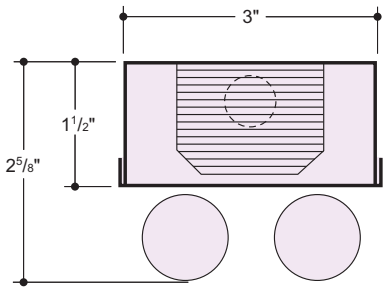

Due to the very nature of coves and enclosed areas, the heat ambiance temperature must be considered when designing and installing in confined spaces, so that the spaces are adequately ventilated to provide heat dissipation and air circulation to prevent ballast cycling, failure, or reduced ballast and lamp life.

MINI-CHANNEL®, XTRALUME® and LEGION® are registered trademarks of LEGION LIGHTING CO., INC.

01/01

LEGION® LIGHTING CO., INC.
221 Glenmore Ave., Brooklyn, NY 11207 • Tel: 718/498-1770 • Fax: 718/498-0128
Toll Free Fax: 800/4-LEGION

bpi
brandston partnership inc.
Lighting design
122 West 26th Street 5th floor
New York New York 10001
T. 212.924.4050 F. 212.691.5418

Utah Museum of Natural History
Salt Lake City, UT

C-CF-2

ORDERING DATA

Catalog No.	No. and Type Lamps	Nominal Dimensions	Wt.
1510-217-2 EBO	2-FO17-OCT	3" x 24"	5
1510-225-3 EBO	2-FO25-OCT	3" x 36"	11
1510-232-4 EBO	2-FO32-OCT	3" x 48"	13
1510-240-5 EBO	2-FO40-OCT	3" x 60"	21
1510-225-6T EBO	4-FO25-OCT	3" x 72"	22
1510-232-8T EBO	4-FO32-OCT	3" x 96"	26

OPTIONS

Suffix ''DIM'' after catalog no. for dimming ballast.
Suffix ''LT'' after catalog no. for cold weather ballast.
Suffix ''DL'' after catalog no. for damp location.
Suffix ''EM'' after catalog no. for emergency battery packs and see price list for types.
Suffix ''XTA'' after catalog no. for XTRALUME® reflector standard with 85% reflectance, for 95% reflectance specify your requirements.
Suffix ''SYM'' after catalog no. for post powder coated white SYMMETRIC reflector.
Suffix ''ASYM'' after catalog no. for post powder coated white ASYMMETRIC reflector.
Suffix ''ASYM1'' after catalog no. for post powder coated white ASYMMETRIC reflector.
Suffix ''WG'' after catalog no. for wire guard.
Suffix ''GCC'' after catalog no. for 3/8" greenfield/conduit connector.

REFLECTOR OPTIONS

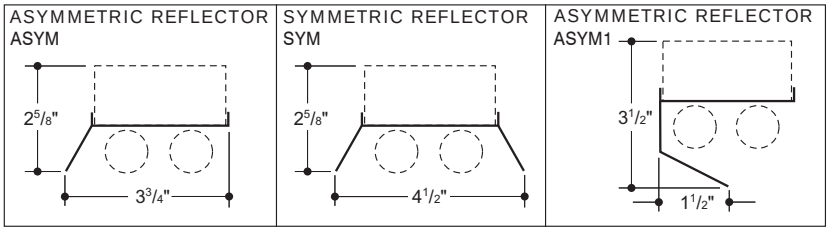

Reflector configurations shown can be modified to specification. Consult factory for minimum quantity order.

WIRE GUARD OPTION

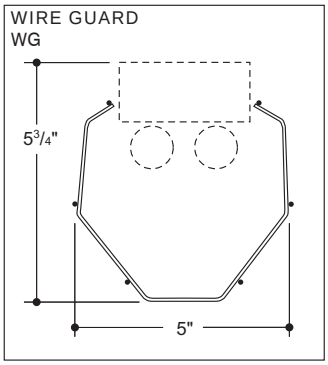

BACK PLANS

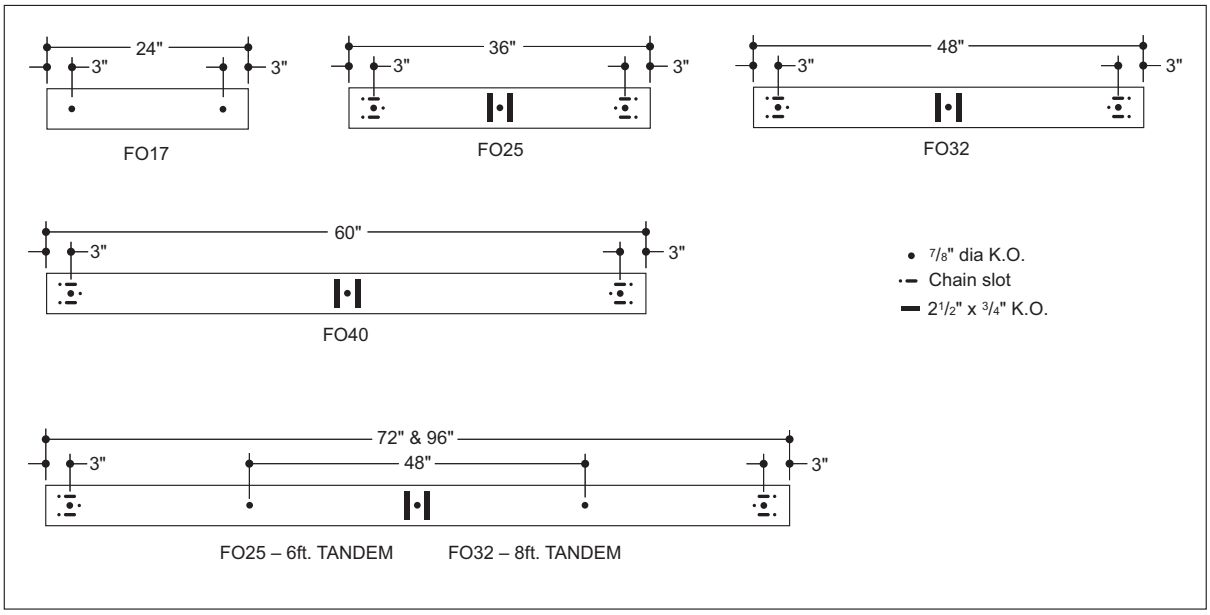

FOR PHOTOMETRIC DATA CONSULT FACTORY
Information supplied primarily for illustrative purposes, subject to change.
Consult factory for verification and minimum quantity orders.

LEGION® LIGHTING CO., INC.

bpi
brandston partnership inc.
Lighting design
122 West 26th Street 5th floor
New York New York 10001
T. 212.924.4050 F. 212.691.5418

Utah Museum of Natural History
Salt Lake City, UT

C-CF-2

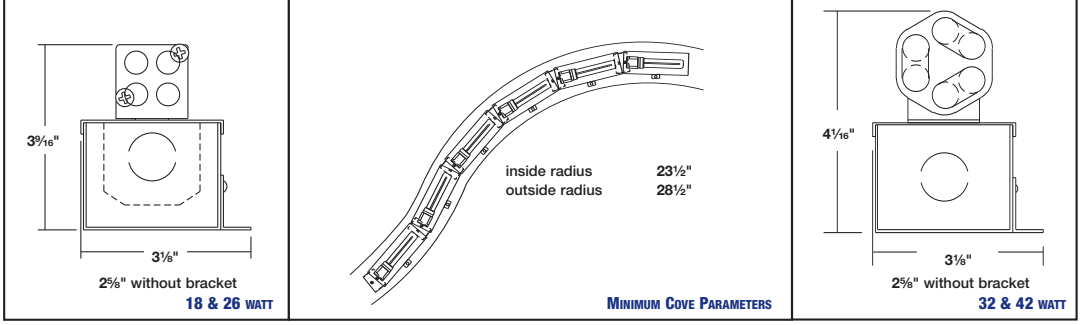

2880 NX2™ & FX2™

QUAD AND TRIPLE TUBE SEAMLESS STRAIGHT AND FIELD CURVABLE SYSTEM

- Lamp Compatible with Specification Grade Downlights
- Linkable Seamless Straight and Field Curvable Lengths
- Constructed of Formed Satin Anodized Aluminum
- 18 or 26 watt Quad and 32 or 42 watt Triple High Performance Compact Fluorescent Lamps *(refer to page 8-33)*
- Voltage Options:
  - 120 volt
  - 277 volt
- Ballasts Options *(refer to page III)*
  - Electronic
  - Dimming*

  ** Dimming applications require an alternate configuration. Please consult factory.*

  Emergency Ballasts are available. Please consult factory.
- 8" On Center Spacing
- Lengths Through Wired for Easy Installation
- Exterior Mounting Clips for Quick, Easy Anchoring
- Custom Reflectors can be manufactured to your specifications. *(refer to page 8-34)*
- UL and CUL Listed Damp Location

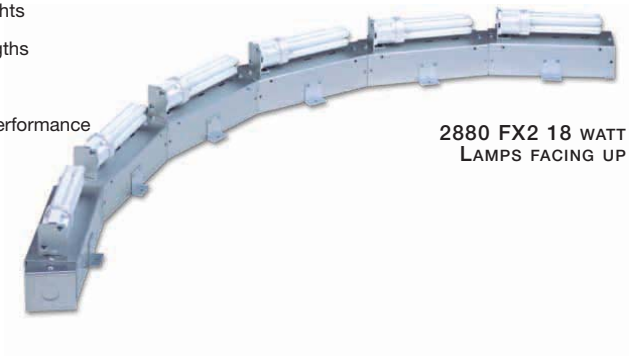

2880 FX2 18 WATT LAMPS FACING UP

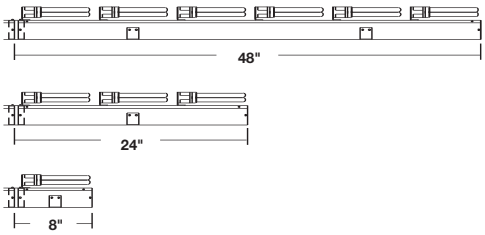

Ordering Format for 2880 NX2 & FX2

Choose one from each category

SERIES	LAMP CONFIGURATION	LAMP	VOLTAGE	BALLAST	LENGTH
2880 linear fixture	**NX2** seamless straight lamp up or down	**18 watt Quad** *(G24q-2)*	**1** 120 volt	**E** electronic	**48** 48" length *(6 lamps)*
	FX2 field curvable lamp up or down	**26 watt Quad** (G24q-3)	**2** 277 volt	**D** dimming* (18, 26 & 32 watt only)	**24** 24" length *(3 lamps)*
		32 watt Triple (G24q-3)			**8** 8" length *(1 lamp)*
		42 watt Triple (G24q-4)			

c UL us LISTED
DAMP LOCATION

NOTE:
* Dimming applications require an alternate configuration. Please consult factory.

These products protected by one or more of the following U.S. Patent Numbers 5,448,460, 5,221,139 & 5,452,187. Other patents pending. Modifications and custom configurations are available. Please contact our Sales Department.

bpi
brandston partnership inc.
Lighting design
122 West 26th Street 5th floor
New York New York 10001
T. 212.924.4050 F. 212.691.5418

Utah Museum of Natural History
Salt Lake City, UT

C-CF-3

MINI-STRIP®

Series **1500**

APPLICATIONS

MINI-STRIP® offers the specifier for the first time, the smallest electronic octic ballasted strip. This Low Profile design opens new vistas and allows greater flexibility for the designer heretofore only accomplished with strips with remote ballast. The compact design occupies minimum space providing high lumen output, energy and installation saving, and impressive color rendering availability. Quality components, welded construction, post powder coated finish, assuring a long trouble free life.

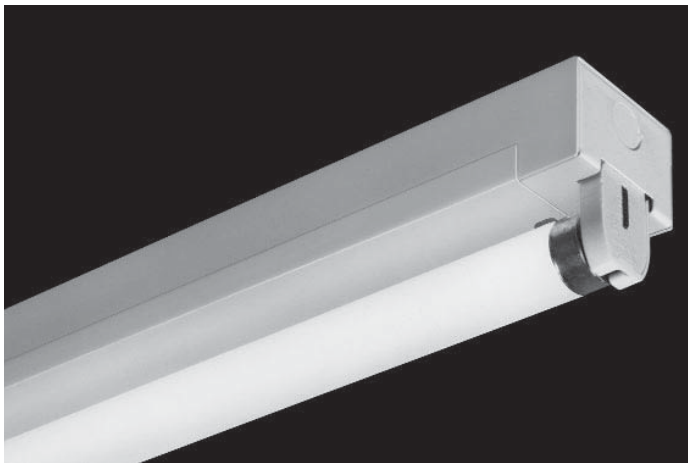

SPECIFICATIONS

CONSTRUCTION: Die formed of 20 gauge cold rolled prime steel, rigidly fabricated, and electrically welded to insure true and perfect alignment.

MOUNTING: Installed flush with ceiling surface or stem mounted, singly or in continuous rows. For continuous mounting, *5/8" dia. end knockouts may be removed and units joined together. Adequate knockouts and holes are provided for mounting and feeds. *Optional 3/8" greenfield conduit connection fitting available, see OPTIONS.

ELECTRICAL: 1 and 2 lamp octic T8, 265MA Electronic High Power Factor, class A sound rated, <10% THD (less than 10% Total Harmonic Distortion) U.L. listed Type 1 for 118 volt 60 Hz operation. Other voltages and frequencies available. CONSULT FACTORY.

FINISH: All steel component parts are completely protected against rust and discoloration after fabrication through an automated conveyorized multi-stage phosphate bonding process. Finished with an electrostatic baked white polyester thermosetting powder coating. This electronic computer controlled integrated system assures consistent high reflectance efficiency and maximum durability.

CERTIFICATION: The MINI-STRIP® Series 1500 is U.L. and C.U.L. listed and bears the label of the I.B.E.W./AFL-CIO, Local #3. Optionally U.L. and C.U.L. listed for damp locations "DL".

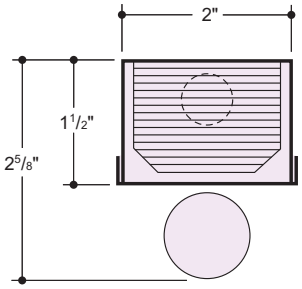

Due to the very nature of coves and enclosed areas, the heat ambiance temperature must be considered when designing and installing in confined spaces, so that the spaces are adequately ventilated to provide heat dissipation and air circulation to prevent ballast cycling, failure, or reduced ballast and lamp life.

MINI-STRIP®, XTRALUME® and LEGION® are registered trademarks of LEGION LIGHTING CO., INC.

01/01

LEGION® LIGHTING CO., INC.
221 Glenmore Ave., Brooklyn, NY 11207 • Tel: 718/498-1770 • Fax: 718/498-0128
Toll Free Fax: 800/4-LEGION

bpi
brandston partnership inc.
Lighting design
122 West 26th Street 5th floor
New York New York 10001
T. 212.924.4050 F. 212.691.5418

Utah Museum of Natural History
Salt Lake City, UT

C-CF-4

ORDERING DATA

Catalog No.	No. and Type Lamps	Nominal Dimensions	Wt.
1500-117-2 EBO	1-FO17-OCT	2" x 24"	4
1500-125-3 EBO	1-FO25-OCT	2" x 36"	7
1500-132-4 EBO	1-FO32-OCT	2" x 48"	8
1500-140-5 EBO	1-FO40-OCT	2" x 60"	11
1500-125-6T EBO	2-FO25-OCT	2" x 72"	14
1500-132-8T EBO	2-FO32-OCT	2" x 96"	16

OPTIONS

Suffix ''DIM'' after catalog no. for dimming ballast.
Suffix ''LT'' after catalog no. for cold weather ballast.
Suffix ''DL'' after catalog no. for damp location.
Suffix ''EM'' after catalog no. for emergency battery packs and see price list for types.
Suffix ''XTA'' after catalog no. for XTRALUME® reflector standard with 85% reflectance, for 95% reflectance specify your requirements.
Suffix ''SYM'' after catalog no. for post powder coated white SYMMETRIC reflector.
Suffix ''ASYM'' after catalog no. for post powder coated white ASYMMETRIC reflector.
Suffix ''ASYM1'' after catalog no. for post powder coated white ASYMMETRIC reflector.
Suffix ''WG'' after catalog no. for wire guard.
Suffix ''GCC'' after catalog no. for 3/8" greenfield/conduit connector.

REFLECTOR OPTIONS

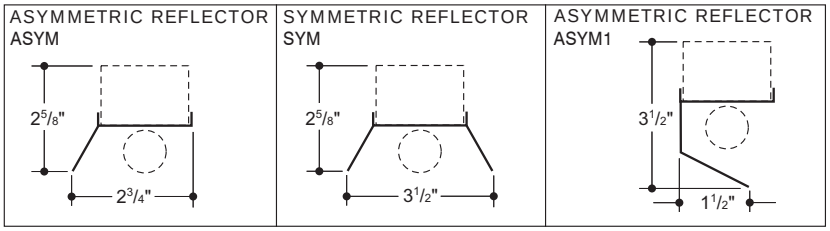

Reflector configurations shown can be modified to specification. Consult factory for minimum quantity order.

WIRE GUARD OPTION

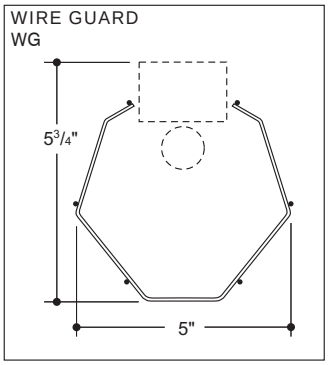

BACK PLANS

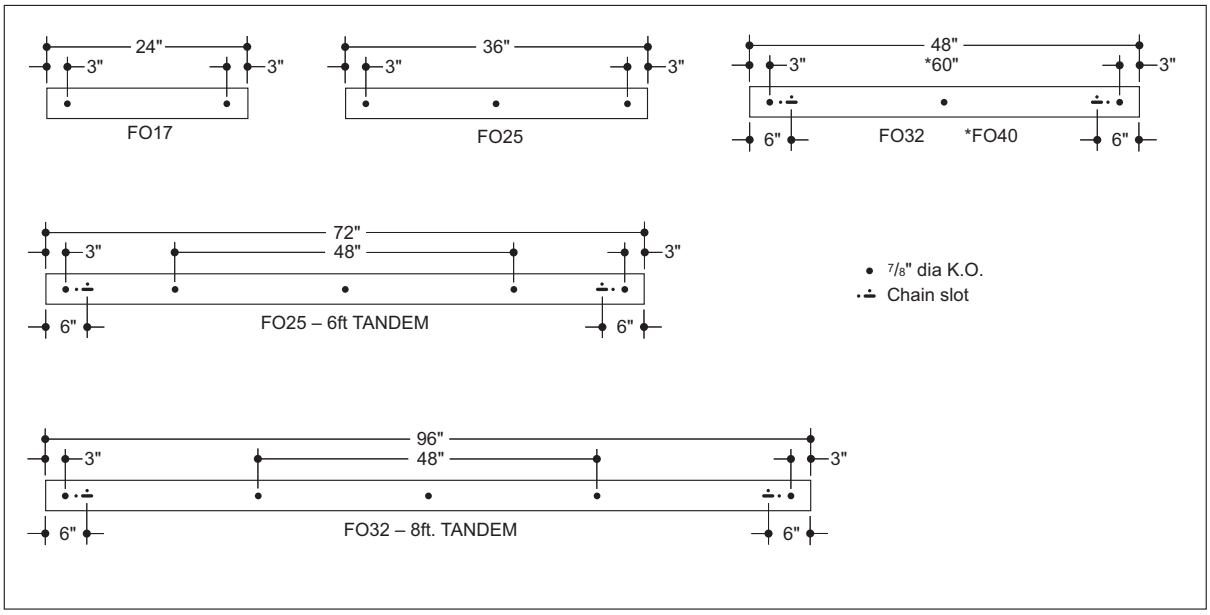

FOR PHOTOMETRIC DATA CONSULT FACTORY
Information supplied primarily for illustrative purposes, subject to change.
Consult factory for verification and minimum quantity orders.

LEGION® LIGHTING CO., INC.

bpi
brandston partnership inc.
Lighting design
122 West 26th Street 5th floor
New York New York 10001
T. 212.924.4050 F. 212.691.5418

Utah Museum of Natural History
Salt Lake City, UT

C-CF-4

line™ .75

SYMMETRIC

Application

io Lighting's **line series .75** is approximately .75" x .75" in cross section. UL Listed for damp locations, its low profile housing enables functional luminous intensities from "tight" architectural details such as niches, coves & casework. Similar to halogen light sources, LEDs are point sources that offer superior definition to three dimensional objects and sparkle to reflective surfaces.

series .75 is a low voltage linear accent luminaire that may be ordered in incremental nominal lengths that range from 6" to 96". Optional beam spreads along the perpendicular axis of the fixture include 10°, 45°, and 65°. For details on the asymmetric beam spread, see dedicated specification sheet. **io** ensures that each LED is driven with the proper current and voltage which enables the average rated life to be 50,000 hours at 70% of the lamp lumen output. To ensure proper performance, architectural details should allow for ventilation and air flow around the fixture. Ambient temperature surrounding the fixture shall not exceed 120˚F.

Light Output

line series .75 is available with two lumen outputs for white light only. Red, green and blue are available in high output only. IES format files may be obtained from the factory or downloaded from **www.iolighting.com.**

Standard Output	High Output
3000K White: 34 lms/ft	**3000K White: 170 lms/ft**
5000K White: 40 lms/ft	**5000K White: 230 lms/ft**

Construction

The light weight, yet durable, extruded aluminum housing provides recommended heat sink requirements for LEDs. Patented optical assembly is composed of a customized acrylic material that offers very high transmisivity, UV stability, and excellent longevity. **series .75** is UL Listed for damp locations only.

Electrical

4'-0" 22 AWG, 600 volt TFFN rated power cords are supplied with strain reliefs. 24 volt 100 watt power supply will be provided as a standard. See daisy chain and remote distance requirements in chart on the lower left hand corner of this specification sheet. Alternate power supply options are available. Consult **io** website or **io** representative for **io** driver specification sheets.

Power supply and dimming module must be specified separately. For detailed information, see the **LED Linear** brochure or download the Power Supply specification sheet from **www.iolighting.com**.

Power Consumption

Standard Output: 2.1 w/ft **High Output: 7.6 w/ft**

Power consumption does not include power supply losses. Consult **io** driver specification sheets for losses associated with each driver option.

Finish

Anodized aluminum finish is standard. Custom finishes may be available upon request.

Dimensions

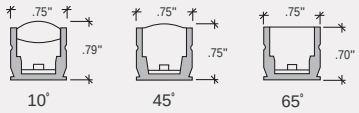

Beam Spreads

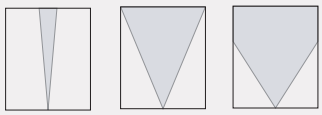

Power Supply

Standard Output

TYPE	SUPPLIES	REMOTE DISTANCE
24v100w	up to 35'-0"	7'-0" (w/22AWG)
	(2) RUNS UP TO	18'-0" (w/18AWG)
	49' WITH (1) RUN	46'-0" (w/14AWG)
	NTE 35'-0"	71'-0" (w/12AWG)

High Output

TYPE	SUPPLIES	REMOTE DISTANCE
24v100w	up to 12'-0"	7'-0" (w/22AWG)
		18'-0" (w/18AWG)
		46'-0" (w/14AWG)
		71'-0" (w/12AWG)

io Lighting
370 Corporate Woods Pkwy Vernon Hills, IL 60061-3107
T 847.735.7000 F 847.735.7001 E info@iolighting.com W iolighting.com

2007 - io Lighting reserves the right to change specifications for product improvement without notification.

brandston partnership inc.

Lighting design

122 West 26th Street 5th floor
New York New York 10001
T. 212.924.4050 F. 212.691.5418

Utah Museum of Natural History
Salt Lake City, UT

C-LE-1

io line™ .75
SYMMETRIC

Light Output / Distributions / Electrical Feed Options

STANDARD OUTPUT

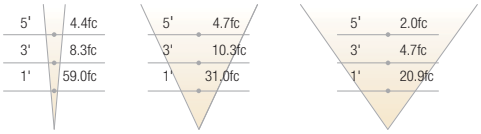

10°	45°	65°
3000K	3000K	3000K
8'-0"	8'-0"	8'-0"

HIGH OUTPUT

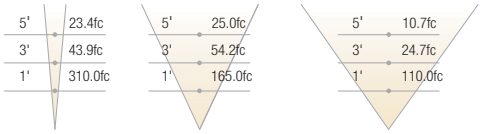

10°	45°	65°
3000K	3000K	3000K
8'-0"	8'-0"	8'-0"

ELECTRICAL END FEED OPTIONS

2 End feed | 3 Right side feed | 4 Left side feed | 5 Bottom feed

LIGHT OUTPUT CONVERSION TABLE

White Light Output	3000K S.O.	5000K S.O.	3000K H.O.	5000K H.O.
Light Output Multiplier	0.2(2)	0.24(2)	1.0(2)	1.35(2)

Color Light Output	RED	GREEN	BLUE
Light Output Multiplier	0.47(1)	0.71(1)	0.24(1)

IES format photometrics may be downloaded from **www.iolighting.com**

Mounting Options

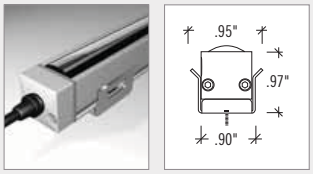

100 Surface (**io** part #: SA.BK.SURF)

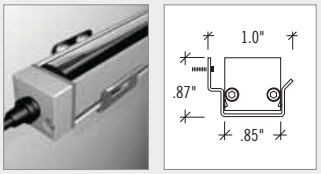

101 Side surface (**io** part #: SA.BK.WALL)

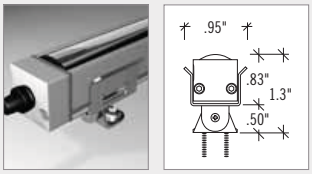

102 Field adjustable (**io** part #: SA.BK.ADJUST)

Order Code

io	1	2	3	4	5	6	7	8	9	10
0	03									

1. LINE SERIES
03 .75 S.O. or H.O.

2. LOCATION
I Interior
E Exterior (Note: Rated for damp locations face down only)

3. COLOR
3K White 3000K (Standard)(2)
3KHO White 3000K (High Output)(2)
5K White 5000K (Standard)(2)
5KHO White 5000K (High Output)(2)
R Red(1)
G Green(1)
B Blue(1)

4. DISTRIBUTION
10 10 degree
45 45 degree
65 65 degree

5. MOUNTING
100 Surface
101 Side surface
102 Field adjustable

6. FINISH
1 Anodized Aluminum
2 Anodized Custom Color

7. LENGTH

	UNITS	(ACTUAL)
01	6"	(6.26")(3)
02	12"	(11.95")(3)
03	18"	(17.7")(3)
04	24"	(23.26")(3)
05	30"	(28.95")(3)
06	36"	(34.7")(3)
07	42"	(40.26")(3)
08	48"	(45.95")(3)
09	54"	(51.7")(3)
10	60"	(57.26")(3)
11	66"	(62.95")(3)
12	72"	(68.7")(3)
13	78"	(79.95")(3)
14	84"	(85.7")(3)
15	90"	(91.26")(3)
16	96"	(96.95")(3)

8. ELECTRICAL FEED
2 End feed
3 Right side feed
4 Left side feed
5 Bottom feed
FOR CONTINUOUS ROW
2-2 Right end feed
Left end feed
3-4 Right side feed
Left side feed
5-5 Right bottom feed
Left bottom feed

9. VOLTAGE / DIMMING
1 120v
2 277v
3 120v w/dim
4 277v w/dim
5 Other

10. SPECIFY DRIVER / DIMMING
Note: Reference **io** power supply specification sheet for driver and dimming options. If left blank, **io** will supply 100 watt drivers. Download Power Supply specification sheet from **www.iolighting.com**

Footnotes

Footnotes
1. Refer to conversion table for output.
2. White light variance between LED's within a single fixture will not exceed +/- 200k.
3. "Actual" length provided includes end feed and non-feed endcaps. Add .27 to each length when electrical feeds occur on both endcaps (for continuous row mounting).

2007 - io Lighting reserves the right to change specifications for product improvement without notification.

bpi
brandston partnership inc.
Lighting design
122 West 26th Street 5th floor
New York New York 10001
T. 212.924.4050 F. 212.691.5418

Utah Museum of Natural History
Salt Lake City, UT

C-LE-1

ADVANCE

XITANIUM
LED Drivers

Universal Outdoor Drivers for 12V and 24V LED systems

Applications

Orientation/Step Lighting

Architectural Lighting

Channel Letters

Contour Lighting

Edge Lighting

LEDs have evolved into a practical, flexible light source for a wide variety of illumination applications. Common LED products available in the market today are configured in a series-parallel array – designed to be powered by a suitable 24vdc driver – which allows flexibility to connect variable load levels. These operating voltages have become the standard in the industry.

The Brain Behind the Bright Idea

Xitanium LED drivers from Advance are designed specifically for 24V LED systems and incorporate features that enable broad commercialization of end-use solid-state lighting products.

Features	Benefits
UL Class 2	Limited output voltage and current plus isolation for safe operation
UL Outdoor Damp location rated - IP 66	Fully potted for moisture resistance and thermal benefits
Ultra small, compact size	Facilitates new, low-profile fixture design
Extreme low temperature Performance (-40°C)	Allows use in any outdoor application
Generous high temperature capability (+60°C)	Margin flexibility to facilitate fixture design
Tightly regulated output (1% line, 5% load)	Consistent light output across line and load levels
5 year warranty	Peace of mind for your new products and for end users…from the industry's most trusted component maker
Powered by Advance	Advance is preferred by end users – Enhance the value of your product

bpi

brandston partnership inc.

Lighting design

122 West 26th Street 5th floor
New York New York 10001
T. 212.924.4050 F. 212.691.5418

Utah Museum of Natural History
Salt Lake City, UT

C-LE-1

Quick Selection Table

Catalog Number	Description	Application
LEDINTA0024V41FO	Intellivolt 100 Watt 24Vdc Outdoor	• 24Vdc LED Systems

LED Driver Specifications

Description	Catalog Number	Input			Output			Case Temp Max (°C)	Figure	Weight (Grams)
		Volts (V)	Power Max (W)	Current Max (A)	Power Max (W)	Voltage Nom (V)	Current Max (A)			
100 Watt	LEDINTA0024V41FO	120	117.0	0.98	100.0	24.0	4.1	90	A	640
		230		0.51						
		277		.042						

Total Harmonic Distortion: 20% max
Power Factor: 90% min
Line Regulation: 1% output variation across input voltage range
Load Regulation: 5% output variation across input voltage range
Current Crest Factor: 1.5 max
Environmental Protection: IP66 outdoor rated
EMI: FCC47 SubPart15, CISPR15 and CISPR22 Class A
Protection: Meet UL1310 for Class 2; Inherent short-circuit protection, self-limited; overload protected; 3.2KV output insulation
AC Input and DC Output: 2 (0.78mm²) Solid Copper Wires, 15cm long

Dimensions

Fig. A

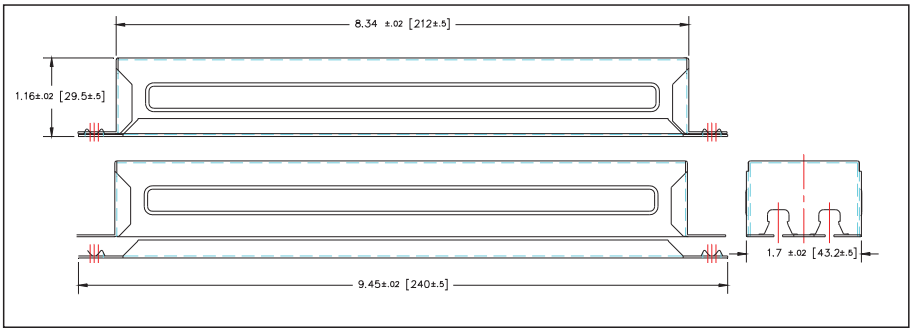

Advance, A Division of Philips Electronics North America · 10275 W Higgins Road · Rosemont, IL 60018 · USA
Tel: + 1 847 390-5205 · Fax: + 1 847 390-5264 · Revised 09/05PJJ

line

100W driver enclosure

100 Watt driver
Catalog number: 250ENC2.011x4x4

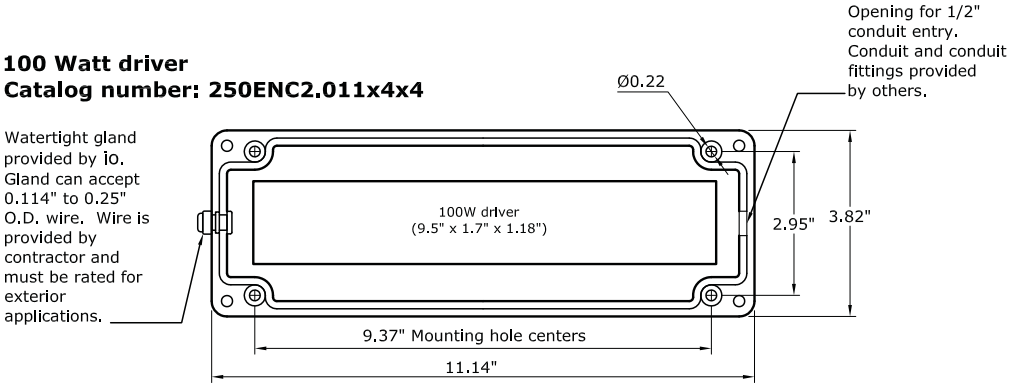

Front view without cover

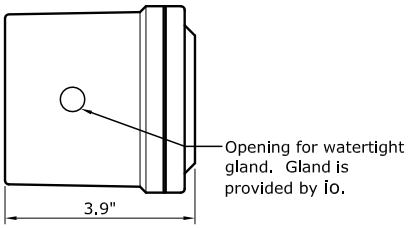

Left end view with cover

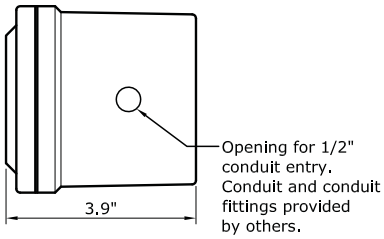

Right end view with cover

Enclosure Construction

Enclosure material is a molded fiberglass reinforced polyester (thermoset). The gasket is poured polyurethane seamless gasket that provides watertight, dust-tight environmental seal. The cover screws are recessed, captive and stainless steel.

Enclosure Industry Standards

UL/cUL 50	File E64358 type 1, 3, 4X, 6P, 12
NEMA 250	Type 1, 3, 4X, 6P, 12
CSA Std 22.2	File LR069014 type 1, 3, 4X, 6P, 12
Temp rating	(-40°C to +120°C)
Flammability rating	UL94-5V

io Lighting LLC, 370 Corporate Woods Pkwy, Vernon Hills, Illinois 60061-3107
T: 847 735 7000 F: 847 735 7001 info@iolighting.com www.iolighting.com

line™ .75

SYMMETRIC

Application

io Lighting's **line series .75** is approximately .75" x .75" in cross section. UL Listed for damp locations, its low profile housing enables functional luminous intensities from "tight" architectural details such as niches, coves & casework. Similar to halogen light sources, LEDs are point sources that offer superior definition to three dimensional objects and sparkle to reflective surfaces.

series .75 is a low voltage linear accent luminaire that may be ordered in incremental nominal lengths that range from 6" to 96". Optional beam spreads along the perpendicular axis of the fixture include 10°, 45°, and 65°. For details on the asymmetric beam spread, see dedicated specification sheet. **io** ensures that each LED is driven with the proper current and voltage which enables the average rated life to be 50,000 hours at 70% of the lamp lumen output. To ensure proper performance, architectural details should allow for ventilation and air flow around the fixture. Ambient temperature surrounding the fixture shall not exceed 120˚F.

Light Output

line series .75 is available with two lumen outputs for white light only. Red, green and blue are available in high output only. IES format files may be obtained from the factory or downloaded from **www.iolighting.com.**

Standard Output	High Output
3000K White: 34 lms/ft	**3000K White: 170 lms/ft**
5000K White: 40 lms/ft	**5000K White: 230 lms/ft**

Construction

The light weight, yet durable, extruded aluminum housing provides recommended heat sink requirements for LEDs. Patented optical assembly is composed of a customized acrylic material that offers very high transmisivity, UV stability, and excellent longevity. **series .75** is UL Listed for damp locations only.

Electrical

4'-0" 22 AWG, 600 volt TFFN rated power cords are supplied with strain reliefs. 24 volt 100 watt power supply will be provided as a standard. See daisy chain and remote distance requirements in chart on the lower left hand corner of this specification sheet. Alternate power supply options are available. Consult **io** website or **io** representative for **io** driver specification sheets.

Power supply and dimming module must be specified separately. For detailed information, see the **LED Linear** brochure or download the Power Supply specification sheet from **www.iolighting.com**.

Power Consumption

Standard Output: 2.1 w/ft **High Output: 7.6 w/ft**

Power consumption does not include power supply losses. Consult **io** driver specification sheets for losses associated with each driver option.

Finish

Anodized aluminum finish is standard. Custom finishes may be available upon request.

Dimensions

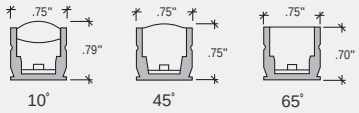

Beam Spreads

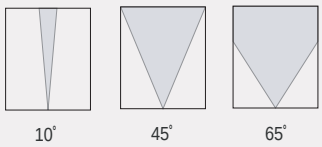

Power Supply

Standard Output

TYPE	SUPPLIES	REMOTE DISTANCE
24v100w	up to 35'-0"	7'-0" (w/22AWG)
	(2) RUNS UP TO	18'-0" (w/18AWG)
	49' WITH (1) RUN	46'-0" (w/14AWG)
	NTE 35'-0"	71'-0" (w/12AWG)

High Output

TYPE	SUPPLIES	REMOTE DISTANCE
24v100w	up to 12'-0"	7'-0" (w/22AWG)
		18'-0" (w/18AWG)
		46'-0" (w/14AWG)
		71'-0" (w/12AWG)

io Lighting
370 Corporate Woods Pkwy Vernon Hills, IL 60061-3107
T 847.735.7000 F 847.735.7001 E info@iolighting.com W iolighting.com

2007 - io Lighting reserves the right to change specifications for product improvement without notification.

brandston partnership inc.

Lighting design

122 West 26th Street 5th floor
New York New York 10001
T. 212.924.4050 F. 212.691.5418

Utah Museum of Natural History
Salt Lake City, UT

C-LE-2

io line™ .75
SYMMETRIC

Light Output / Distributions / Electrical Feed Options

STANDARD OUTPUT

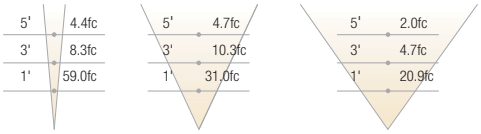

10°	45°	65°
3000K	3000K	3000K
8'-0"	8'-0"	8'-0"

HIGH OUTPUT

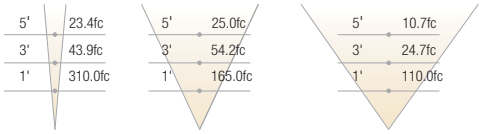

10°	45°	65°
3000K	3000K	3000K
8'-0"	8'-0"	8'-0"

ELECTRICAL END FEED OPTIONS

2 End feed | 3 Right side feed | 4 Left side feed | 5 Bottom feed

LIGHT OUTPUT CONVERSION TABLE

White Light Output	3000K S.O.	5000K S.O.	3000K H.O.	5000K H.O.
Light Output Multiplier	0.2(2)	0.24(2)	1.0(2)	1.35(2)

Color Light Output	RED	GREEN	BLUE
Light Output Multiplier	0.47(1)	0.71(1)	0.24(1)

IES format photometrics may be downloaded from **www.iolighting.com**

Mounting Options

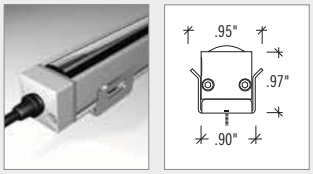

100 Surface (**io** part #: SA.BK.SURF)

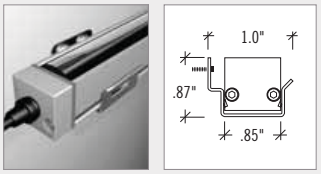

101 Side surface (**io** part #: SA.BK.WALL)

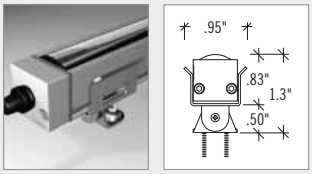

102 Field adjustable (**io** part #: SA.BK.ADJUST)

Order Code

io	1	2	3	4	5	6	7	8	9	10
0	03									

1. LINE SERIES
03 .75 S.O. or H.O.

2. LOCATION
I Interior
E Exterior (Note: Rated for damp locations face down only)

3. COLOR
3K White 3000K (Standard)(2)
3KHO White 3000K (High Output)(2)
5K White 5000K (Standard)(2)
5KHO White 5000K (High Output)(2)
R Red(1)
G Green(1)
B Blue(1)

4. DISTRIBUTION
10 10 degree
45 45 degree
65 65 degree

5. MOUNTING
100 Surface
101 Side surface
102 Field adjustable

6. FINISH
1 Anodized Aluminum
2 Anodized Custom Color

7. LENGTH

	UNITS	(ACTUAL)
01	6"	(6.26")(3)
02	12"	(11.95")(3)
03	18"	(17.7")(3)
04	24"	(23.26")(3)
05	30"	(28.95")(3)
06	36"	(34.7")(3)
07	42"	(40.26")(3)
08	48"	(45.95")(3)
09	54"	(51.7")(3)
10	60"	(57.26")(3)
11	66"	(62.95")(3)
12	72"	(68.7")(3)
13	78"	(79.95")(3)
14	84"	(85.7")(3)
15	90"	(91.26")(3)
16	96"	(96.95")(3)

8. ELECTRICAL FEED
2 End feed
3 Right side feed
4 Left side feed
5 Bottom feed
FOR CONTINUOUS ROW
2-2 Right end feed
Left end feed
3-4 Right side feed
Left side feed
5-5 Right bottom feed
Left bottom feed

9. VOLTAGE / DIMMING
1 120v
2 277v
3 120v w/dim
4 277v w/dim
5 Other

10. SPECIFY DRIVER / DIMMING
Note: Reference **io** power supply specification sheet for driver and dimming options. If left blank, **io** will supply 100 watt drivers. Download Power Supply specification sheet from **www.iolighting.com**

Footnotes

Footnotes
1. Refer to conversion table for output.
2. White light variance between LED's within a single fixture will not exceed +/- 200k.
3. "Actual" length provided includes end feed and non-feed endcaps. Add .27 to each length when electrical feeds occur on both endcaps (for continuous row mounting).

2007 - io Lighting reserves the right to change specifications for product improvement without notification.

bpi
brandston partnership inc.
Lighting design
122 West 26th Street 5th floor
New York New York 10001
T. 212.924.4050 F. 212.691.5418

Utah Museum of Natural History
Salt Lake City, UT

C-LE-2

ADVANCE

XITANIUM
LED Drivers

Universal Outdoor Drivers for 12V and 24V LED systems

Applications

Orientation/Step Lighting

Architectural Lighting

Channel Letters

Contour Lighting

Edge Lighting

LEDs have evolved into a practical, flexible light source for a wide variety of illumination applications. Common LED products available in the market today are configured in a series-parallel array – designed to be powered by a suitable 24vdc driver – which allows flexibility to connect variable load levels. These operating voltages have become the standard in the industry.

The Brain Behind the Bright Idea

Xitanium LED drivers from Advance are designed specifically for 24V LED systems and incorporate features that enable broad commercialization of end-use solid-state lighting products.

Features	Benefits
UL Class 2	Limited output voltage and current plus isolation for safe operation
UL Outdoor Damp location rated - IP 66	Fully potted for moisture resistance and thermal benefits
Ultra small, compact size	Facilitates new, low-profile fixture design
Extreme low temperature Performance (-40°C)	Allows use in any outdoor application
Generous high temperature capability (+60°C)	Margin flexibility to facilitate fixture design
Tightly regulated output (1% line, 5% load)	Consistent light output across line and load levels
5 year warranty	Peace of mind for your new products and for end users…from the industry's most trusted component maker
Powered by Advance	Advance is preferred by end users – Enhance the value of your product

bpi

brandston partnership inc.

Lighting design

122 West 26th Street 5th floor
New York New York 10001
T. 212.924.4050 F. 212.691.5418

Utah Museum of Natural History
Salt Lake City, UT

C-LE-2

Quick Selection Table

Catalog Number	Description	Application
LEDINTA0024V41FO	Intellivolt 100 Watt 24Vdc Outdoor	• 24Vdc LED Systems

LED Driver Specifications

Description	Catalog Number	Input			Output			Case Temp Max (°C)	Figure	Weight (Grams)
		Volts (V)	Power Max (W)	Current Max (A)	Power Max (W)	Voltage Nom (V)	Current Max (A)			
100 Watt	LEDINTA0024V41FO	120	117.0	0.98	100.0	24.0	4.1	90	A	640
		230		0.51						
		277		.042						

Total Harmonic Distortion: 20% max
Power Factor: 90% min
Line Regulation: 1% output variation across input voltage range
Load Regulation: 5% output variation across input voltage range
Current Crest Factor: 1.5 max
Environmental Protection: IP66 outdoor rated
EMI: FCC47 SubPart15, CISPR15 and CISPR22 Class A
Protection: Meet UL1310 for Class 2; Inherent short-circuit protection, self-limited; overload protected; 3.2KV output insulation
AC Input and DC Output: 2 (0.78mm²) Solid Copper Wires, 15cm long

Dimensions

Fig. A

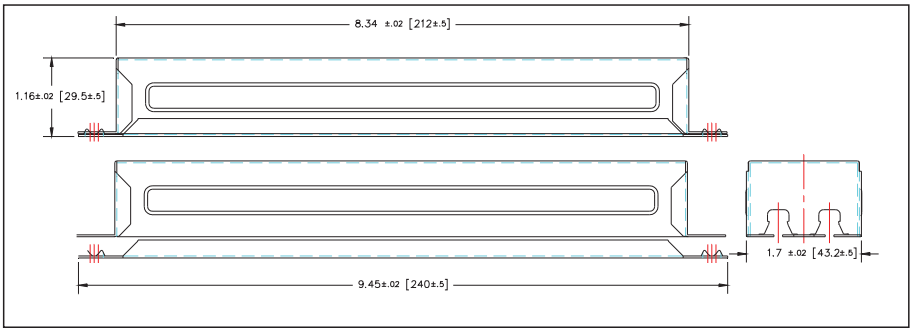

Advance, A Division of Philips Electronics North America · 10275 W Higgins Road · Rosemont, IL 60018 · USA
Tel: + 1 847 390-5205 · Fax: + 1 847 390-5264 · Revised 09/05PJJ

line

100W driver enclosure

100 Watt driver
Catalog number: 250ENC2.011x4x4

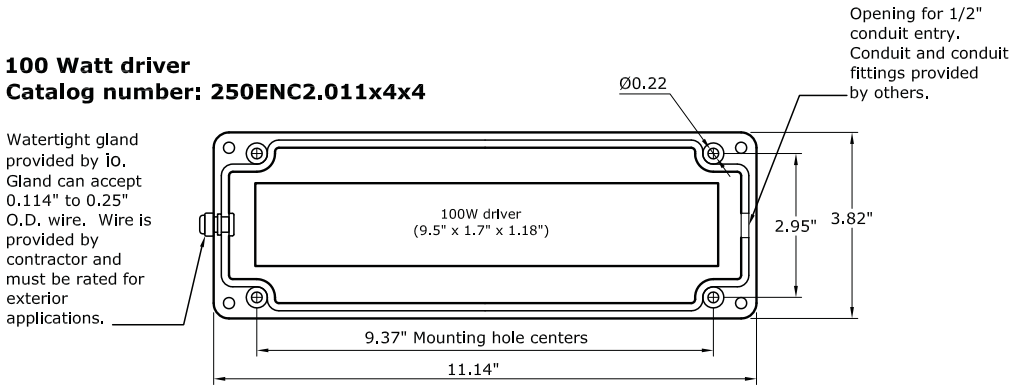

Front view without cover

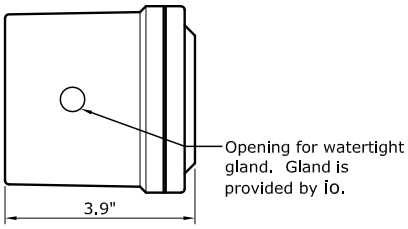

Left end view with cover

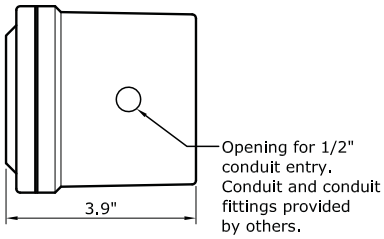

Right end view with cover

Enclosure Construction

Enclosure material is a molded fiberglass reinforced polyester (thermoset). The gasket is poured polyurethane seamless gasket that provides watertight, dust-tight environmental seal. The cover screws are recessed, captive and stainless steel.

Enclosure Industry Standards

UL/cUL 50	File E64358 type 1, 3, 4X, 6P, 12
NEMA 250	Type 1, 3, 4X, 6P, 12
CSA Std 22.2	File LR069014 type 1, 3, 4X, 6P, 12
Temp rating	(-40°C to +120°C)
Flammability rating	UL94-5V

io Lighting LLC, 370 Corporate Woods Pkwy, Vernon Hills, Illinois 60061-3107
T: 847 735 7000 F: 847 735 7001 info@iolighting.com www.iolighting.com

line™ .75

SYMMETRIC

Application

io Lighting's **line series .75** is approximately .75" x .75" in cross section. UL Listed for damp locations, its low profile housing enables functional luminous intensities from "tight" architectural details such as niches, coves & casework. Similar to halogen light sources, LEDs are point sources that offer superior definition to three dimensional objects and sparkle to reflective surfaces.

series .75 is a low voltage linear accent luminaire that may be ordered in incremental nominal lengths that range from 6" to 96". Optional beam spreads along the perpendicular axis of the fixture include 10°, 45°, and 65°. For details on the asymmetric beam spread, see dedicated specification sheet. **io** ensures that each LED is driven with the proper current and voltage which enables the average rated life to be 50,000 hours at 70% of the lamp lumen output. To ensure proper performance, architectural details should allow for ventilation and air flow around the fixture. Ambient temperature surrounding the fixture shall not exceed 120˚F.

Light Output

line series .75 is available with two lumen outputs for white light only. Red, green and blue are available in high output only. IES format files may be obtained from the factory or downloaded from **www.iolighting.com.**

Standard Output	High Output
3000K White: 34 lms/ft	**3000K White: 170 lms/ft**
5000K White: 40 lms/ft	**5000K White: 230 lms/ft**

Construction

The light weight, yet durable, extruded aluminum housing provides recommended heat sink requirements for LEDs. Patented optical assembly is composed of a customized acrylic material that offers very high transmisivity, UV stability, and excellent longevity. **series .75** is UL Listed for damp locations only.

Electrical

4'-0" 22 AWG, 600 volt TFFN rated power cords are supplied with strain reliefs. 24 volt 100 watt power supply will be provided as a standard. See daisy chain and remote distance requirements in chart on the lower left hand corner of this specification sheet. Alternate power supply options are available. Consult **io** website or **io** representative for **io** driver specification sheets.

Power supply and dimming module must be specified separately. For detailed information, see the **LED Linear** brochure or download the Power Supply specification sheet from **www.iolighting.com**.

Power Consumption

Standard Output: 2.1 w/ft **High Output: 7.6 w/ft**

Power consumption does not include power supply losses. Consult **io** driver specification sheets for losses associated with each driver option.

Finish

Anodized aluminum finish is standard. Custom finishes may be available upon request.

Dimensions

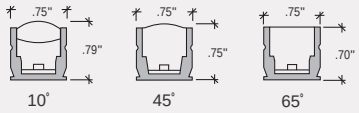

Beam Spreads

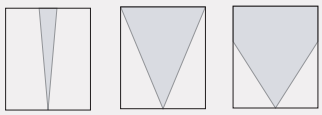

Power Supply

Standard Output

TYPE	SUPPLIES	REMOTE DISTANCE
24v100w	up to 35'-0"	7'-0" (w/22AWG)
	(2) RUNS UP TO	18'-0" (w/18AWG)
	49' WITH (1) RUN	46'-0" (w/14AWG)
	NTE 35'-0"	71'-0" (w/12AWG)

High Output

TYPE	SUPPLIES	REMOTE DISTANCE
24v100w	up to 12'-0"	7'-0" (w/22AWG)
		18'-0" (w/18AWG)
		46'-0" (w/14AWG)
		71'-0" (w/12AWG)

io Lighting
370 Corporate Woods Pkwy Vernon Hills, IL 60061-3107
T 847.735.7000 F 847.735.7001 E info@iolighting.com W iolighting.com

2007 - io Lighting reserves the right to change specifications for product improvement without notification.

brandston partnership inc.

Lighting design

122 West 26th Street 5th floor
New York New York 10001
T. 212.924.4050 F. 212.691.5418

Utah Museum of Natural History
Salt Lake City, UT

C-LE-3

io line™ .75
SYMMETRIC

Light Output / Distributions / Electrical Feed Options

STANDARD OUTPUT

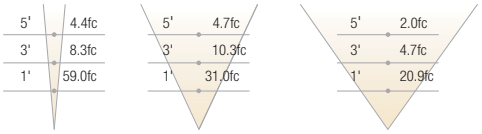

10°	45°	65°
3000K	3000K	3000K
8'-0"	8'-0"	8'-0"

HIGH OUTPUT

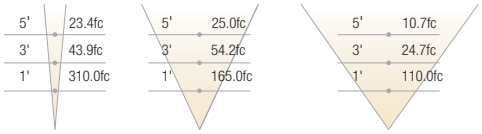

10°	45°	65°
3000K	3000K	3000K
8'-0"	8'-0"	8'-0"

ELECTRICAL END FEED OPTIONS

2 End feed | 3 Right side feed | 4 Left side feed | 5 Bottom feed

LIGHT OUTPUT CONVERSION TABLE

White Light Output	3000K S.O.	5000K S.O.	3000K H.O.	5000K H.O.
Light Output Multiplier	0.2(2)	0.24(2)	1.0(2)	1.35(2)

Color Light Output	RED	GREEN	BLUE
Light Output Multiplier	0.47(1)	0.71(1)	0.24(1)

IES format photometrics may be downloaded from **www.iolighting.com**

Mounting Options

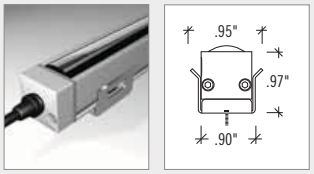

100 Surface (**io** part #: SA.BK.SURF)

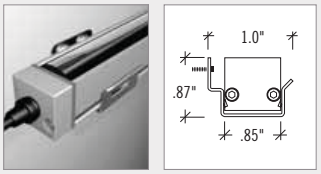

101 Side surface (**io** part #: SA.BK.WALL)

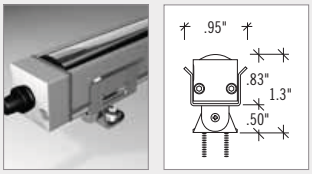

102 Field adjustable (**io** part #: SA.BK.ADJUST)

Order Code

0	.	03	.		.		.		.		.		.		.		.		.	
io		1		2		3		4		5		6		7		8		9		10

1. LINE SERIES
03 .75 S.O. or H.O.

2. LOCATION
I Interior
E Exterior (Note: Rated for damp locations face down only)

3. COLOR
3K White 3000K (Standard)(2)
3KHO White 3000K (High Output)(2)
5K White 5000K (Standard)(2)
5KHO White 5000K (High Output)(2)
R Red(1)
G Green(1)
B Blue(1)

4. DISTRIBUTION
10 10 degree
45 45 degree
65 65 degree

5. MOUNTING
100 Surface
101 Side surface
102 Field adjustable

6. FINISH
1 Anodized Aluminum
2 Anodized Custom Color

7. LENGTH

	UNITS	(ACTUAL)
01	6"	(6.26")(3)
02	12"	(11.95")(3)
03	18"	(17.7")(3)
04	24"	(23.26")(3)
05	30"	(28.95")(3)
06	36"	(34.7")(3)
07	42"	(40.26")(3)
08	48"	(45.95")(3)
09	54"	(51.7")(3)
10	60"	(57.26")(3)
11	66"	(62.95")(3)
12	72"	(68.7")(3)
13	78"	(79.95")(3)
14	84"	(85.7")(3)
15	90"	(91.26")(3)
16	96"	(96.95")(3)

8. ELECTRICAL FEED
2 End feed
3 Right side feed
4 Left side feed
5 Bottom feed
FOR CONTINUOUS ROW
2-2 Right end feed
Left end feed
3-4 Right side feed
Left side feed
5-5 Right bottom feed
Left bottom feed

9. VOLTAGE / DIMMING
1 120v
2 277v
3 120v w/dim
4 277v w/dim
5 Other

10. SPECIFY DRIVER / DIMMING
Note: Reference **io** power supply specification sheet for driver and dimming options. If left blank, **io** will supply 100 watt drivers. Download Power Supply specification sheet from **www.iolighting.com**

Footnotes

Footnotes
1. Refer to conversion table for output.
2. White light variance between LED's within a single fixture will not exceed +/- 200k.
3. "Actual" length provided includes end feed and non-feed endcaps. Add .27 to each length when electrical feeds occur on both endcaps (for continuous row mounting).

2007 - io Lighting reserves the right to change specifications for product improvement without notification.

bpi
brandston partnership inc.
Lighting design
122 West 26th Street 5th floor
New York New York 10001
T. 212.924.4050 F. 212.691.5418

Utah Museum of Natural History
Salt Lake City, UT

C-LE-3

ADVANCE

XITANIUM
LED Drivers

Universal Outdoor Drivers for 12V and 24V LED systems

Applications

Orientation/Step Lighting

Architectural Lighting

Channel Letters

Contour Lighting

Edge Lighting

LEDs have evolved into a practical, flexible light source for a wide variety of illumination applications. Common LED products available in the market today are configured in a series-parallel array – designed to be powered by a suitable 24vdc driver – which allows flexibility to connect variable load levels. These operating voltages have become the standard in the industry.

The Brain Behind the Bright Idea

Xitanium LED drivers from Advance are designed specifically for 24V LED systems and incorporate features that enable broad commercialization of end-use solid-state lighting products.

Features	Benefits
UL Class 2	Limited output voltage and current plus isolation for safe operation
UL Outdoor Damp location rated - IP 66	Fully potted for moisture resistance and thermal benefits
Ultra small, compact size	Facilitates new, low-profile fixture design
Extreme low temperature Performance (-40°C)	Allows use in any outdoor application
Generous high temperature capability (+60°C)	Margin flexibility to facilitate fixture design
Tightly regulated output (1% line, 5% load)	Consistent light output across line and load levels
5 year warranty	Peace of mind for your new products and for end users…from the industry's most trusted component maker
Powered by Advance	Advance is preferred by end users – Enhance the value of your product

bpi

brandston partnership inc.

Lighting design

122 West 26th Street 5th floor
New York New York 10001
T. 212.924.4050 F. 212.691.5418

Utah Museum of Natural History
Salt Lake City, UT

C-LE-3

Quick Selection Table

Catalog Number	Description	Application
LEDINTA0024V41FO	Intellivolt 100 Watt 24Vdc Outdoor	• 24Vdc LED Systems

LED Driver Specifications

Description	Catalog Number	Input			Output			Case Temp Max (°C)	Figure	Weight (Grams)
		Volts (V)	Power Max (W)	Current Max (A)	Power Max (W)	Voltage Nom (V)	Current Max (A)			
100 Watt	LEDINTA0024V41FO	120	117.0	0.98	100.0	24.0	4.1	90	A	640
		230		0.51						
		277		.042						

Total Harmonic Distortion: 20% max
Power Factor: 90% min
Line Regulation: 1% output variation across input voltage range
Load Regulation: 5% output variation across input voltage range
Current Crest Factor: 1.5 max
Environmental Protection: IP66 outdoor rated
EMI: FCC47 SubPart15, CISPR15 and CISPR22 Class A
Protection: Meet UL1310 for Class 2; Inherent short-circuit protection, self-limited; overload protected; 3.2KV output insulation
AC Input and DC Output: 2 (0.78mm²) Solid Copper Wires, 15cm long

Dimensions

Fig. A

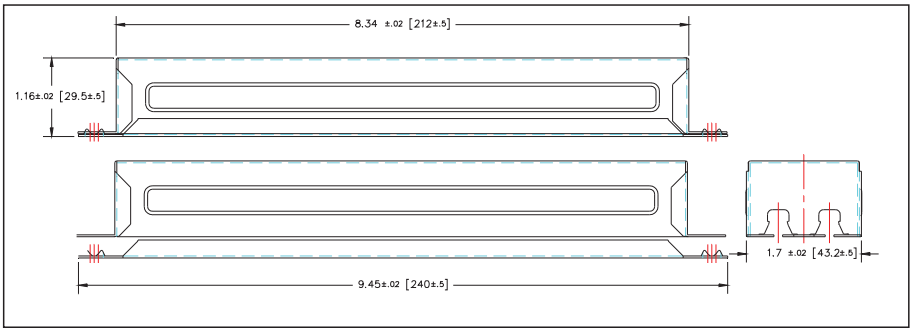

Advance, A Division of Philips Electronics North America · 10275 W Higgins Road · Rosemont, IL 60018 · USA
Tel: + 1 847 390-5205 · Fax: + 1 847 390-5264 · Revised 09/05PJJ

line

100W driver enclosure

100 Watt driver
Catalog number: 250ENC2.011x4x4

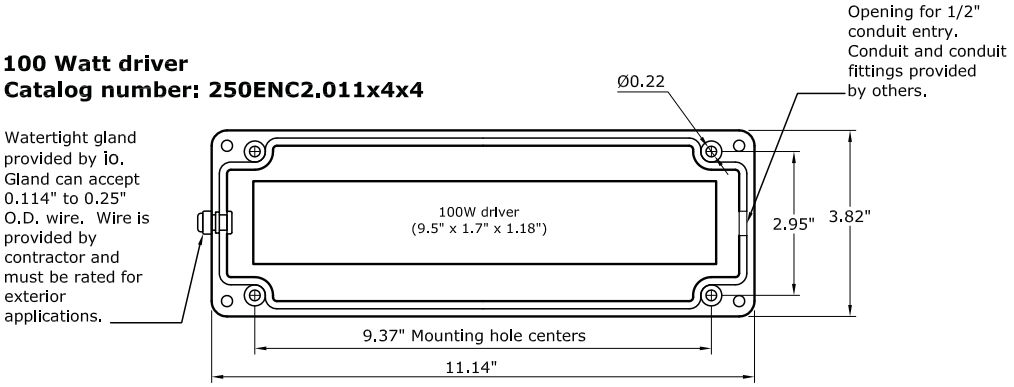

Front view without cover

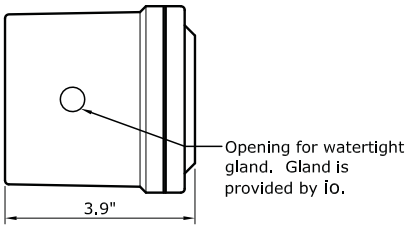

Left end view with cover

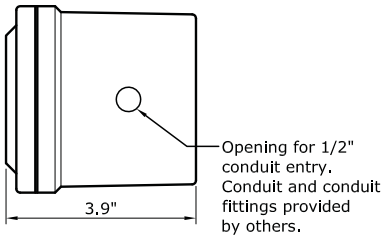

Right end view with cover

Enclosure Construction

Enclosure material is a molded fiberglass reinforced polyester (thermoset). The gasket is poured polyurethane seamless gasket that provides watertight, dust-tight environmental seal. The cover screws are recessed, captive and stainless steel.

Enclosure Industry Standards

UL/cUL 50	File E64358 type 1, 3, 4X, 6P, 12
NEMA 250	Type 1, 3, 4X, 6P, 12
CSA Std 22.2	File LR069014 type 1, 3, 4X, 6P, 12
Temp rating	(-40°C to +120°C)
Flammability rating	UL94-5V

io Lighting LLC, 370 Corporate Woods Pkwy, Vernon Hills, Illinois 60061-3107
T: 847 735 7000 F: 847 735 7001 info@iolighting.com www.iolighting.com

BRUCK.

LEDRA™ II

Description:
The Ledra II is a fully adjustable Uni-Light fixture. Integral AC/DC converter allows fixture to work on all Bruck tracks with standard 12VAC transformers. Fixture works with electronic transformer but, must meet minimum 20% load. Internal dimming, through integral 32-step switching, controls on each fixture for precise setting. The small size, long life, lack of UV, and cool beam makes the Ledra II ideal for displays, casework, difficult to maintain locations, and applications requiring efficient rich color accents. Ledra II may only be used with a magnetic transformer.

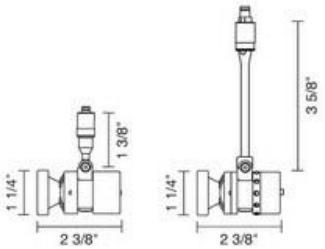

Technical Specs:
Finish: matte chrome and bronze
Power consumption: 6.5 Watts
Drive current: 700mA
Lumen output: 65 at 700mA
Lamp life: 70% at 50,000hrs
5500 White with Luxeon III Star LED
3200 Warm White with Z- Power LED

Part Numbers:

135711/s	white 5000K, 10° lens, 1 3/8" stem
135711/m	white 5000K, 30° lens, 1 3/8" stem
135711/fl	white 5000K, 45° lens, 1 3/8" stem
135711bz/s	bronze, white 5000K, 10° lens, 1 3/8" stem
135711bz/m	bronze, white 5000K, 30° lens, 1 3/8" stem
135711bz/fl	bronze, white 5000K, 45° lens, 1 3/8" stem
135711-1/s	white 3000K, 10° lens, 1 3/8" stem
135711-1/m	white 3000K, 30° lens, 1 3/8" stem
135711-1/fl	white 3000K, 45° lens, 1 3/8" stem
135711-1bz/s	bronze, white 3000K, 10° lens, 1 3/8" stem
135711-1bz/m	bronze, white 3000K, 30° lens, 1 3/8" stem

15774 Gateway Circle Tustin, CA 92780 ph: (714) 259-9959 fax: (714) 259-9969 www.brucklighting.com

BRUCK.

135711-1bz/fl	bronze, white 3000K, 45° lens, 1 3/8" stem
135713/s	white 5000K, 10° lens, 3 5/8" stem
135713/m	white 5000K, 30° lens, 3 5/8" stem
135713/fl	white 5000K, 45° lens, 3 5/8" stem
135713bz/s	bronze, white 5000K, 10° lens, 3 5/8" stem
135713bz/m	bronze, white 5000K, 30° lens, 3 5/8" stem
135713bz/fl	bronze, white 5000K, 45° lens, 3 5/8" stem
135713-1/s	white 3000K, 10° lens, 3 5/8" stem
135713-1/m	white 3000K, 30° lens, 3 5/8" stem
135713-1/fl	white 3000K, 45° lens, 3 5/8" stem
135713-1bz/s	bronze, white 3000K, 10° lens, 3 5/8" stem
135713-1bz/m	bronze, white 3000K, 30° lens, 3 5/8" stem
135713-1bz/fl	bronze, white 3000K, 45° lens, 3 5/8" stem

15774 Gateway Circle Tustin, CA 92780 ph: (714) 259-9959 fax: (714) 259-9969 www.brucklighting.com

V/A TRACK

The V/A track consists of 2 extruded copper pipes with galvanized surface in chrome, bronze, gold or matte chrome. The plastic insulation is either black or grey.

STRAIGHT TRACK

12V | MAX 300W | SINGLE CIRCUIT

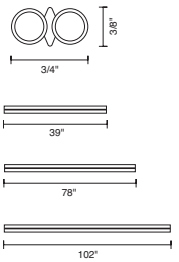

BZ	160031bz	39″
CH	160031ch	39″
G	160031g	39″
MC	160031mc	39″
BZ	160032bz	78″
CH	160032ch	78″
G	160032g	78″
MC	160032mc	78″
BZ	160033bz	102″
CH	160033ch	102″
MC	160033mc	102″

CURVED TRACK

12V | MAX 300W | SINGLE CIRCUIT

Custom curved V/A track bent horizontally or vertically in any radius from 2′ 6″ to 100′.

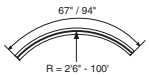

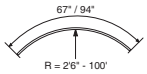

	horizontal curve	
BZ	160019-1bz	67″
CH	160019-1ch	67″
G	160019-1g	67″
MC	160019-1mc	67″
	horizontal curve	
BZ	160019-2bz	94″
CH	160019-2ch	94″
MC	160019-2mc	94″
	vertical curve	
BZ	160019-3bz	67″
CH	160019-3ch	67″
MC	160019-3mc	67″
	vertical curve	
BZ	160019-4bz	94″
CH	160019-4ch	94″
MC	160019-4mc	94″

END CAP

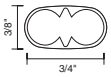

BK	160020blk
MC	160020mc

DEBURRING TOOL

160400

bpi

brandston partnership inc.

Lighting design

122 West 26th Street 5th floor
New York New York 10001
T. 212.924.4050 F. 212.691.5418

Utah Museum of Natural History
Salt Lake City, UT

C-LV

TRACK CONNECTOR / ISO CONNECTOR

160402	conductive	CH
160409blk	isolator	BK
160409mc	isolator	MC

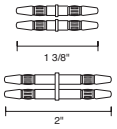

FLEXIBLE TRACK CONNECTOR

conductive

160501bz	55º-130º	BZ
160501ch	55º-130º	CH
160501g	55º-130º	G
160501mc	55º-130º	MC

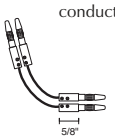

HORIZONTAL ANGLE CONNECTOR

conductive

N 160411bz	45º	BZ
160411ch	45º	CH
160411g	45º	G
160411mc	45º	MC
N 160420bz	60º	BZ
160420ch	60º	CH
160420g	60º	G
160420mc	60º	MC
160406bz	90º	BZ
160406ch	90º	CH
160406g	90º	G
160406mc	90º	MC
N 160421bz	120º	BZ
160421ch	120º	CH
160421g	120º	G
160421mc	120º	MC
N 160408bz	135º	BZ
160408ch	135º	CH
160408g	135º	G
160408mc	135º	MC

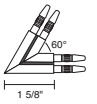

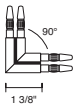

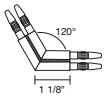

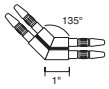

CUSTOM HORIZONTAL ANGLE CONNECTOR

conductive

custom angle in 5º increments, specify when ordering

N 160830bz	45º-180º	BZ
160830ch	45º-180º	CH
160830g	45º-180º	G
160830mc	45º-180º	MC

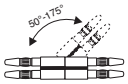

bpi

brandston partnership inc.

Lighting design

122 West 26th Street 5th floor
New York New York 10001
T. 212.924.4050 F. 212.691.5418

Utah Museum of Natural History
Salt Lake City, UT

C-LV

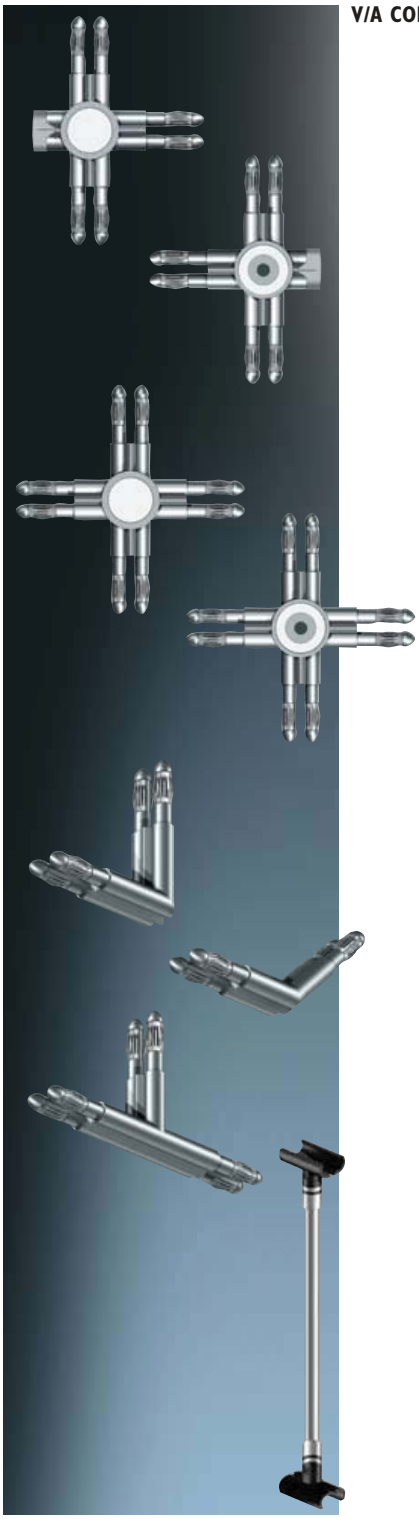

V/A CONNECTORS

HORIZONTAL T-CONNECTOR

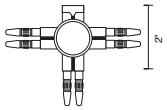

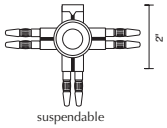

suspendable

BZ	N 160414bz	T-Connector
CH	160414ch	T-Connector
G	160414g	T-Connector
MC	160414mc	T-Connector
	for use with 160605	
BZ	N 160416bz	T-Connector
CH	N 160416ch	T-Connector
G	N 160416g	T-Connector
MC	N 160416mc	T-Connector

HORIZONTAL CROSS CONNECTOR

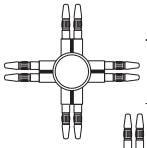

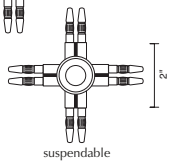

suspendable

BZ	N 160404bz	Cross Connector
CH	160404ch	Cross Connector
G	160404g	Cross Connector
MC	160404mc	Cross Connector
	for use with 160605	
BZ	N 160412bz	Cross Connector
CH	N 160412ch	Cross Connector
G	N 160412g	Cross Connector
MC	N 160412mc	Cross Connector

VERTICAL ANGLE CONNECTOR

conductive

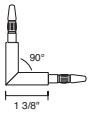

BZ	N 160407bz	90º
CH	160407ch	90º
G	160407g	90º
MC	160407mc	90º

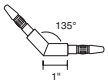

BZ	N 160410bz	135º
CH	160410ch	135º
G	160410g	135º
MC	160410mc	135º

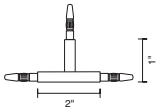

BZ	N 160403bz	T-Connector
CH	160403ch	T-Connector
G	160403g	T-Connector
MC	160403mc	T-Connector

TRACK SPACER

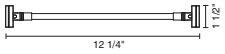

BZ	160210bz	12 1/4″
CH	160210ch	12 1/4″
G	N 160210g	12 1/4″
MC	160210mc	12 1/4″

bpi

brandston partnership inc.

Lighting design

122 West 26th Street 5th floor
New York New York 10001
T. 212.924.4050 F. 212.691.5418

Utah Museum of Natural History
Salt Lake City, UT

C-LV

CORD SUSPENSION CLIP

aircraft cable with clamp adaptor

N 160600bz	78″	BZ
N 160600ch	78″	CH
N 160600g	78″	G
N 160600mc	78″	MC

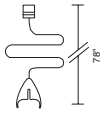

CORD SUSPENSION II

for use with 160412 or 160416

N 160605ch	39 3/8″	CH
N 160605mc	39 3/8″	MC

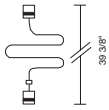

CORD SUSPENSION CROSS CONNECTOR

aircraft cable with clamp adaptor

160206ch	39 3/8″	CH
160206mc	39 3/8″	MC

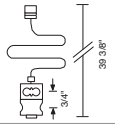

WALL & CEILING ATTACHMENT CLIP

160518bz	1″	BZ
160518ch	1″	CH
160518g	1″	G
160518mc	1″	MC

160519blk	3/8″	BK
160519mc	3/8″	MC

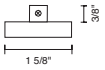

WALL EXTENSION ARM CLIP

160560bz	11 3/4″	BZ
160560ch	11 3/4″	CH
160560mc	11 3/4″	MC
160561bz	20″	BZ
160561ch	20″	CH
160561mc	20″	MC

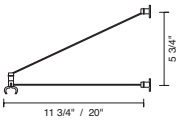

bpi

brandston partnership inc.

Lighting design

122 West 26th Street 5th floor
New York New York 10001
T. 212.924.4050 F. 212.691.5418

Utah Museum of Natural History
Salt Lake City, UT

C-LV

V/A MOUNTING SUPPORTS

SPACER

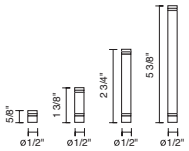

BZ	N	160430bz	5/8″
CH		160430ch	5/8″
G		160430g	5/8″
MC		160430mc	5/8″
BZ	N	160530bz	1 3/8″
CH		160530ch	1 3/8″
G		160530g	1 3/8″
MC		160530mc	1 3/8″
BZ		160531bz	2 3/4″
CH		160531ch	2 3/4″
G		160531g	2 3/4″
MC		160531mc	2 3/4″
BZ	N	160532bz	5 3/8″
CH		160532ch	5 3/8″
G		160532g	5 3/8″
MC		160532mc	5 3/8″

WALL SUSPENSION

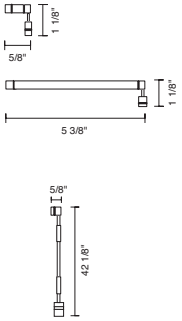

CH	160565ch	5/8″
MC	160565mc	5/8″
CH	160566ch	5 3/8″
MC	160566mc	5 3/8″
CH	160580ch	42″ 1/8″
MC	160580mc	42″ 1/8″

PLATE DISC

BZ	160533bz
CH	160533ch
G	160533g
MC	160533mc

bpi

brandston partnership inc.

Lighting design

122 West 26th Street 5th floor
New York New York 10001
T. 212.924.4050 F. 212.691.5418

Utah Museum of Natural History
Salt Lake City, UT

C-LV

TC2 ELECTRONIC TRANSFORMER

Class II with 5A breakers included

TC2-150/120v	3 x 50W, 120V
TC2-300/120v	6 x 50W, 120V

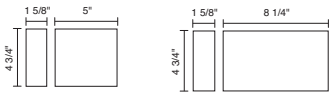

T-60 PLUG-IN TRANSFORMER

electronic transformer for standard wall sockets

70403	60W, 120V	BLK

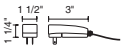

PLUG-IN TRANSFORMER FOR LEDRA FIXTURES

short circuit and overload protected, output DC 12V 700mA max, UL listed

70423	120V/250V	BLK

T REMOTE TRANSFORMER

2 secondary taps with circuit breaker included in housing, for separate switching separate transformers should be used, choke optional

T-150/120v	150W, 120V	BLK
T-300/120v	300W, 120V	MC
T-300/277v	300W, 277V	MC
T-600/120v	2 x 300W, 120V	MC
T-600/277v	2 x 300W, 277V	MC
TCK-300	choke for 300W transformer	
TCK-600	choke for 600W transformer	

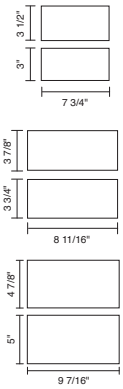

TQ REMOTE/SURFACE TRANSFORMER

4 secondary taps with primary and secondary circuit breaker included, zero clearance requirement, choke optional for dimming

TQ-150/120v	150W, 120V	WH
TQ-300/120v	300W, 120V	WH
TQ-300/277v	300W, 277V	WH
TQ-600/120v	2 x 300W, 120V	WH
TQ-600/277v	2 x 300W, 277V	WH
TCK-300	choke for 300W transformer	
TCK-600	choke for 600W transformer	

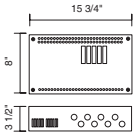

bpi

brandston partnership inc.

Lighting design

122 West 26th Street 5th floor
New York New York 10001
T. 212.924.4050 F. 212.691.5418

Utah Museum of Natural History
Salt Lake City, UT

C-LV

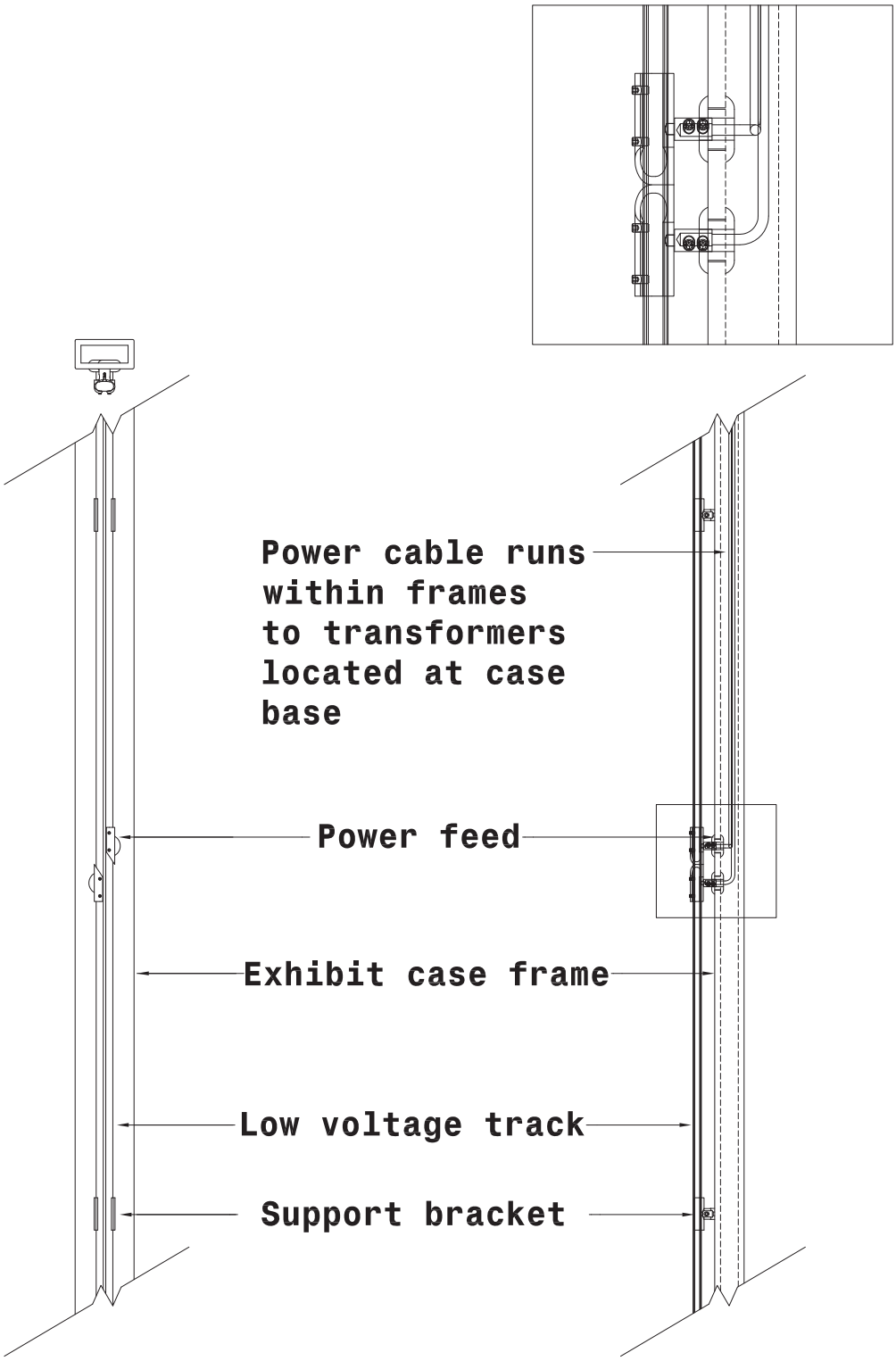

TYPICAL C-LV MOUNTING DETAIL AT EXHIBIT CASE (NOT TO SCALE)

bpi

brandston partnership inc.

Lighting design

122 West 26th Street 5th floor
New York New York 10001
T. 212.924.4050 F. 212.691.5418

Utah Museum of Natural History
Salt Lake City, UT

C-LV

ETC

Sensor®+ AF Racks

100V 120V

Sensor+ Series

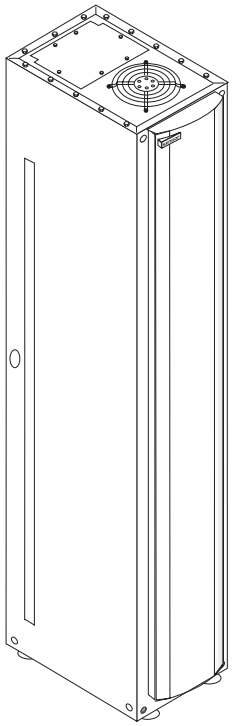

GENERAL INFORMATION

Sensor+ dimming systems provide high density, professional features and exceptional reliability for lighting applications that require the best the entertainment industry can offer.

APPLICATIONS

- Professional and educational theatre
- Production studios
- Concert and performance halls
- Themed retail and dining
- Multi-use Convention Centers
- Houses of Worship

FEATURES

- Standard system and rack monitoring with diagnostic reporting as well as dimmer-specific load reporting and diagnostics
- High dimmer density
- Up to two 2.4kW dimmers per module
- 6, 12, 24, and 48 module racks available
- Rugged industrial construction
- Installation flexibility
- Adaptable modular design
- 100,000A Short Circuit Current Rating (SCCR)
- Advanced configuration editing built into rack
- Stores up to 128 Presets in memory
- Direct Ethernet control signal input
- Two DMX512 inputs
- Supports ETC Dimmer Doubling™
- All racks UL and cUL LISTED

ACCESSORIES

- SmartLink® Button Stations and SmartLink TimeClock
- Dimmer Doubler
- Sound Suppression Hood
- Floor pedestal for 24-module rack
- Document holder

ORDERING INFORMATION

Installation Racks

MODEL	DESCRIPTION
SR48AF+	Sensor+ 48 Module Advanced Features Rack
SR24AF+	Sensor+ 24 Module Advanced Features Rack
SR12AF+	Sensor+ 12 Module Advanced Features Rack
SR6AF+	Sensor+ 6 Module Advanced Features Rack
SR24AF+1P	Sensor+ 24 Module Single Phase Advanced Features Rack
SR12AF+1P	Sensor+ 12 Module Single Phase Advanced Features Rack
SR6AF+1P	Sensor+ 6 Module Single Phase Advanced Features Rack

Rack Options*

MODEL	DESCRIPTION
AT48	Amp-Trap fuse option for 48-module rack
AT24	Amp-Trap fuse option for 24-module rack
AT12	Amp-Trap fuse option for 12-module rack
BK48	Bussing kit for 2 – 48-module racks
BK24	Bussing kit for 2 – 24-module racks
BK12	Bussing kit for 2 – 12-module racks
AUX30-48	30″ Auxiliary Rack(s) for 48-module rack
AUX19-48	19″ Auxiliary Rack(s) for 48-module rack
AUX12-48	12″ Auxiliary Rack(s) for 48-module rack
AUX19-24	19″ Auxiliary Rack(s) for 24-module rack
AUX19-12	19″ Auxiliary Rack(s) for 12-module rack

*Vibration Reduction mounts available for all Sensor+ racks. Contact ETC for details

Rack Accessories

MODEL	DESCRIPTION
SSSh24-48	Sensor+ Sound Suppression Hood – large
SSSh6-12	Sensor+ Sound Suppression Hood – small
Pedestal	Floor pedestal for 24-module rack
DH	Document Holder

SmartLink Accessories

MODEL	DESCRIPTION
S-LPB	SmartLink Power Board for Sensor+ Racks*
S-10005	SmartLink 5-Button Station*
S-10010	SmartLink 10-Button Station*

*One SmartLink Power Board required for station support.
S-LPB supports up to four stations.
Only one S-LPB may be enabled in a system.

SPECIFICATIONS

GENERAL

- Racks available in four sizes
  - SR6AF+ 6 modules, 12 dimmers maximum
  - SR12AF+ 12 modules, 24 dimmers maximum
  - SR24AF+ 24 modules, 48 dimmers maximum
  - SR48AF+ 48 modules, 96 dimmers maximum
- Dual density (two dimmers per module), single density and half density dimmer modules available
- Operating temperature: 0-40°C / 32-104°F
  - Dimmer room HVAC systems must at all times maintain the specified ambient temperature at the dimmer rack. Dimming systems operating within 10 degrees F of the upper or lower temperature limits must strictly follow installation and operation guidelines to operate reliably.
- Relative humidity: 30-90% non-condensing
- All racks UL and cUL LISTED
- UL924 LISTED for Bypass operation

MECHANICAL

- Rugged 16-gauge steel construction
- Fine-textured, scratch-resistant, epoxy paint
- SR6AF+ and SR12AF+ uses wall mount installation
- SR24AF+ can be wall or pedestal mounted
- SR48AF+ is floor mounted
- Top and bottom conduit access through removable panels (SR48AF+) or knockouts (SR6AF+, SR12AF+, and SR24AF+)
- No tools required for module removal or installation
- Keyed module slots prevent insertion of inappropriate module types
- Front access to all wiring and terminations
- Full height locking door
- Electrostatic air filter easily removed from door for periodic cleaning
- High efficiency cooling system with airflow sensor
- High visibility LED status beacon

ELECTRICAL

- SR6AF+, SR12AF+ and SR24AF+ accept:
  - Three phase 120/208 VAC
  - Single phase 120/240 VAC
- SR48AF+ accepts
  - Three phase 120/208 VAC
- Line feed frequencies from 47-63Hz
- Line feed voltage range is 90-140 VAC
- Load terminals accept up to #4 AWG (16mm^2) wire (see chart)
- Short Circuit Current Rating: 100.000A RMS symmetrical @ 240VAC
- Auxiliary equipment racks and custom switchgear/distribution available (Call ETC for details)

CONTROL ELECTRONICS

- Sensor+ Control Electronics Module (CEM+)
- Single Ethernet control signal input
- Two DMX512 inputs
- System, rack, and dimmer-specific load and diagnostic reporting via browser-based interface or DimStat software
- Supports Dimmer Doubling™
- Supports SmartLink® control of presets

OPTIONS

- Amp-Trap® fuses to allow feeding individual racks from oversize mains
- All-copper bus kits available
- Vibration reduction kits available for all racks
- SmartLink Power Board
- SmartLink TimeClock

ADDITIONAL INFORMATION

Compatible Dimmer Modules

SENSOR ADVANCED FEATURES (AF) MODULES	
MODEL	**DESCRIPTION**
D15AF/D20AF	Dual 15A/20A Dimmer Module – 350µS – AF
D50AF	Single 50A Dimmer Module – 500µS – AF
D100AF*	Half 100A Dimmer Module – 500µS – AF
D20HR	Single 20A Dimmer Module – 1000µS – AF
D20DHR	Dual 20A Dimmer Module – 800µS – AF
D50HR	Half 50A Dimmer Module – 800µS – AF
SENSOR SPECIAL PURPOSE MODULES	
L10	Dual 10A Low Wattage Dimmer Module
L10F	Single 10A Low Wattage Fluorescent Dimmer Module
D15F/D20F	Single 15A/20A Fluorescent Dimmer Module
R15AF/R20AF	Dual 15A/20A Relay Module – AF
CC15/CC20	Dual 15A/20A Constant Circuit Breaker Module
AFM	Air Flow Module

*Half-density modules use two module slots

Control Modules

MODEL	DESCRIPTION
CEM+	Control Electronics Module +

Load Wiring Lug Capacity

CONNECTION	WIRE SIZE
10A, 15A, 20A, and 50A lugs	4 AWG Max. (16mm^2)
100A lugs	2/0 Max.

Primary Feed Lug Capacity

CONNECTION	WIRE SIZE
SR48AF+	Dual 600 kcmil – 2 AWG
SR24AF+	Dual 350 kcmil – 4 AWG
SR12AF+	Dual 250 kcmil – 6 AWG
SR6AF+	Single 2/0 – 14 AWG

Sound Pressure Level (dBA)

MODEL	dBA @ 1000Hz (1kHz)*	
	WITHOUT	WITH SSSh**
SR48AF+	37.0	30.9
SR24AF+	40.2	34.0
SR12AF+	41.8	33.8
SR6AF+	26.0	21.4

*dBA values for each Sensor rack measured at 1 meter. Visit www.etcconnect.com for full spectrum dBA ratings.

**Sensor Sound Supression Hood (SSSh)

TYPICAL SYSTEM RISER

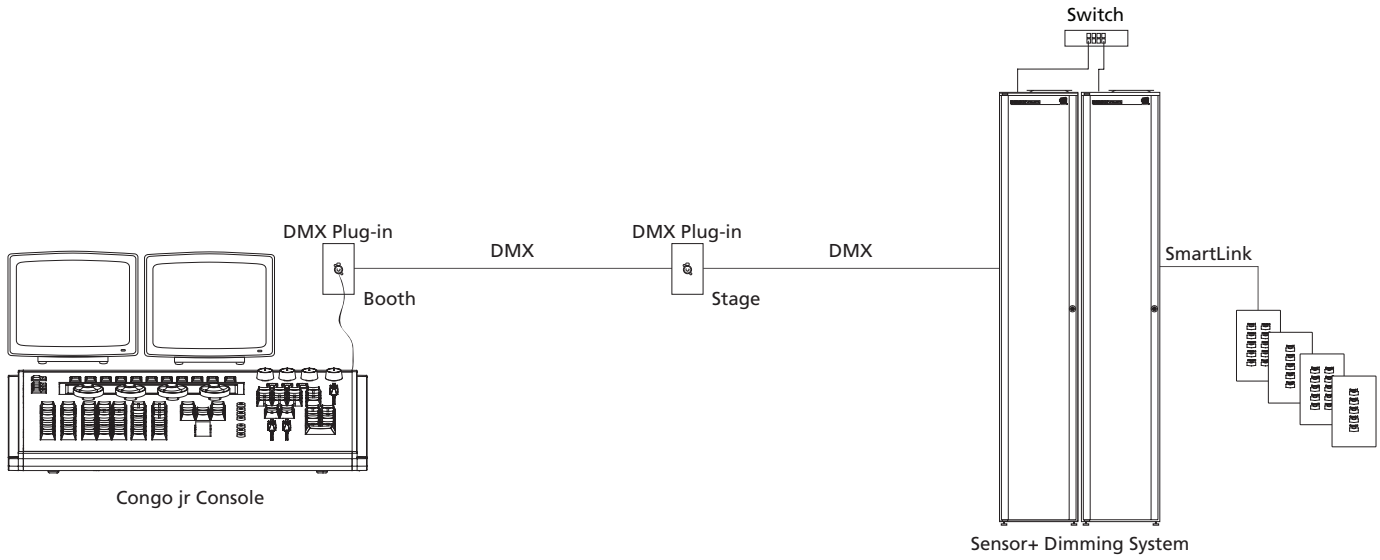

TYPICAL NETWORK RISER

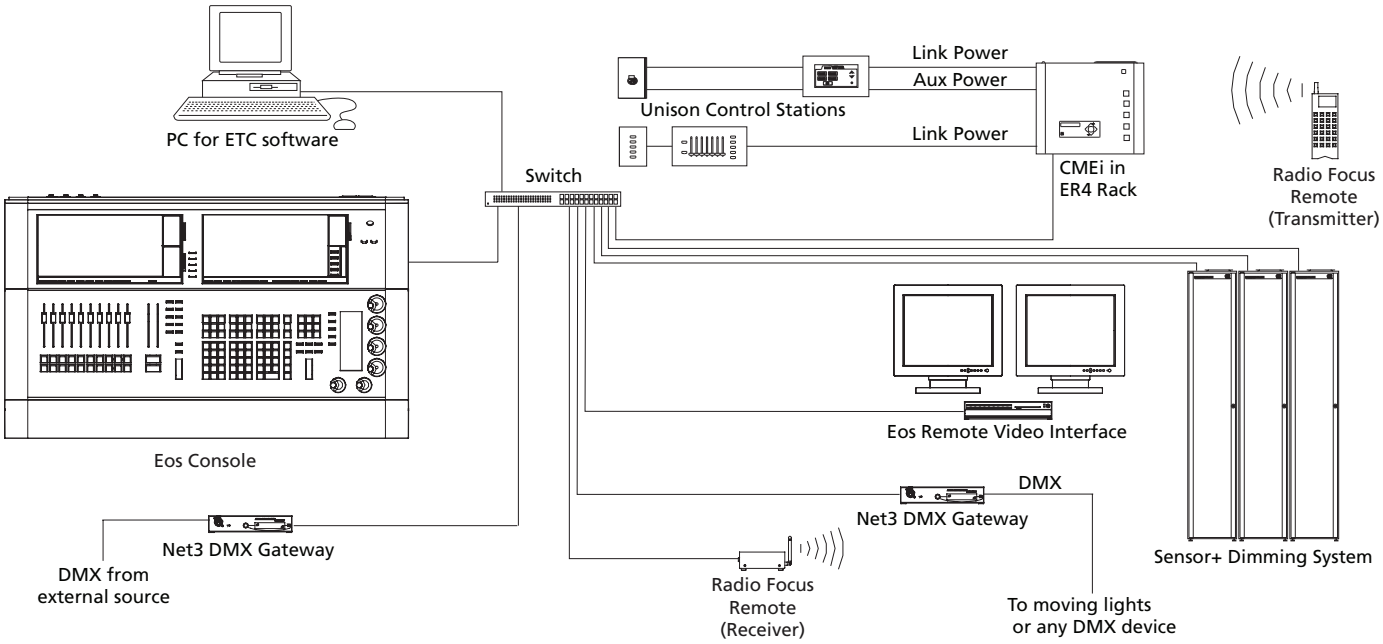

PHYSICAL

Empty Dimmer Rack Weights

MODEL	WEIGHT		SHIPPING WEIGHT	
	lbs	kgs	lbs	kgs
SR48AF+	188	86	198	90
SR48AF+ Door*	31	14	35	16
SR24AF+	107	49	115	53
SR24AF+ Door*	17	8	20	9
SR12AF+	45	21	50	23
SR12AF+ Door*	11	5	14	6.5
SR6AF+ with Door	36	16	45	21

*Rack doors ship separately

Full Dimmer Rack Weights

MODEL	MAX. WEIGHT		TYPICAL WEIGHT	
	lbs	kgs	lbs	kgs
SR48AF+	493	224	459	209
SR24AF+	261	119	244	111
SR12AF+	115	53	105	48
SR6AF+	71	33	66	30

*Maximum – D100AF modules (11.7lbs/slot) Typical – D20AF modules (5lbs/slot)

Refer to module datasheets to calculate rack weight for other module types

Installation Rack Dimensions

MODEL	HEIGHT		WIDTH		DEPTH	
	inches	mm	inches	mm	inches	mm
SR48AF+	83.1	2110	14.6	370	22.8	580
SR24AF+	45.8	1160	14.6	370	16.8	430
SR12AF+	25.8	660	14.6	370	13.3	340
SR6AF+	16.4	420	14.6	370	13.3	340

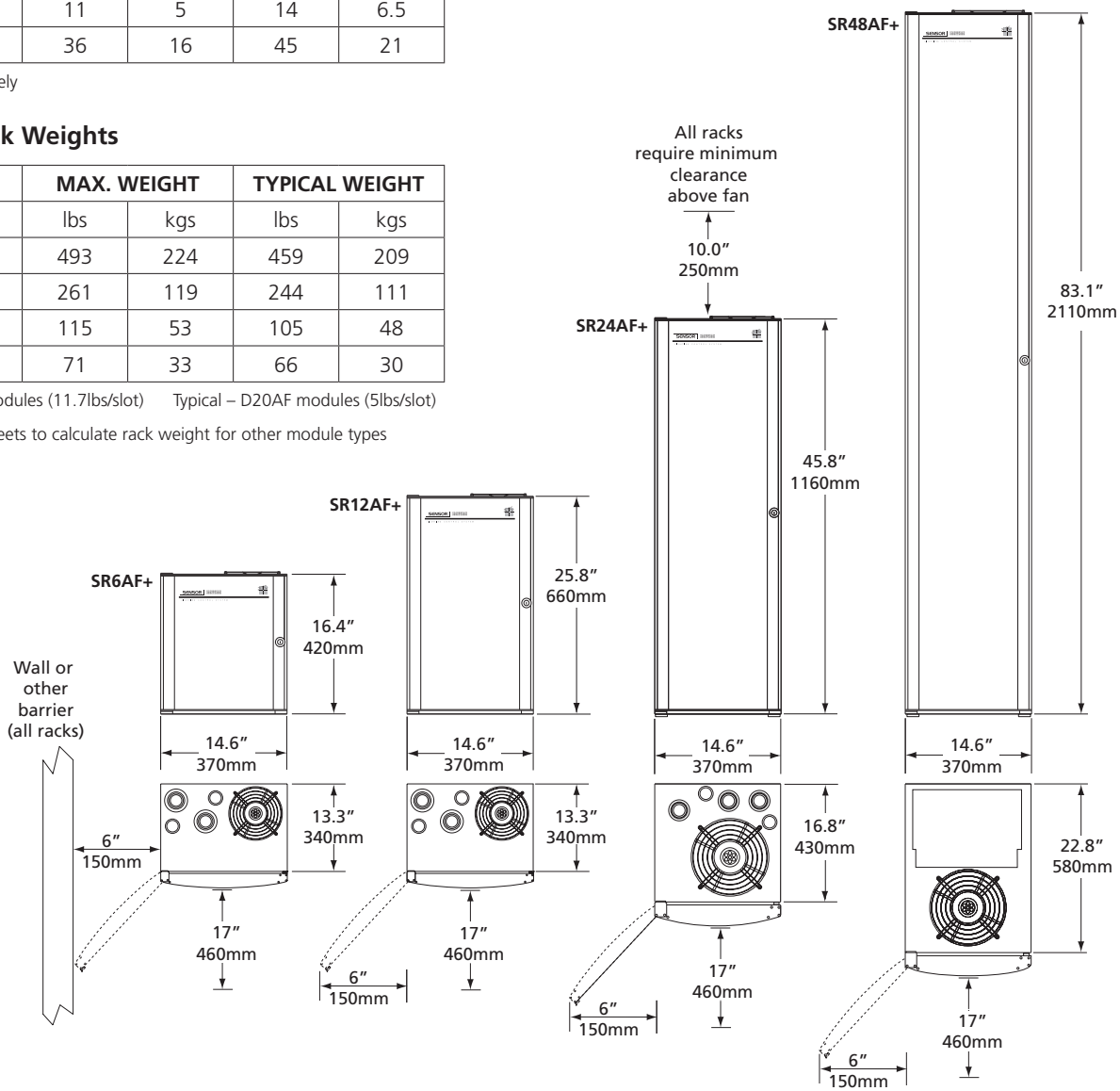

Corporate Headquarters • 3031 Pleasant View Rd, PO Box 620979, Middleton WI 53562 0979 USA • Tel +1 608 831 4116 • Fax +1 608 836 1736
London, UK • Unit 26-28, Victoria Industrial Estate, Victoria Road, London W3 6UU, UK • Tel +44 (0)20 8896 1000 • Fax +44 (0)20 8896 2000
Rome, IT • Via Ennio Quirino Visconti, 11, 00193 Rome, Italy • Tel +39 (06) 32 111 683 • Fax +44 (0) 20 8752 8486
Holzkirchen, DE • Ohmstrasse 3, 83607 Holzkirchen, Germany • Tel +49 (80 24) 47 00-0 • Fax +49 (80 24) 47 00-3 00
Hong Kong • Room 1801, 18/F, Tower 1 Phase 1, Enterprise Square, 9 Sheung Yuet Road, Kowloon Bay, Kowloon, Hong Kong • Tel +852 2799 1220 • Fax +852 2799 9325
Web • www.etcconnect.com • Copyright©2008 ETC. All Rights Reserved. All product information and specifications subject to change. 7151L1002 Rev. E Printed in USA 06/08

Sensor® products protected by one or more of the following U.S. Patent Numbers 5,323,088, 5,352,088, 7,233,112, 7,019,469, 6,849,943, and 6,002,563; European Number 0603333T2; German 69203609.

LIGHTING PLAYBACK CONTROLLERS

SHEPHERDS BUILDING, ROCKLEY ROAD, LONDON W14 0DA, UNITED KINGDOM
www.pharoscontrols.com

OVERVIEW

The Pharos control solution has two complementary parts: the Controllers (LPC, AVC), which form a permanent part of the installation, and the Designer software which runs on any personal computer and is only required when creating or modifying the project.

Many playback controllers for lighting installations store the show as frames of control data and so playback consists of outputting these frames in sequence. However this is a very limited way to control lighting. Because the show data is stored in such a raw form it takes up a lot of memory and that imposes limits on the length of the show. Furthermore it can only reproduce its output exactly as programmed every time, which means that there is no ability to separate the lighting into multiple zones with discrete intensity control or provide interactive triggering beyond a simple start and stop.

The Pharos Lighting Playback Controllers (LPC) are intended to be price-competitive with these frame-store solutions but offer genuine lighting control functionality. Lighting is programmed on timelines with a particular timeline having control data for one, some or all the lighting fixtures being controlled. Multiple timelines are supported and so a single unit can control multiple distinct zones, or more complex presentations can be programmed with external triggers coming from multiple systems.

The LPCs are provided in a compact DIN-rail compatible housing for mounting within an electrical cabinet, or alternatively they can be wall-mounted. For easy installation most connections are provided as plug-strips. The solid state design with efficient, embedded firmware ensures unparalleled reliability.

The extensive range of external triggering interfaces supported by the LPC includes Ethernet, RS232 serial, MIDI and digital inputs. Additional interfaces are supported by optional LPC Expansion Modules. Conditional logic, variables and scripts provide powerful show control functionality.

Multiple units can be used together for larger installations and synchronized automatically over Ethernet. The units have an internal web server with an active web page giving status and configuration information for remote monitoring, and either Ethernet or USB can be used to connect to the PC running the Designer software during programming.

VERSIONS

There are two versions of the Lighting Playback Controller:

LPC 1:
- One DMX512 output (up to 512 dimmers or 170 RGB colour-mixing units).
- Triggering via Ethernet, RS232 serial, MIDI and digital inputs.
- Realtime clock with astronomical and daylight saving functionality.
- Supports Expansion Modules for other protocols and interfaces.
- Scalable with other Pharos Controllers & Remote Devices over Ethernet.
- Integrated Web Server.
- 256Mb Compact Flash Card.

Model Number: PLPC1

LPC 2:
- Two DMX512 outputs (up to 1024 dimmers or 340 RGB colour-mixing units).
- Other features as the LPC 1.

Model Number: PLPC2

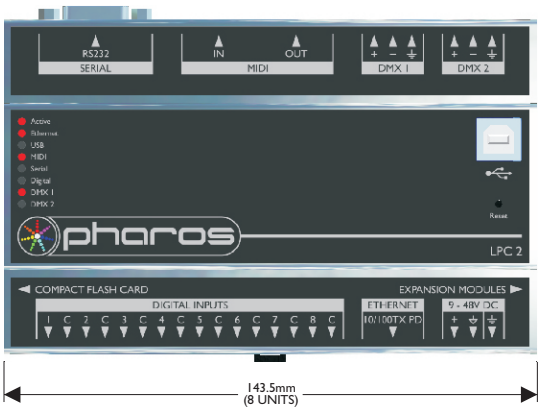

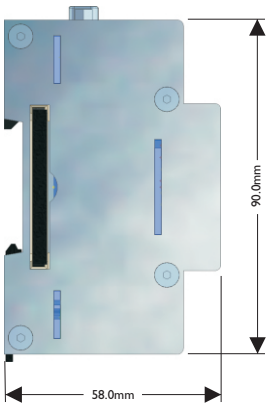

SPECIFICATIONS

General:

- Microprocessor based system specifically designed for the control of lighting in an architectural or entertainment application.
- Project data stored in non-volatile solid-state memory (Compact Flash Card), uploaded from a remote personal computer over an Ethernet, USB or web connection.
- Operating System stored in non-volatile solid-state memory, remotely updated when necessary from a personal computer over an Ethernet or USB connection.
- Commences playback automatically on receiving power without additional external trigger.
- Internal realtime clock operates when power is absent.
- Supports multiple LPC Expansion Modules for other interfaces and protocols, including RS485, audio, timecode and DALI.
- Integrated web server.

Physical:

- Enclosure and mounting complies with DIN43880 and EN60715 (35/7.5 rail) respectively.
- 8 unit wide DIN enclosure.
- Operating temperature range 0°C to 50°C (32°F to 122°F).
- **CE** compliant and **ETL/cETL** listed.

Electrical:

Supports the following wire terminations (Camden Electronics CTB9208 5.08mm plug-in rising clamp terminals, supplied):
- 9V to 48V DC power. *
- Isolated DMX512 ports, RDM compatible (2).
- Isolated digital inputs (8, tri-mode: active high, active low or contact closure).

In addition there are the following standard connectors:
- RJ45 socket for 10/100Base-TX Ethernet
- IEEE 802.3af PoE powered device. *
- USB-B socket for USB 1.1.
- 9-pin D plug for isolated RS232 serial.
- 5-pin DIN socket for MIDI In.
- 5-pin DIN socket for MIDI Out.
- 25-pin D socket for Expansion Modules only.

* Unit may be powered either via DC input or PoE.

North American Distributor
3031 Pleasant View Road, PO Box 620979, Middleton WI 53562 0979 USA • Tel +1 608 831 4116 • Fax +1 608 836 1736 • www.etcarchitectural.com/pharos

4220L1001 Rev. E Printed in USA 11/07

Copyright © 2004-7 Pharos Architectural Controls Limited. All rights reserved. Specifications subject to change without notice (19-10-2007).