Jon M. Huntsman, Jr.
Governor
Gary Herbert
Lieutenant Governor
F. Keith Stepan
Director

State of Utah

Division of Facilities Construction & Management

Department of Administrative Services
4110 State Office Building
Salt Lake City, Utah 84114
Phone (801) 538-3018
Fax (801) 538-3267

MEMORANDUM

Date: March 17, 2006

To: Registered General Contractors

From: Matthias Mueller

Reference: Division of Facilities Construction and Management
Construction Services for Old Main Building Remodel & Seismic Upgrade and
CMGC Services for New Teacher Education Building
DFCM Project Nos. 03234730 and 05049730

Subject: **Addendum No. 2**

Note: This Addendum shall be included as part of the Contract Documents. Items in this Addendum apply to all drawings and specification sections whether referenced or not involving the portion of the work added, deleted. Modified, or otherwise addressed in the Addendum. Acknowledge receipt of this Addendum in the space provided on the Cost Proposal Form.

2.1 Addenda Content

This addendum includes an attachment from CRSA Architects that includes architectural, structural, mechanical, and electrical addendum items. Total pages including this cover sheet is 101 pages, reference the Architectural Addendum for sheet breakdown.

2.2 List of Bidding General Contractors

The following General Contractors are bidding this project:

- Carter Enterprises
- Jacobsen Construction
- McCullough Engineering & Construction

END OF ADDENDUM 2

Addendum # 2

P:\B04-012 SUU OLD MAIN\Text\3 - Bid Construction\Addenda\SUU Addenda #02draft

PROJECT NAME: SUU Old Main Building Renovation
Southern Utah University
Cedar City, Utah

DATE: March 17, 2006

DFCM Project No.: **003234730**
CRSA Project No.: **B04-012**

FROM: Cooper Roberts Simonsen Architects
700 North 300 West
Salt Lake City, Utah 84103
(801) 355-5915
Fax (801) 355-9885

TO: All Bidders

This Addendum forms a part of the Contract Documents and modifies the original Bid Documents dated January 23, 2006 as noted below. Acknowledge receipt of this Addendum in the space provided on the Bid Form. Failure to do so may subject the Bidder to disqualification.

This Addendum consists of (8) 8 ½"x11" pages,
Cedar City Dumping Agreement (10) 8 ½"x11" pages,
Specification Sections (12) 8 ½"x11" pages,
Architectural Drawings (23) 24" x 36" drawing sheets,
Structural Addenda (20) 8 ½"x11" pages,
Mechanical Addenda (13) 8 ½"x11" pages,
Electrical (14) 8 ½"x11" pages (Includes Section 16561)

I. CHANGES TO PRIOR ADDENDA:

III-1 None

II. CHANGES TO BIDDING REQUIREMENTS:

II-1 Cedar City will allow the contractor to use their dump for the disposal of certain waste from the project. The agreement is attached.

IV. CHANGES TO AGREEMENT & OTHER CONTRACT FORMS:

III-1 None

IV. CHANGES TO CONDITIONS OF THE CONTRACT:

III-2 None

V. CHANGES TO SPECIFICATIONS:

V-1 Table of Contents

a) Remove section 15082 "Equipment Insulation" from the Table of Contents.

V-2 The following paragraph shall be applied to all exposed finishes for architectural, mechanical, and electrical work and shall be included specifically (but not limited to) the following sections. 02751, 03500, 04810, 05500, 05521, 07462, 07260, 08111, 08211, 08212, 08311, 08385, 08550, 10520, 10801, 12486, and 12491.

a) Benchmark Samples (Mockups): Provide a benchmark finish sample for each type of gypsum board assembly required. Duplicate finish of approved sample Submittals.

(1) Architect will select one room or surface to represent surfaces and conditions for application of each type of gypsum board assembly.
(2) Install benchmark samples, according to requirements for the completed Work, after permanent lighting and other environmental services have been activated. Provide required sheen, color, and texture on each surface.
(3) Do not proceed with remainder of gypsum board assembly until benchmark sample has been approved by Owner, Architect, and DFCM.

(a) After finishes are accepted, Architect will use the room or surface to evaluate gypsum board assembly of a similar nature. Any work not conforming with the quality standard of the benchmark sample shall be removed and replaced.

V-3 01500 Temporary Facilities and Controls

a) 01500-3.05.A.3.a. **ADD** "2) Fence material of wire-mesh "chain-link" type.
b) 01500-3.05.A.3.a. **ADD** "3) Fence prevents view to interior of project site by placement of opaque material integral to fencing to full 6'-0" height along east edge of enclosure."
c) 01500 3.01 **ADD** "E. The Administration Parking Lot (north of the administration building) is to be usable for commencement. Fencing and other mobilization work at this parking lot may occur after May 8th."

V-4 01700 Execution Requirements

a) 01732-3.6.C **ADD 1. "**Disposal site arranged at Bulloch Pit Class IVb Landfill owned and operated by Cedar City Corporation.
(1) Acceptable Waste: construction/demolition waste, inert waste, and yard waste.
(2) Prohibited Waste: No hazardous waste as defined by UAC R3l5-301-2(29); PCB's as defined by UACR3l5-301-2(52); household waste; municipal waste; special waste, commercial waste; or industrial waste may be accepted at the landfill.
(3) Combustible waste disposed at the active face of the landfill shall be covered with a minimum of six inches of soil as needed to avoid a fire hazard.
(4) Dust Control: sub-permittee shall take steps as necessary to control dust generated from roads, construction, general operations, and covering the waste at the landfill.
(5) Record Keeping: sub-permittee shall maintain and keep on file, either at the landfill site or as part of the Project Construction records kept at the project site, an operating record that shall include: a copy of the permit including the permit application; the number of vehicles entering the landfill each day of operation; an estimate of the weights or volumes of

waste received each day of operation; the types of waste received; records of any inspections; and records of any noncompliance.

(6) Closure: The final closure of the landfill shall consist of leveling waste to the extent practicable, covering with a minimum of two feet of earthen material, contouring to promote storm water run-off.

ADD 2. Landfill use agreement requires:

a) A. at least one person, provided by the using party and trained and accepted by Cedar City, shall be at the landfill during all hours that it is open for the extended project, and shall inspect loads of waste received at the landfill to prevent the disposal of unacceptable waste.

b) B. besides the covering of combustible material as described above, any part of the disposal area filled to the final disposal contours during the extended project shall be leveled to the extent practicable, covered with a minimum of two feet of earthen material and contoured for storm run-off.

c) the using party shall control all dust generated during the extended project including during the construction of roads, waste disposal operations, and covering of the waste material.

d) daily logs as shown on the attached sheet shall be maintained by the using party during the extended project The log shall include the number of the vehicles entering the landfill each day f or the project, the estimated volume of waste received, the type of waste received, and the individual's signature who is keeping the log. The using parry, at the conclusion of the extended project, shall return the daily logs to cedar city.

e) Indemnification. Cedar City shall not be liable for injury or damage to persons or property occurring within or upon the Bulloch Pit, unless caused by or resulting from the negligence of Cedar City or any of Cedar City's agents, servants or employees in the operation or maintenance of the premises. All parties to this Agreement covenant to indemnify and hold harmless Cedar City from all liability, loss, costs (including attorneys' fees) and obligations on account of or arising out of any such injuries or losses, however occurring, including any acts, negligent or otherwise, by the agents, independent contractors, employees, or servants of the parties to this agreement, and said parties agree to defend Cedar City at their cost (including attorney's fees) against all such claims, actions or suits, brought against Cedar City.

f) Daily Operating Record (sample attached)

b) 01700-3.1.D **ADD "1. Provide Cedar City Employee full record of daily operating record of time and count of loads dumped at Bulloch Pit during construction period.**

V-2 03361 Shot Crete

a) Add section to construction documents (see attached).

V-3 05513 Aluminum Inclined Ladders

a) Add section to construction documents (see attached).

V-4 06100 Rough Carpentry

a) 2.6 A, Clarification. Only wood that is specifically referred to in the drawings as fire-retardant or fire-resistant is required to be fire-retardant.

V-5 08550 Wood Windows

a) 08550 1.8 B. **Change** the warranty period from 30 year to 20 year.
b) 08550 2.2 B. 3. a. 1. Change "Custom Colors: Window to match (Sherwin Williams) SW2822 Downing Sand. Brick Mold/Frame Expander to match SW 2812 Rockwood Jade."
c) 08550 2.2 B. 3. a. ADD "The finish to the aluminum can meet either the AAMA 2604 or AAMA 2605 Standard.

V-6 08800 Glazing

a) 2.02 B, 1 ADD "Type TIG"
b) 2.03 B, Add "Type FG"

V-3 09310 Ceramic Tile

a) Change 2.3, E 1 & 2 to "Base Cove: Pumice D336 Build-up Sanitary Base. 2 rows of 3x3 tile and 1 row of C-103 (1"x 3")

V-4 11451 Residential Appliances

a) 2.3, A 3. Change "Total freezer refrigerator volume to be 18.1 cu. ft.
b) 2.3, A 3, d. Add "Unit width to be 29.5" x depth 31.5"
c) 2.3, A, 9. Change Color to Black.

V-5 12491 Horizontal Louver Blinds

a) Add section to the Specification (See attached)

VI. CHANGES TO DRAWINGS:

VI-1 AS101 – Site Plan. Add "See E6/AE503 for mounting detail" to the end of note 17 (Site Reference Notes).

VI-2 SF105 – Roof Framing Plan

a) Remove note "New Dormer. See Arch. Details for Framing." From the west side (eave line) of the building.
b) Clarification: The tube steel is continuous around the entire perimeter of the building as described in details A1 & A2/SF503.

VI-3 AD101 – Demo Plans

a) Clarification: The plaster (note 24) demolition is only required at the new shear wall locations and at the pop outs at the east and north stairs (all three levels). In all other locations the new metal framed wall furring will be placed directly against the existing plaster.
b) Change General Note O to "Existing heat tape to be removed and re-installed after installation of new roof. Coordinate with Roof & Electrical Plans".
c) Salvage (10) beams (3"X 16"X 8'/10') from the lower level ceiling, south east corner or the second level stair well lobby area East side to SUU. These beams are original to the building and will be used by the University for Donor recognition.

VI-4 AE101 - Floor Plans.

a.) Add "See E6/AE503 for mounting detail" to the end of note 32.
b.) Clarification: Reference note 2 should read "see wall type "E"
c.) Reference note 7 to read: "not used"
d.) Reference note 11 to read: "not used"
e.) Reference note 19 to read: "not used"
f.) Add to reference note 32: "See E6/AE503 for anchor detail."

g.) Reference note 39 to read: “Window guard-see detail E1/AE503.”
h.) Add wood column as shown to A1,A3,C1 & C3.
i.) Delete 1-hr fire rating from Room 104 North and East walls as shown on A3/AE101.
j.) Delete west elevator door on drawing C1
k.) Moved door 302A on drawing C3

VI-5 AE102-Wall Framing Plans & Wall Types

a.) Add wood column as shown to A1,A3,C1 & C3.
b.) Delete west elevator door on drawing C1
c.) Moved door 302A on drawing C3

VI-6 AE103-Reflected Ceiling Plans

a.) Add exit signs on A3, C1, C3 and Ceiling Legend.
b.) Reference note 14 to reference “section 09992”
c.) Reference note 3 to read: “Flush mounted mechanical access panel. Paint to all access panels to match corresponding ceiling color.
d.) Add paint colors to notes 14, 15, 16.

VI-7 AE104 – Roof and Attic Plans

a.) Change all notes that reference C5/AE504 to E3/AE503 (Attic Reference Notes & A1/AE104 (3 places)

VI-8 AE105 – Furniture Plans, on A3 and C1 drawing title. Replace 1”=10’ with **1/8”=1’-0”**

VI-9 AE201 - Elevations

a.) Reference note 5 to read: “1 x 6 cementitious fascia with pre finished metal drip edge and ¾” thick cementitious beadboard soffit.
b.) Add Horn Strobe and Bell to East elevation on C1.
c.) Add reference note 41 to read “Fire alarm signal strobe and bell. See electrical systems drawings.
d.) Reference note 39 to read: “1 x 6 cementitious trim”
e.) Reference note 13 to read “New 6” gutter system. Color to match soffit-SW2828 “Colonial Revival Tan”. Alternate color-SW2822 “Downing Sand”
f.) Provide a 3200 Series Knox Box at the north building entrance. It is to be recessed in the existing masonry and will require the Recessed Mounting Kit. Final location of the box is to be determined by the Fire Marshall. Color is to be black.

VI-10 AE301- Building Sections

a.) Drawing A3, ceiling transition detail A2/AE502 to read: “A3/502”

VI-11 AE302- Wall Sections

a.) The following reference numbers to read “not used”

-3C
-3F
-5F
-6F
-6M
-7B
-7G
-7H
-7J

-12A

b.) Add reference note 8b to drawing A5 as shown

VI-12 AE401, AE402, AE403, AE404, AE407 – Enlarged Floor Plans, Interior Elevations

a.) Insert these five sheets into the set to replace existing. The changes have not been clouded. The changes include:

AE401

(1) Change to Notes 4 & 9
(2) Modification to the tile pattern to match that on AF101. Also the height changed to coordinate with the mirrors.
(3) Slight vertical movement of exit signs, sensors, etc… to reduce conflict with molding and tile.
(4) Adding blocking for owner supplied furniture (note 9)
(5) Note 7 to read "Janitor floor sink. SUU standard. See E2/AE401."
(6) Detail D1-Elevation, Detail reference to read A1/AE602 Typical. no wood casing on restroom side of door.

AE402, AE403, AE404, AE407

(1) Interior Keynotes and General notes are common to all (4) sheets
(2) Reference note 37 to read, "Conduit stubout for future "smartboard" See electrical drawings."
(3) On B1/AE407**,** elevation "A" vertical detail reference through window reads: "E1/AF101 typical"
(4) On B1/AE402 Kitchenette modified for ADA compliance.

VI-13 AE405- Enlarged Stair Plans & Stair Sections

a.) Drawing A1, Second & Third Level Stair Plan, Detail reference through guardrail at landings should read: "B2/AE503 Similar"
b.) Drawing A3, note pointing out third level hand & stair rail should reference D1/AE503 as shown.
c.) Drawing D3, note pointing out second level hand & stair rail should reference D1/AE503 as shown.
d.) Drawing A5:

-Main Level Stair Plan & Mechanical Room, Detail reference at intersection of existing masonry wall and new cmu wall should read: "A4/Ae503 Similar"
-Main Level Stair Plan & Mechanical room. Add detail reference and additional information to automatic door opener note.

-Second & Third Level Stair Plan, Detail reference through guardrail at landings should read: "B2/AE503 Similar"

VI-14 AE406- Enlarged Stair Plans & Stair Sections

a.) Drawing A5-East exterior stair to be new concrete stair and new stair guard with stainless steel anchor mounts. New stair to be built between existing stone masonry stoops as shown.
b.) Detail D1-note change in size of pipe. Add detail reference.

VI-15 AE501 Typical Details & Wall Types

a.) Add note to detail A6. Note should read: " 12 gage vertical suspension cables at 48" on center both ways."
both ways."
b.) Detail B6 & C6-note pointing to conduit should read "3/4" conduit compression brace (full height) typical. Attach to structure."

c.) Detail C6-Add the following notes
-1. Attach to bottom edge of vertical face or wood joist.
-2. "Fixtures not to compromise ceiling performance."
-3. "12 gage vertical wires at 48" on center both ways to have no less than 3 turns after being attached to suspended ceiling system."

d.) Add detail D5-section thru mechanical pipe.

VI-16 AE502- Typical Details

a.) Detail C4, C5, & C6:
-Note pointing to stair carriage should read: "1 ¾" x 14" LVL carriage. (3 required each stair run). Attach to notched stringer each side of stair. See Structural drawings for typical nailing details."
-Note pointing to stair treads should read: "Standard 5/4 wood stair treads." (no oak necessary)
-Note pointing to riser should read: "1 x 8 wood riser" (no oak Necessary)
-Note pointing to stair kickers should read: "(2) 2x4 continuous wood kicker.

b.) Detail D1 -Note addition of detail references and materials.
c.) Add Detail E3 -Automatic door opener assembly.
d.) Detail A1 -Additional gutter system information added
e.) Add Detail C3 -Gutter system and profile.

VI-17 AE503- Typical Details

a.) Detail A2, B2,& D1-See revised details.
b.) Add detail E2, Typical stair guard at stair landing as shown.
c.) Detail C5-Bathroom countertops changed to plastic laminate. Add 3 ½" skirt edge to countertop.
d.) Detail D4-additional material information.

VI-18 AE504A-Alternate Stair Finish Details

a.) Note addition of sheet as a bid alternate. Sheet includes (13) stair details and (1) enlarged typical run of stairs as example of alternate construction of North East and West staircases.

VI-19 AE601- Door Schedule & Door Types

a.) Window Types-All windows in window types to have 2" wide applied mullion (both sides of window) simulated divided light as shown
b.) All window in window types are aluminum clad wood except for window types A,C & F (45 minute fire rated windows) as shown
c.) Door Frame Types-Door frame type "H"-
-Side lights (1) each side of door opening) to be glazed with tempered insulated glass as shown
-(4) transom lights to be glazed with insulated glass as shown.
d.) Door Type 3 to have tempered insulated glass.
e.) Add Door Type 5A-sound door to match STC 60 rating of adjacent wall type "H"
f.) Door Frame Type E-to match STC 60 rating of adjacent wall type "H".
g.) Door Types 1 and 4 have been changed to 5 panel doors.
h.) Door Type 2 is not used.
i.) Doors 303A, 304A, and 305A. Change the frame type from D to J.

j.) For Doors 112B, 217A, and 313A use a Von Duprin 98/99 panic device for a single door. The vertical rods are not required.

VI-20 AE602- Door & Window Details

a.) Detail D6-Add 24 gage counter flashing to attach under bottom edge hollow metal door frame and mount on top of 6" building insulation as shown.

b.) Detail C4-Add reference indicator to typical head and sill detail.

c.) Detail E2-not used.

VII. STRUCTURAL

VII-1 See attached structural addenda

VIII. MECHANICAL

VIII-1 See attached mechanical addenda

IX. ELECTRICAL

IX-1 See attached electrical addenda

End of Addendum

INTERLOCAL COOPERATIVE AGREEMENT

DISPOSAL OF CONSTRUCTION WASTE

THIS AGREEMENT is made and entered into this___ day of_____, 2001, by and between CEDAR CITY, a body politic, hereinafter referred to as "Cedar City"; IRON COUNTY, a body politic, hereinafter referred to as "Iron County; UTAH DEPARTMENT OF TRANSPORTATION, a body politic, hereinafter referred to as "UDOT"; SOUTHERN UTAH UNIVERSITY, a state university and body politic, hereinafter referred to as "University"; IRON COUNTY SCHOOL DISTRICT, a body politic, hereinafter referred to as "District"; and any other entity, authorized by Cedar City, who wishes to abide by the terms and conditions contained herein as reflected by their signature on Exhibit "A", attached hereto and incorporated herein by this reference.

WITNESSETH:

WHEREAS, the Bulloch Pit has been authorized by the State of Utah Department Of Environmental Quality Division of Solid and Hazardous Waste to operate as a Class IV Landfill (see permit number 9611, attached hereto and incorporated herein by this reference as Exhibit "B"), hereinafter referred to as " Permit"; and

WHEREAS, Cedar City has received permission from the State of Utah to allow other local public agencies to use the landfill consistent with certain terms and conditions contained herein and in the Permit (see Letter from the State, attached hereto and incorporated herein by this reference as Exhibit "C"); and

WHEREAS, the Interlocal Cooperation Act, §11-13-1, et seq., Utah Code Annotated, 1953 as amended, permits local government entities to make the most and efficient use of their

agreement of the parties at any time. Further, any party hereto may terminate its participation in this agreement by providing written notice, to all other involved parties, at least thirty (30) days prior to the desired termination date.

2. Compliance. Cedar City is responsible to ensure compliance with all of the provisions of the Permit. All parties hereby agree, as a condition to using the landfill, to abide by all conditions of said Permit. A parties signature hereto imputes knowledge, actual or constructive, of the conditions contained in this Agreement and in the Permit.

3. Use.

A. All parties agree that a Cedar City employee must be present at the Bulloch Pit prior to any dumping. In the event that a Cedar City employee is not on site, the Cedar City Engineering Department should be contacted prior to any agency or party hereto gaining access to the pit.

B. All parties hereto agree that any waste dumped in the pit will be consistent with and authorized by the Permit. Class IV landfills are permitted to accept only construction/demolition waste, yard waste, inert waste, dead animals, agricultural wastes, untreated lumber, asphalt, and under certain conditions waste tires and materials derived from waste tires (less than four whole tires per load). Prohibited wastes as set forth in Exhibit "C" include: hazardous waste, household waste, municipal waste, special waste, commercial waste, industrial waste, appliances, furniture, carpeting not from a building demolition, contaminated soil, friable asbestos, tanks, railroad ties, cardboard not resulting from construction, metal not part of the demolition or construction, electronic equipment and treated lumber. In the event that a party hereto dumps prohibited waste into the pit, that party will be required to remove such

waste before further use of the pit is allowed. The Cedar City Engineer shall determine, consistent with the terms and provisions of the Permit and this Agreement, what material shall be considered prohibited.

4. Disposal Method. The waste shall be placed in the designated area of the landfill in lifts not to exceed 10 feet. The waste shall then be compacted sufficient for heavy rubber tired equipment to place an additional lift on top of the previous one. Vertical face shall not be used for disposal unless approved by the City Engineer.

5. Burning of Waste. The burning of waste shall not be allowed. The using party shall be responsible for all costs associated with the preventing and extinguishing of any fire. Combustible waste disposed of in the landfill shall be covered with a minimum of six inches of soil.

6. Extended Use. In the event that a party hereto will be using the pit for an extended project, each of the following guidelines shall apply:

A. at least one person, provided by the using party and trained and accepted by Cedar City, shall be at the landfill during all hours that it is open for the extended project, and shall inspect loads of waste received at the landfill to prevent the disposal of unacceptable waste.

B. besides the covering of combustible material as described above, any part of the disposal area filled to the final disposal contours during the extended project shall be leveled to the extent practicable, covered with a minimum of two feet of earthen material and contoured for storm run-off.

C. the using party shall control all dust generated during the extended project including during the construction of roads, waste disposal operations, and covering of the waste

material.

D. daily logs as shown on the attached sheet shall be maintained by the using party during the extended project The log shall include the number of the vehicles entering the landfill each day for the project, the estimated volume of waste received, the type of waste received, and the individual's signature who is keeping the log. The using party, at the conclusion of the extended project, shall return the daily logs to Cedar City.

7. Indemnification. Cedar City shall not be liable for injury or damage to persons or property occurring within or upon the Bulloch Pit, unless caused by or resulting from the negligence of Cedar City or any of Cedar City's agents, servants or employees in the operation or maintenance of the premises. All parties to this Agreement covenant to indemnify and hold harmless Cedar City from all liability, loss, costs (including attorneys' fees) and obligations on account of or arising out of any such injuries or losses, however occurring, including any acts, negligent or otherwise, by the agents, independent contractors, employees, or servants of the parties to this agreement, and said parties agree to defend Cedar City at their cost (including attorney's fees) against all such claims, actions or suits, brought against Cedar City.

6. Entire Agreement. This Agreement constitutes the entire agreement of the parties and may be changed or modified only with the written consent of all parties. Failure of any party to sign this agreement shall not render it void as to the signing parties.

IN WITNESS WHEREOF, the parties hereto have affixed their hands and seals on the date set forth hereafter.

Iron County:

Cedar City:

Harold Grant Shirley

B. Acceptable Waste

This permit is for the disposal of construction/demolition waste, inert waste, and yard waste.

C. Prohibited Waste

No hazardous waste as defined by UAC R315-301-2(29); PCB's as defined by UAC R315-301-2(52); household waste; municipal waste; special waste, commercial waste; or industrial waste may be accepted at the landfill.

D. Inspections and Inspection Access

The Permittee shall allow the Executive Secretary of the Utah Solid and Hazardous Waste Control Board or an authorized representative, including representatives from the Southwest Utah Public Health Department, to enter and inspect, at reasonable times, the landfill facility and any practice or operation regulated or required under this permit. The inspector may use photographic equipment, video camera, electronic recording, or any other reasonable means to record information during any inspection.

E. Self Inspections

The owner or operator shall, no less than quarterly, inspect the landfill site including the fencing; gate, or other access controls; and the storm water run-on/run-off controls. A record of these inspections shall be maintained in the operating record.

F. Noncompliance

In the event of noncompliance with the permit or the Solid Waste Rules, the Permittee shall take all reasonable steps to minimize releases to the environment and shall carry out such measures as are necessary to protect human health and the environment. Following a noncompliance event, the Permittee shall document the noncompliance in the operating record; shall verbally notify the Solid Waste Section of the Division of Solid and Hazardous Waste within 24 hours, or by the Division's next working day, and in writing within one week. Compliance with the terms of this permit does not constitute a defense to actions brought under any other State or Federal Law.

II. DESIGN AND CONSTRUCTION

A. Construction

Prior to the acceptance of waste, the landfill shall be constructed in the area designated and according to the design indicated in the permit application including fences, gates, and run-on and run-off controls.

B. Run-on and Run-off Control

Prior to the acceptance of waste, drainage channels and berms shall be constructed and maintained to effectively prevent run-on from the surrounding property and to prevent run-off of storm water from a 25-year storm event that has contacted waste.

III. LANDFILL OPERATION

A. Access Controls

At least one person, employed by Cedar City Corporation, shall be at the landfill during all hours that it is open and shall inspect loads of waste received at the landfill to prevent the disposal of unacceptable waste. The landfill site shall be fenced and the entry gate shall be locked during the time the landfill is not open.

B. Burning of Waste

Intentional burning of solid waste at the landfill is prohibited and all accidental fires shall be extinguished as soon as possible. Combustible waste disposed at the active face of the landfill shall be covered with a minimum of six inches of soil as needed to avoid a fire hazard.

E. Dust Control

The Permittee shall take steps as necessary to control dust generated from roads, construction, general operations, and covering the waste at the landfill.

F. Recordkeeping

The Permittee shall maintain and keep on file, either at the landfill site or as part of the Cedar City Corporation records kept at the city offices, an operating record that shall include: a copy of the permit including the permit application; the number of vehicles entering the landfill each day of operation; an estimate of the weights or volumes of waste received each day of operation; the types of waste received; records of any inspections; and records of any noncompliance.

G. Reporting

An annual report shall be prepared and submitted to the Executive Secretary by March 1 of each year for the most recent calendar or fiscal year of landfill operation. The annual report shall include: the name and address of the facility; the calendar or fiscal year covered by the report; an estimate of the annual quantity of waste disposed in tons or volume in cubic yards; the annual update of the financial assurance; any training program or procedures completed; and any other information required by the Executive Secretary.

IV. CLOSURE REQUIREMENTS

A. Financial Assurance for Closure

On or before the effective date of this Permit, the Permittee shall complete all requirements for the local government financial test which shall serve as financial assurance for closure of the Bulloch Pit Class IV Landfill. The requirements for the local government financial test shall be met each year as part of the annual update of the financial assurance contained in the annual report.

B. Closure

The final closure of the landfill shall consist of leveling waste to the extent practicable, covering with a minimum of two feet of earthen material, contouring to promote storm water run-off, and seeding with grass according to the closure plan contained in the permit application. The Permittee shall also meet the requirements of UAC R315-302-2(6) by recording with the Weber County Recorder, as part of the record of title, that the property has been used as a landfill.

C. Post-closure Care

For a period of 30 years after closure or until the Executive Secretary determines the facility has stabilized, the Permittee shall annually inspect the cover, run-off system, and fencing of the facility. Repairs shall be made as necessary to insure the integrity of these structures or systems.

V. ADMINISTRATIVE REQUIREMENTS

A. Permit Modification

Modifications to this permit may be made by the Executive Secretary when necessary as a result of new information or statutory or regulatory changes, or upon approval

by the Executive Secretary of the Permittee's request for modification. The Permittee will be given written notice of any permit modification initiated by the Executive Secretary.

B. Permit Transfer

This permit may be transferred to a new Permittee by meeting the requirements of the permit transfer provisions of UAC R315-310-9.

C. Expiration

An application for a permit renewal shall be made at least six months prior to the expiration date, as shown on the signature (cover) page, of this permit. If a timely renewal application is made but the permit renewal is not complete by the expiration date, this permit shall continue in force until renewal is completed or denied.

D. Expansion

Any expansion of the landfill facility beyond the areas designated in the permit application will require submittal of a new permit application in accordance with the requirements specified in UAC R315-310-5. The Permittee may not begin construction of any expansion until approval of the new permit is received from the Executive Secretary.

G. Revocation

This permit is subject to revocation if any condition of the permit is not being met. The Permittee will be notified in writing prior to any proposed revocation action. The Permittee may appeal any proposed revocation action and the appeal shall be subject to all applicable hearing procedures established under UAC R315-12 and the *Utah Administrative Procedures Act.*

EXHIBIT "C"

DEPARTMENT OF ENVIRONMENTAL QUALITY
DIVISION OF SOLID AND HAZARDOUS WASTE

Michael O. Leavitt
Governor
Dianne R. Nielson, Ph.D.
Executive Director
Dennis R. Downs
Director

288 North 1460 West
P.O. Box 144880
Salt Lake City, Utah 84114-4880
(801) 538-6170
(801) 538-6715 Fax
(801) 536-4414 T.D.D.
www.deq.state.ut.us Web

April 25, 2001

Kit Wareham, City Engineer
Cedar City Corporation
110 North Main Street
P.O. Box 249
Cedar City, Utah 84721 - 0249

Subject: Bulloch Pit Class IVb Landfill 2000 Permit Modification

Dear Mr. Wareham:

We have reviewed your request to modify the solid waste permit (#9611) for the Bulloch Pit Class IVb Landfill, received March 30, 2001. The requested modification is to allow other local public agencies to use the facility after agreeing to abide by the conditions of the solid waste permit. It is our understanding that no fees will be paid by these agencies for use of the landfill. The requested modification is hereby approved, with the stipulation that an employee of Cedar City be present at the site whenever it is open to other agencies.

As our staff has discussed with you, recent inspections of the landfill have shown that the gate has been left open with no attendant present and a significant quantity of household wastes have been disposed in the landfill as part of the residential cleanup. These wastes include appliances, lawnmowers, furniture, carpeting, and other wastes prohibited in Class IV landfills. Please keep in mind that Class IV landfills are permitted to accept only construction/demolition waste, yard waste, inert waste, dead animals, and under certain conditions waste tires and materials derived from waste tires (R315-301-2(10) UAC). Also, to prevent unauthorized dumping and other problems at the facility, the gate must be kept locked when Cedar City employees are not at the site.

If you have questions or need additional information, please contact Ralph Bohn or Phil Burns at 801-538-6170.

Sincerely,

Dennis R. Downs, Executive Secretary
Utah Solid and Hazardous Waste Control Board

DRD/PEB/kk

c: Joe Melling, City Manager, Cedar City
Gary L. Edwards, M.S., C.H.E.S., Director, Southwest Utah Public Health Department
Wayne Thomas, DEQ District Engineer
Scott Hacking, DEQ District Engineer

U:\SHW\SPB\PBURNS\WP\CedarCityIV\Bullochmod4-01.wpd
File: Iron Co/ Cedar City - Bulloch Pit Class IVb Landfill - #9611

DAILY OPERATING RECORD

DATE:_____

Vehicle	Volume Dumped	Type of Waste
1		
2		
3		
4		
5		
6		
7		
8		
9		
10		
11		
12		
13		
14		
15		
16		
17		
18		
19		

Total Number of Vehicles: _____

Total Volume Dumped:_____

Comments:_____

_____

_____

Operator Signature:_____

SECTION 03361

SHOTCRETE

PART 1 GENERAL

1.01 SECTION INCLUDES

A. Pneumatically applied concrete.

1.02 RELATED SECTIONS

A. Section 03100 - Concrete Forms and Accessories: Prepared forms to achieve configuration, contours, and tolerances required.

B. Section 03200 - Concrete Reinforcement.

C. Section 03300 - Cast-In-Place Concrete: Reinforcement.

1.03 REFERENCES

A. ACI 506.2 - Specification for Materials, Proportioning, and Application of Shotcrete; American Concrete Institute International; 1995.

B. ASTM C 33 - Standard Specification for Concrete Aggregates; 1999a.

C. ASTM C 150 - Standard Specification for Portland Cement; 1999a.

1.04 QUALITY ASSURANCE

A. Perform Work in accordance with ACI 506.2.

1.05 PROJECT CONDITIONS

A. Coordinate the Work with associated items that are placed within shotcrete work.

PART 2 PRODUCTS

2.01 MATERIALS

A. Cement: ASTM C 150, Type I - Normal; white color.

B. Aggregate: Normal weight, ASTM C 33, 3/8 inch maximum size.

C. Water: Clean, potable, and not detrimental to shotcrete.

D. Curing Compound: Type not detrimental to application of subsequent surface finish materials.

E. Bonding Agent: Compatible with substrate and subsequent materials.

2.02 SHOTCRETE MIX

A. Provide wet or dry mix design that gives good compaction and low percentage of rebound, is stiff enough not to sag.

B. Conform to following requirements:
   1. Compressive Strength (28 day minimum): 4,000 psi.
   2. Slump (plus or minus 1/2 inch): 1 inch.

2.03 EQUIPMENT

A. Mixing Equipment: Capable of thoroughly mixing aggregate, cement, and water in sufficient quantity to maintain continuous placement.

B. Water Supply: Uniform water pressure at discharge nozzle sufficiently greater than operating air pressure to ensure intimate mixing with aggregate-cement mix; provide water pump to system if line water pressure is inadequate.

2.04 SOURCE QUALITY CONTROL AND TESTS

A. An independent testing agency will provide inspection and testing services, as specified in Section 01400.

B. Prior to start of work, testing agency will review mix proportions, gradation, and quality of aggregate.

C. Test samples in accordance with ACI 506.2.

PART 3 EXECUTION

3.01 EXAMINATION

A. Verify existing conditions before starting work.

B. Verify that conditions are acceptable and are ready to receive work.

C. Verify that field measurements are as shown on drawings.

D. Verify fabricated forms are:
   1. True to line and dimension.
   2. Adequately braced against vibration during placement.
   3. Constructed to permit escape of trapped air during gunning operations.
   4. Constructed to minimize rebound during gunning operations.

E. Ensure correct placement of reinforcement and sufficient clearance exists around reinforcement to permit complete encasement.

F. Ensure easy access to shotcrete surfaces for screeding and finishing, and to permit uninterrupted application.

3.02 PREPARATION

A. Remove existing unsound concrete from substrate surfaces.
   1. Minimize abrupt changes in depth of area to be repaired.
   2. Remove square external corners from substrate by radiusing the edges.

B. Determine operating procedures for placement in close quarters, extended distances, or around unusual obstructions where placement velocities and mix consistency may be adjusted during application.

C. Clean and wet cementitious or absorptive substrate surfaces prior to receiving shotcrete. Keep porous surfaces damp for several hours prior to placement of shotcrete.

D. Apply bonding agent.

E. Protect adjacent surfaces not receiving shotcrete.

3.03 APPLICATION

A. Place reinforcement in accordance with ACI 506.2.

B. Use mixing and delivery equipment capable of thoroughly mixing aggregate, cement, and water in sufficient quantity to maintain continuous and uniform placement.

C. Do not apply shotcrete more than 45 minutes after adding Portland cement to the mix.

D. Do not place shotcrete on surfaces that are frozen, spongy, or where there is free water.

E. Achieve maximum compaction with minimum rebound.

F. Build-up to required thickness in multiple passes to achieve layering. Encase reinforcement with the first pass.

G. Allow each layer to take initial set before applying succeeding layers.

H. Do not permit applied shotcrete to sag, slough, or displace.

I. After initial set of final layer, remove excess material outside of forms and alignment lines.

J. Finish surface of final layer with natural gun finish.

K. Remove rebound at construction and expansion joints.

L. Remove rebound material which does not fall clear of work; discard salvaged rebound.

M. Maintain shotcrete with minimal moisture loss at relatively constant temperature for period necessary for hydration of cement and hardening of shotcrete.

N. Immediately after placement, protect shotcrete from premature drying, excessively hot or cold temperatures, and mechanical injury.

O. Apply curing compound to exposed surfaces according to manufacturer's instructions.

P. Sound test the applied material with hammer for voids. Expose voids and replace with new shotcrete ensuring full bond with adjacent work.

3.04 PROTECTION OF FINISHED WORK

A. Do not permit applied work to damage adjacent surfaces.

END OF SECTION

SECTION 05513 - ALUMINUM INCLINED LADDERS

PART 1 - GENERAL

1.1 RELATED DOCUMENTS

A. Drawings and general provisions of the Contract, including General and Supplementary Conditions and Division 1 Specification Sections, apply to this Section.

1.2 SUMMARY

A. Section includes: Fixed, inclined, aluminum, folding mezzanine access ship ladder.

B. Related sections:

1. Section 06100 - Rough Carpentry: Blocking in metal stud walls and partitions for anchorage of inclined ladders.

1.3 REFERENCES

A. American National Standards Institute (ANSI):
1. ANSI A14.3 - Ladders, Fixed, Safety Requirements.

B. American Society for Testing and Materials (ASTM) Publications:
1. ASTM B209 - Aluminum and Aluminum-Alloy Sheet and Plate.
2. ASTM B221 - Aluminum-Alloy Extruded Bar, Rod, Wire, Shape, and Tube.

1.4 SUBMITTALS

A. Provide in accordance with Section 01330 - Submittal Procedures:

1. Product data for inclined ship ladders.
2. Shop drawings showing elevations, dimensions, connections, size and type of fasteners, and fabrication and installation details.
3. Certificate showing compliance with Paragraph 1.4.
4. Installation and maintenance instructions.

1.5 QUALITY ASSURANCE

A. Access ladders shall be designed and installed to comply with ANSI A14.3.

1.6 PROJECT CONDITIONS

A. Field Measurements: Verify actual locations of walls and other construction contiguous with metal fabrications by field measurements before fabrication and indicate measurements on Shop Drawings.

1. Established Dimensions: Where field measurements cannot be made without delaying the Work, establish dimensions and proceed with fabricating metal fabrications without field measurements. Coordinate wall and other contiguous construction to ensure that actual dimensions correspond to established dimensions.
2. Provide allowance for trimming and fitting at site.

1.7 COORDINATION

A. Coordinate installation of anchorages for metal fabrications. Furnish setting drawings, templates, and directions for installing anchorages, including sleeves, concrete inserts, anchor bolts, and items with integral anchors, that are to be embedded in concrete or masonry. Deliver such items to Project site in time for installation.

PART 2 - PRODUCTS

2.1 MANUFACTURERS

A. ACL Industries, Inc., 179 Elm Street, Manchester, New Hampshire 03101; 603-668-1276.

B. ALACO Ladder Company, 5167 "G" Street, Chino, CA 91710-5143

C. Manufacturers of equivalent products submitted and approved in accordance with Section 01630 - Product Substitution Procedures.

2.2 MATERIALS

A. Extruded aluminum: ASTM B221, Alloy 6063 Temper T-6, non-spark.

B. Sheet aluminum: ASTM B209 6063 Temper T-6.

1. Finish: Mill finished aluminum.

2.3 GENERAL FABRICATION

A. Field verify ladder dimensions prior to fabrication.

B. Fabricate to designs indicated on Drawings and to meet performance requirements specified in Paragraph 1.4.

C. Components shall be welded and bolted. Ladder shall not require field assembly.

2.4 INCLINED SHIP LADDER

A. Type: Fixed, inclined, aluminum, folding mezzanine access ship ladder.
1. Basis-of-Design Product: ACL Model No. ACL-505
2. Accommodation height: approximately 14’-6”
3. Angle of inclination: 60 degrees.

4. Refer to size of ladder closet on third floor for sizing ladder.

B. Treads: Form with two 1-1/4 inches square tubes by 24 inches long with corrugated surfaces.
1. Equally space treads as indicated on Drawings and reviewed shop drawings.
2. Attach treads to stringers by welding.

C. Operation: Folding ladder shall store against wall with stringers in vertical position. Top of ladder shall pivot with sliding hinge assembly with stainless steel pin to inclined use position.

D. Stringers: 3 by 1 inch aluminum channel. Equip bottom of stringer with non-skid rubber foot. Top of stringer shall be supported by wall bracket fabricated from 3 inches by 1/4 inch thick aluminum plate.

E. Handrail: Fabricate from 1-1/4 inches diameter aluminum pipe
1. Form returns with 6 inches radius.
2. Attach rail to stringer such that rail projects approximately 6 inches above stringer.
3. Extend rail above ladder to form guardrail extending 42 inches above top tread.
4. Locate bottom of handrail 36 inches above floor.

2.5 ACCESSORIES

A. Support brackets: Support ship ladder with top wall brackets and bottom floor brackets fabricated from 2 by 1/4 inch minimum flat bar aluminum.

PART 3 - EXECUTION

3.1 PREPARATION

A. Prior to fabrication, field verify required dimensions.

B. Coordinate provision of access ladder with provision of roof hatch specified in Section 07725 - Roof Hatch to ensure height and position of ladder is compatible with roof hatch curb.

C. Coordinate ladder installation with construction of stud partitions specified in Section 09260 - Gypsum Board Assemblies to ensure adequate support and blocking for attachment of brackets and support of ladder.

D. Insulate dissimilar metals to prevent electrolysis with bituminous paint or non-absorptive isolation pad to prevent contact.

3.2 INSTALLATION

A. Install inclined ladder in accordance with manufacturer's instructions and reviewed shop drawings.

B. Securely anchor support brackets with fasteners of type and size recommended by manufacturer. Place wall brackets at top and floor brackets at bottom of ladder. Place intermediate wall brackets at 48 inches maximum.

C. Ensure ladder is plumb and rigid.

D. After installation inspect ladder to verify proper, secure, and safe installation.

E. Clean ladder using clean water and mild detergent. Do not use abrasive agent, steel wool, or harsh chemicals. Rinse with clean water.

END OF SECTION 05500

SECTION 12491 - HORIZONTAL LOUVER BLINDS

PART 1 - GENERAL

1.1 RELATED DOCUMENTS

A. Drawings and general provisions of the Contract, including General and Supplementary Conditions and Division 1 Specification Sections, apply to this Section.

1.2 SUMMARY

A. This Section includes the following:

1. Horizontal louver blinds with aluminum slats.

B. Related Sections include the following:

1. Division 6 Section "Miscellaneous Carpentry" for wood blocking and grounds for mounting horizontal louver blinds and accessories.

1.3 SUBMITTALS

A. Product Data: For each type of product indicated.

B. Shop Drawings: Show fabrication and installation details for horizontal louver blinds.

C. Samples for Initial Selection: For each type and color of horizontal louver blind indicated.

1. Include similar Samples of accessories involving color selection.

D. Window Treatment Schedule: For horizontal louver blinds. Use same designations indicated on Drawings.

E. Product Certificates: For each type of horizontal louver blind, signed by product manufacturer.

F. Maintenance Data: For horizontal louver blinds to include in maintenance manuals.

1.4 QUALITY ASSURANCE

A. Source Limitations: Obtain horizontal louver blinds through one source from a single manufacturer.

B. Fire-Test-Response Characteristics: Provide horizontal louver blinds with the fire-test-response characteristics indicated, as determined by testing identical products per test method indicated below by UL or another testing and inspecting agency acceptable to authorities having jurisdiction. Identify materials with appropriate markings of applicable testing and inspecting agency.

1. Flame-Resistance Ratings: Passes NFPA 701.

C. Product Standard: Provide horizontal louver blinds complying with WCSC A 100.1.

1.5 DELIVERY, STORAGE, AND HANDLING

A. Deliver horizontal louver blinds in factory packages, marked with manufacturer and product name, fire-test-response characteristics, and location of installation using same designations indicated on Drawings and in a window treatment schedule.

1.6 PROJECT CONDITIONS

A. Environmental Limitations: Do not install horizontal louver blinds until construction and wet and dirty finish work in spaces, including painting, is complete and dry and ambient temperature and humidity conditions are maintained at the levels indicated for Project when occupied for its intended use.

B. Field Measurements: Where horizontal louver blinds are indicated to fit to other construction, verify dimensions of other construction by field measurements before fabrication and indicate measurements on Shop Drawings. Allow clearances for operable glazed units' operation hardware throughout the entire operating range. Notify Architect of discrepancies. Coordinate fabrication schedule with construction progress to avoid delaying the Work.

PART 2 - PRODUCTS

2.1 HORIZONTAL LOUVER BLINDS, ALUMINUM SLATS

A. Provide blinds on the interior side lights for door frame types C, D, E, F, and G and the doors associated with these frame types. See AE601.

B. Available Products: Subject to compliance with requirements, products that may be incorporated into the Work include, but are not limited to, the following:

1. Bali - Classic Blind Series 3000
2. Hunter Douglas; equal product.
3. Levolor, a Newell Rubbermaid Company; equal product.
4. Springs Window Fashions Division, Inc.; equal product.

C. Slats: Aluminum; alloy and temper recommended by producer for type of use and finish indicated; with crowned profile and radiused corners.

1. Width: 1 inch.

   a. Spacing: Manufacturer's standard.

2. Thickness: Manufacturer's standard.
3. Finish: One color.

D. Headrail: Formed steel or extruded aluminum; long edges returned or rolled; fully enclosing operating mechanisms on three sides and end plugs and the following:

1. Capacity: One blind per headrail.
2. Integrated Headrail/Valance: Curved face.

3. Light-blocking lower back lip.
4. Tilt limiter with preselected degree settings.

E. Bottom Rail: Formed-steel or extruded-aluminum tube, with plastic or metal capped ends top contoured to match crowned shape of slat; with enclosed ladders and tapes to prevent contact with sill.

F. Ladders: Evenly spaced to prevent long-term slat sag.
1. For Blinds with Nominal Slat Width 2 Inches or More: Braided string.

G. Lift Cords: Manufacturer's standard.

H. Tilt Control: Enclosed worm-gear mechanism, slip clutch or detachable wand preventing overrotation, and linkage rod, and the following:

1. Tilt Operation: Manual with clear plastic rod tilter.
2. Length of Tilt Control: Manufacturer's standard.
3. Tilt: Full.

I. Lift Operation: Manual, cord lock; locks pull cord to stop blind at any position in ascending or descending travel.

J. Tilt-Control and Cord-Lock Position: Right and left side of headrail, respectively, unless otherwise indicated.

K. Valance: Aluminum strip.

1. Finish Color Characteristics: Match color, texture, pattern, and gloss of slats.

L. Mounting: End mounting, permitting easy removal and replacement without damaging blind or adjacent surfaces and finishes; with spacers and shims required for blind placement and alignment indicated.

1. Provide intermediate support brackets if end support spacing exceeds spacing recommended by manufacturer for weight and size of blind.

M. Hold-Down Brackets and Hooks or Pins: Manufacturer's standard.

N. Colors, Textures, Patterns, and Gloss: to match Springs Bali 625 DESERT SAND.

2.2 HORIZONTAL LOUVER BLIND FABRICATION

A. Concealed Components: Noncorrodible or corrosion-resistant-coated materials.

1. Lift-and-Tilt Mechanisms: With permanently lubricated moving parts.

B. Unit Sizes: Obtain units fabricated in sizes to fill window and other openings as follows, measured at 74 deg F:

1. Blind Units Installed between (inside) Jambs: Width equal to 1/4 inch per side or 1/2 inch total, plus or minus 1/8 inch, less than jamb-to-jamb dimension of opening in which each blind is installed. Length equal to 1/4 inch, plus or minus 1/8 inch, less than head-to-sill dimension of opening in which each blind is installed.

2. Blind Units Installed outside Jambs: Width and length as indicated, with terminations between blinds of end-to-end installations at centerlines of mullion or other defined vertical separations between openings.

C. Installation Brackets: Designed for easy removal and reinstallation of blind, for supporting headrail, valance, and operating hardware, and for hardware position and blind mounting method indicated.

D. Installation Fasteners: No fewer than two fasteners per bracket, fabricated from metal noncorrosive to blind hardware and adjoining construction; type designed for securing to supporting substrate; and supporting blinds and accessories under conditions of normal use.

E. Color-Coated Finish:

1. Metal: For components exposed to view, apply manufacturer's standard baked finish complying with manufacturer's written instructions for surface preparation including pretreatment, application, baking, and minimum dry film thickness.

F. Component Color: Provide rails, cords, ladders, and exposed-to-view metal and plastic matching or coordinating with slat color, unless otherwise indicated.

PART 3 - EXECUTION

3.1 EXAMINATION

A. Examine substrates, areas, and conditions, with Installer present, for compliance with requirements for installation tolerances, operational clearances, and other conditions affecting performance.

1. Proceed with installation only after unsatisfactory conditions have been corrected.

3.2 INSTALLATION

A. Install horizontal louver blinds level and plumb and aligned with adjacent units according to manufacturer's written instructions, and located so exterior slat edges in any position are not closer than 1 inch to interior face of glass. Install intermediate support as required to prevent deflection in headrail. Allow clearances between adjacent blinds and for operating glazed opening's operation hardware if any.

B. Flush Mounted: Install horizontal louver blinds with slat edges flush with finish face of opening if slats are tilted open.

3.3 ADJUSTING

A. Adjust horizontal louver blinds to operate smoothly, easily, safely, and free of binding or malfunction throughout entire operational range.

3.4 CLEANING AND PROTECTION

A. Clean horizontal louver blind surfaces after installation, according to manufacturer's written instructions.

B. Provide final protection and maintain conditions, in a manner acceptable to manufacturer and Installer, that ensure that horizontal louver blinds are without damage or deterioration at time of Substantial Completion.

C. Replace damaged horizontal louver blinds that cannot be repaired, in a manner approved by Architect, before time of Substantial Completion.

3.5 SCHEDULE

A. Provide blinds on all windows except stair windows.

END OF SECTION 12491

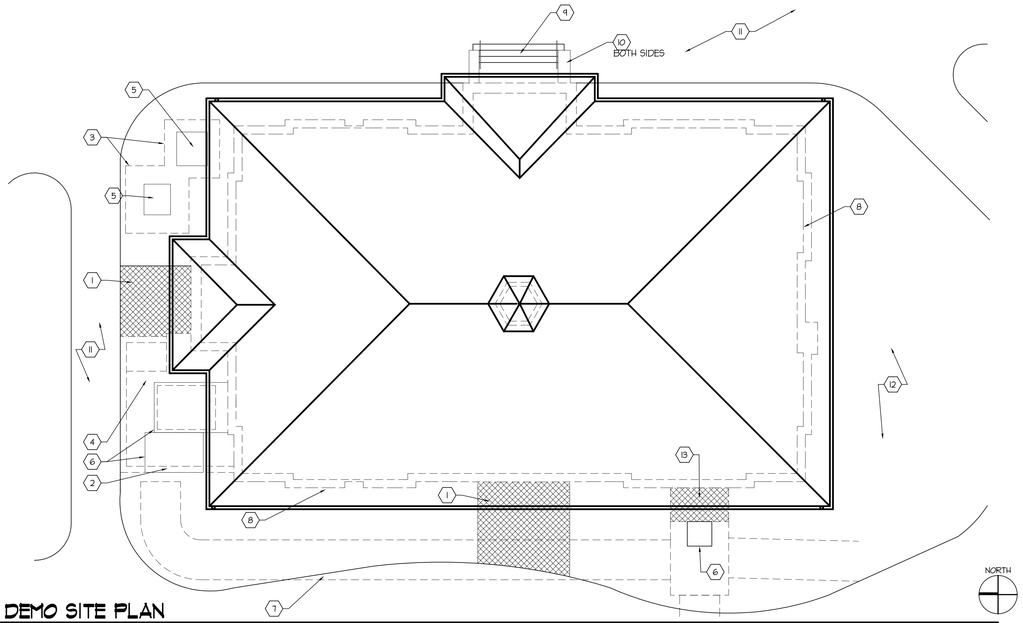

D1 DEMO SITE PLAN

1" = 10' - 0"

AS101-C3-T20

SITE DEMO REFERENCE NOTES

1. REMOVE EXISTING BRICK AND CONCRETE PATIO FROM BUILDING TO EXISTING SIDEWALK.
2. REMOVE EXISTING MECHANICAL ENCLOSURE INCLUDING FOOTINGS, FOUNDATION WALLS , SLABS AND MASONRY WALLS. DO NOT DAMAGE TUNNEL BELOW. SALVAGE ALL BRICK AND RETURN TO OWNER.
3. REMOVE EXISTING WOOD FENCE.
4. REMOVE EXISTING CONCRETE PAD AND EQUIPMENT.
5. EXISTING EQUIPMENT TO REMAIN - PROTECT DURING CONSTRUCTION.
6. EXISTING CONCRETE CAP FOR TUNNEL/UTILITY VAULT AND MAN HOLE TO REMAIN. PROTECT DURING CONSTRUCTION. CONFIRM EXTENT/LOCATION.
7. APPROXIMATE LOCATION OF UTILITY TUNNEL TO THE BRAITHWAITE BUILDING.
8. EXISTING HISTORIC MASONRY STRUCTURE TO REMAIN.
9. REMOVE EXISTING CONCRETE STAIRS.
10. EXISTING STONE TO REMAIN.
11. EXISTING SIDEWALKS TO REMAIN.
12. EXISTING TREES TO REMAIN.
13. EXCAVATION FOR INSTALLATION OF NEW UTILITY CONNECTION TO BUILDING.

GENERAL NOTES

A. PROTECT ALL TREES AROUND THE BUILDING DURING CONSTRUCTION. DO NOT DAMAGE THEM.

B. ALL SIDEWALKS AROUND THE BUILDING ARE TO BE LEFT OPEN TO THE PUBLIC EXCEPT AS NEEDED TO TEMPORARILY MOVE EQUIPMENT & MATERIALS TO THE PROJECT.

C. SALVAGE ALL EXISTING BRICK & RETURN TO OWNER.

D. PROTECT HISTORIC MASONRY (STONE AND BRICK) SURFACE AND OPENINGS DURING DEMOLITION AND CONSTRUCTION.

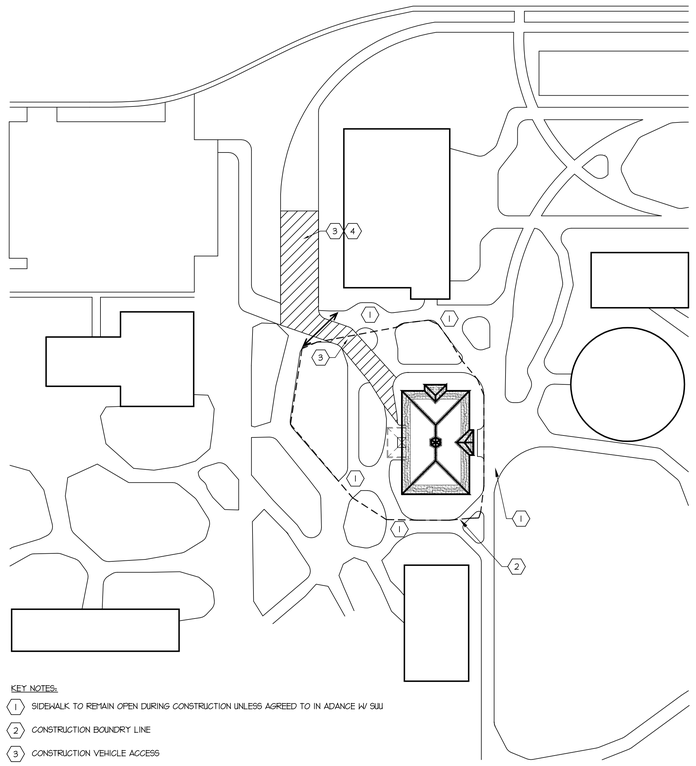

KEY NOTES:

1. SIDEWALK TO REMAIN OPEN DURING CONSTRUCTION UNLESS AGREED TO IN ADVANCE W/ SUU
2. CONSTRUCTION BOUNDRY LINE
3. CONSTRUCTION VEHICLE ACCESS
4. STAGING AREA

NORTH

C5 CAMPUS SITE PLAN

1" = 80' - 0"

AS101-C3-T20

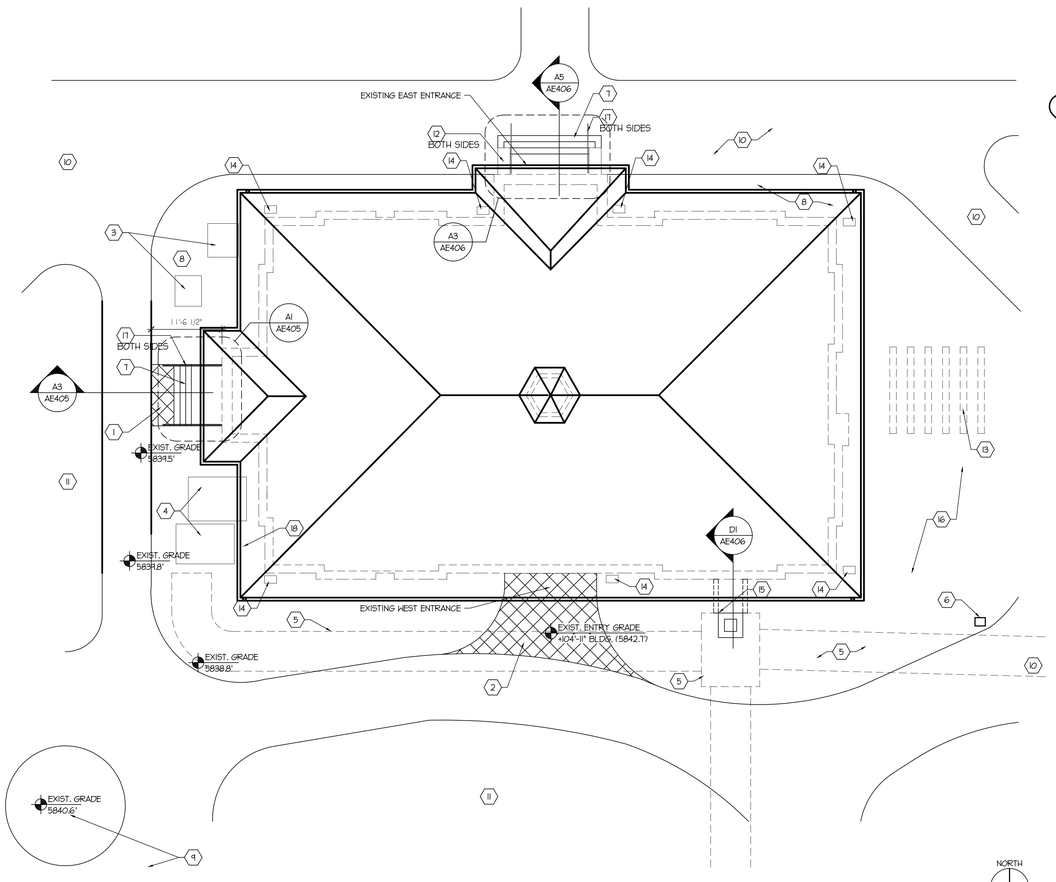

D1 SITE PLAN

1" = 10' - 0"

AS101-C3-T20

SITE REFERENCE NOTES

1. NEW CONCRETE SIDWALK AND LANDING FOR NEW BUILDING ENTRANCE.
2. NEW RAMP & STAIR FOR NEW ACCESSIBLE BLDG. ENTRANCE.
3. EXISTING TRANSFORMERS
4. EXISTING CONCRETE CAP FOR TUNNEL/UTILITY VAULT. PROTECT DURING CONSTRUCTION.
5. APPROXIMATE LOCATION OF UTILITY TUNNEL TO THE BRAITHWAITE BUILDING.
6. LOCATIONS FOR EMERGENCY BLUE LIGHT. CONTRACTOR TO SUPPLY CONDUIT FOR POWER & PHONE ONLY. REMAINDER BY SUU
7. NEW CONCRETE STAIRS. SEE E6/AE503 FOR MOUNTING DETAIL.
8. NEW LANDSCAPING. SEE LANDSCAPING PLANS.
9. REMOVE & REPLACE CONCRETE SIDEWALK WHERE USED FOR CONSTRUCTION ACCESS OR DAMAGED BY CONSTRUCTION ACTIVITIES.
10. PROTECT EXISTING SIDEWALK DURING CONSTRUCTION.
11. REPLACE EXISTING LANDSCAPING LOCATED IN THE CONSTRUCTION BOUNDARY LINE.
12. EXISTING STONE TO REMAIN. PROTECT DURING CONSTRUCTION.
13. EXISTING TRELLIS TO REMAIN. PROTECT DURING CONSTRUCTION.
14. EXISTING STORMWATER DRAIN INLET TO BE PROTECTED DURING CONSTRUCTION.
15. MECHANICAL TUNNEL CONNECTION.
16. PROTECT EXISTING TREES.
17. NEW STAIR HANDRAIL.
18. FILL IN OR ABANDON CONNECTION INTO OLD MAIN.

GENERAL NOTES

A. ALL SIDEWALKS AROUND THE BUILDING TO THE EAST AND SOUTH ARE TO BE LEFT OPEN TO THE PUBLIC EXCEPT AS NEEDED TO TEMPORARILY MOVE EQUIPMENT & MATERIALS TO THE PROJECT.

B. COORD. W/ LANDSCAPING PLANS FOR NEW IRRIGATION SYSTEM & PLANTINGS.

C. COORD. WITH PLUMBING PLANS FOR UTILITIES LEAVING THE BUILDING.

D. PROTECT & MAINTAIN ALL TREES WITHIN THE CONSTRUCTION BOUNDARY LINE EXCEPT THOSE NOTED FOR DEMOLITION BY THE LANDSCAPE ARCHITECT.

E. COORD WITH ELECTRICAL FOR POWER AND COMMUNICATION LINE LEAVING THE BUILDING.

COOPER ROBERTS SIMONSEN ARCHITECTURE

crsa

700 NORTH 200 WEST
SALT LAKE CITY,UTAH 84103
(801) 355-5915
(801) 355-9885 FAX
WWW.CRSARCHITECTS.COM

RE&A REAVELEY ENGINEERS &ASSOCIATES, INC.
Consulting Structural Engineers
1515 South 1100 East
Salt Lake City, Utah 84105-2424
(801) 486-3883 Fax (801) 485-0911

WHW ENGINEERING INC.
PROFESSIONAL MECHANICAL ENGINEERING
1354 East 3300 South Suite 200
SALT LAKE CITY, UTAH 84106
(801)485-4021, FAX 485-8536
EMAIL: excellence@whw-engineering.com

BNA Consulting Engineers Electrical Engineering & Lighting Design
635 South State Street
Salt Lake City, Utah 84111
(801) 532-2196 FAX (801) 532-2305

© 2004 BNA Consulting Engineers

bma brent morris associates ■ landscape architects
1074 hymark road fruit heights, utah, 84037 voice 801-544-0064 fax 801-546-8669 email bma@utahsbest.net

OLD MAIN BUILDING SOUTHERN UTAH UNIVERSITY

351 WEST CENTER STREET
CEDAR CITY, UTAH 84720

STATE OF UTAH

DFCM

4110 STATE OFFICE BUILDING
SALT LAKE CITY, UTAH

3	3/8/06	BID ADDENDUM 2
2		
1		
BID DOCUMENT	1/16/06	
CD 100%	7/21/04	
DD Sumbittal	7/12/04	

ARCHITECT PROJECT NO.: B04-012
DFCM PROJECT NO.: 03234730
DTN

EXISTING SITE PLAN

AS101

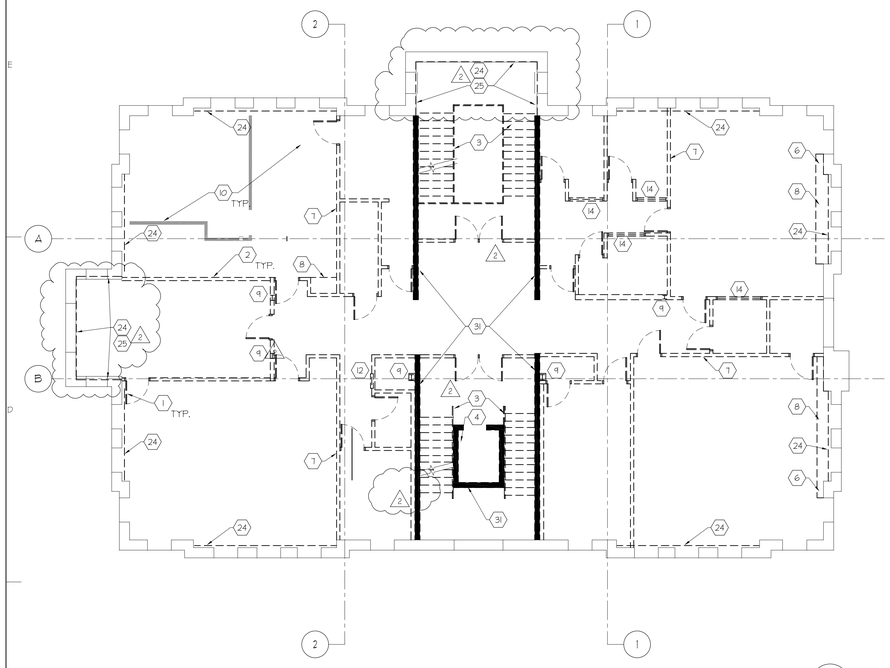

C1 SECOND LEVEL DEMO PLAN
1/8"=1'-0"

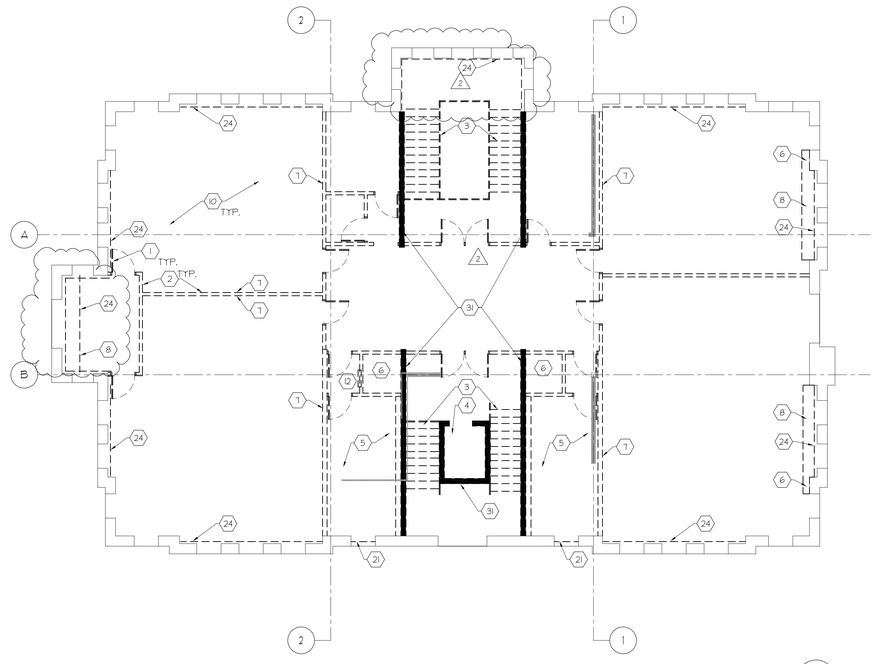

C3 THIRD LEVEL DEMO PLAN
1/8"=1'-0"

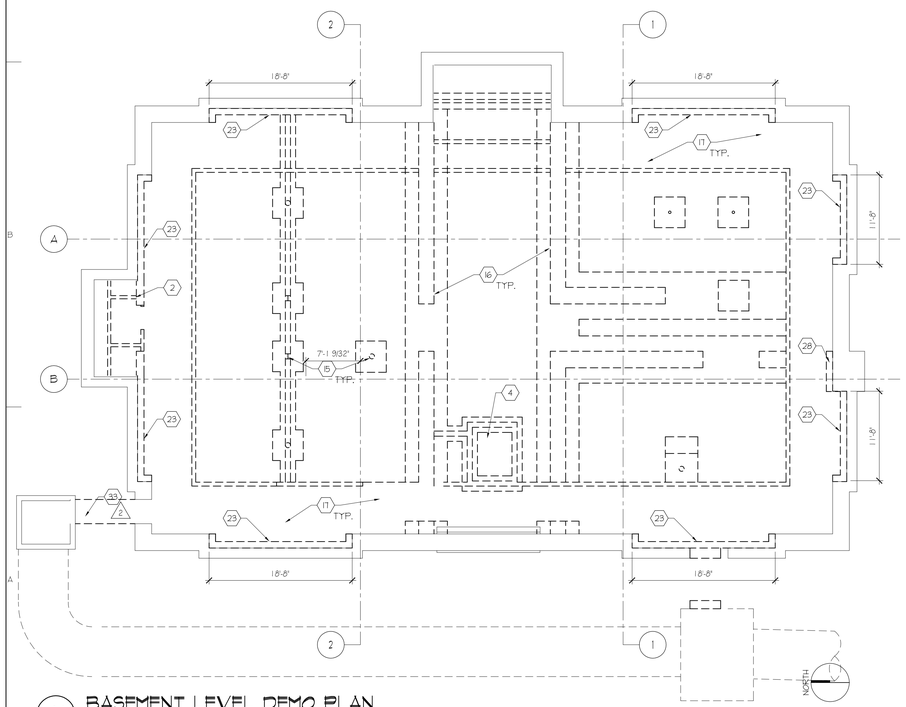

A1 BASEMENT LEVEL DEMO PLAN
1/8"=1'-0"

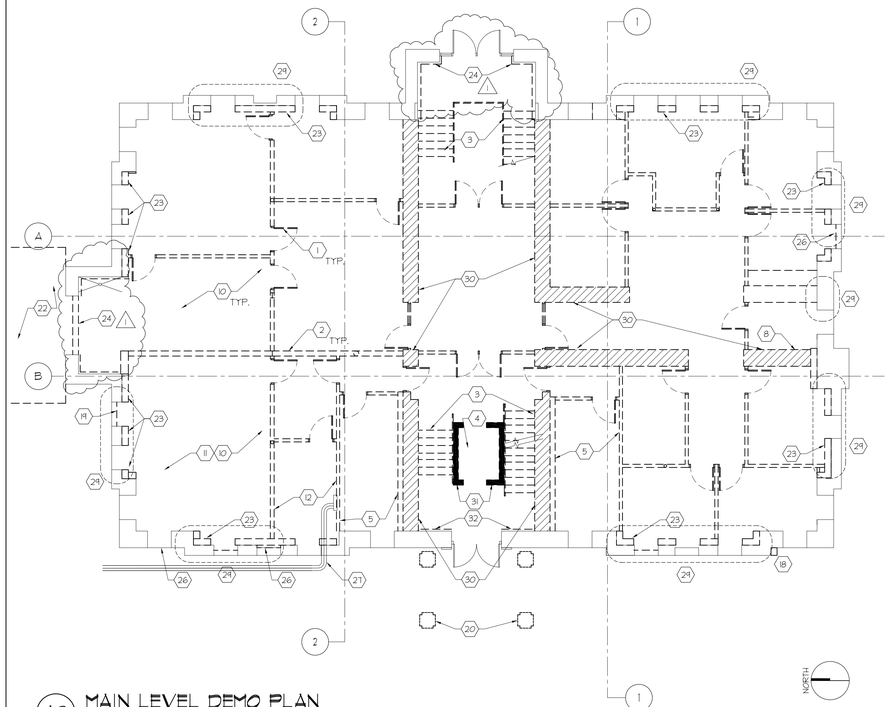

A3 MAIN LEVEL DEMO PLAN
1/8"=1'-0"

GENERAL NOTES

A. ALL EXISTING ITEMS TO BE REMOVED.

B. ALL DEMOLISHED MATERIALS TO BE LEGALLY DISPOSED OF OFF SITE.

C. ALL DRAWINGS AND STRUCTURAL DESIGNS ARE BASED ON ASSUMED CONSTRUCTION CONDITIONS AS EVIDENT BY FIELD OBSERVATIONS. IF THE EXISTING CONDITIONS VARY FROM CONDITIONS PRESENT IN THIS SET OF DOCUMENTS, THE CONTRACTOR IS TO CONTACT THE ARCHITECT AND STRUCTURAL ENGINEER BEFORE PROCEDING WITH WORK.

D. DEMOLITION WORK OF THIS CONTRACT INCLUDES INCIDENTAL REMOVAL AND/OR MODIFICATION OF MINOR FEATURES NOT SPECIALLY INDICATED IN THE DRAWINGS, BUT REQUIRED IN ORDER TO ACCOMMODATE THE FINISHED AND FUNCTIONAL DESIGN.

E. NOTIFY OWNER IF ANY ASBESTOS CONTAINING MATERIAL IS ENCOUNTERED THAT HAS NOT BEEN PREVIOUSLY IDENTIFIED.

F. CONTRACTOR IS RESPONSIBLE FOR ALL SHORING AND BRACING REQUIRED TO SAFELY CARRY OUT THE WORK OF THE CONTRACT.

G. ALL EXISTING CONDITIONS, CORRECT DIMENSION AND SIZE OF THE BUILDING ARE TO BE VERIFIED BY THE CONTRACTOR.

H. PROTECT ALL EXTERIOR WINDOWS DURING CONSTRUCTION. REMOVE AND INSTALL AS REQUIRED.

I. COORD. WITH ELECTRICAL AND MECHANICAL DRAWINGS FOR DEMOLITION WORK.

J. SALVAGE ALL EXISTING BRICK & STONE REMOVED FROM BUILDING FOR REUSE. STORE PER OWNER DIRECTIONS.

K. REMOVAL OF ALL INTERIOR WALL PLASTER FOR INSTALLATION OF NEW FRAMING, GYPSUM BOARD, ETC.

L. ROCKS UNDER EXISTING FOOTING WILL VARY IN SIZE UP TO AND GREATER THAN 24" DIA.

M. SEE STRUCTURAL DWGS. FOR EXCAVATION R EQUIRED FOR NEW FOOTINGS.

N. REMOVE ALL VINES IN WALLS AT SHEAR WALL LOCATIONS.

O. EXISTING HEAT TAPE TO BE REMOVED & REINSTALLED AFTER INSTALLATION OF NEW ROOF. COORDINATE WITH ROOF & ELECTRICAL PLANS.

P. DEMOLISH AND SALVAGE TO OWNER ALL WINDOWS

REFERENCE NOTES

1. REMOVE EXISTING DOOR AND FRAME AND RETURN TO OWNER'S STOCK.

2. REMOVE EXISTING WALL CONSTRUCTION INCLUDING ALL ELECTRICAL AND MECHANICAL COMPONENTS BACK TO THE SOURCE.

3. REMOVE EXISTING STAIR TREADS, RISERS NEWEL POSTS, RAILINGS AND BALUSTERS. CHECK WITH OWNER FOR FUTURE USE.

4. REMOVE EXISTING ELEVATOR EQUIPMENT & INFRASTRUCTURE.

5. REMOVE ALL EXISTING PLUMBING FIXTURES, RESTROOM ACCESSORIES. REMOVE EXISTING MECHANICAL PIPING TO SOURCE.

6. POTENTAIL EXISTING MECHANICAL DUCT. REMOVE EXISTING WALL CONSTRUCTION INCLUDING ALL ELECTRICAL AND MECHANICAL COMPONENTS BACK TO THE SOURCE.

7. REMOVE EXISTING CLASSROOM ACCESSORIES AND RETURN TO OWNER'S STOCK.

8. REMOVE EXISTING COUNTERTOP, SINK AND ALL MECHANICAL PIPING BACK TO SOURCE.

9. REMOVE EXISTING COLUMN.

10. REMOVE EXISTING FLOOR CONSTRUCTION.

11. REMOVE EXISTING MECHANICAL UNITS, PIPING, DUCTWORK, ETC.

12. REMOVE EXISTING ELECTRICAL EQUIPMENT.

13. REMOVE EXISTING OPENING BRICK INFILL AND STONE BEAM-SALVAGE FOR REUSE. PREPARE FOR NEW STOREFRONT SYSTEM - SEE FLOOR PLAN AND DOOR SCHEDULE.

14. REMOVE AND SALVAGE TO OWNER ONE-WAY MIRRORED GLAZING.

15. REMOVE EXISTING COLUMN AND CONCRETE FOOTING.

16. REMOVE EXISTING CONCRETE FOOTING AND FOUNDATION WALL.

17. REMOVE EXISTING CONCRETE MECHANICAL TUNNEL.

18. REMOVE CONCRETE AND ALL TRACES OF ATTACHMENT.

19. REMOVE MECHANICAL LOUVER & BRICK INFILL & PREPARE FOR NEW WINDOW. COORDINATE WITH WINDOW SCHEDULE.

20. REMOVE PORTICO STRUCTURE.

21. REMOVE MECHANICAL LOUVERS & PREPARE FOR WINDOW SASH. REPAIR FRAME AS REQUIRED FOR NEW SASH INSTALLATION. COORDINATE WITH WINDOW SCHEDULE.

22. REMOVE EXISTING PORCH. COORD. WITH ASIOI.

23. REMOVE MYTHS OF BRICKS TO ALLOW FOR INSTALLATION OF THE NEW CONCRETE SHEAR WALLS. THE BRICK IS TO BE REMOVED SO THAT THE SHEAR WALL WILL ALIGN VERTICALLY WITH THE SECOND AND THIRD FLOORS. COORD. WITH STRUCTURAL DWGS.

24. REMOVE CASTING PLASTER ON EXTERIOR MASONRY WALL.

25. DEMO FOR NEW BEAM - SEE A3/AE405 & A5/AE406 AND STRUCTURAL.

26. REMOVE BRICK INFILL &/OR MECHANICAL LOUVERS IN ORIGINAL WINDOW OPENING. PREPARE FOR INSTALLATION OF NEW WINDOW.

27. EXISTING FIBER AND TELEPHONE SERVICE LINE TO REMAIN - PROTECT DURING CONSTRUCTION.

28. REMOVE MYTHES OF BRICKS AND/OR FOUNDATION - COORD WITH STRUCTURAL.

29. PATCH AND FILL IN VOID AT EXISTING MECHANICAL CHASE IN WALL - SEE MECANICAL DEMO DRAWINGS NOTE #2.

30. REMOVE CONCRETE WALLS WITH POSSIBLE MASONRY VENEER - FIELD VERIFY.

31. REMOVE CONCRETE WALLS - FIELD VERIFY.

32. REMOVE EXISTING CONCRETE CURB.

33. REMOVE EXISTING CONDUITS EXCEPT AS REQUIRED BY ELECTRICAL.

COOPER ROBERTS SIMONSEN ARCHITECTURE

crsa

700 NORTH 200 WEST
SALT LAKE CITY,UTAH 84103
(801) 355-5915
(801) 355-9885 FAX
WWW.CRSARCHITECTS.COM

RE & A REAVELEY ENGINEERS &ASSOCIATES, INC.
Consulting Structural Engineers
1515 South 1100 East
Salt Lake City, Utah 84105-2424
(801) 486-3883 Fax (801) 485-0911

WHW ENGINEERING INC.
PROFESSIONAL MECHANICAL ENGINEERING
1354 East 3300 South Suite 200
SALT LAKE CITY, UTAH 84106
(801)466-4021, FAX 466-8536
EMAIL: excellence@whw-engineering.com

BNA Consulting Engineers
Electrical Engineering
& Lighting Design
635 South State Street
SALT LAKE CITY, Utah 84111
(801) 532-2104 FAX (801) 532-2305

© 2004 BNA Consulting Engineers

bma
brent morris associates ■ landscape architects
1574 raymond road fruit heights, utah, 84037 voice 801-544-0064 fax 801-546-9693 email bma@xmission.net

OLD MAIN BUILDING SOUTHERN UTAH UNIVERSITY

351 WEST CENTER STREET
CEDAR CITY, UTAH 84720

STATE OF UTAH

DFCM

4110 STATE OFFICE BUILDING
SALT LAKE CITY, UTAH

2	3/8/06	BID ADDENDUM 2
1		

BID DOCUMENT	1/16/06
CD 100%	7/21/04
DD Sumbittal	7/12/04

ARCHITECT PROJECT NO.: B04-012
DFCM PROJECT NO.: 03234730
DTN

DEMO PLANS

AD101

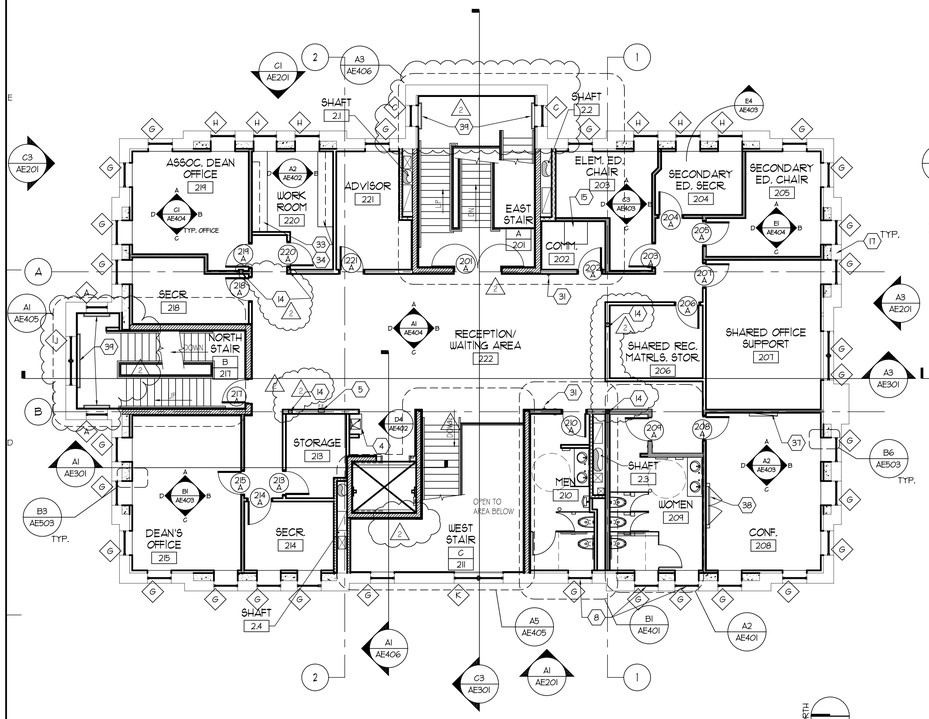

C1 SECOND LEVEL FLOOR PLAN

1/8"=1'-0"

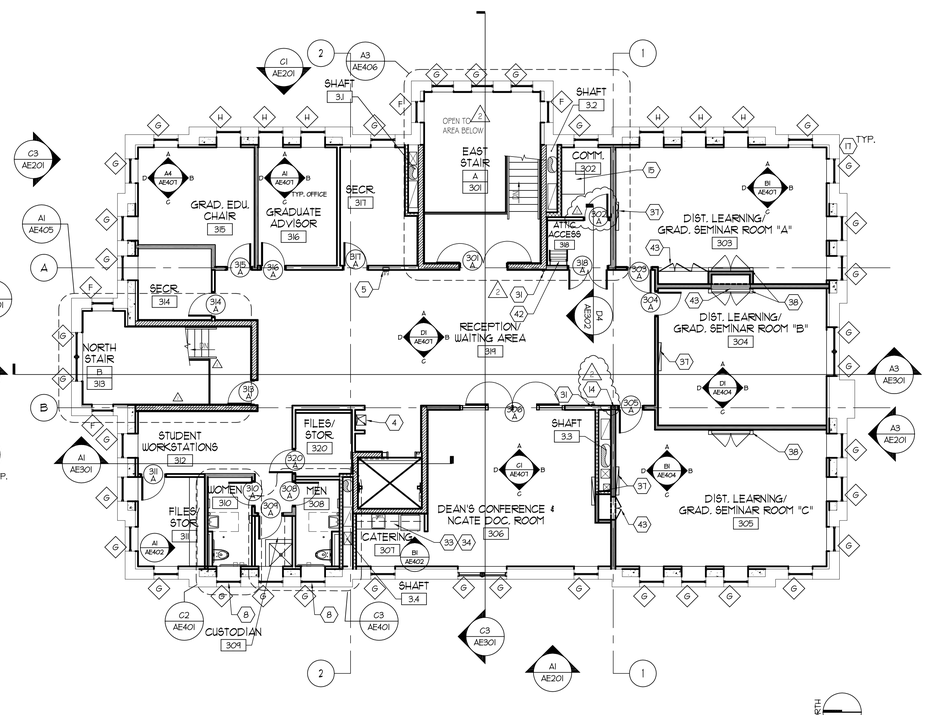

C3 THIRD LEVEL FLOOR PLAN

1/8"=1'-0"

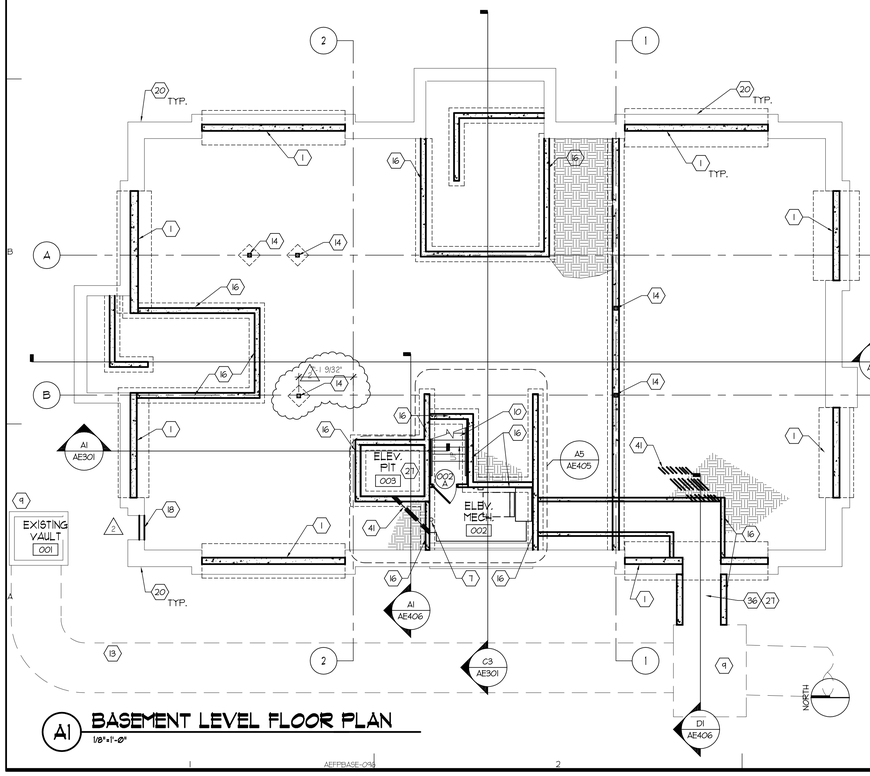

A1 BASEMENT LEVEL FLOOR PLAN

1/8"=1'-0"

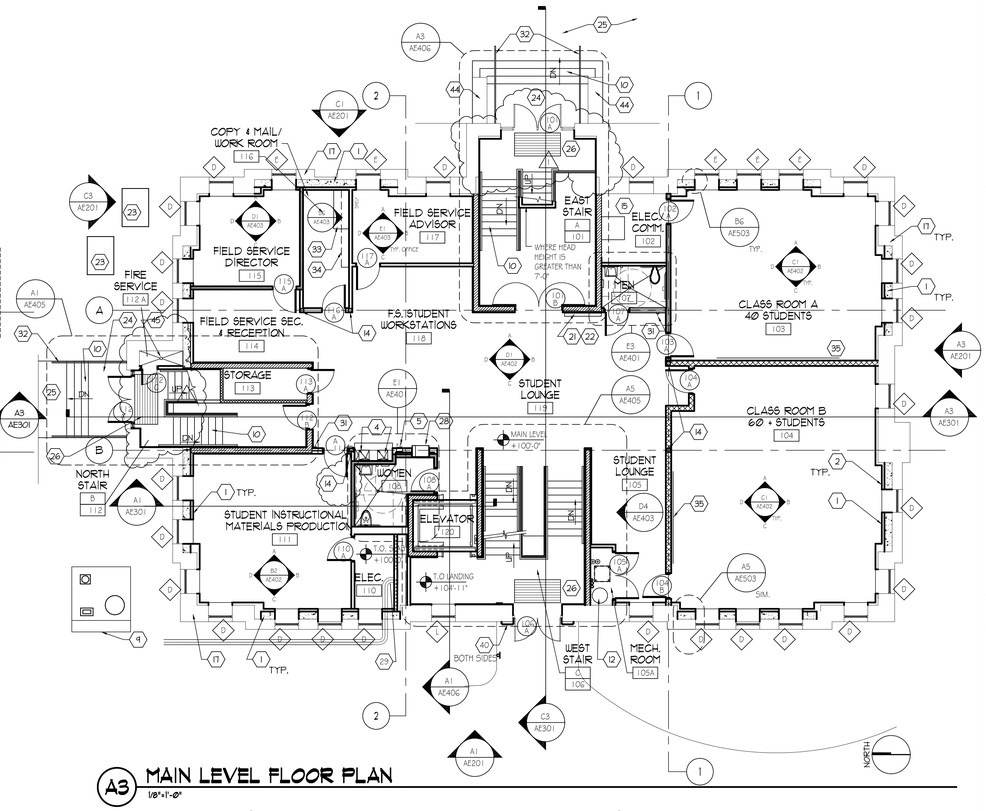

A3 MAIN LEVEL FLOOR PLAN

1/8"=1'-0"

REFERENCE NOTES

1. SHOTCRETE CONCRETE SHEAR WALL COORD. WITH STRUCTURAL AND DETAIL A5/AE501.
2. INSULATED FURRED WALL ON ALL EXISTING PERIMETER WALLS - COORD. WITH FRAMING PLAN. SEE WALL TYPE "E".
3. NOT USED.
4. DRINKING FOUNTAIN.
5. RECESSED FIRE EXTINGUISHER CABINET - SEE DETAIL B4/AE502.
6. NOT USED.
7. NOT USED
8. WINDOW WITH PRIVACY GLASS.
9. EXISTING VAULT COORD. WITH MECHANICAL.
10. NEW CONCRETE STAIR, EXPANSION JOINT AT EDGE, CONTINUOUS.
11. NOT USED.
12. WATER HEATER - COORD. WITH MECHANICAL.
13. EXISTING PIPE TUNNEL COORD. WITH MECHANICAL.
14. WOOD COLUMN. SEE STRUCTURAL.
15. COMMUNICATION RACK - COORD. WITH ELECTRICAL.
16. NEW CONCRETE STEM WALLS - COORD. WITH STRUCTURAL.
17. EXISTING MASONRY EXTERIOR WALL TO BE PROTECTED DURING CONSTRUCTION - SEE AE201 FOR RESTORATION REQUIREMENTS.
18. REMOVE EXISTING PIPE & FILL IN OPENING.
19. NOT USED.
20. EXISTING STONE FOUNDATION WALL.
21. SCROLLING MARQUEE, N.I.C.
22. BUILDING DIRECTORY, SIGNAGE ALLOWANCE ITEM.
23. EXISTING TRANSFORMERS.
24. NEW CONCRETE LANDING EXTEND FROM STAIR TO EXISTING WALK - SEE SHEET AS101.
25. EXISTING CONCRETE SIDEWALK TO REMAIN.
26. 36"x 72" ENTRY MAT.
27. CONCRETE SLAB - SEE STRUCTURAL
28. PHONE CABINET - SEE DETAIL D5/AE503.
29. EXISTING FIBER OPTIC CABLES TO BE PROTECTED DURING CONSTRUCTION - COORD. WITH ELECTRICAL.
30. PROJECTION SCREEN.
31. FUTURE SURVEILLANCE CAMERA.- COORD. CONDUIT REQUIREMENTS WITH ELECTRICAL.
32. NEW HANDRAIL - SEE SECTIONS FOR PROFILE, PAINTED - COLOR SELECTED BY ARCHITECT. SEE E6/AE605 FOR MOUNTING DETAIL.
33. WORK COUNTER. COORD. W/ INTERIOR ELEVATIONS.
34. WALL MOUNTED UPPER CABINETS. COORD. W/ INTERIOR ELEVATIONS.
35. VISUAL DISPLAY UNIT, N.I.C.
36. 48" HIGH CONCRETE CONNECTON CHASE FROM EXISTING MECHANICAL VAULT TO ELEVATOR MECHANICAL ROOM.
37. WALL MOUNTED PLASMA T.V., N.I.C
38. VISUAL DIPLAY CONFERENCE UNIT, N.I.C.
39. WINDOW GUARD - SEE DETAILS B1/AE505.
40. SANDSTONE VENEER.
41. 4" SLEEVES, DIRECT BURY - COORD. WITH ELECTRICAL
42. ALTERNATING TREAD LADDER
43. OAK DOOR IN OAK FACE FRAME - HIDDEN ATTACHMENT WITH LOCKABLE DOORS.
44. EXISTING STONE TO REMAIN - PROTECT DURING CONSTRUCTION.
45. FLOOR DRAIN, SEE MECHANICAL.

GENERAL NOTES

1. SEE G1002 AND AE102 FOR REQUIRED FIRE RATED ASSEMBLIES (WALL & CEILING)
2. FOR WALL TYPES SEE SHEET AE102 AND ADDITIONAL DETAILS.
3. SEE AE105 FOR CASEWORK BLOCKING & SWI FOR SYSTEM FURNITURE BLOCKING REQUIREMENTS.
4. MASONRY VOIDS EXPECTED IN HISTORIC EXTERIOR WALLS. FILL WITH MASONRY CAVITIES DISCOVED DURING WORK. ALLOWANCE OF 5% OF TOTAL VOLUME OF AREA INDICATED FOR REMOVAL OF INTERIOR AND EXTERIOR MASONRY.

WALL HATCH LEGEND

- 1-HOUR FIRE RATED WALL
- CMU WALL (1-HOUR FIRE RATED WALL) @ EAST & NORTH STAIR & ELEVATOR
- SHOTCRETE SHEAR WALL
- SOUND INSULATION (IN SPECIFIED WALL TYPE)

COOPER ROBERTS SIMONSEN ARCHITECTURE
crsa
700 NORTH 200 WEST
SALT LAKE CITY,UTAH 84103
(801) 355-5915
(801) 355-9885 FAX
WWW.CRSARCHITECTS.COM

OLD MAIN BUILDING
SOUTHERN UTAH UNIVERSITY
351 WEST CENTER STREET
CEDAR CITY, UTAH 84720

STATE OF UTAH

DFCM

4110 STATE OFFICE BUILDING
SALT LAKE CITY, UTAH

3/8/06	BID ADDENDUM 2
BID DOCUMENT	1/16/06
CD 100%	7/21/04
DD Sumbittal	7/12/04
ARCHITECT PROJECT NO.:	B04-012
DFCM PROJECT NO.:	03234730
DTN	

FLOOR PLANS

AE101

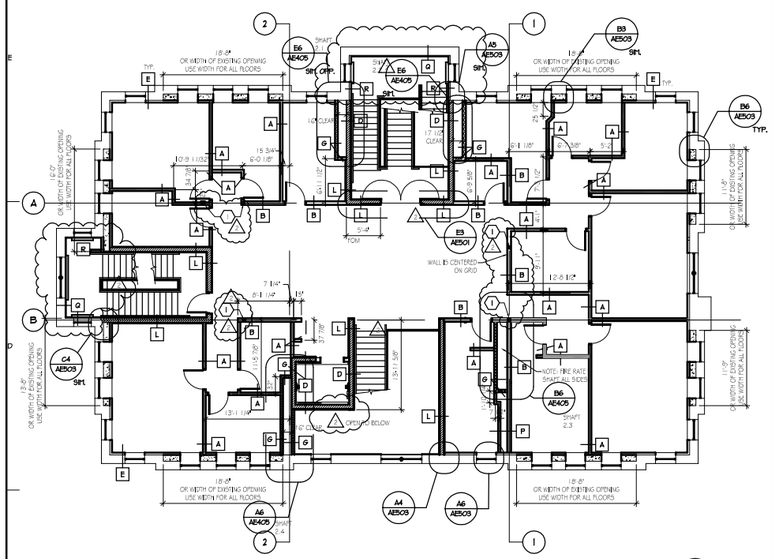

C1 SECOND LEVEL WALL FRAMING & WALL TYPES PLAN

1/8"=1'-0"

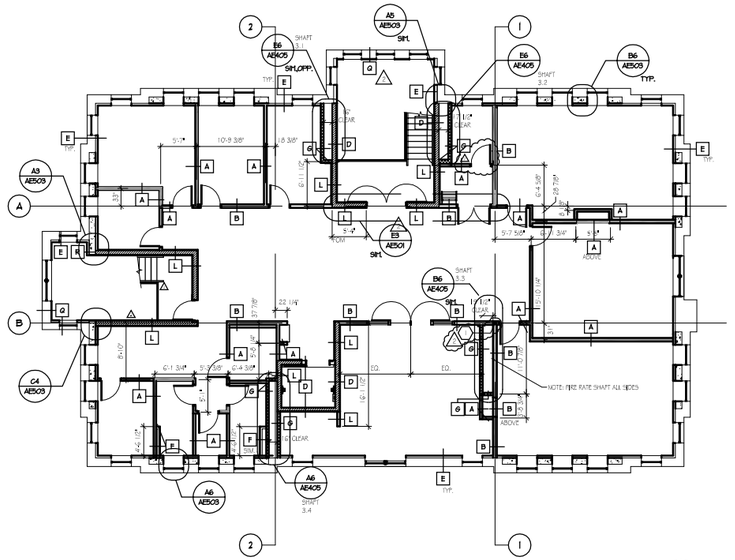

C3 THIRD LEVEL WALL FRAMING & WALL TYPES PLAN

1/8"=1'-0"

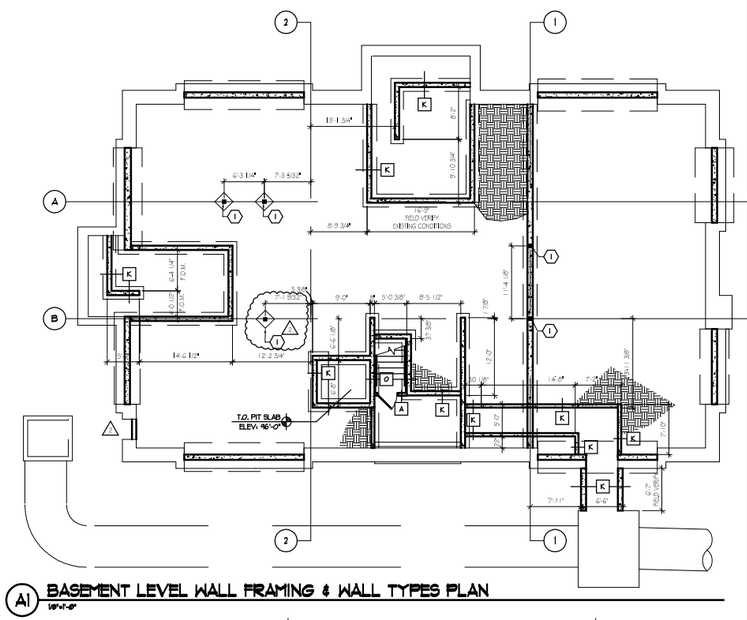

A1 BASEMENT LEVEL WALL FRAMING & WALL TYPES PLAN

1/8"=1'-0"

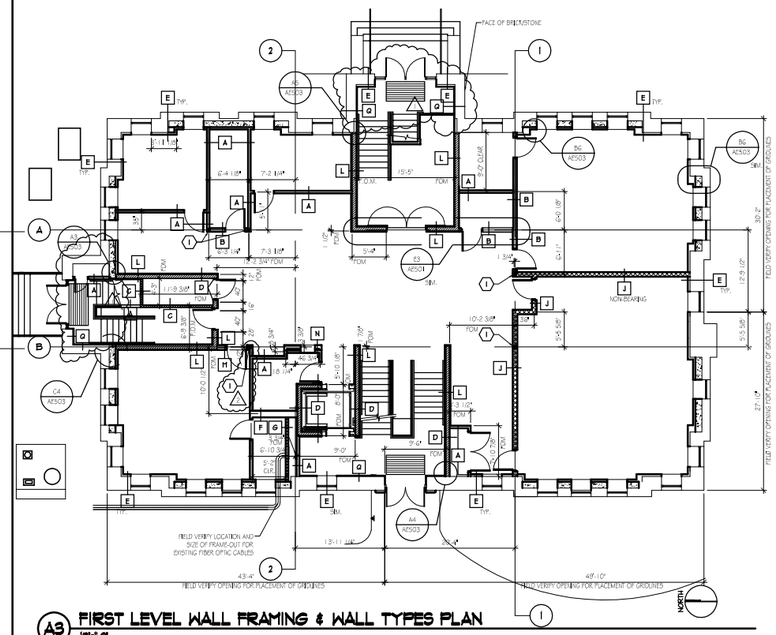

A3 FIRST LEVEL WALL FRAMING & WALL TYPES PLAN

1/8"=1'-0"

GENERAL FRAMING NOTES

A. COORD. WITH STRUCTURAL DRAWING FOR STRUCTURAL WALL REQUIREMENTS.

B. SEE FLOOR PLANS FOR WALLS REQUIRED TO BE RATED & SHEET G002.

C. SEE ELEVATIONS/BUILDING SECTIONS FOR FINISHES.

D. IN TOILET ROOMS ON CERAMIC TILED WALLS, PROVIDE CEMENTITIOUS BOARD IN LIEU OF GYPSUM BOARD

E. ALL FIRE BLOCKINGS ARE REQUIRED TO BE 10'-0" O.C. VERTICAL MAXIMUM BETWEEN STUD.

F. UNLESS OTHERWISE NOTED DIMENSION LINES ARE TO CENTER OF WALL TYPE.

G. UNLESS OTHERWISE NOTED THE CENTER OF THE DOOR IS LOCATED 1'-10" FROM WALL ON HINGE SIDE OF DOOR.

WALL TYPES

WALL TYPE A. SEE A1/AE501.
WALL TYPE B. SEE A2/AE501.
WALL TYPE C. SEE A3/AE501.
WALL TYPE D. SEE A4/AE501.
WALL TYPE E. SEE A5/AE501
WALL TYPE F. SEE B5/AE501.
WALL TYPE G. SEE B4/AE501.
WALL TYPE H. SEE B3/AE501.
WALL TYPE J. SEE B2/AE501.
WALL TYPE K. SEE B1/AE501.
WALL TYPE L. SEE G1/AE501.
WALL TYPE M. SEE C2/AE501.
WALL TYPE N. SEE C3/AE501.
WALL TYPE O. SEE C4/AE501.
WALL TYPE P. SEE C5/AE501.
WALL TYPE Q. SEE D1/AE501.
WALL TYPE R. SEE D2/AE501.

REFERENCE NOTES

1. COLUMN - COORD. WITH STRUCTURAL.

WALL LEGEND

- 1-HOUR FIRE RATED WALL
- GYP. WALL (1-HOUR FIRE RATED WALL) @ EAST & NORTH STAIR & ELEVATOR
- SHOTCRETE SHEAR WALL
- SOUND INSULATION (IN SPECIFIED WALL TYPE)
- FOM — DIMENSION TAKEN FROM FACE OF MASONRY

COOPER ROBERTS SIMONSEN ARCHITECTURE
crsa
700 NORTH 200 WEST
SALT LAKE CITY,UTAH 84103
(801) 355-5915
(801) 355-6885 FAX
WWW.CRSARCHITECTS.COM

REAVELEY ENGINEERS &ASSOCIATES, INC.
Consulting Structural Engineers
1515 South 1100 East
Salt Lake City, Utah 84105-2424
(801) 486-3883 Fax (801) 485-0911

WHW ENGINEERING INC.
PROFESSIONAL MECHANICAL ENGINEERING
1356 East 3300 South Suite 200
SALT LAKE CITY, UTAH 84106
(801) 486-4221 FAX 486-4228
EMAIL: mail@whw-engineering.com

BNA Consulting Engineers Electrical Engineering & Lighting Design
825 East 3rd Ave. South
Salt Lake City, UT 84111
(801) 532-7746 FAX (801) 532-3290
© 2004 BNA Consulting Engineers

brent morris associates ■ landscape architects
824 ogden ave. ste 1 ogden, utah, 84401 phn 801-399-0884 fx 801-399-0885 email brentmorrisassoc@msn.com

OLD MAIN BUILDING
SOUTHERN UTAH UNIVERSITY
351 WEST CENTER STREET
CEDAR CITY, UTAH 84720

STATE OF UTAH

DFCM

4110 STATE OFFICE BUILDING
SALT LAKE CITY, UTAH

3/8/06	BID ADDENDUM 2
BID DOCUMENT	1/16/06
CD 100%	7/21/04
DD Submittal	7/12/04
ARCHITECT PROJECT NO.:	B04-012
DFCM PROJECT NO.:	03234730
DTN	

WALL FRAMING PLANS & WALL TYPES

AE102

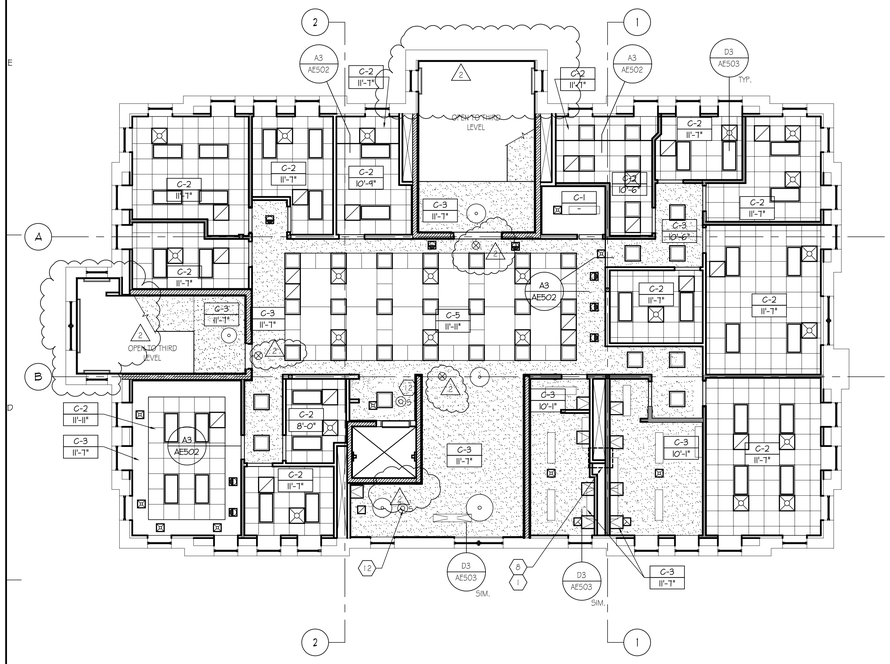

C1 SECOND LEVEL REFLECTED CEILING PLAN

1/8"=1'-0"

AEFPBASE-096

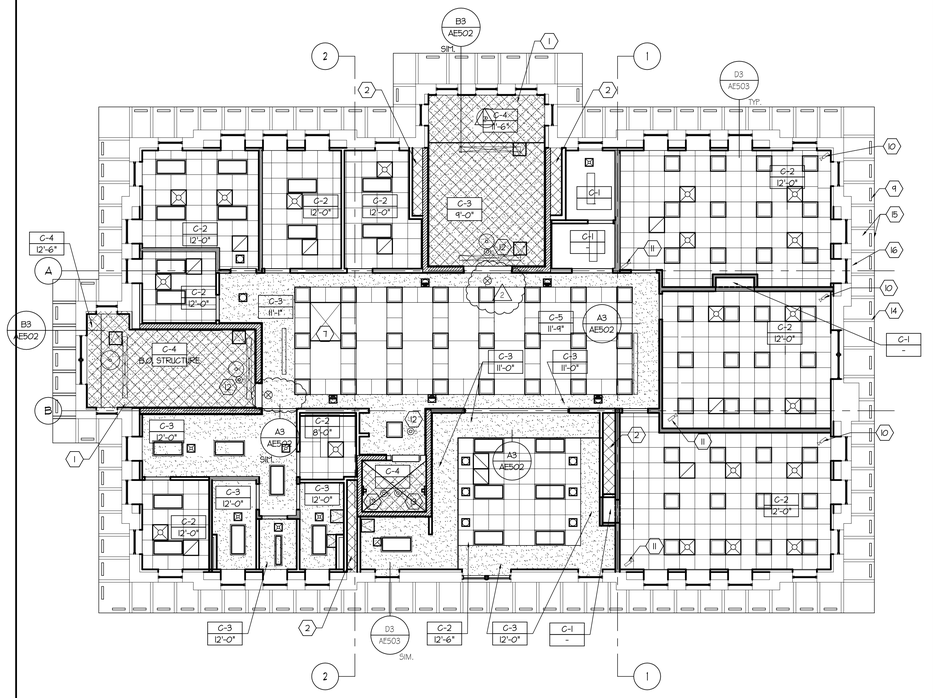

C3 THIRD LEVEL REFLECTED CEILING PLAN

1/8"=1'-0"

AEFPBASE-096

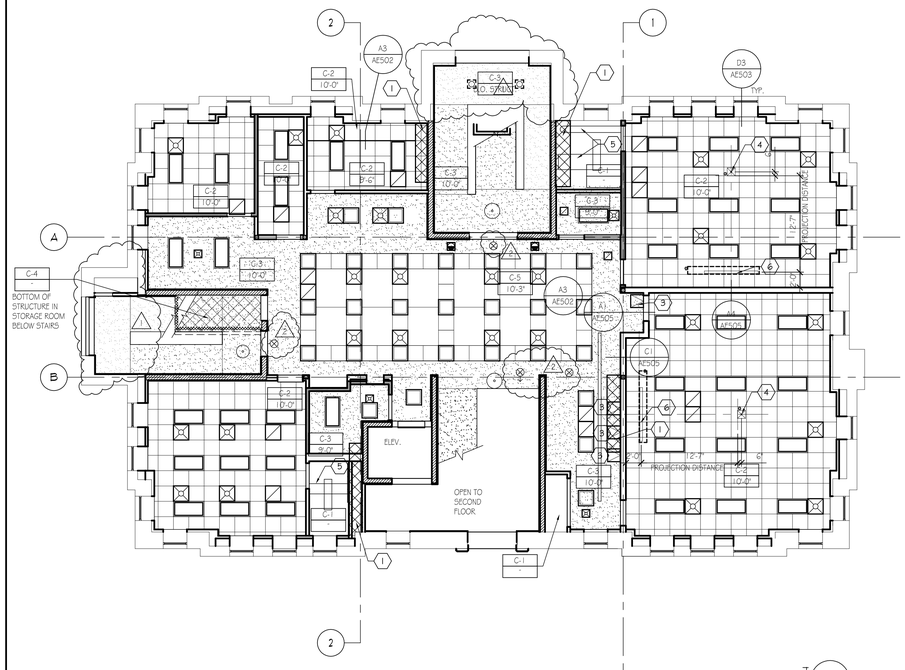

A3 MAIN LEVEL REFLECTED CEILING PLAN

1/8"=1'-0"

AEFPBASE-096

CEILING TYPES

C-1 HEIGHT	OPEN TO STRUCTURE
C-2 HEIGHT	24"x 48" METAL SUPENSION SYSTEM, WITH 24"x 24" GRID TILES
C-3 HEIGHT	5/8" PAINTED GYPSUM BOARD OVER SUSPENDED CEILING SYSTEM
C-4 HEIGHT	5/8" PAINTED GYPSUM BOARD
C-5 HEIGHT	48"x 60" TILES IN METAL SUPENSION SYSTEM & 24"x 48" GRID WITH 24"x 24" GRID TILES

GENERAL NOTES

A. CEILING MATERIALS SHALL NOT EXCEED THE FLAME SPREAD CLASSIFICATIONS IN BUILDING CODE.

B. IN SUSPENDED "T-BAR" CEILINGS, ATTIC ACCESS IS THROUGH REMOVABLE PANELS. IN GYPSUM BOARD CEILINGS,PROVIDE ACCESS HATCHES TO EACH AREA AND AS REQUIRED TO ALLOW SERVICE AND INSPECTION ACCESS TO MECHANICAL AND OTHER SYSTEMS.

C. SEE ARCHITECTUAL REFLECTED CEILING PLANS FOR PRECISE LOCATIONS AND ORIENTATION OF LIGHT FIXTURES.

D. DIMENSIONS IN RESTROOMS ARE SUBJECT TO ADJUSTMENT BASED UPON ACTUAL DIMENSIONS OF SELECTED PLUMBING FIXTURES. PRIOR TO LAYOUT OF WALLS AND PLUMBING SERVICES IN THESE AREAS, COORDINATE WITH ARCHITECT FOR UPDATED DIMENSIONING.

E. SOUND RATED CEILINGS/FLOOR AND CEILING/ROOF CONSTRUCTION REQUIRED IN ROOMS WITH SOUND RATED WALLS, SEE FINISH SCHEDULE AP101 AND E6/AE501

SUSPENDED GYPSUM BOARD CEILING

1-HOUR RATED FLOOR/CEILING OR ROOF/CEILING ASSEMBLY SEE D6/AE501, FOR MECHANICAL SHAFTS SEE C6/AE504 & D6/AE504

SUSPENDED ACOUSTICAL CEILING

CEILING LEGEND

SUPPLY AIR DIFFUSER - COORDINATE WITH MECHANICAL FOR TYPE & SIZE

RETURN AIR GRILLE - COORDINATE WITH MECHANICAL FOR TYPE & SIZE

VENT FAN - COORDINATE WITH MECHANICAL & ELECTRICAL FOR TYPE & SIZE

RECESSED DOWN LIGHT - COORDINATE WITH ELECTRICAL FOR TYPE & SIZE

RECESSED SPOT LIGHT - COORDINATE WITH ELECTRICAL FOR TYPE & SIZE

PENDANT LIGHT FIXTURE - COORDINATE WITH ELECTRICAL FOR TYPE & SIZE

24x 48 FLUORESCENT LIGHT - COORDINATE WITH ELECTRICAL FOR TYPE & SIZE

24x 24 FLUORESCENT LIGHT - COORDINATE WITH ELECTRICAL FOR TYPE & SIZE

12x 48 FLUORESCENT LIGHT - COORDINATE WITH ELECTRICAL FOR TYPE & SIZE

FLUORESCENT STRIP LIGHT - COORDINATE WITH ELECTRICAL FOR TYPE & SIZE

ACCESS PANEL

WALL MOUNTED EXIT LIGHT

CEILING MOUNTED EXIT LIGHT

REFERENCE NOTES

1. 1-HOUR RATED BOTTOM OF SHAFT ASSEMBLY. LOCATE BELOW THE SECOND FLOOR DECK - SEE SECTIONS A4 & A5/ AE302.

2. 1-HOUR RATED TOP OF SHAFT ASSEMBLY. LOCATE ABOVE THE THIRD FLOOR CEILING JOISTS - SEE SECTIONS A4 & A5/ AE302.

3. MECHANICAL ACCESS PANEL.

4. PROJECTOR ON SUSPENDED CEILING MOUNT W/ CABLE COVER. PROJECTION DISTANCE AND MOUNTING BASED ON MITSUBISHI XE400 SERIES PROJECTOR - REDESIGN MOUNTING IF ANOTHER PROJECTOR/MODEL PROVIDED.

5. EXPOSED MECHANICAL DUCT.

6. 7'x7' ELECTRIC RECESSED PROJECTION SCREEN SEE DETAIL G1/AE502.

7. REMOVABLE TILE TO ACCESS HOIST WAY ABOVE - SEE ATTIC PLAN.

8. FIRE PROOF AS NECESSARY BETWEEN 2nd FLOOR CEILING & 3rd FLOOR DUE TO STEP IN MECHANICAL SHAFT.

9. VENTILATION STRIPS. SEE A1/AE502

10. VIDEO CAMERA. DIRECT AT INSTRUCTOR.

11. VIDEO CAMERA. DIRECT AT STUDENT MODULES.

12. SMOKE DETECTOR. SEE ELECTRICAL.

13. HEAT DETECTOR. SEE ELECTRICAL.

14. EXISTING CORBEL TO REMAIN. PREP, FOR PAINT. SEE SECTION 09902
PAINT - SW #2854, "CARIBBEAN CORAL" - ALT. SW 2812, "ROCKWOOD JADE".

15. EXISTING SOFFIT & FASCIA TO REMAIN. PREP, FOR PAINT.
PAINT TO MATCH SOFFIT - SW #2828, "COLONIAL REVIVAL TAN" - ALT. SW 2822, "DOWNING SAND".

16. EXISTING MOLDING TO REMAIN. PREP, FOR PAINT
PAINT TO MATCH SOFFIT - SW #2828, "COLONIAL REVIVAL TAN" - ALT. SW 2822, "DOWNING SAND".

COOPER ROBERTS SIMONSEN ARCHITECTURE

crsa

700 NORTH 200 WEST
SALT LAKE CITY,UTAH 84103
(801) 355-5915
(801) 355-9885 FAX
WWW.CRSARCHITECTS.COM

REAVELEY ENGINEERS &ASSOCIATES, INC.
Consulting Structural Engineers
1515 South 1100 East
Salt Lake City, Utah 84105-2424
(801) 486-3883 Fax (801) 485-0911

WHW ENGINEERING INC.
PROFESSIONAL MECHANICAL ENGINEERING
1354 East 3300 South Suite 200
SALT LAKE CITY, UTAH 84106
(801)466-4421, FAX 466-8536
EMAIL: excellence@whw-engineering.com

BNA Consulting Engineers
Electrical Engineering
& Lighting Design
635 South 700e Street
Salt Lake City, Utah 84111 FAX (801) 532-2305
(801) 532-2746

© 2004 BNA Consulting Engineers

bma
brent morris associates ■ landscape architects
1574 raymond road fruit heights, utah, 84037 voice 801-544-0064 fax 801-546-9869 email bma@xmission.net

OLD MAIN BUILDING SOUTHERN UTAH UNIVERSITY

351 WEST CENTER STREET
CEDAR CITY, UTAH 84720

STATE OF UTAH

DFCM

4110 STATE OFFICE BUILDING
SALT LAKE CITY, UTAH

3/8/06	BID ADDENDUM 2
BID DOCUMENT	1/16/06
CD 100%	7/21/04
DD Sumbittal	7/12/04
ARCHITECT PROJECT NO.:	B04-012
DFCM PROJECT NO.:	03234730
	DTN

REFLECTED CEILING PLANS

AE103

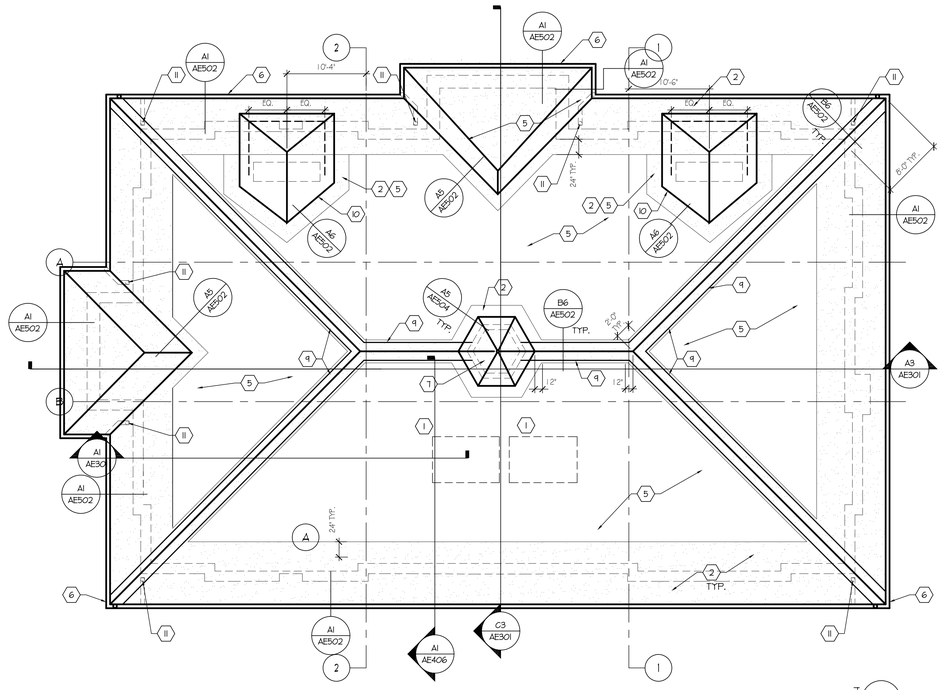

C1 ROOF PLAN

1/8" 1'-0"

AEFFBASE-0916

DRAFT STOPPING
NOT REQUIRED PER IBC 711.4.3, EXCEPTION WITH INSULATION OF F.S.

ATTIC VENTILATION SUMMARY			AREA PROVIDED		
			SOFFIT	RIDGE	
ATTIC SPACE	AREA	REQUIRED VENTILATION AREA	0.0625 FT²/L.F.	0.1138 FT²/L.F.	
TOTAL	5,290 S.F.	35.21 S.F.	20.34 S.F.	19.03 S.F.	39.37 S.F.

ROOF DRAINAGE SUMMARY						
ROOF AREA	AREA	MODIFYING FACTOR	MODIFIED AREA	AMOUNT OF WATER I IN. OF DOWN SPOUT WILL DRAIN	REQ'D DOWN SPOUT AREA	ASSUMING 4 DOWN SPOUTS
HIGH ROOF	5,290	1.10	5,819	230	25.3 IN²	6.325 -3" ROUND 7.07 IN / OR 3X4 RECTANGULAR

C5 ROOF & ATTIC SUMMARY

1/8"=1'-0"

AE104-01-96

ROOF REFERENCE NOTES

1. PATCH ROOF STRUCTURE REMOVED FOR INSTALLATION OF ATTIC MECHANICAL EQUIPMENT. COORD WITH STRUCTURAL.
2. SELF ADHERING SHEET UNDERLAYMENT. PROVIDE FELT UNDERLAYMENT IN ALL OTHER AREAS.
3. NOT USED.
4. NOT USED.
5. WOOD SHINGLE ROOF - SEE DETAIL A1/AE502.
6. PREFINISHED METAL RAIN GUTTER, CONTINUOUS.
7. CUPOLA - SEE DETAILS A5 & A6/ AE504
8. NOT USED
9. RIDGE VENT
10. NEW DORMER FOR MECHANICAL FRESH AIR - SEE C2 & C3/AE503.
11. DOWNSPOUT.

ATTIC PLAN GENERAL NOTES

A. COORD. WITH MECHANICAL AND STRUCTURAL PLANS FOR MECHANICAL PLACEMENT.

B. SEE BUILDING SECTIONS FOR PLACEMENT OF INSULATION.

C. MECHANICAL DUCTS WILL NOT BLOCK ACCESS (UP TO 1'-0" HEIGHT) ALONG THE ATTIC WALKWAY.

D. SEE DETAIL B3/AE501 FOR WALL TYPE "H"

ATTIC REFERENCE NOTES

1. WOOD ATTIC GUARDRAIL. SEE DETAIL E3/AE503
2. HR. TOP OF SHAFT ASSEMBLY. LOCATE ABOVE THE THIRD FLOOR CEILING JOISTS. SEE D6/AE501 & C6/AE504.
3. VIBRATION ISOLATION GAP BETWEEN CATWALK & WALL STRUCTURE.
4. ALUMINUM INCLINED LADDER.
5. 1 HOUR FIRE RATED ATTIC ACCESS HATCH.
6. INSTALL SALVAGED CEILING JOISTS. COORDINATE WITH STRUCTURAL
7. ELEVATOR SHAFT BELOW.
8. EXISTING STEEL TRUSS.
9. ATTIC FLOOR FRAMING - 11-7/8" TJI 560 @ 16" O.C. COORDINATE WITH STRUCTURAL.
10. LINE OF EXISTING CEILING JOISTS.
11. LINE OF CONCRETE SLAB.
12. ATTIC OPENING WITH REMOVABLE METAL GRATE.
13. HOIST BEAM - COORD. WITH STRUCTURAL.
14. CATWALK - SEE DETAIL E5/AE503.
15. ISOLATOR - COORD. WITH STRUCTURAL.
16. 1 1/2" STANDARD PIPE VERTICAL SUPPORT BETWEEN GUARDRAIL (NOTE #1) WITH REMOVABLE SAFETY CHAIN ALONG OPENING @ 48" O.C. MAX.

CONCRETE FLOOR DECK

ATTIC CATWALK OVER EXISTING STRUCTURE

RAISED ATTIC CATWALK OVER NEW STRUCTURE

1 HR. FIRE RATED SHAFT LID

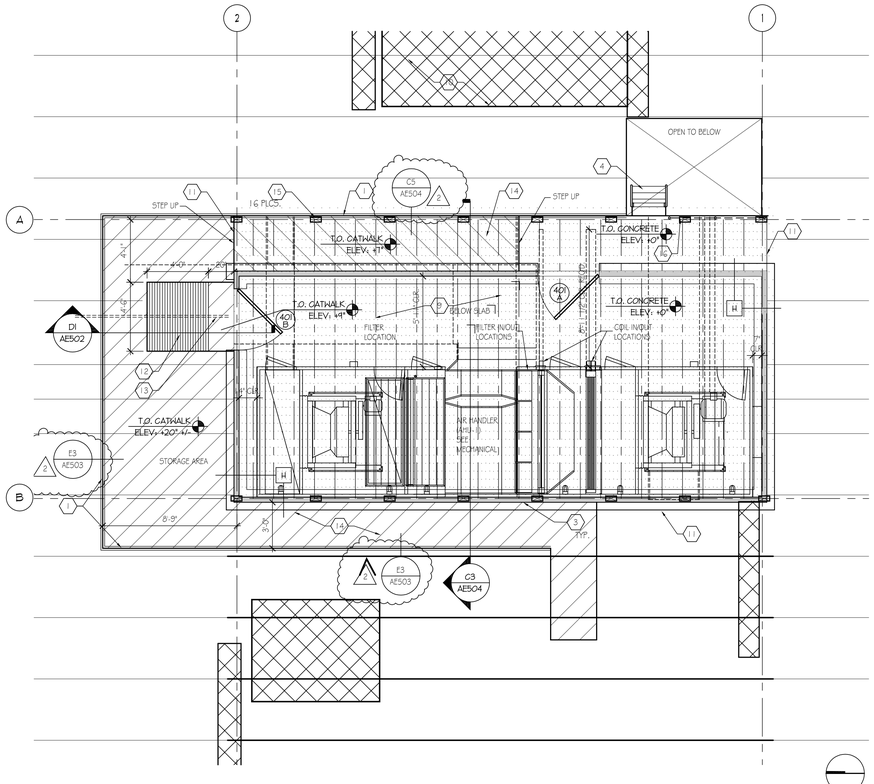

A1 ENLARGED ATTIC PLAN

1/4" 1'-0"

AEFFBASE-0916

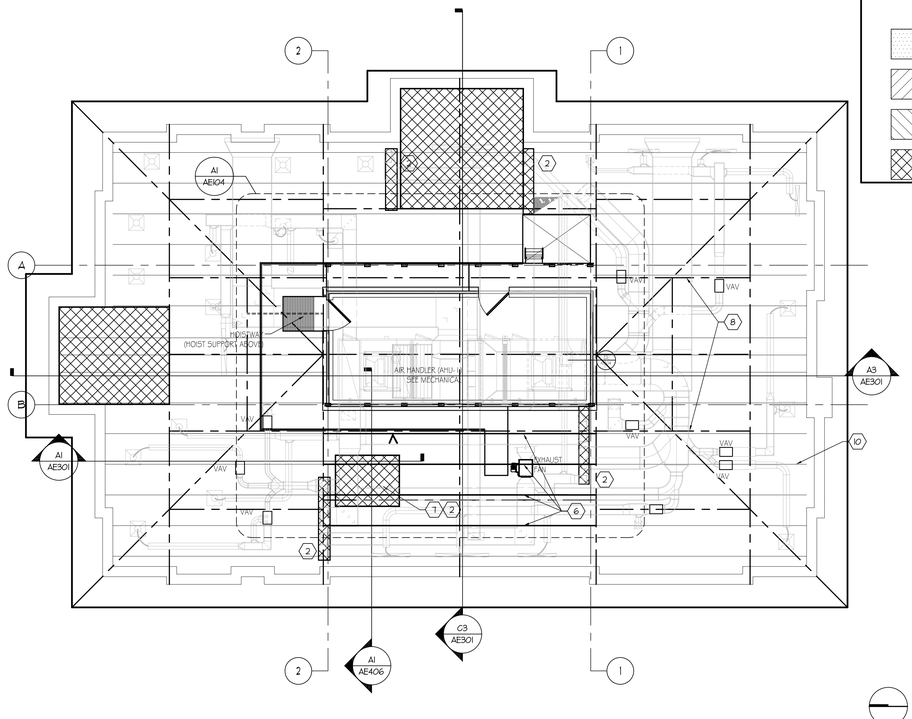

A3 ATTIC REFERENCE PLAN

1/8" 1'-0"

AEFFBASE-0916

COOPER ROBERTS SIMONSEN ARCHITECTURE
crsa
700 NORTH 200 WEST
SALT LAKE CITY,UTAH 84103
(801) 355-5915
(801) 355-9885 FAX
WWW.CRSARCHITECTS.COM

REAVELEY ENGINEERS &ASSOCIATES, INC.
Consulting Structural Engineers
1515 South 1100 East
Salt Lake City, Utah 84105-2424
(801) 486-3883 Fax (801) 485-0911

WHW ENGINEERING INC.
PROFESSIONAL MECHANICAL ENGINEERING
1354 East 3300 South Suite 200
SALT LAKE CITY, UTAH 84106
(801)466-4021, FAX 466-8536
EMAIL: excellence@whw-engineering.com

BNA Consulting Engineers
Electrical Engineering & Lighting Design
635 South Stone Street
Salt Lake City, Utah 84111 FAX (801) 532-2305
© 2004 BNA Consulting Engineers
bma
brent morris associates ■ landscape architects
1574 raymond road holt heights, utah, 84037 voice 801-544-0064 fax 801-546-9669 email bma@xmission.net

OLD MAIN BUILDING
SOUTHERN UTAH UNIVERSITY
351 WEST CENTER STREET
CEDAR CITY, UTAH 84720

STATE OF UTAH

DFCM

4110 STATE OFFICE BUILDING
SALT LAKE CITY, UTAH

3/8/06	BID ADDENDUM 2	
BID DOCUMENT	1/16/06	
CD 100%	7/21/04	
DD Sumbittal	7/12/04	
ARCHITECT PROJECT NO.:	B04-012	
DFCM PROJECT NO.:	03234730	
	DTN	

ROOF, ATTIC ROOF SUMMARY

AE104

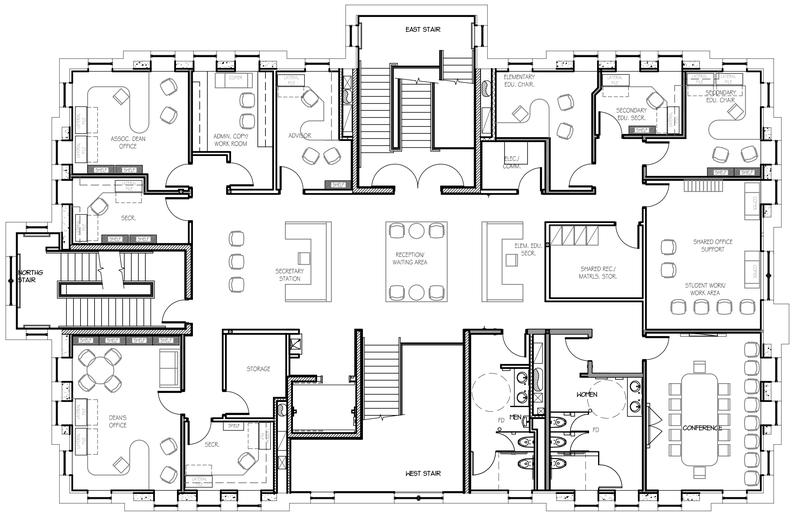

NORTH

C1 SECOND LEVEL FURNITURE PLAN

1/8"=1'-0"

AEFFBASE-096

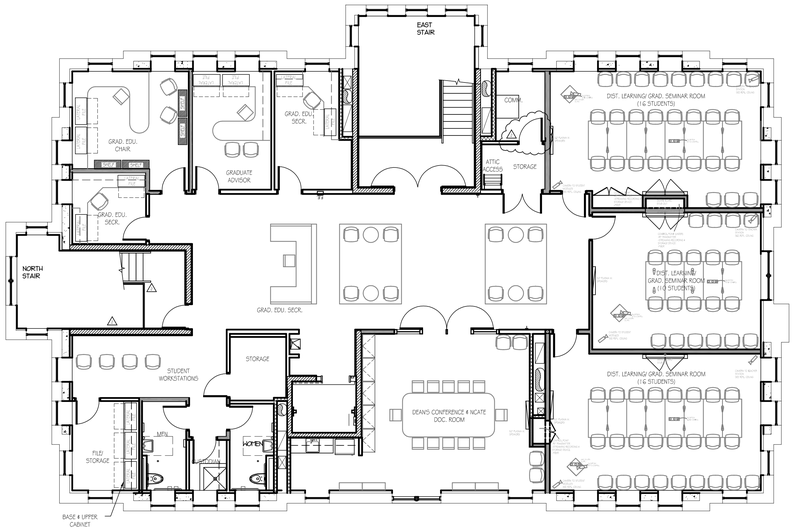

NORTH

C3 THIRD LEVEL FURNITURE PLAN

1/8"=1'-0"

AEFFBASE-096

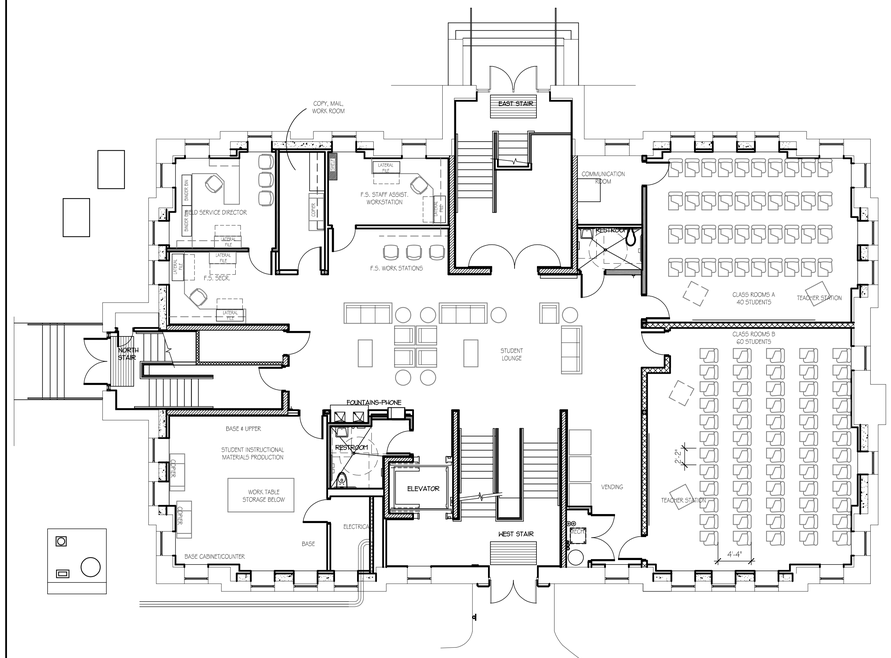

NORTH

A3 MAIN LEVEL FURNITURE PLAN

1/8"=1'-0"

AEFFBASE-096

GENERAL NOTES

1. SEE G1002 AND AE102 FOR REQUIRED FIRE RATED ASSEMBLIES (WALL & CEILING)
2. FOR WALL TYPES SEE SHEET AE102 AND ADDITIONAL DETAILS.
3. SEE AE105 FOR CASEWORK BLOCKING & SWI FOR SYSTEM FURNITURE BLOCKING REQUIREMENTS.
4. FURNITURE FOR REFERENCE ONLY
5. SHELVING SHOWN HATCHED FOR BLOCKING COORDINATION, SHELVING N.I.C.

COOPER
ROBERTS
SIMONSEN
ARCHITECTURE

crsa

700 NORTH 200 WEST
SALT LAKE CITY,UTAH 84103
(801) 355-5915
(801) 355-9885 FAX
WWW.CRSARCHITECTS.COM

OLD MAIN BUILDING SOUTHERN UTAH UNIVERSITY

351 WEST CENTER STREET
CEDAR CITY, UTAH 84720

STATE OF UTAH

DFCM

4110 STATE OFFICE BUILDING
SALT LAKE CITY, UTAH

3/8/06	BID ADDENDUM 2
BID DOCUMENT	1/16/06
CD 100%	7/21/04
DD Sumbittal	7/12/04
ARCHITECT PROJECT NO.:	B04-012
DFCM PROJECT NO.:	03234730

FURNITURE PLANS

AE105

C1 EAST ELEVATION

SCALE: 1/8" = 1'-0"

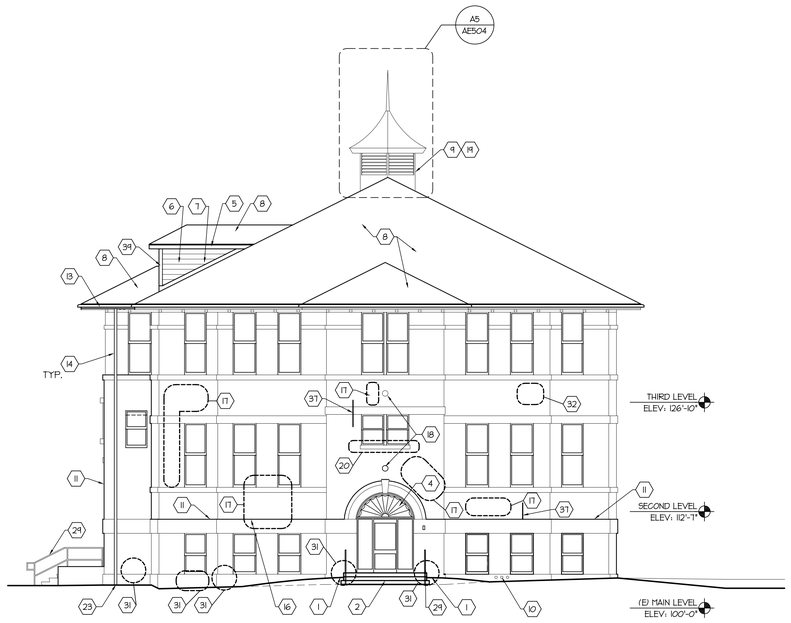

C3 NORTH ELEVATION

SCALE: 1/8" = 1'-0"

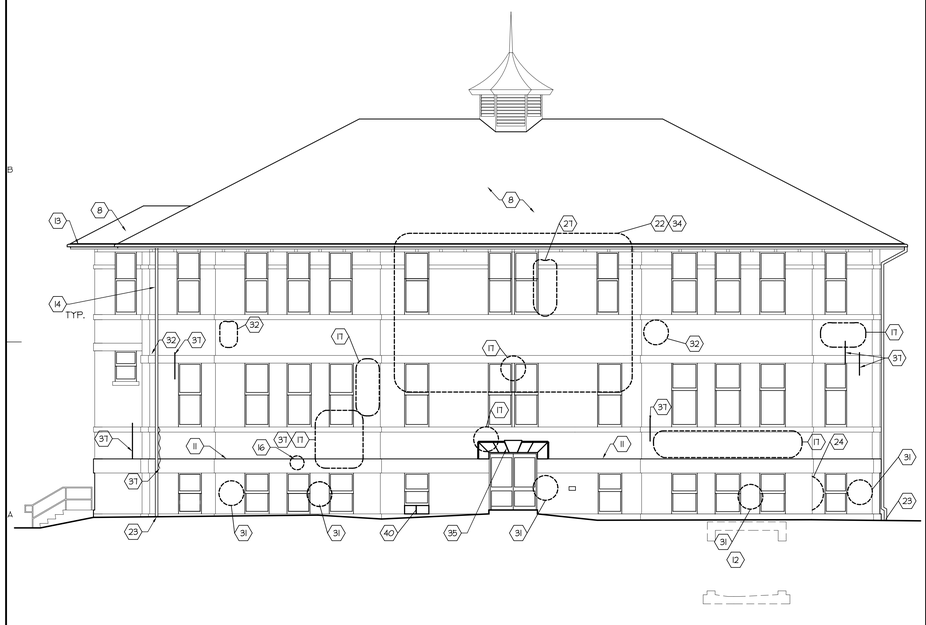

A1 WEST ELEVATION

SCALE: 1/8" = 1'-0"

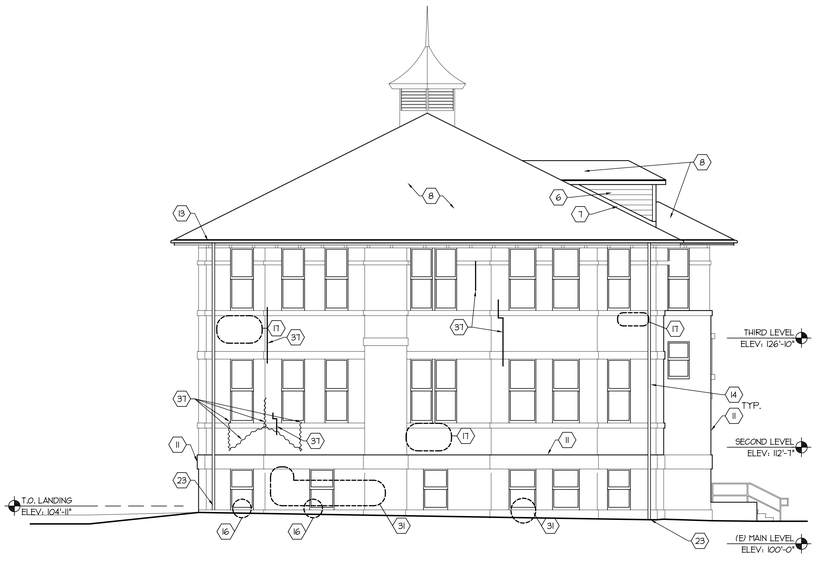

A3 SOUTH ELEVATION

SCALE: 1/8" = 1'-0"

REFERENCE NOTES

1. BRING GRADE TO STAIR ELEVATION AND SLOPE OFF GRADUALLY.
2. NEW CONCRETE STAIRS.
3. INSTALL SNAD STONE DUTCHMAN, STAINLESS STEEL ANCHORS @ 9" O.C.
4. NEW ARCHED TRANSOM WINDOW, COORD. WITH DOOR SCHEDULE.
5. 1x 6 CEMENTITIOUS FASCIA WITH PRE FINISHED METAL DRIP EDGE & 3/4" CEMENTITIOUS SOFFIT PANELS. (2)
6. CEMENTITIOUS LAP BOARD SIDING.
7. FLASHING - CONTINUOUS, COLOR BY ARCHITECT.
8. NEW WOOD SHINGLE ROOF - SEE ROOF PLAN.
9. EXISTING CUPOLA TO REMAIN. REFURBISH COMPONENTS: FASCIA LOUVERS, SOFFIT, ROOFING & SPIRE.
10. INFILL & REPAIR HOLES WITH STONE PATCH.
11. LIMIT OF EXISTING STONE BASE.
12. CONNECTION TO EXISTING UNDERGROUND MECHANICAL VAULT.
13. NEW 6" RAIN GUTTER SYSTEM - SEE ROOF PLAN. COLOR TO MATCH SOFFIT - SW2828, "COLONIAL REVIVAL TAN" (2) ALT. COLOR - SW2822, "DOWNING SAND".
14. 6" SQUARE DOWN SPOUTS WITH HEAT TAPE. PAINTED TO MATCH SOFFIT - SW2828, "COLONIAL REVIVAL TAN" ALT. COLOR - SW2822, "DOWNING SAND".
15. NOT USED.
16. REPLACE MISSING PORTION OF STONE WITH STONE PATCH.
17. REMOVE EXISTING BRICK & REPLACE WITH BRICK SALVAGED FROM INFILL.
18. REMOVE EXISTING LIGHT FIXTURE - COORD. WITH ELECTRICAL, REPLACE W/ MASONRY UNIT.
19. EXISTING SPEAKER AND BELLS TO REMAIN - COORD. WITH ELECTRICAL.
20. STABILIZE STONE SILL WITH STAINLESS STEEL ANCHORS & MORTAR.
21. STRIP & REPAINT WOOD FRAME & WOOD FAN.
22. AREA OF PORTICO DEMOLITION. REPAIR, REPLACE BRICK AS NECESSARY TO MATCH ADJACENT CONDITIONS.
23. CONNECT DOWN SPOUT TO EXISTING STORM WATER INLET.
24. REMOVE CONCRETE & REPAIR STONE FACE.
25. NOT USED.
26. REMOVE MORTAR SPLASHES.
27. REMOVE BRICK & REPLACE WITH SALVAGED BRICK.
28. PROTECT PLAQUE DURING ALL PHASES OF CONSTRUCTION.
29. 1 1/4" PIPE HANDRAIL - SEE STAIR SECTION A3/AE405. COLOR BY ARCHITECT.
30. POWDER COAT ARCHITECTUAL GRILLE - COORD. WITH MECHANICAL. COLOR BY ARCHITECT.
31. REPAIR & PATCH STONE.
32. REMOVE BOLTS - CLEAN AREA, PATCH & REPAIR MASONRY UNIT.
33. REPLACE CONCRETE STAIRS & LANDING (REINSTALL STONE TO ORIGINAL DESIGN CONDITION).
34. REPLACE MASONRY UNITS & INFILL STRUCTURAL ATTACHMENT POINT IN AREA OF DEMOLITION.
35. INSTALL NEW STONE VENEER OVER EXISTING CONCRETE BEAM HEADER - STAINLESS STEEL ANCHORS @ 9" O.C.
36. NOT USED.
37. PROVIDE CRACK ARRESTING REINFORCING EVERY 4 BRICK COURSES OF CRACK.
38. NOT USED.
39. 1x 6 CEMENTITIOUS TRIM. (2)
40. INSTALL SALVAGED SANDSTONE - TOOL WITH POSITIVE DRAINAGE SILL.
41. FIRE ALARM SIGNAL STROBE AND BELL. SEE ELECTRICAL SYSTEMS DRAWINGS. (2)

GENERAL NOTES

A. REMOVE & REPOINT UNIT MASONRY MOTAR - CLEAN AND TUCKPOINT.

B. REMOVE NON-ORIGINAL NON-FUNCTIONING WIRES, CONDUIT, PIPES, BRACKETS, CABLES, SCREENS, ETC. FILL HOLES WITH MORTAR OF MATCHING COLOR AND TEXTURE. MORTAR MIX TO BE APPROVED BY ARCHITECT PRIOR TO APPLICATION.

C. PROTECT ALL EXISTING TREES TO REMAIN AROUND THE BUILDING DURING CONSTRUCTION.

D. PROTECT ALL EXISTING CIRCULATION PATHS AROUND THE BUILDING THAT ARE TO REMAIN.

E. ALL PORTIONS OF THE BUILDING WILL BE RE-ROOFED - COORD. WITH STRUCTURAL & SEE ROOF PLAN.

F. INSTALL WINDOWS. COLOR BY ARCHITECT.

G. REMOVE ALL STONE MORTAR & REPOINT WITH PROFILE TO MATCH EXISTING "BEAD" POINTING.

H. REMOVE ALL CONSTRUCTION REMAINS, REFURBISH MASONRY & BRICK TO MATCH ADJACENT CONDITIONS.

J. REVIEW BRICK & STONE WITH ARCHITECT AS SCAFFOLD STAGING ALLOWS FOR DETERMINATION OF ADDITIONAL REPAIR AREAS.

K. REMOVE PAINT ON EXTERIOR WALLS (50 S.F. ALLOWANCE).

L. AREA INDICATES ACTUAL SQUARE FOOT OF WORK IN CONTRACT.

M. NO SURFACE MOUNTED ELECTRICAL.

COOPER ROBERTS SIMONSEN ARCHITECTURE

crsa

700 NORTH 200 WEST
SALT LAKE CITY,UTAH 84103
(801) 355-5915
(801) 355-9885 FAX
WWW.CRSARCHITECTS.COM

REAVELEY ENGINEERS &ASSOCIATES, INC.
Consulting Structural Engineers
1515 South 1100 East
Salt Lake City, Utah 84105-2424
(801) 486-3883 Fax (801) 485-0911

WHW ENGINEERING INC.
PROFESSIONAL MECHANICAL ENGINEERING
1354 East 3300 South Suite 200
SALT LAKE CITY, UTAH 84106
(801)466-4121, FAX 466-8536
EMAIL: excellence@whw-engineering.com

BNA Consulting Engineers
Electrical Engineering & Lighting Design
635 South 700e Street
Salt Lake City, Utah 84111 FAX (801) 532-2305
(801) 532-2746

© 2004 BNA Consulting Engineers

bma
brent morris associates ■ landscape architects
1574 raymond road fruit heights, utah, 84037 voice 801-544-0064 fax 801-546-9693 email bma@xmission.net

OLD MAIN BUILDING SOUTHERN UTAH UNIVERSITY

351 WEST CENTER STREET
CEDAR CITY, UTAH 84720

STATE OF UTAH

DFCM

4110 STATE OFFICE BUILDING
SALT LAKE CITY, UTAH

2	3/8/06	BID ADDENDUM 2
1		
BID DOCUMENT	1/16/06	
CD 100%	7/21/04	
DD Sumbittal	7/12/04	

ARCHITECT PROJECT NO.: B04-012
DFCM PROJECT NO.: 03234730

ELEVATIONS

AE201

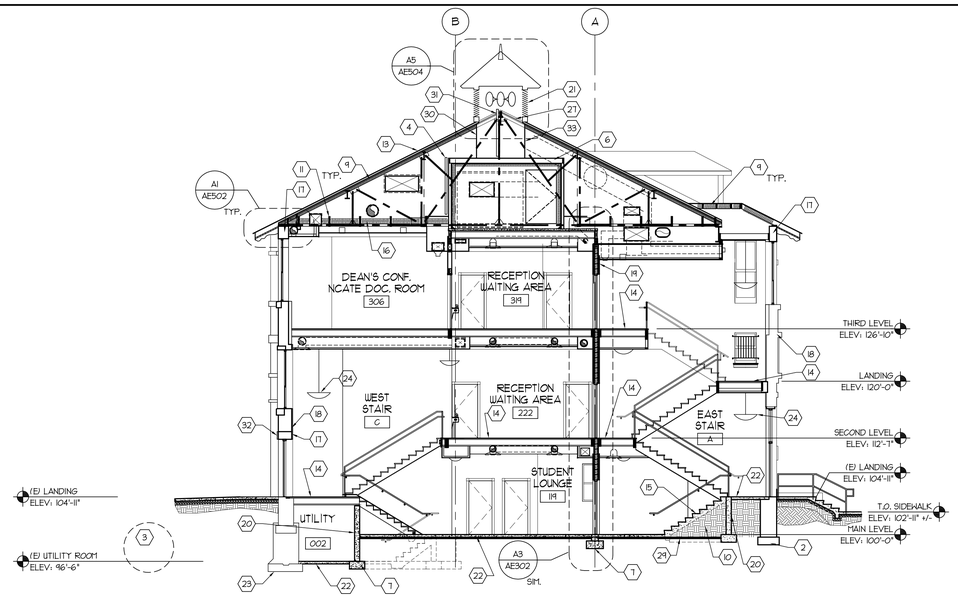

C3 BUILDING SECTION
1/8"=1'-0"

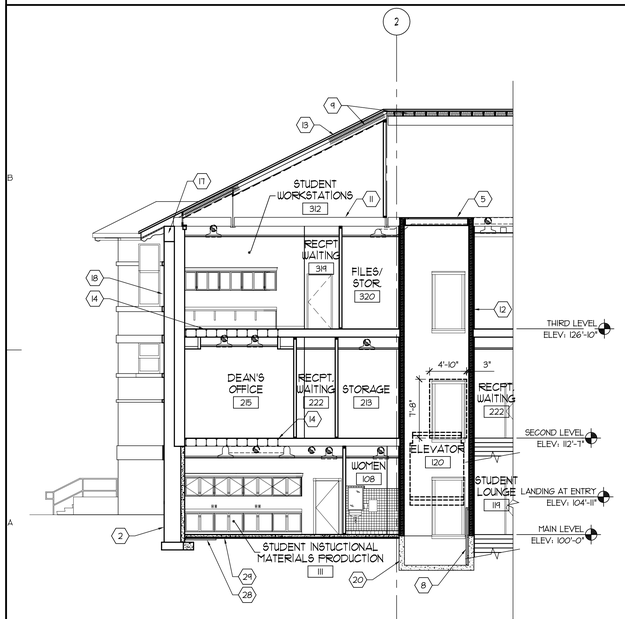

A1 PARTIAL BUILDING SECTION
1/8"=1'-0"

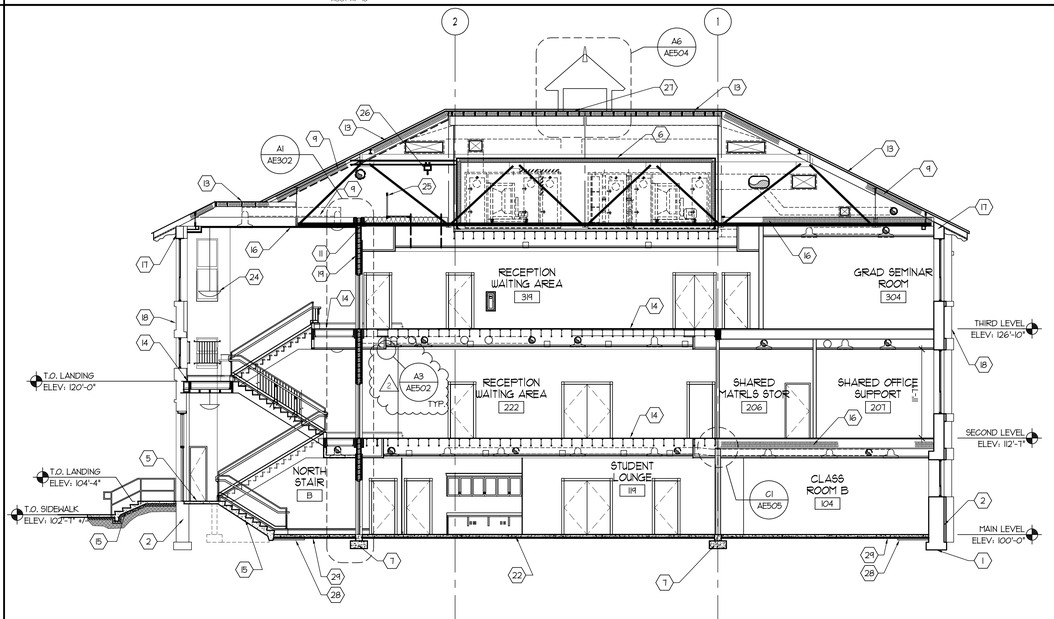

A3 BUILDING SECTION
1/8"=1'-0"

REFERENCE NOTES

1. EXISTING CONCRETE FOOTING/FOUNDATION.
2. EXISTING STONE FOOTING/FOUNDATION.
3. EXISTING UTILITY TUNNEL. EXACT LOCATION IS NOT KNOWN.
4. VERTICAL METAL ACCESS LADDER MOUNTED TO WALL. ACCESS TO TOP OF MECHANICALROOM.
5. 1-HOUR TOP OF SHAFT ASSEMBLY - SEE DETAIL D6/AE501.
6. SOUND RATED CEILING ASSEMBLY 12" ABOVE MECHANICAL UNIT - FIELD VERIFY.
7. NEW CONCRETE FOOTING - COORD. WITH STRUCTURAL.
8. ELEVATOR PIT ACCESS LADDER - SEE DETAIL D4/AE502.
9. INSULATION - SEE SPECS
10. COMPACTED ENGINEERED FILL UNDER STAIR & LANDING.
11. EXISTING CEILING JOIST
12. CMU SHEAR WALL - COORD WITH STRUCTURAL.
13. EXISTING ROOF STRUCTURE & DECKING. PROVIDE NEW PLYWOOD SHEATHING.
14. NEW FLOOR STRUCTURE. COORD. W/ STRUCTURAL
15. NEW CONCRETE STAIR. - COORD. WITH STRUCTURAL & DETAIL A3/AE405
16. SOUND BATT. INSULATION.
17. EXISTING CONCRETE BOND BEAM.
18. EXISTING MASONRY WALL (THICKNESS VARIES).
19. NEW CMU WALL - COORD. WITH WALL TYPES.
20. NEW CONCRETE FOUNDATION WALL.
21. MODIFY EXISTING ALUM. LOUVERS TO ALLOW ACCESS TO SPEAKERS FROM ROOF.
22. NEW 4" CONCRETE SLAB, SAME ELEVATION AS EXISTING SLAB - COORD. WITH STRUCTURAL.
23. EXISTING CONCRETE UNDERPINNING EXISTING STONE FOOTING
24. PENDENT LIGHT FIXTURE - SEE REFLECTED CEILING PLAN & ELECTRICAL PLANS.
25. ATTIC SAFETY RAIL - SEE DETAIL E3/AE503.
26. EQUIPMENT HOIST - SEE SPECS. & STRUCTURAL.
27. ROOF PENETRATION FOR MECHANICAL DUCT - COORD. WITH STRUCTURAL.
28. 2"x 48" PERIMETER UNDER SLAB INSULATION BOARD.
29. UNDER SLAB VAPOR BARRIER.
30. MECHANICAL DUCT WITH ACCESS OPENING TO LADDER - COORD. WITH MECHANICAL.
31. VERTICAL METAL ACCESS LADDER WELDED TO EXISATING STEEL BEAM AND ATTACHED TO FRAMING OF MECHANICAL ROOM CEILING JOISTS.
32. SANDSTONE VENEER.
33. MECHANICAL DUCT EXTENDS TO PLATFORM BELOW, COORD. WITH MECHANICAL

GENERAL NOTES

A. SEE STAIR SECTIONS FOR ENLARGED SECTIONS AT ALL STAIRS.

COOPER ROBERTS SIMONSEN ARCHITECTURE
crsa
700 NORTH 200 WEST
SALT LAKE CITY,UTAH 84103
(801) 355-5915
(801) 355-9885 FAX
WWW.CRSARCHITECTS.COM

REAVELEY ENGINEERS &ASSOCIATES, INC.
Consulting Structural Engineers
1515 South 1100 East
Salt Lake City, Utah 84105-2424
(801) 486-3883 Fax (801) 483-0911

WHW ENGINEERING INC.
PROFESSIONAL MECHANICAL ENGINEERING
1354 East 3300 South Suite 200
SALT LAKE CITY, UTAH 84106
(801)466-4321, FAX 466-8536
EMAIL: excellence@whw-engineering.com

BNA Consulting Engineers
Electrical Engineering & Lighting Design
635 South State Street
Salt Lake City, Utah 84111
(801) 532-2748 FAX (801) 532-2305

© 2004 BNA Consulting Engineers

bma
brent morris associates ■ landscape architects
1574 raymond road fruit heights, utah, 84037 voice 801-544-0064 fax 801-546-9869 email bma@xmission.net

OLD MAIN BUILDING
SOUTHERN UTAH UNIVERSITY
351 WEST CENTER STREET
CEDAR CITY, UTAH 84720

STATE OF UTAH

DFCM

4110 STATE OFFICE BUILDING
SALT LAKE CITY, UTAH

3	3/8/06	BID ADDENDUM 2
2		
1		

BID DOCUMENT	1/16/06	
CD 100%	7/21/04	
DD Sumbittal	7/12/04	

ARCHITECT PROJECT NO.: B04-012
DFCM PROJECT NO.: 03234730
ESM

BUILDING SECTIONS

AE301

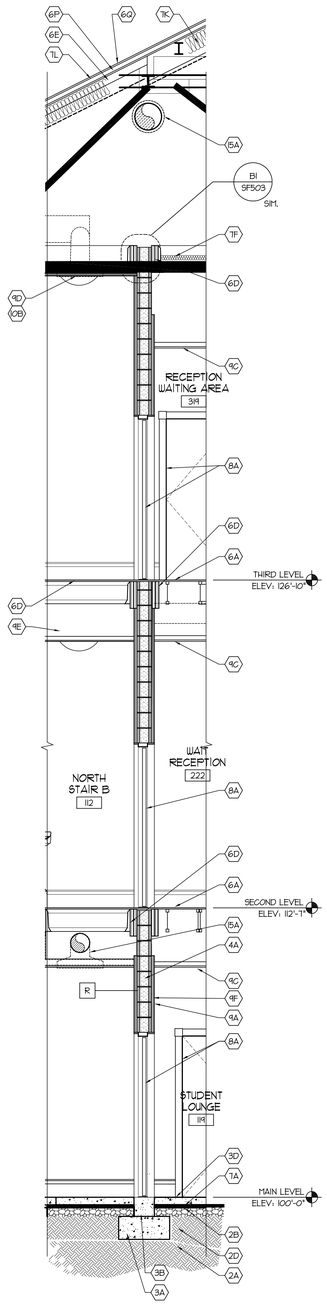

A1 WALL SECTION
3/8" = 1'-0"

1 AE405-A4-32

2

2 AE405-A4-32

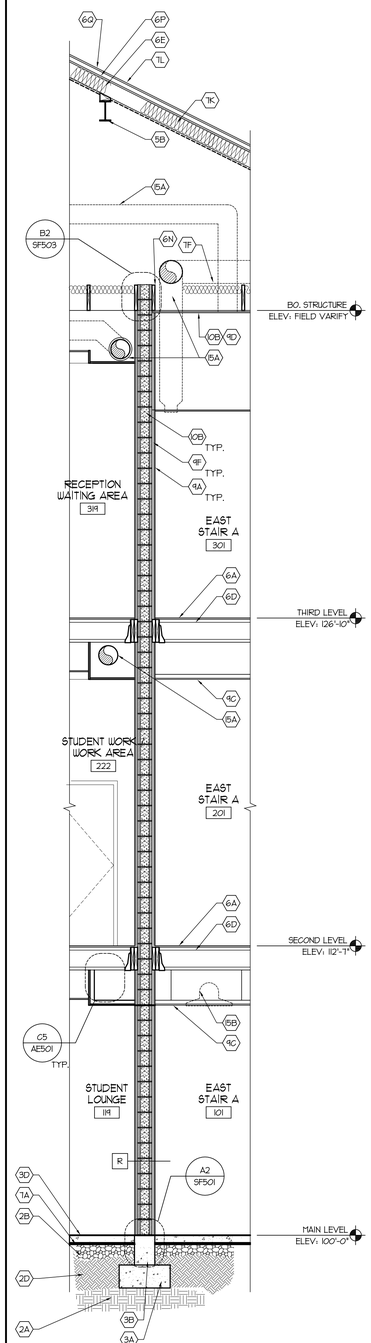

A3 WALL SECTION
3/8" = 1'-0"

3 AE405-A4-32

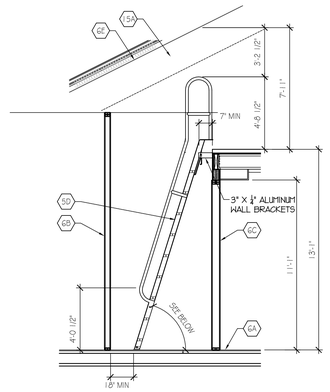

LADDER ANGLE - 75° PREFERRED, 60° MIN-VARIES

D4 ATTIC ACCESS SECTION
1/4" = 1'-0"

AE405-D4-32

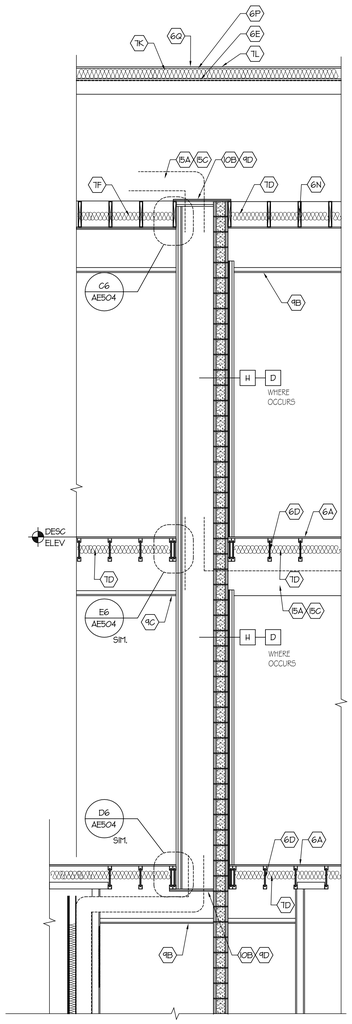

A4 SHAFT WALL SECTION
3/8" = 1'-0"

4 AE405-A4-32

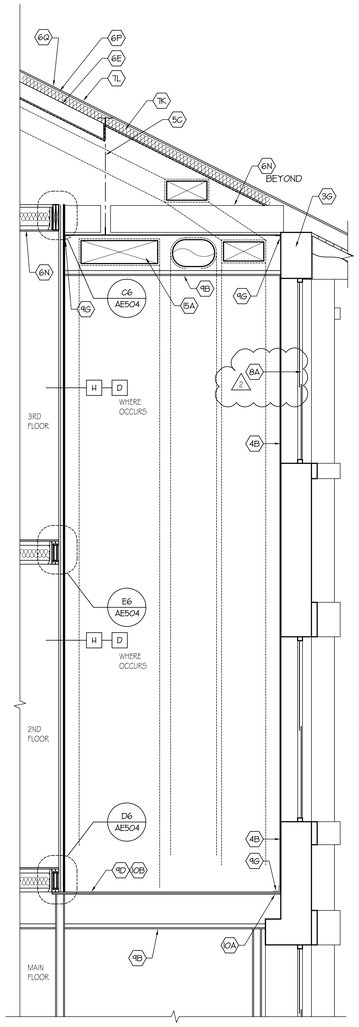

A5 SHAFT WALL SECTION
3/8" = 1'-0"

5 AE405-A4-32

WALL SECTION REFERENCE NOTES

02 SITEWORK

2A UNDISTURBED EARTH - SEE STRUCTURAL
2B GRAVEL BASE - SEE STRUCTURAL
2C NOT USED
2D COMPACTED STRUCTURAL FILL - SEE STRUCTURAL

03 CONCRETE

3A CONCRETE FOOTING - SEE STRUCTURAL
3B CONCRETE STEMWALL/FOUNDATION WALL - SEE STRUCTURAL & WALL TYPES
3C NOT USED
3D CONCRETE SLAB ON GRADE - SEE STRUCTURAL
3E CONCRETE SLAB OVER METAL DECK - SEE STRUCTURAL
3F NOT USED
3G EXISTING CONCRETE BOND BEAM

04 MASONRY

4A 8" CMU. - COORD. WITH STRUCTURAL
4B EXISTING MASONRY WALL - THICKNESS VARIES

05 METALS

5A STEEL BEAM - SEE STRUCTURAL
5B EXISTING STEEL BEAM (WHERE OCCURS)
5C EXISTING STEEL ROOF TRUSS
5D ALUMINUM INCLINED LADDER
5E NOT USED
5F NOT USED

06 WOOD & PLASTICS

6A FLOOR SHEATHING - SEE STRUCTURAL
6B 2x 4 WOOD FRAMING - SEE WALL TYPES
6C 2x 6 WOOD FRAMING - SEE WALL TYPES
6D WOOD JOIST FLOOR SYSTEM - SEE STRUCTURAL AND SEE FINISH SCHEDULE FOR FLOOR/CEILINGTYPE DESIGNATIONS ABOVE SPACES.
6E EXISTING ROOF JOIST. COORDINATE WITH STRUCTURAL
6F NOT USED
6H 2x WOOD HEADER - SEE STRUCTURAL
6J NOT USED
6K EXTERIOR SHEATHING
6L NOT USED
6M NOT USED
6N EXISTING CEILING JOIST TO REMAIN
6P EXISTING ROOF SHEATHING
6Q NEW ROOF SHEATHING. COORD. WITH STRUCTURAL

07 THERMAL & MOISTURE PROTECTION

7A UNDER SLAB VAPOR BARRIER
7B NOT USED
7C NOT USED
7D SOUND ATTENUATION BLANKETS FILL CAVITY OF WALL AND FLOOR
7E NOT USED
7F FACED BATT. INSULATION
7G NOT USED
7H NOT USED
7J NOT USED
7K PLACE CONTINUOUS VAPOR BARRIER BETWEEN ROOF/CEILING SHEATHING AND BOTTOM OF JOISTS. FILL ENTIRE PRIMARY ROOF/CEILING ASSEMBLY WITH INSULATION.
7L NEW ROOF SYSTEM OVER EXISTING ROOF STRUCTURE - SEE ROOF PLAN AND A5/AE502

08 DOORS & WINDOWS

8A DOOR AND FRAME - SEE FLOOR PLAN & DOOR SCHEDULE
8B WINDOW - SEE ELEVATIONS, FLOOR PLANS AND AE602 FOR TYPES

09 FINISHES

9A PAINTED GYPSUM BOARD - SEE WALL TYPES
9B SCHEDULED CEILING - SEE FINISH SCHEDULE FOR FLOOR/CEILING TYPE DESIGNATIONS
9C SUSPENDED CEILING SYSTEM - SEE REFLECTED CEILING PLANS
9D 1-HR FIRE RATED ASSEMBLY SIMILIAR TO WALL TYPE "G" - SEE B4/AE501.
9E FINISHED GYP. BRD. CEILING ATTACHED TO FLOOR STRUCTURE
9F RESILENT CHANNEL
9G 20GA METAL CLIP SECURED TO MASONRY WALL

10 SPECIALTIES

10A FIRE CAULK JOINT
10B PROVIDE APPROPRIATE & UL APPROVED FIRE STOP SYSTEM ALT. ALL PENETRATIONS IN THE SHAFT WALL - SEE SHEETS AE506 - AE508.

12 FURNISHINGS

12A NOT USED

15 MECHANICAL

15A MECHANICAL DUCT
15B MECHANICAL DIFFUSER - COORD. WITH MECHANICAL DWGS.
15C PROVIDE FIRE AND SMOKE DAMPERS WHERE ANY DUCT PENETRATES A RATED ASSEMBLY

WALL SECTION GENERAL NOTES

A. SEE FLOOR FRAMING PLANS ON SHEETS AE102 FOR WALL TYPE CALLOUTS

A

B. SEE BUILDING ELEVATIONS FOR ACTUAL TOP OF WALL CONDITIONS AND THE DETAIL CALLOUTS.

C. PROVIDE FIRE BLOCKING AT MAX. 10'-0" O.C., HORIZONTAL AND VERTICAL IN ALL WALL, FLOOR/CEILING, AND ROOF/CEILING ASSEMBLIES.

D. PROVIDE 5/8" GYPSUM BOARD ON UNDERSIDE OF ALL INTERIOR STAIRWAYS AND LANDINGS.

E. SEE REFLECTED CEILING PLANS FOR FINISH CEILING ELEVATIONS

F. SEE G002 & AE101 FPR REQUIRED RATED ASSEMBLIES.

6

COOPER ROBERTS SIMONSEN ARCHITECTURE
crsa
700 NORTH 200 WEST
SALT LAKE CITY,UTAH 84103
(801) 355-5915
(801) 355-9885 FAX
WWW.CRSARCHITECTS.COM

REAVELEY ENGINEERS &ASSOCIATES, INC.
Consulting Structural Engineers
1515 South 1100 East
Salt Lake City, Utah 84105-2424
(801) 486-3883 Fax (801) 485-0911

WHW ENGINEERING INC.
PROFESSIONAL MECHANICAL ENGINEERING
1354 East 3300 South Suite 200
SALT LAKE CITY, UTAH 84106
(801)466-4021 FAX 466-8536
EMAIL: excellence@whw-engineering.com

BNA Consulting Engineers
Electrical Engineering
& Lighting Design
535 South Third Street
Las Vegas, Nevada 89101 FAX (801) 532-2305
(801) 532-2104
© 2004 BNA Consulting Engineers
bma
brent morris associates ■ landscape architects
1574 wynyard road fruit heights, utah, 84037 voice 801-544-0064 fax 801-546-9669 email bma@xmission.net

OLD MAIN BUILDING
SOUTHERN UTAH UNIVERSITY
351 WEST CENTER STREET
CEDAR CITY, UTAH 84720

STATE OF UTAH

DFCM

4110 STATE OFFICE BUILDING
SALT LAKE CITY, UTAH

2	3/8/06	BID ADDENDUM 2
1		

BID DOCUMENT	1/16/06
CD 100%	7/21/04
DD Sumbittal	7/12/04

ARCHITECT PROJECT NO.:	B04-012
DFCM PROJECT NO.	03234730
	DTN

WALL SECTIONS

AE302

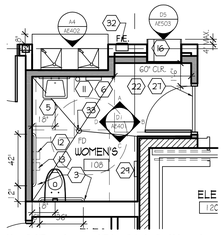

E1 ENLARGED PLAN VIEW WOMEN'S RESTRM. #108

1/4"=1'-0"

AE401-A2-4B

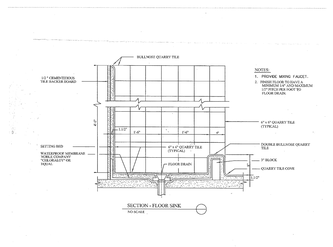

E2 JANITOR'S FLOOR SINK

1/2"=1'-0"

AE401-E2-4B

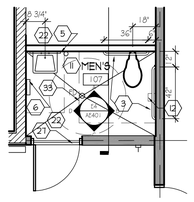

E3 ENLARGED PLAN VIEW MEN'S RESTRM. #107

1/4"=1'-0"

AE401-A2-4B

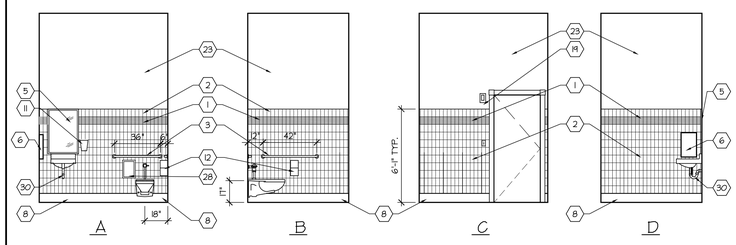

E4 MEN'S RESTROOM #107 ELEVATIONS

1/4"=1'-0"

AE401-A1-4B

REFERENCE NOTES

1. CERAMIC ACCENT TILE.
2. CERAMIC FIELD TILE.
3. GRAB BARS.
4. TOILET PARTITION- HEAD RAIL BRACED - SEE G6/AE401 FOR ATTACHMENT OF URINAL SCREEN.
5. 24"x 35" MIRROR
6. PAPER TOWEL DISPENSER
7. JANITOR FLOOR SINK, SJU STANDARD, SEE E2/AE403
8. CERAMIC TILE BASE.
9. 12" SHELF WITH UTILITY HOOKS
10. MOP HOLDER
11. SOAP DISPENSER. - OWNER SUPPLIED
12. TOILET PAPER DISPENSER. - OWNER SUPPLIED
13. SANITARY NAPKIN DISPOSAL.
14. URINAL PARTITION.
15. PAINTED COUNTERTOP SUPPORT. COLOR BY ARCHITECT. SIMILAR TO DETAIL D4/AE503
16. PHONE BOOTH. SEE D5/AE503
17. AUTOMATIC DOOR OPENER EACH SIDE OF DOOR
18. FIRE ALARM HORN/STROBE LIGHT.
19. FIRE ALARM STROBE LIGHT.
20. NOT USED
21. NOT USED
22. FLOOR TILE W/ ACCENT.
23. PAINTED GYPSUM BOARD.
24. COUNTERTOP WITH 4" BACKSPLASH. SIMILAR TO C5/AE503
25. NOT USED
26. SOAP DISPENSER IN COUNTERTOP.
27. MARBLE THRESHOLD - SEE DETAIL C4/AF101.
28. TOILET ACCESS PANEL - 8"x12" STAINLESS STEEL PAINTED TO MATCH TILE
29. SANITARY NAPKIN DISPENSER
30. INSULATE WATER SUPPLY & WASTE LINES
31. NOT USED.
32. RECESSED FIRE EXTINGUISHER.
33. FLOOR DRAIN COORDINATE WITH PLUMBING DRAWINGS

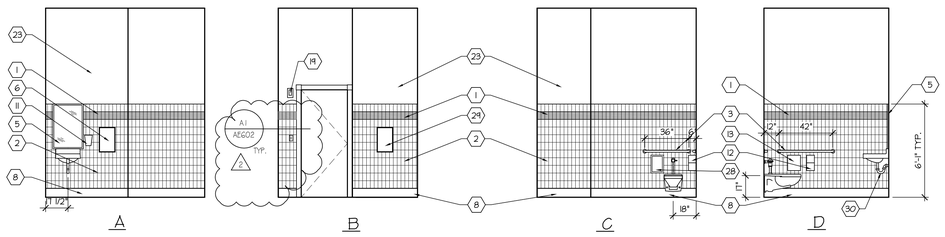

D1 WOMEN'S RESTROOM #108- ELEVATIONS

1/4"=1'-0"

AE401-A1-4B

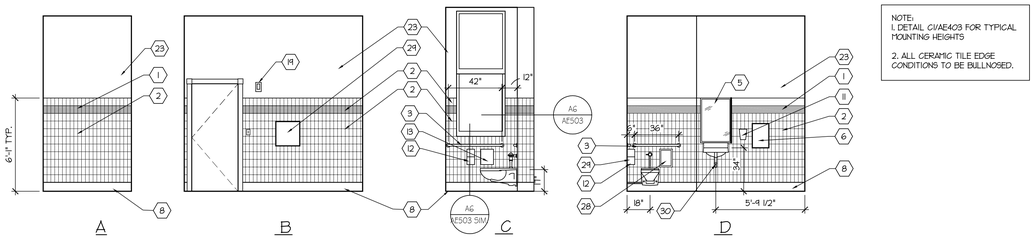

NOTE:
1. DETAIL C1/AE403 FOR TYPICAL MOUNTING HEIGHTS

2. ALL CERAMIC TILE EDGE CONDITIONS TO BE BULLNOSED.

D4 WOMEN'S RESTROOM #310- ELEVATIONS

1/4"=1'-0"

AE401-A1-4B

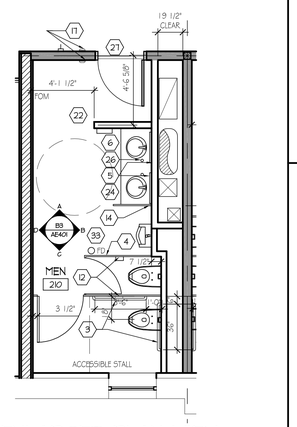

B1 ENLARGED PLAN VIEW MEN'S RESTRM. #210

1/4"=1'-0"

AE401-A2-4B

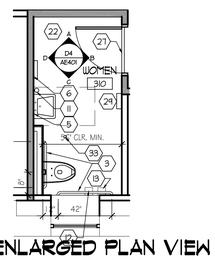

C2 ENLARGED PLAN VIEW WOMEN'S RESTRM. #310

1/4"=1'-0"

AE401-A2-4B

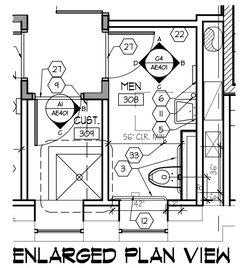

C3 ENLARGED PLAN VIEW MEN'S RESTRM. #308

1/4"=1'-0"

AE401-A2-4B

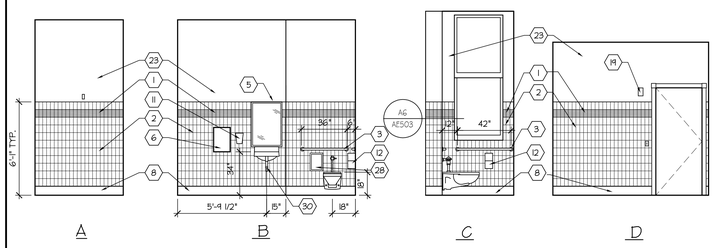

C4 MEN'S RESTROOM #308, - ELEVATIONS

1/4"=1'-0"

AE401-A1-4B

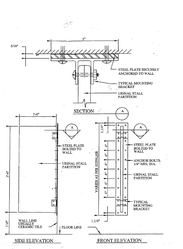

C6 URINAL PART. SUPPORT

3/8" SCALE SJU STANDARD

AE401-A1-4B

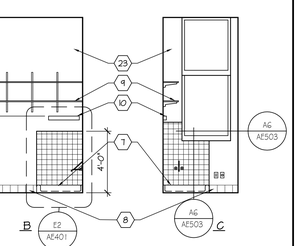

A1 CUSTODIAL ROOM #309

1/4"=1'-0"

AE401-A2-4B

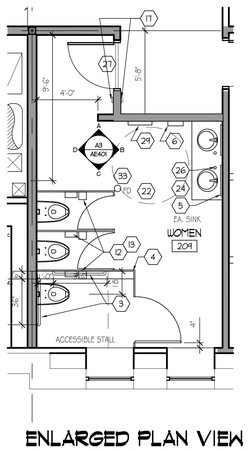

A2 ENLARGED PLAN VIEW WOMEN'S RESTRM. #209

1/4"=1'-0"

AE401-A2-4B

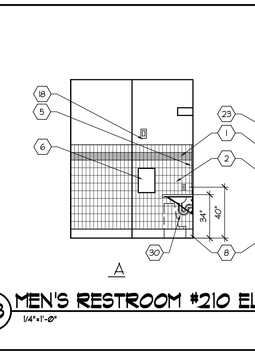

B3 MEN'S RESTROOM #210 ELEVATIONS

1/4"=1'-0"

AE401-A1-4B

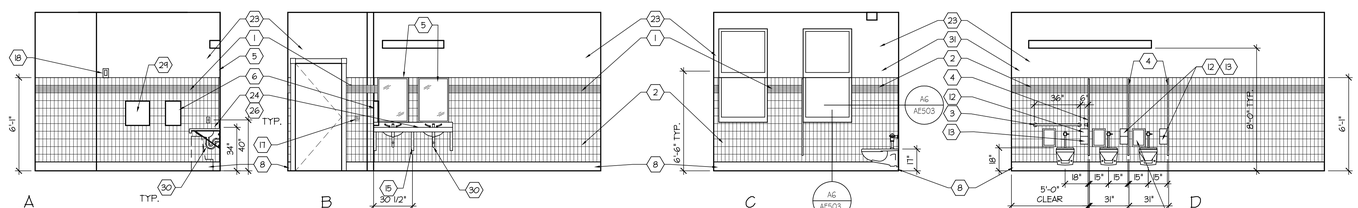

A3 WOMEN'S RESTROOM #209 - ELEVATIONS

1/4"=1'-0"

AE401-A1-4B

COOPER ROBERTS SIMONSEN ARCHITECTURE

crsa

700 NORTH 200 WEST
SALT LAKE CITY,UTAH 84103
(801) 355-5915
(801) 355-0885 FAX
WWW.CRSARCHITECTS.COM

REAVELEY ENGINEERS &ASSOCIATES, INC.
Consulting Structural Engineers
1515 South 1100 East
Salt Lake City, Utah 84105-2424
(801) 486-3883 Fax (801) 485-0911

WHW ENGINEERING INC.
PROFESSIONAL MECHANICAL ENGINEERING
1354 East 3300 South Suite 200
SALT LAKE CITY, UTAH 84106
(801)466-4021, FAX 466-8536
EMAIL: excellence@whw-engineering.com

BNA Consulting Engineers
Electrical Engineering
& Lighting Design
635 South State Street
Salt Lake City, Utah 84111
(801) 532-2196 FAX (801) 532-2305

© 2004 BNA Consulting Engineers

bma
brent morris associates ■ landscape architects
1674 raymond road fruit heights, utah, 84037 voice 801-544-0064 fax 801-546-6669 email bma@xmission.net

3/8/06	BID ADDENDUM 2
BID DOCUMENT	1/16/06
CD 100%	7/21/04
DD Sumbittal	7/12/04
ARCHITECT PROJECT NO.:	B04-012
DFCM PROJECT NO.:	03234730

OLD MAIN BUILDING
SOUTHERN UTAH UNIVERSITY
351 WEST CENTER STREET
CEDAR CITY, UTAH 84720

STATE OF UTAH

DFCM

4110 STATE OFFICE BUILDING
SALT LAKE CITY, UTAH

ENLARGED FLOOR PLANS - INTERIOR ELEVATIONS

AE401

Xref: P:\B04-012 SJU OLD MAIN\Dwg\AE401-A6-01.dwg

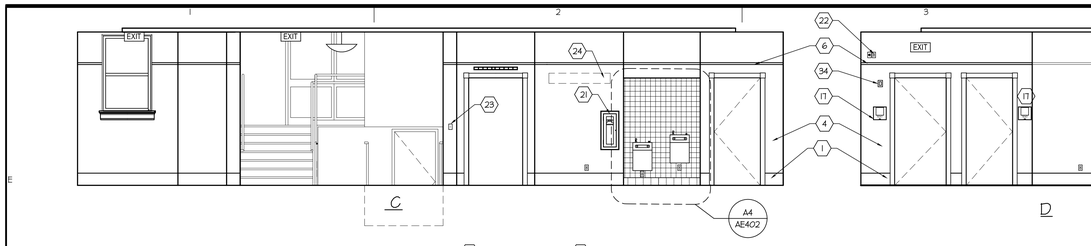

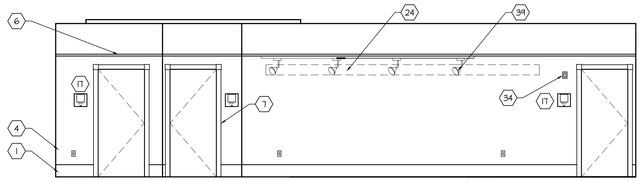

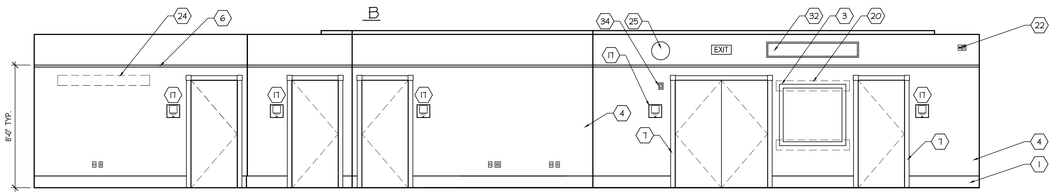

D1 STUDENT LOUNGE #119

1/4"=1'-0"

AE402-A1-48

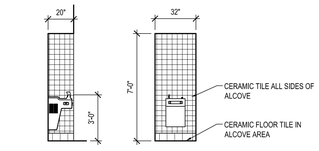

D4 DRNK. FOUNTAIN #222, #319

1/4"=1'-0"

AE402-A1-48

INTERIOR KEY NOTES

1. BASE - SEE FINISH SCHEDULE AF101
2. 3" CHAIR RAIL - SEE AI/AF101 FOR PROFILE INFORMATION.
3. BUILDING DIRECTORY. WOOD BLOCKING REQUIRED.
4. PAINTED GYPSUM BOARD - SEE FINISH SCHEDULE.
5. LIGHT FIXTURE - SEE ELECTRICAL DWGS.
6. 1 1/2" PICTURE RAIL. SEE BI/AF101
7. DOOR WINDOW CASING - SEE B3/AF101 FOR PROFILE INFORMATION.
8. WALL FINISH - SEE FINISH SCHEDULE.
9. PROVIDE 2x 6 HORIZONTAL BLOCKING IN AREAS SCHEDULED TO RECEIVE SHELVES OR WALL HUNG CABINETS.
10. 3 ½" BASE - SEE FINISH SCHEDULE FOR PROFILE INFORMATION.
11. COUNTERTOP WITH 4" BACKSPLASH. SEE D4/AE503
- 11A. COUNTERTOP WITH 4" BACKSPLASH. SEE C5 AE503
12. BASE CABINET.
13. WALL CABINET. 12" DEEP
14. REFRIGERATOR.
15. PAINTED COUNTERTOP SUPPORT. COLOR BY ARCHITECT. SEE DETAIL D4/AE503.
16. LAMINATE END PANEL - FINISHED BOTH SIDES.
17. ADA SIGNAGE - SEE DETAIL D3/AF101 & AE601 FOR SCHEDULE
18. CEILING MOUNTED PROJECTION SCREEN
19. WALL MOUNTED VISUAL DISPLAY CONFERENCE UNIT - SEE 1010. (NIC)
20. WOOD BLOCKING FOR DISPLAY BOARD - SEE MFG. REQUIREMENTS.
21. SEMI-RECESSED FIRE EXTINGUISHER CABINET.
22. FUTURE SURVEILLANCE CAMERA. COORDINATE W/ ELECTRICAL FOR CONDUIT REQUIREMENTS.
23. WALL MOUNTED TEMPERATURE SENSOR @ 48" ABOVE F.F. - SEE ME103.
24. 2x 8 BLOCKING FOR FUTURE ART.
25. SYSTEM CLOCK - COORD. WITH ELECTRICAL.
26. 4" RUBBER BASE (SEE FINISH SCHEDULE AF101
27. 12' X 4' WHITE MARKER BOARD.
28. 42"x 7'-0" P-LAM CLAD BOOKSHELVES W/ ADJUSTABLE MELAMINE CLAD SHELVES (NIC)
29. 2x 8 WOOD BLOCKING FOR BOOKSHELVES
30. WOOD WINDOW SILL & SKIRT. SEE E2.E3/AF101
31. CONTINUOUS RADIUSED GYPSUM BOARD EDGE.
32. ELECTRONIC SCROLLING MARQUEE. COORDINATE WITH ELECTRICAL DRAWINGS
33. AUTOMATIC DOOR OPENER EACH SIDE OF DOOR
34. FIRE ALARM HORN/STROBE LIGHT. SEE ELECTRICAL.
35. MANUAL FIRE ALARM STATION
36. RECEPTACLE & TV OUTLET FOR 52" DIAGONAL FLAT SCREEN MONITOR.
37. STUB OUT FOR FUTURE "SMARTBOARD"
38. LOCKABLE CONTROL CABINET.
39. TRACK LIGHTING. SEE ELECTRICAL.
40. MICROWAVE.
41. ADA COMPLIANT MOLDED UNDERSINK SAFETY COVER. DRAIN & SUPPLY LINES.
42. SKIRT TO MATCH BASE CABINETS

GENERAL NOTES

1. ALL EXPOSED SURFACES ARE TO BE FINISHED.
2. SEE FINISH SCHEDULE FOR BASE INFORMATION.
3. ALL TOILET ACCESSORIES ARE TO BE MOUNTED ACCORDING TO ANSI A117.1 STANDARDS.
4. SEE FLOOR PLAN AND SHEET AE601 FOR DOOR AND WINDOW NOTES.

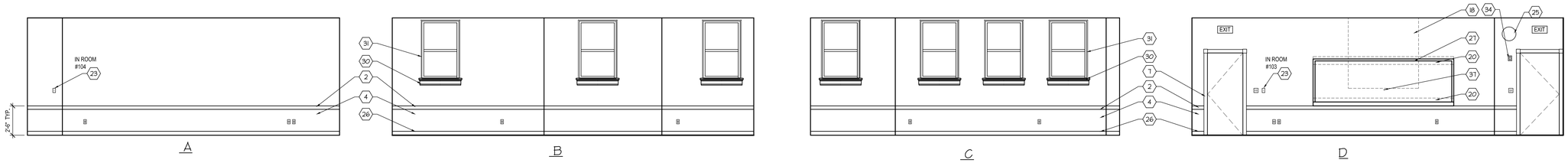

C1 CLASSROOM B #104, #103 SIM.

1/4"=1'-0"

AE402-A1-48

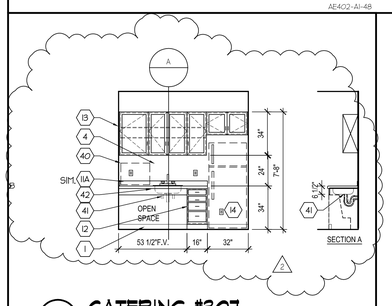

B1 CATERING #307

1/4"=1'-0"

AE402-A1-48

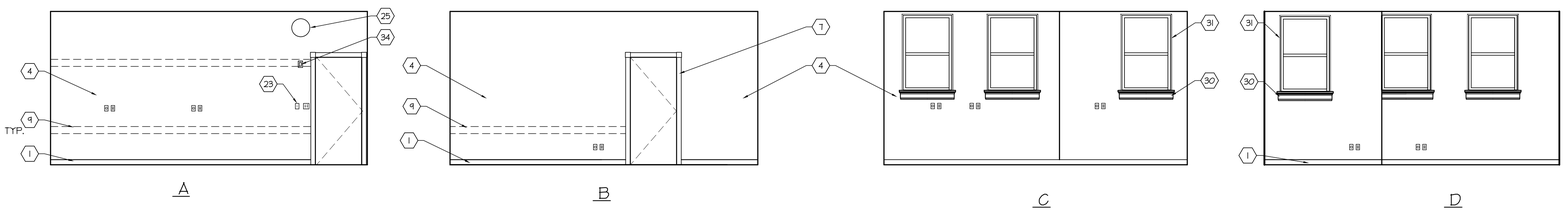

B2 STUDENT INSTRUCTIONAL MATERIAL PRODUCTION # 111

1/4"=1'-0"

AE402-B248

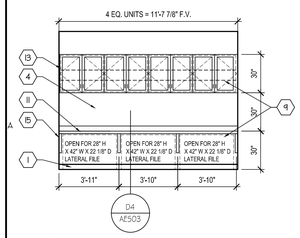

A1 FILE STORAGE #311

1/4"=1'-0"

AE402-A1-48

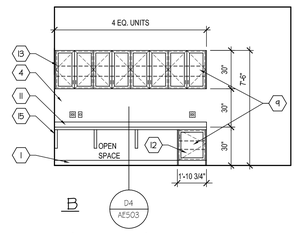

A2 WORKROOM # 220

1/4"=1'-0"

AE402-A1-48

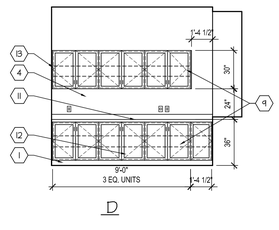

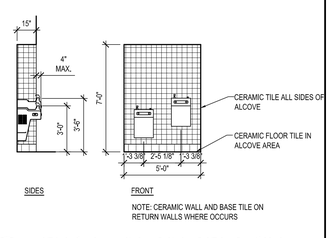

A4 DRNK. FOUNTAIN AREA #119

1/4"=1'-0"

AE402-A1-48

COOPER ROBERTS SIMONSEN ARCHITECTURE

crsa

700 NORTH 200 WEST
SALT LAKE CITY,UTAH 84103
(801) 355-5915
(801) 355-9885 FAX
WWW.CRSARCHITECTS.COM

REAVELEY ENGINEERS &ASSOCIATES, INC.
Consulting Structural Engineers
1515 South 1100 East
Salt Lake City, Utah 84105-2424
(801) 486-3883 Fax (801) 485-0911

WHW ENGINEERING INC.
PROFESSIONAL MECHANICAL ENGINEERING
1354 East 3300 South Suite 200
SALT LAKE CITY, UTAH 84106
(801)466-4321, FAX 466-8536
EMAIL: excellence@whw-engineering.com

BNA Consulting Engineers
Electrical Engineering
& Lighting Design
635 South 700e Street
Salt Lake City, Utah 84111 FAX (801) 532-2305

© 2004 BNA Consulting Engineers

bma
brent morris associates ■ landscape architects
1574 raymond road fruit heights, utah, 84037 voice 801-544-0064 fax 801-546-9669 email bma@xmission.net

OLD MAIN BUILDING
SOUTHERN UTAH UNIVERSITY
351 WEST CENTER STREET
CEDAR CITY, UTAH 84720

STATE OF UTAH

DFCM

4110 STATE OFFICE BUILDING
SALT LAKE CITY, UTAH

3/8/06	BID ADDENDUM 2
BID DOCUMENT	1/16/06
CD 100%	7/21/04
DD Sumbittal	7/12/04
ARCHITECT PROJECT NO.:	B04-012
DFCM PROJECT NO.:	03234730

INTERIOR ELEVATIONS

AE402

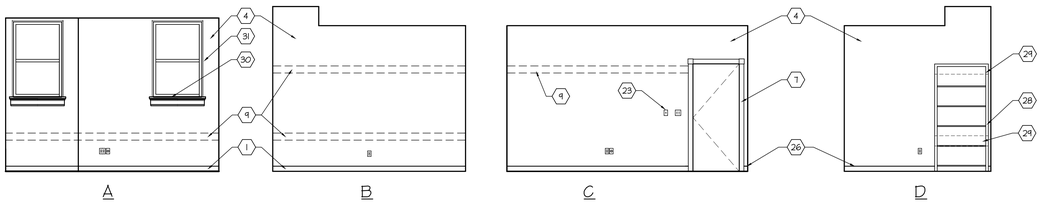

E1 FIELD SERVICE ADVISOR #117 (TYP. OFFICE)
1/4"=1'-0"

AE403-A1-48

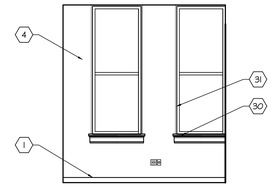

E5 SEC. ED. SECR. RM #204
1/4"=1'-0"

AE403-D5-48

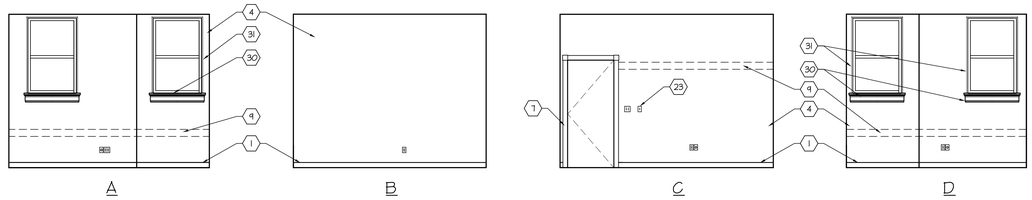

D1 FIELD SERVICE DIR. RM. #115
1/4"=1'-0"

AE403-A1-48

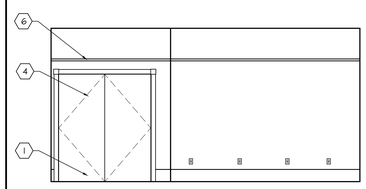

D4 STUDENT LOUNGE RM. #105
1/4"=1'-0"

AE403-D4-48

INTERIOR KEY NOTES

1. BASE - SEE FINISH SCHEDULE AF101
2. 3" CHAIR RAIL - SEE A1/AF101 FOR PROFILE INFORMATION.
3. BUILDING DIRECTORY. WOOD BLOCKING REQUIRED.
4. PAINTED GYPSUM BOARD - SEE FINISH SCHEDULE.
5. LIGHT FIXTURE - SEE ELECTRICAL DWGS.
6. 1 1/2" PICTURE RAIL. SEE B1/AF101
7. DOOR /WINDOW CASING - SEE B3/AF101 FOR PROFILE INFORMATION.
8. WALL FINISH - SEE FINISH SCHEDULE.
9. PROVIDE 2x 6 HORIZONTAL BLOCKING IN AREAS SCHEDULED TO RECEIVE SHELVES OR WALL HUNG CABINETS.
10. 3 ½" BASE - SEE FINISH SCHEDULE FOR PROFILE INFORMATION.
11. COUNTERTOP WITH 4" BACKSPLASH. SEE D4/AE503
- 11A. COUNTERTOP WITH 4" BACKSPLASH. SEE C5 AE503 (A)
12. BASE CABINET.
13. WALL CABINET. 12" DEEP
14. REFRIGERATOR.
15. PAINTED COUNTERTOP SUPPORT. COLOR BY ARCHITECT. SEE DETAIL D4/AE503.
16. LAMINATE END PANEL - FINISHED BOTH SIDES.
17. ADA SIGNAGE - SEE DETAIL D3/AF101 & AE601 FOR SCHEDULE
18. CEILING MOUNTED PROJECTION SCREEN
19. WALL MOUNTED VISUAL DISPLAY CONFERENCE UNIT - SEE 1010/. (NIC)
20. WOOD BLOCKING FOR DISPLAY BOARD - SEE MFG. REQUIREMENTS.
21. SEMI-RECESSED FIRE EXTINGUISHER CABINET.
22. FUTURE SURVEILLANCE CAMERA. COORDINATE W/ ELECTRICAL FOR CONDUIT REQUIREMENTS.
23. WALL MOUNTED TEMPERATURE SENSOR @ 48" ABOVE F.F. - SEE ME103.
24. 2x 8 BLOCKING FOR FUTURE ART.
25. SYSTEM CLOCK - COORD. WITH ELECTRICAL.
26. 4" RUBBER BASE (SEE FINISH SCHEDULE AF101
27. 12' X 4' WHITE MARKER BOARD.
28. 42"x 7'-0" P-LAM GLAD BOOKSHELVES W/ ADJUSTABLE MELAMINE CLAD SHELVES (NIC)
29. 2x 8 WOOD BLOCKING FOR BOOKSHELVES
30. WOOD WINDOW SILL & SKIRT. SEE E2,E3/AF101
31. CONTINUOUS RADIUSED GYPSUM BOARD EDGE.
32. ELECTRONIC SCROLLING MARQUEE. COORDINATE WITH ELECTRICAL DRAWINGS
33. AUTOMATIC DOOR OPENER EACH SIDE OF DOOR
34. FIRE ALARM HORN/STROBE LIGHT. SEE ELECTRICAL.
35. MANUAL FIRE ALARM STATION
36. RECEPTACLE & TV OUTLET FOR 52" DIAGONAL FLAT SCREEN MONITOR.
37. STUB OUT FOR FUTURE "SMARTBOARD"
38. LOCKABLE CONTROL CABINET.
39. TRACK LIGHTING. SEE ELECTRICAL.
40. MICROWAVE.
41. ADA COMPLIANT MOLDED UNDERSINK SAFETY COVER. DRAIN & SUPPLY LINES.
42. SKIRT TO MATCH BASE CABINETS

GENERAL NOTES

1. ALL EXPOSED SURFACES ARE TO BE FINISHED.
2. SEE FINISH SCHEDULE FOR BASE INFORMATION.
3. ALL TOILET ACCESSORIES ARE TO BE MOUNTED ACCORDING TO ANSI A117.1 STANDARDS.
4. SEE FLOOR PLAN AND SHEET AE601 FOR DOOR AND WINDOW NOTES.

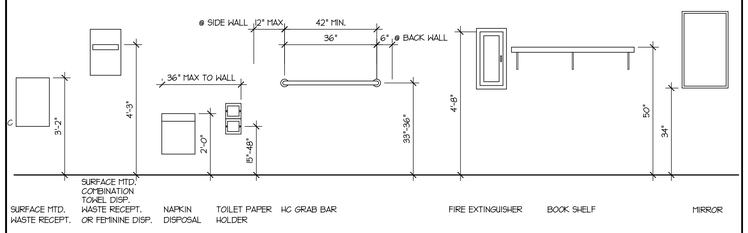

C1 FIXTURE AND ACCESSIBLE ACCESSORY MOUNTING HEIGHTS
1/2"=1'-0"

AE402-C1-24

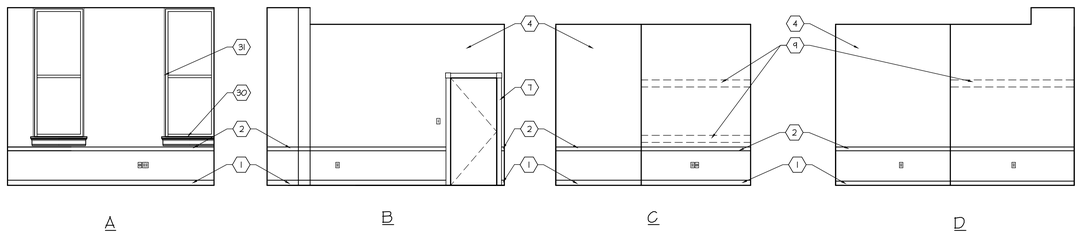

C3 ELEM. ED. CHAIR RM. #203
1/4"=1'-0"

AE403-C248

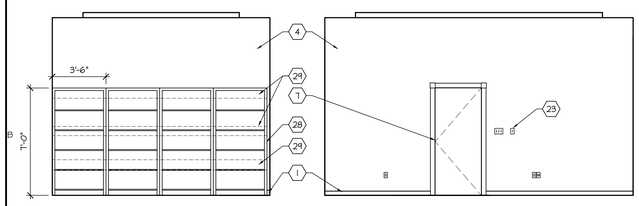

B1 DEAN'S OFFICE. RM. #215
1/4"=1'-0"

AE403-B1-48

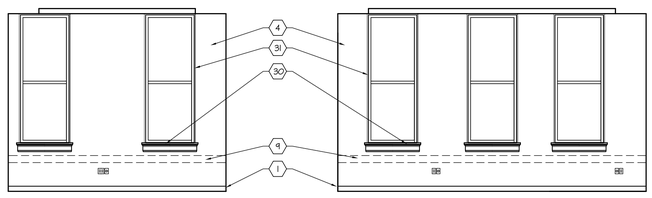

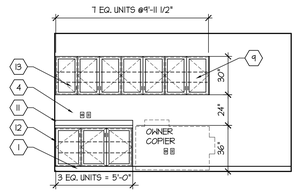

B6 COPY/MAIL/WORK RM. #116
1/4"=1'-0"

AE403-B6-48

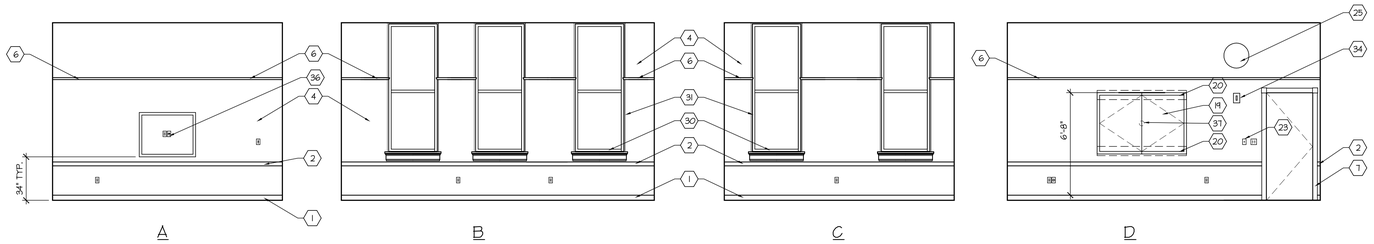

A2 CONFERENCE RM. #208
1/4"=1'-0"

AE403-A2-48

COOPER ROBERTS SIMONSEN ARCHITECTURE
crsa
700 NORTH 200 WEST
SALT LAKE CITY,UTAH 84103
(801) 355-5915
(801) 355-9885 FAX
WWW.CRSARCHITECTS.COM

REAVELEY ENGINEERS &ASSOCIATES, INC.
Consulting Structural Engineers
1515 South 1100 East
Salt Lake City, Utah 84105-2424
(801) 486-3883 Fax (801) 485-0911

WHW ENGINEERING INC.
PROFESSIONAL MECHANICAL ENGINEERING
1354 East 3300 South Suite 200
SALT LAKE CITY, UTAH 84106
(801)466-4121, FAX 466-8536
EMAIL: excellence@whw-engineering.com

BNA Consulting Engineers
Electrical Engineering & Lighting Design
635 South Third Street
Salt Lake City, Utah 84111 FAX (801) 532-2305
(801) 532-2746
© 2004 BNA Consulting Engineers
bma
brent morris associates ■ landscape architects
1574 raymond road fruit heights, utah, 84037 voice 801-544-0064 fax 801-546-9669 email bma@xmission.net

OLD MAIN BUILDING
SOUTHERN UTAH UNIVERSITY
351 WEST CENTER STREET
CEDAR CITY, UTAH 84720

STATE OF UTAH

DFCM

4110 STATE OFFICE BUILDING
SALT LAKE CITY, UTAH

3/8/06	BID ADDENDUM 2
BID DOCUMENT	1/16/06
CD 100%	7/21/04
DD Submittal	7/12/04
ARCHITECT PROJECT NO.:	B04-012
DFCM PROJECT NO.:	03234730

INTERIOR ELEVATIONS

AE403

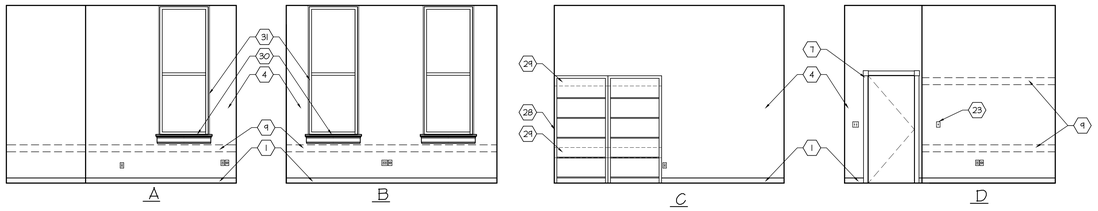

E1 SECOND. ED. CHAIR RM. #205

1/4"=1'-0"

AE404-D1-4B

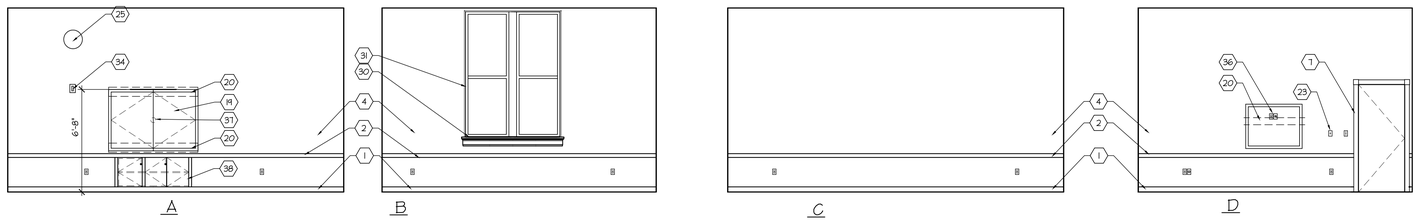

D1 DIST. LEARNING GRAD. SEMINAR RM. # 304

1/4"=1'-0"

AE404-D1-4B

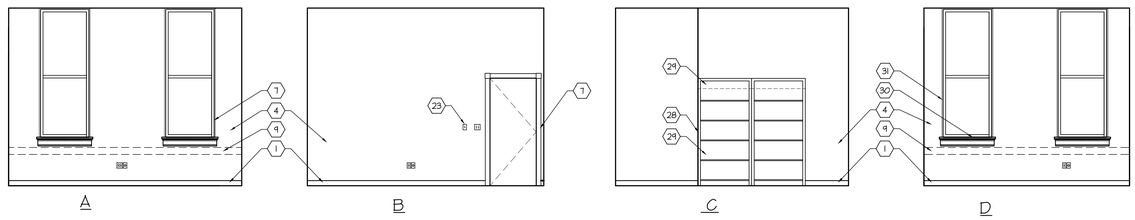

C1 ASSOC . DEAN RM. #219

1/4"=1'-0"

AE404-C1-4B

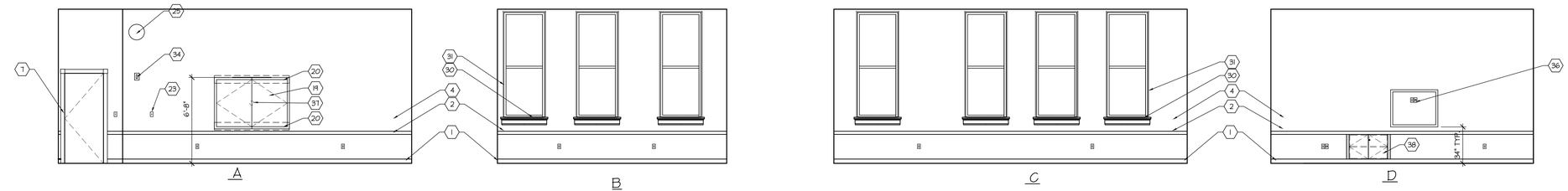

B1 DIST. LEARNING GRAD. SEMINAR RM. # 305

1/4"=1'-0"

AE404-B1-4B

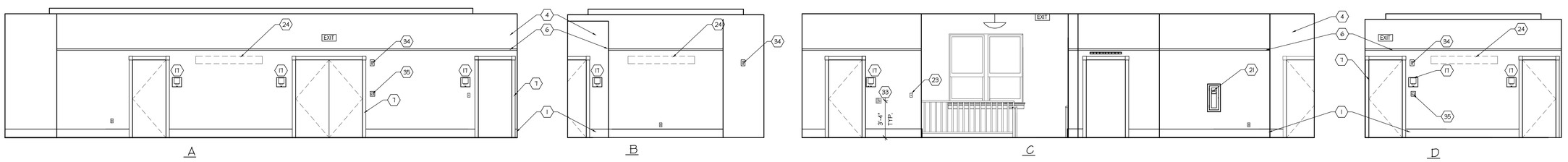

A1 RECEPT./WATING RM. #222

1/4"=1'-0"

AE404-A1-4B

INTERIOR KEY NOTES

1. BASE - SEE FINISH SCHEDULE AF101
2. 3" CHAIR RAIL - SEE A1/AF101 FOR PROFILE INFORMATION.
3. BUILDING DIRECTORY. WOOD BLOCKING REQUIRED.
4. PAINTED GYPSUM BOARD - SEE FINISH SCHEDULE.
5. LIGHT FIXTURE - SEE ELECTRICAL DWGS.
6. 1 1/2" PICTURE RAIL. SEE B1/AF101
7. DOOR /WINDOW CASING - SEE B3/AF101 FOR PROFILE INFORMATION.
8. WALL FINISH - SEE FINISH SCHEDULE.
9. PROVIDE 2x 6 HORIZONTAL BLOCKING IN AREAS SCHEDULED TO RECEIVE SHELVES OR WALL HUNG CABINETS.
10. 3 ½" BASE - SEE FINISH SCHEDULE FOR PROFILE INFORMATION.
11. COUNTERTOP WITH 4" BACKSPLASH. SEE D4/AE503
- 11A. COUNTERTOP WITH 4" BACKSPLASH. SEE C5 AE503 (A)
12. BASE CABINET.
13. WALL CABINET. 12" DEEP
14. REFRIGERATOR.
15. PAINTED COUNTERTOP SUPPORT. COLOR BY ARCHITECT. SEE DETAIL D4/AE503.
16. LAMINATE END PANEL - FINISHED BOTH SIDES.
17. ADA SIGNAGE - SEE DETAIL D3/AF101 & AE601 FOR SCHEDULE
18. CEILING MOUNTED PROJECTION SCREEN
19. WALL MOUNTED VISUAL DISPLAY CONFERENCE UNIT - SEE 101/01. (NIC)
20. WOOD BLOCKING FOR DISPLAY BOARD - SEE MFG. REQUIREMENTS.
21. SEMI-RECESSED FIRE EXTINGUISHER CABINET.
22. FUTURE SURVEILLANCE CAMERA. COORDINATE W/ ELECTRICAL FOR CONDUIT REQUIREMENTS.
23. WALL MOUNTED TEMPERATURE SENSOR @ 48" ABOVE F.F. - SEE ME103.
24. 2x 8 BLOCKING FOR FUTURE ART.
25. SYSTEM CLOCK - COORD. WITH ELECTRICAL.
26. 4" RUBBER BASE (SEE FINISH SCHEDULE AF101
27. 12' X 4' WHITE MARKER BOARD.
28. 42"x 71"-0" P-LAM CLAD BOOKSHELVES W/ ADJUSTABLE MELAMINE CLAD SHELVES (NIC)
29. 2x 8 WOOD BLOCKING FOR BOOKSHELVES
30. WOOD WINDOW SILL & SKIRT. SEE E2,E3/AF101
31. CONTINUOUS RADIUSED GYPSUM BOARD EDGE.
32. ELECTRONIC SCROLLING MARQUEE. COORDINATE WITH ELECTRICAL DRAWINGS
33. AUTOMATIC DOOR OPENER EACH SIDE OF DOOR
34. FIRE ALARM HORN/STROBE LIGHT. SEE ELECTRICAL.
35. MANUAL FIRE ALARM STATION
36. RECEPTACLE & TV OUTLET FOR 52" DIAGONAL FLAT SCREEN MONITOR.
37. STUB OUT FOR FUTURE "SMARTBOARD"
38. LOCKABLE CONTROL CABINET.
39. TRACK LIGHTING. SEE ELECTRICAL.
40. MICROWAVE.
41. ADA COMPLIANT MOLDED UNDERSINK SAFETY COVER. DRAIN & SUPPLY LINES.
42. SKIRT TO MATCH BASE CABINETS

GENERAL NOTES

1. ALL EXPOSED SURFACES ARE TO BE FINISHED.
2. SEE FINISH SCHEDULE FOR BASE INFORMATION.
3. ALL TOILET ACCESSORIES ARE TO BE MOUNTED ACCORDING TO ANSI A117.1 STANDARDS.
4. SEE FLOOR PLAN AND SHEET AE601 FOR DOOR AND WINDOW NOTES.

COOPER ROBERTS SIMONSEN ARCHITECTURE

crsa

700 NORTH 200 WEST
SALT LAKE CITY,UTAH 84103
(801) 355-5915
(801) 355-9885 FAX
WWW.CRSARCHITECTS.COM

REAVELEY ENGINEERS &ASSOCIATES, INC.
Consulting Structural Engineers
1515 South 1100 East
Salt Lake City, Utah 84105-2424
(801) 486-3883 Fax (801) 485-0911

WHW ENGINEERING INC.
PROFESSIONAL MECHANICAL ENGINEERING
1354 East 3300 South Suite 200
SALT LAKE CITY, UTAH 84106
(801)466-4121, FAX 466-8536
EMAIL: excellence@whw-engineering.com

BNA Consulting Engineers
Electrical Engineering
& Lighting Design
635 South State Street
SALT LAKE CITY, UT 84111 FAX (801) 532-2305
(801) 532-2740

© 2004 BNA Consulting Engineers

bma
brent morris associates ■ landscape architects
1574 ramond road fruit heights, utah, 84037 voice 801-544-2064 fax 801-546-9693 email bma@xmission.net

OLD MAIN BUILDING
SOUTHERN UTAH UNIVERSITY
351 WEST CENTER STREET
CEDAR CITY, UTAH 84720

STATE OF UTAH

DFCM

4110 STATE OFFICE BUILDING
SALT LAKE CITY, UTAH

3/8/06	BID ADDENDUM 2
BID DOCUMENT	1/16/06
CD 100%	7/21/04
DD Sumbittal	7/12/04
ARCHITECT PROJECT NO.:	B04-012
DFCM PROJECT NO.:	03234730

INTERIOR ELEVATIONS

AE404

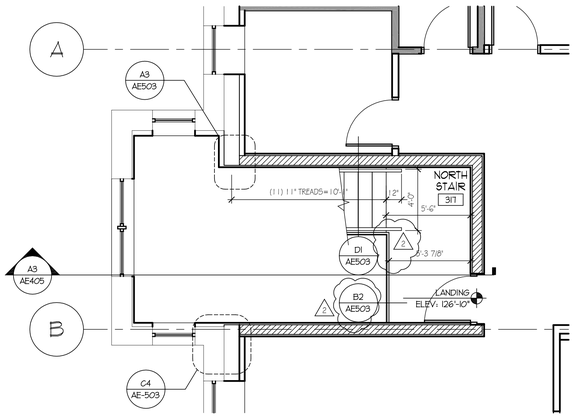

THIRD LEVEL STAIR PLAN

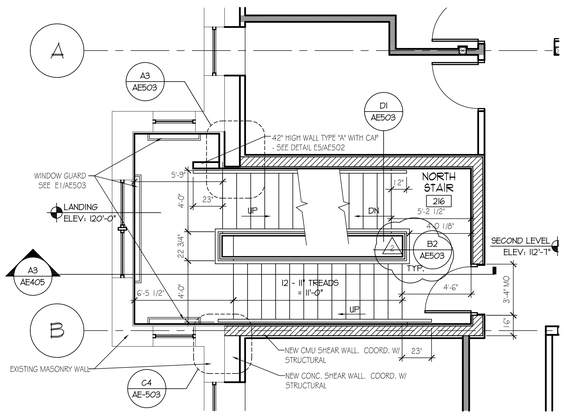

SECOND LEVEL STAIR PLAN

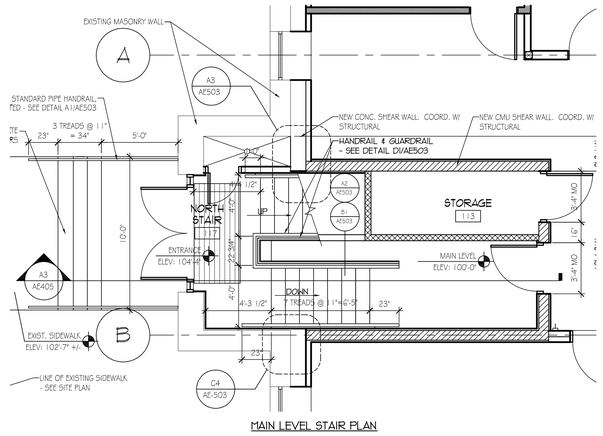

MAIN LEVEL STAIR PLAN

A1 ENLARGED NORTH STAIR PLAN

1/4" = 1'-0"

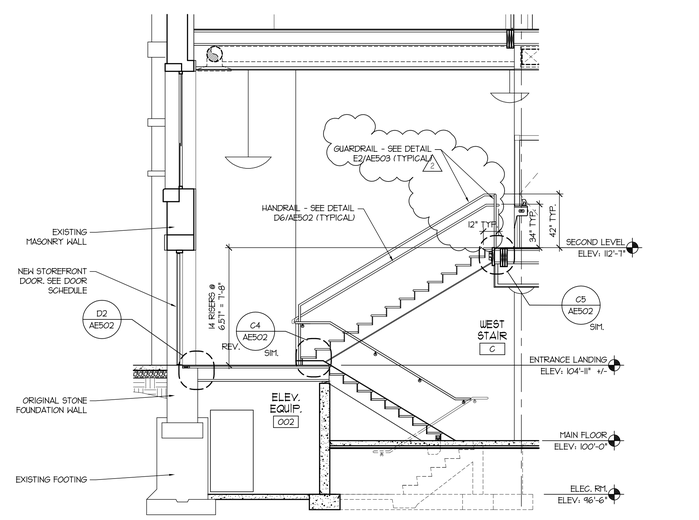

D3 STAIR SECTION - WEST

1/4" = 1'-0"

AE406-A1-48

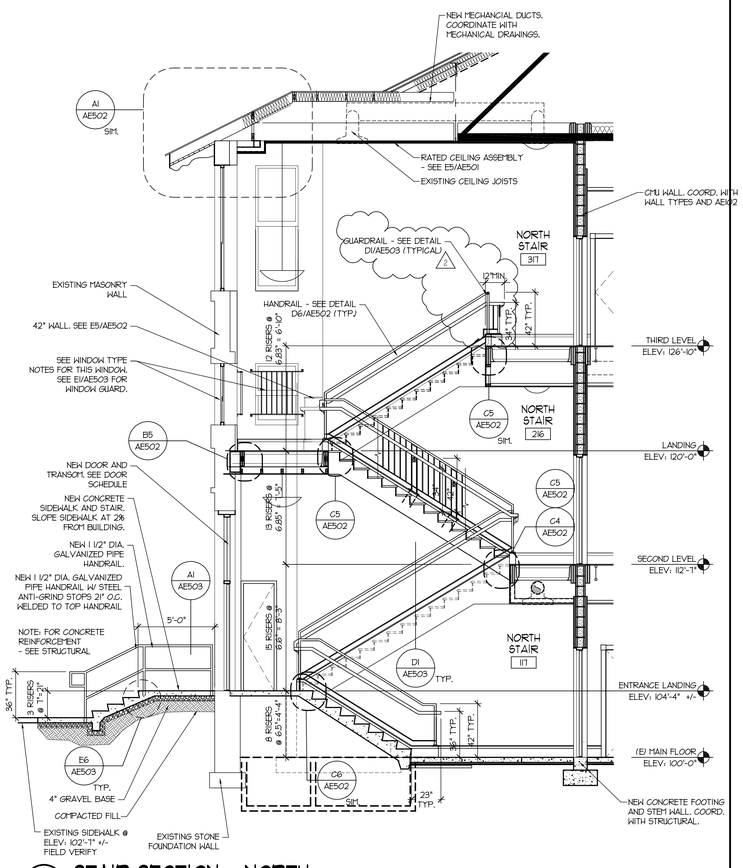

A3 STAIR SECTION - NORTH

1/4" = 1'-0"

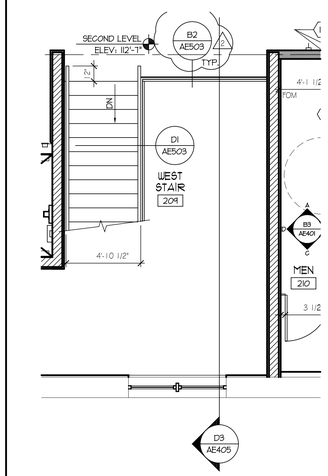

SECOND LEVEL STAIR PLAN

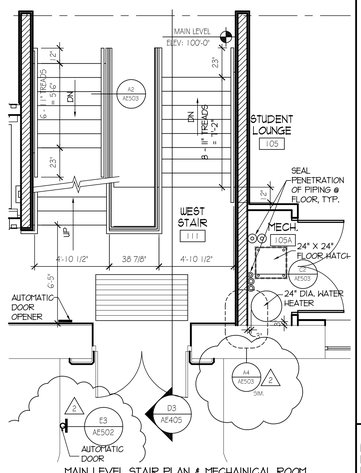

MAIN LEVEL STAIR PLAN & MECHAINICAL ROOM

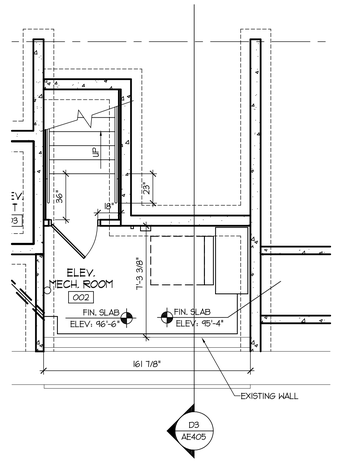

BASEMENT LEVEL STAIR & ELEVATOR
MECHANICAL ROOM

A5 STAIR SECTION - WEST

1/4" = 1'-0"

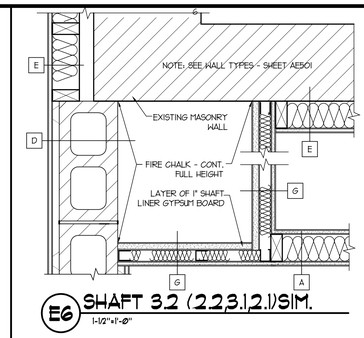

E6 SHAFT 3.2 (2.2,3,1.2,1)SIM.

1-1/2"=1'-0"

AE405-E6-08

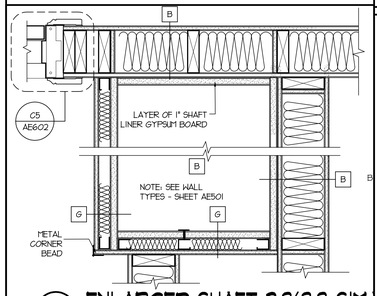

B6 ENLARGED SHAFT 2.3(3.3 SIM.)

1-1/2"=1'-0"

AE405-B6-08

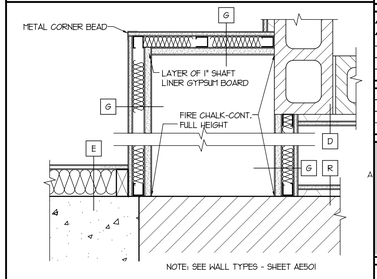

A6 ENLARGED SHAFT 2.4(3.4 SIM.)

1-1/2"=1'-0"

AE405-A6-08

COOPER
ROBERTS
SIMONSEN
ARCHITECTURE

crsa

700 NORTH 200 WEST
SALT LAKE CITY,UTAH 84103
(801) 355-5915
(801) 355-9885 FAX
WWW.CRSARCHITECTS.COM

REAVELEY ENGINEERS
&ASSOCIATES, INC.
Consulting Structural Engineers
1515 South 1100 East
Salt Lake City, Utah 84105-2424
(801) 486-3883 Fax (801) 485-0911

WHW
ENGINEERING INC.
PROFESSIONAL MECHANICAL ENGINEERING
1354 East 3300 South Suite 200
SALT LAKE CITY, UTAH 84106
(801)466-4321, FAX 466-8536
EMAIL: excellence@whw-engineering.com

BNA
Consulting Engineers
Electrical Engineering
& Lighting Design
635 South 700e Street
Salt Lake City, Utah 84111
(801) 532-2104 FAX (801) 532-2305

© 2004 BNA Consulting Engineers

bma
brent morris associates ■ landscape architects
1574 raymond road fruit heights, utah, 84037 voice 801-544-0064 fax 801-546-9869 email bma@xmission.net

OLD MAIN BUILDING
SOUTHERN UTAH
UNIVERSITY
351 WEST CENTER STREET
CEDAR CITY, UTAH 84720

STATE OF UTAH

DFCM

4110 STATE OFFICE BUILDING
SALT LAKE CITY, UTAH

3/8/06	BID ADDENDUM 2
BID DOCUMENT	1/16/06
CD 100%	7/21/04
DD Sumbittal	7/12/04
ARCHITECT PROJECT NO.:	B04-012
DFCM PROJECT NO.	03234730
	DTN

ENLARGED
STAIR PLANS
& STAIR SECTIONS

AE405

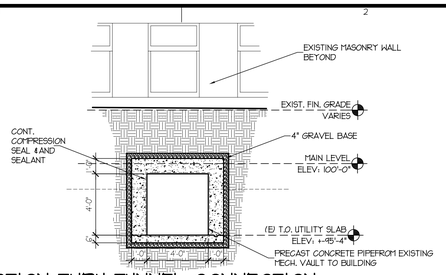

E1 CROSS-SECTION THRU TUNNEL CONNECTION

1/4" = 1'-0"

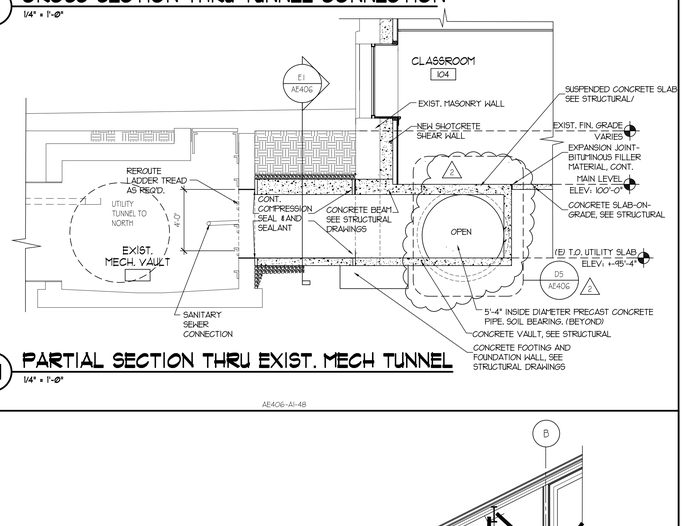

D1 PARTIAL SECTION THRU EXIST. MECH TUNNEL

1/4" = 1'-0"

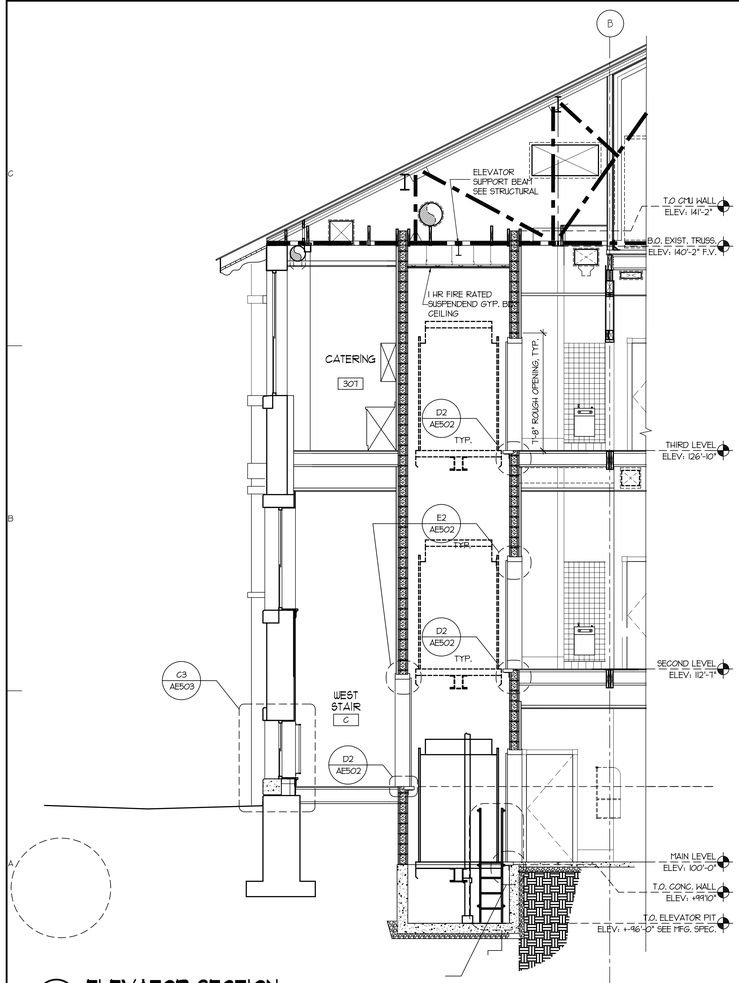

A1 ELEVATOR SECTION

1/4" = 1'-0"

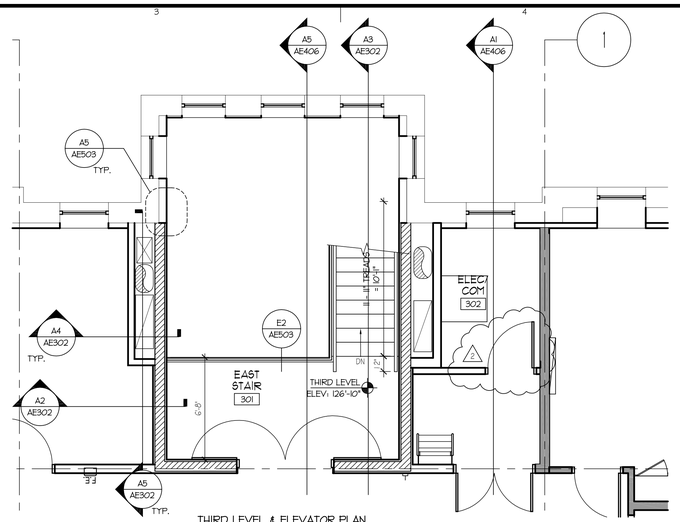

THIRD LEVEL & ELEVATOR PLAN

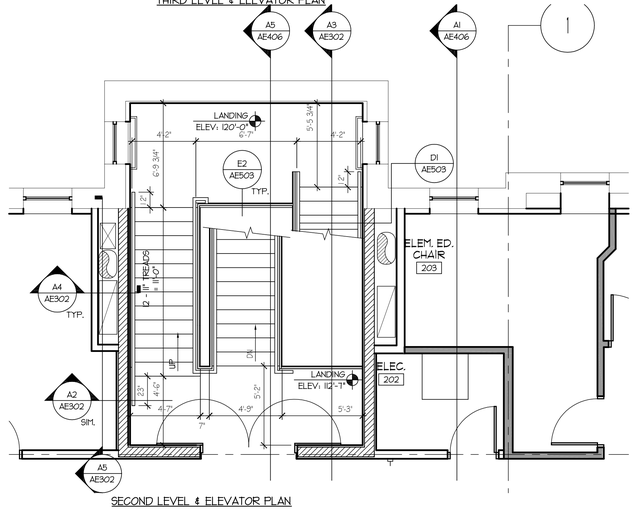

SECOND LEVEL & ELEVATOR PLAN

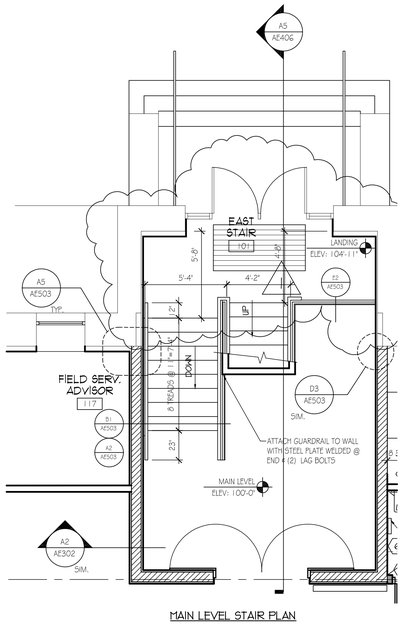

MAIN LEVEL STAIR PLAN

A3 ENLARGED EAST STAIR PLAN

1/4" = 1'-0"

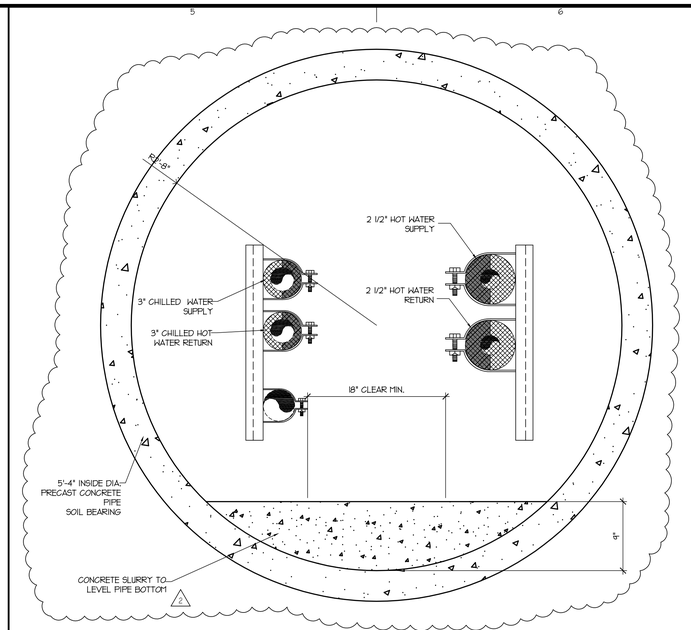

D5 SECTION THRU MECH. PIPE

1-1/2"=1'-0"

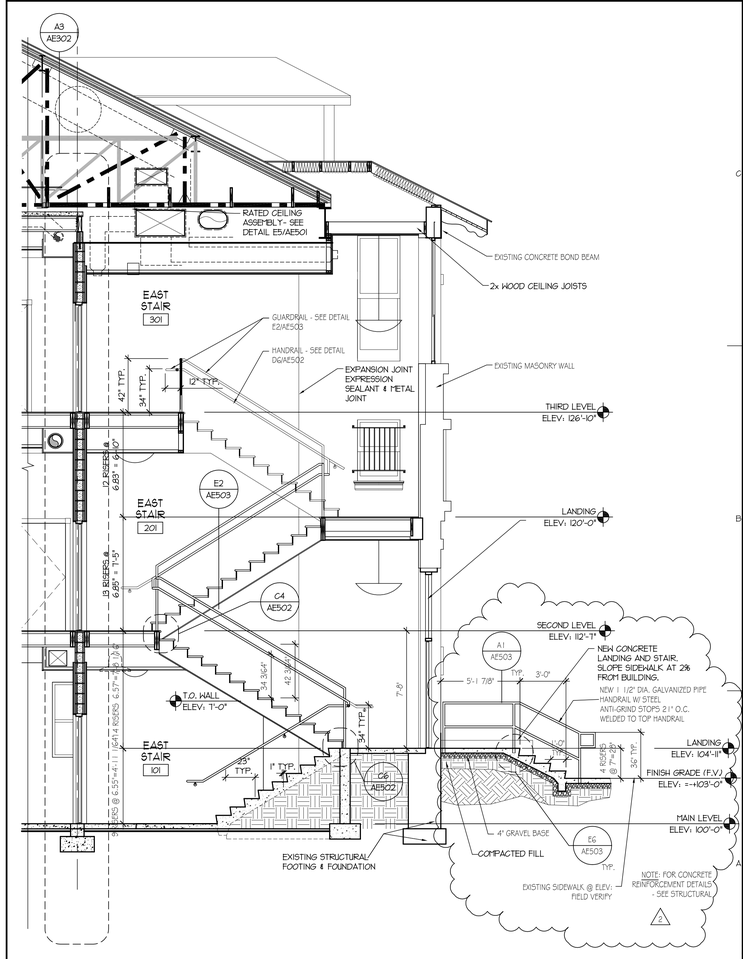

A5 STAIR SECTION - EAST

1/4" = 1'-0"

COOPER ROBERTS SIMONSEN ARCHITECTURE
crsa
700 NORTH 200 WEST
SALT LAKE CITY,UTAH 84103
(801) 355-5915
(801) 355-9885 FAX
WWW.CRSARCHITECTS.COM

REAVELEY ENGINEERS &ASSOCIATES, INC.
Consulting Structural Engineers
1515 South 1100 East
Salt Lake City, Utah 84105-2424
(801)-486-3883 Fax (801) 485-0911

WHW ENGINEERING INC.
PROFESSIONAL MECHANICAL ENGINEERING
1354 East 3300 South Suite 200
SALT LAKE CITY, UTAH 84106
(801)466-4021, FAX 466-8536
EMAIL: excalibrecw@whwengineering.com

BNA Consulting Engineers
Electrical Engineering
& Lighting Design
635 South State Street
Salt Lake City, Utah 84111
(801) 532-2196 FAX (801) 532-2306
© 2004 BNA Consulting Engineers
bma
brent morris associates ■ landscape architects
1074 raymond road bull heights, utah, 84037 voice 801-544-0064 fax 801-546-8668 email bma@xmission.com

OLD MAIN BUILDING
SOUTHERN UTAH UNIVERSITY
351 WEST CENTER STREET
CEDAR CITY, UTAH 84720

STATE OF UTAH

DFCM

4110 STATE OFFICE BUILDING
SALT LAKE CITY, UTAH

1	3/8/06	BID ADDENDUM 2
2		

BID DOCUMENT	1/16/06
CD 100%	7/21/04
DD Sumbittal	7/12/04

ARCHITECT PROJECT NO.: B04-012
DFCM PROJECT NO.: 03234730
DTN

ENLARGED STAIR PLANS & STAIR SECTIONS

AE406

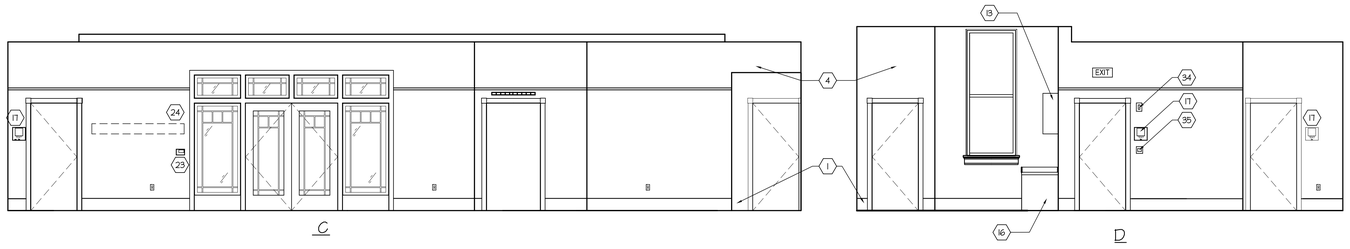

D1 RECEPT./WAITING RM. #319
1/4"=1'-0"

AE404A-D1-48

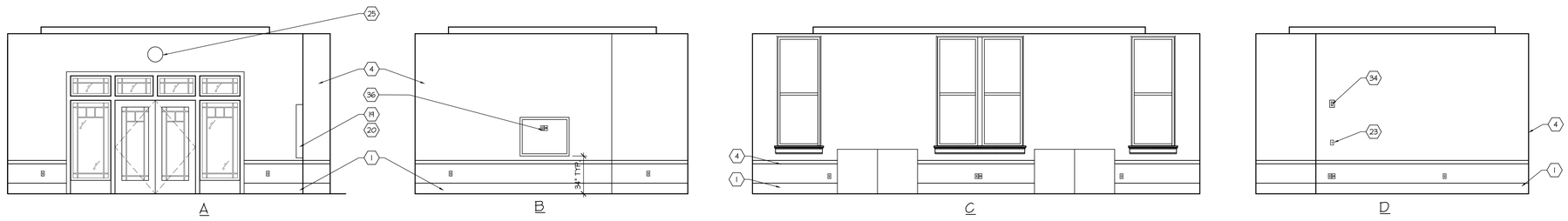

C1 DEAN'S CONF. & NCATE DOC. RM#306
1/4"=1'-0"

AE404A-C1-48

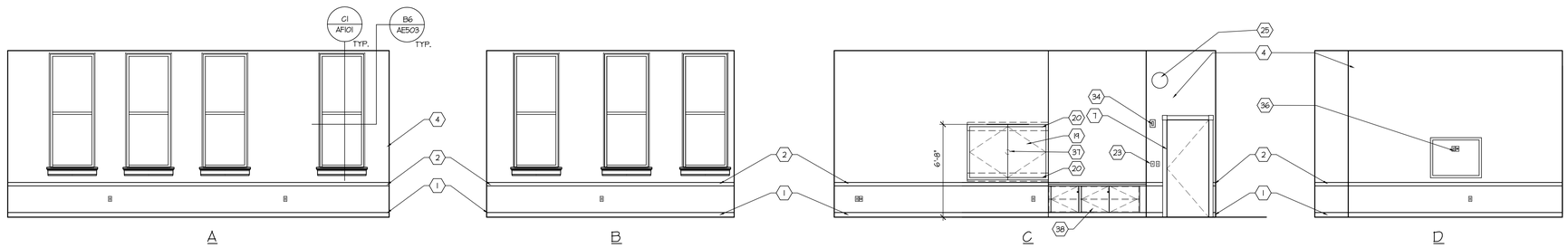

B1 DIST. LEARNING GRAD. SEMINAR RM. # 303
1/4"=1'-0"

AE404A-B1-48

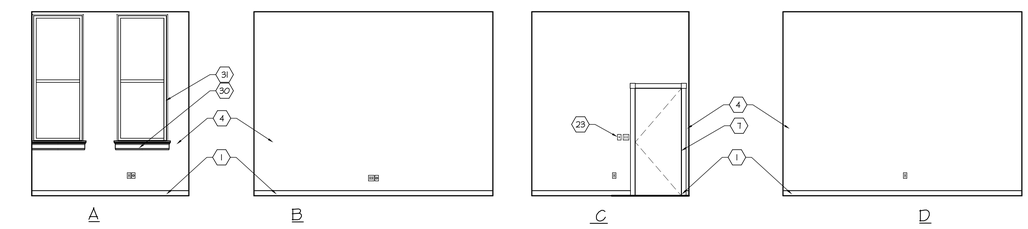

A1 GRAD. ADVISOR RM.#316
1/4"=1'-0"

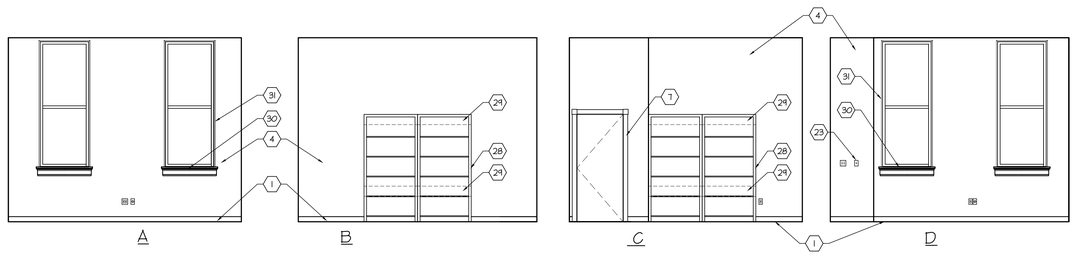

A4 GRAD. EDU. CHAIR RM.#315
1/4"=1'-0"

AE404-A1-48

AE404-A4-48

INTERIOR KEY NOTES

1. BASE = SEE FINISH SCHEDULE AF101
2. 3# CHAIR RAIL = SEE A1/AF101 FOR PROFILE INFORMATION.
3. BUILDING DIRECTORY. WOOD BLOCKING REQUIRED.
4. PAINTED GYPSUM BOARD = SEE FINISH SCHEDULE.
5. LIGHT FIXTURE = SEE ELECTRICAL DWGS.
6. 1 1/2# PICTURE RAIL. SEE B1/AF101
7. DOOR /WINDOW CASING = SEE B3/AF101 FOR PROFILE INFORMATION.
8. WALL FINISH = SEE FINISH SCHEDULE.
9. PROVIDE 3x 6 HORIZONTAL BLOCKING IN AREAS SCHEDULED TO RECEIVE SHELVES OR WALL HUNG CABINETS.
10. 3 1/4" BASE = SEE FINISH SCHEDULE FOR PROFILE INFORMATION.
11. COUNTERTOP WITH 4" BACKSPLASH. SEE D4/AE503
- 11A. COUNTERTOP WITH 4" BACKSPLASH. SEE D3 AE503
12. BASE CABINET.
13. WALL CABINET, 12" DEEP
14. REFRIGERATOR.
15. PAINTED COUNTERTOP SUPPORT, COLOR BY ARCHITECT, SEE DETAIL D4/AE503.
16. LAMINATE END PANEL = FINISHED BOTH SIDES.
17. ADA SIGNAGE = SEE DETAIL D3/AF101 & AE601 FOR SCHEDULE
18. CEILING MOUNTED PROJECTION SCREEN
19. WALL MOUNTED VISUAL DISPLAY CONFERENCE UNIT = SEE I01/01, 1N1G1
20. WOOD BLOCKING FOR DISPLAY BOARD = SEE MFG. REQUIREMENTS.
21. SEMI-RECESSED FIRE EXTINGUISHER CABINET.
22. FUTURE SURVEILLANCE CAMERA. COORDINATE W/ ELECTRICAL FOR CONDUIT REQUIREMENTS.
23. WALL MOUNTED TEMPERATURE SENSOR @ 48" ABOVE F.F. = SEE M103.
24. 2x 8 BLOCKING FOR FUTURE ART.
25. SYSTEM CLOCK = COORD. WITH ELECTRICAL.
26. 4" RUBBER BASE (SEE FINISH SCHEDULE AF101
27. 12' X 4' WHITE MARKER BOARD.
28. 42"h 11'-0" l=LAM CLAD BOOKSHELVES W/ ADJUSTABLE MELAMINE CLAD SHELVES (N1G)
29. 2x 8 WOOD BLOCKING FOR BOOKSHELVES
30. WOOD WINDOW SILL & SKIRT, SEE E2/E3/AF101
31. CONTINUOUS RADIUSED GYPSUM BOARD EDGE.
32. ELECTRONIC SCROLLING MARQUEE. COORDINATE WITH ELECTRICAL DRAWINGS
33. AUTOMATIC DOOR OPENER EACH SIDE OF DOOR
34. FIRE ALARM HORN/STROBE LIGHT, SEE ELECTRICAL.
35. MANUAL FIRE ALARM STATION
36. RECEPTACLE & TV OUTLET FOR 52# DIAGONAL FLAT SCREEN MONITOR.
37. STUB OUT FOR FUTURE "SMARTBOARD"
38. LOCKABLE CONTROL CABINET.
39. TRACK LIGHTING. SEE ELECTRICAL.
40. MICROWAVE.
41. ADA COMPLIANT MOLDED UNDERSINK SAFETY COVER, DRAIN & SUPPLY LINES.
42. SKIRT TO MATCH BASE CABINETS

GENERAL NOTES

1. ALL EXPOSED SURFACES ARE TO BE FINISHED.
2. SEE FINISH SCHEDULE FOR BASE INFORMATION.
3. ALL TOILET ACCESSORIES ARE TO BE MOUNTED ACCORDING TO ANSI A117.1 STANDARDS.
4. SEE FLOOR PLAN AND SHEET AE601 FOR DOOR AND WINDOW NOTES.

COOPER ROBERTS SIMONSEN ARCHITECTURE

crsa

700 NORTH 200 WEST
SALT LAKE CITY,UTAH 84103
(801) 355-5915
(801) 355-9885 FAX
WWW.CRSARCHITECTS.COM

REAVELEY ENGINEERS &ASSOCIATES, INC.
Consulting Structural Engineers
1515 South 1100 East
Salt Lake City, Utah 84105-2424
(801) 486-3883 Fax (801) 485-0911

WHW ENGINEERING INC.
PROFESSIONAL MECHANICAL ENGINEERING
1354 East 3300 South Suite 200
SALT LAKE CITY, UTAH 84106
(801)466-4321, FAX 466-8536
EMAIL: excellence@whw-engineering.com

BNA Consulting Engineers
Electrical Engineering
& Lighting Design
635 South State Street
Salt Lake City, Utah 84111 FAX (801) 532-2305
(801) 532-2740

© 2004 BNA Consulting Engineers

bma
brent morris associates ■ landscape architects
1574 ramond road holt heights, utah, 84037 voice 801-544-0064 fax 801-546-9669 email brad@bmalawns.net

OLD MAIN BUILDING
SOUTHERN UTAH UNIVERSITY
351 WEST CENTER STREET
CEDAR CITY, UTAH 84720

STATE OF UTAH

DFCM

4110 STATE OFFICE BUILDING
SALT LAKE CITY, UTAH

3/8/06	BID ADDENDUM 2
BID DOCUMENT	1/16/06
CD 100%	7/21/04
DD Sumbittal	7/12/04
ARCHITECT PROJECT NO.:	B04-012
DFCM PROJECT NO.:	03234730

INTERIOR ELEVATIONS

AE407

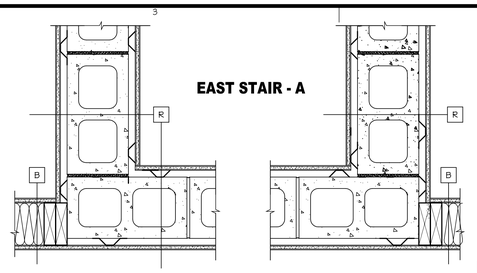

E3 FRAMING DETAIL
1 1/2" = 1'-0"

SEE INDIVIDUAL WALL TYPES AS NOTED ON PLAN FOR SPECIFIC CALLOUTS, MATERIAL REFERENCES, AND ASSEMBLIES.

AE501-A1-08

GENERAL NOTES

1. SEE DETAILS E4 & E5/AE503 FOR WALL TO FLOOR/CLG. JOINT FOR SOUND WALLS. SOUND WALLS ARE ALL WALLS WITH SOUND BATT. INSULATION - SEE SHEET AE101.

BEARING WALL
FIRE RATING: N/A
FIRE TEST: N/A

SOUND RATING: N/A
SOUND TEST: N/A
HEIGHT: N/A

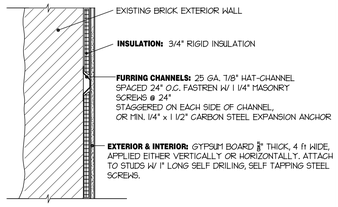

D1 WALL TYPE 'Q'
1 1/2" = 1'-0"

AE501-D1-08

BEARING WALL
FIRE RATING: N/A
FIRE TEST: NA

SOUND RATING: N/A
SOUND TEST: N/A
HEIGHT: VARIES

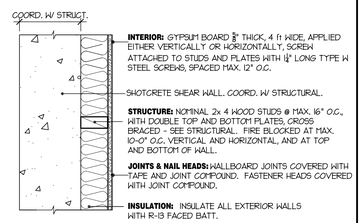

D2 WALL TYPE 'R'
1-1/2" =1'-0"

AE501-D2-08

BEARING WALL
FIRE RATING: I-HR
FIRE TEST: GA FILE NO. WP 3230

STC: 50 TO 54 STC
SOUND TEST: RAL TL11-138 **HEIGHT:** BOTTOM OF FLOOR/ROOF STRUCTURE

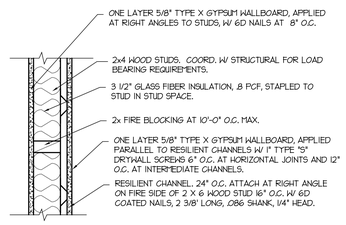

D3 WALL TYPE 'S'
1 1/2" = 1'-0"

AE501-A1-08

FIRE RATING: 1 HR.
FIRE TEST: GA FC 5406

SOUND RATING: 35 - 39 STC
SOUND TEST: EST.

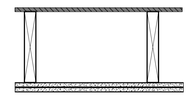

BASE LAYER 5/8" TYPE "X" GYPSUM WALLBOARD APPLIED AT RIGHT ANGLES TO 2x 10 WOOD JOISTS 24" O.C. WITH 1 1/4" TYPE "W" OR "S" DRYWALL SCREWS @ 24" O.C. **FACE** LAYER 5/8" TYPE "X" GYPSUM WALLBOARD OR GYPSUM VENEER BASE APPLIED AT RIGHT ANGLES TO JOISTS WITH 1 1/4" TYPE "S" DRYWALL SCREWS @ 12"O.C. AT JOINTS AND INTERMEDIATE JOISTS AND 1 1/4" TYPE "S" DRYWALL SCREWS @ 12" O.C. PLACED 2" BACK ON EITHER SIDE OF END JOINTS. JOINTS OFFSET 24" FROM BASE LAYER JOINTS. WOOD JOINTS SUPPORTING 1/2" PLYWOOD WITH EXTERIOR GLUE APPLIED AT RIGHT ANGLES TO JOINTS WITH 8D NAILS. **CEILING PROVIDES ONE HOUR FIRE RESISTANCE PROTECTION FOR WOOD FRAMING, INCLUDING TRUSSES.**

D6 FLOOR-CEILING
1-1/2" =1'-0"

AE501-E5-08

BEARING WALL
FIRE RATING: 3-HR
FIRE TEST: UL 184

SOUND RATING: N/A
SOUND TEST: N/A
HEIGHT: UNDERSIDE OF TOPCHORD OF TRUSS

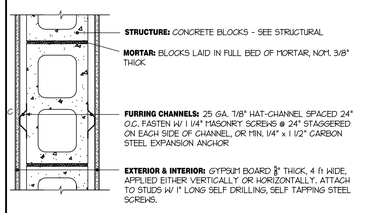

C1 WALL TYPE 'L'
1-1/2" =1'-0"

AE501-A1-08

BEARING WALL
FIRE RATING: N/A

SOUND RATING: N/A
SOUND TEST: N/A
HEIGHT: FLOOR/ROOF STRUCTURE

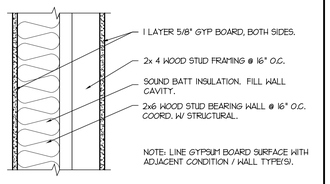

C2 WALL TYPE 'M'
1 1/2" = 1'-0"

AE501-A1-08

BEARING WALL
FIRE RATING: N/A
FIRE TEST: N/A
SEE NOTE 1

SOUND RATING: N/A
SOUND TEST: N/A
HEIGHT: N/A

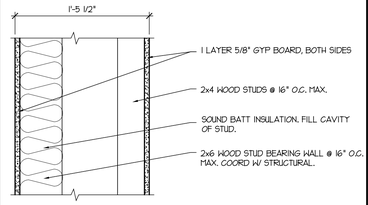

C3 WALL TYPE 'N'
1 1/2" = 1'-0"

AE501-A1-08

BEARING WALL
FIRE RATING: N/A
FIRE TEST: NA

SOUND RATING: N/A
SOUND TEST: N/A
HEIGHT: VARIES

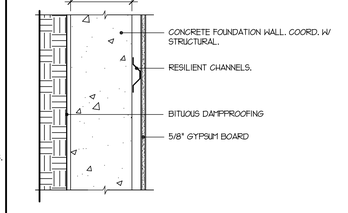

C4 WALL TYPE 'O'
1-1/2" =1'-0"

AE501-A1-08

NON-BEARING WALL
FIRE RATING: N/A
FIRE TEST: N/A
SEE NOTE 1

SOUND RATING: N/A
SOUND TEST: N/A
HEIGHT: N/A

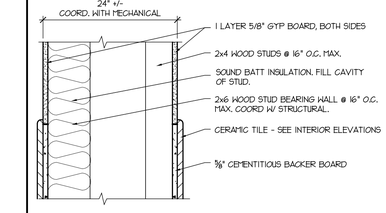

C5 WALL TYPE 'P'
1 1/2" = 1'-0"

AE501-A1-08

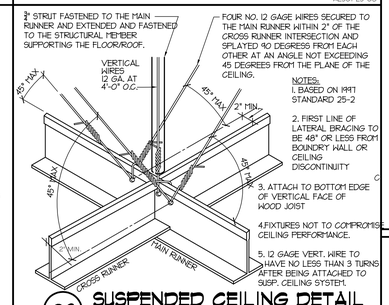

NOTES:
1. BASED ON RMT STANDARD 25-2
2. FIRST LINE OF LATERAL BRACING TO BE 48" OR LESS FROM BOUNDRY WALL OR CEILING DISCONTINUITY
3. ATTACH TO BOTTOM EDGE OF VERTICAL FACE OF WOOD JOIST
4. FIXTURES NOT TO COMPROMISE CEILING PERFORMANCE.
5. 12 GAGE VERT. WIRE TO HAVE NO LESS THAN 3 TURNS AFTER BEING ATTACHED TO SUSP. CEILING SYSTEM.

C6 SUSPENDED CEILING DETAIL
3/4"=1'-0"

BEARING WALL
FIRE RATING: N/A
FIRE TEST: NA

SOUND RATING: N/A
SOUND TEST: NONE
HEIGHT: TO STRUCTURE ABOVE

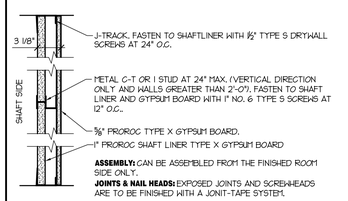

ASSEMBLY: CAN BE ASSEMBLED FROM THE FINISHED ROOM SIDE ONLY.
JOINTS & NAIL HEADS: EXPOSED JOINTS AND SCREWHEADS ARE TO BE FINISHED WITH A JONIT-TAPE SYSTEM.
ACOUSTIC BATT INSULATION: FILL CAVITY

B4 WALL TYPE 'G' HORIZONTAL SECTION
1-1/2" =1'-0"

AE501-A1-08

NON-BEARING WALL
FIRE RATING:
FIRE TEST: NA
SEE NOTE 1

SOUND RATING: N/A
SOUND TEST: N/A
HEIGHT: FLOOR DECK

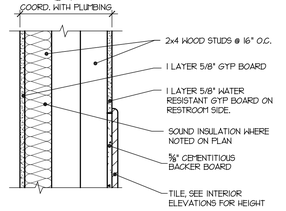

B5 WALL TYPE 'F'
1 1/2" = 1'-0"

AE501-A1-08

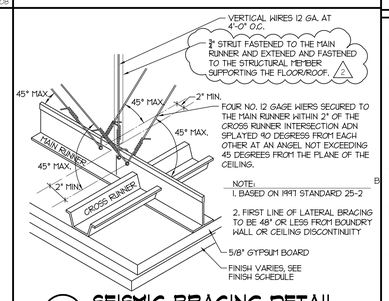

B6 SEISMIC BRACING DETAIL
12"=1'-0"

AE501-B6-01

BEARING WALL
FIRE RATING: N/A
FIRE TEST: N/A

SOUND RATING: N/A
SOUND TEST: N/A
HEIGHT: VARIES

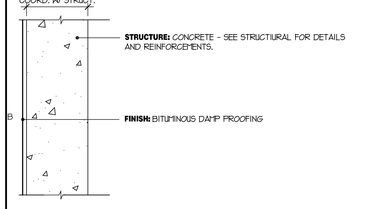

B1 WALL TYPE 'K'
1-1/2" =1'-0"

AE501-A1-08

BEARING WALL
FIRE RATING: I-HR
FIRE TEST: GA FILE NO. WP 3230

STC: 50 TO 54 STC
SOUND TEST: RAL TL11-138 **HEIGHT:** BOTTOM OF FLOOR/ROOF STRUCTURE

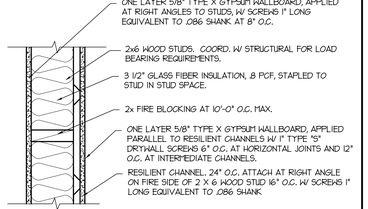

B2 WALL TYPE 'J'
1 1/2" = 1'-0"

AE501-A1-08

NON-BEARING WALL
FIRE RATING: N/A
FIRE TEST: N/A

SOUND RATING: N/A
SOUND TEST: N/A
HEIGHT: 8'-0"

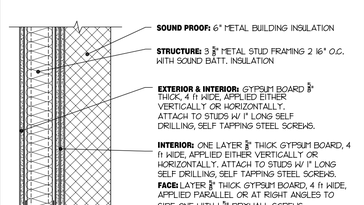

B3 WALL TYPE 'H'
1-1/2" =1'-0"

AE501-A1-08

NON-BEARING WALL
FIRE RATING: I-HR
FIRE TEST: UL 305

SOUND RATING: 35 TO 39 STC
SOUND TEST: ESTIMATED
HEIGHT: BOTTOM OF FLOOR

SEE NOTE 1

STRUCTURE: NOMINAL 2x 4 WOOD STUDS @ MAX. 16" O.C., WITH DOUBLE TOP AND BOTTOM PLATES, CROSS BRACED - SEE STRUCTURAL. FIRE BLOCKED AT MAX. 10'-0" O.C. VERTICAL AND HORIZONTAL, AND AT TOP AND BOTTOM OF WALL.

EXTERIOR & INTERIOR: GYPSUM BOARD 5/8" THICK, 4 ft WIDE, APPLIED EITHER VERTICALLY OR HORIZONTALLY, SCREW ATTACHED TO STUDS AND PLATES WITH 1 1/2" LONG TYPE W STEEL SCREWS, SPACED MAX. 12" O.C.

JOINTS & NAIL HEADS WALLBOARD JOINTS COVERED WITH TAPE AND JOINT COMPOUND. FASTENER HEADS COVERED WITH JOINT COMPOUND.

BATTS & BLANKETS: AS NOTED ON WALL TYPES PLAN

A3 WALL TYPE 'C'
1-1/2" =1'-0"

AE501-A1-08

BEARING WALL
FIRE RATING: 3-HR
FIRE TEST: UL 184

SOUND RATING: N/A
SOUND TEST: N/A
HEIGHT: UNDERSIDE OF TOPCHORD OF TRUSS

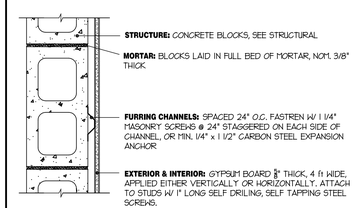

A4 WALL TYPE 'D'
1-1/2" =1'-0"

AE501-A1-08

BEARING WALL
FIRE RATING: N/A
FIRE TEST: N/A

SOUND RATING: N/A
SOUND TEST: N/A
HEIGHT: N/A

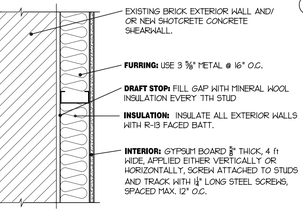

A5 WALL TYPE 'E'
1 1/2" = 1'-0"

AE501-A1-08

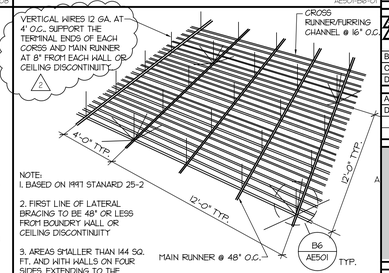

NOTE:
1. BASED ON RMT STANARD 25-2
2. FIRST LINE OF LATERAL BRACING TO BE 48" OR LESS FROM BOUNDRY WALL OR CEILING DISCONTINUITY
3. AREAS SMALLER THAN 144 SQ. FT. AND WITH WALLS ON FOUR SIDES, EXTENDING TO THE STRUCTURE, DO NOT NEED TO BE BRACED.

A6 SEISMIC BRACING DETAIL
12"=1'-0"

AE501-A6-01

COOPER ROBERTS SIMONSEN ARCHITECTURE
crsa
700 NORTH 200 WEST
SALT LAKE CITY,UTAH 84103
(801) 355-5915
(801) 355-9885 FAX
WWW.CRSARCHITECTS.COM

REAVELEY ENGINEERS &ASSOCIATES, INC.
Consulting Structural Engineers
1515 South 1100 East
Salt Lake City, Utah 84105-2424
(801) 486-3883 Fax (801) 485-0911

WHW ENGINEERING INC.
PROFESSIONAL MECHANICAL ENGINEERING
1384 East 3300 South Suite 200
SALT LAKE CITY, UTAH 84106
(801)466-4221, FAX 466-8536
EMAIL: excellence@whw-engineering.com

BNA Consulting Engineers
Electrical Engineering & Lighting Design
635 South State Street
Salt Lake City, Utah 84111
(801) 532-2796 FAX (801) 532-2305

© 2004 BNA Consulting Engineers

bma
brent morris associates ■ landscape architects
1574 ogmond road fruit heights, utah, 84037 voice 801-544-0064 fax 801-546-5869 email bma@xmission.com

OLD MAIN BUILDING
SOUTHERN UTAH UNIVERSITY
351 WEST CENTER STREET
CEDAR CITY, UTAH 84720

STATE OF UTAH

DFCM

4110 STATE OFFICE BUILDING
SALT LAKE CITY, UTAH

3/8/06	BID ADDENDUM 2
BID DOCUMENT	1/16/06
CD 100%	7/21/04
DD Sumbittal	7/12/04
ARCHITECT PROJECT NO.:	B04-012
DFCM PROJECT NO.:	03234730
	DTN

TYP. DETAILS & WALL TYPES

AE501

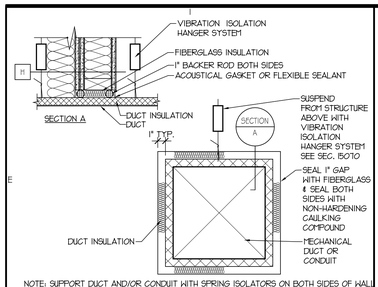

NOTE: SUPPORT DUCT AND/OR CONDUIT WITH SPRING ISOLATORS ON BOTH SIDES OF WALL

E1 SOUND WALL PENETRATION
1-1/2" = 1'-0"

AE502-E1-08

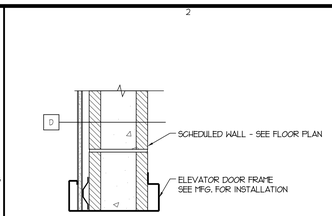

E2 ELEVATOR HEAD (JAMB SIM)
1-1/2" = 1'-0"

AE502-E2-08

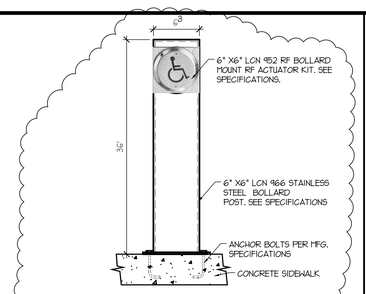

E3 AUTO DOOR BOLLARD
1-1/2" = 1'-0"

AE502-E3-08

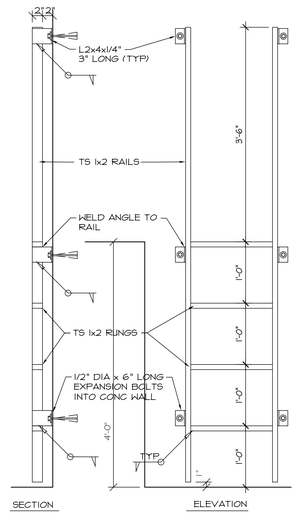

PAINT LADDER PRIOR TO ATTACHING TO WALL

E4 ELEVATOR LADDER
1" = 1'-0"

AE502-E4-12

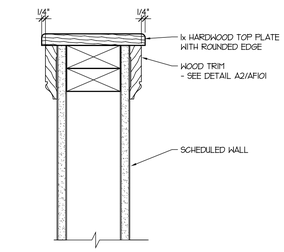

E5 WALL CAP DETAIL
3"=1'-0"

AE502-E5-04

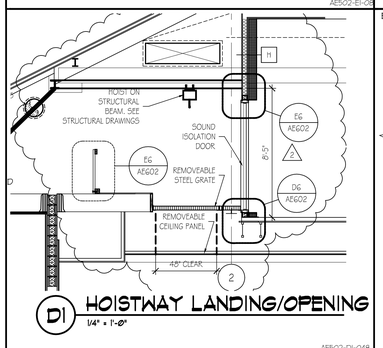

D1 HOISTWAY LANDING/OPENING
1/4" = 1'-0"

AE502-D1-04B

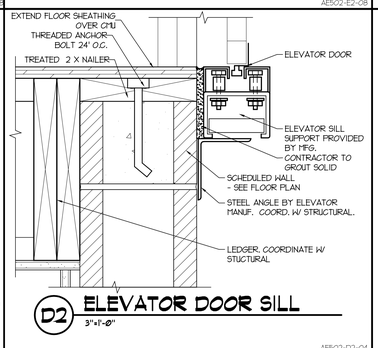

D2 ELEVATOR DOOR SILL
3"=1'-0"

AE502-D2-04

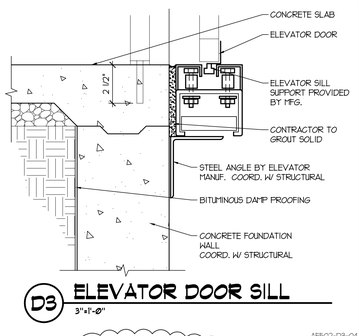

D3 ELEVATOR DOOR SILL
3"=1'-0"

AE502-D3-04

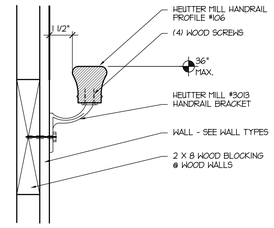

D6 HANDRAIL DETAIL @ WALL
3"=1'-0"

AE502-D6-04

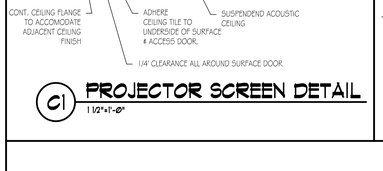

C1 PROJECTOR SCREEN DETAIL
1 1/2"=1'-0"

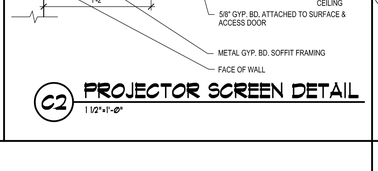

C2 PROJECTOR SCREEN DETAIL
1 1/2"=1'-0"

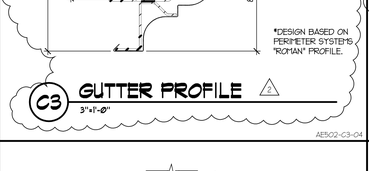

C3 GUTTER PROFILE
3"=1'-0"

AE502-C3-04

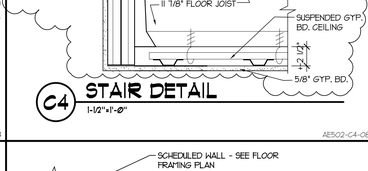

C4 STAIR DETAIL
1-1/2"=1'-0"

AE502-C4-08

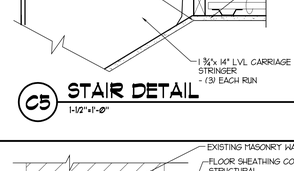

C5 STAIR DETAIL
1-1/2"=1'-0"

AE502-B5-08

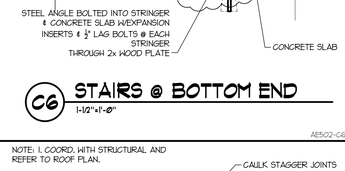

C6 STAIRS @ BOTTOM END
1-1/2"=1'-0"

AE502-C6-08

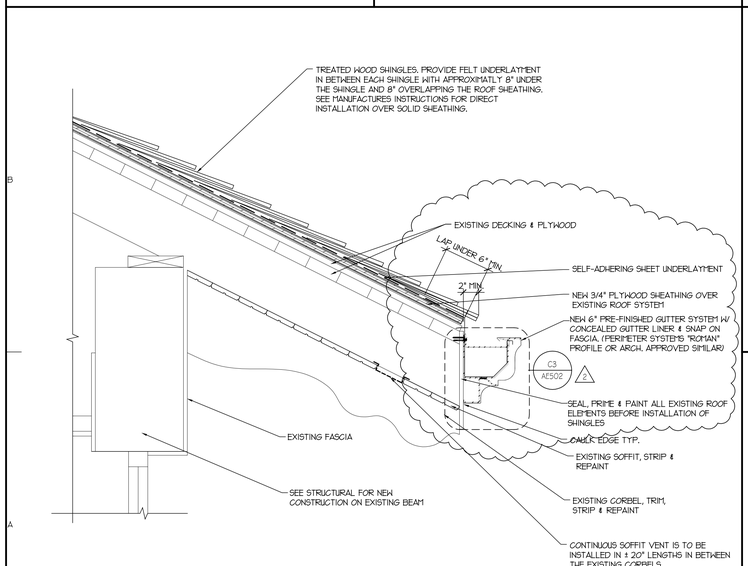

THIS DETAIL IS CONCEPTUAL. CONTRACTOR TO CONTACT ARCHITECT WHEN EXISTING CONDITIONS ARE DISCOVERED.

A1 EAVE DETAIL
1-1/2"=1'-0"

AE502-A2-08

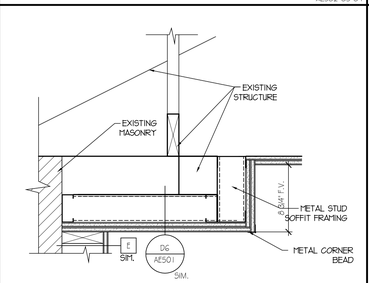

B3 CEILING DROP @ WINDOW
1-1/2"=1'-0"

AE502-B3-08

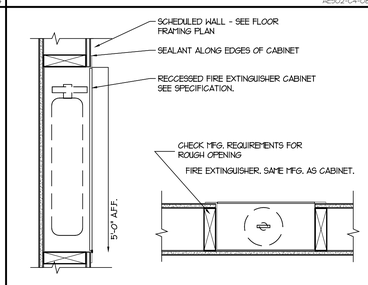

B4 FIRE EXTINGUISHER CAB.
1-1/2"=1'-0"

AE502-B4-08

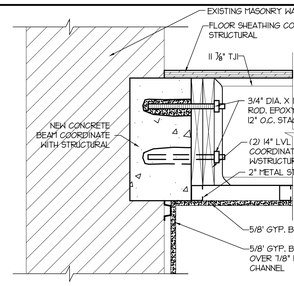

B5 STAIR LANDING (N & E)
1-1/2"=1'-0"

AE502-B5-08

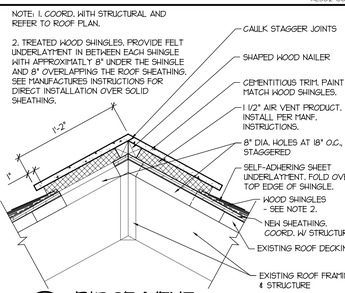

B6 RIDGE VENT
1-1/2"=1'-0"

AE502-B6-08

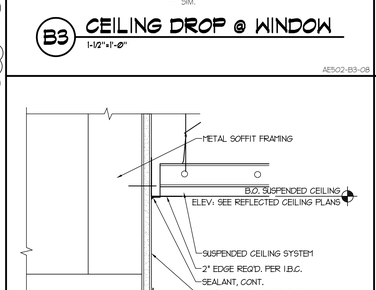

A3 TYP. CEILING DROP
3"=1'-0"

AE502-A3-04

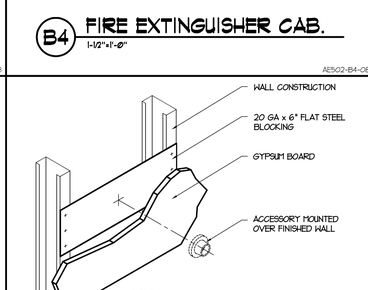

NOTE:
1. TYPICAL BLOCKING REQUIRED BEHIND WALL MOUNTED ACCESSORIES AND EQUIPMENT

A4 METAL FRAMING BLOCKING DETAIL
NONE

AE502-A4-01

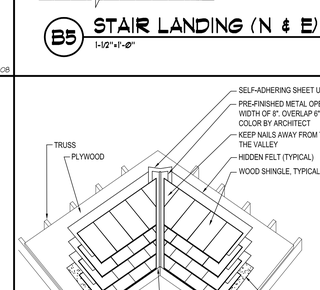

A5 VALLEY DETAIL
N.T.S.

AE502-A5-16

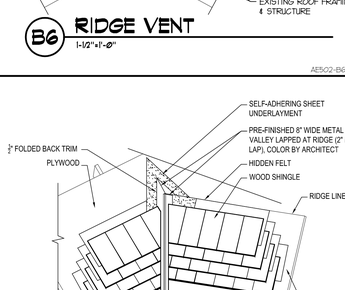

A6 SADDLE FLASHING DETAIL
N.T.S.

AE502-A6-16

COOPER ROBERTS SIMONSEN ARCHITECTURE
crsa
700 NORTH 200 WEST
SALT LAKE CITY,UTAH 84103
(801) 355-5915
(801) 355-9885 FAX
WWW.CRSARCHITECTS.COM

REAVELEY ENGINEERS &ASSOCIATES, INC.
Consulting Structural Engineers
1515 South 1100 East
Salt Lake City, Utah 84105-2424
(801) 486-3883 Fax (801) 485-0911

WHW ENGINEERING INC.
PROFESSIONAL MECHANICAL ENGINEERING
1384 East 3300 South Suite 200
SALT LAKE CITY, UTAH 84106
(801)466-4221, FAX 466-8536
EMAIL: excellence@whw-engineering.com

BNA Consulting Engineers
Electrical Engineering & Lighting Design
635 South State Street
Salt Lake City, Utah 84111
(801) 532-2796 FAX (801) 532-2305
© 2004 BNA Consulting Engineers
bma
brent morris associates ■ landscape architects
1574 ogmond road fruit heights, utah, 84037 voice 801-544-0064 fax 801-546-5869 email bma@xmission.com

OLD MAIN BUILDING
SOUTHERN UTAH UNIVERSITY
351 WEST CENTER STREET
CEDAR CITY, UTAH 84720

STATE OF UTAH

DFCM

4110 STATE OFFICE BUILDING
SALT LAKE CITY, UTAH

2	3/8/06	BID ADDENDUM 2
1		
BID DOCUMENT	1/16/06	
CD 100%	7/21/04	
DD Sumbittal	7/12/04	

ARCHITECT PROJECT NO.: B04-012
DFCM PROJECT NO.: 03234730
DTN

TYP. DETAILS

AE502

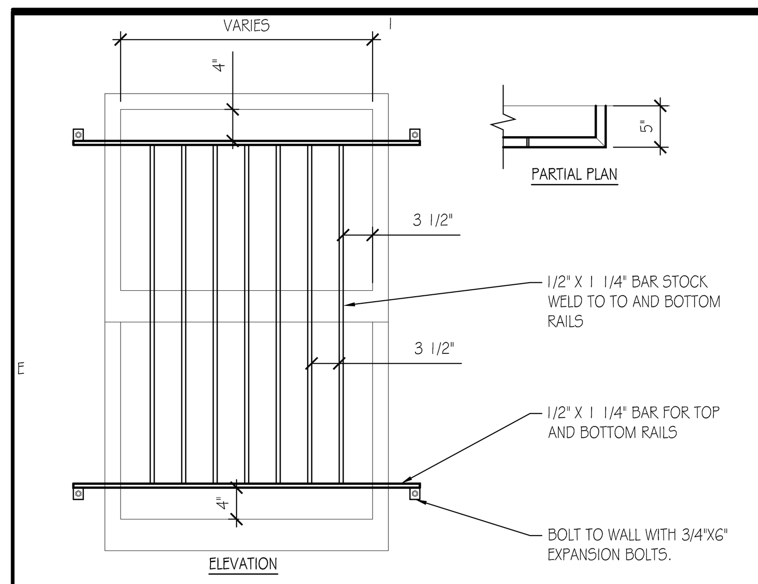

E1 WINDOW GUARD
3/4"=1'-0"

AE503-C1-16D

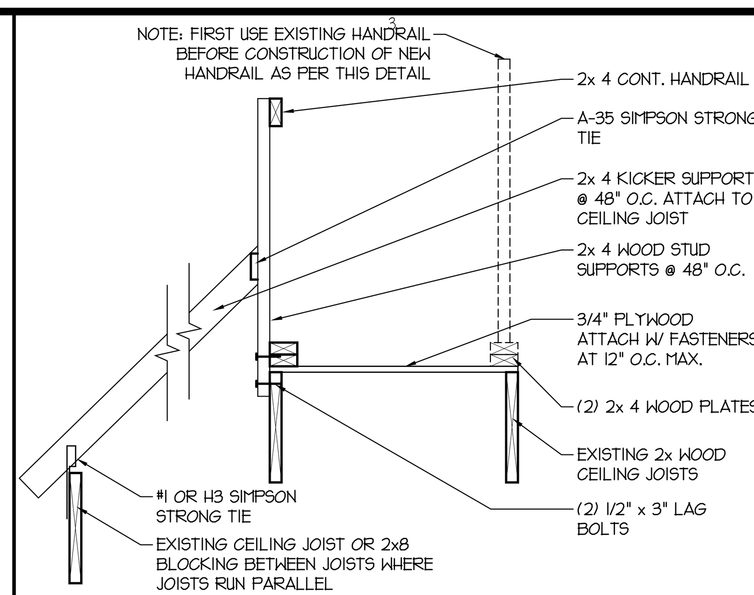

E3 ATTIC ACCESS RAIL
3/4"=1'-0"

AE503-E3-16

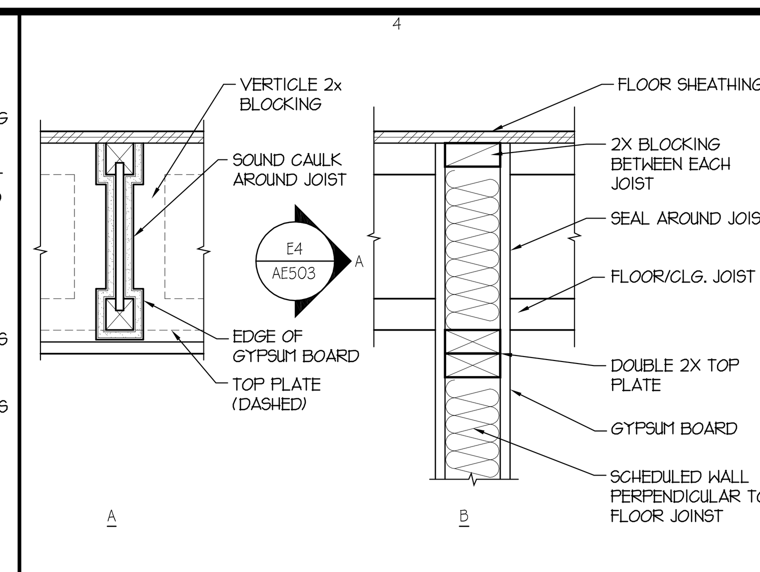

E4 SOUND WALL @ BEARING WALL
1-1/2" =1'-0"

AE503-E4-08

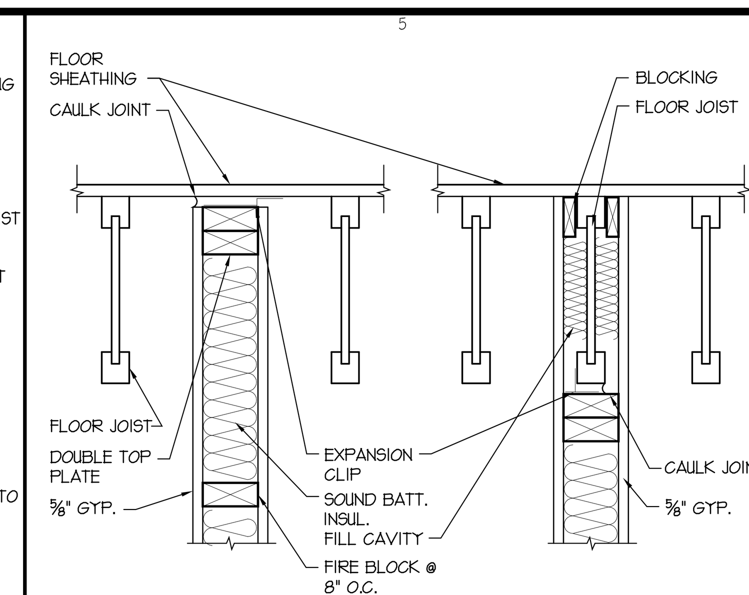

E5 SOUND WALL TO FLOOR
1-1/2" =1'-0"

AE503-E4-08

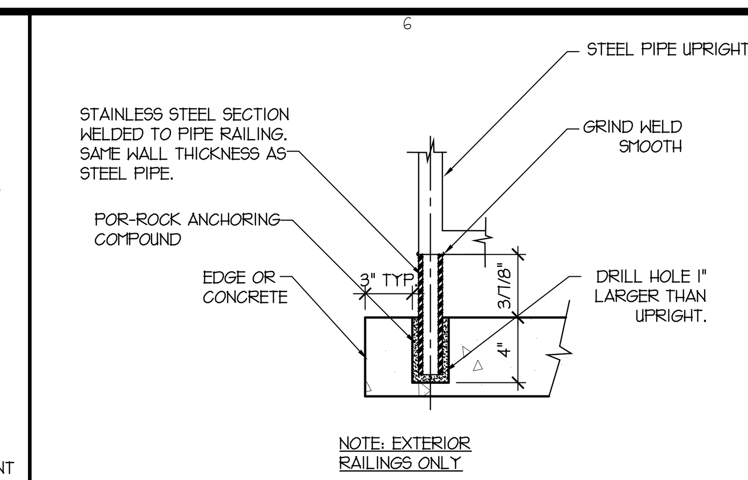

E6 POST ANCHOR DETAIL
1-1/2" =1'-0"

AE503-E4-08

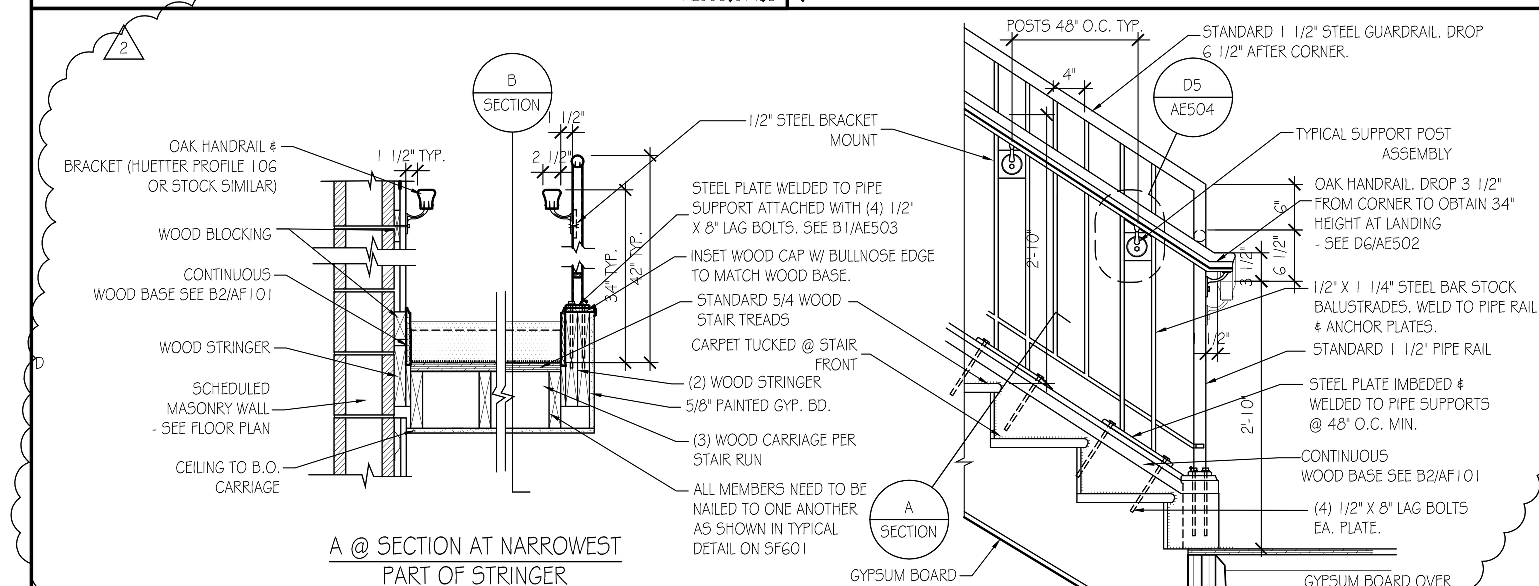

D1 TYPICAL STAIRWAY
3/4"=1'-0"

AE503-C1-16D

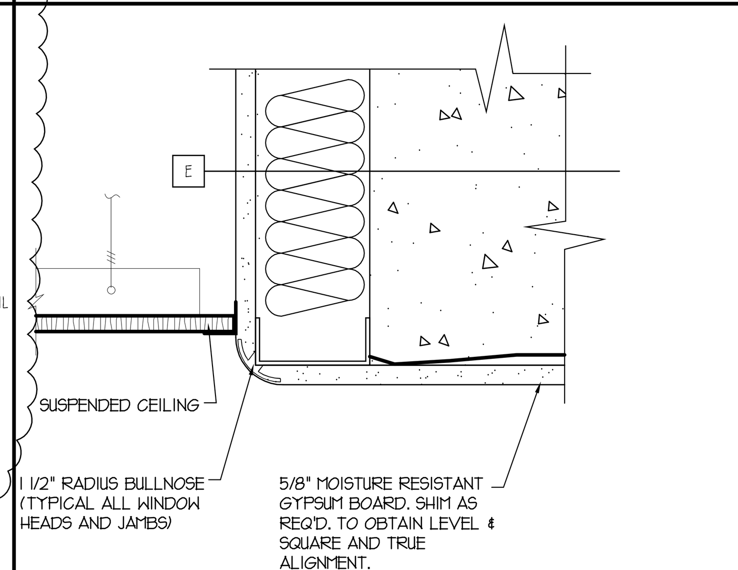

D3 TYP . WINDOW HEAD
3"=1'-0"

AE503-D3-04

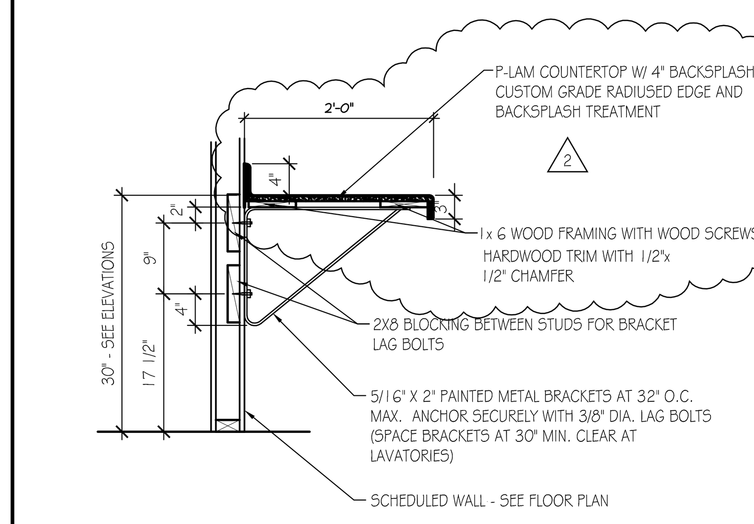

D4 WORK COUNTER
3/4"=1'-0"

AE503-A3-16

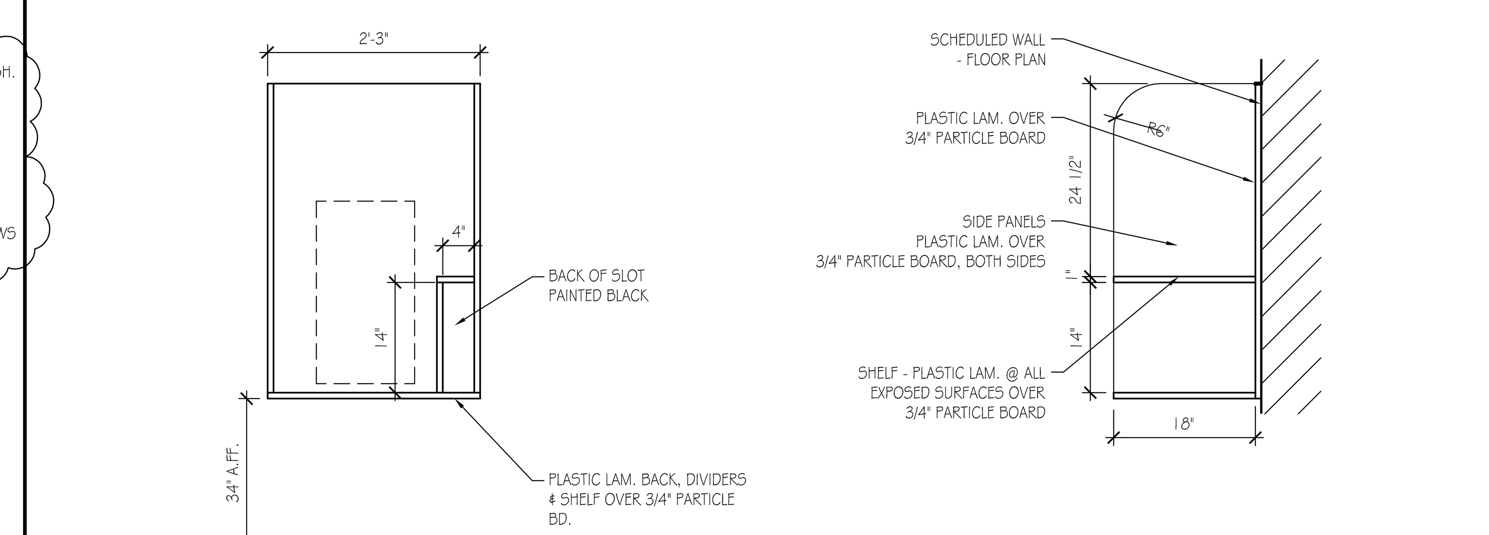

D5 PHONE BOOTH
3/4"=1'-0"

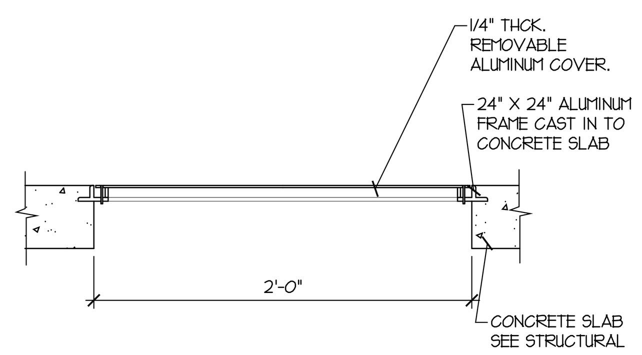

C2 REMOVABLE FLOOR HATCH
1-1/2" =1'-0"

AE503-A2-08

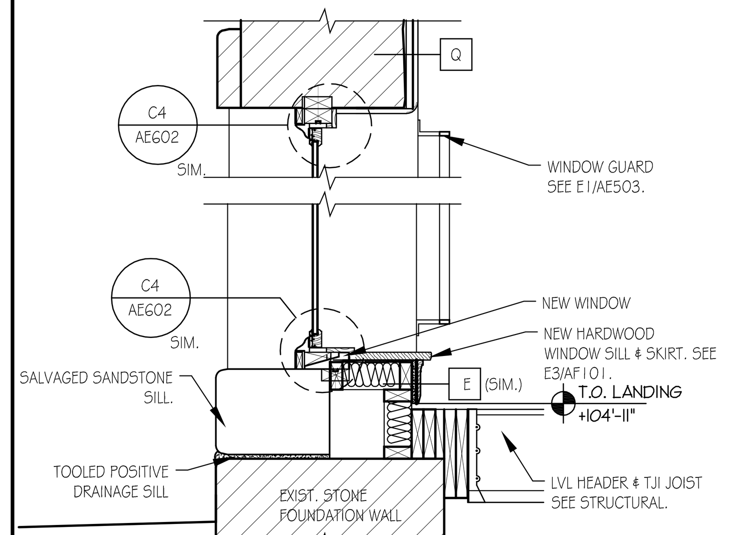

C3 SILL AT WEST STAIR LANDING
3/4"=1'-0"

AE503-A3-16

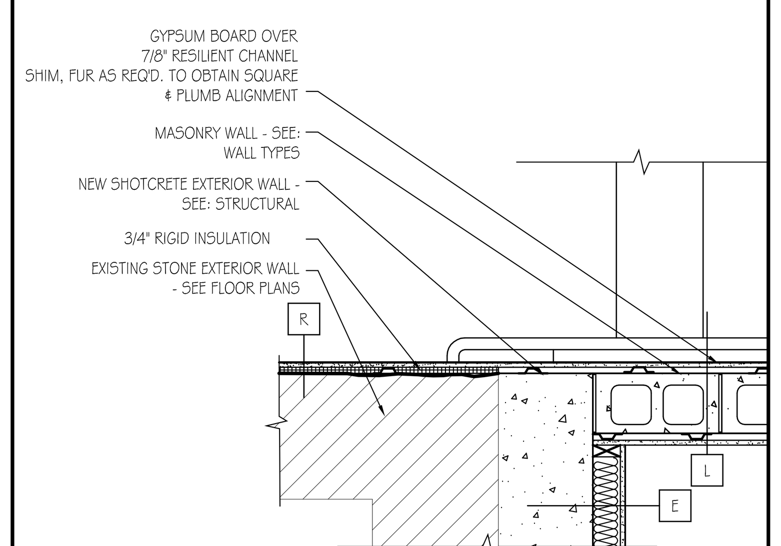

C4 TYP. WALL CONNECTION
3/4"=1'-0"

AE503-A3-16

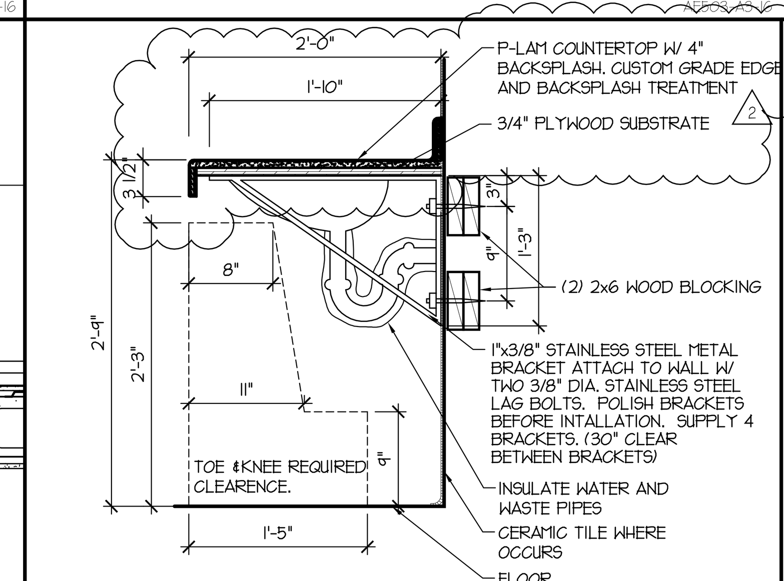

C5 CABINET SECTION
1"=1'-0"

AE503-C5-12

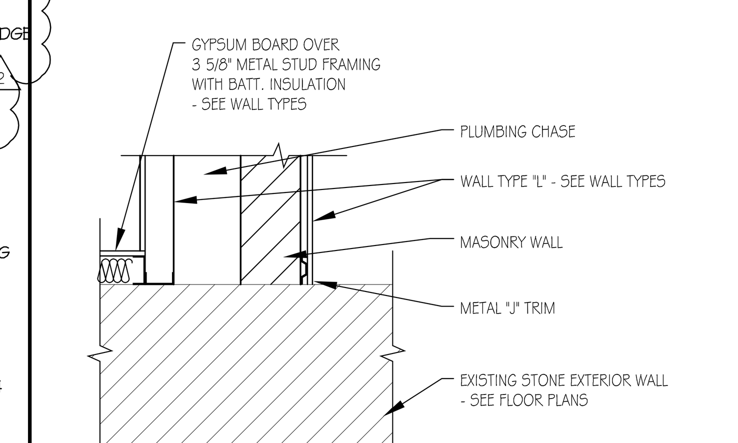

C6 TYP. WALL CONNECTION
3/4"=1'-0"

AE503-A3-16

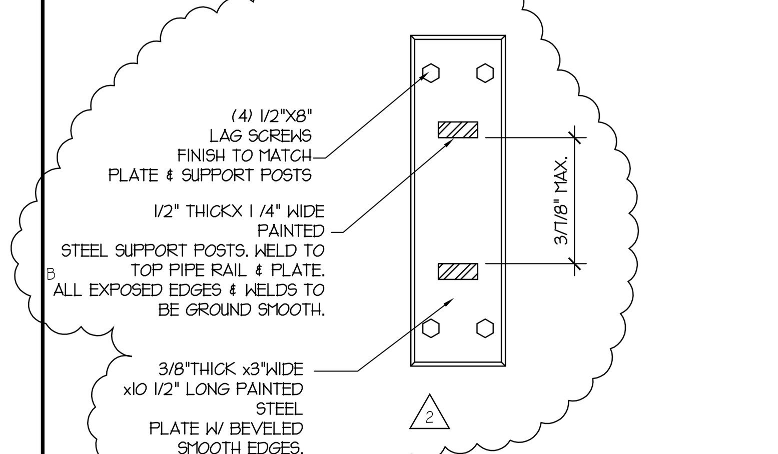

B1 PLATE DETAIL
3"=1'-0"

AE503-B1-04

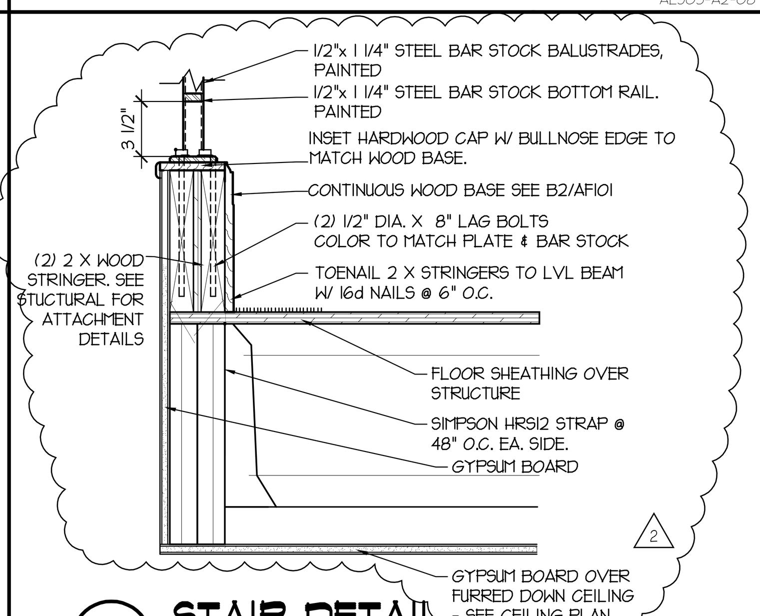

B2 STAIR DETAIL
1-1/2"=1'-0"

AE503-A2-08

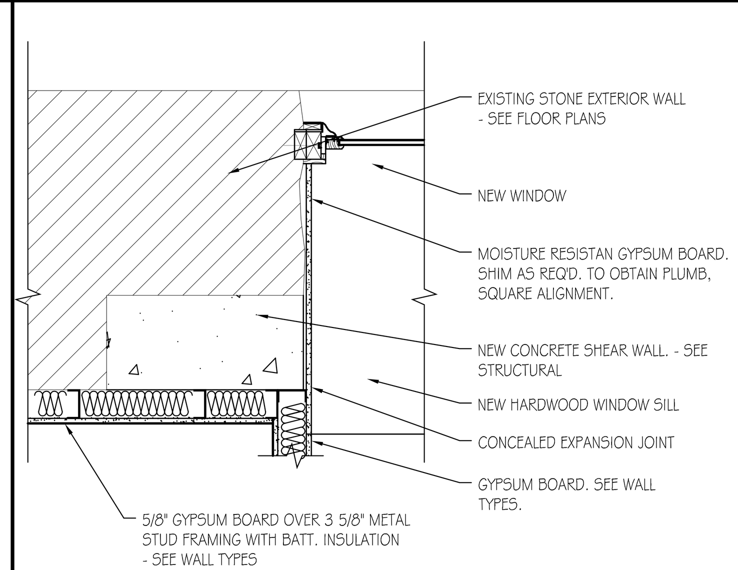

B3 TYP. WALL CONNECTION
3/4"=1'-0"

AE503-A3-16

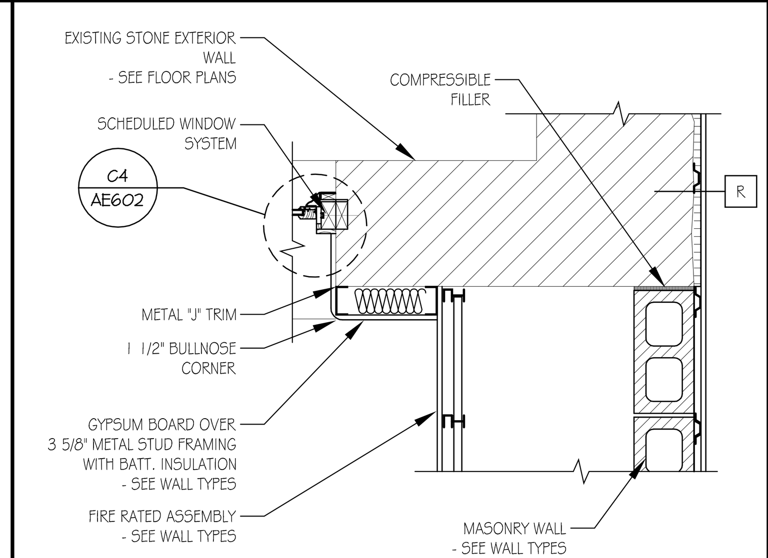

B4 SHAFT WALL DETAIL
3/4"=1'-0"

AE503-A3-16

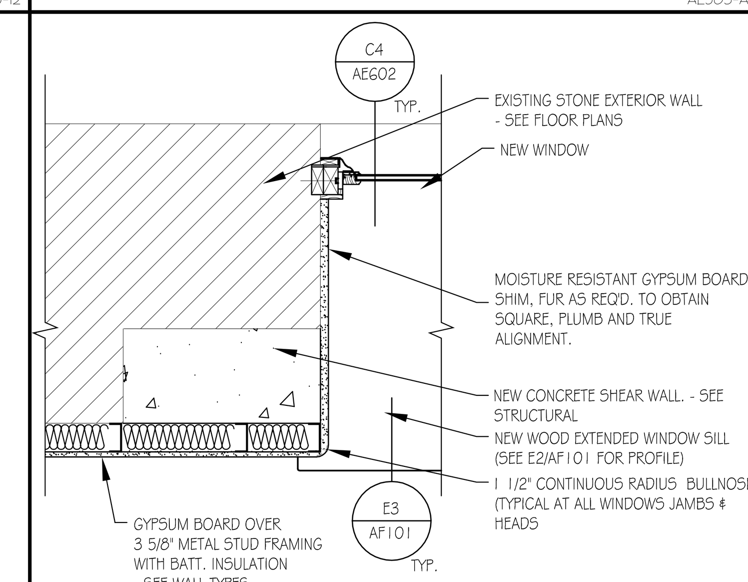

B6 TYP. WALL CONNECTION
3/4"=1'-0"

AE503-A3-16

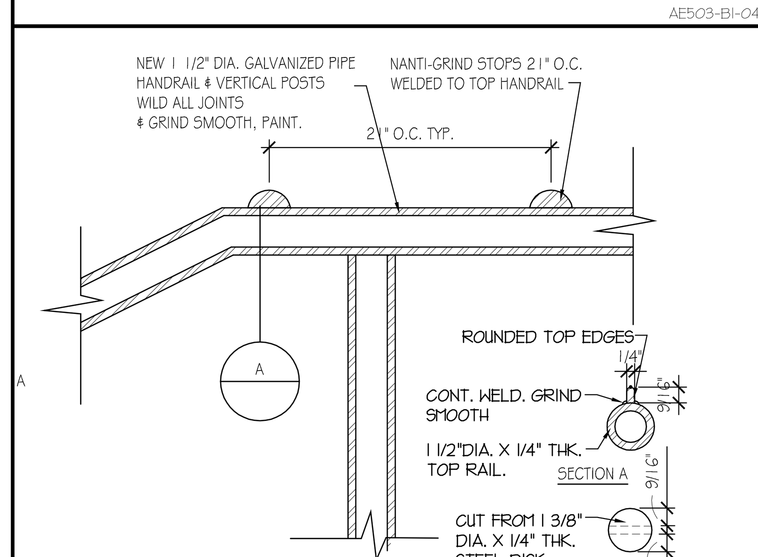

A1 EXT. HANDRAIL DETAIL
3"=1'-0"

AE503-A1-04

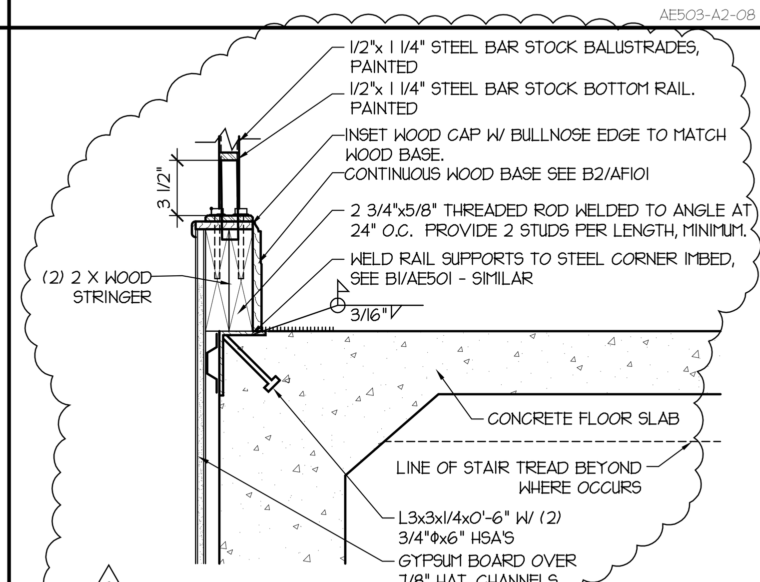

A2 STAIR HANDRAIL DETAIL
1-1/2"=1'-0"

AE503-A2-08

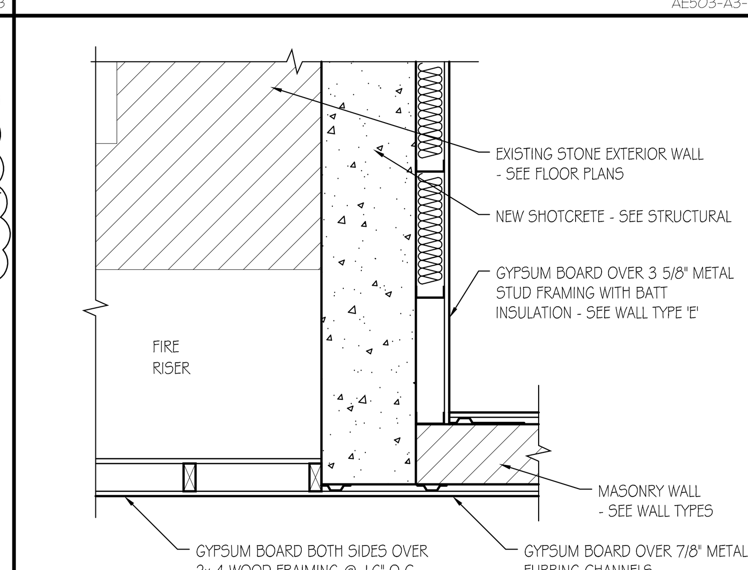

A3 WALL CONNECTION
3/4"=1'-0"

AE503-A3-16

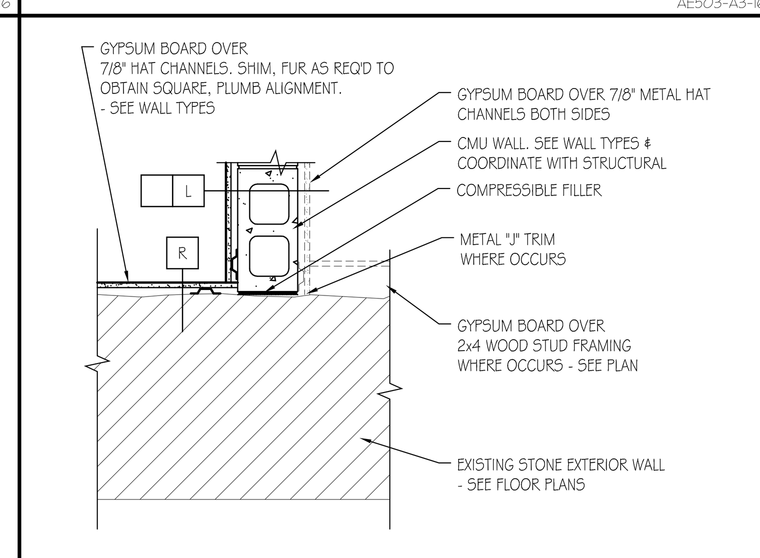

A4 WALL CONNECTION
3/4"=1'-0"

AE503-A3-16

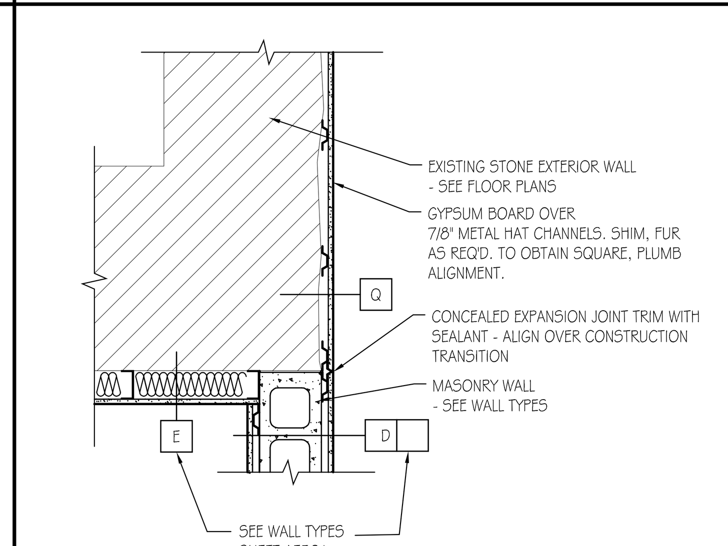

A5 WALL CONNECTION
3/4"=1'-0"

AE503-A3-16

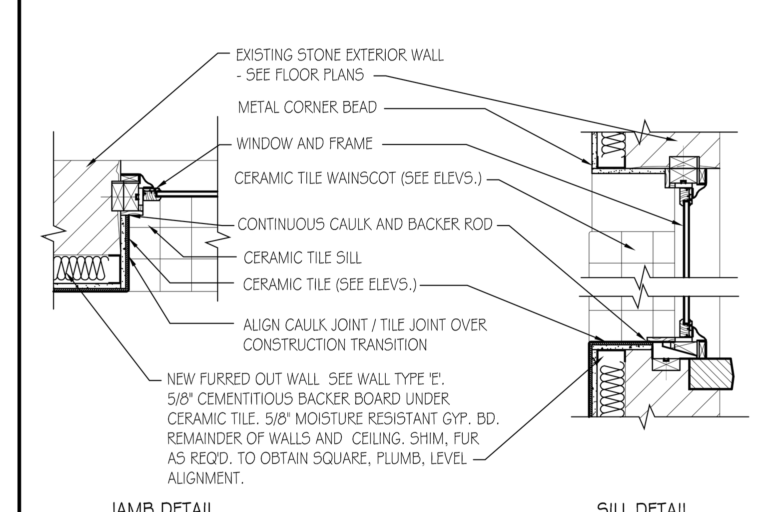

A6 TYP. HEAD, JAMB, SILL RESTRM. WINDOWS
3/4"=1'-0"

AE503-E5-16

COOPER ROBERTS SIMONSEN ARCHITECTURE

crsa

700 NORTH 200 WEST
SALT LAKE CITY,UTAH 84103
(801) 355-5915
(801) 355-9885 FAX
WWW.CRSARCHITECTS.COM

REAVELEY ENGINEERS &ASSOCIATES, INC.
Consulting Structural Engineers
1515 South 1100 East
Salt Lake City, Utah 84105-2424
(801) 486-3883 Fax (801) 485-0911

WHW ENGINEERING INC.
PROFESSIONAL MECHANICAL ENGINEERING
1354 East 3300 South Suite 200
SALT LAKE CITY, UTAH 84106
(801)466-4021, FAX 466-8536
EMAIL: excellence@whw-engineering.com

BNA Consulting Engineers Electrical Engineering & Lighting Design
635 South State Street
Salt Lake City, Utah 84111
(801) 532-2196 FAX (801) 532-2305

© 2004 BNA Consulting Engineers

bma
brent morris associates ■ landscape architects
1074 raymond road fruit heights, utah, 84037 voice 801-544-0064 fax 801-546-6669 email bma@mailsnare.net

OLD MAIN BUILDING
SOUTHERN UTAH UNIVERSITY
351 WEST CENTER STREET
CEDAR CITY, UTAH 84720

STATE OF UTAH

DFCM

4110 STATE OFFICE BUILDING
SALT LAKE CITY, UTAH

2	3/8/06	BID ADDENDUM 2
1		

BID DOCUMENT	1/16/06
CD 100%	7/21/04
DD Sumbittal	7/12/04

ARCHITECT PROJECT NO.: B04-012
DFCM PROJECT NO.: 03234730
BR

TYP. DETAILS

AE503

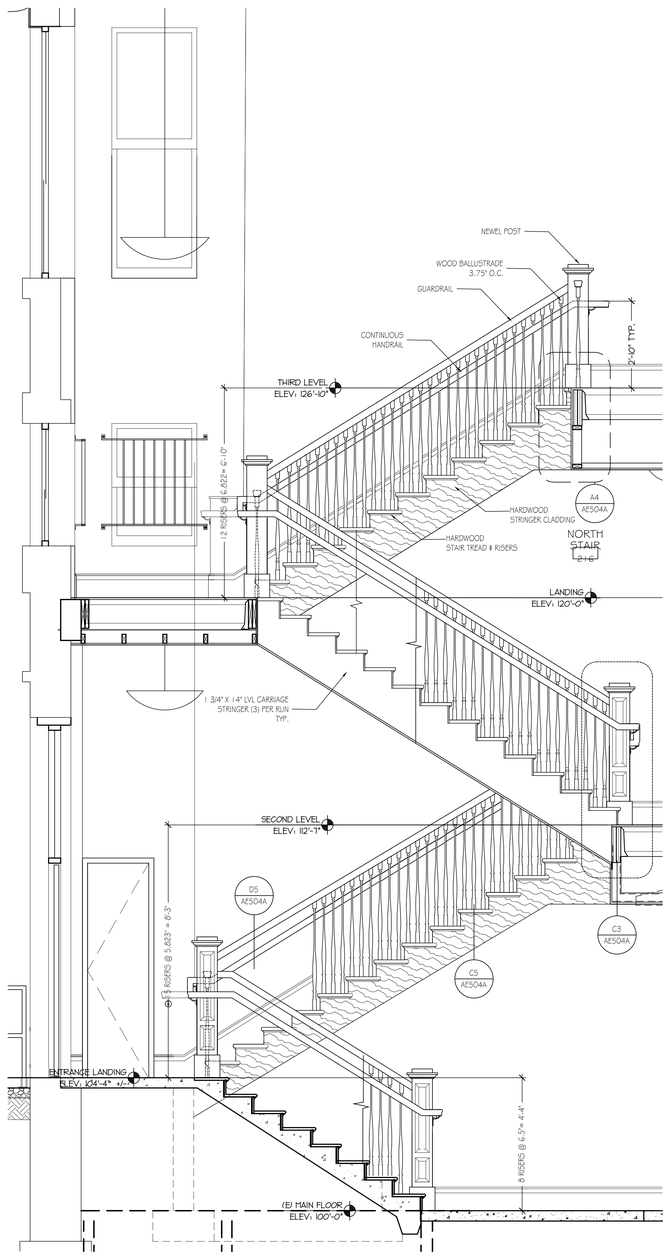

B1 PARTIAL SECTION -NORTH STAIR
SCALE: 1/2" = 1'-0"

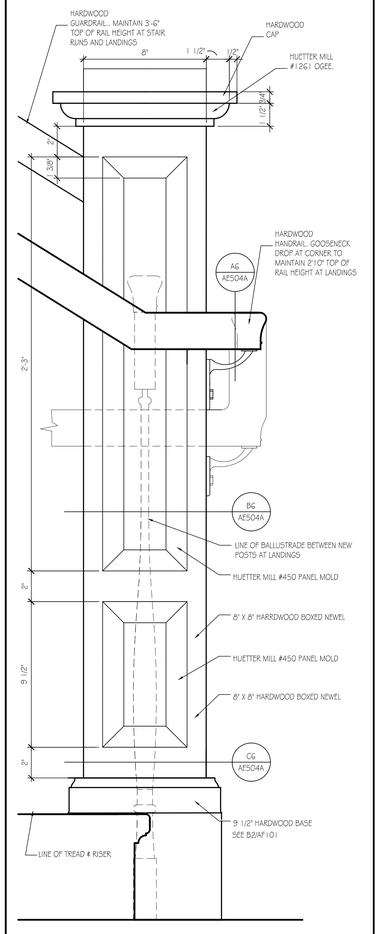

C3 NEWEL POST ELEVATION
3"=1'-0"

AE504A-D3-04

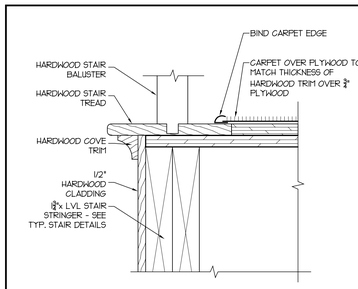

D4 TRANSITION @ STAIR
3"=1'-0"

AE504-D4-04

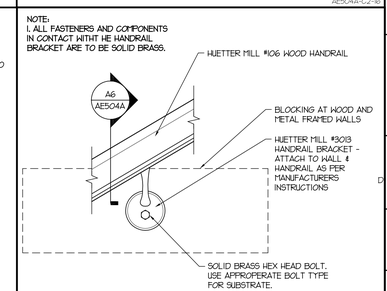

D5 HANDRAIL DETAIL
3"=1'-0"

AE504-D5-04

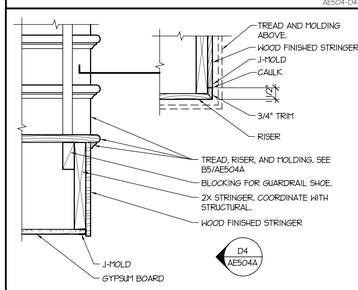

C5 STAIR EDGE DETAIL
1 1/2" = 1'-0"

AE504-C5-08

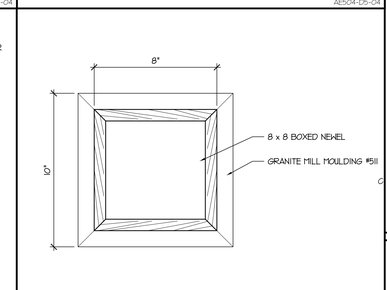

C6 NEWEL POST SECTION
3"=1'-0"

AE504A-C3-04

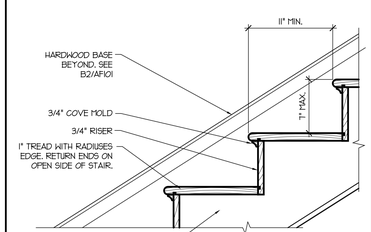

B5 TREAD & NOSING DETAIL
1 1/2" = 1'-0"

AE504-B5-08

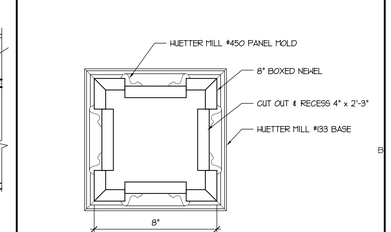

B6 NEWEL POST SECTION
3"=1'-0"

AE503-C4-04

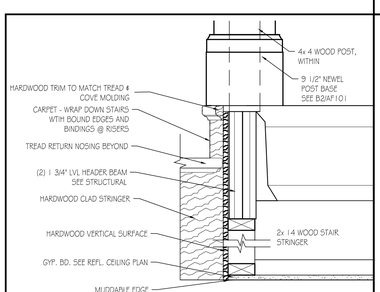

A4 STAIRS @ TOP END
1 1/2"=1'-0"

AE504A-A4-08

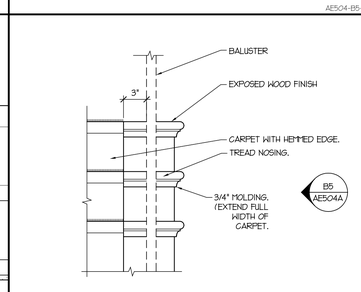

A5 CARPET TRANSITION
1 1/2" = 1'-0"

AE504-A5-08

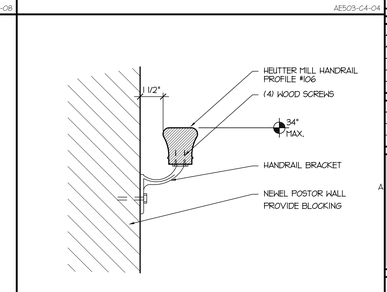

A6 HANDRAIL DETAIL @ WALL
3"=1'-0"

AE504A-A6-04

COOPER ROBERTS SIMONSEN ARCHITECTURE
crsa
700 NORTH 200 WEST
SALT LAKE CITY,UTAH 84103
(801) 355-5915
(801) 355-9885 FAX
WWW.CRSARCHITECTS.COM

REAVELEY ENGINEERS &ASSOCIATES, INC.
Consulting Structural Engineers
1515 South 1100 East
Salt Lake City, Utah 84105-2424
(801) 486-3883 Fax (801) 485-0911

WHW ENGINEERING INC.
PROFESSIONAL MECHANICAL ENGINEERING
1354 East 3300 South Suite 200
SALT LAKE CITY, UTAH 84106
(801)466-4021, FAX 466-8536
EMAIL: excellence@whw-engineering.com

BNA Consulting Engineers Electrical Engineering & Lighting Design
635 South State Street
Salt Lake City, Utah 84111
(801) 532-2196 FAX (801) 532-2305
© 2004 BNA Consulting Engineers
bma
brent morris associates ■ landscape architects
1074 raymond road fruit heights, utah, 84037 voice 801-544-0064 fax 801-546-8669 email bma@mstarz.net

OLD MAIN BUILDING
SOUTHERN UTAH UNIVERSITY
351 WEST CENTER STREET
CEDAR CITY, UTAH 84720

STATE OF UTAH

DFCM

4110 STATE OFFICE BUILDING
SALT LAKE CITY, UTAH

2	3/8/06	BID ADDENDUM 2
1		
BID DOCUMENT	1/16/06	
CD 100%	7/21/04	
DD Sumbittal	7/12/04	

ARCHITECT PROJECT NO.: B04-012
DFCM PROJECT NO.: 03234730
BR

ALTERNATE CONSTRUCTION FINISH DETAILS

AE504A

DOOR TYPES

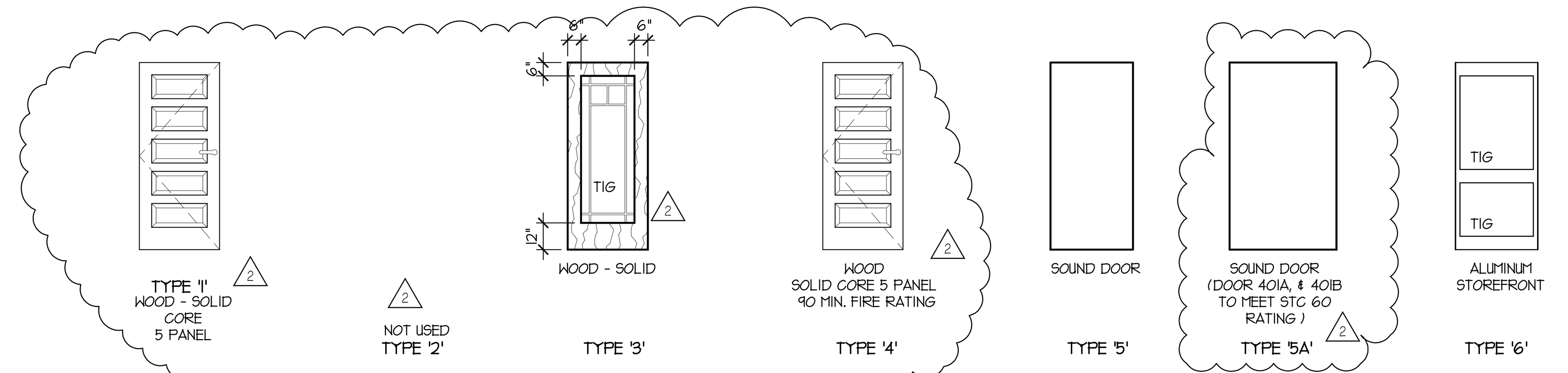

DOOR FRAME TYPES

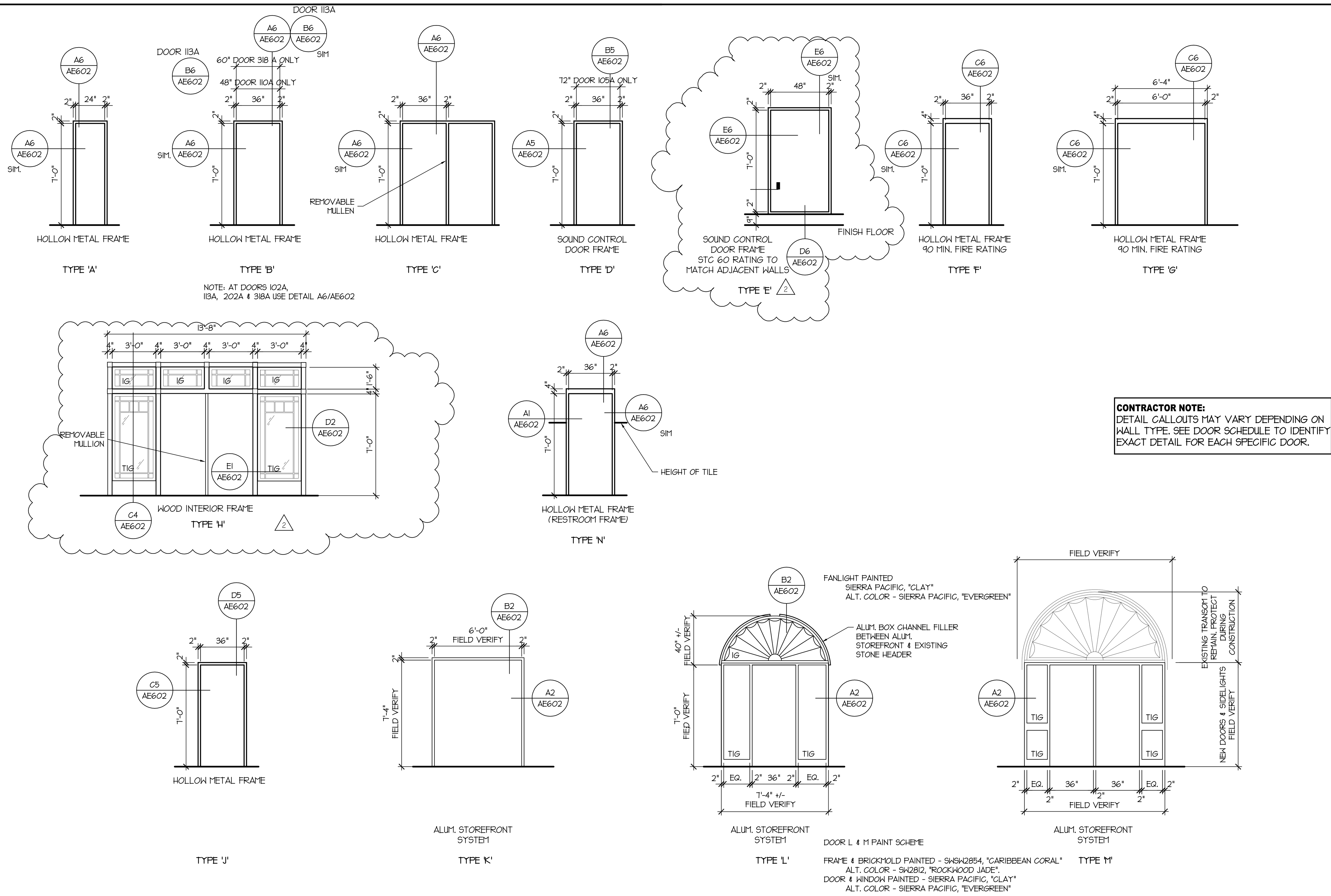

DOOR L & M PAINT SCHEME

FRAME & BRICKMOLD PAINTED - SWSW2854, "CARIBBEAN CORAL"
ALT. COLOR - SW2812, "ROCKWOOD JADE".
DOOR & WINDOW PAINTED - SIERRA PACIFIC, "CLAY"
ALT. COLOR - SIERRA PACIFIC, "EVERGREEN"

CONTRACTOR NOTE:
DETAIL CALLOUTS MAY VARY DEPENDING ON WALL TYPE. SEE DOOR SCHEDULE TO IDENTIFY EXACT DETAIL FOR EACH SPECIFIC DOOR.

DOOR SCHEDULE

GENERAL		DOOR			FRAME CONSTRUCTION		MISCELLANEOUS					
MARK	ROOM NAME	DOOR TYPE	PAIR	DOOR GLAZING	FRAME TYPE		HARDWARE GROUP	FIRE RATING	AUTOMATIC OPENER	THRESHOLD	NOTES	SIGNS
BASEMENT LEVEL												
002A	ELEVATOR MECH. ROOM	5			D		H7			T3	3,6	
MAIN LEVEL												
101A	EAST STAIR - A	6	●	TIG	M		H1			T1	1, 5	
101B	EAST STAIR - A	4			G		H3	90			2	A5
102A	ELECTRICAL/COMMUNICATIONS	5			D		H7			T3	3, 6	
103A	CLASSROOM A	1			B		H10					A6
104A	CLASSROOM B	1			B		H10					A6
104B	CLASSROOM B	1			B		H10					A6
105A	MECHANICAL ROOM	1	●		C		H8			T3	6, 7, 8	
106A	WEST STAIR "C"	6	●	TIG	K		H2		●	T1	1, 5, 7	
107A	MEN RESTROOM	1			N		H5			T2		A1
108A	WOMEN RESTROOM	1			N		H5			T2		A2
110A	ELECTRICAL	1			B		H7			T3	6	
111A	STUDENT INST. MAT. PROD.	1			B		H6				6	A6
112A	NORTH STAIR "B"	6		TIG	L		H1			T1	1	
112B	NORTH STAIR "B"	4			F		H11	90				A5
112C	FIRE SERVICE	1	●		A		H7			T3	6	
113A	STORAGE	4			F		H9	90			6	
115A	FIELD SERVICE DIRECTOR	1			J		H6					A6
116A	COPY AND MAIL/WORK	1			B		H6				6	
117A	FIELD SERVICE ADVISOR	1			J		H6					A6
SECOND LEVEL												
201A	EAST STAIR "A"	4	●		G		H3	90			2	A5
202A	COMM. ROOM	1			B		H7			T3	6	
203A	ELEM. ED. CHAIR	1			J		H6					A6
204A	SEC. ED. SECRETARY	3		TG	J		H6					A6
205A	SEC. ED. CHAIR	1			J		H6					A6
206A	SHARED REC. MAT. STOR.	1			B		H6				6	A6
207A	SHARED OFFICE SUPPORT	1			J		H9					A6
208A	CONFERENCE	3		TG	J		H6					A4
209A	WOMEN RESTROOM	1			N		H4		●	T2		A2
210A	MEN RESTROOM	1			N		H4		●	T2		A1
213A	STORAGE	1			B		H9				6	
214A	SECRETARY	3		TG	J		H6					A6
215A	DEAN'S OFFICE	1			J		H6					A6
217A	NORTH STAIR "B"	4			F		H11	90				A5
218A	SECRETARY	3		TG	J		H6					A6
219A	ASSOC. DEAN OFFICE	1			J		H6					A6
220A	WORK ROOM	1			B		H6				6	A6
221A	ADVISOR	1			J		H6					A6
THIRD LEVEL												
301A	EAST STAIR - A	4	●		G		H3	90			2	A5
302A	ELECTRICAL/COMM.	5			D		H8			T3	6	
303A	DIST. LEARNING/GRAD. "A"	1			D		H6					A6
304A	DIST. LEARNING/GRAD. "B"	1			D		H6					A6
305A	DIST. LEARNING/GRAD. "C"	1			D		H6					A6
306A	DEAN'S CONF. & NCATE DOC.	3		TG	H		H6				7	A6
308A	MEN RESTROOM	1			N		H5			T2		A6
309A	CUSTODIAN	1			B		H7			T3	4, 6	
310A	WOMEN RESTROOM	1			N		H5			T2		A6
311A	FILES/STORAGE	1			B		H9				6	
313A	NORTH STAIR - B	4			F		H11	90				A5
314A	SECRETARY	3		TG	J		H6					A6
315A	GRAD. ED. CHAIR	1			J		H6					A6
316A	GRAD. ADVISOR	1			J		H6					A6
317A	SECRETARY	3		TG	J		H6					A6
318A	ATTIC ACCESS	1 (2)	●		B		H7			T3	6	
320A	FILES/STORAGE	1			B		H9				6	
ATTIC												
	ALL ATTIC DOORS (401A & 401B)	5A			E		H12				3	

AE601-C3-01

GENERAL DOOR NOTES:

A. DUE TO MULTIPLE USE, SOME OF THE DETAILS, FRAME TYPES, ETC. REFERENCED TO ON THE DOOR SCHEDULE ARE REVISED AND/OR ROTATED FROM THE DIRECTION SHOWN ON THE FLOOR PLAN. THE CONTRACTOR SHALL COORDINATE WITH WALL TYPES (SHEET AE501) FOR WALL FINISHES.

B. THE GENERAL INTENT OF DETAILS SHALL, IN ALL CASES, BE FOLLOWED AND THE ARCHITECT CONSULTED SHOULD QUESTIONS ARISE.

C. DOORS TO BE SET TO CLEAR FINISHED FLOOR SURFACES BY 1/2".

D. THE CONTRACTOR SHALL FIELD VERIFY ALL FRAME/DOOR DIMENSIONS.

E. IT IS THE CONTRACTORS RESPONSIBILITY TO PROTECT DOORS TO ROOMS WHERE VARIOUS WORK IS TAKING PLACE. DOORS MAY BE REMOVED AND STORED OR PROTECTED BY OTHER MEANS.

F. ALL WOOD IS TO BE STAINED TO MATCH ARCHITECTS SAMPLE. (MEDIUM COLORED OAK)

GLASS NOTES: THICKNESS SEE SPEC

TG - TEMPERED GLASS
TIG - TEMPERED INSULATED GLASS
IG - INSULATED GLASS
C - CLEAR FLOAT GLASS
FG - FIRE RATED INSULATED GLASS

THRESHOLD NOTES:

T1 - ALUMINUM THRESHOLD. SEE A5/AF101
T2 - MARBLE THRESHOLD. SEE A1 & B1/AE504
T3 - CARPET TERMINATION STRIP

KEYED NOTES

1. DOOR ALARM/SECURITY. WIRE FOR FUTURE INSTALLATION.
2. MAGNETIC HOLD OPEN
3. SOUND DOOR - SEE SPEC
4. 1" BOTTOM DOOR SPACE FOR MECH. EXHAUST AIR BALANCE
5. EXISTING ARCHED WOOD TRANSOM TO REMAIN, STRIP PAINT AND REFINISH TO MATCH NEW DOOR AND FRAME COLOR. REPLACE BROKEN GLASS.
6. OMIT DOOR TRIM ON INSIDE FACE OF FRAME. EXTEND GYPSUM BOARD TO FRAME AND FINISH.
7. REMOVABLE MULLION.
8. OPPERABLE DOOR TO BE WEST LEAF.

ACCESSIBLE SIGNS

A1 - NOT USED
A2 - NOT USED
A3 - NOT USED
A4 - NOT USED
A5 - EXIT STAIR
A6 - OCCUPANT TITLE (ROOM NAME).

ALL SIGNS ARE TO BE MOUNTED AT 40" FROM THE BASELINE OF THE BRAILLE CHARACTERS TO THE FINISHED FLOOR. THE SIGNS WILL BE MOUNTED ON THE LATCH SIDE OF THE DOOR.

WINDOW TYPES

WINDOW PAINT SCHEME

FRAME & BRICKMOLD PAINTED - SWSW2854, "CARIBBEAN CORAL"
ALT. COLOR - SW2812, "ROCKWOOD JADE".
SASH PAINTED - SW2839, "ROYCROFT COPPER RED"
ALT. COLOR - SW0041, "HUNTER GREEN"

NOTES:
1) ALL WINDOWS NEW FITTING INTO EXISTING OPENINGS. CONTRACTOR IS TO FIELD VERIFY ALL DIMENSION.
2) ALL WINDOWS TO BE FIXED SASH.
3) PRIVACY GLASS ALL BATHROOM WINDOW.
4) ALL WINDOW TYPES TO HAVE 2" WIDE APPLIED MULLION (BOTH SIDES OF WINDOW) SIMULATED DIVIDED LIGHT
5) ALL WINDOWS ARE ALUMINUM CLAD EXCEPT TYPES: A, C, F.

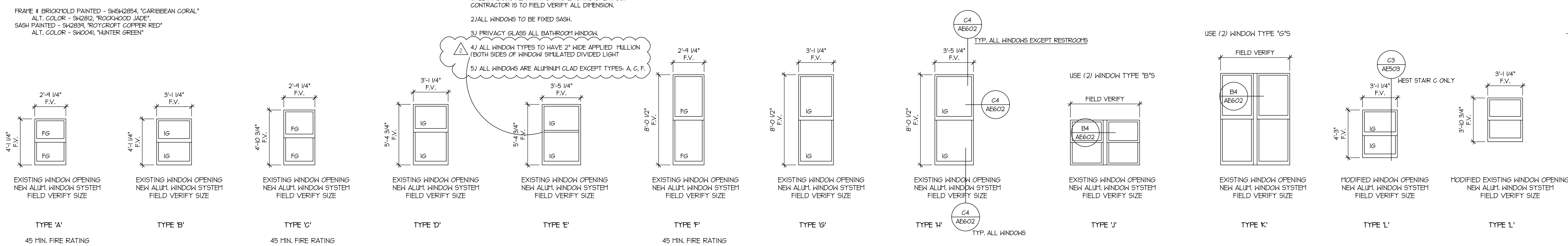

COOPER ROBERTS SIMONSEN ARCHITECTURE
crsa
700 NORTH 200 WEST
SALT LAKE CITY,UTAH 84103
(801) 355-5915
(801) 355-9885 FAX
WWW.CRSARCHITECTS.COM

REAVELEY ENGINEERS & ASSOCIATES, INC.
Consulting Structural Engineers
1515 South 1100 East
Salt Lake City, Utah 84105-2424
(801) 486-3883 Fax (801) 485-0911

WHW ENGINEERING INC.
PROFESSIONAL MECHANICAL ENGINEERING
1354 East 3300 South Suite 200
SALT LAKE CITY, UTAH 84106
(801)466-4021, FAX 466-8536
EMAIL: excellence@whw-engineering.com

BNA Consulting Engineers
Electrical Engineering & Lighting Design
635 South State Street
Salt Lake City, Utah 84111
(801) 532-2196 FAX (801) 532-2305

© 2004 BNA Consulting Engineers

bma
brent morris associates ■ landscape architects
1074 raymond road fruit heights, utah, 84037 voice 801-544-0064 fax 801-546-6669 email bma@mailsnare.net

OLD MAIN BUILDING
SOUTHERN UTAH UNIVERSITY
351 WEST CENTER STREET
CEDAR CITY, UTAH 84720

STATE OF UTAH

DFCM

4110 STATE OFFICE BUILDING
SALT LAKE CITY, UTAH

2	3/8/06	BID ADDENDUM 2
1		
BID DOCUMENT	1/16/06	
CD 100%	7/21/04	
DD Sumbittal	7/12/04	

ARCHITECT PROJECT NO.: B04-012
DFCM PROJECT NO.: 03234730
DTN

DOOR SCHEDULE & DOOR TYPES

AE601

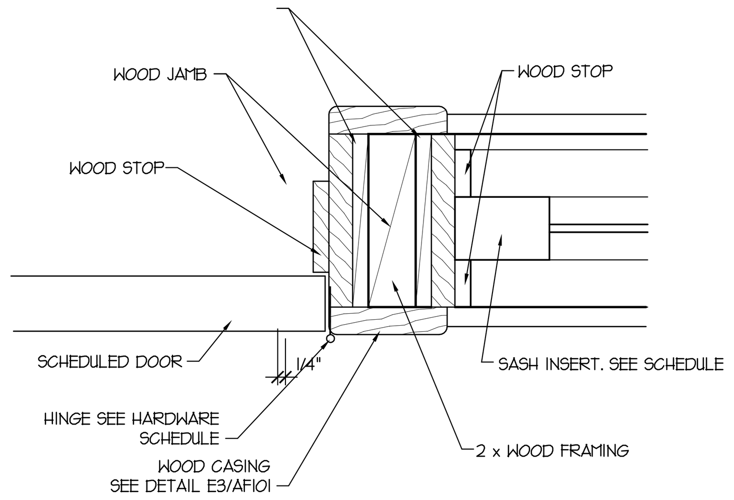

E1 MULLION DTL. / DOOR - WDO
3"=1'-0"

AE602-E1-04

E2 NOT USED
2

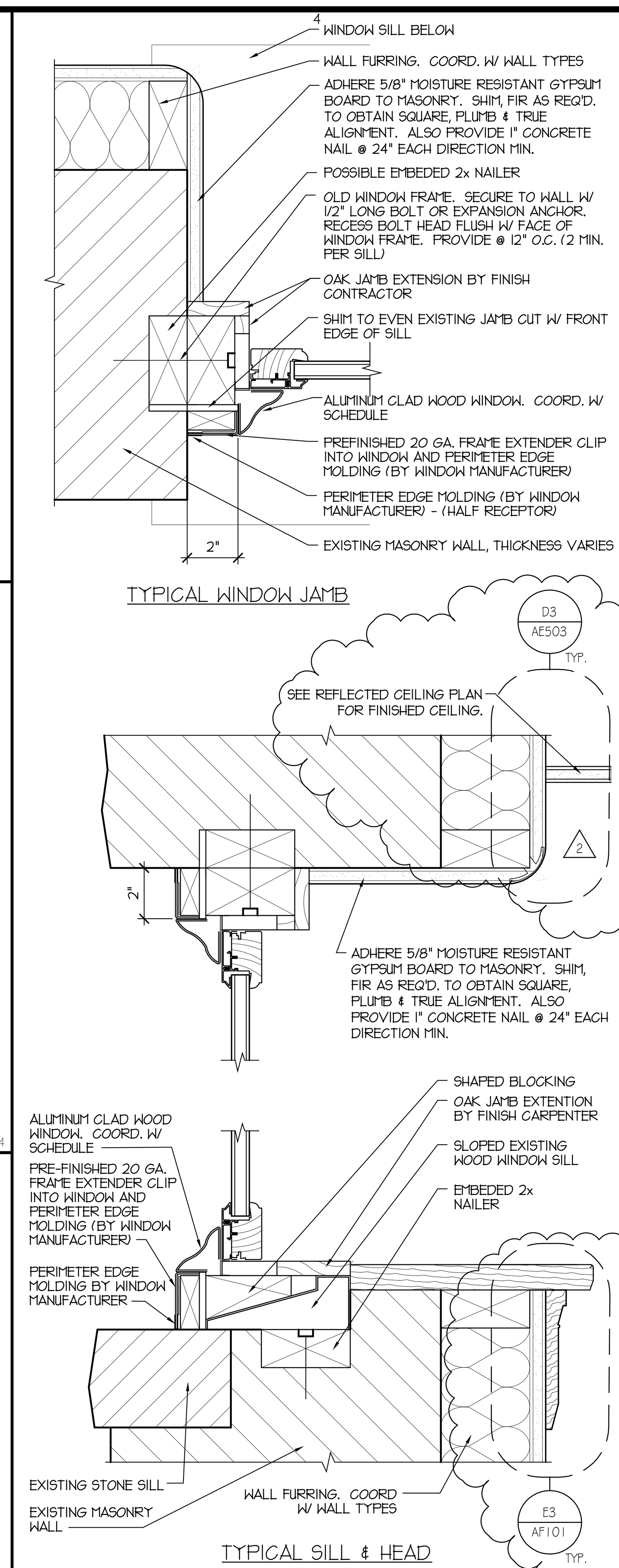

C4 TYPICAL WINDOW SILL, JAMB HEAD DETAIL
3"=1'-0"

AE602-A1-04

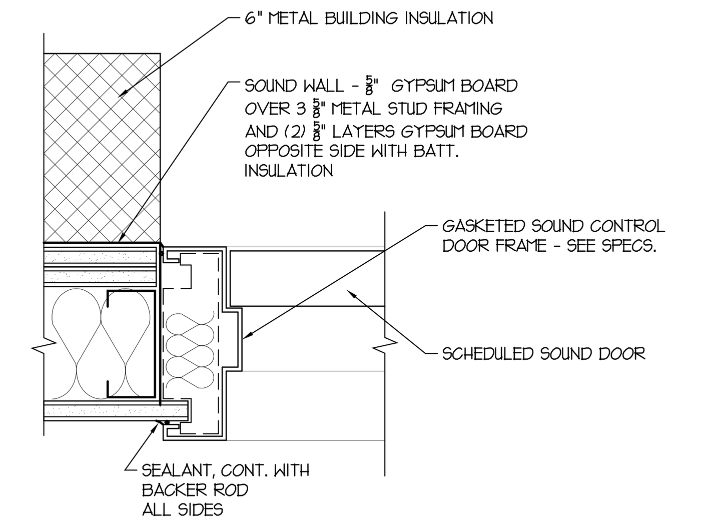

E6 ATTIC JAMB (HEAD SIM.)
3"=1'-0"

AE602-A1-04

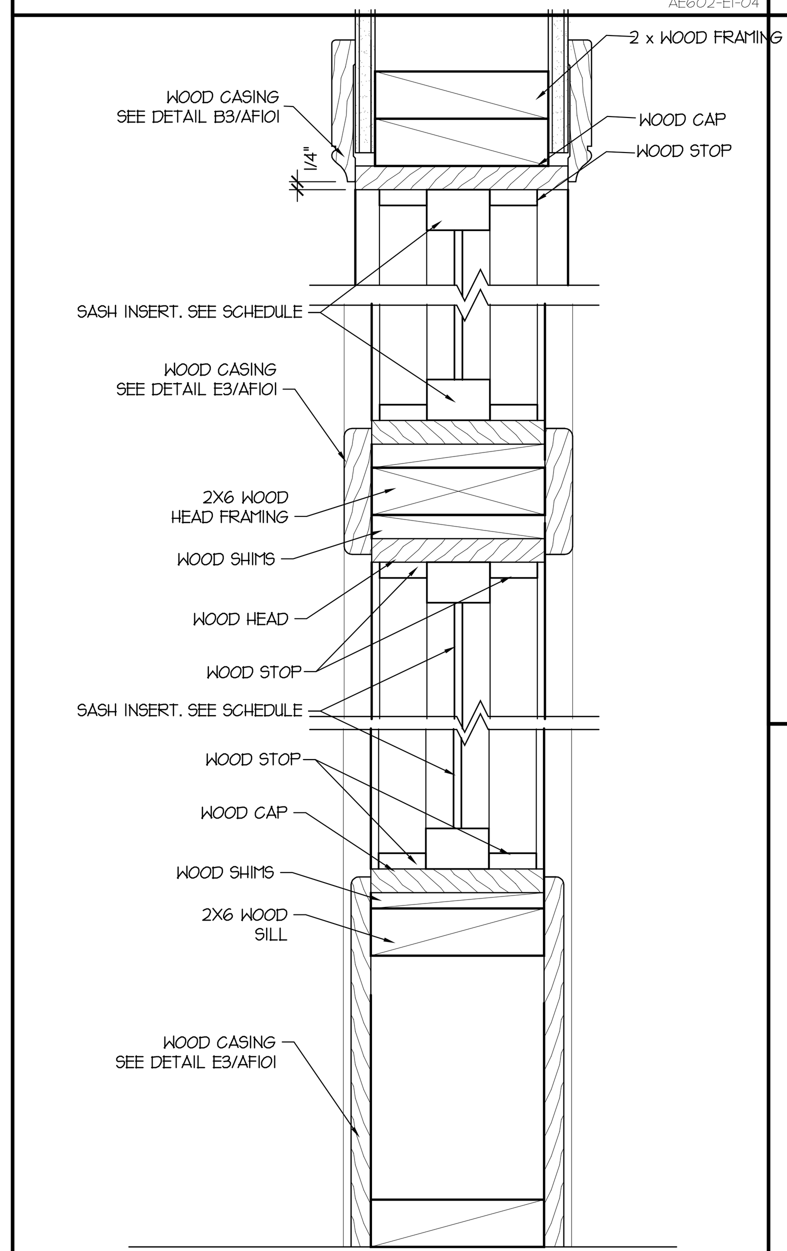

C4 TYPICAL WINDOW SILL, JAMB HEAD DETAIL RM. #306
3"=1'-0"

AE602-C1-04

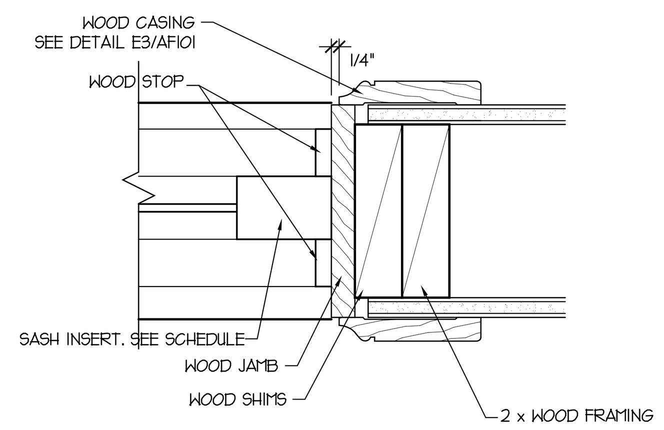

D2 INT. WINDOW JAMB DTL.
3"=1'-0"

AE601-D204

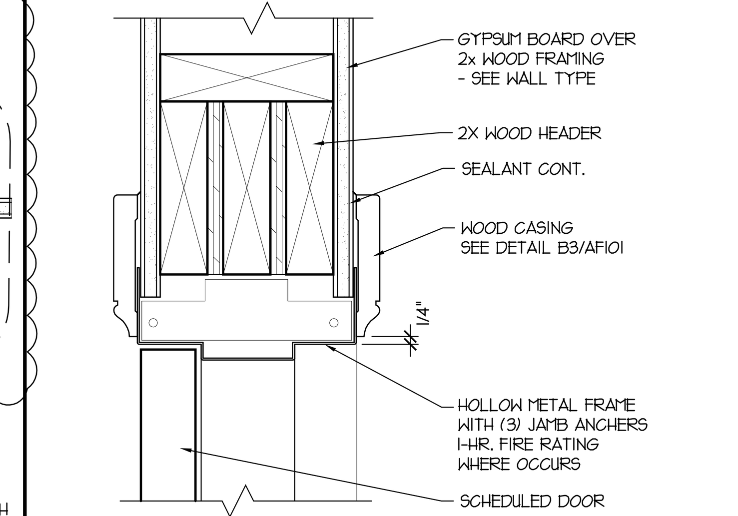

D5 HEAD DTL. - HOLLOW MTL.
3"=1'-0"

AE602-A1-04

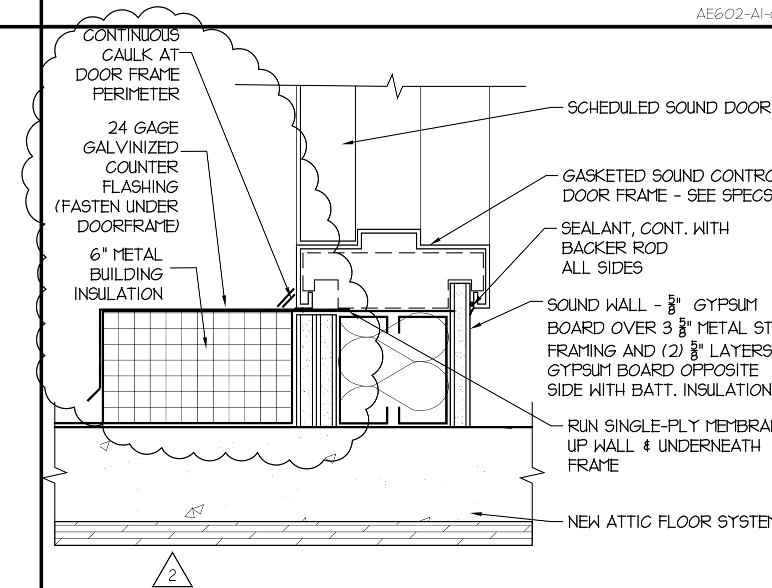

D6 ATTIC SILL
3"=1'-0"

AE602-A1-04

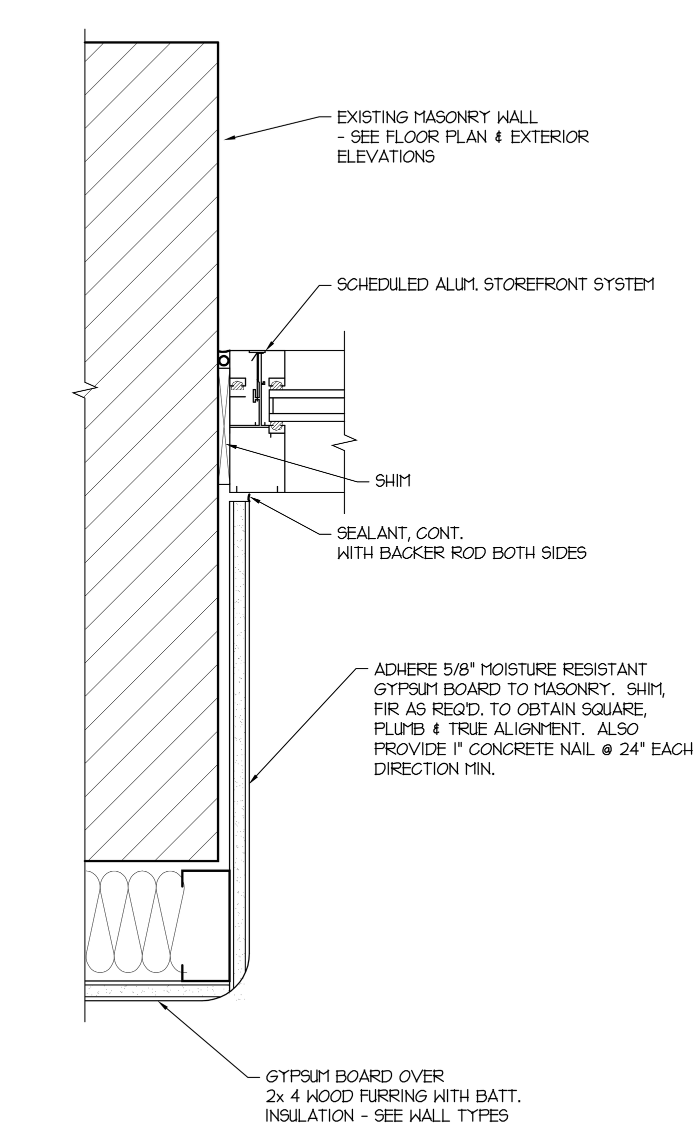

B3 JAMB DETAIL
3"=1'-0"

AE602-A1-04

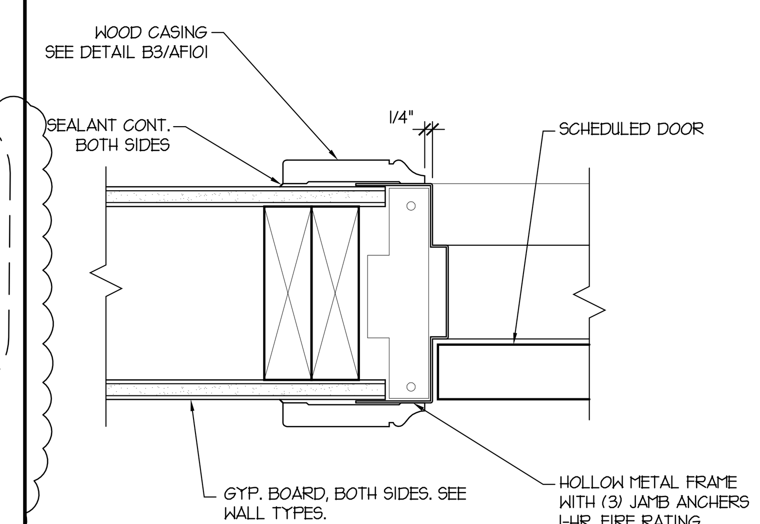

C5 JAMB DTL. - HOLLOW MTL.
3"=1'-0"

AE602-A1-04

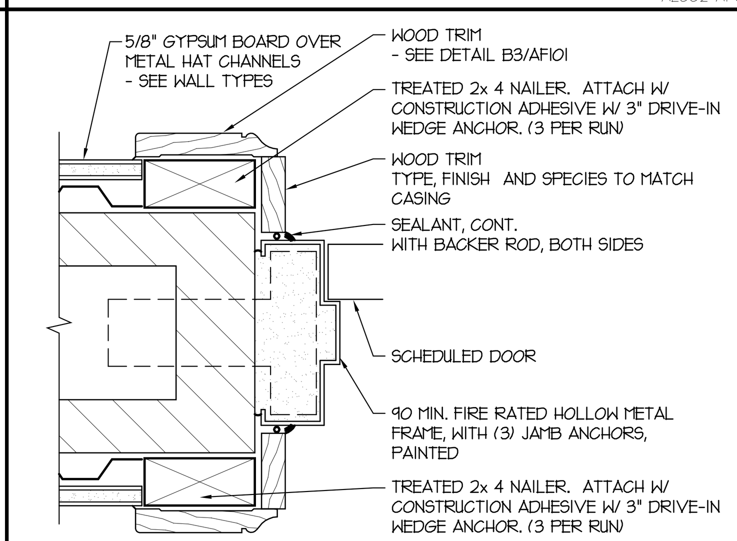

C6 HW MTL. HEAD (JAMB SIM.)
3"=1'-0"

AE602-A1-04

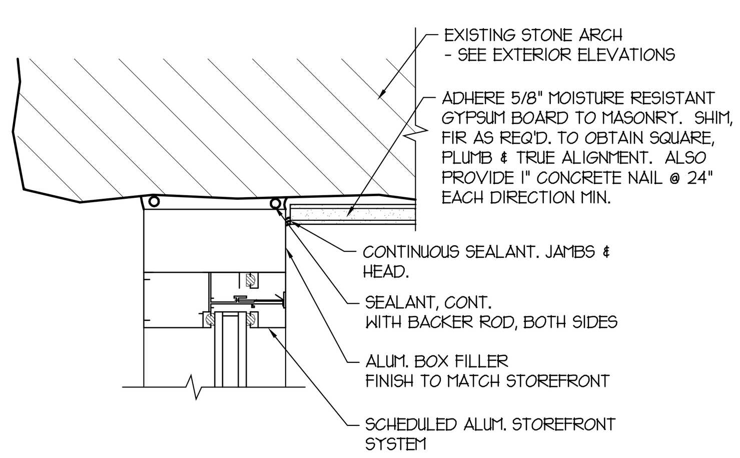

B2 HEAD DETAIL
3"=1'-0"

AE602-A1-04

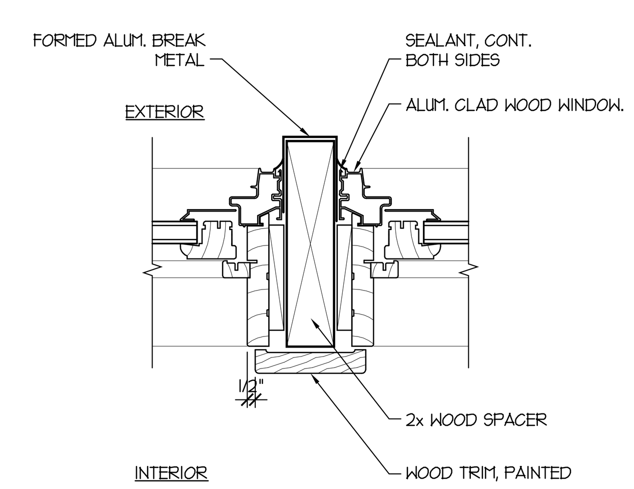

B3 SUPPORT MULLION DETAIL
3"=1'-0"

AE602-A1-04

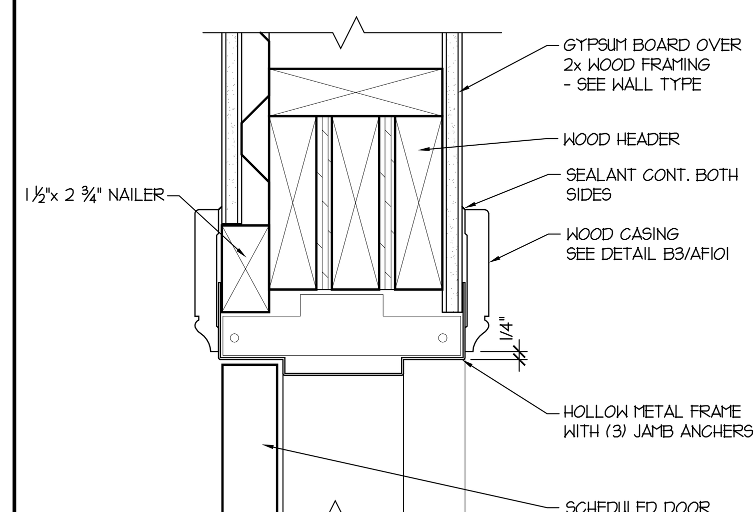

B5 HEAD DTL. - HOLLOW MTL.
3"=1'-0"

AE602-A1-04

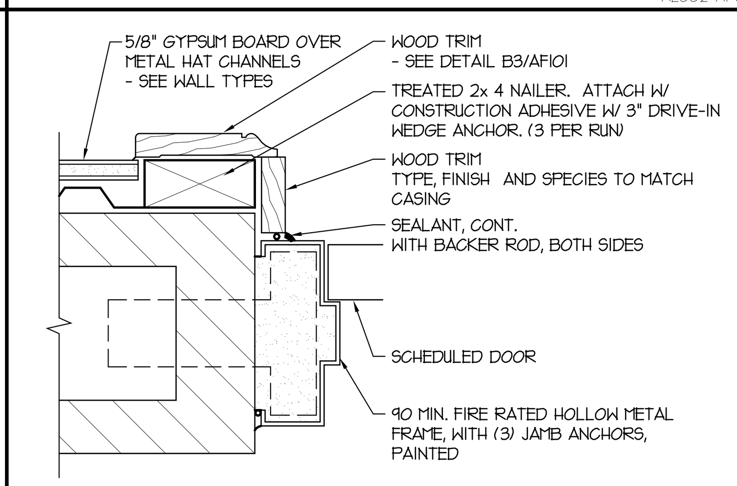

B6 HW MTL. HEAD (JAMB SIM.)
3"=1'-0"

AE602-A1-04

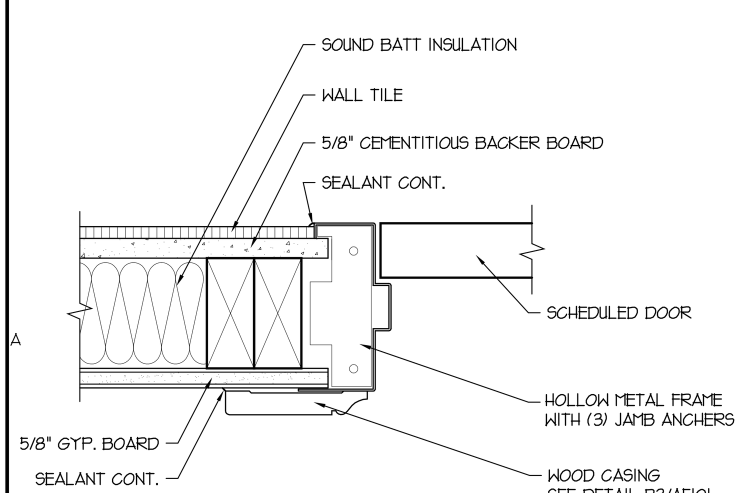

A1 TYPICAL JAMB DETAIL AT RESTROOMS
3"=1'-0"

AE602-A1-04

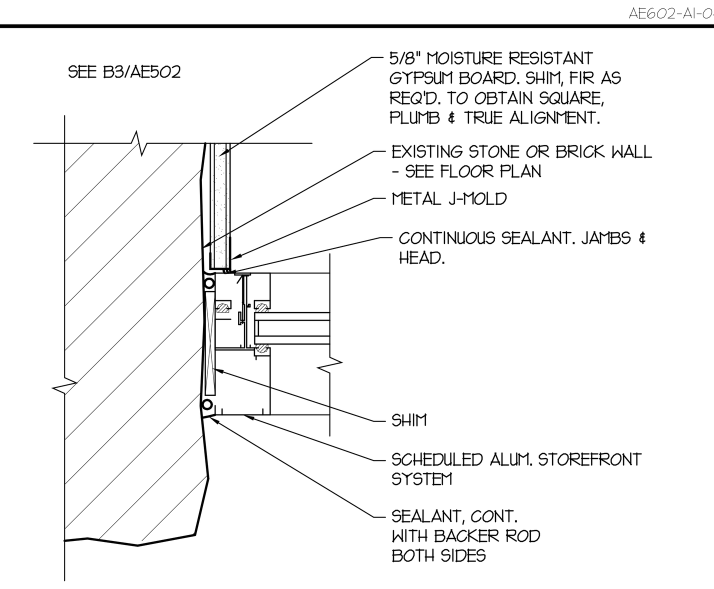

A2 JAMB DETAIL
3"=1'-0"

AE602-A1-04

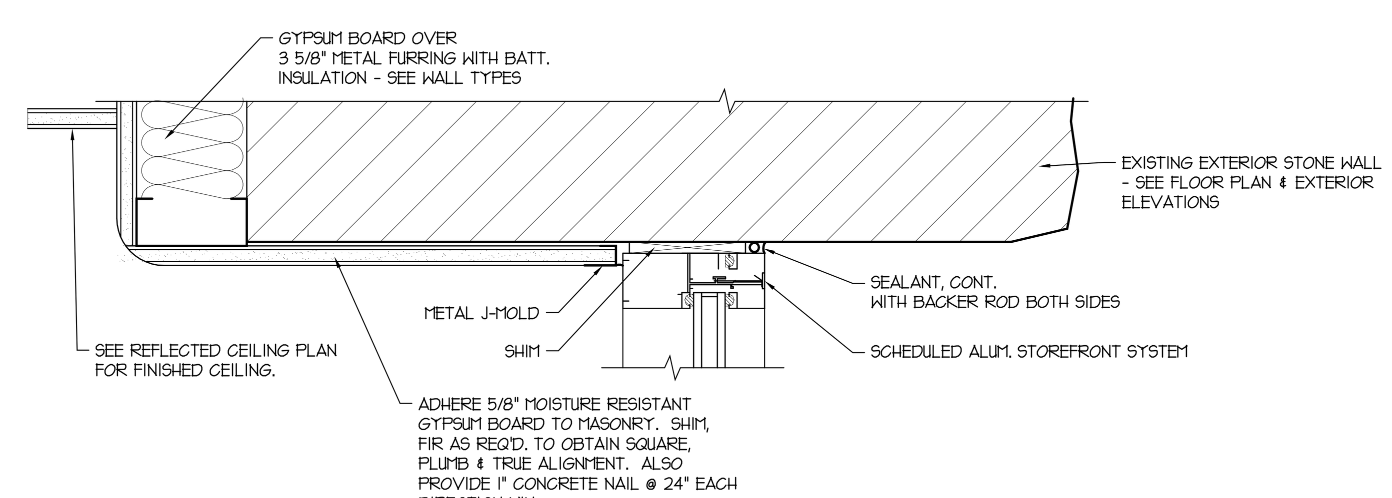

A3 HEAD DETAIL
3"=1'-0"

AE602-A1-04

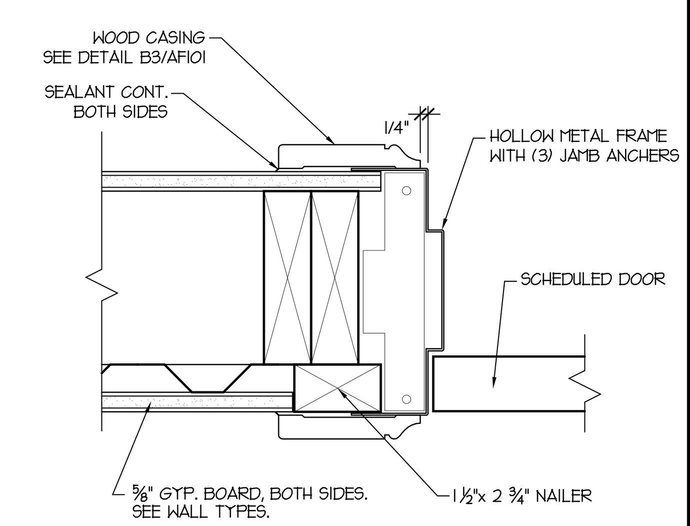

A5 JAMB DTL. - HOLLOW MTL.
3"=1'-0"

AE602-A1-04

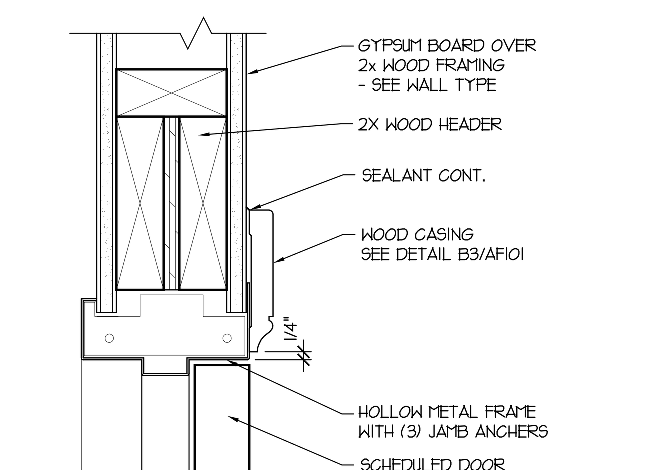

A6 HW MTL. HEAD (JAMB SIM.)
3"=1'-0"

AE602-A1-04

COOPER ROBERTS SIMONSEN ARCHITECTURE
crsa
700 NORTH 200 WEST
SALT LAKE CITY, UTAH 84103
(801) 355-5915
(801) 355-9885 FAX
WWW.CRSARCHITECTS.COM

REAVELEY ENGINEERS & ASSOCIATES, INC.
Consulting Structural Engineers
1515 South 1100 East
Salt Lake City, Utah 84105-2424
(801) 486-3883 Fax (801) 485-0911

WHW ENGINEERING INC.
PROFESSIONAL MECHANICAL ENGINEERING
1354 East 3300 South Suite 200
SALT LAKE CITY, UTAH 84106
(801)466-4021, FAX 466-8536
EMAIL: excellence@whw-engineering.com

BNA Consulting Engineers Electrical Engineering & Lighting Design
635 South State Street
Salt Lake City, Utah 84111
(801) 532-2196 FAX (801) 532-2305
© 2004 BNA Consulting Engineers
bma
brent morris associates ■ landscape architects
1074 raymond road fruit heights, utah, 84037 voice 801-544-0064 fax 801-546-6669 email bma@mailsnare.net

OLD MAIN BUILDING
SOUTHERN UTAH UNIVERSITY
351 WEST CENTER STREET
CEDAR CITY, UTAH 84720

STATE OF UTAH

DFCM

4110 STATE OFFICE BUILDING
SALT LAKE CITY, UTAH

2	3/8/06	BID ADDENDUM 2
1		

BID DOCUMENT	1/16/06
CD 100%	7/21/04
DD Sumbittal	7/12/04

ARCHITECT PROJECT NO.: B04-012
DFCM PROJECT NO.: 03234730
DTN

DOOR & WINDOW DETAILS

AE602

REAVELEY ENGINEERS
& ASSOCIATES, INC.

ADDENDUM

Construction Documents:

SB502 –

- Detail D4/SB502 – See attached detail for updated information
- Detail B4/SF502 – See attached detail for updated information

SF102 –

- The beam along grid A at the far north edge of the building that is referenced as a (2)-1-3/4"x 14" lvl beam shall be changed to read (3) – 1-3/4"x14" lvl.

SF105 –

- The W12x22 wide flange beam hoist support beam near grids 2-A shall be changed to a W6x9 wide flange beam.

Consulting Engineers
1515 S 1100 East
Salt Lake City, Utah 84105-2424
phone (801) 486-3883 — fax (801) 485-0911
email cempey@reaveley.com

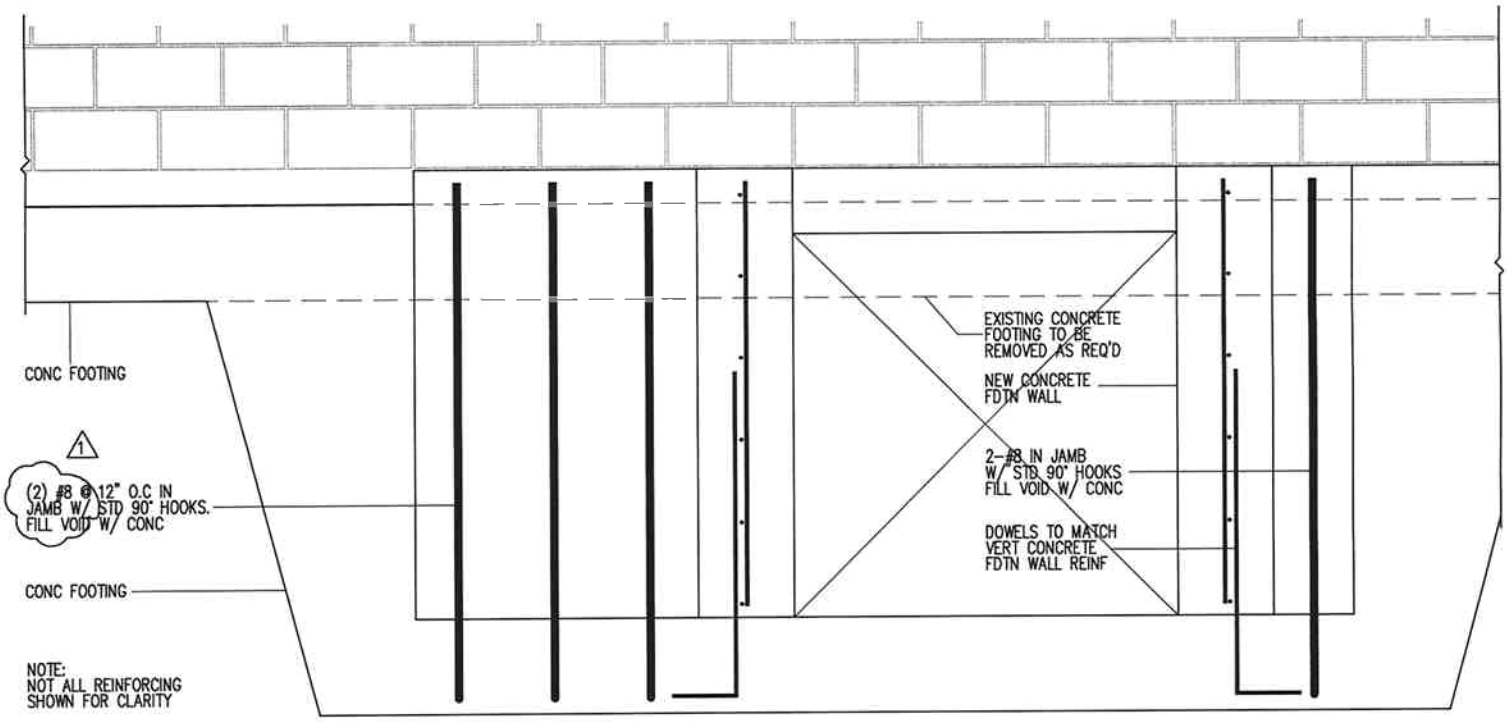

D4 / S8502 DETAIL AT MECHANICAL VAULT OPENING
NO SCALE

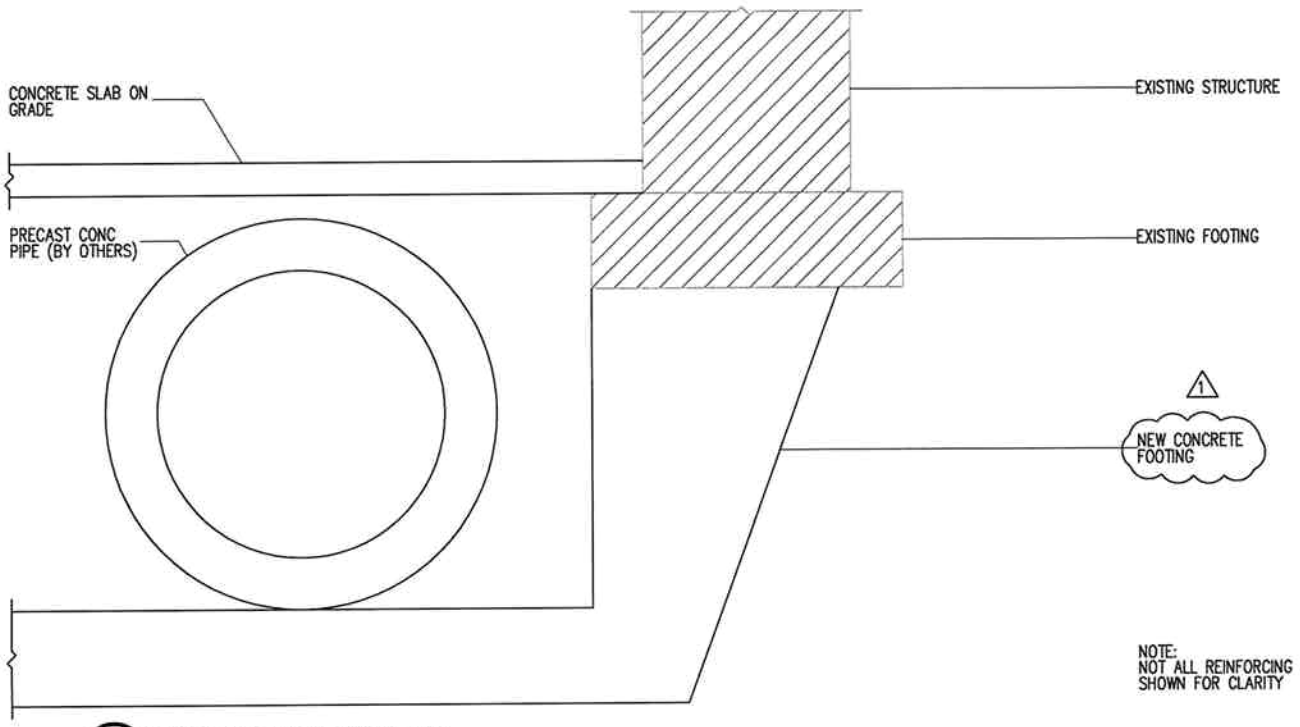

B4 / SB502 FOOTING AT MECHANICAL PIPE

NO SCALE

REAVELEY
ENGINEERS + ASSOCIATES
Consulting Structural Engineers

SUU OLD MAIN SEISMIC RENOVATION
ADDENDUM

DRAWINGS:

SB101

- Detail reference on the footing and foundation plan note #6 shall be changed from D2/SB504 to D2/SB501.
- Detail reference on the footing and foundation plan note #8 shall be changed from D4/SB504 to D4/SB501.
- Footing and foundation plan note #9 shall read as follows: "See D5/SB501 for typical new wall to existing structure detail".
- Existing footing and foundation plan note #9 shall be moved to footing and foundation plan note #10.
- Footing and foundation plan note #10 shall be moved to footing and foundation plan note #11.
- See attached SB101 sheets for additional plan updates.

SB502

- Detail B3/SB502 shall be added – see attached
- Detail D4/SB502 shall be updated – see attached
- Detail B4/SB502 shall be updated – see attached

SF101

- Post at along grid B north of grid 2 shall be referenced as a 6x6 post.
- Detail reference A5/SF502 along west exterior wall between grids 1 and 2 shall be changed to A4/SF502.
- Plan note #6 shall be changed to reference detail D2/SB501 versus D2/SB504.
- Plan note #7 shall be changed to reference detail D4/SB501 versus D4/SB504.

SF102

- Detail reference A4/SF502 along the north wall of the east stair shall be removed.
- Post along grid B north of grid 2 shall be referenced as a 6x6 post.

P:801.486.3883
F:801.485.0911

1515 South 1100 East
Salt Lake City, Utah 84105
www.reaveley.com

SF103

- See attached SF103 sheet for additional plan updates.

SF105

- The W12x22 hoist support beam north of grid 2 and west of grid A shall be changed to a W6x9 beam.
- Dormer note regarding overbuild framing along west exterior wall removed.

SF201

- Floor level elevations shall be changed to match architectural sheets. Elevation 111′-7″ shall be changed to 112′-7″ and elevation 125′-10″ shall be changed to 126′-10″.
- Note on all shear wall elevations stating "(2) #7 BARS TYP REF DET. C4/SF201" should be changed to read"(**4**) #7 BARS TYP REF DET. C4/SF201".
- See attached A1/SF201 for updates around the tunnel opening.

SF501

- Update detail D1/SF501 with the attached detail D1/SF501.

SF503

- Update detail D3/SF503 with the attached detail D3/SF503.
- Update detail D4/SF503 with the attached detail D4/SF503.
- Update detail B1/SF503 with the attached detail B1/SF503.

REAVELEY ENGINEERS
& ASSOCIATES, INC.

Monday, February 06, 2006

CRSA
700n. 200w.
Salt Lake City, Ut. 84103
Attention: Mike Lieshman

RE: DFCM plan review comments
SUU Old Main 100% CD Revision -

Dear Mike,

The following letter is to provide response to the items mentioned in the DFCM plan review letter dated February 4th 2006.

Item #1 - IBC 2003 compliance

All structural calculations were updated to be in compliance with the IBC 2003 edition. The general note will be revised to address this update.

Item #2 - Quality Control Plan

Please see attached document regarding updates to the quality control plan

Sincerely,

Cameron Empey E.I.T.
Project Engineer

R E & A
Consulting Engineers
1515 S 1100 East
Salt Lake City, Utah 84105-2424
phone (801) 486-3883 — fax (801) 485-0911

VIII. Quality Assurance

A. Quality Assurance Agency Requirements:
   1. The owner shall engage a qualified Quality Assurance Agency (QAA) to provide all special inspection and quality assurance testing for the project. All quality assurance personnel assigned to the project shall demonstrate competence, to the satisfaction of the building official, for inspection of the particular type of construction or operation requiring special inspection.
   2. Prior to construction, the QAA shall prepare a written Quality Assurance Implementation Plan (QAIP) for the project. The QAIP shall include a list of personnel assigned to the project including management personnel, inspection procedures and frequency, proposed testing methods and frequency of testing, and reporting procedures. The QAIP shall also outline methods of documenting deficiencies and reporting corrections. A copy of the QAIP shall be given to the contractor for review and coordination with subcontractors.
   3. Prior to construction, the QAA shall submit the following information to the Architect and Engineer of Record for approval:
      a. A copy of the Quality Assurance Implementation Plan for the project.
      b. A copy of the appropriate certification and training records for each individual performing inspections or testing.
      c. A list of the testing equipment designated for the project and recent calibration records for the equipment.
      d. Sample inspection and testing reports and the distribution list for the reports.
   4. The special inspector shall inspect the work per Chapter 17 of the IBC for conformance with the contract documents. The special inspector shall send reports to the owner, building official, architect, engineer, and contractor. All discrepancies shall be brought to the immediate attention of the contractor for correction. The QAA shall submit a final signed report stating that the special inspection work was, to the best of their knowledge, in conformance with the plans, specifications and applicable workmanship provisions of the IBC.

B. Seismic Force Resisting Systems
   1. Elements that are a part of the Main Seismic Force Resisting System for the structure may require increased quality assurance inspection and testing. The Main Seismic Force Resisting system for the structure includes the following elements:
      a. Masonry walls.
      b. Concrete shear walls.
      c. Footings and foundation systems that directly support walls referenced above.
      d. Roof decking.
      e. Floor decking and/or slab systems.
      f. All elements labeled as "drag struts" or "chords."
      g. Connections between the elements referenced above.

C. Special Inspection: Special Inspection shall be provided for the following elements per IBC sections 1704 and 1707:
   1. Concrete and elements embedded in concrete shall be special inspected prior to and during placement of concrete. Special inspection of concrete shall include the following:
      a. Reinforcing steel size and placement.
      b. Post-tensioned strand placement and stressing.
      c. Surface preparation at cold joints including placement of keyways.
      d. Bolt and embed size, configuration and placement.
      e. Concrete shall receive continuous special inspection during placement, and periodic inspection after placement to ensure proper curing and weather protection procedures.
      f. Shotcrete placement shall receive continuous special inspection.
   2. Structural steel fabrication and erection shall be special inspected, including the following:
      a. High strength bolts per IBC 1704.3.3 and IBC section 2209.
      b. Fillet welds smaller than 5/16" per AWS D1.1.
      c. Fillet welds larger than 5/16", multiple pass welds, and all groove welds shall receive continuous special inspection during weld placement per AWS D1.1.

d. Welding of reinforcing steel shall receive continuous special inspection during weld placement per AWS D1.1.
e. Welding of Headed Stud Anchors (HSA) and Deformed Bar Anchors (DBA) shall be inspected to comply with AWS D1.1 Section 7.6 through 7.8 and Annex IX.
f. Welding or fastening of floor or roof deck per AWS D1.3. or per the code evaluation report for the fastening method.
g. Welding primary members of moment frames shall receive continuous special inspection to comply with AWS D1.1, FEMA 350 and 353, and the special provisions for moment frames in the structural steel sections of the GSN and specifications.

3. Structural Masonry: Special inspection shall be provided, as follows:
   a. As masonry construction begins, and periodically during construction, verify the following are in compliance:
      (1) Proportions of site-mixed mortar and grout.
      (2) Placement of masonry units and construction of mortar joints.
      (3) Locations of reinforcement, connectors and embeds.
      (4) Protection of masonry during cold or hot weather.
   b. Prior to grouting, verify the following are in compliance:
      (1) Grout space.
      (2) Size and location of structural elements.
      (3) Grade, size and placement of reinforcement, connectors and embeds.
      (4) Construction of all mortar joints.
   c. Continuous inspection is required during placement of grout and during preparation of grout specimens, mortar specimens, and/or prisms for testing.
4. Post-installed anchors, including but not limited to expansion anchors, adhesive anchors and rebar dowels, and low velocity fasteners, shall receive special inspection per the code evaluation reports for the anchors.
   a. Continuous special inspection is required during the installation of all adhesive anchors and rebar dowels. Special inspector shall verify the following:
      (1) Anchor size and steel grade.
      (2) Hole diameter, location, and type of drill bit.
      (3) Cleanliness of hole and anchor.
      (4) Adhesive application.
      (5) Anchor embedment.
5. Wood: Nailing of wood floor and roof diaphragms, nailing of wood shearwalls and installation of anchor bolts, hold down anchors, seismic straps and other elements of the main seismic force resisting system shall recieve special inspection per IBC 1707.3.

D. Structural Testing: The following materials shall be tested per IBC sections 1704 and 1708. The owner reserves the right to test any and all materials using any appropriate non-destructive procedure. Any items found to be deficient shall be corrected and retested at no additional cost to the owner.
   1. Earthwork: All compacted structural fill shall be tested to verify soil gradation, lift thickness, and compaction requirements. See the specifications and earthwork section of the GSN for testing frequency and acceptability criteria.
   2. Concrete Strength Verification and Testing. All concrete shall be tested to verify strength, slump, unit weight, air content, and temperature. See the specifications for testing criteria, testing frequency and acceptability criteria.
   3. Masonry Strength Verification:
      a. Masonry strength, f'm shall be verified using the "Unit Strength Method" per IBC Section 2105.2.2.1 and as follows: Prior to construction, the masonry units and grout shall be tested for compressive strength. Certificates of compliance with strength requirements of the masonry units and grout shall be submitted by the masonry and grout suppliers. During construction, the masonry units and grout shall be tested for every 5,000 square feet of masonry constructed per GSN IV.A, above. Proportions of materials in mortar and grout delivered to the site shall be verified.
      b. The contractor has the option of using the "Masonry Prism Test Method" per IBC Section 2105.2.2.2, in lieu of the "Unit Strength Method."

4. Welded connections shall be tested for compliance according to IBC Table 1704.3, AWS D1.1 and the contract specifications and plans. As a minimum, the testing shall include the following:
   a. All complete penetration groove welds shall be tested 100 percent either by ultrasonic testing or by radiography.
   b. Partial penetration groove welds shall be tested either by ultrasonic testing or radiography. A minimum of 50% of these welds shall be tested.
   c. Base metal thicker than 1 1/2", when subjected to through thickness weld shrinkage strains, shall be ultrasonically inspected for discontinuities directly behind such welds and three inches above and below the weld after joint assembly completion.
   d. Any material discontinuities shall be accepted or rejected on the basis of the defect rating in accordance with the testing in AWS D1.1 Chapter 6, excluding Sections 6.1 through and including 6.6. All deficient welds shall be corrected and retested at no additional cost to the owner.
5. Post-installed anchors, including but not limited to expansion anchors, adhesive anchors, and low velocity fasteners, shall be tested per the code evaluation reports for the anchors.

E. Structural Observations by the Engineer of Record.
   1. The Engineer of Record may perform structural observations at critical phases of the project. Copies of the engineer's report will be distributed to the architect, contractor, owner, and QAA.
   2. Observation visits to the site by the Engineer's field representatives shall not be construed as inspection or approval of construction.
   3. Notification of Engineer: The contractor shall notify the engineer twenty-four hours prior to:
      a. Placing concrete in any footing.
      b. Closing any wall forms.
      c. Placing concrete in any column, beam or suspended slab.
      d. Grouting any masonry.
      e. Completing the welding of major sections of steel decking.
      f. Completing the nailing of any plywood wall or deck.

F. Contractor Responsibility: The contractor shall prepare and submit a written statement of responsibility to the building official and the owner prior to commencement of work on the project. As a minimum the statement shall contain the following information:
   1. Acknowledgement of the quality assurance requirements for the structure.
   2. Acknowledgement of receipt of the Quality Assurance Implementation Plan (QAIP) from the testing agency.
   3. Acknowledgement that control will be exercised to obtain conformance to the Contract Documents and the QAIP.
   4. Quality control procedures within the contractors organization, methods and frequency of reporting, and distribution of the reports.
   5. Identification and qualifications of the person(s) responsible for quality control and their position(s) in the organization.

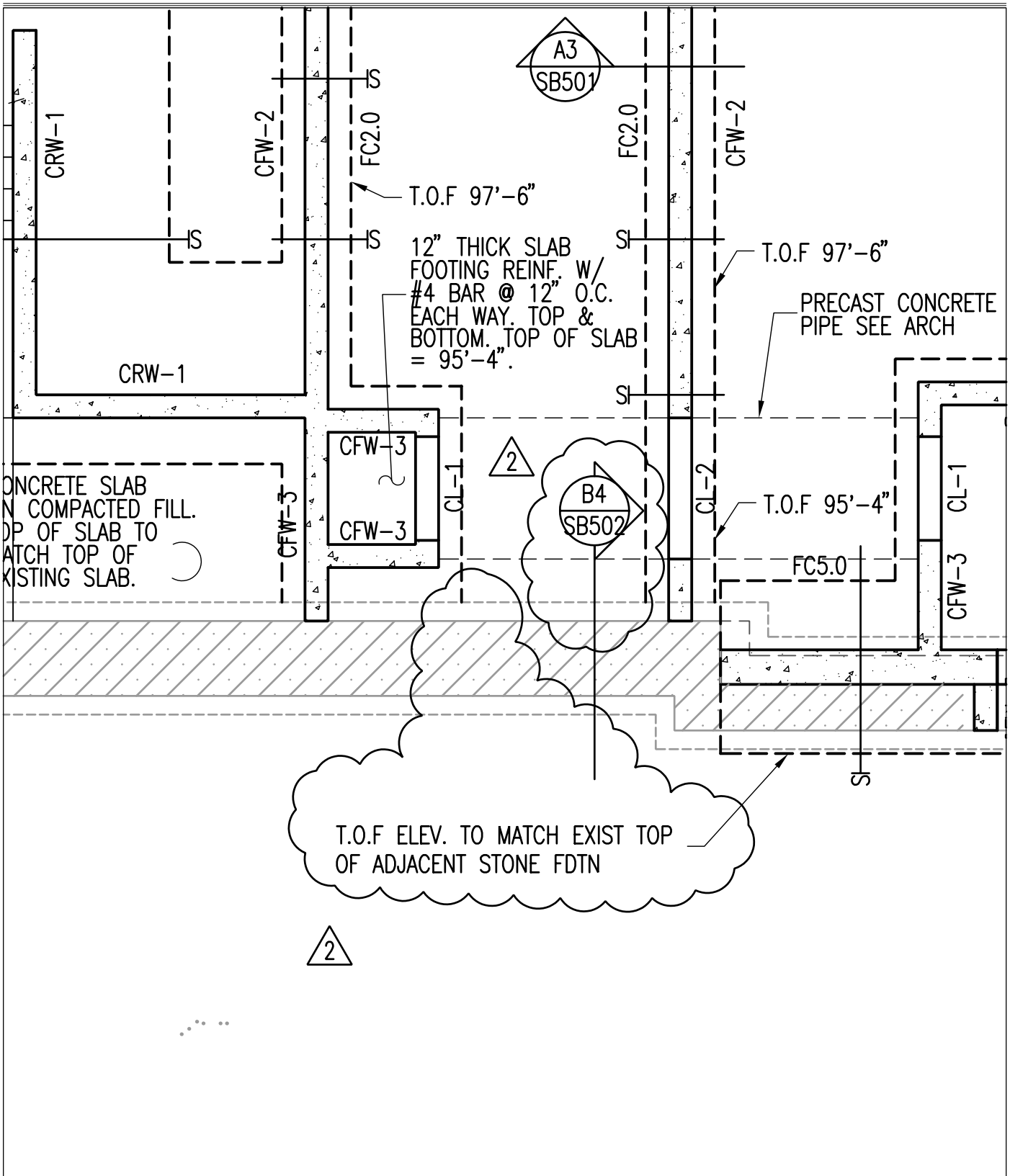

COOPER
ROBERTS
SIMONSEN
ARCHITECTURE

700 NORTH 200 WEST
SALT LAKE CITY,UTAH 84103
(801) 355-5915
(801) 355-9885 FAX
WWW.CRSARCHITECTS.COM

SUU OLD MAIN

PROJECT NO: #B04-012	DATE: MARCH 17, 2006
CAD DWG FILE: ADDENDUM 2	
DRAWN BY: MK	CHECKED BY:

-

SD-1

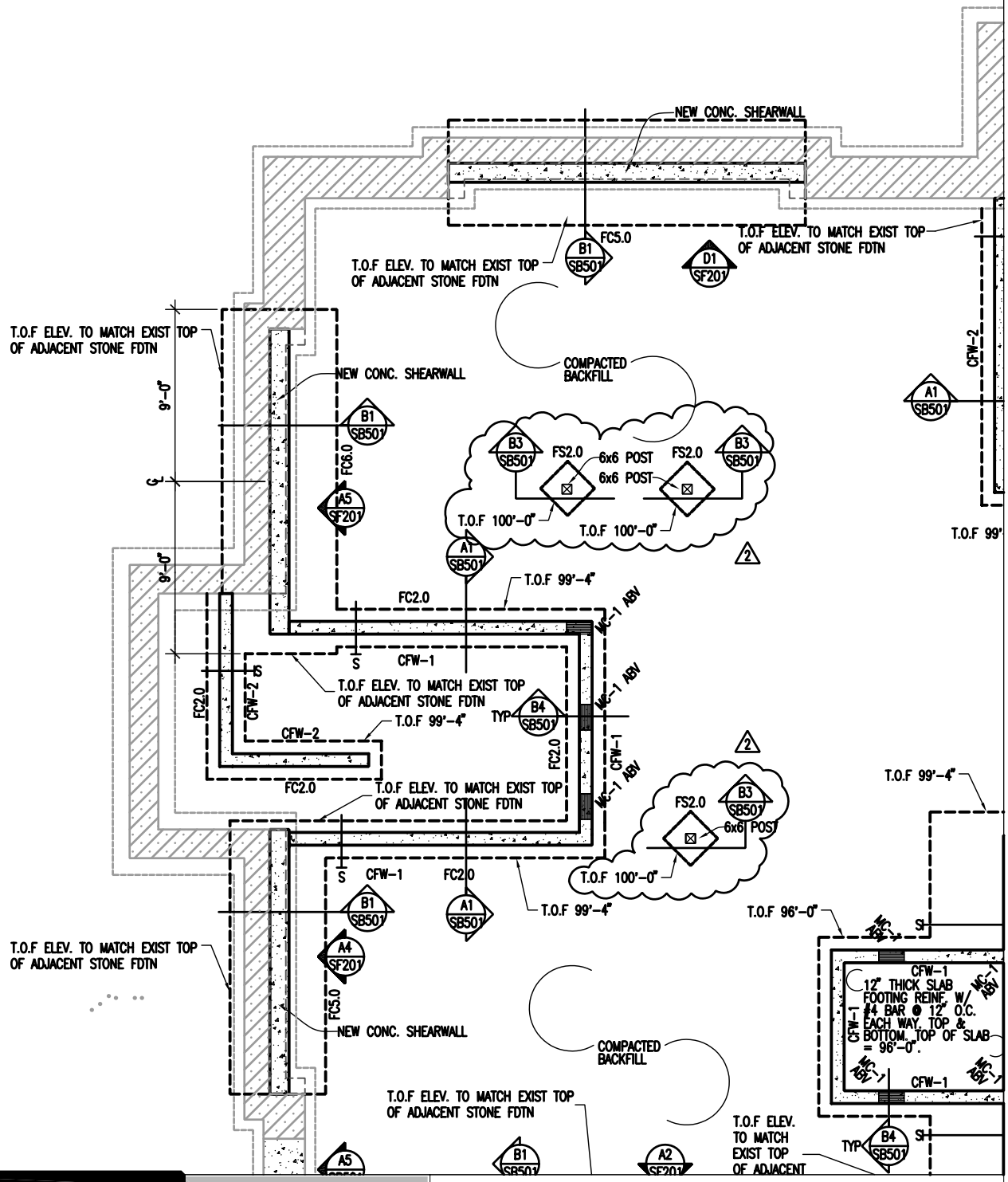

COOPER
ROBERTS
SIMONSEN
ARCHITECTURE

700 NORTH 200 WEST
SALT LAKE CITY,UTAH 84103
(801) 355-5915
(801) 355-9885 FAX
WWW.CRSARCHITECTS.COM

SUU OLD MAIN

PROJECT NO: #B04-012	DATE: MARCH 17, 2006
CAD DWG FILE: ADDENDUM 2	
DRAWN BY: MK	CHECKED BY:

-

SD-2

2

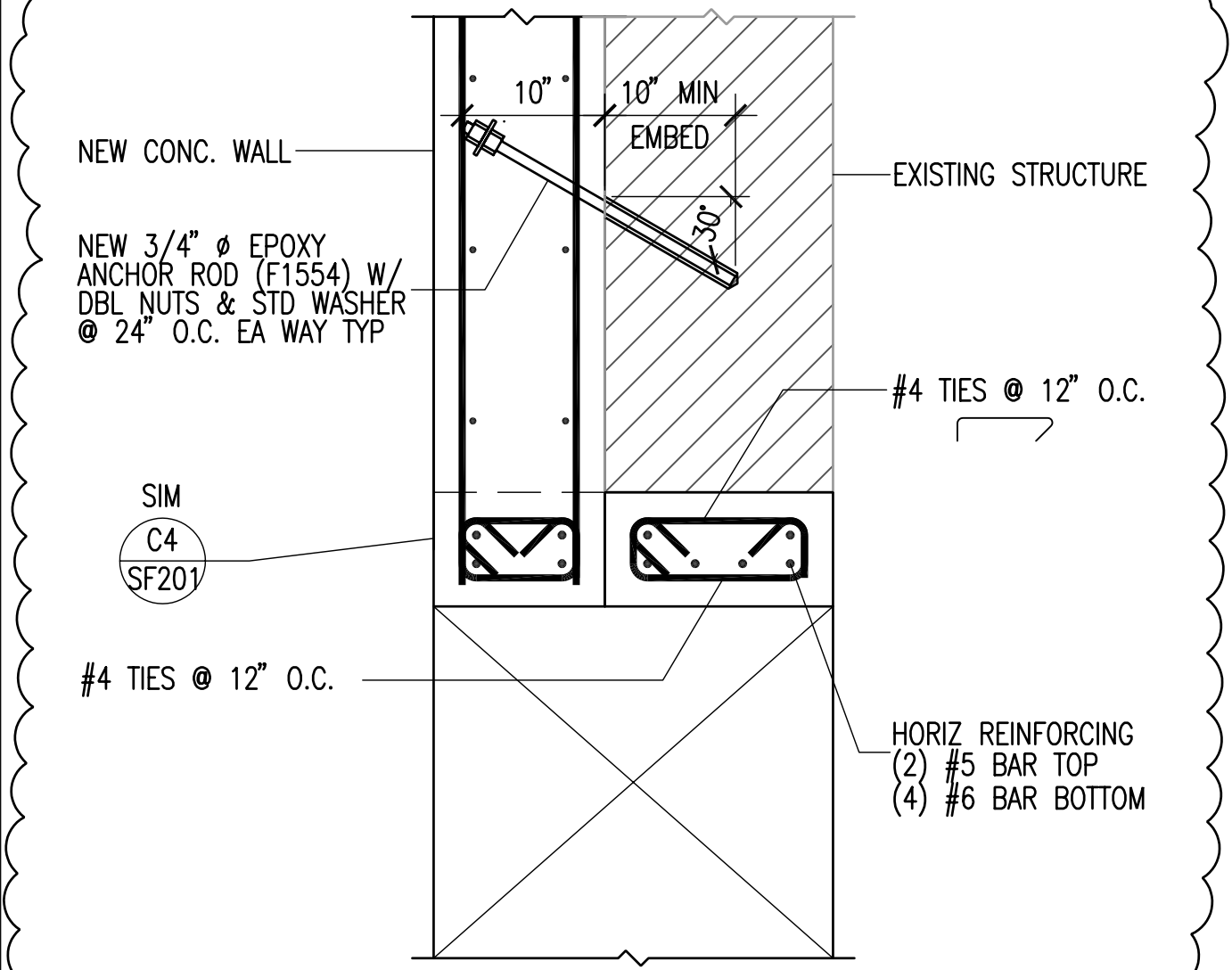

B3 / SB502 TYPICAL SPANDRAL BEAM
NO SCALE

COOPER
ROBERTS
SIMONSEN
ARCHITECTURE

700 NORTH 200 WEST
SALT LAKE CITY,UTAH 84103
(801) 355-5915
(801) 355-9885 FAX
WWW.CRSARCHITECTS.COM

SUU OLD MAIN

PROJECT NO: #B04-012	DATE: MARCH 17, 2006
CAD DWG FILE: ADDENDUM 2	
DRAWN BY: MK	CHECKED BY:

-

SD-3

COOPER
ROBERTS
SIMONSEN
ARCHITECTURE

700 NORTH 200 WEST
SALT LAKE CITY,UTAH 84103
(801) 355-5915
(801) 355-9885 FAX
WWW.CRSARCHITECTS.COM

SUU OLD MAIN

PROJECT NO: #B04-012	DATE: MARCH 17, 2006
CAD DWG FILE: ADDENDUM 2	
DRAWN BY: MK	CHECKED BY:

-

SD-4

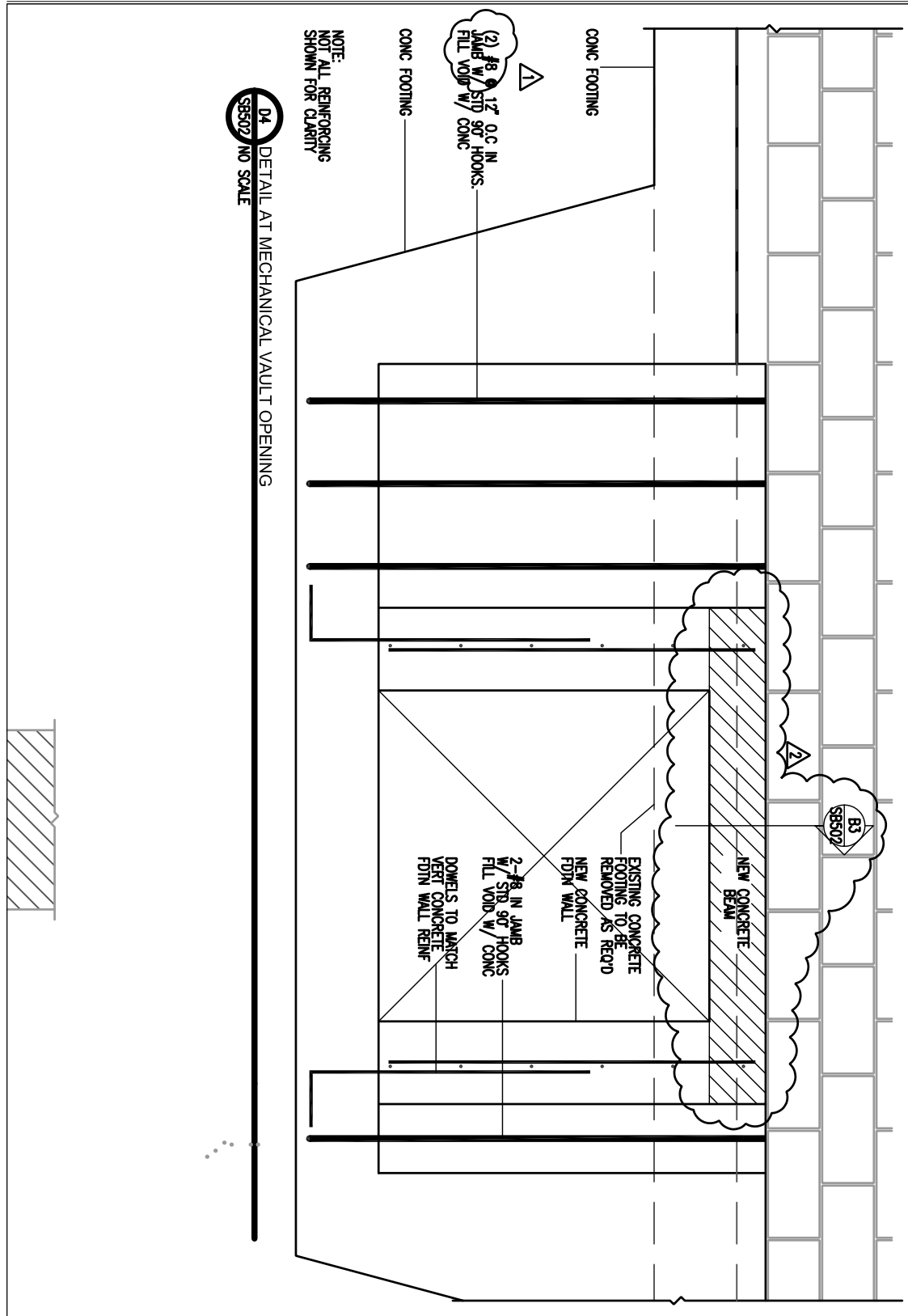

COOPER
ROBERTS
SIMONSEN
ARCHITECTURE

700 NORTH 200 WEST
SALT LAKE CITY,UTAH 84103
(801) 355-5915
(801) 355-9885 FAX
WWW.CRSARCHITECTS.COM

SUU OLD MAIN

PROJECT NO: #B04-012	DATE: MARCH 17, 2006
CAD DWG FILE: ADDENDUM 2	
DRAWN BY: MK	CHECKED BY:

-

SD-5

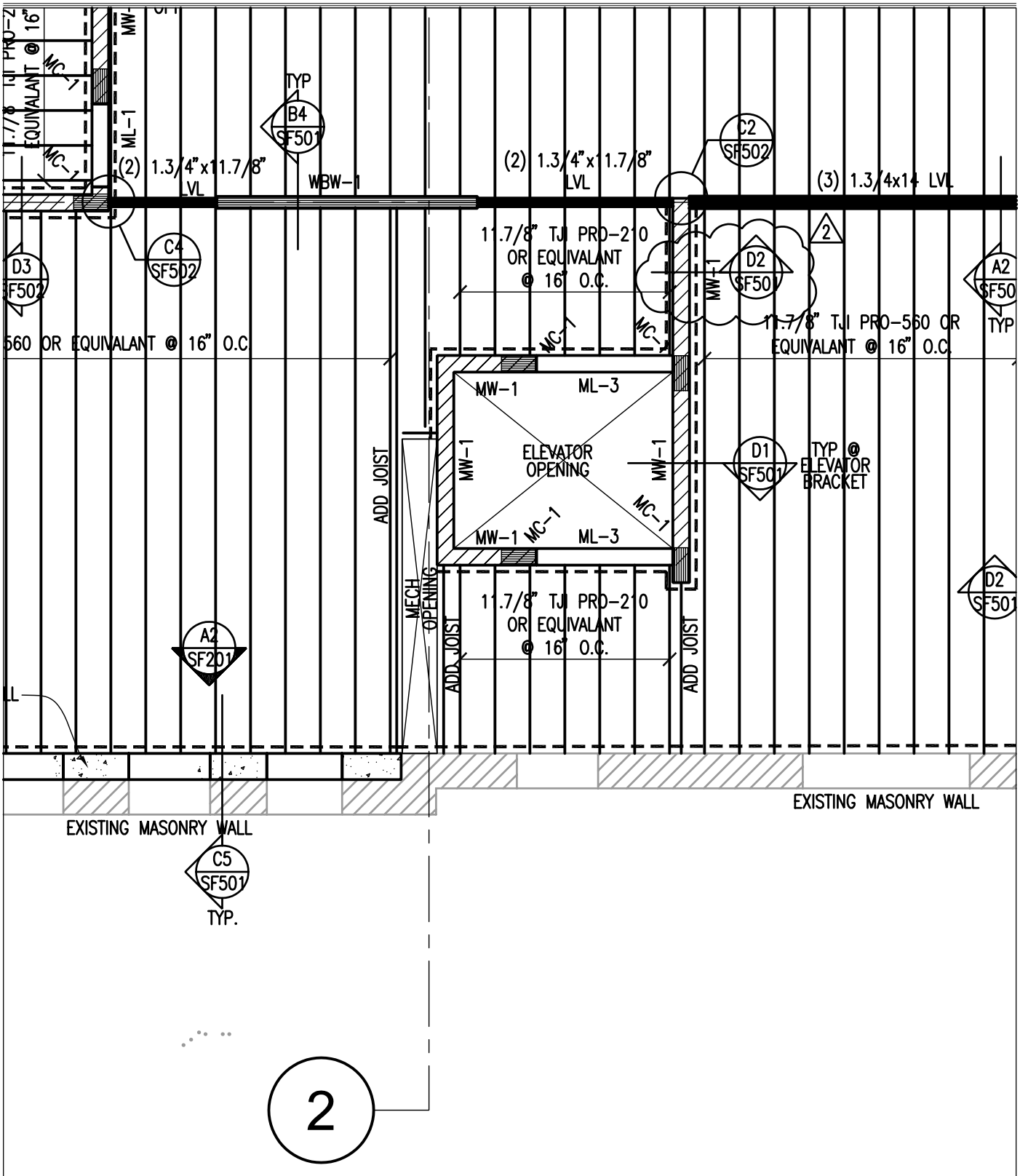

COOPER
ROBERTS
SIMONSEN
ARCHITECTURE

700 NORTH 200 WEST
SALT LAKE CITY,UTAH 84103
(801) 355-5915
(801) 355-9885 FAX
WWW.CRSARCHITECTS.COM

SUU OLD MAIN

PROJECT NO: #B04-012	DATE: MARCH 17, 2006
CAD DWG FILE: ADDENDUM 2	
DRAWN BY: MK	CHECKED BY:

-

SD-6

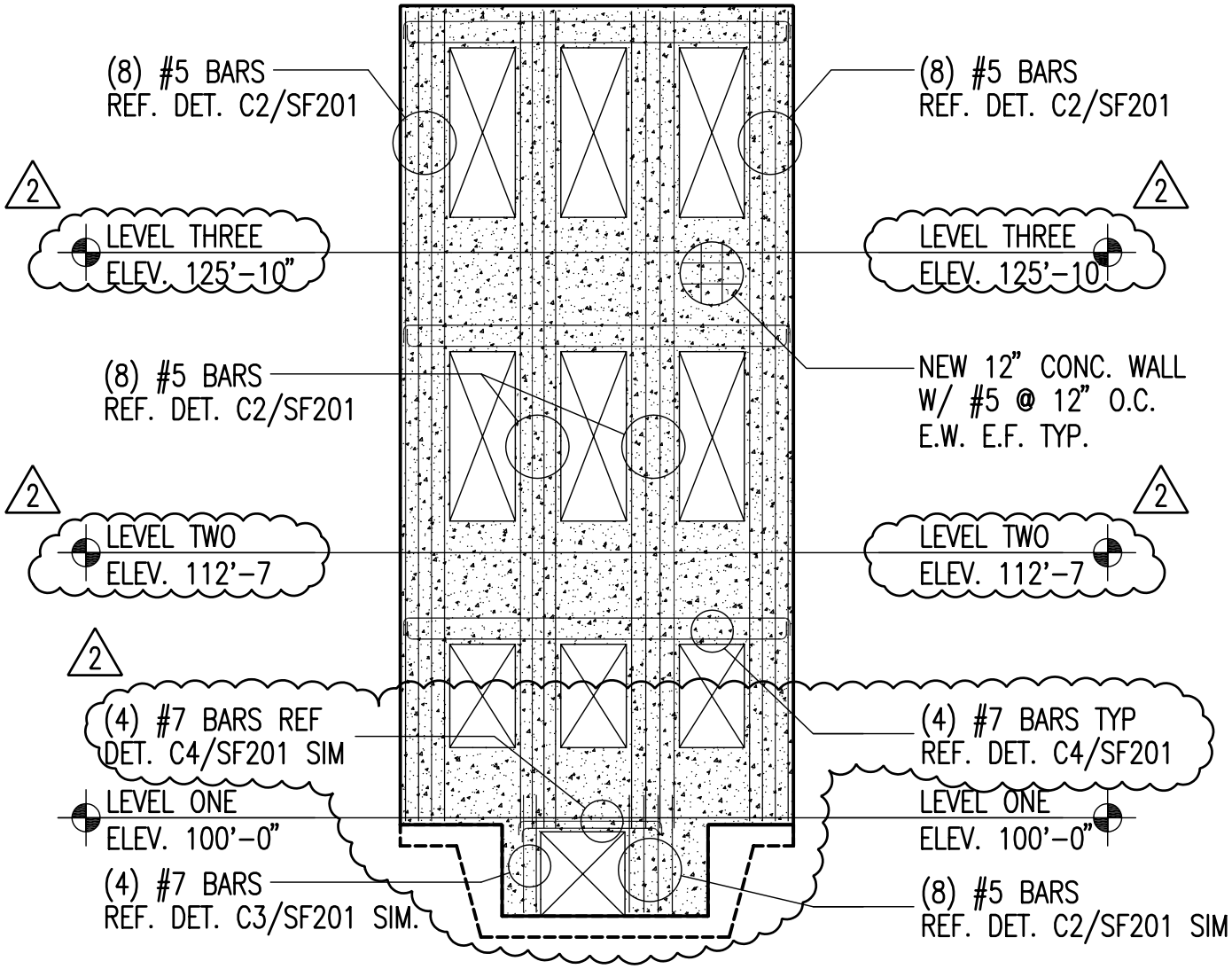

A1
SF201

CONCRETE SHEAR WALL ELEVATION

SCALE: 1/8"=1'-0"

COOPER
ROBERTS
SIMONSEN
ARCHITECTURE

700 NORTH 200 WEST
SALT LAKE CITY,UTAH 84103
(801) 355-5915
(801) 355-9885 FAX
WWW.CRSARCHITECTS.COM

SUU OLD MAIN

PROJECT NO: #B04-012	DATE: MARCH 17, 2006
CAD DWG FILE: ADDENDUM 2	
DRAWN BY: MK	CHECKED BY:

-

SD-7

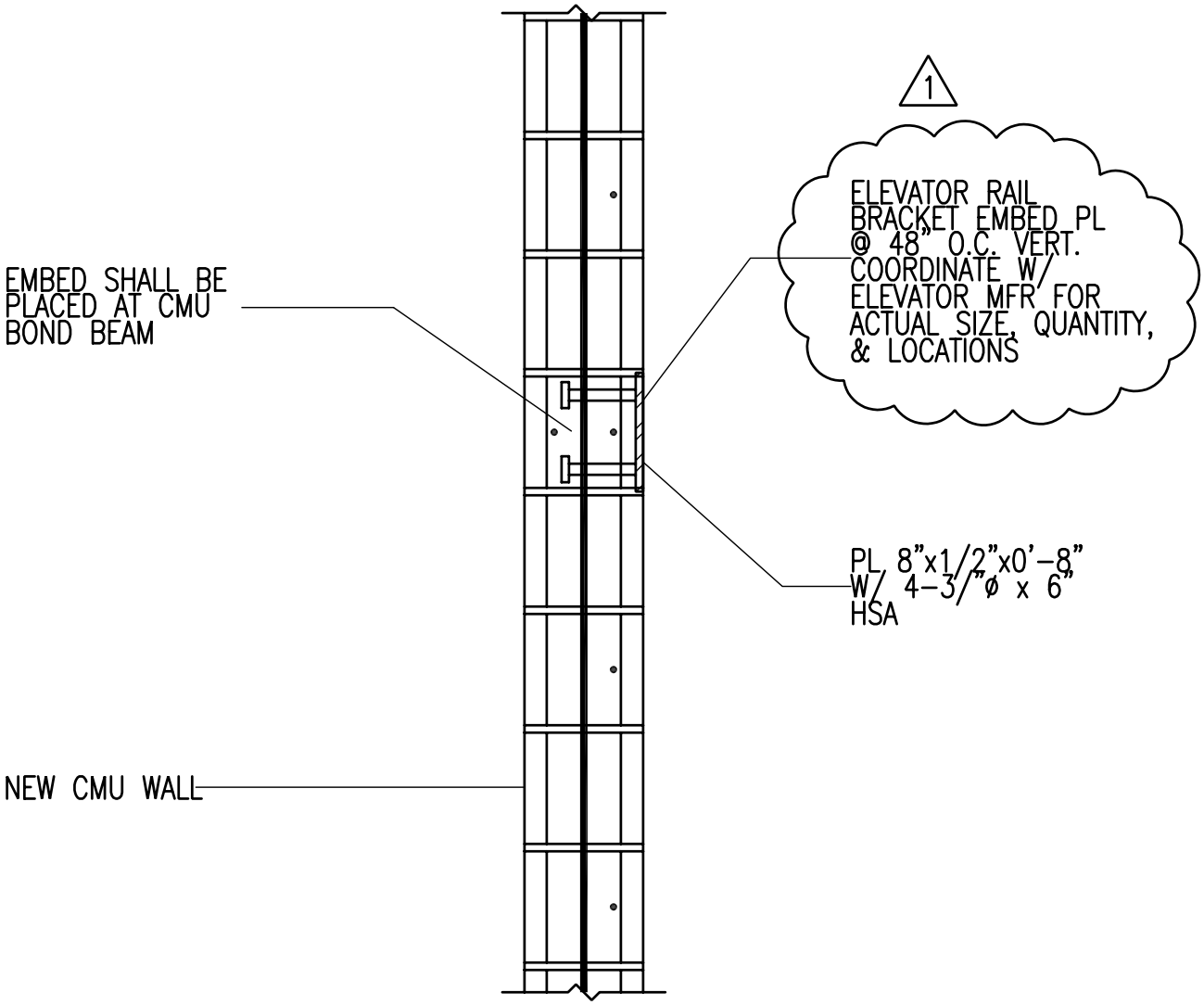

D1 / SF501 ELEVATOR RAIL BRACKET EMBED

NO SCALE

COOPER
ROBERTS
SIMONSEN
ARCHITECTURE

700 NORTH 200 WEST
SALT LAKE CITY,UTAH 84103
(801) 355-5915
(801) 355-9885 FAX
WWW.CRSARCHITECTS.COM

SUU OLD MAIN

PROJECT NO: #B04-012	DATE: MARCH 17, 2006
CAD DWG FILE: ADDENDUM 2	
DRAWN BY: MK	CHECKED BY:

-

SD-8

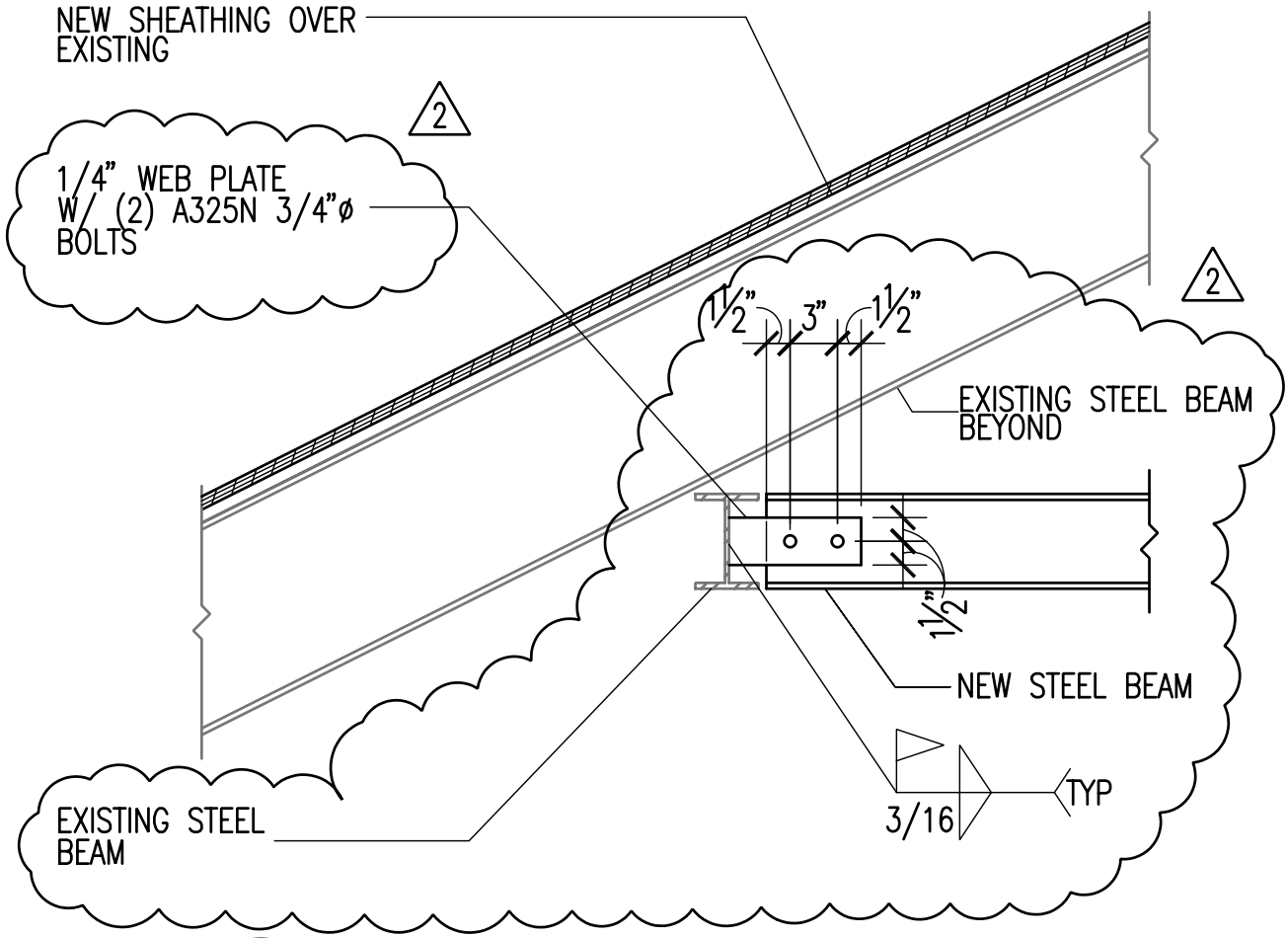

D3 / SF503 TYPICAL HOIST BEAM CONNECTION

NO SCALE

COOPER ROBERTS SIMONSEN ARCHITECTURE

700 NORTH 200 WEST
SALT LAKE CITY,UTAH 84103
(801) 355-5915
(801) 355-9885 FAX
WWW.CRSARCHITECTS.COM

SUU OLD MAIN

PROJECT NO: #B04-012	DATE: MARCH 17, 2006
CAD DWG FILE: ADDENDUM 2	
DRAWN BY: MK	CHECKED BY:

-

SD-9

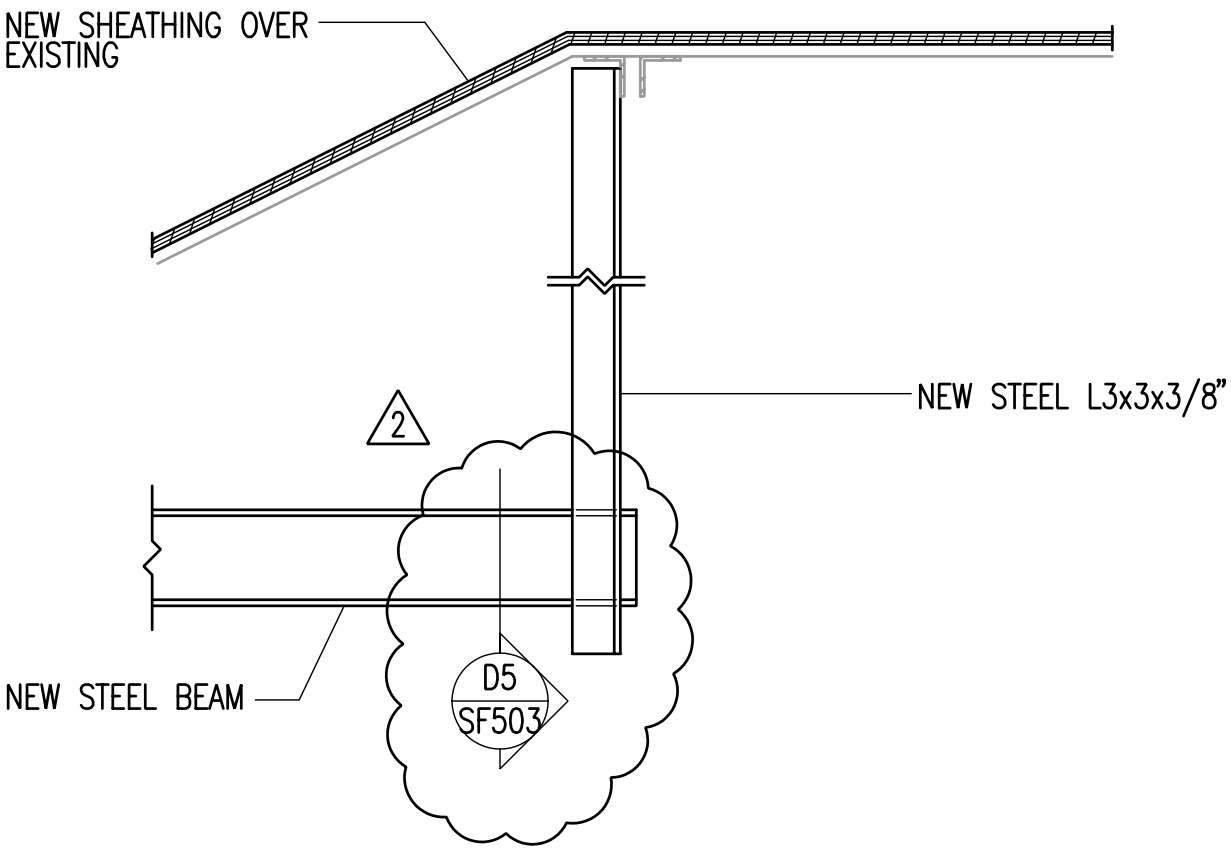

D4 / SF503 HOIST BEAM SUPPORT
NO SCALE

COOPER
ROBERTS
SIMONSEN
ARCHITECTURE

700 NORTH 200 WEST
SALT LAKE CITY,UTAH 84103
(801) 355-5915
(801) 355-9885 FAX
WWW.CRSARCHITECTS.COM

SUU OLD MAIN

PROJECT NO: #B04-012	DATE: MARCH 17, 2006
CAD DWG FILE: ADDENDUM 2	
DRAWN BY: MK	CHECKED BY:

-

SD-10

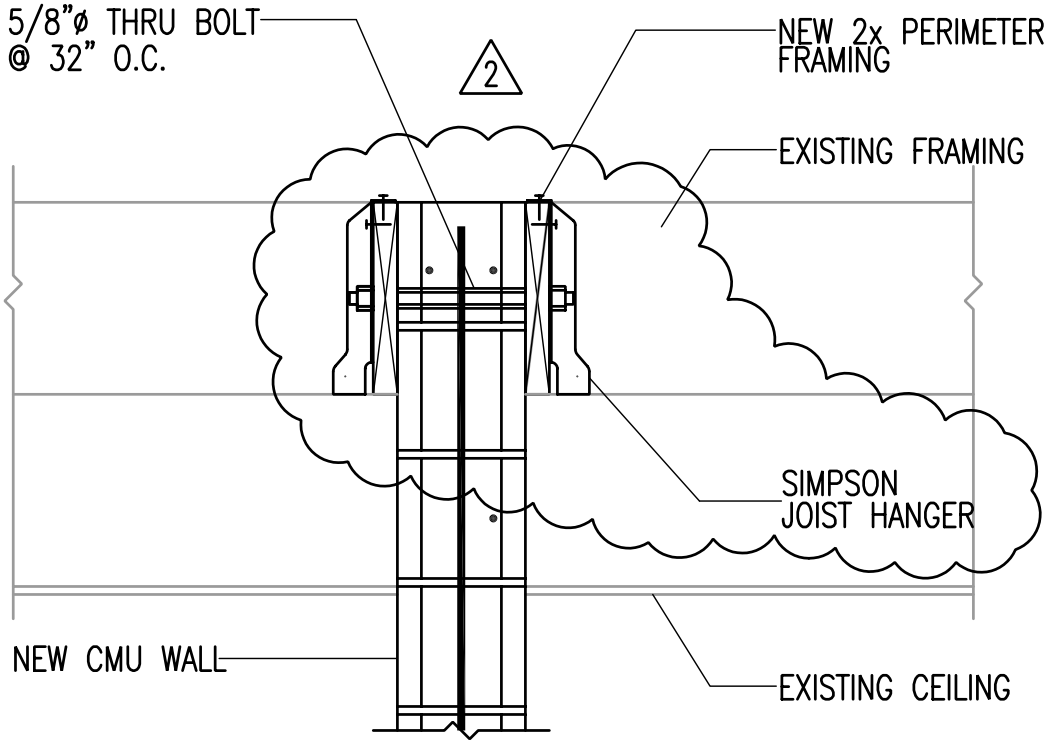

B1 / SF503 TOP OF CMU WALL BRACING DETAIL

NO SCALE

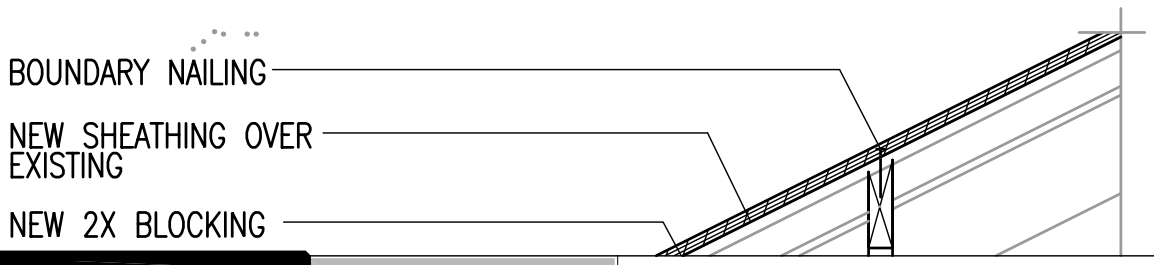

COOPER
ROBERTS
SIMONSEN
ARCHITECTURE

700 NORTH 200 WEST
SALT LAKE CITY,UTAH 84103
(801) 355-5915
(801) 355-9885 FAX
WWW.CRSARCHITECTS.COM

SUU OLD MAIN

PROJECT NO: #B04-012	DATE: MARCH 17, 2006
CAD DWG FILE: ADDENDUM 2	
DRAWN BY: MK	CHECKED BY:

-

SD-11

ADDENDUM

Project Name: SUU Old Main

Addendum No.: 2

DFCM Project # 03234730 - 05049730

Date: 03-17-06

From: WHW Engineering Inc
1354 East 3300 South Suite 200
Salt Lake City, Utah 84106
Phone (80) 466-4021 Fax (801) 466-8536

To: All bidders

This Addendum forms and becomes a part of the Contract Documents and modifies the original Bidding Documents dated January 2006 as noted below. Acknowledge receipt of this Addendum in the space provided on the Bid Form. Failure to do so may subject the Bidder to disqualification.

The mechanical portion of this Addendum consists of 13 pages.

I - CHANGES TO PRIOR ADDENDA:

II - CHANGES TO BIDDING REQUIREMENTS:

III - CHANGES TO AGREEMENT & OTHER CONTRACT FORMS:

IV – CHANGES/CLARIFICATIONS TO CONDITIONS OF THE CONTRACT:

V - CHANGES/CLARIFICATIONS TO SPECIFICATIONS:

Item V-1. 15910 – ATC shall provide air flow measuring station for outside air at air handling unit.

Item V-2. 15910-22 – Delete the requirements for the condensate pump and meter, main heating water pumps and heat exchanger, and the chilled water pumps. These items will be located in the new Teacher Education Building, and will be included in that project instead.

Item V-3. 15910-22 – The BAS interface to the computer room cooling unit shall include space temperature monitoring and adjustment, unit run status, unit start/stop, and alarm status.

Item V-4. 15910 – ATC shall provide a temperature sensor for monitoring the fire riser room with the electric baseboard heater. The thermostat for the heater shall be provided with the heater, and the ATC shall provide monitoring only.

Item V-5. 15910 – Coil circulating pumps CP-1 and CP-2 shall be controlled by the BAS through a start/stop on a call for their respective functions (heating or cooling). The pumps shall also be started in freeze protection sequence when mixed air temperature drops below 40 degrees (adj).

Item V-6. 15910 4.1.G. – Delete paragraph 2.

Item V-7. 15410 2.1.F.3. – Install trap primers at all floor drains. Install in an accessible location for maintenance. Locations shall be marked or labeled, and included in O&M manuals and as-built redlines.

Item V-8. 15410 2.1.I.1.f. – Cleanouts shall be installed in restrooms, storage rooms and other

concealed locations. Do not install in public finished areas, unless specifically approved by architect and owner.

VI - CHANGES/CLARIFICATIONS TO DRAWINGS:

Item VI-1. Sheets ME 102 through ME 105, and ME 601: The computer room unit CRU-1 shall be moved to the attic space and ducted to serve the communications rooms on all three floors. The computer room unit shall be increased to 1.5 tons to handle the additional load. See attached sheets ME 102-A2, ME 103-A2, ME 104-A2, ME105-A2, and ME601-A2.

Item VI-2. Sheet ME101: See updated tunnel connection section and bypass valve requirements. See attached sheet ME101-A2. Coordinate with architectural plans.

Item VI-3. Sheet ME104: Graduate Education Chair office temperature sensor shall be re-located around the corner from where it is currently shown. Coordinate all sensor locations with architectural plans, and interior elevations.

Item VI-4. Sheet ME601: Registers, grilles and diffusers shall be baked enamel finish with color by architect.

Item VI-5. Sheet PE101: Re-route waste line around elevator equipment room in lieu of that shown in the drawings. See attached plan PE 101-A2.

Item VI-6. Sheet PE102: Re-route waste line around elevator equipment room in lieu of that shown in the drawings. Modify note 7 to route waste underfloor. Add note 4 to waste riser in water heater room. See attached plan PE 102-A2.

Item VI-7. Sheet PE104: Route piping for break room sink in adjacent chase and under counter instead of in elevator shaft wall. See attached plan PE 104-A2.

Item VI-8. Sheet PE105: Offset vent piping (notes 4 and 5) in attic. Route waste line from floor drain to chase. See attached plan PE 105-A2.

PRIOR APPROVALS

THE FOLLOWING ITEMS, AS SUBMITTED, ARE CONSIDERED, IN GENERAL AND IN NAME ONLY, AS EQUAL TO THOSE ITEMS SPECIFIED. THIS REVIEW DOES NOT RELIEVE THE CONTRACTOR OR SUPPLIER OF THE RESPONSIBILITY OF CONFORMING TO THE DRAWINGS AND SPECIFICATIONS, NOR DOES IT RELIEVE THE CONTRACTOR OF THE REQUIREMENTS OF THE SPECIFICATIONS FOR COORDINATION WITH OTHER TRADES. ALL DIMENSIONS SHALL BE CONFIRMED AND CORRELATED AT THE JOBSITE. THE CONTRACTOR SHALL BE RESPONSIBLE FOR VERIFYING EXISTING CONDITIONS AND THE SUITABILITY OF “EQUAL” PRODUCTS FOR THE SPECIFIED APPLICATION.

Description	**Manufacturer**
1. Vibration and seismic control	Kinetics Noise Control
2. Pumps	Grundfoss
3. Hydronic Specialties	IFC Conbraco
4. Pipe flexible connections	Flex-hose
5. Plumbing fixtures	Crane Briggs/Sayco/Proflo

6. Plumbing fixtures – drainage products	Mifab
7. Plumbing fixtures - Service Sinks	CECO
8. Water Heaters	Rheem
9. Electric baseboard heater	REDD-I (TPI Corporation) Markel
10. Computer room unit	Compu-Aire Data Aire Esco Air
11. Flexible duct	ANCO Products, Inc. Hart and Cooley
12. Square to round high efficiency take off fittings	Air-Rite Clifco
13. Duct access doors	Leader Hart and Cooley
14. Volume dampers	Leader
15. Combination fire/smoke dampers	C & S
16. Exhaust fans	Greenheck Twin City Captive Aire
17. Diffusers, registers and grilles	Titus Krueger
18. Louvers and vents	Greenheck Louvers and Dampers Cesco Dowco NCA
19. VAV boxes	Krueger Nailor Industries Inc.

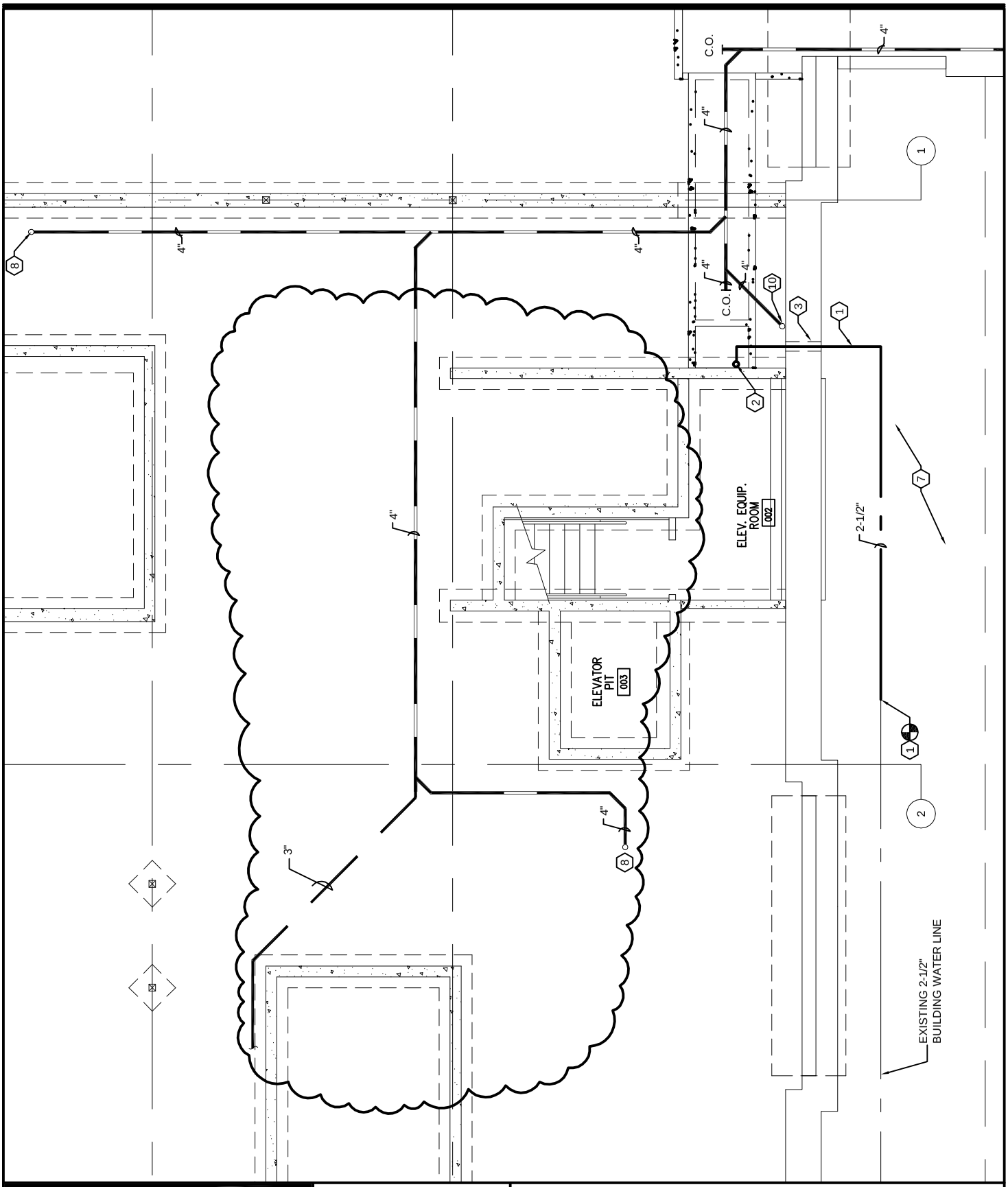

COOPER
ROBERTS
SIMONSEN
ARCHITECTURE
crsa
700 NORTH 200 WEST - SALT LAKE CITY, UT 84103
PH. (801) 355-5915, FAX (801) 355-9885
WWW.CRSARCHITECTS.COM

SUU OLD MAIN ADDENDUM #2

PROJECT #: B04-012	DATE: 03-16-06
DFCM #: 03234730	
DRAWN BY: LD	CHECKED BY: WP

PARTIAL BASEMENT LEVEL PLUMBING PLAN

PE101A2

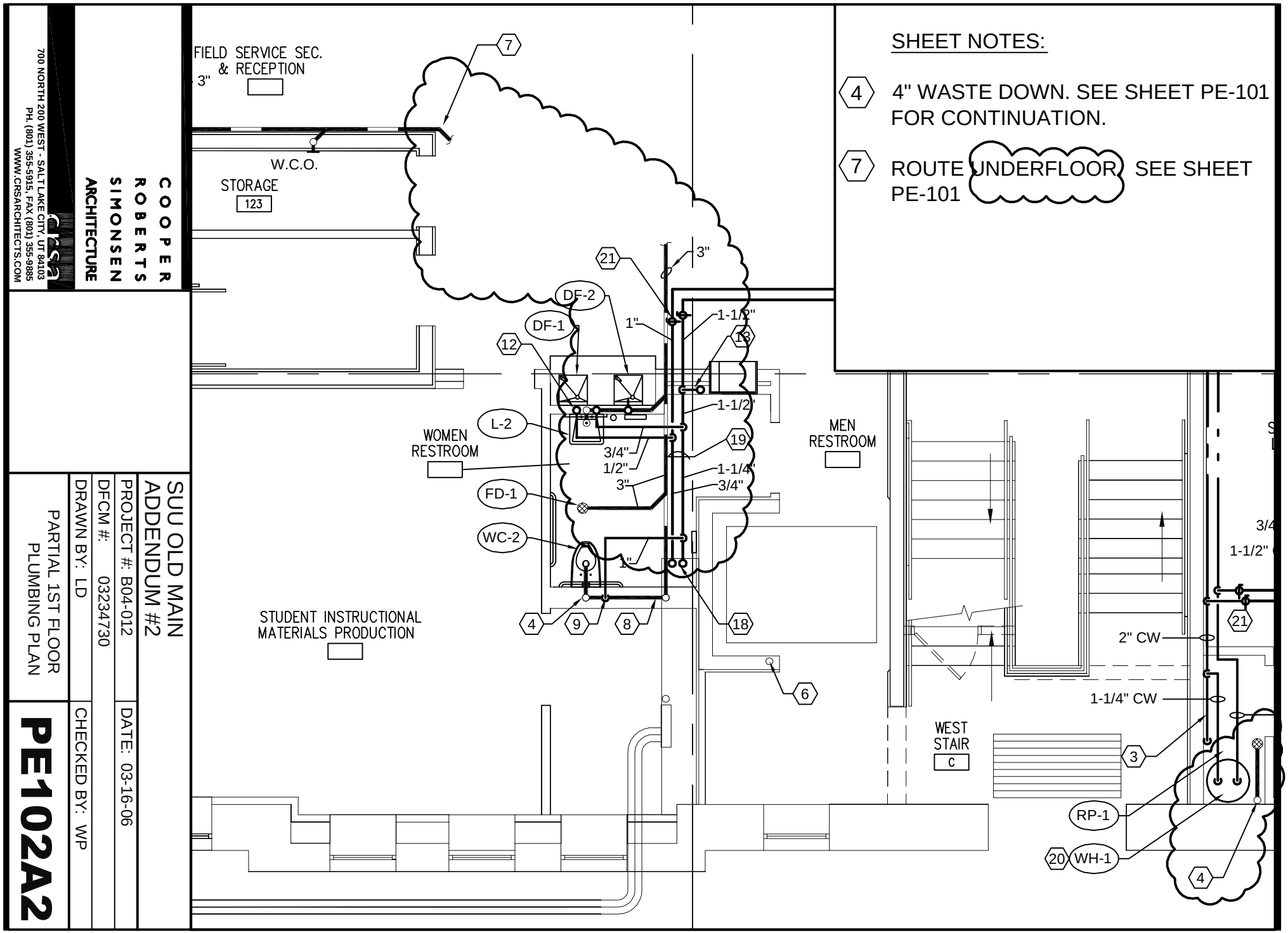

COOPER ROBERTS SIMONSEN ARCHITECTURE
700 NORTH 200 WEST - SALT LAKE CITY, UT 84103
PH. (801) 355-5915, FAX (801) 355-9885
WWW.CRSARCHITECTS.COM

SUU OLD MAIN ADDENDUM #2

PROJECT #: B04-012 DATE: 03-16-06

DFCM #: 032347300

DRAWN BY: LD CHECKED BY: WP

PARTIAL 1ST FLOOR PLUMBING PLAN

PE102A2

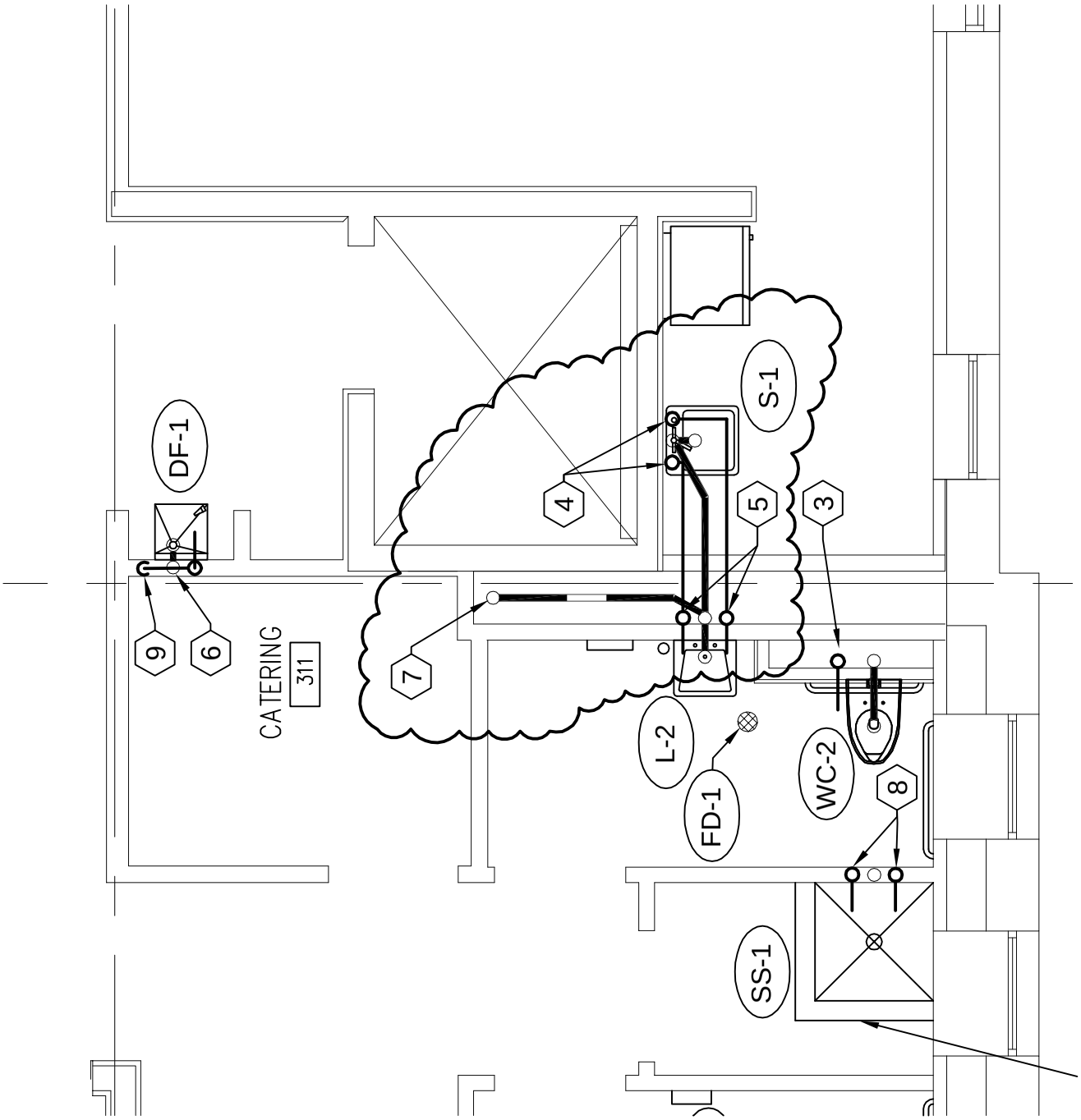

COOPER
ROBERTS
SIMONSEN
ARCHITECTURE
crsa
700 NORTH 200 WEST - SALT LAKE CITY, UT 84103
PH. (801) 355-5915, FAX (801) 355-9885
WWW.CRSARCHITECTS.COM

SUU OLD MAIN
ADDENDUM #2

PROJECT #: B04-012	DATE: 03-16-06
DFCM #: 03234730	
DRAWN BY: LD	CHECKED BY: WP

PARTIAL THIRD LEVEL
PLUMBING PLAN

PE104A2

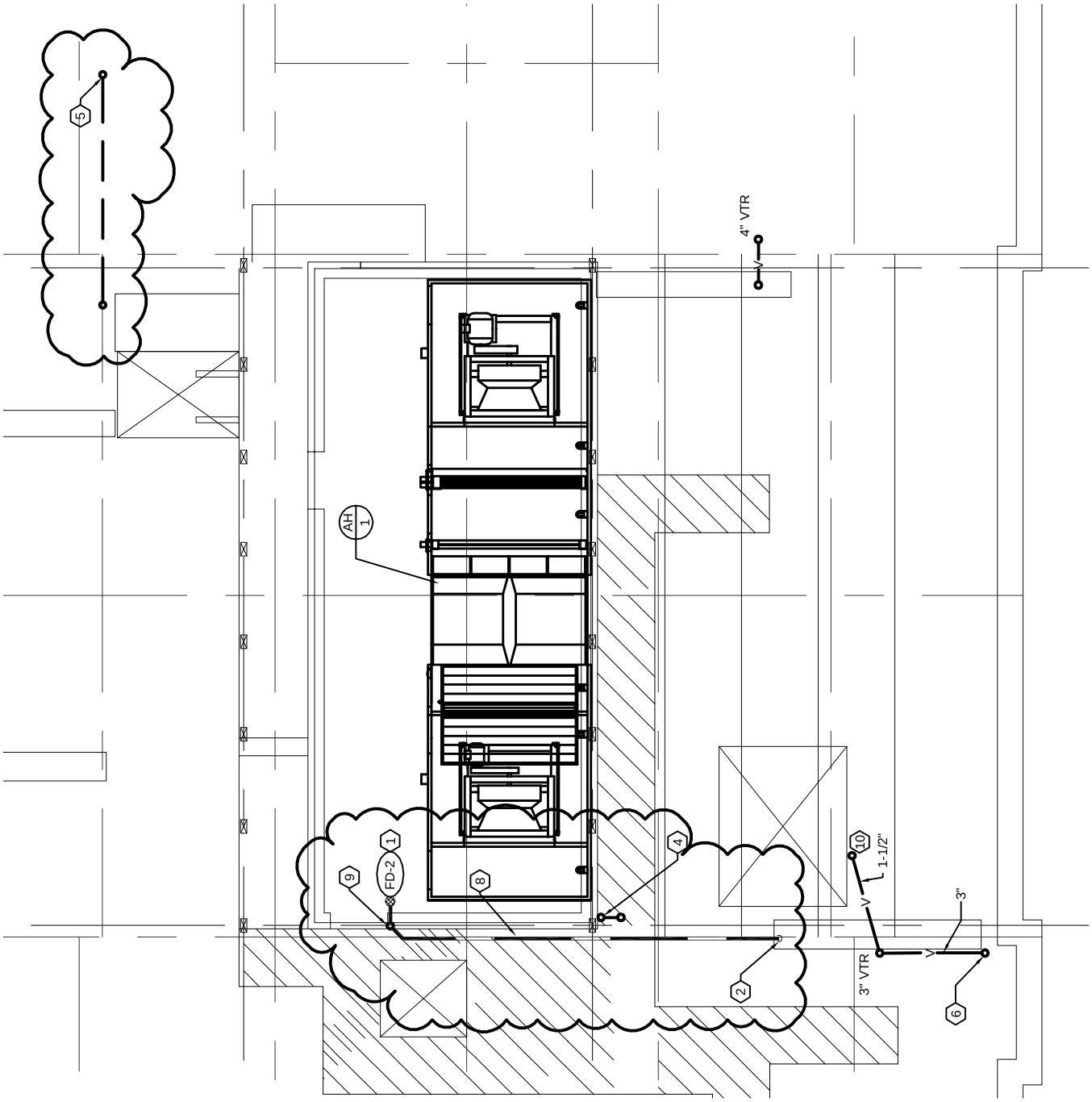

COOPER
ROBERTS
SIMONSEN
ARCHITECTURE
crsa
700 NORTH 200 WEST - SALT LAKE CITY, UT 84103
PH. (801) 355-5915, FAX (801) 355-9885
WWW.CRSARCHITECTS.COM

SUU OLD MAIN
ADDENDUM #2

PROJECT #: B04-012	DATE: 03-16-06
DFCM #: 03234730	
DRAWN BY: LD	CHECKED BY: WP

PARTIAL ATTIC LEVEL
PLUMBING PLAN

PE105A2

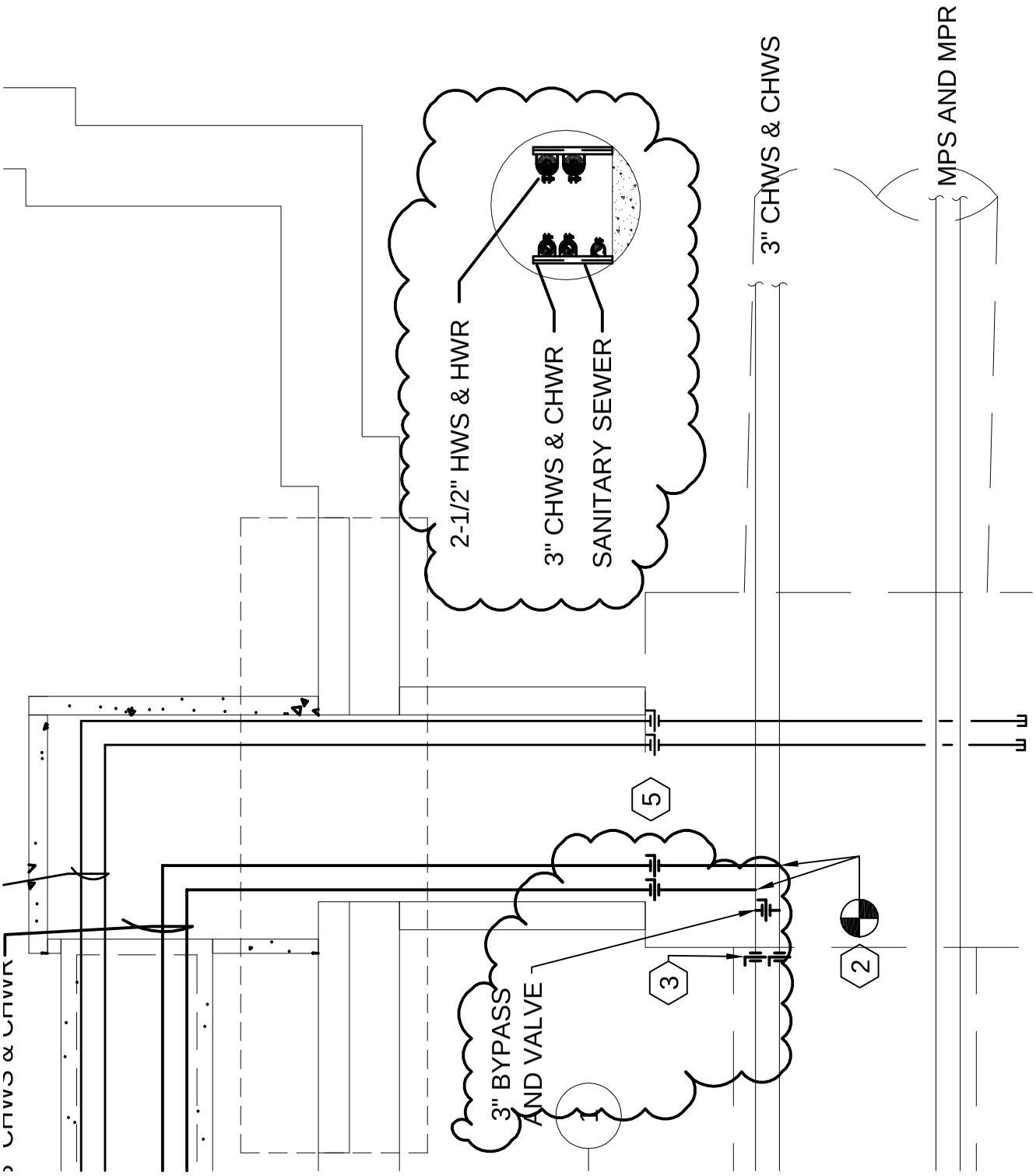

COOPER
ROBERTS
SIMONSEN
ARCHITECTURE
crsa
700 NORTH 200 WEST - SALT LAKE CITY, UT 84103
PH. (801) 355-5915, FAX (801) 355-9885
WWW.CRSARCHITECTS.COM

SUU OLD MAIN
ADDENDUM #2

PROJECT #: B04-012	DATE: 03-16-06
DFCM #: 03234730	
DRAWN BY: LD	CHECKED BY: WP

PARTIAL BASEMENT LEVEL MECHANICAL PLAN

ME101A2

COOPER ROBERTS SIMONSEN ARCHITECTURE

700 NORTH 200 WEST - SALT LAKE CITY, UT 84103
PH. (801) 355-5915, FAX (801) 355-9885
WWW.CRSARCHITECTS.COM

SUU OLD MAIN ADDENDUM #2

PROJECT #: B04-012
DATE: 03-16-06

DFCM #: 03234730

DRAWN BY: LD
CHECKED BY: WP

PARTIAL FIRST LEVEL MECHANICAL PLAN

ME102A2

SHEET NOTES:

8. PROVIDE WALL MOUNTED SENSOR FOR EACH VAV BOX. COORDINATE EXACT LOCATION WITH ALL DISCIPLINES. ALIGN WITH SWITCH STROBE AND CLOCK. SEE ARCH. INTERIOR ELEVATIONS.

9. PROVIDE SUPPLY AND RETURN TO 2ND FLOOR COMM. ROOM FROM UNIT IN ATTIC.

10. PROVIDE FIRE/SMOKE DAMPERS AT WALL PENETRATIONS. COORDINATE WITH DIV. 16.

COOPER ROBERTS SIMONSEN ARCHITECTURE
crsa
700 NORTH 200 WEST - SALT LAKE CITY, UT 84103
PH. (801) 355-5915, FAX (801) 355-9885
WWW.CRSARCHITECTS.COM

SUU OLD MAIN ADDENDUM #2

PROJECT #: B04-012 DATE: 03-16-06

DFCM #: 03234730

DRAWN BY: LD CHECKED BY: WP

PARTIAL SECOND LEVEL MECHANICAL PLAN

ME103A2

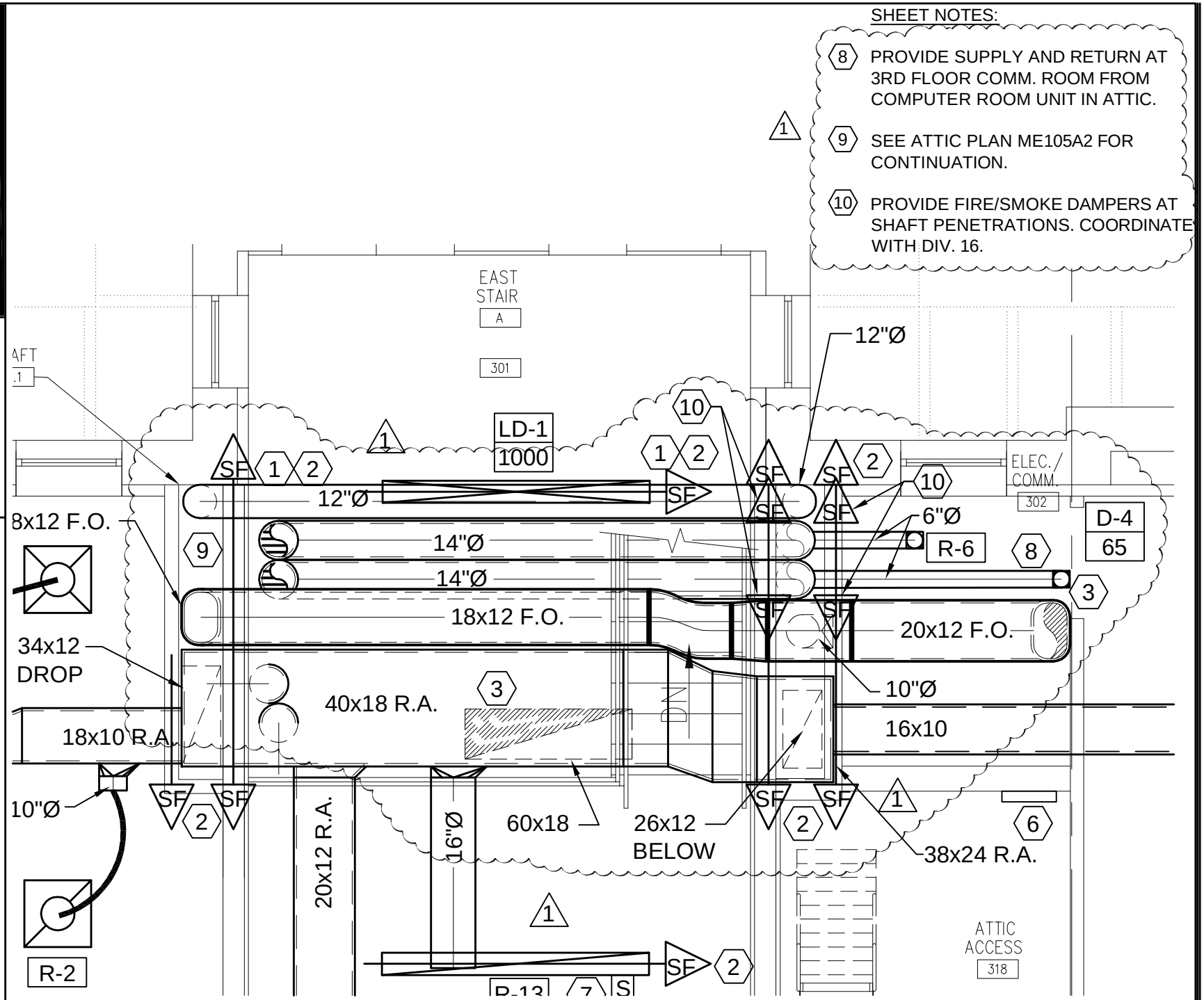

COOPER ROBERTS SIMONSEN ARCHITECTURE
crsa
700 NORTH 200 WEST - SALT LAKE CITY, UT 84103
PH. (801) 355-5915, FAX (801) 355-9885
WWW.CRSARCHITECTS.COM

SUU OLD MAIN ADDENDUM #2

PROJECT #: B04-012
DATE: 03-16-06
DFCM #: 03234730
DRAWN BY: LD
CHECKED BY: WP

PARTIAL THIRD LEVEL MECHANICAL PLAN

ME104A2

COOPER ROBERTS SIMONSEN ARCHITECTURE
crsa
700 NORTH 200 WEST - SALT LAKE CITY, UT 84103
PH. (801) 355-5915, FAX (801) 355-9885
WWW.CRSARCHITECTS.COM

SUU OLD MAIN ADDENDUM #2

PROJECT #: B04-012
DATE: 03-16-06
DFCM #: 03234730
DRAWN BY: LD
CHECKED BY: WP

PARTIAL ATTIC LEVEL MECHANICAL PLAN

ME105A2

SYMBOL	CAPACITY		(FANS)						EVAPORATOR COIL ①			ELECTRICAL			MANUFACTURER MODEL # ②③④⑤⑥⑦
	TOTAL MBH	SENSIBLE MBH	CFM	ESP	HP	NO. FANS	FLA	OPD	AREA SQ. FT.	ROWS	FACE VEL (FPM)	VOLTS	Ø	HZ	
CRU 1	19,300	15,300	750	0.3	.2	1	12.8	20	2.44	3	291	208	1	60	LIEBERT MMD18A

① COND. ENTERING EVAPORATOR 80° DB, 63° WB.

② PROVIDE SELF CONTAINED AIR COOLED UNIT. DUCT CONDENSER INTAKE AND DISCHARGE TO ATTIC.

③ PROVIDE DUCTED SUPPLY AND RETURN. SEE PLANS.

④ PROVIDE WITH HOT GAS REHEAT OPTION.

⑤ PROVIDE WITH THERMOSTAT AND NECESSARY CONTROLS FOR CENTRAL MONITORING. SEE NOTE 7.

⑥ PROVIDE WITH OPTIONAL CONDENSATE PUMP.

⑦ PROVIDE WITH NIC CARD WITH MOD BUS RTU INTERFACE. COORDINATE WITH CONTROLS CONTRACTOR.

CFM	SIDEWALL	SUPPLY	325	16x6	16x6	NA	PRICE LBMR	1,3,4,5
EG-1 CFM	CEILIING	EXHAUST	100	6X6	6X6	HARD	PRICE 535	1,3,4,5
EG-2 CFM	CEILIING	EXHAUST	185	8x8	8x8	HARD	PRICE 535	1,3,4,5
EG-3 CFM	CEILING	EXHAUST	450	14x14	14x14	HARD	PRICE 535	1,3,4,5
L-1	LOUVER	FRESH AIR	9500	108"x44"	NA	NA	RUSKIN ELF811S	2,3

REGISTER. LOUVER AND DIFFUSER SCHEDULE NOTE S:

① MAXIMUM NC = 25 @ MAXIMUM CFM NOTED.

② PROVIDE WITH BIRD SCREENS, AND KYNAR FINISH WITH COLOR BY ARCHITECT..

③ SEE SPECIFICATIONS FOR APPROVED MANUFACTURERS.

④ FINISH SHALL BE BAKED ENAMEL WITH COLOR BY ARCHITECT.

⑤ PROVIDE TRANSITION TO DUCT SIZE SHOWN ON PLANS.

COOPER ROBERTS SIMONSEN ARCHITECTURE
crsa
700 NORTH 200 WEST - SALT LAKE CITY, UT 84103
PH. (801) 355-5915, FAX (801) 355-9885
WWW.CRSARCHITECTS.COM

SUU OLD MAIN ADDENDUM #2

MECHANICAL SCHEDULES

PROJECT #: B04-012
DATE: 03-16-06
DFCM #: 03234730
DRAWN BY: LD
CHECKED BY: WP

ME601A2

SUU OLD MAIN RESTORATION
ELECTRICAL ADDENDUM NO. 2
March-17, 2006

ITEM 1 – SPECIFICATIONS

SECTION 16135 – ELECTRICAL BOXES AND FITTINGS

1. Page 2, paragraph FLOOR BOXES. Provide all floor boxes complete with covers, carpet flange and trim, inserts and mounting plates for duplex receptacles, plates for data/voice jacks, plates for AV devices, and all accessories for a complete installation. Floor box covers shall be "scrub-test" rated.

SECTION 16180 – OVERCURRENT PROTECTIVE DEVICES

1. Page 1, paragraph Description of Work: Delete reference to Section 16175 in the last sentence.

SECTION 16510 – INTERIOR AND EXTERIOR BUILDING LIGHTING

1. Page 3, first paragraph. Change the last sentence to "Ballasts shall have a total current harmonic distortion of less than 10%."
2. Page 3, paragraph FLUORESCENT LAMPS. Change the initial lumens value to "3100 Minimum Initial Lumens, 24,000 Hour lamp life" instead of 2950.
3. Page 3, paragraph FLUORESCENT LAMPS. Delete the name "Sylvania Octron' from the list of manufacturers.
4. Page 3, paragraph SPARE LAMPS. Change sentence to read "Provide at least (5) of each or 15% (whichever is greater)."

SECTION 16561 – OCCUPANCY SENSORS. Add this section, included in this Addendum, to the Division 16 Specifications.

SECTION 16721 – FIRE ALARM AND DETECTION SYSTEM

1. Page 2, paragraph System Operation: Replace sentence "Selectively activate and/or deactivate fan units…" with the sentence "Deactivate all fan units upon building fire alarm from any initiating device."
2. Page 3, paragraph "Provide supervised circuits for the following:"
   a. in paragraph 1, delete the words "through the HVAC interface relays at the Fire Command Center."
   b. Delete paragraph 3 entirely. There is no Fire Command Center.
3. Page 3, paragraph "Central Station Monitoring". Replace this paragraph with the following paragraph:
   Central Station Monitoring. Provide connection to the existing Simplex equipment and 2120 multiplex panel located in the Campus Physical Plant. Report alarm and trouble conditions to this equipment. Tie the Old Main Building fire alarm panel into the 2120 communication loop. Provide programming and software at the Physical Plant as required.
4. Page 3, add the following paragraph above 'Central Station Monitoring' paragraph:

   Remote Signal Transmission: Provide reverse polarity transmitter compatible with the existing Campus central receiver accepting the alarm signal transmission. Transmit alarm and trouble signals to a remote signal receiving panel located at the Campus Physical Plant. Provide all software, programming, equipment and wiring at both the project site and Physical Plant (except leased phone line) required for full and proper remote signal transmission.

SECTION 16741 – VOICE/DATA COMMUNICATIONS CABLING SYSTEM

1. Delete this specification Section. Voice/data cabling system shall be furnished and installed by the State of Utah ITS Division.

SECTION 16782 – SECURITY SYSTEM (RACEWAY)

1. Page 1, PRODUCTS, GENERAL: In paragraph "Provide terminal cabinets..." change words "as indicated" to "12 inch wide by 12 inch high by 4 inch deep, surface mounted"

SPECIFICATIONS – GENERAL, SUBMITTALS. The Electrical Contractor shall provide samples of all wiring devices and device cover plates with the submittals. This includes voice/data devices and voice/data cover plates. Note that specifications require all cover plates, including voice/data, to be stainless steel. Color of devices shall be as selected by architect. The electrical contractor shall provide sample of all floor boxes and floor box covers, trim plates, inserts, etc.

ITEM2 – DRAWINGS

DRAWING EG101

1. Light fixture Schedule. Replace the light fixture schedule on the drawing with the fixture schedule included in this Addendum.
2. Equipment Schedule – make the following changes:
   a. CRU-1. Change to Load 1 HP; FLA 8.7; OCDP 15
   b. Add unit BB-1 baseboard heater. Load 500 watts; 120v, 1-phase; ¾ inch conduit; 2#12 conductors + ground; 20A circuit breaker; 1A disconnect.

DRAWING EL100

1. Light fixture next to Grid 1, add reference note 2.
2. Reference note 2. Change lighting circuit number to A-4.
3. Tunnel: Change fixture type 'S' to type 'R'.

DRAWING EL101

1. Provide an additional conductor (unswitched) to each type J light pole to power the duplex receptacle in the pole with unswitched power.
2. All switches in classrooms shall be mounted in a single row, light switches one above the other is not acceptable.
3. Provide eight fluorescent dimmer switches compatible with T8 fluorescent dimming ballasts in type A1 fixtures. Provide switch boxes and custom switch plates. Provide labor and materials to install and connect dimmer switches. Dimmer switches shall be installed in the field as directed by the Engineer.

DRAWING EL102

1. Conference Room 208. Add lighting circuit conduit and wire from "PP" (power pack symbol) and EM lights in Room 209.
2. Rooms 220 and 221. Add lighting circuit conduit and wire to interconnect "PP" units in each room.

DRAWING EL103

1. In Conference room 306, provide a custom switch plate that will house standard the two switches plus the dimmer switch under one switch plate. Provide switch box sized to fit standard switches and dimmer switch without breaking off fins of the dimmer switch.
2. In Conference room 306, connect the DF2 fixtures on the north side of the room to the DF2 fixtures on the south side.
3. Rooms 311 and 312. Add light switch at doorway in each room with lighting circuit and connection to the respective "PP" power pack.
4. Room 317. Add lighting circuit to interconnect "PP" unit with lights.

5. Rooms 303 and 318. Add lighting circuit to interconnect "PP" units in each room.
6. Room 306. Add lighting circuit to interconnect both rows of downlights.
7. Reference note 2. Add the word "Contactor" after lighting.
8. Delete reference note 4.

DRAWING EP100

1. Elevator Pit. Add one fire alarm heat detector.

DRAWING EP101

1. Add electric baseboard heater BB-1 in Stairway 112. Provide power circuit E-20.
2. Comm Room 102. Provide 8 feet of cable tray on the north side of the room, suspended above the terminal board and data rack.

DRAWING EP102

1. Comm Room 202. Provide 8 feet of cable tray on the east side of the room, suspended above the terminal board and data rack.

DRAWING EP103

1. Rooms 304 and 305. Add one duplex receptacle on the north wall of each room at the plasma screen. Provide power circuit G-9 in Room 304 and power circuit G-17 in Room 305.
2. Rooms 303 and 305. Add reference note 21 at the conference table.
3. Add Reference note 21 which shall read as follows: Provide four additional floor boxes for power, data and microphone inputs. See sheet EY102 Detail 3 for power circuits and for floor box type.
4. Room 304. Add reference note 22 at the conference table.
5. Add Reference note 22 which shall read as follows: Provide three additional floor boxes for power, data and microphone inputs. See sheet EY102 Detail 3 for power circuits and for floor box type.
6. Comm Room 302. Provide 8 feet of cable tray on the north side of the room, suspended above the terminal board and data rack.

DRAWING EP104

1. Attic plan. Locate the lighting control photocell on north side of the building, below roof eaves. Run 4#12, ¾" conduit down to the lighting contactor.
2. All conduit penetrations for conduit entering or exiting the mechanical room space shall be made with a 3 feet length of sealtite conduit through the wall to limit transmission of noise and vibration.
3. Attic Lighting Plan: Move the light fixture on northwest side 4' feet north and 3' east.

DRAWING EX 101

1. One Line Diagram, Main Panel MDP. Short circuit rating shall be 25,000 AIC.
2. One Line Diagram. Feeders for Panels F and G are shown reversed. Panel F feeder shall be "41X"; panel G feeder shall be 2" conduit, 4#1/0, 2#6 ground.

DRAWING EX102

1. Change AIC ratings for panels A, B, C, D and E to 22,000 AIC instead of 10,000.
2. Panel D shall be flush mount enclosure instead of surface mount.
3. Panel D Schedule. Delete "Subfeed Lugs". Add "ISO Ground".

DRAWING EX201

1. Diagram P005. The photocell shall be mounted below the roof eaves on the north wall of the building in lieu of on the roof.

DRAWING EY101

1. Fire Alarm. Locate all control modules and relays above accessible ceilings.
2. Fire Alarm. Add a control module and relay on main floor, 2nd level and 3rd level for control of fire/smoke dampers. Interconnect the relays and control module with as part of the fire alarm work.
3. At each of the three entry doors, provide an additional 3/8 inch flex conduit into the door frame for a future electronic lock system.
4. Main Level Plan, 2nd Level Plan, and 3rd Level Plan: Interconnect all fire/smoke dampers with each other and with the fire alarm relay on each respective level, with ¾ inch conduit, 2#12 + ground.
5. Main Level Plan, 2nd Level Plan, and 3rd Level Plan: Provide a power circuit to the fire alarm relay (circuit B-38 on main; circuit D-34 on 2nd; circuit G-33 on 3rd).
6. Reference Note 13: Change to four 4 inch conduits.
7. Reference Note 15: Change to four 4 inch conduits.

DRAWING EY102

1. Diagram 2. The floor box model number has a typographical error. The floor box shall be a Wiremold model AC8840 raised floor box.
2. Add floor boxes in each of the three Distance Learning rooms below the table for use by participants. Floor boxes shall be for power, data and microphone inputs. Refer to supplemental drawings included in this addendum.

SUU OLD MAIN

SECTION 16561 – OCCUPANCY SENSORS

PART 1 - GENERAL

RELATED DOCUMENTS:

Drawings and general provisions of Contract, including General and Supplementary Conditions and Division-1 Specification sections, apply to work of this section.

This section is a Division-16 Basic Materials and Methods section, and is part of each Division-16 section making reference to wiring devices specified herein.

DESCRIPTION OF WORK:

The extent of occupancy sensor work is indicated by drawings and schedules.

Types of occupancy sensors in this section include the following:

Ultrasonic Wall Switch
Dual Technology Ceiling Sensor w/ Control Pack

QUALITY ASSURANCE:

Comply with NEC and NEMA standards as applicable to construction and installation of occupancy sensors. Provide occupancy sensors which have been UL listed and labeled.

All sensors shall be capable of operating normally with electronic ballasts, PL lamp systems, motor loads and any other passive infrared or microwave systems.

SUBMITTALS:

PRODUCT DATA: Submit manufacturer's data on occupancy sensors, control modules, wiring diagrams, interconnection diagrams and any related accessories.

Submit scaled drawings with lighting fixtures shown clearly marked by manufacturer showing proper product, location and orientation of each sensor.

PART 2 - PRODUCTS

MANUFACTURER: The manufacturer shall have a minimum of five years of experience in the sensor and lighting control industry. Sensors and related relays shall be compatible with the specific lighting types controlled. All sensors shall be of the same manufacturer, mixing brands of sensors is not acceptable.

ULTRASONIC (MICROPHONICS) WALL SWITCH: Where units are indicated, provide a sensor that meets the following minimum requirements:

Sensor shall utilize active ultrasonics to detect motion.

Sensor shall have two ultrasonic transmitters and one receiver.

Sensor shall incorporate an inrush current limiter circuit to protect the relay contacts.

Sensor shall utilize a dry relay contact for control of the lighting load.

© BNA Consulting, Inc.

Sensor shall have a time out adjustment from 8 seconds to 32 minutes. Timer shall be linear and controlled by a timer chip.

Sensor shall have automatic sensitivity adjustment and be microprocessor controlled.

Sensor shall have automatic gain setback to reduce the sensitivity after the sensor has turned off the lighting to prevent false tripping.

Sensor shall have transmitter control adjustments to prevent false tripping from hallway traffic.

Sensor shall have a 180 degree field of view, coverage up to 800 square feet, and shall detect six inches of hand movement towards the sensor at a distance of 22 feet. Sensor shall detect body motion towards the sensor at a distance of 32 feet.

Sensor shall operate at 120VAC and 277VAC.

Sensor shall be rated for 40 to 740 watts at 120VAC and 90 to 1400 watts at 277VAC.

Sensor shall be automatic on and shall have an automatic to off override switch on the unit. Switch shall be an air gap switch to disconnect power to the lighting load.

Sensor shall have a real time motion indicator on the front of the unit.

Sensor shall mount to a single or double gang switch box.

Subject to compliance with the above requirements, provide models of one of the following:

Hubbell-ATU 1277 Series
Sensorswitch-WSD-PDT-P Series
Mytech LH-US Series
Novitas – 01-250

DUAL TECHNOLOGY CEILING SENSOR: Where units are indicated, provide a sensor that meets the following minimum requirements:

Sensor shall incorporate ultrasonic (microphonics) and infrared technologies in a single unit.

Sensor shall be Class 2, low voltage; capable of mounting in the ceiling for maximum coverage.

Sensor shall use internal microprocessor for motion signal analysis and automatic self-adjustment.

Sensor shall have automatic self-adjustment algorithm which adjusts timer and sensitivity settings to maximize performance and minimize energy usage.

Sensor shall have manual time-out adjustment from 8 minutes to 32 minutes and automatic time out from 8 minutes to 100 minutes.

Sensor shall have test time-out setting of 8 seconds, with automatic return to 8 minutes after one hour if sensor is left in test mode.

Sensor's microprocessor shall automatically extend timer by 1 hour in response to recognition to false off condition. After 5 hours, sensor reduces extended time by 30 minutes and continues to reduce by 30 minute increments over the next few days.

Sensor's microprocessor shall automatically reduce either PIR or ultrasonic sensitivity in response to false

© BNA Consulting, Inc.

on condition.

Sensor microprocessor will automatically monitor PIR background threshold signal level and makes corresponding sensitivity adjustments automatically.

Sensor microprocessor algorithm shall incorporate automatic adaptation to continuous airflow.

For airflow which is so intense as to mask motion, sensor shall flash indicator LED code to indicate excessive airflow.

Sensor's microprocessor shall use a four week learning period and develop a circadian calendar. An internal 24 hour 7 day clock establishes what periods the room is typically occupied, biasing sensor to keep lights on while normally occupied and off when normally unoccupied.

Sensor shall have selection settings for the following dual technology schemes:

High Sensitivity and High Confidence (miser mode)

Sensor shall be available with either 180 degrees or 360 degrees coverage pattern.

Infrared lens shall have 360 degree field of view. Two types of lens shall be available, standard and extra dense.

Sensor shall have a variety of mask inserts for PIR coverage rejection to prevent false tripping.

Transducers shall be protected from tampering.

Sensor shall have manual adjustments for timer and sensitivities and override switches to force manual adjustment mode

Sensor shall have adjustable sensitivity from 0% to 100% for both ultrasonic and infrared.

Controls shall be behind cover to resist tampering. All adjustments shall be accessible from the front of the sensor.

Sensor shall be available with a photocell adjustment from 20 to 3,000 Lux.

Sensor shall provide internal operating status and settings confirmation via LED motion lamp indicator.

Sensor shall have two (if 180 degree) or three (if 360 degree) real time LED motion indicators visible from the front of the unit: Red = infrared; green = ultrasonic.

Subject to compliance with the above requirements, provide models of one of the following:

Hubbell-ATD Series
Sensor Switch-CM-PDT Series
Wattstopper-DT Series

Mytech-Omni-DT Series
Lithonia-LMTO Series
Novitas – 01-300/310

© BNA Consulting, Inc.

24 VDC POWER/CONTROL PACK: Where units are indicated, provide a power/control pack that meets the following minimum requirements:

Control module shall consist of a DC power supply and a dry contact relay for switching a lighting load.

Control module shall be available in versions to accept 120, and 277 VAC line voltages.

Output shall be 24VDC nominal, and shall be inherently safe, low voltage, limited power output (Class 2).

Output shall supply 100mA current, in addition to current consumed internally to operate internal relay.

Relay shall utilize normally open, silver alloy dry contacts, and shall be rated for a 20A ballast load at 120V and 277V.

Relay function shall not require more than 5 mA control current to operate.

Control module shall have line voltage wiring, consisting of input voltage and relay contact connections, exiting from one end, and low voltage DC connections, consisting of ground, power, and control wires, exiting from the other end.

Control module shall be sized to fit inside a standard 4" x 4" junction box.

Control module shall be equipped with a 1/2" EMT threaded male fitting on the line voltage end, such that it may be mounted to the outside of a junction box with the line voltage wiring internal to the box and the low voltage wiring external.

Control module shall be equipable with accessory 1/2" EMT threaded male fitting on the low voltage end, such that it may be mounted to the inside of a ballast cavity with the box and line voltage wiring internal to the cavity and the low voltage wiring external.

Slave module shall be available for switching additional circuits. Slave module has same construction and specifications as control module except without power supply function.

Subject to compliance with the above requirements, provide models of one of the following:

Hubbell-CU Series
Sensor Switch-PP-20 Series
Wattstopper-BEP Series
Mytech-MP Series
Lithonia-LPCS Series
Novitas – 13/051

PART 3 – EXECUTION

INSTALLATION OF LIGHTING CONTROL EQUIPMENT:

Install occupancy lighting control system components and ancillary equipment as indicated, in accordance with equipment manufacturer's written instructions, and with recognized industry practices, to ensure that lighting control equipment complies with requirements.

Comply with requirements of NEC, and applicable portions of NECA's "Standard of Installation" pertaining to general electrical installation practices.

© BNA Consulting, Inc.

Coordinate with other electrical work, including raceways, and electrical boxes and fittings, as necessary to interface installation of lighting control equipment work with other work.

Contractor shall be on site as required, to adjust lighting control units for proper operation.

Mount the switchpack in a standard 4" junction box or extension through a ½" KO in the cover plate. Refer to manufacturer supplied mounting instructions.

Provide 5 spare sensors power packs for each type used on project.

FIELD QUALITY CONTROL:

Upon completion of installation and after circuitry has been energized, demonstrate capability and compliance of system with requirements.

Where possible, correct malfunctioning units at site, then retest to demonstrate compliance; otherwise, remove and replace with new units, and proceed with retesting.

Contractor shall visit the job site 3 months after the owner has taken occupancy and adjust any units not operating properly, otherwise remove and replace with new units.

MANUFACTURER AUTHORIZED PERSONNEL TRAINING:

Building Operating Personnel Training: Train Owner's building personnel in procedures for starting-up, testing and operating lighting control system equipment.

END OF SECTION 16561

© BNA Consulting, Inc.

FIXTURE SCHEDULE

TYPE	DESCRIPTION	CATALOG NUMBER	VOLTS	LAMPS
A1	RECESSED 2 X 4 INDIRECT, GRID MOUNT, DUAL SWITCHING WITH CENTER PERFORATED BASKET 3 LAMP T8 ELEC PROVIDE DIMMING BALLAST IN CLASSROOMS	LITHONIA 2AV-G-3-32-MDR-120-GLR (DIMMING BALLAST IN CLASSROOMS)	120	(3) FO32/841/XPS/ECO
A2	RECESSED 2 X 2 INDIRECT, GRID MOUNT WITH CENTER PERFORATED BASKET 2 LAMP 55 WATT BIAX	LITHONIA 2AV-G-2-CF55-MDR-120-GLR	120	(2) FT55W/2G11-41K
A3	RECESSED 2X2 INDIRECT FLANGE MOUNT WITH PERFORATED BASKET WITH LOUVER 2 LAMP 55 WATT BIAX	LITHONIA 2AV-G-2-CF55-MDR-120-GLR-DGA	120	(2) FT55W/2G11-41K
A4	RECESSED 2 X 4 INDIRECT, FLANGE MOUNT WITH CENTER PERFORATED BASKET 3 LAMP T8	LITHONIA 2AV-G-3-32-MDR-120-GLR-1/3-DGA	120	(3) FO32/841/XPS/ECO
B1	RECESSED 2 X 4 LENSED TROFFER, GRID MOUNT A1.125 LENS 3 LAMP T8	LITHONIA 2SPB-G-3-32-120-FW-1/3-GLR-A12125	120	(3) FO32/841/XPS/ECO
B2	RECESSED 2 X 4 LENSED TROFFER, FLANGE MOUNT A1.125 LENS 3 LAMP T8	LITHONIA 2SP8-F-3-32-120-FW-1/3-GLR-A12125	120	(3) FO32/841/XPS/ECO
B3	RECESSED 2 X 2 LENSED TROFFER, FLANGE MOUNT A1.125 LENS 2 LAMP 55W COMPACT FLUORESCENT BIAX	LITHONIA 2SP-F-B-2CF55-FW-A12.125-120	120	(2) FT55W/2G11-41K
B4	RECESSED 1 X 4 LENSED TROFFER, FLANGE MOUNT A1.125 LENS 2 LAMP T8	LITHONIA SP-F-B-232-FW-120	120	(2)FO32/841/XPS/ECO
C	WALL MOUNTED FLUORESCENT WRAPAROUND LENS 1 LAMP T8 WHITE FINISH - MOUNT WALL MOUNTED FIXTURE AT THE CEILING LINE-DOWNLIGHT ONLY	LITHONIA WB-132-A12L-120-WH	120	(1)FO32/841/XPS/ECO
DF1	8" COMPACT FLUORESCENT DOWNLIGHT VERTICAL LAMP, CLEAR DIFFUSE FINISH 1 LAMP 42 TRT	LITHONIA AFV-42TRT-8-AR-LD-120	120	(1) CF42DT/E/IN/841
DF2	8" COMPACT FLUORESCENT DOWNLIGHT SAME AS DF1 EXCEPT ADD DIMMING BALLAST ***	LITHONIA AFV-42TRT-8-AR-LD-120-DIM	120	(1) CF42DT/E/IN/841
J	LIGHT POLE. SUU STANDARD MODIFIED WITH (1) 42 TRT PROVIDE GFI RECEPTACLE IN POLE ***	HOLOPHANE RSL-350-(RLPT) 1 42 TRT-120-SCBA 15-F2-18'-RTAP - GFI RECEPTACLE COLOR TO MATCH POLE WP	120	(1) CF42DT/E/IN/841
P1	PENDANT BOWL WITH PAINTED ROLLED TRIM RING 32" DIAMETER, SINGLE SWIVEL SEE PLANS FOR NON-STANDARD STEM LENGTHS AND OVERALL HEIGHT (VARIES) WHITE OPAL BOWL 6 LAMP 40 WATT BIAX	SPI RIP--1004-F-4F40/2F40-120-PT-F-SAV OAH XX STANDARD PAINT FINISH BY ARCHITECT	120	(6) FT40W/2G11-41K
P2	SURFACE MOUNT FIXTURE TO MATCH P1 24" DIAMETER 2 LAMP 39 WATT BIAX	SPI RIC 1002-2F39-120-PT-F TRIM RING, STEM AND CANOPY IS STANDARD PAINT FINISH BY ARCHITECT	120	(2) FT39W/2G11-41K
P3	PENDANT BOWL WITH PAINTED ROLLED TRIM RING 42" DIA. SINGLE SWIVEL STEM - SEE PLANS FOR STEM LGTHS AND O.A.H. WHITE OPAL BOWL 9 LAMP 40 WATT BIAX	SPI RIP1006-6F40/3F40-120-PT-F-SAV-OAH XX TRIM RING, STEM AND CANOPY IS STANDARD PAINT FINISH BY ARCHITECT	120	(9) FT40W/2G11-41K
R	JELLY JAR W/ GUARD, FLUORESCENT LAMP, WALL MOUNTED ***	RIG-A-LITE: CVP42F27GGW	120	(1) CF42DT/E/IN/841
S	FLUORESCENT STRIP LIGHT 2-LAMP, WIRE GUARD ***	LITHONIA: C-232-120-GLR-CSMR-WG-GLR	120	(2) FO32/841/XPS/ECO
T	SURFACE MOUNTED WHITE SINGLE CIRCUIT TRACK SEE PL ANS FOR EXACT LENGTHS. LINE VOLTAGE HALOGEN FIXTURE - SEE PLANS FOR QTY.	LITHONIA TRACK-LT-SERIES-WH-120-XX FIXTURE-RNDB-WH	120	PAR 20 75WATT WIDE FLOOD
V	VIDEO CONFERENCING FIXTURE *** ***	ELP 255BXVT-TB	120	(2) FT55W/2G11-41K
W	6" DOWNLIGHT, WALL WASH VERTICAL LAMP, CLEAR DIFFUSE FINISH 1 LAMP 42 WATT TRT	LITHONIA: AFW-1/42 TRT-ADJ	120	(1) CF42DT/E/IN/841
X1	SINGLE FACE EXIT LIGHT, LED, UNIVERSAL MOUNT SEE PLANS FOR MOUNTING AND ARROWS	LITHONIA: LES1G-120/277	120	LED INCLUDED
X2	DOUBLE FACE EXIT LIGHT, LED, UNIVERSAL MOUNT SEE PLANS FOR MOUNTING AND ARROWS	LITHONIA: LES2G-120/277	120	LED INCLUDED
		NO OSRAM SYLVANIA LAMPS ALLOWED ALL FLUORESCENT LAMPS TO BE 41 K		

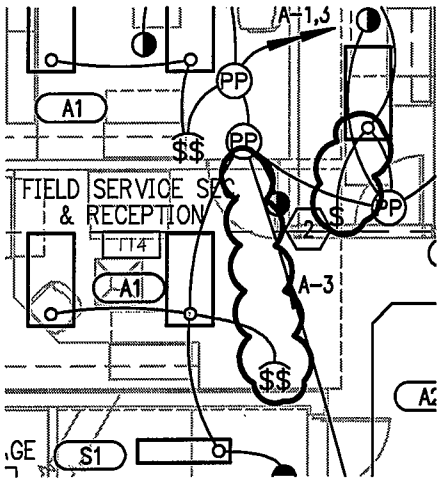

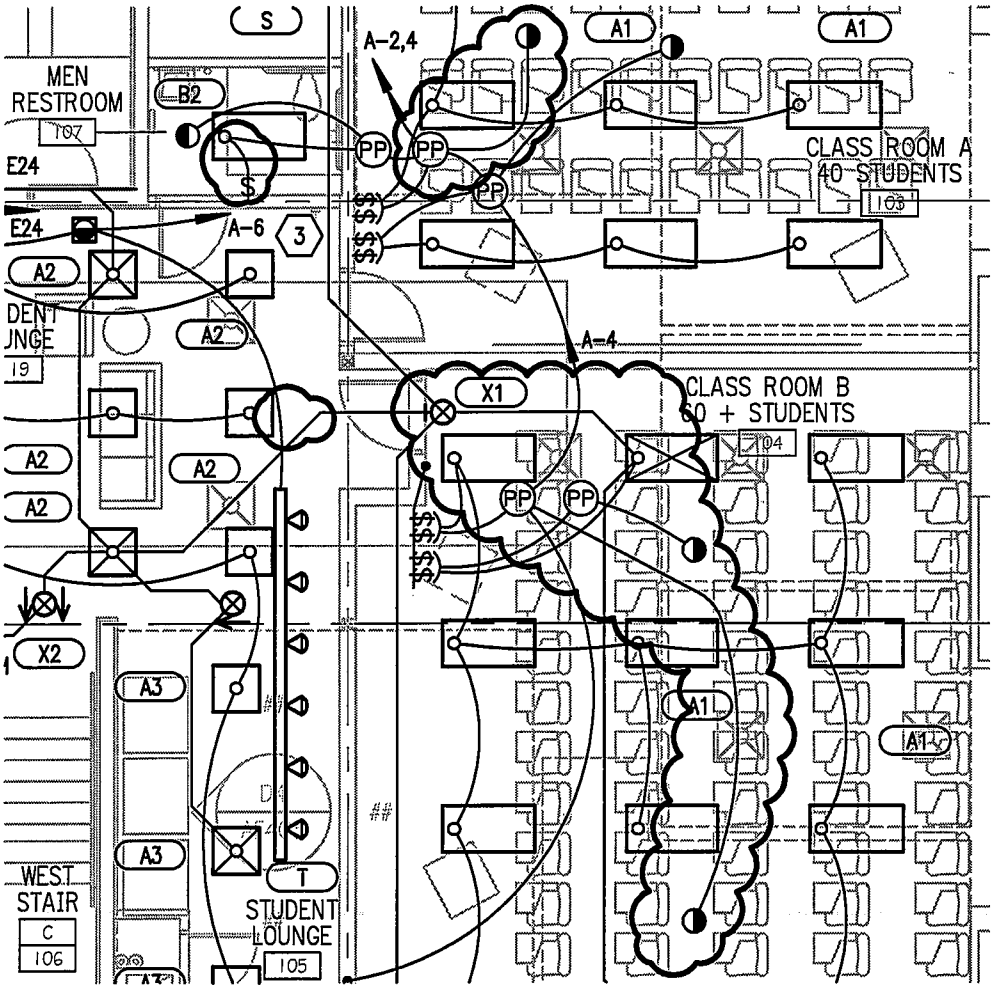

BNA CONSULTING
635 South State Street
Salt Lake City, Utah 84111
P:801.532.2196
F:801.532.2305
www.bnaconsulting.com
SALT LAKE ST.GEORGE LAS VEGAS PHOENIX
© 2005 BNACONSULTING

OLD MAIN BUILDING
SOUTHERN UTAH
UNIVERSITY

351 WEST CENTER STREET
CEDAR CITY, UTAH 84720

1 ADDENDUM 2

SCALE	1/8"=1'-0"
DATE:	03-17-2006
DRAWN	BNA
CHECKED	CF
JOB NUMBER	05348A
REF. SHEET NUMBER	EL101
SHEET NUMBER	ESD-1.02

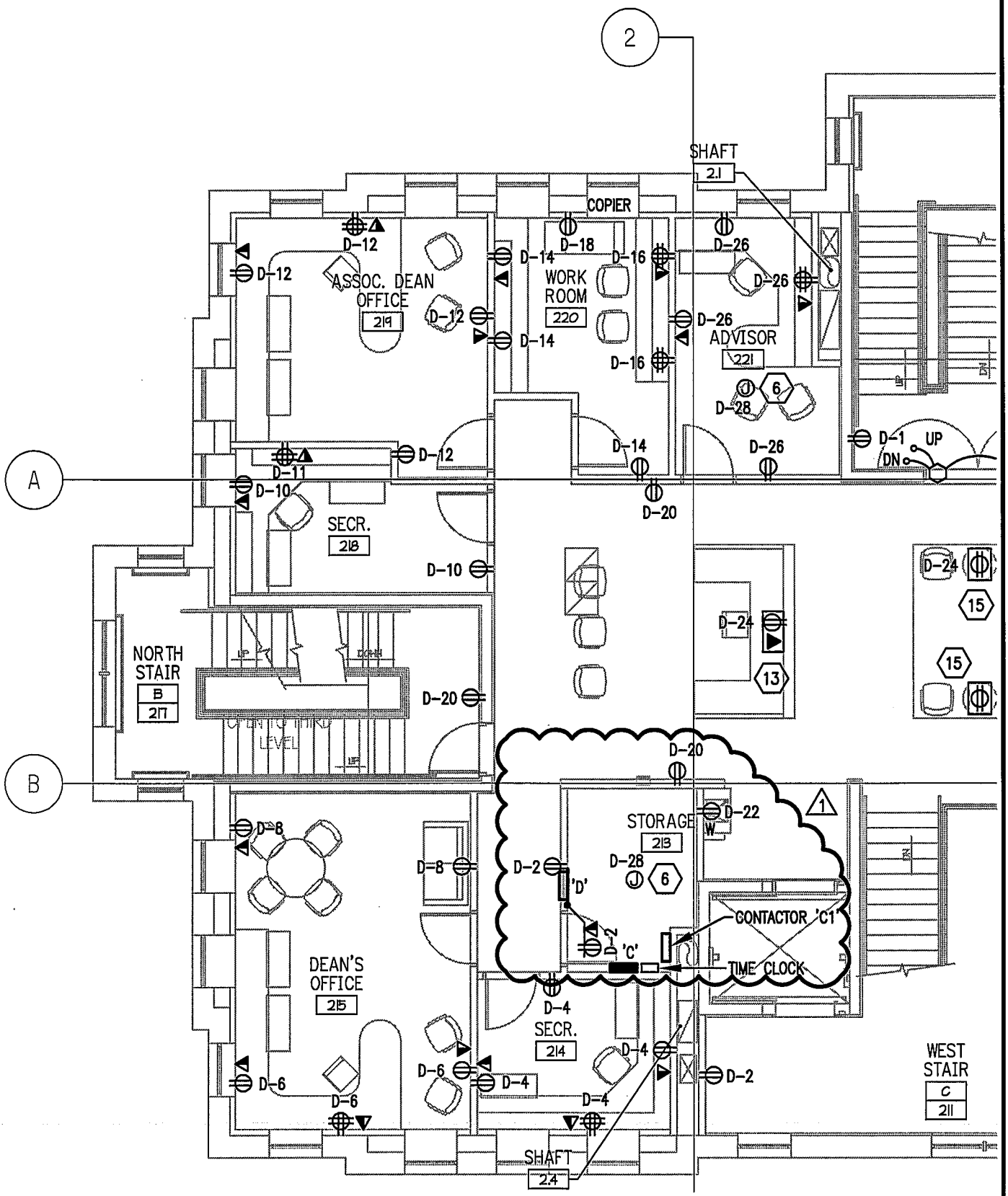

BNA CONSULTING
SALT LAKE ST.GEORGE LAS VEGAS PHOENIX
635 South State Street
Salt Lake City, Utah 84111
P:801.532.2196
F:801.532.2305
www.bnaconsulting.com

© 2005 BNACONSULTING

OLD MAIN BUILDING
SOUTHERN UTAH
UNIVERSITY

351 WEST CENTER STREET
CEDAR CITY, UTAH 84720

1 ADDENDUM 2	
SCALE 1/8"=1'-0"	DATE: 02-13-2006
DRAWN BNA / CHECKED CF	SHEET NUMBER ESD-1.01
JOB NUMBER 05348A	
REF. SHEET NUMBER EP102	

SHEET KEYNOTES

1. PROVIDE FLOOR BOX WIRE MOLD 8803W (3-GANG) BOX, 837B (BRASS) FLANGE, 828 GFITC COVER PLATES WITH 6A BEZEL FOR DATA AND MIC. PROVIDE WITH 4 DATA, 2 MIC AND (1) DECORA STYLE DUPLEX.

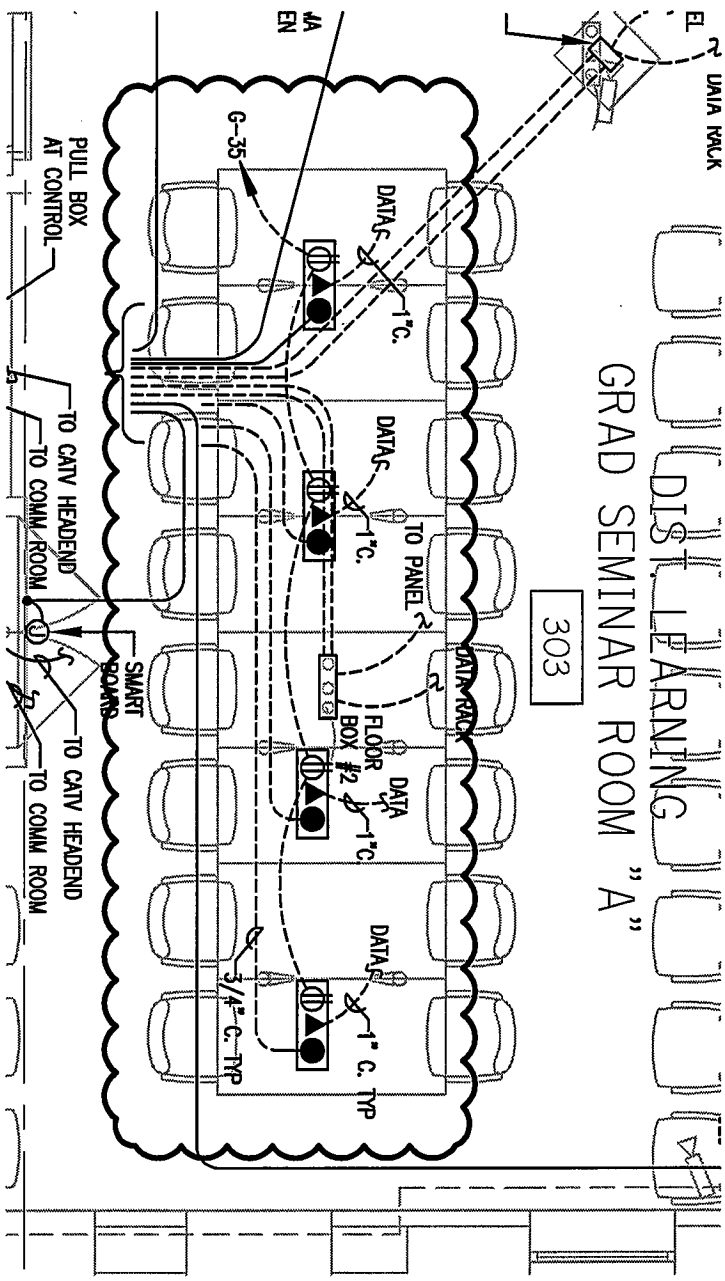

BNA CONSULTING
SALT LAKE ST.GEORGE LAS VEGAS PHOENIX
635 South State Street
Salt Lake City, Utah 84111
P:801.532.2196
F:801.532.2305
www.bnaconsulting.com

© 2005 BNACONSULTING

OLD MAIN BUILDING
SOUTHERN UTAH UNIVERSITY

351 WEST CENTER STREET
CEDAR CITY, UTAH 84720

1 ADDENDUM 2	
SCALE 1/4"=1'-0"	DATE: 03-17-2006
DRAWN BNA	CHECKED CF
JOB NUMBER 05348A	SHEET NUMBER ESD-1.03
REF. SHEET NUMBER EY102	

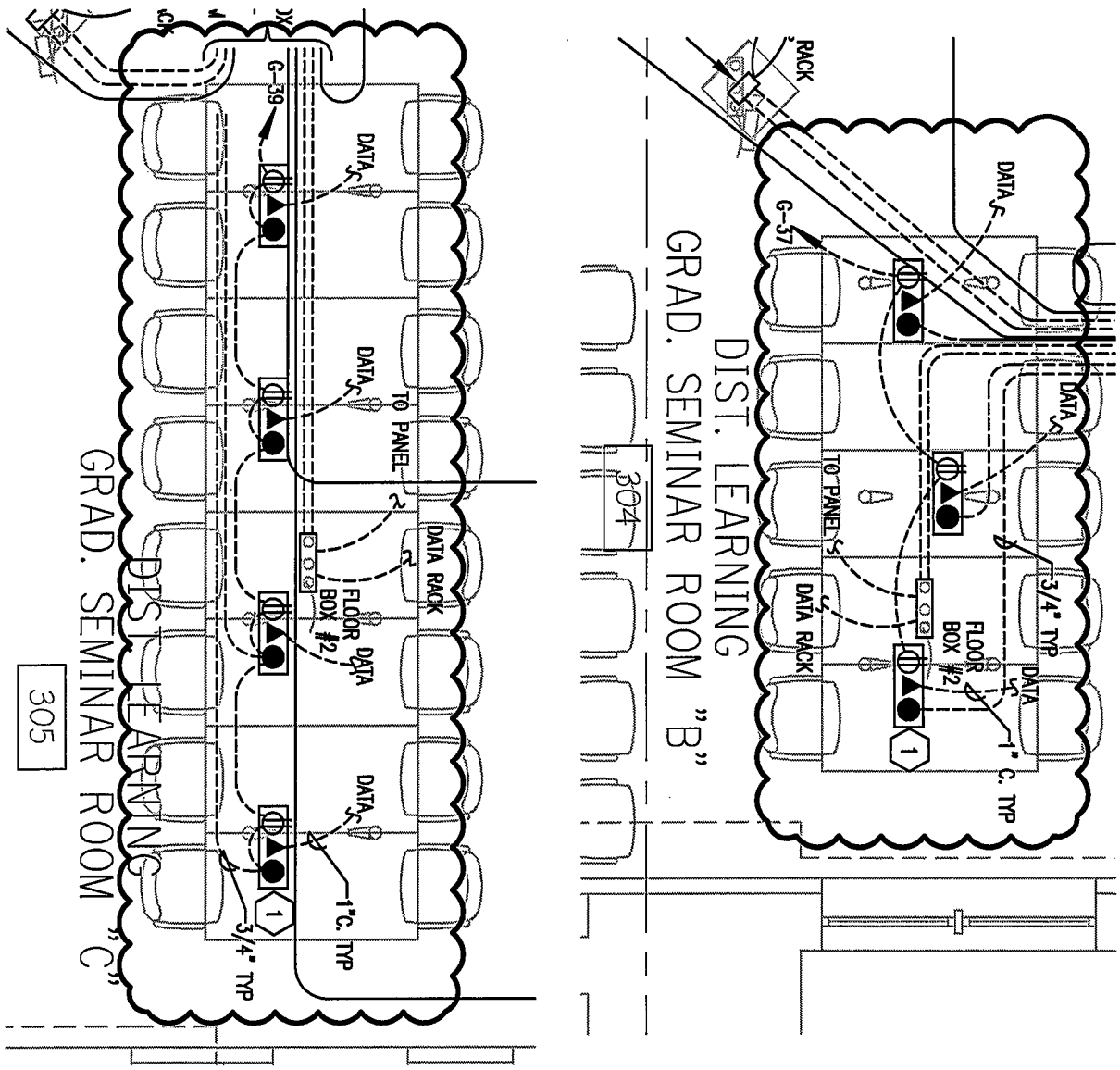

BNA CONSULTING
635 South State Street
Salt Lake City, Utah 84111
P:801.532.2196
F:801.532.2305
www.bnaconsulting.com
SALT LAKE ST.GEORGE LAS VEGAS PHOENIX

© 2005 BNACONSULTING

OLD MAIN BUILDING
SOUTHERN UTAH UNIVERSITY

351 WEST CENTER STREET
CEDAR CITY, UTAH 84720

1 ADDENDUM 2	
SCALE 1/4"=1'-0"	DATE: 03-17-2006
DRAWN BNA / CHECKED CF	SHEET NUMBER ESD-1.04
JOB NUMBER 05348A	
REF. SHEET NUMBER EY102	