MONUMENT VALLEY VENDOR VILLAGE

MONUMENT VALLEY, UTAH

NAVAJO DEPARTMENT OF ECONOMIC DEVELOPMENT
DFCM PROJECT NO. 03272300

CONTRACT DOCUMENTS

AUGUST 25, 2005

DESIGN TEAM

- **ARCHITECT**
  EMA ARCHITECTS, LLC
  460 SOUTH 400 EAST
  SALT LAKE CITY, UTAH 84111
  (801) 363-1511
  (801) 363-1560 (FAX)
- **STRUCTURAL CONSULTANT**
  SHEN ENGINEERING
  2625 EAST 3300 SOUTH
  SALT LAKE CITY, UTAH 84109
  (801) 466-2656
  (801) 466-2625 (FAX)
- **MECHANICAL ENGINEER**
  COLVIN ENGINEERING
  244 WEST 300 NORTH #3200
  SALT LAKE CITY, UTAH 84103
  (801) 322-2400
  (801) 322-2416 (FAX)
- **ELECTRICAL ENGINEER**
  OWEN & ASSOCIATES
  244 WEST 300 NORTH
  SALT LAKE CITY, UTAH 84103
  (801) 534-1130
  (801) 534-1080 (FAX)

LIST OF DRAWINGS

G-001	COVER SHEET
C-101	SITE PLAN
C-102	DIMENSIONED SITE PLAN
CR-101	CODE REVIEW SHEETS
A-101	RETAIL BUILDING FLOOR & ROOF PLAN (BASE BID)
A-102	FOOD COURT FLOOR AND ROOF PLANS
A-103	SERVICE BUILDING FLOOR & ROOF PLANS
A-111	REFLECTED CEILING PLANS
A-201	RETAIL BUILDING EXTERIOR ELEVATIONS (BASE BID)
A-202	FOOD COURT EXTERIOR ELEVATIONS
A-203	SERVICE BUILDING EXTERIOR ELEVATIONS
A-204	EXTERIOR ELEVATIONS
A-301	BUILDING SECTIONS
A-311	WALL SECTIONS
A-312	WALL SECTIONS
A-401	SCHEDULES
A-402	DOOR & WINDOW DETAILS
A-501	INTERIOR ELEVATIONS & BLDG, DETAILS
S-101	STRUCTURAL NOTES
S-102	STRUCTURAL DETAILS
S-103	STRUCTURAL DETAILS
S-201A	RETAIL BUILDING FOUNDATION PLAN
S-202A	RETAIL BUILDING ROOF FRAMING PLAN
S-203A	FOOD COURT FOUNDATION PLAN
S-204A	FOOD COURT ROOF FRAMING PLAN
S-205A	SERVICE BUILDING FOUNDATION PLAN
S-206A	SERVICE BUILDING ROOF FRAMING PLAN
S-301A	STRUCTURAL DETAILS
S-401A	STRUCTURAL DETAILS
S-402	STRUCTURAL DETAILS
M-001	MECHANICAL LEGENDS AND SCHEDULES
M-002	MECHANICAL SCHEDULES AND DETAILS
M-101	RETAIL BUILDING MECHANICAL PLAN
M-102	FOOD COURT MECHANICAL PLAN
M-103	SERVICE BUILDING MECHANICAL PLAN
M-104	RADIANT HEATING FLOOR PLANS
M-105	MECHANICAL SITE PLAN
M-501	MECHANICAL DETAILS
P-101	RETAIL BUILDING PLUMBING PLAN
P-102	FOOD COURT PLUMBING PLAN
P-103	SERVICE BUILDING PLUMBING PLAN
E-000	SCHEDULES
E-101	SITE ELECTRICAL PLAN
E-201	RETAIL BUILDING LIGHTING PLAN
E-202	FOOD COURT LIGHTING PLAN
E-203	SERVICE BUILDING LIGHTING PLAN
E-301	RETAIL BUILDING POWER PLAN
E-302	FOOD COURT POWER PLAN
E-303	SERVICE BUILDING POWER PLAN
E-401	ONE LINE DIAGRAM & DETAILS
E-402	PANELBOARD SCHEDULES
E-501	REFLECTED CEILING PLAN BUILDING "F"
E-502	SITE PLAN SPEAKER LAYOUT BUILDING "A, B, C, D"
E-503	EAST AND WEST ELEVATIONS
E-504	NORTH ELEVATION BUILDING "E"
E-505	NORTH AND SOUTH ELEVATIONS BUILDING "A, B, C, D"
AV-101	RISER DIAGRAM

CODE DATA

NOTE: EACH BUILDING IS LISTED AS A SEPARATE ENTITY

RETAIL BUILDING A:

OCCUPANCY	GROUP B, BUSINESS
TYPE OF CONSTRUCTION	TYPE V-B
ALLOWABLE AREA	9000 sf
ACTUAL AREA	2499 sf
ALLOWABLE STORIES	2
ACTUAL STORIES	1
BUILDING ELEMENT RATINGS	0 HOURS (table 601)
ADJACENT BLDG. SEPARATION	16'-1 1/2" MIN.
OCCUPANCY	25 (table 1004.1.2)

FOOD COURT BUILDING B:

OCCUPANCY	GROUP A-2, ASSEMBLY, FOOD & DRINK
TYPE OF CONSTRUCTION	TYPE V-B
ALLOWABLE AREA	9000 sf
ACTUAL AREA	2124 sf
ALLOWABLE STORIES	2
ACTUAL STORIES	1
BUILDING ELEMENT RATINGS	0 HOURS (table 601)
ADJACENT BLDG. SEPARATION	16'-1 1/2" MIN.
OCCUPANCY	72 (table 1004.1.2)

SERVICE BUILDING C:

OCCUPANCY	GROUP B, BUSINESS
TYPE OF CONSTRUCTION	TYPE V-B
ALLOWABLE AREA	9000 sf
ACTUAL AREA	2306 sf
ALLOWABLE STORIES	2
ACTUAL STORIES	1
BUILDING ELEMENT RATINGS	0 HOURS (table 601)
ADJACENT BLDG. SEPARATION	23'- 8" MIN.
OCCUPANCY	13 (table 1004.1.2) BUSINESS- 1021 sf/10 = 11 ACCESSORY- 495 sf/300 = 2

PLUMBING FIXTURE DATA:

RETAIL BUILDING A:

TOTAL OCCUPANCY	108 (50 MALE, 50 FEMALE)
WATER CLOSETS	2 EACH
LAVATORIES	2 EACH
DRINKING FOUNTAINS	1

FOOD COURT BUILDING B:

TOTAL OCCUPANCY	72 (36 MALE, 36 FEMALE)
WATER CLOSETS	.5 EACH
LAVATORIES	.5 EACH
DRINKING FOUNTAINS	.2

EXTERIOR DINING:

TOTAL OCCUPANCY	10 (5 MALE, 5 FEMALE)
WATER CLOSETS	.2 EACH
LAVATORIES	.2 EACH
DRINKING FOUNTAINS	.1

SERVICE BUILDING C:

TOTAL OCCUPANCY	10 (5 MALE, 5FEMALE)
WATER CLOSETS	.2 EACH
LAVATORIES	.13 EACH
DRINKING FOUNTAINS	.13

TOTAL REQUIRED FIXTURES:

WATER CLOSETS	2.9 EACH = 3
LAVATORIES	2.83 EACH = 3
DRINKING FOUNTAINS	1.5 = 2

TOTAL FIXTURES PROVIDED:

WATER CLOSETS	2
LAVATORIES	2
DRINKING FOUNTAINS	2

NOTES:

ADDITIONAL TOILET FACILITIES ARE INCLUDED IN THE REST AREA RE: SITE MASTER PLAN

CALCULATIONS ASSUME CONCURRENT OCCUPANCY IN RETAIL AND DINING BUILDINGS. ACTUAL OCCUPANCY WOULD BE SHARED BETWEEN SPACES.

(2) OFFICE SPACES IN SERVICE BUILDING F CONTAIN SEPARATE TOILET ROOMS.

STATE OF UTAH
DONALD J. MAHONEY
124584
LICENSED ARCHITECT

GENERAL NOTES

1. SLOPE ALL CONCRETE PAVING AWAY FROM BLDG. FACES AT RATE OF 2% MAX. TOWARDS ADJACENT LANDSCAPE ZONE.
2. PROPERLY COMPACT ALL AREAS SCHEDULED TO RECEIVE BLDG. OR PAVING IMPROVEMENTS. REFER TO SPECIFICATIONS FOR THESE REQUIREMENTS.
3. CONTRACTOR IS RESPONSIBLE FOR ALL DEBRIS - DO NOT ALLOW THIS TO ESCAPE ANY PORTION OF SITE. CONTAINERS SHALL BE SECURED TO PREVENT WIND FROM BLOWING DEBRIS AROUND ADJACENT AREAS.
4. REFER TO ADDITIVE ALTERNATE SPECIFICATION FOR COMPLETE DESCRIPTION OF ADDITIVE ALTERNATES.
5. EXCESS SOIL FROM CONSTRUCTION MAY BE STORED ON-SITE IN STOCK PILE AREA AS DESIGNATED.

ALTERNATE NOTES

<A1> THIS BUILDING AND SURROUNDING CONCRETE ("A") TO BE INCLUDED AS ADDITIVE ALTERNATE NO. 1.

REFERENCE NOTES

<1> THIS SECTION OF PAVING TO BE BID AS AN ADD. ALTERNATE - SEE BID FORM
<2> LANDSCAPE ZONE - PROVIDE NATIVE SOIL MATERIAL TO WITHIN 1" OF PAVING SURFACE.
<3> 4" CONCRETE PAVING OVER 4" DRAINAGE FILL. PROVIDE FIBERMESH REINFORCING.
<4> HATCHED AREA INDICATES ASPHALT EDGE TO MATCH. ADJOIN CONCRETE CURB AND GUTTER TO MATCH ADJACENT CONTRACT LIMIT AREA.
<5> CMU COOKING ENCLOSURE. SEE BLDG. FLOOR PLAN FOR ADDITIONAL INFORMATION.
<6> PANNING SECURITY CAMERA. SEE SPEC.
<7> BENCH- SEE DETAIL 10/A501
<8> DISABLED ACCESS SIGN/ 24" CONC. BASE W/ HOLE MOUNT (GALVANIZED).
<9> RUN CENTRAL POINT TO ADMIN. LOCATION TO BE DETERMINED BY ARCHITECT AND OWNER
<10> NOT USED
<11> NOT USED.
<12> NOT USED.
<13> NOT USED.
<14> NOT USED.
<15> 2" ASPHALT OVER 6" COMPACTED ROAD BASE.
<16> (2) DISABLED ACCESS STALLS TO BE INCLUDED IN BASE BID. REMAINDER OF PARKING LOT TO BE INCLUDED IN ADDITIVE ALTERNATE NO. 1. AS ASPHALT PARKING SURFACE, CURB AND GUTTER AND CONCRETE PAVING SIDEWALK. INCLUDE SIGNAGE TO MEET ADA ACCESS CODE IN BASE BID (2) TOTAL.
<17> 4" WIDE PARKING STRIPE IN COLOR TO MATCH UDOT PROJECT AREA TO BE INCLUDED AS PART OF ADDITIVE ALTERNATE NO. 1.
<18> CURB AND GUTTER SHOWN AS STIPPLED SHALL BE BID AS PART OF ADDITIVE ALTERNATE NO. 1. NON-STIPPLED CURB AND GUTTER SHOWN IS PART OF SEPARATE UDOT CONTRACT AND SHALL NOT BE PART OF THIS SCOPE OF WORK. MATCH CURB AND GUTTER AT ALL TIE-IN POINTS TO WORK OUTSIDE THIS SCOPE OF WORK.
<19> CONCRETE PAVING ALONG THIS EDGE OF ASPHALT PAVING TO BE INCLUDED AS PART OF ADDITIVE ALTERNATE NO. 1.
<20> NOT USED.
<21> 6' HIGH MASONRY DUMPSTER SURROUND WALL WITH PRE-CAST CAP. MASONRY TO MATCH COLOR AND FINISH AS STANDARD FOR BUILDING CONSTRUCTION.
<22> PROPANE TANK BY OTHERS. REFER TO MECHANICAL DRAWINGS FOR PIPING HOOKUPS TO BUILDING SYSTEM.
<23> PROVIDE 8" COMPACTED GRAVEL OVER GEO-TEXTILE FABRIC AS DUMPSTER BASE.
<24> GRADE NATURAL SOIL IN THIS AREA UPON COMPLETION OF CONSTRUCTION TO BE 1" BELOW ADJACENT PAVING.
<25> DASHED LINE INDICATES AREA FOR GENERAL CONTRACTOR TO PERMANENTLY STOCKPILE EXCESS SOILS GRADE SOIL TO BLEND IN GRADUAL TRANSITION FROM SURROUNDING GRADE TO FORM SHAPED BERM.
<26> ACCESSIBLE CURB RAMP TYPE 'C' WITH DETECTABLE WARNING Provide synthetic material for ramp with truncated dome design for detectable surface.
<27> SLOPE ALL CONCRETE PAVING AWAY FROM BLDG. FACES AT RATE OF 2% MAX. TOWARDS ADJACENT LANDSCAPE ZONE.

C101 PARKING SIGN DETAIL
SCALE: 3/4" = 1'

02 C101 CURB DETAIL
SCALE: 1" = 1'

01 C101 SITE PLAN
SCALE: 1" = 20'

EMA
PLANNING ARCHITECTURE INTERIORS
Salt Lake City
460 South 400 East
Salt Lake City, Utah 84111
voice: (801) 363-1511
fax: (801) 363-1560
Park City
Main Street P.O. Box 9
Park City, Utah 84060
voice: (435) 649-0092
fax: (435) 649-7127

CONSULTANTS

MONUMENT VALLEY VENDOR VILLAGE
OWNER

MARK	DATE	DESCRIPTION
	07-29-05	REQUEST FOR CODE APPROVAL

PROJECT NUMBER: 2002-07
DRAWING FILE:
DRAWN BY:
CHECKED BY:

COPYRIGHT 2002 EMA ARCHITECTS, LLC

SHEET TITLE
SITE PLAN

C - 101
OF

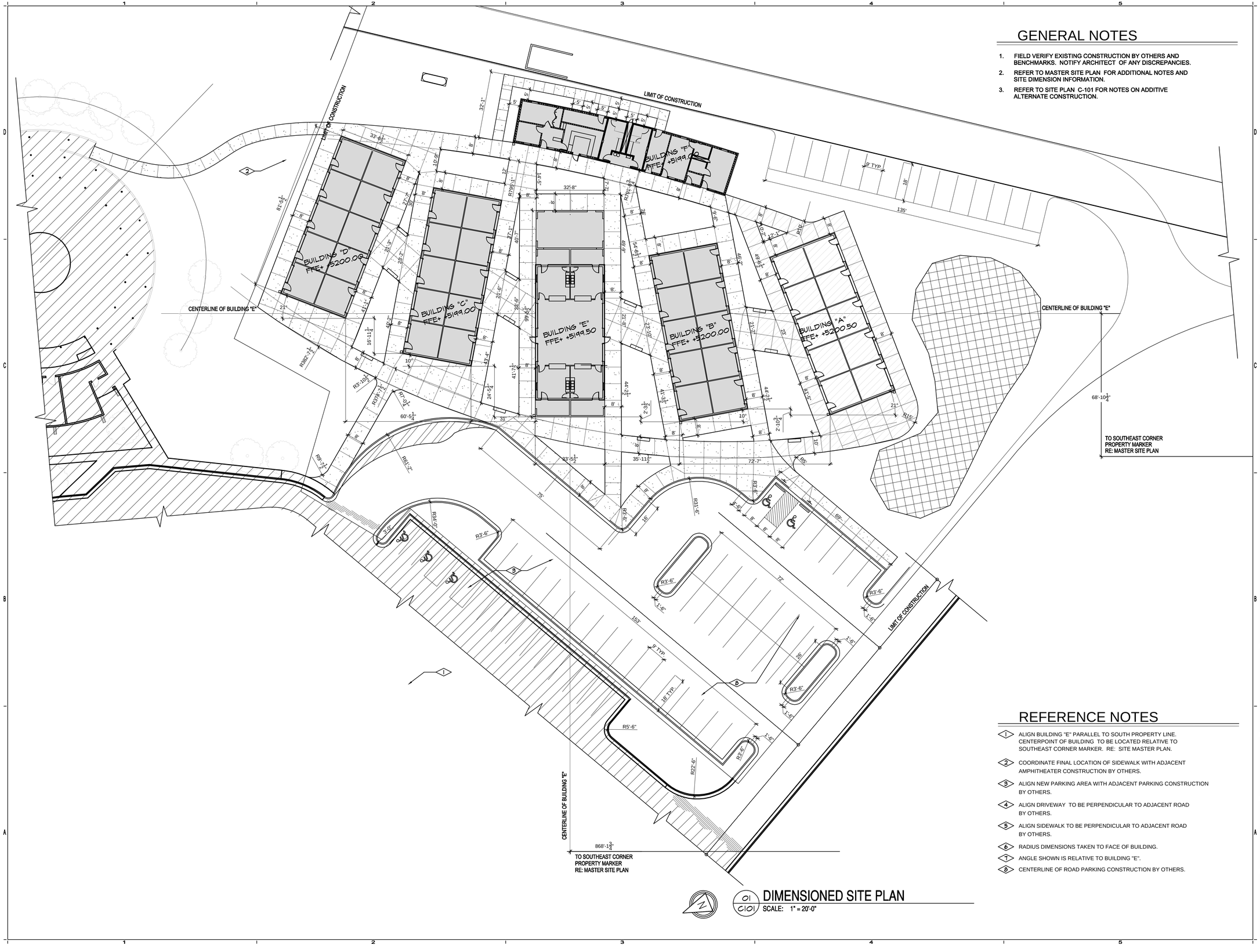

GENERAL NOTES

1. FIELD VERIFY EXISTING CONSTRUCTION BY OTHERS AND BENCHMARKS. NOTIFY ARCHITECT OF ANY DISCREPANCIES.
2. REFER TO MASTER SITE PLAN FOR ADDITIONAL NOTES AND SITE DIMENSION INFORMATION.
3. REFER TO SITE PLAN C-101 FOR NOTES ON ADDITIVE ALTERNATE CONSTRUCTION.

REFERENCE NOTES

1. ALIGN BUILDING "E" PARALLEL TO SOUTH PROPERTY LINE. CENTERPOINT OF BUILDING TO BE LOCATED RELATIVE TO SOUTHEAST CORNER MARKER. RE: SITE MASTER PLAN.
2. COORDINATE FINAL LOCATION OF SIDEWALK WITH ADJACENT AMPHITHEATER CONSTRUCTION BY OTHERS.
3. ALIGN NEW PARKING AREA WITH ADJACENT PARKING CONSTRUCTION BY OTHERS.
4. ALIGN DRIVEWAY TO BE PERPENDICULAR TO ADJACENT ROAD BY OTHERS.
5. ALIGN SIDEWALK TO BE PERPENDICULAR TO ADJACENT ROAD BY OTHERS.
6. RADIUS DIMENSIONS TAKEN TO FACE OF BUILDING.
7. ANGLE SHOWN IS RELATIVE TO BUILDING "E".
8. CENTERLINE OF ROAD PARKING CONSTRUCTION BY OTHERS.

DIMENSIONED SITE PLAN

01 C101 SCALE: 1" = 20'-0"

EMA
PLANNING ARCHITECTURE INTERIORS
Salt Lake City
360 South 400 East
Salt Lake City, Utah 84111
voice: (801) 363-1511
fax: (801) 363-1560
Park City
1364 Main Street P.O. Box 9
Park City, Utah 84060
voice: (435) 649-0092
fax: (435) 649-7127

CONSULTANTS

MONUMENT VALLEY VENDOR VILLAGE

OWNER

MARK	DATE	DESCRIPTION
	07-29-05	REQUEST FOR CODE APPROVAL

PROJECT NUMBER: 2002-07
DRAWING FILE:
DRAWN BY:
CHECKED BY:

COPYRIGHT 2002 EMA ARCHITECTS, LLC

SHEET TITLE

DIMENSIONED SITE PLAN

C - 102

OF

CODE ANALYSIS

BUILDING A (B,C,D SIMILAR)

APPLICABLE CODES			
	Year		Year
International Building Code	2003	National Electrical Code	
International Mechanical Code	2003	Uniform Code for	
International Plumbing Code	2003	Building Conservation	N/A
International Fire Code		ADA Accessibility	
International Energy		Guildelines	
Conservation Code	N/A		

A. Occupancy and Group: M

Change in Use: Yes ____ No X Mixed Occupancy: Yes ____ No X

Special Use and Occupancy (e.g. High Rise, Covered Mall): N/A

B. Seismic Design Category: D Design Wind Speed: 90 mph

C. Type of Construction (circle one):

I A | I B | II A | II B | III A | III B | IV HT | V A | (V B)

D. Fire Resistance Rating Requirements for the Exterior Walls based on the fire separation distance (in hours):

North: N/A South: N/A East: N/A West: N/A

E. Mixed Occupancies: ____ Nonseparated Uses: ____

F: Sprinklers: N/A

Required: ____ Provided: ____ Type of Sprinkler System: ____

G: Number of Stories: 1 Building Height: 20' 5-1/4"

H: Actual Area per Floor (square feet): 2637

I: Tabular Area: 9000 SQ.FT.

J: Area Modifications:

a) $A_a = A_t + \left[\frac{A_t I_f}{100}\right] \left[\frac{A_t I_a}{100}\right]$ $I_f = 100 \left[\frac{F}{P} - 0.25\right] \frac{W}{30}$

a) $A_a = 9000 + \left[\frac{9000 \times 71}{100}\right]$

b) Sum of the Ratio Calculations for Mixed Occupancies:

$\frac{\text{Actual Area}}{\text{Allowable Area}} \leq 1$

c) Total Allowable Area for:

1) One Story: 15398
2) Two Story: A (2)$_a$ ____
3) Three Story: A (3)$_a$ ____

d) Unlimited Area Building: Yes ____ No X Code Section: ____

K. Fire Resistance Rating Requirements for Building Elements (hours).

Element	Hours	Assembly Listing	Element	Hours	Assembly Listing
Exterior Bearing Walls	N/A		Floors - Ceiling Floors	N/A	
Interior Bearing Walls	N/A		Roofs - Ceiling Roofs	N/A	
Exterior Non-Bearing Walls	N/A		Exterior Doors and Windows	N/A	
Structural Frame	N/A		Shaft Enclosures	N/A	
Partitions - Permanent	N/A		Fire Walls	N/A	
Fire Barriers	N/A		Fire Partitions	N/A	
			Smoke Partitions	N/A	

L. Design Occupant Load: 43 OCCUPANTS/BUILDING

Exit Width Required: 36" Exit Width Provided: 36" x 10 DOORS FOR EA. FACILITY

M. Minimum Number of Required Plumbing Facilities:

a) Water Closets - Required (m) ____ (f) ____ Provided (m) ____ (f) ____
b) Lavatories - Required (m) ____ (f) ____ Provided (m) ____ (f) ____
c) Bath Tubs or Showers: ____
d) Drinking Fountains: ____ Service Sinks: ____

FOOTNOTES:

1) In case of conflict with the U.S. Department of Justice Federal Registers Parts through ⅄ ADA Guidelines and specific reference to the International Building Code Accessibility Chapters, the more restrictive requirement shall govern.

2) Additional Code Information shall be provided at the discretion of the Building Official for Complex Buildings. Including, but not limited to:
   a) High Rise Requirements.
   b) Atriums.
   c) Performance Based Criteria.
   d) Means or Egress Analysis.
   e) Fire Assembly Locator Sheet.
   f) Exterior and Interior Accessibility Route.
   g) Fire Stopping, Including Tested Design Number.

CODE ANALYSIS

BUILDING E

APPLICABLE CODES			
	Year		Year
International Building Code	2003	National Electrical Code	
International Mechanical Code	2003	Uniform Code for	
International Plumbing Code	2003	Building Conservation	N/A
International Fire Code		ADA Accessibility	
International Energy		Guildelines	
Conservation Code	N/A		

A. Occupancy and Group: M

Change in Use: Yes ____ No X Mixed Occupancy: Yes ____ No X

Special Use and Occupancy (e.g. High Rise, Covered Mall): N/A

B. Seismic Design Category: D Design Wind Speed: 90 mph

C. Type of Construction (circle one):

I A | I B | II A | II B | III A | III B | IV HT | V A | (V B)

D. Fire Resistance Rating Requirements for the Exterior Walls based on the fire separation distance (in hours):

North: N/A South: N/A East: N/A West: N/A

E. Mixed Occupancies: ____ Nonseparated Uses: ____

F: Sprinklers: N/A

Required: ____ Provided: ____ Type of Sprinkler System: ____

G: Number of Stories: 1 Building Height: 20' 5-1/4"

H: Actual Area per Floor (square feet): 2124

I: Tabular Area: 9000 SQ.FT.

J: Area Modifications:

a) $A_a = A_t + \left[\frac{A_t I_f}{100}\right] \left[\frac{A_t I_a}{100}\right]$ $I_f = 100 \left[\frac{F}{P} - 0.25\right] \frac{W}{30}$

a) $A_a = 9000 + \left[\frac{9000 \times 71}{100}\right]$

b) Sum of the Ratio Calculations for Mixed Occupancies:

$\frac{\text{Actual Area}}{\text{Allowable Area}} \leq 1$

c) Total Allowable Area for:

1) One Story: 15398
2) Two Story: A (2)$_a$ ____
3) Three Story: A (3)$_a$ ____

d) Unlimited Area Building: Yes ____ No X Code Section: ____

K. Fire Resistance Rating Requirements for Building Elements (hours).

Element	Hours	Assembly Listing	Element	Hours	Assembly Listing
Exterior Bearing Walls	N/A		Floors - Ceiling Floors	N/A	
Interior Bearing Walls	N/A		Roofs - Ceiling Roofs	N/A	
Exterior Non-Bearing Walls	N/A		Exterior Doors and Windows	N/A	
Structural Frame	N/A		Shaft Enclosures	N/A	
Partitions - Permanent	N/A		Fire Walls	N/A	
Fire Barriers	N/A		Fire Partitions	N/A	
			Smoke Partitions	N/A	

L. Design Occupant Load: 35 OCCUPANTS/BUILDING

Exit Width Required: 36" Exit Width Provided: 36" x 8 DOORS

M. Minimum Number of Required Plumbing Facilities:

a) Water Closets - Required (m) ____ (f) ____ Provided (m) ____ (f) ____
b) Lavatories - Required (m) ____ (f) ____ Provided (m) ____ (f) ____
c) Bath Tubs or Showers: ____
d) Drinking Fountains: ____ Service Sinks: ____

FOOTNOTES:

1) In case of conflict with the U.S. Department of Justice Federal Registers Parts through ⅄ ADA Guidelines and specific reference to the International Building Code Accessibility Chapters, the more restrictive requirement shall govern.

2) Additional Code Information shall be provided at the discretion of the Building Official for Complex Buildings. Including, but not limited to:
   a) High Rise Requirements.
   b) Atriums.
   c) Performance Based Criteria.
   d) Means or Egress Analysis.
   e) Fire Assembly Locator Sheet.
   f) Exterior and Interior Accessibility Route.
   g) Fire Stopping, Including Tested Design Number.

CODE ANALYSIS

BUILDING F

APPLICABLE CODES			
	Year		Year
International Building Code	2003	National Electrical Code	
International Mechanical Code	2003	Uniform Code for	
International Plumbing Code	2003	Building Conservation	N/A
International Fire Code		ADA Accessibility	
International Energy		Guildelines	
Conservation Code	N/A		

A. Occupancy and Group: M

Change in Use: Yes ____ No X Mixed Occupancy: Yes ____ No X

Special Use and Occupancy (e.g. High Rise, Covered Mall): N/A

B. Seismic Design Category: D Design Wind Speed: 90 mph

C. Type of Construction (circle one):

I A | I B | II A | II B | III A | III B | IV HT | V A | (V B)

D. Fire Resistance Rating Requirements for the Exterior Walls based on the fire separation distance (in hours):

North: N/A South: N/A East: N/A West: N/A

E. Mixed Occupancies: ____ Nonseparated Uses: ____

F: Sprinklers: N/A

Required: ____ Provided: ____ Type of Sprinkler System: ____

G: Number of Stories: 1 Building Height: 17' 5-1/4"

H: Actual Area per Floor (square feet): 2205

I: Tabular Area: 9000 SQ.FT.

J: Area Modifications:

a) $A_a = A_t + \left[\frac{A_t I_f}{100}\right] \left[\frac{A_t I_a}{100}\right]$ $I_f = 100 \left[\frac{F}{P} - 0.25\right] \frac{W}{30}$

a) $A_a = 9000 + \left[\frac{9000 \times 71}{100}\right]$

b) Sum of the Ratio Calculations for Mixed Occupancies:

$\frac{\text{Actual Area}}{\text{Allowable Area}} \leq 1$

c) Total Allowable Area for:

1) One Story: 15398
2) Two Story: A (2)$_a$ ____
3) Three Story: A (3)$_a$ ____

d) Unlimited Area Building: Yes ____ No X Code Section: ____

K. Fire Resistance Rating Requirements for Building Elements (hours).

Element	Hours	Assembly Listing	Element	Hours	Assembly Listing
Exterior Bearing Walls	N/A		Floors - Ceiling Floors	N/A	
Interior Bearing Walls	N/A		Roofs - Ceiling Roofs	N/A	
Exterior Non-Bearing Walls	N/A		Exterior Doors and Windows	N/A	
Structural Frame	N/A		Shaft Enclosures	N/A	
Partitions - Permanent	N/A		Fire Walls	N/A	
Fire Barriers	N/A		Fire Partitions	N/A	
			Smoke Partitions	N/A	

L. Design Occupant Load: ____

Exit Width Required: 36" Exit Width Provided: 36" x 10 DOORS FOR EA. FACILITY

M. Minimum Number of Required Plumbing Facilities:

a) Water Closets - Required (m) ____ (f) ____ Provided (m) ____ (f) ____
b) Lavatories - Required (m) ____ (f) ____ Provided (m) ____ (f) ____
c) Bath Tubs or Showers: ____
d) Drinking Fountains: ____ Service Sinks: ____

FOOTNOTES:

1) In case of conflict with the U.S. Department of Justice Federal Registers Parts through ⅄ ADA Guidelines and specific reference to the International Building Code Accessibility Chapters, the more restrictive requirement shall govern.

2) Additional Code Information shall be provided at the discretion of the Building Official for Complex Buildings. Including, but not limited to:
   a) High Rise Requirements.
   b) Atriums.
   c) Performance Based Criteria.
   d) Means or Egress Analysis.
   e) Fire Assembly Locator Sheet.
   f) Exterior and Interior Accessibility Route.
   g) Fire Stopping, Including Tested Design Number.

EMA

PLANNING ARCHITECTURE INTERIORS

Salt Lake City
460 South 400 East
Salt Lake City, Utah 84111
voice: (801) 363-1511
fax: (801) 363-1560

Park City
1564 Main Street P.O. Box 9
Park City, Utah 84060
voice: (435) 649-0092
fax: (435) 649-7127

CONSULTANTS

STATE OF UTAH
DONALD J. MEMORY
124584
LICENSED ARCHITECT

MONUMENT VALLEY VENDOR VILLAGE

MONUMENT VALLEY, UT

OWNER
NAVAHO NATION DEPARTMENT OF ECONOMIC DEVELOPMENT

MARK	DATE	DESCRIPTION

PROJECT NUMBER: 2002-07
DRAWING FILE:
DRAWN BY:
CHECKED BY:

COPYRIGHT 2002 EMA ARCHITECTS, LLC

SHEET TITLE

CODE REVIEW

CR-101

OF

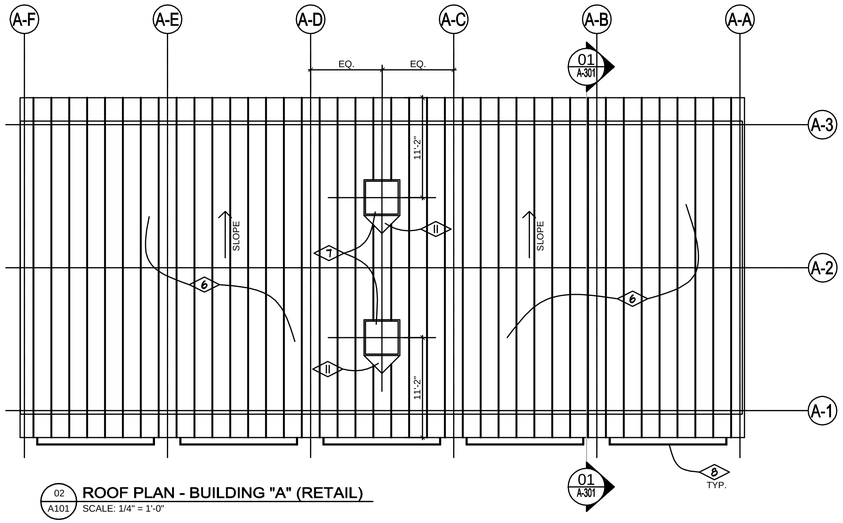

02 A101 **ROOF PLAN - BUILDING "A" (RETAIL)**
SCALE: 1/4" = 1'-0"

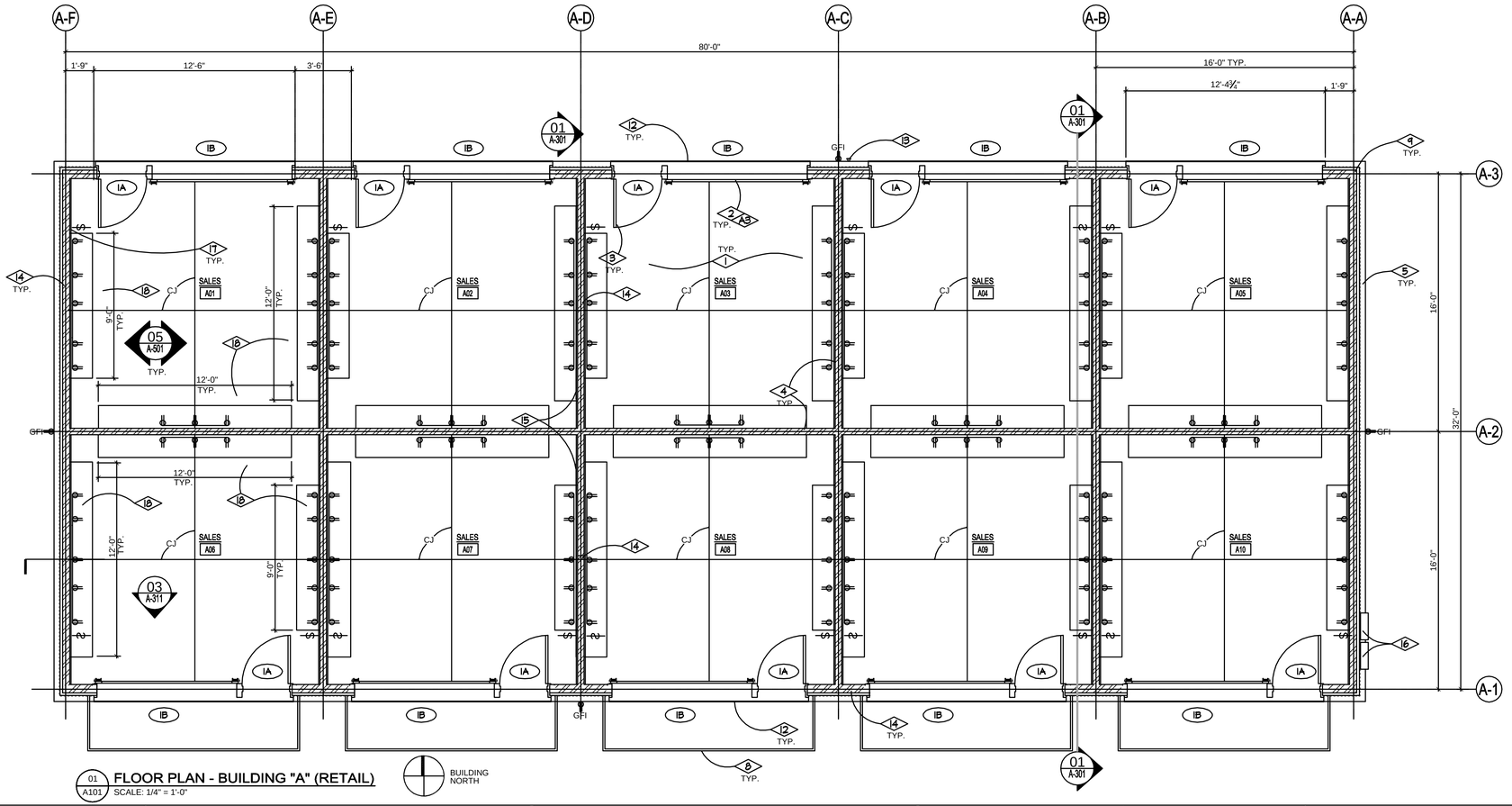

01 A101 **FLOOR PLAN - BUILDING "A" (RETAIL)**
SCALE: 1/4" = 1'-0"

BUILDING NORTH

REFERENCE NOTES

1. 4" COLORED CONCRETE SLAB ON GRADE WITH INTEGRAL RADIANT HEAT PIPING. PIPING CONNECTIONS AND LOCATIONS SHALL BE COORDINATED WITH HVAC CONTRACTOR PRIOR TO INSTALLATION OF CONCRETE SLAB.
2. OVERHEAD DOOR - SEE TYPICAL ELEVATION.
3. TYPICAL HOLLOW METAL DOOR WITH GLASS PANEL - SEE ELEVATION.
4. TYPICAL INTERSTITIAL WALL TO BE CONSTRUCTED OF WOOD FRAMING AT 16" O.C. WITH UNFINISHED 5/8" TYPE 'X' GYPSUM BOARD. PROVIDE WOOD SLAT WALL OVER GYPSUM BOARD AS INDICATED ON TYP. INTERIOR ELEVATION.
5. CMU WAINSCOT WITH SLOPED METAL CAP. SEE TYPICAL SECTION.
6. METAL PANEL ROOF SYSTEM--COLOR BY ARCHITECT FROM MANUFACTURER'S STANDARD COLORS.
7. EVAPORATIVE COOLER & CURB - RE: MECHANICAL. INSTALL AS SHOWN.
8. SHADING OVERHANG--SEE WALL SECTIONS.
9. 2X6 WOOD FRAMING. RE: STRUCTURAL
10. 8' LONG PLUG MOLD WITH DUPLEX OUTLET @ 2' 0" O.C. AS INDICATED. SEE INTERIOR ELEVATION . MOUNT AS INDICATED.
11. CRICKET TO MATCH METAL ROOFING.
12. EDGE OF CONCRETE FLOOR SLAB. SEE SITE PLAN FOR CONTINUATION OF PAVING.
13. FROST-PROOF HOSE BIBB. RE: PLUMBING.
14. SHEAR WALL CONSTRUCTION AT ALL PERIMETER WALLS AND AT INTERIOR PARTITIONS WHERE INDICATED, EXTENDING 8'-0" MIN. FROM PERIMETER WALL - RE: STRUCTURAL.
15. DRAG - RE: STRUCTURAL.
16. ELECTRICAL PANELS RE: ELECTRICAL DRAWINGS- TYPICAL AT EACH RETAIL BUILDING.
17. SLATBOARD - SEE INTERIOR ELEVATION
18. FOLDING COUNTER SYSTEM - SEE DETAIL SYSTEM 12-8501

GENERAL NOTES

1. BUILDING SHELL BY MANF. SHALL INCLUDE ALL PERIMETER WALL CONSTRUCTION, ROOF CONSTRUCTION, BUILDING SHEAR PANELS, METAL ROOF SYSTEM, WATERPROOF BARRIER MEMBRANES AS DESCRIBED ON WALL AND BUILDING SECTIONS. CONTRACTOR IS RESPONSIBLE FOR SHOP DRAWING SUBMITTALS TO MEET ALL LOCAL AND NATIONAL CODES AND REQUIREMENTS INCLUDING COMPLIANCE WITH THE AMERICAN WITH DISABILITIES ACT.
2. THE BUILDING PLAN SHOWN HERE IS TYPICAL FOR ALL RETAIL BUILDINGS. SEE SITE PLAN FOR PLACEMENT.
2. MOUNT LIGHT SWITCHES 4'-0" A.F.F.
4. EXTERIOR OUTLETS MOUNTED AT 18" TO CENTER LINE OF OUTLET ABOVE CONCRETE PAVING.

EMA
PLANNING ARCHITECTURE INTERIORS
Salt Lake City
460 South 400 East
Salt Lake City, Utah 84111
voice: (801) 363-1511
fax: (801) 363-1560
Park City
1364 Main Street P.O. Box 9
Park City, Utah 84060
voice: (435) 649-0092
fax: (435) 649-7127

CONSULTANTS

MARK	DATE	DESCRIPTION
	07-29-05	REQUEST FOR CODE APPROVAL

MONUMENT VALLEY VENDOR VILLAGE

MONUMENT VALLEY, UT

OWNER
NAVAHO NATION DEPARTMENT OF ECONOMIC DEVELOPMENT

PROJECT NUMBER: 2002-07
DRAWING FILE:
DRAWN BY:
CHECKED BY:

COPYRIGHT 2002 EMA ARCHITECTS, LLC

SHEET TITLE

BUILDING "A, B, C, D" (RETAIL)
FLOOR & ROOF PLANS

A-101

OF

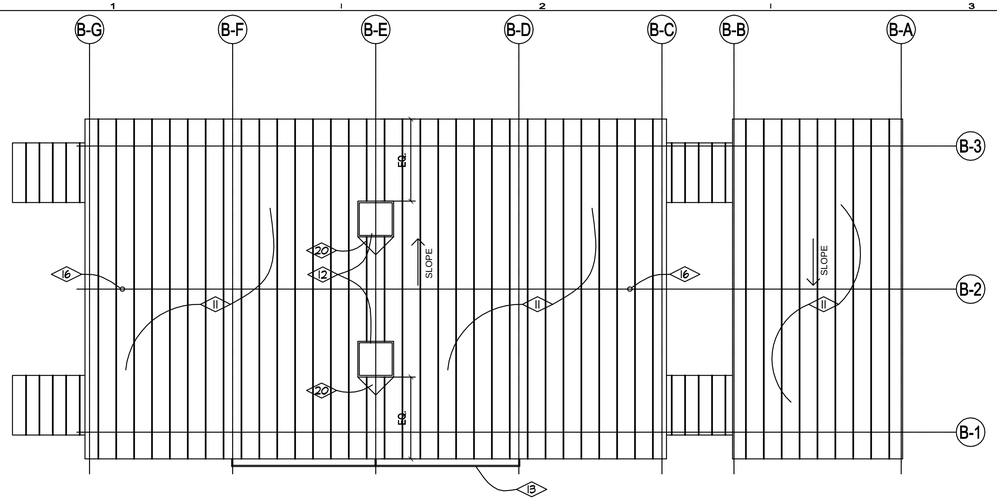

02 A102 ROOF PLAN - BUILDING "E" (FOOD COURT)

SCALE: 1/8" = 1'-0"

GENERAL NOTES

1. BUILDING SHELL BY MANF. SHALL INCLUDE ALL PERIMETER WALL CONSTRUCTION, ROOF CONSTRUCTION, BUILDING SHEAR PANELS, METAL ROOF SYSTEM, WATERPROOF BARRIER MEMBRANES AS DESCRIBED ON WALL AND BUILDING SECTIONS. CONTRACTOR IS RESPONSIBLE FOR SHOP DRAWING SUBMITTALS TO MEET ALL LOCAL AND NATIONAL CODES AND REQUIREMENTS INCLUDING COMPLIANCE WITH THE AMERICAN WITH DISABILITIES ACT. SHOP DRAWINGS TO INCLUDE STRUCTURAL CALCULATION S FOR EACH BUILDING STRUCTURE.
2. LIGHT SWITCHES AT FOOD SALES ROOMS SHALL BE 3-WAY SWITCHED AT EACH OF THE TWO DOORS.
3. OUTSIDE CMU CORNERS AS OPENINGS AT OUTDOOR EATING AREA SHALL HAVE BULLNOSE OR CHAMFERED CORNERS.

REFERENCE NOTES

1. 4" COLORED CONCRETE SLAB ON GRADE WITH INTEGRAL RADIANT HEAT PIPING. PIPING CONNECTIONS AND LOCATIONS SHALL BE COORDINATED WITH HVAC CONTRACTOR PRIOR TO INSTALLATION OF CONCRETE SLAB.
2. ALUMINUM STOREFRONT SYSTEM - SEE TYPICAL ELEVATION & ALTERNATE NOTES.
3. TYPICAL HOLLOW METAL DOOR WITH GLASS PANEL - SEE ELEVATION.
4. TYPICAL INTERSTITIAL WALL TO BE CONSTRUCTED OF LIGHTWEIGHT METAL FRAMING AT 16" O.C. WITH UNFINISHED 5/8", TYPE 'X' GYPSUM BD. TO 5'-4" A.F.F. EXPOSED GYPSUM BD. ABOVE 5'-4" TO BE TAPED, SANDED AND PAINTED. GYPSUM BOARD BELOW 5'-4" TO BE COVERED WITH PRE-FINISHED CORRUGATED METAL PANEL SYSTEM COMPLETE WITH TRIM AT ALL EDGES AND BETWEEN PANELS.
5. LAMINATE COUNTERTOP - COLOR BY ARCHITECT.
6. CMU WALL TO MATCH HEIGHT & COLOR OF CMU ON BUILDING.
7. 48" TALL CMU WALL TO MATCH COLOR OF CMU ON BUILDING.
8. FULL HEIGHT CMU WALL TO MATCH COLOR OF CMU ON BUILDING - RE: STRUCTURAL FOR REINFORCING REQUIREMENTS.
9. 3 COMPARTMENT SINK IN LAMINATE COUNTERTOP WITH BACKSPLASH & WITH CABINETS BELOW. RE: CASEWORK DRAWING.
10. CMU WAINSCOT.
11. METAL PANEL ROOF SYSTEM--COLOR BY ARCHITECT FROM MANUFACTURER'S STANDARD COLORS.
12. EVAPORATIVE COOLER & CURB - RE: MECHANICAL.
13. SHADING OVERHANG BELOW.
14. 2X6 WOOD FRAMING. RE: STRUCTURAL
15. OUTDOOR COOKING AREA - RE: SITE PLAN. (CONC. PAVING)
16. VENT STACK - RE: PLUMBING.
17. FINE BROOM FINISH CONC. SLAB WITH CONTROL JOINTS AS SHOWN
18. DASHED LINE INDICATES ROLL DOWN COUNTER DOOR - PROVIDE DOOR PRIMED - PAINT (2) FINISH COATS ON SITE
19. DEDICATED ELECTRICAL OUTLETS AT 4' 0" A. F. F.
20. CRICKET TO MATCH METAL ROOFING.
21. EDGE OF CONCRETE FLOOR SLAB - SEE SITE PLAN FOR CONTINUATION OF PAVING.
22. QUAD ELECTRICAL OUTLET IN FLOOR SLAB.
23. HOT WATER HEATER - RE: MECHANICAL - WITH ADJUSTABLE SHELVING ABOVE ON STANDARDS WITH BRACKETS.
24. FROST-PROOF HOSE BIBB - RE: PLUMBING.
25. SHEAR WALL CONSTRUCTION AT INTERIOR PARTITIONS WHERE INDICATED - RE: STRUCTURAL.
26. DRAG - RE: STRUCTURAL.
27. ELECTRICAL PANEL RE: ELECTRICAL DRAWINGS.

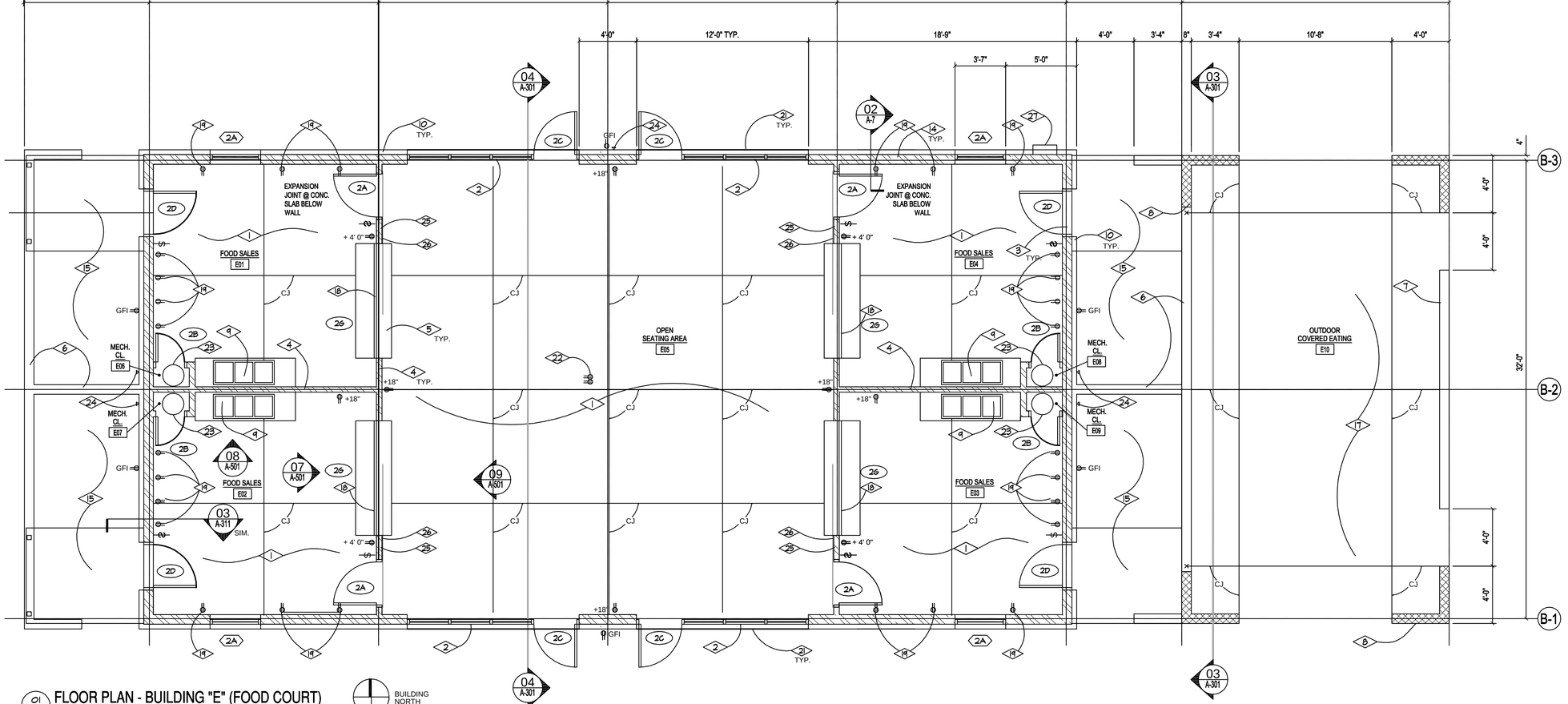

01 A102 FLOOR PLAN - BUILDING "E" (FOOD COURT)

SCALE: 1/4" = 1'-0"

BUILDING NORTH

EMA
PLANNING ● ARCHITECTURE ● INTERIORS
Salt Lake City — Park City
460 South 400 East, Salt Lake City, Utah 84111, voice: (801) 363-1511, fax: (801) 363-1560
364 Main Street, P.O. Box 9, Park City, Utah 84060, voice: (435) 649-0092, fax: (435) 649-7127

CONSULTANTS

STATE OF UTAH — DONALD J. MEDDOCK — 124584 — LICENSED ARCHITECT

MONUMENT VALLEY VENDOR VILLAGE
MONUMENT VALLEY, UT
OWNER
NAVAHO NATION DEPARTMENT OF ECONOMIC DEVELOPMENT

MARK	DATE	DESCRIPTION
		07-29-05 REQUEST FOR CODE APPROVAL

PROJECT NUMBER: 2002-07
DRAWING FILE:
DRAWN BY:
CHECKED BY:

COPYRIGHT 2002 EMA ARCHITECTS, LLC

SHEET TITLE

BUILDING "E" (FOOD COURT)
FLOOR & ROOF PLANS

A-102

OF

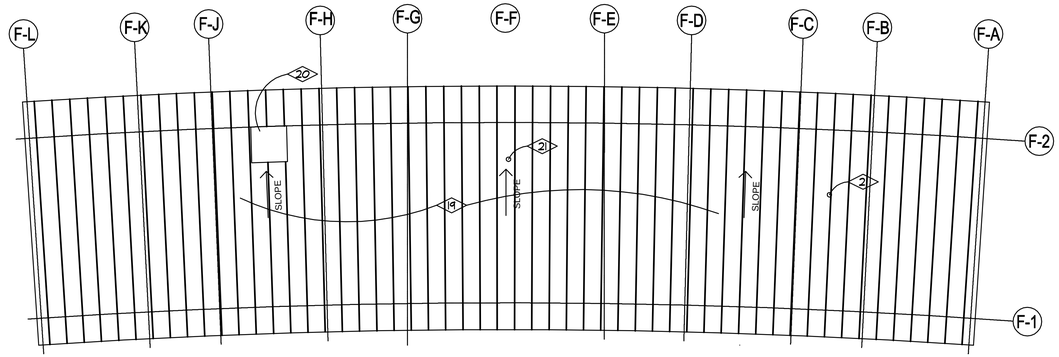

02 A103 ROOF PLAN - BUILDING "F" (SERVICE)
SCALE: 1/8" = 1'-0"

GENERAL NOTES

1. BUILDING SHELL BY MANF. SHALL INCLUDE ALL PERIMETER WALL CONSTRUCTION, ROOF CONSTRUCTION, BUILDING SHEAR PANELS, METAL ROOF SYSTEM, WATERPROOF BARRIER MEMBRANES AS DESCRIBED ON WALL AND BUILDING SECTIONS. CONTRACTOR IS RESPONSIBLE FOR SHOP DRAWING SUBMITTALS TO MEET ALL LOCAL AND NATIONAL CODES AND REQUIREMENTS INCLUDING COMPLIANCE WITH THE AMERICAN WITH DISABILITIES ACT.
2. SEE INTERIOR ELEVATIONS FOR ADDITIONAL NOTES INCLUDING TOILET ACCESSORY MOUNTING HEIGHTS.
3. PROVIDE POWER TO MECHANICAL RM. F06 TO CONTROL PUMP EQUIPMENT
4. MOUNT ALL SWITCHES @ 4' 0" A. F. F. TO CENTERLINE OF \SWITCH. MOUNT ALL OUTLETS A\@ 18" A. F. F. (UNLESS OTHERWISE NOTED) TO CENTERLINE OF OUTLET.
4. ROOFING NOTE: METAL ROOF SEAMS AT THIS BUILDING MAY BE STRAIGHT, IN LIEU OF CURVED SECTIONS. SEAMS PARALLEL TO GRID LINE E-F, AT BUILDING CENTER LINE.

REFERENCE NOTES

1. CONCRETE SLAB ON GRADE WITH INTEGRAL RADIANT HEAT PIPING. PIPING CONNECTIONS AND LOCATIONS SHALL BE COORDINATED WITH HVAC CONTRACTOR PRIOR TO INSTALLATION OF CONCRETE SLAB - FINISH NOTES AS PER SCHEDULE.
2. TYPICAL INTERSTITIAL WALL TO BE CONSTRUCTED OF LIGHTWEIGHT METAL FRAMING AT 16" O.C. WITH 5/8" TYPE 'X' GYPSUM BOARD FINISHED AS PER SCHEDULE.
3. NOT USED.
4. NOT USED.
5. SET CMU WALL FLUSH WITH ADJACENT CMU WAINSCOT.
6. ACCESSIBLE FLUSH VALVE WATER CLOSET - RE: PLUMBING.
7. FLUSH VALVE WATER CLOSET - RE: PLUMBING.
8. ADA COMPLIANT URINAL - RE: PLUMBING.
9. COUNTER WITH PLASTIC LAMINATE SURFACE & BACKSPLASH.
10. LAVATORY - RE: PLUMBING.
11. FLOOR-MOUNTED MOP SINK - RE: PLUMBING.
12. 1 1/2" O.D. STAINLESS STEEL GRAB BAR.
13. SEMI-RECESSED PAPER TOWEL DISPENSER/TRASH RECEPTACLE.
14. RECESSED FEMINE HYGIENE PRODUCT DISPENSER.
15. FLOOR DRAIN - RE: PLUMBING.
16. REFER TO MECHANICAL DRAWINGS FOR EQUIPMENT IN THIS AREA.
17. 2X6 WOOD FRAMING. RE: STRUCTURAL
18. BULLNOSE @ OUTSIDE CORNER. AT CONTRACTOR'S OPTION, CHAMFERED CORNER MAY BE USED IN LIEU OF BULLNOSE.
19. METAL PANEL ROOF SYSTEM - COLOR BY ARCHITECT FROM MANUFACTURER'S STANDARD COLORS.
20. EVAPORATIVE COOLER & CURB - RE: MECHANICAL.
21. PLUMBING VENT - RE: MECHANICAL.
22. NOT USED.
23. NOT USED.
24. PAIRED DRINKING FOUNTAINS IN "HIGH-LOW" MOUNTING - RE: PLUMBING.
25. PREFABRICATED TELEPHONE ENCLOSURE WITH PAY TELEPHONE (TELEPHONE BY OTHERS).
26. ATTIC ACCESS LADDER.
27. REFER TO ELECTRICAL DRAWINGS FOR EQUIPMENT IN THIS AREA.

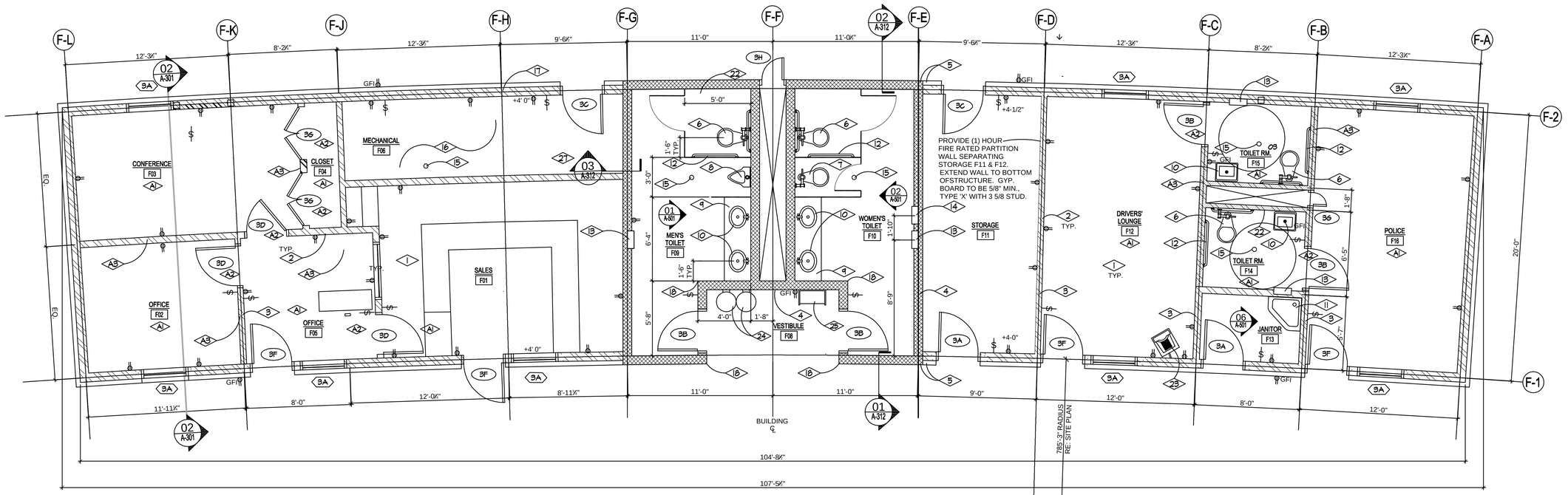

01 A103 FLOOR PLAN - BUILDING "F" (SERVICE)
SCALE: 1/4" = 1'-0"

BUILDING NORTH

EMA
PLANNING ● ARCHITECTURE ● INTERIORS
Salt Lake City
460 South 400 East
Salt Lake City, Utah 84111
voice: (801) 363-1511
fax: (801) 363-1560
Park City
1910 Main Street P.O. Box 9
Park City, Utah 84060
voice: (435) 649-0092
fax: (435) 649-7127

CONSULTANTS

STATE OF UTAH
DONALD J. MARKHAM
124584
LICENSED ARCHITECT

MONUMENT VALLEY VENDOR VILLAGE

MONUMENT VALLEY, UT

OWNER
NAVAHO NATION DEPARTMENT OF ECONOMIC DEVELOPMENT

MARK	DATE	DESCRIPTION
	07-29-05	REQUEST FOR CODE APPROVAL

PROJECT NUMBER: 2002-07
DRAWING FILE:
DRAWN BY:
CHECKED BY:

COPYRIGHT 2002 EMA ARCHITECTS, LLC

SHEET TITLE

BUILDING "F" (SERVICE)
FLOOR & ROOF PLANS

A-103

OF

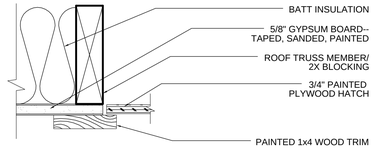

08/A111 ATTIC ACCESS HATCH DETAIL
SCALE: 3" = 1'-0"

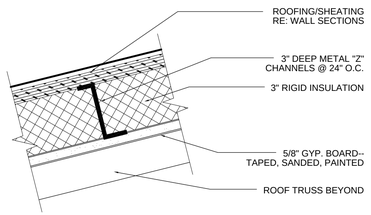

07/A111 SLOPED CEILING DETAIL
SCALE: 3" = 1'-0"

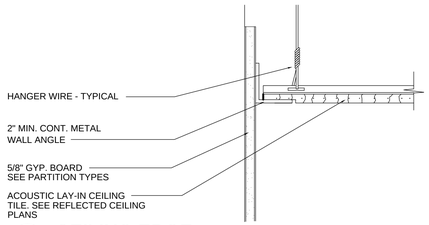

06/A111 CEILING EDGE
SCALE: 3" = 1'-0"

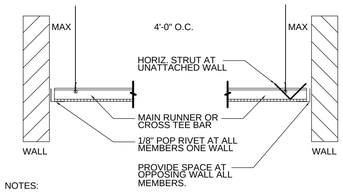

NOTES:

1. ALL SPLAY WIRES TO BE IN LINE WITH ATTACHED COMPONENT.
2. ALL SPLAY WIRES TAUT AND TIED, BOTH ENDS WITH MIN. OF THREE TURNS IN 1" OF RUN.
3. COMPLY WITH UBC STANDARD 47-18 & ASTM E-5800.
4. CEILING DETAIL NOTES AND DETAILS SHOWN APPLY TO ALL SUSPENDED CEILINGS.
5. REFER TO ABOVE REFERENCE STANDARDS FOR CEILING SUPPORT AT LIGHT FIXTURES, AIR TERMINALS AND OTHER SERVICES.
6. SUSPEND LIGHT FIXTURES FROM THE STRUCTURE IN AT LEAST TWO LOCATIONS WITHOUT REGARD TO THE SUSPENDED CEILING GRID.

05/A111 SUSPENDED CEILING DETAIL
SCALE: 3/4" = 1'-0"

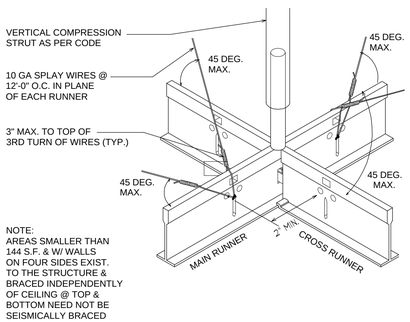

NOTE:
AREAS SMALLER THAN 144 S.F. & W/ WALLS ON FOUR SIDES EXIST. TO THE STRUCTURE & BRACED INDEPENDENTLY OF CEILING @ TOP & BOTTOM NEED NOT BE SEISMICALLY BRACED

04/A111 SUSPENDED CEILING ISOMETRIC
SCALE: NO SCALE

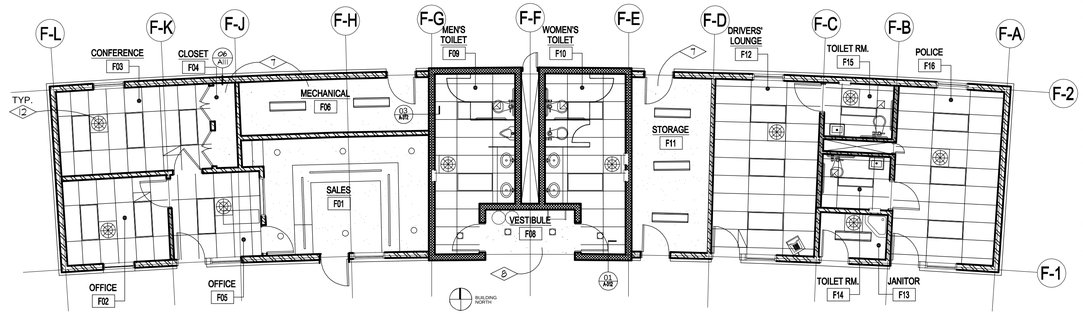

03/A111 REF. CLG. PLAN - BUILDING "F" (SERVICE)
SCALE: 1/8" = 1'-0"

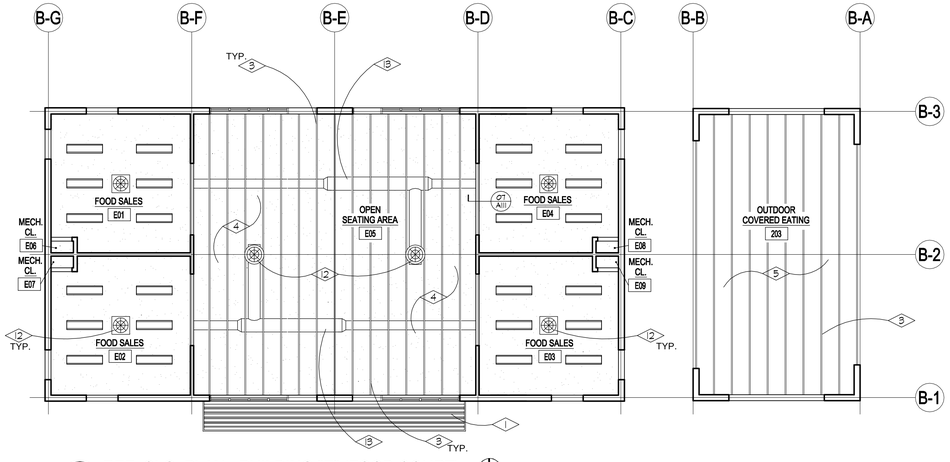

02/A111 REF. CLG. PLAN - BUILDING "E" (FOOD COURT)
SCALE: 1/8" = 1'-0"

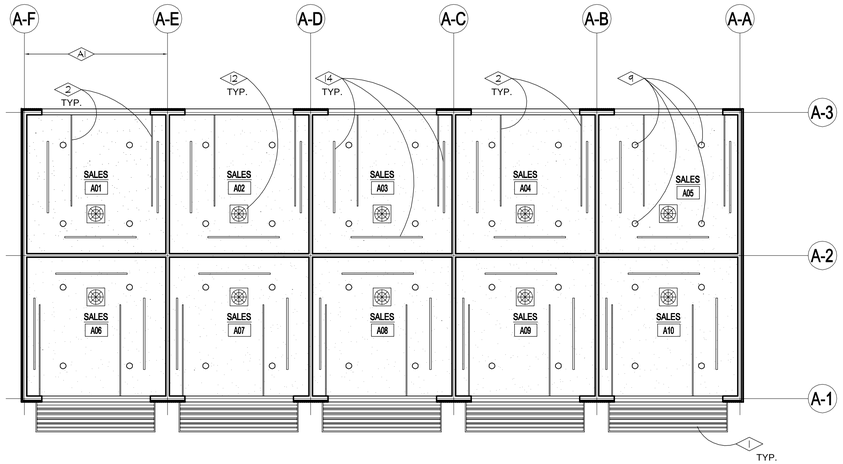

01/A111 REF. CLG. PLAN - BUILDING "A,B,C,D" (RETAIL)
SCALE: 1/8" = 1'-0"

REFERENCE NOTES

1. SHADING OVERHANG - SEE SECTIONS.
2. OVERHEAD DOOR TRACK - SEE SECTIONS.
3. EXPOSED, PAINTED WOOD ROOF TRUSSES - SEE SECTIONS, STRUCTURAL.
4. SLOPED, PAINTED GYPSUM BOARD CEILING.
5. SLOPED, PAINTED WOOD CEILING.
6. 20"x30" PAINTED WOOD ATTIC ACCESS HATCH.
7. SUSPENDED GYPSUM BOARD CEILING, PAINTED.
8. PAINTED, MOISTURE-RESISTANT GYPSUM BOARD.
9. RECESSED FLORESCENT
10. NOT USED.
11. NOT USED.
12. EVAPORATIVE COOLER REGISTER - RE: MECHANICAL. COORDINATE EXACT LOCATION WITH CEILING STRUCTURE.
13. EXPOSED, PAINTED DUCTWORK. LOCATE ABOVE BOTTOM CHORD OF TRUSS - RE: MECHANICAL.
14. TRACK LIGHTING - LOCATION TO ACCOMMODATE LIGHT POSITION AROUND OVERHEAD DOOR

GENERAL NOTES

1. REFER TO FINISH SCHEDULE FOR ADDITIONAL NOTES AND CEILING HEIGHTS.
2. REFER TO MECHANICAL AND ELECTRICAL PLANS FOR ADDITIONAL NOTES CONCERNING EQUIPMENT IN CEILING.
3. UNLESS NOTED OTHERWISE, SUSPENDED CEILING GRIDS SHALL BE CENTERED WITHIN SPACE. LIGHTING FIXTURES SHALL BE CENTERED AND EQUALLY SPACED.

LEGEND

- 2'-0"x4'-0" SUSPENDED ACOUSTICAL TILE CEILING.
- PAINTED GYPSUM BOARD CEILING ATTACHED TO UNDERSIDE OF ROOF TRUSS UNLESS NOTED OTHERWISE.
- 2'-0"x4'-0" RECESSED FLUORESCENT LIGHTING FIXTURE.
- 1'-0"x4'-0" SURFACE-MOUNTED FLUORESCENT LIGHTING FIXTURE.
- RECESSED LIGHTING FIXTURE.
- 1'-0"x4'-0" RECESSED FLUORESCENT LIGHTING FIXTURE.
- TRACK LIGHTING
- EVAPORATIVE COOLER REGISTER.
- RETURN AIR VENT

EMA
PLANNING ● ARCHITECTURE ● INTERIORS
Salt Lake City
460 South 400 East
Salt Lake City, Utah 84111
voice: (801) 363-1511
fax: (801) 363-1560
Park City
364 Main Street P.O. Box 9
Park City, Utah 84060
voice: (435) 649-0092
fax: (435) 649-7127

CONSULTANTS

MONUMENT VALLEY VENDOR VILLAGE

MONUMENT VALLEY, UT

OWNER
NAVAHO NATION DEPARTMENT OF ECONOMIC DEVELOPMENT

MARK	DATE	DESCRIPTION
	07-29-05	REQUEST FOR CODE APPROVAL

PROJECT NUMBER: 2002-07
DRAWING FILE:
DRAWN BY:
CHECKED BY:

COPYRIGHT 2002 EMA ARCHITECTS, LLC

SHEET TITLE

REFLECTED CEILING PLANS

A-111

OF

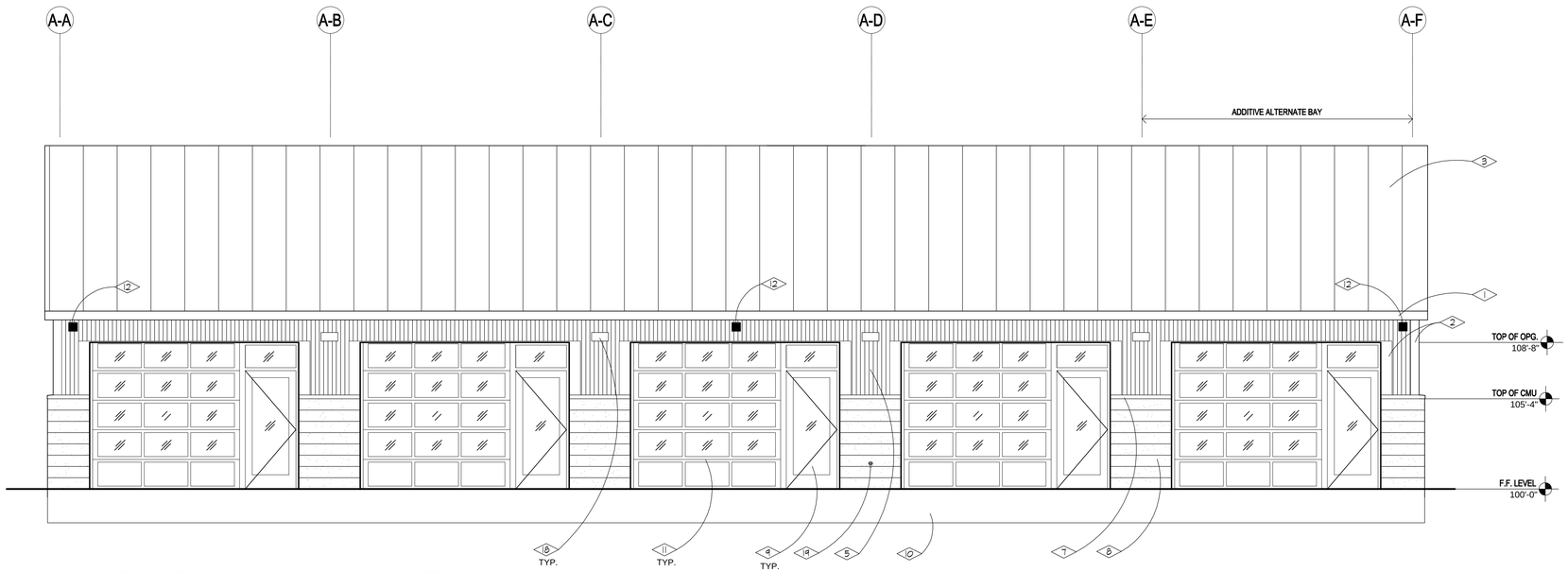

02 A201 NORTH ELEVATION - BUILDING "A, B, C, D" (RETAIL)
SCALE: 1/4" = 1'-0"

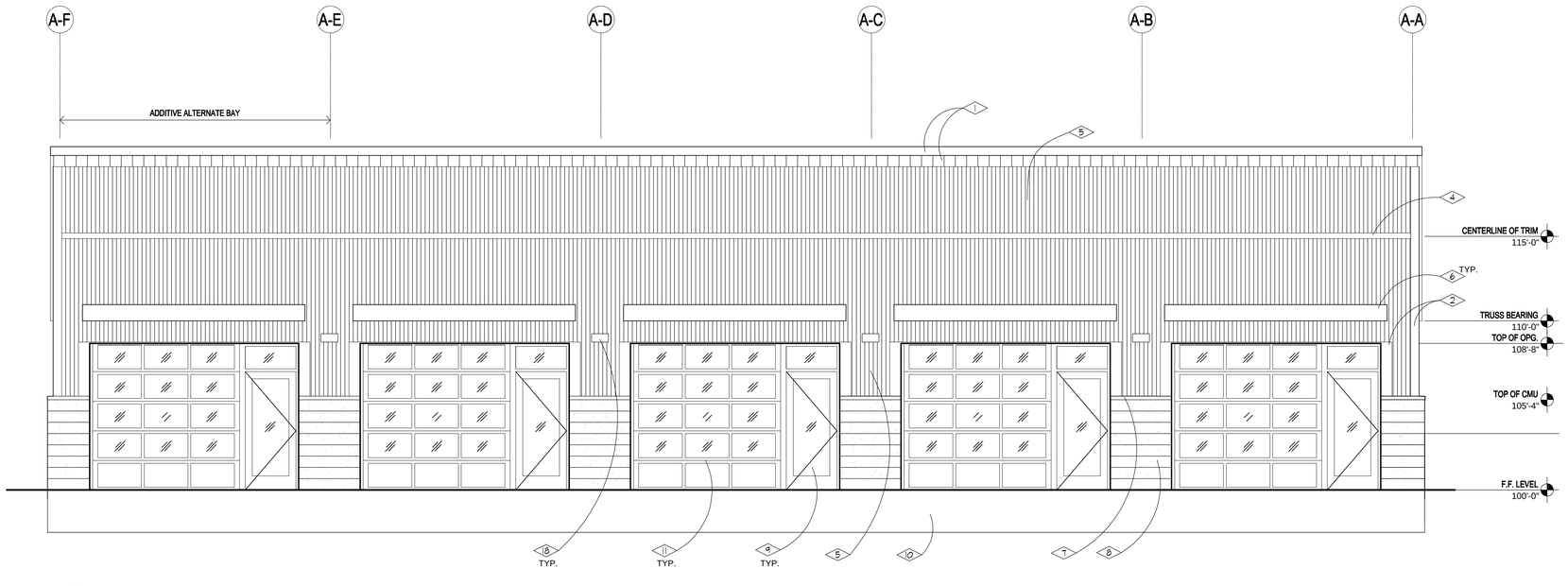

01 A201 SOUTH ELEVATION - BUILDING "A, B, C, D" (RETAIL)
SCALE: 1/4" = 1'-0"

REFERENCE NOTES

1. ALUMINUM FASCIA & SOFFIT.
2. METAL FLASHING.
3. METAL PANEL ROOF SYSTEM BY BUILDING SHELL MANUFACTURER.
4. CONTINUOUS METAL TRIM.
5. 24 GA. VERTICALLY-ORIENTED CORRUGATED METAL SIDING SYSTEM WITH KYNAR FINISH.
6. PAINTED WOOD LOUVERED OVERHANG.
7. METAL COPING WITH KYNAR FINISH ON WOOD BLOCKING.
8. TINTED SPLIT-FACE CMU WAINSCOT. RAKE ALL HORIZONTAL JOINTS.
9. HOLLOW METAL DOOR & FRAME W/ TRANSOM - RE: SCHEDULE.
10. CONCRETE FOOTING & FOUNDATION - RE: STRUCTURAL.
11. ALUMINUM SECTIONAL DOOR W/ GLAZING - RE: SCHEDULE.
12. RECESSED SOUND EQUIPMENT - SEE ELECTRICAL
13. NOT USED.
14. NOT USED.
15. NOT USED.
16. NOT USED
17. NOT USED.
18. WALL-MOUNTED LIGHT FIXTURES - PROVIDE LIGHT SENSORS TO SWITCH FIXTURES.
19. FROST-PROOF HOSE BIBB - RE: PLUMBING.

GENERAL NOTES

1. BUILDING SHELL BY MANF. SHALL INCLUDE ALL PERIMETER WALL CONSTRUCTION, ROOF CONSTRUCTION, BUILDING SHEAR PANELS, METAL ROOF SYSTEM, WATERPROOF BARRIER MEMBRANES AS DESCRIBED ON WALL AND BUILDING SECTIONS. CONTRACTOR IS RESPONSIBLE FOR SHOP DRAWING SUBMITTALS TO MEET ALL LOCAL AND NATIONAL CODES AND REQUIREMENTS INCLUDING COMPLIANCE WITH THE AMERICAN WITH DISABILITIES ACT.
2. THE BUILDING ELEVATIONS SHOWN HERE ARE TYPICAL FOR ALL FOUR RETAIL BUILDINGS (I.E. A, B, C, D). SEE SITE PLAN FOR PLACEMENT.
3. UNLESS NOTED OTHERWISE, MATERIAL COLORS SHALL BE SELECTED BY ARCHITECT FROM MANUFACTURER'S STANDARD COLORS.

EMA
PLANNING ● ARCHITECTURE ● INTERIORS
Salt Lake City — Park City
460 South 400 East, Salt Lake City, Utah 84111, voice: (801) 363-1511, fax: (801) 363-1560
364 Main Street, P.O. Box 9, Park City, Utah 84060, voice: (435) 649-0092, fax: (435) 649-7127

CONSULTANTS

MONUMENT VALLEY VENDOR VILLAGE

MONUMENT VALLEY, UT

OWNER
NAVAHO NATION DEPARTMENT OF ECONOMIC DEVELOPMENT

MARK	DATE	DESCRIPTION
	07-29-05	REQUEST FOR CODE APPROVAL

PROJECT NUMBER: 2002-07
DRAWING FILE:
DRAWN BY:
CHECKED BY:

COPYRIGHT 2002 EMA ARCHITECTS, LLC

SHEET TITLE

BUILDING "A, B, C, D" (RETAIL)
EXTERIOR ELEVATIONS

A-201

OF

REFERENCE NOTES

1. ALUMINUM FASCIA & SOFFIT.
2. METAL FLASHING.
3. METAL PANEL ROOF SYSTEM BY BUILDING SHELL MANUFACTURER.
4. CONTINUOUS METAL TRIM.
5. 24 GA. VERTICALLY-ORIENTED CORRUGATED METAL SIDING SYSTEM WITH KYNAR FINISH.
6. PAINTED WOOD LOUVERED OVERHANG.
7. METAL COPING WITH KYNAR FINISH ON WOOD BLOCKING.
8. TINTED SPLIT-FACE CMU WAINSCOT. RAKE ALL HORIZONTAL JOINTS.
9. HOLLOW METAL DOOR & FRAME W/ TRANSOM - RE: SCHEDULE.
10. CONCRETE FOOTING & FOUNDATION - RE: STRUCTURAL.
11. ALUMINUM STOREFRONT SYSTEM - RE: SCHEDULE.
12. HOLLOW METAL WINDOW W/ OPERABLE AWNING - RE: SCHEDULE.
13. PAINTED WOOD TRUSS BRACING.
14. PAINTED BUILT-UP WOOD BEAM - RE: STRUCTURAL.
15. EXPOSED WOOD TRUSSES BY BUILDING MANUF., PAINTED.
16. NOT USED
17. 8" SPLIT-FACE CMU WALL CONSTRUCTION. RAKE ALL HORIZONTAL JOINTS. SPLIT FACE TO BE AT EXTERIOR FACE.
18. WALL-MOUNTED LIGHT FIXTURES - PROVIDE LIGHT SENSORS TO SWITCH FIXTURES.
19. FROST-PROOF HOSE BIBB - RE: PLUMBING.
20. **RECESSED SOUND EQUIPMENT - SEE ELECTRICAL**

GENERAL NOTES

1. BUILDING SHELL BY MANF. SHALL INCLUDE ALL PERIMETER WALL CONSTRUCTION, ROOF CONSTRUCTION, BUILDING SHEAR PANELS, METAL ROOF SYSTEM, WATERPROOF BARRIER MEMBRANES AS DESCRIBED ON WALL AND BUILDING SECTIONS. CONTRACTOR IS RESPONSIBLE FOR SHOP DRAWING SUBMITTALS TO MEET ALL LOCAL AND NATIONAL CODES AND REQUIREMENTS INCLUDING COMPLIANCE WITH THE AMERICAN WITH DISABILITIES ACT.
2. UNLESS NOTED OTHERWISE, MATERIAL COLORS SHALL BE SELECTED BY ARCHITECT FROM MANUFACTURER'S STANDARD COLORS.

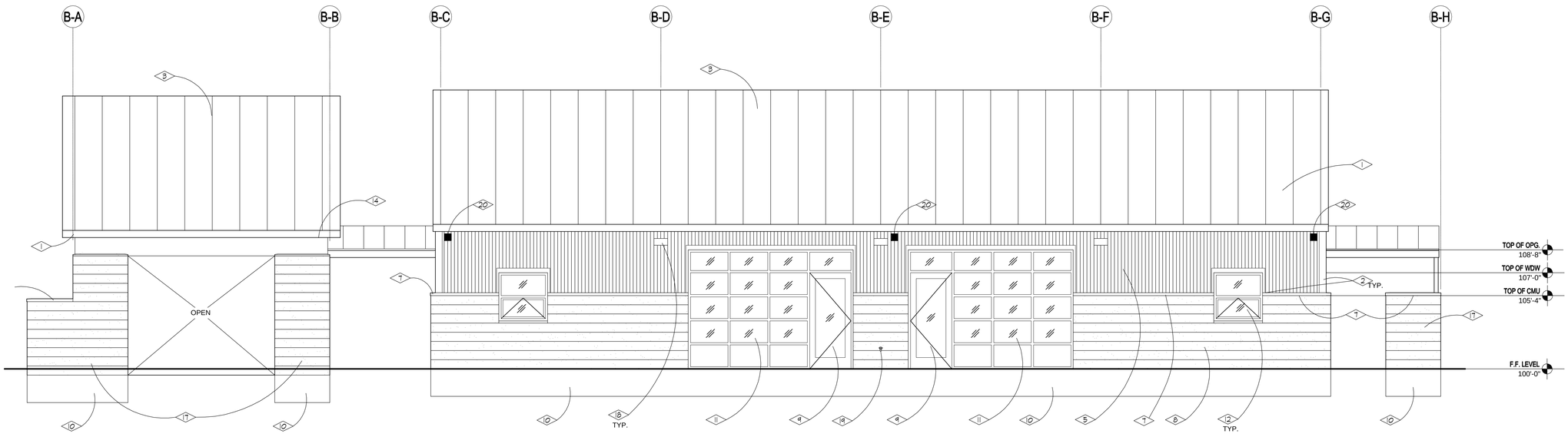

02 A202 NORTH ELEVATION - BUILDING "E" (FOOD COURT)
SCALE: 1/4" = 1'-0"

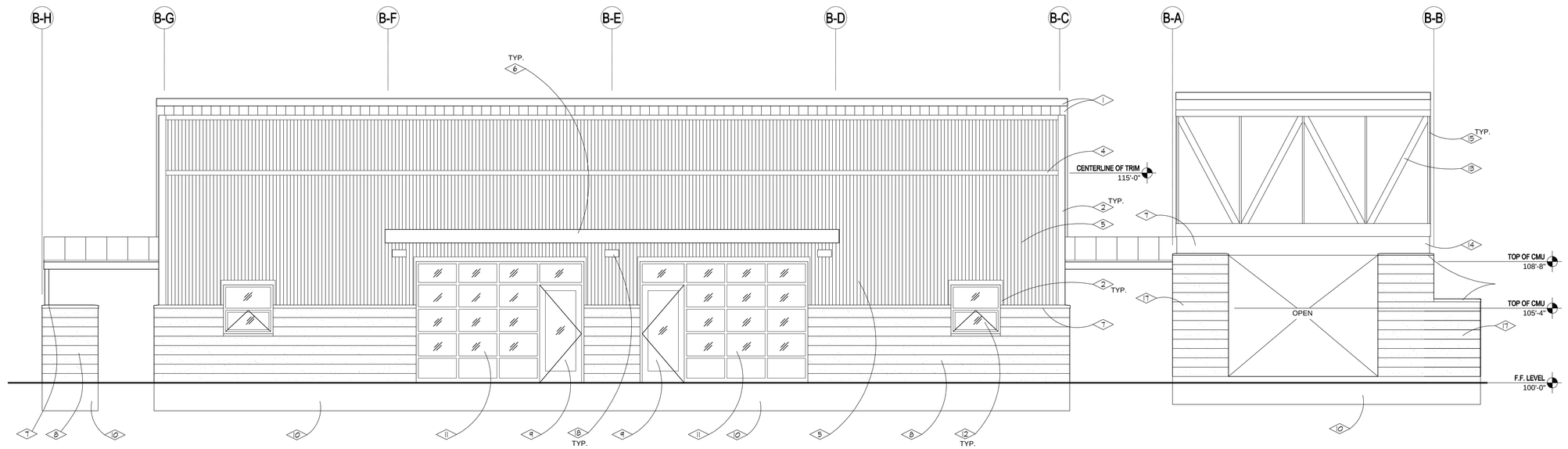

01 A202 SOUTH ELEVATION - BUILDING "E" (FOOD COURT)
SCALE: 1/4" = 1'-0"

EMA
PLANNING ● ARCHITECTURE ● INTERIORS
Salt Lake City — Park City
460 South 400 East, Salt Lake City, Utah 84111, voice: (801) 363-1511, fax: (801) 363-1560
364 Main Street, P.O. Box 9, Park City, Utah 84060, voice: (435) 649-0092, fax: (435) 649-7127

CONSULTANTS

MONUMENT VALLEY VENDOR VILLAGE

MONUMENT VALLEY, UT

OWNER
NAVAHO NATION DEPARTMENT OF ECONOMIC DEVELOPMENT

MARK	DATE	DESCRIPTION
		07-29-05 REQUEST FOR CODE APPROVAL

PROJECT NUMBER: 2002-07
DRAWING FILE:
DRAWN BY:
CHECKED BY:

COPYRIGHT 2002 EMA ARCHITECTS, LLC

SHEET TITLE

BUILDING "E" (FOOD COURT)
EXTERIOR ELEVATIONS

A-202

OF

REFERENCE NOTES

1. ALUMINUM FASCIA & SOFFIT.
2. METAL FLASHING.
3. METAL PANEL ROOF SYSTEM BY BUILDING SHELL MANUFACTURER.
4. CONTINUOUS METAL TRIM.
5. 24 GA. VERTICALLY-ORIENTED CORRUGATED METAL SIDING SYSTEM WITH KYNAR FINISH.
6. PAINTED WOOD LOUVERED OVERHANG.
7. METAL COPING WITH KYNAR FINISH ON WOOD BLOCKING.
8. TINTED SPLIT-FACE CMU WAINSCOT. RAKE ALL HORIZONTAL JOINTS.
9. HOLLOW METAL DOOR & FRAME W/ TRANSOM - RE: SCHEDULE.
10. CONCRETE FOOTING & FOUNDATION - RE: STRUCTURAL.
11. NOT USED.
12. HOLLOW METAL WINDOW W/ OPERABLE AWNING - RE: SCHEDULE.
13. RECESSED SOUND EQUIPMENT - SEE ELECTRICAL
14. NOT USED.
15. NOT USED.
16. NOT USED
17. 8" SPLIT-FACE CMU TINTED WALL CONSTRUCTION. RAKE ALL HORIZONTAL JOINTS.
18. WALL MOUNTED LIGHT FIXTURE - PROVIDE SENSOR TO SWITCH FIXTURE.
19. FROST-PROOF HOSE BIBB - RE: PLUMBING.
20. PAIRED DRINKING FOUNTAINS IN "HIGH-LOW" MOUNTING - RE: PLUMBING.
21. PREFABRICATED TELEPHONE ENCLOSURE WITH PAY-TELEPHONE (TELEPHONE BY OTHERS).
22. EXHAUST FAN - RE: MECHANICAL.
23. HVAC CONDENSER ON CONCRETE PAD - RE: SITE PLAN, MECHANICAL.

GENERAL NOTES

1. BUILDING SHELL BY MANF. SHALL INCLUDE ALL PERIMETER WALL CONSTRUCTION, ROOF CONSTRUCTION, BUILDING SHEAR PANELS, METAL ROOF SYSTEM, WATERPROOF BARRIER MEMBRANES AS DESCRIBED ON WALL AND BUILDING SECTIONS. CONTRACTOR IS RESPONSIBLE FOR SHOP DRAWING SUBMITTALS TO MEET ALL LOCAL AND NATIONAL CODES AND REQUIREMENTS INCLUDING COMPLIANCE WITH THE AMERICAN WITH DISABILITIES ACT.
2. UNLESS NOTED OTHERWISE, MATERIAL COLORS SHALL BE SELECTED BY ARCHITECT FROM MANUFACTURER'S STANDARD COLORS.

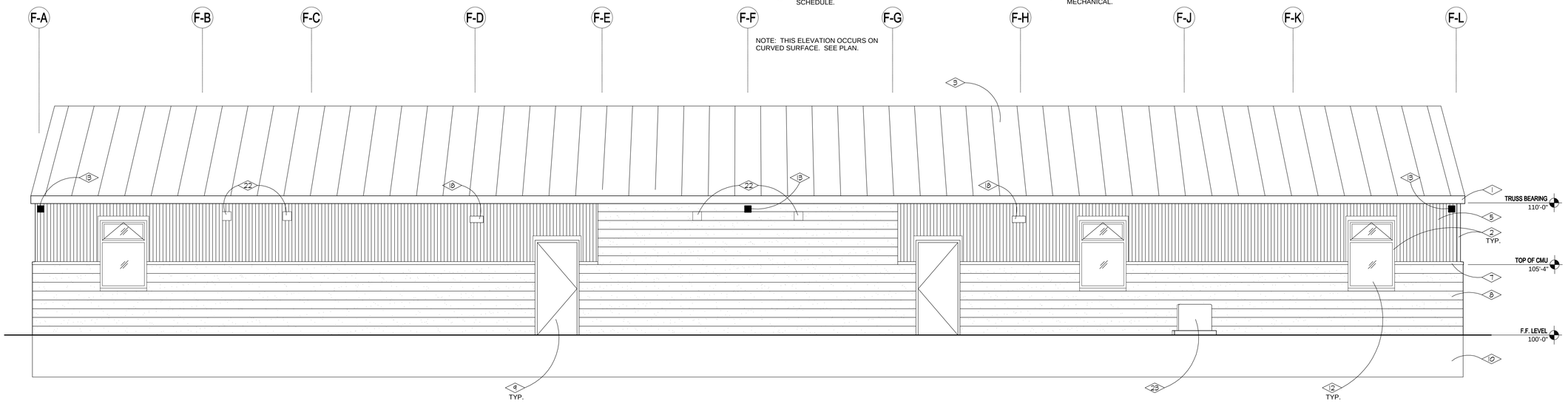

02 A203 EAST ELEVATION - BUILDING "F" (SERVICES)
SCALE: 1/4" = 1'-0"

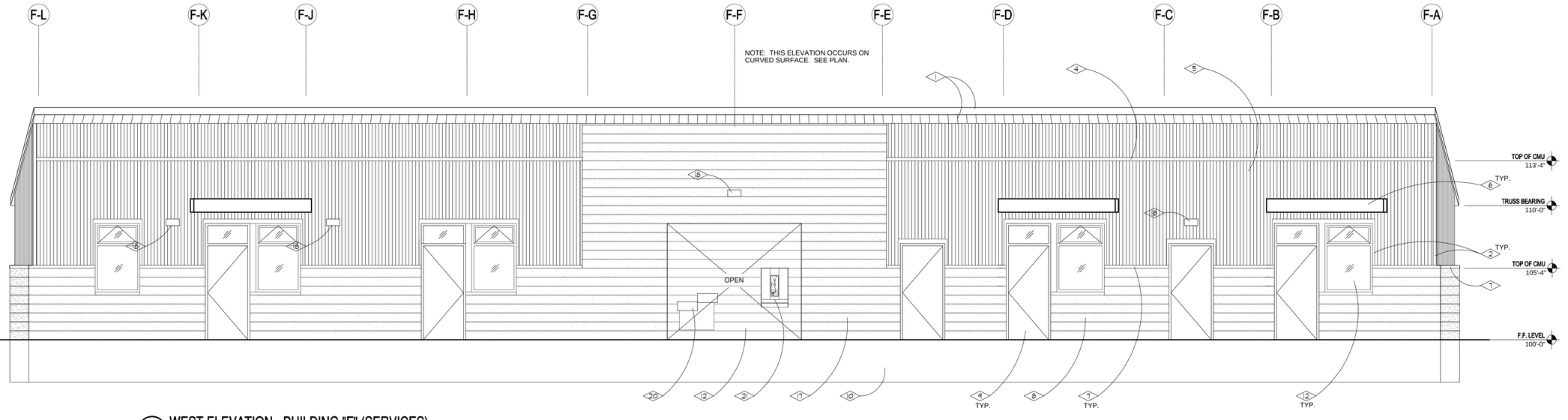

01 A203 WEST ELEVATION - BUILDING "F" (SERVICES)
SCALE: 1/4" = 1'-0"

EMA
PLANNING ● ARCHITECTURE ● INTERIORS
Salt Lake City
460 South 400 East
Salt Lake City, Utah 84111
voice: (801) 363-1511
fax: (801) 363-1560
Park City
Main Street P.O. Box 9
Park City, Utah 84060
voice: (435) 649-0092
fax: (435) 649-7127

CONSULTANTS

STATE OF UTAH
DONALD J. MAYHEW
124584
LICENSED ARCHITECT

MONUMENT VALLEY VENDOR VILLAGE

MONUMENT VALLEY, UT

OWNER
NAVAHO NATION DEPARTMENT OF ECONOMIC DEVELOPMENT

MARK	DATE	DESCRIPTION
		07-29-05 REQUEST FOR CODE APPROVAL

PROJECT NUMBER: 2002-07
DRAWING FILE:
DRAWN BY:
CHECKED BY:

COPYRIGHT 2002 EMA ARCHITECTS, LLC

SHEET TITLE

BUILDING "F" (SERVICES)
EXTERIOR ELEVATIONS

A-203

OF

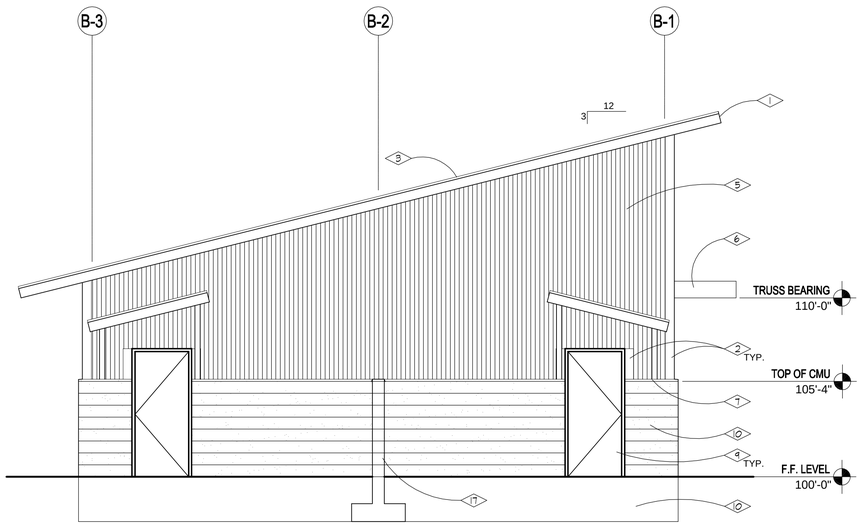

04 A204 **WEST ELEVATION - BUILDING "E" (FOOD COURT)**
SCALE: 1/4" = 1'-0" EAST ELEVATION SIMILAR

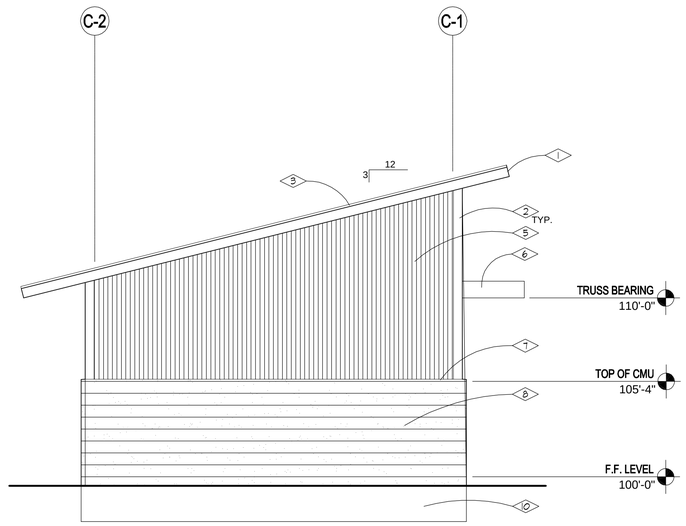

02 A204 **WEST ELEVATION - BUILDING "F" (SERVICES)**
SCALE: 1/4" = 1'-0" EAST ELEVATION SIMILAR

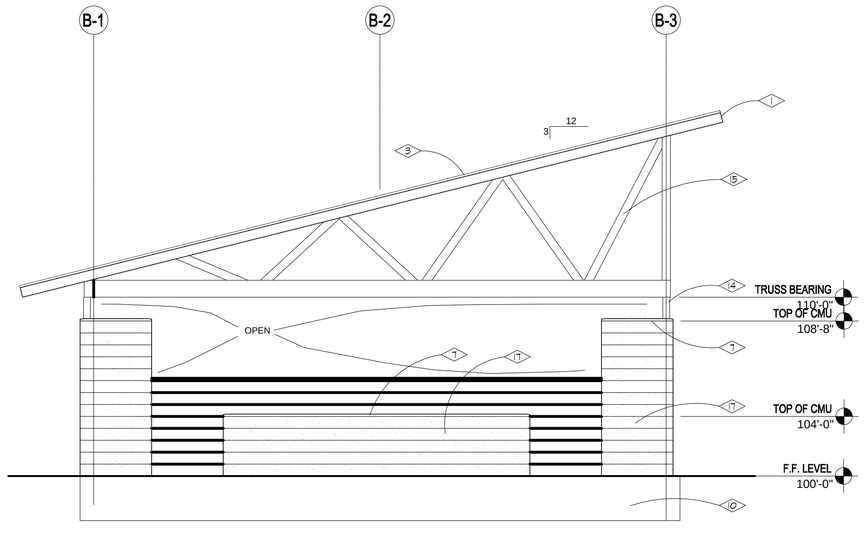

03 A204 **EAST ELEVATION - OUTDOOR DINING**
SCALE: 1/4" = 1'-0" WEST ELEVATION SIMILAR

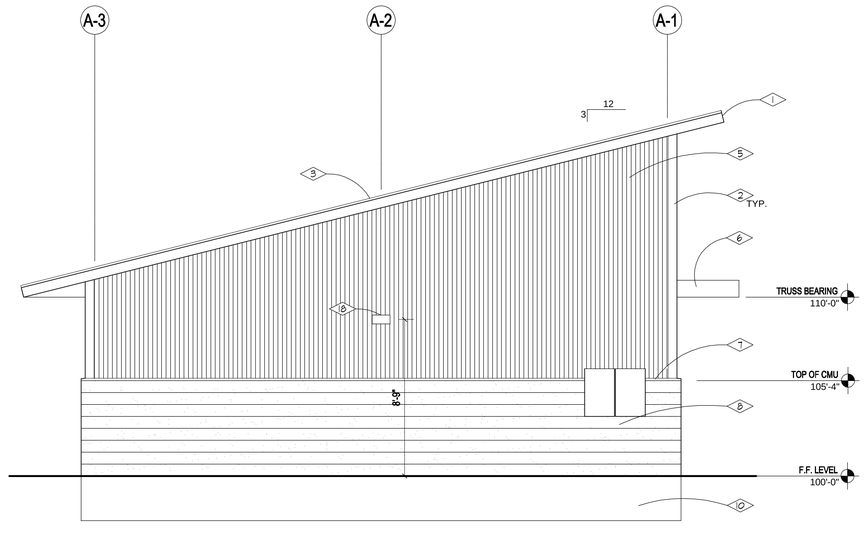

01 A204 **WEST ELEVATION - BUILDING "A, B, C, D" (RETAIL)**
SCALE: 1/4" = 1'-0" EAST ELEVATION SIMILAR

REFERENCE NOTES

1. ALUMINUM FASCIA & SOFFIT.
2. METAL FLASHING.
3. METAL PANEL ROOF SYSTEM BY BUILDING SHELL MANUFACTURER.
4. NOT USED.
5. 24 GA. VERTICALLY-ORIENTED CORRUGATED METAL SIDING SYSTEM WITH KYNAR FINISH.
6. PAINTED WOOD LOUVERED OVERHANG.
7. METAL COPING WITH KYNAR FINISH ON WOOD BLOCKING.
8. TINTED SPLIT-FACE CMU WAINSCOT. RAKE ALL HORIZONTAL JOINTS.
9. HOLLOW METAL DOOR & FRAME - RE: SCHEDULE.
10. CONCRETE FOOTING & FOUNDATION - RE: STRUCTURAL.
11. NOT USED.
12. NOT USED.
13. NOT USED.
14. PAINTED BUILT-UP WOOD BEAM - RE: STRUCTURAL.
15. EXPOSED WOOD TRUSSES BY BUILDING MANUF., PAINTED.
16. NOT USED
17. 8" SPLIT-FACE CMU WALL CONSTRUCTION. RAKE ALL HORIZONTAL JOINTS.
18. WALL-MOUNTED LIGHT FIXTURE - PROVIDE LIGHT SENSORS TO SWITCH FIXTURES.

GENERAL NOTES

1. BUILDING SHELL BY MANF. SHALL INCLUDE ALL PERIMETER WALL CONSTRUCTION, ROOF CONSTRUCTION, BUILDING SHEAR PANELS, METAL ROOF SYSTEM, WATERPROOF BARRIER MEMBRANES AS DESCRIBED ON WALL AND BUILDING SECTIONS. CONTRACTOR IS RESPONSIBLE FOR SHOP DRAWING SUBMITTALS TO MEET ALL LOCAL AND NATIONAL CODES AND REQUIREMENTS INCLUDING COMPLIANCE WITH THE AMERICAN WITH DISABILITIES ACT.
2. UNLESS NOTED OTHERWISE, MATERIAL COLORS SHALL BE SELECTED BY ARCHITECT FROM MANUFACTURER'S STANDARD COLORS.

EMA
PLANNING ● ARCHITECTURE ● INTERIORS
Salt Lake City — Park City
460 South 400 East, Salt Lake City, Utah 84111, voice: (801) 363-1511, fax: (801) 363-1560
364 Main Street, P.O. Box 9, Park City, Utah 84060, voice: (435) 649-0092, fax: (435) 649-7127

CONSULTANTS

STATE OF UTAH — DONALD J. MAHONEY — 124584 — LICENSED ARCHITECT

MONUMENT VALLEY VENDOR VILLAGE

MONUMENT VALLEY, UT

OWNER NAVAHO NATION DEPARTMENT OF ECONOMIC DEVELOPMENT

MARK	DATE	DESCRIPTION
	07-29-05	REQUEST FOR CODE APPROVAL

PROJECT NUMBER: 2002-07
DRAWING FILE:
DRAWN BY:
CHECKED BY:

COPYRIGHT 2002 EMA ARCHITECTS, LLC

SHEET TITLE

RETAIL, FOOD COURT, & SERVICES BLDG.
EAST & WEST ELEVATIONS

A-204

OF

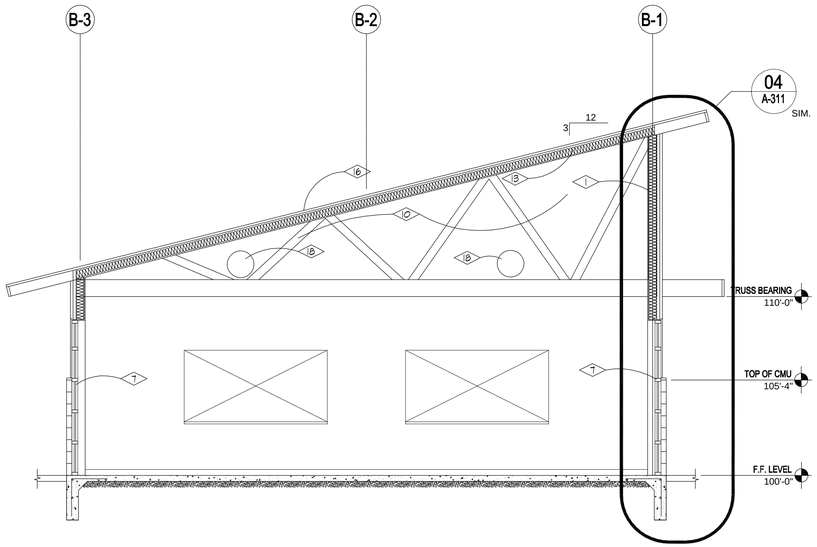

04 A301 SECTION THROUGH BUILDING "E" (FOOD COURT)
SCALE: 1/4" = 1'-0"

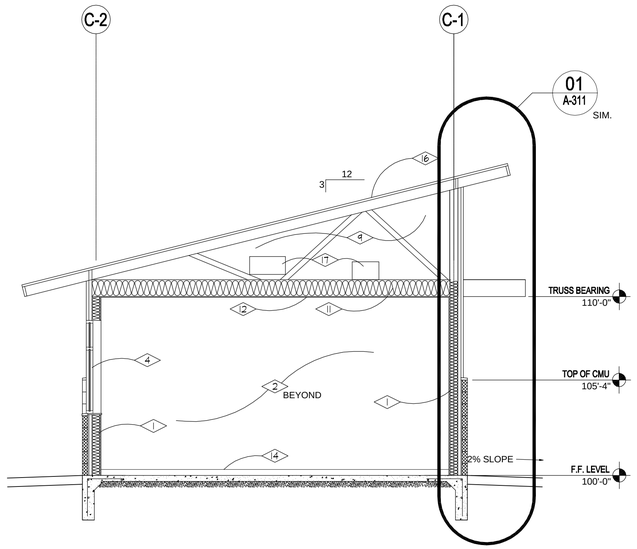

02 A301 SECTION THROUGH BUILDING "F" (SERVICES)
SCALE: 1/4" = 1'-0"

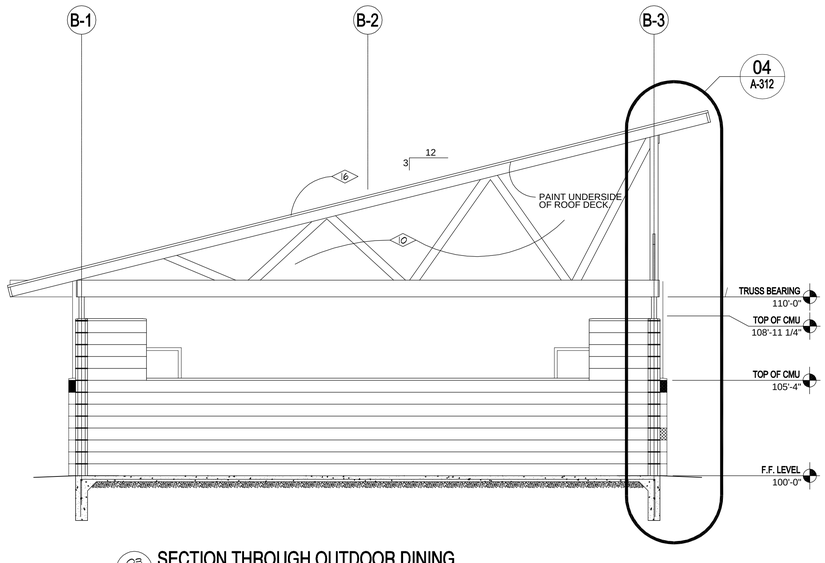

03 A301 SECTION THROUGH OUTDOOR DINING
SCALE: 1/4" = 1'-0"

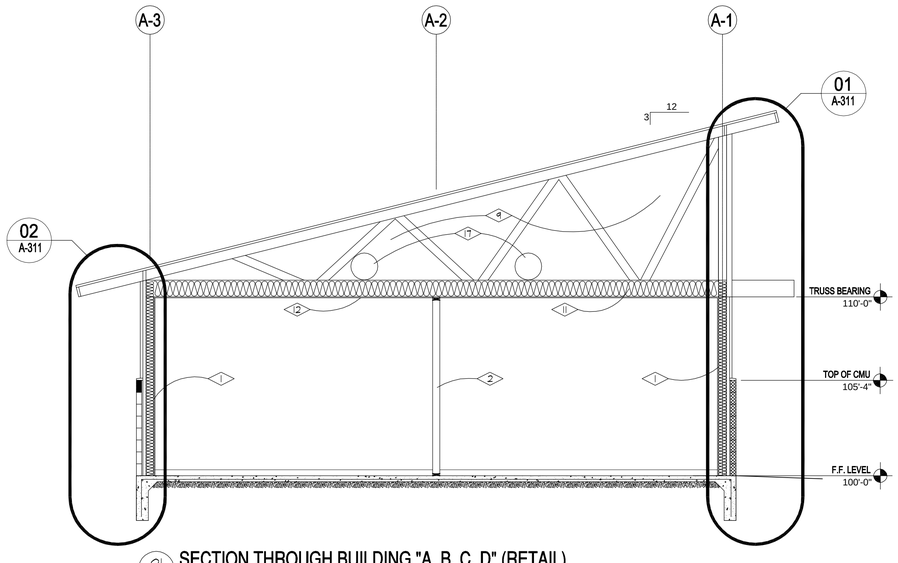

01 A301 SECTION THROUGH BUILDING "A, B, C, D" (RETAIL)
SCALE: 1/4" = 1'-0"

REFERENCE NOTES

1. EXTERIOR WALL CONSTRUCTION - RE: WALL SECTIONS.
2. INTERIOR PARTITION CONSTRUCTION - RE: FLOOR PLANS.
3. NOT USED
4. WINDOW - RE: SCHEDULE.
5. LINE OF BUILDING BEYOND.
6. DOOR AND TRANSOM - RE: SCHEDULE.
7. STOREFRONT SYSTEM.
8. 2X BLOCKING AS REQUIRED FOR SUPPORT OF SECTIONAL DOOR TRACK.
9. WOOD ROOF TRUSS WITH FINISHED CEILING AT UNDERSIDE.
10. EXPOSED PAINTED WOOD ROOF TRUSS.
11. R-30 BLDG. INSULATION (FIBERGLASS BATTS)
12. 5/8" TYPE 'X' GYPSUM BOARD - FINISH WITH "KNOCK DOWN" STIPPLED FINISH
13. R-19 BATT INSULATION
14. BASE AS SCHEDULED
15. PAINTED WALL SURFACE - BEYOND
16. METAL PANEL ROOF SYSTEM OVER WOOD SUBSTRATE.
17. DUCTWORK IN CEILING PLENUM - RE: MECHANICAL.
18. EXPOSED PAINTED DUCTWORK - RE: MECHANICAL.

GENERAL NOTES

1. BUILDING SHELL BY MANF. SHALL INCLUDE ALL PERIMETER WALL CONSTRUCTION, ROOF CONSTRUCTION, BUILDING SHEAR PANELS, METAL ROOF SYSTEM, WATERPROOF BARRIER MEMBRANES AS DESCRIBED ON WALL AND BUILDING SECTIONS. CONTRACTOR IS RESPONSIBLE FOR SHOP DRAWING SUBMITTALS TO MEET ALL LOCAL AND NATIONAL CODES AND REQUIREMENTS INCLUDING COMPLIANCE WITH THE AMERICAN WITH DISABILITIES ACT.
2. REFER TO WALL SECTIONS FOR ADDITIONAL NOTES. SEE FLOOR PLANS FOR ADDITIONAL DETAIL REFERENCES.

EMA
PLANNING ● ARCHITECTURE ● INTERIORS
Salt Lake City
460 South 400 East
Salt Lake City, Utah 84111
voice: (801) 363-1511
fax: (801) 363-1560
Park City
364 Main Street P.O. Box 9
Park City, Utah 84060
voice: (435) 649-0092
fax: (435) 649-7127

CONSULTANTS

STATE OF UTAH
DONALD J. MAYORS
124584
LICENSED ARCHITECT

MONUMENT VALLEY VENDOR VILLAGE

MONUMENT VALLEY, UT

OWNER
NAVAHO NATION DEPARTMENT OF ECONOMIC DEVELOPMENT

MARK	DATE	DESCRIPTION
	07-29-05	REQUEST FOR CODE APPROVAL

PROJECT NUMBER: 2002-07
DRAWING FILE:
DRAWN BY:
CHECKED BY:

COPYRIGHT 2002 EMA ARCHITECTS, LLC

SHEET TITLE

RETAIL, FOOD COURT, & SERVICES BLDG.
BUILDING SECTIONS

A-301

OF

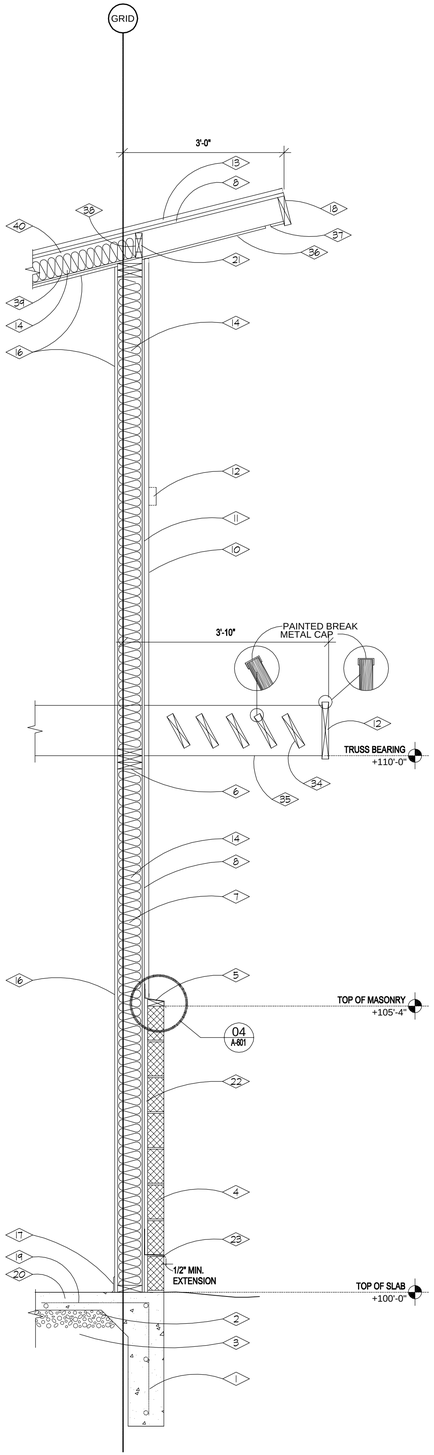

04 A311 END WALL SECTION - FOOD COURT

SCALE: 3/4" = 1'-0"

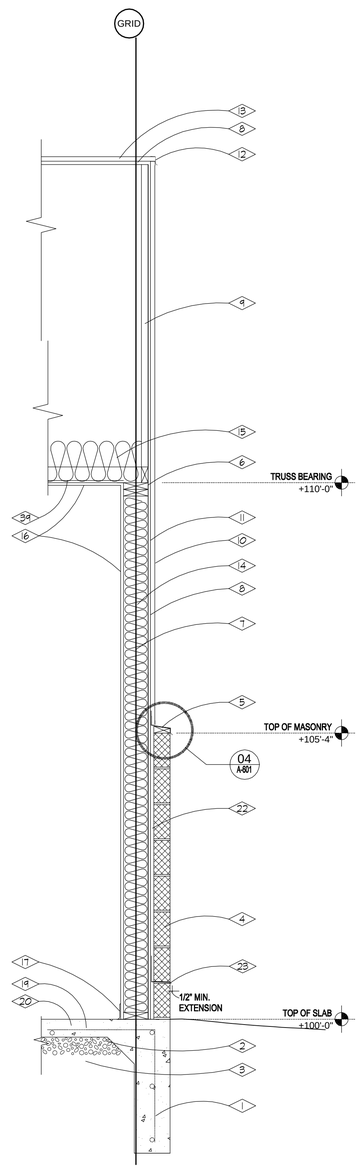

03 A311 SIDE WALL SECTION

SCALE: 3/4" = 1'-0"

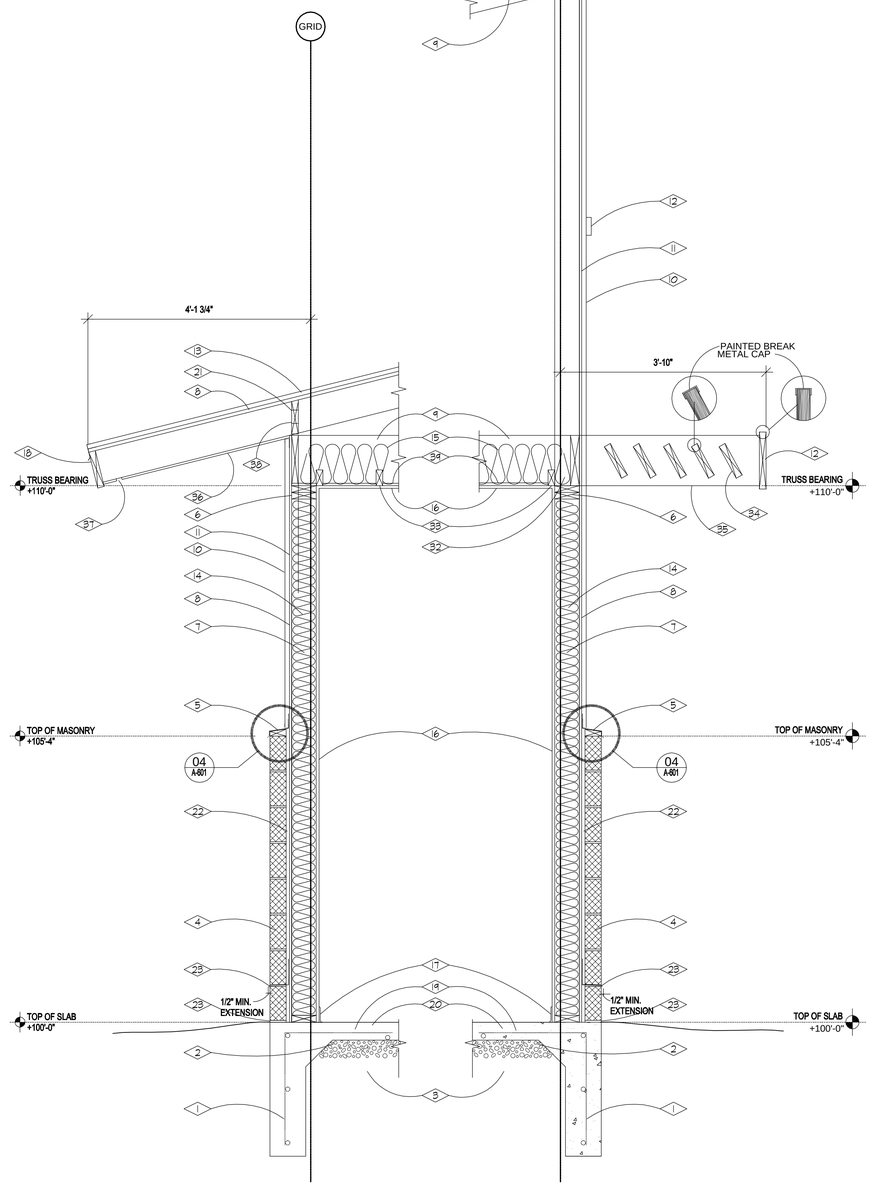

02 A311 END WALL SECTION - RETAIL

SCALE: 3/4" = 1'-0"

01 A311 END WALL SECTION - RETAIL

SCALE: 3/4" = 1'-0"

REFERENCE NOTES

1. REINFORCED CONCRETE FOUNDATION TO FROST DEPTH OVER UNDISTURBED NATURAL EARTH. REINFORCING SCHEDULE DEPTH RE: STRUCTURAL.
2. 4" CONCRETE SLAB-ON-GRADE.
3. 4" DRAINAGE FILL OVER COMPACTED EARTH.
4. 4" TINTED SPLIT FACE CMU - COLOR BY ARCHITECT. RAKE ALL HORIZONTAL JOINTS. MASONRY WALL TIES TO MEET ALL CODE REQUIREMENTS FOR SEISMIC DESIGN. INSTALL AT 16" O.C. EACH WAY MINIMUM USING GALVANIZED TIE MATERIAL. COLOR TO MATCH CORR. METAL SIDING.
5. KYNAR PAINTED METAL COPING ON WOOD BLOCKING TO MATCH METAL SIDING.
6. DBL. WOOD TOP PLATE. RE:STRUCTURAL
7. 2X6 WOOD FRAMING. RE: STRUCTURAL
8. PLYWOOD SHEATHING. RE: STRUCTURAL
9. MANUFACTURED WOOD TRUSS. RE: STRUCTURAL
10. 24 GA. CORRUGATED METAL PANEL WALL SYSTEM WITH KYNAR FINISH. COLOR BY ARCH.
11. 30# BUILDING PAPER.
12. PAINTED WOOD 2X12 FASCIA WITH PAINTED BREAK METAL CAP.
13. METAL PANEL ROOF SYSTEM COLOR BY ARCHITECT FROM MANUF. STANDARD RANGE.
14. R-19 BATT INSULATION.
15. R-30 BATT INSULATION.
16. 5/8" GYPSUM BD. - TAPED/SANDED & PAINTED.
17. BASE AS SCHEDULED.
18. ALUMINUM RAKE OVER 2X WOOD TRIM - COLOR BY ARCHITECT. PROVIDE 1/4" MIN. DRIP.
19. RADIANT FLOOR HEATING SYSTEM - RE: MECHANICAL.
20. CONCRETE TOPPING SLAB WITH INTEGRAL COLOR. FINISHED TREATMENT TO BE STAINED TO MATCH ARCHITECT'S SAMPLE.
21. CONT. 2X BLOCKING RE: STRUCTURAL
22. 3/4" AIR SPACE.
23. MASONRY WEEP HOLES @ 24" O.C. WITH CONT. FLASHING. EXTEND FLASHING 1/2" MIN. BEYOND FACE OF MASONRY WALL.
24. NOT USED.
25. NOT USED.
26. NOT USED.
27. NOT USED.
28. NOT USED.
29. NOT USED.
30. 2X4 CEILING JOISTS @ 16" O.C.
31. NOT USED.
32. "SIMPSON TIES" - RE: STRUCTURAL.
33. BLOCKING - RE: STRUCTURAL.
34. PAINTED WOOD 2X8'S @ 5 1/2" O.C. W/ PAINTED BREAK METAL CAP. MOUNT @ 61 DEGREE ANGLE.
35. PAINTED WOOD 2X10 TRUSS EXTENSION W/ PAINTED BREAK METAL CAP @ EACH SIDE OF SHADING DEVICE. RE: EXTERIOR ELEVATIONS, ROOF PLANS.
36. ALUMINUM SOFFIT - COLOR BY ARCHITECT.
37. CONT. 1 1/4" SOFFIT VENT WITH INSECT SCREEN.
38. 3" VENTILATION HOLES AT 11" O.C.
39. VAPOR RETARDER PER ASTM E96 WITH 1 PERM MAX. TRANSMISSION RATE.
40. 1" AIR GAP.

GENERAL NOTES

1. REFER TO STRUCTURAL DRAWINGS AND SCHEDULES FOR WALL AND ROOF NAILING DATA.
2. VERTICAL ELEVATIONS SHOWN ARE RELATIVE TO EACH BUILDING FLOOR SLAB. REFER TO SITE PLANS FOR BUILDING ELEVATIONS RELATIVE TO SITE.
3. MECHANICAL, ELECTRICAL & PLUMBING EQUIPMENT AND PENETRATIONS NOT SHOWN. REFER TO MEP DRAWINGS FOR ADDITIONAL DATA.

EMA
PLANNING ● ARCHITECTURE ● INTERIORS
Salt Lake City
460 South 400 East
Salt Lake City, Utah 84111
voice: (801) 363-1511
fax: (801) 363-1560
Park City
364 Main Street P.O. Box 9
Park City, Utah 84060
voice: (435) 649-0092
fax: (435) 649-7127

CONSULTANTS

MONUMENT VALLEY VENDOR VILLAGE

MONUMENT VALLEY, UT

OWNER
NAVAHO NATION DEPARTMENT OF ECONOMIC DEVELOPMENT

MARK	DATE	DESCRIPTION
	07-29-05	REQUEST FOR CODE APPROVAL

PROJECT NUMBER: 2002-07
DRAWING FILE:
DRAWN BY:
CHECKED BY:

COPYRIGHT 2002 EMA ARCHITECTS, LLC

SHEET TITLE

WALL SECTIONS

A-311

OF

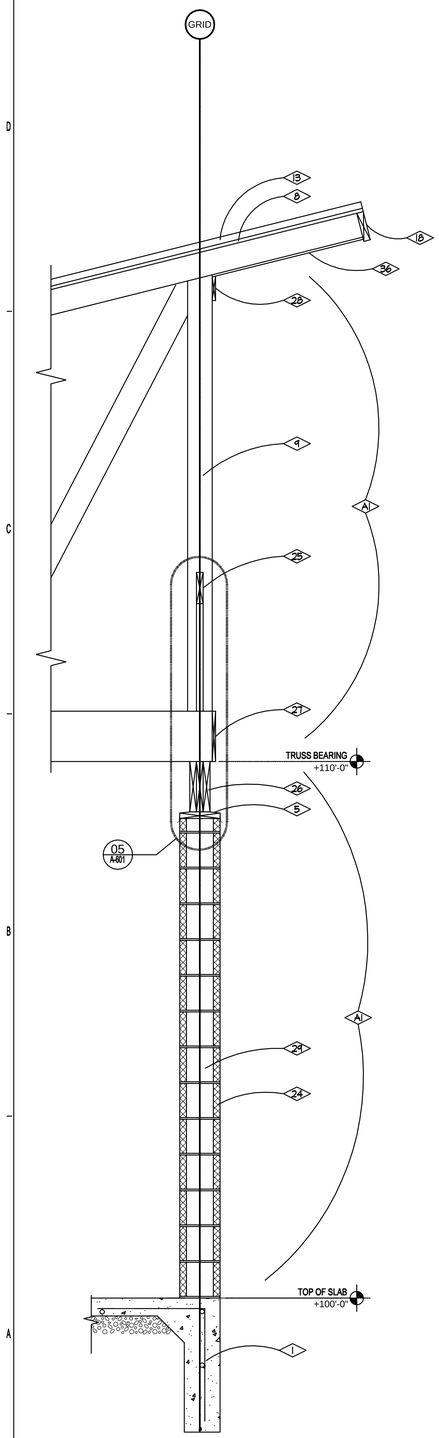

04 A312 DINING PAVILION WALL SECTION

SCALE: 3/4" = 1'-0"

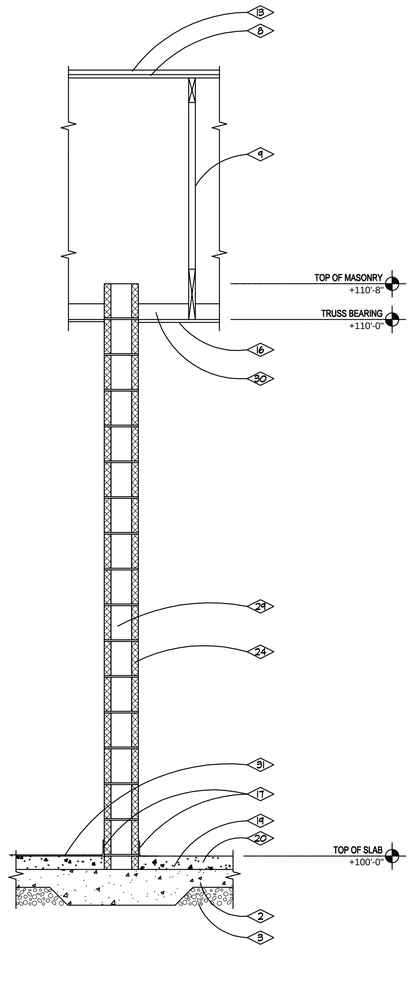

03 A312 INTERIOR WALL @ SERVICE BUILDING

SCALE: 3/4" = 1'-0"

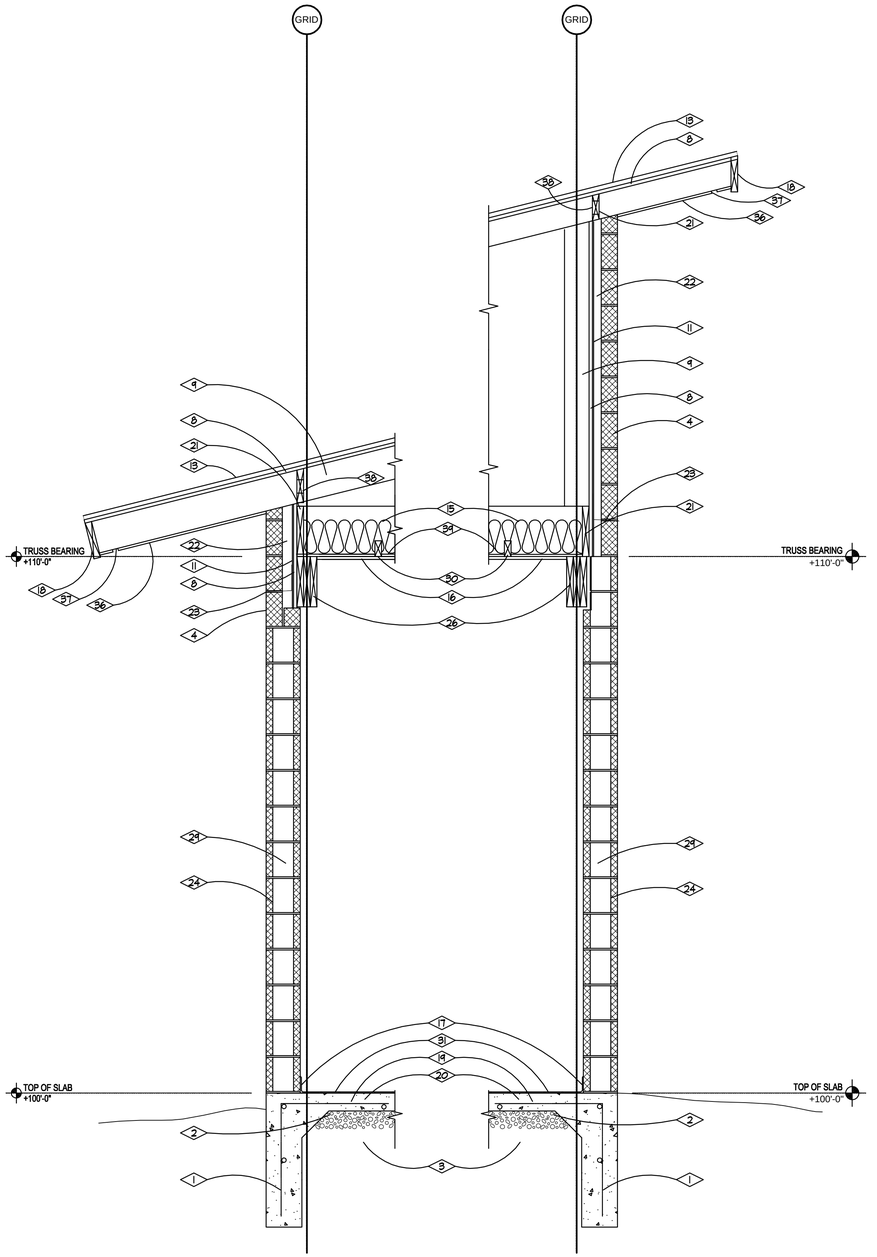

02 A312 END WALL SECTION @ SERVICE BLDG.

SCALE: 3/4" = 1'-0"

01 A312 END WALL SECTION @ SERVICE BUILDING

SCALE: 3/4" = 1'-0"

REFERENCE NOTES

1. REINFORCED CONCRETE FOUNDATION TO FROST DEPTH OVER UNDISTURBED NATURAL EARTH. REINFORCING SCHEDULE - RE: STRUCTURAL.
2. 4" CONCRETE SLAB-ON-GRADE.
3. 4" DRAINAGE FILL OVER COMPACTED EARTH.
4. 4" TINTED SPLIT FACE CMU - COLOR BY ARCHITECT. RAKE ALL HORIZONTAL JOINTS. MASONRY WALL TIES RE: STRUCTURAL
5. KYNAR PAINTED METAL COPING ON WOOD BLOCKING TO MATCH METAL SIDING.
6. NOT USED.
7. NOT USED.
8. PLYWOOD SHEATHING. RE: STRUCTURAL
9. MANUFACTURED WOOD TRUSS. RE: STRUCTURAL
10. NOT USED.
11. 30# BUILDING PAPER.
12. NOT USED.
13. METAL PANEL ROOF SYSTEM. COLOR BY ARCHITECT FROM MANUF. STANDARD RANGE.
14. NOT USED.
15. R-30 BATT INSULATION
16. 5/8" GYPSUM BD. - TAPED/SANDED & PAINTED.
17. BASE AS SCHEDULED
18. ALUMINUM RAKE OVER 2X WOOD TRIM - COLOR BY ARCHITECT. PROVIDE 1/4" MIN. DRIP.
19. RADIANT FLOOR HEATING SYSTEM - RE: MECHANICAL.
20. CONCRETE TOPPING SLAB WITH INTEGRAL COLOR. FINISHED TREATMENT TO BE STAINED TO MATCH ARCHITECT'S SAMPLE.
21. CONT. 2X BLOCKING.
22. 2"+/- AIR SPACE.
23. MASONRY WEEP HOLES @ 24" O.C. WITH CONT. FLASHING.
24. 8" SPLIT FACE CMU - COLOR BY ARCHITECT. RAKE ALL HORIZONTAL JOINTS. STRUCT. REINF. AS PER STRUCT. DRAWINGS.
25. DIAGONAL WOOD BRACING.
26. BUILT-UP WOOD BEAM - RE: STRUCTURAL.
27. PAINTED 1X12 WOOD TRIM.
28. PAINTED 1X6 WOOD TRIM.
29. PERLITE INSULATION.
30. 2X4 CEILING JOISTS @ 16" O.C.
31. THIN-SET CERAMIC FLOOR TILE - RE: FINISH SCHEDULE.
32. "SIMPSON" TIES RE: STRUCTURAL
33. BLOCKING RE: STRUCTURAL
34. NOT USED.
35. NOT USED.
36. ALUMINUM SOFFIT - COLOR BY ARCHITECT.
37. CONT. 1 1/4" SOFFIT VENT WITH INSECT SCREEN.
38. 3" VENTILATION HOLES AT 11" O.C.
39. VAPOR RETARDER PER ASTM E96 WITH 1 PERM MAX. TRANSMISSION RATE.
40. 1" AIR GAP.

GENERAL NOTES

1. REFER TO STRUCTURAL DRAWINGS AND SCHEDULES FOR WALL AND ROOF NAILING DATA.
2. VERTICAL ELEVATIONS SHOWN ARE RELATIVE TO EACH BUILDING FLOOR SLAB. REFER TO SITE PLANS FOR BUILDING ELEVATIONS RELATIVE TO SITE.
3. MECHANICAL, ELECTRICAL & PLUMBING EQUIPMENT AND PENETRATIONS NOT SHOWN. REFER TO MEP DRAWINGS FOR ADDITIONAL DATA.

EMA

PLANNING ● ARCHITECTURE ● INTERIORS

Salt Lake City
460 South 400 East
Salt Lake City, Utah 84111
voice: (801) 363-1511
fax: (801) 363-1560

Park City
364 Main Street P.O. Box 9
Park City, Utah 84060
voice: (435) 649-0092
fax: (435) 649-7127

CONSULTANTS

STATE OF UTAH
DONALD J. MATHEWS
124584
LICENSED ARCHITECT

MONUMENT VALLEY VENDOR VILLAGE

MONUMENT VALLEY, UT

OWNER
NAVAHO NATION DEPARTMENT OF ECONOMIC DEVELOPMENT

MARK	DATE	DESCRIPTION
	07-29-05	REQUEST FOR CODE APPROVAL

PROJECT NUMBER: 2002-07
DRAWING FILE:
DRAWN BY:
CHECKED BY:

COPYRIGHT 2002 EMA ARCHITECTS, LLC

SHEET TITLE

WALL SECTIONS

A-312

OF

DOOR AND FRAME SCHEDULE

DOOR NUMBER	LOCATION	DOORS: DOOR SIZE: WIDTH	HEIGHT	THICKNESS	SINGLE/PAIR	TYPE	MAT'L: HOLLOW METAL	WOOD	ALUMINUM	FRAMES: TYPE	MAT'L: HOLLOW METAL	ALUMINUM	WOOD	DEPTH	DETAILS: HEAD	JAMB	THRESHOLD	DOOR RATING LABEL	HARDWARE GROUP	NOTES
							M	W	A		HM	A	W							
1A	RETAIL	3'-0"	7'-0"	1 3/4"	S	2	M			A	HM				04 / A-402	01, 02, 03 / A-402			12	1
1B	RETAIL - SECTIONAL	8'-8"	8'-8"			7			A			A			07 / A-402	03, 05, 06 / A-402			1	1, 2
2A	FOOD COURT - FOOD SALES	3'-0"	7'-0"		S	1	M			C	HM				12 / A-402	12 / A-402			5	
2B	FOOD COURT- MECH. CL	2'-0"	7'-0"		S	3	M			E	HM				12 / A-402	12 / A-402			4	
2C	FOOD COURT	3'-0"	7'-0"	1 3/4"	S	2			A	H		A			9, 14 / A-402	15, 16 / A-402			2	3
2D	FOOD COURT - FOOD SALES	3'-0"	7'-0"	1 3/4"	S	1	M			C	HM				04 / A-402	01, 02 / A-402			3	
3A	SERVICE BUILDING	3'-0"	7'-0"	1 3/4"	S	1	M			C	HM				04 / A-402	01, 02 / A-402			6	
3B	SERVICE - RESTROOMS	3'-0"	7'-0"	1 3/4"	S	1	M			F	HM				10 / A-402	10 / A-402			7	
3C	SERVICE - MECH. - STOR.	3'-0"	7'-0"	1 3/4"	S	1	M			C	HM				04 / A-402	01, 02 / A-402			6	
3D	SERVICE - OFFICES	3'-0"	7'-0"	1 3/4"	S	1		W		C	HM				12 / A-402	9, 12 / A-402			8	4
3E	SERVICE - CONF. CLOSET	4'-0"	7'-0"	1 3/4"	P	4		W		D	HM				12 / A-402	12 / A-402			10	4
3F	SERVICE - ENTRY	3'-0"	7'-0"	1 3/4"	S	1	M			B	HM				04 / A-402	01, 02 / A-402			11	
3G	SERVICE - CHASE.	1'-8	7'-0"	1 3/4"	S	6		W		G	HM				10 / A-402	10 / A-402			6	

NOTES:

1. NOT USED
2. OVERHEAD SECTIONAL DOOR.
3. STOREFRONT UNIT.

DOOR/ WDW. KEYNOTES:

<1> METAL PANEL - PAINTED - OVER SOLID PHENOLIC CORE GLAZED INTO DOOR FRAME SYSTEM. PANELS BY DOOR MANUF.

<2> TEMPERED GLASS PANEL.

<3> ALUMINUM SECTIONAL DOOR WITH PERIMETER WEATHER STRIPPING DOOR SHALL BE SIMILAR TO "HAAS DOOR-MODEL CA-110-NARROW LINE FRAME." PROVIDE ANODIZED FINISH.

ROOM FINISH SCHEDULE

ROOM NUMBER	ROOM NAME	FLOOR FINISH	BASE TYPE	NORTH WALL	EAST WALL	SOUTH WALL	WEST WALL	CEILING TYPE	CEILING HEIGHT	NOTES
A01-A08	TYPICAL RETAIL SPACE	F1	B1	W4	W4	W4	W4	C2	9'-11"	1, 10 BASE BID
A09,A10	TYPICAL RETAIL SPACE	F1	B1	W4	W4	W4	W4	C2	9'-11"	1, 10 ADD. ALT.
B01-B04	TYPICAL FOOD SALES	F1	B2	W1/W3	W1/W3	W1/W3	W1/W3	C2	9'-11"	1
B05	FOOD COURT	F1	B2	W1/W3	W1/W3	W1/W3	W1/W3	C2	VARIES	2
B06-B09	TYPICAL MECHANICAL CLOSET	F1	B4	W1	W1	W1	W1	C2	8'-0"	3
B10	COVERED EATING	F4	--	O/W2	O/W2	O/W2	O/W2	O/W2	VARIES	4,5
C01	LOBBY	F3	B1	W1	W1	W1	W1	C3	8'-0"	3, 7, 8, 9
C02	OFFICE	F3	B1	W1	W1	W1	W1	C3	8'-0"	3, 7, 8, 9
C03	CONFERENCE	F3	B1	W1	W1	W1	W1	C3	8'-0"	3, 7, 8, 9
C04	CLOSET	F3	B1	W1	W1	W1	W1	C2	8'-0"	3, 7, 8, 9
C05	OFFICE	F3	B1	W1	W1	W1	W1	C3	8'-0"	3, 7, 8, 9
C06	MECHANICAL ROOM	F5	B4	W1	W1	W1	W1	C2	9'-0"	1
C07	STORAGE	F5	B4	W1	W1	W2	W1	C2	9'-0"	1
C08	VESTIBULE	F4	--	W2	W2	W2	O	C2	9'-0"	4
C09	MEN'S TOILET	F1	--	W2	W2	W2	W2	C3	8'-0"	3
C10	WOMEN'S TOILET	F1	--	W2	W2	W2	W2	C3	8'-0"	3

LEGEND

FLOOR FINISHES
- F1 - 4" COLORED & SEALED CONCRETE SLAB
- F2 - CERAMIC TILE
- F3 - CARPET
- F4 - SEALED CONCRETE SLAB W/ FINE BROOM FINISH
- F5 - SEALED CONCRETE SLAB

BASE TYPES
- B1 - PAINTED 5 1/2" X 3/4" WOOD
- B2 - METAL TRIM
- B3 - CERAMIC TILE
- B4 - RESILIENT BASE

WALL FINISHES
- O - OPEN
- W1 - PAINTED GYPSUM BOARD
- W2 - EXPOSED CMU
- W3 - VERTICALLY-ORIENTED CORRUGATED METAL SIDING
- W4 - WOOD SLATS ON GYPSUM BOARD
- W5 - CERAMIC TILE WAINSCOT (48")

CEILING TYPES
- C1 - EXPOSED PAINTED STRUCTURE ABOVE
- C2 - PAINTED GYPSUM BOARD
- C3 - SUSPENDED ACOUSTICAL TILE

FINISH NOTES:

1. FINISHED CEILING INSTALLED AT UNDERSIDE OF ROOF TRUSS BOTTOM CHORD.
2. FINISHED CEILING INSTALLED AT UNDERSIDE OF SLOPED ROOF STRUCTURE.
3. SUSPENDED CEILING SYSTEM.
4. UNCONDITIONED OUTDOOR SPACE
5. SLOPED ROOF STRUCTURE
6. WAINSCOT 3'-0" LONG ADJACENT TO FLOOR SINK.

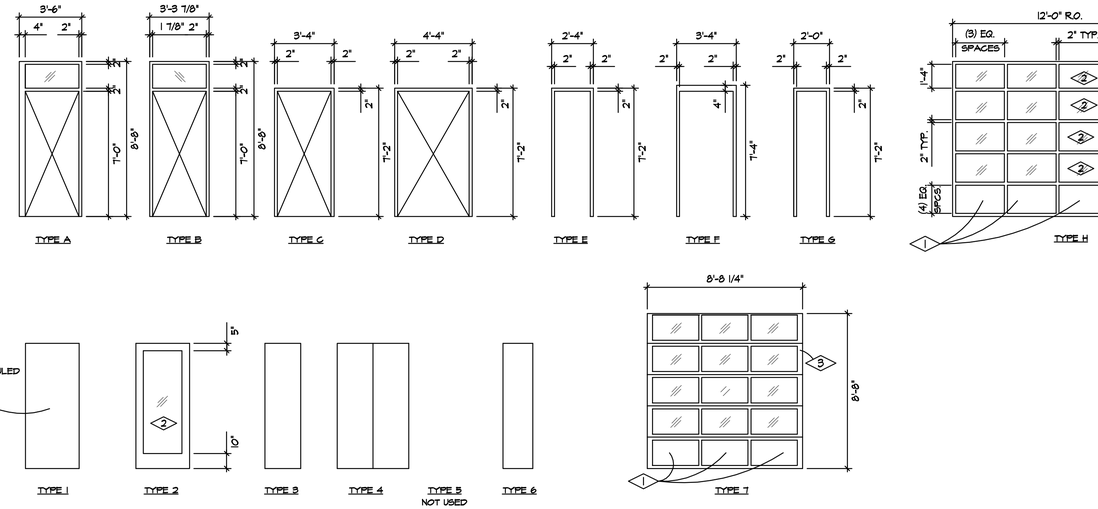

WINDOW SCHEDULE

WINDOW NUMBER	LOCATION	WINDOW: SIZE: WIDTH	HEIGHT	TYPE	MAT'L: DOUBLE GLAZED: D	SINGLE GLAZED: S	FRAME DEPTH	FRAME: MAT'L: HOLLOW METAL: HM	ALUMINUM: A		DETAILS: HEAD	JAMB	SILL	MULLION	TYPE: DOUBLE HUNG: DH	FIXED: F	FIXED W/ AWNING: F/A	NO. OF WINDOWS	NOTES
2A	FOOD COURT - KITCHENS	3'-6"	3'-6"	A	D		4"		A		14/A402	15, 16/A402	13/A402				F/A	4	
3A	SERVICES BUILDING	3'-6"	5'-0"	B	D		4"		A		14/A402	15, 16/A402	13/A402				F/A	8	

EMA
PLANNING ● ARCHITECTURE ● INTERIORS
Salt Lake City Park City
460 South 400 East 364 Main Street P.O. Box 9
Salt Lake City, Utah 84111 Park City, Utah 84060
voice: (801) 363-1511 voice: (435) 649-0092
fax: (801) 363-1560 fax: (435) 649-7127

CONSULTANTS

STATE OF UTAH
DONALD J. MAHONEY
124584
LICENSED ARCHITECT

MONUMENT VALLEY VENDOR VILLAGE
MONUMENT VALLEY, UT
OWNER
NAVAHO NATION DEPARTMENT OF ECONOMIC DEVELOPMENT

MARK	DATE	DESCRIPTION
	07-29-05	REQUEST FOR CODE APPROVAL

PROJECT NUMBER: 2002-07
DRAWING FILE:
DRAWN BY:
CHECKED BY:

COPYRIGHT 2002 EMA ARCHITECTS, LLC

SHEET TITLE
FINISH SCHEDULE
DOOR SCHEDULE
WINDOW SCHEDULE

A-401

OF

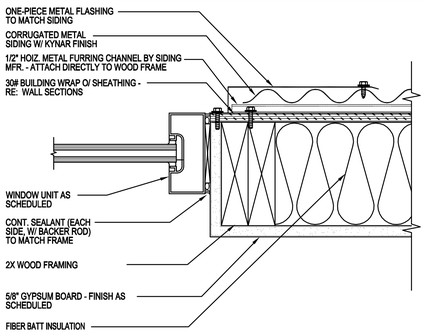

16 A-402 DOOR/WINDOW JAMB DTL. @ SIDING
SCALE: 3" = 1'-0"

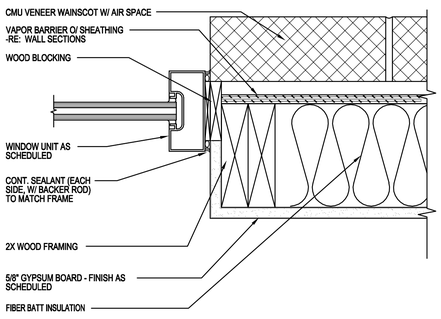

15 A-402 DOOR/WINDOW JAMB @ WAINSCOT
SCALE: 3" = 1'-0"

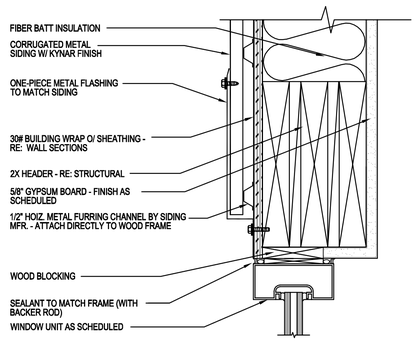

14 A-402 DOOR/WINDOW HEAD DETAIL
SCALE: 3" = 1'-0"

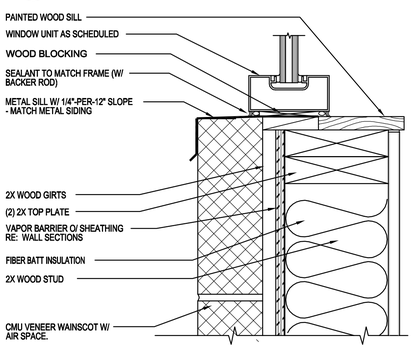

13 A-402 WINDOW SILL DETAIL
SCALE: 3" = 1'-0"

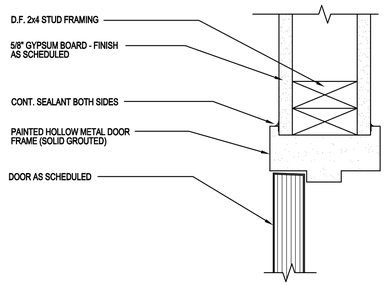

12 A-402 HEAD/JAMB DETAIL
SCALE: 3" = 1'-0"

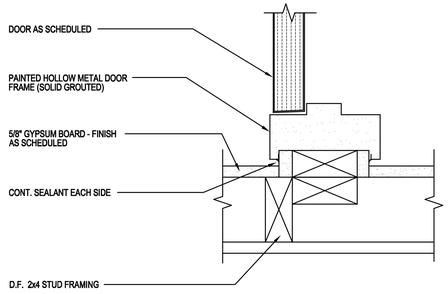

11 A-402 JAMB DETAIL
SCALE: 3" = 1'-0"

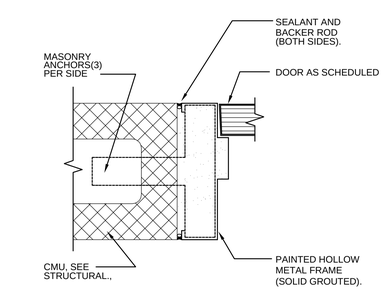

10 A-402 JAMB DETAIL (HEAD SIMILIAR)
SCALE: 3" = 1'-0"

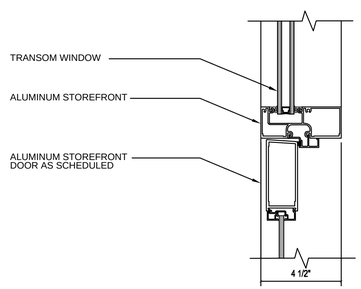

09 A-402 HEAD DETAIL
SCALE: 3" = 1'-0"

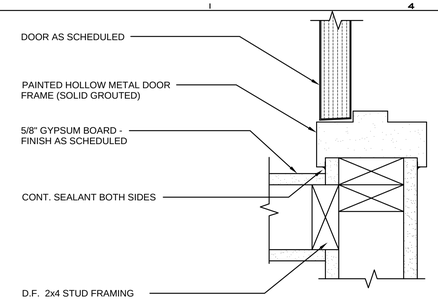

08 A-402 JAMB DETAIL
SCALE: 3" = 1'-0"

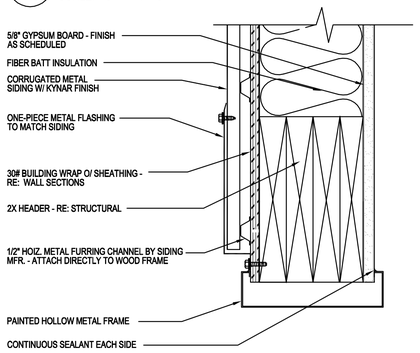

07 A-402 HEAD DETAIL
SCALE: 3" = 1'-0"

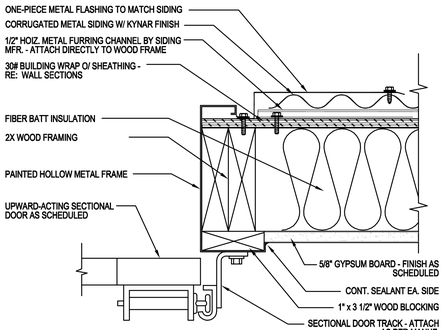

06 A-402 JAMB DETAIL @ SIDING
SCALE: 3" = 1'-0"

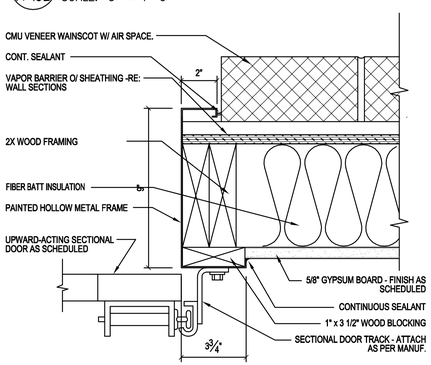

05 A-402 JAMB DETAIL @ WAINSCOT
SCALE: 3" = 1'-0"

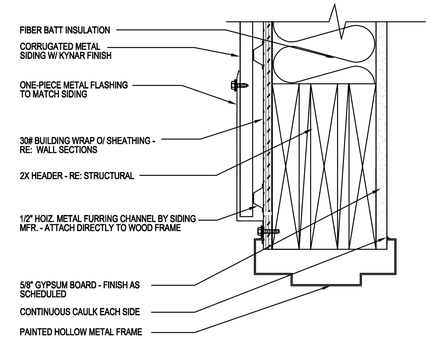

04 A-402 HEAD DETAIL
SCALE: 3" = 1'-0"

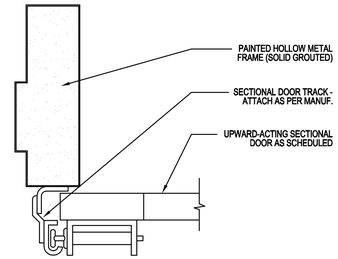

03 A-402 JAMB DETAIL
SCALE: 3" = 1'-0"

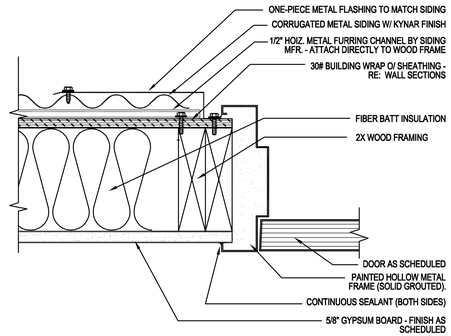

02 A-402 DOOR JAMB DETAIL @ SIDING
SCALE: 3" = 1'-0"

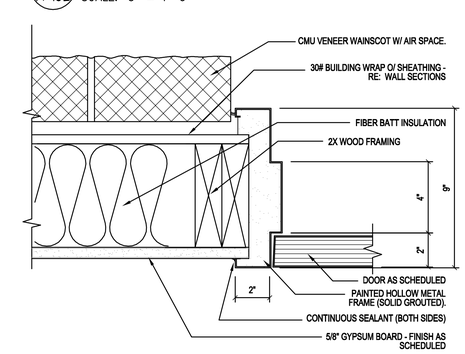

01 A-402 DOOR JAMB DETAIL @ WAINSCOT
SCALE: 3" = 1'-0"

EMA
PLANNING ● ARCHITECTURE ● INTERIORS
Salt Lake City
460 South 400 East
Salt Lake City, Utah 84111
voice: (801) 363-1511
fax: (801) 363-1560
Park City
364 Main Street P.O. Box 9
Park City, Utah 84060
voice: (435) 649-0092
fax: (435) 649-7127

CONSULTANTS

MONUMENT VALLEY VENDOR VILLAGE
MONUMENT VALLEY, UT
OWNER
NAVAHO NATION DEPARTMENT OF ECONOMIC DEVELOPMENT

MARK	DATE	DESCRIPTION
	07-29-05	REQUEST FOR CODE APPROVAL

PROJECT NUMBER: 2002-07
DRAWING FILE:
DRAWN BY:
CHECKED BY:

COPYRIGHT 2002 EMA ARCHITECTS, LLC

SHEET TITLE

DOOR & WINDOW DETAILS

A-402

OF

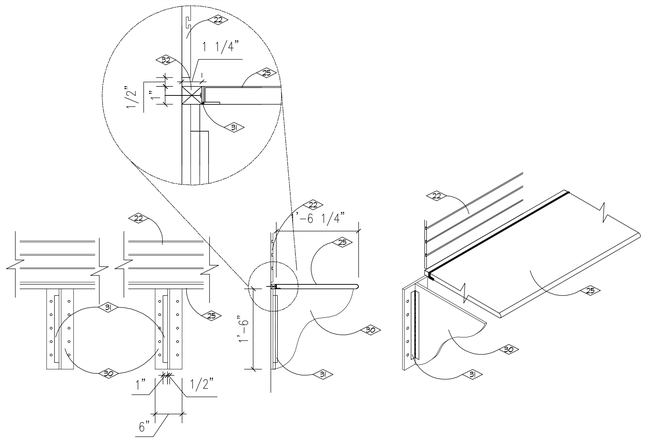

12 A50 RETAIL COUNTER
SCALE: 3/4" = 1'-0"

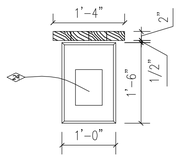

11 A50 EXTERIOR BENCH
SCALE: 3/4" = 1'-0"

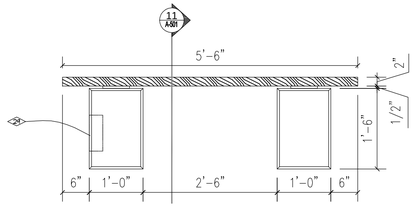

10 A50 EXTERIOR BENCH
SCALE: 3/4" = 1'-0"

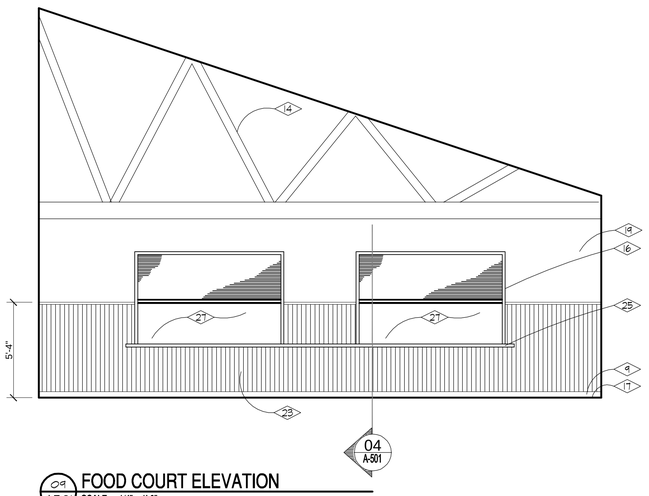

09 A50 FOOD COURT ELEVATION
SCALE: 1/4" = 1'-0"

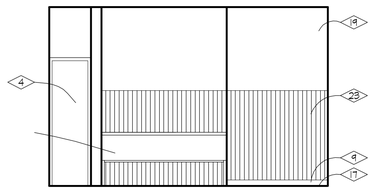

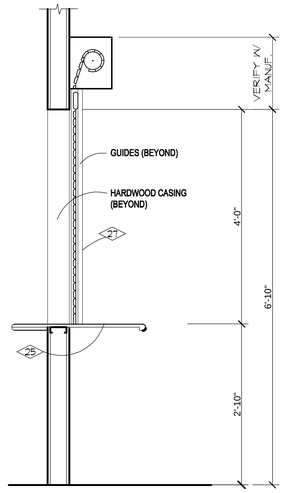

08 A50 FOOD SALES B02 - NORTH
SCALE: 1/4" = 1'-0"
FOOD SALES B01, B03, B04 SIMILAR.

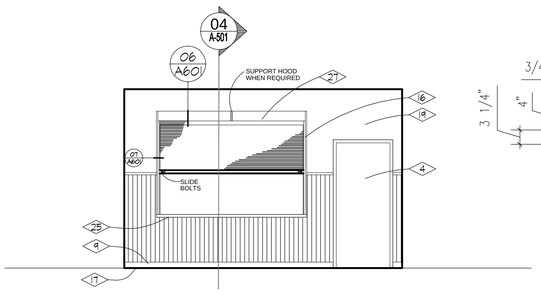

07 A50 FOOD SALES B02 - EAST
SCALE: 1/4" = 1'-0"
FOOD SALES B01, B03, B04 SIMILAR.

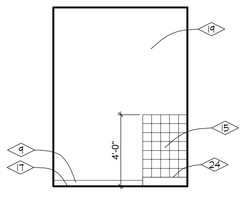

06 A50 JANITOR SINK
SCALE: 1/4" = 1'-0"

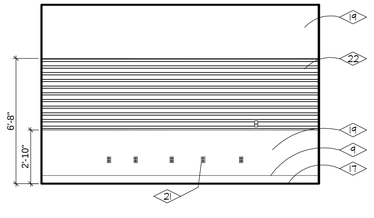

05 A50 TYPICAL RETAIL ELEVATION
SCALE: 1/4" = 1'-0"
TOILET F15 SIMILAR

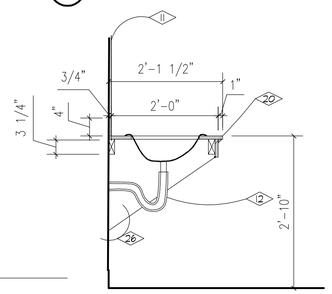

04 A50 BASE CAB./PASS-THRU
SCALE: 3/4"=1'-0"

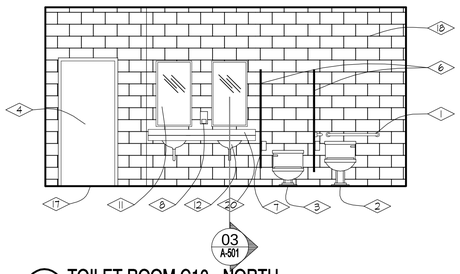

03 A50 COUNTER W/ LAVATORY
SCALE: 3/4"=1'-0"

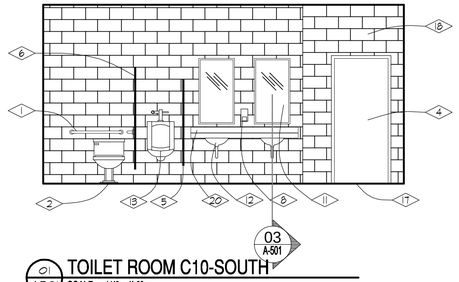

02 A50 TOILET ROOM C10 - NORTH
SCALE: 1/4" = 1'-0"

01 A50 TOILET ROOM C10-SOUTH
SCALE: 1/4" = 1'-0"

REFERENCE NOTES

1. WALL MOUNTED 1/2" STAINLESS STEEL GRAB BAR.
2. FLOOR MOUNTED BARRIER FREE TYPE WATER CLOSET, SEE PLUMBING DWGS.
3. FLOOR MOUNTED WATER CLOSET, SEE PLUMBING DRAWINGS.
4. DOOR AND FRAME, SEE FLOOR PLAN & DOOR SCHEDULE.
5. WALL MOUNTED URINAL SCREEN.
6. TOILET PARTITION.
7. SURFACE MOUNTED TOILET TISSUE DISPENSER.
8. SURFACE MOUNTED SOAP DISPENSER.
9. BASE AS SCHEDULED
10. SURFACE MOUNTED FEMININE NAPKIN RECEPTACLE.
11. MIRROR.
12. LAVATORY W/INSULATED SUPPLY & DRAIN LINES-SEE PLUMBING DWGS.
13. BARRIER FREE URINAL- SEE PLUMBING DRAWINGS.
14. PAINTED, EXPOSED WOOD TRUSSES RE: STRUCTURAL & ARCH. BUILDING SECTIONS.
15. CERAMIC TILE AS SCHEDULED.
16. PAINTED HOLLOW METAL FRAME.
17. FLOOR FINISH AS SCHEDULED.
18. EXPOSED CMU WALL, FINISH AS PER SCHEDULE.
19. GYPSUM BOARD, FINISH AS PER SCHEDULE.
20. PARTICLEBOARD COUNTER BACKSPLASH W/PLASTIC LAMINATE FINISH. AND FULL ISO "RADIUSED (HALFROUND) FRONT EDGE.
21. ELECTRICAL OUTLETS. RE: FLOOR PLAN, ELEC.
22. 3/4" THICK NOM. 4X8 PARTICLEBOARD SLATWALL IN STANDARD FINISH TO BE SELECTED BY ARCHITECT. PROVIDE BLOCKING IN WALL AS PER MANUF. REQUIREMENTS. HARDWARE AND SHELVES PROVIDED BY OWNER.
23. VERTICALLY-ORIENTED CORRUGATED METAL WAINSCOT WITH METAL TRIM CAP. STANDARD COLOR TO BE SELECTED BY ARCHITECT.
24. MOP SINK WITH FLOOR DRAIN RE: PLUMBING.
25. SOLID SURFACE COUNTER TOP. RADIUS FRONT EDGE 1/2". COLOR BY ARCH.
26. PAINTED WOOD
27. COILING SHUTTER
28. SINK RE: PLUMBING
29. CAST INSET TO CONTAIN POWER AND DATA - SEE ELECTRICAL
30. MELAMINE
31. CONT. METAL HINGE OR PVC PAINTED FINISH
32. CONT. BLOCKING TO PROVIDE SPACE FOR FOLDING COUNTERTOP - ANCHOR TO WALL

GENERAL NOTES

1. REFER TO FINISH SCHEDULE FOR ADDITIONAL FINISH NOTES.
2. CONTRACTOR SHALL PROVIDE ADDITIONAL STUDS AS REQUIRED FOR PARTITION AND FIXTURE INSTALLATIONS AT STUD PARTIONS.
3. CERAMIC TILES TO BE SELECTED BY ARCHITECT FROM MANUFACTURER'S FULL COLOR LINE. PROVIDE ACCENT TILES AND BORDERS AS INDICATED-
4. CONTRACTOR TO FIELD VERIFY LOCATION AND PLACEMENT OF ALL FIXTURES AND ACCESSORIES AND COORDINATE WITH A.D.A. REQUIREMENTS.
5. PROVIDE A CONTINUOUS WATERPROOFING MEMBRANE FULL LENGTH AND WIDTH OF TOILET ROOMS.
6. PROVIDE PLYWOOD BEHIND ALL MIRROR SURFACES FLUSH WITH TILE. EXTEND TILE 2" INSIDE EDGE OF MIRROR TO CONCEAL EDGE, TYPICAL.
7. TILE AT WALLS TO INCLUDE 15% FACTOR FOR ACCENT COLOR. PATTERN FOR ACCENT BANDS TO BE PROVIDED DURING CONSTUCTION PERIOD USING FULL AND HALF SIZED PIECES. (HALF SIZES MAY INCLUDE DIAGONAL CUTS)
8. ALL CORNERS AND TERMINATIONS AT TILE SHALL BE BULLNOSED.
9. PLUMBING FIXTURES SHALL BE CENTERED WITHIN MOUNTING LOCATIONS UNLESS NOTED. OTHERWISE.
9. REFER TO FLOOR PLANS FOR ADDITIONAL PLUMBING FIXTURE ACCESSORY NOTES AND DIMENSIONS.

FIXTURE MOUNTING DATA

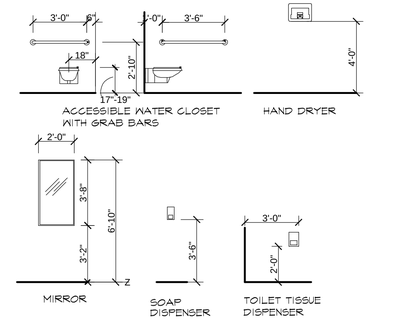

EMA
PLANNING ARCHITECTURE INTERIORS
Salt Lake City
460 South 400 East Main Street P.O. Box 9
Salt Lake City, Utah 84111 Park City, Utah 84060
voice: (801) 363-1511 voice: (435) 649-0092
fax: (801) 363-1560 fax: (435) 649-7127

CONSULTANTS

STATE OF UTAH
DONALD J. MANN
124584
LICENSED ARCHITECT

MONUMENT VALLEY VENDOR VILLAGE

MONUMENT VALLEY, UT

OWNER NAVAHO NATION DEPARTMENT OF ECONOMIC DEVELOPMENT

MARK	DATE	DESCRIPTION
	07-29-05	REQUEST FOR CODE APPROVAL

PROJECT NUMBER: 2002-07
DRAWING FILE:
DRAWN BY:
CHECKED BY:

COPYRIGHT 2002 EMA ARCHITECTS, LLC

SHEET TITLE

TOILET ROOM PLANS & ELEVATIONS & BLDG. DETAILS

A-501

OF

GENERAL STRUCTURAL NOTES:

I. GENERAL:

A. THE STRUCTURAL DRAWINGS SHOW THE COMPLETED PROJECT. DETAILS, SECTIONS, AND NOTES SHOWN ON THE DRAWINGS SHALL BE TYPICAL AND APPLY TO SIMILAR SITUATIONS ELSEWHERE UNLESS NOTED OR SHOWN OTHERWISE.
B. REFER TO THE SPECIFICATIONS FOR INFORMATION NOT COVERED BY THESE NOTES OR STRUCTURAL DRAWINGS. WHERE THE STRUCTURAL NOTES, DRAWINGS OR SPECIFICATIONS DISAGREE, THE CONTRACTOR MAY REQUEST A CLARIFICATION. OTHERWISE THE MORE STRINGENT REQUIREMENTS SHALL CONTROL.
C. CONTRACTOR SHALL COMPARE ALL DIMENSIONS AND CONDITIONS ON CONTRACT DOCUMENTS AND AT THE SITE. ANY OMISSION OR CONFLICT SHALL BE BROUGHT TO THE ATTENTION OF THE ARCHITECT/ENGINEER. IN CASE OF ANY CONFLICT FOLLOW THE MOST STRINGENT REQUIREMENT AS DIRECTED BY ARCHITECT/ENGINEER.
D. CONTRACTOR SHALL PROVIDE ADEQUATE TEMPORARY BRACING FOR ALL PORTIONS OF THE BUILDING UNTIL THE ENTIRE STRUCTURE OF THE BUILDING IS COMPLETE.
E. OBSERVATION VISITS TO THE SITE BY STRUCTURAL ENGINEER?S FIELD REPRESENTATIVES SHALL NOT BE CONSTRUED AS INSPECTION OR APPROVAL OF CONSTRUCTION.
F. ANY ENGINEERING DESIGN PROVIDED BY OTHERS AND SUBMITTED FOR REVIEW SHALL BEAR THE SEAL AND SIGNATURE OF A STRUCTURAL ENGINEER REGISTERED IN UTAH.

II. DESIGN CRITERIA:

A. BUILDING CODE: 2003 INTERNATIONAL BUILDING CODE (IBC) W/ AMENDMENTS
B. LOADINGS:
   1. ROOF SNOW LOAD = 30 PSF + SNOW DRIFT PER IBC
   2. BASIC WIND SPEED - 90 MPH - EXPOSURE C
   3. SEISMIC DESIGN CATEGORY: D
C. FOUNDATION:
   1. ALL EXTERIOR FOOTINGS ARE TO BE FOUNDED AT NOT LESS THAN 30" BELOW LOWEST ADJACENT FINISH FLOOR OR FINISH GRADE ONTO A MINIMUM THICKNESS OF 1 FOOT OF ENGINEERED FILL MATERIAL HAVING A MINIMUM NET BEARING CAPACITY OF 2500 PSF (WESTERN TECHNOLOGIES INC. JOB NO. 9121JC128).

III. CONCRETE:

A. ALL MATERIALS SHALL COMPLY WITH ACI 318 AND ACI 347 PUBLICATIONS AND APPLICABLE ASTM PUBLICATIONS.
B. CONCRETE MATERIAL PROPERTIES: 28- DAY COMPRESSIVE STRENGTHS ARE TO BE 3000 PSI TYPICAL UNLESS NOTED OTHERWISE. DESIGN BASED ON 2500 PSI.
C. CAST IN PLACE CONCRETE:
   1. SPACING OF CONSTRUCTION JOINTS OR CONTROL JOINTS IN WALLS EXPOSED TO VIEW SHALL NOT EXCEED 40 FEET UNLESS SPECIFICALLY NOTED OTHERWISE ON THE DRAWINGS.
   2. PROVIDE EXTRA REINFORCING AROUND ALL OPENINGS EXCEEDING 24 INCHES SQUARE OR ROUND IN ALL SLABS AND WALLS EQUAL TO TWO #5 BARS ON FOUR SIDES AND EXTEND TWO FEET BEYOND THE OPENING.
   3. PROVIDE A 7" CHAMFER ON ALL EXPOSED CORNERS OF CONCRETE UNLESS NOTED OTHERWISE.
   4. PROVIDE CLASS B LAP SPLICES FOR ALL REINFORCING UNLESS NOTED OTHERWISE.
   5. PROVIDE ISOLATION JOINTS AROUND ALL COLUMNS AT ALL EXPOSED SLAB ON GRADE AREAS.
D. CONSTRUCTION JOINTS AND CONTROL JOINTS:
   1. PROVIDE A CONTINUOUS 2X4 KEYWAY IN ALL WALL FOOTINGS, UNLESS NOTED OTHERWISE.
   2. ALL HORIZONTAL AND VERTICAL CONSTRUCTION JOINTS SHALL HAVE A CONTINUOS 2X4 KEYWAY ALONG THE JOINT UNLESS NOTED OTHERWISE. IN ADDITION, ALL JOINTS SHALL BE INTENTIONALLY ROUGHENED TO A FULL AMPLITUDE OF APPROXIMATELY 3".
   3. PROVIDE REINFORCING DOWEL TO MATCH THE MEMBER REINFORCING AT THE JOINT UNLESS NOTED OTHERWISE.
   4. SLABS ON GRADE SHALL HAVE CONSTRUCTION OR CONTROL JOINTS SPACED NOT TO EXCEED 42 TIME THE SLAB THICKNESS IN ANY DIRECTION. CONSTRUCTION JOINTS SHALL NOT EXCEED A DISTANCE OF 125'-0" O.C. IN ANY DIRECTION.
   5. CONTROL JOINTS SHALL BE INSTALLED IN SLAB ON GRADE SO THE LENGTH TO WIDTH RATIO OF THE SLAB IS NO MORE THAN 1.25:1. CONTROL JOINTS SHALL BE COMPLETED WITHIN 12 HOURS OF CONCRETE PLACEMENT.

IV. REINFORCING STEEL:

A. ALL BARS #4 AND LARGER TO BE ASTM A 615, GRADE 60. ALL #2 AND #3 BARS TO BE ASTM A 615, GRADE 40. DETAILED, FABRICATED AND ERECTED IN ACCORDANCE WITH ACI-318, LATEST ADOPTION.
B. ALL REINFORCING STEEL SHALL BE BENT, DETAILED AND CHAIRED AS PER "ACI MANUAL OF STANDARD PRACTICE FOR DETAILING REINFORCING CONCRETE STRUCTURES".
C. WELDED WIRE FABRIC TO BE IN ACCORDANCE WITH ASTM A 185.
D. COMPLETE COVER REQUIREMENTS FOR DEFORMED BAR REINFORCING STEEL SHALL COMPLY WITH ACI 318, "BUILDING CODE REQUIREMENTS FOR REINFORCING CONCRETE".
   1. CAST-IN-PLACE CONCRETE:
      a) CONCRETE CAST AGAINST AND PERMANENTLY EXPOSED TO EARTH: 3"
      b) FORMED CONCRETE EXPOSED TO EARTH OR WEATHER:
         #6 BARS AND LARGER: 2"
         #5 BARS AND SMALLER: 1-1/2"
      c) CONCRETE NOT EXPOSED TO WEATHER OR IN CONTACT WITH GROUND:
         SLABS, WALLS JOISTS: #11 BARS OR SMALLER: ?"
         BEAMS, COLUMNS: PRIMARY REINFORCING, TIES, STIRRUPS, SPIRALS: 1-1/2"

V. MASONRY:

A. GENERAL:
   1. LIGHTWEIGHT HOLLOW CONCRETE MASONRY UNIT TO BE ASTM C 90, GRADE N-I AND HAVE A MINIMUM UNIT STRENGTH OF 2800 PSI AND F'm OF 2000 PSI. MORTAR TO BE TYPE "S". GROUT FILL TO BE 2000 PSI AT 28 DAYS.
   2. MASONRY DESIGN IS BASED ON LEVEL TWO SPECIAL INSPECTION.
   3. SEE CONCRETE FOR REQUIREMENTS FOR REINFORCING.
B. MASONRY REINFORCING:
   1. MINIMUM REINFORCING OF CONCRETE MASONRY UNIT WALLS:
      ALL MASONRY WALLS SHALL BE REINFORCING AS FOLLOWS, UNLESS SHOWN OTHERWISE ON THE DRAWINGS
      8" C.M.U. WALLS #5 VERTICAL AT 32" O.C.
      #5 HORIZONTAL AT 48" O.C.
   2. C.M.U. WALLS ARE TO HAVE #5 VERTICALS AT ALL CORNERS, ENDS, JAMBS, INTERSECTIONS AND BOTH SIDES OF CONTROL JOINTS, TYPICAL UNLESS NOTED OTHERWISE.
   3. BUILDING WALLS ARE TO HAVE 2 #5 BARS CONTINUOUS IN A MINIMUM 8" DEEP BOND BEAM AT ALL ROOF AND FLOOR LEVELS UNLESS NOTED OTHERWISE.
   4. BUILDING WALLS ARE TO HAVE 1 #5 BAR CONTINUOUS IN A MINIMUM 8" DEEP BOND BEAM AT THE TOP OF ALL PARAPETS UNLESS NOTED OTHERWISE.
   5. PROVIDE A MINIMUM OF 2 #5 BARS X (THE WIDTH OF THE OPENING PLUS 4'-0") IN A MINIMUM 8" DEEP BOND BEAM BELOW ALL WINDOW AND MECHANICAL OPENINGS UNLESS NOTED OTHERWISE.
C. MASONRY LINTELS:
   1. ALL REINFORCING IS TO EXTEND A MINIMUM OF 2'-0" BEYOND THE JAMB AND TO BE GROUTED SOLID FOR THE ENTIRE DEPTH INDICATED.
   2. ALL CONCRETE MASONRY UNITS USED IN THE LENGTH ARE TO BE "OPEN-END" TYPE, TO INSURE FULLY GROUTED HEAD JOINTS.
   3. ALL LINTELS ARE TO BE PROPERLY SHORED FOR THEIR WEIGHT PLUS ANY CONSTRUCTION LOADS AND LATERALLY BRACED TO PREVENT ANY LATERAL MOVEMENT FOR A MINIMUM OF 7 DAYS AFTER GROUTING, UNLESS NOTED OTHERWISE.
D. MASONRY GROUTING PROCEDURES:
   1. GROUTED MASONRY SHALL BE CONSTRUCTED IN SUCH A MANNER THAT ALL ELEMENTS OF THE MASONRY ACT TOGETHER AS A STRUCTURAL ELEMENT.
   2. PRIOR TO GROUTING, THE GROUT SPACE SHALL BE CLEANED SO THAT ALL SPACES TO BE FILLED WITH GROUT DO NOT CONTAIN MORTAR PROJECTIONS GREATER THAN 1/2", MORTAR DROPPINGS OR OTHER FOREIGN MATERIAL.
   3. GROUT MATERIALS AND WATER CONTENT SHALL BE CONTROLLED TO PROVIDE ADEQUATE FLUIDITY FOR PLACEMENT, WITHOUT SEGREGATION OF THE CONSTITUENTS AND SHALL BE MIXED THOROUGHLY. SEGREGATION OF THE GROUT MATERIALS AND DAMAGE TO THE MASONRY SHALL BE AVOIDED DURING THE GROUTING PROCESS.
   4. THE GROUTING OF ANY SECTION OF WALL SHALL BE COMPLETED IN ONE DAY WITH NO INTERRUPTIONS GREATER THAN ONE HOUR.
   5. BETWEEN GROUT POURS, A HORIZONTAL CONSTRUCTION JOINT SHALL BE FORMED BY STOPPING ALL WITHERS AT THE SAME ELEVATION AND WITH THE GROUT STOPPING A MINIMUM OF 1 1/2 INCHES BELOW A MORTAR JOINT, EXCEPT AT THE TOP OF THE WALL. WHERE BOND BEAMS OCCUR, STOP GROUT POUR A MINIMUM OF 1/2 INCH BELOW THE TOP OF THE MASONRY.
   6. ALL CELLS AND SPACES CONTAINING REINFORCING BARS SHALL BE FILLED WITH GROUT. GROUT SHALL BE PLACED SO THAT ALL SPACES TO BE GROUTED DO NOT CONTAIN VOIDS.
   7. GROUT SHALL BE CONSOLIDATED BY MECHANICAL VIBRATION DURING PLACING BEFORE LOSS OF PLASTICITY IN A MANNER TO FILL THE GROUT SPACE. GROUT POURS GREATER THAN 12 INCHES SHALL BE RECONSOLIDATED BY MECHANICAL VIBRATION TO MINIMIZE VOIDS DUE TO WATER LOSS. GROUT POURS 12 INCHES OR LESS IN HEIGHT SHALL BE MECHANICALLY VIBRATED, OR PUDDLED.
   8. WHERE GROUT POURS EXCEED 5 FEET, CLEANOUTS SHALL BE PROVIDED IN THE BOTTOM COURSE AT EVERY VERTICAL BAR LOCATION BUT SHALL NOT BE SPACED MORE THAN 32 INCHES ON CENTER FOR SOLID GROUTED MASONRY. GROUT SHALL BE PLACED IN A CONTINUOUS POUR NOT TO EXCEED 16 FEET IN HEIGHT, AND IN GROUT LIFTS NOT TO EXCEED 6 FEET.
   9. REINFORCING SHALL BE CONTINUOUS THE FULL HEIGHT OF THE GROUT POUR PLUS ANY REQUIRED LAP ABOVE. REINFORCEMENT SHALL BE SECURED AGAINST DISPLACE MENT PRIOR TO GROUTING BY WIRE POSITIONERS OR OTHER SUITABLE DEVICES AT INTERVALS NOT TO EXCEED 200 BAR DIAMETERS NOR 10 FEET.
   10. TOLERANCE FOR THE PLACEMENT OF STEEL IN WALLS AND FLEXURAL ELEMENTS SHALL BE PLUS OR MINUS 1/2 INCH FOR "D" EQUAL TO 8 INCHES OR LESS, PLUS OR MINUS ONE INCH FOR "D" EQUAL TO 24 INCHES OR LESS BUT GREATER THAN 8 INCHES, AND PLUS OR MINUS 1 1/4 INCH FOR "D" GREATER THAN 24 INCHES.

VI. STRUCTURAL AND MISCELLANEOUS STEEL:

A. MATERIAL PROPERTIES:
   1. ALL SHAPES, PLATES, ANGLES, AND CHANNELS TO BE ASTM A-36 UNLESS NOTED OTHERWISE.
   2. ALL WF SHAPES WEIGHING 84 POUNDS PER LINEAR FOOT OR LESS TO BE ASTM A 572, GRADE 50. ALL WF SHAPES WEIGHING MORE THAN 84 POUNDS PER LINEAR FOOT TO BE ASTM A 572, GRADE 36.
   3. SQUARE OR RECTANGULAR TUBES TO BE ASTM A 500, GRADE B, FY = 46 KSI.
   4. ALL STEEL TO BE DETAILED, FABRICATED AND ERECTED IN ACCORDANCE WITH A.I.S.C. SPECIFICATIONS, LATEST ADOPTION.
B. WELDING:
   1. FOR STRUCTURAL STEEL TO BE IN ACCORDANCE WITH A.W.S. REQUIREMENTS FOR E70XX ELECTRODES. E60XX MAY BE USED FOR WELDING STEEL FLOOR AND ROOF DECKS.
C. BOLTS:
   1. ALL BOLTS TO BE 3/4" DIAMETER ASTM A 325-N UNLESS NOTED OTHERWISE. A325N BOLTS SHALL BE USED IN CONNECTIONS FOR SIMPLE SPAN FRAMING AND BEAMS TO BEARING PLATE CONNECTIONS. TIGHTEN BOLTS TO SNUG TIGHT CONDITION. A SNUG TIGHT CONDITION IS USUALLY ATTAINED BY A FEW IMPACTS OF AN IMPACT WRENCH OR THE FULL EFFORT OF A MAN USING AN ORDINARY SPUD WRENCH. BOLTS SHALL BE TIGHTENED UNTIL ALL PLIES OF THE JOINT ARE IN FIRM CONTACT. ALL CONNECTIONS SHALL BE INSPECTED TO INSURE CONNECTION PLIES ARE IN FIRM CONTACT.
   2. BOLTS, NUTS AND WASHERS SHALL NOT BE REUSED.
   3. ANCHOR BOLTS SHALL BE ASTM A 307 OR A 36.
   4. EXPANSION BOLTS ARE 3/4" DIAMETER RAWSET "DYNABOLTS" INSTALLED IN ACCORDANCE WITH ICBO #1372. MINIMUM EMBEDMENT TO BE 3 1/2" IN CONCRETE AND 5" IN SOLID GROUTED MASONRY. ALL CONCRETE OR MASONRY SHALL BE AT ITS SPECIFIED DESIGN STRENGTH AT THE TIME OF INSTALLATION.

VII. WOOD:

A. DIMENSIONAL LUMBER: ALL TO BE GRADE STAMPED PER W.C.L.B. RULES.
   1. ALL JOISTS, BEAMS, PLATES, HEADERS AND OTHER LUMBER TO BE D.FIR/LARCH #2 UNLESS OTHERWISE NOTED.
   2. 2 X 4 SUB-PURLINS TO BE D.FIR/LARCH NO.1.
   3. 2X 6 SUB-PURLINS TO BE D.FIR/LARCH NO.1.
   4. PURLINS TO BE D.FIR DENSE #1.
   5. 4X AND 6X POSTS TO BE D.FIR/LARCH NO.1.
   6. WALL STUDS TO BE D.FIR/LARCH #2 GRADE OR BETTER.
B. WOOD DECKING: FLOOR DECKING SHALL BE COMMERCIAL 2 X 6 (NOMINAL TONGUE AND GROOVE DECKING, HEM-FIR OR BETTER WITH A REPETITIVE Fb OF 1450 PSI MINIMUM.
C. GLU-LAMS:
   1. TO BE GRADE STAMPED PER A.I.T.C., D.FIR/LARCH COMBINATION 24F-V8 FOR CONTINUOUS SPANS AND D.FIR/LARCH COMBINATION 24F-V4 FOR SIMPLE SPANS. GLUED WITH WATERPROOF GLUE.
D. PLYWOOD:
   1. ROOF SHEATHING TO BE STD 5/8" C-D WITH EXTERIOR GLUE, IDENTIFICATION INDEX 32/16. NAIL WITH 10d NAILS AT 6" O.C. AT ALL EDGE SUPPORTS AND WITH 10d NAILS AT 12" O.C. AT ALL INTERMEDIATE SUPPORTS UNLESS NOTED OTHERWISE.
   2. EXTERIOR WALLS TO BE STD 1/2" C-C WITH EXTERIOR GLUE. NAIL WITH 10d NAILS AT 6" O.C. AT ALL EDGE SUPPORTS AND WITH 10d NAILS AT 12" O.C. AT ALL INTERMEDIATE SUPPORTS UNLESS NOTED OTHERWISE. SEE SHEAR WALL SCHEDULE FOR SHEAR WALL SHEATHING AND NAILING.
E. SPECIAL TREATMENTS (AMERICAN WOOD PRESERVERS INSTITUTE STANDARDS):
   1. ALL WOOD IN CONTACT WITH CONCRETE, MASONRY OR SOIL: PRESSURE TREAT WITH WOLMAN CCA PRESERVATIVE OR EQUAL AS APPROVED BY THE ARCHITECT.
   2. FIRE RETARDANT: PRESSURE TREAT WITH DRICON OR EQUAL AS APPROVED THE ARCHITECT.
F. WOOD NAILING SCHEDULE:
   1. JOIST TO SILL OR GIRDER, TOENAIL 3-8d
   2. BRIDGING TO JOIST, TOENAIL EACH END 2-8d
   3. 1"X6" SUBFLOOR OR LESS TO EACH JOIST FACE NAIL 2-8d
   4. WIDER THAN 1"X6" SUBFLOOR TO EACH JOIST, FACE NAIL 3-8d
   5. SUBFLOOR TO JOIST OR GIRDER, BLIND AND FACE NAIL 2-16d
   6. SOLE PLATE TO JOIST OR BLOCKING, FACE NAIL 2-16d
   7. TOP PLATE TO STUD, END NAIL 2-16d
   8. STUD TO SOLE PLATE TOENAIL 4-8d OR FACE NAIL 2-16d
   9. DOUBLE STUDS, FACE NAIL 16d @ 24" o.c.
   10. DOUBLED TOP PLATES, FACE NAIL 16d @ 16" O.C.
   11. TOP PLATES, LAPS AND INTERSECTIONS, FACE NAIL 2-16d
   12. CONTINUOUS HEADER, 2 PIECES 16d @ 16"O.C. ALONG 2 EDGES
   13. CEILING JOISTS TO PLATE, TOENAIL 3-8d
   14. CONTINUOUS HEADER TO STUD, TOENAIL 4-8d
   15. CEILING JOIST, LAPS OVER PARTITIONS FACE NAIL 3-16d
   16. CEILING JOIST TO PARALLEL RAFTERS FACE NAIL 3-16d
   17. RAFTER TO PLATE, TOENAIL 4-8d
   18. BRACE TO EACH STUD AND PLATE, FACE NAIL 2-8d
   19. 1"X8" SHEATHING OR LESS TO EACH BEARING, FACE NAIL 2-8d
   20. WIDER THAN 1"X8" SHEATHING TO EACH BEARING, FACE NAIL 3-8d
   21. BUILT UP CORNER STUDS 16d @ 24" O.C.
   22. BUILT-UP GIRDERS AND BEAMS 20d @ 32"O.C. AT TOP AND BOTTOM AND STAGGERED 2-20d AT EACH END & SPLICE
   23. PLANKS 2-16d AT EACH BEARING

VIII. MISCELLANEOUS:

A. GYPSUM WALLBOARD: FOR SHEAR WALLS TO BE STANDARD 1/2" GYPSUM WALLBOARD, NAIL WITH 5D COOLER NAILS AT 7" O.C. TO ALL STUDS, TOP AND BOTTOM PLATES AND BLOCKING.
B. STUCCO: FOR SHEAR WALLS TO BE STANDARD 7/8" PORTLAND CEMENT PLASTER ON EXPANDED METAL OR WOVEN WIRE LATH. NAIL WITH NO.11 GAGE, 1 1/2" LONG, 7/16" HEAD NAILS OR NO.16 GAGE STAPLES WITH 7/8" LONG LEGS AT 6" O.C. TO ALL STUDS, TOP AND BOTTOM PLATES AND BLOCKING.

IX. SPECIAL INSPECTION: SPECIAL INSPECTION IS NOT REQUIRED IN ACCORDANCE WITH I.B.C. SECTION 1701.

A. MASONRY IS LEVEL TWO SPECIAL INSPECTION.
B. FIELD WELDS.

X. PREFABRICATED WOOD TRUSSES:

1. TO BE "GANG-NAIL" OR "ALPINE" OR APPROVED EQUAL DESIGNED, DETAILED AND FABRICATED IN ACCORDANCE WITH THE NATIONAL FOREST PRODUCTS ASSOCIATION "NATIONAL DESIGN SPECIFICATION FOR STRESS GRADE LUMBER AND ITS FASTENING" AND THE TRUSS PLATE INSTITUTE "DESIGN SPECIFICATION FOR METAL PLATE CONNECTED WOOD TRUSSES", LATEST ADOPTION.
2. LOADING:
   a) TRUSS TOP CHORDS ARE TO BE DESIGNED FOR THE LIVE LOADS LISTED ABOVE AND FOR A SUPERIMPOSED DEAD LOAD OF NOT LESS THAN 15 PSF.
   b) TRUSS BOTTOM CHORDS ARE TO BE DESIGNED FOR A SUPERIMPOSED DEAD LOAD OF NOT LESS THAN 5 PSF.
   c) DESIGN TRUSSES FOR TWICE THE WEIGHT OF MECHANICAL UNITS INDICATED ON THE PLANS IN ACCORDANCE WITH AMERICAN INSTITUTE OF TIMBER CONSTRUCTION TECHNICAL NOTE #4, REVIEW ARCHITECTURAL AND MECHANICAL DRAWINGS FOR ADDITIONAL UNITS REQUIRED.
   d) FOR TRUSSES MANUFACTURED SUCH THAT ALL CHORDS ARE MSR LUMBER AND CHORD SPLICES ARE FINGER JOINTS AND PROOF LOADED IN ACCORDANCE WITH U.B.C STANDARDS, THE ALLOWABLE STRESS INCREASE FOR DURATION OF LOAD MAY BE THE MAXIMUM PERMITTED BY THE NATIONAL FOREST PRODUCTS ASSOCIATION "NATIONAL DESIGN SPECIFICATION FOR STRESS GRADE LUMBER AND ITS FASTENING", LATEST ADOPTION.
3. SUBMITTALS:
   a) COMPLETE DESIGN CALCULATIONS SHALL BE FURNISHED TO THE ENGINEER FOR EACH TRUSS. CALCULATIONS MUST BE PREPARED AND SEALED BY AN ENGINEER REGISTERED IN THE STATE OF UTAH.
   b) SHOP DRAWINGS SHALL BE SUBMITTED TO THE ARCHITECT FOR REVIEW BY THE ENGINEER PRIOR TO FABRICATION.
   c) THE TRUSS MANUFACTURER SHALL PROVIDE WRITTEN CERTIFICATION THAT THE TRUSS QUALITY IS IN CONFORMANCE TO "QUALITY STANDARD FOR METAL PLATE CONNECTED WOOD TRUSSES", LATEST ADOPTION, PUBLISHED BY THE TRUSS PLATE INSTITUTE.
   d) THE TRUSS MANUFACTURER SHALL HAVE A QUALITY ASSURANCE PROGRAM IN ACCORDANCE WITH SECTION 25-1739 OF UBC STANDARD NO. 25-17 AND PROVIDE WRITTEN CERTIFICATION OF COMPLIANCE FROM THE INDEPENDENT TESTING AGENCY.
4. GENERAL:
   a) ALL TRUSSES AND RELATED BRACING SHALL BE SIZED AND DETAILED TO FIT THE DIMENSIONS AND LOADS INDICATED ON THE PLANS.
   b) LUMBER USED FOR CHORDS AND WEBS SHALL HAVE A MAXIMUM MOISTURE CONTENT BELOW 19% AT THE TIME OF FABRICATION.
   c) ALL TRUSS MEMBERS SHALL MEET OR EXCEED VISUAL REQUIREMENTS FOR NO. 2 GRADE. NO WANE SHALL BE PERMITTED IN THE CONNECTION AREA.
   d) DESIGN LATERAL RESISTANCE VALUES FOR TRUSS PLATES AND METAL WEBS SHALL BE 80% OF ICBO ALLOWABLE LOAD VALUES.
   e) THE HANKINSON FORMULA OR STRAIGHT LINE INTERPOLATION SHALL BE USED TO DETERMINE LATERAL RESISTANCE VALUES FOR PLATE TO WOOD GRAIN ANGLES BETWEEN 0 AND 90 DEGREES.
   f) AT CHORD SPLICE LOCATIONS, MAXIMUM TENSION FORCES SHALL BE AS FOLLOWS:

PLATE GAGE	2X4	2X6
20	3500 #	5000 #
18	4800 #	7000 #
16	6000 #	9000 #

   g) THE AXIAL FORCE FOR A 2X4 WEB SHALL NOT EXCEED 3500 LBS.
   h) TRUSS PLATES SHALL BE SIZED SO THAT THEY CAN BE CENTERED BOTH HORIZONTALLY AND VERTICALLY ON THE JOINT UNLESS THE CHORD DEPTH OR THE TRUSS GEOMETRY PROHIBITS SUCH PLACEMENT.
   i) EVERY TRUSS PLATE SHALL BE FULLY EMBEDDED INTO THE UNDERLYING WOOD ACROSS THE ENTIRE CONTACT AREA.
   j) ALL TRUSSES SHALL BE INSTALLED IN ACCORDANCE WITH THE LATEST EDITION OF "HANDLING AND ERECTING WOOD TRUSSES: COMMENTARY AND RECOMMENDATIONS", PUBLISHED BY THE TRUSS PLATE INSTITUTE. TEMPORARY BRACING SHALL BE INSTALLED DURING ERECTION AS REQUIRED BY THE LATEST EDITION OF "BRACING WOOD TRUSSES: COMMENTARY AND RECOMMENDATIONS", PUBLISHED BY THE TRUSS PLATE INSTITUTE.

EMA ARCHITECTS, LLC
460 South 400 East Salt Lake City, Utah 84111
(801) 363-1511 (801) 363-1560 Fax

CONSULTANTS

Shen Engineers, Inc.
Structural/Seismic Consultants
3335 South 900 East, Suite 250
Salt Lake City, UT 84106
Telephone 801 466-2625
Facsimile 801 466-2656
E-mail: shenengr@msn.com

LICENSED PROFESSIONAL ENGINEER
No. 260129
HUA SHEN
STATE OF UTAH

MONUMENT VALLEY VENDOR VILLAGE
MONUMENT VALLEY, UTAH
OWNER
NAVAHO NATION DEPARTMENT OF ECONOMIC DEVELOPMENT

REVISION 1	12/15/2004	2x6 STUD WALLS
MARK	DATE	DESCRIPTION

PROJECT NUMBER: SE02094
DATE:
DRAWN BY: BS
CHECKED BY: HS

COPYRIGHT 2005 EMA ARCHITECTS, LLC

SHEET TITLE

CHANGE "CLEARY WALLS"
TO "2x6 STUD WALLS"

S-101

OF

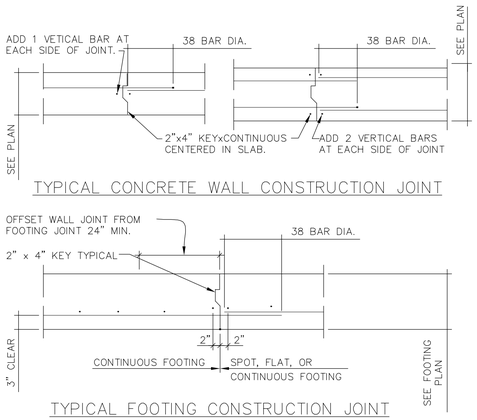

10 TYP. FTG. & WALL CONSTRUCTION JOINT

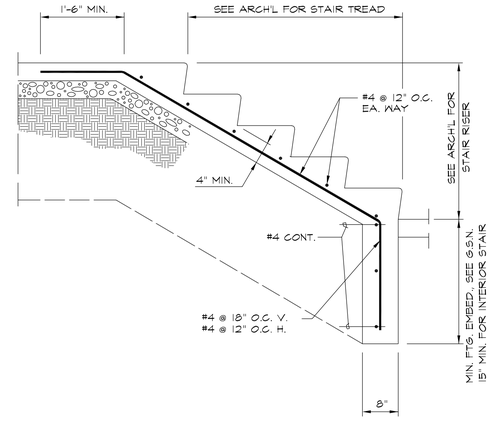

7 CONCRETE STAIR ON GRADE

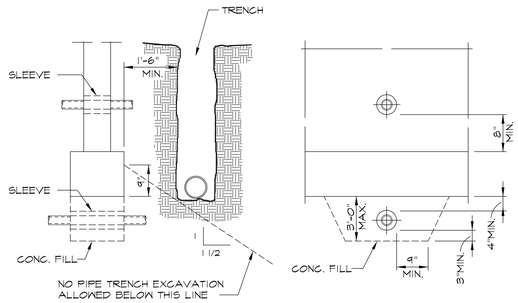

NOTE: CONCRETE FILL TO BE THE SAME WIDTH AS FOOTING & FULL WIDTH OF PIPE TRENCH. PIPE TO CLEAR SLEEVE BY 1/2" ALL AROUND

4 PIPES AT CONCRETE FOOTING

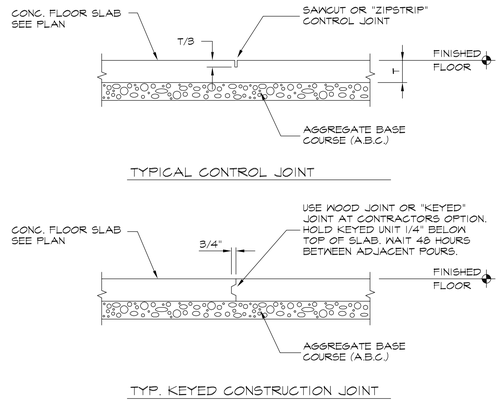

1 TYPICAL CONCRETE FLOOR JOINTS

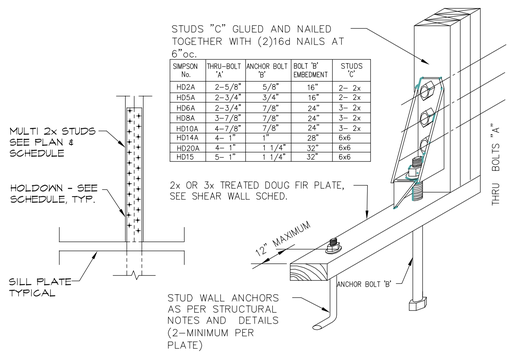

SIMPSON No.	THRU-BOLT 'A'	ANCHOR BOLT 'B'	BOLT 'B' EMBEDMENT	STUDS 'C'
HD2A	2-5/8"	5/8"	16"	2- 2x
HD5A	2-3/4"	3/4"	16"	2- 2x
HD6A	2-3/4"	7/8"	24"	3- 2x
HD8A	3-7/8"	7/8"	24"	3- 2x
HD10A	4-7/8"	7/8"	24"	3- 2x
HD14A	4- 1"	1"	28"	6x6
HD20A	4- 1"	1 1/4"	32"	6x6
HD15	5- 1"	1 1/4"	32"	6x6

11 TYPICAL HOLDOWN TO CONC.

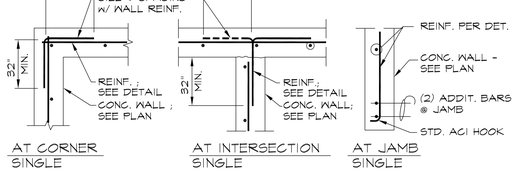

8 TYPICAL CONC. WALL REINF.

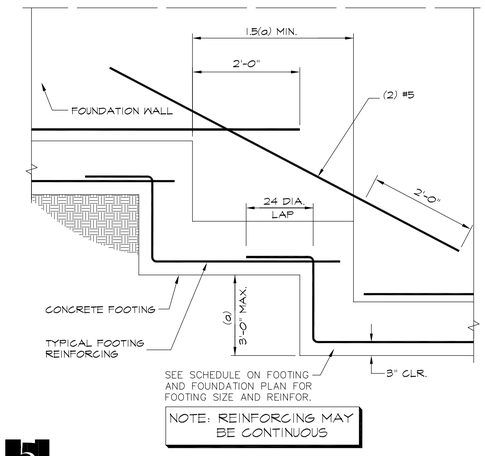

NOTE: REINFORCING MAY BE CONTINUOUS

5 TYPICAL STEPPED FOOTING

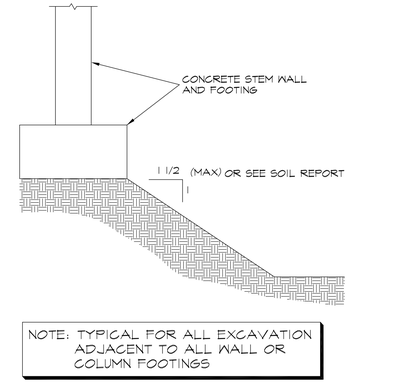

NOTE: TYPICAL FOR ALL EXCAVATION ADJACENT TO ALL WALL OR COLUMN FOOTINGS

2 EXCAVATION ADJACENT TO FOOTING

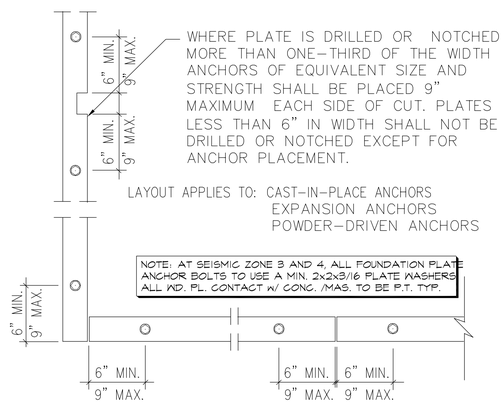

12 TYPICAL ANCHOR BOLTS LAYOUT

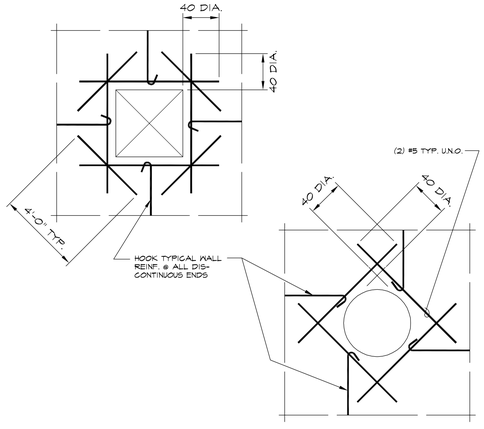

9 TYP. REINF. @ CONC. WALL OPNG.

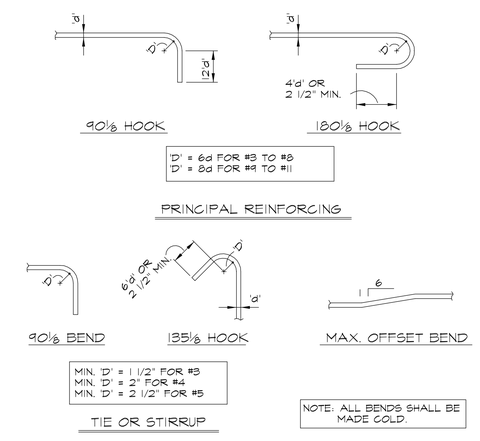

6 TYPICAL REINFORCING BAR BENDS

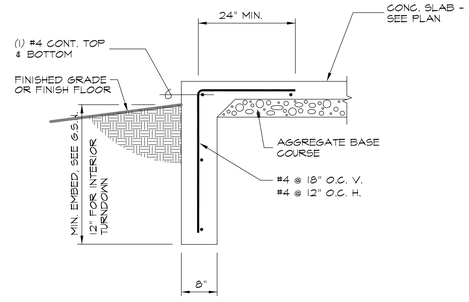

3 TYPICAL TURNDOWN FOOTING

EMA ARCHITECTS, LLC
460 South 400 East Salt Lake City, Utah 84111
(801) 363-1511 (801) 363-1560 Fax

CONSULTANTS

Shen Engineers, Inc.
Structural/Seismic Consultants
3335 South 400 East, Suite 250
Salt Lake City, UT 84106
Telephone 801 466-2625
Facsimile 801 466-2656
E-mail: shengs@msn.com

LICENSED PROFESSIONAL ENGINEER
No. 260129
HUA SHEN
STATE OF UTAH

MONUMENT VALLEY VENDOR VILLAGE

MONUMENT VALLEY, UTAH

OWNER
NAVAHO NATION DEPARTMENT OF ECONOMIC DEVELOPMENT

MARK	DATE	DESCRIPTION
REVISION 1	12/15/2004	2x6 STUD WALLS

PROJECT NUMBER: SE02094
DATE:
DRAWN BY: BS
CHECKED BY: HS

COPYRIGHT 2005 EMA ARCHITECTS, LLC

SHEET TITLE

CHANGE "CLEARY WALLS" TO "2x6 STUD WALLS"

S-102

OF

AutoCAD Version 13.x4
April 08, 1998 2:26:37 p.m.
Drawing: C:\M13\DWG\PHOTOS\0712.DWG (R4)

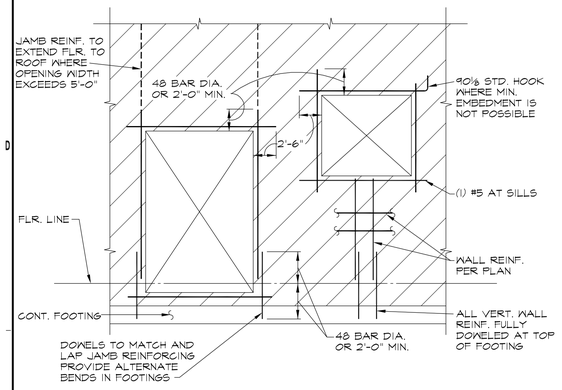

10 TYPICAL MASONRY WALL OPNG. REINF.

MARK	REINFORCING	GROUT "D"
ML-1	(2) #5	8"
ML-2	(2) #5 T. & B.	12"
ML-3	(2) #5 T. T B.	20"

ALL REINFORCING TO EXTEND A MINIMUM OF 2'-0" BEYOND JAMBS AND BE GROUTED SOLID FOR DEPTH "D".

ALL CONCRETE MASONRY UNITS USED IN LENGTH OF LINTEL TO BE "OPEN-END" TYPE, TO INSURE FULLY GROUTED HEAD JOINTS.

ALL LINTELS TO BE PROPERLY SHORED DURING GROUTING AND REMAIN IN PLACE FOR A MINIMUM OF 7 DAYS FOLLOWING GROUTING.

ALL GROUT TO BE MINIMUM OF 2000 PSI AT 28 DAYS.

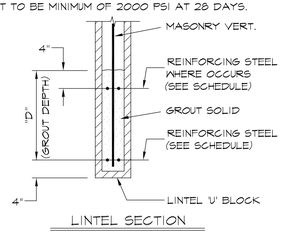

LINTEL SECTION

11 MASONRY LINTEL SCHEDULE

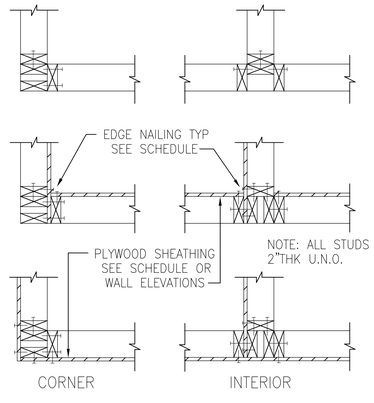

7 TYPICAL WALL INTERSECTION FRAMING

NAIL/STAPLE EQUIVALENT TABLE.

FLOORS AND ROOF

NAILS		STAPLES		
SIZE	SPACING	SIZE	SPACING	LENGTH
8d	6"	14 GA	6"	1 1/2"
8d	4"	14 GA	4"	1 1/2"
8d	2 1/2"	14 GA	2 1/2"	1 1/2"
8d	2"	14 GA	2"	1 1/2"
10d	6"	14 GA	4"	1 5/8"*
10d	4"	14 GA	2 1/2"	1 5/8"*
10d	2 1/2"	14 GA	2"	1 5/8"*

* IN 3/4" PLYWOOD USE 2" STAPLES

WALL

3/8" PLYWOOD

8d	6"	14 GA	6"	1 3/8"
8d	4"	14 GA	4"	1 3/8"
8d	3"	14 GA	3"	1 3/8"
8d	2"	14 GA	2"	1 3/8"

1/2" PLYWOOD

8d	6"	14 GA	6"	1 1/2"
8d	4"	14 GA	3"	1 1/2"
8d	3"	14 GA	2 1/2"	1 1/2"
10d	6"	14 GA	4"	1 1/2"
10d	4"	14 GA	3"	1 1/2"
10d	3"	14 GA	2"	1 1/2"

8 NAIL/STAPLE EQUIVALENT TABLE

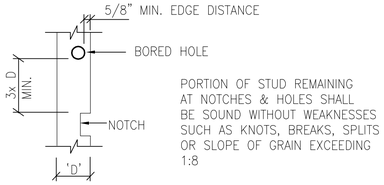

PORTION OF STUD REMAINING AT NOTCHES & HOLES SHALL BE SOUND WITHOUT WEAKNESSES SUCH AS KNOTS, BREAKS, SPLITS OR SLOPE OF GRAIN EXCEEDING 1:8

WOOD STUD SIZE	BEARING		NON-BEARING	
	MAX.ø HOLE (40%)	MAX.ø HOLE (25%)	MAX.ø HOLE (60%)	MAX.ø HOLE (40%)
2x4	1 3/8"	7/8"	2 1/8"	1 3/8"
2x6	2 3/16"	1 3/8"	3 5/16"	2 3/16"

4 TYPICAL NOTCHING IN WOOD STUDS

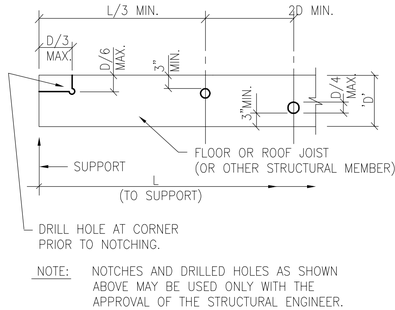

NOTE: NOTCHES AND DRILLED HOLES AS SHOWN ABOVE MAY BE USED ONLY WITH THE APPROVAL OF THE STRUCTURAL ENGINEER.

5 TYPICAL HOLES & NOTCHING IN BEAMS

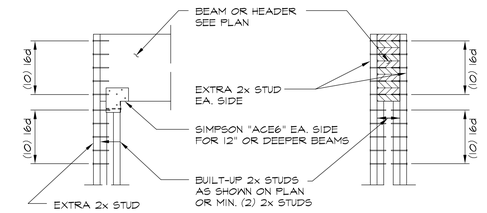

NOTE: FOR BEAMS DEEPER THAN 16", ONE SIMPSON "MST60" SHALL BE USED TO CONNECT BEAM TO THE MULTI-STUDS TYP. U.N.O.

1 TYPICAL WOOD HEADER OR BEAM TO MULTI-STUDS CONNECTION

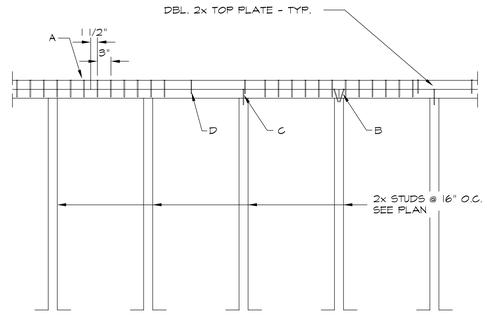

NAILING SCHEDULE	
MARK	DESCRIPTION
A	(24) 16d NAILS AT 3'-0" O.C. .
B	2 - 16d NAILS AT THE END OF EACH PLATE (TOP OR BOTTOM) 4 - TOTAL.
C	2 - 16d NAIL AT EACH STUD.
D	NAIL TOP AND BOTTOM PLATES TOGETHER WITH 2 - 16d NAILS AT 16"O.C. TYPICAL.

2 TYPICAL TOP PLATE SPLICE

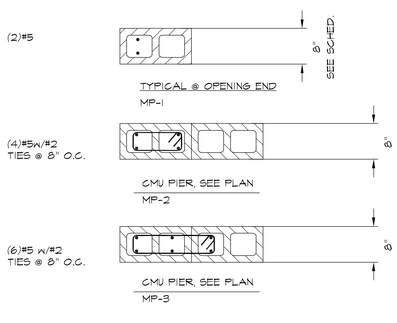

12 MASONRY PIER CONFIGURATION

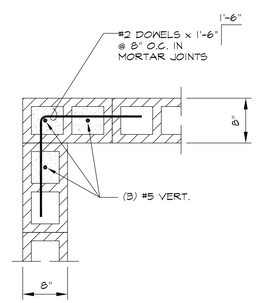

9 TYP. MASONRY PIER @ CORNER OF WALL

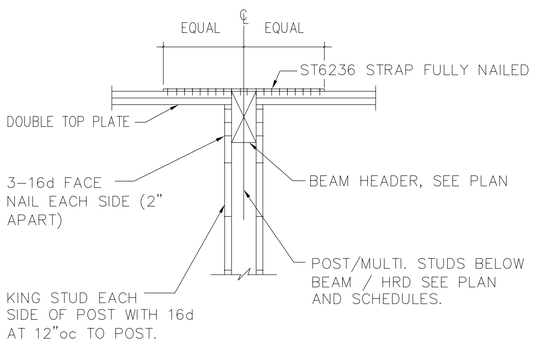

6 TYP. TOP PL. THRU BEAM HEADER IN WALL

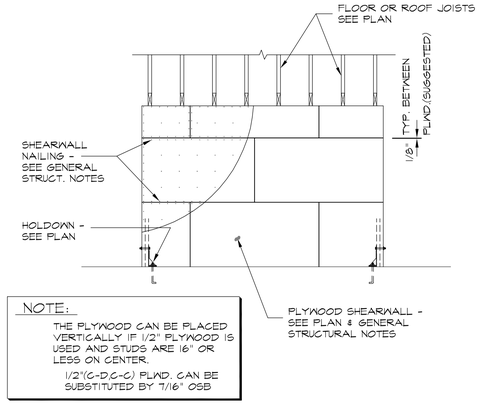

NOTE:
THE PLYWOOD CAN BE PLACED VERTICALLY IF 1/2" PLYWOOD IS USED AND STUDS ARE 16" OR LESS ON CENTER.
1/2"(C-D,C-C) PLWD. CAN BE SUBSTITUTED BY 7/16" OSB

3 TYPICAL SHEAR WALL ELEVATION

EMA ARCHITECTS, LLC
460 South 400 East Salt Lake City, Utah 84111
(801) 363-1511 (801) 363-1560 Fax

CONSULTANTS

Shen Engineers, Inc.
Structural/Seismic Consultants
3335 South 900 East, Suite 250
Salt Lake City, UT 84106
Telephone 801 466-2625
Facsimile 801 466-2656
E-mail: shenengr@msn.com

LICENSED PROFESSIONAL ENGINEER
No. 260129
HUA SHEN
STATE OF UTAH

MONUMENT VALLEY VENDOR VILLAGE
MONUMENT VALLEY, UTAH
OWNER
NAVAHO NATION DEPARTMENT OF ECONOMIC DEVELOPMENT

REVISION 1	12/15/2004	2x6 STUD WALLS
MARK	DATE	DESCRIPTION

PROJECT NUMBER: SE02094
DATE:
DRAWN BY: BS
CHECKED BY: HS

COPYRIGHT 2005 EMA ARCHITECTS, LLC

SHEET TITLE

CHANGE "CLEARY WALLS" TO "2x6 STUD WALLS"

S-103

OF

AutoCAD Version: 13_c4
Plotted: 8:11 am
Drawing: C:\R13\COM\VER3700\S103.DWG (R4.0)

FOUNDATION PLAN NOTES:

1. SEE GENERAL STRUCTURAL NOTES SHEET AND STANDARD CONCRETE DETAIL SHEET FOR:
   - A. GENERAL STRUCTURAL NOTES
   - B. TYPICAL EXCAVATION ADJACENT TO FOOTING
   - C. TYPICAL SLAB JOINT DETAILS
   - D. TYPICAL STEPPED FOOTING
2. WS - DENOTES CONCRETE WALL STEP.
3. F-1 - DENOTES FOOTING MARK - SEE FOOTING SCHEDULE.
4. K.G.J. - DENOTES KEYED CONSTR. JOINT - SEE STANDARD DETAIL.
5. C.J. - DENOTES CONTROL JOINT - SEE STANDARD DETAIL.
6. F-----S - DENOTES FOOTING STEP, SEE DETAIL TYPICAL.
7. CONTRACTOR TO VERIFY ALL DIMENSIONS AND ELEVATIONS WITH ARCHITECTURAL DRAWINGS PRIOR TO CONSTRUCTION. SEE ARCHITECTURAL FOR ALL DIMENSIONS. SLAB SLOPES & DEPRESSIONS NOT NOTED.
8. ALL SLABS ON GRADE ARE TO BE JOINTED AT NO MORE THAN 15'-0" EACH WAY USING JOINTS AS PER STANDARD DETAIL. IN ADDITION, NO SECTION OF CONCRETE SHALL HAVE AN ASPECT RATIO OF GREATER THAN 1 1/2:1. PROVIDE (2) #4 x 4'-0" MID-HEIGHT SLAB BARS ADJACENT TO ALL DISCONTINUOUS JOINT LOCATIONS. ALL COLUMN ISOLATION JOINT CORNERS ARE TO BE INTERSECTED BY A SLAB JOINT OR REINFORCED WITH SLAB BARS PER ABOVE. SUBMIT COMPLETE JOINT LAYOUT PLAN TO THE ARCHITECT FOR PRIOR REVIEW.
9. ALL WOOD TO CONTACT W/ CONC. OR MASONRY TO BE P.T. OR REDWOOD TYP.
10. ALL FOUNDATION PL. ANCHOR BOLTS TO USE A MIN. 2x2x3/16 PL. WASHERS TYP.

CONCRETE POUR NOTES:

1. VERIFY FTG STEP LOCATIONS AND HEIGHT WITH ARCHITECT IN FIELD PRIOR TO FORMING FOOTINGS. MAKE FTG REBAR CONTINUOUS THROUGH FTGS WITH BENT BARS AT CORNERS. LAP BARS 40 BAR DIAMETERS AT SPLICES AND TIE.
2. THE DIMENSIONS ARE TO FACE OF CONCRETE UNLESS OTHERWISE NOTED. NOTE THAT DIMENSIONS ON ARCHITECTURAL PLANS ARE TO FACE OF STUD AND FACE OF STUD IS 1" OUT FROM FACE OF CONCRETE (TYPICAL).
3. ACCURATELY LOCATE ANCHOR BOLTS AND HOLDDOWNS FROM THE ARCHITECTURAL PLAN AND VERIFY WITH THE ARCHITECT PRIOR TO PLACING CONCRETE.
4. DO NOT POUR ANY CONCRETE UNTIL THE FORMS ARE ADEQUATELY BOLSTERED AND SUPPORTED AND ALL REBAR IS IN PLACE AND SECURED.
5. DO NOT PERMIT FIN. GRADE TO COME CLOSER THAN 6" TO TOP OF CONCRETE.
6. BEARING SURFACES FOR PRECAST CONCRETE, STEEL OR TIMBER MEMBERS SHALL BE PREPARED TO A TRUE AND LEVEL LINE.

HOLDOWN SCHEDULE

MARK	HOLDOWN EACH END TYPE	HOLDOWN EACH END END STUD	HOLDOWN EACH END ANCHOR BOLT	LOCATION
HDN1	MST37	(2)2xSTUDS MIN.	--	FLOOR TO FLOOR
HDN2	MST60	(2)2xSTUDS MIN.	--	FLOOR TO FLOOR
HDN3	DBL. MST60	(4)2xSTUDS MIN. or 6x6	--	FLOOR TO FLOOR
HDN4	HD15	(4)2xSTUDS MIN. or 6x6	--	FLOOR TO FLOOR
HDN5	STHD8/HD2A	(2)2xSTUDS MIN.	--/SSTB16	FOUNDATION
HDN6	STHD14/HD8A	(2)2xSTUDS MIN.	--/SSTB28	FOUNDATION
HDN7	HD8A	(3)2xSTUDS MIN.	SSTB28	FOUNDATION
HDN8	HD10A	(3)2xSTUDS MIN.	SSTB28	FOUNDATION
HDN9	HD15	6x6 MIN.	1 1/4"ø x30"	FOUNDATION

NOTE: IF RIM JOIST IS USED, HDN5 SHALL BE STHD8RJ & HDN6 SHALL BE STHD14RJ. SAME SIZE EPOXY BOLTS CAN BE USED AS SUBSTITUTION OF SSTB'S, TYP. SEE SIMPSON'S FOR MIN. EMBEDED LENGTH.

FOOTING SCHEDULE

BASED ON SOIL BEARING = 1500 PSF ARCH/CONTRACTOR VERIFY IT

MARK	SIZE	REINFORCING	REMARKS
F1	18" x CONT. TURNDOWN FTG.	(2) #4 CONT.	TYP. FOR CONT. FTG. U.N.O.
F2	12" x CONT. TURNDOWN FTG.	(2) #4 CONT.	

WOOD STUD WALL SCHEDULE

TYPE / HEIGHT	MARK	2x4 STUD GRADE @ 16" O.C.	2x6 DF#3 GRADE @ 16" O.C.	2x6 DF#3 GRADE @ 12" O.C.	REMARKS
NON-BEARING INTERIOR WALLS		16'-0"	24'-0"	--	
BEARING INTERIOR WALLS		12'-0"	20'-0"	--	
NON-BEARING EXTERIOR WALLS		10'-0"	16'-0"	18'-0"	
BEARING EXTERIOR WALLS		8'-0"	12'-0"	16'-0"	

NOTES: 1. FOR THE CASE NOT FOUND HERE, INFORM ENG. FOR DESIGN.

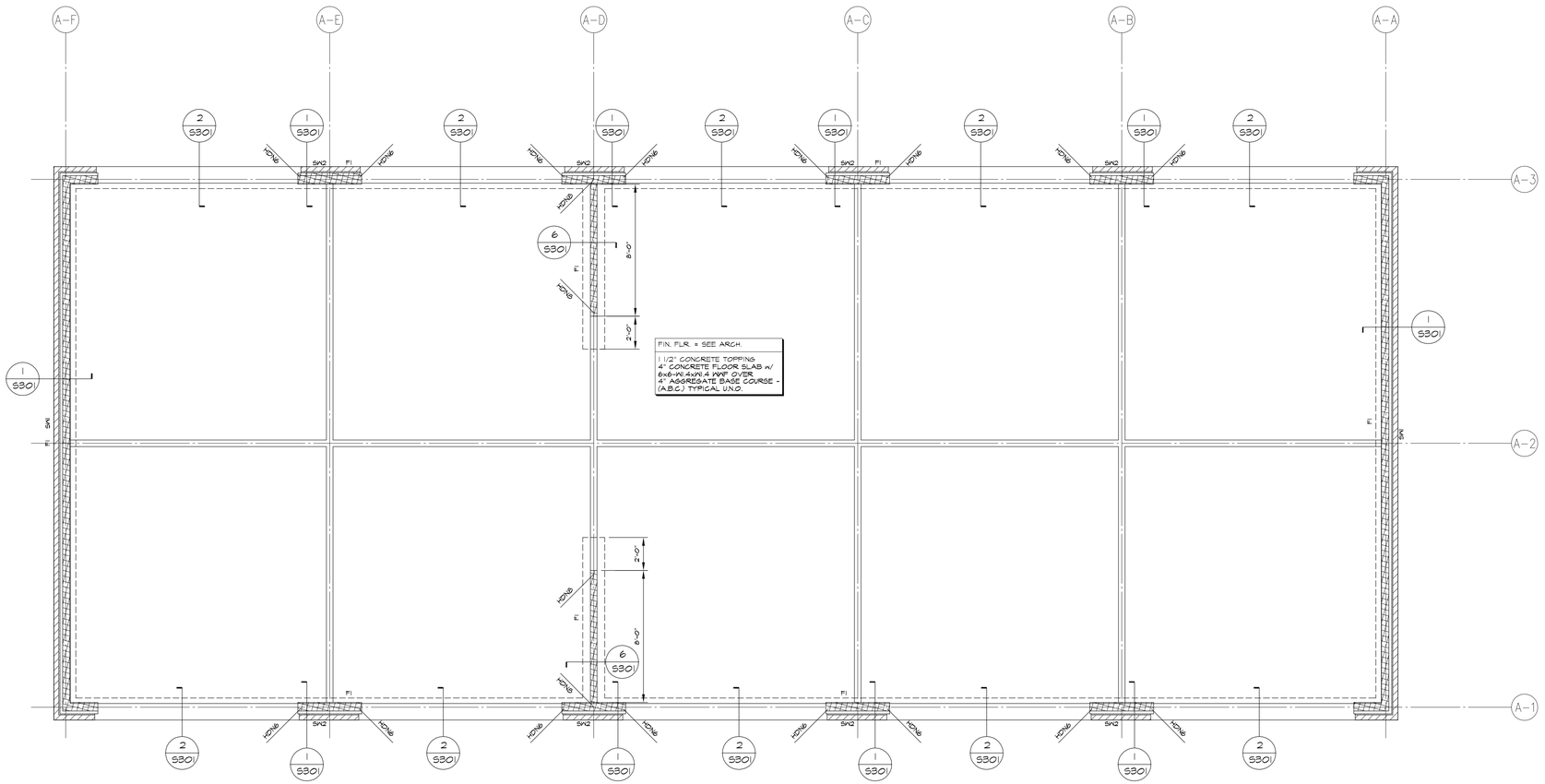

FOUNDATION PLAN-BUILDING "A"
SCALE: 1/4" = 1'-0"
BUILDINGS B, C, D SIMILAR

BUILDING NORTH

EMA ARCHITECTS, LLC
460 South 400 East Salt Lake City, Utah 84111
(801) 363-1511 (801) 363-1560 Fax

CONSULTANTS

Shen Engineers, Inc.
Structural/Seismic Consultants
3335 South 900 East, Suite 250
Salt Lake City UT 84106
Telephone 801 466-2625
Facsimile 801 466-2656
E-mail: shenengr@msn.com

LICENSED PROFESSIONAL ENGINEER
No. 260129
HUA SHEN
STATE OF UTAH

MONUMENT VALLEY VENDOR VILLAGE

MONUMENT VALLEY, UTAH

OWNER
NAVAHO NATION DEPARTMENT OF ECONOMIC DEVELOPMENT

MARK	DATE	DESCRIPTION
REVISION 1	12/15/2004	2x6 STUD WALLS

PROJECT NUMBER: SE02094
DATE:
DRAWN BY: BS
CHECKED BY: HS

COPYRIGHT 2005 EMA ARCHITECTS, LLC

SHEET TITLE

CHANGE "CLEARY WALLS" TO "2x6 STUD WALLS"

S-201A

OF

AutoCAD Version: 15.x4
Width: 36.0 Height: 24.0
Drawing C:\SHEN\EMA\PROTOS\S01212.DWG (R40)

ROOF FRAMING PLAN NOTES:

1. SEE GENERAL STRUCTURAL NOTES SHEET AND STANDARD WOOD FRAMING DETAILS FOR
   A. GENERAL STRUCTURAL NOTES
   B. TYPICAL HEADER DETAIL
   C. TYPICAL TOP PLATE SPLICE DETAIL
   D. TYPICAL ROOF OPENING
2. K.P. = KING POST. SEE PLAN FOR SIZE AND LOCATION TYPICAL.
3. ALL ROOF TRUSSES ARE TO BE PRE-FABRICATED TRUSSES. SEE PLAN TYP.
4. ESTABLISH AND VERIFY ALL OPENINGS & INSERTS FOR MECHANICAL, ELECTRICAL & PLUMBING WITH THE APPROPRIATE TRADES, DRAWINGS AND SUBCONTRACTORS PRIOR TO CONSTRUCTION.
5. HANGING CEILING, DUCTWORK OR OTHER ITEMS FROM THE PLYWOOD DECK IS NOT ALLOWED.
6. PROVIDE TRUSS BRIDGING AS PER MANUFACTURER'S SPECIFICATION.
7. PROVIDE SOLID BLOCKING AT TRUSS BEARING TYPICAL U.N.O.
8. PROVIDE 1/8" GAP ON ROOF DECK PLYWOOD OR FOLLOW MANUFACTURER'S SPECIFICATION.
9. ALL HEADERS OVER OPENINGS TO BE MIN. (3) 2x10 AT BRG. WALLS w/(2) 2x6 STUDS ENDS.
10. SEE STANDARD DETAIL FOR MULTI-STUDS TO WOOD BEAM/HEADER CONNECTION TYPICAL.
11. SHEAR WALLS SHOWN ARE BELOW FRAMING LEVEL. COORDINATE WITH FRAMING PLANS.

ROOF TRUSS DESIGN CRITERIA

MARK	TOP CHORD DEAD LOAD	BOTTOM CHORD DEAD LOAD	TOP CHORD NON LOAD	TOTAL LOADS
REGULAR TRUSSES	15 PSF	5 PSF	25 PSF	45 PSF
GIRDER TRUSSES	15 PSF	5 PSF	25 PSF	45 PSF

SHEARWALL SCHEDULE

MARK	SHEATHING: PLYWOOD	SHEATHING: EDGE NAILING	SHEATHING: INTER. NAILING	BOTTOM PLATE	NAILING THRU FLOOR: ANCHOR BOLTS TO CONC.	PANEL EDGE STUD
SW1	1/2" (C-D, C-C)	8d @ 6" O.C.	8d @ 12" O.C.	2xPL	16d @ 6" O.C.	--
					3/4" ⌀ A.B. x 10" @ 48" O.C.	
SW2	1/2" (C-D, C-C)	8d @ 4" O.C.	8d @ 12" O.C.	2xPL	16d @ 5" O.C.	--
					3/4" ⌀ A.B. x 10" @ 32" O.C.	
SW3	1/2" (C-D, C-C)	8d @ 3" O.C.	8d @ 12" O.C.	2xPL	3/8" LAG BOLTS x5" @ 8" O.C.	--
					3/4" ⌀ A.B. x 10" @ 24" O.C.	
SW4	1/2" (C-D, C-C)	8d @ 2" O.C.	8d @ 12" O.C.	3xPL	3/8" LAG BOLTS x5" @ 8" O.C.	
					3/4" ⌀ A.B. x 10" @ 32" O.C.	3xSTUDS MIN.
SW5	DBL.1/2"(C-D,C-C)	8d @ 4" O.C.	8d @ 12" O.C.	3xPL	1/2" LAG BOLTS x5" @ 12" O.C.	
					3/4" ⌀ A.B. x 10" @ 24" O.C.	3xSTUDS MIN.
SW6	DBL.1/2"(C-D,C-C)	8d @ 3" O.C.	8d @ 12" O.C.	3xPL	1/2" LAG BOLTS x5" @ 8" O.C.	
					3/4" ⌀ A.B. x 10" @ 16" O.C.	3xSTUDS MIN.
SW7	DBL 5/8" GYP. BD	6dCOOLER@4	6dCOOLER@12	2xPL	16d @ 6" O.C.	--
					3/4" ⌀ A.B. x 10" @ 48" O.C.	

NOTE: FOR DOUBLE SIDED PLYWOOD SHEAR WALLS, THE PANEL JOINTS ON BOTH FACES TO BE OFFSET TO FALL ON DIFFERENT STUDS TYPICAL.
1/2"(C-D,C-C) PLWD CAN BE SUBSTITUTED BY 7/16" OSB TYP. U.N.O.
FOR SW4 FRAMING AT PANEL EDGES TO BE 3xSTUD AND NAILS TO BE STAGGERED TYP.
WHERE LAG BOLTS TO BE USED, THE RIM JOIST OR JOIST BLOCKING TO BE MIN. 3x MEMBER TYP.

TYPICAL ROOF DECK:

5/8" APA RATED SHEATHING, SPAN RATING 32/16
1/2" OSB SHEATHING, SPAN RATING 32/16
SEE GENERAL STRUCTURAL NOTES-TYPICAL NAILING.
8d @ 6" O.C. AT ALL PANEL EDGES, SUPPORTED EDGES, AND ALL TOP OF SHEAR WALLS
8d @ 12" O.C. AT ALL PANEL FIELD
PLACE SHEATHING LONG-AXIS ACROSS FRAMING
STAGGER END JOINTS. UNBLOCKED DIAPHRAGM.

HEADER SCHEDULE

MARK	SIZE	END BRG.	REMARKS
HDR-1	(3) 2x6	(2) 2x6	--
HDR-2	(3) 2x8	(2) 2x6	--
HDR-3	(3) 2x10	(2) 2x6	--
HDR-4	(3) 2x12	(3) 2x6	--
HDR-5	5 1/8x12 GLB	(3) 2x6	or (3)1 3/4x11 7/8LVL

NOTES:
1. GLULAM BEAMS SHALL BE COMBINATION SYMBOL 24F-V4 FOR REGULAR BEAM AND 24F-V8 FOR CANTILEVERED BEAM TYPICAL.
2. ALL GLULAM BEAMS TO BE ZERO CAMBER BEAMS U.N.O.
3. ALL MULTI-MEMBER BEAMS AND STUDS SHALL BE NAILED TOGETHER w/(2) ROWS 16d @ 6" O.C. BOTH SIDES TYPICAL.

TYPICAL DRAG-STRUT NOTES

DRAG1
(1) EXTRA JOIST. (OR JOIST BLKG.) w/SIMPSON "CS16" CONT. w/ FULL NAILING TYP.
SEE DET. 1/S402

DRAG2
SIMPSON "CS16" CONT. FROM BEAM(OR BLKG.) TO SHEAR WALL w/FULL NAILING TYP.
SEE DET. 1/S402

DRAG3
3"x BLKG (OR 3" WIDE JOIST) w/SIMPSON "CMST14" CONT. w/ FULL NAILING TYP.
SEE DET. 1/S402

NOTE:
ALL EXTERIOR WALLS ARE TO BE "CLEARY WALLS" PROVIDED, DESIGNED AND DETAILED BY CLEARY BUILDING CORP. THE LISTED HEADER SIZE MULTI-STUDS FOR END BEARING ON HEADER SCHEDULE ARE THE REFERENCES FOR CLEARY WALL DESIGN OR USE. CLEARY NEEDS TO FOLLOW THE SHEAR WALL SCHEDULE TO PROVIDE REQUIRED CLEARY SHEAR WALLS. FOR ANYTHING UNCLEAR, CONTACT THE ENGINEER IN RECORD TYPICAL UNLESS NOTED OTHERWISE.

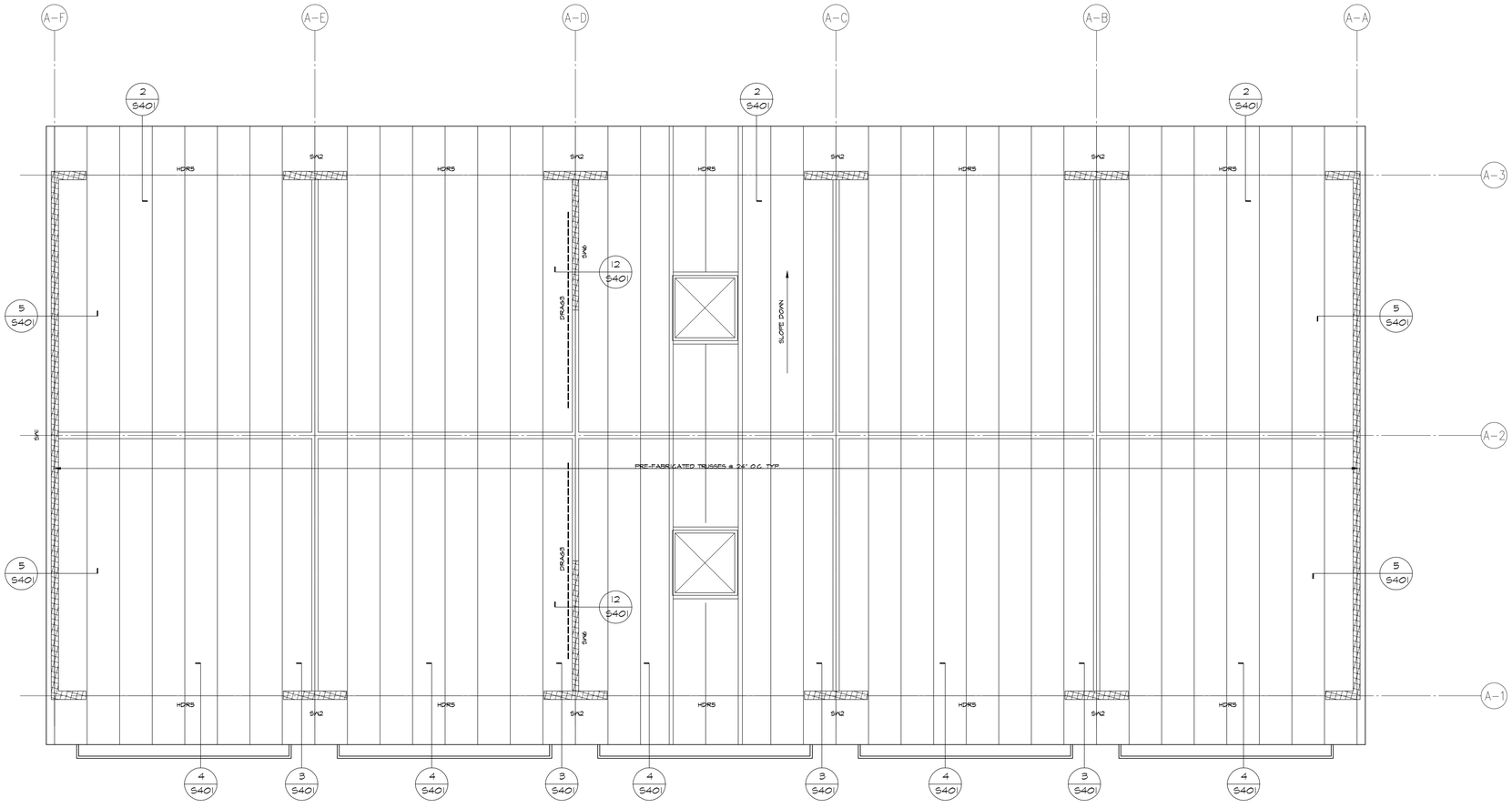

ROOF FRAMING PLAN - BUILDING "A"

SCALE: 1/4" = 1'-0"

BUILDINGS B, C, D SIMILAR

BUILDING NORTH

EMA ARCHITECTS, LLC
460 South 400 East Salt Lake City, Utah 84111
(801) 363-1511 (801) 363-1560 Fax

CONSULTANTS
Shen Engineers, Inc.
Structural/Seismic Consultants
3335 South 900 East, Suite 250
Salt Lake City, UT 84106
Telephone 801 466-2625
Facsimile 801 466-2656
E-mail: shenen@msn.com

LICENSED PROFESSIONAL ENGINEER
No. 260129
HUA SHEN
STATE OF UTAH

MONUMENT VALLEY VENDOR VILLAGE

MONUMENT VALLEY, UTAH

OWNER
NAVAHO NATION DEPARTMENT OF ECONOMIC DEVELOPMENT

MARK	DATE	DESCRIPTION
REVISION 1	12/15/2004	2x6 STUD WALLS

PROJECT NUMBER: SE02094
DATE:
DRAWN BY: BS
CHECKED BY: HS

COPYRIGHT 2005 EMA ARCHITECTS, LLC

SHEET TITLE

CHANGE "CLEARY WALLS"
TO "2x6 STUD WALLS"

S-202A

OF

AutoCAD Version: 13.c4
Model: Model_Space
Layout: Plot
Drawing: C:\#13\COM\PROJ\05\01\21DWG (R4C)

FOUNDATION PLAN NOTES:

1. SEE GENERAL STRUCTURAL NOTES SHEET AND STANDARD CONCRETE DETAIL SHEET FOR
   - A. GENERAL STRUCTURAL NOTES
   - B. TYPICAL EXCAVATION ADJACENT TO FOOTING
   - C. TYPICAL SLAB JOINT DETAILS
   - D. TYPICAL STEPPED FOOTING
2. NS - DENOTES CONCRETE WALL STEP.
3. F=1 - DENOTES FOOTING MARK - SEE FOOTING SCHEDULE.
4. K.C.J. - DENOTES KEYED CONSTR. JOINT - SEE STANDARD DETAIL.
5. C.J. - DENOTES CONTROL JOINT - SEE STANDARD DETAIL.
6. F------S - DENOTES FOOTING STEP, SEE DETAIL TYPICAL.
7. CONTRACTOR TO VERIFY ALL DIMENSIONS AND ELEVATIONS WITH ARCHITECTURAL DRAWINGS PRIOR TO CONSTRUCTION. SEE ARCHITECTURAL FOR ALL DIMENSIONS, SLAB SLOPES & DEPRESSIONS NOT NOTED.
8. ALL SLABS ON GRADE ARE TO BE JOINTED AT NO MORE THAN 15'-0" EACH WAY USING JOINTS AS PER STANDARD DETAIL. IN ADDITION, NO SECTION OF CONCRETE SHALL HAVE AN ASPECT RATIO OF GREATER THAN 1 1/2:1. PROVIDE (2) #4 x 4'-0" MID-HEIGHT SLAB BARS ADJACENT TO ALL DISCONTINUOUS JOINT LOCATIONS. ALL COLUMN ISOLATION JOINT CORNERS ARE TO BE INTERSECTED BY A SLAB JOINT OR REINFORCED WITH SLAB BARS PER ABOVE. SUBMIT COMPLETE JOINT LAYOUT PLAN TO THE ARCHITECT FOR PRIOR REVIEW.
9. ALL WOOD TO CONTACT W/ CONC. OR MASONRY TO BE P.T. OR REDWOOD TYP.
10. ALL FOUNDATION PL. ANCHOR BOLTS TO USE A MIN. 2x2x5/16 PL. WASHERS TYP.

CONCRETE POUR NOTES:

1. VERIFY FTG STEP LOCATIONS AND HEIGHT WITH ARCHITECT IN FIELD PRIOR TO FORMING FOOTINGS. MAKE FTG REBAR CONTINUOUS THROUGH FTGS WITH BENT BARS AT CORNERS. LAP BARS 40 BAR DIAMETERS AT SPLICES AND TIE.
2. THE DIMENSIONS ARE TO FACE OF CONCRETE UNLESS OTHERWISE NOTED. NOTE THAT DIMENSIONS ON ARCHITECTURAL PLANS ARE TO FACE OF STUD AND FACE OF STUD IS 1" OUT FROM FACE OF CONCRETE (TYPICAL).
3. ACCURATELY LOCATE ANCHOR BOLTS AND HOLDDOWNS FROM THE ARCHITECTURAL PLAN AND VERIFY WITH THE ARCHITECT PRIOR TO PLACING CONCRETE.
4. DO NOT POUR ANY CONCRETE UNTIL THE FORMS ARE ADEQUATELY BOLSTERED AND SUPPORTED AND ALL REBAR IS IN PLACE AND SECURED.
5. DO NOT PERMIT FIN. GRADE TO COME CLOSER THAN 6" TO TOP OF CONCRETE.
6. BEARING SURFACES FOR PRECAST CONCRETE, STEEL OR TIMBER MEMBERS SHALL BE PREPARED TO A TRUE AND LEVEL LINE.

MASONRY WALL SCHEDULE

LEVEL II SPECIAL INSPECTION ON CMU TYP. F'm=2000 PSI

MARK	WALL THICKNESS	VERT. REINF	HORIZ. REINF	BOND BM. @ ROOF LVL	REMARKS
MW1	8"	#5 @ 32" O.C.	#5 @ 48" O.C.	8"x16" MIN. w/ (4)#5 HORIZ.	GROUT CELLS w/REBARS TYP. FOR 8" CMU WALLS U.N.O.

1. TERMINATE HORIZ. REBARS AT WALL JOINTS TYP.
2. CONTINUE HORIZ. REBARS FOR BOND BEAM AT WALL JOINTS TYP.
3. SOLID GROUT ALL CELLS FOR WALLS UNDER FINISHED GRADE TYP.

HOLDOWN SCHEDULE

MARK	HOLDOWN EACH END TYPE	END STUD	ANCHOR BOLT	LOCATION
HDN1	MST37	(2)2x STUDS MIN.	--	FLOOR TO FLOOR
HDN2	MST60	(2)2x STUDS MIN.	--	FLOOR TO FLOOR
HDN3	DBL. MST60	(4)2x STUDS MIN. or 6x6	--	FLOOR TO FLOOR
HDN4	HDI5	(4)2x STUDS MIN. or 6x6	--	FLOOR TO FLOOR
HDN5	STHD8/HD2A	(2)2x STUDS MIN.	--/SSTB16	FOUNDATION
HDN6	STHD14/HD6A	(2)2x STUDS MIN.	--/SSTB28	FOUNDATION
HDN7	HD8A	(3)2x STUDS MIN.	SSTB28	FOUNDATION
HDN8	HD10A	(3)2x STUDS MIN.	SSTB28	FOUNDATION
HDN9	HDI5	6x6 MIN.	1 1/4"ø x30"	FOUNDATION

NOTE: IF RIM JOIST IS USED, HDN5 SHALL BE STHD8RJ & HDN6 SHALL BE STHD14RJ. SAME SIZE EPOXY BOLTS CAN BE USED AS SUBSTITUTION OF SSTB'S, TYP. SEE SIMPSON'S FOR MIN. EMBEDED LENGTH.

FOOTING SCHEDULE

BASED ON SOIL BEARING = 1500 PSF ARCH/CONTRACTOR VERIFY IT

MARK	SIZE	REINFORCING	REMARKS
F1	16" x CONT. TURNDOWN FTG.	(2) #4 CONT.	TYP. FOR CONT. FTG. U.N.O.
F2	12" x CONT. TURNDOWN FTG.	(2) #4 CONT.	

WOOD STUD WALL SCHEDULE

MARK / TYPE, HEIGHT	2x4 STUD GRADE @ 16" O.C.	2x6 DF#2 GRADE @ 16" O.C.	2x6 DF#2 GRADE @ 12" O.C.	REMARKS
NON-BEARING INTERIOR WALLS	16'-0"	24'-0"	--	
BEARING INTERIOR WALLS	12'-0"	20'-0"	--	
NON-BEARING EXTERIOR WALLS	10'-0"	16'-0"	18'-0"	
BEARING EXTERIOR WALLS	8'-0"	12'-0"	16'-0"	

NOTES: 1. FOR THE CASE NOT FOUND HERE, INFORM ENG. FOR DESIGN.

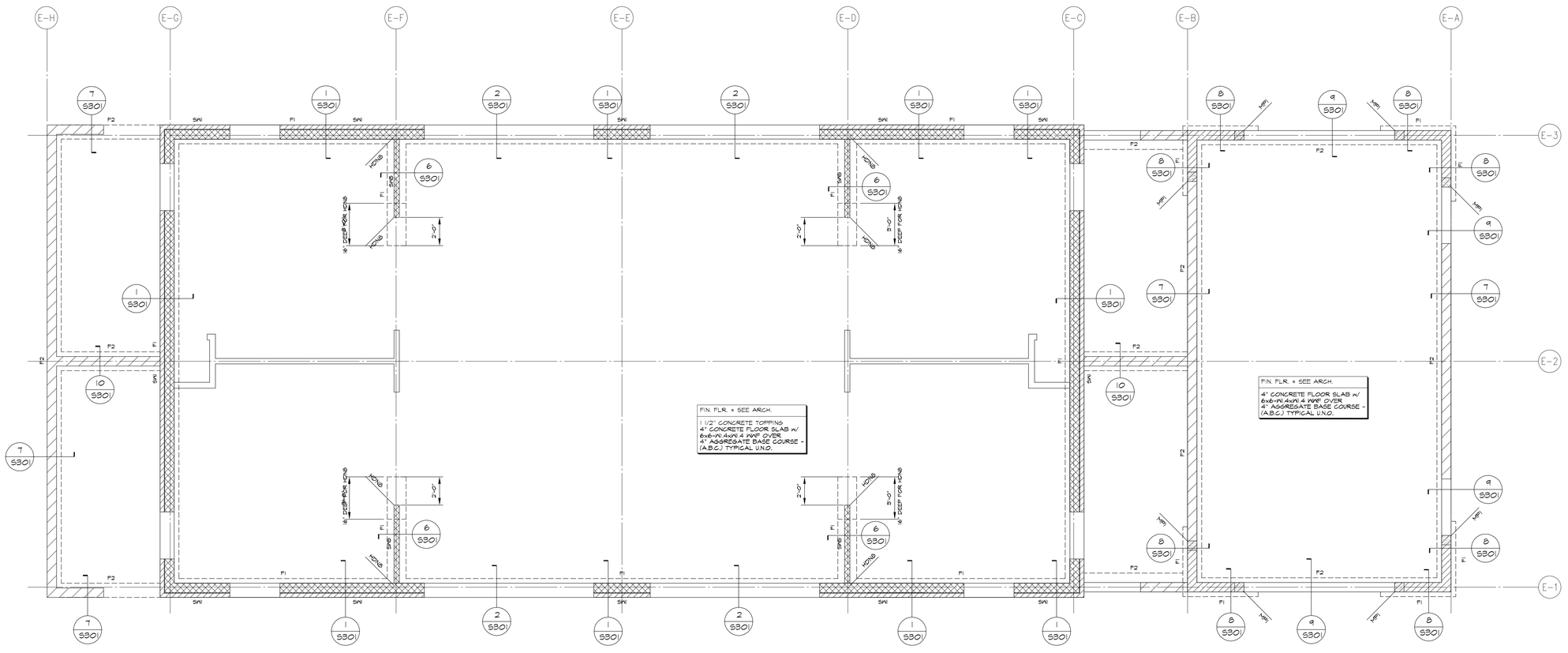

FOUNDATION PLAN - BUILDING "E"

SCALE: 1/4" = 1'-0"

BUILDING NORTH

MASONRY PIER SCHEDULE

MARK	SIZE	REINF.	TIES	MIN. BRG. PL SIZE FOR BM./GIRDER
MP=1	8" x 8"	(2) #5	NONE	1/2"xT'xT' PL. w/ (1) 3/4"ø H.S. x3"
MP=2	8" x 16"	(4) #5	#2 @ 8" O.C.	1/2"xT'x14" PL. w/ (2) 3/4"ø H.S. x5"

NOTE: SEE DETAIL FOR CMU PIER REINFORCEMENT CONFIGURATION TYPICAL. MP#1(FOR 8" CMU) IS TO BE APPLIED @ EA. END OF OPENINGS MIN. TYP. U.N.O.

EMA ARCHITECTS, LLC

EMA ARCHITECTS, LLC
460 South 400 East Salt Lake City, Utah 84111
(801) 363-1511 (801) 363-1560 Fax

CONSULTANTS

Shen Engineers, Inc.
Structural/Seismic Consultants
3395 South 900 East, Suite 250
Salt Lake City, UT 84106
Telephone 801 466-2625
Facsimile 801 466-2656
E-mail: shenengr@msn.com

LICENSED PROFESSIONAL ENGINEER
No. 260129
HUA SHEN
STATE OF UTAH

MONUMENT VALLEY VENDOR VILLAGE

MONUMENT VALLEY, UTAH

OWNER
NAVAHO NATION DEPARTMENT OF ECONOMIC DEVELOPMENT

REVISION 1	12/15/2004	2x6 STUD WALLS
MARK	DATE	DESCRIPTION

PROJECT NUMBER: SE02094
DATE:
DRAWN BY: BS
CHECKED BY: HS

COPYRIGHT 2005 EMA ARCHITECTS, LLC

SHEET TITLE

CHANGE "CLEARY WALLS" TO "2x6 STUD WALLS"

S-203A

OF

AutoCAD Version: 13_c4
Plot: 26, 17, p.m.
Last: 31, 2004 PM (T:\Dcs\S\12.DWG (R4C)
Drawing: 12

ROOF FRAMING PLAN NOTES:

1. SEE GENERAL STRUCTURAL NOTES SHEET AND STANDARD WOOD FRAMING DETAILS FOR
   - A. GENERAL STRUCTURAL NOTES
   - B. TYPICAL HEADER DETAIL
   - C. TYPICAL TOP PLATE SPLICE DETAIL
   - D. TYPICAL ROOF OPENING
2. K.P. = KING POST. SEE PLAN FOR SIZE AND LOCATION TYPICAL.
3. ALL ROOF TRUSSES ARE TO BE PRE-FABRICATED TRUSSES. SEE PLAN TYP.
4. ESTABLISH AND VERIFY ALL OPENINGS & INSERTS FOR MECHANICAL, ELECTRICAL & PLUMBING WITH THE APPROPRIATE TRADES DRAWINGS AND SUBCONTRACTORS PRIOR TO CONSTRUCTION.
5. HANGING CEILING, DUCTWORK OR OTHER ITEMS FROM THE PLYWOOD DECK IS NOT ALLOWED.
6. PROVIDE TRUSS BRIDGING AS PER MANUFACTURER'S SPECIFICATION.
7. PROVIDE SOLID BLOCKING AT TRUSS BEARING TYPICAL U.N.O.
8. PROVIDE 1/8" GAP ON ROOF DECK PLYWOOD OR FOLLOW MANUFACTURER'S SPECIFICATION.
9. ALL HEADERS OVER OPENINGS TO BE MIN. (3) 2x10 AT BRG. WALLS w/(2) 2x6 STUDS ENDS.
10. SEE STANDARD DETAIL FOR MULTI-STUDS TO WOOD BEAM/HEADER CONNECTION TYPICAL.
11. SHEAR WALLS SHOWN ARE BELOW FRAMING LEVEL. COORDINATE WITH FRAMING PLANS.

ROOF TRUSS DESIGN CRITERIA

MARK	TOP CHRD DEAD LOAD	BOTTOM CHRD DEAD LOAD	TOP CHRD NON LOAD	TOTAL LOADS
REGULAR TRUSSES	15 PSF	5 PSF	25 PSF	45 PSF
GIRDER TRUSSES	15 PSF	5 PSF	25 PSF	45 PSF

SHEARWALL SCHEDULE

MARK	SHEATHING: PLYWOOD	SHEATHING: EDGE NAILING	SHEATHING: INTER. NAILING	BOTTOM PLATE	NAILING THRU FLOOR: ANCHOR BOLTS TO CONC.	PANEL EDGE STUD
SW1	1/2" (C-D, C-C)	8d @ 6" O.C.	8d @ 12" O.C.	2xPL.	16d @ 6" O.C.	--
SW2	1/2" (C-D, C-C)	8d @ 4" O.C.	8d @ 12" O.C.	2xPL.	16d @ 5" O.C.	--
SW3	1/2" (C-D, C-C)	8d @ 3" O.C.	8d @ 12" O.C.	2xPL.	3/4"Ø A.B. x 10" @ 32" O.C.	--
SW4	1/2" (C-D, C-C)	8d @ 2" O.C.	8d @ 12" O.C.	3xPL.	3/8" LAG BOLTS x5" @ 8" O.C. 3/4"Ø A.B. x 10" @ 24" O.C.	--
SW5	1/2" (C-D, C-C) DBL. 1/2"(C-D,C-C)	8d @ 2" O.C.	8d @ 12" O.C.	3xPL.	3/8" LAG BOLTS x5" @ 8" O.C. 3/4"Ø A.B. x 10" @ 32" O.C.	3xSTUDS MIN.
SW6	DBL. 1/2"(C-D,C-C)	8d @ 4" O.C.	8d @ 12" O.C.	3xPL.	1/2" LAG BOLTS x5" @ 12" O.C. 3/4"Ø A.B. x 10" @ 24" O.C.	3xSTUDS MIN.
SW7	DBL. 1/2"(C-D,C-C)	8d @ 3" O.C.	8d @ 12" O.C.	3xPL.	1/2" LAG BOLTS x5" @ 8" O.C. 3/4"Ø A.B. x 10" @ 16" O.C.	3xSTUDS MIN.
SW7	DBL. 5/8" STR. BD.	6dCOOLERS@4"	6dCOOLERS@12"	2xPL.	16d @ 6" O.C. 3/4"Ø A.B. x 10" @ 48" O.C.	--

NOTE: FOR DOUBLE SIDED PLYWOOD SHEAR WALLS, THE PANEL JOINTS ON BOTH FACES TO BE OFFSET TO FALL ON DIFFERENT STUDS TYPICAL.
1/2"(C-D,C-C) PLWD CAN BE SUBSTITUTED BY 7/16" OSB TYP. U.N.O.
FOR SW4 FRAMING AT PANEL EDGES TO BE 3xSTUD AND NAILS TO BE STAGGERED TYP.
WHERE LAG BOLTS TO BE USED, THE RIM JOIST OR JOIST BLOCKING TO BE MIN. 3x MEMBER TYP.

TYPICAL ROOF DECK:
5/8" APA RATED SHEATHING, SPAN RATING 32/16
1/2" OSB SHEATHING, SPAN RATING 32/16
SEE GENERAL STRUCTURAL NOTES-TYPICAL NAILING:
8d @ 6" O.C. AT ALL PANEL EDGES, SUPPORTED EDGES, AND ALL TOP OF SHEAR WALLS
8d @ 12" O.C. AT ALL PANEL FIELD
PLACE SHEATHING LONG-WISE ACROSS FRAMING
STAGGER END JOINTS. UNBLOCKED DIAPHRAGM

HEADER SCHEDULE

MARK	SIZE	END BRG.	REMARKS
HDR-1	(3) 2x6	(2) 2x6	--
HDR-2	(3) 2x8	(2) 2x6	--
HDR-3	(3) 2x10	(2) 2x6	--
HDR-4	(3) 2x12	(3) 2x6	--
HDR-5	5 1/8x12 GLB	(3) 2x6	or (3)1 3/4x11 7/8LVL

NOTES:
1. GLULAM BEAMS SHALL BE COMBINATION SYMBOL 24F-V4 FOR REGULAR BEAM AND 24F-V8 FOR CANTILEVERED BEAM TYPICAL.
2. ALL GLULAM BEAMS TO BE ZERO CAMBER BEAMS U.N.O.
3. ALL MULTI-MEMBER BEAMS AND STUDS SHALL BE NAILED TOGETHER w/(2) ROWS 16d @ 6" O.C. BOTH SIDES TYPICAL.

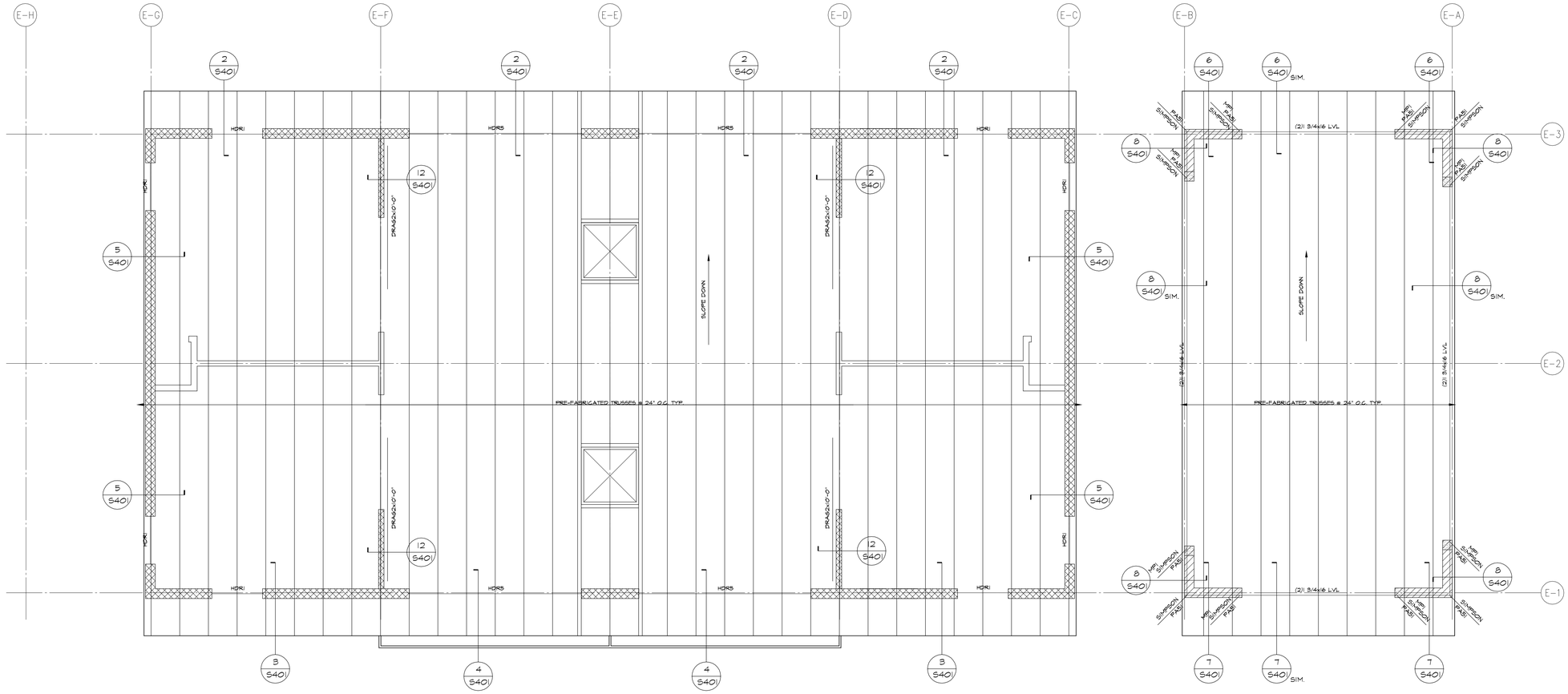

MARK	SIZE OF LINTEL	REINFORCING	MIN. END BRG.	REMARKS
ML-1	8"x8"	(2) #5	MP-1	
ML-2	8"x16"	(2) #5 T&B	MP-1	
ML-3	8"x24"	(2)#5 T&B	MP-1	

PROVIDE 10x16 BOND BEAM w/(4)#5 HORIZ. CONT. AT A/V FLOOR LEVEL TYP. U.N.O.

ROOF FRAMING PLAN - BUILDING "E"
SCALE: 1/4" = 1'-0"

BUILDING NORTH

TYPICAL DRAG-STRUCT NOTES
DRAG1
(1) EXTRA JOIST (OR JOIST BLKG.) w/SIMPSON "CS16" CONT. w/ FULL NAILING TYP. SEE DET. 1/S402

DRAG2
SIMPSON "CS16" CONT. FROM BEAM/GIR BLKG.) TO SHEAR WALL w/FULL NAILING TYP. SEE DET. 1/S402

DRAG3
3"x BLKG (OR 3" WIDE JOIST) w/SIMPSON "CMST14" CONT. w/ FULL NAILING TYP. SEE DET. 1/S402

NOTE:
ALL EXTERIOR WALLS ARE TO BE 'CLEARY WALLS' PROVIDED DESIGNED AND DETAILED BY CLEARY BUILDING CORP. THE LISTED HEADER SIZE, MULTI-STUDS FOR END BEARING ON HEADER SCHEDLE ARE THE REFERENCES FOR CLEARY WALL DESIGN OR USE. CLEARY NEEDS TO FOLLOW THE SHEAR WALL SCHEDULE TO PROVIDE REQUIRED CLEARY SHEAR WALLS. FOR ANY THING UNCLEAR, CONTACT THE ENGINEER IN RECORD TYPICAL UNLESS NOTED OTHERWISE.

EMA ARCHITECTS, LLC
460 South 400 East Salt Lake City, Utah 84111
(801) 363-1511 (801) 363-1560 Fax

CONSULTANTS

Shen Engineers, Inc.
Structural/Seismic Consultants
3335 South 900 East, Suite 250
Salt Lake City, UT 84106
Telephone 801 466-2625
Facsimile 801 466-2656
E-mail: shenengr@msn.com

LICENSED PROFESSIONAL ENGINEER
No. 260129
HUA SHEN
STATE OF UTAH

MONUMENT VALLEY VENDOR VILLAGE

MONUMENT VALLEY, UTAH

OWNER
NAVAHO NATION DEPARTMENT OF ECONOMIC DEVELOPMENT

MARK	DATE	DESCRIPTION
REVISION 1	12/15/2004	2x6 STUD WALLS

PROJECT NUMBER: SE02094
DATE:
DRAWN BY: BS
CHECKED BY: HS

COPYRIGHT 2005 EMA ARCHITECTS, LLC

SHEET TITLE

CHANGE "CLEARY WALLS" TO "2x6 STUD WALLS"

S-204A

OF

AutoCAD Version: 13_c4
Plot Date: 12/15/2004 - 11:31:30
Drawing: C:\SE\13.0\EMA\PROTOS\S204.DWG (RJC)

FOUNDATION PLAN NOTES:

1. SEE GENERAL STRUCTURAL NOTES SHEET AND STANDARD CONCRETE DETAIL SHEET FOR
   - A. GENERAL STRUCTURAL NOTES
   - B. TYPICAL EXCAVATION ADJACENT TO FOOTING
   - C. TYPICAL SLAB JOINT DETAILS
   - D. TYPICAL STEPPED FOOTING
2. WS - DENOTES CONCRETE WALL STEP.
3. F-1 - DENOTES FOOTING MARK - SEE FOOTING SCHEDULE.
4. K.G.J. - DENOTES KEYED CONSTR. JOINT - SEE STANDARD DETAIL
5. C.J. - DENOTES CONTROL JOINT - SEE STANDARD DETAIL.
6. F-----S - DENOTES FOOTING STEP, SEE DETAIL TYPICAL.
7. CONTRACTOR TO VERIFY ALL DIMENSIONS AND ELEVATIONS WITH ARCHITECTURAL DRAWINGS PRIOR TO CONSTRUCTION. SEE ARCHITECTURAL FOR ALL DIMENSIONS. SLAB SLOPES & DEPRESSIONS NOT NOTED.
8. ALL SLABS ON GRADE ARE TO BE JOINTED AT NO MORE THAN 15'-0" EACH WAY USING JOINTS AS PER STANDARD DETAIL. IN ADDITION, NO SECTION OF CONCRETE SHALL HAVE AN ASPECT RATIO OF GREATER THAN 1 1/2:1. PROVIDE (2) #4 x 4'-0" MID-HEIGHT SLAB BARS ADJACENT TO ALL DISCONTINUOUS JOINT LOCATIONS. ALL COLUMN ISOLATION JOINT CORNERS ARE TO BE INTERSECTED BY A SLAB JOINT OR REINFORCED WITH SLAB BARS PER ABOVE. SUBMIT COMPLETE JOINT LAYOUT PLAN TO THE ARCHITECT FOR PRIOR REVIEW.
9. ALL WOOD TO CONTACT W/ CONC. OR MASONRY TO BE P.T. OR REDWOOD TYP.
10. ALL FOUNDATION PL. ANCHOR BOLTS TO USE A MIN. 2x2x3/16 PL. WASHERS TYP.

CONCRETE POUR NOTES:

1. VERIFY FTG STEP LOCATIONS AND HEIGHT WITH ARCHITECT IN FIELD PRIOR TO FORMING FOOTINGS. MAKE FTG REBAR CONTINUOUS THROUGH FTGS WITH BENT BARS AT CORNERS. LAP BARS 40 BAR DIAMETERS AT SPLICES AND TIE.
2. THE DIMENSIONS ARE TO FACE OF CONCRETE UNLESS OTHERWISE NOTED. NOTE THAT DIMENSIONS ON ARCITECTURAL PLANS ARE TO FACE OF STUD AND FACE OF STUD IS 1" OUT FROM FACE OF CONCRETE (TYPICAL).
3. ACCURATELY LOCATE ANCHOR BOLTS AND HOLDDOWNS FROM THE ARCHITECTURAL PLAN AND VERIFY WITH THE ARCHITECT PRIOR TO PLACING CONCRETE.
4. DO NOT POUR ANY CONCRETE UNTIL THE FORMS ARE ADEQUATELY BOLSTERED AND SUPPORTED AND ALL REBAR IS IN PLACE AND SECURED.
5. DO NOT PERMIT FIN. GRADE TO COME CLOSER THAN 6" TO TOP OF CONCRETE.
6. BEARING SURFACES FOR PRECAST CONCRETE, STEEL OR TIMBER MEMBERS SHALL BE PREPARED TO A TRUE AND LEVEL LINE.

MASONRY WALL SCHEDULE

LEVEL II SPECIAL INSPECTION ON CMU TYP. f'm=2000 PSI

MARK	WALL THICKNESS	VERT. REINF.	HORIZ. REINF.	BOND BM. @ ROOF LVL	REMARKS
MW1	8"	#5 @ 32" O.C.	#5 @ 48" O.C.	8"x16" MIN. w/ (4)#5 HORIZ.	GROUT CELLS w/REBARS. TYP. FOR 8" CMU WALLS U.N.O.

1. TERMINATE HORIZ. REBARS AT WALL JOINTS TYP.
2. CONTINUE HORIZ. REBARS FOR BOND BEAM AT WALL JOINTS TYP.
3. SOLID GROUT ALL CELLS FOR WALLS UNDER FINISHED GRADE TYP.

HOLDOWN SCHEDULE

MARK	HOLDOWN EACH END TYPE	END STUD	ANCHOR BOLT	LOCATION
HDN1	MST37	(2)2x STUDS MIN.	--	FLOOR TO FLOOR
HDN2	MST60	(2)2x STUDS MIN.	--	FLOOR TO FLOOR
HDN3	DBL. MST60	(4)2x STUDS MIN. or 6x6	--	FLOOR TO FLOOR
HDN4	HD15	(4)2x STUDS MIN. or 6x6	--	FLOOR TO FLOOR
HDN5	STHD8/HD2A	(2)2x STUDS MIN.	--/SSTB16	FOUNDATION
HDN6	STHD14/HD8A	(2)2x STUDS MIN.	--/SSTB28	FOUNDATION
HDN7	HD8A	(3)2x STUDS MIN.	SSTB28	FOUNDATION
HDN8	HD10A	(3)2x STUDS MIN.	SSTB28	FOUNDATION
HDN9	HD15	6x6 MIN.	1 1/4"ϕ x30"	FOUNDATION

NOTE: IF RIM JOIST IS USED, HDN5 SHALL BE STHD8RJ & HDN6 SHALL BE STHD14RJ. SAME SIZE EPOXY BOLTS CAN BE USED AS SUBSTITUTION OF SSTB'S. TYP. SEE SIMPSONS FOR MIN. EMBEDED LENGTH.

FOOTING SCHEDULE

BASED ON SOIL BEARING = 1500 PSF ARCH/CONTRACTOR VERIFY IT

MARK	SIZE	REINFORCING	REMARKS
F1	16" x CONT. TURNDOWN FTG.	(2) #4 CONT.	TYP. FOR CONT. FTG. U.N.O.
F2	12" x CONT. TURNDOWN FTG.	(2) #4 CONT.	

WOOD STUD WALL SCHEDULE

TYPE / HEIGHT	2x4 STUD @ RADE @ 16" O.C.	2x6 DF#2 @ RADE @ 16" O.C.	2x6 DF#2 @ RADE @ 12" O.C.	REMARKS
NON-BEARING INTERIOR WALLS	16'-0"	24'-0"	--	
BEARING INTERIOR WALLS	12'-0"	20'-0"	--	
NON-BEARING EXTERIOR WALLS	10'-0"	16'-0"	18'-0"	
BEARING EXTERIOR WALLS	8'-0"	12'-0"	16'-0"	

NOTES: 1. FOR THE CASE NOT FOUND HERE, INFORM ENG. FOR DESIGN.

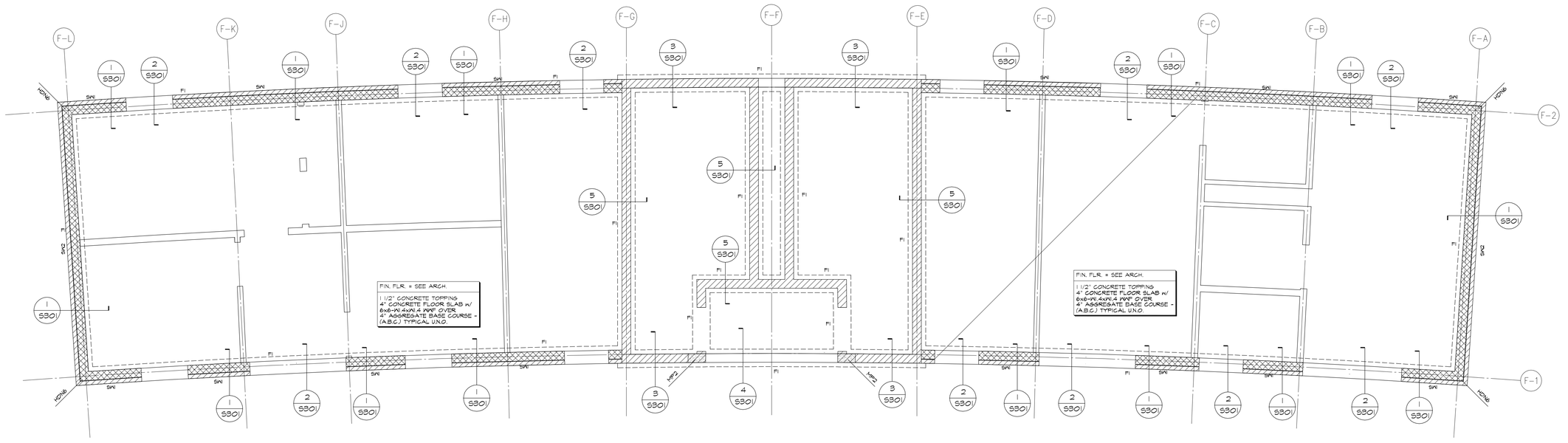

FOUNDATION PLAN - BUILDING "F"

SCALE: 1/4" = 1'-0"

BUILDING NORTH

MASONRY PIER SCHEDULE

MARK	SIZE	REINF.	TIES	MIN. BRG. PL SIZE FOR BM./GIRDER
MP-1	8" x 8"	(2) #5	NONE	1/2"xT"xT" PL. w/ (1) 3/4"ϕ H.S. x5"
MP-2	8" x 16"	(4) #5	#2 @ 8" O.C.	1/2"xT"x14" PL. w/ (2) 3/4"ϕ H.S. x5"

NOTE: SEE DETAIL FOR CMU PIER REINFORCEMENT CONFIGURATION TYPICAL. MP#1TOK 8" CMU IS TO BE APPLIED @ EA. END OF OPENINGS MIN. TYP. U.N.O.

EMA ARCHITECTS, LLC

460 South 400 East Salt Lake City, Utah 84111

(801) 363-1511 (801) 363-1560 Fax

CONSULTANTS

Shen Engineers, Inc.

Structural/Seismic Consultants

3335 South 900 East, Suite 250
Salt Lake City, UT 84106
Telephone 801 466-2625
Facsimile 801 466-2656
E-mail: sheneng@msn.com

LICENSED PROFESSIONAL ENGINEER
No. 260129
HUA SHEN
STATE OF UTAH

MONUMENT VALLEY VENDOR VILLAGE

MONUMENT VALLEY, UTAH

OWNER
NAVAHO NATION DEPARTMENT OF ECONOMIC DEVELOPMENT

MARK	DATE	DESCRIPTION
REVISION 1	12/15/2004	2x6 STUD WALLS

PROJECT NUMBER: SE02094
DATE:
DRAWN BY: BS
CHECKED BY: HS

COPYRIGHT 2005 EMA ARCHITECTS, LLC

SHEET TITLE

CHANGE "CLEARY WALLS" TO "2x6 STUD WALLS"

S-205A

OF

AutoCAD Version: 13_c4
Model: Model_Space
Layout: Layout1
Drawing: C:\W13\COMMON\ROTOS\S1\S1205.DWG (6:40)

ROOF FRAMING PLAN NOTES:

1. SEE GENERAL STRUCTURAL NOTES SHEET AND STANDARD WOOD FRAMING DETAILS FOR
   - A. GENERAL STRUCTURAL NOTES
   - B. TYPICAL HEADER DETAIL
   - C. TYPICAL TOP PLATE SPLICE DETAIL
   - D. TYPICAL ROOF OPENING
2. K.P. = KING POST, SEE PLAN FOR SIZE AND LOCATION TYPICAL.
3. ALL ROOF TRUSSES ARE TO BE PRE-FABRICATED TRUSSES, SEE PLAN TYP.
4. ESTABLISH AND VERIFY ALL OPENINGS & INSERTS FOR MECHANICAL, ELECTRICAL & PLUMBING WITH THE APPROPRIATE TRADES, DRAWINGS AND SUBCONTRACTORS PRIOR TO CONSTRUCTION.
5. HANGING CEILING DUCTWORK OR OTHER ITEMS FROM THE PLYWOOD DECK IS NOT ALLOWED.
6. PROVIDE TRUSS BRIDGING AS PER MANUFACTURER'S SPECIFICATION.
7. PROVIDE SOLID BLOCKING AT TRUSS BEARING TYPICAL U.N.O.
8. PROVIDE 1/8" GAP ON ROOF DECK PLYWOOD OR FOLLOW MANUFACTURER'S SPECIFICATION.
9. ALL HEADERS OVER OPENINGS TO BE MIN. (3) 2x10 AT BRG. WALLS w/(2) 2x6 STUDS ENDS.
10. SEE STANDARD DETAIL FOR MULTI-STUDS TO WOOD BEAM/HEADER CONNECTION TYPICAL.
11. SHEAR WALLS SHOWN ARE BELOW FRAMING LEVEL. COORDINATE WITH FRAMING PLANS.

ROOF TRUSS DESIGN CRITERIA

MARK	TOP CHRD DEAD LOAD	BOTTOM CHRD DEAD LOAD	TOP CHRD SNOW LOAD	TOTAL LOADS
REGULAR TRUSSES	15 PSF	5 PSF	25 PSF	45 PSF
GIRDER TRUSSES	15 PSF	5 PSF	25 PSF	45 PSF

SHEARWALL SCHEDULE

MARK	SHEATHING			BOTTOM PLATE	NAILING THRU FLOOR	PANEL EDGE STUD
	PLYWOOD	EDGE NAILING	INTER. NAILING		ANCHOR BOLTS TO CONC.	
SW1	1/2" (G-D, C-C)	8d @ 6" O.C.	8d @ 12" O.C.	2xPL.	16d @ 6" O.C.	--
					3/4" ⌀ A.B. x 10" @ 48" O.C.	
SW2	1/2" (G-D, C-C)	8d @ 4" O.C.	8d @ 12" O.C.	2xPL.	16d @ 3" O.C.	--
					3/4" ⌀ A.B. x 10" @ 32" O.C.	
SW3	1/2" (G-D, C-C)	8d @ 3" O.C.	8d @ 12" O.C.	2xPL.	3/8" LAG BOLTS x5" @ 8" O.C.	--
					3/4" ⌀ A.B. x 10" @ 24" O.C.	
SW4	1/2" (G-D, C-C)	8d @ 2" O.C.	8d @ 12" O.C.	3xPL.	3/8" LAG BOLTS x5" @ 8" O.C.	3xSTUDS MIN.
					3/4" ⌀ A.B. x 10" @ 32" O.C.	
SW5	DBL 1/2"(G-D,C-C)	8d @ 4" O.C.	8d @ 12" O.C.	3xPL.	1/2" LAG BOLTS x5" @ 12" O.C.	3xSTUDS MIN.
					3/4" ⌀ A.B. x 10" @ 24" O.C.	
SW6	DBL 1/2"(G-D,C-C)	8d @ 3" O.C.	8d @ 12" O.C.	3xPL.	1/2" LAG BOLTS x5" @ 8" O.C.	3xSTUDS MIN.
					3/4" ⌀ A.B. x 10" @ 16" O.C.	
SW7	DBL 5/8" GYP. BD	6dCOOLER@4	6dCOOLER@12	2xPL.	16d @ 6" O.C.	--
					3/4" ⌀ A.B. x 10" @ 48" O.C.	

NOTE: FOR DOUBLE SIDED PLYWOOD SHEAR WALLS, THE PANEL JOINTS ON BOTH FACES TO BE OFFSET TO FALL ON DIFFERENT STUDS TYPICAL.
1/2"(G-D,C-C) PLWD CAN BE SUBSTITUTED BY 7/16" OSB TYP. U.N.O.
FOR SW4 FRAMING AT PANEL EDGES TO BE 3xSTUD AND NAILS TO BE STAGGERED TYP.
WHERE LAG BOLTS TO BE USED, THE RIM JOIST OR JOIST BLOCKING TO BE MIN. 3x MEMBER TYP.

TYPICAL ROOF DECK:
5/8" APA RATED SHEATHING, SPAN RATING 32/16
1/2" OSB SHEATHING, SPAN RATING 32/16
SEE GENERAL STRUCTURAL NOTES-TYPICAL NAILING:
10d @ 6" O.C. AT ALL PANEL EDGES, SUPPORTED EDGES, AND ALL TOP OF SHEAR WALLS
10d @ 12" O.C. AT ALL PANEL FIELD
PLACE SHEATHING LONG-WISE ACROSS FRAMING. STAGGER END JOINTS. UNBLOCKED DIAPHRAGM

HEADER SCHEDULE

MARK	SIZE	END BRG.	REMARKS
HDR-1	(3) 2x6	(2) 2x6	--
HDR-2	(3) 2x8	(2) 2x6	--
HDR-3	(3) 2x10	(2) 2x6	--
HDR-4	(3) 2x12	(3) 2x6	--
HDR-5	5 1/8x12 GLB	(3) 2x6	or (3)1 3/4x11 7/8LVL

NOTES:
1. GLULAM BEAMS SHALL BE COMBINATION SYMBOL 24F-V4 FOR REGULAR BEAM AND 24F-V8 FOR CANTILEVERED BEAM TYPICAL.
2. ALL GLULAM BEAMS TO BE ZERO CAMBER BEAMS U.N.O.
3. ALL MULTI-MEMBER BEAMS AND STUDS SHALL BE NAILED TOGETHER w/(2) ROWS 16d @ 6" O.C. BOTH SIDES TYPICAL.

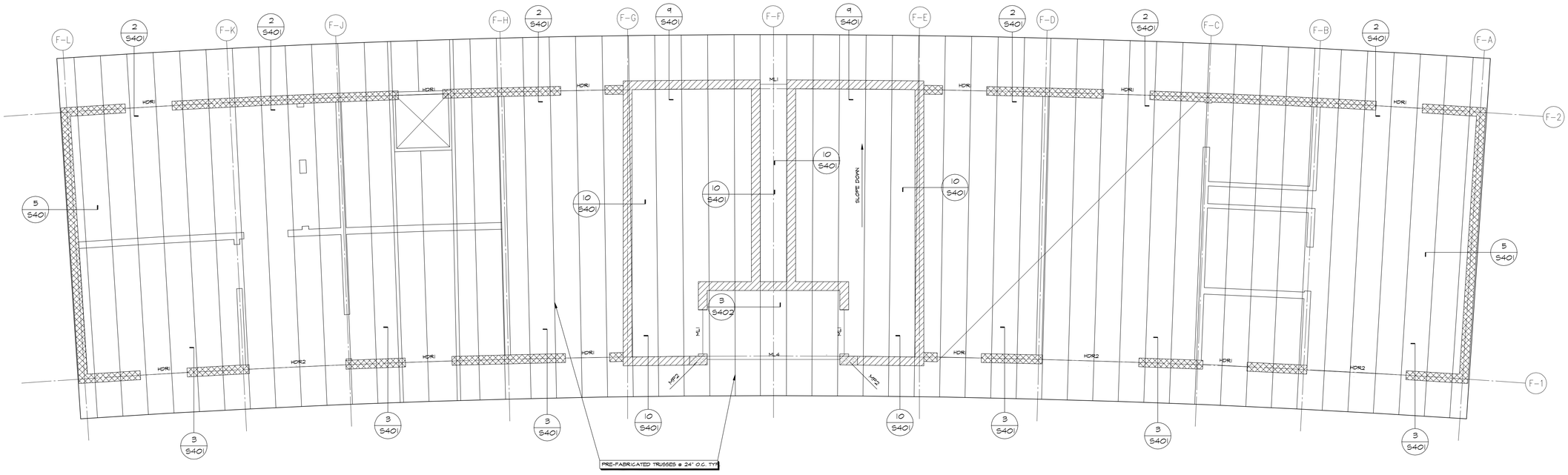

MARK	SIZE OF LINTEL	REINFORCING	MIN. END BRG.	REMARKS
ML-1	8"x8"	(2) #5	MP-1	
ML-2	8"x16"	(2) #5 T&B	MP-1	
ML-3	8"x24"	(2)#5 T&B	MP-1	

PROVIDE 10x16 BOND BEAM w/4-#5 HORIZ. CONT. AT A.V. FLOOR LEVEL TYP. U.N.O.

ROOF FRAMING PLAN - BUILDING "F"
SCALE: 1/4" = 1'-0"

BUILDING NORTH

TYPICAL DRAG-STRUCT NOTES
DRAG1
(1) EXTRA JOIST (OR JOIST BLKG.) w/SIMPSON "CS16" CONT w/ FULL NAILING TYP.
SEE DET. 1/S402

DRAG2
SIMPSON "CS16" CONT. FROM BEAM(OR BLKG.) TO SHEAR WALL w/FULL NAILING TYP.
SEE DET. 1/S402

DRAG3
3"x BLKG (OR 3" WIDE JOIST) w/SIMPSON "CMST14" CONT. w/ FULL NAILING TYP.
SEE DET. 1/S402

NOTE:
ALL EXTERIOR WALLS ARE TO BE "CLEARY WALLS" PROVIDED, DESIGNED AND DETAILED BY CLEARY BUILDING CORP. THE LISTED HEADER SIZE, MULTI-STUDS FOR END BEARING ON HEADER SCHEDULE ARE THE REFERENCES FOR CLEARY WALL DESIGN OR USE. CLEARY NEEDS TO FOLLOW THE SHEAR WALL SCHEDULE TO PROVIDE REQUIRED CLEARY SHEAR WALLS FOR ANY THING UNCLEAR, CONTACT THE ENGINEER IN RECORD TYPICAL UNLESS NOTED OTHERWISE.

EMA ARCHITECTS, LLC
460 South 400 East Salt Lake City, Utah 84111
(801) 363-1511 (801) 363-1560 Fax

CONSULTANTS

Shen Engineers, Inc.
Structural/Seismic Consultants
3335 South 900 East, Suite 250
Salt Lake City, UT 84106
Telephone 801 466-2625
Facsimile 801 466-2656
E-mail: sheneng@msn.com

LICENSED PROFESSIONAL ENGINEER
No. 260129
HUA SHEN
STATE OF UTAH

MONUMENT VALLEY VENDOR VILLAGE

MONUMENT VALLEY, UTAH

OWNER
NAVAHO NATION DEPARTMENT OF ECONOMIC DEVELOPMENT

REVISION 1	12/15/2004	2x6 STUD WALLS
MARK	DATE	DESCRIPTION

PROJECT NUMBER: SE02094
DATE:
DRAWN BY: BS
CHECKED BY: HS

COPYRIGHT 2005 EMA ARCHITECTS, LLC

SHEET TITLE

CHANGE "CLEARY WALLS" TO "2x6 STUD WALLS"

S-206A

OF

AutoCAD Version: 13.1c4
Plot Date: 2005.10.11 - 10:31:11
Drawing: C:\W1\COM\PROTOTYP\12.DWG (R&D)

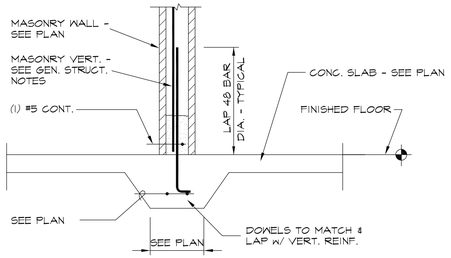

NOTE: THREADED INSERT MAY BE USED IN LIEU OF DOWEL

10 INTERIOR CMU WALL & FOOTING

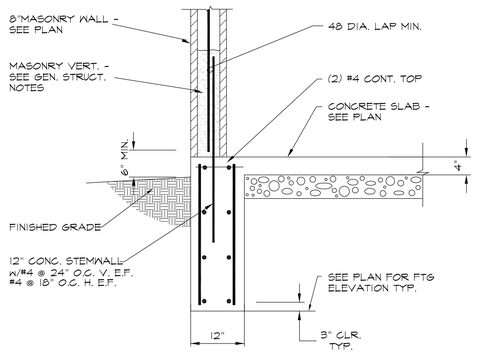

7

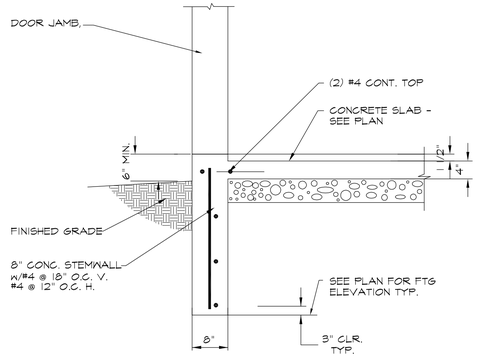

4

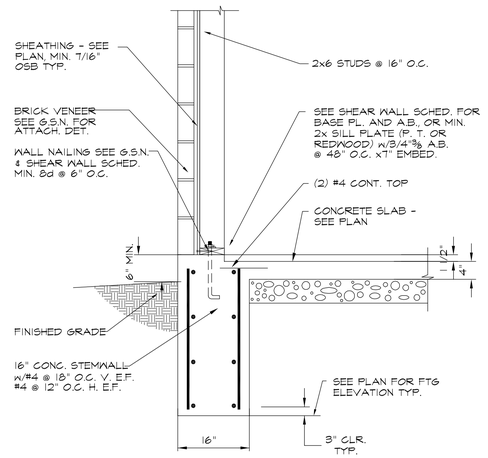

1

8

NOTE: THREADED INSERT MAY BE USED IN LIEU OF DOWEL

5 INTERIOR CMU WALL & FOOTING

2

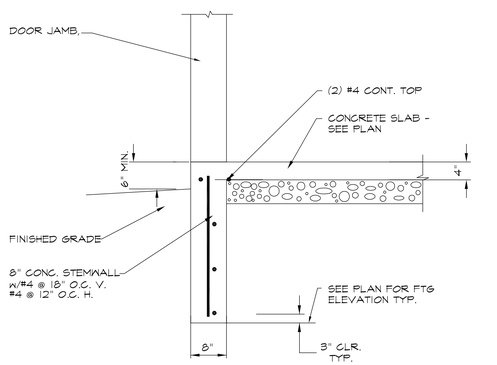

9

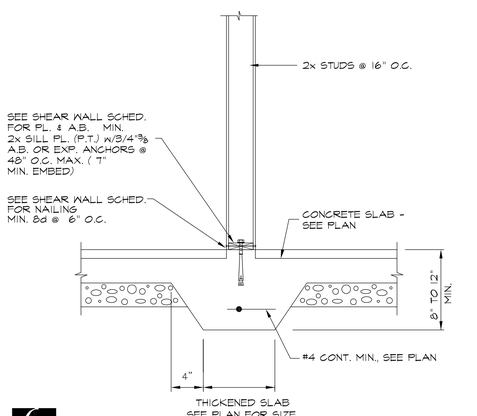

6

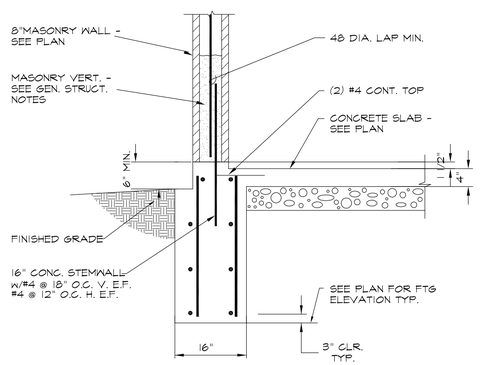

3

EMA ARCHITECTS, LLC
460 South 400 East Salt Lake City, Utah 84111
(801) 363-1511 (801) 363-1560 Fax

CONSULTANTS

Shen Engineers, Inc.
Structural/Seismic Consultants
3335 South 900 East, Suite 250
Salt Lake City, UT 84106
Telephone 801 466-2625
Facsimile 801 466-2656
E-mail: shenengr@msn.com

LICENSED PROFESSIONAL ENGINEER
No. 260129
HUA SHEN
STATE OF UTAH

MONUMENT VALLEY VENDOR VILLAGE

MONUMENT VALLEY, UTAH

OWNER
NAVAHO NATION DEPARTMENT OF ECONOMIC DEVELOPMENT

MARK	DATE	DESCRIPTION
REVISION 1	12/15/2004	2x6 STUD WALLS

PROJECT NUMBER: SE02094
DATE:
DRAWN BY: BS
CHECKED BY: HS

COPYRIGHT 2005 EMA ARCHITECTS, LLC

SHEET TITLE

CHANGE "CLEARY WALLS" TO "2x6 STUD WALLS"

S-301A

OF

AutoCAD Version: 13_c4
Plot Date: 12/15/2004 - 11:47:11
Drawing: C:\R13\DOM\VB07\DS\S312.DWG (RJG)

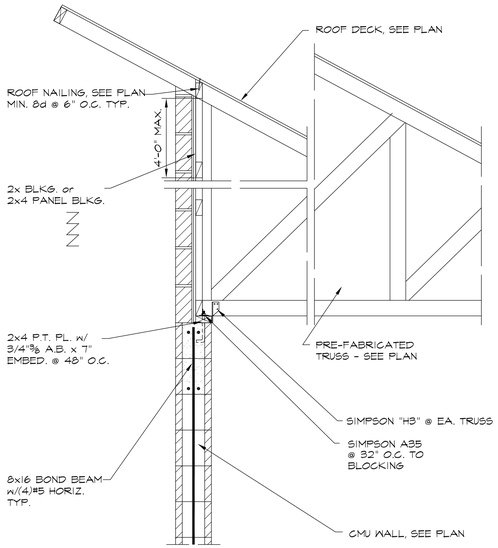

10

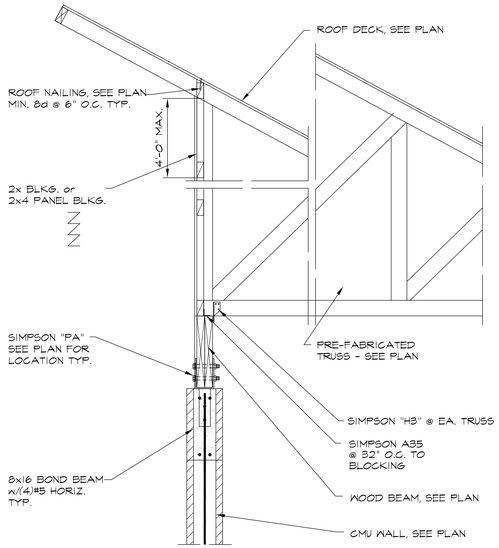

7

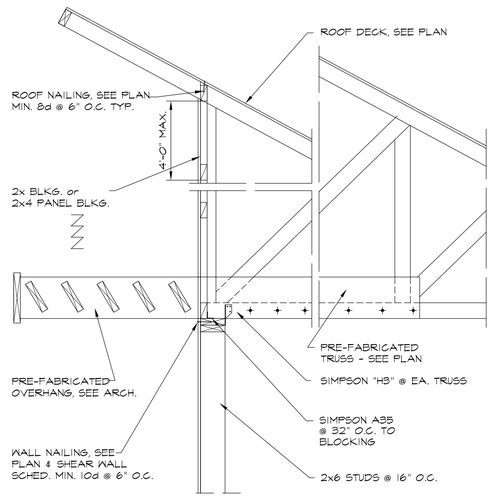

4

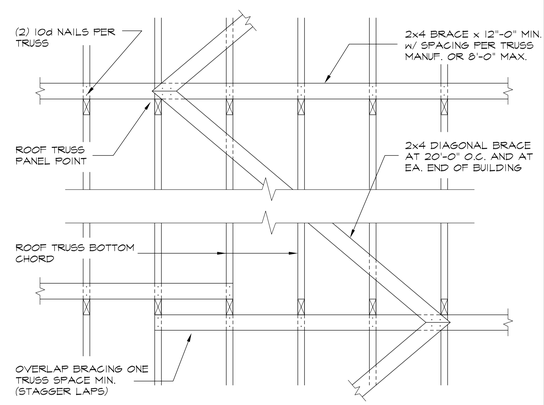

1 TYP. ROOF TRUSS BRACING (PLAN)

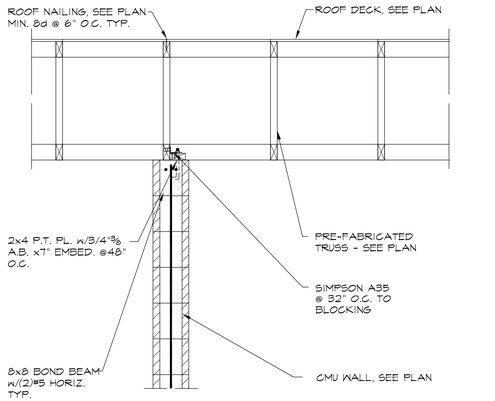

11

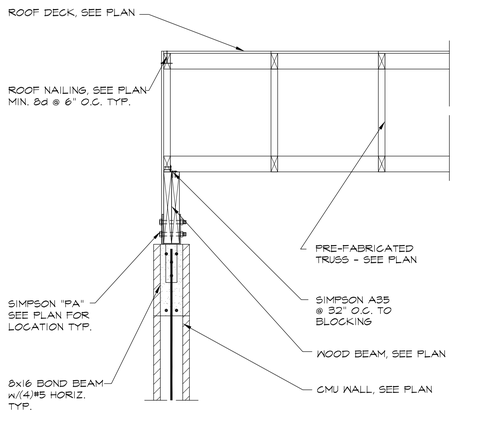

8

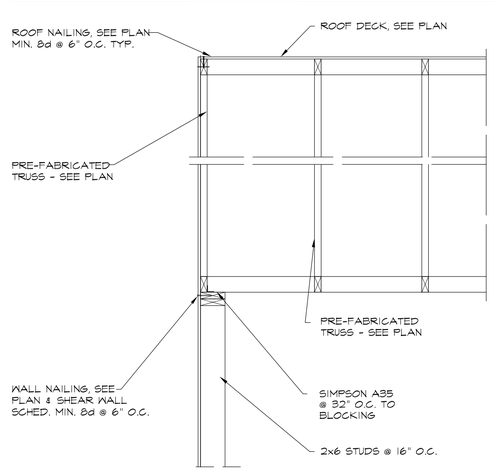

5

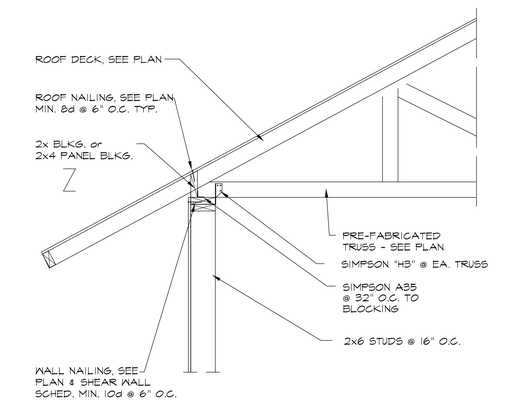

2

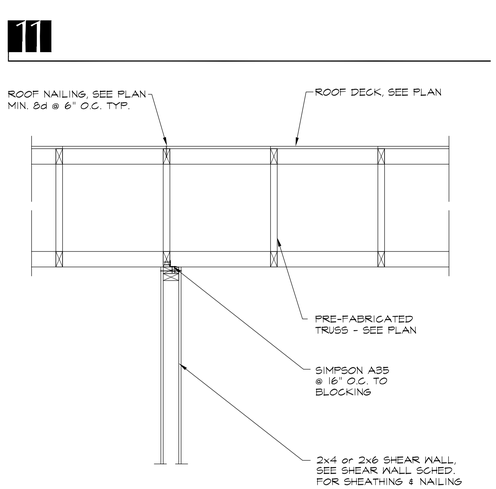

12

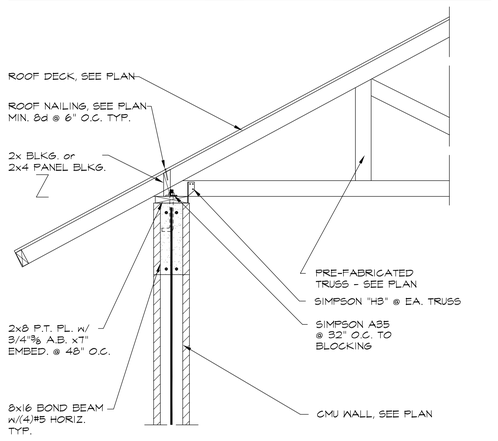

9

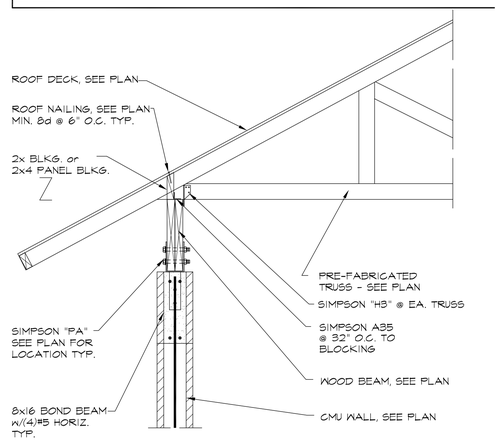

6

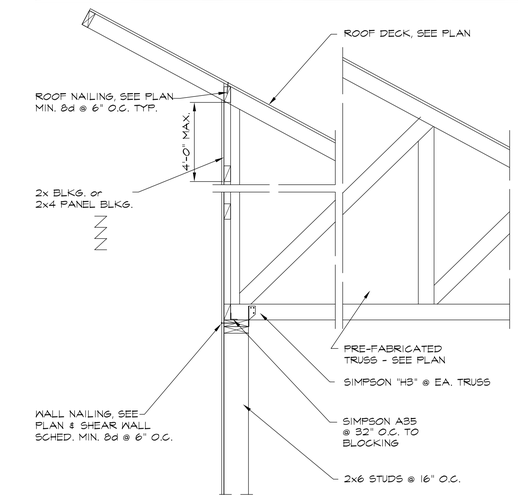

3

EMA ARCHITECTS, LLC
460 South 400 East Salt Lake City, Utah 84111
(801) 363-1511 (801) 363-1560 Fax

CONSULTANTS

Shen Engineers, Inc.
Structural/Seismic Consultants
3935 South 900 East, Suite 250
Salt Lake City, UT 84106
Telephone 801 466-2625
Facsimile 801 466-2656
E-mail: sheneng@msn.com

LICENSED PROFESSIONAL ENGINEER
No. 260129
HUA SHEN
STATE OF UTAH

MONUMENT VALLEY VENDOR VILLAGE

MONUMENT VALLEY, UTAH

OWNER
NAVAHO NATION DEPARTMENT OF ECONOMIC DEVELOPMENT

REVISION 1	12/15/2004	2x6 STUD WALLS
MARK	DATE	DESCRIPTION

PROJECT NUMBER: SE02094
DATE:
DRAWN BY: BS
CHECKED BY: HS

COPYRIGHT 2005 EMA ARCHITECTS, LLC

SHEET TITLE

CHANGE "CLEARY WALLS" TO "2x6 STUD WALLS"

S-401A

OF

AutoCAD Version: 13_c4
Plot Scale: 1:1 / 1" = 1'-0"
Drawing: C:\R13\DWG\PROTOS\012.DWG (R/O)

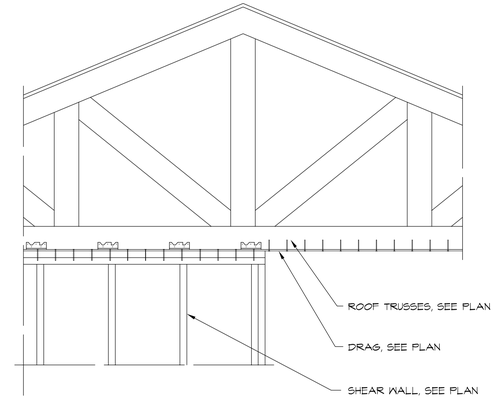

1

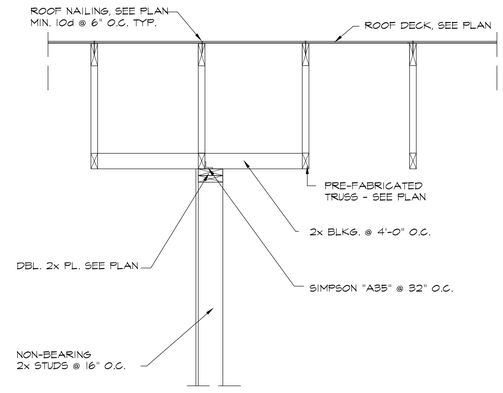

2

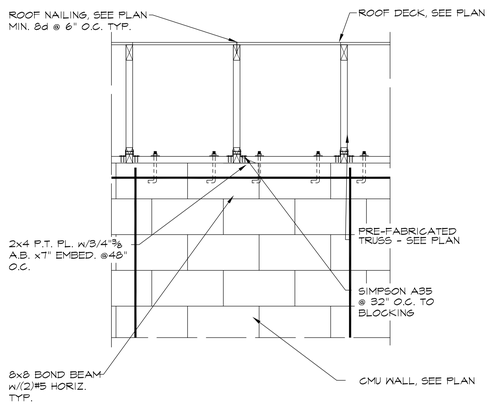

3

EMA
ARCHITECTS, LLC

EMA ARCHITECTS, LLC
460 South 400 East Salt Lake City, Utah 84111
(801) 363-1511 (801) 363-1560 Fax

CONSULTANTS

Shen Engineers, Inc.
Structural/Seismic Consultants
3335 South 900 East, Suite 250
Salt Lake City, UT 84106
Telephone 801 466-2625
Facsimile 801 466-2656
E-mail: shenengr@msn.com

LICENSED PROFESSIONAL ENGINEER
No. 260129
HUA SHEN
STATE OF UTAH

MONUMENT VALLEY VENDOR VILLAGE

MONUMENT VALLEY, UTAH

OWNER
NAVAHO NATION DEPARTMENT OF ECONOMIC DEVELOPMENT

MARK	DATE	DESCRIPTION
REVISION 1	12/15/2004	2x6 STUD WALLS

PROJECT NUMBER: SE02094
DATE:
DRAWN BY: BS
CHECKED BY: HS

COPYRIGHT 2005 EMA ARCHITECTS, LLC

SHEET TITLE

CHANGE "CLEARY WALLS"
TO "2x6 STUD WALLS"

S-402

OF

AutoCAD Version: 13_c4
Plot Date: 12/15/2004 - 11:31 am
Drawing: C:\SE\13JOBS\VMVB\DTGS\V012.DWG (RJC)

Copyright (C) 2002 by Colvin Engineering Associates, Inc. Salt Lake City, Utah. All rights reserved. Unauthorized copying and/or use is illegal and subject to prosecution.

AIR DEVICE SCHEDULE

PLAN CODE — GRILLE — CFM

PLAN CODE	TYPE & DUTY	FACE SIZE	NECK SIZE	CEILING TYPE	MAX. CFM	MAX. T.P. (IN. W.C.)	N.C. LEVEL MAX	MIN. THROW (FT) (T50)	MANUFACTURER & MODEL NO.	REMARKS
1	RADIAL BLADE DIFFUSER	–	24"ø	SURFACE	1100	0.12	35	22	AIR DIFFUSION PRODUCTS, INC. DNR	–
2	RADIAL BLADE DIFFUSER	24" X 24"	16"ø	GRID	520	0.15	35	15	AIR DIFFUSION PRODUCTS, INC. DNR	WITH MANUAL OBD.
3	RADIAL BLADE DIFFUSER	24" X 24"	10"ø	GRID	200	0.15	35	9.5	AIR DIFFUSION PRODUCTS, INC. DNR	WITH MANUAL OBD.
4	RADIAL BLADE DIFFUSER	24" X 24"	8"ø	GRID	120	0.15	28	7.5	AIR DIFFUSION PRODUCTS, INC. DNR	WITH MANUAL OBD.
5	PERFORATED RETURN/EXHAUST	24" X 12"	22" X 10'	MATCH CEILING	600	0.06	10	–	TITUS PAR	WITH MANUAL OBD.
7	OUTSIDE AIR GRILLE	16" X 16"	14" X 14"	SIDEWALL	488	0.085	27	–	TITUS 23RFL	FILTER IN GRILLE

PLUMBING FIXTURE CONNECTION SCHEDULE

PLAN CODE	DESCRIPTION	CONNECTION SIZE			COMMENTS
		C.W.	H.W.	WASTE	
WC-1	WATER CLOSET, ADA ACCESSIBLE FLOOR MOUNT, FLUSH VALVE SIPHON JET, VITREOUS CHINA 1.6 GPF	1"	–	3"	KOHLER K-4302 SEAT: KOHLER K-4670-CA FLUSH VALVE: ZURN Z-6000-WS1 COLOR: WHITE FLOOR TO RIM: 17"
WC-2	WATER CLOSET, STANDARD FLOOR MOUNT, FLUSH VALVE SIPHON JET, VITREOUS CHINA 1.6 GPF	1"	–	3"	KOHLER K-4386 SEAT: KOHLER K-4670-CA FLUSH VALVE: ZURN Z-6000-WS1 COLOR: WHITE FLOOR TO RIM: 15"
U-1	URINAL, ADA COMPLIANT, VITREOUS CHINA, SIPHON JET 1.0 GPF	3/4"	–	2"	BOWL: KOHLER K-5016-ET FLUSH VALVE: ZURN ZR-6003-WS1 COLOR: WHITE FLOOR TO RIM: 17"
L-1	OVAL, VITREOUS CHINA, COUNTER MOUNT LAVATORY, SINGLE LEVER FAUCET	1/2"	1/2"	1 1/2"	BOWL: KOHLER K-2196 FAUCET: KOHLER K-15182 GRID DRAIN KOHLER K-7715
L-2	RECTANGULAR, VITREOUS CHINA, WALL MOUNT, SINGLE LEVER FAUCET	1/2"	1/2"	1 1/2"	BOWL: KOHLER K-1722 FAUCET: KOHLER K15182 GRID DRAIN KOHLER K-7715
S-1	TRIPLE COMPARTMENT, RECTANGULAR STAINLESS STEEL, COUNTER MOUNT SINK, GOOSENECK SWING SPOUT WITH WING HANDLES, 18 GA.	1/2"	1/2"	1 1/4"	ELKAY LTR-6322-10 FAUCET: ELKAY LK-232-S-BH-5 STRAINER: ELKAY LK-35
SS-1	MOLDED STONE SERVICE SINK	3/4"	3/4"	3"	FIAT MSB-2424 WITH FLAT STRAINER, HOSE & BRACKET, MOP HANGER, AND 830-AA FAUCET
EWC-1	ELECTRIC WATER COOLER, VANDAL RESISTANT	1/2"	–	1 1/2"	HAWS MODEL 1116

ABBREVIATIONS

ø	ROUND OR DIAMETER	MAX	MAXIMUM
AFF	ABOVE FINISHED FLOOR	MBH	THOUSAND BRITISH THERMAL UNITS/HOUR
ALT	ALTERNATE	MECH	MECHANICAL
BTU/H	BRITISH THERMAL UNITS PER HOUR	MIN	MINIMUM
CAP.	CAPACITY	NC	NOISE CRITERIA OR NORMALLY CLOSED
CFM	CUBIC FEET PER MINUTE	NO.	NUMBER
CV	CONSTANT VOLUME	NOM	NOMINAL
DB	DRY BULB	NTS	NOT TO SCALE
DIA	DIAMETER	OA	OUTSIDE AIR
EAT	ENTERING AIR TEMPERATURE	PD	PRESSURE DROP
EFF	EFFICIENCY	PRV	PRESSURE REDUCING VALVE
ELEV	ELEVATION	PSI	POUNDS PER SQUARE INCH
ESP	EXTERNAL STATIC PRESSURE	PSIG	POUNDS PER SQUARE INCH GAUGE
ET	EXPANSION TANK	RA	RETURN AIR
EWT	ENTERING WATER TEMPERATURE	RPBP	REDUCED PRESSURE BACKFLOW PREVENTER
FCO	FLOOR CLEANOUT	SA	SUPPLY AIR
FD	FLOOR DRAIN	SEN	SENSIBLE
FPM	FEET PER MINUTE	SIM	SIMILAR
FS	FLOOR SINK	SL	SEA LEVEL
FT	FEET	SP	STATIC PRESSURE
FV	FACE VELOCITY	SQ FT	SQUARE FEET
GA	GAUGE	SS	SERVICE SINK OR STAINLESS STEEL
GAL	GALLON	TSP	TOTAL STATIC PRESSURE
GPM	GALLONS PER MINUTE	U	URINAL
HP	HORSEPOWER	VFD	VARIABLE FREQUENCY DRIVE
HR	HOUR	VOL	VOLUME
HT	HEIGHT	VTR	VENT THROUGH ROOF
IN.	INCH	W/	WITH
INWC	INCHES OF WATER COLUMN	W/O	WITHOUT
INWG	INCHES OF WATER GAUGE	WB	WET BULB
L	LAVATORY	WC	WATER CLOSET
LAT	LEAVING AIR TEMPERATURE	WCO	WALL CLEANOUT
LBS	POUNDS	WPD	WATER PRESSURE DROP
LWT	LEAVING WATER TEMPERATURE	WT	WEIGHT

MECHANICAL LEGEND

NOTE: ALL ITEMS MAY NOT APPEAR ON DRAWINGS

GATE VALVE
OS & Y PATTERN GATE VALVE
BALL VALVE
BUTTERFLY VALVE
MOTORIZED VALVE OPERATOR (M)
GAS COCK
PLUG VALVE
CHECK VALVE (SWING OR LIFT AS REQ'D)
SOLENOID VALVE
AUTOMATIC CONTROL VALVE (2-WAY)
AUTOMATIC CONTROL VALVE (3-WAY)
PRESSURE REDUCING VALVE
P & T RELIEF VALVE
STRAINER
CALIBRATED BALANCE VALVE
VENTURI FLOW METER
REDUCER
PET COCK OR GAUGE COCK
PRESSURE GAUGE W/GAUGE COCK
THERMOMETER
TEMPERATURE & PRESSURE TEST PLUG
IN-LINE PUMP
FLOW SWITCH (F)
AQUASTAT (A)
HOSE BIBB OR SILLCOCK
FLOOR DRAIN
FLOOR SINK
MANHOLE
WALL CLEANOUT (CI)
FLOOR OR GRADE CLEANOUT
GRADE CLEANOUT W/ CONCRETE PAD
VENT THROUGH ROOF
EXPANSION JOINT
FLEXIBLE PIPE CONNECTION
REDUCED PRESSURE BACKFLOW PREVENTER (RPBP)
DIRECTION OF FLOW
ELBOW DOWN
ELBOW UP
PIPE CAP
TEE DOWN
UNION
DOMESTIC COLD WATER
DOMESTIC HOT WATER
HOT WATER CIRC.
SANITARY (PLBG) VENT

SANITARY SEWER ABOVE GRADE
SANITARY SEWER BELOW GRADE
FIRE SERVICE — F —
PROPANE — P —
HEAT TRACING
CONDENSER WATER SUPPLY — CS —
CONDENSER WATER RETURN — CR —
RADIANT FLOOR SUPPLY — RFS —
RADIANT FLOOR RETURN — RFR —
CONDENSATE — C —
DUCT SIZE, FIRST FIGURE IS SIDE SHOWN (18/12)
DUCT W/ ACOUSTICAL LINING
FLEXIBLE DUCT (HELICAL)
SPIN-IN FITTINGS W/MVD
SUPPLY SLOT DIFFUSER
SUPPLY DIFFUSER
RETURN GRILLE
RADIAL SUPPLY DIFFUSERS
RETURN AIR DUCT SECTION
RETURN AIR DUCT UP
RETURN AIR DUCT DOWN
SUPPLY AIR DUCT SECTION
SUPPLY AIR DUCT UP
SUPPLY AIR DUCT DOWN
EXHAUST AIR DUCT SECTION
EXHAUST AIR DUCT UP
EXHAUST AIR DUCT DOWN
ACCESS PANEL
MANUAL VOLUME DAMPER
FIRE DAMPER (F)
SMOKE DAMPER (S)
COMBINATION FIRE/SMOKE DAMPER (FS)
DUCT TRANSITION
ELBOW W/ TURNING VANES
TEE W/ 45° ENTRY
WYE W/ 45° ENTRY
THERMOSTAT OR TEMP SENSOR (T)
HUMIDISTAT OR HUMIDITY SENSOR (H)
POINT OF REMOVAL FROM EXISTING
POINT OF CONNECTION TO EXISTING
DETAIL TAG — DETAIL NO. / DRAWING NO.
KEYED NOTE — NOTE NO.
SECTION CUT LINE — SECTION NO. / DRAWING NO.

EVAPORATIVE COOLER

PLAN CODE	AIR VOLUME (CFM)	FAN		PUMP	ELECTRICAL		SIZE				MANUFACTURER MODEL
		ESP (IN WC)	HP	MAXIMUM USAGE (GPM)	VOLT/ PHASE	MCA	LENGTH (IN)	WIDTH (IN)	HEIGHT (IN)	WEIGHT (LBS)	
EC-1 THRU EC-10	2500	0.5	3/4	3.2	120/1	11.8	43	42	27 1/4	185	MASTERCOOL CMC441

WATER HEATER SCHEDULE

PLAN CODE	CAP. (GAL)	RECOVERY (GAL/HR) @ ELEV.	FUEL	INPUT (BTU/H)	INPUT (KW)	TEMP RISE (°F)	DIMENSIONS				OPERATING WEIGHT	MANUFACTURER & MODEL NO.	REMARKS
							DIA. (in.)	HEIGHT (in.)	VOLT & PHASE	AMPS			
WH-1 THRU 5	15	18	NA	NA	2.5	60	18	26	208/1	12.0	178	A.O. SMITH DEL-15	–

ELECTRIC UNIT HEATER SCHEDULE

PLAN CODE	CFM (ALT.)	MBH	ELECTRICAL				MANUFACTURER & MODEL NO.	REMARKS
			AMPS	VOLTS	HZ	PH		
EUH-1	350	17	24.0	208	60	1	QMARK MUH05-81	MOUNT UP HIGH AS POSSIBLE (1)

(1) PROVIDE WALL MOUNTING BRACKET.

FURNACE

PLAN CODE	FUEL	NOMINAL				APPROX. NET COOLING		APPROX. NET HEATING			EVAPORATOR			ELECTRICAL	DIMENSIONAL				MAKE/MODEL	COMMENTS
		CONDENSING UNIT	AIRFLOW (CFM)	OUTSIDE AIR (CFM)	ESP (IN WC)	SENSIBLE MIN. (MBH)	TOTAL MIN. (MBH)	NOM. INPUT AT S.L.	MIN. OUTPUT (MBH)	MIN. TEMP RISE (F)	MAX. LDB/LWB (F)	EDB/EWB (F)	MIN. EFFICIENCY	VOLT/ PHASE	HEIGHT (IN)	WIDTH (IN)	LENGTH (IN)	WEIGHT (LB)		
F-1	PROPANE	CU-1	2000	450	0.5	48.2	48.2	80 MBH	75	26	55/49	80/58	80%	115/1	38	21	26	197	CARRIER 58MXA080-20	CONDENSING FURNACE (SEALED COMBUSTION), WITH FILTER SECTION, EVAPORATOR SECTION, TXV REFRIGERANT METERING DEVICE, 7-DAY PROGRAMMABLE THERMOSTAT. PROVIDE 3" PVC PIPING W/ CONCENTRIC TERMINATION KIT UP THROUGH ROOF.

CONDENSING UNIT SCHEDULE

PLAN CODE	MIN SEER	ELECTRICAL		DIMENSIONAL				MAKE/MODEL	COMMENTS
		VOLT	MCA	HEIGHT (IN)	WIDTH (IN)	DEPTH (IN)	WEIGHT (LB)		
CU-1	10.0	208/1	37.4	40	30	35	268	CARRIER 38TRA060	INSTALL ON 4" CONCRETE PAD

EXHAUST FAN SCHEDULE (1)

PLAN CODE	AREA SERVED	TYPE	CFM @ ELEV.	ESP @ ELEV.	FAN RPM	MOTOR		SONES	DAMPER (GRAVITY OR MOTOR)	METHOD OF CONTROL	OPERATING WT. (LBS.)	MANUFACTURER / MODEL	REMARKS
						WATT'S	VOLTAGE & PHASE						
EF-1	MEN'S TOILET F09	CEILING CABINET FAN	175	0.25	1500	89.4	115/1	5.0	GRAVITY	SWITCH	15	COOK GC-160	–
EF-2	WOMEN'S TOILET F10	CEILING CABINET FAN	175	0.25	1500	89.4	115/1	5.0	GRAVITY	SWITCH	15	COOK GC-160	–
EF-3	TOILET ROOM F14	CEILING CABINET FAN	75	0.25	1200	44.8	115/1	1.5	GRAVITY	SWITCH	22	COOK GC-240	–
EF-4	TOILET ROOM F15	CEILING CABINET FAN	75	0.25	1200	44.8	115/1	1.5	GRAVITY	SWITCH	22	COOK GC-240	–

(1) WITH WALL TERMINATION CAP.

EMA ARCHITECTS, LLC
460 South 400 East Salt Lake City, Utah 84111
(801) 363-1511 (801) 363-1560 Fax

CONSULTANTS

Colvin Engineering Associates, Inc.
244 West 300 North Suite 200
Salt Lake City, Utah 84103
Phone: (801) 322-2400 / Fax: (801) 322-2418

Stephen G. Connor — REGISTERED — No. 187524 — PROFESSIONAL ENGINEER — State of Utah

MONUMENT VALLEY VENDOR VILLAGE

MONUMENT VALLEY, UT

OWNER: NAVAJO NATION DEPARTMENT OF ECONOMIC DEVELOPMENT

MARK	DATE	DESCRIPTION
	11/11/04	CONSTRUCTION DOCUMENTS
1	11/16/04	ADDENDUM 1
2	08/23/05	MS№ 2

PROJECT NUMBER: 2002-047.00
DRAWING FILE:
DRAWN BY: JLW
CHECKED BY: JRJ

COPYRIGHT 2002 EMA ARCHITECTS, LLC

SHEET TITLE

MECHANICAL
LEGEND & SCHEDULES

M-001

Copyright (C) 2002 by Colvin Engineering Associates, Inc. Salt Lake City, Utah. All rights reserved. Unauthorized copying and/or use is illegal and subject to prosecution.

MECHANICAL GENERAL NOTES

1. DO NOT SCALE DRAWINGS. SEE ARCHITECTURAL DRAWINGS AND REFLECTED CEILING PLAN FOR EXACT LOCATION OF DOORS, WINDOWS, CEILING DIFFUSERS, ETC. CLOSELY COORDINATE NEW MECHANICAL WITH ALL NEW AND EXISTING MECHANICAL, ELECTRICAL, ARCHITECTURAL AND STRUCTURAL MEMBERS. DUCTWORK AND PIPE ROUTING IS APPROXIMATE, DIAGRAMMATIC AND IS NOT TO BE SCALED. PROVIDE ALTERNATE ROUTING, OFFSETS AND TRANSITIONS AS REQUIRED FOR COORDINATION OF ALL WORK WITHOUT ADDITIONAL COST TO THE OWNER.
2. FIELD VERIFY ALL MECHANICAL AND PLUMBING ITEMS PRIOR TO COMMENCING NEW WORK. NO ADDITIONAL PAYMENT WILL BE ALLOWED FOR CONTRACTOR'S FAILURE TO BECOME FAMILIAR WITH EXISTING CONDITIONS.
3. ALL MECHANICAL WORK SHALL BE COORDINATED WITH THE WORK PERFORMED UNDER OTHER DIVISIONS TO AVOID INTERFERENCE.
4. HVAC CONTRACTOR SHALL REPAIR, REPLACE AND REPAINT TO MATCH EXISTING SURFACES DAMAGED BY THE HVAC CONTRACTOR DURING INSTALLATION OF MECHANICAL EQUIPMENT.
5. HVAC CONTRACTOR SHALL REMOVE FROM THE JOBSITE ANY MATERIALS NOT ECONOMICALLY RECOVERABLE. ANY MATERIALS REMOVED FROM THE JOBSITE AND SOLD FOR SALVAGE SHALL BE CREDITED TO THE OWNERS ACCOUNT.
6. DO NOT SHUT-OFF/PUT OUT SERVICE ANY SYSTEMS/SERVICES WITHOUT FIRST COORDINATING ALL DOWNTIME WITH THE OWNER'S PERSONNEL.
7. INSTALL ALL EQUIPMENT PER MANUFACTURERS RECOMMENDATIONS AND INSTRUCTIONS.
8. DUCT DIMENSIONS SHOWN ARE INSIDE CLEAR DIMENSIONS.
9. INSTRUMENT TEST HOLES SHALL BE LOCATED IN ALL NEW SUPPLY, EXHAUST AND RETURN DUCTS.
10. HVAC CONTRACTOR SHALL PROVIDE AND INSTALL MANUAL BALANCING DAMPERS IN DUCTWORK FIVE FEET UPSTREAM OF ALL DUCTED DIFFUSERS. IF FIVE FEET CANNOT BE MAINTAINED THE MAXIMUM DISTANCE POSSIBLE SHOULD BE OBSERVED. THE CONTRACTOR SHALL ALSO PROVIDE AND INSTALL ALL DAMPERS NECESSARY TO BALANCE THE SYSTEM TO AIR FLOW VALUES SHOWN ON PLANS.
11. HVAC CONTRACTOR SHALL PROVIDE AND INSTALL FIRE AND/OR SMOKE DAMPERS WHERE INDICATED ON PLANS AND IN SUCH LOCATIONS AS REQUIRED BY APPLICABLE CODE. INSTALLATION OF FIRE AND/OR SMOKE DAMPERS SHALL BE IN STRICT ACCORDANCE WITH THE DAMPER MANUFACTURER'S RECOMMENDATIONS.
12. USE SMACNA STANDARDS FOR MEDIUM PRESSURE DUCT CONSTRUCTION OF SUPPLY DUCTWORK UPSTREAM OF VAV BOX – 6 INWG PRESSURE CLASS, SEAL CLASS "A". CONSTRUCT ALL OTHER DUCTWORK ACCORDING TO SMACNA STANDARDS FOR LOW PRESSURE DUCT CONSTRUCTION – 2 INWG PRESSURE CLASS, SEAL CLASS "A". FIBERGLASS DUCTWORK IS UNACCEPTABLE.
13. WRAP ALL RIGID ROUND AND MEDIUM PRESSURE RECTANGULAR DUCTWORK WITH 1-1/2" – 0.75 LBS/CU.FT. FIBERGLASS DUCT WRAP. LINE ALL LOW PRESSURE RECTANGULAR DUCT WITH 1" – 1.5 LBS/CU.FT. DUCT LINER PIN LINER ON 12" CENTERS. TRIM AND SEAL JOINTS.
14. LOW PRESSURE ROUND FLEXIBLE DUCT TO BE 1" THICK INSULATED AND INSTALLED AS SHORT AS POSSIBLE WITHOUT KINKS. ALL INSULATION TO MEET NFPA 90A STANDARDS. ALL DUCTWORK SHALL MEET UL 181-CLASS 1 OR 0 DUCT STANDARDS.
15. ALL EQUIPMENT, DUCTWORK AND PIPING SHALL BE SEISMICALLY RESTRAINED IN ACCORDANCE WITH THE LOCAL CODE.
16. COORDINATE ALL FIRE SPRINKLER, DIFFUSER AND GRILLE LOCATIONS WITH REFLECTED CEILING PLAN AND ELECTRICAL DRAWINGS.
17. ALL VALVES AND PIPING SPECIALTIES SHALL BE LINE SIZED UNLESS NOTED OTHERWISE. USE ECCENTRIC REDUCERS ON CONTROL VALVES WHERE REQUIRED.
18. ALL PIPING, DUCTS, VENTS, ETC. EXTENDING THROUGH THE WALL AND/OR ROOF SHALL BE FLASHED AND COUNTERFLASHED IN A WATERPROOF MANNER.
19. ALL PIPING INSULATION SHALL RUN CONTINUOUSLY THROUGH FLOOR, WALLS, AND PARTITIONS.
20. ALL PIPING SHALL BE SUPPORTED ADJACENT TO EQUIPMENT, TO PREVENT WEIGHT OF PIPING BEING PLACED ON EQUIPMENT.
21. GENERAL CONTRACTOR SHALL FURNISH AND INSTALL ALL SUPPORTING ANGLES AND EXTRA SUPPORT BEAMS FOR A.C. UNITS, EXHAUST FANS, ETC.
22. HVAC CONTRACTOR SHALL CHANGE OUT THE EQUIPMENT FILTERS AT THE TIME OF POSSESSION OF THE PROJECT BY THE OWNER, USING ONLY NEW FILTERS OF THE PROPER SIZE AND TYPE.
23. THE HVAC CONTRACTOR SHALL LEAVE HIS WORK IN PERFECT WORKING CONDITION AND SHALL GUARANTEE SAME FOR A PERIOD OF TWELVE (12) MONTHS FROM DATE OF FINAL ACCEPTANCE.
24. INSTALL ALL MECHANICAL SYSTEMS IN ACCORDANCE WITH THE 2003 INTERNATIONAL BUILDING CODE, 2003 INTERNATIONAL MECHANICAL CODE, 2003 INTERNATIONAL FIRE CODE AND 2003 INTERNATIONAL PLUMBING CODE.
25. FIRE SPRINKLER CONTRACTOR SHALL ADD AND/OR RELOCATE REQUIRED SPRINKLER HEADS PER REFLECTED CEILING PLAN AND THE JURISDICTIONAL FIRE CODE. CONTRACTOR TO SUBMIT SHOP DRAWINGS FOR APPROVAL.
26. PROVIDE IDENTIFICATION LABELS ON ALL EQUIPMENT, PIPING, VALVES, CONTROLS, ETC. TO MATCH EXISTING BUILDING LABELING STANDARD AND INCLUDING TENANT NAME AND SPACE NUMBER.
27. DUCT INTERIORS VISIBLE THROUGH REGISTERS, GRILLES, AND DIFFUSERS SHALL BE FLAT BLACK.
28. DISINFECT NEW DOMESTIC WATER PIPING AND PROVIDE TEST RESULTS TO ENGINNER.
29. PIPING MATERIALS SHALL MATCH EXISTING BUILDING CONSTRUCTION.
30. INSULATE ALL DOMESTIC HOT AND CIRC. WATER, HEATING SUPPLY AND RETURN WATER, AND DOMESTIC COLD HORIZONTAL DISTRIBUTION PIPING. CONFORM TO 2003 INTERNATIONAL ENERGY CODE FOR PIPE INSULATION THICKNESS.
31. CURRENT OWNER SPECIFICATION AND STANDARDS ARE A PART OF THESE DOCUMENTS AND SHALL BE FOLLOWED.
32. PROVIDE OPERATION AND MAINTENANCE MANUALS AND SUBMIT TO ENGINEER.
33. PROVIDE ASBUILT DRAWINGS AND SUBMIT TO ENGINEER.
34. PROVIDE SUBMITTALS ON ITEMS LISTED IN MECHANICAL AND PLUMBING EQUIPMENT SCHEDULES TO THE ENGINEER FOR REVIEW PRIOR TO ORDER, PURCHASE OR INSTALLATION.
35. PROVIDE ISOLATION VALVES ON ALL PIPING TO EQUIPMENT.
36. AUTOMATIC TEMPERATURE CONTROLS, TESTING AND BALANCING, AND FIRE PROTECTION SCOPES OF WORK SHALL BE COMPLETED BY LANDLORDS APPROVED CONTRACTORS AT THE TENANT'S EXPENSE (IF NO LANDLORD APPROVED CONTRACTOR IS REQUIRED, CONTRACTOR SHALL PROVIDE AT HIS DISCRETION AND ALL REQUIRED COST IN HIS BID.). THE MECHANICAL CONTRACTOR SHALL INCLUDE THESE CONTRACT AMOUNTS IN HIS BID PRICE AND SHALL BE RESPONSIBLE FOR THE COORDINATION OF THESE TRADES AT COMPLETION OF TENANT'S INSTALLATION. THE MECHANICAL SYSTEMS SHALL BE ADJUSTED AND BALANCED BY AN INDEPENDENT BALANCING FIRM SPECIALIZING IN THIS WORK. BALANCING CONTRACTOR SHALL BE AABC CERTIFIED. ALL WORK SHALL BE DONE UNDER DIRECT SUPERVISION OF A STATE OF UTAH REGISTERED PROFESSIONAL ENGINEER. TENANT SHALL SUBMIT TWO COPIES OF BALANCING REPORT TO LANDLORD FOR REVIEW, APPROVAL AND RECORD.
37. THESE TENANT FINISH SHALL INCLUDE AND MAKE PART OF THESE DOCUMENTS THE ORIGINAL SHELL BUILDING SPECIFICATIONS.
38. CLEAN, FLUSH, AND DRAIN ALL TENANT HYDRONIC PIPING AFTER PRESSURE TESTING AND FILL WITH INDICATED CONCENTRATION OF PROPYLENE GLYCOL SOLUTION AND BORATE NITRITE INHIBITOR BEFORE OPENING TENANT ISOLATION VALVES. CONTRACTOR TO PROVIDE CLEANING CERTIFICATE TO ENGINEER.

HVAC AND PLUMBING SPECIFICATIONS

DRAWINGS AND GENERAL PROVISIONS OF THE CONTRACT, INCLUDING GENERAL AND SUPPLEMENTARY CONDITIONS AND DIVISION 1 SPECIFICATION SECTIONS, APPLY TO THIS SECTION.

THE CONTRACTOR SHALL VISIT THE PROJECT SITE PRIOR TO BEGINNING WORK FOR THE PURPOSE OF OBSERVING EXISTING CONDITIONS AND TO DETERMINE THE EXTENT OF THE WORK. THE CONTRACTOR SHALL MAKE ALLOWANCES FOR PROVIDING ALL MATERIAL, EQUIPMENT, AND LABOR AS REQUIRED FOR A COMPLETE AND OPERATIONAL SYSTEM IN ACCORDANCE WITH THE REQUIREMENTS OF THE DRAWINGS, SPECIFICATIONS, AND ALL CODE REQUIREMENTS.

HVAC WORK SHALL BE AS INDICATED ON THE PLANS AND AS HEREIN SPECIFIED. THE WORK SHALL CONSIST OF PROVIDING COMPLETE OPERATIONAL HVAC AND FIRE PROTECTION SYSTEMS AS INDICATED ON THE DRAWINGS. THE SYSTEM SHALL BE TESTED AND BALANCED. CAPACITIES SHALL BE AS SHOWN ON THE DRAWINGS. ADJUSTMENTS AS REQUIRED SHALL BE MADE BY THE CONTRACTOR TO INSTALL THE WORK WITHIN THE INTENT OF THE DRAWINGS AND SPECIFICATIONS AND TO PROVIDE AN ACCEPTABLE SYSTEM IN ACCORDANCE WITH STATE CODES, LOCAL CODES, ASHRAE, AND SMACNA RECOMMENDATIONS.

PLUMBING WORK SHALL BE AS INDICATED ON THE PLANS AND AS HEREIN SPECIFIED. IT IS THE INTENTION OF THESE DRAWINGS TO COVER ALL WORK FOR A COMPLETE FIRST CLASS PLUMBING INSTALLATION. ANY EQUIPMENT, TRIM HARDWARE AND/OR DEVICES USUALLY UTILIZED IN THE CLASS OF WORK, THOUGH NOT SPECIFICALLY MENTIONED OR SHOWN ON THE DRAWINGS, BUT WHICH MAY BE NECESSARY FOR THE SATISFACTORY COMPLETION OF THE WORK (AS DETERMINED BY THE ARCHITECT) SHALL BE FURNISHED AND INSTALLED BY THE PLUMBING CONTRACTOR AS PART OF HIS TOTAL WORK. WORK SHALL CONSIST OF PROVIDING A COMPLETE AND OPERATIONAL SYSTEM INCLUDING ALL FIXTURES, PIPING, VALVES, AND OTHER REQUIRED DEVICES, EQUIPMENT, ETC. ALL WORK SHALL BE INSTALLED IN STRICT ACCORDANCE WITH ALL STATE AND LOCAL CODE REQUIREMENTS. WHERE THERE ARE CONFLICTS BETWEEN THE PLANS, SPECIFICATIONS, AND CODE REQUIREMENTS, THE CONTRACTOR SHALL MAKE ANY ADJUSTMENTS AS REQUIRED FOR COMPLIANCE WITH ALL CODES AND FOR APPROVAL OF THE SYSTEM. THE SYSTEM SHALL EXTEND TO AND CONNECT INTO THE EXISTING MUNICIPAL.

WHENEVER A MATERIAL, ARTICLE, OR PIECE OF EQUIPMENT IS IDENTIFIED ON THE DRAWINGS BY REFERENCE TO MANUFACTURERS OR VENDORS NAMES, TRADE NAMES, CATALOG NUMBERS, OR THE LIKE, IT IS SO IDENTIFIED FOR THE PURPOSE OF ESTABLISHING A STANDARD, AND ANY MATERIAL, ARTICLE, OR PIECE OF EQUIPMENT OF OTHER MANUFACTURERS OR VENDORS WHICH WILL PERFORM ADEQUATELY THE DUTIES IMPOSED BY THE GENERAL DESIGN WILL BE CONSIDERED EQUALLY ACCEPTABLE PROVIDED THE MATERIAL, ARTICLE, OR PIECE OF EQUIPMENT SO PROPOSED IS OF EQUAL SUBSTANCE, APPEARANCE.

DUCTWORK:

DUCTWORK SHALL BE OF THE SIZE AS INDICATED ON THE PLANS WITH INTERNAL INSULATION PROVIDED ON ALL RECTANGULAR SUPPLY AND RETURN DUCTWORK. INSULATION SHALL BE 1" THICK 1-1/2 PCF FIBERGLASS, NEOPRENE COATED, AND ADHERED WITH AN APPROVED ADHESIVE WITH 100% COVERAGE AND STICK CLIPS ON 12" CENTERS. ROUND DUCTWORK, BOTH METAL AND FLEXIBLE, SHALL BE INSULATED WITH 1" THICK 1-1/2 PCF FIBERGLASS INSULATION. ALL DUCTWORK SHALL BE FABRICATED AND INSTALLED IN ACCORDANCE WITH ASHRAE AND SMACNA RECOMMENDATIONS. ALL DUCTWORK SIZES INDICATED ARE NET SIZES. DUCTWORK SHALL BE INCREASED TO ALLOW FOR INTERNAL INSULATION. ALL SQUARE ELBOWS SHALL INCLUDE SINGLE THICKNESS TURNING VANES.

FLEXIBLE DUCTWORK SHALL NOT BE LONGER THAN 5 FEET. ALL TAKE-OFF FITTINGS SHALL HAVE EXTRACTORS AND DAMPERS. STAINLESS STEEL CLAMPS SHALL BE USED FOR ALL FLEXIBLE CONNECTIONS. FLEXIBLE DUCTWORK SHALL BE EXTERNALLY INSULATED AND CONFORM TO UL 181.

EQUIPMENT:

ALL AIR HANDLING EQUIPMENT, DIFFUSERS, GRILLES, REGISTERS, FANS, REFRIGERATION UNITS, ETC., SHALL MEET PERFORMANCE, SIZE, ETC. AS SCHEDULED ON THE DRAWINGS. CONTROLS SHALL BE PROVIDED AS REQUIRED AND DESCRIBED ON THE DRAWINGS AND IN COMPLIANCE WITH LOCAL ENERGY CODES. ALL CONTROL WIRING SHALL BE INSTALLED IN ACCORDANCE WITH NEC REQUIREMENTS. ALL RELAYS, INTERLOCKS, ETC., SHALL BE PROVIDED AS REQUIRED. POWER WIRING SHALL BE PROVIDED BY THE ELECTRICAL CONTRACTOR UP TO AND INCLUDING FINAL CONNECTION. THE MECHANICAL CONTRACTOR SHALL PROVIDE ALL STARTERS, DISCONNECTS, AND OTHER DEVICES AS REQUIRED BY CODE UNLESS INDICATED TO BE PROVIDED BY THE ELECTRICAL CONTRACTOR. THE MECHANICAL CONTRACTOR SHALL MOUNT ALL DEVICES, ETC., AND THE ELECTRICAL CONTRACTOR SHALL WIRE THROUGH THEM AS REQUIRED. ALL ELECTRICAL WORK SHALL BE IN ACCORDANCE WITH THE NEC. REFRIGERANT PIPING WHERE REQUIRED SHALL BE OF THE PRECHARGED TYPE AS SUPPLIED BY THE REFRIGERATION EQUIPMENT MANUFACTURER, PROPERLY SIZED AND INSULATED OR FIELD FABRICATED AT THE CONTRACTOR'S OPTION. FIELD FABRICATED REFRIGERANT PIPING SHALL BE TYPE "L" A.R.I. COPPER, SOLDERED WITH 95/5 SOLDER, INSULATED WITH 1" ARMAFLEX AND WEATHERPROOFED. CIRCULATE DRY NITROGEN THROUGH TUBES BEING BRAZED TO ELIMINATE FORMATION OF COPPER OXIDE DURING BRAZING OPERATION. IF IT IS OBSERVED THAT BRAZING IS TAKING PLACE WITHOUT NITROGEN BEING CIRCULATED IT SHALL BE CAUSE FOR REMOVAL OF ALL REFRIGERANT PIPING INCLUDING ALL PREVIOUSLY INSTALLED PIPING. PIPING SHALL BE ARRANGED AND PIPED IN ACCORDANCE WITH THE EQUIPMENT MANUFACTURER'S RECOMMENDATIONS AND SHALL INCLUDE SIGHT GLASSES, SERVICE VALVES, AND FILTER DRYERS WITH BY-PASS WHEN INDICATED OR AS RECOMMENDED BY THE EQUIPMENT MANUFACTURER FOR PROPER EQUIPMENT OPERATION. ALL PIPING ARRANGEMENTS SHALL BE APPROVED BY BOTH THE EQUIPMENT MANUFACTURER AND THE ENGINEER PRIOR TO INSTALLATION.

THE CONTRACTOR SHALL TEST ALL DUCT AND PIPING SYSTEMS FOR LEAKAGE, BALANCE AIR AS INDICATED, CHARGE REFRIGERATION EQUIPMENT, PROVIDE CLEAN FILTERS, START SYSTEMS, AND INSTRUCT THE OWNER IN OPERATION OF THE SYSTEM AFTER ALL TEST AND BALANCING HAS BEEN ACCOMPLISHED. ALL LEAKS OBSERVED IN THE SYSTEM SHALL BE REPAIRED BY EITHER REPLACING OR REPAIRING THE DEFECTIVE MATERIAL OR EQUIPMENT IN A MANNER APPROVED BY THE ENGINEER. THE ENTIRE HVAC SYSTEM SHALL BE UNCONDITIONALLY GUARANTEED FOR ONE YEAR FROM THE DATE OF ACCEPTANCE BY THE OWNER. ALL DEFECTIVE EQUIPMENT AND/OR MATERIAL SHALL BE REPLACED AT NO EXPENSE TO THE OWNER. ALL REFRIGERATION COMPRESSORS SHALL HAVE AN EXTENDED WARRANTY FOR FOUR ADDITIONAL YEARS. ALL GUARANTEES SHALL BE WRITTEN, DATED, AND FORWARDED TO THE OWNER. EQUIPMENT SHALL BE PROVIDED WITH SPRING VIBRATION ISOLATORS, FLEXIBLE CONNECTORS AT EQUIPMENT CONNECTIONS AND INSULATED DRAIN LINES PIPED TO FLOOR DRAINS, HUB DRAINS, OR OTHER APPROVED DRAIN POINTS.

PLUMBING PIPING:

ALL UNDERGROUND WATER PIPING SHALL BE TYPE "K" COPPER MINIMUM. ALL ABOVE GROUND WATER PIPING SHALL BE TYPE "L" COPPER MINIMUM. PROVIDE WROUGHT COPPER FITTINGS. JOINTS SHALL BE SOLDERED WITH LEAD FREE SOLDER. ADPATORS SHALL BE CAST BRONZE. ALL EXPOSED PIPING SHALL BE CHROME PLATED. WASTE AND VENT PIPING SHALL BE MINIMUM SCHEDULE 40 PVC OR SERVICE WEIGHT CAST IRON WITH EITHER NO-HUB OR "CHARLOTTE SEAL" JOINTS. NO-HUB JOINTS ARE NOT PERMITTED BELOW GRADE. ALL WASTE PIPING TO BE RUN AT 1/4" PER FOOT SLOPE. ALL EQUIPMENT REQUIRING PLUMBING CONNECTIONS SHALL BE CONNECTED BY THE PLUMBER REGARDLESS OF WHO PROVIDES THE EQUIPMENT OR FIXTURE. COPPER PIPING SHALL NOT BE ALLOWED TO COME IN CONTACT WITH MASONRY OR DISSIMILAR METALS. PIPING SHALL BE PROTECTED BY COPPER HANGERS AND SLEEVES.

ALL HOT AND COLD WATER PIPING ABOVE GRADE SHALL BE INSULATED WITH MINIMUM 1" THICK 3 PCF DENSITY FIBERGLASS PIPE COVERING WITH VAPOR BARRIER JACKET OR AS REQUIRED BY CODE. ALL JOINTS SHALL BE LAPPED AND SEALED WITH AN APPROVED TYPE ADHESIVE AND END STRIPS AS RECOMMENDED BY THE INSULATION SUPPLIER AND/OR MANUFACTURER.

VACUUM BREAKERS SHALL BE PROVIDED FOR ALL HOSE CONNECTIONS AND OTHER POINTS WHERE CROSS CONTAMINATION CAN OCCUR. REDUCED PRESSURE BACKFLOW PREVENTERS SHALL BE PROVIDED WHERE REQUIRED BY CODE. ALL FIXTURES, HOSE BIBBS, FLOOR DRAINS, ETC., SHALL BE PROVIDED AS INDICATED AND SCHEDULED ON THE PLANS. THE SYSTEM SHALL BE TESTED, CLEANED, AND DISINFECTED IN ACCORDANCE WITH ALL STATE AND LOCAL REQUIREMENTS.

THE ENTIRE PLUMBING SYSTEM SHALL BE UNCONDITIONALLY GUARANTEED FOR 1 YEAR FROM ACCEPTANCE BY THE OWNER. ALL GUARANTEES SHALL BE WRITTEN, DATED, AND FORWARDED TO THE OWNER. ALL DEFECTIVE EQUIPMENT AND/OR MATERIAL SHALL BE REPLACED AT NO EXPENSE TO THE OWNER.

GAS PIPING:

PIPE AND FITTINGS SHALL BE BLACK STEEL WITH MALLEABLE IRON FITTINGS UP THROUGH 2" I.P.S. AND STEEL WELDING FITTINGS 2-1/2" I.P.S. AND ABOVE. DIELECTRIC COUPLINGS OR UNIONS SHALL BE UTILIZED WHEN PIPING OF DISSIMILAR METAL IS CONNECTED.

GAS PIPING SYSTEM SHALL BE INSTALLED TO THE REQUIREMENTS OF THE AGA PAMPHLET "INSTALLATION OF GAS APPLIANCES AND GAS PIPING" AND NFPA STANDARD NO. 54. THE CONTRACTOR SHALL MAKE ALL ARRANGEMENTS AND PAY ALL FEES WITH THE "LOCAL" GAS COMPANY FOR THE INSTALLATION OF THE GAS METER, GAS SERVICE, AND ITS ACCESSORIES.

GAS PIPING SHALL BE TESTED IN ACCORDANCE WITH THE PROCEDURES DESCRIBED IN NFPA NO. 54. ANY OTHER TESTS AS REQUIRED BY THE LOCAL BUILDING INSPECTION DEPARTMENT OR GAS COMPANY SHALL ALSO BE PERFORMED. PAINT GAS PIPING WITH RUST RESISTANT PAINT.

AIR SEPARATOR

PLAN CODE	SYSTEM SERVED	CONNECTION SIZE	MAX. GPM *	P.D. (FT)	% PG	MAX. DIMENSIONS DIA. (IN.)	H (IN.)	FLANGE TO FLANGE (IN.)	DRY WT. (LBS)	MAX. OPER. WT. (LBS.)	MANUFACTURER ** & MODEL NO.
AS-1	HEATING WATER	1 1/4"	13	.5	35	3.5	8.3	5.1	7	10	SPIROVENT JUNIOR

* MAXIMUM TEMPERATURE = 270° F @ 145 PSIG
** S.L.C. REPRESENTATIVE IS LUNDQUIST SALES – 487-5709

BOILER SCHEDULE ②

PLAN CODE	SEA LEVEL INPUT (MBH)	ELEV. (4,300') OUTPUT (MBH)	FUEL	TYPE	VENT SIZE (IN.) ①	FLUID	EWT/LWT	FLOW (GPM)	PRESS. DROP (FT.)	SIZE LENGTH (IN)	WIDTH (IN)	HEIGHT (IN)	WEIGHT (LBS)	VOLTAGE & PHASE	REMARKS	MANUFACTURER & MODEL NO.
B-1	140	90	PROPANE	CONDENSING	3" V. 4" CA	35% PG	110/120	10.5	1	30	13	30	180	120/1	–	MONITOR MZ40C

①3" VENT 4" COMBUSTION PVC PIPE, WITH CONCENTRIC TERMINATION KIT. PROVIDE SCREENED INLETS & OUTLETS.
②BOILER TO BE PROVIDED WITH PUMP TO PROVIDE 10.5 GPM AT 17' HEAD.

EXPANSION TANK SCHEDULE

PLAN CODE	SYSTEM SERVED	WATER TEMP. (°F)	TANK VOL. (GAL)	ACCEPTANCE VOL. (GAL)	% PG	PHYSICAL DATA DIA. (IN.)	H (IN.)	OPERATING WT. (LBS)	MANUFACTURER & MODEL NO.	REMARKS
ET-1	HEATING WATER	140	7.8	9.5	35	12	19	105	AMTROL AX-15	–

PUMP SCHEDULE

PLAN CODE	DUTY	GPM	FEET OF HEAD	PUMP RPM	% PG	MOTOR H.P.	MOTOR VOLTAGE & PHASE	MANUFACTURER & MODEL NO.	REMARKS
–	– –	–	–	–	–	–	–	– –	–
–	– –	–	–	–	–	–	–	– –	–
P-1	RADIANT FLOOR	2.2	13	2,750	35	1/12	115/1	GRUNDFOS UP25-64SF	–
P-2	RADIANT FLOOR	2.2	13	2,750	35	1/12	115/1	GRUNDFOS UP25-64SF	–
P-3	RADIANT FLOOR	2.2	13	2,750	35	1/12	115/1	GRUNDFOS UP25-64SF	–
P-4	RADIANT FLOOR	2.2	13	2,750	35	1/12	115/1	GRUNDFOS UP25-64SF	–
P-5	RADIANT FLOOR	1.7	10	2,590	35	1/22	115/1	GRUNDFOS UP15-42SF	–

SEQUENCE OF CONTROL

1. FURNACE – F-1
   A. PROGRAMMABLE THERMOSTAT SHALL CONTROL UNOCCUPIED AND OCCUPIED STATUS OF FAN SYSTEM BASED ON ADJUSTABLE SEVEN DAY PROGRAM. FAN SHALL RUN CONTINUOUSLY IN OCCUPIED MODE AND CYCLE IN UNOCCUPIED MODE.
   B. ADJUSTABLE HEATING AND COOLING SET POINTS SHALL CONTROL SPACE TEMPERATURE BY ACTIVATING EITHER HEATING OR COOLING EQUIPMENT. PROGRAMMABLE THERMOSTAT PROVIDES AUTOMATIC CHANGE OVER BETWEEN HEATING AND COOLING.
   C. MINIMUM OUTSIDE AIR DAMPER (SPRING RETURN TYPE) SHALL OPEN IN OCCUPIED MODE AND REMAIN CLOSED IN UNOCCUPIED MODE.

EMA ARCHITECTS, LLC
460 South 400 East Salt Lake City, Utah 84111
(801) 363-1511 (801) 363-1560 Fax

CONSULTANTS

Colvin Engineering Associates, Inc.
244 West 300 North Suite 200
Salt Lake City, Utah 84103
Phone (801) 322-2400 / Fax (801) 322-2418

Stephen G. Connor REGISTERED No. 187524 PROFESSIONAL ENGINEER State of Utah

MONUMENT VALLEY VENDOR VILLAGE
MONUMENT VALLEY, UT
OWNER NAVAJO NATION DEPARTMENT OF ECONOMIC DEVELOPMENT

MARK	DATE	DESCRIPTION
	11/11/04	CONSTRUCTION DOCUMENTS
1	11/16/04	ADDENDUM # 1

PROJECT NUMBER: 2002-047.00
DRAWING FILE:
DRAWN BY: JLW
CHECKED BY: JRJ

COPYRIGHT 2002 EMA ARCHITECTS, LLC

SHEET TITLE

MECHANICAL SCHEDULES & GENERAL NOTES

M-002

Copyright (C) 2002 by Colvin Engineering Associates, Inc. Salt Lake City, Utah. All rights reserved. Unauthorized copying and/or use is illegal and subject to prosecution.

KEYED NOTES

1. INSULATE OUTDOOR DUCT.
2. PROVIDE 1" THICK NEOPRENE SPRING VIBRATION ISOLATORS UNDER EACH CORNER OF UNIT.

GENERAL NOTES

A. ALL RUNOUT DIMENSIONS TO MATCH NECK SIZE UNLESS NOTED OTHERWISE.

B. ALL DIFFUSER DROPS WITH BALANCING DAMPER AT TAKE OFF FROM MAIN.

C. PROVIDE LEVEL PLATFORM WITH GUARD RAILS ON ROOF AT EVAP COOLER FOR MAINTENANCE. PLATFORM SHALL EXTEND NO LESS THAN 30" BEYOND EACH END OF EVAP COOLER. GUARD RAILS ARE TO BE NO LESS THAN 42" ABOVE ELEVATED SURFACE.

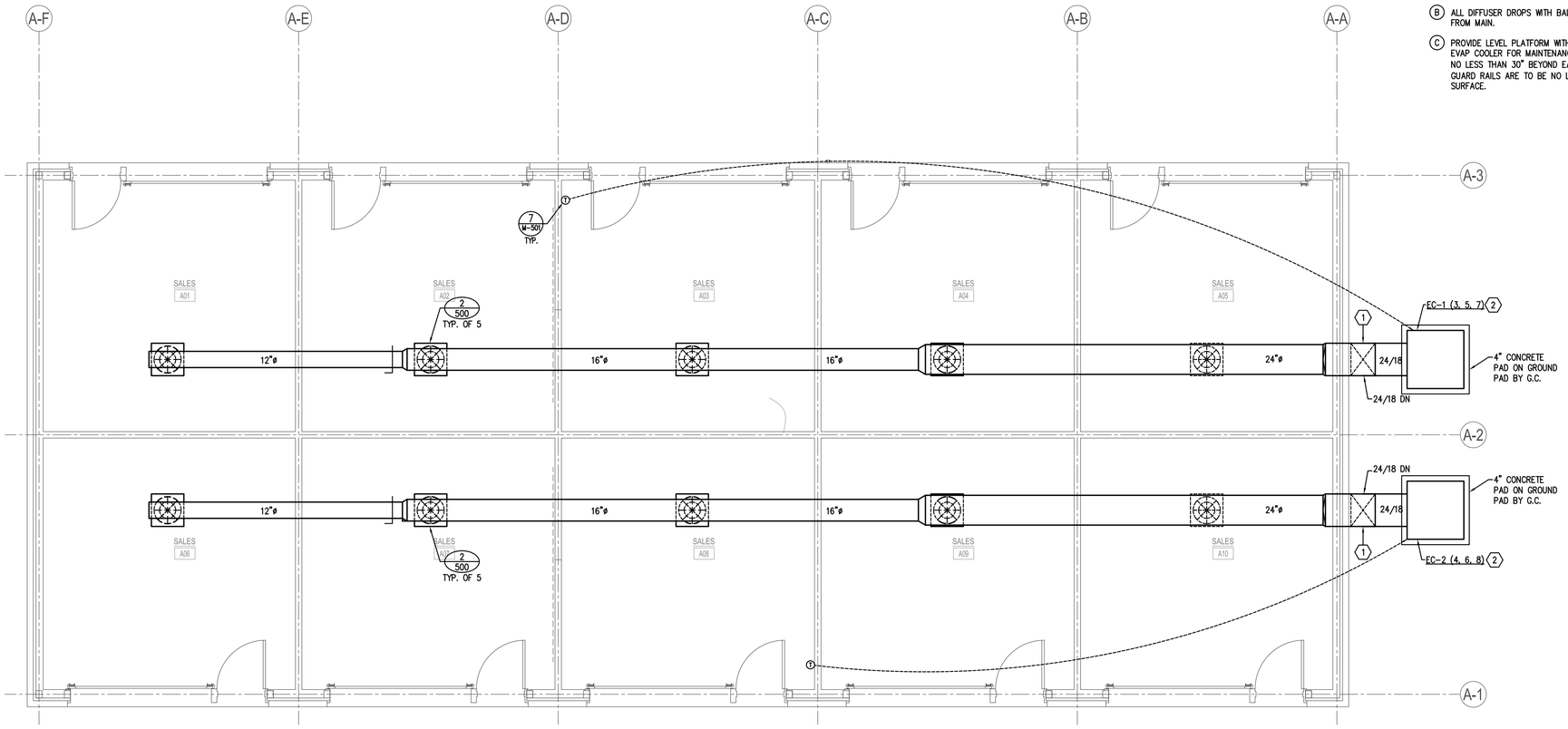

BUILDINGS "A" AND "D" ARE ALTERNATE SEE ARCHITECTURAL SHEETS FOR ALTERNATE NUMBERS.

01 / M101 MECHANICAL FLOOR PLAN - BUILDING "A, B, C, & D" (RETAIL)

SCALE:1/4" = 1' - 0" 3' 0 2' 4' 6' 8'

BUILDINGS B, C, D SIMILAR

BUILDING NORTH

EMA ARCHITECTS, LLC
460 South 400 East Salt Lake City, Utah 84111
(801) 363-1511 (801) 363-1560 Fax

CONSULTANTS

Colvin Engineering Associates, Inc.
244 West 300 North Suite 200
Salt Lake City, Utah 84103
Phone: (801) 322-2400 / Fax: (801) 322-2418

Stephen G. Connor REGISTERED No. 187524 PROFESSIONAL ENGINEER State of Utah

MONUMENT VALLEY VENDOR VILLAGE

MONUMENT VALLEY, UT

OWNER: NAVAJO NATION DEPARTMENT OF ECONOMIC DEVELOPMENT

MARK	DATE	DESCRIPTION
	11/11/04	CONSTRUCTION DOCUMENTS
2	08/23/05	MSM 2

PROJECT NUMBER: 2002-047.00
DRAWING FILE:
DRAWN BY: JLW
CHECKED BY: JRJ

COPYRIGHT 2002 EMA ARCHITECTS, LLC

SHEET TITLE

BUILDINGS "A, B, C, & D" (RETAIL) MECHANICAL FLOOR PLAN

M-101

Copyright (C) 2002 by Colvin Engineering Associates, Inc. Salt Lake City, Utah. All rights reserved. Unauthorized copying and/or use is illegal and subject to prosecution.

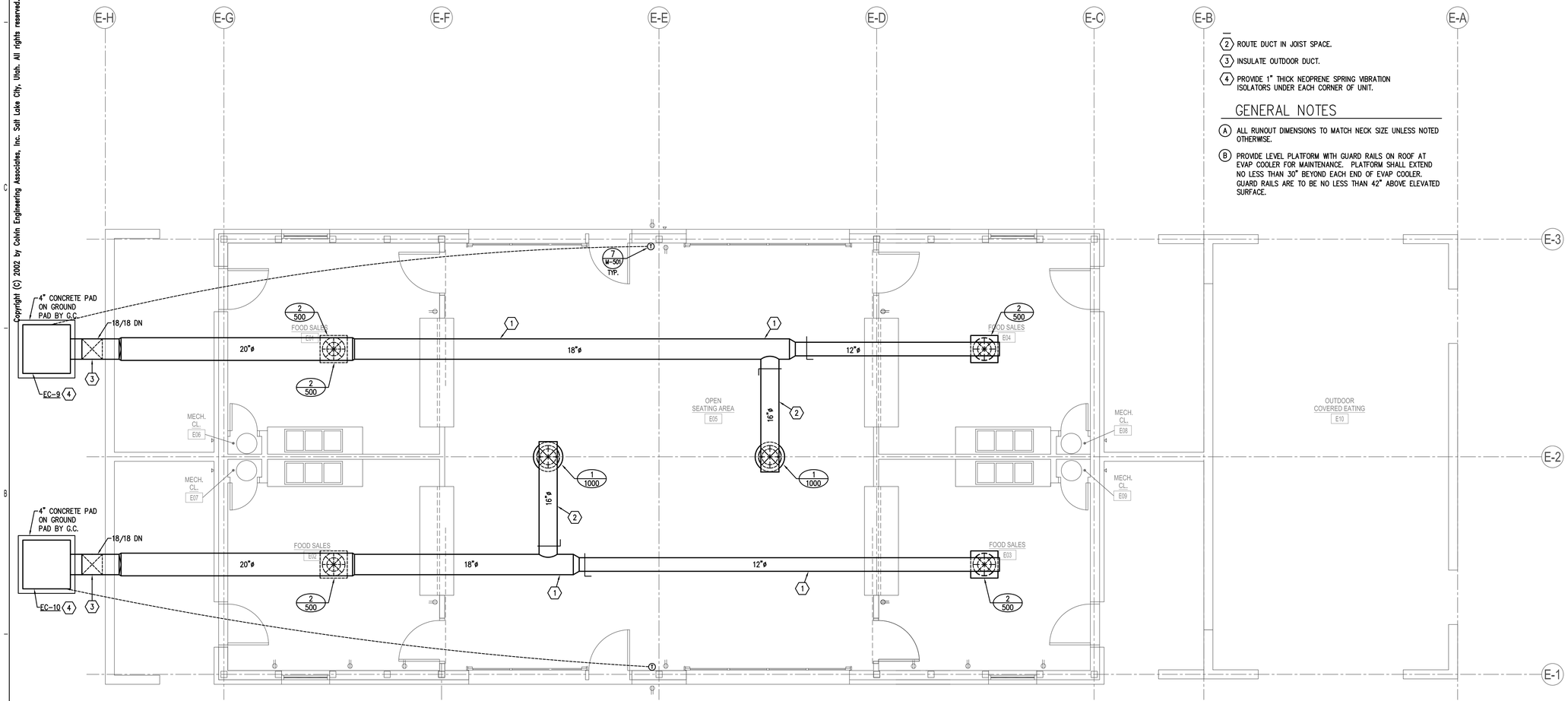

(2) ROUTE DUCT IN JOIST SPACE.

(3) INSULATE OUTDOOR DUCT.

(4) PROVIDE 1" THICK NEOPRENE SPRING VIBRATION ISOLATORS UNDER EACH CORNER OF UNIT.

GENERAL NOTES

(A) ALL RUNOUT DIMENSIONS TO MATCH NECK SIZE UNLESS NOTED OTHERWISE.

(B) PROVIDE LEVEL PLATFORM WITH GUARD RAILS ON ROOF AT EVAP COOLER FOR MAINTENANCE. PLATFORM SHALL EXTEND NO LESS THAN 30" BEYOND EACH END OF EVAP COOLER. GUARD RAILS ARE TO BE NO LESS THAN 42" ABOVE ELEVATED SURFACE.

01 / M102 MECHANICAL FLOOR PLAN - BUILDING "E" (FOOD COURT)

SCALE:1/4" = 1' – 0" 3' 0 2' 4' 6' 8'

BUILDING NORTH

EMA ARCHITECTS, LLC
460 South 400 East Salt Lake City, Utah 84111
(801) 363-1511 (801) 363-1560 Fax

CONSULTANTS

Colvin Engineering Associates, Inc.
244 West 300 North Suite 200
Salt Lake City, Utah 84103
Phone: (801) 322-2400 / Fax: (801) 322-2416

Stephen G. Connor REGISTERED 187524 PROFESSIONAL ENGINEER State of Utah

MONUMENT VALLEY VENDOR VILLAGE

MONUMENT VALLEY, UT

OWNER: NAVAJO NATION DEPARTMENT OF ECONOMIC DEVELOPMENT

MARK	DATE	DESCRIPTION
	11/11/04	CONSTRUCTION DOCUMENTS
2	08/23/05	MSI # 2

PROJECT NUMBER: 2002-047.00
DRAWING FILE:
DRAWN BY: JLW
CHECKED BY: JRJ

COPYRIGHT 2002 EMA ARCHITECTS, LLC

SHEET TITLE

BUILDING "E" (FOOD COURT)
MECHANICAL FLOOR PLAN

M-102

Copyright (C) 2002 by Colvin Engineering Associates, Inc. Salt Lake City, Utah. All rights reserved. Unauthorized copying and/or use is illegal and subject to prosecution.

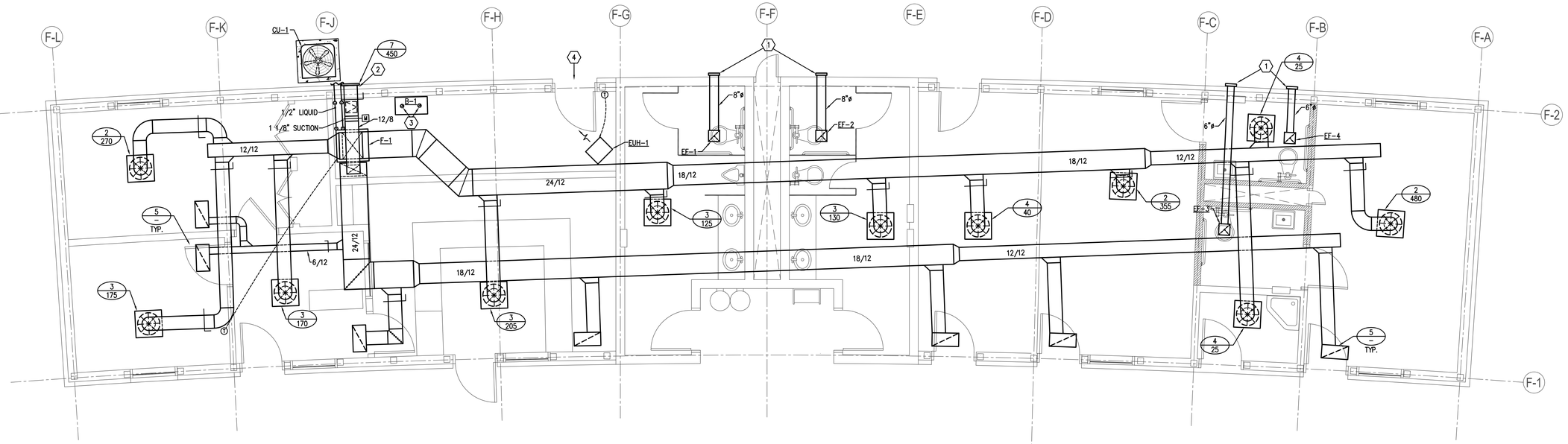

KEYED NOTES

1. INSTALL MANUFACTURES WALL TERMINATION CAP.
2. 12" X 8" MANUAL DAMPER 10" X 10" ACCESS DOOR AND 12" X 8" AUTOMATIC DAMPER IN OUTDOOR DUCT.
3. 3" VENT 4" COMBUSTION AIR PVC PIPING UP THROUGH ROOF. SCREEN OUTLETS RODENT PROOF.
4. UNDERCUT DOOR 1/4" FOR PROPANE VENTILATION.

GENERAL NOTES

- A. ALL RUNOUT DIMENSIONS TO MATCH NECK SIZE UNLESS NOTED OTHERWISE.
- B. FLEXIBLE CONNECTIONS AT SUPPLY, RETURN AND OUTDOOR AIR DUCT CONNECTIONS.
- C. FILTER BOX EXTERNAL TO UNIT.

01 / M103 MECHANICAL FLOOR PLAN - BUILDING "F" (SERVICE)

SCALE:1/4" = 1' - 0" 3' 0 2' 4' 6' 8'

BUILDING NORTH

EMA ARCHITECTS, LLC
460 South 400 East Salt Lake City, Utah 84111
(801) 363-1511 (801) 363-1560 Fax

CONSULTANTS

Colvin Engineering Associates, Inc.
244 West 300 North Suite 200
Salt Lake City, Utah 84103
Phone• (801) 322-2400 / Fax• (801) 322-2418

Stephen G. Connor REGISTERED No. 187524 PROFESSIONAL ENGINEER State of Utah

MONUMENT VALLEY VENDOR VILLAGE

MONUMENT VALLEY, UT

OWNER
NAVAJO NATION DEPARTMENT OF ECONOMIC DEVELOPMENT

MARK	DATE	DESCRIPTION
	11/11/04	CONSTRUCTION DOCUMENTS
1	11/16/04	ADDENDUM 1

PROJECT NUMBER: 2002-047.00
DRAWING FILE:
DRAWN BY: JLW
CHECKED BY: JRJ

COPYRIGHT 2002 EMA ARCHITECTS, LLC

SHEET TITLE

BUILDING "F" (SERVICE)
MECHANICAL FLOOR PLAN

M-103

Copyright (C) 2002 by Colvin Engineering Associates, Inc. Salt Lake City, Utah. All rights reserved. Unauthorized copying and/or use is illegal and subject to prosecution.

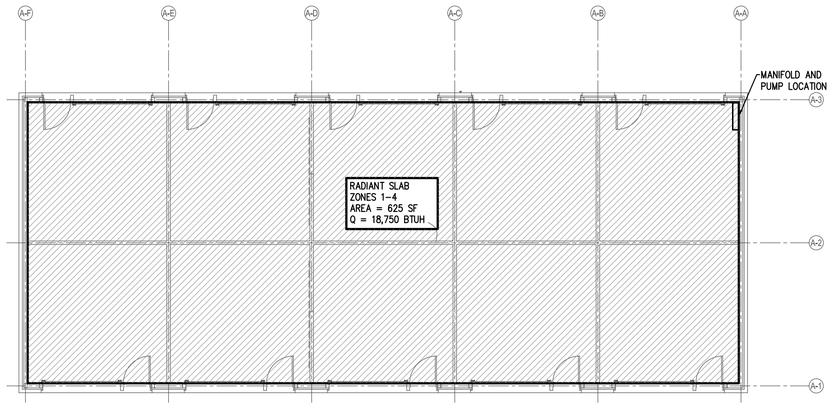

01 M104 RADIANT FLOOR PLAN-BUILDINGS A, B, C, & D (RETAIL)
NO SCALE

BUILDING NORTH

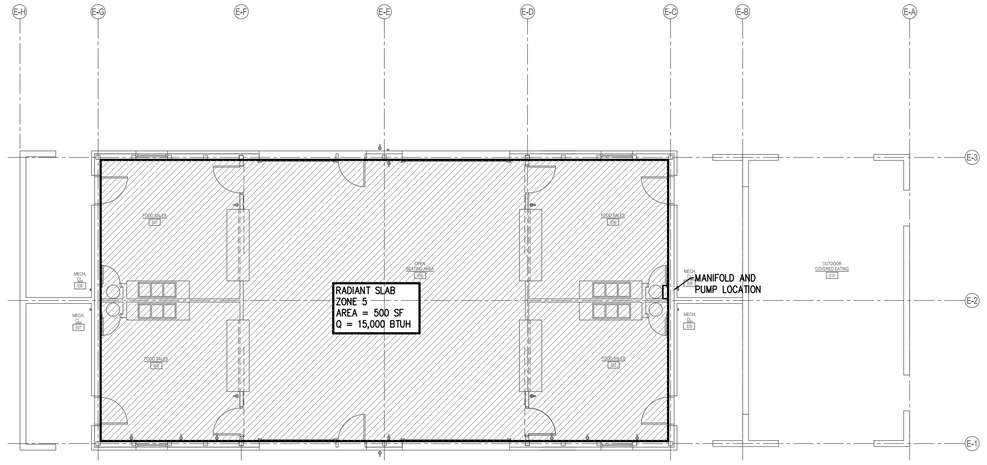

02 M104 RADIANT FLOOR PLAN-BUILDING E (FOOD COURT)
NO SCALE

BUILDING NORTH

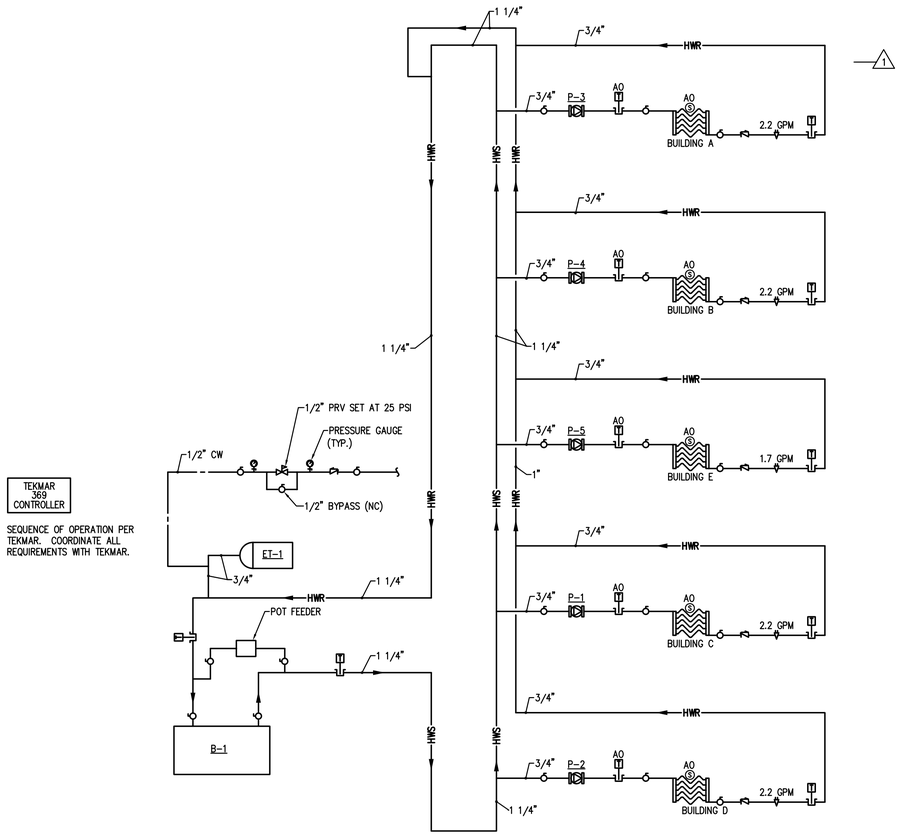

03 M104 PIPING SCHEMATIC
NO SCALE

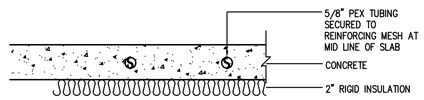

04 M104 PIPING INSTALLATION
NO SCALE

EMA ARCHITECTS, LLC
460 South 400 East Salt Lake City, Utah 84111
(801) 363-1511 (801) 363-1560 Fax

CONSULTANTS

Colvin Engineering Associates, Inc.
244 West 300 North Suite 200
Salt Lake City, Utah 84103
Phone (801) 322-2400 / Fax (801) 322-2418

Stephen G. Connor REGISTERED 187524 PROFESSIONAL ENGINEER State of Utah

MONUMENT VALLEY VENDOR VILLAGE

MONUMENT VALLEY, UT

OWNER
NAVAJO NATION DEPARTMENT OF ECONOMIC DEVELOPMENT

MARK	DATE	DESCRIPTION
	11/11/04	CONSTRUCTION DOCUMENTS
1	11/16/04	ADDENDUM 1

PROJECT NUMBER: 2002-047.00
DRAWING FILE:
DRAWN BY: JLW
CHECKED BY: JRJ

COPYRIGHT 2002 EMA ARCHITECTS, LLC

SHEET TITLE

MECHANICAL
RADIANT FLOOR PLANS

M-104

Copyright (C) 2002 by Colvin Engineering Associates, Inc. Salt Lake City, Utah. All rights reserved. Unauthorized copying and/or use is illegal and subject to prosecution.

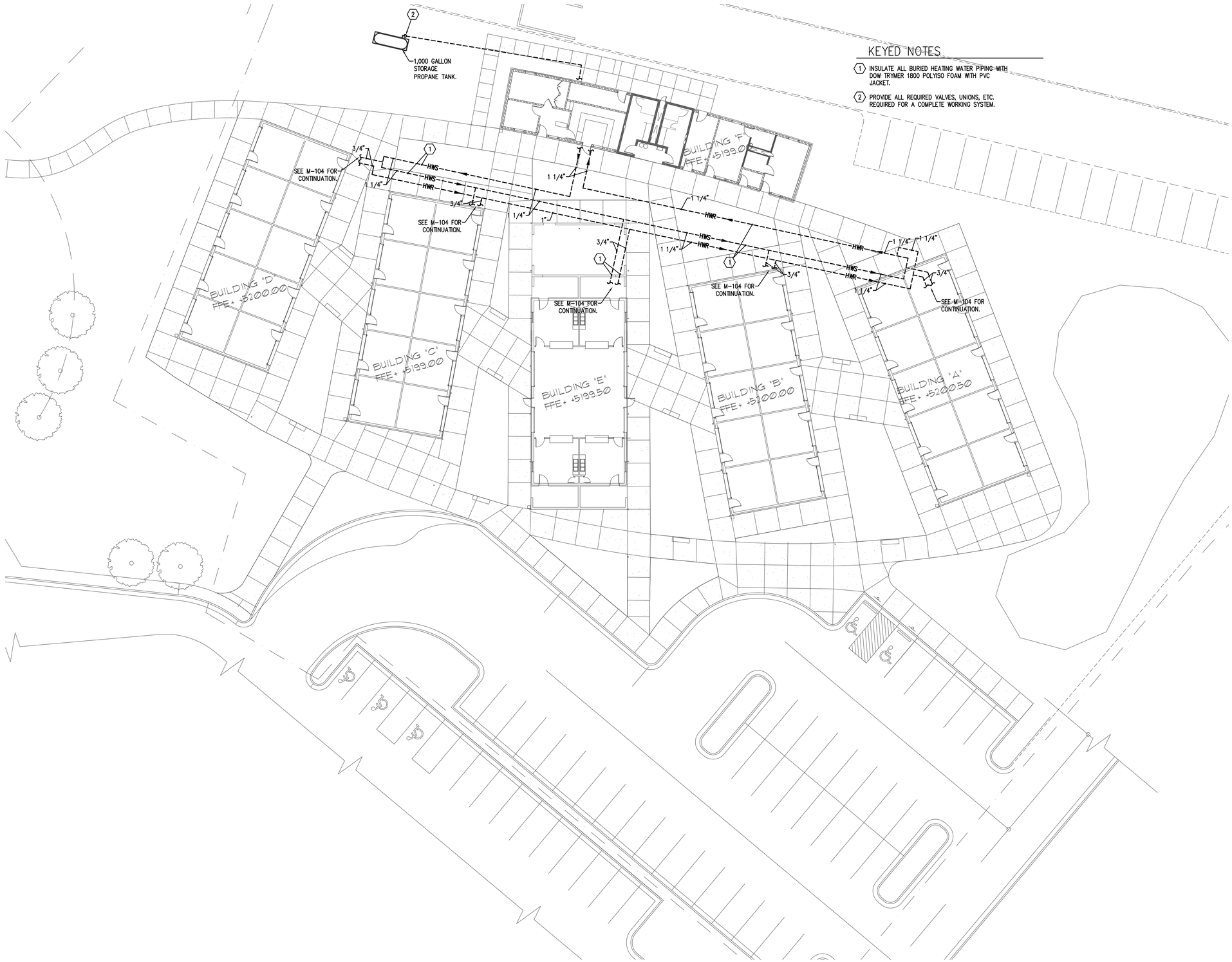

01 M105 MECHANICAL SITE PLAN
SCALE: 1/16" = 1'-0"

EMA ARCHITECTS, LLC
460 South 400 East Salt Lake City, Utah 84111
(801) 363-1511 (801) 363-1560 Fax

CONSULTANTS

Colvin Engineering Associates, Inc.
244 West 300 North Suite 200
Salt Lake City, Utah 84103
Phone: (801) 322-2400 / Fax: (801) 322-2418

Stephen G. Connor REGISTERED 187524 PROFESSIONAL ENGINEER State of Utah

MONUMENT VALLEY VENDOR VILLAGE

MONUMENT VALLEY, UT

OWNER
NAVAJO NATION DEPARTMENT OF ECONOMIC DEVELOPMENT

MARK	DATE	DESCRIPTION
	11/11/04	CONSTRUCTION DOCUMENTS
1	11/16/04	ADDENDUM 1

PROJECT NUMBER: 2002-047.00
DRAWING FILE:
DRAWN BY: JLW
CHECKED BY: JRJ

COPYRIGHT 2002 EMA ARCHITECTS, LLC

SHEET TITLE

MECHANICAL
SITE PLAN

M-105

Copyright (C) 2002 by Colvin Engineering Associates, Inc. Salt Lake City, Utah. All rights reserved. Unauthorized copying and/or use is illegal and subject to prosecution.

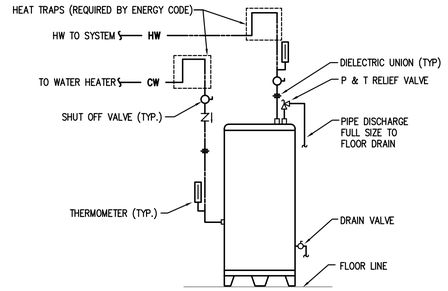

1 M-501 ELECTRIC WATER HEATER PIPING DETAIL

NO SCALE 15450_WaterHeater-Elect

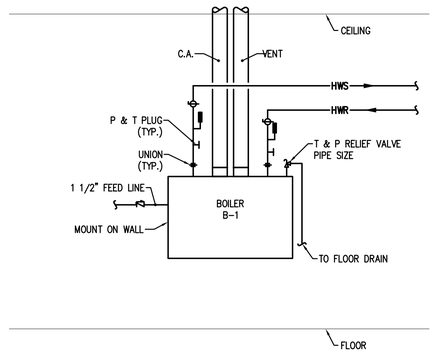

4 M-501 GAS WATER HEATER PIPING DETAIL

NO SCALE

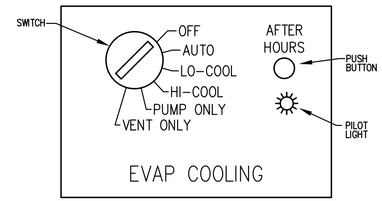

7 M-501 EVAP COOLING CONTROL PANEL

NO SCALE

PRV SCHEDULE			
PLAN CODE	SIZE	GPM RANGE	PRESSURE SETTING (PSIG)
PRV-1	1 1/4"	0-68	4

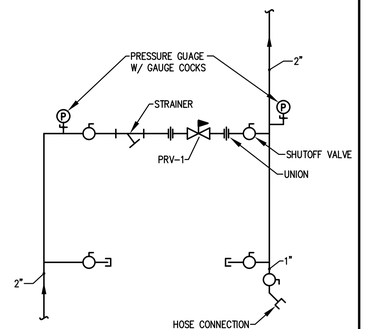

2 M-501 PRV STATION DETAIL

NO SCALE 15430_PRV

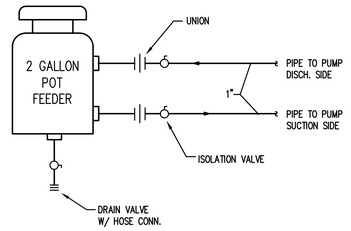

5 M-501 CHEMICAL POT FEEDER PIPING DETAIL

NO SCALE 15505

8 M-501

NO SCALE

NOT USED

3 M-501

NO SCALE

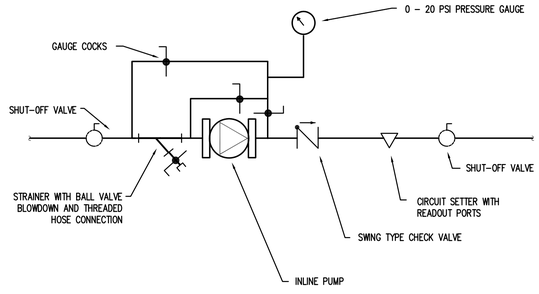

6 M-501 IN-LINE PUMP PIPING DETAIL

NO SCALE 15540

9 M-501

NO SCALE

NOT USED

EMA ARCHITECTS, LLC
460 South 400 East Salt Lake City, Utah 84111
(801) 363-1511 (801) 363-1560 Fax

CONSULTANTS

Colvin Engineering Associates, Inc.
244 West 300 North Suite 200
Salt Lake City, Utah 84103
Phone: (801) 322-2400 / Fax: (801) 322-2418

Stephen G. Connor REGISTERED 187524 PROFESSIONAL ENGINEER State of Utah

MONUMENT VALLEY VENDOR VILLAGE

MONUMENT VALLEY, UT

OWNER NAVAJO NATION DEPARTMENT OF ECONOMIC DEVELOPMENT

MARK	DATE	DESCRIPTION
	11/11/04	CONSTRUCTION DOCUMENTS
1	11/16/04	ADDENDUM 1
2	08/23/05	MSI# 2

PROJECT NUMBER: 2002-047.00
DRAWING FILE:
DRAWN BY: JLW
CHECKED BY: JRJ

COPYRIGHT 2002 EMA ARCHITECTS, LLC

SHEET TITLE

MECHANICAL DETAILS

M-501

I:\PROJECTS\2002 Projects\2002-047.00\Drawings\M-501.dwg, 8/24/2005 10:02:28 AM, groberts

Copyright (C) 2002 by Colvin Engineering Associates, Inc. Salt Lake City, Utah. All rights reserved. Unauthorized copying and/or use is illegal and subject to prosecution.

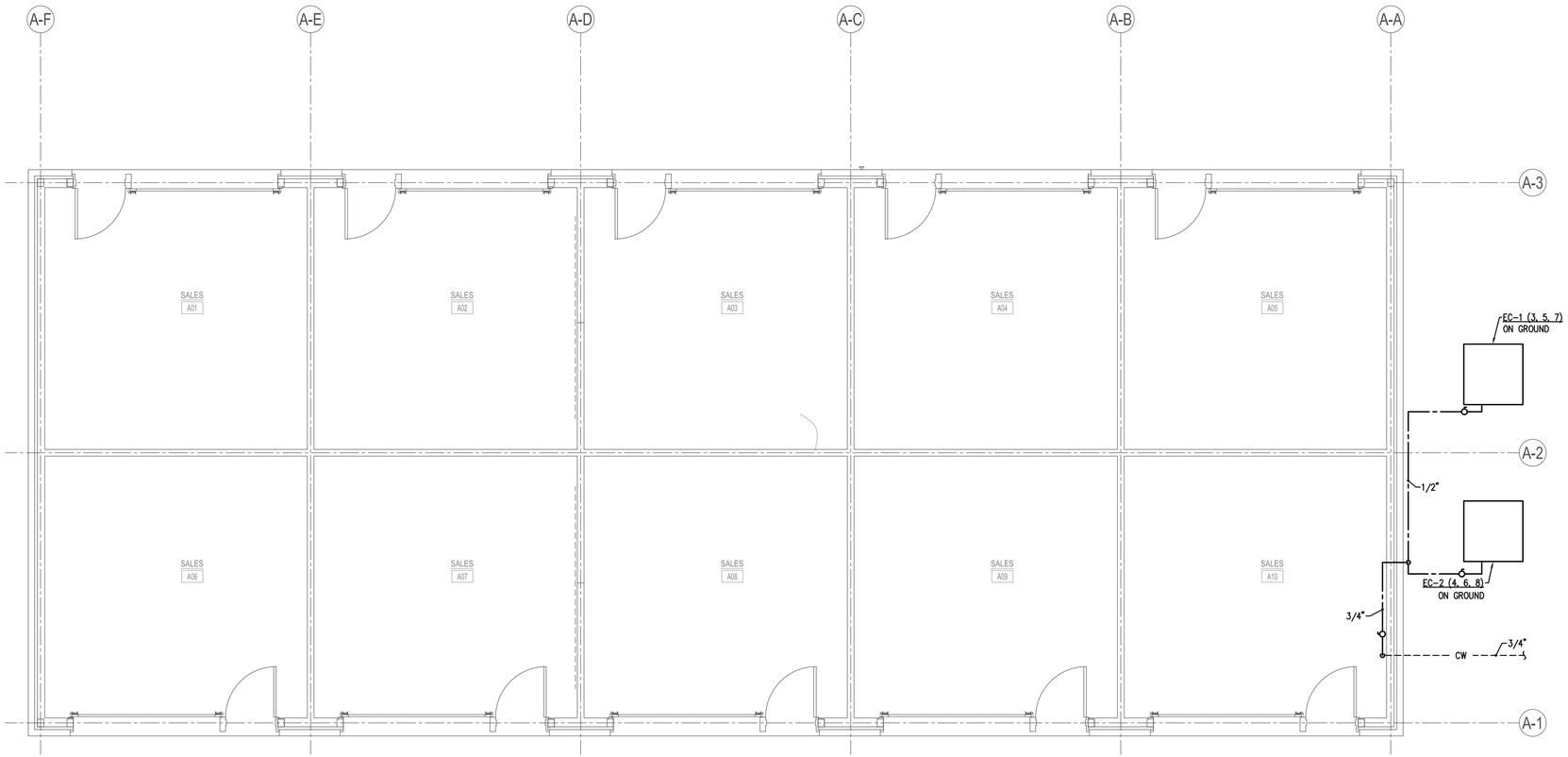

BUILDINGS "A" AND "D" ARE ALTERNATE
SEE ARCHITECTURAL SHEETS FOR
ALTERNATE NUMBERS.

01 / P101 PLUMBING FLOOR PLAN - BUILDING "A, B, C, & D" (RETAIL)

SCALE:1/4" = 1' - 0" 3' 0 2' 4' 6' 8' BUILDINGS B, C, D SIMILAR

BUILDING NORTH

EMA ARCHITECTS, LLC
460 South 400 East Salt Lake City, Utah 84111
(801) 363-1511 (801) 363-1560 Fax

CONSULTANTS

Colvin Engineering Associates, Inc.
244 West 300 North Suite 200
Salt Lake City, Utah 84103
Phone: (801) 322-2400 / Fax: (801) 322-2416

Stephen G. Connor REGISTERED No. 187524 PROFESSIONAL ENGINEER State of Utah

MONUMENT VALLEY VENDOR VILLAGE

MONUMENT VALLEY, UT

OWNER NAVAJO NATION DEPARTMENT OF ECONOMIC DEVELOPMENT

MARK	DATE	DESCRIPTION
	11/11/04	CONSTRUCTION DOCUMENTS
2	08/23/05	MSI# 2

PROJECT NUMBER: 2002-047.00
DRAWING FILE:
DRAWN BY: JLW
CHECKED BY: JRJ

COPYRIGHT 2002 EMA ARCHITECTS, LLC

SHEET TITLE

BUILDINGS "A, B, C, & D" (RETAIL)
PLUMBING FLOOR PLAN

P-101

Copyright (C) 2002 by Colvin Engineering Associates, Inc. Salt Lake City, Utah. All rights reserved. Unauthorized copying and/or use is illegal and subject to prosecution.

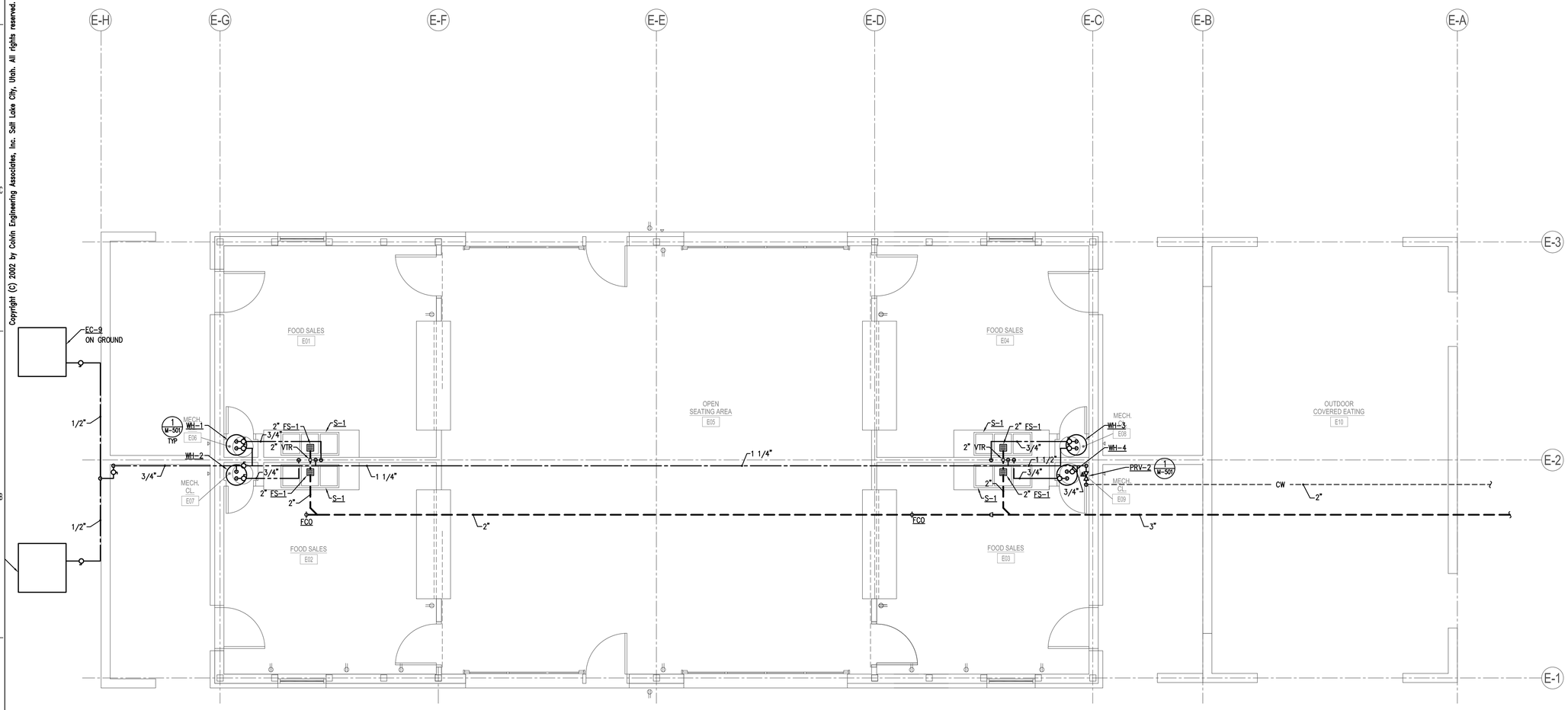

01 / P102 PLUMBING FLOOR PLAN - BUILDING "E" (FOOD COURT)

SCALE:1/4" = 1' – 0" 3' 0 2' 4' 6' 8'

BUILDING NORTH

EMA ARCHITECTS, LLC
460 South 400 East Salt Lake City, Utah 84111
(801) 363-1511 (801) 363-1560 Fax

CONSULTANTS

Colvin Engineering Associates, Inc.
244 West 300 North Suite 200
Salt Lake City, Utah 84103
Phone: (801) 322-2400 / Fax: (801) 322-2416

Stephen G. Connor
REGISTERED
No. 187524
PROFESSIONAL ENGINEER
State of Utah

MONUMENT VALLEY VENDOR VILLAGE

MONUMENT VALLEY, UT

OWNER
NAVAJO NATION DEPARTMENT OF ECONOMIC DEVELOPMENT

MARK	DATE	DESCRIPTION
	11/11/04	CONSTRUCTION DOCUMENTS
1	11/16/04	ADDENDUM 1
2	08/23/05	MSI# 2

PROJECT NUMBER: 2002-047.00
DRAWING FILE:
DRAWN BY: JLW
CHECKED BY: JRJ

COPYRIGHT 2002 EMA ARCHITECTS, LLC

SHEET TITLE

BUILDING "E" (FOOD COURT)
PLUMBING FLOOR PLAN

P-102

Copyright (C) 2002 by Colvin Engineering Associates, Inc. Salt Lake City, Utah. All rights reserved. Unauthorized copying and/or use is illegal and subject to prosecution.

KEYED NOTES

1. DROP COLD WATER DOWN IN CHASE AND CONNECT TO FIXTURES AND TO EWC-1 AT END OF CHASE. PROVIDE ISOLATION VALVE.
2. DROP HOT WATER DOWN IN CHASE AND CONNECT TO LAVATORIES. PROVIDE ISOLATION VALVE.
3. COMBINATION WASTE AND VENT.
4. INSULATE ALL BURIED HEATING WATER PIPING WITH DOW TRYMER 1800 POLYISO FOAM WITH PVC JACKET.
5. PROVIDE GAS COCK AND UNION IN DROP TO EQUIPMENT.
6. UNDERCUT DOOR 1/4" FOR PROPANE VENTILATION.
7. 3/4" CONDENSATE WITH P-TRAP. PIPE TO FLOOR DRAIN.

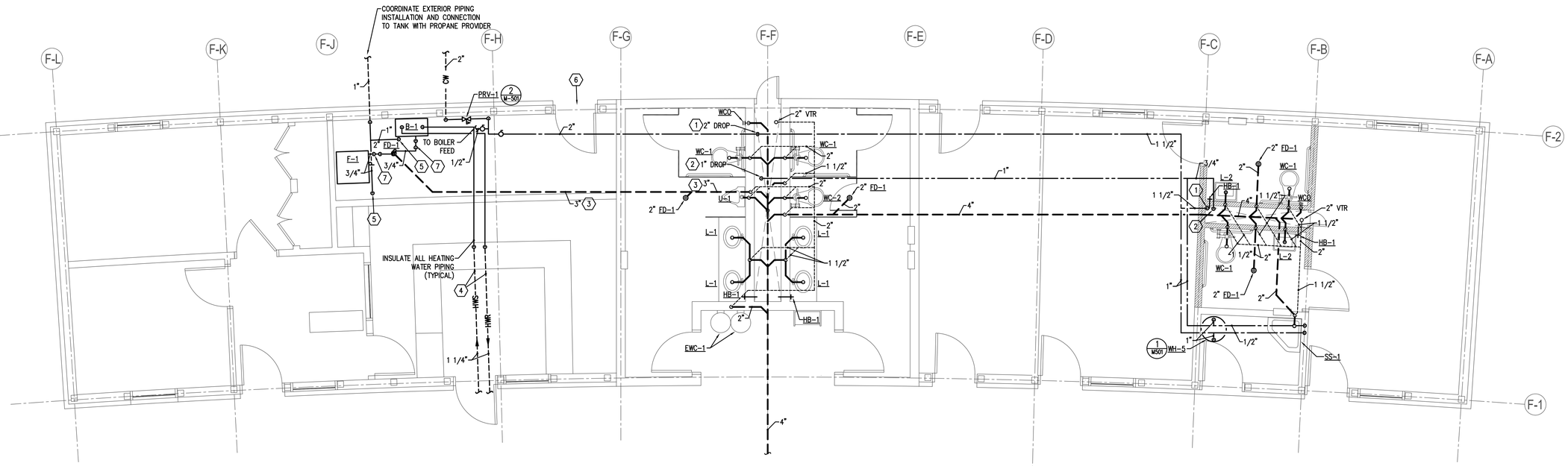

01 / P103 PLUMBING FLOOR PLAN - BUILDING "F" (SERVICE)

SCALE:1/4" = 1' - 0" 3' 0 2' 4' 6' 8'

BUILDING NORTH

EMA ARCHITECTS, LLC
460 South 400 East Salt Lake City, Utah 84111
(801) 363-1511 (801) 363-1560 Fax

CONSULTANTS

Colvin Engineering Associates, Inc.
244 West 300 North Suite 200
Salt Lake City, Utah 84103
Phone: (801) 322-2400 / Fax: (801) 322-2416

Stephen G. Connor REGISTERED 187524 PROFESSIONAL ENGINEER State of Utah

MONUMENT VALLEY VENDOR VILLAGE

MONUMENT VALLEY, UT

OWNER
NAVAJO NATION DEPARTMENT OF ECONOMIC DEVELOPMENT

MARK	DATE	DESCRIPTION
	11/11/04	CONSTRUCTION DOCUMENTS
1	11/16/04	ADDENDUM 1

PROJECT NUMBER: 2002-047.00
DRAWING FILE:
DRAWN BY: JLW
CHECKED BY: JRJ

COPYRIGHT 2002 EMA ARCHITECTS, LLC

SHEET TITLE

BUILDING "F" (SERVICE)
PLUMBING FLOOR PLAN

P-103

EQUIPMENT SCHEDULE

UNIT NAME	DESCRIPTION	LOAD	TYPE	VOLTAGE	PHASE	AMPERAGE	CONDUIT SIZE	WIRES NO.	WIRES SIZE	WIRES NOTE	STARTER / DISCONNECT/ CONNETION AT UNIT STARTER SIZE	MCP /FUSE SIZE	MCP /FUSE POLES	DISCONNECT SIZE	DISCONNECT POLES	REMARKS
B-1	BOILER	300	WATTS	120	1	1	3/4	2	12	1A	-	-	-	HP	1	
P-1	PUMP	1/12	HP	120	1	10	3/4	2	12	1A	-	-	-			
P-2	PUMP	1/2	HP	120	1	1	3/4	2	12	1A	-	-	-			
P-3	PUMP	1/12	HP	120	1	1	3/4	2	12	1A	-	-	-			
P-4	PUMP	1/12	HP	120	1	1	3/4	2	12	1A	-	-	-			
P-5	PUMP	1/12	HP	120	1	1	3/4	2	12	1A	-	-	-			
EUH-1	ELEC. UNIT HEATER	24	FLA	208	1	24	3/4	2	10	10A	-	30	2	30	2	
EC-1	EVAPORATIVE COOLER	12	MCA	120	1	12	3/4	2	12	1A	-	-	-	HP	1	
EC-2	EVAPORATIVE COOLER	12	MCA	120	1	12	3/4	2	12	1A	-	-	-			
EC-3	EVAPORATIVE COOLER	12	MCA	120	1	12	3/4	2	12	1A	-	-	-			
EC-4	EVAPORATIVE COOLER	12	MCA	120	1	12	3/4	2	12	1A	-	-	-			
EC-5	EVAPORATIVE COOLER	12	MCA	120	1	12	3/4	2	12	1A	-	-	-			
EC-6	EVAPORATIVE COOLER	12	MCA	120	1	12	3/4	2	12	1A	-	-	-			
EC-7	EVAPORATIVE COOLER	12	MCA	120	1	12	3/4	2	12	1A	-	-	-			
EC-8	EVAPORATIVE COOLER	12	MCA	120	1	12	3/4	2	12	1A	-	-	-			
EC-9	EVAPORATIVE COOLER	12	MCA	120	1	12	3/4	2	12	1A	-	-	-			
EC-10	EVAPORATIVE COOLER	12	MCA	120	1	12	3/4	2	12	1A	-	-	-			
EF-1	EXHAUST FAN	90	WATTS	120	1	1	3/4	2	12	1A	-	-	-			
EF-2	EXHAUST FAN	90	WATTS	120	1	1	3/4	2	12	1A	-	-	-			
EF-3	EXHAUST FAN	45	WATTS	120	1	1	3/4	2	12	1A	-	-	-			
EF-4	EXHAUST FAN	45	WATTS	120	1	1	3/4	2	12	1A	-	-	-			
CU-1	CONDENSING UNIT	38	MCA	208	1	38	1"	2	6	10A	-	50	2	60	2	
F-1	FURNACE	3/4	HP	208	1	14	3/4	2	10	1A	-	-	-	HP	2	
WH-1	WATER HEATER	12	A	208	1	12	3/4	2	12	9A	-	-	-	30	2	
WH-2	WATER HEATER	12	A	208	1	12	3/4	2	12	9A	-	-	-	30	2	
WH-3	WATER HEATER	12	A	208	1	12	3/4	2	12	9A	-	-	-	30	2	
WH-4	WATER HEATER	12	A	208	1	12	3/4	2	12	9A	-	-	-	30	2	
WH-5	WATER HEATER	12	A	208	1	12	3/4	2	12	9A	-	-	-	30	2	

SIZE ALL FUSES IN ACCORDANCE WITH MANUFACTURER'S RECOMMENDATIONS.

STARTER / DISCONNECT NOTES:
1. MANUAL STARTER WITH THERMAL OVERLOAD
2. MANUAL STARTER WITH THERMAL OVERLOAD PROTECTION & LOW VOLTAGE RELAY / CONTACTOR FOR ATC CONTROL
3. COMBINATION MAGNETIC STARTER / FUSED DISCONNECT
4. COMBINATION MAGNETIC STARTER / MOTOR CIRCUIT PROTECTOR (MCP)
5. COMBINATION VARIABLE FREQUENCY DRIVE / MOTOR CIRCUIT PROTECTOR (MCP)
6. REDUCED VOLATAGE STARTER
7. COMBINATION TWO-SPEED STARTER / FUSED DISCONNECT
8. COMBINATION TWO-SPEED STARTER / MOTOR CIRCUIT PROTECTOR (MCP)
9. NON-FUSED DISCONNECT SWITCH
10. FUSED DISCONNECT SWITCH
11. BREAKER AND ENCLOSURE
12. DIRECT CONNECTION
13. DUPLEX RECEPTACLE OUTLET
14. SPECIAL PRUPOSE OUTLET
15. MAGNETIC STARTER WITH OVERLOADS

INSTALLATION NOTES:
A. FURNISHED, INSTALLED, & CONNECTED UNDER DIVISION 16
B. FURNISHED & INSTALLED UNDER ANOTHER DIVISION REQUIRING CONNECTIONS UNDER DIVISION 16
C. FURNISHED UNDER ANOTHER DIVISION BUT INSTALLED AND CONNECTED UNDER DIVISION 16
D. FURNISHED, INSTALLED, & CONNECTED UNDER ANOTHER DIVISION
E. FURNISHED BY OWNER, INSTALLED & CONNECTED BY DIVISION 16

LIGHT FIXTURE SCHEDULE

TYPE	MANUFACTURER NAME	MANUFACTURER CATALOG NO.	FIXTURE WATTS	MOUNTING	LAMPS	REMARKS
A1	COLUMBIA	AWA4-432-EB8120	130	SURFACE	(4) F032/T8/835	SURFACE WRAP
A2	COLUMBIA	WAL4-232-EB8120	70	WALL	(2) F032/T8/835	WALL BRACKET
A3	HUBBELL	VHX-152	150	WALL	(1) 150A19	JELLY JAR
A4	COLUMBIA	J24-432G-F9A12J25-4EB8-120	130	LAY-IN	(4) F032/T8/835	LAY-IN TROFFER
A5	COLUMBIA	AWA4-232-EB8120	70	SURFACE	(2) F032/T8/835	SURFACE WRAP
A6	COLUMBIA	J24-232G-F9A12J25-EB8-120	70	LAY-IN	(2) F032/T8/835	LAY-IN TROFFER
D1	PRESCOLITE	CFT642EB-STF602	45	RECESSED	(1) CF42DT/E/IN/835	COMPACT FL. DOWNLIGHT
PFI	GUTH	ELP-E-O-42232T-1	64	PENDANT	(2) CF32DT/E/IN/835	
PNI	HILITE	H-1320C	200	PENDANT	(1) 200W A19	
A13	SPAULDING	CVS-A-S25-H3-F-Q-DB/ARM656DB	260	20' POLE	(1) LU250/HgF/ECO	TYPE III POLE-MTD LUMINAIRE
A23	SPAULDING	CVS-A-S25-H3-F-Q-DB/ARM656DB	260	20' POLE	(2) LU250/HgF/ECO	TYPE III POLE-MTD LUMINAIRE
SIP	SPAULDING	S-S-S-20-40-1-AX/BX-DB	-	20 POLE	N/A	POLE FOR A13 & A23
S2	SPAULDING	M01-M175-MT-CBA	190	SURFACE	(1) M175/U	BOLLARD
T1	PRESCOLITE	AKTSCP20	50	TRACK	(1) 50PAR20	STEP CYLINDER TRACK FIXTURE
T1 TRACK	PRESCOLITE	AKT8-AKTEF-AKTPFCC	0	SURFACE	NONE	8' TRACK COLOR BY ARCHITECT
W1	AAL	ES2-3-CBA-150MH-SMB	160	WALL	(1) MH150	WALL PACK
X1	PRESCOLITE	NVT3GW	6	UNIVERSAL	INCLUDED	EXIT SIGN/EMERGENCY LIGHTING UNIT
X2	PRESCOLITE	EZ-2	6	WALL	INCLUDED	EMERGENCY LIGHTING UNIT

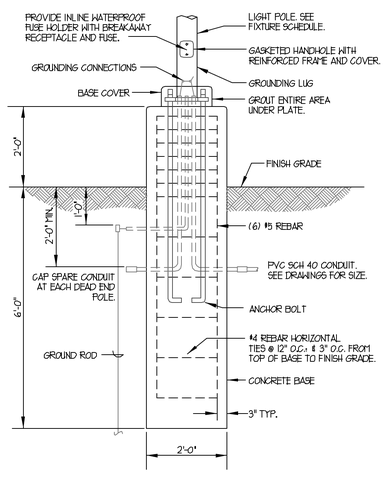

1 E-000 POLE BASE DETAIL
SCALE: NO SCALE

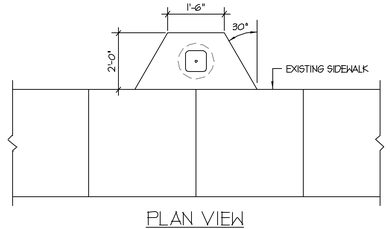

PLAN VIEW

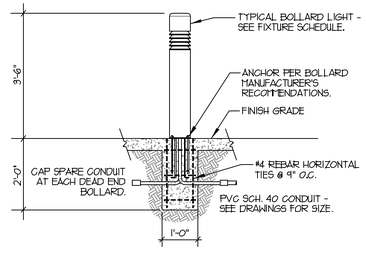

2 E-000 BOLLARD BASE DETAIL
SCALE: NO SCALE

ELECTRICAL SYMBOL SCHEDULE

GENERAL NOTES:
1. MOUNT ALL OUTLETS AND EQUIPMENT AT HEIGHTS INDICATED BELOW, UNLESS NOTED OTHERWISE ON DRAWINGS.
2. WHERE RECEPTACLES ARE DENOTED BY SUBSCRIPTS, PROVIDE RECEPTACLES WITH FEATURES AS INDICATED IN THE ABBREVIATION SCHEDULE.
3. WHERE OUTLETS ARE DENOTED BY THE SUBSCRIPT 'A', MOUNT AT 4" ABOVE COUNTER. IF COUNTER HAS A BACKSPLASH, MOUNT AT 4" ABOVE BACKSPLASH. REFER TO ARCHITECTURAL INTERIOR ELEVATIONS.
4. ALL SYMBOLS SHOWN ON THIS SHEET DESIGNATE NEW EQUIPMENT. ANY DASHED SYMBOL INDICATES THAT THE ITEM IS EITHER EXISTING OR UNDERGROUND. CONSULT EACH LOCATION WHERE EACH PARTICULAR SYMBOL APPEARS FOR NOTES AND SPECIFIC INFORMATION PERTAINING TO IT.

SYMBOL	DESCRIPTION	MOUNTING HEIGHT	NOTES
	1 CIRCUIT, 2 WIRE HOME RUN TO PANEL		REFER TO ELECTRICAL SPECIFICATIONS FOR GROUND WIRE REQUIREMENTS
	2 CIRCUIT, 3 WIRE, COMMON NEUTRAL HOME RUN TO PANEL		
	TWO WIRE CONDUCTORS WITH NO NEUTRAL		
	3 CIRCUIT, 4 WIRE, COMMON NEUTRAL HOME RUN TO PANEL		
	THREE WIRE CONDUCTORS WITH NO NEUTRAL		
	FOUR WIRE CONDUCTORS WITH NO NEUTRAL		
	MULTIPLE CONDUCTORS WITH COMMON NEUTRAL		
	CONDUIT		
	CONDUIT UP		
	CONDUIT DOWN		
	CONTINUATION SYMBOL		
	STUB-UP SYMBOL		
	SERVICE CONTINUATION SYMBOL		
	PLUGMOLD	4" ABOVE BACKSPLASH	
	SURFACE-MOUNTED OR PENDANT LIGHT FIXTURE	AS NOTED	
	WALL-MOUNTED LIGHT FIXTURE	AS NOTED	
	RECESSED LIGHT FIXTURE	CEILING	
	WALL-WASHER RECESSED LIGHT FIXTURE	CEILING	
	TRACK OR CANOPY-MOUNTED LIGHT FIXTURE	AS NOTED	
	CEILING-MOUNTED EXIT SIGN	CEILING	
	WALL-MOUNTED EXIT SIGN	AS NOTED	
	PARKING LOT LIGHT FIXTURE WITH POLE & BASE - (SQUARE)	SEE POLE BASE DETAIL	
	WALL MOUNTED EXIT SIGN WITH ARROWS (NEW)		
	FLUORESCENT LIGHT FIXTURE	AS NOTED	
	FLUORESCENT EGRESS LIGHT FIXTURE	AS NOTED	PROVIDE EMERGENCY BATTERY PACK
	FLUORESCENT EGRESS/NORMAL LIGHT FIXTURE CIRCUIT 2 OUTBOARD LAMPS TO EMERGENCY POWER CIRCUIT INBOARD LAMP (S) TO NORMAL POWER		
$	SINGLE-POLE TOGGLE SWITCH	+48"	
$a	SINGLE-POLE TOGGLE SWITCH	+48"	SUBSCRIPT KEYS SWITCH TO FIXTURES CONTROLLED
$3	THREE-WAY TOGGLE SWITCH	+48"	
$4	FOUR-WAY TOGGLE SWITCH	+48"	
$K	KEY-OPERATED SINGLE-POLE TOGGLE SWITCH	+48"	
$P	SINGLE-POLE TOGGLE SWITCH WITH PILOT LIGHT	+48"	
$	DIMMER SWITCH	+48"	
$$	DUAL LEVEL SWITCH		
$OCC,W	MOTION SENSOR LIGHT SWITCH	+48"	CEILING-MOUNTED WITH SUBSCRIPT O, WALL-MOUNTED WITH SUBSCRIPT W
	SPLIT-WIRED DUPLEX RECEPTACLE	+18"	
	SIMPLEX RECEPTACLE	+18"	
	DUPLEX RECEPTACLE	+18"	
	FOURPLEX RECEPTACLE	+18"	
	GROUND FAULT INTERRUPTER DUPLEX RECEPTACLE	+18"	
	EMERGENCY DUPLEX RECEPTACLE	+18"	
	EMERGENCY FOURPLEX RECEPTACLE	+18"	
	FLOOR BOX WITH DUPLEX RECEPTACLE	FLOOR	
	MULTISERVICE FLOOR BOX	FLOOR	
	SPECIAL PURPOSE OUTLET	+18"	
	CORD DROP WITH DUPLEX RECEPTACLE	CEILING	
	TELEVISION OUTLET		
	TELEPHONE OUTLET	+18"	
	DATA OUTLET	+18"	
	COMBINATION TELEPHONE/DATA OUTLET	+18"	
	FLOOR BOX WITH TELEPHONE/DATA OUTLET	FLOOR	
	JUNCTION BOX	AS NOTED	
	PHOTOELECTRIC CONTROL	+60"	
H	HORN		MOUNT AT LESSOR OF EITHER 80" AFF OR 6" BELOW CEILING
M	MINI HORN		
S	FIRE ALARM STROBE		
HS	FIRE ALARM AUDIO/VISUAL STROBE/HORN		
MS	MINI HORN/STROBE		
SP	FIRE ALARM AUDIO SPEAKER		SUBSCRIPT WP INDICATES A WEATHER PROOF OBJECT
SPS	FIRE ALARM AUDIO/VISUAL SPEAKER/STROBE		
ANN	ANNUCIATOR	TOP AT +72"	

SYMBOL	DESCRIPTION	MOUNTING HEIGHT	NOTES
T	TAMPER SWITCH		
W	WATER FLOW SWITCH		
BD	BEAM DETECTOR	TOP AT +12"	
FACP	FIRE ALARM CONTROL PANEL	TOP AT +72"	
FSD	FIRE/SMOKE DAMPER	TOP AT +72"	
SFCP	FIRE ALARM CONTROL SUB PANEL	TOP AT +72"	
	HEAT DETECTOR	CEILING	
	SMOKE DETECTOR	CEILING	
D	DUCT SMOKE DETECTOR	IN DUCT	
F	FIRE ALARM MANUAL STATION		
Z	CONTROL MODULE		
I	MONITOR MODULE		
R	FAN SHUTDOWN RELAY		
D	DOOR HOLDER		
P	SECURITY SYSTEM DOOR PORT MODULE	ABOVE CEILING	
	SIGNAL BELL/PUSH-BUTTON	+48"	
D	DURESS PUSH-BUTTON	BELOW DESK	
OHS	OVERHEAD MAGNETIC DOOR SWITCH	DOOR	
	MAGNETIC CONTACT DOOR SWITCH	DOOR	
S	ELECTROMAGNETIC DOOR STRIKE	DOOR	
	MAGNETIC LOCK	DOOR	
KP	KEYPAD	+48"	
	FIRE ALARM AUDIO/VISUAL STROBE/CHIME	+90"	
C	CLOCK		
CL	CLOCK - (LCD)		
CTC	CLOCK - (TOWER CLOCK)		
MC	MASTER CLOCK		
	CLOCK OUTLET	+90"	
CS	COMBINATION CLOCK/SPEAKER OUTLET	+90"	
	CLOSED CIRCUIT TELEVISION CAMERA	CEILING	
B	BELL	+90"	
	SOUND SYSTEM EQUIPMENT CABINET	WALL	
	SOUND SYSTEM SPEAKER OUTLET	+96"	
HL	SOUND SYSTEM SPEAKER OUTLET	CEILING	
	SOUND SYSTEM MICROPHONE OUTLET	+18"	
V	SOUND SYSTEM VOLUME CONTROL SWITCH	+48"	
SCP	SECURITY CONTROL PANEL		
	INTERCOM MASTER STATION	DESK	
	INTERCOM STATION	+60"	
S	SONALERT WITH TIME DELAY	+80"	
EXIT	REQUEST TO EXIT MOTION DETECTOR	CEILING	
	MOTION DETECTOR	CEILING	SUBSCRIPT DENOTES DEGREES OF MONITORED AREA
	MANUAL STARTER WITH PILOT LIGHT	AS NOTED	
	ELECTRIC MOTOR	AS NOTED	
	NON-FUSED DISCONNECT SWITCH	+60"	
F	FUSED DISCONNECT SWITCH	+60"	
	CIRCUIT BREAKER AND ENCLOSURE	+60"	
	MAGNETIC STARTER	+60"	
	COMBINATION MAGNETIC STARTER/NON-FUSED DISCONNECT	+60"	
F	COMBINATION MAGNETIC STARTER/FUSED DISCONNECT	+60"	
	COMB. MAGNETIC STARTER/ MOTOR CIRCUIT PROTECTOR	+60"	
	METER & BASE SYMBOL	+48"	
A	PANELBOARD (SURFACE MOUNTED)	TOP AT +72"	LETTER 'A' INTENDED TO INDICATE PANEL DESIGNATION
BB	PANELBOARD (FLUSH MOUNTED)	TOP AT +72"	LETTERS 'BB' INTENDED TO INDICATE PANEL DESIGNATION
	MAIN DISTRIBUTION PANELBOARD	TOP AT +72"	
	TELEPHONE TERMINAL BOARD	TOP AT +72"	
XX	KEYED NOTE SYMBOL		SEE KEYED NOTES
XXX	REVISION/AS-BUILT/ADDENDUM CALLOUT SYMBOL		
100	ARCHITECTURAL ROOM NAME		
A	LIGHT FIXTURE CALLOUT (LETTER DENOTES FIXTURE TYPE)		
M	MECHANICAL EQUIPMENT DESIGNATION SYMBOL		
	CONDENSING UNIT		
	SCONCE/DOME LIGHT	4" ABOVE DOOR	THE SUBSCRIPT C INDICATES CEILING-MOUNTED
	EMERGENCY WALL PACK FIXTURE	AS NOTED	

ABBREVIATION SCHEDULE

NOTE: NOT ALL ABBREVIATIONS MAY BE USED.

A	ABOVE COUNTER	ISO	ISOLATED
A	AMP OR AMPS	K.V.A	KILO VOLT AMPERES
ADJ	ADJACENT	KW	KILOWATTS
AFF	ABOVE FINISHED FLOOR	LFMC	LIQUID-TIGHT METAL CONDUIT
AHJ	AUTHORITY HAVING JURISDICTION	LFNC	LIQUID-TIGHT NONMETAL CONDUIT
AL	ALUMINUM	MCA	MINIMUM CIRCUIT AMPS
C	CONDUIT	MLO	MAIN LUGS ONLY
CB	CIRCUIT BREAKER	N.C.	NORMALLY CLOSED
CKT	CIRCUIT	N.I.C.	NOT IN CONTRACT
C.O.'S	CONVENIENCE OUTLETS	NL.	NIGHT LIGHT
CU	COPPER	N.O.	NORMALLY OPEN
EA	EACH	O.C.	ON CENTER(S)
ELEC	ELECTRICAL	OCP	OVER CURRENT PROTECTION
EM	EMERGENCY	QTY	QUANTITY
EMT	ELECTRIC METALLIC TUBING	R	REMOVE
ENT	ELECTRIC NONMETALLIC TUBING	REQ.	REQUIREMENTS
EQUIP	EQUIPMENT	RMC	RIGID METAL CONDUIT
EWC	ELECTRIC WATER COOLER	RNC	RIGID NONMETALLIC CONDUIT
E, EX	EXISTING	RR	REMOVE AND RELOCATE
EXP	EXPLOSION PROOF	SS	SURGE SUPPRESSION
FA	FIRE ALARM	SCP	SECURITY CONTROL PANEL
FACP	FIRE ALARM CONTROL PANEL	TR	TAMPER RESISTANT
FLA	FULL LOAD AMPS	TYP	TYPICAL
FMC	FLEXIBLE METAL CONDUIT	TVSS	TRANSIENT VOLTAGE SURGE SUPRESSOR
FOB	FREIGHT ON BOARD	UF	UNDER FLOOR
GND	GROUND CONDUCTOR	UG	UNDERGROUND
HOA	HAND-OFF-AUTO	U.N.O.	UNLESS NOTED OTHERWISE
HP	HORSE POWER	W	WITH
IG	ISOLATED GROUND	WP	WEATHER PROOF
IMC	INTERMEDIATE METAL CONDUIT	XFMR	TRANSFORMER
INS	INSULATED		

EMA
PLANNING ● ARCHITECTURE ● INTERIORS
Salt Lake City
460 South 400 East
Salt Lake City, Utah 84111
voice: (801) 363-1511
fax: (801) 363-1560
Park City
364 Main Street P.O. Box 9
Park City, Utah 84060
voice: (435) 649-0092
fax: (435) 649-7127

CONSULTANTS

REGISTERED PROFESSIONAL ENGINEER
JEFFREY R. OWEN
No.177411
STATE OF UTAH

MONUMENT VALLEY VENDOR VILLAGE
MONUMENT VALLEY, UT
OWNER
NAVAHO NATION DEPARTMENT OF ECONOMIC DEVELOPMENT

MARK	DATE	DESCRIPTION
	7-29-05	REQUEST FOR CODE APPROVAL

PROJECT NUMBER: 2002-07
DRAWING FILE:
DRAWN BY:
CHECKED BY:

COPYRIGHT 2002 EMA ARCHITECTS, LLC

SHEET TITLE

SCHEDULES

E-000

OF

R:\2004-008.01 - Monument Valley\New Bldg & Modifications\Elec\E000.dwg, 8/1/2005 12:27:52 PM, dee, Overit & Associates LLC

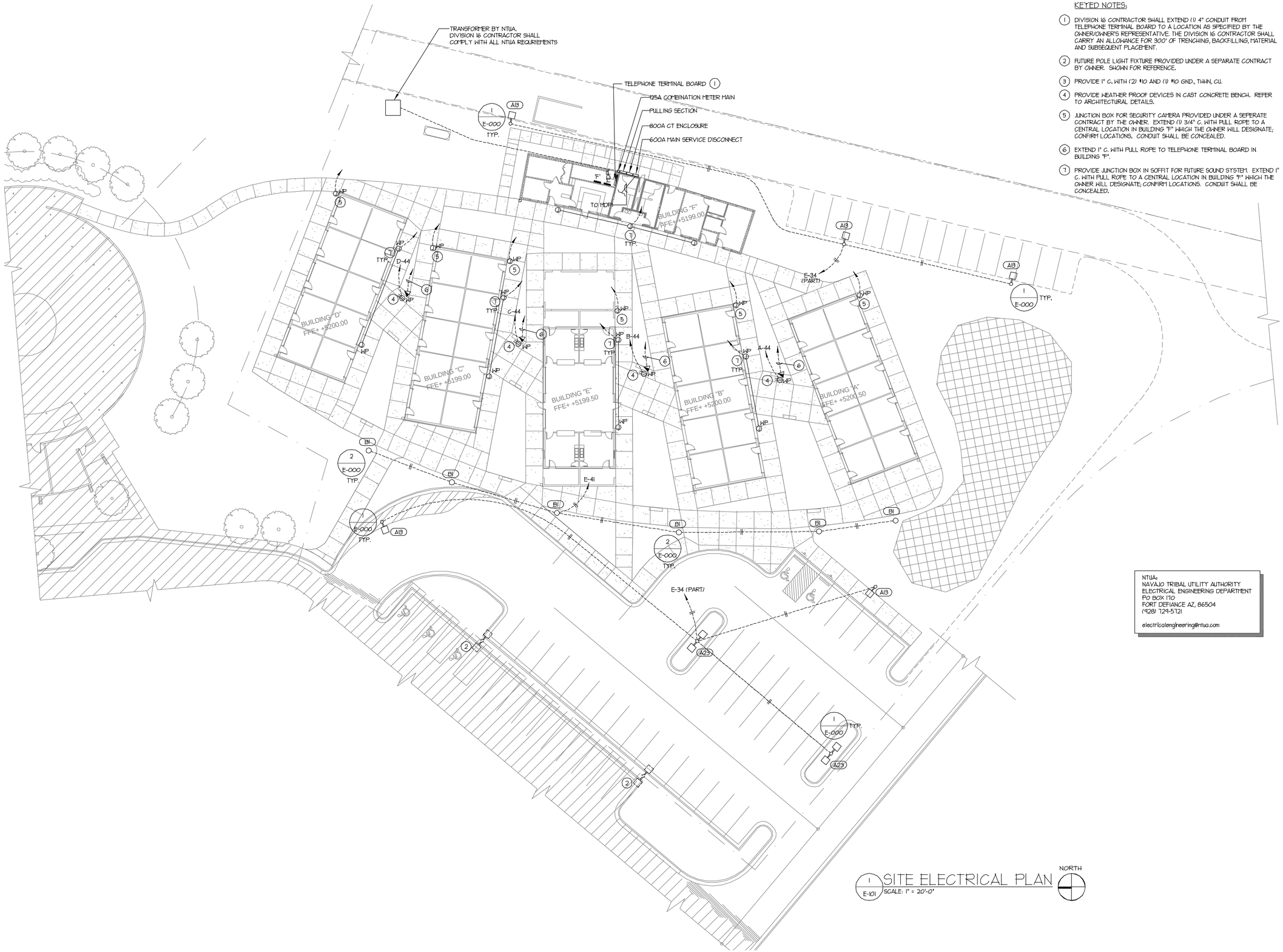

KEYED NOTES:

1. DIVISION 16 CONTRACTOR SHALL EXTEND (1) 4" CONDUIT FROM TELEPHONE TERMINAL BOARD TO A LOCATION AS SPECIFIED BY THE OWNER/OWNER'S REPRESENTATIVE. THE DIVISION 16 CONTRACTOR SHALL CARRY AN ALLOWANCE FOR 300' OF TRENCHING, BACKFILLING, MATERIAL AND SUBSEQUENT PLACEMENT.
2. FUTURE POLE LIGHT FIXTURE PROVIDED UNDER A SEPARATE CONTRACT BY OWNER. SHOWN FOR REFERENCE.
3. PROVIDE 1" C. WITH (2) #10 AND (1) #10 GND., THHN, CU.
4. PROVIDE WEATHER PROOF DEVICES IN CAST CONCRETE BENCH. REFER TO ARCHITECTURAL DETAILS.
5. JUNCTION BOX FOR SECURITY CAMERA PROVIDED UNDER A SEPERATE CONTRACT BY THE OWNER. EXTEND (1) 3/4" C. WITH PULL ROPE TO A CENTRAL LOCATION IN BUILDING "F" WHICH THE OWNER WILL DESIGNATE; CONFIRM LOCATIONS. CONDUIT SHALL BE CONCEALED.
6. EXTEND 1" C. WITH PULL ROPE TO TELEPHONE TERMINAL BOARD IN BUILDING "F".
7. PROVIDE JUNCTION BOX IN SOFFIT FOR FUTURE SOUND SYSTEM. EXTEND 1" C. WITH PULL ROPE TO A CENTRAL LOCATION IN BUILDING "F" WHICH THE OWNER WILL DESIGNATE; CONFIRM LOCATIONS. CONDUIT SHALL BE CONCEALED.

NTUA:
NAVAJO TRIBAL UTILITY AUTHORITY
ELECTRICAL ENGINEERING DEPARTMENT
PO BOX 170
FORT DEFIANCE AZ, 86504
(928) 729-5721

electricalengineering@ntua.com

1 E-101 SITE ELECTRICAL PLAN
SCALE: 1" = 20'-0"

NORTH

EMA
PLANNING ● ARCHITECTURE ● INTERIORS

Salt Lake City
460 South 400 East
Salt Lake City, Utah 84111
voice: (801) 363-1511
fax: (801) 363-1560

Park City
364 Main Street P.O. Box 9
Park City, Utah 84060
voice: (435) 649-0092
fax: (435) 649-7127

CONSULTANTS

REGISTERED PROFESSIONAL ENGINEER
JEFFREY R. OWEN
No.177411
STATE OF UTAH

MONUMENT VALLEY VENDOR VILLAGE

MONUMENT VALLEY, UT

OWNER
NAVAHO NATION DEPARTMENT OF ECONOMIC DEVELOPMENT

MARK	DATE	DESCRIPTION
	7-29-05	REQUEST FOR CODE APPROVAL

PROJECT NUMBER: 2002-07
DRAWING FILE:
DRAWN BY:
CHECKED BY:

COPYRIGHT 2002 EMA ARCHITECTS, LLC

SHEET TITLE

SITE ELECTRICAL PLAN

E-101

OF

R:\2004-008.01 - Monument Valley\New Bldg & Modifications\Elec\E101.dwg, 8/1/2005 12:28:52 PM, dee, Owen & Associates L.C.

KEYED NOTES:

1. FURNISH AND INSTALL PHOTOCELL TORK MODEL 2101 - REFER TO DETAIL I/E-201.
2. BUILDINGS B, C & D SHALL HAVE CIRCUITING/PANELBOARD SCHEDULES IDENTICAL TO BUILDING A. PROVIDE PANEL-MOUNTED DIRECTORIES THAT REFLECT THE CORRECT BUILDING DESIGNATIONS.

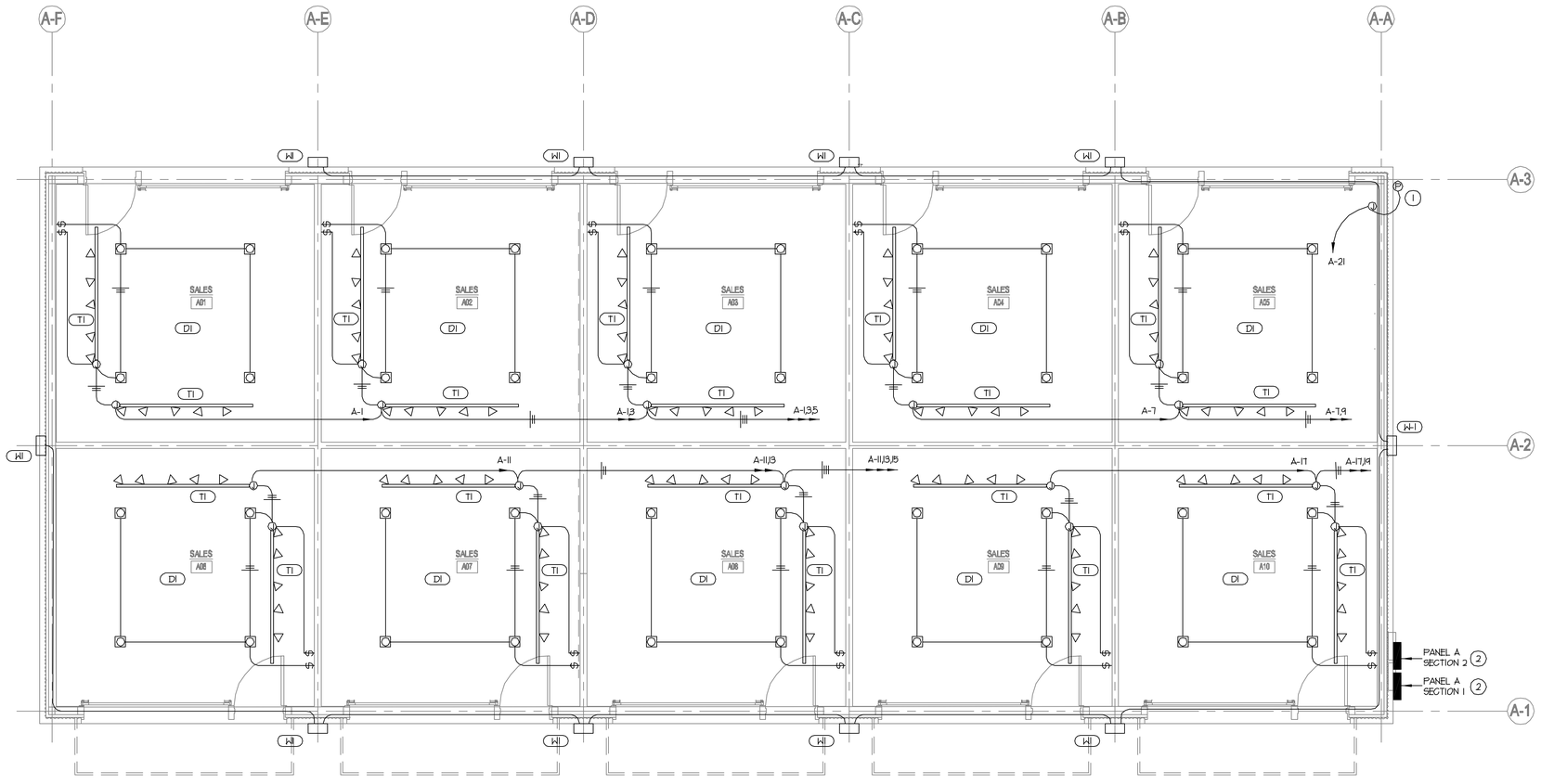

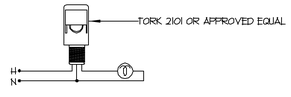

2 E-201 PHOTCELL DETAIL
SCALE: NONE

1 E-201 BUILDING "A,B,C,D" LIGHTING
SCALE: 1/4" = 1'0"

BUILDING NORTH

EMA

PLANNING ● ARCHITECTURE ● INTERIORS

Salt Lake City
460 South 400 East
Salt Lake City, Utah 84111
voice: (801) 363-1511
fax: (801) 363-1560

Park City
364 Main Street P.O. Box 9
Park City, Utah 84060
voice: (435) 649-0092
fax: (435) 649-7127

CONSULTANTS

REGISTERED PROFESSIONAL ENGINEER
JEFFREY R. OWEN
No.177411
STATE OF UTAH

MONUMENT VALLEY VENDOR VILLAGE

MONUMENT VALLEY, UT

OWNER
NAVAHO NATION DEPARTMENT OF ECONOMIC DEVELOPMENT

MARK	DATE	DESCRIPTION
	7-29-05	REQUEST FOR CODE APPROVAL

PROJECT NUMBER: 2002-07
DRAWING FILE:
DRAWN BY:
CHECKED BY:

COPYRIGHT 2002 EMA ARCHITECTS, LLC

SHEET TITLE

BUILDING "A,B,C,D" (RETAIL)
LIGHTING PLANS

E-201

OF

R:\2004-008.01 - Monument Valley\New Bldg & Modifications\Elec\E201.dwg, 8/12/2005 12:29:17 PM, dee, Owen & Associates LLC.

KEYED NOTES:

1. FURNISH AND INSTALL PHOTOCELL TORK MODEL 2101 - REFER TO DETAIL 1/E-201.
2. EXTEND AN UN-SWITCHED HOT CONDUCTOR TO EACH EXIT SIGN AND EMERGENCY EGRESS LIGHT FIXTURE.
3. EXTEND CIRCUIT FROM OUTLET BELOW TO EXIT SIGN.

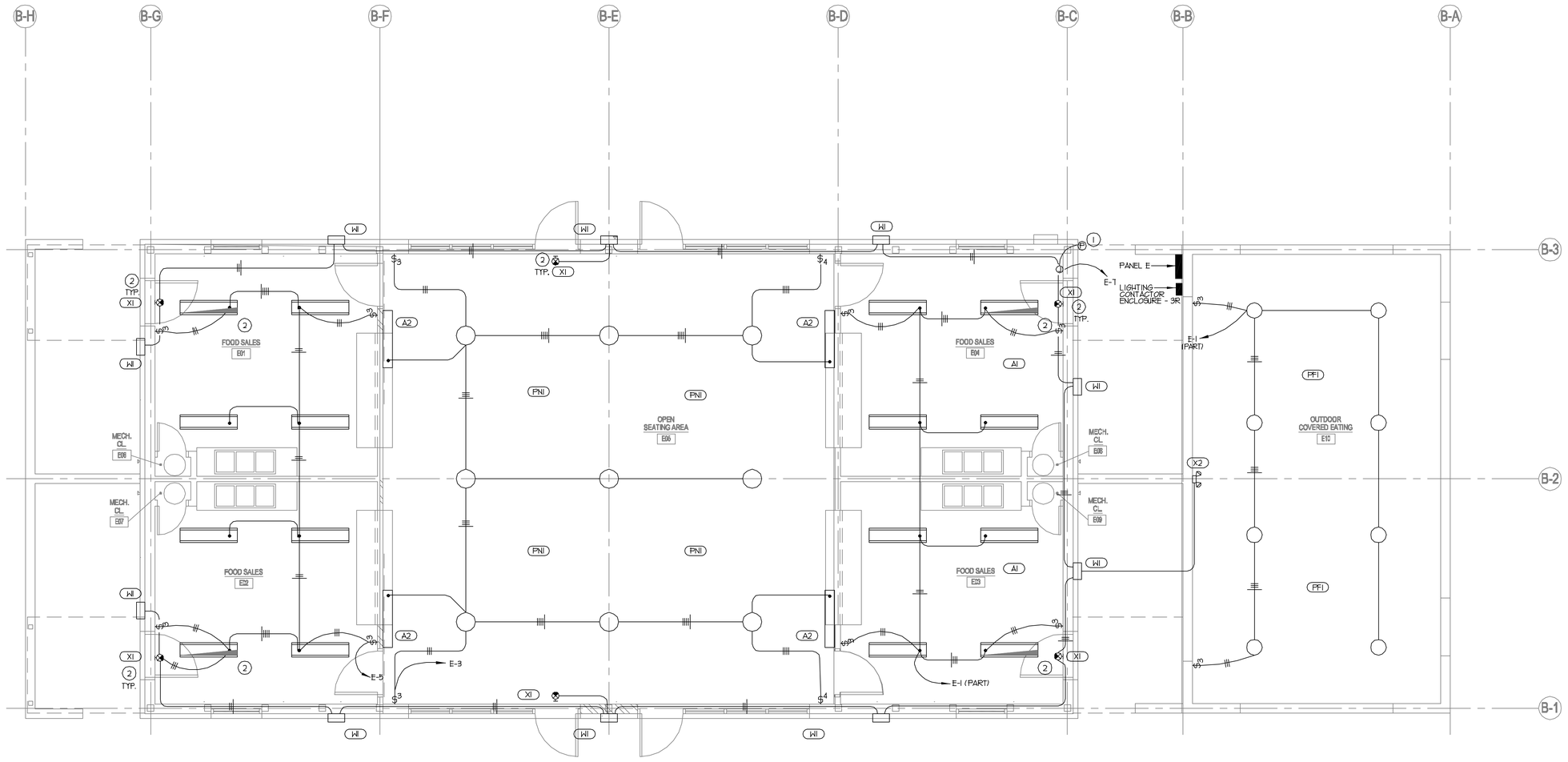

1 E-202 BUILDING "E" LIGHTING
SCALE: 1/4" = 1'0"

BUILDING NORTH

EMA
PLANNING ● ARCHITECTURE ● INTERIORS

Salt Lake City
460 South 400 East
Salt Lake City, Utah 84111
voice: (801) 363-1511
fax: (801) 363-1560

Park City
364 Main Street P.O. Box 9
Park City, Utah 84060
voice: (435) 649-0092
fax: (435) 649-7127

CONSULTANTS

REGISTERED PROFESSIONAL ENGINEER
JEFFREY R. OWEN
No.177411
STATE OF UTAH

MONUMENT VALLEY VENDOR VILLAGE

MONUMENT VALLEY, UT

OWNER
NAVAHO NATION DEPARTMENT OF ECONOMIC DEVELOPMENT

MARK	DATE	DESCRIPTION
	7-29-05	REQUEST FOR CODE APPROVAL

PROJECT NUMBER: 2002-07
DRAWING FILE:
DRAWN BY:
CHECKED BY:

COPYRIGHT 2002 EMA ARCHITECTS, LLC

SHEET TITLE

BUILDING "E" (FOOD COURT) LIGHTING PLANS

E-202

OF

R:\2004-008.01 - Monument Valley\New Bldg & Modifications\Elec\E202.dwg, 8/1/2005 12:29:41 PM, dee, Owen & Associates L.C.

KEYED NOTES:

1. FURNISH AND INSTALL PHOTOCELL TORK MODEL 2101 - REFER TO DETAIL 1/E-201.
2. CIRCUIT AND SWITCH EXHAUST FANS W/ LIGHTS.
3. EXTEND UN-SWITCHED HOT CONDUCTOR TO EACH EXIT SIGN AND EMEGENCY EGRESS LIGHT FIXTURE.

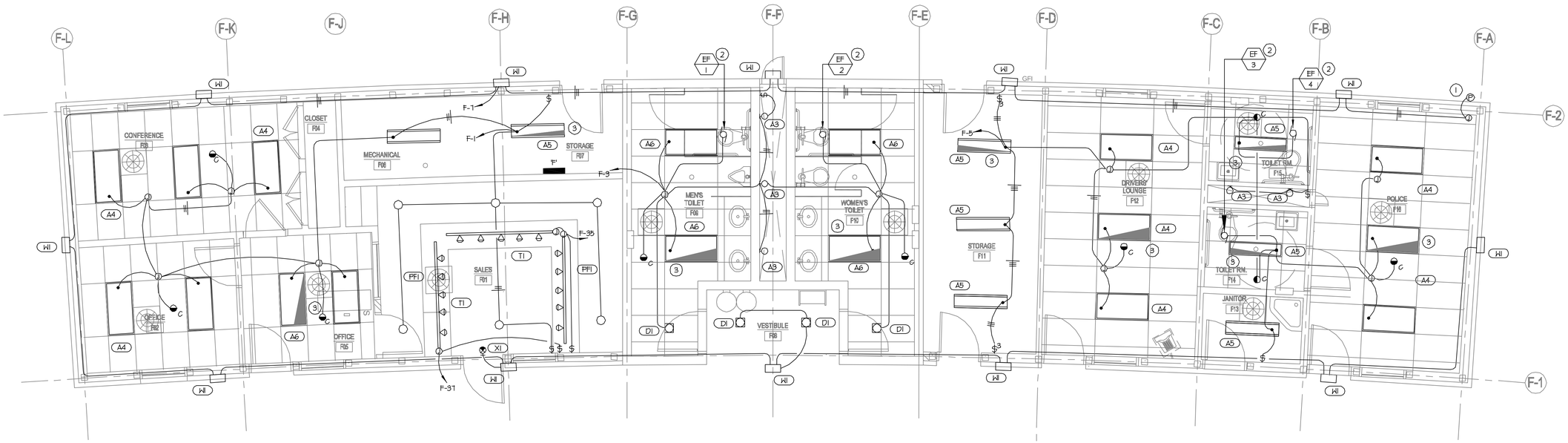

BUILDING "F" LIGHTING
E-203 SCALE: 1/4" = 1'0"

BUILDING NORTH

EMA
PLANNING ● ARCHITECTURE ● INTERIORS

Salt Lake City
460 South 400 East
Salt Lake City, Utah 84111
voice: (801) 363-1511
fax: (801) 363-1560

Park City
364 Main Street P.O. Box 9
Park City, Utah 84060
voice: (435) 649-0092
fax: (435) 649-7127

CONSULTANTS

REGISTERED PROFESSIONAL ENGINEER
JEFFREY R. OWEN
No.177411
STATE OF UTAH

MONUMENT VALLEY VENDOR VILLAGE

MONUMENT VALLEY, UT

OWNER
NAVAHO NATION DEPARTMENT OF ECONOMIC DEVELOPMENT

MARK	DATE	DESCRIPTION
	7-29-05	REQUEST FOR CODE APPROVAL

PROJECT NUMBER: 2002-07
DRAWING FILE:
DRAWN BY:
CHECKED BY:

COPYRIGHT 2002 EMA ARCHITECTS, LLC

SHEET TITLE

BUILDING "F" (SERVICE)
LIGHTING PLANS

E-203

OF

R:\2004-008.01 - Monument Valley\New Bldg & Modifications\Elec\E203.dwg, 8/1/2005 12:30:06 PM, dee, Owen & Associates L.C.

KEYED NOTES:

(1) BUILDINGS B, C & D SHALL HAVE CIRCUITING/PANELBOARD SCHEDULES IDENTICAL TO BUILDING A. PROVIDE PANEL-MOUNTED DIRECTORIES THAT REFLECT THE CORRECT BUILDING DESIGNATIONS.

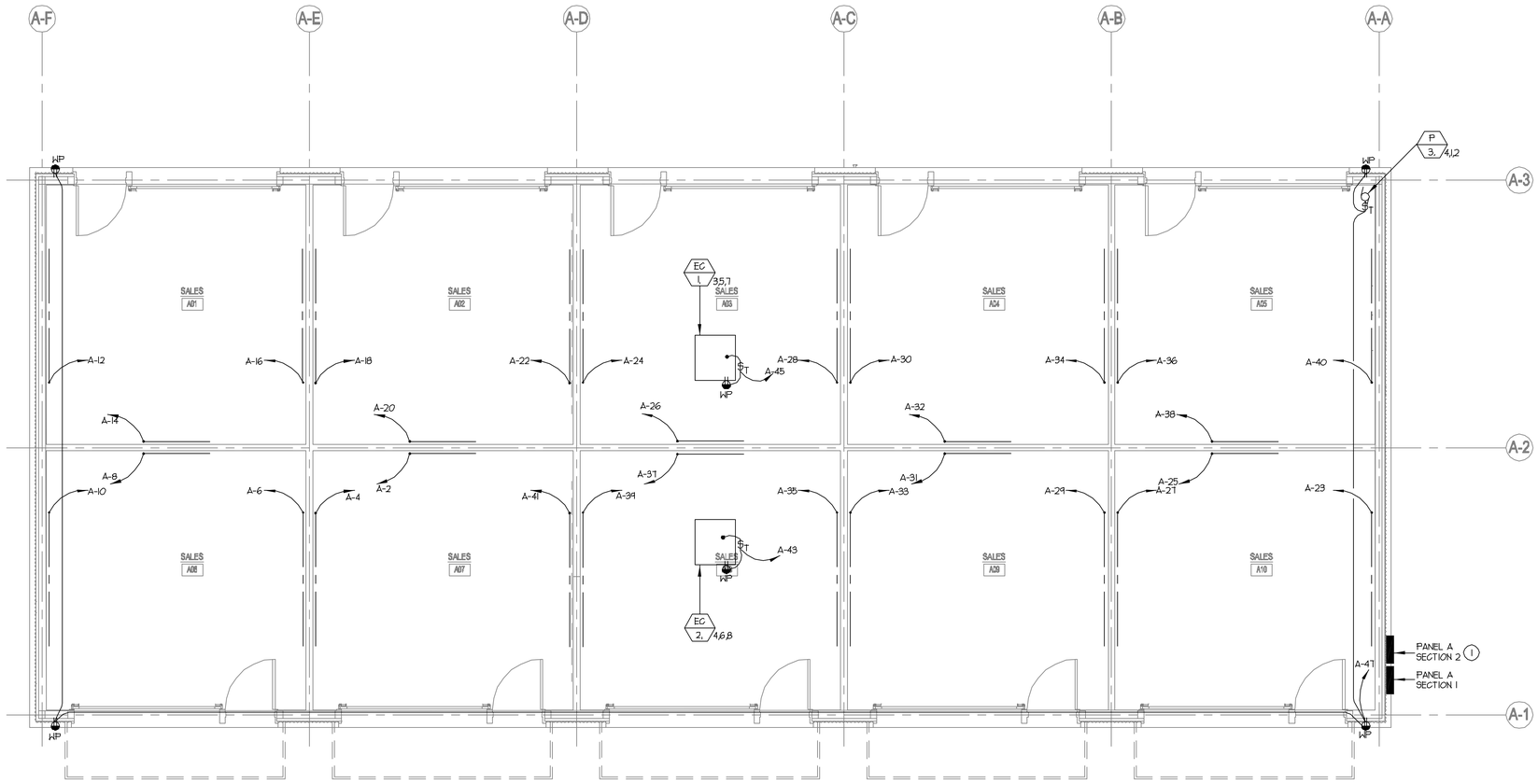

1 E-301 BUILDING "A,B,C,D" POWER
SCALE: 1/4" = 1'0"

BUILDING NORTH

EMA
PLANNING ● ARCHITECTURE ● INTERIORS

Salt Lake City
460 South 400 East
Salt Lake City, Utah 84111
voice: (801) 363-1511
fax: (801) 363-1560

Park City
364 Main Street P.O. Box 9
Park City, Utah 84060
voice: (435) 649-0092
fax: (435) 649-7127

CONSULTANTS

REGISTERED PROFESSIONAL ENGINEER
JEFFREY R. OWEN
No.177411
STATE OF UTAH

MONUMENT VALLEY VENDOR VILLAGE

MONUMENT VALLEY, UT

OWNER: NAVAHO NATION DEPARTMENT OF ECONOMIC DEVELOPMENT

MARK	DATE	DESCRIPTION
	7-29-05	REQUEST FOR CODE APPROVAL

PROJECT NUMBER: 2002-07
DRAWING FILE:
DRAWN BY:
CHECKED BY:

COPYRIGHT 2002 EMA ARCHITECTS, LLC

SHEET TITLE

BUILDING "A,B,C,D" (RETAIL)
POWER PLANS

E-301

OF

R:\2004-008.01 - Monument Valley\New Bldg & Modifications\Elec\E301.dwg, 8/1/2005 12:30:32 PM, dee, Owen & Associates LLC.

KEYED NOTES:

(1) FURNISH AND INSTALL ROUND FLOOR BOX WALKER 881 W/ ADJUSTING RING WALKER 881ADP & COVER 845TGFI W/ (1) GFCI OUTLET PER BOX.

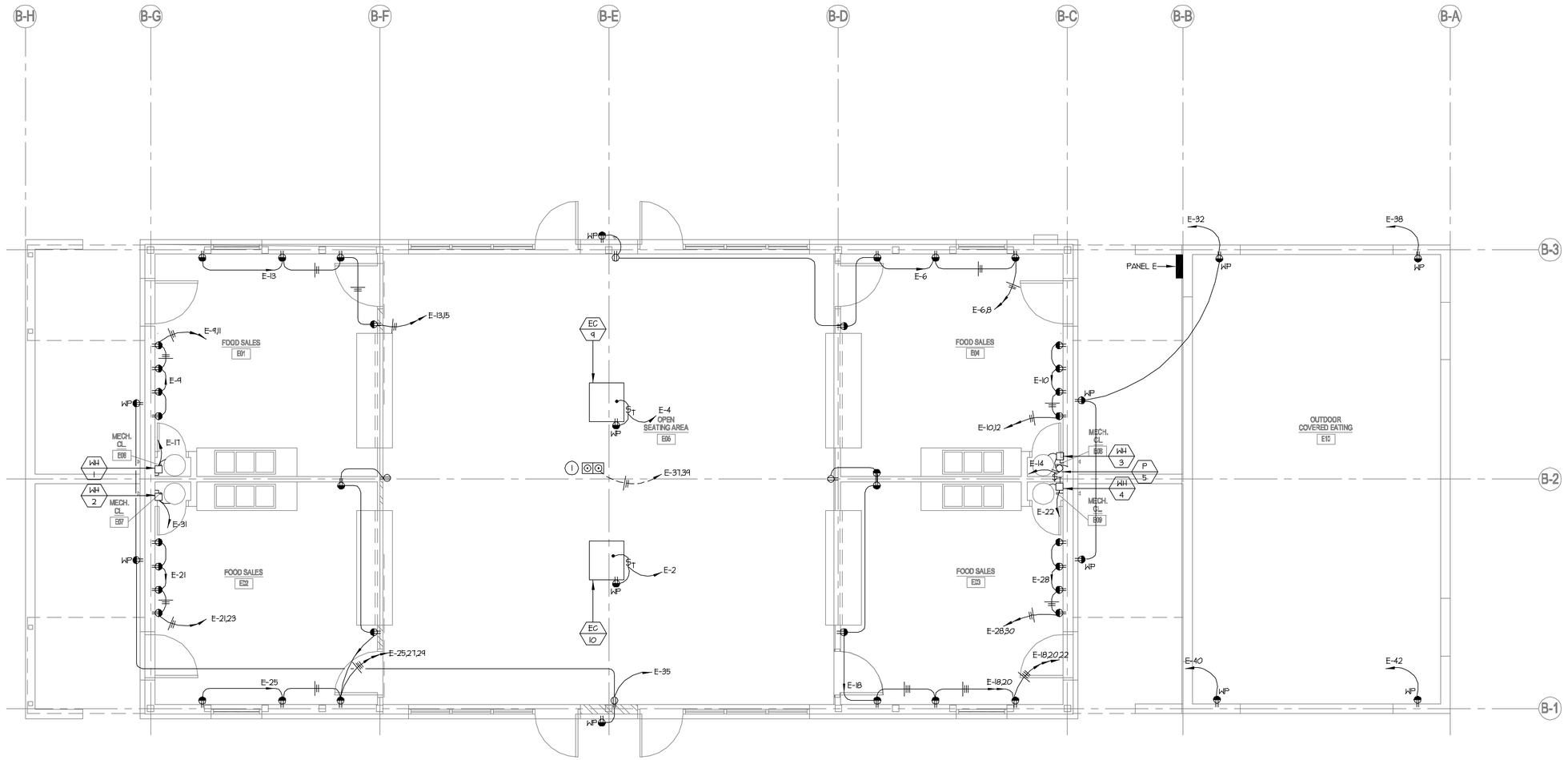

BUILDING "E" POWER
1 / E-302 SCALE: 1/4" = 1'0"

BUILDING NORTH

EMA
PLANNING ● ARCHITECTURE ● INTERIORS

Salt Lake City
460 South 400 East
Salt Lake City, Utah 84111
voice: (801) 363-1511
fax: (801) 363-1560

Park City
364 Main Street P.O. Box 9
Park City, Utah 84060
voice: (435) 649-0092
fax: (435) 649-7127

CONSULTANTS

REGISTERED PROFESSIONAL ENGINEER
JEFFREY R. OWEN
No.177411
STATE OF UTAH

MONUMENT VALLEY VENDOR VILLAGE

MONUMENT VALLEY, UT

OWNER
NAVAHO NATION DEPARTMENT OF ECONOMIC DEVELOPMENT

MARK	DATE	DESCRIPTION
	7-29-05	REQUEST FOR CODE APPROVAL

PROJECT NUMBER: 2002-07
DRAWING FILE:
DRAWN BY:
CHECKED BY:

COPYRIGHT 2002 EMA ARCHITECTS, LLC

SHEET TITLE

BUILDING "E" (FOOD COURT) POWER PLANS

E-302

OF

R:\2004-008.01 - Monument Valley\New Bldg & Modifications\Elec\E302.dwg, 8/17/2005 12:31:00 PM, dee, Owen & Associates L.C.

KEYED NOTES:

1. EXTEND (1) 1" CONDUIT FROM EACH TELE/DATA JUCNTION BOX TO ACCESIBLE CEILING SPACE.
2. THE DIVISION 16 CONTRACTOR SHALL COORDINATE LOCATION OF PHONE IN DRIVERS OFFICE W/ ARCHITECT AND OWNER PRIOR TO PERFORMING ANY ROUGH-IN WORK.
3. VERIFY EXACT LOCATION OF DEVICES WITH THE OWNER. COORDINATE ROUGH-IN OF DEVICES WITH THE CASE WORK INSTALLER.

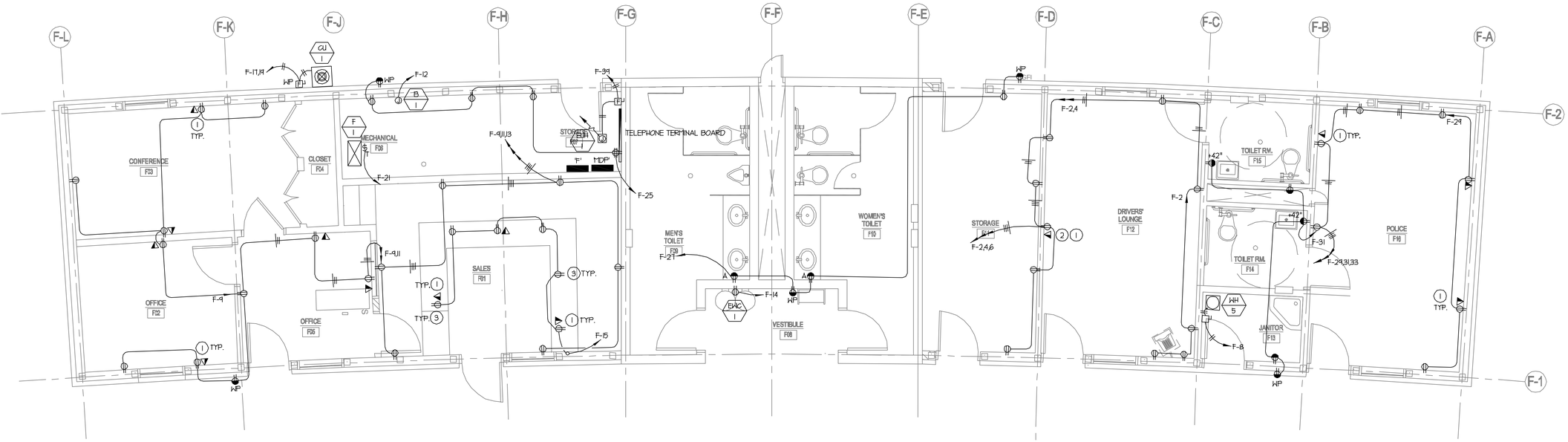

BUILDING "F" POWER
E-303 SCALE: 1/4" = 1'0"

BUILDING NORTH

EMA
PLANNING ● ARCHITECTURE ● INTERIORS

Salt Lake City
460 South 400 East
Salt Lake City, Utah 84111
voice: (801) 363-1511
fax: (801) 363-1560

Park City
364 Main Street P.O. Box 9
Park City, Utah 84060
voice: (435) 649-0092
fax: (435) 649-7127

CONSULTANTS

REGISTERED PROFESSIONAL ENGINEER
JEFFREY R. OWEN
No.177411
STATE OF UTAH

MONUMENT VALLEY VENDOR VILLAGE

MONUMENT VALLEY, UT

OWNER
NAVAHO NATION DEPARTMENT OF ECONOMIC DEVELOPMENT

MARK	DATE	DESCRIPTION
	7-29-05	REQUEST FOR CODE APPROVAL

PROJECT NUMBER: 2002-07
DRAWING FILE:
DRAWN BY:
CHECKED BY:

COPYRIGHT 2002 EMA ARCHITECTS, LLC

SHEET TITLE

BUILDING "F" (SERVICE)
POWER PLANS

E-303

OF

R:\2004-008.01 - Monument Valley\New Bldg & Modifications\Elec\E303.dwg, 8/1/2005 12:31:25 PM, dee.
Owen & Associates L.C.

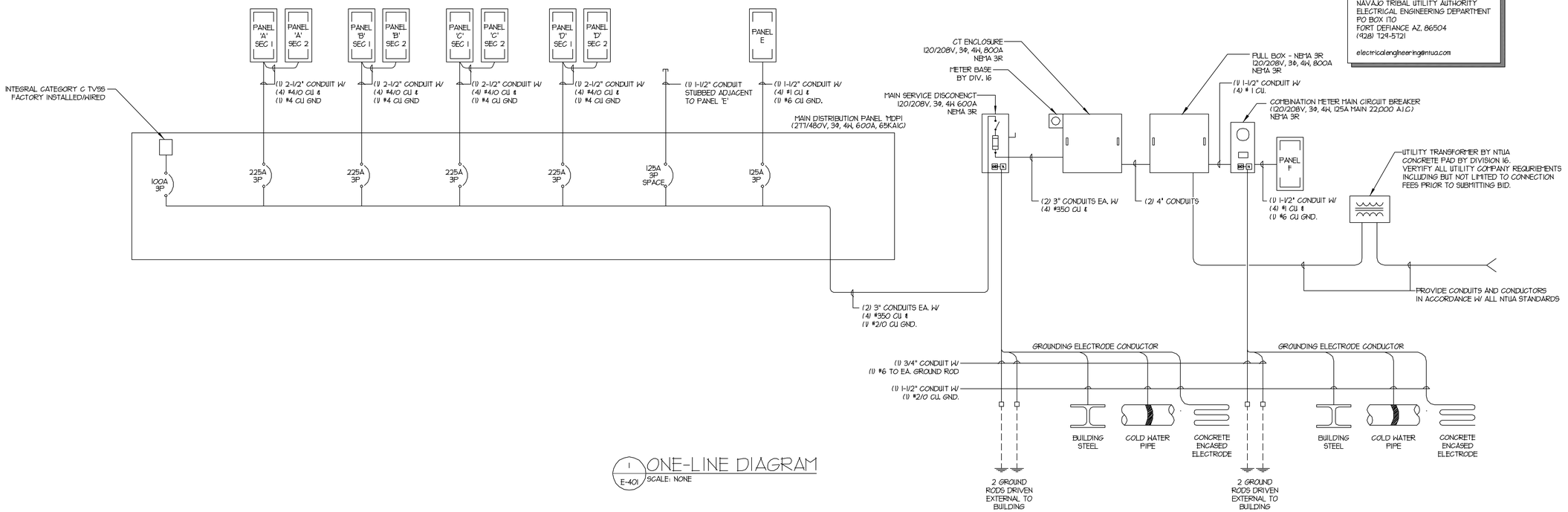

1 E-401 ONE-LINE DIAGRAM
SCALE: NONE

NTUA:
NAVAJO TRIBAL UTILITY AUTHORITY
ELECTRICAL ENGINEERING DEPARTMENT
PO BOX 170
FORT DEFIANCE AZ, 86504
(928) 729-5721
electricalengineering@ntua.com

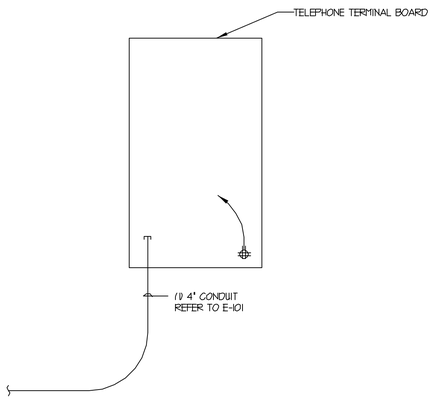

3 E-401 TELEPHONE RISER DIAGRAM
SCALE: NONE

CONTACTOR SCHEDULE

CONTACTOR #	CIRCUITS CONTROLLED	LOAD DESCRIPTION	CONTACTOR SIZE	CONTACTOR LOCATION	CONTROL MODE
1	E-34,36,37	SITE LIGHTS BUILDING LIGHTS	20A. 4P.	ADJACENT TO PANEL 'E'	P.C. T.C.

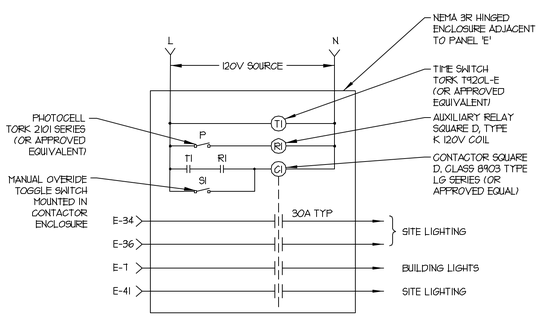

2 E-401 SITE LIGHTING CONTACTOR
SCALE: NONE

EMA
PLANNING ● ARCHITECTURE ● INTERIORS
Salt Lake City
460 South 400 East
Salt Lake City, Utah 84111
voice: (801) 363-1511
fax: (801) 363-1560
Park City
364 Main Street P.O. Box 9
Park City, Utah 84060
voice: (435) 649-0092
fax: (435) 649-7127

CONSULTANTS

REGISTERED PROFESSIONAL ENGINEER
JEFFREY R. OWEN
No.177411
STATE OF UTAH

MONUMENT VALLEY VENDOR VILLAGE

MONUMENT VALLEY, UT

OWNER
NAVAHO NATION DEPARTMENT OF ECONOMIC DEVELOPMENT

MARK	DATE	DESCRIPTION
	7-29-05	REQUEST FOR CODE APPROVAL

PROJECT NUMBER: 2002-07
DRAWING FILE:
DRAWN BY:
CHECKED BY:

COPYRIGHT 2002 EMA ARCHITECTS, LLC

SHEET TITLE

ONE-LINE DIAGRAM & DETAILS

E-401

OF

R:\2004-008.01 - Monument Valley\New Bldg & Modifications\Elec\E401.dwg, 8/1/2005 12:31:47 PM, dee, Owen & Associates L.C.

LIGHTING AND APPLIANCE PANELBOARD SCHEDULE

A - SEC1
B - SEC1
C - SEC2
D - SEC2

PANEL NAME: ____ TYPE: NQOD CIRCUIT BREAKERS: [X] BOLT ON [ ] PLUG ON 120 / 208 VOLTAGE 3 Φ 4 W

[X] ENGRAVED NAME TAGS BUS MATERIAL: [ ] ALUM BUS [X] CU BUS GROUND: [X] GROUND BUS [ ] ISOL GND BUS NEUTRAL: [X] 100% [ ] 200% LUGS: [ ] MAIN [ ] SUB-FEED [X] FEED-THROUGH MAIN BREAKER: [X] AMPS 225 BUS AMPS: 225

BRANCH BREAKERS

NOTES	ITEM	AMP	POLE	WIRE SIZE	CIR. NO.	LEFT PHASE LOAD A	LEFT PHASE LOAD B	LEFT PHASE LOAD C	RIGHT PHASE LOAD A	RIGHT PHASE LOAD B	RIGHT PHASE LOAD C	CIR. NO.	AMP	POLE	WIRE SIZE	ITEM	NOTES
	Track lights	20	1	12	1	1200			720			2	20	1	12	Plugmold	
	Track lights	20	1	12	3		1200			1440		4	20	1	12	Plugmold	
	Track lights	20	1	12	5			1200			1440	6	20	1	12	Plugmold	
	Track lights	20	1	12	7	1200			720			8	20	1	12	Plugmold	
	Track lights	20	1	12	9		1200			1440		10	20	1	12	Plugmold	
	Track lights	20	1	12	11			1200			1440	12	20	1	12	Plugmold	
	Track lights	20	1	12	13	1200			720			14	20	1	12	Plugmold	
	Track lights	20	1	12	15		1200			1440		16	20	1	12	Plugmold	
	Track lights	20	1	12	17			1200			1440	18	20	1	12	Plugmold	
	Track lights	20	1	12	19	1200			720			20	20	1	12	Plugmold	
	Wall packs	20	1	12	21		1050			1440		22	20	1	12	Plugmold	
	Plugmold	20	1	12	23			1440			1440	24	20	1	12	Plugmold	
	Plugmold	20	1	12	25	720			720			26	20	1	12	Plugmold	
	Plugmold	20	1	12	27		1440			1440		28	20	1	12	Plugmold	
	Plugmold	20	1	12	29			1440			1440	30	20	1	12	Plugmold	
	Plugmold	20	1	12	31	720			720			32	20	1	12	Plugmold	
	Plugmold	20	1	12	33		1440			1440		34	20	1	12	Plugmold	
	Plugmold	20	1	12	35			1440			1440	36	20	1	12	Plugmold	
	Plugmold	20	1	12	37	720			720			38	20	1	12	Plugmold	
	Plugmold	20	1	12	39		1440			1440		40	20	1	12	Plugmold	
	Plugmold	20	1	12	41			1440				42	20	2		Spare	
						6960	8970	9360	5040	10080	8640						
						12000	19050	18000	TOTAL								
						100	159	150	AMPS / PHASE								

FEEDER ENTRY: [ ] TOP [X] BOTTOM FRONT: [X] STANDARD [ ] HINGED [ ] DOOR-IN-DOOR

MOUNTING: [ ] FLUSH [X] SURFACE [ ] SURFACE W/ SKIRT ABOVE [ ] SURFACE W/ SKIRT BELOW

TVSS: [X] NONE [ ] CATEGORY "C" [ ] CATEGORY "B" [ ] CATEGORY "A"

NEMA RATING: [ ] NEMA 1 [X] NEMA 3R [ ] NEMA 4X [ ] NEMA 12 [ ] STAINLESS STEEL

TOTAL CONNECTED LOAD: 49,050

SHORT CIRCUIT RATING: [X] SERIES - RATED [ ] FULLY - RATED

22,000 AMPS RMS SYM

REFER TO ONE-LINE DIAGRAM FOR FEEDER , CONDUIT AND CONDUCTOR SIZES

LIGHTING AND APPLIANCE PANELBOARD SCHEDULE

A - SEC2
B - SEC2
C - SEC2
D - SEC2

PANEL NAME: ____ TYPE: NQOD CIRCUIT BREAKERS: [X] BOLT ON [ ] PLUG ON 120 / 208 VOLTAGE 3 Φ 4 W

[X] ENGRAVED NAME TAGS BUS MATERIAL: [ ] ALUM BUS [X] CU BUS GROUND: [X] GROUND BUS [ ] ISOL GND BUS NEUTRAL: [X] 100% [ ] 200% LUGS: [X] MAIN [ ] SUB-FEED [ ] FEED-THROUGH MAIN BREAKER: [ ] AMPS ____ BUS AMPS: 225

BRANCH BREAKERS

NOTES	ITEM	AMP	POLE	WIRE SIZE	CIR. NO.	LEFT PHASE LOAD A	LEFT PHASE LOAD B	LEFT PHASE LOAD C	RIGHT PHASE LOAD A	RIGHT PHASE LOAD B	RIGHT PHASE LOAD C	CIR. NO.	AMP	POLE	WIRE SIZE	ITEM	NOTES
	EC-1	20	1	12	43	1440			1800			44	20	1	12	Receptacle in bench	
	EC-2	20	1	12	45		1440					46	20	1		Space	
	Receptacles	20	1	12	47			720				48	20	1		Space	
	Spare	20	1		49							50	20	1		Space	
	Spare	20	1		51							52	20	1		Space	
	Spare	20	1		53							54	20	1		Space	
	Spare	20	1		55							56	20	1		Space	
	Spare	20	1		57							58	20	1		Space	
	Space	20	1		59							60	20	1		Space	
	Space	20	1		61							62	20	1		Space	
	Space	20	1		63							64	20	1		Space	
	Space	20	1		65							66	20	1		Space	
	Space	20	1		67							68	20	1		Space	
	Space	20	1		69							70	20	1		Space	
	Space	20	1		71							72	20	1		Space	
	Space	20	1		73							74	20	1		Space	
	Space	20	1		75							76	20	1		Space	
	Space	20	1		77							78	20	1		Space	
	Space	20	1		79							80	20	1		Space	
	Space	20	1		81							82	20	1		Space	
	Space	20	1		83							84	20	1		Space	
						1440	1440	720	1800	0	0						
						2240	1440	720	TOTAL								
						19	12	6	AMPS / PHASE								

FEEDER ENTRY: [ ] TOP [X] BOTTOM FRONT: [X] STANDARD [ ] HINGED [ ] DOOR-IN-DOOR

MOUNTING: [ ] FLUSH [X] SURFACE [ ] SURFACE W/ SKIRT ABOVE [ ] SURFACE W/ SKIRT BELOW

TVSS: [X] NONE [ ] CATEGORY "C" [ ] CATEGORY "B" [ ] CATEGORY "A"

NEMA RATING: [ ] NEMA 1 [X] NEMA 3R [ ] NEMA 4X [ ] NEMA 12 [ ] STAINLESS STEEL

TOTAL CONNECTED LOAD: 3,600

SHORT CIRCUIT RATING: [X] SERIES - RATED [ ] FULLY - RATED

22,000 AMPS RMS SYM

REFER TO ONE-LINE DIAGRAM FOR FEEDER , CONDUIT AND CONDUCTOR SIZES

LIGHTING AND APPLIANCE PANELBOARD SCHEDULE

PANEL NAME: E TYPE: NQOD CIRCUIT BREAKERS: [X] BOLT ON [ ] PLUG ON 120 / 208 VOLTAGE 3 Φ 4 W

[X] ENGRAVED NAME TAGS BUS MATERIAL: [ ] ALUM BUS [X] CU BUS GROUND: [X] GROUND BUS [ ] ISOL GND BUS NEUTRAL: [X] 100% [ ] 200% LUGS: [ ] MAIN [ ] SUB-FEED [ ] FEED-THROUGH MAIN BREAKER: [X] AMPS 125 BUS AMPS: 125

BRANCH BREAKERS

NOTES	ITEM	AMP	POLE	WIRE SIZE	CIR. NO.	LEFT PHASE LOAD A	LEFT PHASE LOAD B	LEFT PHASE LOAD C	RIGHT PHASE LOAD A	RIGHT PHASE LOAD B	RIGHT PHASE LOAD C	CIR. NO.	AMP	POLE	WIRE SIZE	ITEM	NOTES
	Lights	20	1	12	1	1040			1440			2	20	1	12	EC-10	
	Lights	20	1	12	3		1430			1440		4	20	1	12	EC-9	
	Lights	20	1	12	5			1040			720	6	20	1	12	Receptacles E04	
	Wall packs	20	1	12	7	1000			360			8	20	1	12	Receptacles E04	
	Receptacles - E01	20	1	12	9		360			360		10	20	1	12	Receptacles E04	
	Receptacles - E01	20	1	12	11			360			360	12	20	1	12	Receptacles E04	
	Receptacles - E01	20	1	12	13	180			1250			14	20	2	12	WH-3	
	Receptacles - E01	20	1	12	15		540			1250		16	-	-	-	-	
	WH-1	20	2	12	17			1250			540	18	20	1	12	Receptacles E03	
	-	-	-	-	19	1250			360			20	20	1	12	Receptacles E03	
	Receptacles - E02	20	1	12	21		360			180		22	20	1	12	Receptacles E03	
	Receptacles - E02	20	1	12	23			360			1250	24	20	2	12	WH-4	
	Receptacles - E02	20	1	12	25	180			1250			26	-	-	-	-	
	Receptacles - E02	20	1	12	27		540			360		28	20	1	12	Receptacles E03	
	Receptacles - E02	20	1	12	29			540			360	30	20	1	12	Receptacles E03	
	WH-2	20	2	12	31	1250			720			32	20	1	12	Receptacles	
	-	-	-	-	33		1250			1410		34	20	2	8	Site lights	
	Receptacles - E05	20	1	12	35			720			1410	36	-	-	-	-	
	Receptacles - E05	20	1	12	37	180			180			38	20	1	12	Receptacles	
	Receptacles - E05	20	1	12	39		180			180		40	20	1	12	Receptacles	
	Site Lighting	20	1	10	41			1300			180	42	20	1	12	Receptacles	
						5080	4700	4270	5560	4910	4610						
						10640	9610	8880	TOTAL								
						89	81	74	AMPS / PHASE								

FEEDER ENTRY: [ ] TOP [X] BOTTOM FRONT: [X] STANDARD [ ] HINGED [ ] DOOR-IN-DOOR

MOUNTING: [ ] FLUSH [X] SURFACE [ ] SURFACE W/ SKIRT ABOVE [ ] SURFACE W/ SKIRT BELOW

TVSS: [X] NONE [ ] CATEGORY "C" [ ] CATEGORY "B" [ ] CATEGORY "A"

NEMA RATING: [ ] NEMA 1 [X] NEMA 3R [ ] NEMA 4X [ ] NEMA 12 [ ] STAINLESS STEEL

TOTAL CONNECTED LOAD: 28,650

SHORT CIRCUIT RATING: [X] SERIES - RATED [ ] FULLY - RATED

22,000 AMPS RMS SYM

REFER TO ONE-LINE DIAGRAM FOR FEEDER , CONDUIT AND CONDUCTOR SIZES

LIGHTING AND APPLIANCE PANELBOARD SCHEDULE

PANEL NAME: F TYPE: NQOD CIRCUIT BREAKERS: [X] BOLT ON [ ] PLUG ON 120 / 208 VOLTAGE 3 Φ 4 W

[X] ENGRAVED NAME TAGS BUS MATERIAL: [ ] ALUM BUS [X] CU BUS GROUND: [X] GROUND BUS [ ] ISOL GND BUS NEUTRAL: [X] 100% [ ] 200% LUGS: [X] MAIN [ ] SUB-FEED [ ] FEED-THROUGH MAIN BREAKER: [X] AMPS 125 BUS AMPS: 125

BRANCH BREAKERS

NOTES	ITEM	AMP	POLE	WIRE SIZE	CIR. NO.	LEFT PHASE LOAD A	LEFT PHASE LOAD B	LEFT PHASE LOAD C	RIGHT PHASE LOAD A	RIGHT PHASE LOAD B	RIGHT PHASE LOAD C	CIR. NO.	AMP	POLE	WIRE SIZE	ITEM	NOTES
	Lights	20	1	12	1	1400			540			2	20	1	12	Receptacles	
	Lights	20	1	12	3		1200			360		4	20	1	12	Receptacles	
	Lights	20	1	12	5			1400			900	6	20	1	12	Receptacles	
	Wall packs	20	1	12	7	1200			720			8	20	2	12	WH-5	
	Receptacles	20	1	12	9		900			720		10	-	-	-	-	
	Receptacles	20	1	12	11			900			500	12	20	1	12	Boiler	
	Receptacles	20	1	12	13	1080			1000			14	20	1	12	EHC-1	
	Receptacles	20	1	12	15		900					16	20	1		Spare	
	CU-1	40	2	8	17			3450				18	20	1		Spare	
	-	-	-	-	19	3450						20	20	1		Spare	
	F-1	20	1	12	21		1650					22	20	1		Spare	
	Spare	20	1		23							24	20	1		Spare	
	Receptacles	20	1	12	25	900						26	20	1		Spare	
	Receptacles	20	1	12	27		900					28	20	1		Spare	
	Receptacles	20	1	12	29			540				30	20	1		Spare	
	Receptacles	20	1	12	31	720						32	20	1		Spare	
	Receptacles	20	1	12	33		900					34	20	1		Spare	
	Lights	20	2	12	35			1200				36	20	1		Spare	
	Lights	20	1	12	37	800						38	20	1		Spare	
	ELH-1	30	2	10	39		2500					40	20	1		Spare	
	-	-	-	-	41			2500				42	20	1		Spare	
						1050	8950	10440	2660	1080	1400						
						12710	1090	11840	TOTAL								
						106	84	100	AMPS / PHASE								

FEEDER ENTRY: [ ] TOP [X] BOTTOM FRONT: [X] STANDARD [ ] HINGED [ ] DOOR-IN-DOOR

MOUNTING: [ ] FLUSH [X] SURFACE [ ] SURFACE W/ SKIRT ABOVE [ ] SURFACE W/ SKIRT BELOW

TVSS: [X] NONE [ ] CATEGORY "C" [ ] CATEGORY "B" [ ] CATEGORY "A"

NEMA RATING: [X] NEMA 1 [ ] NEMA 3R [ ] NEMA 4X [ ] NEMA 12 [ ] STAINLESS STEEL

TOTAL CONNECTED LOAD: 25,230

SHORT CIRCUIT RATING: [X] SERIES - RATED [ ] FULLY - RATED

22,000 AMPS RMS SYM

REFER TO ONE-LINE DIAGRAM FOR FEEDER , CONDUIT AND CONDUCTOR SIZES

EMA

PLANNING ● ARCHITECTURE ● INTERIORS

Salt Lake City
460 South 400 East
Salt Lake City, Utah 84111
voice: (801) 363-1511
fax: (801) 363-1560

Park City
364 Main Street P.O. Box 9
Park City, Utah 84060
voice: (435) 649-0092
fax: (435) 649-7127

CONSULTANTS

REGISTERED PROFESSIONAL ENGINEER
JEFFREY R. OWEN
No.177411
STATE OF UTAH

MONUMENT VALLEY VENDOR VILLAGE

MONUMENT VALLEY, UT

OWNER
NAVAHO NATION DEPARTMENT OF ECONOMIC DEVELOPMENT

MARK	DATE	DESCRIPTION
	7-29-05	REQUEST FOR CODE APPROVAL

PROJECT NUMBER: 2002-07
DRAWING FILE:
DRAWN BY:
CHECKED BY:

COPYRIGHT 2002 EMA ARCHITECTS, LLC

SHEET TITLE

PANELBOARD SCHEDULES

E-402

OF

R:\2004-008.01 - Monument Valley\New Bldg & Modifications\Elec\E402.dwg, 8/1/2005 12:32:08 PM, dee, Owen & Associates L.C.

ELECTRICAL EQUIPMENT LIST

SPEC SECTION 16811

SYM	DESCRIPTION	QTY	MANUFACTURER & MODEL NUMBER
#M	Conduit & Microphone cable, 22 AWG cross lines indicate # of cables if more than one	A/R	Belden 8451 Liberty 22-IP-E2 West Penn 454
#S	Conduit & speaker cable, 16 AWG cross lines indicate # of cables if more than one	A/R	Belden 8471 Liberty 16-2C-GRY West Penn 225
M	Microphone jack & wall plate 3" deep single gang box, not on horiz. Electrical outlet height	A/R	
1	AV equipment cabinet 31" w/ front door #1 Paint cabinet to match wall	1	Atlas Sound 320-28B-972 & B399A Keyed lock (beige finish) Middle Atlantic DWR-16-22-FD-16 (putty powder finish)

A/R = As Required per drawing

NOTES

1. COORDINATE SWITCHES, SPEAKERS, AND CABINET LOCATIONS WITH FINISHED DESIGN.

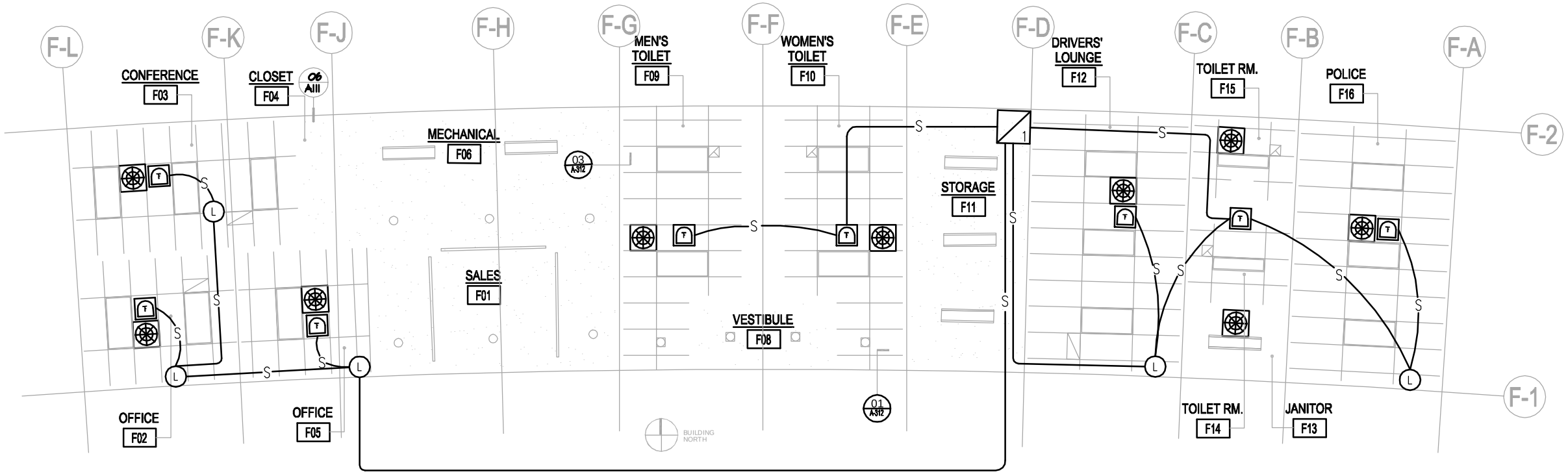

REF. CLG. PLAN - BUILDING "F" (SERVICE)

SCALE: 1/8" = 1'-0"

PLANNING ● ARCHITECTURE ● INTERIORS

Salt Lake City
460 South 400 East
Salt Lake City, Utah 84111
voice: (801) 363-1511
fax: (801) 363-1560

Park City
384 Main Street P.O. Box 8
Park City, Utah 84060
voice: (435) 649-0092
fax: (435) 649-7127

CONSULTANTS

MONUMENT VALLEY VENDOR VILLAGE

MONUMENT VALLEY, UT

OWNER
NAVAHO NATION DEPARTMENT OF ECONOMIC DEVELOPMENT

MARK	DATE	DESCRIPTION
1	03/16/04	PER PLAN CHECK COMMENTS

PROJECT NUMBER: 2002-07
DRAWING FILE:
DRAWN BY:
CHECKED BY:

COPYRIGHT 2002 EMA ARCHITECTS, LLC

SHEET TITLE

BUILDINGS "F"
REFLECTED CEILING PLANS

SOUND DESIGN INTERNATIONAL INCORPORATED
533 West 2600 South, Suite 110
Bountiful, Utah 84010
Phone: 801-298-1113 Fax: 801-298-1336 sound@sounddesignint.com

© Copyright 2005 SDI Inc.

E501

OF

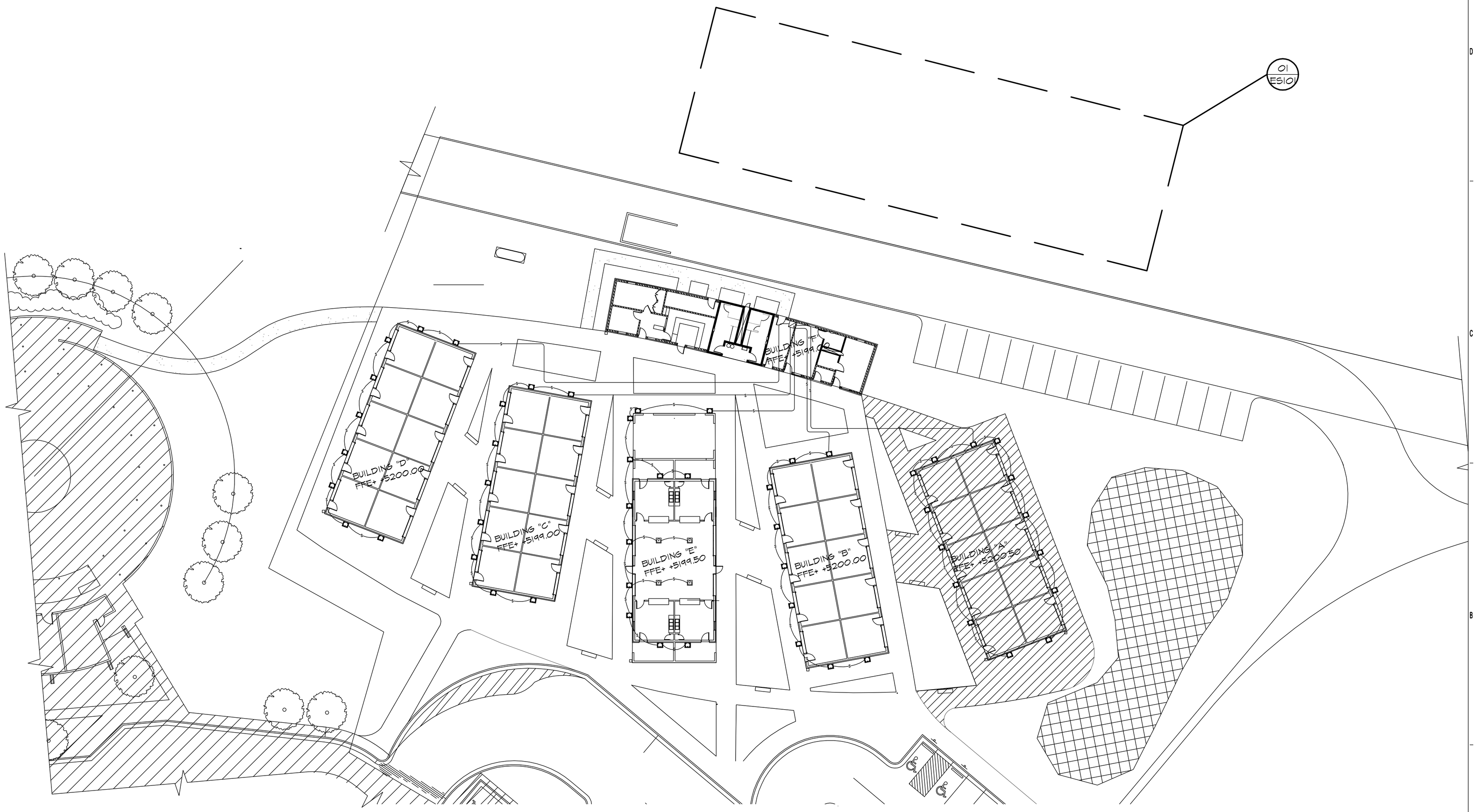

01 SITE_PLAN-SPEAKER_LAYOUT
C101 SCALE: 1" = 20'

EMA
PLANNING ARCHITECTURE INTERIORS
Salt Lake City
460 South 400 East
Salt Lake City, Utah 84111
voice: (801) 363-1511
fax: (801) 363-1560
Park City
1354 Main Street P.O. Box 9
Park City, Utah 84060
voice: (435) 649-0092
fax: (435) 649-7127

CONSULTANTS

MONUMENT VALLEY VENDOR VILLAGE

OWNER

MARK	DATE	DESCRIPTION

PROJECT NUMBER: 2002-0
DRAWING FILE:
DRAWN BY:
CHECKED BY:

COPYRIGHT 2002 EMA ARCHITECTS, LLC

SHEET TITLE

SITE PLAN
SPEAKER LAYOUT
BUILDING "A,B,C,D"

SOUND DESIGN
INTERNATIONAL
INCORPORATED
533 West 2600 South, Suite 110
Bountiful, Utah 84010
Phone: 801-298-1113 · Fax: 801-298-1336 · sound@sounddesignint.com

© Copyright 2005 SDI Inc.

E502

OF

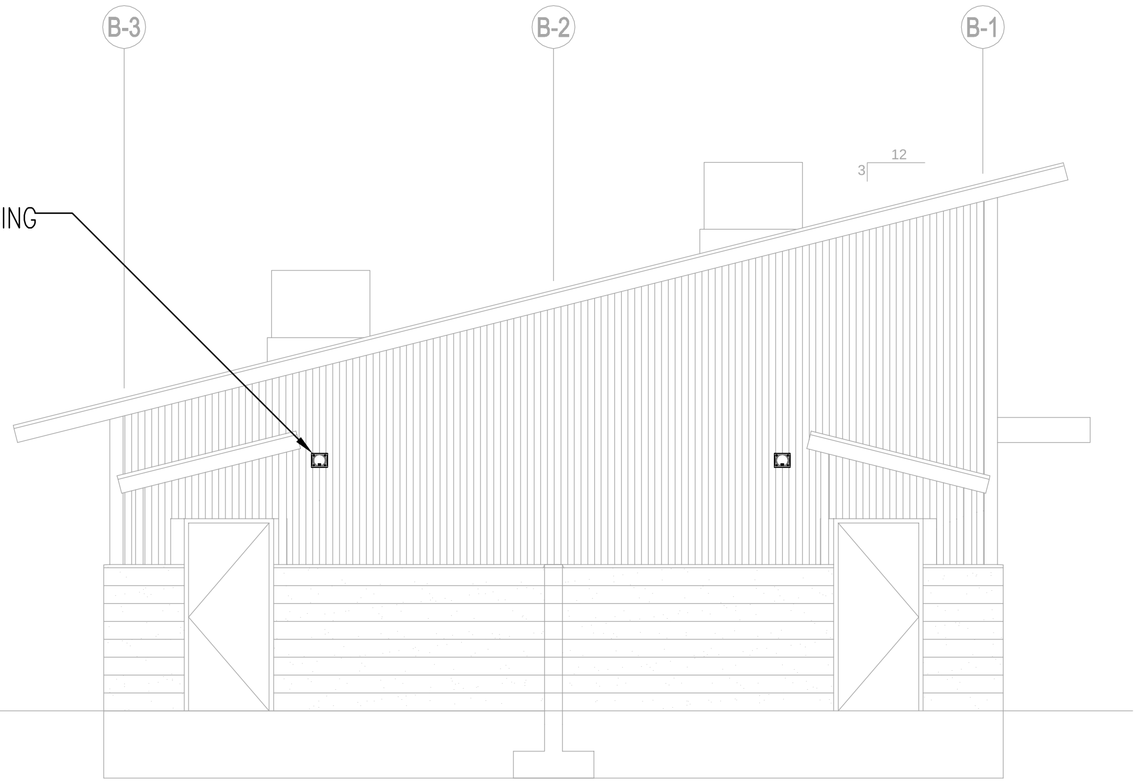

04 E5103 WEST ELEVATION - BUILDING "E" (FOOD COURT)
SCALE: 1/4" = 1'-0"
EAST ELEVATION SIMILAR

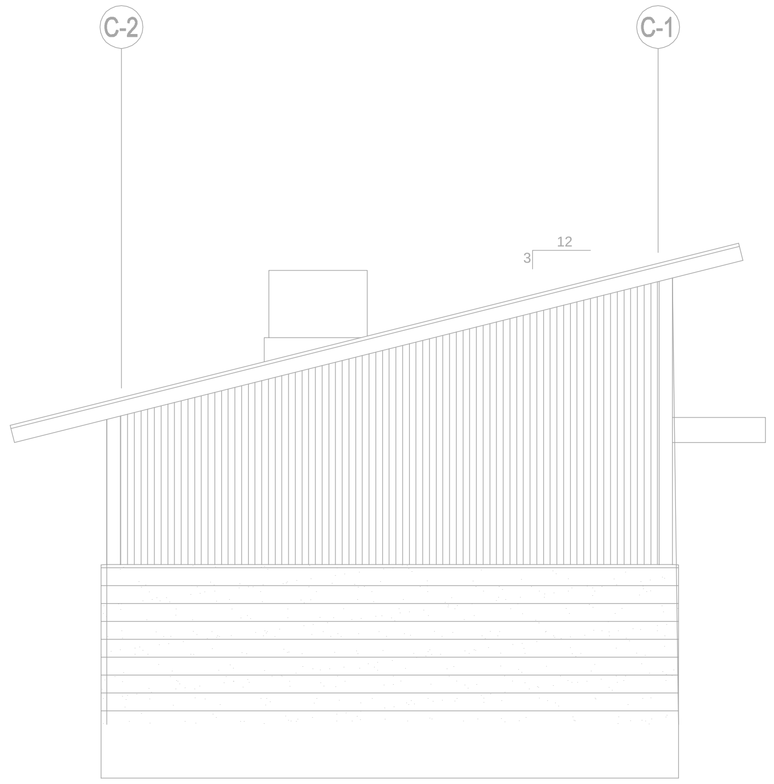

02 E5103 WEST ELEVATION - BUILDING "F" (SERVICES)
SCALE: 1/4" = 1'-0"
EAST ELEVATION SIMILAR

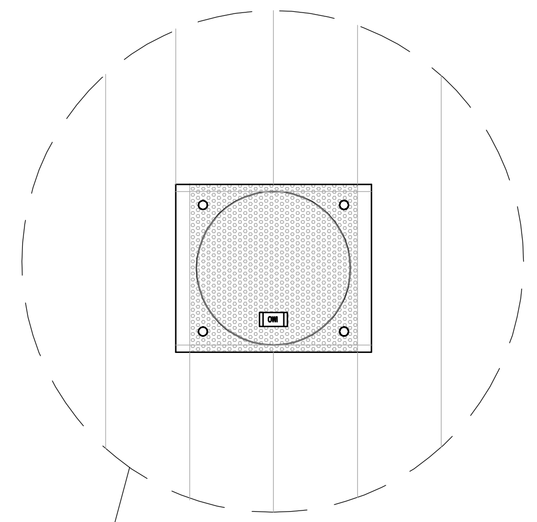

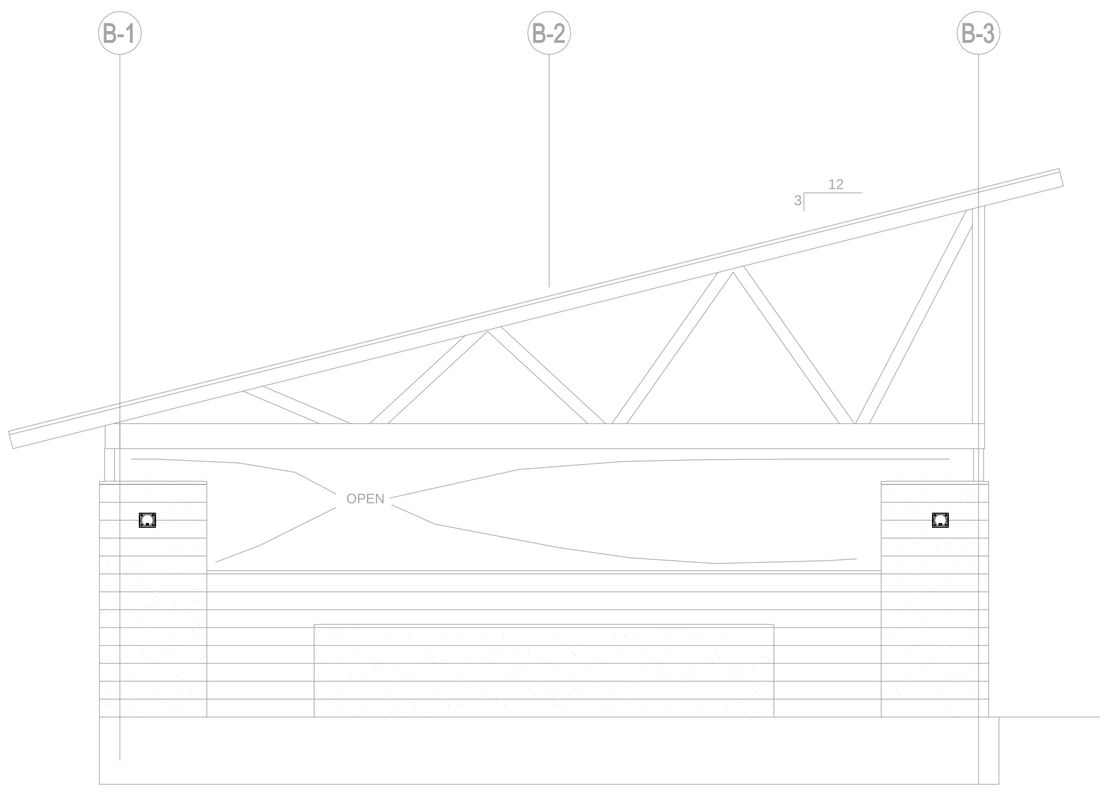

03 E5103 EAST ELEVATION - OUTDOOR DINING
SCALE: 1/4" = 1'-0"
WEST ELEVATION SIMILAR

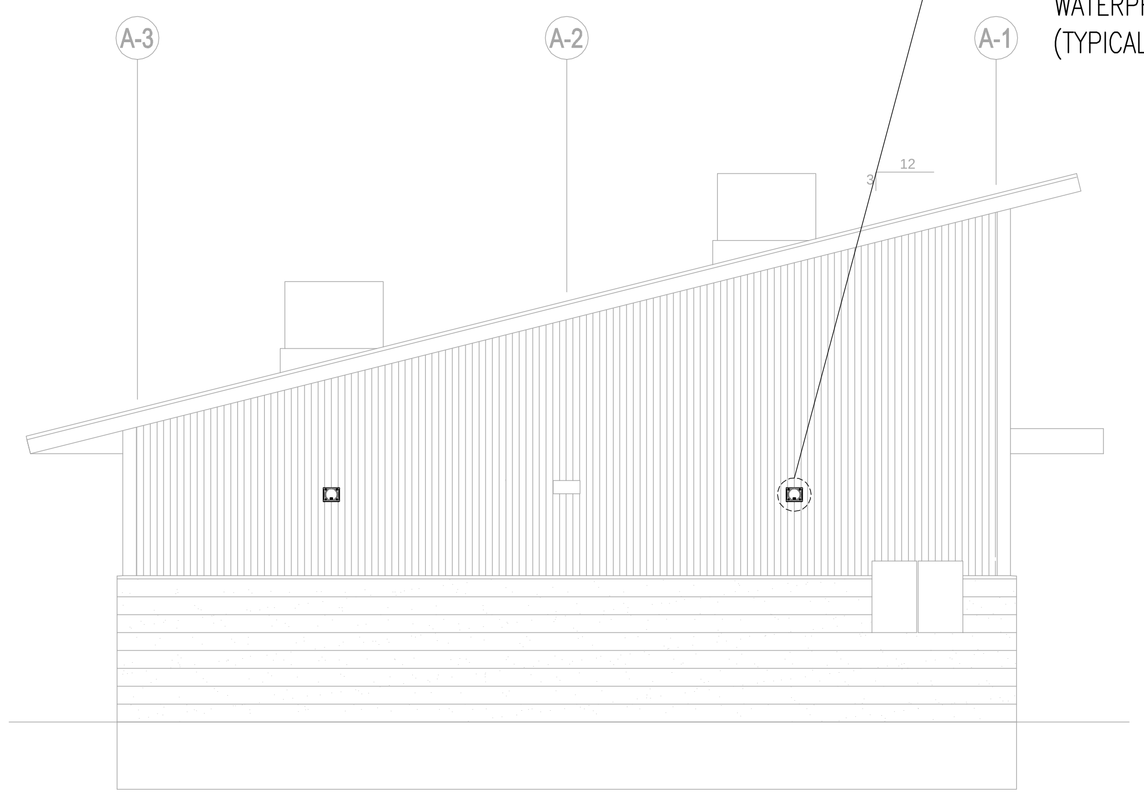

01 E5103 WEST ELEVATION - BUILDING "A, B, C, D" (RETAIL)
SCALE: 1/4" = 1'-0"
EAST ELEVATION SIMILAR

SOUND DESIGN
INTERNATIONAL
INCORPORATED
533 West 2600 South, Suite 110
Bountiful, Utah 84010
Phone: 801-298-1113 · Fax: 801-298-1336 · sound@sounddesignint.com

© Copyright 2005 SDI Inc.

EMA
PLANNING ● ARCHITECTURE ● INTERIORS
Salt Lake City
460 South 400 East
Salt Lake City, Utah 84111
voice: (801) 363-1511
fax: (801) 363-1560
Park City
364 Main Street P.O. Box 9
Park City, Utah 84060
voice: (435) 649-0092
fax: (435) 649-7127

CONSULTANTS

STATE OF UTAH
DONALD J. WARNER
124584
LICENSED ARCHITECT

MONUMENT VALLEY VENDOR VILLAGE
MONUMENT VALLEY, UT
OWNER
NAVAHO NATION DEPARTMENT OF ECONOMIC DEVELOPMENT

MARK	DATE	DESCRIPTION

PROJECT NUMBER: 2002-07
DRAWING FILE:
DRAWN BY:
CHECKED BY:

COPYRIGHT 2002 EMA ARCHITECTS, LLC

SHEET TITLE

RETAIL, FOOD COURT, & SERVICES BLDG.
EAST & WEST ELEVATIONS

E503

OF

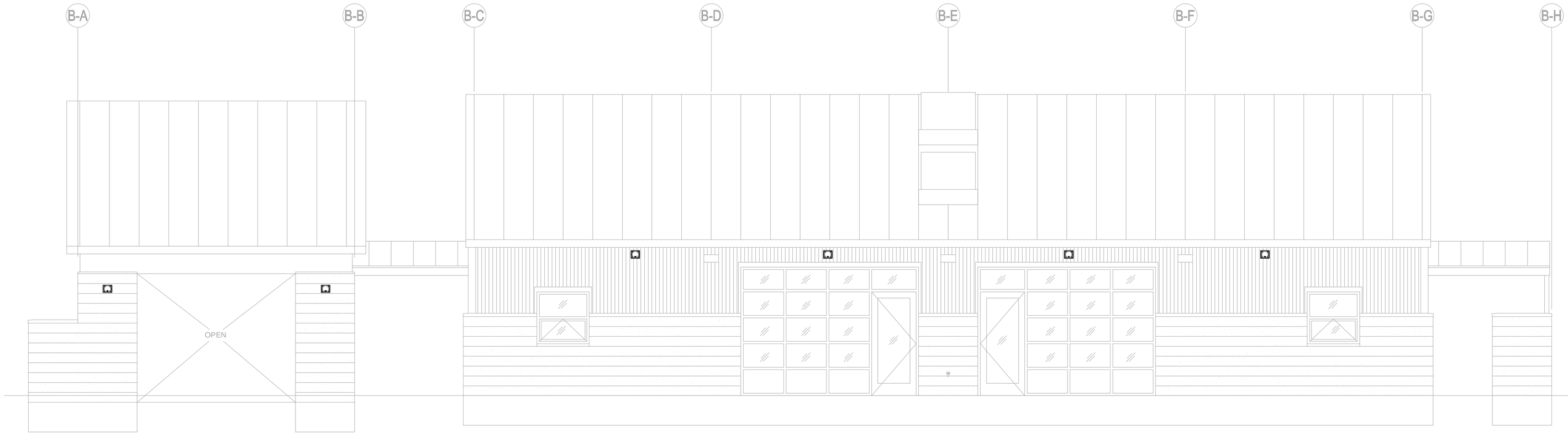

NORTH ELEVATION - BUILDING "E" (FOOD COURT)
SCALE: 1/4" = 1'-0"

EMA
PLANNING ● ARCHITECTURE ● INTERIORS
Salt Lake City
460 South 400 East
Salt Lake City, Utah 84111
voice: (801) 363-1511
fax: (801) 363-1560
Park City
364 Main Street P.O. Box 9
Park City, Utah 84060
voice: (435) 649-0092
fax: (435) 649-7127

CONSULTANTS

MONUMENT VALLEY VENDOR VILLAGE
MONUMENT VALLEY, UT
OWNER
NAVAHO NATION DEPARTMENT OF ECONOMIC DEVELOPMENT

MARK	DATE	DESCRIPTION

PROJECT NUMBER: 2002-07
DRAWING FILE:
DRAWN BY:
CHECKED BY:

COPYRIGHT 2002 EMA ARCHITECTS, LLC

SHEET TITLE

BUILDING "E" (FOOD COURT)
NORTH ELEVATION

SOUND DESIGN
INTERNATIONAL
INCORPORATED
533 West 2600 South, Suite 110
Bountiful, Utah 84010
Phone: 801-298-1113 · Fax: 801-298-1336 · sound@sounddesignint.com

© Copyright 2005 SDI Inc.

E504
OF

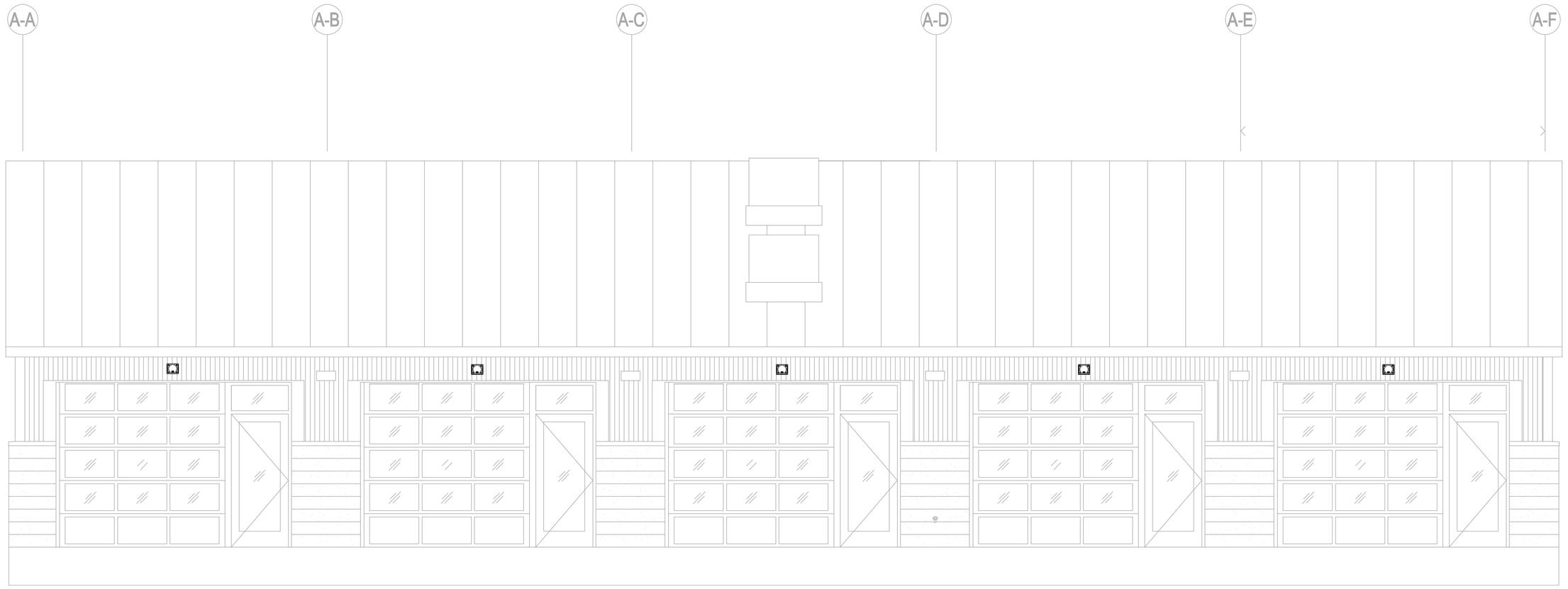

02 E505 NORTH ELEVATION - BUILDING "A, B, C, D" (RETAIL)
SCALE: 1/4" = 1'-0"

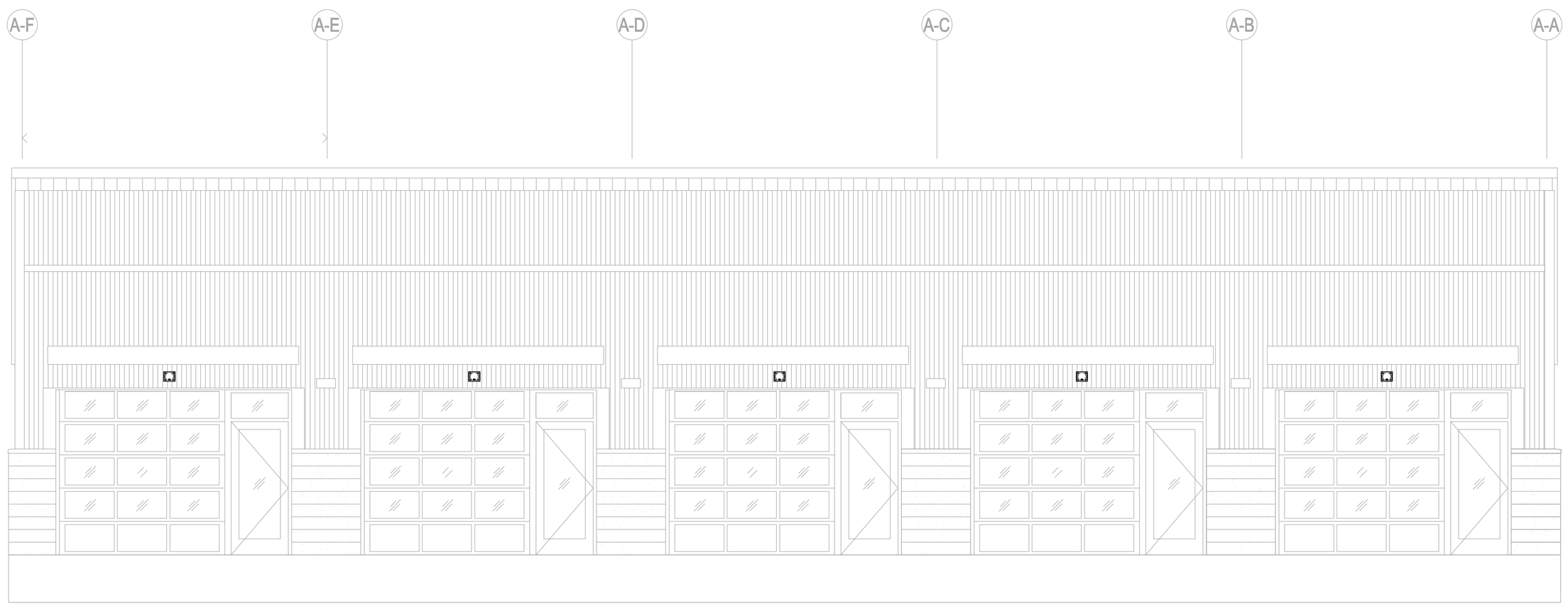

01 E505 SOUTH ELEVATION - BUILDING "A"
SCALE: 1/4" = 1'-0"

EMA
PLANNING ● ARCHITECTURE ● INTERIORS
Salt Lake City
460 South 400 East
Salt Lake City, Utah 84111
voice: (801) 363-1511
fax: (801) 363-1560
Park City
364 Main Street P.O. Box 9
Park City, Utah 84060
voice: (435) 649-0092
fax: (435) 649-7127

CONSULTANTS

MONUMENT VALLEY VENDOR VILLAGE

MONUMENT VALLEY, UT

OWNER
NAVAHO NATION DEPARTMENT OF ECONOMIC DEVELOPMENT

MARK	DATE	DESCRIPTION

PROJECT NUMBER: 2002-07
DRAWING FILE:
DRAWN BY:
CHECKED BY:

COPYRIGHT 2002 EMA ARCHITECTS, LLC

SHEET TITLE

BUILDING "A, B, C, D" (RETAIL)
NORTH & SOUTH EXTERIOR ELEVATIONS

E505
OF

SOUND DESIGN
INTERNATIONAL
INCORPORATED
533 West 2600 South, Suite 110
Bountiful, Utah 84010
Phone: 801-298-1113 · Fax: 801-298-1336 · sound@sounddesignint.com

© Copyright 2005 SDI Inc.

A/V EQUIPMENT LIST

SPEC SECTION 16811

SYM	DESCRIPTION	QTY	MANUFACTURER & MODEL NUMBER
	Microphone Desk	1	Shure MX412D/C
	CD/ Cassette player	1	Denon DN-T625 Marantz PMD 351
		1	Tascam CD-A500
▷	Amplifier, 4 channel 200 watt per channel PA1, PA2, PA3, PA4	1	Crown CTs 4200 QSC-CX204V, with security cover
	Commercial Processor 6X4	1	Rane CP 64
T	Speaker, 5" with transformer, tile brace and back can with grille	A/R	OWI IC-5-725
	Speaker, 5" surface with transformer	A/R	BSK M-5CX-725TR
L	Overflow switch & wallplate	A/R	EMtech MSC-L

A/R = As Required per drawing

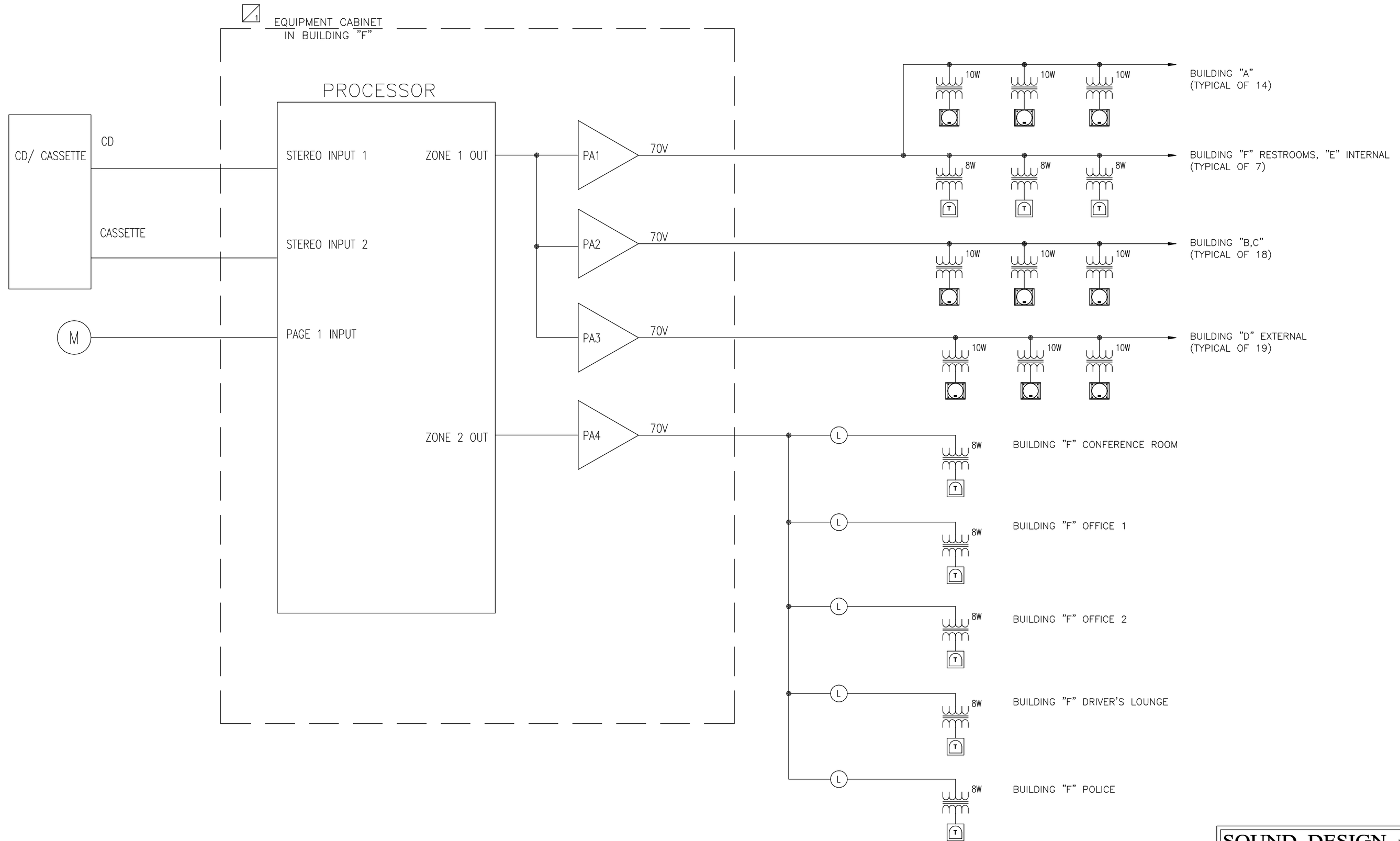

RISER DIAGRAM

SOUND DESIGN
INTERNATIONAL
INCORPORATED
533 West 2600 South, Suite 110
Bountiful, Utah 84010
Phone: 801-298-1113 · Fax: 801-298-1336 · sound@sounddesignint.com

© Copyright 2005 SDI Inc.

EMA
PLANNING ● ARCHITECTURE ● INTERIORS
Salt Lake City
460 South 400 East
Salt Lake City, Utah 84111
voice: (801) 363-1511
fax: (801) 363-1560
Park City
364 Main Street P.O. Box 9
Park City, Utah 84060
voice: (435) 649-0092
fax: (435) 649-7127

CONSULTANTS

MONUMENT VALLEY VENDOR VILLAGE

MONUMENT VALLEY, UT

OWNER
NAVAHO NATION DEPARTMENT OF ECONOMIC DEVELOPMENT

MARK	DATE	DESCRIPTION
1	03/16/04	PER PLAN CHECK COMMENTS

PROJECT NUMBER: 2002-07
DRAWING FILE:
DRAWN BY:
CHECKED BY:

COPYRIGHT 2002 EMA ARCHITECTS, LLC

SHEET TITLE

RISER DIAGRAM

AV101