State of Utah

JON M. HUNTSMAN, JR.
Governor

GARY R. HERBERT
Lieutenant Governor

Department of Administrative Services
KIMBERLY K. HOOD
Executive Director

Division of Facilities Construction and Management
DAVID G. BUXTON
Director

ADDENDUM #1

Date:	11 March 2008		
To:	Interested Parties		
From:	Matthias Mueller, Project Manager		
Reference:	Utah National Guard Utah Army National Guard – Construction Services DFCM Project No. 04188470		
Subject:	**Addendum No. 1**		
Pages	Addendum	1	page
	Revised Project Schedule	1	page
	Specifications, Drawings, Questions & Soils Report	71	pages
	Total	**73**	**pages**

Note: This Addendum shall be included as part of the Contract Documents. Items in this Addendum apply to all drawings and specification sections whether referenced or not involving the portion of the work added, deleted, modified, or otherwise addressed in the Addendum.

1.1 **SCHEDULE CHANGES** – Charges have been made to the project schedule. The revised project schedule dates March 11, 2008 reflects an event addition to the **Subcontractors List** to include ***any Cost Reduction Proposals Due.***

1.2 **SPECIFICATIONS, DRAWING & SOILS REPORT**
GSBS Architecture – Addendum No. 1 dated March 11, 2008 - Specifications and Drawings
Questions submitted by General Contractors
GSH Geotechnical Consultants, Inc. – Soils Report dated September 29, 2006

End of Addendum #1

	STATE OF UTAH - DEPARTMENT OF ADMINISTRATIVE SERVICES **Division of Facilities Construction and Management**	**DFCM**

PROJECT SCHEDULE – REVISED
PER ADDENDUM NO. 1 DATED MARCH 11, 2008

PROJECT NAME: **READINESS CENTER**
UTAH ARMY NATIONAL GUARD – SALT LAKE CITY, UTAH

DFCM PROJECT NO. **04188470**

Event	Day	Date	Time	Place
Request for Proposals and Construction Documents Available	Wednesday	February 20, 2008	10:00 AM	DFCM 4110 State Office Bldg SLC, UT and the DFCM web site *
Mandatory Pre-Proposal Site Meeting	Friday	February 29, 2008	10:00 AM	GSBS Architects 375 West 200 South Salt Lake City, UT
Last Day to Submit Questions Prior to Submittal of Statements of Qualifications	Friday	March 7, 2008	4:00 PM	Matthias Mueller - DFCM E-mail mmueller@utah.gov
Addendum Issued	Tuesday	March 11, 2008	2:00 PM	DFCM web site *
Prime Contractors Turn In References, Statements of Qualifications, Management Plans, and Termination Debarment Certifications	Tuesday	March 18, 2008	2:00 PM	DFCM 4110 State Office Bldg SLC, UT
Short Listing by Selection Committee (if applicable)	Tuesday	March 25, 2008	To be determined	To be determined
Last Day to Submit Questions for Final Addendum	Tuesday	April 1, 2008	4:00 PM	Matthias Mueller - DFCM E-mail mmueller@utah.gov
Final Addendum Issued	Thursday	April 3, 2008	2:00 PM	DFCM web site *
Prime Contractors Turn in Cost Proposals and Schedules	Tuesday	April 8, 2008	12:00 NOON	DFCM 4110 State Office Bldg SLC, UT
Subcontractor List **and any Cost Reduction Proposals Due**	Wednesday	April 9, 2008	12:00 NOON	DFCM 4110 State Office Bldg SLC, UT Fax 801-538-3677
Interviews	Tuesday	April 15, 2008	To be determined	To be determined
Announcement	Wednesday	April 16, 2008	4:00 PM	
Substantial Completion Date	Friday	October 23, 2009		

* **DFCM's web site address is http://dfcm.utah.gov.**

DFCM

Division of Facilities Construction and Management
4110 State Office Building Salt Lake City, UT 84114
Telephone (801) 538-3018 FAX (801) 538-3267

ADDENDUM NO. 1
March 11, 2008

Readiness Center & Civil Support Team Building
North Salt Lake, Utah

The original specifications and drawings, dated February 1, 2008 for the project referenced above are amended in the Addendum No. 1, dated March 11, 2008.

Receipt of this addendum shall be acknowledged by inserting its number and date in the space provided on the bid form.

This addendum consists of the following:

AD1-A01 Sheet LS101, Note 8:
Provide **Three (3)** Flagpoles.

AD1-A02 Sheet AE101, Room 115:
Delete Reference to Keynote 41.

AD1-A03 Specification 102226, Paragraph 1.2.A.1:
Change from five (5) locations to **two (2)** locations.

AD1-A04 Specification 012300, Paragraph 3.1.A:
Change Alternate No. 1: Roller Window Shades in the Assembly Hall including windows **W13** (in the second floor hallways) and **W11** (in the light monitors.)

AD1-A05 Specification 012300, Paragraph 3.1.C:
Change Alternate No. 3: Provide direct evaporative cooling sections in **AHU-3, AHU-4 and AHU-5**, as described on mechanical sections.

AD1-A06 Specification 083549, Paragraph 2.3.A:
General: **GSA approved Class V** vault door.

AD1-A07 Add Specification **074243** Composite Wall Panels in its entirety.
For the fascia at the covered entryway.

AD1-A08 Add Specification **107300** Interior Light Shelf System in its entirety.
For the interior light shelves.

AD1-A09 D5/AE201 East Elevation,
Note: Sun Shades typ. See detail ~~DE/AE503~~ should read D3/AE503.

AD1-A10 A5/AE202 West Elevation
Missing CMU banding. **See attachment AD1-A10 – A5/AE202**

AD1-A11 Detail E2/AE502
Delete "Primary" from title.
Detail C1/AE502
Delete "Secondary" from title.

AD1-A12 Sheet AE503
Clarifications to sun shade system details and clarification to entrance canopy details. **See attached Sheet AE503**. **Replace entire sheet**.

AD1-A13 Detail D5/AE512
Clarification to light shelf system. **See attachment AD1-A13 D5/AE512**.

AD1-A14 Detail D6/AE512
Clarification to light shelf system. **See attachment AD1-A14 – D6/AE512.**

AD1-A015 Add Specification **105114** Metal Equipment Lockers in its entirety.
For the Equipment Lockers.

AD1-A016 Add Specification **057500** Decorative Formed Metal in its entirety.
For the Exterior Sunshades.

AD1-A017 Questions Submitted by General Contractors.

END OF ADDENDUM

SECTION 074243 - COMPOSITE WALL PANELS

PART 1 - GENERAL

1.1 RELATED DOCUMENTS

A. Drawings and general provisions of the Contract, including General and Supplementary Conditions and Division 01 Specification Sections, apply to this Section.

1.2 SUMMARY

A. Section includes metal-faced composite wall panels.

B. Related Sections:

1. Division 05 Section "Cold-Formed Metal Framing" for cold-formed metal framing supporting metal-faced composite wall panels.
2. Division 07 Section "Sheet Metal Flashing and Trim" for field-formed flashings and other sheet metal work not part of metal-faced composite wall panel assemblies.

1.3 DEFINITION

A. Metal-Faced Composite Wall Panel Assembly: Metal-faced composite wall panels, attachment system components, miscellaneous metal framing, and accessories necessary for a complete weathertight wall system.

1.4 PERFORMANCE REQUIREMENTS

A. General Performance: Metal-faced composite wall panel assemblies shall comply with performance requirements without failure due to defective manufacture, fabrication, installation, or other defects in construction.

B. Air Infiltration: Air leakage through assembly of not more than 0.06 cfm/sq. ft. (0.3 L/s per sq. m) of wall area when tested according to ASTM E 283 at the following test-pressure difference:

1. Test-Pressure Difference: 1.57 lbf/sq. ft. (75 Pa).

C. Water Penetration Under Static Pressure: No water penetration when tested according to ASTM E 331 at the following test-pressure difference:

1. Test-Pressure Difference: 6.24 lbf/sq. ft. (300 Pa).

D. Structural Performance: Provide metal-faced composite wall panel assemblies capable of withstanding the effects of the following loads and stresses within limits and under conditions indicated, based on testing according to ASTM E 330:

1. Wind Loads: Determine loads based on the following minimum design wind pressures:
   a. Uniform pressure of 30 lbf/sq. ft. (1436 Pa), acting inward or outward, unless indicated otherwise.

2. Deflection Limits: Metal-faced composite wall panel assemblies shall withstand wind loads with horizontal deflections no greater than 1/175 of the span at the perimeter and 1/60 of the span anywhere in the panel.

E. Thermal Movements: Allow for thermal movements from ambient and surface temperature changes by preventing buckling, opening of joints, overstressing of components, failure of joint sealants, failure of connections, and other detrimental effects. Base calculations on surface temperatures of materials due to both solar heat gain and nighttime-sky heat loss.

1. Temperature Change (Range): 120 deg F (67 deg C), ambient; 180 deg F (100 deg C), material surfaces.

1.5 SUBMITTALS

A. Product Data: For each type of product indicated. Include construction details, material descriptions, dimensions of individual components and profiles, and finishes for each type of metal-faced composite wall panel and accessory.

B. Shop Drawings: Show fabrication and installation layouts of metal-faced composite wall panels; details of edge conditions, joints, panel profiles, corners, anchorages, attachment system, trim, flashings, closures, and accessories; and special details. Distinguish among factory-, shop-, and field-assembled work.

1. Accessories: Include details of the following items, at a scale of not less than 1-1/2 inches per 12 inches (1:10):

   a. Flashing and trim.
   b. Anchorage systems.

C. Samples for Initial Selection: For each type of metal-faced composite wall panel indicated with factory-applied color finishes.

1. Include similar Samples of trim and accessories involving color selection.
2. Include manufacturer's color charts consisting of strips of cured sealants showing the full range of colors available for each sealant exposed to view.

D. Samples for Verification: For each type of exposed finish required, prepared on Samples of size indicated below:

1. Metal-Faced Composite Wall Panels: Minimum 12 x 12 inches (300 x 300 mm). Include fasteners, closures, and other metal-faced composite wall panel accessories.

   a. Composite Panels: Include four-way joint.

2. Trim and Closures: 12 inches (300 mm) long. Include fasteners and other exposed accessories.

3. Accessories: 12-inch- (300-mm-) long Samples for each type of accessory.
4. Exposed Gaskets: 12 inches (300 mm) long.
5. Exposed Sealants: For each type and color of joint sealant required. Install joint sealants in 1/2-inch- (13-mm-) wide joints formed between two 6-inch- (150-mm-) long strips of material matching the appearance of metal-faced composite wall panels adjacent to joint sealants.

E. Coordination Drawings: Exterior elevations, drawn to scale, on which the following items are shown and coordinated with each other, using input from installers of the items involved:

1. Wall panels and attachments.
2. Wall-mounted items including doors, windows, louvers, and lighting fixtures.
3. Penetrations of wall by pipes and utilities.

F. Qualification Data: For testing agency.

G. Compatibility and Adhesion Test Reports: From sealant manufacturer, indicating the following:

1. Materials forming joint substrates and joint-sealant backings have been tested for compatibility and adhesion with joint sealants.
2. Interpretation of test results and written recommendations for primers and substrate preparation needed for adhesion.

H. Product Test Reports: Based on evaluation of comprehensive tests performed by a qualified testing agency, for each product.

I. Field quality-control reports.

J. Maintenance Data: For metal wall panels to include in maintenance manuals.

K. Warranties: Samples of special warranties.

1.6 QUALITY ASSURANCE

A. Testing Agency Qualifications: Qualified according to ASTM E 329 for testing indicated.

B. Source Limitations: Obtain each type of metal-faced composite wall panel from single source from single manufacturer.

C. Preconstruction Compatibility and Adhesion Testing: Submit samples of materials that will contact joint sealants to joint-sealant manufacturers for testing indicated in subparagraphs below:

1. Use manufacturer's standard test methods to determine whether priming and other specific joint preparation techniques are required to obtain rapid, optimum adhesion of joint sealants to joint substrates.

a. Perform tests under environmental conditions replicating those that will exist during installation.

2. Submit no fewer than nine pieces of each type of material, including joint substrates, shims, joint-sealant backings, secondary seals, and miscellaneous materials.
3. Schedule enough time for testing and analyzing results to prevent delaying the Work.
4. For materials failing tests, obtain joint-sealant manufacturer's written instructions for corrective measures, including use of specially formulated primers.

D. Mockups: Build mockups to verify selections made under sample submittals and to demonstrate aesthetic effects and set quality standards for fabrication and installation.

1. Build mockup of typical wall panel as shown on Drawings; approximately one bay wide by one story high by full thickness, including supports, attachments, and accessories.

   a. Include four-way joint for metal-faced composite wall panels.
2. Approval of mockups does not constitute approval of deviations from the Contract Documents contained in mockups unless Architect specifically approves such deviations in writing.
3. Approved mockups may become part of the completed Work if undisturbed at time of Substantial Completion.

E. Preinstallation Conference: Conduct conference at Project site.

1. Meet with Owner, Architect, Owner's insurer if applicable, testing and inspecting agency representative, metal-faced composite wall panel Installer, metal-faced composite wall panel manufacturer's representative, structural-support Installer, and installers whose work interfaces with or affects metal-faced composite wall panels including installers of doors, windows, and louvers.
2. Review and finalize construction schedule and verify availability of materials, Installer's personnel, equipment, and facilities needed to make progress and avoid delays.
3. Review methods and procedures related to metal-faced composite wall panel installation, including manufacturer's written instructions.
4. Examine support conditions for compliance with requirements, including alignment between and attachment to structural members.
5. Review flashings, special siding details, wall penetrations, openings, and condition of other construction that will affect metal-faced composite wall panels.
6. Review governing regulations and requirements for insurance, certificates, and tests and inspections if applicable.
7. Review temporary protection requirements for metal-faced composite wall panel assembly during and after installation.
8. Review wall panel observation and repair procedures after metal-faced composite wall panel installation.

1.7 DELIVERY, STORAGE, AND HANDLING

A. Deliver components, sheets, metal-faced composite wall panels, and other manufactured items so as not to be damaged or deformed. Package metal-faced composite wall panels for protection during transportation and handling.

B. Unload, store, and erect metal-faced composite wall panels in a manner to prevent bending, warping, twisting, and surface damage.

C. Store metal-faced composite wall panels vertically, covered with suitable weathertight and ventilated covering. Store metal-faced composite wall panels to ensure dryness, with positive slope for drainage of water. Do not store metal-faced composite wall panels in contact with other materials that might cause staining, denting, or other surface damage. Do not allow storage space to exceed 120 deg F (49 deg C).

D. Retain strippable protective covering on metal-faced composite wall panel for period of panel installation.

1.8 PROJECT CONDITIONS

A. Weather Limitations: Proceed with installation only when existing and forecasted weather conditions permit assembly of metal-faced composite wall panels to be performed according to manufacturer's written instructions and warranty requirements.

B. Field Measurements: Verify locations of structural members and wall opening dimensions by field measurements before metal-faced composite wall panel fabrication and indicate measurements on Shop Drawings.

1.9 COORDINATION

A. Coordinate metal-faced composite wall panel assemblies with rain drainage work, flashing, trim, and construction of studs, soffits, and other adjoining work to provide a leakproof, secure, and noncorrosive installation.

1.10 WARRANTY

A. Special Warranty: Manufacturer's standard form in which manufacturer agrees to repair or replace components of metal-faced composite wall panel assemblies that fail in materials or workmanship within specified warranty period.

1. Failures include, but are not limited to, the following:

a. Structural failures, including rupturing, cracking, or puncturing.
b. Deterioration of metals and other materials beyond normal weathering.

2. Warranty Period: Two years from date of Substantial Completion.

B. Special Warranty on Panel Finishes: Manufacturer's standard form in which manufacturer agrees to repair finish or replace metal-faced composite wall panels that show evidence of deterioration of factory-applied finishes within specified warranty period.

1. Exposed Panel Finish: Deterioration includes, but is not limited to, the following:

a. Color fading more than 5 Hunter units when tested according to ASTM D 2244.
b. Chalking in excess of a No. 8 rating when tested according to ASTM D 4214.
c. Cracking, checking, peeling, or failure of paint to adhere to bare metal.

2. Finish Warranty Period: 20 years from date of Substantial Completion.

PART 2 - PRODUCTS

2.1 PANEL MATERIALS

A. Aluminum Sheet: Coil-coated sheet, ASTM B 209 (ASTM B 209M), alloy as standard with manufacturer, with temper as required to suit forming operations and structural performance required.

1. Surface: Smooth, flat finish.

2. Exposed Anodized Finishes:

a. Clear Anodic Finish: AAMA 611, AA-M12C22A41, Class I, 0.018 mm or thicker.

3. Concealed Finish: Apply pretreatment and manufacturer's standard white or light-colored acrylic or polyester backer finish, consisting of prime coat and wash coat with a minimum total dry film thickness of 0.5 mil (0.013 mm).

B. Panel Sealants:

1. Joint Sealant: ASTM C 920; elastomeric polyurethane, polysulfide, or silicone sealant; of type, grade, class, and use classifications required to seal joints in metal-faced composite wall panels and remain weathertight; and as recommended in writing by panel manufacturer.

2.2 MISCELLANEOUS METAL FRAMING

A. Miscellaneous Metal Framing, General: ASTM C 645, cold-formed metallic-coated steel sheet, ASTM A 653/A 653M, G40 (Z120) hot-dip galvanized or coating with equivalent corrosion resistance unless otherwise indicated.

B. Subgirts: Manufacturer's standard C- or Z-shaped sections 0.064-inch (1.63-mm) nominal thickness.

C. Zee Clips: 0.079-inch (2.01-mm) nominal thickness.

D. Base or Sill Angles: 0.079-inch (2.01-mm) nominal thickness.

E. Hat-Shaped, Rigid Furring Channels:

1. Nominal Thickness: As required to meet performance requirements.
2. Depth: 7/8 inch (22 mm).

F. Cold-Rolled Furring Channels: Minimum 1/2-inch- (13-mm-) wide flange.

1. Nominal Thickness: As required to meet performance requirements.

2. Depth: 3/4 inch (19 mm).
3. Furring Brackets: Adjustable, corrugated-edge type of steel sheet with nominal thickness of 0.040 inch (1.02 mm).
4. Tie Wire: ASTM A 641/A 641M, Class 1 zinc coating, soft temper, 0.062-inch- (1.57-mm-) diameter wire, or double strand of 0.048-inch- (1.22-mm-) diameter wire.

G. Fasteners for Miscellaneous Metal Framing: Of type, material, size, corrosion resistance, holding power, and other properties required to fasten miscellaneous metal framing members to substrates.

2.3 MISCELLANEOUS MATERIALS

A. Aluminum Extrusions: ASTM B 221 (ASTM B 221M), alloy and temper recommended by manufacturer for type of use and finish indicated.

B. Fasteners: Self-tapping screws, bolts, nuts, self-locking rivets and bolts, end-welded studs, and other suitable fasteners designed to withstand design loads. Provide exposed fasteners with heads matching color of metal-faced composite wall panels by means of plastic caps or factory-applied coating. Provide EPDM, PVC, or neoprene sealing washers.

2.4 METAL-FACED COMPOSITE WALL PANELS

A. General: Provide factory-formed and -assembled, metal-faced composite wall panels fabricated from two metal facings bonded, using no glues or adhesives, to solid, extruded thermoplastic core; formed into profile for installation method indicated. Include attachment system components and accessories required for weathertight system.

1. Fire-Retardant Core: Noncombustible, with the following surface-burning characteristics as determined by testing identical products per ASTM E 84 by UL or another testing and inspecting agency acceptable to authorities having jurisdiction:

   a. Flame-Spread Index: 25 or less.
   b. Smoke-Developed Index: 450 or less.

2. Products: Subject to compliance with requirements, available products that may be incorporated into the Work include, but are not limited to, the following:

   a. Alcan Composites USA Inc.; Alucobond.
   b. Alcoa Inc.; Reynobond PE.
   c. ALPOLIC, Division of Mitsubishi Chemical America, Inc.; ALPOLIC.
   d. CENTRIA Architectural Systems; Formabond Wall System.
   e. Citadel Architectural Products, Inc., Envelope 2000 (RS).
   f. Copper Sales, Inc.; UNA-FAB Series 1000.
   g. Protean Construction Products, Inc.; ACM 100.

B. Aluminum-Faced Composite Wall Panels: Formed with 0.020-inch- (0.50-mm-) thick, coil-coated aluminum sheet facings.

1. Panel Thickness: 0.118 inch (3 mm).

2. Core: Fire retardant.
3. Exterior Finish: Clear anodized.

C. Attachment System Components: Formed from extruded aluminum.

1. Include manufacturer's standard perimeter extrusions with integral weather stripping.

2.5 ACCESSORIES

A. Wall Panel Accessories: Provide components required for a complete metal-faced composite wall panel assembly including trim, copings, fasciae, mullions, sills, corner units, clips, flashings, sealants, gaskets, fillers, closure strips, and similar items. Match material and finish of metal-faced composite wall panels unless otherwise indicated.

B. Flashing and Trim: Formed from 0.018-inch- (0.46-mm-) minimum thickness, zinc-coated (galvanized) steel sheet or aluminum-zinc alloy-coated steel sheet prepainted with coil coating. Provide flashing and trim as required to seal against weather and to provide finished appearance. Locations include, but are not limited to, bases, drips, sills, jambs, corners, endwalls, framed openings, rakes, fasciae, parapet caps, soffits, reveals, and fillers. Finish flashing and trim with same finish system as adjacent metal-faced composite wall panels.

2.6 FABRICATION

A. General: Fabricate and finish metal-faced composite wall panels and accessories at the factory to greatest extent possible, by manufacturer's standard procedures and processes, as necessary to fulfill indicated performance requirements demonstrated by laboratory testing. Comply with indicated profiles and with dimensional and structural requirements.

B. Fabricate metal-faced composite wall panels in a manner that eliminates condensation on interior side of panel and with joints between panels designed to form weathertight seals.

C. Metal-Faced Composite Wall Panels: Factory form panels in a continuous process with no glues or adhesives between dissimilar materials. Trim and square edges of sheets with no displacement of face sheets or protrusion of core material.

1. Form panel lines, breaks, and angles to be sharp and true, with surfaces free from warp and buckle.
2. Fabricate panels with sharply cut edges, with no displacement of face sheets or protrusion of core material.
3. Fabricate panels with panel stiffeners, as required to comply with deflection limits, attached to back of panels with structural silicone sealant or bond tape.
4. Dimensional Tolerances:

a. Panel Bow: 0.8 percent maximum of panel length or width.
b. Squareness: 0.25 inch (5 mm) maximum.

D. Sheet Metal Accessories: Fabricate flashing and trim to comply with recommendations in SMACNA's "Architectural Sheet Metal Manual" that apply to design, dimensions, metal, and other characteristics of item indicated.

1. Form exposed sheet metal accessories that are without excessive oil canning, buckling, and tool marks and that are true to line and levels indicated, with exposed edges folded back to form hems.
2. Seams for Aluminum: Fabricate nonmoving seams with flat-lock seams. Form seams and seal with epoxy seam sealer. Rivet joints for additional strength.
3. Sealed Joints: Form nonexpansion but movable joints in metal to accommodate elastomeric sealant to comply with SMACNA standards.
4. Conceal fasteners and expansion provisions where possible. Exposed fasteners are not allowed on faces of accessories exposed to view.
5. Fabricate cleats and attachment devices from same material as accessory being anchored or from compatible, noncorrosive metal recommended by metal-faced composite wall panel manufacturer.

    a. Size: As recommended by SMACNA's "Architectural Sheet Metal Manual" or metal-faced composite wall panel manufacturer for application, but not less than thickness of metal being secured.

2.7 GENERAL FINISH REQUIREMENTS

A. Comply with NAAMM's "Metal Finishes Manual for Architectural and Metal Products" for recommendations for applying and designating finishes.

B. Protect mechanical and painted finishes on exposed surfaces from damage by applying a strippable, temporary protective covering before shipping.

C. Appearance of Finished Work: Noticeable variations in same piece are not acceptable. Variations in appearance of abutting or adjacent pieces are acceptable if they are within one-half of the range of approved Samples. Variations in appearance of other components are acceptable if they are within the range of approved Samples and are assembled or installed to minimize contrast.

PART 3 - EXECUTION

3.1 EXAMINATION

A. Examine substrates, areas, and conditions, with Installer present, for compliance with requirements for installation tolerances, metal-faced composite wall panel supports, and other conditions affecting performance of the Work.

1. Examine wall framing to verify that girts, angles, channels, studs, and other structural panel support members and anchorage have been installed within alignment tolerances required by metal-faced composite wall panel manufacturer.
2. Examine wall sheathing to verify that sheathing joints are supported by framing or blocking and that installation is within flatness tolerances required by metal-faced composite wall panel manufacturer.
3. Verify that weather-resistant sheathing paper has been installed over sheathing or backing substrate to prevent air infiltration or water penetration.

B. Examine roughing-in for components and systems penetrating metal-faced composite wall panels to verify actual locations of penetrations relative to seam locations of panels before panel installation.

C. For the record, prepare written report, endorsed by Installer, listing conditions detrimental to performance of the Work.

D. Proceed with installation only after unsatisfactory conditions have been corrected.

3.2 PREPARATION

A. Miscellaneous Framing: Install subgirts, base angles, sills, furring, and other miscellaneous wall panel support members and anchorage according to ASTM C 754 and metal-faced composite wall panel manufacturer's written instructions.

3.3 METAL-FACED COMPOSITE WALL PANEL INSTALLATION

A. General: Install metal-faced composite wall panels according to manufacturer's written instructions in orientation, sizes, and locations indicated on Drawings. Install panels perpendicular to girts and subgirts unless otherwise indicated. Anchor panels and other components of the Work securely in place, with provisions for thermal and structural movement.

1. Commence metal-faced composite wall panel installation and install minimum of 300 sq. ft. (27.8 sq. m) in presence of factory-authorized representative.
2. Shim or otherwise plumb substrates receiving metal-faced composite wall panels.
3. Flash and seal metal-faced composite wall panels at perimeter of all openings. Do not begin installation until weather barrier and flashings that will be concealed by panels are installed.
4. Install flashing and trim as metal-faced composite wall panel work proceeds.
5. Apply elastomeric sealant continuously between metal base channel (sill angle) and concrete, and elsewhere as indicated or, if not indicated, as necessary for waterproofing.
6. Provide weathertight escutcheons for pipe and conduit penetrating exterior walls.

B. Fasteners:

1. Aluminum Wall Panels: Use aluminum or stainless-steel fasteners for surfaces exposed to the exterior and aluminum or galvanized-steel fasteners for surfaces exposed to the interior.

C. Metal Protection: Where dissimilar metals will contact each other or corrosive substrates, protect against galvanic action as recommended by metal-faced composite wall panel manufacturer.

D. Joint Sealers: Install gaskets, joint fillers, and sealants where indicated and where required for weathertight performance of metal-faced composite wall panel assemblies. Provide types of gaskets, fillers, and sealants indicated or, if not indicated, types recommended by panel manufacturer.

1. Prepare joints and apply sealants to comply with requirements in Division 07 Section "Joint Sealants."

E. Attachment System Installation, General: Install attachment system required to support metal-faced composite wall panels and to provide a complete weathertight wall system, including subgirts, perimeter extrusions, tracks, drainage channels, panel clips, and anchor channels.

1. Include attachment to supports, panel-to-panel joinery, panel-to-dissimilar-material joinery, and panel-system joint seals.
2. Do not begin installation until weather barrier and flashings that will be concealed by composite panels are installed.

F. Clip Installation: Attach panel clips to supports at each metal-faced composite wall panel joint at locations, spacings, and with fasteners recommended by manufacturer. Attach routed-and-returned flanges of wall panels to panel clips with manufacturer's standard fasteners.

1. Seal horizontal and vertical joints between adjacent panels with sealant backing and sealant. Install sealant backing and sealant according to requirements specified in Division 07 Section "Joint Sealants."

3.4 ACCESSORY INSTALLATION

A. General: Install accessories with positive anchorage to building and weathertight mounting and provide for thermal expansion. Coordinate installation with flashings and other components.

1. Install components required for a complete metal-faced composite wall panel assembly including trim, copings, corners, seam covers, flashings, sealants, gaskets, fillers, closure strips, and similar items.

B. Flashing and Trim: Comply with performance requirements, manufacturer's written installation instructions, and SMACNA's "Architectural Sheet Metal Manual." Provide concealed fasteners where possible, and set units true to line and level as indicated. Install work with laps, joints, and seams that will be permanently watertight and weather resistant.

1. Install exposed flashing and trim that is without excessive oil canning, buckling, and tool marks and that is true to line and levels indicated, with exposed edges folded back to form hems. Install sheet metal flashing and trim to fit substrates and to result in waterproof and weather-resistant performance.
2. Expansion Provisions: Provide for thermal expansion of exposed flashing and trim. Space movement joints at a maximum of 10 feet (3 m) with no joints allowed within 24 inches (610 mm) of corner or intersection. Where lapped expansion provisions cannot be used or would not be sufficiently weather resistant and waterproof, form expansion joints of intermeshing hooked flanges, not less than 1 inch (25 mm) deep, filled with mastic sealant (concealed within joints).

3.5 ERECTION TOLERANCES

A. Installation Tolerances: Shim and align metal-faced composite wall panel units within installed tolerance of 1/4 inch in 20 feet (6 mm in 6 m), nonaccumulative, on level, plumb, and location

lines as indicated and within 1/8-inch (3-mm) offset of adjoining faces and of alignment of matching profiles.

3.6 FIELD QUALITY CONTROL

A. Testing Agency: Engage a qualified testing agency to perform tests and inspections.

B. Water Penetration: Test areas of installed system indicated on Drawings for compliance with system performance requirements according to ASTM E 1105 at minimum differential pressure of 20 percent of inward-acting, wind-load design pressure as defined by SEI/ASCE 7, but not less than 6.24 lbf/sq. ft. (300 Pa).

C. Water-Spray Test: After completing the installation of 75-foot- (23-m-) by-2-story minimum area of metal-faced composite wall panel assembly, test assembly for water penetration according to AAMA 501.2 in a 2-bay area directed by Architect.

D. Manufacturer's Field Service: Engage a factory-authorized service representative to inspect, test, and adjust completed metal-faced composite wall panel installation, including accessories.

E. Metal-faced composite wall panels will be considered defective if they do not pass tests and inspections.

F. Additional tests and inspections, at Contractor's expense, will be performed to determine compliance of replaced or additional work with specified requirements.

G. Prepare test and inspection reports.

3.7 CLEANING

A. Remove temporary protective coverings and strippable films, if any, as metal-faced composite wall panels are installed unless otherwise indicated in manufacturer's written installation instructions. On completion of metal-faced composite wall panel installation, clean finished surfaces as recommended by panel manufacturer. Maintain in a clean condition during construction.

B. After metal-faced composite wall panel installation, clear weep holes and drainage channels of obstructions, dirt, and sealant.

C. Replace metal-faced composite wall panels that have been damaged or have deteriorated beyond successful repair by finish touchup or similar minor repair procedures.

END OF SECTION 074243

INTERIOR LIGHT SHELF SYSTEM
SECTION 107300

PART 1 GENERAL

1.01 RELATED DOCUMENTS:

A. The General Conditions of the Contract, including Supplementary Conditions and Division 1 - General Requirements, apply to the work of this Section.

1.02 WORK INCLUDED:

A. Design, manufacture and installation of translucent insulating system. An assembly of extruded Nano-Cell polycarbonate glazing panels incorporated into a complete aluminum framed system that has been tested and warranted by the manufacturer as a single source system.

B. All anchors, brackets, and hardware attachments necessary to complete the specified structural assembly, weatherability and water-tightness performance requirements. All flashing up to but not penetrating adjoining work are also required as part of the system and shall be included.

C. Trained and factory authorized labor with supervision to complete the entire panel installation.

1.03 RELATED WORK SPECIFIED ELSEWHERE:

A. Section ____085123 - Steel Windows

1.04 QUALITY ASSURANCE

A. Materials and Products shall be manufactured by a company continuously and regularly employed in the manufacture of polycarbonate (not glass) panel systems for a period of at least ten (10) years. Manufacturers shall provide a list of at least ten (10) projects having been in place a minimum of ten (10) years, with similar size, scope, climate and type.

B. Erection shall be by a factory-approved installer which has been in the business of erecting similar material for at least five (5) consecutive years and can show evidence of satisfactory completion of projects of similar size, scope and type.

C. The manufacturer shall be responsible for the configuration and fabrication of the complete panel system, and will ensure that it fully meets all requirements of this specification.

D. MANUFACTURERS:
Subject to compliance with requirements, available manufacturers offering products that may be incorporated into the Work.

1.05 SUBMITTALS:

A. Submit shop drawings and color samples in accordance with Section 013300 Submittals

B. The manufacturer shall submit written guarantee accompanied by substantiating data, stating that the products to be furnished are in accordance with or exceed these specifications.

C. The manufacturer shall submit certified test reports made by an independent organization for each type and class of panel system. Reports shall verify that the material will meet all performance requirements of this specification. Previously completed test reports will be acceptable if they are current and indicative of products used on this project. Test reports required are:

1. Self Ignition Temperature (ASTM 1929-3)
2. Smoke Density (ASTM D-2843)
3. Burning Extent (ASTM D-635)
4. Interior Flame Spread (ASTM E-84)
5. Color Difference (ASTM D-2244-85)
6. Weathering (ASTM D-4364)
7. Yellowing Index (ASTM D-1925)
8. Weathering Evaluation before and after exposure to 300°F, 25 minutes include Light Transmission, Color Change, and Yellowing Index, per ASTM E-1175, ASTM D-2244 and ASTM D-1925 respectively.
9. Shatter Resistance (ASTM D-3841/SPI Method B)
10. Load Bearing Capability (ASTM E-330-97)

D. MAINTENANCE DATA: The manufacturer shall provide recommended maintenance procedures, schedule of maintenance and materials required or recommended for maintenance.

1.06 WARRANTY:

A. Provide a single source canopy system manufacturer warranty for glazing panels and framing system – third party warranty for glazing panels shall not be acceptable.

B. Provide manufacturer 10 year warranty to include:

1. Change in light transmission of no more than 6% per ASTM D-1003
2. No delamination of panel affecting appearance, performance or structural integrity of the panel or the system.
3. Thermal aging - the light transmission and the color shall not change after exposure to heat of 300°F for 25 minutes. (When measured per ASTM D-1003 and ASTM D-2244 respectively).

PART 2 PRODUCTS

2.01 TRANSLUCENT INSULATING NANO-CELL GLAZING SYSTEM:

A. The design and performance criteria of this job are based upon the products manufactured by CPI Daylighting, Inc., telephone (800) 759-6985, (847) 816-1060, fax (847) 816-0425.

B. Other translucent polycarbonate systems will be considered provided that they fully meet all specification, warranty, module and aesthetic intent. All submittals for approval shall include samples and complete test data as prescribed in Section 1.05 of this specification and per Division 1. Fiberglass skins are unacceptable.

2.02 TRANSLUCENT PANEL PERFORMANCE

A. Nano-Cell Panel Technology - Longevity and Resistance to Buckling and Pressure

1. Translucent Panels must be of Nano-Cell technology. Wide Cell technology (cell size exceeding 0.18") shall not be acceptable.
2. The extruded panel shall include an integral extruded Nano-Cell structural core. The panel's exterior skins shall be connected with supporting continuous ribs, perpendicular to the skins, at a spacing not to exceed 0.18" (truss-like construction). In addition, the space between the two exterior skins shall be divided by multiple parallel horizontal surfaces, at a spacing not to exceed 0.18".

B. Appearance:

1. Panel assembly thickness shall be a minimum .47" (12mm) single panel with exposed interlocking 1.25" wide U battens.
2. Panel Width: Shall not exceed 2' to ensure best performance for wind uplift, vibration, oil canning and visual appearance. Panels over 2' wide will not be approved.

2.03 METAL FRAME STRUCTURE

B. To meet ANSI/ASCE 7-95 building design load, design criteria shall be:

1. Dead Load 40 PSF.

C. The framing is designed to be self-supporting between the support constructions. The deflection of the Structural framing members in a direction normal to the plane of the glazing, when subjected to a uniform load deflection, shall not exceed L/60 for the unsupported span. All adjacent and support construction must support the transfer of all loads including horizontal and vertical, exerted by the canopy.

2.04 METAL MATERIALS

A. Extruded Aluminum shall be ANSI/ASTM B221; 6063-T6: 6063-T5 or 6005-T5.

B. All Fasteners for aluminum framing to be stainless steel or cadmium plated steel, excluding the final fasteners to the building.

C. All exposed ALUMINUM FINISH shall be standard color Mill Finish

2.045 STAINLESS STEEL WIRE ROPE SUSPENSION CABLE ASSEMBLY

A. Cable: ASTM A492 Type 316 stainless steel 7x7 or 7x19 wire rope, or 1x19 strand.

B. Fittings, Hardware, and Accessories: AISI 304, 316 or 316L stainless steel, as required to support light shelves.

PART 3 EXECUTION

3.01 EXAMINATION

A. General Contractor to verify when structural support is ready to receive all work in this section and to convene a Pre-Installation Conference at least one week prior to commencing work of this Section. Attendance required of General Contractor, skylight installer and all parties directly affecting and effected by the work of this section.

B. All submitted opening sizes, dimensions and tolerances are to be field verified by general contractor unless otherwise stipulated.

C. Installer to examine area of installation to verify readiness of site conditions. Notify general contractor about any defects requiring correction. Do not work until conditions are satisfactory.

3.02 INSTALLATION

A. Install components in strict accordance with manufacturer's instructions and approved shop drawings. Use proper fasteners and hardware for material attachments as specified.

B. Use methods of attachment to structure allowing sufficient adjustment to accommodate tolerances.

B. Remove all protective coverings on panels immediately after installation.

3.03 CLEANING

A. Follow manufacturer's instructions when washing down exposed panel surfaces using a solution of mild detergent in warm water that is applied with soft, clean wiping cloths.

B. Follow strict panel manufacturer guidelines when removing foreign substances from panel surfaces requiring mineral spirits or any solvents that are acceptable

for use.

C. Installers shall leave panel system clean at completion of installation. Final cleaning is by others upon completion of project, following manufacturer's cleaning instructions.

END OF SECTION

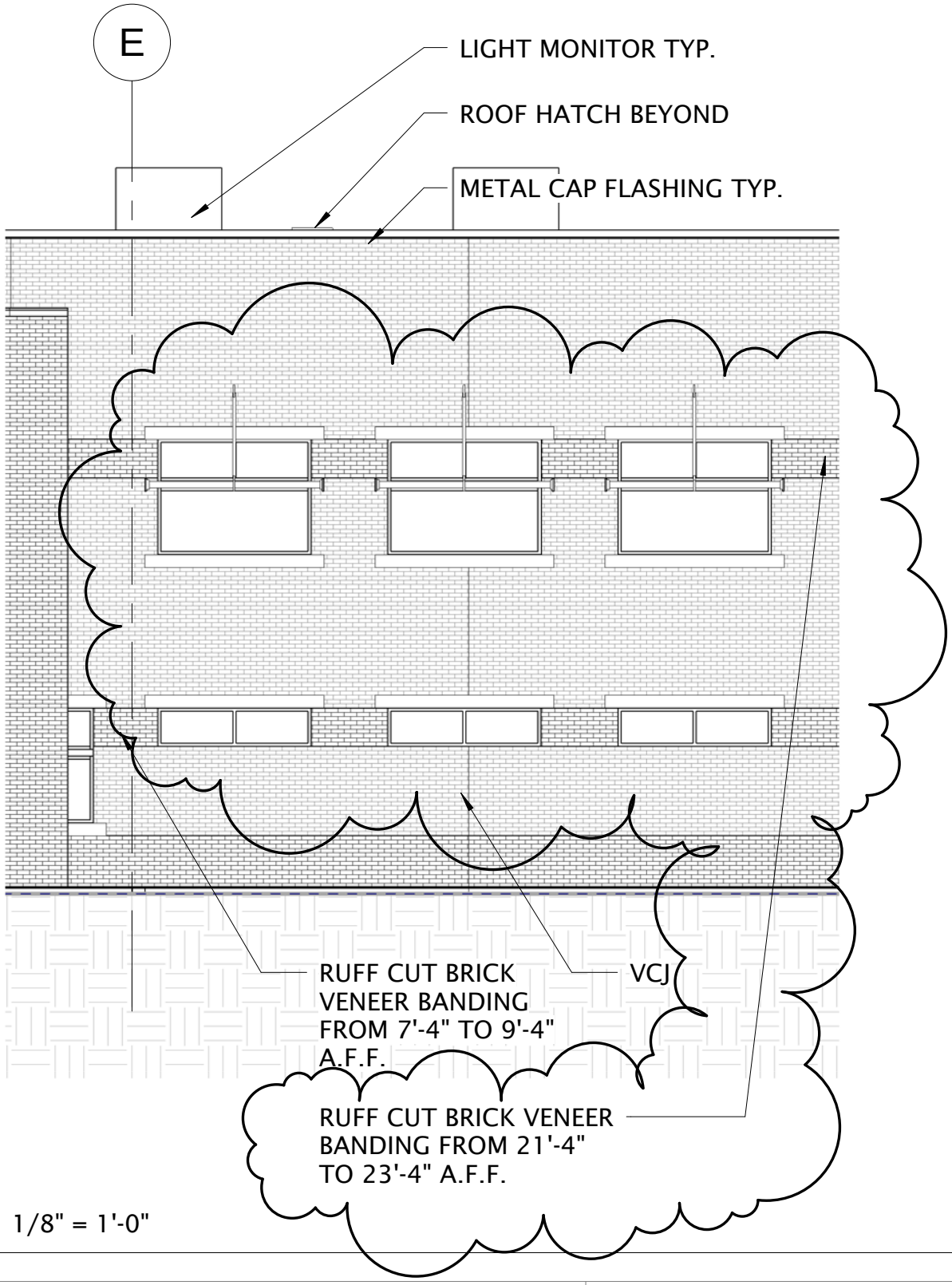

SCALE 1/8" = 1'-0"

C:\Documents and Settings\jallen\Desktop\UTNG Local 2005.003\U03_Local-3.rvt

3/10/2008 4:55:57 PM

GSBS ARCHITECTS

375 WEST 200 SOUTH
SALT LAKE CITY, UT 84101
P 801.521.8600
F 801.521.7913
www.gsbsarchitects.com

AD1-A10 - A5/AE202

GSBS PROJECT NO.: 2005.003
ISSUED DATE: 03/11/2008

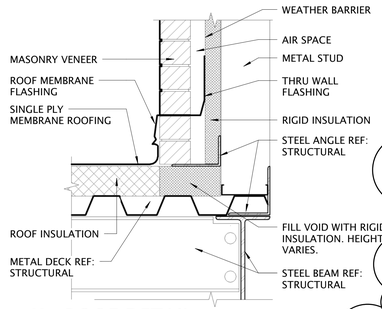

E4 AE503 .ROOF DETAIL
1 1/2" = 1'-0"

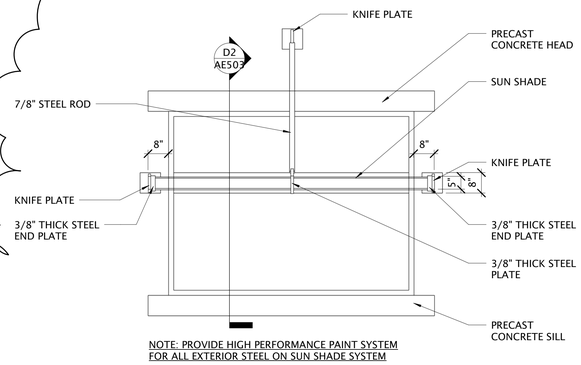

NOTE: PROVIDE HIGH PERFORMANCE PAINT SYSTEM FOR ALL EXTERIOR STEEL ON SUN SHADE SYSTEM

ELEVATION

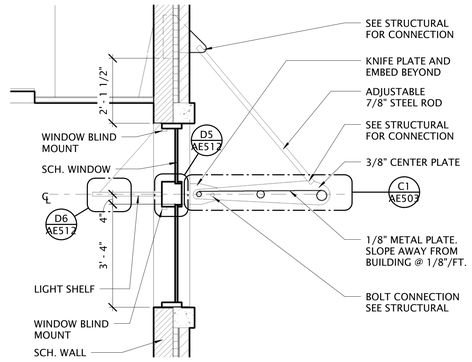

NOTE: PROVIDE HIGH PERFORMANCE PAINT SYSTEM FOR ALL EXTERIOR STEEL ON SUN SHADE SYSTEM

D2 AE503 SUN SHADE/ LIGHT SHELF SECTION
1/2" = 1'-0"

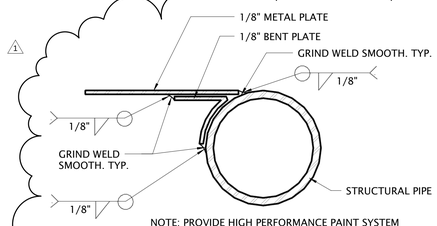

NOTE: PROVIDE HIGH PERFORMANCE PAINT SYSTEM FOR ALL EXTERIOR STEEL ON SUN SHADE SYSTEM

D4 AE503 SUN SHADE PIPE DETAIL
6" = 1'-0"

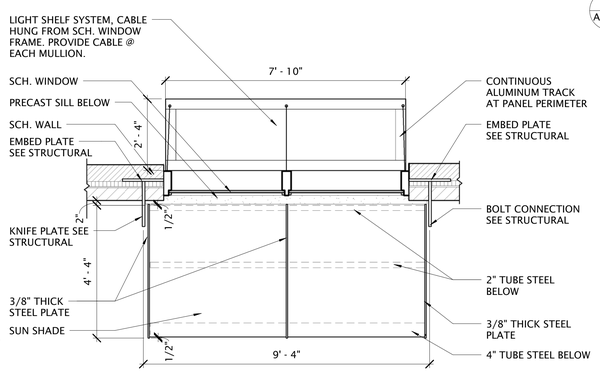

NOTE: PROVIDE HIGH PERFORMANCE PAINT SYSTEM FOR ALL EXTERIOR STEEL ON SUN SHADE SYSTEM

PLAN

D3 AE503 SUN SHADE/LIGHT SHELF
1/2" = 1'-0"

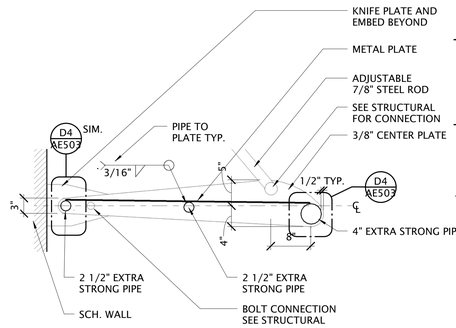

NOTE: SLOT PIPES THRU CENTER PLATE.

NOTE: PROVIDE HIGH PERFORMANCE PAINT SYSTEM AT ALL EXTERIOR STEEL ON SUN SHADE SYSTEM

C1 AE503 SUN SHADE DETAIL
1" = 1'-0"

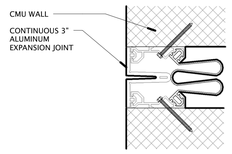

C4 AE503 EXPANSION JOINT DETAIL.
6" = 1'-0"

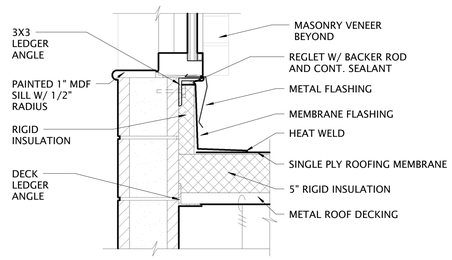

B4 AE503 FLASHING DETAIL @ SILL
1 1/2" = 1'-0"

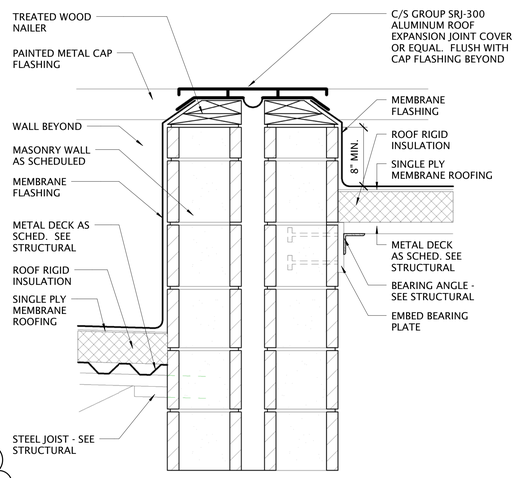

A2 AE503 ROOF DETAIL @ CST
1 1/2" = 1'-0"

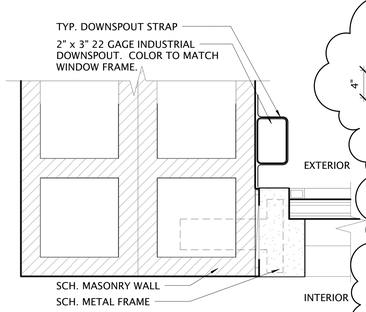

A6 AE503 DOWNSPOUT DETAIL
3" = 1'-0"

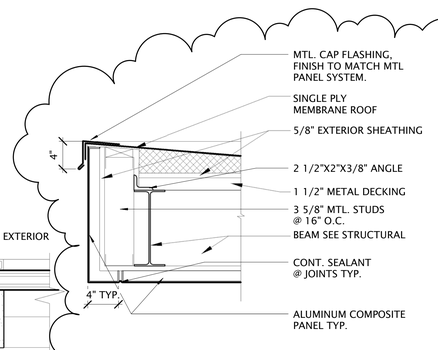

A5 AE503 CANOPY FASCIA DETAIL
1 1/2" = 1'-0"

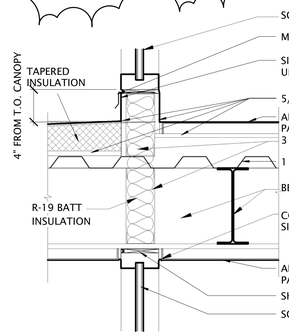

A4 AE503 CANOPY DETAIL @ GLAZING
1 1/2" = 1'-0"

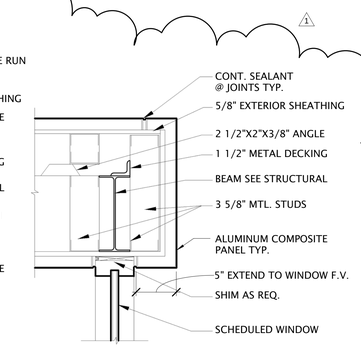

A3 AE503 CANOPY DETAIL @ INTERIOR GLAZING
1 1/2" = 1'-0"

GSBS | ARCHITECTURE | LANDSCAPE ARCHITECTURE | PLANNING | INTERIOR DESIGN

375 West 200 South Suite 100
Salt Lake City
Utah 84101

Tel 801.521.8600
Fax 801.521.7913

GSBS-PC.COM

STATE OF UTAH LICENSED ARCHITECT 116302 2/01/2008

Revision Schedule		
#	DATE	REVISION
1	03/11/2008	ADDENDUM 1

NORTH SALT LAKE READINESS CENTER AND CIVIL SUPPORT TEAM

Salt Lake City, UT

EXTERIOR DETAILS

PROJECT NO. 2005.003
DATE 3/11/2008
DRAWN TK
CHECKED MK
BINDING ORDER 61

AE503

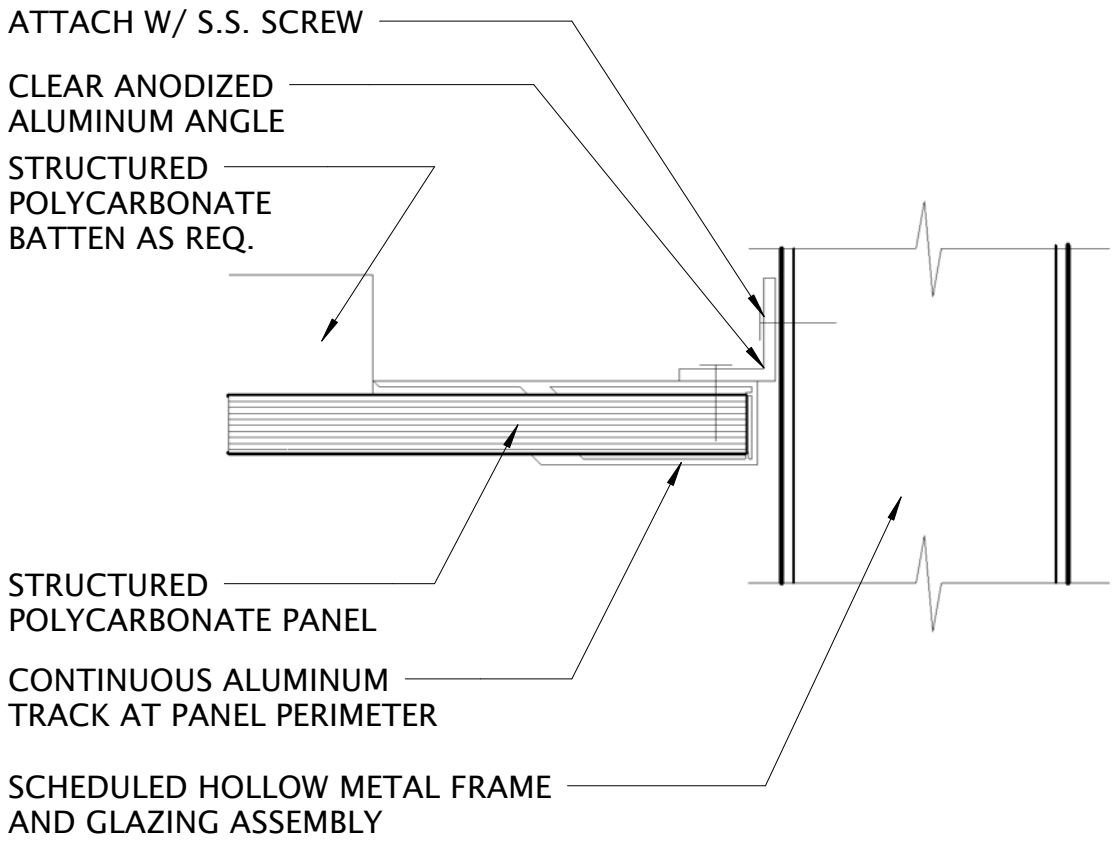

SCALE 6" = 1'-0"

C:\Documents and Settings\jallen\Desktop\UTNG Local 2005.003\U03_Local-3.rvt

3/10/2008 4:56:17 PM

GSBS ARCHITECTS
375 WEST 200 SOUTH
SALT LAKE CITY, UT 84101
P 801.521.8600
F 801.521.7913
www.gsbsarchitects.com

AD1-A13 - D5/AE512

GSBS PROJECT NO.:	2005.003
ISSUED DATE:	3/11/2008

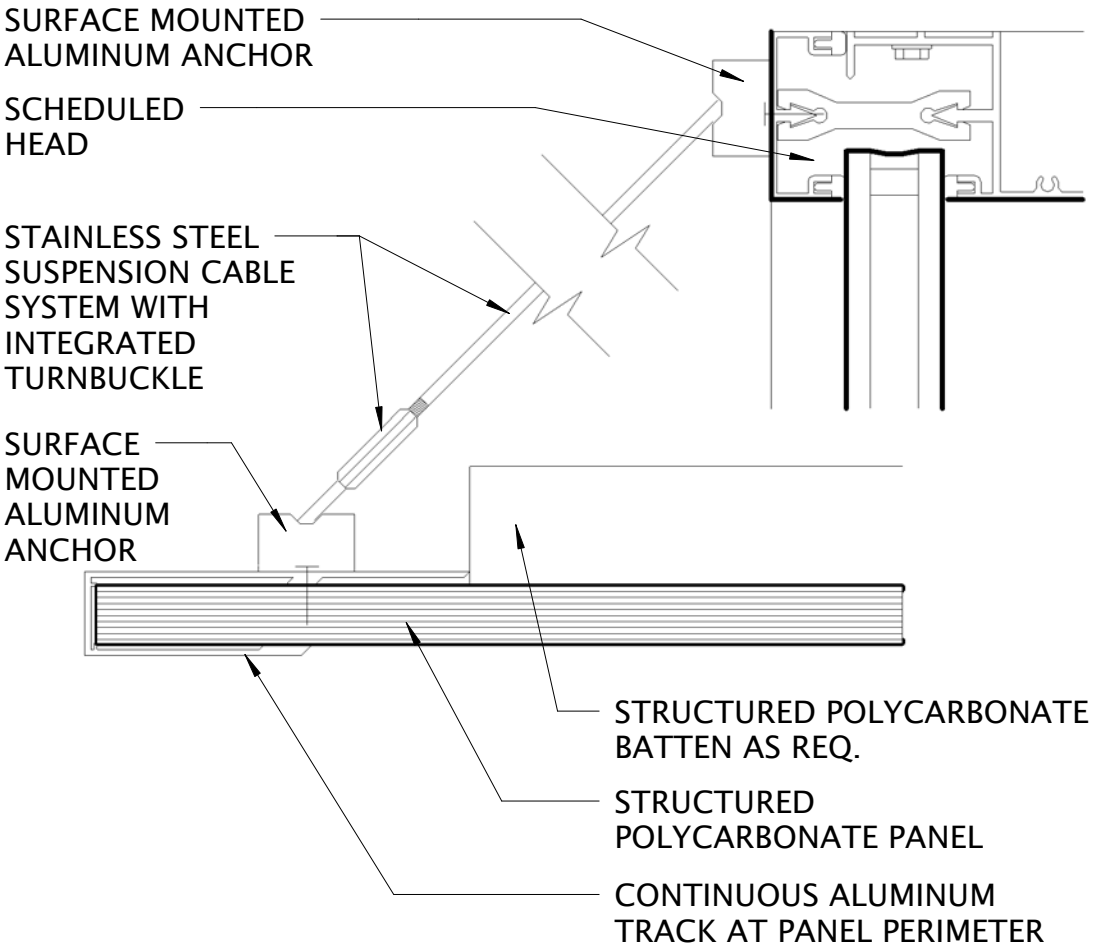

SCALE 6" = 1'-0"

C:\Documents and Settings\jallen\Desktop\UTNG Local 2005.003\U03_Local-3.rvt

3/10/2008 4:56:41 PM

GSBS ARCHITECTS
375 WEST 200 SOUTH
SALT LAKE CITY, UT 84101
P 801.521.8600
F 801.521.7913
www.gsbsarchitects.com

AD1-A14 - D6/AE512

GSBS PROJECT NO.:	2005.003
ISSUED DATE:	3/11/2008

SECTION 105114 - METAL EQUIPMENT LOCKERS

PART 1 - GENERAL

1.1 RELATED DOCUMENTS

A. Drawings and general provisions of the Contract, including General and Supplementary Conditions and Division 01 Specification Sections, apply to this Section.

1.2 SUMMARY

A. Section Includes:
   1. Heavy-duty metal lockers.

1.3 SUBMITTALS

A. Product Data: For each type of product indicated. Include construction details, material descriptions, dimensions of individual components and profiles, and finishes for each type of metal locker.

B. Shop Drawings: For metal lockers. Include plans, elevations, sections, details, and attachments to other work.

   1. Show locker trim and accessories.
   2. Include locker identification system and numbering sequence.

C. Samples for Initial Selection: For units with factory-applied color finishes.

D. Samples for Verification: For metal lockers, in manufacturer's standard sizes.

E. Qualification Data: For qualified Installer.

F. Maintenance Data: For adjusting, repairing, and replacing locker doors and latching mechanisms to include in maintenance manuals.

G. Warranty: Sample of special warranty.

1.4 QUALITY ASSURANCE

A. Installer Qualifications: Manufacturer's authorized representative who is trained and approved for installation of units required for this Project.

B. Source Limitations: Obtain metal lockers and accessories from single source from single manufacturer.

C. Regulatory Requirements: Where metal lockers are indicated to comply with accessibility requirements, comply with the U.S. Architectural & Transportation Barriers Compliance Board's "Americans with Disabilities Act (ADA) and Architectural Barriers Act (ABA) Accessibility Guidelines for Buildings and Facilities" and ICC/ANSI A117.1.

D. Preinstallation Conference: Conduct conference at Project site.

1.5 DELIVERY, STORAGE, AND HANDLING

A. Do not deliver metal lockers until spaces to receive them are clean, dry, and ready for their installation.

1.6 PROJECT CONDITIONS

A. Field Measurements: Verify actual dimensions of recessed openings by field measurements before fabrication.

1.7 COORDINATION

A. Coordinate sizes and locations of framing, blocking, furring, reinforcements, and other related units of work specified in other Sections to ensure that metal lockers can be supported and installed as indicated.

1.8 WARRANTY

A. Special Warranty: Manufacturer's standard form in which manufacturer agrees to repair or replace components of metal lockers that fail in materials or workmanship, excluding finish, within specified warranty period.

1. Failures include, but are not limited to, the following:

    a. Structural failures.
    b. Faulty operation of latches and other door hardware.

2. Damage from deliberate destruction and vandalism is excluded.
3. Warranty Period for Metal Lockers: Ten years from date of Substantial Completion.

1.9 EXTRA MATERIALS

A. Furnish extra materials that match products installed and that are packaged with protective covering for storage and identified with labels describing contents.

1. Full-size units of the following metal locker hardware items equal to 10 percent of amount installed for each type and finish installed, but no fewer than five units:
    a. Identification plates.
    b. Hooks.

PART 2 - PRODUCTS

2.1 MATERIALS

A. Cold-Rolled Steel Sheet: ASTM A 1008/A 1008M, Commercial Steel (CS), Type B, suitable for exposed applications.

B. Steel Tube: ASTM A 500, cold rolled.

C. Fasteners: Zinc- or nickel-plated steel, slotless-type, exposed bolt heads; with self-locking nuts or lock washers for nuts on moving parts.

D. Anchors: Material, type, and size required for secure anchorage to each substrate.

1. Provide nonferrous-metal or hot-dip galvanized anchors and inserts on inside face of exterior walls for corrosion resistance.
2. Provide toothed-steel or lead expansion sleeves for drilled-in-place anchors.

2.2 HEAVY-DUTY METAL LOCKERS

A. Products: Subject to compliance with requirements, available products that may be incorporated into the Work include, but are not limited to, the following:
1. DeBourgh Mfg. Co.; Sentry Corridor/Personnel Lockers.
2. List Industries Inc.; Marquis Protector.
3. Lyon Workspace Products, LLC; All-Welded Lockers.
4. Penco Products, Inc.; All-Welded Defiant SPL Lockers.

B. Locker Arrangement: Single tier. 30” wide x 24” deep x 72” high

C. Material: Cold-rolled steel sheet.

D. Body: Assembled by welding body components together. Fabricate from unperforated steel sheet with thicknesses as follows:

1. Tops, Bottoms, and Sides: 0.060-inch (1.52-mm) nominal thickness.
2. Backs: 0.048-inch (1.21-mm) nominal thickness.
3. Shelves: 0.060-inch (1.52-mm) nominal thickness, with double bend at front and single bend at sides and back.

E. Frames: Channel formed; fabricated from 0.060-inch (1.52-mm) nominal-thickness steel sheet; lapped and factory welded at corners; with top and bottom main frames factory welded into vertical main frames. Form continuous, integral door strike full height on vertical main frames.

F. Doors: One piece; fabricated from 0.075-inch (1.90-mm) nominal-thickness steel sheet; formed into channel shape with double bend at vertical edges and with right-angle single bend at horizontal edges.

1. Reinforcement: Manufacturer's standard reinforcing angles, channels, or stiffeners for doors more than 15 inches (381 mm) wide; welded to inner face of doors.

2. Door Style:
   a. Security Vents: Manufacturer's standard, stamped horizontal or vertical.

G. Hinges: Welded to door and attached to door frame with no fewer than two factory-installed rivets per hinge that are completely concealed and tamper resistant when door is closed; fabricated to swing 180 degrees.
   1. Continuous Hinges: Manufacturer's standard, steel, full height.

H. Recessed Door Handle and Latch: Stainless-steel cup with integral door pull, recessed so locking device does not protrude beyond face of door; pry and vandal resistant.

   1. Single-Point Latching: Nonmoving latch hook with steel padlock loop that projects through recessed cup and is finished to match metal locker body.

      a. Latch Hook: Equip each door with one latch hook, fabricated from 0.120-inch (3.04-mm) nominal-thickness steel sheet; welded midway up full-height door strike; with resilient silencer.

I. Combination Padlocks: Provided by Owner.

J. Equipment: Equip each metal locker with identification plate and the following unless otherwise indicated:

   1. Single-Tier Units: Shelf, one double-prong ceiling hook, and two single-prong wall hooks.

K. Accessories:

   1. Continuous Zee Base: Fabricated from, manufacturer's standard thickness, but not less than 0.060-inch (1.52-mm) nominal-thickness steel sheet.

      a. Height: 4 inches (102 mm).

   2. Continuous Sloping Tops: Fabricated from 0.048-inch (1.21-mm) nominal-thickness steel sheet, with a pitch of approximately 20 degrees.

      a. Closures: Vertical-end type.

   3. Recess Trim: Fabricated from 0.048-inch (1.21-mm) nominal-thickness steel sheet.
   4. Filler Panels: Fabricated from 0.048-inch (1.21-mm) nominal-thickness steel sheet.
   5. Boxed End Panels: Fabricated from 0.048-inch (1.21-mm) nominal-thickness steel sheet.

L. Finish: powder coat.

   1. Color(s): As selected by Architect from manufacturer's full range.

2.3 FABRICATION

A. Fabricate metal lockers square, rigid, and without warp and with metal faces flat and free of dents or distortion. Make exposed metal edges safe to touch and free of sharp edges and burrs.

1. Form body panels, doors, shelves, and accessories from one-piece steel sheet unless otherwise indicated.
2. Provide fasteners, filler plates, supports, clips, and closures as required for complete installation.

B. Fabricate each metal locker with an individual door and frame; individual top, bottom, and back; and common intermediate uprights separating compartments. Factory weld frame members of each metal locker together to form a rigid, one-piece assembly.

C. All-Welded Construction: Factory preassemble metal lockers by welding all joints, seams, and connections; with no bolts, nuts, screws, or rivets used in assembly of main locker groups. Factory weld main locker groups into one-piece structures. Grind exposed welds flush.

D. Accessible Lockers: Fabricate as follows:

1. Locate bottom shelf no lower than 15 inches (381 mm) above the floor.
2. Where hooks, coat rods, or additional shelves are provided, locate no higher than 48 inches (1219 mm) above the floor.

E. Hooks: Manufacturer's standard ball-pointed type, aluminum or steel; zinc plated.

F. Identification Plates: Manufacturer's standard, etched, embossed, or stamped aluminum plates, with numbers and letters at least 3/8 inch (9 mm) high.

G. Continuous Base: Formed into channel or zee profile for stiffness, and fabricated in lengths as long as practical to enclose base and base ends of metal lockers; finished to match lockers.

H. Continuous Sloping Tops: Fabricated in lengths as long as practical, without visible fasteners at splice locations; finished to match lockers.

1. Sloping-top corner fillers, mitered.

I. Recess Trim: Fabricated with minimum 2-1/2-inch (64-mm) face width and in lengths as long as practical; finished to match lockers.

J. Filler Panels: Fabricated in an unequal leg angle shape; finished to match lockers. Provide slip-joint filler angle formed to receive filler panel.

K. Boxed End Panels: Fabricated with 1-inch- (25-mm-) wide edge dimension, and designed for concealing fasteners and holes at exposed ends of nonrecessed metal lockers; finished to match lockers.

1. Provide one-piece panels for double-row (back-to-back) locker ends.

L. Finished End Panels: Designed for concealing unused penetrations and fasteners, except for perimeter fasteners, at exposed ends of nonrecessed metal lockers; finished to match lockers.

1. Provide one-piece panels for double-row (back-to-back) locker ends.

M. Center Dividers: Full-depth, vertical partitions between bottom and shelf; finished to match lockers.

2.4 STEEL SHEET FINISHES

A. Factory finish steel surfaces and accessories except stainless-steel and chrome-plated surfaces.

B. Powder-Coat Finish: Immediately after cleaning and pretreating, electrostatically apply manufacturer's standard, baked-polymer, thermosetting powder finish. Comply with resin manufacturer's written instructions for application, baking, and minimum dry film thickness.

PART 3 - EXECUTION

3.1 EXAMINATION

A. Examine walls, floors, and support bases, with Installer present, for compliance with requirements for installation tolerances and other conditions affecting performance of the Work.

B. Prepare written report, endorsed by Installer, listing conditions detrimental to performance of the Work.

C. Proceed with installation only after unsatisfactory conditions have been corrected.

3.2 INSTALLATION

A. General: Install level, plumb, and true; shim as required, using concealed shims.

1. Anchor locker runs at ends and at intervals recommended by manufacturer, but not more than 36 inches (910 mm) o.c. Using concealed fasteners, install anchors through backup reinforcing plates, channels, or blocking as required to prevent metal distortion.
2. Anchor single rows of metal lockers to walls near top of lockers and to floor.
3. Anchor back-to-back metal lockers to floor.

B. All-Welded Metal Lockers: Connect groups together with standard fasteners, with no exposed fasteners on face frames.

C. Equipment and Accessories: Fit exposed connections of trim, fillers, and closures accurately together to form tight, hairline joints, with concealed fasteners and splice plates.

1. Attach hooks with at least two fasteners.
2. Identification Plates: Identify metal lockers with identification indicated on Drawings.

    a. Attach plates to each locker door, near top, centered, with at least two aluminum rivets.

3. Attach recess trim to recessed metal lockers with concealed clips.
4. Attach filler panels with concealed fasteners. Locate filler panels where indicated on Drawings.
5. Attach sloping-top units to metal lockers, with closures at exposed ends.
6. Attach boxed end panels with concealed fasteners to conceal exposed ends of nonrecessed metal lockers.

7. Attach finished end panels with fasteners only at perimeter to conceal exposed ends of nonrecessed metal lockers.

3.3 ADJUSTING, CLEANING, AND PROTECTION

A. Clean, lubricate, and adjust hardware. Adjust doors and latches to operate easily without binding.

B. Protect metal lockers from damage, abuse, dust, dirt, stain, or paint. Do not permit use during construction.

C. Touch up marred finishes, or replace metal lockers that cannot be restored to factory-finished appearance. Use only materials and procedures recommended or furnished by locker manufacturer.

END OF SECTION 105113

SECTION 057500 - DECORATIVE FORMED METAL

PART 1 - GENERAL

1.1 RELATED DOCUMENTS

A. Drawings and general provisions of the Contract, including General and Supplementary Conditions and Division 01 Specification Sections, apply to this Section.

1.2 SUMMARY

A. Section Includes:
   1. Exterior sunshades.

B. Related Sections include the following:

   1. Division 09 Section "High Performance Coatings" for finishes on steel exterior sunshades.

1.3 PERFORMANCE REQUIREMENTS

A. Control of Corrosion: Prevent galvanic action and other forms of corrosion by insulating metals and other materials from direct contact with incompatible materials.

1.4 SUBMITTALS

A. Product Data: For each type of product indicated. Include finishing materials.

B. LEED Submittals:

   1. Product Data for Credit MR 4.1 and Credit MR 4.2: For products having recycled content, documentation indicating percentages by weight of postconsumer and preconsumer recycled content. Include statement indicating costs for each product having recycled content.

C. Shop Drawings: Show fabrication and installation details for decorative formed metal.

   1. Include plans, elevations, component details, and attachments to other work.
   2. Indicate materials and profiles of each decorative formed metal member, fittings, joinery, finishes, fasteners, anchorages, and accessory items.

D. Samples for Verification: For each type of exposed finish required, prepared on 6-inch- (150-mm-) square Samples of metal of same thickness and material indicated for the Work.

E. Qualification Data: For qualified Installer, fabricator and coating applicator.

F. Welding certificates.

1.5 QUALITY ASSURANCE

A. Fabricator Qualifications: A firm experienced in producing decorative formed metal similar to that indicated for this Project and with a record of successful in-service performance, as well as sufficient production capacity to produce required units.

B. Coating Applicator Qualifications: A firm experienced in successfully applying coatings of type indicated to metals of types indicated and that employs competent control personnel to conduct continuing, effective quality-control program to ensure compliance with requirements.

C. Installer Qualifications: Fabricator of products.

D. Welding Qualifications: Qualify procedures and personnel according to the following:

1. AWS D1.1/D1.1M, "Structural Welding Code - Steel."
2. AWS D1.2/D1.2M, "Structural Welding Code - Aluminum."
3. AWS D1.3, "Structural Welding Code - Sheet Steel."
4. AWS D1.6, "Structural Welding Code - Stainless Steel."

E. Mockups: Build mockups to verify selections made under sample submittals and to demonstrate aesthetic effects and set quality standards for fabrication and installation.

1. Build mockups for the following types of decorative formed metal:

a. Exterior Sunshades.

2. Approved mockups may become part of the completed Work if undisturbed at time of Substantial Completion.

F. Preinstallation Conference: Conduct conference at Project site.

1.6 DELIVERY, STORAGE, AND HANDLING

A. Deliver decorative formed metal products wrapped in protective coverings and strapped together in suitable packs or in heavy-duty cartons. Remove protective coverings before they stain or bond to finished surfaces.

B. Store products on elevated platforms in a dry location.

1.7 PROJECT CONDITIONS

A. Field Measurements: Verify actual locations of walls, columns, beams, and other construction contiguous with decorative formed metal by field measurements before fabrication and indicate measurements on Shop Drawings.

1.8 COORDINATION

A. Coordinate installation of anchorages for decorative formed metal items. Furnish setting drawings, templates, and directions for installing anchorages, including sleeves, concrete inserts, anchor bolts, and items with integral anchors, that are to be embedded in concrete or masonry. Deliver such items to Project site in time for installation.

B. Coordinate installation of decorative formed metal with adjacent construction to ensure that wall assemblies, flashings, trim, and joint sealants, are protected against damage from the effects of weather, age, corrosion, and other causes.

PART 2 - PRODUCTS

2.1 STEEL PIPE

A. Steel Pipe: Extra strong (Schedule 80) unless otherwise indicated.

2.2 SHEET METAL

A. General: Provide sheet metal without pitting, seam marks, roller marks, stains, discolorations, or other imperfections where exposed to view on finished units.

B. Recycled Content of Steel Products: Provide products with an average recycled content of steel products so postconsumer recycled content plus one-half of preconsumer recycled content is not less than 25 percent.

C. Steel Sheet: Uncoated, cold-rolled, ASTM A 1008/A 1008M, commercial steel, exposed or electrolytic zinc-coated, ASTM A 879/A 879M, with steel sheet substrate complying with ASTM A 1008/A 1008M, commercial steel, exposed.

2.3 MISCELLANEOUS MATERIALS

A. Filler Metal and Electrodes: Provide type and alloy of filler metal and electrodes as recommended by producer of metal to be welded or brazed and as necessary for strength, corrosion resistance, and compatibility in fabricated items.

B. Fasteners: Fabricated from same basic metal and alloy as fastened metal unless otherwise indicated. Do not use metals that are incompatible with materials joined.

1. Provide concealed fasteners for interconnecting decorative formed metal items and for attaching them to other work unless otherwise indicated.

2.4 PAINTS AND COATINGS

A. Shop Primers: Comply with Division 09 Section "High-Performance Coatings."

2.5 FABRICATION, GENERAL

A. Shop Assembly: Preassemble decorative formed metal items in shop to greatest extent possible to minimize field splicing and assembly. Disassemble units only as necessary for shipping and handling limitations. Clearly mark units for reassembly and coordinated installation.

B. Coordinate dimensions and attachment methods of decorative formed metal items with those of adjoining construction to produce integrated assemblies with closely fitting joints and with edges and surfaces aligned unless otherwise indicated.

C. Form metal to profiles indicated, in maximum lengths to minimize joints. Produce flat, flush surfaces without cracking or grain separation at bends. Fold back exposed edges of unsupported sheet metal to form a 1/2-inch- (12-mm-) wide hem on the concealed side, or ease edges to a radius of approximately 1/32 inch (1 mm) and support with concealed stiffeners.

D. Increase metal thickness or reinforce with concealed stiffeners, backing materials, or both, as needed to provide surface flatness equivalent to stretcher-leveled standard of flatness and sufficient strength for indicated use.

   1. Support joints with concealed stiffeners as needed to hold exposed faces of adjoining sheets in flush alignment.

E. Build in straps, plates, and brackets as needed to support and anchor fabricated items to adjoining construction. Reinforce decorative formed metal items as needed to attach and support other construction.

F. Provide support framing, mounting and attachment clips, splice sleeves, fasteners, and accessories needed to install decorative formed metal items.

G. Where welding or brazing is indicated, weld or braze joints and seams continuously. Grind, fill, and dress to produce smooth, flush, exposed surfaces in which joints are not visible after finishing is completed.

2.6 GENERAL FINISH REQUIREMENTS

A. Comply with NAAMM's "Metal Finishes Manual for Architectural and Metal Products" for recommendations for applying and designating finishes.

B. Finish exterior sunshades after assembly.

C. Appearance of Finished Work: Variations in appearance of abutting or adjacent pieces are acceptable if they are within one-half of the range of approved Samples. Noticeable variations in the same piece are not acceptable. Variations in appearance of other components are acceptable if they are within the range of approved Samples and are assembled or installed to minimize contrast.

2.7 STEEL SHEET FINISHES

1. Surface Preparation: Clean surfaces to comply with SSPC-SP 1, "Solvent Cleaning," to remove dirt, oil, grease, or other contaminants that could impair paint bond. Prepare

surfaces complying with SSPC-SP 6/NACE No. 3, "Commercial Blast Cleaning" or as required by coating manufacturer.

B. Pretreatment: Immediately after cleaning, apply a conversion coating of type suited to coating applied over it.

PART 3 - EXECUTION

3.1 EXAMINATION

A. Examine substrates, areas, and conditions, with Installer present, for compliance with requirements for installation tolerances and other conditions affecting performance of decorative formed metal.

B. Proceed with installation only after unsatisfactory conditions have been corrected.

3.2 INSTALLATION

A. Locate and place decorative formed metal items level and plumb and in alignment with adjacent construction. Perform cutting, drilling, and fitting required to install decorative formed metal.

1. Do not cut or abrade finishes that cannot be completely restored in the field. Return items with such finishes to the shop for required alterations, followed by complete refinishing, or provide new units as required.

B. Use concealed anchorages where possible. Provide brass or lead washers fitted to screws where needed to protect metal surfaces and to make a weathertight connection.

C. Form tight joints with exposed connections accurately fitted together. Provide reveals and openings for sealants and joint fillers as indicated.

D. Corrosion Protection: Apply bituminous paint or other permanent separation materials on concealed surfaces where metals would otherwise be in direct contact with substrate materials that are incompatible or could result in corrosion or deterioration of either material or finish.

3.3 ADJUSTING AND CLEANING

A. Unless otherwise indicated, clean metals by washing thoroughly with clean water and soap, rinsing with clean water, and drying with soft cloths.

B. Touchup Painting: Cleaning and touchup painting of field welds, bolted connections, and abraded areas of shop paint are specified in Division 09 painting Sections and Division 09 Section "High-Performance Coatings."

C. Restore finishes damaged during installation and construction period so no evidence remains of correction work. Return items that cannot be refinished in the field to the shop; make required alterations and refinish entire unit or provide new units.

3.4 PROTECTION

A. Protect finishes of decorative formed metal items from damage during construction period. Remove temporary protective coverings at time of Substantial Completion.

END OF SECTION 057500

Questions Submitted by General Contractors

1. (Previously submitted via email dated 2.25/2008) Section 012300 indicates there are 4 bid alternates. However the Cost Proposal Form is set-up as a lump sum cost proposal. How are we to breakout and show these alternate bid items?

Answer: A new bid form will be prepared and furnished via future addendum to address this matter.

2. On sheets CG301 and 302 note C indicates a handicapped access ramp on the corner of 2200 W. and 1700 N. Should they also be in the drive approaches to this facility?

Answer: The sidewalk at 2200 West Street is an at grade sidewalk per Salt Lake City Standard Plans and Specifications. It does not step down to meet the pavement at the entrances. Therefore, handicap ramps are not required at these locations. Refer to APWA Std. Plan 225 as indicated by Keyed Construction Note "D" on sheets CG301 and CG302. (Not an addendum item)

3. Sheet LS101, note 8 calls for a flag pole (singular) and points to one location. However, on either side of that location two similar symbols are shown. Does that mean there are 3 flag poles?

Answer: It is meant to indicate all three symbols. There should be three flagpoles as part of the bid. (Addendum item)

4. Sheet AE101, note 5 calls for metal equipment lockers. Specification 105113, Metal Lockers, is for the double tiered athletic lockers. Please provide a spec for the metal equipment lockers.

Answer: Specification 105114 will be provided in the Addendum. (Addendum item)

5. Sheet AE101, note 41 states "Not Used". However, there is a note 41 shown in room 115. Should this note reference be ignored?

Answer: Delete Keynote 41 from Room 115. (Addendum item)

6. Specification 102226, Operable Panel Partitions, paragraph 1.2 indicates there are five locations for these partitions on the drawings. The drawings only show two locations in rooms 203-205. Are there other locations?

Answer: Specification 102226 should indicate only (2) locations of Operable Panel Partitions.

7. Sheet AE103, note 26 states that motorized window shades are to be installed on all W13 windows in the second floor hallway per alternate bid item b. #2. Alternate 3.1.A in

section 012300 lists shades for "windows W11 (in the second floor hallways and W12 (in the light monitors)." This is confusing; please clarify where the motorized window shades go.

Answer: Specification should include W11 and W13 only. (Addendum item)

8. Specification 0123000, paragraph 3.1.C states that evaporative cooling sections in AHU-3 through AHU-7 should be bid as an alternate. The mechanical plans and schedules do not list an AHU-6 or 7. Is this in error?

Answer: Specifications should say AHU-3, AHU-4, and AHU-5 only. (Addendum item)

9. Sheet ES101 indicates an underground power feed from the Readiness Center building to panel UHB in the Unheated Storage Building. Sheet EP103 indicates the power for the Controlled Waste Facility (CWF) is fed from panel UHB, but sheet ES101 does not indicate if this feed is to be underground or overhead. How should the CWF be fed?

Answer: This requires an underground feed. (Not an addendum item.)

10. In the "Procurement Process" section of the RFP, paragraph 16 says the project schedule is to be submitted with the Management Plan. The schedule says it is to be submitted with the Cost Proposal. Which is correct?

Answer: The requirement to submit a schedule, as indicated in prargraph 16 of the RFP, with the Management Plan prior to short listing is voided. All firms shall submit a Management Plan when required by the RFP's Project Schedule. However, only short listed firms will need to submit a schedule and the schedule shall be submitted with the firm's Cost Propsal when required by the RFP's Project Schedule.

11. In the "Procurement Process" section of the RFP, paragraph 13 says cost reduction proposals are to be submitted by the deadline indicated in the Project Schedule. The schedule does not specifically provide a deadline, although it can be assumed they would be due the same time as the Cost Proposal. However, since most subcontractors will provide these on bid day, there is insufficient time to evaluate and turn them in. Request they be due on the following day along with the subcontractor list to allow time to evaluate them.

Answer: Good suggestion: cost reduction proposals (if any) shall be submitted on Wednesday, April 9, 2008 by 12:00 Noon with the Subcontractor List.

12. Would you please post the soils report for this project?

Answer: Yes. The geotech report is furnished for the Contractor's reference only. The Contractor shall notify DFCM immediately if the Contractor identifies any conflicts between the contract documents and the geotech report.

Gordon Spilker Huber
Geotechnical Consultants, Inc.

REPORT
GEOTECHNICAL STUDY
PROPOSED READINESS CENTER AND CIVIL SUPPORT TEAM BUILDING
SOUTHEAST CORNER OF 1700 NORTH AND 2200 WEST STREETS
SALT LAKE CITY, UTAH

Submitted To:

Gillies Stransky Berms Smith PC
375 West 200 South, Suite 100
Salt Lake City, Utah 84101

Submitted By:

Gordon Spilker Huber Geotechnical Consultants, Inc.
4426 South Century Drive, Suite 100
Salt Lake City, Utah 84123

September 29, 2006

Job No. 0341-001-06

GSH
Gordon Spilker Huber
Geotechnical Consultants, Inc.

September 29, 2006
Job No. 0341-001-06

Gillies Stransky Berms Smith PC
375 West 200 South, Suite 100
Salt Lake City, Utah 84101

Attention: Mr. Martin Kemsley

Gentlemen:

Re: Report
Geotechnical Study
Proposed Readiness Center and
Civil Support Team Building
Southeast Corner of 1700 North
and 2200 West Streets
Salt Lake City, Utah

1. INTRODUCTION

1.1 GENERAL

This report presents the results of our geotechnical study performed at the site of the proposed Readiness Center and Civil Support Team Building, which is to be located at the southeast corner of 1700 North and 2200 West Streets in Salt Lake City, Utah. The general location of the site with respect to major topographic features and existing facilities, as of 1998, is presented on Figure 1, Vicinity Map. A more detailed layout of the site showing proposed facilities, existing roadways and the borings drilled in conjunction with this study as well as a previous study for the development dated January 19, 2005[1] is presented on Figure 2, Site Plan. In addition to this report, preliminary information was provided in a memorandum dated March 8, 2005[2]. The locations of the borings drilled in conjunction with this study (B-1A through B-7A) as well as the January 19, 2005 report (B-1 and B-2) are also presented on Figure 2.

---

1 "Report, Preliminary Geotechnical Reconnaissance, Property Located Southeast of the Intersection of 1700 North 2200 West, Salt Lake City, Utah," AMEC Job No. 5-817005006.

2 "Memorandum, Supplemental Discussions, Property Located Southeast of the Intersection of 1700 North 2200 West, Salt Lake City, Utah," AMEC Job No. 5-817-005006.

Gordon Spilker Huber Geotechnical Consultants, Inc.
4426 South Century Drive, Suite 100
Salt Lake City, Utah 84123
Tel: (801) 293-3478 Fax: (801) 685-2990
www.gshgeotech.com

1.2 OBJECTIVES AND SCOPE

The objectives and scope of our study were planned in discussions between Mr. Martin Kemsley of Gillies Stransky Berms Smith PC, and Mr. Bill Gordon of Gordon Spilker Huber Geotechnical Consultants, Inc. (GSH).

In general, the objectives of this study were to:

1. Review of the previous reports for the site.

2. Define and evaluate the subsurface soil and groundwater conditions across the site.

3. Provide appropriate foundation, earthwork, and pavement recommendations to be utilized in the design and construction of the proposed facilities.

In accomplishing these objectives, our scope has included the following:

1. Reviewing of previous reports for the site.

2. A field program consisting of the drilling, logging, and sampling of seven exploration borings.

3. A laboratory testing program.

4. An office program consisting of the correlation of available data, engineering analyses, and the preparation of this summary report.

1.3 AUTHORIZATION

Authorization was provided by returning a signed copy of our Professional Services Agreement No. 06-0638 dated June 30, 2006.

1.4 PROFESSIONAL STATEMENTS

Supporting data upon which our recommendations are based are presented in subsequent sections of this report. Recommendations presented herein are governed by the physical properties of the soils encountered in the exploration borings, projected groundwater conditions, and the layout and design data discussed in Section 2., Proposed Construction, of this report. If subsurface conditions other than those described in this report are encountered and/or if design and layout changes are implemented, GSH must be informed so that our recommendations can be reviewed and amended, if necessary.

Our professional services have been performed, our findings developed, and our recommendations prepared in accordance with generally accepted engineering principles and practices in this area at this time.

2. PROPOSED CONSTRUCTION

The proposed development will consist of one primary structure. The structure is planned to be one-extended to two levels in height. The Readiness Center and Civil Support Team Building will have an area of approximately 71,000 square feet. The building will be established slab-on-grade and will be of CMU and steel-frame construction. In addition, there will be a detention pond, gatehouse, and outside storage structure in the locations indicated on Figure 2.

Structural loads on the primary building will be transmitted down through columns and bearing walls to the supporting foundations. Maximum column and wall loads are anticipated to be on the order of 80 to 85 kips and 4 to 5 kips per lineal foot, respectively. Floor slab loads will be moderate and are projected to have maximum average uniform pressures of 200 pounds per square foot.

Paved parking and roadway areas will be part of the overall development. We anticipate that parking areas will be subjected to traffic consisting of a light to moderate volume of automobiles and light trucks and occasional medium-weight trucks. In the roadways and truck parking areas, the traffic is anticipated to consist of a moderate volume of medium- to heavy-weight trucks.

Maximum site grading cuts and fills are anticipated to be up to approximately eight feet.

3. SITE INVESTIGATIONS

3.1 FIELD PROGRAM

In order to define and evaluate the subsurface soil and groundwater conditions across the site, 7 borings (B-1A through B-7A) were drilled in conjunction with this study to depths ranging from 5.0 to 31.5 feet with a truck-mounted drill rig equipped with hollow-stem augers. Borings B-1 and B-2 were done in conjunction with the January 19, 2005 report. Locations of the borings from the current and the January 19, 2005 studies are presented on Figure 2.

The field portion of our study was under the direct control and continual supervision of an experienced member of our geotechnical staff. During the course of the drilling operations, a continuous log of the subsurface conditions encountered was maintained. The soils were classified in the field based upon visual and textural examination. These classifications were supplemented by subsequent inspection and testing in our laboratory. A detailed graphical representation of the subsurface conditions encountered during this study (B-1A through B-7A) is presented on Figures 3A through 3G, Log of Borings. A detailed graphical representation of the subsurface conditions encountered during the January 19, 2005 study (B-1 and B-2) is presented on Figures 4A and 4B, Logs of Borings (January 19, 2005 Study). Soils were

classified in accordance with the nomenclature described on Figure 5, Unified Soil Classification System.

A 3.25-inch outside diameter, 2.42-inch inside diameter drive sampler (Dames & Moore) was utilized in the subsurface sampling at the site. The blow-counts recorded on the boring logs were those required to drive the sampler 12 inches with a 140-pound hammer dropping 30 inches.

Following completion of drilling operations, one and one-quarter-inch diameter slotted PVC pipe was installed in Borings B-1 and B-2 (January 19, 2005 study) and Borings B-1A and B-7A (from the current study) in order to provide a means of monitoring the groundwater fluctuations.

3.2 LABORATORY TESTING

3.2.1 General

In order to provide data necessary for our engineering analyses, a laboratory testing program was completed. The program included moisture, density, collapse-consolidation, and chemical tests. The following paragraphs describe the tests and summarize the test data.

3.2.2 Moisture and Density Tests

To provide index parameters and to correlate other test data, moisture and density tests were performed on selected undisturbed samples. The results of these tests are presented to the right on the boring logs, Figures 3A through 3G.

3.2.3 Partial Gradation Tests

To aid in classifying the granular soils, partial gradations tests were performed. Results of the tests area tabulated below:

Boring No.	Depth (feet)	Percent Passing No. 200 Sieve	Soil Classification
B-1	14.5	3.5	SP
B-2	10.0	40.7	SM/ML
B-2	20.0	32.4	SM

3.2.4 Collapse-Consolidation Tests

To provide data necessary for our settlement analyses, collapse-consolidation tests were performed on each of five representative samples of the natural soils that exhibit a “pinhole”-type structure. In addition, two collapse tests were performed on soils that exhibit a “pinhole”-

type structure during the March 8, 2005 study and are included in this report. The collapse portion of the overall test was performed in accordance with the following procedure:

1. Load sample at in-situ moisture content to specific axial pressure.
2. Measure and record axial deflection.
3. Saturate sample.
4. Measure and record resulting collapse.

The results of the collapse portion of the test are tabulated below:

Boring No.	Depth (feet)	Soil Type	Natural Dry Density (pcf)	Natural Moisture Content (percent)	Axial Load When Saturated (psf)	Collapse (-) (percent)
B-1*	2.0	CL	96	8.2	1,600	0.90 (-)
B-2*	5.0	CL	66	52.3	1,600	0.62 (-)
B-1A	3.0	CL	101	7.9	1,600	0.70 (-)
B-2A	14.5	CL	62	62.5	1,600	0
B-3A	3.0	CL	102	4.6	1,600	0.72 (-)
B-7A	8.0	SC/CL	98	5.3	100	0
B-7A	15.5	CL	63	61.9	100	0

* Tests from March 8, 2005 report.

Upon completion of the collapse portion of the tests, standard consolidation test loading was applied. The results of these tests indicate the samples from Borings B-1 at two feet and Boring B-2 at five feet from the March 8, 2005 study and Borings B-1A at three feet and Boring B-3A at five feet from this study exhibited only slightly collapse that upon examination of test data, as well as re-examination of the samples is likely due to sample disturbance and not to collapse potential. The remaining samples tested exhibited a negligible swell and are moderately over-consolidated. Detailed results of these tests are maintained within our files and can be transmitted to you, upon your request.

3.2.5 Chemical Tests

To determine if the site soils will react detrimentally with concrete, pH and soluble sulfates tests were performed on a representative sample of the natural near-surface soils. The results of those tests are tabulated on the following page.

Boring No.	Depth (feet)	USCS Group Symbol	pH	Water Soluble Sulfate (mg/kg-dry)
B-5A	0.0 – 5.0	CL	9.28	< 5.4

4. SITE CONDITIONS

4.1 SURFACE

The site, which is located on the southeast corner of 1700 North and 2200 West in Salt Lake City, Utah, is currently undeveloped. The site is a roughly square parcel with plan dimensions on the order of 980-feet by 1,030-feet. Interstate 215 bounds the site to the east. The west property boundary is 2200 West Street. The north property boundary is 1700 North Street and the property is bounded to the south by undeveloped land.

The central and west portions of the site are relatively level, however the north, east, and south portions of the property slope downward with a maximum elevation difference of approximately eight feet. The proposed building area is mostly level, however, the northern portion of the proposed building area slopes downward approximately three feet.

The majority of the site is covered with moderate amounts of weeds, brush, and scattered trees.

4.2 SUBSURFACE SOIL

The soil conditions encountered in the seven borings were relatively consistent across the site. In Borings B-1A, B-3A, and B-7A, silty clays were encountered to depths of 8.0, 8.0, and the extent explored, 16.5 feet, in Borings B-1A, B-3A, and B-7A, respectively. In some locations to depths up to seven feet the clay soils exhibit a slight “pinhole”-type structure which may be indicative of a moisture sensitive (collapsible) soil. Laboratory data shows that these soils in some areas exhibit only a slight collapse potential and in others no potential. The clay soils are moist, medium stiff to very stiff, and will exhibit moderate strength and compressibility characteristics. At the surface of the other borings to depths of up to five feet are silty sand/sandy silts. These sands/silts are medium dense to dense, slightly moist, light brown, and will exhibit moderately high strength and moderately low compressibility characteristics under the projected loadings. Major root zones to approximately one to three inches thick, which have been classified as topsoil, were encountered at the ground surface at some of the boring locations. In addition the surficial soils, approximately six to nine inches deep, are loose and disturbed from normal weathering and previous agricultural activity. Topsoil and disturbed soils will exhibit poor engineering characteristics.

Below the surface clays at Boring B-1A is a four and one-half-foot thick layer of alternating layers up to eight inches thick of silty clay and sand. Underlying the surface clays at

Boring B-3A is a five-foot thick layer of silty sand. These sand layers are medium dense, slightly moist to moist, and brown. The layered clays are moist, very stiff, and brown.

Under the sands at Borings B-1A and B-3A are silty clays that extend to 26.0 feet in Boring B-1A and to the extent explored, 16.5 feet, in Boring B-3A. These deep clays are soft to medium stiff, moist to saturated, and gray. Below the deep clays at Boring B-1A are silty sands which are medium dense, gray, and saturated.

Borings B-1 and B-2 (January 19, 2005 study) encountered the clay-sand-clay-sand sequences as Boring B-1A with slightly different depths to each of the individual layers.

The lines designating the interface between soil types on the boring logs generally represent approximate boundaries. In-situ, the transition between soil types may be gradual.

4.3 GROUNDWATER

Immediately following drilling operations, groundwater was measured at a depth of 25 feet below existing grade within Boring B-1A. Four weeks following drilling, groundwater was measured at a depth of 17.3 feet within Boring B-1A. Groundwater had stabilized in Borings B-1 and B-2 at depths of 13.6 feet and 7.8 feet as indicated in the March 8, 2005 report. Groundwater was not encountered within the other borings performed in conjunction with this report.

Seasonal and longer-term groundwater fluctuations on the order of one to two feet are projected. The highest seasonal levels will generally occur during the late spring and early summer months.

5. DISCUSSIONS AND RECOMMENDATIONS

5.1 SUMMARY OF FINDINGS

The geotechnical aspects of the site that will most influence the design and construction of the proposed structures and pavements are the loose, disturbed surficial soils encountered across the site to depths of approximately six to nine inches.

The loose disturbed surficial soils must be removed from an area extending out at least five feet from the perimeter of the proposed structures and pavements.

The proposed structures may be supported upon conventional spread and continuous wall foundations supported upon suitable natural soils or granular structural fill extending to suitable natural soils.

Detailed discussions pertaining to earthwork, foundations, floor slabs, lateral resistance, pavements, and the geoseismic setting of the site are discussed in the following sections.

5.2 EARTHWORK

5.2.1 Site Preparation

Initial site preparation will consist of the removal of surface vegetation, topsoil, loose/disturbed surficial soils, and other deleterious materials from beneath the pavements, exterior flatwork areas, and from an area extending out at least five feet from the perimeter of the proposed structures.

Subsequent to the above operations and prior to the placement of footings, structural site grading fill, or floor slabs, the exposed natural subgrade must be proofrolled by passing moderate-weight rubber tire-mounted construction equipment over the surface at least twice. If any loose, soft, or disturbed zones are encountered, they must be completely removed in footing and floor slab areas and replaced with granular structural fill. In pavement areas, unsuitable soils encountered during recompaction and proofrolling must be removed to a maximum depth of two feet and replaced with compacted granular structural fill.

5.2.2 Temporary Excavations

Temporary construction excavations not exceeding four feet in depth may be constructed with near-vertical sideslopes. Deeper construction excavations up to eight feet in depth in the natural soils may be constructed with sideslopes no steeper than one-half horizontal to one vertical. Where granular soils are encountered in deeper excavations, sideslopes shall be no steeper than three quarters horizontal to one vertical. Excavations deeper than eight feet are not anticipated at the site. If excessive sloughing occurs, or where extensive layers of clean granular soils are encountered, the sideslopes should be appropriately flattened.

All excavations must be inspected periodically by qualified personnel. If any signs of instability are noted, immediate remedial action must be initiated.

5.2.3 Structural Fill

Structural fill will be required as site grading fill, as backfill over foundations and utilities, and potentially as replacement fill below footings. All structural fill must be free of sod, rubbish, construction debris, frozen soil, and other deleterious materials. Structural site grading fill is defined as fill placed over fairly large open areas to raise the overall site grade.

The maximum particle size within structural site grading area should generally not exceed four inches; although, occasional particles up to six to eight inches may be incorporated provided that they do not result in “honeycombing” or preclude the obtainment of the desired degree of compaction. In confined areas, the maximum particle size should generally be restricted to two and one-half inches.

On-site fine-grained and granular soils may be re-utilized as structural site grading fill if they do not contain deleterious material. The fine-grained soils will require that very close moisture control be maintained during placement and compaction. It will be very difficult, if not impossible, to properly place and compact these fills during wet and cold periods of the year.

Generally, we recommend that all imported structural fill consist of a well-graded mixture of sands and gravels with a minimum of 20 percent fines (material passing the No. 200 sieve). Granular fills are also recommended in confined areas.

Non-structural site grading fill is defined as all fill material not designated as structural fill, and may consist of any cohesive or granular soils not containing excessive amounts of degradable material.

5.2.4 Fill Placement and Compaction

All structural fill placed within the area extending 5 feet from the perimeter of the building should be placed in lifts not exceeding 8 inches in loose thickness and compacted to at least 95 percent of the maximum dry density as determined by the AASHTO[3] T-180 (ASTM[4] D-1557) compaction criteria. Fills less than 5 feet thick and outside the building area should be compacted to at least 90 percent of the above-defined criteria. Fills thicker than five feet are not anticipated at the site. However, if over 5 feet thick and beneath structure the compaction should be increased to 97 percent of the above-defined criteria.

Prior to the placement of structural site grading fill, pavements, floor slabs, or footings, the exposed subgrade must be prepared as discussed in Section 5.2.1, Site Preparation, of this report. In confined areas, subgrade preparation must consist of the removal of all loose or disturbed soils.

Non-structural fill may be placed in lifts not exceeding 12 inches in loose thickness and compacted by passing construction, spreading, or hauling equipment over the surface at least twice.

5.2.5 Utility Trenches

All utility trench backfill material below structurally loaded facilities (flatwork, floor slabs, roads, etc.) should be placed at the same density requirements established for structural fill. If the surface of the backfill becomes disturbed during the course of construction, the backfill should be proofrolled and/or properly compacted prior to the construction of any exterior flatwork over a backfilled trench. Proofrolling may be performed by passing moderately loaded rubber tire-mounted construction equipment uniformly over the surface at least twice. If excessively loose or soft areas are encountered during proofrolling, they should be removed to a maximum depth of two feet below design finish grade and replaced with structural fill.

---

[3] American Association of State Highway and Transportation Officials
[4] American Society for Testing and Materials

Most utility companies and City-County governments are now requiring that Type A-1 or A-1a (AASHTO Designation – basically granular soils with limited fines) soils be used as backfill over utilities. These organizations are also requiring that in public roadways the backfill over major utilities be compacted over the full depth of fill to at least 96 percent of the maximum dry density as determined by the AASHTO T-180 (ASTM D-1557) method of compaction. We recommend that as the major utilities continue onto the site that these compaction specifications are followed.

The fine-grained soils are not recommended for use as trench backfill.

5.3 SPREAD AND CONTINUOUS WALL FOUNDATIONS

5.3.1 Design Data

The results of our analyses indicate that the proposed structure may be supported upon conventional spread and/or continuous wall foundations established upon on suitable natural granular soils or granular structural fill extending to suitable natural granular soils. For design, the following parameters are recommended:

Minimum Recommended Depth of Embedment for Frost Protection	- 30 inches
Minimum Recommended Depth of Embedment for Non-frost Conditions	- 15 inches
Recommended Minimum Width for Continuous Wall Footings	- 18 inches
Minimum Recommended Width for Isolated Spread Footings	- 24 inches
Recommended Net Bearing Pressure for Real Load Conditions	- 2,000 pounds per square foot
Bearing Pressure Increase for Seismic Loading	- 50 percent

The term “net bearing pressure” refers to the pressure imposed by the portion of the structure located above lowest adjacent final grade. Therefore, the weight of the footing and backfill to lowest adjacent final grade need not be considered. Real loads are defined as the total of all dead plus frequently applied live loads. Total load includes all dead and live loads, including seismic and wind.

5.3.2 Installation

Under no circumstances should the footings be established upon loose or disturbed soils, sod, rubbish, construction debris, non-engineered fill, other deleterious materials, frozen soils, or within ponded water. If unsuitable soils are encountered, they must be removed and replaced with compacted structural fill. If granular structural fills become loose or disturbed, they must be recompacted to the requirements for structural fill.

The width of structural replacement fill below footings should be equal to the width of the footing plus one foot for each foot of fill thickness.

5.3.3 Settlements

Settlement of foundations designed and installed in accordance with the above recommendations, and supporting maximum loads as discussed in Section 2., Proposed Construction, should not exceed three-eighths to one-half of an inch. Settlements will occur rapidly with approximately 50 to 60 percent of the quoted settlements occurring during construction.

5.4 LATERAL RESISTANCE

Lateral loads imposed upon foundations due to wind or seismic forces may be resisted by the development of passive earth pressures and friction between the base of the footings and the supporting soils. In determining frictional resistance, a coefficient of 0.45 should be utilized. Passive resistance provided by properly placed and compacted granular structural fill above the water table may be considered equivalent to a fluid with a density of 300 pounds per cubic foot. Below the water table, this granular soil should be considered equivalent to a fluid with a density of 150 pounds per cubic foot.

A combination of passive earth resistance and friction may be utilized provided that the friction component of the total is divided by 1.5.

5.5 FLOOR SLABS

Floor slabs must be established upon suitable natural soils and/or upon structural fill extending to suitable natural soils. Under no circumstances should floor slabs be established over potentially collapsible soils, loose or disturbed soils, sod, rubbish, construction debris, non-engineered fill, other deleterious materials, frozen soils, or within ponded water. Capillary break gravels will not be required beneath at-grade slabs due to the depth to the water table.

Settlement of moderately loaded floor slabs (200 pounds per square foot or less) is anticipated to be minor.

5.6 PAVEMENTS

The existing natural soils encountered at the site will exhibit poor pavement support characteristics when saturated or near saturated. All pavement areas must be prepared as previously discussed. The natural subgrade must be prepared as described in Section 5.2.1, Site Preparation. With the subgrade soils and the projected traffic as discussed in Section 2., Proposed Construction, the following pavement sections are recommended:

Parking Areas

(Moderate Volume of Automobiles and Light Trucks
with Occasional Medium-Weight Trucks
and No Heavy-Weight Trucks)
[1 equivalent 18-kip axle load per day]

Flexible Pavements:
(Asphalt Concrete)

2.5 inches	Asphalt concrete
8.0 inches	Aggregate base course
Over	Properly prepared natural subgrade soils, and/or structural site grading fill extending to natural subgrade soils

Rigid Pavements:
(Non-Reinforced Concrete)

5.0 inches	Portland cement concrete (non-reinforced)
4.0 inches	Aggregate base course
Over	Properly prepared natural subgrade soils, and/or structural site grading fill extending to natural subgrade soils

.

Roadway Areas

(Moderate Volume of Automobiles, Light Trucks
and Medium-Weight Trucks
and Heavy-Weight Trucks)
[25 equivalent 18-kip axle loads per day]

Flexible Pavements:
(Asphalt Concrete)

4.0 inches	Asphalt concrete
6.0 inches	Aggregate base course
10.0 inches	Granular subbase
Over	Properly prepared natural subgrade soils, and/or structural site grading fill extending to natural subgrade soils

Rigid Pavements:
(Non-Reinforced Concrete)

6.0 inches	Portland cement concrete (non-reinforced)
4.0 inches	Aggregate base course
10.0 inches	Granular subbase
Over	Properly prepared natural subgrade soils, and/or structural site grading fill extending to natural subgrade soils

These rigid pavement sections are for non-reinforced Portland cement concrete. Construction of the rigid pavement should be in sections 10 to 12 feet in width with construction or expansion joints or one-quarter depth saw-cuts on no more than 12-foot centers. Saw-cuts must be completed within 24 hours of the "initial set" of the concrete and should be performed under the direction of the concrete paving contractor. The concrete should have a minimum 28-day unconfined compressive strength of 4,000 pounds per square inch and contain 6 percent ±1 percent air-entrainment.

5.7 CEMENT TYPE

Laboratory tests indicate that the site soils contain negligible amounts of water soluble sulfates. Therefore, all concrete which will be in contact with the site soils may be prepared using Type I or IA cement.

5.8 GEOSEISMIC SETTING

5.8.1 General

Utah municipalities have adopted the International Building Code (IBC) 2003. The IBC 2003 code determines the seismic hazard for a site based upon regional mapping of bedrock accelerations prepared by the United States Geologic Survey (USGS) and the soil site class (formerly soil profile type). The USGS values are presented on maps incorporated into the IBC code and are also available based on latitude and longitude coordinates (grid points). In comparison, the former UBC (Uniform Building Code) generally placed the entire Wasatch front into a single seismic zone (Seismic Zone 3).

The structures must be designed in accordance with the procedure presented in Chapter 16 of the IBC 2003 edition.

5.8.2 Site Class

For dynamic structural analysis, the Site Class "D" as defined in Table 1615.1.1, Site Class Definitions of the 2003 IBC, can be utilized.

5.8.3 Faulting

The Wasatch Fault zone is located near the southeast corner of the site as mapped by Salt Lake County. The proposed buildings are located outside of the special study zone. Any development proposed within the study zone will require a fault rupture hazard study.

5.8.4 Ground Motions

The IBC 2003 code is based on 1997 USGS (United State Geologic Survey) mapping, which provides values of short and long period accelerations for the Site Class "B"-"C" boundary for the 2 percent in 50 year event (2,475 year return period). This Site Class "B"-"C" boundary represents a hypothetical bedrock surface and must be corrected for local soil conditions. The following table summarizes the peak horizontal and short and long period accelerations for a 2 percent in 50-year event <u>and incorporates a soil amplification factor for a Site Class "D" soil profile</u>. Based on the site latitude and longitude (40.8045 degrees north and 111.9521 degrees west, respectively), the values for this site are tabulated on the following page.

Spectral Acceleration Value, T Seconds	MCE 2% in 50 Yr event (2,475 yr return), % g
Peak Horizontal Ground Acceleration	64.6
0.2 Seconds, (Short Period Acceleration, S_{MS})	161.5
1.0 Seconds (Long Period Acceleration, S_{M1})	102.8

MCE – Maximum considered earthquake

The IBC 2003 code site accelerations are based on taking the above short and long period accelerations for the Maximum Considered Earthquake Event, and multiplying by two-thirds (⅔).

5.8.5 Liquefaction

The site is located in an area that has been mapped as having a "high" liquefaction potential. Liquefaction is defined as the condition when saturated, loose, fine sand-type soils lose their support capabilities because of excessive pore water pressure which develops during a seismic event. Clayey soils, even if saturated, will not liquefy during a major seismic event.

The majority of the site soils are cohesive, however some of the saturated granular soils did exhibit a potential for liquefaction. From the March 8, 2005 study, the isolated potentially liquefiable saturated soils at Borings B-1 and B-2 indicated a settlement potential of approximately one-half to one and one-half inches during the design seismic event. This study found a layer in Boring B-1A at depths between 26.0 to 31.5 feet which indicates a settlement potential of approximately one inch.

Due to the thickness of the overlaying non-liquefiable soils as well as the thickness of the potential liquefiable layers, ground rupture is not anticipated at the site.

Due to the discontinuity of the potentially liquefiable layers lateral spread is not anticipated at the site.

Calculations performed used the procedures described in NCEER-97-0022 entitled, "Proceedings of the NCEER Workshop on Evaluation of Liquefaction Resistance of Soils," and only apply to the saturated cohesionless deposits.

GSH
Gordon Spilker Huber
Geotechnical Consultants, Inc.

We appreciate the opportunity of providing this service for you. If you have any questions or require additional information, please do not hesitate to contact us.

Respectfully submitted,

GSH Geotechnical Consultants, Inc.

Hogan R. Wright, State of California No. 64276
State of Utah No. Pending
Professional Engineer

Reviewed by:

Michael S. Huber, State of Utah No. 343650
Professional Engineer

HRW/MSH:sn

Encl. Figure 1, Vicinity Map
Figure 2, Site Plan
Figures 3A through 3G, Log of Borings
Figures 4A and 4B, Logs of Borings (January 19, 2005 Study)
Figure 5, Unified Soil Classification System

Addressee (3)

GILLIES STRANSKY BERMS SMITH PC
JOB NO. 0341-001-06

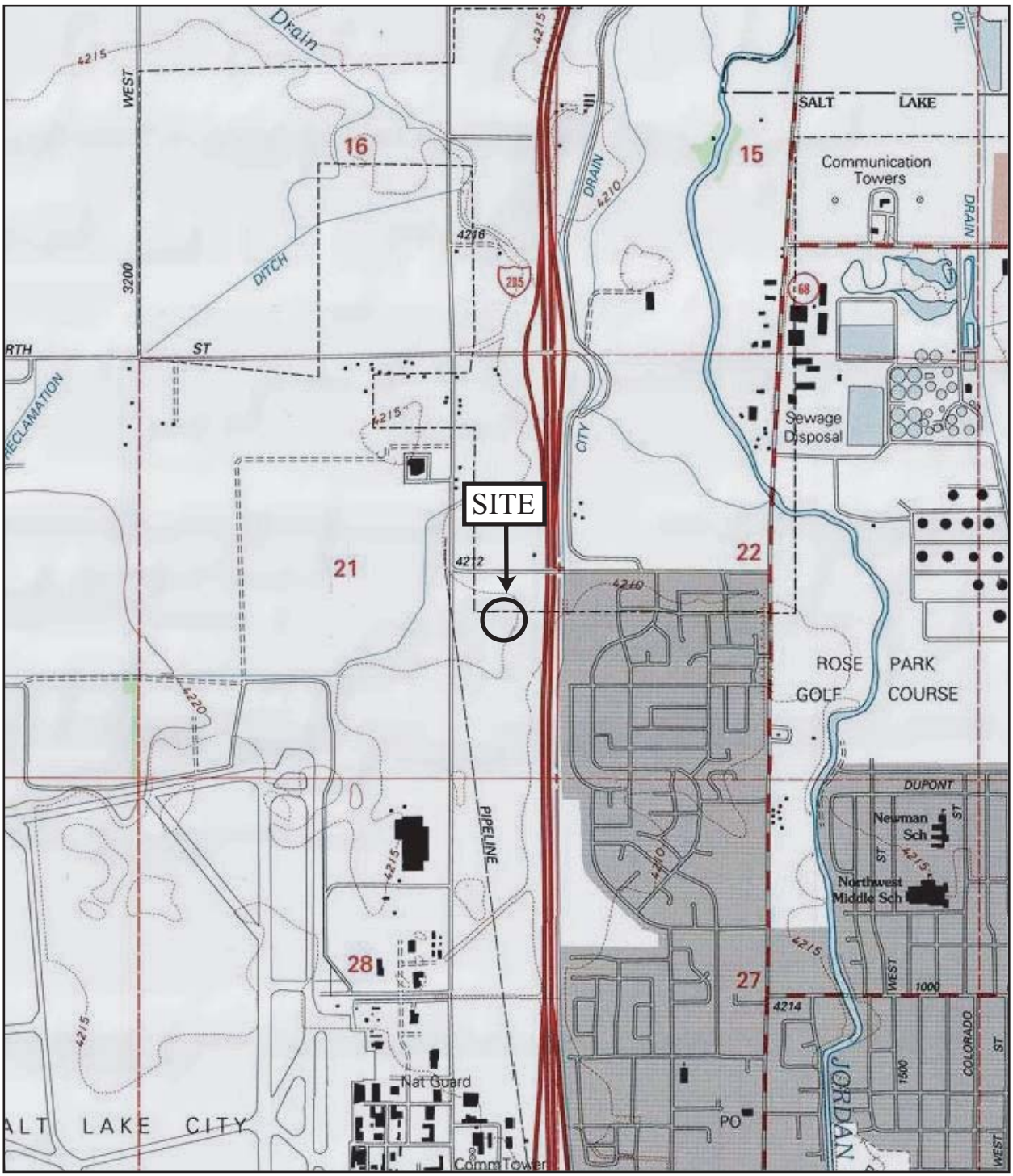

SCALE IN FEET
1000 0 1000 2000

FIGURE 1
VICINITY MAP

GSH
Gordon Spilker Huber
Geotechnical Consultants, Inc.

REFERENCE:
USGS 7.5 MINUTE TOPOGRAPHIC QUADRANGLE MAP
TITLED "SALT LAKE CITY NORTH, UTAH" DATED 1998

GILLIES STRANSKY BERMS SMITH PC
JOB NO. 0341-001-06

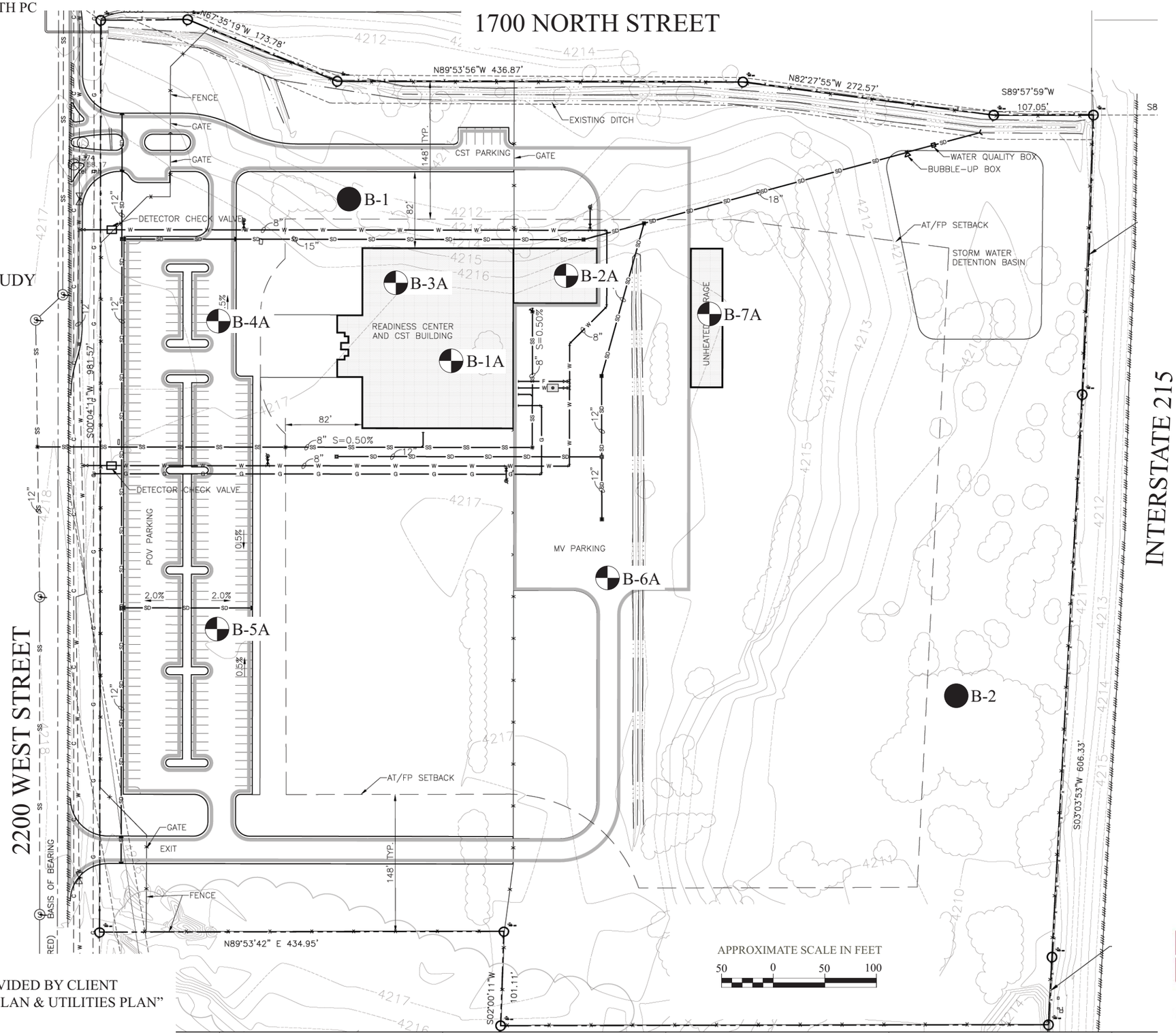

KEY:

THIS STUDY

JANUARY 19, 2005 STUDY

REFERENCE:
ADAPTED FROM DRAWING PROVIDED BY CLIENT
ENTITLED "CONCEPTUAL SITE PLAN & UTILITIES PLAN"
DATED MAY 24, 2006

FIGURE 2
SITE PLAN

GSH
Gordon Spilker Huber
Geotechnical Consultants, Inc.

Gordon Spilker Huber Geotechnical Consultants, Inc.
Salt Lake City, Utah 84123

Project Name: Readiness Center & Civil Support Team Bldgs
Project No.: 0341-001-06
Location: SE Crnr of 1700 N & 2200 W, Salt Lake City, Utah
Client: Gillies Stransky Berms Smith PC
Drilling Method: 3-3/4" ID Hollow-Stem Auger
Date Drilled: 07-19-06
Elevation: Approximately 4220' +/-
Water Level: 25.0' (07-19-06) 17.3' (08-15-06)
Remarks:

Graphical Log	Water Level	DESCRIPTION	DEPTH FT.	BLOWS/FT	SAMPLE SYMBOL	MOISTURE (%)	% PASSING 200	DRY DENSITY (PCF)	Liquid Limit (%)	Plastic Limit (%)	REMARKS
		Ground Surface	0								
		SILTY CLAY with some silty fine sand; major roots (topsoil) to 1" to 2"; some pinholes; brown (CL)									loose 6" to 9" slightly moist hard
				71							
		grades with occasional layers up to 1/8" thick of silty fine sand; without pinholes	5	24							very stiff
		SILTY CLAY AND SAND in alternating layers up to 8" thick; fine to coarse sand; brown (CL/SP)									moist medium dense very stiff
			10	26							
		SILTY CLAY with fine sand; occasional layers up to 1/4" thick of silty fine sand; gray (CL)									moist soft
			15	4							
		grades with black mottling	20	6							saturated medium stiff
			25								

The discussion in the text under the section titled, SUBSURFACE CONDITIONS, is necessary for a proper understanding of the nature of the subsurface material.

FIGURE 3A

Gordon Spilker Huber Geotechnical Consultants, Inc.
Salt Lake City, Utah 84123

Project Name: Readiness Center & Civil Support Team Bldgs
Project No.: 0341-001-06
Location: SE Crnr of 1700 N & 2200 W, Salt Lake City, Utah
Client: Gillies Stransky Berms Smith PC
Drilling Method: 3-3/4" ID Hollow-Stem Auger
Date Drilled: 07-19-06
Elevation: Approximately 4220' +/-
Water Level: 25.0' (07-19-06) 17.3' (08-15-06)
Remarks:

Graphical Log	Water Level	DESCRIPTION	DEPTH FT.	BLOWS/FT	SAMPLE SYMBOL	MOISTURE (%)	% PASSING 200	DRY DENSITY (PCF)	Liquid Limit (%)	Plastic Limit (%)	REMARKS
		SILTY SAND with occasional layers up to 1/4" thick of fine sand; fine to coarse sand; gray (SM)		17							stiff saturated medium dense
			30	32							
		Stopped drilling at 30.0'. Stopped sampling at 31.5'. Installed 1-1/4" diameter slotted PVC pipe to 30.0'.	35								
			40								
			45								
			50								

The discussion in the text under the section titled, SUBSURFACE CONDITIONS, is necessary for a proper understanding of the nature of the subsurface material.

FIGURE 3A
(con't)

Gordon Spilker Huber Geotechnical Consultants, Inc.
Salt Lake City, Utah 84123

Project Name: Readiness Center & Civil Support Team Bldgs
Project No.: 0341-001-06
Location: SE Crnr of 1700 N & 2200 W, Salt Lake City, Utah
Client: Gillies Stransky Berms Smith PC
Drilling Method: 3-3/4" ID Hollow-Stem Auger
Date Drilled: 07-19-06
Elevation: Approximately 4220' +/-
Water Level: No groundwater encountered.
Remarks:

Graphical Log	Water Level	DESCRIPTION	DEPTH FT.	BLOWS/FT	SAMPLE SYMBOL	MOISTURE (%)	% PASSING 200	DRY DENSITY (PCF)	Liquid Limit (%)	Plastic Limit (%)	REMARKS
		Ground Surface	0								
		SANDY SILT/SILTY SAND major roots (topsoil) to 2" to 3"; silty fine to coarse sand; light brown (ML/SM)									loose 6" to 9" slightly moist dense
				74							
		SILTY CLAY with occasional layers up to 1/4" thick of silty fine sand; without pinholes; brown with oxidation mottling (CL)	5								slightly moist very stiff
				47							
		grades with some pinholes	10								
				36							
		grades gray without pinholes									moist soft
			15	5							
		Stopped drilling at 14.0'. Stopped sampling at 15.5'. No groundwater encountered at time of drilling.	20								
			25								

The discussion in the text under the section titled, SUBSURFACE CONDITIONS, is necessary for a proper understanding of the nature of the subsurface material.

FIGURE 3B

Gordon Spilker Huber Geotechnical Consultants, Inc.
Salt Lake City, Utah 84123

Project Name: Readiness Center & Civil Support Team Bldgs
Project No.: 0341-001-06
Location: SE Crnr of 1700 N & 2200 W, Salt Lake City, Utah
Client: Gillies Stransky Berms Smith PC
Drilling Method: 3-3/4" ID Hollow-Stem Auger
Date Drilled: 07-19-06
Elevation: Approximately 4220' +/-
Water Level: No groundwater encountered.
Remarks:

Graphical Log	Water Level	DESCRIPTION	DEPTH FT.	BLOWS/FT	SAMPLE SYMBOL	MOISTURE (%)	% PASSING 200	DRY DENSITY (PCF)	Liquid Limit (%)	Plastic Limit (%)	REMARKS
		Ground Surface	0								
		SILTY CLAY with some fine sand; major roots (topsoil) to 2" to 3"; some pinholes; light brown (CL)									slightly moist very stiff
				59							
		grades with occasional layers up to 4" thick of fine sand; without pinholes		64							hard
			5								
		SILTY SAND fine to medium sand; brown with oxidation mottling (SM)									slightly moist medium dense
			10	30							
		SILTY CLAY with some fine sand; gray (CL)									moist soft
			15	1							
		Stopped drilling at 15.0'. Stopped sampling at 16.5'. No groundwater encountered at time of drilling.	20								
			25								

The discussion in the text under the section titled, SUBSURFACE CONDITIONS, is necessary for a proper understanding of the nature of the subsurface material.

FIGURE 3C

Gordon Spilker Huber Geotechnical Consultants, Inc.
Salt Lake City, Utah 84123

Project Name: Readiness Center & Civil Support Team Bldgs
Project No.: 0341-001-06
Location: SE Crnr of 1700 N & 2200 W, Salt Lake City, Utah
Client: Gillies Stransky Berms Smith PC
Drilling Method: 3-3/4" ID Hollow-Stem Auger
Date Drilled: 07-19-06
Elevation: Approximately 4220' +/-
Water Level: No groundwater encountered.
Remarks:

Graphical Log	Water Level	DESCRIPTION	DEPTH FT.	BLOWS/FT	SAMPLE SYMBOL	MOISTURE (%)	% PASSING 200	DRY DENSITY (PCF)	Liquid Limit (%)	Plastic Limit (%)	REMARKS
		Ground Surface									
		SANDY SILT/SILTY SAND major roots (topsoil) to 1" to 2"; fine sand; light brown (ML/SM)	0								loose 6" to 9" slightly moist "medium dense"
			5								
		Stopped drilling at 5.0'.									
		Stopped sampling at 4.5'.									
		No groundwater encountered at time of drilling.									
			10								
			15								
			20								
			25								

The discussion in the text under the section titled, SUBSURFACE CONDITIONS, is necessary for a proper understanding of the nature of the subsurface material.

FIGURE 3D

Gordon Spilker Huber Geotechnical Consultants, Inc.
Salt Lake City, Utah 84123

Project Name: Readiness Center & Civil Support Team Bldgs
Project No.: 0341-001-06
Location: SE Crnr of 1700 N & 2200 W, Salt Lake City, Utah
Client: Gillies Stransky Berms Smith PC
Drilling Method: 3-3/4" ID Hollow-Stem Auger
Date Drilled: 07-19-06
Elevation: Approximately 4220' +/-
Water Level: No groundwater encountered.
Remarks:

Graphical Log	Water Level	DESCRIPTION	DEPTH FT.	BLOWS/FT	SAMPLE SYMBOL	MOISTURE (%)	% PASSING 200	DRY DENSITY (PCF)	Liquid Limit (%)	Plastic Limit (%)	REMARKS
		Ground Surface									
		SANDY SILT/SILTY SAND major roots (topsoil) to 1" to 2"; fine sand; light brown (ML/SM)	0								loose 6" to 9" slightly moist "medium dense"
			5								
		Stopped drilling at 5.5'.									
		Stopped sampling at 5.0'.									
		No groundwater encountered at time of drilling.									
			10								
			15								
			20								
			25								

The discussion in the text under the section titled, SUBSURFACE CONDITIONS, is necessary for a proper understanding of the nature of the subsurface material.

FIGURE 3E

Gordon Spilker Huber Geotechnical Consultants, Inc.
Salt Lake City, Utah 84123

Project Name: Readiness Center & Civil Support Team Bldgs
Project No.: 0341-001-06
Location: SE Crnr of 1700 N & 2200 W, Salt Lake City, Utah
Client: Gillies Stransky Berms Smith PC
Drilling Method: 3-3/4" ID Hollow-Stem Auger
Date Drilled: 07-19-06
Elevation: Approximately 4220' +/-
Water Level: No groundwater encountered.
Remarks:

Graphical Log	Water Level	DESCRIPTION	DEPTH FT.	BLOWS/FT	SAMPLE SYMBOL	MOISTURE (%)	% PASSING 200	DRY DENSITY (PCF)	Liquid Limit (%)	Plastic Limit (%)	REMARKS
		Ground Surface									
		SANDY SILT/SILTY SAND major roots (topsoil) to 1" to 2"; fine sand; light brown (ML/SM)	0								loose 6" to 9" slightly moist "medium dense"
			5								
		Stopped drilling at 5.0'.									
		Stopped sampling at 4.5'.									
		No groundwater encountered at time of drilling.									
			10								
			15								
			20								
			25								

The discussion in the text under the section titled, SUBSURFACE CONDITIONS, is necessary for a proper understanding of the nature of the subsurface material.

FIGURE 3F

Gordon Spilker Huber Geotechnical Consultants, Inc.
Salt Lake City, Utah 84123

Project Name: Readiness Center & Civil Support Team Bldgs
Project No.: 0341-001-06
Location: SE Crnr of 1700 N & 2200 W, Salt Lake City, Utah
Client: Gillies Stransky Berms Smith PC
Drilling Method: 3-3/4" ID Hollow-Stem Auger
Date Drilled: 07-19-06
Elevation: Approximately 4220' +/-
Water Level: No groundwater encountered.
Remarks:

Graphical Log	Water Level	DESCRIPTION	DEPTH FT.	BLOWS/FT	SAMPLE SYMBOL	MOISTURE (%)	% PASSING 200	DRY DENSITY (PCF)	Liquid Limit (%)	Plastic Limit (%)	REMARKS
		Ground Surface									
		SILTY CLAY with some fine sand; some pinholes; light brown (CL)	0								loose 6" to 9" slightly moist very stiff
				25							
			5								
		grades brown wothout pinholes with occasional layers up to 1/8" thick of silty fine sand									moist stiff
				21							
			10								
				17							
		grades gray with layers up to 1/4" thick of silty fine sand	15								
				4							
		Stopped drilling at 15.0'.									
		Stopped sampling at 16.5'.									
		Installed 1-1/4" diameter slotted PVC pipe to 15.0'.									
		No groundwater encountered at time of drilling.	20								
			25								

The discussion in the text under the section titled, SUBSURFACE CONDITIONS, is necessary for a proper understanding of the nature of the subsurface material.

FIGURE 3G

PROJECT Utah National Guard Facilities
1700 North 2200 West, Salt Lake City, Utah

LOG OF TEST BORING NO. B-1

JOB NO. 5-817-005006 DATE 01-17-05

RIG TYPE CME 750
BORING TYPE 3-3/4" ID Hollow-Stem Auger
SURFACE ELEV.
DATUM

Depth in Feet	Continuous Penetration Resistance	Graphical Log	Sample	Sample Type	Blows/foot 140 lb. 30" free-fall drop hammer	Dry Density lbs. per cubic foot	Moisture Content Percent of Dry Weight	Unified Soil Classification	REMARKS	VISUAL CLASSIFICATION
0								CL FILL?	moist medium stiff	**SILTY CLAY**; major roots (topsoil) to 3"; dark brown, FILL?
				D	60					
								SM/ CL	dry very stiff	**ALTERNATING LAYERS UP TO 1/2" OF SILTY CLAY AND SILTY SAND; fine sand; light brown with** oxidation stains
5				D	87				hard	
								SM/ SP	slightly moist medium dense	**SAND** with some silt; fine to medium sand; brown
10				D	37					
									saturated loose	
15				D	10					grades to fine sand
								CL/ CH	saturated medium stiff	**SILTY CLAY** with some fine sand; grayish-black
20				D	8					
25				D	29					grades with occasional layers up to 1/4" of silty fine sand

GROUNDWATER

DEPTH	HOUR	DATE
14.0	*	01-17-05
13.6	09:00	01-18-05

SAMPLE TYPE
A - Auger cuttings
S - 2" O.D. 1.38" I.D. tube sample.
U - 3" O.D. 2.42" I.D. tube sample.
T - 3" O.D. thin-walled Shelby tube.
D - 3 1/4" O.D. 2.42" I.D. tube sample.
C - California Split Spoon Sample

FIGURE 4A

amec

PROJECT Utah National Guard Facilities
1700 North 2200 West, Salt Lake City, Utah

LOG OF TEST BORING NO. B-1

JOB NO. 5-817-005006 DATE 01-17-05

RIG TYPE CME 750
BORING TYPE 3-3/4" ID Hollow-Stem Auger
SURFACE ELEV.
DATUM

Depth in Feet	Continuous Penetration Resistance	Graphical Log	Sample	Sample Type	Blows/foot 140 lb. 30" free-fall drop hammer	Dry Density lbs. per cubic foot	Moisture Content Percent of Dry Weight	Unified Soil Classification	REMARKS	VISUAL CLASSIFICATION
25										
								SM	saturated medium dense	**SILTY SAND**; fine sand; grayish-black
30				D	54					
										Stopped drilling at 29.5'.
										Stopped sampling at 31.0'.
										Installed 1-1/4" diameter slotted PVC pipe to 31.0'.
35										
40										
45										The discussion in the text under the section titled, SUBSURFACE CONDITIONS, is necessary to a proper understanding of the nature of the subsurface materials.
50										

GROUNDWATER

	DEPTH	HOUR	DATE
▽	14.0	*	01-17-05
▼	13.6	09:00	01-18-05

SAMPLE TYPE

A - Auger cuttings
S - 2" O.D. 1.38" I.D. tube sample.
U - 3" O.D. 2.42" I.D. tube sample.
T - 3" O.D. thin-walled Shelby tube.
D - 3 1/4" O.D. 2.42" I.D. tube sample.
C - California Split Spoon Sample

FIGURE 4A
(con't)

amec

PROJECT Utah National Guard Facilities
1700 North 2200 West, Salt Lake City, Utah

LOG OF TEST BORING NO. B-2

JOB NO. 5-817-005006 DATE 01-17-05

RIG TYPE CME 750
BORING TYPE 3-3/4" ID Hollow-Stem Auger
SURFACE ELEV.
DATUM

Depth in Feet	Continuous Penetration Resistance	Graphical Log	Sample	Sample Type	Blows/foot 140 lb. 30" free-fall drop hammer	Dry Density lbs. per cubic foot	Moisture Content Percent of Dry Weight	Unified Soil Classification	REMARKS	VISUAL CLASSIFICATION
0								CL	very moist very stiff	**SILTY CLAY** with some fine to coarse sand; major roots (topsoil) to 3"; dark brown
				D	23					
5				D	15				moist stiff	
								SM/ SP	saturated medium dense	**SAND** with some silt; fine to medium sand; gray to black
10				D	8					
15				D	45					grades with slight hydrogen sulfide odor
20				D	34					
								CL/ CH	saturated stiff	**SILTY CLAY** with some fine sand; grayish-black
25				D	22					

GROUNDWATER

DEPTH	HOUR	DATE
12.0	*	01-17-05
7.8	09:00	01-18-05

SAMPLE TYPE
A - Auger cuttings
S - 2" O.D. 1.38" I.D. tube sample.
U - 3" O.D. 2.42" I.D. tube sample.
T - 3" O.D. thin-walled Shelby tube.
D - 3 1/4" O.D. 2.42" I.D. tube sample.
C - California Split Spoon Sample

FIGURE 4B

amec

PROJECT Utah National Guard Facilities
1700 North 2200 West, Salt Lake City, Utah

LOG OF TEST BORING NO. B-2

JOB NO. 5-817-005006 DATE 01-17-05

RIG TYPE CME 750
BORING TYPE 3-3/4" ID Hollow-Stem Auger
SURFACE ELEV.
DATUM

Depth in Feet	Continuous Penetration Resistance	Graphical Log	Sample	Sample Type	Blows/foot 140 lb. 30" free-fall drop hammer	Dry Density lbs. per cubic foot	Moisture Content Percent of Dry Weight	Unified Soil Classification	REMARKS	VISUAL CLASSIFICATION
25										
								SM	saturated medium dense	**SILTY SAND**; fine sand; gray
30				D	39					
										Stopped drilling at 29.5'. Stopped sampling at 31.0'. Installed 1-1/4" diameter slotted PVC pipe to 25.0'.
35										
40										
45										The discussion in the text under the section titled, *SUBSURFACE CONDITIONS*, is necessary to a proper understanding of the nature of the subsurface materials.
50										

GROUNDWATER

	DEPTH	HOUR	DATE
▽	12.0	*	01-17-05
▼	7.8	09:00	01-18-05

SAMPLE TYPE

A - Auger cuttings
S - 2" O.D. 1.38" I.D. tube sample.
U - 3" O.D. 2.42" I.D. tube sample.
T - 3" O.D. thin-walled Shelby tube.
D - 3 1/4" O.D. 2.42" I.D. tube sample.
C - California Split Spoon Sample

FIGURE 4B
(con't)

amec

UNIFIED SOIL CLASSIFICATION SYSTEM

FIELD IDENTIFICATION PROCEDURES				GRAPH SYMBOL	LETTER SYMBOL [1]	TYPICAL DESCRIPTIONS
COARSE GRAINED SOILS More than half of material is larger than No. 200 sieve size. [2] (The No. 200 sieve size is about the smallest particle visible to the naked eye)	GRAVELS More than half of coarse fraction is larger than No. 4 sieve size. (For visual classifications, the 1/4" size may be used as equivalent to the No. 4 sieve size.)	CLEAN GRAVELS (Little or no fines)	Wide range in grain size and substantial amounts of all intermediate particle sizes.		GW	Well graded gravels, gravel-sand mixtures, little or no fines.
			Predominantly one size or a range of sizes with some intermediate sizes missing.		GP	Poorly graded gravels, gravel-sand mixtures, little or no fines.
		GRAVELS WITH FINES (Appreciable amount of fines)	Non-plastic fines (for identification procedures see ML below).		GM	Silty gravels, poorly graded gravel-sand-silt mixtures.
			Plastic fines (for identification procedures see CL below).		GC	Clayey gravels, poorly graded gravel-sand-clay mixtures.
	SANDS More than half of coarse fraction is smaller than No. 4 sieve size. (For visual classifications, the 1/4" size may be used as equivalent to the No. 4 sieve size.)	CLEAN SANDS (Little or no fines)	Wide range in grain sizes and substantial amounts of all intermediate particle sizes.		SW	Well graded sands, gravelly sands, little or no fines.
			Predominantly one size or a range of sizes with some intermediate sizes missing.		SP	Poorly graded sands, gravelly sands, little or no fines.
		SANDS WITH FINES (Appreciable amount of fines)	Non-plastic fines (for identification procedures see ML below).		SM	Silty sands, poorly graded sand-silt mixtures.
			Plastic fines (for identification procedures see CL below).		SC	Clayey sands, poorly graded sand-clay mixtures.

IDENTIFICATION PROCEDURES ON FRACTION SMALLER THAN No. 40 SIEVE SIZE							
		DRY STRENGTH (CRUSHING CHARACTERISTICS)	DILATANCY (REACTION TO SHAKING)	TOUGHNESS (CONSISTENCY NEAR PLASTIC LIMIT)			
FINE GRAINED SOILS More than half of material is smaller than No. 200 sieve size. (The No. 200 sieve size is about the smallest particle visible to the naked eye)	SILTS AND CLAYS Liquid limit less than 50	None to slight	Quick to slow	None		ML	Inorganic silts and very fine sands, rock flour, silty or clayey fine sand with slight plasticity.
		Medium to high	None to very slow	Medium		CL	Inorganic clays of low to medium plasticity, gravelly clays, sandy clays, silty clays, lean clays.
		Slight to medium	Slow	Slight		OL	Organic silts and organic silt-clays of low plasticity.
	SILTS AND CLAYS Liquid limit greater than 50	Slight to medium	Slow to none	Slight to medium		MH	Inorganic silts, micaceous or diatomaceous fine sandy or silty soils, elastic silts.
		High to very high	None	High		CH	Inorganic clays of high plasticity, fat clays.
		Medium to high	None to very slow	Slight to medium		OH	Organic clays of medium to high plasticity.
HIGHLY ORGANIC SOILS		Readily identified by color, odor, spongy feel and frequently by fibrous texture.				Pt	Peat and other highly organic soils.

[1] Boundary classifications: —Soils possessing characteristics of two groups are designated by combinations of group symbols. For example GW—GC, well graded gravel—sand mixture with clay binder.
[2] All sieve sizes on this chart are U.S. standard.

GENERAL NOTES

1. In general, Unified Soil Classification Designations presented on the logs were evaluated by visual methods only. There rore, actual designations (based on laboratory testing) may differ.

2. Lines seperating strata on the logs represent approximate boundaries only Actual transitions may be gradual.

3. Logs represent general soil conditions observed at teh point of exploration onthe date indicated.

4. No warranty is provided as to the continuity of soil conditions between individual sample locations.

FINE - GRAINED SOIL

CONSISTENCY	SPT (blows/ft)	TORVANE UNDRAINED SHEAR STRENGTH (tsf)	POCKET PENETROMETER UNCONFINED COMPRESSIVE STRENGTH (tsf)	FIELD TEST
Very Soft	<2	<0.125	<0.25	Easily penetrated several inches by Thumb. Squeezes through fingers.
Soft	2 - 4	0.125 - 0.25	0.25 - 0.5	Easily penetrated 1 " by Thumb . Molded by light finger pressure.
Medium Stiff	4 - 8	0.25 - 0.5	0.5 - 1.0	Penetrated over 1/2 " by Thumb with moerate effort. Molded by strong finger pressure.
Stiff	8 - 15	0.5 - 1.0	1.0 - 2.0	Indented about 1/2 " by Thumb but penetrated only with great effort
Very Stiff	15 - 30	1.0 - 2.0	2.0 - 4.0	Readily Indented by Thumbnail
Hard	>30	>2.0	>4.0	Indented with difficulty by Thumbnail

LOG KEY SYMBOLS

- Bulk / Bag Sample
- Thin Wall
- Standard Penetration Split Spoon Sampler
- No Recovery
- Rock Core
- 3-3/4" ID D&M Sampler
- 3" ID D&M Sampler
- Water Level
- California Sampler

COARSE -GRAINDE SOIL

APPERENT DENSITY	SPT (blows/ft)	RELATIVE DENSITY (%)	FIELD TEST
Very Loose	<4	0 - 15	Easily penetrated with 1/2 " reinforcing rod pushed by hand
Loose	4 - 10	15 - 35	Difficult to penetrated with 1/2 " reinforcing rod pushed by hand
Medium Dense	10 - 30	35 - 65	Easily penetrated a foot with 1/2 " reinforcing rod driven with 5-lb hammer
Dense	30 - 50	65 - 85	Difficult to penetrated a foot with 1/2 " reinforcing rod driven with 5-lb hammer
Very Dense	>50	85 - 100	Penetrated only a few inches with 1/2 " reinforcing rod driven with 5-lb hammer

STRATIFICATION

DESCRIPTION	THICKNESS
SEAM	1/16 - 1/2 "
LAYER	1/2 - 12 "

DESCRIPTION	THICKNESS
Occasional	One or less per foot of thickness
Frequent	More than on per foot of thichness

CEMENTATION

DESCRIPTION	DESCRIPTION
Weakely	Crumbles or breaks with handling of slight finger pressure
Moderately	Crumbles or breaks with considerable finger pressure
Strongly	Will not crumbles or breaks with finger pressure

MODIFIERS

DESCRIPTION	%
Trace	<5
Some	5 - 12
With	>12

MOISTURE CONTENT

DESCRIPTION	FIELD TEST
Dry	Absence of moisture, dusty, dry to the touch
Moist	Damp but no visible water
Wet	Visible water, usually soil below Water Table

FIGURE 5

GSH
Gordon Spilker Huber
Geotechnical Consultants, Inc.