Door Schedule

Room Number	Door Number	Width	Height	Door Thickness	Door Type	Door Material	Finish	Door Glazing	Hardware	Fire Rating	Frame Type	Frame Material	Head Width	Fire Rating	Frame Thickness	Glazing	Finish	Remarks
100	100A	6' - 8"	7' - 0"		G	AL	CL-A	LIG	AL-01		W8	AL				LIG	AL	Storefront Insulated
100	100B	6' - 8"	7' - 0"		G	AL	CL-A	LIG	AL-02		W9	AL				LIG	AL	Storefront Insulated
101	101A	6' - 4"	7' - 0"	1 3/4"	E	WD	STN	TG	05		C	HM	4"		5 3/4"	-	PNT	View
101	101B	6' - 4"	7' - 0"	1 3/4"	E	WD	STN	TG	05		C	HM	4"		5 3/4"	-	PNT	View
101	101C	3' - 6"	7' - 0"	1 3/4"	A	HM	PNT	-	11	60	B	HM	4"	60	5 3/4"	-	PNT	
102	102A	3' - 0"	7' - 0"	1 3/4"	A	WD	STN	-	07		F	HM	2"		5 3/4"	TG/CG	PNT	Side light
103	103A	6' - 4"	7' - 0"	1 3/4"	E	HM	PNT	TG	04		C	HM	4"		5 3/4"	-	PNT	View/ Heavy Duty
103	103B	6' - 4"	7' - 0"	1 3/4"	F	HM	PNT	-	01		C	HM	4"		5 3/4"	-	PNT	Insulated
103	103C	4' - 0"	7' - 0"	1 3/4"	A	STL	PNT	-	(none)		B	HM	4"		5 3/4"	-	PNT	Vault Door
105	105A	3' - 0"	7' - 0"	1 3/4"	C	HM	PNT	TG	07		B	HM	4"		5 3/4"	-	PNT	View
106	106A	6' - 4"	7' - 0"	1 3/4"	E	HM	PNT	TG	04		C	HM	4"		5 3/4"	-	PNT	View/ Heavy Duty
106	106B	6' - 4"	7' - 0"	1 3/4"	F	HM	PNT		01		C	HM	4"		5 3/4"	-	PNT	Insulated
106	106C	4' - 0"	7' - 0"	1 3/4"	A	STL	PNT	-	(none)		B	HM	4"		5 3/4"	-	PNT	Vault Door
106	106D	3' - 0"	7' - 0"	1 3/4"	C	HM	PNT	TG	11		B	HM	4"		5 3/4"	-	PNT	View
108	108A	3' - 0"	7' - 0"	1 3/4"	C	HM	PNT	TG	07		B	HM	4"		5 3/4"	-	PNT	View
112	112A	3' - 0"	7' - 0"	1 3/4"	A	HM	PNT	-	07		B	HM	4"		5 3/4"	-	PNT	
113	113A	6' - 4"	7' - 0"	1 3/4"	F	HM	PNT	-	01		C	HM	4"		5 3/4"	-	PNT	Insulated
114	114A	3' - 0"	7' - 0"	1 3/4"	C	HM	PNT	LIG	02		B	HM	4"		6 3/4"	-	PNT	View/ Insulated
114	114B	14' - 0"	12' - 0"	1 1/2"	H	OHD	PNT	LIG	(none)		A					-	PNT	Insulated W/ Windows
114	114C	14' - 0"	12' - 0"	1 1/2"	H	OHD	PNT	LIG	(none)		A					-	PNT	Insulated W/ Windows
115	115A	3' - 0"	7' - 0"	1 3/4"	A	HM	PNT	-	07		B	HM	4"		5 3/4"	-	PNT	
116	116A	6' - 4"	7' - 0"	1 3/4"	E	HM	PNT	TG	04		C	HM	4"		5 3/4"	-	PNT	View/ Heavy Duty
117	117A	3' - 0"	7' - 0"	1 3/4"	A	HM	PNT	-	03		B	HM	4"		6 3/4"	-	PNT	Insulated
118	118A	3' - 0"	7' - 0"	1 3/4"	A	HM	PNT	-	07		D	HM	4"		5 3/4"	LIG	PNT	Side light
119	119A	3' - 0"	7' - 0"	1 3/4"	A	HM	PNT	-	07		B	HM	4"		5 3/4"	-	PNT	
120	120A	3' - 0"	7' - 0"	1 3/4"	D	WD	STN	-	11		E	HM	2"		5 3/4"	LIG	PNT	Grille
121	121A	3' - 0"	7' - 0"	1 3/4"	A	WD	STN	-	03		E	HM	2"		5 3/4"	LIG	PNT	
121	121B	6' - 4"	7' - 0"	1 3/4"	F	HM	PNT	-	01		C	HM	4"		5 3/4"	-	PNT	Insulated
122	122A	3' - 0"	7' - 0"	1 3/4"	C	WD	STN	TG	08		E	HM	2"		5 3/4"	LIG	PNT	View
123	123A	3' - 0"	7' - 0"	1 3/4"	A	WD	STN	-	12		E	HM	2"		5 3/4"	LIG	PNT	
124	124A	3' - 0"	7' - 0"	1 3/4"	A	WD	STN	-	12		E	HM	2"		5 3/4"	LIG	PNT	
126	126A	3' - 0"	7' - 0"	1 3/4"	A	WD	STN	-	07		G	HM	2"		5 3/4"	LIG	PNT	Side light
127	127A	3' - 0"	7' - 0"	1 3/4"	A	WD	STN	-	07		G	HM	2"		5 3/4"	LIG	PNT	Side light
128	128B	3' - 0"	7' - 0"	1 3/4"	C	WD	STN	TG	08		E	HM	2"		5 3/4"	LIG	PNT	View
129	129A	3' - 0"	7' - 0"	1 3/4"	A	WD	STN		16		E	HM	2"		5 3/4"	LIG	PNT	Provide Cipher lock
131	131A	3' - 0"	7' - 0"	1 3/4"	A	WD	STN	-	16		E	HM	2"		5 3/4"	LIG	PNT	Provide Cipher lock
132	132A	3' - 0"	7' - 0"	1 3/4"	A	WD	STN	-	12		G	HM	2"		5 3/4"	LIG	PNT	Side light
133	133A	3' - 0"	7' - 2"	1 3/4"	B	HM	CL-PNT	LIG	17		B	HM	4"		5 3/4"	-	PNT	Full light
133	133B	3' - 0"	7' - 2"	1 3/4"	B	HM	CL-PNT	LIG	02		B	HM	4"		5 3/4"	-	PNT	Full light
133	133C	6' - 4"	7' - 0"	1 3/4"	E	HM	PNT	TG	05		C	HM	4"		5 3/4"	-	PNT	View
133	133D	3' - 0"	7' - 0"	1 3/4"	C	HM	PNT	LIG	10		B	HM	4"		5 3/4"	-	PNT	View, Panic
134	134A	3' - 0"	7' - 0"	1 3/4"	C	HM	PNT	LIG	10		B	HM	4"		5 3/4"	-	PNT	View
134	134B	3' - 0"	7' - 0"	1 3/4"	C	HM	PNT	LIG	10		B	HM	4"		5 3/4"	-	PNT	View
134	134C	6' - 4"	7' - 0"	1 3/4"	E	HM	PNT	TG	05		C	HM	4"		5 3/4"	-	PNT	View
135	135A	6' - 0"	4' - 0"	2"	J	OHD	PNT		(none)		A					-	PNT	
136	136A	3' - 0"	7' - 0"	1 3/4"	C	HM	PNT	LIG	07		B	HM	4"		5 3/4"	-	PNT	View
136	136B	3' - 0"	7' - 0"	1 3/4"	C	HM	PNT	LIG	08	0	B	HM	4"	0	5 3/4"	-	PNT	View
136	136C	6' - 4"	7' - 0"	1 3/4"	E	HM	PNT	TG	06		C	HM	4"		5 3/4"	-	PNT	View
140	137A	3' - 0"	7' - 0"	1 3/4"	C	HM	PNT	LIG	17		E	HM	2"		5 3/4"	LIG	PNT	
138	138A	3' - 0"	7' - 0"	1 3/4"	A	HM	PNT	-	07	0	D	HM	4"	0	5 3/4"	LIG	PNT	Side light
139	139A	3' - 0"	7' - 0"	1 3/4"	A	HM	PNT	-	08		E	HM	2"		5 3/4"	LIG	PNT	
137	140A	3' - 0"	7' - 0"	1 3/4"	C	HM	PNT	LIG	02		B	HM	4"		6 3/4"	-	PNT	View/ Insulated
141	141A	3' - 0"	7' - 0"	1 3/4"	A	HM	PNT	-	11		B	HM	4"		5 3/4"	-	PNT	
142	142A	3' - 0"	7' - 0"	1 3/4"	A	HM	PNT	-	14		B	HM	4"		5 3/4"	-	PNT	
143	143A	3' - 0"	7' - 0"	1 3/4"	A	HM	PNT	-	11		B	HM	4"		5 3/4"	-	PNT	
146	146A	6' - 4"	7' - 0"	1 3/4"	F	HM	PNT	-	01		C	HM	4"		5 3/4"	-	PNT	Insulated
148	148A	6' - 4"	7' - 0"	1 3/4"	F	HM	PNT	-	01		C	HM	4"		5 3/4"	-	PNT	Insulated
148	148B	3' - 0"	7' - 0"	1 3/4"	A	HM	PNT	-	15	60	B	HM	4"	60	5 3/4"	-	PNT	
149	149A	3' - 6"	7' - 2"	1 3/4"	B	HM	CL-PNT	LIG	17		B	HM	4"		5 3/4"	-	PNT	Full light
149	150A	3' - 6"	7' - 2"	1 3/4"	B	HM	CL-PNT	LIG	02		B	HM	4"		5 3/4"	-	PNT	Full light
151	151A	3' - 0"	7' - 0"	1 3/4"	C	WD	STN	LIG	07		B	HM	4"		5 3/4"	-	PNT	View
152	152A	3' - 0"	7' - 0"	1 3/4"	B	WD	STN	LIG	12	0	B	HM	4"	0	5 3/4"	-	PNT	
153	153A	3' - 0"	7' - 0"	1 3/4"	D	WD	STN	-	11		B	HM	4"		5 3/4"	-	PNT	Grille
154	154A	3' - 0"	7' - 0"	1 3/4"	A	WD	STN	-	12	0	B	HM	4"	0	5 3/4"	-	PNT	
154	154B	1' - 6"	7' - 0"	1 3/4"	A	WD	STN	-	07	0	E	HM	2"	0	5 3/4"	LIG	PNT	
157	157A	6' - 4"	7' - 0"	1 3/4"	F	HM	PNT	-	06		C	HM	4"		5 3/4"	-	PNT	
159	159A	3' - 0"	7' - 0"	1 3/4"	A	WD	STN	-	07		F	HM	2"		5 3/4"	TG/CG	PNT	Side light and Transom
160	160A	3' - 0"	7' - 0"	1 3/4"	A	HM	PNT	-	11		B	HM	4"		5 3/4"	-	PNT	
162	162A	3' - 0"	7' - 0"	1 3/4"	A	HM	PNT	-	03		E	HM	2"		5 3/4"	LIG	PNT	Provided by bldg. man.
162	162B	6' - 0"	8' - 0"	1 1/2"	K	OHD	PNT		(none)		(none)						PNT	Provided by bldg. man.
162	162C	6' - 0"	10' - 0"	1 1/2"	K	OHD	PNT		(none)		(none)						PNT	Provided by bldg. man.
170	170A	3' - 0"	7' - 0"	1 3/4"	L	HM	PNT		02		B	HM	4"		6 3/4"	-	PNT	Insulated

Door Schedule

Room Number	Door Number	Width	Height	Door Thickness	Door Type	Door Material	Finish	Door Glazing	Hardware	Fire Rating	Frame Type	Frame Material	Head Width	Fire Rating	Frame Thickness	Glazing	Finish	Remarks
170	170B	3' - 0"	7' - 0"	1 3/4"	C	HM	PNT	TG	02		B	HM	4"		6 3/4"	-	PNT	Insulated
170	170C	3' - 0"	7' - 0"	1 3/4"	A	HM	PNT	-	10		B	HM	4"		5 3/4"	-	PNT	View/ Insulated
170	170D	3' - 0"	7' - 0"	1 3/4"	A	HM	PNT	-	08		B	HM	4"		5 3/4"	-	PNT	View/ Insulated
170	170E	20' - 0"	12' - 0"	2"	H	OHD	PNT	TG	(none)		A	HM				-	PNT	Insulated W/ Windows
170	170F	20' - 0"	12' - 0"	2"	H	OHD	PNT	TG	(none)		A	HM				-	PNT	Insulated W/ Windows
170	170G	20' - 0"	12' - 0"	2"	H	OHD	PNT	TG	(none)		A	HM				-	PNT	Insulated W/ Windows
170	170H	20' - 0"	12' - 0"	2"	H	OHD	PNT	TG	(none)		A	HM				-	PNT	Insulated W/ Windows
170	170I	20' - 0"	12' - 0"	2"	H	OHD	PNT	TG	(none)		A	HM				-	PNT	Insulated W/ Windows
170	170J	20' - 0"	12' - 0"	2"	H	OHD	PNT	TG	(none)		A	HM				-	PNT	Insulated W/ Windows
170	170K	3' - 0"	7' - 0"	1 3/4"	L	HM	PNT	TG	02		B	HM	4"		6 3/4"	-	PNT	Insulated
180	180A	3' - 0"	7' - 0"	1 3/4"	A	HM	PNT	-	03		E	HM	2"		5 3/4"	LIG	PNT	Provided by bldg. man.
180	180B	8' - 0"	10' - 0"	1 1/2"	K	OHD	PNT		(none)		(none)							Provided by bldg. man.
180	180C	8' - 0"	10' - 0"	1 1/2"	K	OHD	PNT		(none)		(none)							Provided by bldg. man.
180	180D	8' - 0"	10' - 0"	1 1/2"	K	OHD	PNT		(none)		(none)							Provided by bldg. man.
180	180E	8' - 0"	10' - 0"	1 1/2"	K	OHD	PNT		(none)		(none)							Provided by bldg. man.
180	180F	8' - 0"	10' - 0"	1 1/2"	K	OHD	PNT		(none)		(none)							Provided by bldg. man.
180	180G	8' - 0"	10' - 0"	1 1/2"	K	OHD	PNT		(none)		(none)							Provided by bldg. man.
180	180H	3' - 0"	7' - 0"	1 3/4"	A	HM	PNT	-	14		E	HM	2"		5 3/4"	LIG	PNT	Provided by bldg. man.
180	180I	3' - 0"	7' - 0"	1 3/4"	A	HM	PNT	-	14		E	HM	2"		5 3/4"	LIG	PNT	Provided by bldg. man.
180	180J	3' - 0"	7' - 0"	1 3/4"	A	HM	PNT	-	14		E	HM	2"		5 3/4"	LIG	PNT	Provided by bldg. man.
180	180K	3' - 0"	7' - 0"	1 3/4"	A	HM	PNT	-	14		E	HM	2"		5 3/4"	LIG	PNT	Provided by bldg. man.
180	180L	3' - 0"	7' - 0"	1 3/4"	A	HM	PNT	-	14		E	HM	2"		5 3/4"	LIG	PNT	Provided by bldg. man.
200	200A	3' - 0"	7' - 0"	1 3/4"	D	HM	PNT	-	11	0	B	HM	4"	0	5 3/4"	-	PNT	Grille
201	201A	3' - 0"	7' - 0"	1 3/4"	C	WD	STN	TG	09		E	HM	2"		5 3/4"	LIG	PNT	View
201	201B	3' - 0"	7' - 0"	1 3/4"	C	WD	STN	TG	09		E	HM	2"		5 3/4"	LIG	PNT	View
231	201C	3' - 0"	7' - 0"	1 3/4"	C	WD	STN	TG	08		E	HM	2"		5 3/4"	LIG	PNT	View
202	202A	3' - 0"	7' - 0"	1 3/4"	C	WD	STN	TG	12		E	HM	2"		5 3/4"	LIG	PNT	View
202	202B	3' - 0"	7' - 0"	1 3/4"	A	WD	STN	-	11		E	HM	2"		5 3/4"	LIG	PNT	
204	204A	3' - 0"	7' - 0"	1 3/4"	C	WD	STN	TG	09		E	HM	2"		5 3/4"	LIG	PNT	View
207	207A	3' - 0"	7' - 0"	1 3/4"	A	WD	STN	-	07		G	HM	2"		5 3/4"	LIG	PNT	Side light
208	208A	3' - 0"	7' - 0"	1 3/4"	A	WD	STN	-	07		G	HM	2"		5 3/4"	LIG	PNT	Side light
209	209A	3' - 0"	7' - 0"	1 3/4"	A	WD	STN	-	07		G	HM	2"		5 3/4"	LIG	PNT	Side light
210	210A	3' - 0"	7' - 0"	1 3/4"	C	WD	STN	TG	08		E	HM	2"		5 3/4"	LIG	PNT	View
211	211A	3' - 0"	7' - 0"	1 3/4"	A	WD	STN	-	07		G	HM	2"		5 3/4"	LIG	PNT	Side light
212	212A	3' - 0"	7' - 0"	1 3/4"	A	WD	STN	-	07		G	HM	2"		5 3/4"	LIG	PNT	Side light
214	214A	3' - 0"	7' - 0"	1 3/4"	A	WD	STN	-	07		G	HM	2"		5 3/4"	LIG	PNT	Side light
215	215A	3' - 0"	7' - 0"	1 3/4"	A	WD	STN	-	07		G	HM	2"		5 3/4"	LIG	PNT	Side light
216	216A	3' - 0"	7' - 0"	1 3/4"	A	WD	STN	-	11		E	HM	2"		5 3/4"	LIG	PNT	
216	216B		9' - 10"		(none)				(none)		(none)							Accordian Door
217	217A	3' - 0"	7' - 0"	1 3/4"	A	WD	STN	-	11		E	HM	2"		5 3/4"	LIG	PNT	
218	218A	3' - 0"	7' - 0"	1 3/4"	C	WD	STN	TG	07		E	HM	2"		5 3/4"	LIG	PNT	View
219	219A	3' - 0"	7' - 0"	1 3/4"	C	WD	STN	TG	07		E	HM	2"		5 3/4"	LIG	PNT	View
221	221A	3' - 0"	7' - 0"	1 3/4"	A	WD	STN	-	11		E	HM	2"		5 3/4"	LIG	PNT	
222	222A	3' - 0"	7' - 0"	1 3/4"	A	WD	STN	-	05		E	HM	2"		5 3/4"	LIG	PNT	
223	223A	3' - 0"	7' - 0"	1 3/4"	A	WD	STN	-	07		E	HM	2"		5 3/4"	LIG	PNT	
224	224A	3' - 0"	7' - 0"	1 3/4"	A	WD	STN	-	11		E	HM	2"		5 3/4"	LIG	PNT	Grille
224	224B	3' - 0"	7' - 0"	1 3/4"	A	WD	STN	-	11		E	HM	2"		5 3/4"	LIG	PNT	
227	227A	3' - 0"	7' - 0"	1 3/4"	A	WD	STN	-	12		E	HM	2"		5 3/4"	LIG	PNT	
228	228B	2' - 6"	7' - 0"	1 3/4"	A	HM	PNT	-	07		E	HM	2"		5 3/4"	LIG	PNT	
229	229A	3' - 0"	7' - 0"	1 3/4"	A	WD	STN	-	12		E	HM	2"		5 3/4"	LIG	PNT	
230	230A	3' - 0"	7' - 0"	1 3/4"	A	WD	STN	-	11		E	HM	2"		5 3/4"	LIG	PNT	
232	232A	3' - 0"	7' - 0"	1 3/4"	A	WD	STN	-	07		E	HM	2"		5 3/4"	LIG	PNT	Side light
233	233A	3' - 0"	7' - 0"	1 3/4"	A	WD	STN	-	07		E	HM	2"		5 3/4"	LIG	PNT	Side light
234	234A	3' - 0"	7' - 0"	1 3/4"	A	WD	STN	-	07		E	HM	2"		5 3/4"	LIG	PNT	Side light
235	235A	3' - 0"	7' - 0"	1 3/4"	A	WD	STN	-	07		E	HM	2"		5 3/4"	LIG	PNT	Side light
237	236A	3' - 0"	7' - 0"	1 3/4"	C	WD	STN	TG	08	0	D	HM	4"	0	5 3/4"	LIG	PNT	View
237	237A	3' - 0"	7' - 0"	1 3/4"	A	WD	STN	-	13		G	HM	2"		5 3/4"	LIG	PNT	Side light
238	238A	3' - 0"	7' - 0"	1 3/4"	A	WD	STN	-	07		G	HM	2"		5 3/4"	LIG	PNT	Side light
239	239A	3' - 0"	7' - 0"	1 3/4"	A	WD	STN	-	07		G	HM	2"		5 3/4"	LIG	PNT	Side light
240	240A	3' - 0"	7' - 0"	1 3/4"	C	WD	STN	TG	13	0	G	HM	2"	0	5 3/4"	LIG	PNT	Side light
241	241A	3' - 0"	7' - 0"	1 3/4"	A	WD	STN	-	07		G	HM	2"		5 3/4"	LIG	PNT	Side light
243	243A	3' - 0"	7' - 0"	1 3/4"	A	WD	STN	-	07		G	HM	2"		5 3/4"	LIG	PNT	Side light
244	244A	3' - 0"	7' - 0"	1 3/4"	A	WD	STN	-	07		G	HM	2"		5 3/4"	LIG	PNT	Side light
245	245B	3' - 0"	7' - 0"	1 3/4"	A	WD	STN	-	13		G	HM	2"		5 3/4"	LIG	PNT	Side light
246	246A	3' - 0"	7' - 0"	1 3/4"	A	WD	STN	-	07		G	HM	2"		5 3/4"	LIG	PNT	Side light
247	247A	3' - 0"	7' - 0"	1 3/4"	A	WD	STN	-	07		G	HM	2"		5 3/4"	LIG	PNT	Side light
248	248A	3' - 0"	7' - 0"	1 3/4"	A	WD	STN	-	07		G	HM	2"		5 3/4"	LIG	PNT	Side light
249	249A	3' - 0"	7' - 0"	1 3/4"	A	WD	STN	-	07		G	HM	2"		5 3/4"	LIG	PNT	Side light
251	251A	3' - 0"	7' - 0"	1 3/4"	A	WD	STN	-	07		G	HM	2"		5 3/4"	LIG	PNT	Side light
252	252A	3' - 0"	7' - 0"	1 3/4"	A	WD	STN	-	07		G	HM	2"		5 3/4"	LIG	PNT	Side light
253	253A	3' - 0"	7' - 0"	1 3/4"	A	WD	STN	-	07		G	HM	2"		5 3/4"	LIG	PNT	Side light
254	254A	3' - 0"	7' - 0"	1 3/4"	C	WD	STN	TG	08		E	HM	2"		5 3/4"	LIG	PNT	View
254	254B	3' - 0"	7' - 0"	1 3/4"	C	WD	STN	TG	08		E	HM	2"		5 3/4"	LIG	PNT	View
254	254C	3' - 0"	7' - 0"	1 3/4"	C	WD	STN	TG	13		E	HM	2"		5 3/4"	LIG	PNT	View
256	256A	3' - 0"	7' - 0"	1 3/4"	A	WD	STN	-	07		G	HM	2"		5 3/4"	LIG	PNT	Side light
257	257A	3' - 0"	7' - 0"	1 3/4"	A	WD	STN	-	07		G	HM	2"		5 3/4"	LIG	PNT	Side light
258	258A	3' - 0"	7' - 0"	1 3/4"	A	WD	STN	-	07		G	HM	2"		5 3/4"	LIG	PNT	Side light

WINDOW SCHEDULE

NO.	WINDOW			FRAME		DETAILS			REMARKS
Window Type	Size of Opening	Rating	Glazing (Div. 8)	Depth	Material	Head	Jamb	Sill	
W1	See Frame Elevation	-	LIG	5 3/4"	HM	See Frame Elevation			
W2	See Frame Elevation	-	IG	5 3/4"	HM	See Frame Elevation			
W3	See Frame Elevation	-	LIG	5 3/4"	HM	See Frame Elevation			PROVIDE FROSTED GLAZING @ ROOMS 152, 227, 229
W4	See Frame Elevation	-	LIG/SP	4 1/2"	HM	See Frame Elevation			
W5	See Frame Elevation	-	LIG/SP	4 1/2"	HM	See Frame Elevation			
W6	See Frame Elevation	-	LIG/SP	4 1/2"	HM	See Frame Elevation			
W7	See Frame Elevation	-	LIG	5 3/4"	HM	See Frame Elevation			
W8	See Frame Elevation	-	LIG	4 1/2"	HM	See Frame Elevation			
W9	See Frame Elevation	-	LIG	4 1/2"	HM	See Frame Elevation			
W10	See Frame Elevation	-	TG	5 3/4"	HM	See Frame Elevation			
W11	See Frame Elevation	-	LIG	5 3/4"	HM	See Frame Elevation			
W12	See Frame Elevation	-	LIG	5 3/4"	HM	See Frame Elevation			
W13	See Frame Elevation	-	IG	5 3/4"	HM	See Frame Elevation			

TYPICAL ANCHOR TYPES

SEE E1/AE603 FOR TYPICAL INTERIOR HOLLOW METAL WINDOW/DOOR ANCHOR

SEE D1/AE 603 FOR TYPICAL EXTERIOR HOLLOW METAL WINDOW /DOOR ANCHOR

GLAZING KEY:

LIG: LAMINATED, INSULATED CLEAR GLASS, LOW-E

IG: INSULATED GLASS, LOW-E

SG: SPANDREL GLASS

TG: TEMPERED SAFETY GLASS

CG: CLEAR GLASS

WG1: WIRED GLASS VISION PANEL

GENERAL NOTES:

SEE SHEET AE602 FOR FRAME ELEVATIONS AND DOOR TYPES

GSBS | ARCHITECTURE | LANDSCAPE ARCHITECTURE | PLANNING | INTERIOR DESIGN

375 West 200 South Suite 100
Salt Lake City
Utah 84101

Tel 801.521.8600
Fax 801.521.7913

GSBS-PC.COM

STATE OF UTAH
LICENSED ARCHITECT
116302
2/01/2008

Revision Schedule

#	DATE	REVISION

NORTH SALT LAKE READINESS CENTER AND CIVIL SUPPORT TEAM

Salt Lake City, UT

DOOR SCHEDULE

PROJECT NO. 2005.003
DATE 2/01/2008
DRAWN TK
CHECKED MK
BINDING ORDER 66

AE601

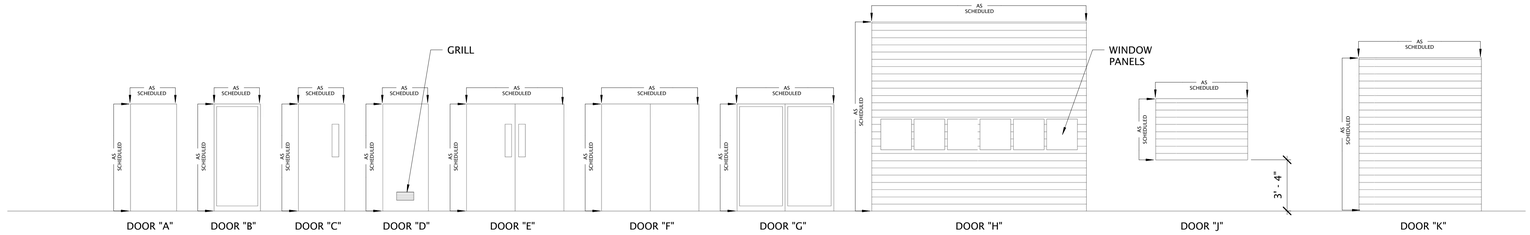

GLAZING KEY:

LIG: LAMINATED, INSULATED CLEAR GLASS, LOW-E

IG: INSULATED GLASS, LOW-E

SG: SPANDREL GLASS

TG: TEMPERED SAFETY GLASS

CG: CLEAR GLASS

WG1: WIRED GLASS VISION PANEL

D1 / AE602 DOOR TYPES

1/4" = 1'-0"

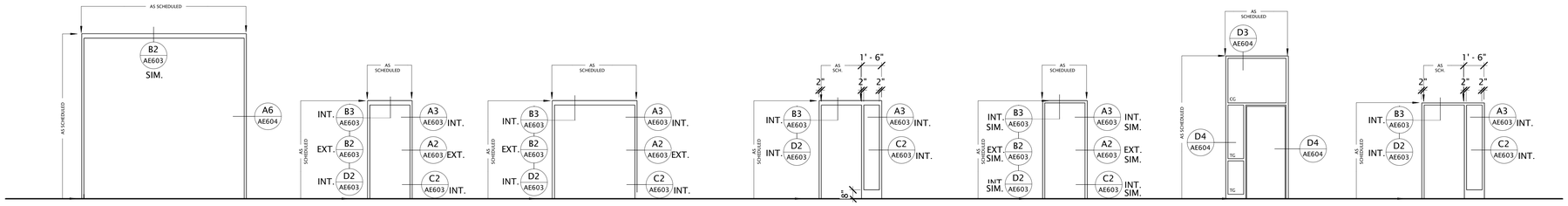

C1 / AE602 DOOR TYPE/ FRAME TYPE

1/4" = 1'-0"

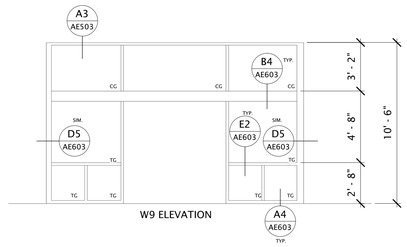

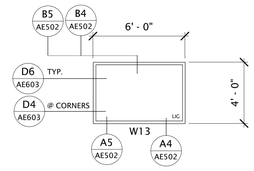

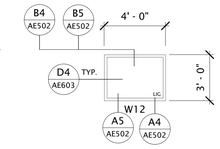

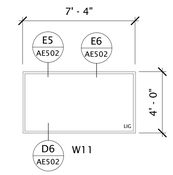

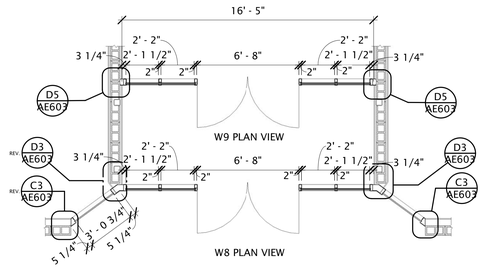

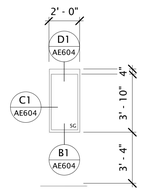

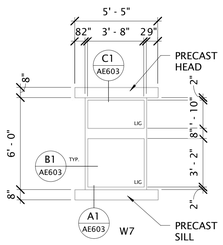

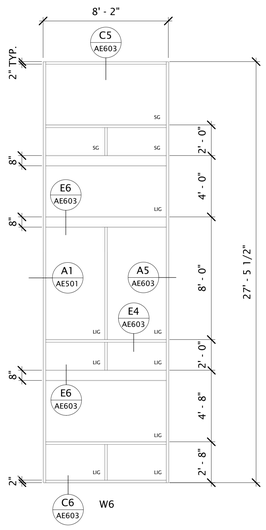

SEE NOTE ON D6/AE202
FOR SPANDREL CONDITION

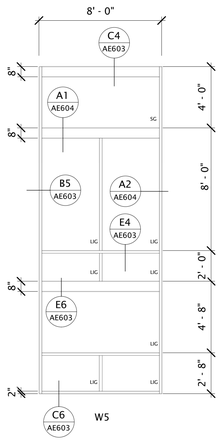

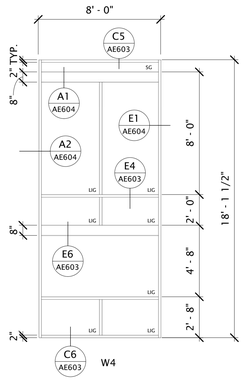

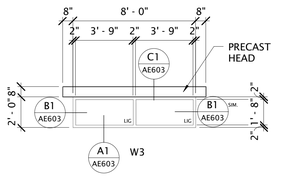

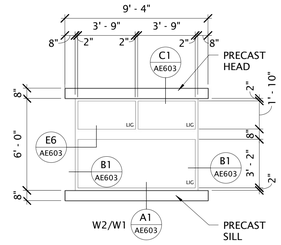

SUN SHADES AND LIGHT
SHELVES @ W2 ONLY

A6 / AE602 WINDOW TYPES

1/4" = 1'-0"

GSBS | ARCHITECTURE | LANDSCAPE ARCHITECTURE | PLANNING | INTERIOR DESIGN

375 West 200 South Suite 100
Salt Lake City
Utah 84101

Tel 801.521.8600
Fax 801.521.7913

GSBS-PC.COM

STATE OF UTAH
116302
2/01/2008

Revision Schedule		
#	DATE	REVISION

NORTH SALT LAKE READINESS CENTER AND CIVIL SUPPORT TEAM

Salt Lake City, UT

DOOR FRAME TYPES/DETAILS

PROJECT NO. 2005.003	AE602
DATE 2/01/2008	
DRAWN TK	
CHECKED MK	BINDING ORDER 67

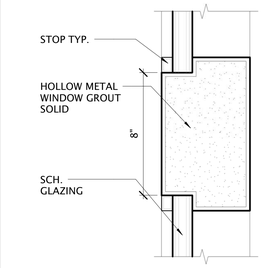

E6 AE603 WINDOW DETAIL
3" = 1'-0"

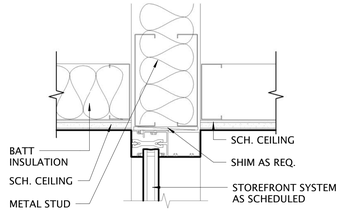

E5 AE603 STOREFRONT HEAD DETAIL
3" = 1'-0"

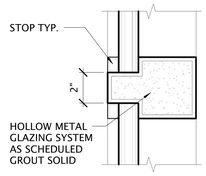

E4 AE603 HORIZ. HOLLOW METAL MULLION
3" = 1'-0"

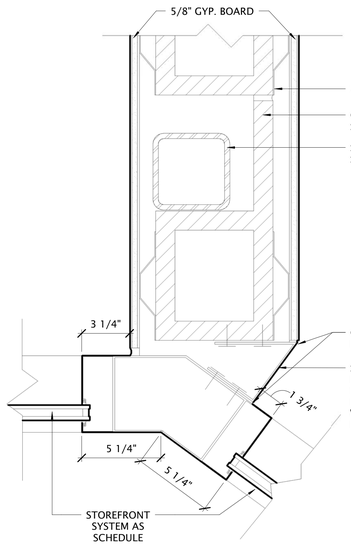

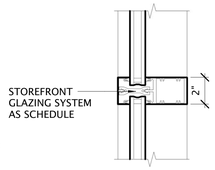

E2 AE603 HORIZ. STOREFRONT MULLION
3" = 1'-0"

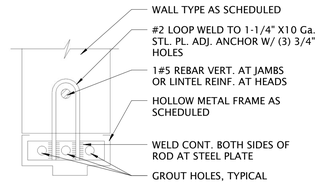

NOTE:
ANCHORS SHALL BE LOCATED AT 16" ON CENTER AT JAMBS AND HEADS TYPICALLY. (TO COINCIDE WITH JOINTS AT CMU WALLS)

E1 AE603 TYPICAL ANCHOR
3" = 1'-0"

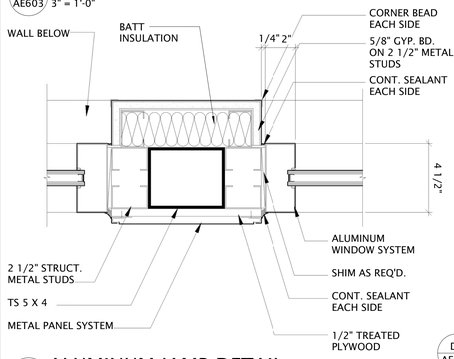

D6 AE603 ALUMINUM JAMB DETAIL
3" = 1'-0"

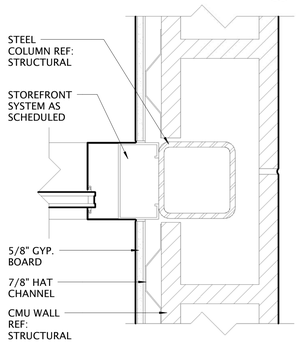

D5 AE603 COLUMN DETAIL @ LOBBY
3" = 1'-0"

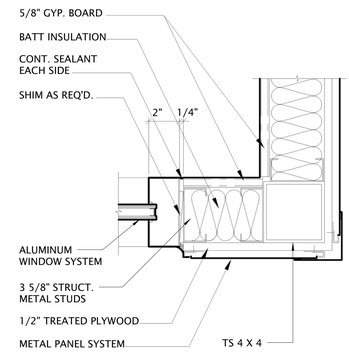

D4 AE603 ALUMINUM JAMB DETAIL @ CORNER
3" = 1'-0"

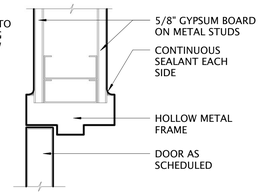

D2 AE603 HEAD DETAIL @ GYP.. WALL
3" = 1'-0"

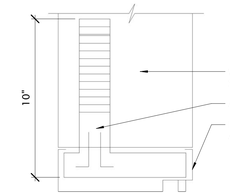

NOTE:
ANCHORS SHALL BE LOCATED AT 16" ON CENTER AT JAMBS & HEADS TYPICALLY (TO COINCIDE WITH JOINTS AT CMU WALLS)

D1 AE603 OFFSET MASONRY ANCHOR
3" = 1'-0"

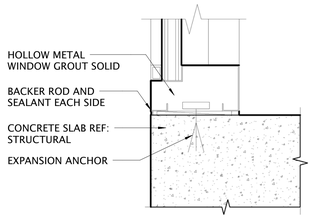

C6 AE603 H.M. WINDOW SILL DETAIL
3" = 1'-0"

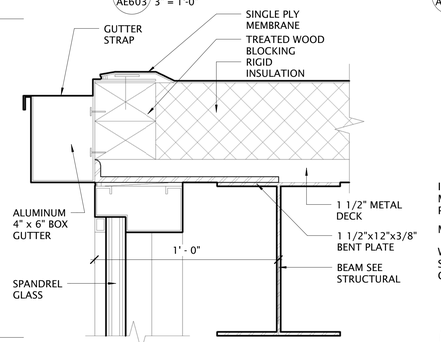

C5 AE603 WINDOW HEAD DETAIL.
3" = 1'-0"

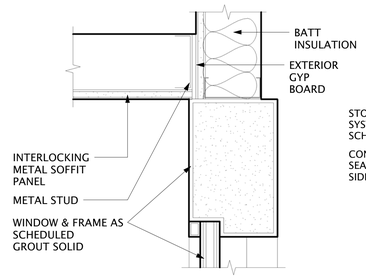

C4 AE603 WINDOW DETAIL@ SOFFIT.
3" = 1'-0"

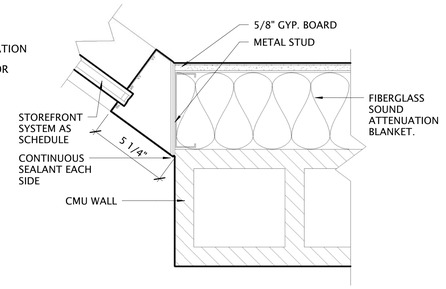

C3 AE603 JAMB DETAIL @ STOREFRONT.
3" = 1'-0"

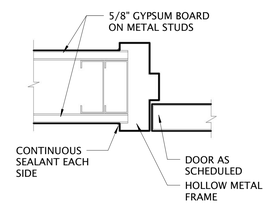

C2 AE603 JAMB DETAIL @ GYP. WALL
3" = 1'-0"

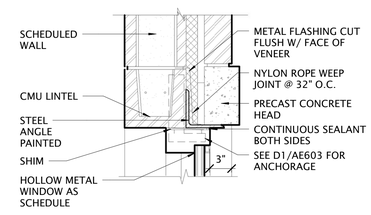

C1 AE603 WINDOW HEAD DETAIL
1 1/2" = 1'-0"

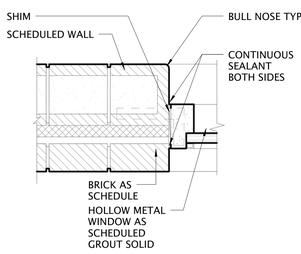

B6 AE603 WINDOW JAMB DETAIL.
1 1/2" = 1'-0"

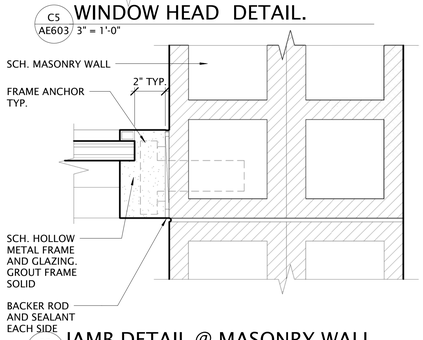

B5 AE603 JAMB DETAIL @ MASONRY WALL.
3" = 1'-0"

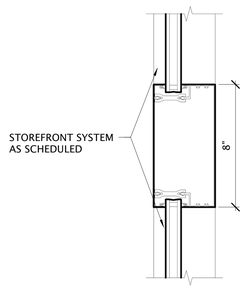

B4 AE603 STOREFRONT DETAIL
3" = 1'-0"

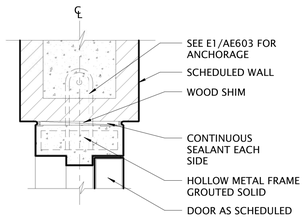

B3 AE603 HEAD DETAIL
3" = 1'-0"

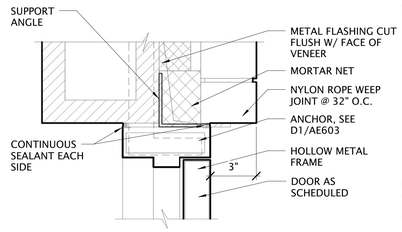

B2 AE603 EXTERIOR HEAD DETAIL
3" = 1'-0"

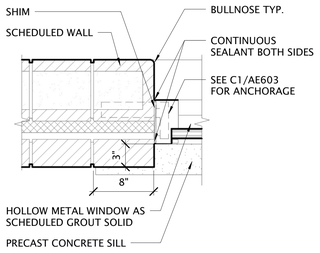

B1 AE603 WINDOW JAMB DETAIL
1 1/2" = 1'-0"

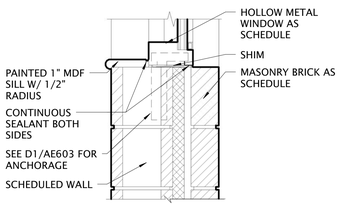

A6 AE603 WINDOW SILL DETAIL..
1 1/2" = 1'-0"

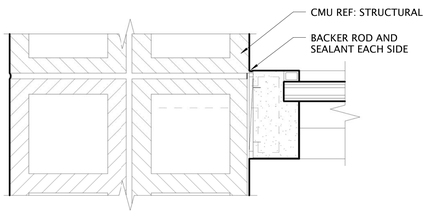

A5 AE603 JAMB DETAIL @ MASONRY WALL
3" = 1'-0"

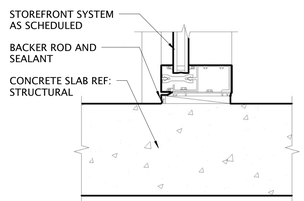

A4 AE603 STOREFRONT SILL DETAIL
3" = 1'-0"

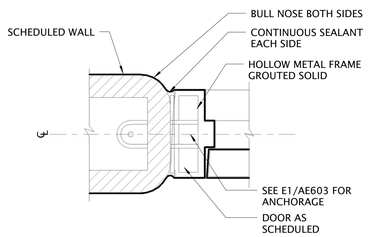

A3 AE603 JAMB DETAIL
3" = 1'-0"

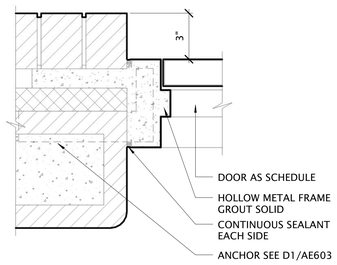

A2 AE603 EXTERIOR JAMB DETAIL
3" = 1'-0"

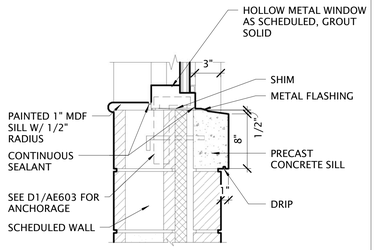

A1 AE603 WINDOW SILL DETAIL
1 1/2" = 1'-0"

GSBS | ARCHITECTURE | LANDSCAPE ARCHITECTURE | PLANNING | INTERIOR DESIGN
375 West 200 South Suite 100
Salt Lake City
Utah 84101
Tel 801.521.8600
Fax 801.521.7913
GSBS-PC.COM

STATE OF UTAH
LICENSED ARCHITECT
116302
2/01/2008

Revision Schedule

#	DATE	REVISION

NORTH SALT LAKE READINESS CENTER AND CIVIL SUPPORT TEAM

Salt Lake City, UT

DOOR & WINDOW DETAILS

PROJECT NO. 2005.003	AE603
DATE 2/01/2008	
DRAWN TK	
CHECKED MK	BINDING ORDER 68

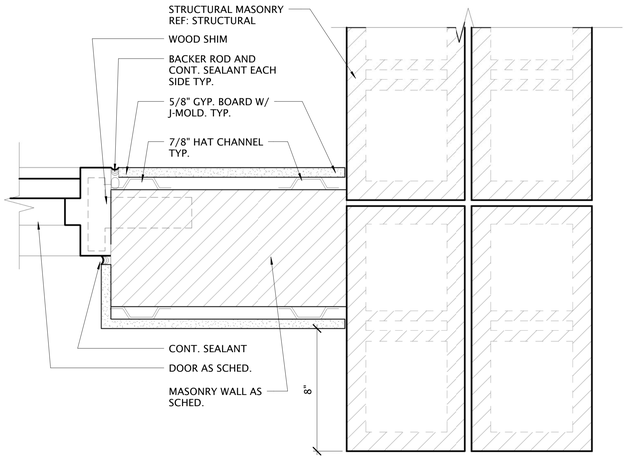

D6 / AE604 WALL DETAIL @ RECRUITING & SUPPORT
3" = 1'-0"

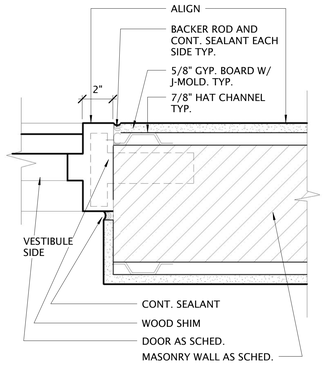

D4 / AE604 JAMB DETAIL @ MASONRY WALL..
3" = 1'-0"

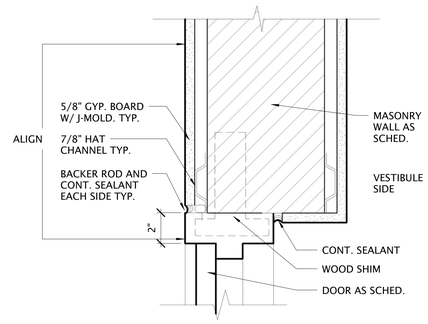

D3 / AE604 HEAD DETAIL @ MASONRY WALL
3" = 1'-0"

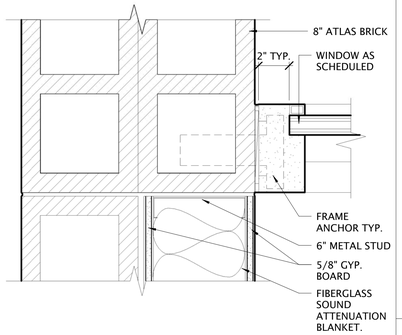

E1 / AE604 JAMB DETAIL @. MASONRY WALL
3" = 1'-0"

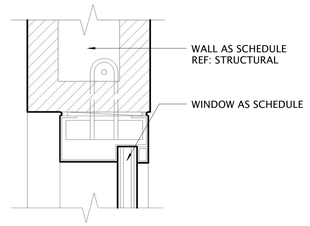

D1 / AE604 INT. WINDOW HEAD DETAIL.
3" = 1'-0"

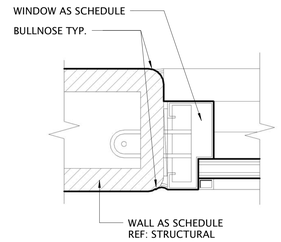

C1 / AE604 INT. WINDOW JAMB DETAIL.
3" = 1'-0"

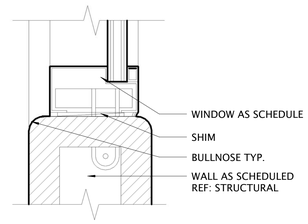

B1 / AE604 INT. WINDOW SILL DETAIL.
3" = 1'-0"

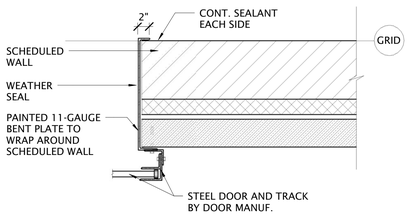

A6 / AE604 OVERHEAD DOOR JAMB
1 1/2" = 1'-0"

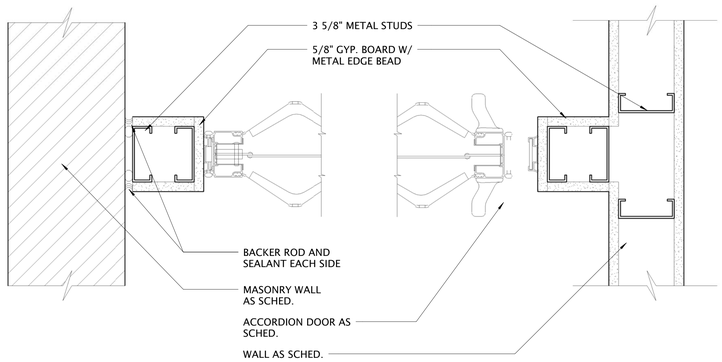

A5 / AE604 ACCORDION PARTITION JAMB
3" = 1'-0"

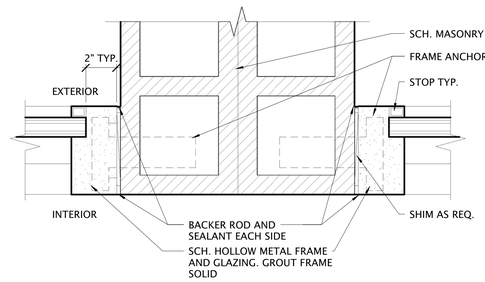

A2 / AE604 JAMB DETAIL @ MASONRY WALL
3" = 1'-0"

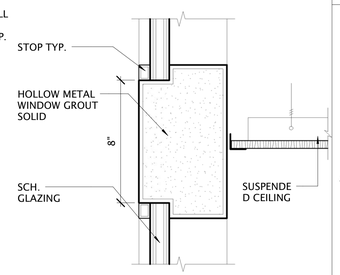

A1 / AE604 WINDOW DETAIL@ SOFFIT
3" = 1'-0"

GSBS | ARCHITECTURE | LANDSCAPE ARCHITECTURE | PLANNING | INTERIOR DESIGN

375 West 200 South Suite 100
Salt Lake City
Utah 84101

Tel 801.521.8600
Fax 801.521.7913

GSBS-PC.COM

STATE OF UTAH
LICENSED ARCHITECT
116302
2/01/2008

Revision Schedule

#	DATE	REVISION

NORTH SALT LAKE READINESS CENTER AND CIVIL SUPPORT TEAM

Salt Lake City, UT

DOOR & WINDOW DETAILS

PROJECT NO. 2005.003	AE604
DATE 2/01/2008	
DRAWN TK	
CHECKED MK	BINDING ORDER 69

I. Design Criteria

A. Governing Building Code: 2006 International Building Code (IBC)

B. Floor Live Loading:
1. Office: 80 psf Live Load + 20 psf Partition Load
2. Exit Facilities & Corridors: 100 psf Live Load
3. Mechanical Rooms: 125 psf Live Load or actual weights, if larger

C. Roof Live Loading:
1. Roof Live Load: 20 psf
2. Roof Snow Load: 30 psf + Drift per IBC
   a. Ground Snow Load, Pg: 43 psf
   b. Snow Exposure Factor, Ce: 1.0
   c. Importance Factor, IS: 1.0
   d. Thermal Factor, Ct: 1.0

D. Earthquake:
1. Seismic Use Group: I
2. Seismic Design Category D
3. Spectral Response Accelerations:
   SS = 1.63 g SDS = 1.09 g
   S1 = 0.69 g SD1 = 0.69 g
4. Soil Site Class: D
   Fa = 1.0 Fv = 1.5
5. Basic Seismic-Force-Resisting System: Special Reinforced Masonry Shear Walls
   R = 5.0 Cd = 4 Ω0 = 2.5
6. Importance Factor, IE: 1.0
7. Design Base Shear: 0.218 x W
8. Design Story Drift, Δ: 1%
9. Analysis Procedure: Equivalent Lateral Force (Static)

E. Wind:
1. Basic Wind Speed (3-second gust): 90 mph
2. Importance Factor, IW: 1.0
3. Exposure: C
4. Internal Pressure Coefficient, GCpi: 0.18

F. Foundation:
1. Subsurface Conditions:
   Soils report and log of borings was obtained by the Owner for the Engineer's use in the design of the foundation, and is not a part of the Contract Documents. This report and log of borings is available for the Contractor's information, but is not a warranty of the subsurface conditions. The Contractor may use the report at his own risk.
2. Soils Report by GSH Geotechnical Consultants, dated September 29, 2006.
3. Net Soil Bearing Pressure: 2000 psf on Naturally Undisturbed soil or Compacted Structural Fill
4. Lateral Soil Pressure Fluid Equivalent Density.
   a. Passive: 300 pcf
5. Coefficient of Friction: 0.45

G. Classification for Fire Rated Construction:
1. For the purpose of determining fire-resistive assemblies, open web steel joists shall be considered unrestrained and all other steel members shall be considered restrained.

II. Earthwork

A. Clearing: The entire building area shall be scraped to remove surface vegetation, topsoil, loose or disturbed surficial soils and other deleterious materials from an area extending out at least 5 feet from each building structure.

B. Proof rolling: After clearing and prior to placing footings, the exposed natural subgrade under all footings and slabs on grade shall be proof rolled by passing moderate-weight rubber tire mounted construction equipment over the surface at least twice. If any loose, soft, or disturbed zones are encountered, they must be completely removed and replaced with compacted structural fill.

C. Compacted structural fill: All fill material shall be free of sod, rubbish, construction debris, frozen soil, and other deleterious materials. Compacted structural fill shall be a well-graded granular material with a maximum particle size less than 4 inches typical or 2.1/2 inches in confined areas inches and with not more than 20 percent passing a No. 200 sieve. It shall be placed in lifts not exceeding 8 inches in loose thickness and compacted to at least 95 percent of the maximum laboratory density as determined by ASTM D1557. Where fill thickness exceeds 5 feet, increase compaction to 97 percent of the maximum laboratory density as determined by ASTM D1557. All fill shall be tested (See Specifications and the Quality Assurance section of the GSN).

III. Concrete

A. Materials shall comply with the Standards specified in American Concrete Institute (ACI) 318-05, "Building Code Requirements for Structural Concrete."
1. Compressive strengths of concrete at 28 days shall be as follows:
   a. Footings: 3000 psi
   b. Slabs on Grade: 3000 psi
   c. Walls: 4000 psi
   d. Normal weight concrete over Steel Deck: 3000 psi
   e. Concrete Suspended Slabs: 4000 psi
2. Concrete Density (Maximum Air Dry Weight):
   a. Normal weight concrete shall be approximately 145 to 155 pounds per cubic foot.
3. Reinforcement steel:
   a. ASTM A615 Grade 60, fy = 60,000 psi min. unless noted otherwise.
   b. Reinforcement at concrete moment frames and shear wall jambs shall be ASTM A706 or ASTM A615 Grade 60, with the following properties:
      (1) Actual yield strength based on mill tests shall not exceed 78,000 psi.
      (2) Retest shall not exceed 81,000 psi.
      (3) Ratio of actual ultimate tensile stress to the actual yield strength shall not be less than 1.25.
      (4) Mill tests shall be submitted to the Engineer.
4. Admixtures:
   a. Air-entraining admixtures, comply with ASTM C 260 (when used).
      (1) When air content of a trowel finished floor slab exceeds 3%, there is an increased risk for delaminations and blistering to occur. When this situation is present, the contractor shall pay special attention to the finishing procedures to help minimize such risks. Refer to ACI 302.1R-96 "Guide for Concrete Floor and Slab Construction" for proper finishing guidelines.
   b. Calcium chloride shall not be added to the concrete mix.
5. Only one grade or type of concrete shall be poured on the site at any given time.

B. Formwork shall comply with ACI Standards Publication 347 and the project specifications. The contractor shall be responsible for the design, detailing, care, placement and removal of the formwork and shores.
1. Precamber forms and screeds with a camber of 1/4" per every 10'-0" of span to compensate for dead load deflection, unless noted otherwise.

C. Concrete cover requirements for deformed bar reinforcing steel shall comply with ACI 318, "Building Code Requirements for Structural Concrete".
1. Cast-in-place Concrete: Clear Cover
   a. Cast against and permanently exposed to earth: 3"
   b. Formed concrete exposed to earth or weather:
      #6 thru #18 bars 2"
      #5 and smaller bars 1.1/2"
   c. Concrete not exposed to weather or in contact with ground:
      Slabs, Walls, Joists; #11 bars and smaller 3/4"
      Beams, Columns: Primary Reinf., Ties, Stirrups, Spirals 1.1/2"

D. Construction Joints and Control Joints:
1. Provide a continuous 2 X 4 keyway or a surface intentionally roughened to a full amplitude of approximately ¼" in all wall footings. Adjust the keyway as necessary to provide for proper bar placement. A continuous keyway shall not be used for concrete shear wall to footing connections, unless specifically indicated. Refer to project plans, schedules and details for the shear wall to footing connection requirements.
2. All horizontal and vertical construction joints shall have a continuous 2 X 4 keyway along the joint or joints shall be intentionally roughened to a full amplitude of approximately ¼", unless noted otherwise.
3. Provide reinforcement dowels to match the member reinforcement across the joint except for shear walls, unless noted otherwise. For dowels across construction joints and wall to footing connections of concrete shear walls, refer to specific project plans, schedules, and details.
4. Construction joints in suspended concrete pours shall be made at the center of spans.
5. Slabs on grade shall have construction or control joints spaced not to exceed 30 times the slab thickness in any direction. All discontinuous control or construction joints shall be reinforced with 2 - #4 x 48". See structural details. Construction joints shall not exceed a distance of 125'-0" o.c. in any direction.
6. Control joints shall be installed in slabs on grade so the length to width ratio of the slab is no more than 1.25:1. Control joints shall be completed within 12 hours of concrete placement. Control joints may be installed by:
   a. Saw cut a depth of 1/4 the thickness of the slab
   b. Tooled joints a depth of 1/4 the thickness of the slab
7. Control joints in visually exposed walls, unless noted otherwise: (Joints shall line up with masonry and architectural joints, see drawings.)
   a. Vertical control joints at 10'-0" on center.
   b. Reinforcing shall be continuous through control and construction joints, unless noted otherwise.
   c. Control joints in concrete foundation walls shall line up with masonry control joints.
8. Control joints shall be installed in suspended slabs over steel decking by sawcutting along all interior grid lines. Joints centered above the purlins shall be ¾" deep and shall have #4 X 5'-0" at 16" o.c. reinforcing, placed perpendicular (and centered) to the purlin. Joints centered above the girders shall be ¾" deep and shall have #4 X 10'-0" at 16" o.c. reinforcing placed perpendicular (and centered) to the girder. The #4 bar reinforcing centered above the grid lines is in addition to the specified WWF continuous throughout the suspended slabs over steel decking. Reinforcing shall be placed 1" below the top of the slab.

E. Detailing: All reinforcing, including WWF, shall be detailed, bolstered & supported to comply with ACI 315, "Details and Detailing of Concrete Reinforcement" and the Concrete Reinforcing Steel Institute (CRSI) recommendations. Reinforcing bars shall not be welded unless specifically shown on drawings.
1. Lap splice lengths shall be detailed to comply with the "Reinforcing Bar Lap Splice Schedule" contained within the contract drawings. Splices may be made with mechanical splices capable of 125% tension capacity of the bar being spliced. Mechanical splices shall be the positive connecting type coupler. They shall be covered by a current ICC Code Evaluation Report. Use "Cadweld" splice sleeves with ferrous filler, "Lenton" taper threaded rebar splices, "Bar-Lock" lockshear bolt coupling sleeves, or approved equivalent. If mechanical splices are used, splices or couplers on adjacent bars shall be staggered a minimum of 24" apart along the longitudinal axis of the reinforcing bars.
2. All embedments and dowels shall be securely tied to formwork or to adjacent reinforcing prior to the placement of concrete.
3. Use chairs or other support devices recommended by the CRSI to support and tie reinforcement bars and WWF prior to placing concrete. WWF shall be continuously supported at 36" o.c. maximum.
4. Provide corner bars at intersecting wall corners using the same bar size and spacing as the horizontal wall reinforcing. Unless noted otherwise, corner bar lap lengths shall conform with reinforcing bar lap splice lengths as noted above.
5. All vertical reinforcing shall be doweled to footings, or to the structure below. Dowels shall be the same size and at the same spacing as the vertical reinforcing scheduled (or detailed) for the element above. Lap splice lengths shall comply as noted above or as shown in the drawings. Dowels extending into footings shall terminate with a 90 degree standard ACI hook and shall extend to within 4" of the bottom of the footing. Footing dowels (#8 bars and smaller) with hooks need not extend more than 20" into footings.
6. Horizontal wall reinforcing shall terminate at ends of walls and openings into the far end of the jamb column with a 90-degree standard ACI hook, unless shown otherwise. Lap horizontal bar splices as noted above or as shown in the drawings. Horizontal wall reinforcing shall be continuous through construction and control joints. Splices in horizontal reinforcement shall be staggered, so the splice laps will not overlap. Splices in two curtains where used shall not occur in the same location, splice laps shall not overlap.
7. Wall Openings 8" to 36" wide: Place 2- #5 bars (or 1 - #7 bar in 10" walls and thinner) around all openings 8" or larger in any direction, and extend the reinforcing bars a minimum of 24" beyond the corner of the openings, unless noted otherwise. Where 24" is not available, extend bars as far beyond the opening as possible and terminate them with a 90 degree standard ACI hook.
8. Provide 2-#5 X 4'-0" diagonal bars (or 1 - #7 x 4'-0" bar in 10" walls and thinner) at the corners of all openings. Diagonal bars shall be centered on the corner of the opening. All recesses in concrete walls that interrupt reinforcing steel shall be reinforced the same as an opening.
9. Contractor shall coordinate placement of all openings, curbs, dowels, sleeves, conduits, bolts, inserts and other embedded items prior to concrete placement.
10. All reinforcement shall be bent cold, and shall be bent only once at the same location. All reinforcement shall be shop bent, unless otherwise permitted by the engineer.

F. Minimum Reinforcing: Wall reinforcing shall be as follows, unless noted otherwise:

Wall Thickness	Horizontal Reinf.	Vertical Reinf.
6"	#4 @ 13" o.c.	#4 @ 18" o.c.
8"	#5 @ 15" o.c.	#4 @ 16" o.c.
10"	#5 @ 12" o.c.	#4 @ 13" o.c.
12"	#4 @ 13" o.c. Each Face	#4 @ 18" o.c. Each Face
Others	0.25% of Wall Area	0.15% of Wall Area

Place steel in the center of the wall (except in walls thicker than 10" and where shown otherwise). Walls thicker than 10" shall have two curtains of reinforcing (placed near each face of the wall), unless otherwise shown on the structural drawings. Spacing shall not exceed three times the wall thickness nor 18". In addition to the above reinforcing, 2 - #5 (or 1 - #7 in 10" walls and thinner) x continuous horizontal bars shall be placed at the bottom of the wall (near the footing) and at each floor level, at the roof level and at the top of wall.

G. No aluminum conduit or product containing aluminum or any other material injurious to concrete shall be embedded in concrete.

H. Unless otherwise noted, all slabs on grade shall be 4" thick.

IV. Masonry

A. Materials, unless noted otherwise:
1. Concrete Masonry Units: Lightweight Grade N, Type 1 (minimum unit strength of 2800 psi) or better. (f'm = 2000 psi)
2. Hollow Clay Units: Hollow Brick, Grade I (minimum unit strength of 6600 psi average) or better. (f'm=2500 psi)
3. Mortar: Use Type "S" according to IBC Section 2103.7, and tested according to ASTM C270. Admixtures shall not be added to the mortar mix. (1800 psi minimum compressive strength).
4. Grout: Conform to IBC Table 2103.10 or ASTM C476. Proportioned according to IBC Section 2103.10 and tested according to ASTM C1019. Grout shall attain a minimum compressive strength of 2000 psi at 28 days.
5. Reinforcing: Grade 60 reinforcing steel shall comply with ASTM A615. Wire joint reinforcing shall comply with ASTM A951.
6. Deformed Bar Anchors (DBA): All DBAs shall comply with ASTM A496.
7. Anchor Bolts (AB): ASTM A307 with ASTM A563 heavy hex nuts and hardened washers, Grade A, unless noted otherwise.
7. Headed Stud Anchors (HSA): Manufacture all HSAs in conformance with ASTM A108 with dimensions complying with AISC specifications.

B. Construction Requirements:
1. Mortar Joints: Joints shall be "concave", "V-joint" or "weathered raked" for structural members unless noted otherwise on architectural drawings.
2. Masonry walls, beams and columns shall be constructed with running bond, unless noted otherwise.
3. Grouting Requirements: Comply with IBC Section 2104 and ACI 530.1/ASCE 6/TMS 602. Grout shall be mechanically consolidated and mechanically reconsolidated according to ACI 530.1/ASCE 6/TMS 602 Section 3.5 E.
4. Reinforcing Bars shall not be welded unless specifically shown on drawings. In such cases, use only AWS standards. Do not substitute reinforcing bars for DBAs or HSAs.
5. Control Joints: Spacing shall not exceed 40'-0". See architectural drawings for locations.
6. Grout all beam and joist pockets solid after installation of beams and joists.
7. Masonry Veneer Attachment and Reinforcing:
   a. To steel stud and wood stud walls: Veneer shall be attached to the studs Dur-O-Wal D/A 213 S seismic veneer anchors or Hohmann & Barnard DW-10 or DW-10HS seismic veneer anchors (or equal) spaced at 16" o.c. Veneer anchors shall be attached to studs with #10 corrosion resistant self drilling screws. Attach the veneer to the anchors with Dur-O-Wal Seismic Steel Pintles or Hohmann & Barnard 3/16" Byna-Tie with Seismiclips (or equal) spaced at a maximum of 16" o.c. in both directions. Anchor ties shall engage to a galvanized No. 9 gauge horizontal joint reinforcement wire in the veneer which shall be continuous and shall be placed at 16" o.c. maximum at the center of the veneer.
   b. To concrete walls: 22 gauge galvanized dovetail slots shall be installed vertically in concrete at 16" o.c. Attach the veneer to dovetail slots with Dur-O-Wal 16 gage seismic dovetail anchor ties or Hohmann & Barnard 3/16" Byna-Tie with Seismiclips (or equal) spaced at a maximum of 16" o.c. in both vertical and horizontal directions. Anchor ties shall engage to a galvanized No. 9 gauge horizontal joint reinforcement wire in the veneer which shall be continuous and shall be placed at 16" o.c. maximum at the center of the veneer. Dovetail slots and anchor ties shall be galvanized.
   c. To reinforced masonry walls: Veneer shall be attached with tri-rod laddur type reinforcement spaced at a maximum of 16" o.c. vertically consisting of 3 - #9 gauge, galvanized, corrugated, wires. Veneer may also be attached with Dur-O-Wal D/A 360 S Seismic Ladur-Eye spaced at 16" o.c. maximum in both vertical and horizontal directions. . Anchor ties shall engage to a galvanized No. 9 gauge horizontal joint reinforcement wire in the veneer which shall be continuous and shall be placed at 16" o.c. maximum at the center of the veneer. Anchors shall extend to the galvanized ladur type (2 - #9 wires) joint reinforcing in the masonry wall spaced at 16" o.c. maximum.
   d. Other methods of attachment may be used after written acceptance by the architect and structural engineer.
   e. Steel Lintels: Provide steel angle lintels at all openings through the masonry veneer. Provide one inch of bearing for each foot of width of opening, with a minimum bearing of six inches. See the Steel Angle Lintel Schedule for size.

C. Detailing Requirements:
1. Standards: Reinforcing detailing shall comply with American Concrete Institute (ACI) Standard 315, "Details and Detailing of Concrete Reinforcement."
2. Reinforcement Protection (cover):
   a. Joint reinforcement shall have not less than 5/8" mortar coverage from the exposed face.
   b. Other reinforcement shall have a minimum coverage of one bar diameter over all the bars, but not less than 3/4". When masonry is exposed to soil, minimum coverage shall be 1.5".
3. Vertical steel reinforcement shall be placed and secured against displacement prior to grouting by wire positioners or other suitable devices: at intervals not exceeding 112 bar diameters, at the grout lift heights, or at bar splice locations, whichever is less. Vertical reinforcing shall be located at the center of the wall, unless noted otherwise.
4. Lap Splice Lengths: Lap all masonry reinforcing bars per the "Masonry Reinforcing Bar Lap Splice Schedule." Joint reinforcement shall lap a minimum of 6".
5. Corner Bars: Horizontal reinforcement shall be continuous at all corners and at intersecting walls. Provide corner bars with the required lap splice length.
6. Dowels: All vertical reinforcing shall be doweled to the foundation wall, footing (structure below) and to the structure above with the same size dowel, spacing (and in the same core) as the vertical wall reinforcing unless noted otherwise.
7. Wall Openings 24" wide and wider: Provide reinforced masonry lintels per Masonry Lintel Schedule over the top of, and 2 - #5 bars, in grouted spaces, on all sides and adjacent to every unscheduled opening, unless noted otherwise. Bars for all openings shall extend a minimum of 48 bar diameters beyond the corners of the opening. Vertical bars shall extend from floor level below to the floor , or roof, level above. Where a 48 bar diameter extension is not possible, extend bars as far beyond the opening as possible and terminate them with a 90 degree standard ACI hook.
8. Horizontal wall reinforcing shall be continuous through joining concrete walls, masonry walls, columns, and pilasters. Provide a key between the wall and the column or pilaster. Horizontal wall reinforcing shall be placed inside the column vertical reinforcing.
9. Anchor bolts and headed stud anchors shall be set in a grouted cell. Anchor bolts and headed stud anchors shall have 1" grout surrounding the shank at its penetration. Grout shall be flush with the face or top of the masonry.
10. All masonry column ties shall terminate with 135 degree hooks plus a 6 bar diameter extension (4" minimum).
11. The exposed face of all embed plates shall be set flush with the face of masonry wall or column.

D. Minimum Reinforcing:
All masonry walls shall be reinforced as follows, unless shown otherwise on the drawings. Reinforcing shall be placed in grouted cells.

Wall Thickness	Horizontal Reinf.	Vertical Reinf.
6"	#4 @ 48" o.c.	#5 @ 32" o.c.
8"	#5 @ 48" o.c.	#5 @ 32" o.c.
10"	#6 @ 48" o.c.	#6 @ 32" o.c.
12"	2 - #5 @ 48" o.c.	#6 @ 32" o.c.

V. Structural Steel

A. Material:
1. W-Shapes: ASTM A992, (Fy = 50 ksi), except as noted otherwise.
2. All Other Shapes and Plates: ASTM A36 (Fy = 36 ksi), except as noted otherwise.
3. Rectangular and Square Hollow Structural Sections (HSS): ASTM A500, Grade B (Fy = 46 ksi).
4. Round HSS: ASTM A500, Grade B (Fy = 42 ksi).
5. Steel Pipe: ASTM A53, Grade B (Fy = 35 ksi).
6. Deformed Bar Anchors (DBA): ASTM A496.
7. Headed Stud Anchors (HSA): ASTM A108, with dimensions complying with AISC specifications.
8. Anchor Rods: ASTM F1554, Grade 36 with ASTM A563 heavy hex nuts and ASTM F436 hardened washers, unless noted otherwise.
9. All steel shapes and plates which are a part of the seismic force resisting system shall have Charpy V-Notch absorbed energy of 20 ft-lbs. or greater at 70 degrees Fahrenheit, as indicated below:
   a. Shapes: Group 3 (with flanges 1.1/2" or thicker), Groups 4 and 5.
   b. Plates: 2" and thicker.
   c. Test Frequency: heat.

B. Fabrication and construction shall comply with the following Codes and Standards:
1. American Institute of Steel Construction (AISC) 360-05, "Specification for Structural Steel Buildings," dated March 9, 2005.
2. AISC 341-05, "Seismic Provisions for Structural Steel Buildings" dated March 9, 2005, including Supplement No. 1, dated November 16, 2005.
3. AISC 303-05, "Code of Standard Practice for Steel Buildings and Bridges" excluding the following: Section 3.3 (last sentence of first paragraph), Section 4.4, Section 4.4.1, Section 4.4.2, Section 4.5, and Section 7.13.3.
   a. The architectural drawings are the prime contract drawings. Consultants' drawings by other disciplines are supplementary to the architectural drawings. The structural drawings shall be used in conjunction with the architectural drawings. Detailing and shop drawing production for structural elements will require information (including dimensions) contained in architectural, structural, and/or other consultants' drawings. Refer to VII. Special Instructions. notes VII.B and VII.C on this sheet.
4. AISC 358-05, "Prequalified Connections for Special and Intermediate Steel Moment Frames for Seismic Applications," dated December 13, 2005.
5. AISC/RCSC 2004, "Specification for Structural Joints Using ASTM A325 or A490 Bolts"
6. American Welding Society (AWS) D1.1-04, "Structural Welding Code - Steel" (specific items do not apply when they conflict with the AISC requirements).
7. Steel Joist Institute (SJI) 1994, "Standard Specification, Load Tables and Weight Tables for Steel Joists and Joist Girders," and "Recommended Code of Standard Practice."
8. American Iron and Steel Institute (AISI) 2001, "North American Specification for the Design of Cold-Formed Steel Structural Members."

C. Structural shapes and plates shall be fabricated from newly rolled (milled) one-piece sections without splices, unless specifically noted otherwise on the structural drawings. Connections for structural steel shall comply with the structural drawings, unless written approval is given by the structural engineer.

D. Welding:
1. Certification of Welders: All shop and field welding shall be executed by AWS certified welders who have been specifically certified for the type of work to be performed. Certification shall be considered current if dated within the past 12 months. Welders will be considered certified if they have been certified under AWS and their work records are current within every six-month period thereafter as required by AWS. Certification and records must comply with AWS Standards. Certification and appropriate records must be provided to the architect prior to beginning work.
2. Electrodes: E-70 XX or as noted otherwise. E60 XX may be used for welding steel floor and roof decks.
3. Minimum Welds: All intersecting steel shapes that are not bolted shall be connected by a fillet weld all around, unless noted otherwise. Fillet weld sizes that are not shown shall be 1/16" less than the thinnest of the connected parts for thicknesses 1/4" and larger. Fillet welds on plates less than 1/4" shall be of the same size as the thinnest of the connected parts.
4. Reinforcing Bars: Do not weld rebar except as specifically detailed in the drawings. In such cases, use only AWS standards. Do not substitute reinforcing bars for deformed bar anchors (DBAs), machine bolts, or headed stud anchors (HSAs).
5. Bolts: Do not apply any welds, including "tack" welds to bolts, including anchor bolts, except as specifically detailed in the drawings.
6. It is recommended the steel erection contractor and steel fabricator contact the Quality Assurance Agency prior to beginning any of the above welds. A program of joint preparation and welding procedures should be worked out between the two parties before the welding is started so that correct welds will be made from the beginning.
7. Headed Stud Anchor (HSA) welding and Deformed Bar Anchor (DBA) welding shall conform to the manufacturer's specifications. Welding shall comply with AWS D1.1 Section 7.6 through 7.8 and Annex IX.
8. Special Provisions for full penetration welds used in moment frames: Welding methods, procedures and quality control shall comply with AWS D1.1 and the following.
   a. Tack weld quality shall comply with Section 5.18.
   b. Arc Strikes, gouges and other imperfections within or adjacent to the joint, shall be repaired or removed.
   c. Preheat, and interpass requirements as outlined in Section 3.5.
   d. Use weld tabs at beam flange connections; after welding, remove the weld tabs and finish to a smooth contour per Section 5.31.3.
   e. Backer bars shall be removed from the beam bottom flange connections to columns. The root of the weld shall be back gouged to sound metal to remove all slag and cracks. Weld the back gouged region and finish welding using a reinforcing fillet weld, according to Section 5.10.4.
   f. Backer bars need not be removed from the beam top flange connections to columns provided that the backer bars are welded to the column flange with a continuous fillet weld for the entire length of the backer bar.
   g. Unrepaired cracks, gouges, grooves and notches will not be permitted in the joint area.
   h. Use electrodes with Charpy V-notch absorbed energy equal to or greater than 20 ft-lbs at 0 degrees Fahrenheit under AWS A5 classification test methods, and 40 ft-lbs at 70 degrees Fahrenheit using test procedures prescribed in Appendix A of FEMA 353. Acceptable electrodes include E70TG-K2, E71T-8, and E71T-1.

E. Bolted Connections:
1. Use ASTM A325N bolts for steel to steel connections, as noted herein or as noted on the drawings. A325N bolts shall be used in connections for simple span framing and beam (or girder) to bearing plate connections. Tighten bolts to a snug tight condition. A snug tight condition is usually attained by a few impacts of an impact wrench or the full effort of a man using an ordinary spud wrench. Bolts shall be tightened until all plies of the joint are in firm contact.
2. Use ASTM A325SC bolts for all steel to steel connections in moment frames and connections subject to vibrations, unless noted otherwise. Tighten bolts by the turn of the nut, calibrated wrench, or direct tension indicator method. Alternate fastener designs as defined by AISC shall be submitted to the engineer for review and acceptability prior to installation.
3. Provide hardened washers beneath the turned element of all bolts or nuts. Provide hardened beveled washers, to compensate for the lack of parallelism, where the outer face of the bolted parts has a slope greater than one in twenty with respect to the plane normal to the bolt axis. Hardened washers or plates installed over oversized holes or slotted holes shall be at least 5/16" thick and shall conform to ASTM F436. Plates or bars installed at slotted holes shall have a size sufficient to completely cover the slot after installation.
4. Where a steel to steel beam connection is not detailed in the drawings, provide a standard AISC framed connection with the capacity to support one half of the total uniform load capacity of the given shape for the span and for the steel specified.
5. Bolts, nuts and washers shall not be reused.

F. Steel Lintels:
Provide steel angle lintels at all openings through the masonry veneer. Provide one inch of bearing for each foot of width of opening, with a minimum bearing of six inches. See the Steel Angle Lintel Schedule for size.

G. Beam Web Stiffener Plates:
Provide full-height web stiffener plates to each side of all beams above all bearing points. Stiffener plates shall be the thickness noted below unless noted otherwise and shall be welded on both sides of the stiffener plate with fillet welds (noted below) all around.

Beam Web stiffener thickness	For beams with flange widths between	Weld Size
1/4 inch thick	Greater than 0" and less than 8 1/4"	3/16"
3/8 inch thick	Greater than 8 1/4" and less than 12 1/4"	1/4"
1/2 inch thick	Greater than 12 1/4" and less than 16 1/2"	5/16"
5/8 inch thick	Greater than 16 1/2" and less than 20 3/4"	3/8"

H. Composite Beams
1. Composite beams are indicated on the framing plans with the suffix ( ). The number inside the brackets indicates number of studs for this beam. Beams shall have the studs spaced uniformly over the entire beam length.
2. Beams which have more than one number inside the symbol (, ,), such as (W, X, Y, Z), shall have "W" number of studs spaced evenly over the first "section of beam", "X" number of studs spaced evenly over the second "section of beam", "Y" number of studs spaced evenly over the third "section of beam", and "Z" number of studs spaced evenly over the fourth "section of beam". A "section of beam" is defined as that portion of beam located between the column and the nearest intersecting framing member or that portion of beam located between two adjacent intersecting framing members.
3. All headed stud type shear connectors shall be in conformance with ASTM A108. Dimensions shall comply with AWS. Use 3/4" diameter studs. Headed studs shall extend 1.1/2" minimum above the top of the steel deck after welding. Headed studs shall be applied through the metal deck to the top flange of the steel section, or welded directly to the steel section.
4. The minimum center-to-center spacing of stud connectors shall be six (6) diameters along the longitudinal axis of the supporting composite beam and four (4) diameters transverse to the longitudinal axis of the supporting composite beam. The maximum center to center spacing shall not exceed 32".
5. C= 0.00" on the plans denotes precamber dimension (upward) in inches.

SEE SE002 FOR STRUCTURAL STEEL CONTINUED.

GSBS | ARCHITECTURE | LANDSCAPE ARCHITECTURE | PLANNING | INTERIOR DESIGN
375 West 200 South Suite 100
Salt Lake City
Utah 84101
Tel 801.521.8600
Fax 801.521.7913
GSBS-PC.COM

LICENSED CERTIFIED STRUCTURAL ENGINEER NO. 144210 RONALD JAMES REAVELEY UTAH
1 FEB 2008

REAVELEY ENGINEERS + ASSOCIATES
Consulting Structural Engineers

Revision Schedule		
#	DATE	REVISION

NORTH SALT LAKE READINESS CENTER AND CIVIL SUPPORT TEAM

Salt Lake City, UT

GENERAL STRUCTURAL NOTES

PROJECT NO. 2005.003
DATE 2/01/2008
DRAWN YW
CHECKED DA
BINDING ORDER 70

SE001

V. Structural Steel Cont.

I. Open Web Steel Joists and Girders:
1. The steel joist supplier shall be responsible for the design of all open web steel joists and girders. Joists or girders with slopes greater than 1/2 inch per foot shall be designed to meet or exceed the load capacities, listed in the SJI load tables, of the joist or girder sizes indicated on the framing plan, as if the joists or girders were installed level.
2. Open web joists and girders shall be designed with deflection limits of L/240 for total load and L/360 for live load, where L is the joist span.
3. Where uplift loads due to wind are indicated, rows of bottom chord bridging shall be provided at the first bottom chord panel points per SJI Specifications. This is in addition to the bridging shown on the framing plans.
4. Provide special bearing ends to accommodate slopes from sloped joists, sloped girders or sloped bearing conditions.
5. Camber: All joists shall be cambered as specified in the SJI specifications, unless noted otherwise.
6. Field Modifications: Do not modify any joist or girder, including holes through the top and bottom chords, without the written consent and direction from the manufacturer.
7. Shop Drawings and Design Calculations: Shop drawings for all joists and girders used in the project shall be submitted for review. Prior to the fabrication of joists and girders, the open web steel joist and girder manufacturer shall prepare complete joist and girder calculations under the direct supervision of a professional engineer licensed in the State of Utah. Calculations shall be submitted for review for joists and girders designated as SPECIAL or SP and for all joists or girders with axial loads or additional concentrated loads (as noted on the drawings). Submitted calculations shall bear the seal of a professional engineer licensed in the State of Utah.
8. Stabilizer Plates: Provide steel joist and joist girder stabilizer plates as indicated. Stabilizer plates shall be 6" x 6" with a 13/16" diameter hole with 1.1/2" minimum edge distance, and shall extend 3" minimum below the bottom chord of the joist or girder. Plate thickness shall be equal to the chord gap minus 1/4", or 3/4", whichever is less.
9. Verify size, weight, location and configuration of all roof top equipment with architect and mechanical engineer. Provide steel frames for support of roof top equipment as indicated on structural details in the structural drawings. Coordinate openings with the mechanical and general contractor.
10. All concentrated loads greater than 100 pounds supported by open web steel joists and girders shall be located within 6 inches of joist or girder panel points or the joist or girder shall be reinforced with an additional web member. Refer to the "TYPICAL DETAIL AT ADDITIONAL CONCENTRATED POINT LOAD" in the structural drawings.
11. Concentrated point loads, single or multiple, totaling 100 pounds or less can be located at any point along the top or bottom chord of an open web steel joist or girder between adjacent panel points without meeting the requirements above. A limit of four concentrated 100# maximum point loads per joist or girder will be permitted on spans of 12' or greater, one concentrated 100# max. load on spans less than 12', unless specifically noted otherwise on the structural drawings.
12. Joist bridging shall never be used to support hanging loads.
13. Bracing of miscellaneous items (mechanical, electrical, plumbing, etc.) to the bottom chord of joists or girders will not be allowed in any instance. All lateral braces must connect to the top flange/top chord of the framing member above unless noted otherwise on the structural drawings.

J. Steel Floor Deck:
1. Steel floor deck shall comply with the latest requirements of the Steel Deck Institute (SDI). Submit ICC Code Evaluation Report with load and lateral shear capacities with shop drawings.
2. Steel floor deck shall be 3" deep X 20 gauge minimum phosphatized/painted composite (deck shall be galvanized (G60) when used above or below mechanical equipment rooms), type "W" deck with interlocking side seams with the following properties:

	20 Gauge	18 Gauge
Minimum S (in3/ft) =	0.534	0.767
Minimum I (in4/ft) =	0.896	1.203

Painted deck shall be coated with special paint to receive sprayed-on fire proofing, where required.
3. A 2 1/2" thick (5 1/2" overall) normal weight concrete (f'c = 3,000 psi @ 28 days unless noted otherwise) slab shall be poured over the steel deck. Reinforce slab with 6" x 6" - W2.1/W2.1 welded wire fabric (minimum) or reinforce slab with 2 pounds per cubic yard minimum polypropylene fibrillated fiber reinforcement, as per specifications. Welded Wire Fabric shall be placed 1" to 1 1/2" below the top of the slab.
4. Steel deck with 2 1/2" thick (5 1/2" overall) lightweight concrete slab shall have a minimum diaphragm shear capacity of 890 lbs/ft. for a 6'-0" deck span.
5. Weld deck to supporting framing members with 3/4" diameter puddle welds at the following spacing (Closer spacings may be used to develop minimum shear requirements.):
   a. 12" o.c. to supports perpendicular to deck corrugations (4 welds per 36" wide sheet).
   b. 12" o.c. to all supports parallel to deck corrugations.
   c. Stud welds may take the place of puddle welds where studs are welded through the deck to the top flange of beams.
   d. All welded surfaces shall be dry before welding deck or studs to supports.
6. Attach interlocking seams with 3/16" button punch at 18" o.c. or 1 1/2" top seam weld at 36" o.c. between adjacent pieces of deck. Crimp seams before button punching or welding interlocking seams. Closer spacings may be used to develop minimum shear requirements.
7. All deck shall be 3-span continuous minimum where possible. In areas where 3-span conditions are not possible, the deck shall meet the above loading criteria for the span condition. The contractor shall provide heavier gauge deck or provide shoring as required for one or two span conditions to meet the equivalent loading of the above deck under a three span condition.
8. Deck shall have a minimum bearing length of 2".

K. Steel Roof Deck:
1. Steel roof deck shall comply with the latest requirements of the Steel Deck Institute (SDI). Submit ICC Code Evaluation Report with load and lateral shear capacities with shop drawings.
2. Steel roof deck shall be 1 1/2" deep X 20 Gauge minimum galvanized (G60), type "B" wide rib deck with interlocking side seams with the following properties:

	20 Gauge	18 Gauge
Minimum S (in3/ft)=	0.235	0.322
Minimum I (in4/ft)=	0.216	0.302

3. Minimum allowable deck diaphragm shear values shall be 1889 lb/ft. for a 10'-0" deck span.
4. Weld steel roof deck to supporting framing members with 3/4" diameter puddle welds at the following spacings (Closer spacings may be used to develop minimum shear requirements.):
   a. 6" o.c. to all supports perpendicular to deck corrugations (7 welds per 36" sheet).
   b. 6" o.c. to the following supports parallel to deck corrugations: All perimeter supports, all concrete or masonry walls, all joists or joist girders with a "T/C" designation, and all steel beams which are on a grid line with braced frames or moment frames.
   c. 12" o.c. to all other supports parallel to deck corrugations.
   d. All welded surfaces shall be dry before welding deck to supports.
5. Attach interlocking seams with 1 1/2" long top seam welds at 12" o.c. minimum between adjacent pieces of decking. Crimp side seams before welding. Closer spacings may be used to develop minimum shear requirements.
6. Alternate means of deck attachment and fastening using screws, pins or other mechanical fastening methods are permitted with approval of the engineer. The contractor shall submit the proposed attachment system and the code evaluation report demonstrating the system has the strength to meet the required deck shears specified above (in item 3) and on the plans. The flexibility factor of the proposed deck attachment system shall be equal to or less than the flexibility factor for the specified welded deck attachment system. If the alternate attachment method is approved, it is the responsibility of the contractor to ensure that the deck type and profile is compatible with the fastening system being used.
7. Provide a 2" minimum bearing and a 4-inch lap at the splice points of all pieces of deck.
8. All deck shall be 3-span continuous minimum where possible. The contractor shall provide heavier gauge deck as required for one or two span conditions to meet equivalent loading of the above deck under a three span condition.
9. Steel roof deck shall not be used to support loads from plumbing, HVAC ducts, light fixtures, architectural elements or equipment of any kind, unless specifically noted otherwise. Lightweight suspended acoustical ceilings with a total weight per wire not exceeding 50# may be hung from the steel roof deck. The hangers should be staggered to distribute the load over multiple deck flutes.

L. Cold-Formed Steel
1. Light Gauge Steel Framing:
   a. Where steel framing size designators are used in the drawings, they follow the convention established by the Steel Stud Manufacturers' Association (SSMA) and the North American Steel Framing Alliance (NASFA). Framing members provided shall comply with the designations according to this convention.
   b. All load bearing stud (and/or) joist framing members along with all runner, bridging, and end track shall be of the designation shown on the plans. All studs with base metal thickness of 54 mil and 68 mil, and joists with base metal thickness of 54 mil, 68 mil and 97 mil, shall be formed from steel meeting the requirements of ASTM A570 except that the steel shall have a 50,000 psi yield stress. All track and end closures with base metal thickness of 54 mil and 68 mil, bridging with base metal thickness of 54 mil, and studs and track with base metal thickness of 43 mil and 33 mil, shall be formed from steel with a minimum yield of 33,000 psi. All components shall be galvanized.
   c. Follow all manufacturers' recommendations for the use of these products.
   d. Unless noted otherwise, all welded connections shall be done using 1/8" AWS type 6013 or 7014 rod with a welding heat of 60-110 amperes depending on the gauge of material and the fit of the parts. Wire tying of framing components shall not be permitted.
   e. All interior non-bearing steel stud walls that extend above the ceiling but do not attach to the floor or roof diaphragm (above) shall have diagonal braces at 45 degrees (+/-). The KL/r ratio of the brace shall not exceed 200 and shall not be spaced further apart than 10'-0". Connect diagonal braces to the top of the steel stud walls and to the underside of the top flange of the steel beams, open web joists or girders, etc. with 1/8" fillet welds all around. Diagonal angle braces may be connected to 8" x 8" x 1/4" steel plates which shall be anchored to the floor or roof decks which have concrete fill above with 2- 3/8" dia. expansion anchors for each plate. Connect angle to plate with a 1/4" fillet weld all around. Connect diagonal braces to roof decking which does not have concrete fill above per the non-bearing wall brace connection details shown on the structural drawings. Diagonal braces may be constructed from cold-formed light gauge steel studs but must conform to the kl/r ratio of less than 200 requirement. When diagonal brace lengths exceed 10'-0" (+/-), cold-formed box sections made from two 600S137-54 steel studs will likely be required.
2. Prefabricated Systems: Submit complete shop drawings and calculations of all elements for review. Submittals shall bear the stamp of a Professional Engineer registered in the State of Utah.

M. Prefabricated Metal Buildings:
1. Design, Fabrication and Erection: All prefabricated elements with their associated hardware shall comply with the latest requirements of the IBC, AISC, SDI and AISI.
2. Design Calculations: Prior to fabrication, and installation of anchor bolts, the metal building supplier shall submit complete shop drawings and calculations including reactions bearing the stamp of a Registered Professional Engineer, licensed in the State of Utah. Complete calculations shall be submitted with the shop drawings.
3. Field Modifications: Do not modify any structural element of the prefabricated metal building without the written consent and direction from the manufacturer. Send copies of the consent and modifications to the Architect-Engineer.

VI. Special Instructions

A. The project specifications are not superseded by the General Structural Notes but are intended to be complementary to them. Consult the specifications for additional requirements in each section. Notes and specific details on the drawings shall take precedence over General Structural Notes and typical details.

B. The architectural drawings are the prime contract drawings. Consultant drawings by other disciplines are supplementary to the architectural drawings. All omissions or conflicts, including dimensions, between the various elements of the consultants' drawings and/or specifications shall be brought to the attention of the Architect before proceeding with any work involved. In case of conflict, follow the most stringent requirement as directed by the Architect without additional cost to the owner. Any work done by the contractor after discovery of such discrepancy shall be done at the contractor's risk.

C. The structural drawings shall be used in conjunction with the architectural drawings. Primary structural elements and overall structural layout are indicated within the structural plans and details. Some secondary elements, architectural layouts, alcoves, elevations, slopes, depressions, curbs, mechanical equipment and electrical equipment, are not indicated within the structural drawings. Detailing and shop drawing production for structural elements will require information (including dimensions) contained in the architectural, structural and/or other consultants' drawings.

D. Shoring and Bracing Requirements:
1. Floor and Roof Structures -- The General Contractor is responsible for the method and sequence of all structural erection. He shall provide temporary shoring and bracing as his method of erection requires to provide adequate vertical and lateral support. Shoring and bracing shall remain in place as the chosen method requires until all permanent members are in place and all final connections are completed, including all roof and floor attachments. The building shall not be considered stable until all connections are complete.
2. Foundation walls must be braced until the complete floor or roof systems is completed. Do not backfill until floor or roof systems are in place.
3. Walls above grade shall be braced until the structural system is complete. Walls shall not be considered to be self supporting.

E. All expansion joints (E.J.) shown in the structural drawings shall be considered seismic separation joints, unless noted otherwise.

F. Submittals: A copy of all shop drawings that have been submitted for review must be kept at the construction site for reference. These drawings must bear the appropriate review stamps. The shop drawing review shall not relieve the contractor of the responsibility of completing the project according to the contract documents. The general contractor shall review and mark all shop drawings prior to submitting them to the Architect for his review. Shop Drawings made from reproductions of (these) contract drawings will be rejected.

G. Project Coordination: It shall be the responsibility of the general contractor to coordinate with all trades any and all items that are to be integrated into the structural system. Openings or penetrations through, or attachments to the structural system that are not indicated on these drawings shall be the responsibility of the general contractor and shall be coordinated with the Architect/Engineers. The order of construction is the responsibility of the general contractor. It is the contractor's obligation to provide all items necessary for his chosen procedure.

H. Contractor shall field verify all dimensions, and conditions. If the contract drawings do not represent actual conditions, contractor shall notify architect/engineer prior to fabrication or construction within that area.

I. Notice of Copyright: The structural drawings, plans, schedules, notes and details are hereby copyrighted by Reaveley Engineers and Associates, Inc., All Rights reserved. Submission or distribution of documents to meet official regulatory requirements or for similar purposes in connection with the project is not to be construed as publication in derogation of Reaveley Engineers & Associates, Inc.'s reserved rights. The documents defining the structure are instruments of service prepared by Reaveley Engineers and Associates, Inc. for one use only. Furthermore, these documents shall not be reproduced, or copied, in whole or in part by the contractor or his subcontractors for preparation of shop drawings or other submittals.

VIII. Quality Assurance

A. Quality Assurance Agency Requirements:
1. The owner shall engage a qualified Quality Assurance Agency (QAA) to provide all special inspection and quality assurance testing for the project. All quality assurance personnel assigned to the project shall demonstrate competence, to the satisfaction of the building official, for inspection of the particular type of construction or operation requiring special inspection.
2. Prior to construction, the QAA shall prepare a written Quality Assurance Implementation Plan (QAIP) for the project. The QAIP shall include a list of personnel assigned to the project including management personnel, inspection procedures and frequency, proposed testing methods and frequency of testing, and reporting procedures. The QAIP shall also outline methods of documenting deficiencies and reporting corrections. A copy of the QAIP shall be given to the contractor for review and coordination with subcontractors.
3. Prior to construction, the QAA shall submit the following information to the Architect and Engineer of Record for approval:
   a. A copy of the Quality Assurance Implementation Plan for the project.
   b. A copy of the appropriate certification and training records for each individual performing inspections or testing.
   c. A list of the testing equipment designated for the project and recent calibration records for the equipment.
   d. Sample inspection and testing reports and the distribution list for the reports.
4. The special inspector shall inspect the work per Chapter 17 of the IBC for conformance with the contract documents. The special inspector shall send reports to the owner, building official, architect, engineer, and contractor. All discrepancies shall be brought to the immediate attention of the contractor for correction. The QAA shall submit a final signed report stating that the special inspection work was, to the best of their knowledge, in conformance with the plans, specifications and applicable workmanship provisions of the IBC.

B. Seismic Force Resisting Systems
1. Elements that are a part of the Main Seismic Force Resisting System for the structure may require increased quality assurance inspection and testing. The Main Seismic Force Resisting system for the structure includes the following elements:
   a. Masonry walls.
   b. Braced Frames
   c. Moment Frames
   d. Footings and foundation systems that directly support walls referenced above.
   e. Roof decking.
   f. Floor decking and/or slab systems.
   g. All elements labeled as "drag struts" or "chords."
   h. Connections between the elements referenced above.

C. Special Inspection: Special Inspection shall be provided for the following elements per IBC sections 1704 and 1707:
1. Concrete and elements embedded in concrete shall be special inspected prior to and during placement of concrete. Special inspection of concrete shall include the following:
   a. Reinforcing steel size and placement.
   b. Surface preparation at cold joints including placement of keyways.
   c. Bolt and embed size, configuration and placement.
   d. Concrete shall receive continuous special inspection during placement, and periodic inspection after placement to ensure proper curing and weather protection procedures.
2. Structural steel fabrication and erection shall be special inspected, including the following:
   a. High strength bolts per IBC 1704.3.3 and IBC section 2209.
   b. Fillet welds smaller than 5/16" per AWS D1.1.
   c. Fillet welds larger than 5/16", multiple pass welds, and all groove welds shall receive continuous special inspection during weld placement per AWS D1.1.
   d. Welding of reinforcing steel shall receive continuous special inspection during weld placement per AWS D1.1.
   e. Welding of Headed Stud Anchors (HSA) and Deformed Bar Anchors (DBA) shall be inspected to comply with AWS D1.1 Section 7.6 through 7.8 and Annex IX.
   f. Welding or fastening of floor or roof deck per AWS D1.3. or per the code evaluation report for the fastening method.
3. Structural Masonry: Special inspection shall be provided, as follows:
   a. As masonry construction begins, and periodically during construction, verify the following are in compliance:
      (1) Proportions of site-mixed mortar and grout.
      (2) Placement of masonry units and construction of mortar joints.
      (3) Locations of reinforcement, connectors and embeds.
      (4) Protection of masonry during cold or hot weather.
   b. Prior to grouting, verify the following are in compliance:
      (1) Grout space.
      (2) Size and location of structural elements.
      (3) Grade, size and placement of reinforcement, connectors and embeds.
      (4) Construction of all mortar joints.
   c. Continuous inspection is required during placement of grout and during preparation of grout specimens, mortar specimens, and/or prisms for testing.
4. Post-installed anchors, including but not limited to expansion anchors, adhesive anchors and rebar dowels, and low velocity fasteners, shall receive special inspection per the code evaluation reports for the anchors.
   a. Continuous special inspection is required during the installation of all adhesive anchors and rebar dowels. Special inspector shall verify the following:
      (1) Anchor size and steel grade.
      (2) Hole diameter, location, and type of drill bit.
      (3) Cleanliness of hole and anchor.
      (4) Adhesive application.
      (5) Anchor embedment.

D. Structural Testing: The following materials shall be tested per IBC sections 1704 and 1708. The owner reserves the right to test any and all materials using any appropriate non-destructive procedure. Any items found to be deficient shall be corrected and retested at no additional cost to the owner.
1. Earthwork: All compacted structural fill shall be tested to verify soil gradation, lift thickness, and compaction requirements. See the specifications and earthwork section of the GSN for testing frequency and acceptability criteria.
2. Concrete Strength Verification and Testing. All concrete shall be tested to verify strength, slump, unit weight, air content, and temperature. See the specifications for testing criteria, testing frequency and acceptability criteria.
3. Masonry Strength Verification:
   a. Masonry strength, f'm shall be verified using the "Unit Strength Method" per IBC Section 2105.2.2.1 and as follows: Prior to construction, the masonry units and grout shall be tested for compressive strength. Certificates of compliance with strength requirements of the masonry units and grout shall be submitted by the masonry and grout suppliers. During construction, the masonry units and grout shall be tested for every 5,000 square feet of masonry constructed per GSN IV.A, above. Proportions of materials in mortar and grout delivered to the site shall be verified.
   b. The contractor has the option of using the "Masonry Prism Test Method" per IBC Section 2105.2.2.2, in lieu of the "Unit Strength Method."
4. Welded connections shall be tested for compliance according to IBC Table 1704.3, AWS D1.1 and the contract specifications and plans. As a minimum, the testing shall include the following:
   a. All complete penetration groove welds shall be tested 100 percent either by ultrasonic testing or by radiography.
   b. Partial penetration groove welds shall be tested either by ultrasonic testing or radiography. A minimum of 50% of these welds shall be tested.
   c. Base metal thicker than 1 1/2", when subjected to through thickness weld shrinkage strains, shall be ultrasonically inspected for discontinuities directly behind such welds and three inches above and below the weld after joint assembly completion.
   d. Any material discontinuities shall be accepted or rejected on the basis of the defect rating in accordance with the testing in AWS D1.1 Chapter 6, excluding Sections 6.1 through and including 6.6. All deficient welds shall be corrected and retested at no additional cost to the owner.
5. Post-installed anchors, including but not limited to expansion anchors, adhesive anchors, and low velocity fasteners, shall be tested per the code evaluation reports for the anchors.

E. Structural Observations by the Engineer of Record.
1. The Engineer of Record may perform structural observations at critical phases of the project. Copies of the engineer's report will be distributed to the architect, contractor, owner, and QAA.
2. Observation visits to the site by the Engineer's field representatives shall not be construed as inspection or approval of construction.
3. Notification of Engineer: The contractor shall notify the engineer twenty-four hours prior to:
   a. Placing concrete in any footing.
   b. Closing any wall forms.
   c. Placing concrete in any column, beam or suspended slab.
   d. Grouting any masonry.
   e. Completing the welding of major sections of steel decking.

F. Contractor Responsibility: The contractor shall prepare and submit a written statement of responsibility to the building official and the owner prior to commencement of work on the project. As a minimum the statement shall contain the following information:
1. Acknowledgement of the quality assurance requirements for the structure.
2. Acknowledgement of receipt of the Quality Assurance Implementation Plan (QAIP) from the testing agency.
3. Acknowledgement that control will be exercised to obtain conformance to the Contract Documents and the QAIP.
4. Quality control procedures within the contractors organization, methods and frequency of reporting, and distribution of the reports.
5. Identification and qualifications of the person(s) responsible for quality control and their position(s) in the organization.

ABBREVIATIONS

AB	ANCHOR BOLT (S)	F.D	FLOOR DRAIN	NIC	NOT IN CONTRACT
ABV	ABOVE	FDTN	FOUNDATION	NTS	NOT TO SCALE
@	AT	F.F.	FINISH FLOOR		
ALT	ALTERNATE	FIN	FINISH	OPNG	OPENING
APPROX	APPROXIMATE	FL	FLOOR	OPP	OPPOSITE
ARCH	ARCHITECT(URAL)	FT	FOOT	O.C.	ON CENTER
		FTG	FOOTING	O.F.	OUTSIDE FACE
BM	BEAM	FV	FIELD VERIFY	OWSJ	OPEN WEB STEEL JOIST
BLW	BELOW				
		GA	GAUGE	PCF	POUNDS/CUBIC FOOT
BRG	BEARING	GALV	GALVANIZED	PL	PLATE
BTWN	BETWEEN	GLB	GLU-LAMINATED BEAM	PLF	POUNDS/LINEAL FOOT
BLDG	BUILDING	GR	GRADE	PNL	PANEL
BOT	BOTTOM	GSN	GENERAL STRUCTURAL	PSF	POUNDS/SQ FOOT
			NOTES	PSI	POUNDS/SQ INCH
C.J.	CONSTRUCTION JOINT			PT	POINT
	OR CONTROL JOINT	HB	HORIZONTAL BRIDGING		
CJP	COMPLETE JOINT	HT	HEIGHT	REINF	REINFORCING
	PENETRATION	HORIZ	HORIZONTAL	R.D.	ROOF DRAIN
CMU	CONC MASONRY UNIT	HSA	HEADED STUD ANCHORS	REQ'D	REQUIRED
COL	COLUMN				
CONC	CONCRETE	IBC	INTERNATIONAL BUILDING	SHT	SHEET
CONST	CONSTRUCTION		CODE	SI	SPECIAL INSPECTION
CONT	CONTINUOUS	ICBO	INTERNATIONAL CONFERENCE	SOG	SLAB ON GRADE
CONTR	CONTRACTOR		OF BUILDING OFFICIALS	STD	STANDARD
CTR	CENTER	ICC	INTERNATIONAL CODE	STIFF	STIFFENER
			COUNCIL	STL	STEEL
DB	DECK BEARING	IN.	INCH	SQ	SQUARE
DBA	DEFORMED BAR ANCHORS	INSUL	INSULATION	SIM	SIMILAR
		INT	INTERIOR	STR	STRUCTURAL
DBL	DOUBLE	I.F.	INSIDE FACE	STAG	STAGGERED
DET	DETAIL				
DIA	DIAMETER	JT	JOINT	T&B	TOP AND BOTTOM
DIM	DIMENSION	JST	JOIST	TEMP	TEMPERATURE
DN	DOWN	KLF	KIPS PER LINEAL FOOT	THDS	THREADS
DWG	DRAWING	KSF	KIPS PER SQUARE FOOT	T.O.	TOP OF
DWL	DOWEL	KSI	KIPS PER SQUARE INCH	TOC	TOP OF CONCRETE
		K	KIPS - 1,000 POUNDS	TOF	TOP OF FOOTING
EA	EACH			TOS	TOP OF SLAB
E.J.	EXPANSION JOINT	LF	LINEAL FOOT	TOW	TOP OF WALL
	(SEISMIC SEPARATION JOINT)	LBS	POUNDS	TYP	TYPICAL
ELEV	ELEVATION	LLH	LONG LEG HORIZONTAL		
ELEC	ELECTRICAL	LLV	LONG LEG VERTICAL	UNO	UNLESS NOTED OTHERWISE
EQUIP	EQUIPMENT				
EQ	EQUAL	MAS	MASONRY	VERT	VERTICAL
EXIST	EXISTING	MAX	MAXIMUM	W/	WITH
EXP	EXPANSION / EXPOSED	MCJ	MASONRY C.J.	WWF	WELDED WIRE FABRIC
EXT	EXTERIOR	MECH	MECHANICAL		
E.F.	EACH FACE	MFR	MANUFACTURER		
E.W.	EACH WAY	MIN	MINIMUM		
		MISC	MISCELLANEOUS		

PLAN MARKS

BF-#	BRACED FRAME	CSS-#	CONC SUSPENDED SLAB	ML-#	MASONRY LINTEL
		CSW-#	CONC SHEAR WALL	MP-#	MASONRY PIER
CB-#	CONCRETE BEAM	CW-#	CONCRETE WALL	MW-#	MASONRY WALL
CC-#	CONCRETE COLUMN				
CDP-#	CONC DRILLED PIER	FC#	CONTINUOUS FOOTING	PD-#	PLYWOOD DIAPHRAGM
CFW-#	CONC FDTN. WALL	FM#	MAT FOOTING	PSW-#	PLYWOOD SHEAR WALL
CGB-#	CONC GRADE BEAM	FR#	RECTANGULAR FOOTING		
CJ-#	CONCRETE JOIST	FS#	SQUARE FOOTING	SBP-#	STEEL BASE PLATE
CL-#	CONCRETE LINTEL	FTS#	THICKEND SLAB FOOTING	SC-#	STEEL COLUMN
CP-#	CONCRETE PIER			SCP-#	STEEL CAP PLATE
CRW-#	CONC RETAINING WALL	MC-#	MASONRY COLUMN	SD-#	STEEL DECK
CSG-#	CONC SLAB ON GRADE	MF-#	MOMENT FRAME		

GSBS | ARCHITECTURE | LANDSCAPE ARCHITECTURE | PLANNING | INTERIOR DESIGN

375 West 200 South Suite 100
Salt Lake City
Utah 84101

Tel 801.521.8600
Fax 801.521.7913

GSBS-PC.COM

LICENSED CERTIFIED STRUCTURAL ENGINEER
NO. 144210
RONALD JAMES REAVELEY
UTAH
1 February 2008

REAVELEY
ENGINEERS + ASSOCIATES
Consulting Structural Engineers

Revision Schedule		
#	DATE	REVISION

NORTH SALT LAKE READINESS CENTER AND CIVIL SUPPORT TEAM

Salt Lake City, UT

GENERAL STRUCTURAL NOTES

PROJECT NO. 2005.003	SE002
DATE 2/01/2008	
DRAWN YW	
CHECKED DA	BINDING ORDER 71

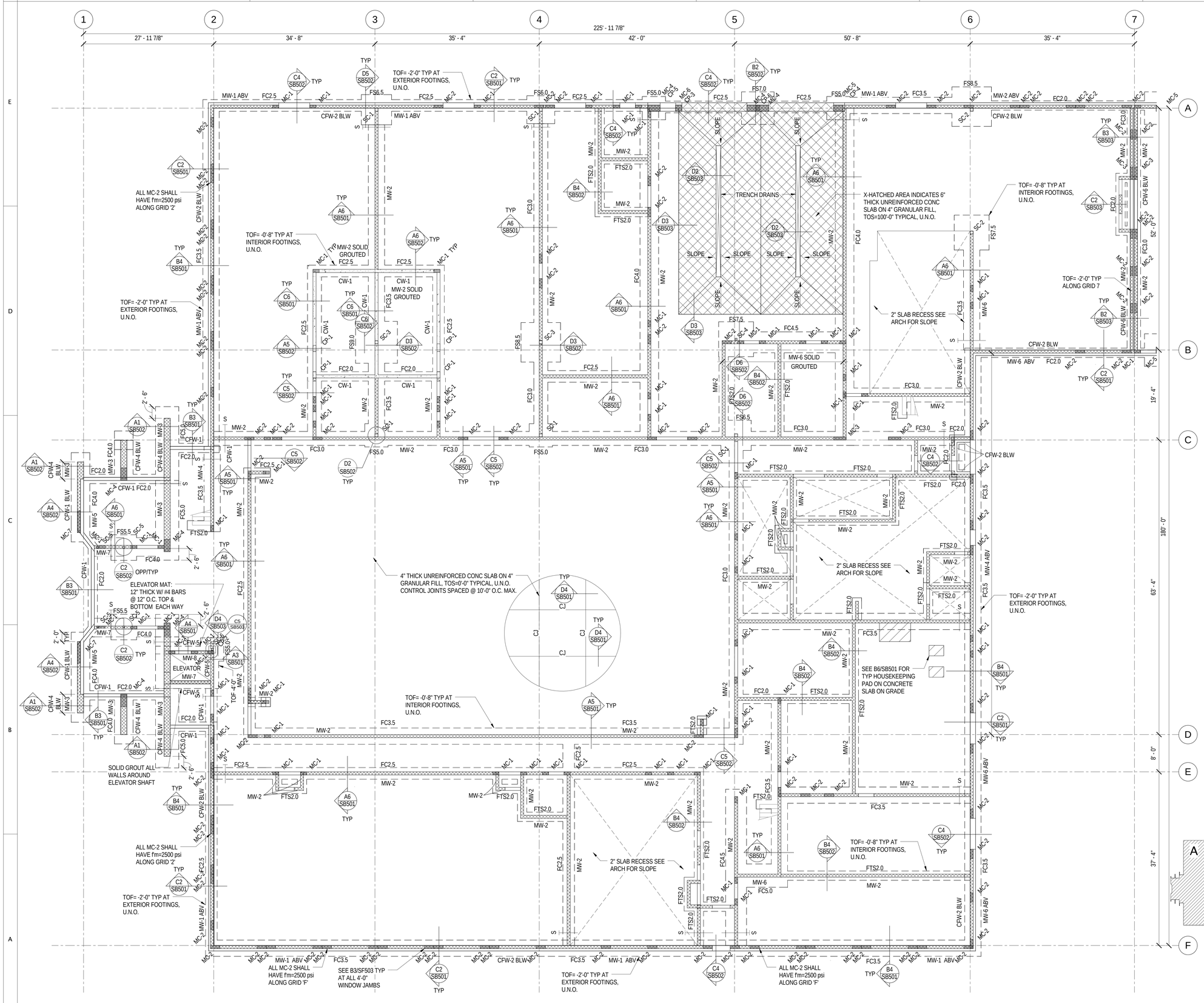

A4 / SB101 FOOTING & FOUNDATION PLAN
NO SCALE

FOOTING & FOUNDATION PLAN LEGEND

- FOOTING STEP
- FOOTING - CONTINUOUS
- FOOTING - THICKENED SLAB
- FOOTING - SQUARE FOOTING - RECTANGULAR FOOTING - MAT FOOTING
- CONCRETE WALL, CONCRETE FOUNDATION WALL, OR CONCRETE RETAINING WALL
- CONCRETE FOUNDATION WALL - RECESSED
- CONCRETE PIER IN CONCRETE WALL. TOP OF PIER RECESSED 8" BELOW SLAB. TYP U.N.O.
- CONCRETE JAMB COLUMN POURED MONOLITHIC WITH CONCRETE WALL
- MASONRY WALL
- MASONRY WALL - RECESSED
- MASONRY COLUMN IN MASONRY WALL
- STEEL COLUMN - TUBE
- 0" CHANGE IN ELEVATION
- SLAB BLOCK-OUT AT COLUMN
- CJ SLAB CONTROL/CONSTRUCTION JOINT
- SPECIAL SLAB AREA
- RECESSED/DEPRESSED SLAB
- OPENING

FOOTING & FOUNDATION PLAN NOTES

1. SEE ARCHITECTURAL, CIVIL AND LANDSCAPE DRAWINGS FOR EXTERIOR CONCRETE WORK AT DOORS, SIDEWALKS ETC.

2. SEE ARCHITECTURAL DRAWINGS AND FINISH SCHEDULE FOR SLAB AREAS TO RECEIVE FLOOR TILE.

3. SEE ARCHITECTURAL DRAWINGS FOR SLAB DEPRESSIONS AND SLOPES TO DRAINS, ETC.

4. SEE ARCHITECTURAL, CIVIL AND LANDSCAPE DRAWINGS FOR ADDITIONAL EXTERIOR CONCRETE RETAINING AND / OR SITE WALLS NOT SHOWN ON THE STRUCTURAL DRAWINGS.

5. SEE D6/SB501 FOR TYPICAL EXTERIOR CONCRETE FOOTING STEP DETAIL. SEE C3/SB501 FOR TYPICAL EXTERIOR TO INTERIOR FOOTING STEP DETAIL.

6. SEE D5/SB501 FOR TYPICAL REINFORCEMENT AT WALL CORNERS AND INTERSECTIONS.

7. SEE D4/SB501 FOR TYPICAL DETAIL AT SLAB JOINTS IN CONCRETE SLABS ON GRADE.

8. SEE D3/SB501 FOR TYPICAL DETAIL AT DEPRESSED CONCRETE SLABS ON GRADE.

9. SEE C6/SB501 FOR REINFORCEMENT AT DISCONTINUOUS CONSTRUCTION / CONTROL JOINTS IN CONCRETE SLAB ON GRADE.

10. REFER TO GENERAL STRUCTURAL NOTES AND SEE D2/SB501 FOR COMPACTED STRUCTURAL FILL REQUIREMENTS BELOW FOOTINGS.

11. SEE C5/SB501 FOR TYPICAL CONTROL JOINTS IN 8" MASONRY WALLS.

12. SEE C4/SB501 FOR TYPICAL RECESS IN 8" MASONRY WALL.

13. SEE B6/SB501 FOR TYPICAL MECHANICAL HOUSEKEEPING PAD ON CONCRETE SLAB ON GRADE.

14. SEE B5/SB501 FOR TYPICAL REINFORCING AROUND MISCELLANEOUS OR RECESSED MASONRY OPENINGS.

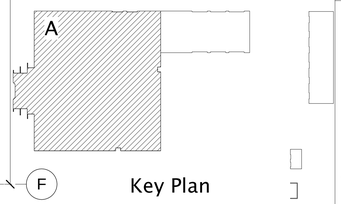

Key Plan

GSBS | ARCHITECTURE | LANDSCAPE ARCHITECTURE | PLANNING | INTERIOR DESIGN
375 West 200 South Suite 100
Salt Lake City
Utah 84101
Tel 801.521.8600
Fax 801.521.7913
GSBS-PC.COM

LICENSED CERTIFIED STRUCTURAL ENGINEER NO. 144210 RONALD JAMES REAVELEY UTAH
1 February 2008

REAVELEY ENGINEERS + ASSOCIATES
Consulting Structural Engineers

Revision Schedule

#	DATE	REVISION

NORTH

NORTH SALT LAKE READINESS CENTER AND CIVIL SUPPORT TEAM

Salt Lake City, UT

FOOTING & FOUNDATION PLAN

PROJECT NO. 2005.003	SB101
DATE 2/01/2008	
DRAWN YW	
CHECKED DA	BINDING ORDER 72

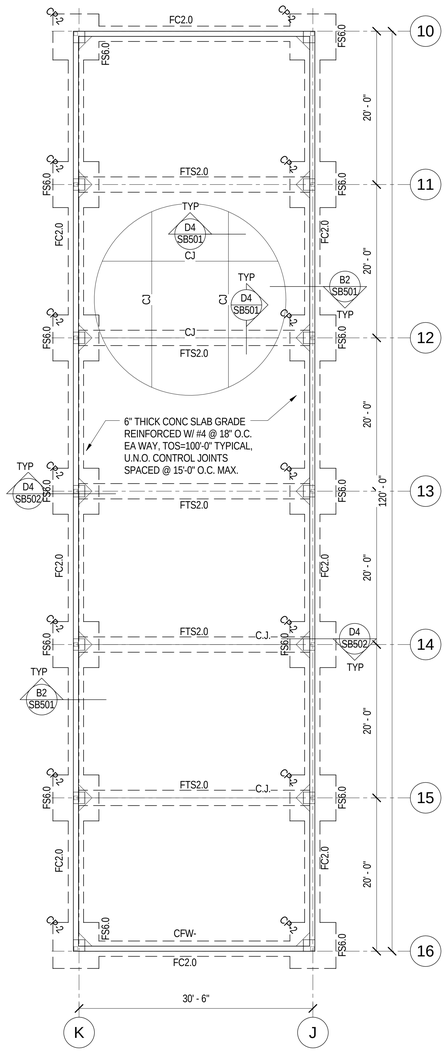

A6 / SB102 FOOTING & FOUNDATION PLAN - STORAGE BUILDING
NO SCALE

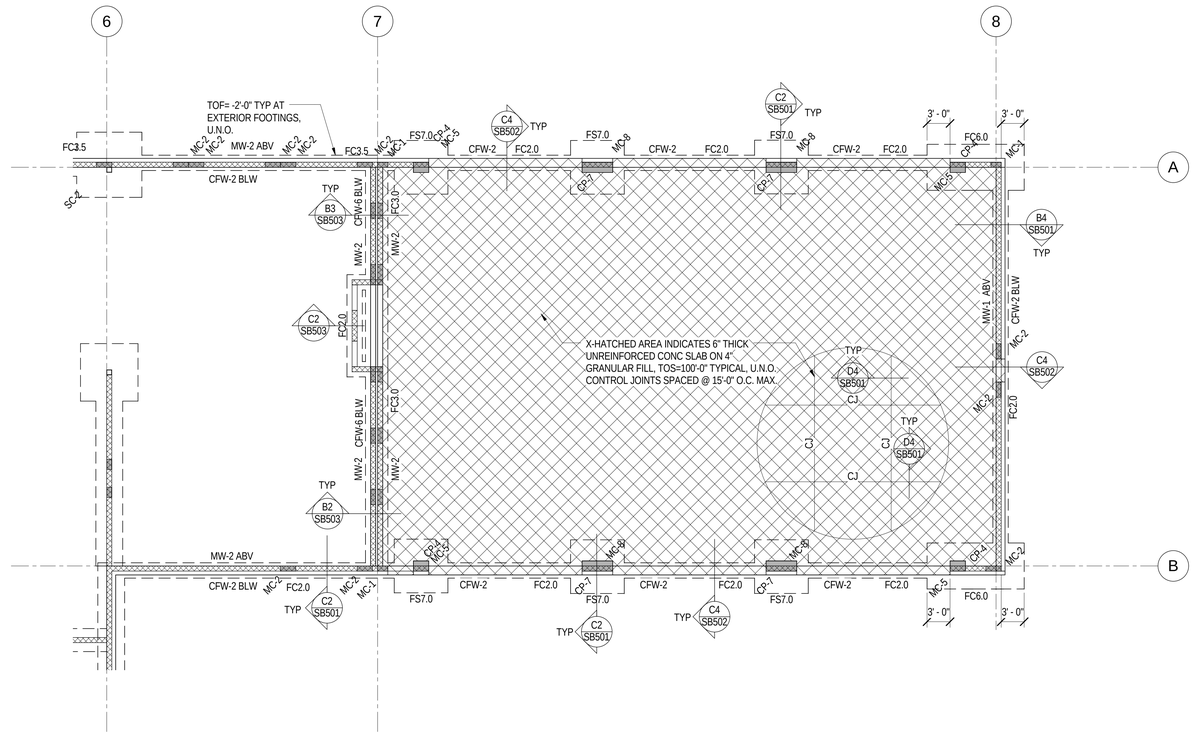

C4 / SB102 FOOTING & FOUNDATION PLAN - VEHICLE BAY
NO SCALE

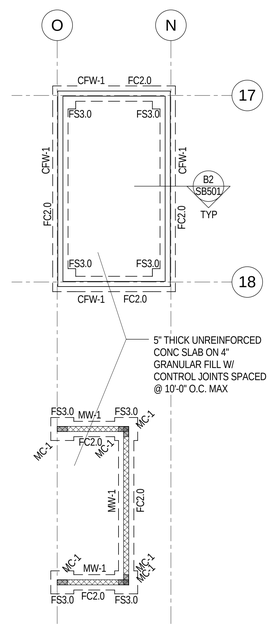

A3 / SB102 TRASH ENCLOSURE
NO SCALE

FOOTING & FOUNDATION PLAN LEGEND

- FOOTING STEP
- FOOTING - CONTINUOUS
- FOOTING - THICKENED SLAB
- FOOTING - SQUARE FOOTING - RECTANGULAR FOOTING - MAT FOOTING
- CONCRETE WALL, CONCRETE FOUNDATION WALL, OR CONCRETE RETAINING WALL
- CONCRETE FOUNDATION WALL - RECESSED
- CONCRETE PIER IN CONCRETE WALL. TOP OF PIER RECESSED 8" BELOW SLAB. TYP U.N.O.
- CONCRETE COLUMN
- CONCRETE JAMB COLUMN POURED MONOLITHIC WITH CONCRETE WALL
- MASONRY WALL
- MASONRY WALL - RECESSED
- MASONRY COLUMN IN MASONRY WALL
- STEEL COLUMN - TUBE
- CHANGE IN ELEVATION
- SLAB BLOCK-OUT AT COLUMN
- SLAB CONTROL/CONSTRUCTION JOINT
- SPECIAL SLAB AREA
- RECESSED/DEPRESSED SLAB
- OPENING

FOOTING & FOUNDATION PLAN NOTES

1. SEE ARCHITECTURAL, CIVIL AND LANDSCAPE DRAWINGS FOR EXTERIOR CONCRETE WORK AT DOORS, SIDEWALKS ETC.
2. SEE ARCHITECTURAL DRAWINGS AND FINISH SCHEDULE FOR SLAB AREAS TO RECEIVE FLOOR TILE.
3. SEE ARCHITECTURAL DRAWINGS FOR SLAB DEPRESSIONS AND SLOPES TO DRAINS, ETC.
4. SEE ARCHITECTURAL, CIVIL AND LANDSCAPE DRAWINGS FOR ADDITIONAL EXTERIOR CONCRETE RETAINING AND / OR SITE WALLS NOT SHOWN ON THE STRUCTURAL DRAWINGS.
5. SEE D6/SB501 FOR TYPICAL EXTERIOR CONCRETE FOOTING STEP DETAIL. SEE C3/SB501 FOR TYPICAL EXTERIOR TO INTERIOR FOOTING STEP DETAIL.
6. SEE D5/SB501 FOR TYPICAL REINFORCEMENT AT WALL CORNERS AND INTERSECTIONS.
7. SEE D4/SB501 FOR TYPICAL DETAIL AT SLAB JOINTS IN CONCRETE SLABS ON GRADE.
8. SEE D3/SB501 FOR TYPICAL DETAIL AT DEPRESSED CONCRETE SLABS ON GRADE.
9. SEE C6/SB501 FOR REINFORCEMENT AT DISCONTINUOUS CONSTRUCTION / CONTROL JOINTS IN CONCRETE SLAB ON GRADE.
10. REFER TO GENERAL STRUCTURAL NOTES AND SEE D2/SB501 FOR COMPACTED STRUCTURAL FILL REQUIREMENTS BELOW FOOTINGS.
11. SEE C5/SB501 FOR TYPICAL CONTROL JOINTS IN 8" MASONRY WALLS.
12. SEE C4/SB501 FOR TYPICAL RECESS IN 8" MASONRY WALL.
13. SEE B6/SB501 FOR TYPICAL MECHANICAL HOUSEKEEPING PAD ON CONCRETE SLAB ON GRADE.
14. SEE B5/SB501 FOR TYPICAL REINFORCING AROUND MISCELLANEOUS OR RECESSED MASONRY OPENINGS.

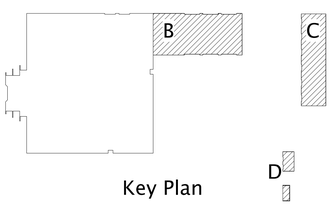

Key Plan

GSBS | ARCHITECTURE | LANDSCAPE ARCHITECTURE | PLANNING | INTERIOR DESIGN
375 West 200 South Suite 100
Salt Lake City
Utah 84101
Tel 801.521.8600
Fax 801.521.7913
GSBS-PC.COM

LICENSED CERTIFIED STRUCTURAL ENGINEER NO. 144210 RONALD JAMES REAVELEY UTAH
1 FEB 2008

REAVELEY ENGINEERS + ASSOCIATES
Consulting Structural Engineers

Revision Schedule		
#	DATE	REVISION

NORTH

NORTH SALT LAKE READINESS CENTER AND CIVIL SUPPORT TEAM

Salt Lake City, UT

FOOTING & FOUNDATION PLAN - PARTIAL

PROJECT NO. 2005.003	SB102
DATE 2/01/2008	
DRAWN YW	
CHECKED DA	BINDING ORDER 73

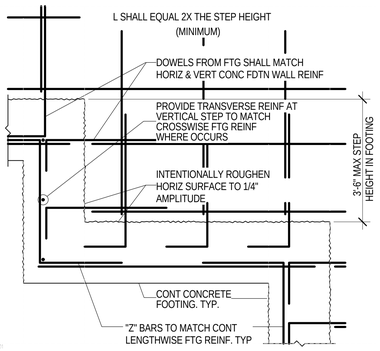

D6 / SB501 TYPICAL STEP FOOTING DETAIL
NO SCALE

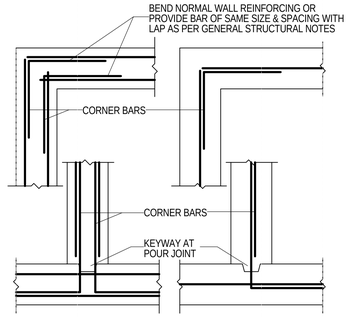

D5 / SB501 PLAN VIEW - TYPICAL WALL CORNERS & INTERSECTION
NO SCALE

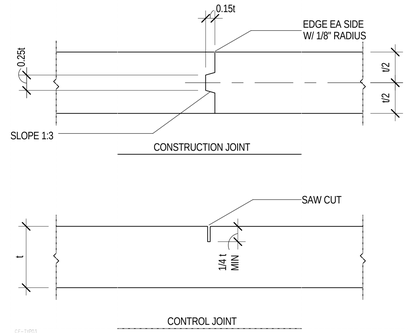

D4 / SB501 TYPICAL SLAB JOINTS
NO SCALE

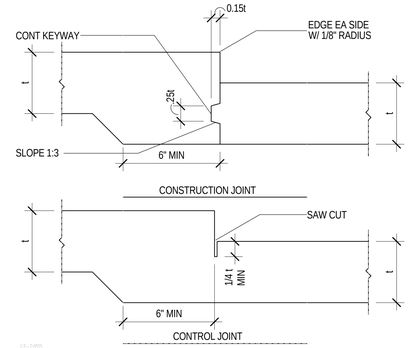

D3 / SB501 TYP SLAB JOINTS AT DEPRESSED SLAB
NO SCALE

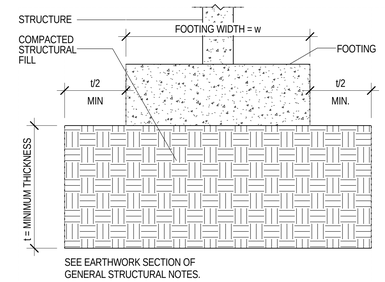

D2 / SB501 TYP COMPACTED STRUCTURAL FILL DETAIL
NO SCALE

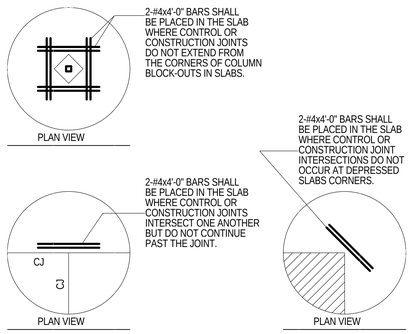

C6 / SB501 TYPICAL SLAB REINF AT DISCONTINUOUS SLAB JOINTS
NO SCALE

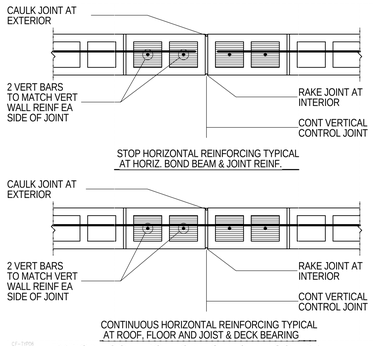

C5 / SB501 TYPICAL CONTROL JOINTS IN 8" MASONRY WALLS
NO SCALE

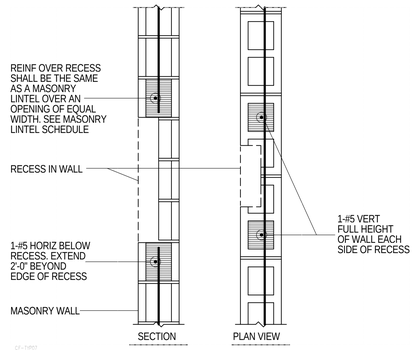

C4 / SB501 TYPICAL RECESS IN 8" MASONRY WALL
NO SCALE

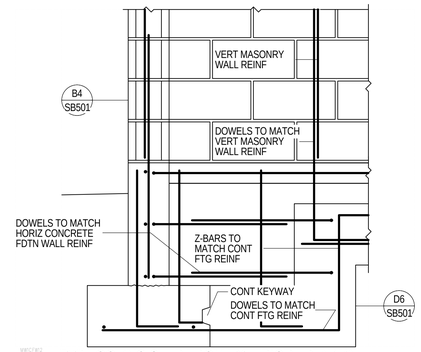

C3 / SB501 TYP FOOTING STEP FROM EXTERIOR FDTN WALL TO INTERIOR WALL
NO SCALE

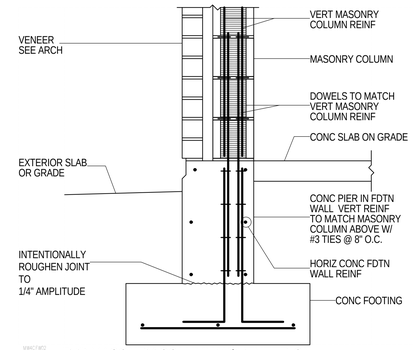

C2 / SB501 TYP MASONRY COLUMN W/ VENEER ON CONCRETE PIER IN FOUNDATION WALL
NO SCALE

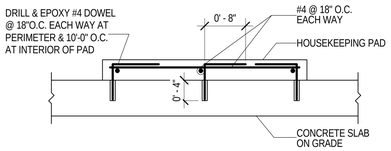

TYPICAL MECHANICAL HOUSEKEEPING PAD
ON CONCRETE SLAB ON GRADE (ALTERNATE)

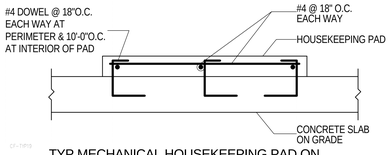

B6 / SB501 TYP MECHANICAL HOUSEKEEPING PAD ON CONCRETE SLAB ON GRADE
NO SCALE

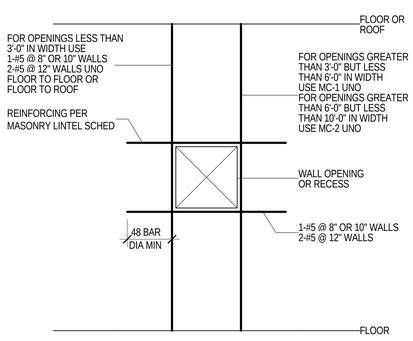

B5 / SB501 TYP REINF AROUND MISC OR RECESSED MASONRY OPENINGS
NO SCALE

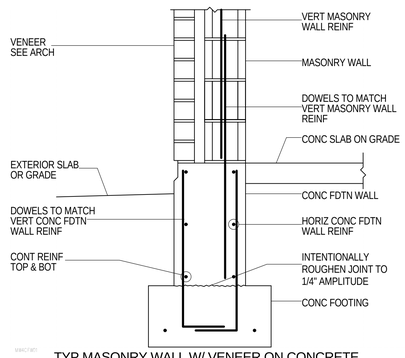

B4 / SB501 TYP MASONRY WALL W/ VENEER ON CONCRETE FOUNDATION WALL
NO SCALE

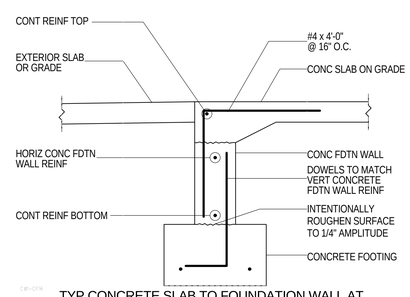

B3 / SB501 TYP CONCRETE SLAB TO FOUNDATION WALL AT DOOR OPENING
NO SCALE

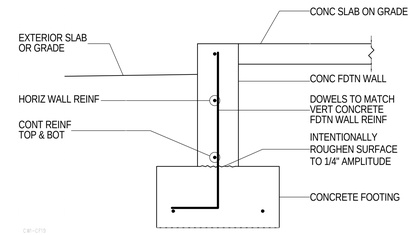

B2 / SB501 TYP EXTERIOR CONCRETE FOUNDATION WALL
NO SCALE

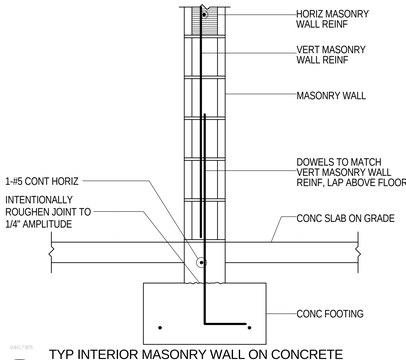

A6 / SB501 TYP INTERIOR MASONRY WALL ON CONCRETE CURB WALL
NO SCALE

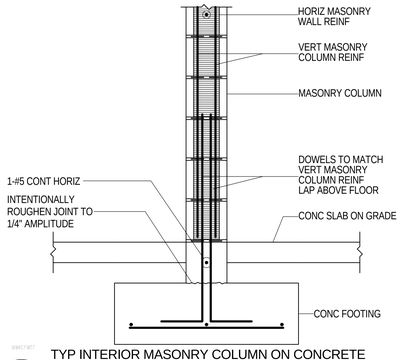

A5 / SB501 TYP INTERIOR MASONRY COLUMN ON CONCRETE CURB
NO SCALE

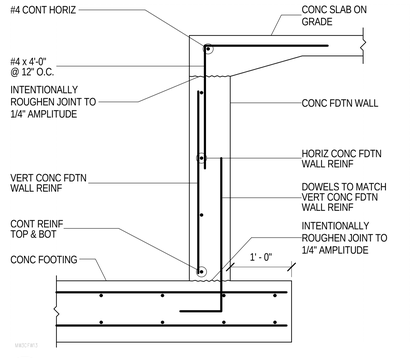

A4 / SB501 TYPICAL ELEVATOR PIT DETAIL
NO SCALE

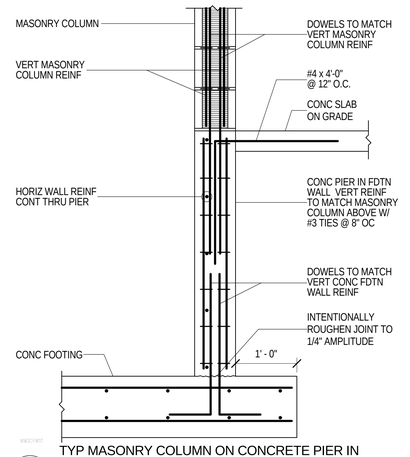

A3 / SB501 TYP MASONRY COLUMN ON CONCRETE PIER IN FOUNDATION WALL AT ELEVATOR PIT
NO SCALE

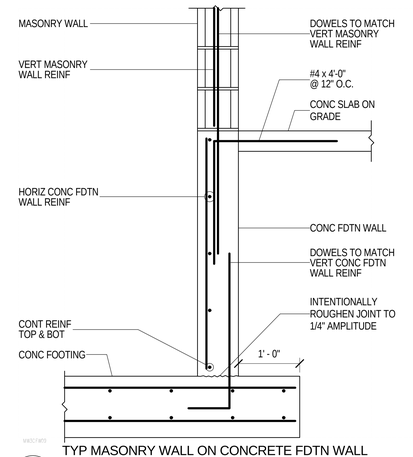

A2 / SB501 TYP MASONRY WALL ON CONCRETE FDTN WALL AT ELEVATOR PIT
NO SCALE

GSBS | ARCHITECTURE | LANDSCAPE ARCHITECTURE | PLANNING | INTERIOR DESIGN
375 West 200 South Suite 100
Salt Lake City
Utah 84101
Tel 801.521.8600
Fax 801.521.7913
GSBS-PC.COM

LICENSED CERTIFIED STRUCTURAL ENGINEER
NO. 144210
RONALD JAMES REAVELEY
UTAH
1 February 2008

REAVELEY
ENGINEERS + ASSOCIATES
Consulting Structural Engineers

Revision Schedule

#	DATE	REVISION

NORTH SALT LAKE READINESS CENTER AND CIVIL SUPPORT TEAM

Salt Lake City, UT

FOOTING & FOUNDATION DETAILS

PROJECT NO. 2005.003	SB501
DATE 2/01/2008	
DRAWN YW	
CHECKED DA	BINDING ORDER 74

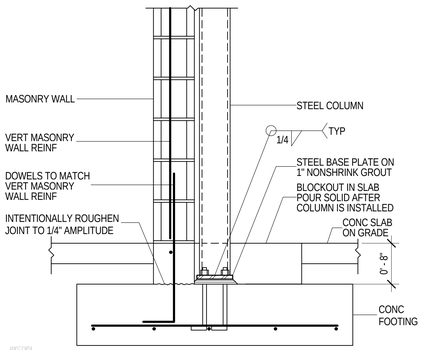

D6 / SB502 TYP STEEL COLUMN & MASONRY WALL ON CONC FOOTING
NO SCALE

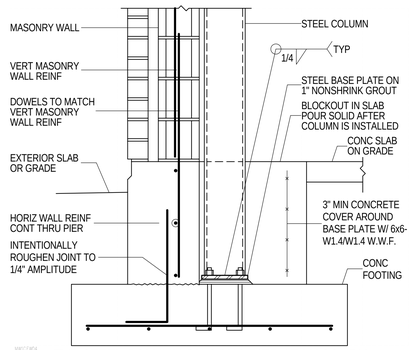

D5 / SB502 TYP STEEL COLUMN ON CONC PIER AT MASONRY WALL ON CONC FDTN WALL
NO SCALE

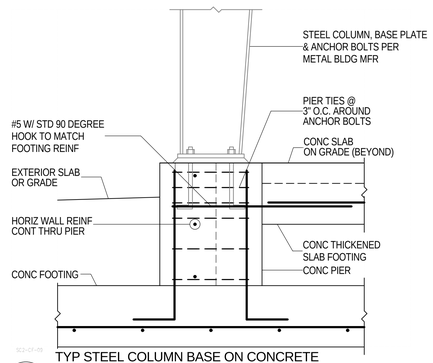

D4 / SB502 TYP STEEL COLUMN BASE ON CONCRETE FOOTING
NO SCALE

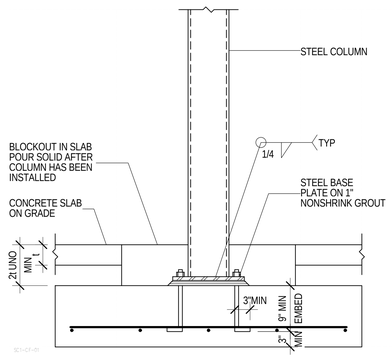

D3 / SB502 TYPICAL STEEL COLUMN BASE
NO SCALE

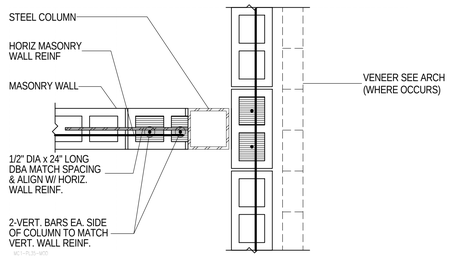

D2 / SB502 TYPICAL STEEL COLUMN IN MASONRY WALL
NO SCALE

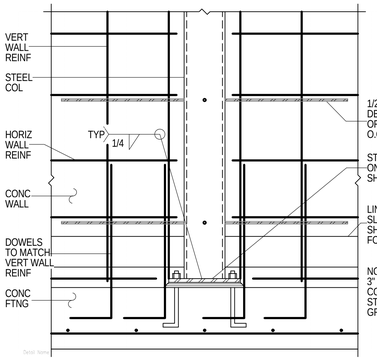

C6 / SB502 TYPICAL STEEL COLUMN AT CONCRETE WALL
NO SCALE

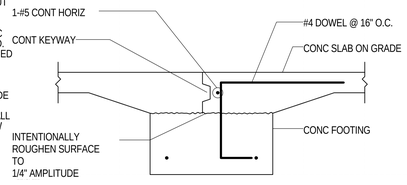

C5 / SB502 TYPICAL DOOR OPENING AT INTERIOR
NO SCALE

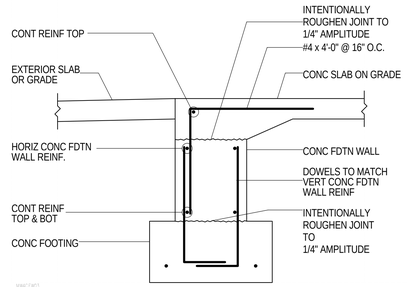

C4 / SB502 TYP FLOOR SLAB CONNECTION TO FOUNDATION WALL AT DOORWAY
NO SCALE

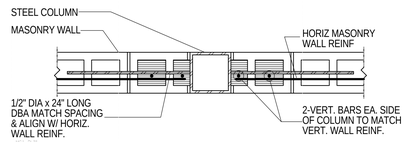

C3 / SB502 TYPICAL STEEL COLUMN IN MASONRY WALL
NO SCALE

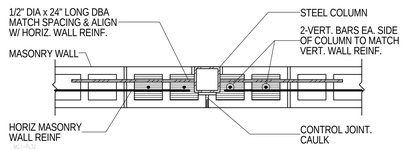

C2 / SB502 TYPICAL STEEL COLUMN IN MASONRY WALL
NO SCALE

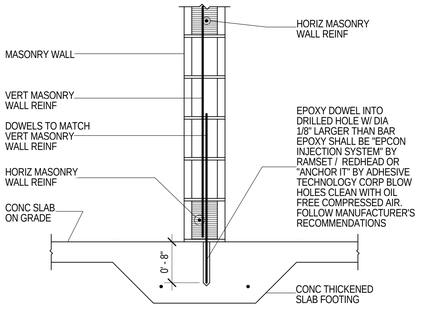

B6 / SB502 TYP INTERIOR MASONRY WALL AT THICKENED SLAB (ALTERNATE)
NO SCALE

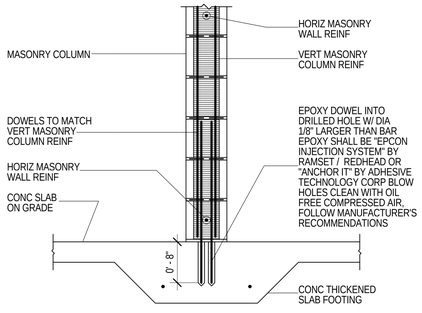

B5 / SB502 TYP INTERIOR MASONRY COLUMN AT THICKENED SLAB (ALTERNATE)
NO SCALE

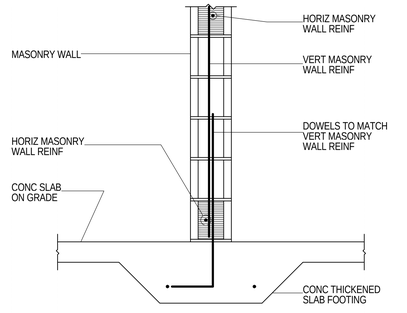

B4 / SB502 TYP INTERIOR MASONRY WALL AT THICKENED SLAB
NO SCALE

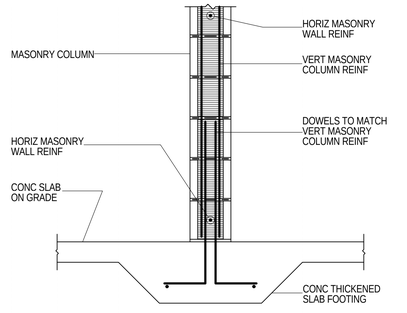

B3 / SB502 TYP INTERIOR MASONRY COLUMN AT THICKENED SLAB
NO SCALE

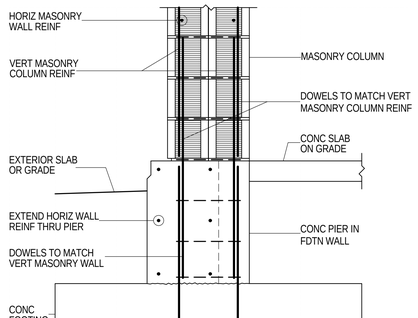

B2 / SB502 MASONRY COLUMN AT CONCRETE FOUNDATION WALL
NO SCALE

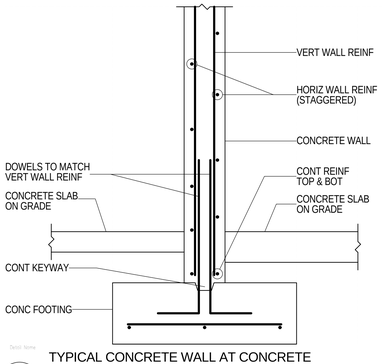

A6 / SB502 TYPICAL CONCRETE WALL AT CONCRETE FOOTING
NO SCALE

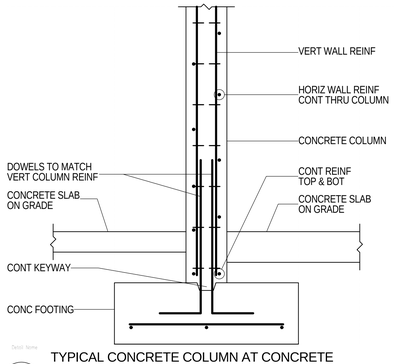

A5 / SB502 TYPICAL CONCRETE COLUMN AT CONCRETE FOOTING
NO SCALE

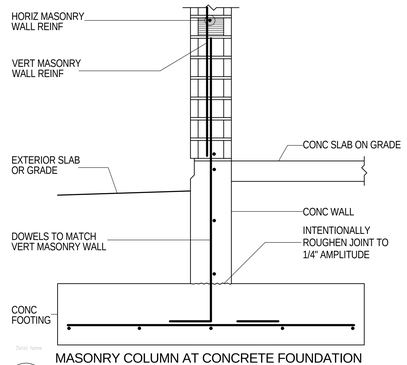

A4 / SB502 MASONRY COLUMN AT CONCRETE FOUNDATION WALL
NO SCALE

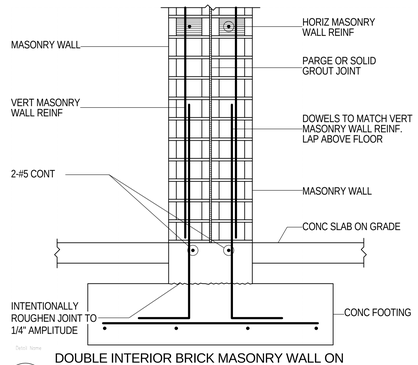

A2 / SB502 DOUBLE INTERIOR BRICK MASONRY WALL ON CONCRETE FOUNDATION WALL
NO SCALE

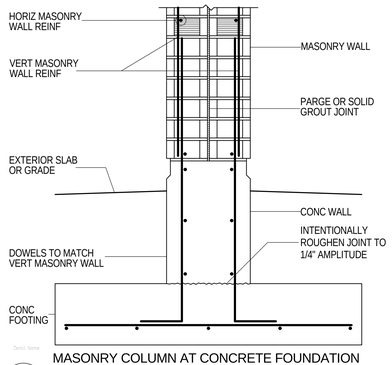

A1 / SB502 MASONRY COLUMN AT CONCRETE FOUNDATION WALL
NO SCALE

GSBS | ARCHITECTURE | LANDSCAPE ARCHITECTURE | PLANNING | INTERIOR DESIGN
375 West 200 South Suite 100
Salt Lake City
Utah 84101
Tel 801.521.8600
Fax 801.521.7913
GSBS-PC.COM

LICENSED CERTIFIED STRUCTURAL ENGINEER NO. 144210 RONALD JAMES REAVELEY UTAH
1 Feb 2008

REAVELEY ENGINEERS + ASSOCIATES
Consulting Structural Engineers

Revision Schedule

#	DATE	REVISION

NORTH SALT LAKE READINESS CENTER AND CIVIL SUPPORT TEAM
Salt Lake City, UT

FOOTING & FOUNDATION DETAILS

PROJECT NO. 2005.003
DATE 2/01/2008
DRAWN YW
CHECKED DA
SB502
BINDING ORDER 75

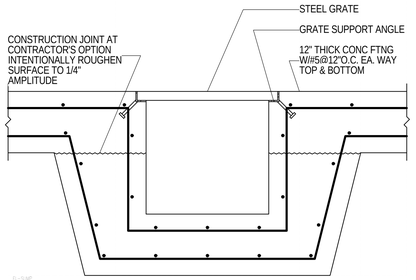

D5 / SB503 — TYPICAL SUMP PIT AT ELEVATOR
NO SCALE

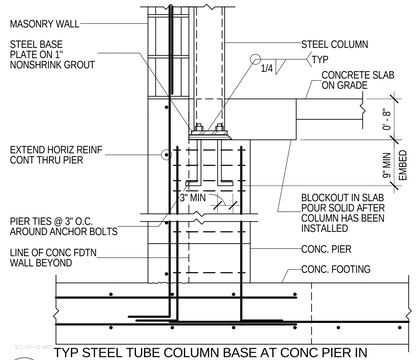

D4 / SB503 — TYP STEEL TUBE COLUMN BASE AT CONC PIER IN FOUNDATION WALL
NO SCALE

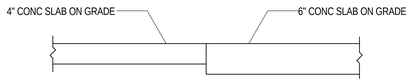

D3 / SB503 — CONCRETE SLAB ON GRADE TRANSITION
NO SCALE

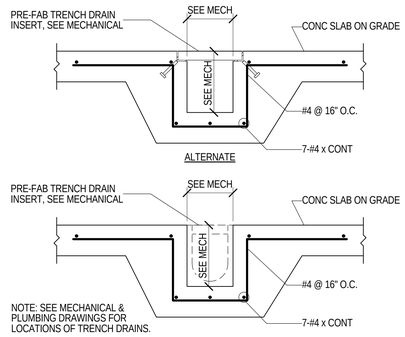

D2 / SB503 — TRENCH DRAIN & TRENCH DRAIN ALTERNATE
NO SCALE

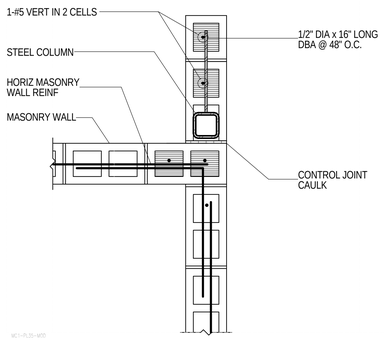

C5 / SB503 — STEEL COLUMN IN MASONRY WALL
NO SCALE

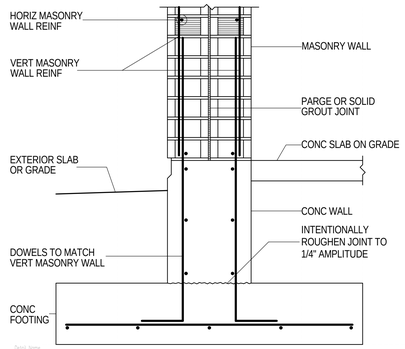

C4 / SB503 — MASONRY COLUMN AT CONCRETE FOUNDATION WALL
NO SCALE

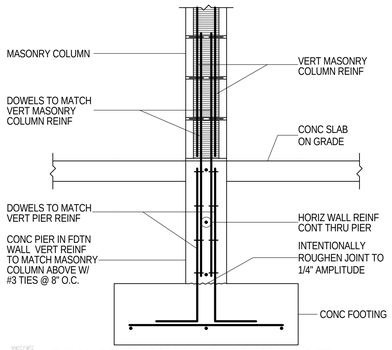

C3 / SB503 — TYP MASONRY COLUMN ON CONCRETE PIER IN FOUNDATION WALL
NO SCALE

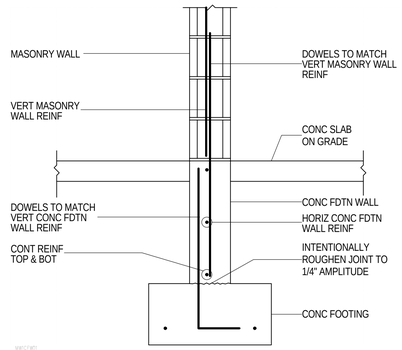

C2 / SB503 — TYP MASONRY WALL ON FOUNDATION WALL
NO SCALE

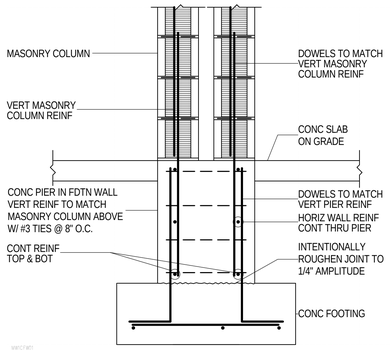

B3 / SB503 — TYP MASONRY WALL ON FOUNDATION WALL
NO SCALE

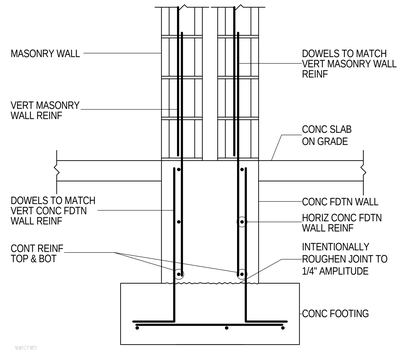

B2 / SB503 — TYP MASONRY WALL ON FOUNDATION WALL
NO SCALE

GSBS | ARCHITECTURE | LANDSCAPE ARCHITECTURE | PLANNING | INTERIOR DESIGN
375 West 200 South Suite 100
Salt Lake City
Utah 84101
Tel 801.521.8600
Fax 801.521.7913
GSBS-PC.COM

LICENSED CERTIFIED STRUCTURAL ENGINEER NO. 144210 RONALD JAMES REAVELEY UTAH
1 Feb 2008

REAVELEY
ENGINEERS + ASSOCIATES
Consulting Structural Engineers

Revision Schedule

#	DATE	REVISION

NORTH SALT LAKE READINESS CENTER AND CIVIL SUPPORT TEAM

Salt Lake City, UT

FOOTING & FOUNDATION DETAILS

PROJECT NO. 2005.003	SB503
DATE 2/01/2008	
DRAWN YW	
CHECKED DA	BINDING ORDER 76

CONCRETE FOOTING SCHEDULE

MARK	WIDTH	LENGTH	THICK	CROSSWISE REINFORCING				LENGTHWISE REINFORCING				REMARKS
				NO.	SIZE	LENGTH	SPACE	NO.	SIZE	LENGTH	SPACE	
FTS2.0	2'-0"	CONT.	12"	--	NONE	REQ'D	--	3	#4	CONT.	9"	
FC2.0	2'-0"	CONT.	12"	--	NONE	REQ'D	--	3	#4	CONT.	9"	
FC2.5	2'-6"	CONT.	12"	--	#5	2'-0"	14"	3	#5	CONT.	12"	
FC3.0	3'-0"	CONT.	12"	--	#5	2'-6"	14"	3	#5	CONT.	15"	
FC3.5	3'-6"	CONT.	12"	--	#5	3'-0"	14"	3	#5	CONT.	18"	
FC4.0	4'-0"	CONT.	12"	--	#5	3'-6"	14"	4	#5	CONT.	14"	
FC4.5	4'-6"	CONT.	12"	--	#5	4'-0"	14"	4	#5	CONT.	16"	
FC5.0	5'-0"	CONT.	14"	--	#5	4'-6"	12"	5	#5	CONT.	13.5"	
FC6.0	6'-0"	CONT.	16"	--	#5	5'-6"	11"	7	#5	CONT.	11"	
FS3.0	3'-0"	3'-0"	12"	3	#5	2'-6"	15"	3	#5	2'-6"	15"	
FS4.0	4'-0"	4'-0"	12"	4	#5	3'-6"	14"	4	#5	3'-6"	14"	
FS5.0	5'-0"	5'-0"	12"	5	#5	4'-6"	13.5"	5	#5	4'-6"	13.5"	
FS6.0	6'-0"	6'-0"	13"	6	#5	5'-6"	13.2"	6	#5	5'-6"	13.2"	
FS6.5	6'-6"	6'-6"	14"	7	#5	6'-0"	12"	7	#5	6'-0"	12"	
FS7.0	7'-0"	7'-0"	15"	8	#5	6'-6"	11.1"	8	#5	6'-6"	11.1"	
FS7.5	7'-6"	7'-6"	16"	6	#6	7'-0"	16.8"	6	#6	7'-0"	16.8"	
FS8.5	8'-6"	8'-6"	18"	8	#6	8'-0"	13.7"	8	#6	8'-0"	13.7"	
FS9.0	9'-0"	9'-0"	19"	9	#6	8'-6"	12.75"	9	#6	8'-6"	12.75"	

NOTES:

1. PLACE ALL FOOTING REINFORCING IN BOTTOM OF FOOTING WITH 3" CLEAR CONCRETE COVER UNLESS NOTED OTHERWISE.
2. TOP REINFORCING, WHERE SPECIFIED, SHALL BE PLACED IN THE TOP OF THE FOOTING WITH 2" CLEAR CONCRETE COVER.
3. SPOT FOOTINGS SHALL BE CENTERED UNDER COLUMNS AND CONTINUOUS FOOTINGS SHALL BE CENTERED UNDER WALLS, UNLESS NOTED OTHERWISE.
4. ALL FOOTINGS SHALL BE FORMED. FOOTINGS SHALL NOT BE EARTH FORMED OR OVERSIZED WITHOUT WRITTEN PERMISSION FROM THE STRUCTURAL ENGINEER.

CONCRETE PIER SCHEDULE

MARK	SIZE	REINFORCING		REMARKS
		VERTICAL	TIES	
CP-1	8" x 16"	6-#4	2-#3 @ 8" O.C.	
CP-2	18" x 18"	8-#6	2-#3 @ 6" O.C.	
CP-3	16" x 16"	4-#7	#3 @ 8" O.C.	
CP-4	24" x 16"	6-#7	2-#3 @ 8" O.C.	
CP-5	32" x 16"	8-#7	3-#3 @ 8" O.C.	
CP-6	56" x 16"	14-#7	6-#3 @ 8" O.C.	
CP-7	48" x 16"	12-#7	5-#3 @ 8" O.C.	

CONCRETE FOUNDATION WALL SCHEDULE

MARK	THICK	HORIZONTAL REINFORCING	VERTICAL REINFORCING	TOP & BOTTOM HORIZONTAL BARS	PLACEMENT
CFW-1	8"	#5 @ 15" O.C.	#4 @ 16" O.C.	2-#5	TYPE A
CFW-2	14"	#4 @ 11" O.C., E.F.	#4 @ 14" O.C., E.F.	2-#5	TYPE D
CFW-3	22"	#5 @ 11" O.C., E.F.	#5 @ 14" O.C., E.F.	2-#5	TYPE D
CFW-4	16"	#4 @ 12" O.C., E.F.	#5 @ 15" O.C., E.F.	2-#5	TYPE C
CFW-5	8"	#5 @ 12" O.C.	#5 @ 12" O.C.	2-#5	TYPE A
CFW-6	19"	#5 @ 12" O.C., E.F.	#4 @ 12" O.C., E.F.	2-#5	TYPE C

PLACEMENT TYPE

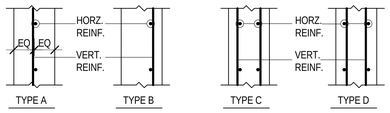

E.F. = EACH FACE
O.F. = OUTSIDE FACE (AGAINST SOIL)
I.F. = INSIDE FACE
3L = THREE LAYERS

CONCRETE WALL SCHEDULE

MARK	THICK	HORIZONTAL REINFORCING	VERTICAL REINFORCING	TOP & BOTTOM HORIZONTAL BARS	PLACEMENT
CW-1	8"	#4 @ 8" O.C., E.F.	#4 @ 8" O.C., E.F.	2-#5	TYPE D

PLACEMENT TYPE

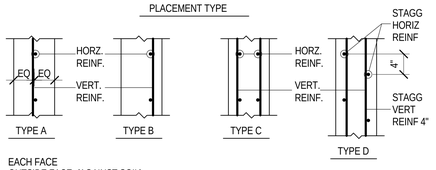

E.F. = EACH FACE
O.F. = OUTSIDE FACE (AGAINST SOIL)
I.F. = INSIDE FACE
3L = THREE LAYERS

CONCRETE SUSPENDED SLAB SCHEDULE

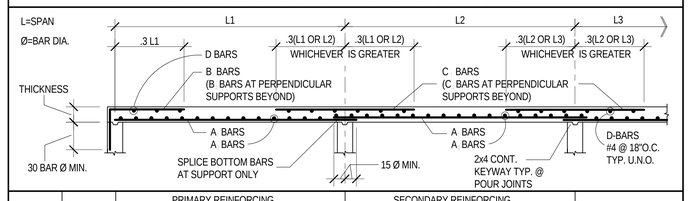

MARK	THICK	PRIMARY REINFORCING			SECONDARY REINFORCING			D BARS
		A BARS	B BARS	C BARS	A BARS	B BARS	C BARS	
CSS-1	8"	#4 @ 6" O.C.	#4 @ 6" O.C.	#4 @ 6" O.C.	#4 @ 6" O.C.	#4 @ 6" O.C.	#4 @ 6" O.C.	#4 @ 6" O.C.

NOTES.

1. PRIMARY REINFORCING SHALL RUN PARALLEL TO THE DIRECTION OF THE ARROW ( ).
2. PRIMARY BOTTOM REINFORCING SHALL BE PLACED BELOW SECONDARY BOTTOM REINFORCING. PRIMARY TOP REINFORCING SHALL BE PLACED ABOVE SECONDARY TOP REINFORCING.

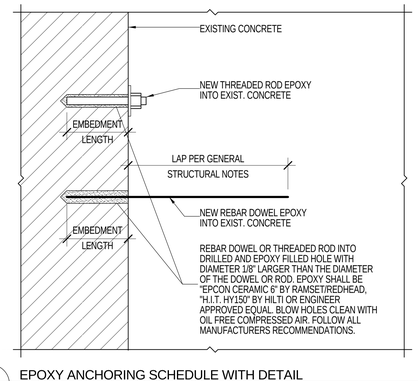

EPOXY ANCHORING SCHEDULE

REBAR DOWEL SIZE	THREADED ROD DIAMETER	EMBEDMENT LENGTH
#3	3/8"	4.1/2"
#4	1/2"	6.1/2"
#5	5/8"	7.1/2"
#6	3/4"	10"
#7	7/8"	12"
#8	1"	13"
#9	1.1/8"	14"
#10	1.1/4"	15"
#11	1.3/8"	16"

NOTES:

1. EMBEDMENT LENGTHS SPECIFIED ON PLANS OR DETAILS TAKE PRECEDENCE OVER EMBEDMENT LENGTHS IN THIS SCHEDULE.
2. EMBEDMENT LENGTHS SHALL BE ADJUSTED WHEN EXISTING CONCRETE IS OF EQUAL OR LESS THICKNESS THAN SCHEDULE REQUIRES. IN THESE CASES THE EMBEDMENT LENGTH SHALL BE THE CONCRETE THICKNESS MINUS THE CLEAR COVER REQUIREMENTS, SEE GSN.
3. CONTINUOUS SPECIAL INSPECTION REQUIRED DURING INSTALLATION FOR ALL DOWELS AND THREADED RODS.

A3 / SB601 EPOXY ANCHORING SCHEDULE WITH DETAIL

NO SCALE

GSBS | ARCHITECTURE | LANDSCAPE ARCHITECTURE | PLANNING | INTERIOR DESIGN

375 West 200 South Suite 100
Salt Lake City
Utah 84101

Tel 801.521.8600
Fax 801.521.7913

GSBS-PC.COM

CERTIFIED STRUCTURAL ENGINEER NO. 144210 RONALD JAMES REAVELEY UTAH

1 Feb 2008

REAVELEY
ENGINEERS + ASSOCIATES
Consulting Structural Engineers

Revision Schedule

#	DATE	REVISION

NORTH SALT LAKE READINESS CENTER AND CIVIL SUPPORT TEAM

Salt Lake City, UT

STRUCTURAL SCHEDULES

PROJECT NO. 2005.003	SB601
DATE 2/01/2008	
DRAWN YW	
CHECKED DA	BINDING ORDER 77

MASONRY COLUMN SCHEDULE

MARK	SIZE	REINFORCING		REMARKS
		VERTICAL	TIES	
MC-1	8" x 16"	4-#4		
MC-2	8" x 24"	6-#4		
MC-3	8" x 32"	8-#4		
MC-4	16" x 32"	8-#5	#3 @ 8" O.C.	
MC-5	16" x 24"	6-#5	#3 @ 8" O.C.	
MC-6	16" x 16"	4-#5	#3 @ 8" O.C.	
MC-7	8" x 56"	14-#4		
MC-8	16"x48"	12-#5	#3 @ 8" O.C.	

NOTES:

1. THE CENTERLINE OF VERTICAL BARS SHALL BE LOCATED 2.1/2" FROM THE FACE OF THE MASONRY UNLESS NOTED OTHERWISE. HORIZONTAL BARS SHALL BE LOCATED TO THE INSIDE OF THE VERTICAL BARS.
2. UNLESS NOTED OTHERWISE, VERTICAL REINFORCING AND TIES SHALL EXTEND FULL HEIGHT OF THE WALL.
3. MASONRY COLUMN VERTICAL BARS OR DOWELS IN CONCRETE FOUNDATION WALLS SHALL BE TIED WITH #3 TIES @ 8" O.C.

MC-8

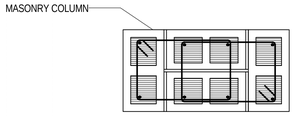

MC-4

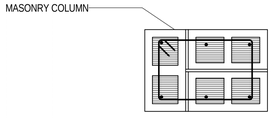

MC-5

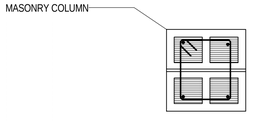

MC-6

C5 / SB602 MASONRY COLUMN - PLAN VIEW
NO SCALE

MASONRY REINFORCING BAR LAP SPLICE SCHEDULE

BAR SIZE	f'm = 2000 psi							f'm = 2500 psi		
	6" CMU	8" CMU		10" CMU		12" CMU		6" ATLAS	8" ATLAS	
	CLASS	CLASS		CLASS		CLASS		CLASS	CLASS	
	A	A	B	A	B	A	B	A	A	B
#3	17"	17"	17"	17"	17"	17"	17"	15"	15"	15"
#4	22"	22"	26"	22"	24"	22"	24"	20"	20"	24"
#5	34"	27"	42"	27"	39"	27"	39"	31"	24"	40"
#6	70"	50"	91"	46"	80"	46"	80"	64"	45"	87"
#7	-	69"	**	53"	**	53"	**	-	63"	**
#8	-	98"	**	75"	**	65"	**	-	89"	**
#9	-	-	-	96"	**	78"	**	-	-	-

NOTES:

1. CLASS A SPLICES MAY BE USED WHEN ONLY ONE BAR IS CONTINUOUS IN THE MASONRY CELL OR COURSE.
2. CLASS B SPLICES SHALL BE USED WHEN TWO BARS ARE CONTINUOUS IN THE MASONRY CELL OR COURSE.
3. ** INDICATES THAT A LAP SPLICE IS NOT ALLOWED AND MECHANICAL BAR COUPLERS ARE REQUIRED FOR THE BAR SPLICES.
4. WHERE VERTICAL BARS HAVE A REQUIRED LAP SPLICE GREATER THAN THE HEIGHT OF THE GROUT POUR, THE BAR SPLICE SHALL BE MADE WITH A MECHANICAL BAR COUPLER. WHERE THE HEIGHT OF THE GROUT POUR EXCEEDS 60 INCHES, HIGH LIFT GROUTING PROCEDURES SHALL BE FOLLOWED.
5. WHERE MECHANICAL BAR COUPLERS ARE USED, THE CONNECTOR SHALL DEVELOP 125% OF THE SPECIFIED YIELD STRENGTH OF THE BAR IN TENSION AND COMPRESSION.

MASONRY LINTEL SCHEDULE

MARK	LINTEL DEPTH	LINTEL WIDTH	MASONRY TYPE	LINTEL		MAXIMUM SPAN	REMARKS
				HORIZONTAL	STIRRUPS		
ML-1	8"	6",8",10" OR 12"	BRICK OR CMU	1- #7 CONT.	-----	3'-4"	
ML-2	16"	6",8",10" OR 12"	BRICK OR CMU	1- #7 CONT. TOP & BOT.	#3 @ 8" O.C.	5'-4"	
ML-3	24"	6",8",10" OR 12"	BRICK OR CMU	1- #7 CONT. TOP & BOT.	#3 @ 8" O.C.	8'-0"	
ML-4	32"	6",8",10" OR 12"	BRICK OR CMU	1- #7 CONT. TOP & BOT.	#3 @ 8" O.C.	10'-0"	
ML-5	40"	8"	BRICK OR CMU	1- #7 CONT. TOP & BOT.	#3 @ 8" O.C.		
ML-6	48"	8"	BRICK OR CMU	1- #7 CONT. TOP & BOT.	#3 @ 8" O.C.	8'-0"	
ML-7	64"	16"	BRICK OR CMU	SEE DETAIL A3/SB602	2-#3 @ 8" O.C.		
ML-8	48"	8"	CMU	1-#7 CONT TOP 2-#7 CONT BOT	#3 @ 8" O.C.	10'-0"	
ML-9	48"	16"	BRICK	2-#7 CONT TOP 2-#7 CONT BOT	2-#3 @ 8" O.C.		
ML-10	40"	8"	BRICK	1-#7 CONT TOP & BOT	#3 @ 8" O.C.		

NOTES:

1. MASONRY LINTELS ML-1 THROUGH ML-4 SHALL BE USED OVER OPENINGS IN MASONRY WALLS WHEN A SPECIFIC MASONRY LINTEL IS NOT OTHERWISE SPECIFIED. THE MASONRY LINTEL TO BE USED SHALL BE DETERMINED BY THE MAXIMUM SPAN AS SPECIFIED IN THIS SCHEDULE. WHEN A SPECIFIC MASONRY LINTEL IS CALLED OUT ON THE PLAN, THE MAXIMUM SPAN AS NOTED IN THIS SCHEDULE SHALL NOT APPLY

2. MASONRY LINTELS ML-1 THROUGH ML-4 SHALL NOT BE LOCATED BELOW ANY FLOOR, OR ROOF BEAM, OR GIRDER, OR ANY OTHER CONCENTRATED LOAD UNLESS SHOWN SPECIFICALLY ON THE PLAN SHEET. JOISTS SHALL NOT BEAR ON ANY LINTEL LESS THAN 16" DEEP.

3. FOR MASONRY LINTELS NOT SHOWN ON THE DRAWINGS THAT CARRY ANY FLOOR, OR ROOF BEAM, OR GIRDER, OR ANY OTHER CONCENTRATED LOAD, OR THAT SPAN GREATER THAN 10'-0" CONSULT THE STRUCTURAL ENGINEER.

4. EXTEND ALL HORIZONTAL REINFORCING 48 BAR DIAMETERS BEYOND THE EDGE OF THE OPENING. IF HORIZONTAL REINFORCING CANNOT BE EXTENDED 48 BAR DIAMETERS BEYOND THE EDGE OF THE OPENING, PROVIDE 90 DEGREE STANDARD HOOK.

5. GROUT MASONRY LINTELS MONOLITHICALLY WITH THE SUPPORT WALL OR COLUMN AT EACH END.

6. SPLICE TOP BARS AT MIDSPAN OF LINTEL ONLY.

7. SPLICE BOTTOM BARS OVER SUPPORTS ONLY.

8. FOR WALL ABOVE LINTEL, DOWEL VERTICAL REINFORCING INTO FULL DEPTH OF THE LINTEL OR 48 BAR DIAMETERS, WHICHEVER IS LESS.

9. HORIZONTAL WALL REINFORCING SHALL CONTINUE THROUGH MASONRY LINTELS. WHERE BOTH HORIZONTAL WALL REINFORCING AND LINTEL REINFORCING WOULD OCCUR IN THE SAME COURSE, THE LARGER BARS ARE TO REPLACE THE SMALLER BARS.

MASONRY WALL SCHEDULE

MARK	THICK	MATERIALS	REINFORCING			NOTES
			VERTICAL	HORIZONTAL	JOINTS	
MW-1	8"	CMU	1-#5@24" O.C.	#5@48" O.C.		
MW-2	8"	CMU	1-#5@32" O.C.	#5@48" O.C.		
MW-3	16"	ATLAS	2-#5@32" O.C.	2-#5@48" O.C.	16" O.C.	SEE NOTE #8
MW-4	8"	CMU	2-#4@8" O.C.	#5@32" O.C.		
MW-5	8"	ATLAS	1-#5@24" O.C.	#5@48" O.C.		
MW-6	8"	CMU	1-#5@32" O.C.	#5@32" O.C.		
MW-7	8"	CMU	1-#5@24" O.C.	#5@24" O.C.		
MW-8	8"	CMU	1-#5@16" O.C.	#5@16" O.C.		
MW-9	8"	CMU	2-#4@16" O.C.	#5@48" O.C.		

NOTES:

1. PROVIDE SCHEDULED VERTICAL REINFORCING BARS AT ALL CORNERS, ENDS OF WALLS, AND SPACED AS SCHEDULED, UNLESS NOTED OTHERWISE.

2. HORIZONTAL REINFORCING BARS SHALL BE CONTINUOUS AT ALL CORNERS AND AT INTERSECTING WALLS. PROVIDE CORNER BARS WITH THE REQUIRED LAP SPLICE LENGTH.

3. TERMINATE ALL HORIZONTAL REINFORCING BARS AT ENDS OF WALLS AND EDGES OF OPENINGS WITH A STANDARD HOOK AROUND VERTICAL REINFORCING BARS.

4. SEE PLANS, DETAILS AND GENERAL STRUCTURAL NOTES FOR ADDITIONAL REINFORCING REQUIREMENTS.

5. GROUT SOLID ALL CELLS BELOW GRADE, CELLS CONTAINING EMBEDS (HSA'S, DBA'S, ANCHOR BOLTS, ETC.), AND CELLS CONTAINING REINFORCING. CONSOLIDATE GROUT AS PER THE GENERAL STRUCTURAL NOTES.

6. HORIZONTAL WALL REINFORCING SHALL BE PLACED INSIDE THE VERTICALS OF MASONRY COLUMNS.

7. HORIZONTAL WALL REINFORCING SHALL CONTINUE THROUGH MASONRY LINTELS. WHERE BOTH HORIZONTAL WALL REINFORCING AND LINTEL REINFORCING OCCUR IN THE SAME COURSE, THE LARGER BARS ARE TO REPLACE THE SMALLER BARS.

8. TWO WYTHE THE 8" ATLAS PARGE COLLAR JOINT, SEE C2/SB602.

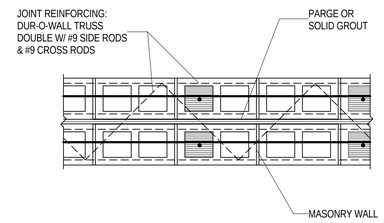

C2 / SB602 DOUBLE WYTHE ATLAS WALL (MW-3, ML-7 & ML-9)
NO SCALE

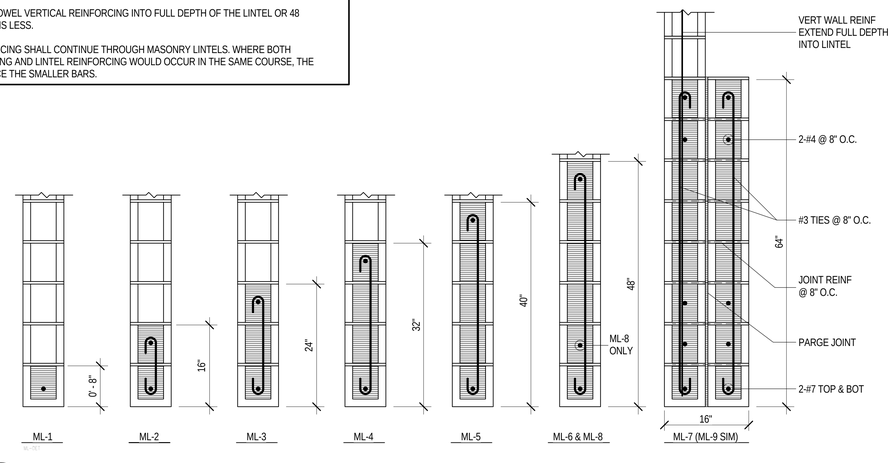

A3 / SB602 TYPICAL MASONRY LINTEL DETAILS
NO SCALE

GSBS | ARCHITECTURE | LANDSCAPE ARCHITECTURE | PLANNING | INTERIOR DESIGN
375 West 200 South Suite 100
Salt Lake City
Utah 84101
Tel 801.521.8600
Fax 801.521.7913
GSBS-PC.COM

CERTIFIED STRUCTURAL ENGINEER
NO. 144210
RONALD JAMES REAVELEY
UTAH
1 February 2008

REAVELEY
ENGINEERS + ASSOCIATES
Consulting Structural Engineers

Revision Schedule

#	DATE	REVISION

NORTH SALT LAKE READINESS CENTER AND CIVIL SUPPORT TEAM

Salt Lake City, UT

STRUCTURAL SCHEDULES

PROJECT NO. 2005.003	SB602
DATE 2/01/2008	
DRAWN YW	
CHECKED DA	BINDING ORDER 78

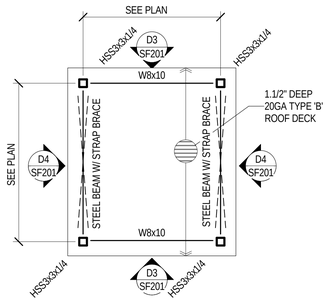

D5 / SF201 TYPICAL SMALL ROOF MONITOR FRAMING PLAN
NO SCALE

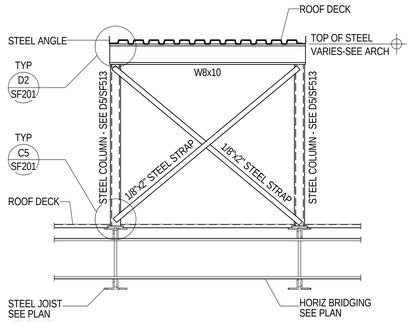

D4 / SF201 TYPICAL SMALL ROOF MONITOR ELEVATION
NO SCALE

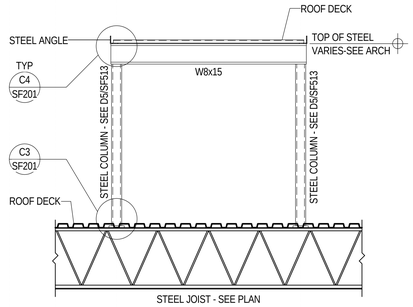

D3 / SF201 TYPICAL SMALL ROOF MONITOR ELEVATION
NO SCALE

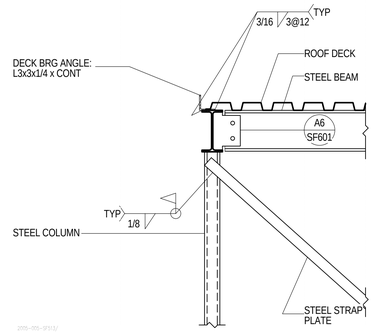

D2 / SF201 TYPICAL STEEL STRAP BRACE CONNECTION
NO SCALE

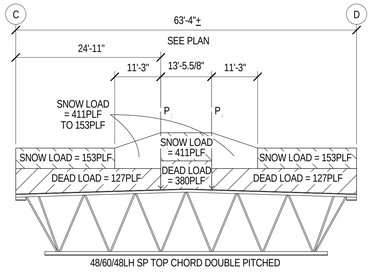

NOTE: SEE A2/SF201 FOR SPECIAL JOIST LOADING SCHEDULE CRITERIA.

C6 / SF201 SPECIAL JOIST LOAD DIAGRAM (SJ-7)
NO SCALE

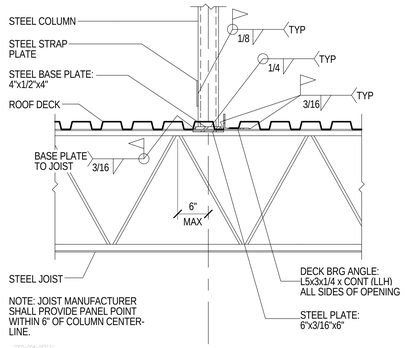

NOTE: JOIST MANUFACTURER SHALL PROVIDE PANEL POINT WITHIN 6" OF COLUMN CENTER-LINE.

C5 / SF201 TYPICAL STEEL STRAP BRACE CONNECTION AT STEEL COLUMN AT STEEL JOIST
NO SCALE

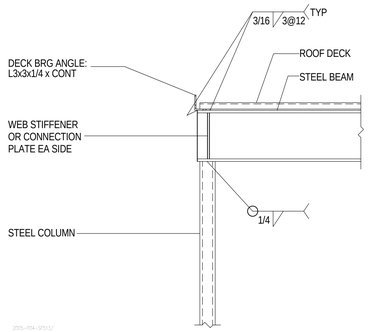

C4 / SF201 TYPICAL STEEL BEAM TO STEEL MOMENT COLUMN
NO SCALE

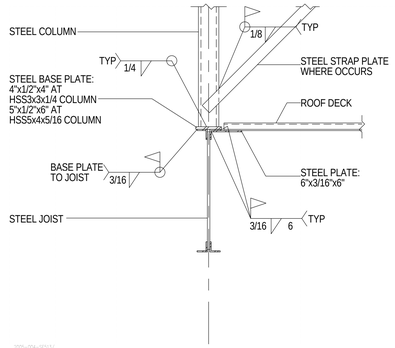

C3 / SF201 TYPICAL STEEL STRAP BRACE CONNECTION AT STEEL COLUMN AT STEEL JOIST
NO SCALE

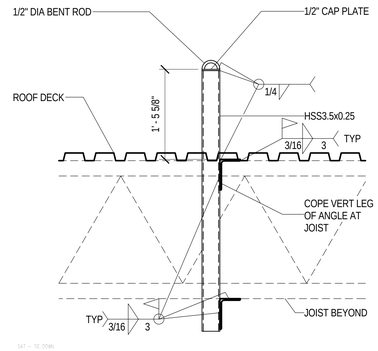

C2 / SF201 SATELLITE TIE DOWN DETAIL
NO SCALE

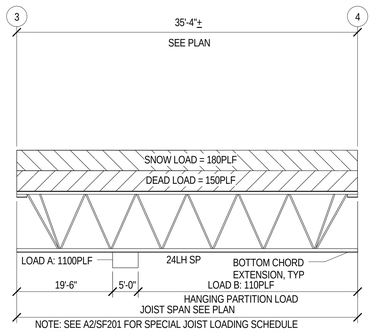

NOTE: SEE A2/SF201 FOR SPECIAL JOIST LOADING SCHEDULE CRITERIA. SEE PLAN FOR ADDITIONAL MECHANICAL LOADS.

B6 / SF201 SPECIAL JOIST LOAD DIAGRAM (SJ-1)
NO SCALE

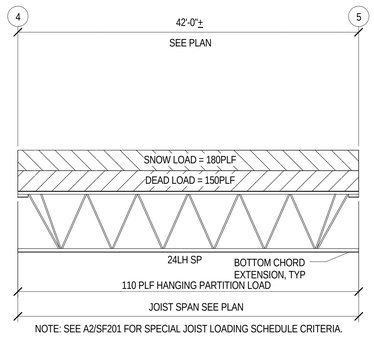

NOTE: SEE A2/SF201 FOR SPECIAL JOIST LOADING SCHEDULE CRITERIA.

B5 / SF201 SPECIAL JOIST LOAD DIAGRAM (SJ-2)
NO SCALE

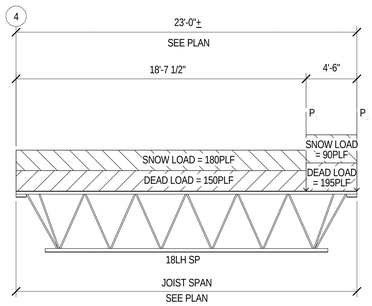

NOTE: SEE A2/SF201 FOR SPECIAL JOIST LOADING SCHEDULE CRITERIA.

B4 / SF201 SPECIAL JOIST LOAD DIAGRAM (SJ-3)
NO SCALE

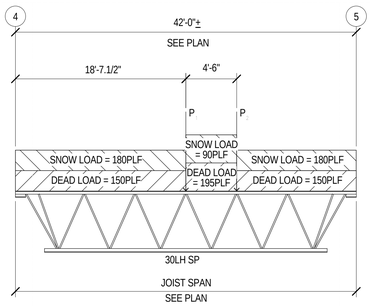

NOTE: SEE A2/SF201 FOR SPECIAL JOIST LOADING SCHEDULE CRITERIA.

B3 / SF201 SPECIAL JOIST LOAD DIAGRAM (SJ-4)
NO SCALE

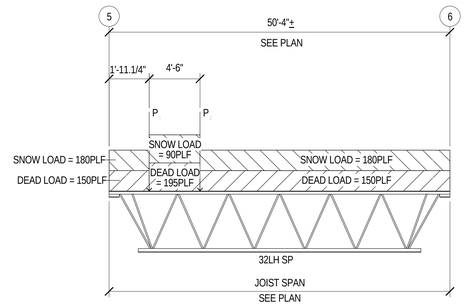

NOTE: SEE A2/SF201 FOR SPECIAL JOIST LOADING SCHEDULE CRITERIA.

B2 / SF201 SPECIAL JOIST LOAD DIAGRAM (SJ-5)
NO SCALE

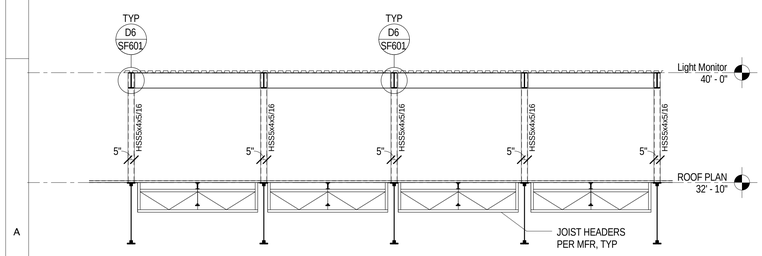

A6 / SF201 TYPICAL LARGE ROOF MONITOR MOMENT FRAME ELEVATION
NO SCALE

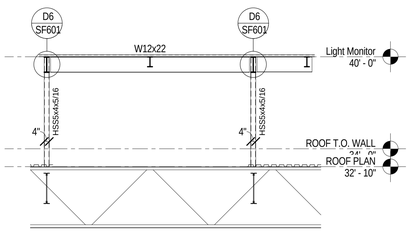

A4 / SF201 TYPICAL LARGE ROOF MONITOR MOMENT FRAME ELEVATION
NO SCALE

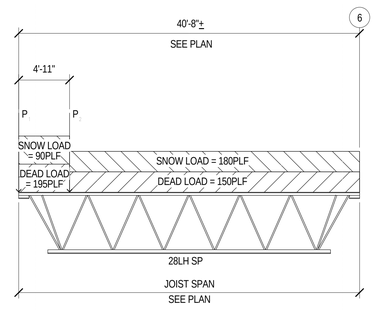

NOTE: SEE A2/SF201 FOR SPECIAL JOIST LOADING SCHEDULE CRITERIA.

A3 / SF201 SPECIAL JOIST LOAD DIAGRAM (SJ-6)
NO SCALE

SPECIAL JOIST LOADING SCHEDULE

LOAD	DEAD LOAD, D	SNOW LOAD, S	SEISMIC LOAD, E	NOTES
P	245 LBS.	370 LBS.	+/-860 LBS.	
P	245 LBS.	370 LBS.	+/-860 LBS.	
P	8700 LBS.	5000 LBS.	+/-3000 LBS.	
P	8700 LBS.	5000 LBS.	+/-3000 LBS.	

NOTE:
1. JOIST SHALL BE DESIGNED FOR LOAD COMBINATIONS OF SECTION 1605 IBC2006. FOR ALLOWABLE STRESS DESIGN E MAY BE DIVIDED BY 1.4.
2. P SEISMIC FORCE AND P SEISMIC FORCE ACT CONCURRENTLY IN OPPOSITE DIRECTIONS.
3. THE FOLLOWING SEISMIC LOAD CASES SHALL BE USED FOR SJ-7:
   A. +P , -P
   B. -P , +P
   C. +P , +P
   D. -P , -P

A2 / SF201 SPECIAL JOIST LOADING SCHEDULE
NO SCALE

GSBS | ARCHITECTURE | LANDSCAPE ARCHITECTURE | PLANNING | INTERIOR DESIGN
375 West 200 South Suite 100
Salt Lake City
Utah 84101
Tel 801.521.8600
Fax 801.521.7913
GSBS-PC.COM

LICENSED CERTIFIED STRUCTURAL ENGINEER NO. 144210 RONALD JAMES REAVELEY UTAH
1 February 2008

REAVELEY
ENGINEERS + ASSOCIATES
Consulting Structural Engineers

Revision Schedule

#	DATE	REVISION

NORTH SALT LAKE READINESS CENTER AND CIVIL SUPPORT TEAM

Salt Lake City, UT

ROOF MONITOR PLAN, ELEVATIONS & DETAILS

PROJECT NO. 2005.003	SF201
DATE 2/01/2008	
DRAWN YW	
CHECKED DA	BINDING ORDER 79

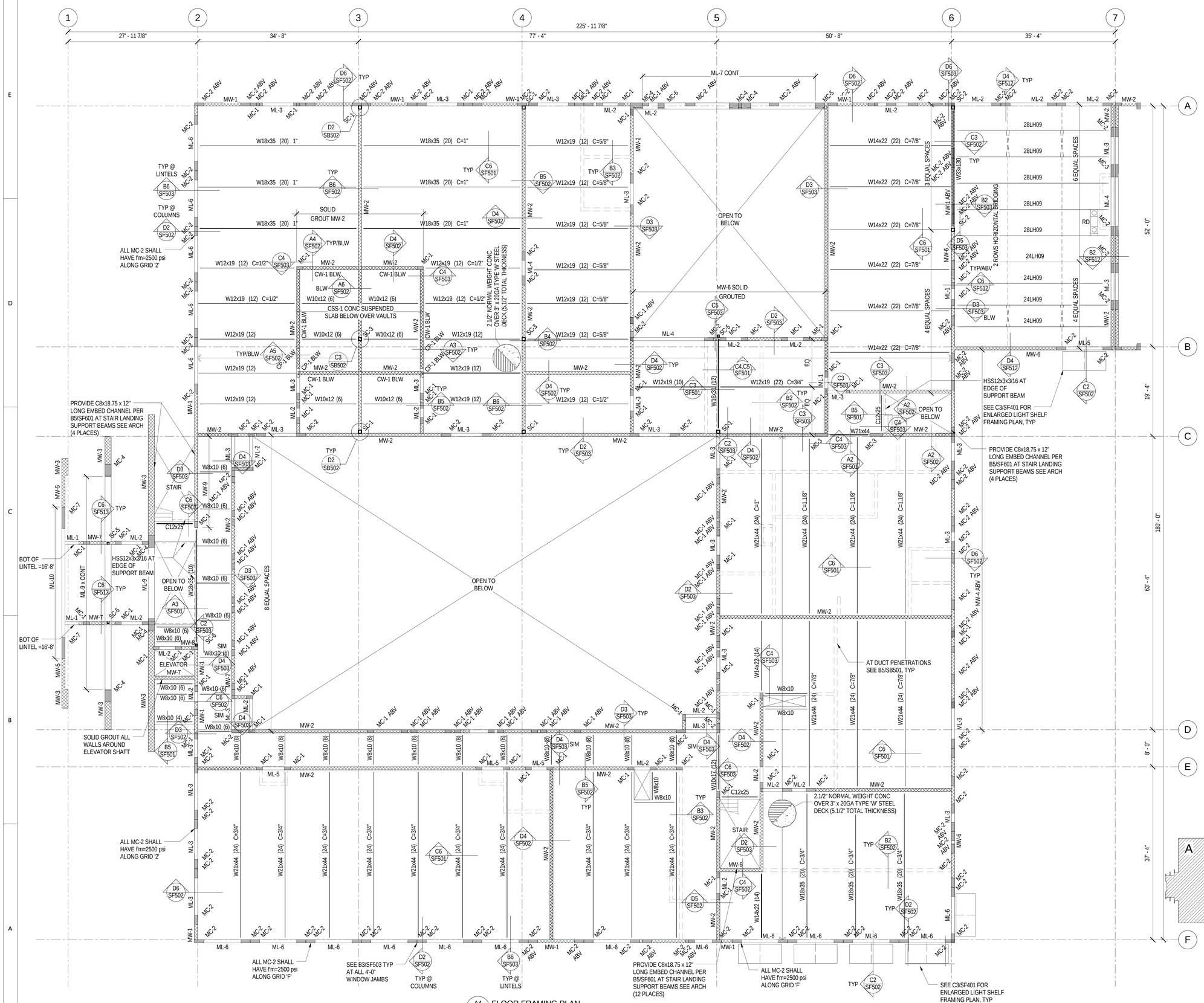

A4 SF101 FLOOR FRAMING PLAN
NO SCALE

FLOOR FRAMING PLAN LEGEND

- MASONRY WALL
- MASONRY LINTEL IN MASONRY WALL
- MASONRY COLUMN IN MASONRY WALL
- STEEL COLUMN - TUBE
- MOMENT CONNECTION
- STEEL BEAM OR GIRDER
- STEEL JOIST OR PURLIN
- CROSS BRIDGING
- HORIZONTAL BRIDGING
- STEEL STUD WALL - STRUCTURAL
- STEEL HEADER IN STEEL STUD WALL
- 0" CHANGE IN ELEVATION
- CONCRETE ON METAL DECK
- ROOF DECK
- SPECIAL DECK AREA
- RECESSED/DEPRESSED SLAB ON METAL DECK
- OPENING

FLOOR FRAMING PLAN NOTES

1. SEE GENERAL STRUCTURAL NOTE (III.D.8) AND DETAILS D2 & D3/SF501 FOR CONTROL JOINTS IN SUSPENDED SLABS OVER STEEL DECK.

2. SEE DETAILS D5 & D6/SF501 FOR MISCELLANEOUS FLOOR OPENINGS.

3. SEE GENERAL STRUCTURAL NOTE (V.J.7) FOR STEEL DECK REQUIREMENTS WHERE 3-SPAN CONDITIONS ARE NOT POSSIBLE.

GSBS | ARCHITECTURE | LANDSCAPE ARCHITECTURE | PLANNING | INTERIOR DESIGN
375 West 200 South Suite 100
Salt Lake City
Utah 84101
Tel 801.521.8600
Fax 801.521.7913
GSBS-PC.COM

LICENSED CERTIFIED STRUCTURAL ENGINEER NO. 144210 RONALD JAMES REAVELEY UTAH
1 February 2008

REAVELEY ENGINEERS + ASSOCIATES
Consulting Structural Engineers

Revision Schedule

#	DATE	REVISION

NORTH

Key Plan

NORTH SALT LAKE READINESS CENTER AND CIVIL SUPPORT TEAM

Salt Lake City, UT

FLOOR FRAMING PLAN

PROJECT NO. 2005.003	SF101
DATE 2/01/2008	
DRAWN YW	
CHECKED DA	BINDING ORDER 80

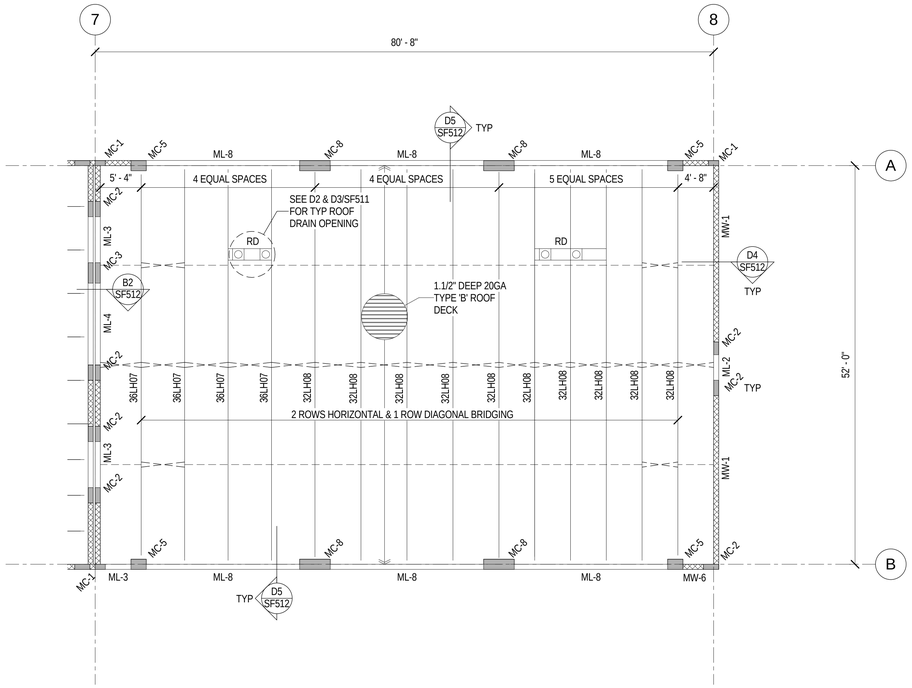

C6 / SF102 ROOF FRAMING PLAN - VEHICLE BAY
NO SCALE

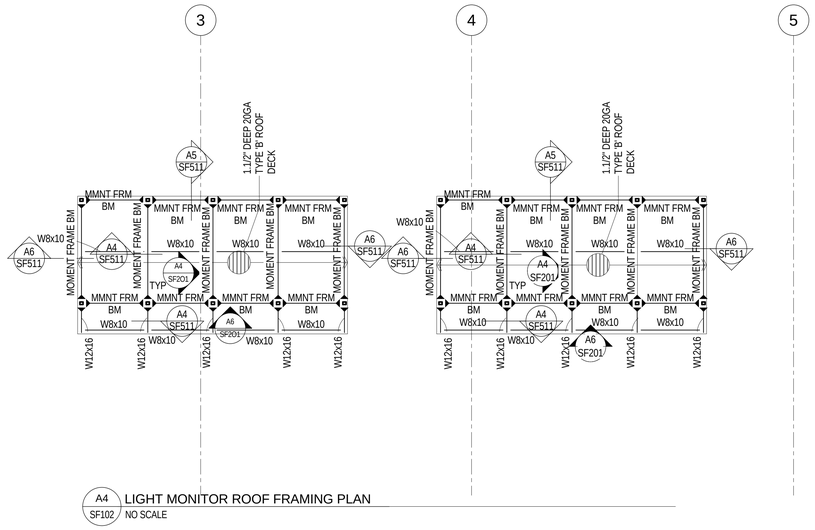

A4 / SF102 LIGHT MONITOR ROOF FRAMING PLAN
NO SCALE

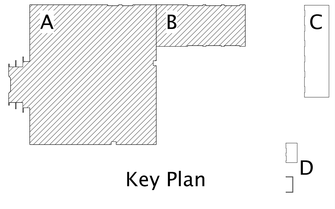

Key Plan

GSBS | ARCHITECTURE | LANDSCAPE ARCHITECTURE | PLANNING | INTERIOR DESIGN

375 West 200 South Suite 100
Salt Lake City
Utah 84101

Tel 801.521.8600
Fax 801.521.7913

GSBS-PC.COM

LICENSED CERTIFIED STRUCTURAL ENGINEER
NO. 144210
RONALD JAMES REAVELEY
UTAH

1 February 2008

REAVELEY
ENGINEERS + ASSOCIATES
Consulting Structural Engineers

Revision Schedule

#	DATE	REVISION

NORTH

NORTH SALT LAKE READINESS CENTER AND CIVIL SUPPORT TEAM

Salt Lake City, UT

ROOF FRAMING PLAN - PARTIAL

PROJECT NO. 2005.003	SF102
DATE 2/01/2008	
DRAWN YW	
CHECKED DA	BINDING ORDER 81

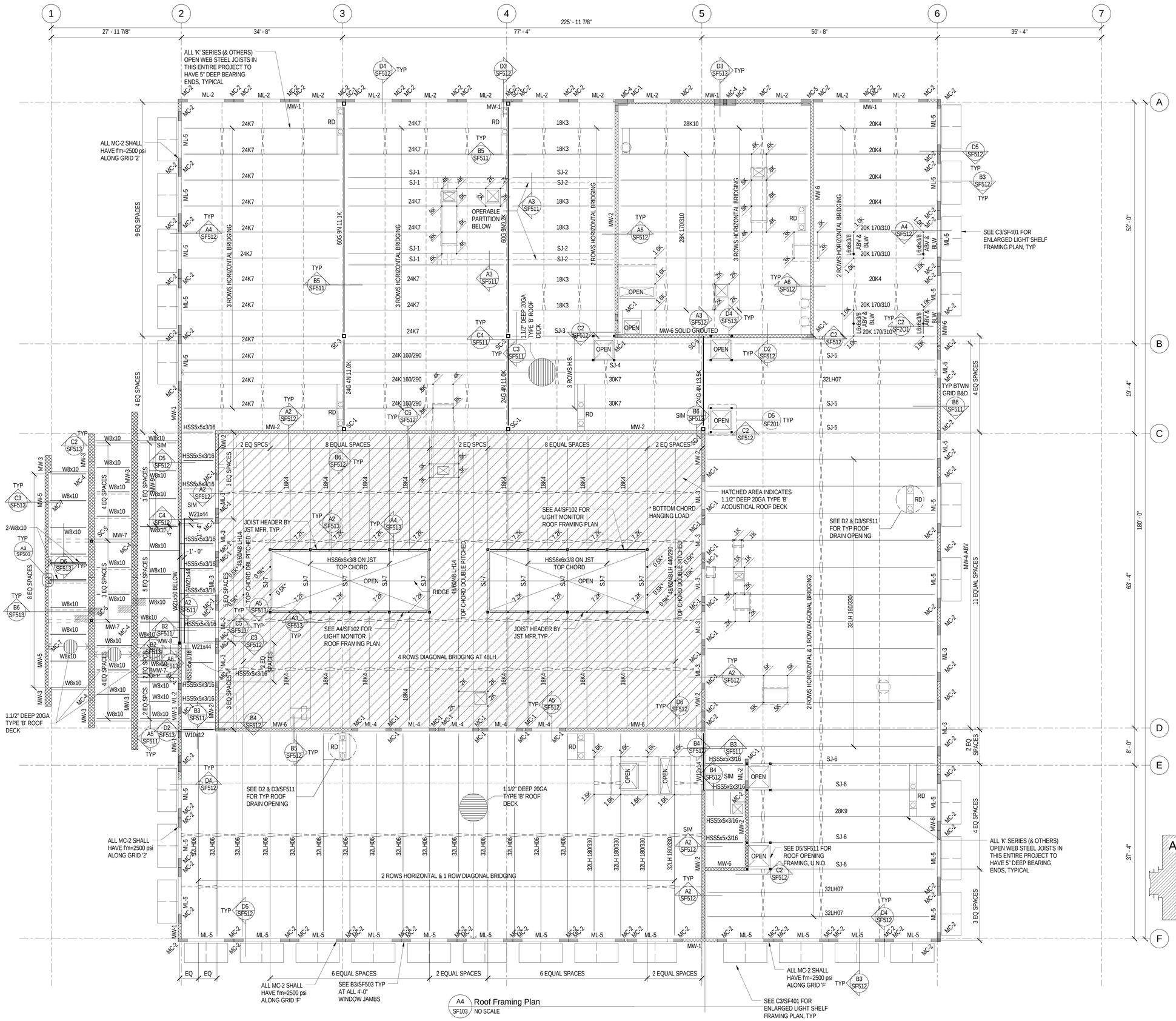

A4 SF103 Roof Framing Plan
NO SCALE

ROOF FRAMING PLAN LEGEND

- MASONRY WALL
- MASONRY LINTEL IN MASONRY WALL
- MASONRY COLUMN IN MASONRY WALL
- STEEL COLUMN - TUBE
- STEEL BRACED FRAME
- MOMENT CONNECTION
- STEEL BEAM OR GIRDER
- STEEL JOIST OR PURLIN
- CROSS BRIDGING
- HORIZONTAL BRIDGING
- STEEL STUD WALL - STRUCTURAL
- STEEL HEADER IN STEEL STUD WALL
- 0" CHANGE IN ELEVATION
- CONCRETE ON METAL DECK
- ROOF DECK
- SPECIAL DECK AREA
- RECESSED/DEPRESSED SLAB ON METAL DECK
- OPENING

ROOF FRAMING PLAN NOTES

1. VERIFY SIZE, WEIGHT, LOCATION AND CONFIGURATION OF ALL ROOF TOP EQUIPMENT WITH ARCHITECT AND MECHANICAL ENGINEER. PROVIDE STEEL FRAMES FOR SUPPORT OF ROOF TOP EQUIPMENT AS INDICATED IN DETAIL D4/SF511 COORDINATE OPENINGS WITH MECHANICAL AND ELECTRICAL AND GENERAL CONTRACTORS.

2. ALL ROOF OPENINGS SHALL BE FRAMED AS INDICATED IN DETAIL D5/SF511. FOR ROUND OPENINGS WHICH ARE LESS THAN 12" DIA. SEE DETAIL C6/SF511.

3. SEE ARCHITECTURAL FOR ROOF SLOPES AND DRAINS. SEE D2 & D3/SF511 FOR ROOF DRAIN OPENING FRAME.

4. OPEN WEB STEEL JOISTS AND JOIST GIRDERS SHALL BE DESIGNED BY THE MANUFACTURER TO SUPPORT THE MECHANICAL AND LATERAL LOADS SHOWN ON THE ROOF FRAMING PLANS IN ADDITION TO THE UNIFORM AND POINT LOADS SHOWN.

5. ±#.#K ADD - INDICATES ADDITIONAL UPLIFT / DOWNWARD FORCE ON STEEL JOIST IN ADDITION TO REGULAR LOADS.

6. T/C=##K - INDICATES ADDITIONAL TOP CHORD AXIAL FORCE ON STEEL JOIST OR GIRDER IN ADDITION TO REGULAR LOADS. THIS FORCE IS A SEISMIC LRFD LEVEL FORCE THAT SHALL BE CONSIDERED IN BOTH TENSION AND COMPRESSION. STEEL JOISTS AND GIRDERS WITH T/C FORCE SHALL BE DESIGNED AS COLLECTOR ELEMENTS PER ACSE7-05 SECTION 12.10.2.1 WITH STRENGTH TO RESIST THE SPECIAL LOAD COMBINATIONS OF ACSE 7-05 SECTION 12.4.3.2.

7. ALL LOADS SUPPORTED BY OPEN WEB STEEL JOISTS AND GIRDERS SHALL BE LOCATED WITHIN 6" OF JOIST OR GIRDER PANEL POINT OR THE JOIST OR GIRDER SHALL BE REINFORCED PER DETAIL D6/SF511.

8. SEE DETAIL C5/SF511 FOR SUPPORT OF HANGING MECHANICAL UNITS.

9. HORIZONTAL AND CROSS BRIDGING SHALL BE SIZED AND SUPPLIED BY THE JOIST MANUFACTURER. CONNECT TO WALLS AS INDICATED IN DETAILS.

10. WHERE SKYLIGHTS OR MECHANICAL UNITS INTERRUPT HORIZONTAL BRIDGING PROVIDE CROSS BRIDGING AT JOIST SPACES ON EACH SIDE. TYPICAL.

11. ALL 'K' SERIES (& OTHERS) OPEN WEB STEEL JOISTS IN THIS ENTIRE PROJECT TO HAVE 5" DEEP BEARING ENDS, TYPICAL.

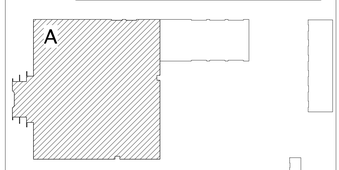

Key Plan

GSBS | ARCHITECTURE | LANDSCAPE ARCHITECTURE | PLANNING | INTERIOR DESIGN
375 West 200 South Suite 100
Salt Lake City
Utah 84101
Tel 801.521.8600
Fax 801.521.7913
GSBS-PC.COM

LICENSED CERTIFIED STRUCTURAL ENGINEER NO. 144210 RONALD JAMES REAVELEY UTAH
1 February 2008

REAVELEY ENGINEERS + ASSOCIATES
Consulting Structural Engineers

Revision Schedule

#	DATE	REVISION

NORTH

NORTH SALT LAKE READINESS CENTER AND CIVIL SUPPORT TEAM

Salt Lake City, UT

ROOF FRAMING PLAN

PROJECT NO. 2005.003	SF103
DATE 2/01/2008	
DRAWN YW	
CHECKED DA	BINDING ORDER 82

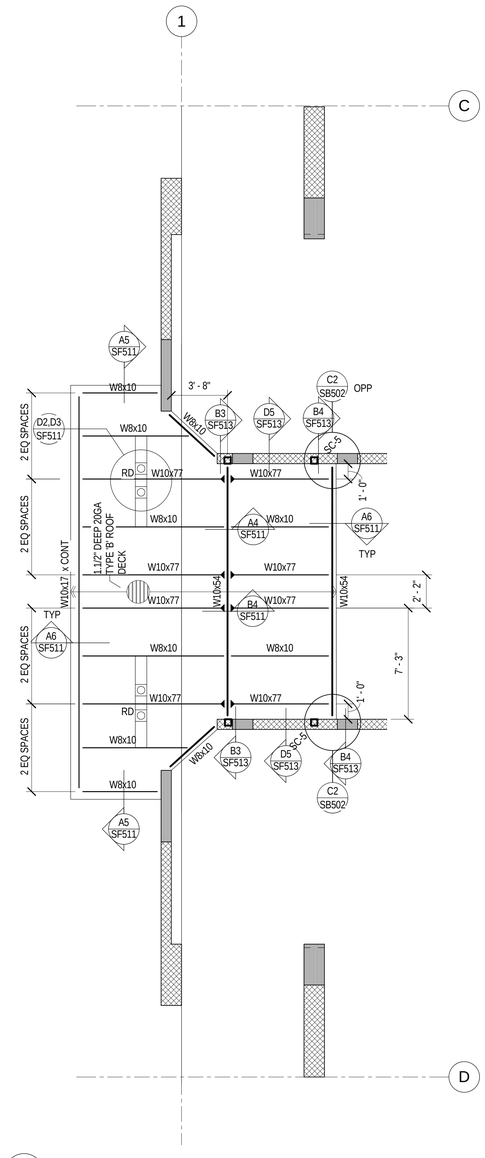

B5 / SF401 ENLARGED ENTRY CANOPY/LIGHT SHELF FRAMING PLAN
NO SCALE

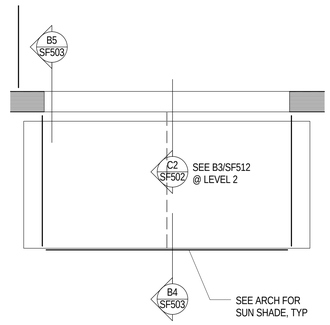

C3 / SF401 ENLARGED SUN SHADE FRAMING PLAN AT ROOF & FLOOR LEVEL
NO SCALE

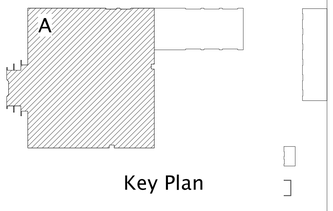

Key Plan

GSBS | ARCHITECTURE | LANDSCAPE ARCHITECTURE | PLANNING | INTERIOR DESIGN

375 West 200 South Suite 100
Salt Lake City
Utah 84101

Tel 801.521.8600
Fax 801.521.7913

GSBS-PC.COM

LICENSED CERTIFIED STRUCTURAL ENGINEER
NO. 144210
RONALD JAMES REAVELEY
UTAH
1 February 2008

REAVELEY
ENGINEERS + ASSOCIATES
Consulting Structural Engineers

Revision Schedule

#	DATE	REVISION

NORTH

NORTH SALT LAKE READINESS CENTER AND CIVIL SUPPORT TEAM

Salt Lake City, UT

ENLARGED FRAMING PLAN

PROJECT NO. 2005.003	SF401
DATE 2/01/2008	
DRAWN YW	
CHECKED DA	BINDING ORDER 83

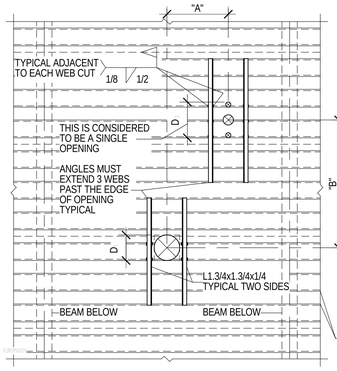

USE THIS DETAIL FOR HOLES CUTTING NO MORE THAN: 3 ADJACENT WEBS FOR 6" AND 8" MODULE DECK, 2 ADJACENT WEBS FOR 12" MODULE DECK

PRIOR TO CONCRETE POUR. SMALL OPENINGS SHOULD BE BLOCKED OUT AND FLOOR DECK LEFT INTACT. HOLES LESS THAN 6" IN DIAMETER AND CUTTING NO MORE THAN 1 WEB NEED NO REINFORCING. AFTER THE CONCRETE HAS CURED. THE BLOCKOUT CAN BE REMOVED AND THE FLOOR DECK IN THE AREA OF THE HOLE REMOVED.

NOTES:

1. ANGLES SHALL BE PLACED ON TOP OF THE DECK.
2. IF DIMENSION "A" IS GREATER THAN 4D . 4D . OR 32" WHICHEVER IS LARGER, THEN THERE IS NO RESTRICTION ON DIMENSION "B".
3. IF DIMENSION "B" IS GREATER THAN 4D . 4D . OR 32" WHICHEVER IS LARGER, THEN THERE IS NO RESTRICTION ON DIMENSION "A".
4. IF DIMENSIONS "A" AND "B" ARE LESS THAN 4D . 4D . OR 32" WHICHEVER IS LARGER. THE OPENING GROUP WILL BE CONSIDERED AS A SINGLE HOLE. AND MUST BE REINFORCED AS REQUIRED FOR THE LARGER OPENING.

D6 / SF501 TYPICAL MISCELLANEOUS OPENING REINFORCING DETAIL
NO SCALE

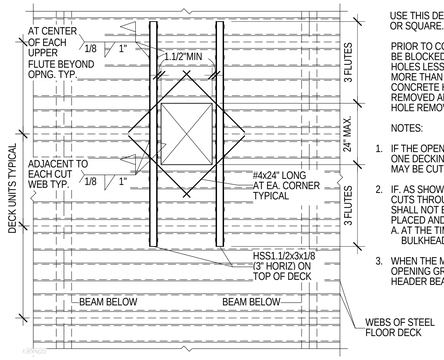

USE THIS DETAIL FOR LARGER HOLES, RECTANGULAR OR SQUARE.

PRIOR TO CONCRETE POUR, SMALL OPENINGS SHOULD BE BLOCKED OUT AND FLOOR DECK LEFT INTACT. HOLES LESS THAN 6" IN DIAMETER AND CUTTING NO MORE THAN 1 WEB NEED NO REINFORCING. AFTER THE CONCRETE HAS CURED. THE BLOCKOUT CAN BE REMOVED AND THE FLOOR DECK IN THE AREA OF THE HOLE REMOVED.

NOTES:

1. IF THE OPENING OR GROUP OF OPENINGS OCCURS IN ONE DECKING UNIT. THE OPENING OR OPENING GROUP MAY BE CUT PRIOR TO POURING OF CONCRETE.
2. IF. AS SHOWN. THE OPENING OR OPENING GROUP CUTS THROUGH TWO DECKING UNITS. THE DECKING SHALL NOT BE CUT UNTIL CONCRETE HAS BEEN PLACED AND CURED.
   A. AT THE TIME OF POURING. SUITABLE SLEEVES OR BULKHEADS SHALL BE PLACED AROUND THE OPENING.
3. WHEN THE MAXIMUM DIMENSION OF AN OPENING OR OPENING GROUP EXCEEDS 24". PROVIDE W8x10 HEADER BEAMS BELOW THE DECK AT ALL SIDES.

D5 / SF501 TYPICAL MISCELLANEOUS OPENING REINFORCING DETAIL
NO SCALE

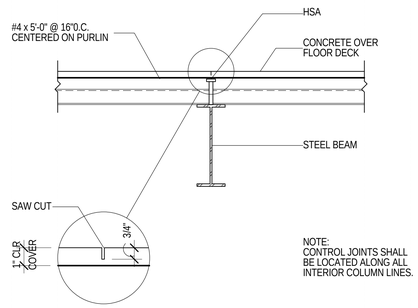

NOTE:
CONTROL JOINTS SHALL BE LOCATED ALONG ALL INTERIOR COLUMN LINES.

D3 / SF501 TYPICAL COMPOSITE DECK CONTROL JOINT AT STEEL PURLIN
NO SCALE

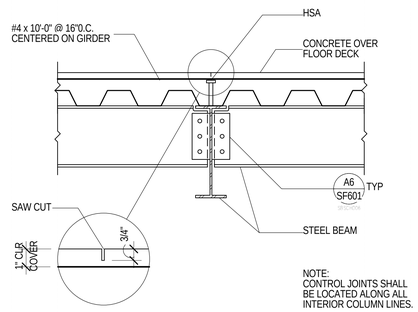

NOTE:
CONTROL JOINTS SHALL BE LOCATED ALONG ALL INTERIOR COLUMN LINES.

D2 / SF501 TYPICAL COMPOSITE DECK CONTROL JOINT AT STEEL GIRDER
NO SCALE

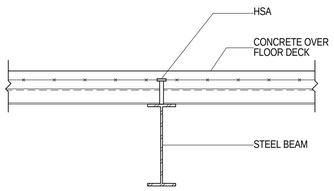

C6 / SF501 TYPICAL COMPOSITE STEEL BEAM
NO SCALE

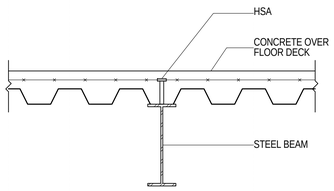

C5 / SF501 TYPICAL COMPOSITE STEEL BEAM
NO SCALE

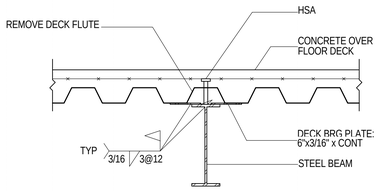

NOTE: THIS DETAIL SHALL APPLY WHEREVER THE DECK FLUTE INTERFERES WITH THE PROPER INSTALLATION OF THE HEADED STUD ANCHOR.

C4 / SF501 TYPICAL ALTERNATE DECK BEARING AT COMPOSITE STEEL BEAM
NO SCALE

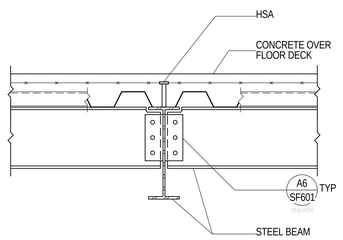

C3 / SF501 TYPICAL COMPOSITE STEEL BEAM W/ STEEL BEAM TWO SIDES
NO SCALE

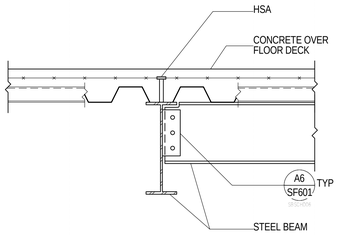

C2 / SF501 TYPICAL COMPOSITE STEEL BEAM W/ STEEL BEAM ONE SIDE
NO SCALE

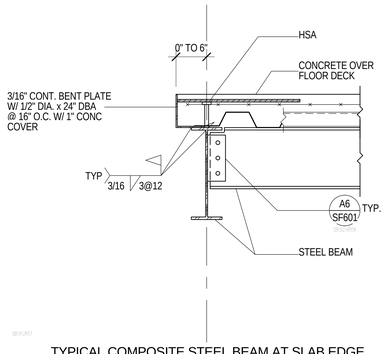

B6 / SF501 TYPICAL COMPOSITE STEEL BEAM AT SLAB EDGE DETAIL FOR 0" UP TO 6"
NO SCALE

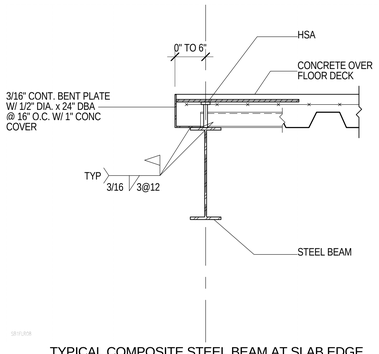

B5 / SF501 TYPICAL COMPOSITE STEEL BEAM AT SLAB EDGE DETAIL FOR 0" UP TO 6"
NO SCALE

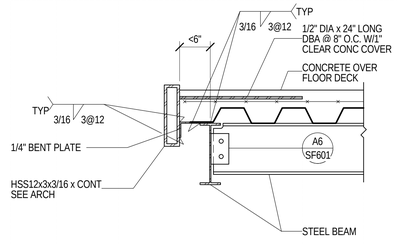

A3 / SF501 STEEL BEAM BEARING AT STEEL BEAM AT SLAB EDGE
NO SCALE

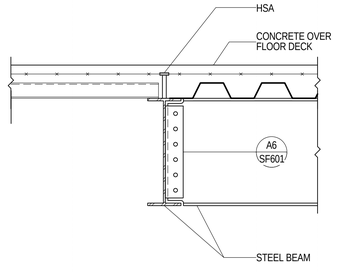

A2 / SF501 COMPOSITE STEEL BEAM W/ STEEL BEAM ONE SIDE
NO SCALE

GSBS | ARCHITECTURE | LANDSCAPE ARCHITECTURE | PLANNING | INTERIOR DESIGN
375 West 200 South Suite 100
Salt Lake City
Utah 84101
Tel 801.521.8600
Fax 801.521.7913
GSBS-PC.COM

LICENSED CERTIFIED STRUCTURAL ENGINEER NO. 144210 RONALD JAMES REAVELEY UTAH
1 February 2008

REAVELEY ENGINEERS + ASSOCIATES
Consulting Structural Engineers

Revision Schedule

#	DATE	REVISION

NORTH SALT LAKE READINESS CENTER AND CIVIL SUPPORT TEAM

Salt Lake City, UT

FLOOR FRAMING DETAILS

PROJECT NO. 2005.003	SF501
DATE 2/01/2008	
DRAWN YW	
CHECKED DA	BINDING ORDER 84

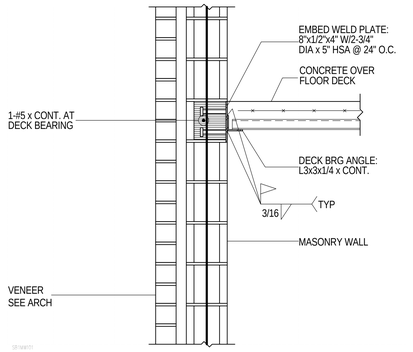

D6 / SF502 TYPICAL DECK BEARING AT MASONRY WALL
NO SCALE

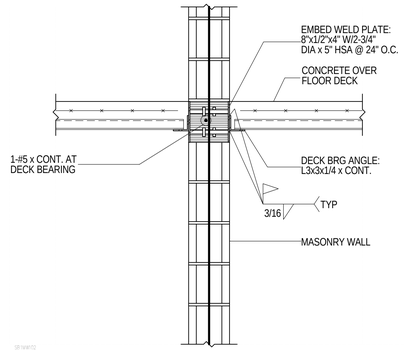

D5 / SF502 TYPICAL DECK BEARING AT MASONRY WALL
NO SCALE

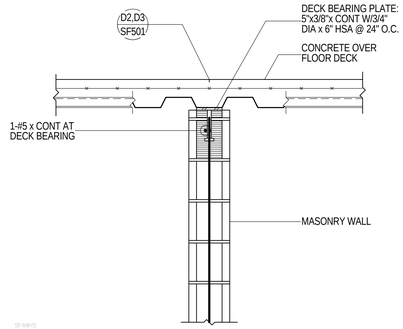

D4 / SF502 TYPICAL DECK BEARING AT MASONRY WAL
NO SCALE

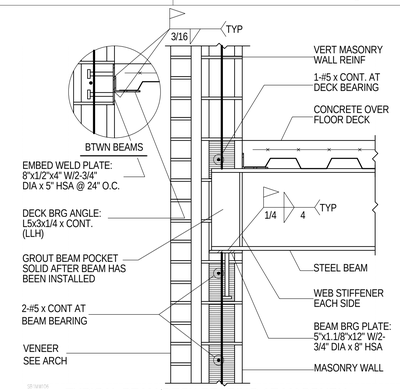

D3 / SF502 TYPICAL BEAM/DECK BEARING AT MASONRY WALL
NO SCALE

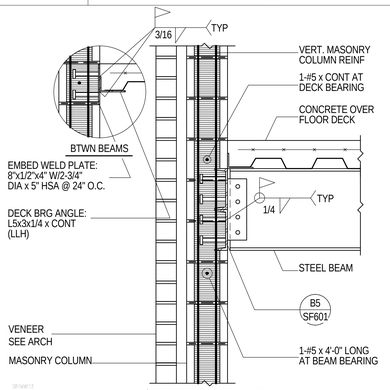

D2 / SF502 TYPICAL BEAM/DECK BEARING AT MASONRY COLUMN
NO SCALE

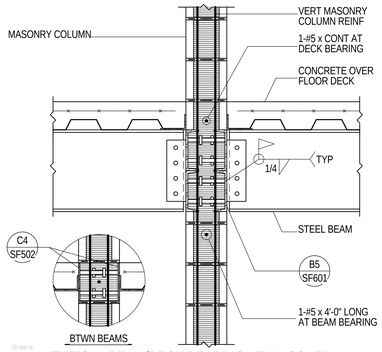

C6 / SF502 TYPICAL BEAM/DECK BEARING AT MASONRY COLUMN
NO SCALE

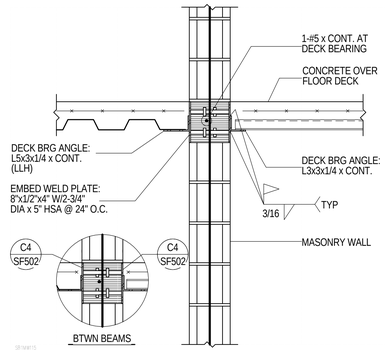

C5 / SF502 TYPICAL DECK BEARING AT MASONRY WALL
NO SCALE

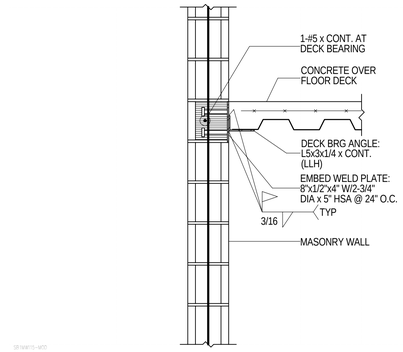

C4 / SF502 TYPICAL DECK BEARING AT MASONRY WALL
NO SCALE

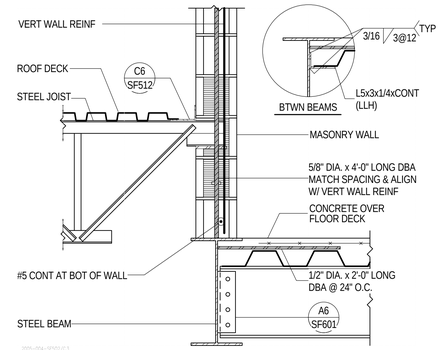

C3 / SF502 MASONRY WALL BEARING ON STEEL BEAM
NO SCALE

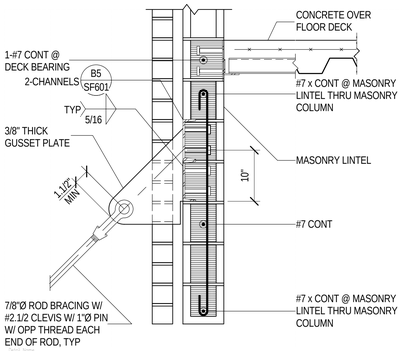

C2 / SF502 LINTEL & LIGHT SHELF SUPPORT AT LEVEL 1
NO SCALE

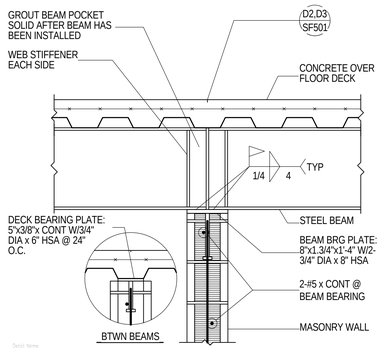

B6 / SF502 SB1MW109
NO SCALE

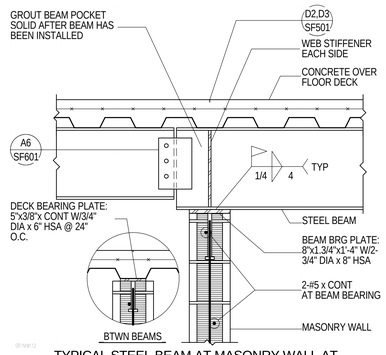

B5 / SF502 TYPICAL STEEL BEAM AT MASONRY WALL AT DROP-IN STEEL BEAM
NO SCALE

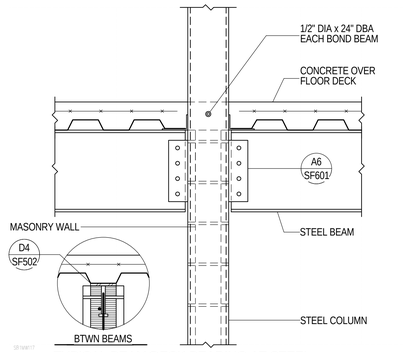

B4 / SF502 TYPICAL BEAM/DECK BEARING AT STEEL COLUMN AT MASONRY WALL
NO SCALE

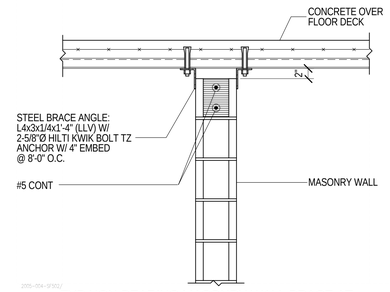

B3 / SF502 TYP NON-BEARING MASONRY WALL BRACE AT UNDERSIDE OF PERPENDICULAR FLOOR DECK
NO SCALE

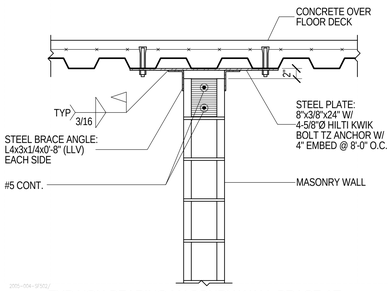

B2 / SF502 TYP NON-BEARING MASONRY WALL BRACE AT UNDERSIDE OF PARALLEL FLOOR DECK
NO SCALE

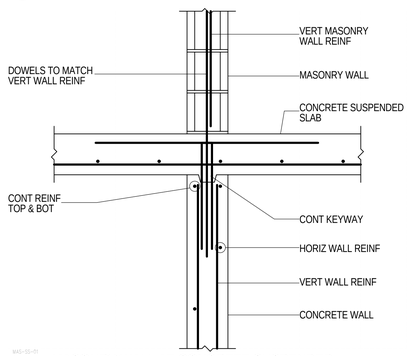

A6 / SF502 MASONRY WALL AT CONCRETE SUSPENDED SLAB/CONC WALL
NO SCALE

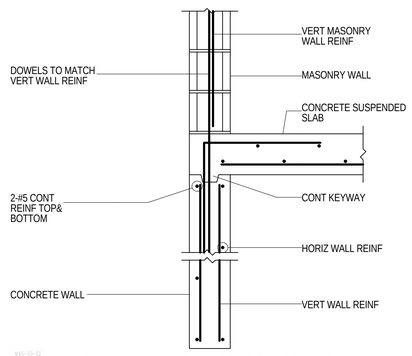

A5 / SF502 MASONRY WALL AT CONCRETE SUSPENDED SLAB/CONCRETE LINTEL
NO SCALE

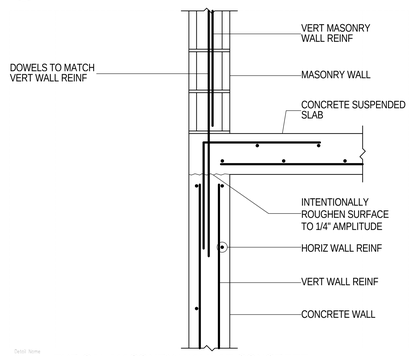

A4 / SF502 TYPICAL MASONRY WALL AT CONCRETE SUSPENDED SLAB & CONCRETE WALL
NO SCALE

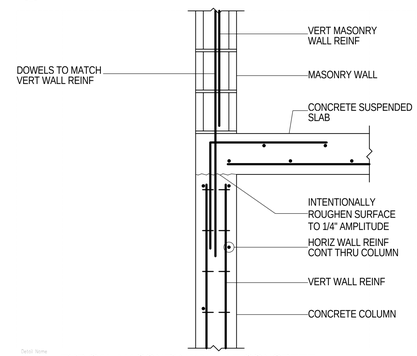

A3 / SF502 TYPICAL MASONRY WALL AT CONCRETE SUSPENDED SLAB & CONC COLUMN
NO SCALE

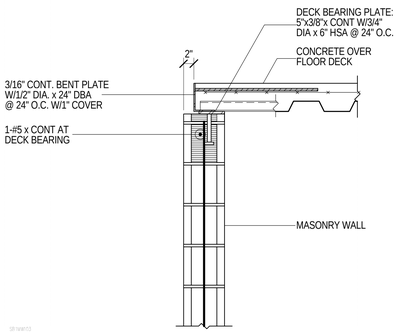

A2 / SF502 TYPICAL DECK BEARING AT MASONRY WALL
NO SCALE

GSBS | ARCHITECTURE | LANDSCAPE ARCHITECTURE | PLANNING | INTERIOR DESIGN
375 West 200 South Suite 100
Salt Lake City
Utah 84101
Tel 801.521.8600
Fax 801.521.7913
GSBS-PC.COM

LICENSED STRUCTURAL ENGINEER
NO. 144210
RONALD JAMES REAVELEY
UTAH
1 February 2008

REAVELEY
ENGINEERS + ASSOCIATES
Consulting Structural Engineers

Revision Schedule

#	DATE	REVISION

NORTH SALT LAKE READINESS CENTER AND CIVIL SUPPORT TEAM

Salt Lake City, UT

FLOOR FRAMING DETAILS

PROJECT NO. 2005.003
DATE 2/01/2008
DRAWN YW
CHECKED DA
BINDING ORDER 85

SF502

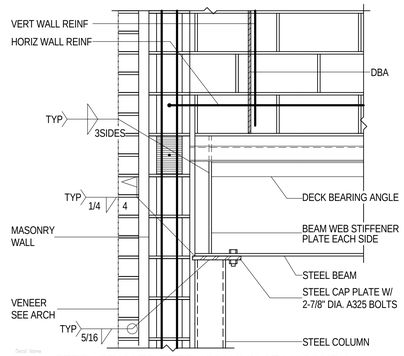

D6 SF503 STEEL BEAM TO STEEL COLUMN AT MASONRY WALL
NO SCALE

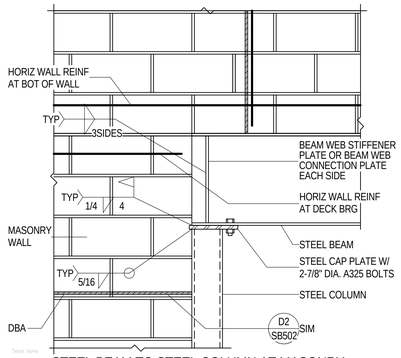

D5 SF503 STEEL BEAM TO STEEL COLUMN AT MASONRY WALL
NO SCALE

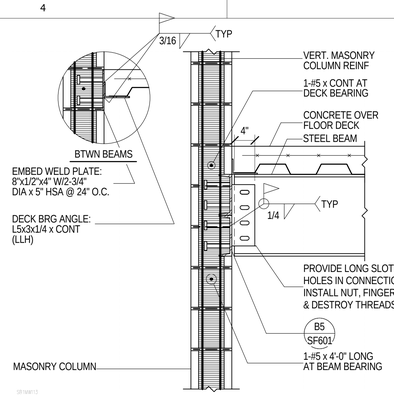

D4 SF503 TYPICAL BEAM/DECK BEARING AT MASONRY COLUMN
NO SCALE

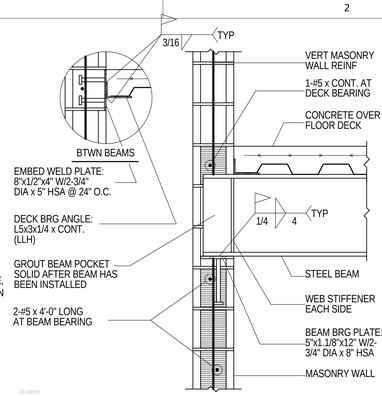

D3 SF503 TYPICAL BEAM/DECK BEARING AT MASONRY WALL
NO SCALE

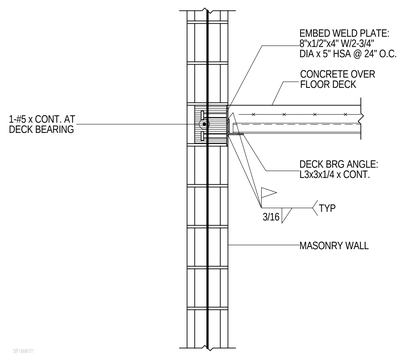

D2 SF503 TYPICAL DECK BEARING AT MASONRY WALL
NO SCALE

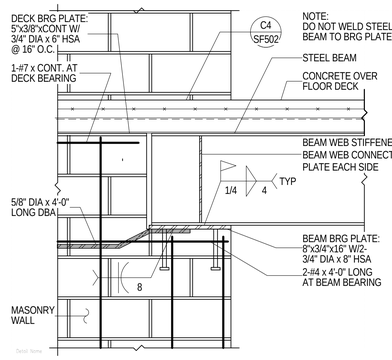

C6 SF503 STEEL BEAM TO MASONRY WALL W/ DRAG
NO SCALE

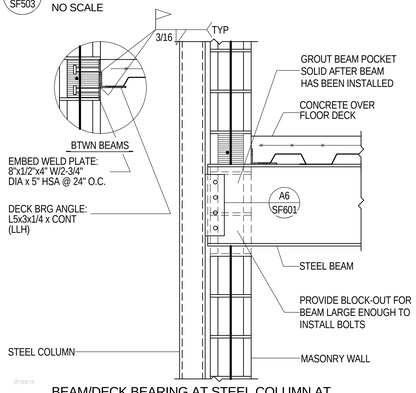

C5 SF503 BEAM/DECK BEARING AT STEEL COLUMN AT MASONRY WALL
NO SCALE

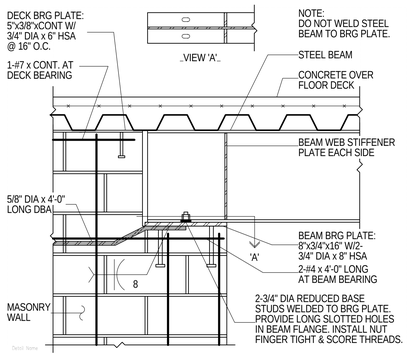

C4 SF503 STEEL BEAM/DECK BRG AT MASONRY WALL
NO SCALE

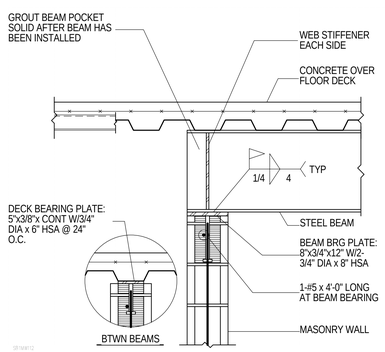

C3 SF503 TYPICAL STEEL BEAM AT MASONRY WALL
NO SCALE

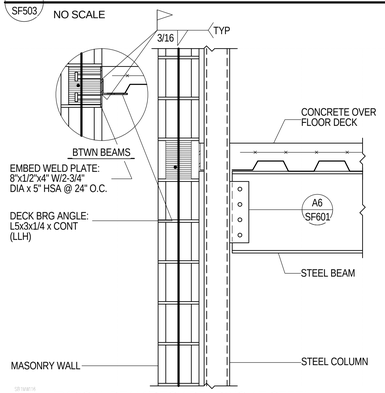

C2 SF503 TYPICAL BEAM/DECK BEARING AT STEEL COLUMN AT MASONRY WALL
NO SCALE

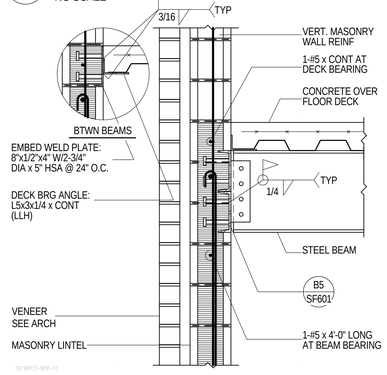

B6 SF503 TYP BEAM/DECK BEARING ABV MASONRY LINTEL
NO SCALE

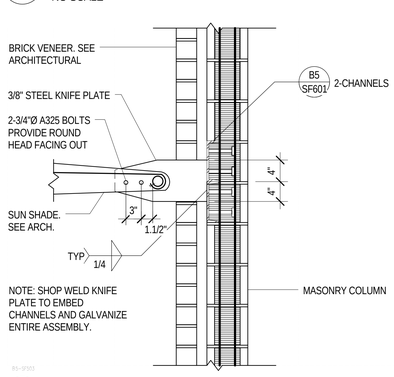

B5 SF503 TYPICAL LIGHT SHELF CONNECTION DETAIL
NO SCALE

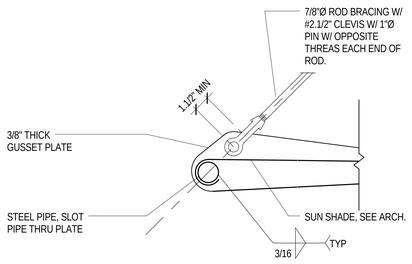

B4 SF503 TYPICAL LIGHT SHELF CONNECTION DETAIL
NO SCALE

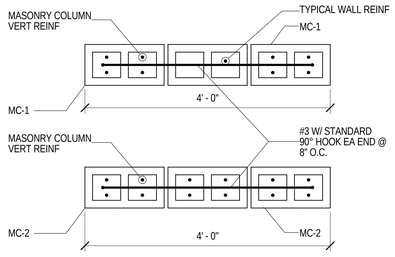

B3 SF503 TYPICAL HORIZONTAL WALL REINFORCING AT 4'-0" WALL SECTION
NO SCALE

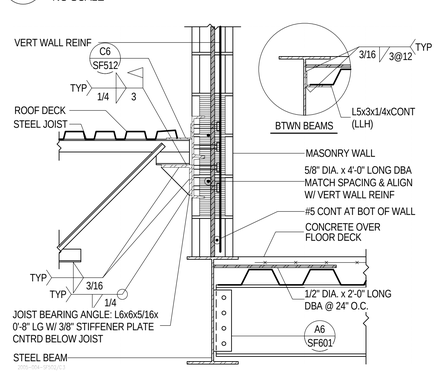

B2 SF503 MASONRY WALL BEARING ON STEEL BEAM
NO SCALE

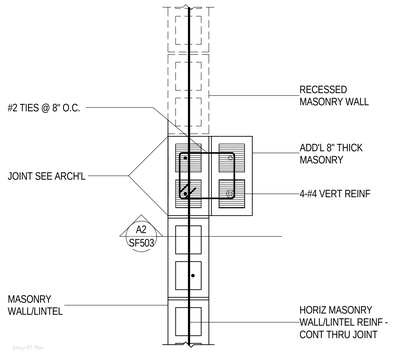

A3 SF503 THICKENED MASONRY WALL - PLAN VIEW
NO SCALE

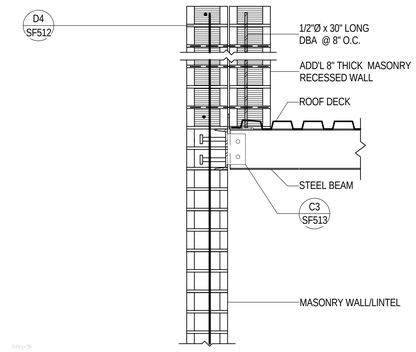

A2 SF503 SECTION AT THICKENED MASONRY WALL
NO SCALE

GSBS | ARCHITECTURE | LANDSCAPE ARCHITECTURE | PLANNING | INTERIOR DESIGN
375 West 200 South Suite 100
Salt Lake City
Utah 84101
Tel 801.521.8600
Fax 801.521.7913
GSBS-PC.COM

LICENSED CERTIFIED STRUCTURAL ENGINEER NO. 144210 RONALD JAMES REAVELEY UTAH
1 Feb 2008

REAVELEY ENGINEERS + ASSOCIATES
Consulting Structural Engineers

Revision Schedule

#	DATE	REVISION

NORTH SALT LAKE READINESS CENTER AND CIVIL SUPPORT TEAM

Salt Lake City, UT

FLOOR FRAMING DETAILS

PROJECT NO. 2005.003	SF503
DATE 2/01/2008	
DRAWN YW	
CHECKED DA	BINDING ORDER 86

NOTE:
WHEN CONCENTRATED LOADS (GREATER THAN 100#) ON OPEN WEB JOISTS OR GIRDERS ARE LOCATED MORE THAN 6 INCHES FROM THE PANEL WORKPOINTS AT EITHER THE TOP OR BOTTOM CHORD ADDITIONAL DIAGONAL WEB MEMBERS SHALL BE FURNISHED AND INSTALLED AT THE LOCATION OF THE CONCENTRATED LOAD BY THE CONTRACTOR. CONCENTRATED POINT LOADS. SINGLE OR MULTIPLE. TOTALING 100# OR LESS CAN BE LOCATED AT ANY POINT ALONG THE TOP OR BOTTOM CHORD OF AN OPEN WEB JOIST OR GIRDER BETWEEN ADJACENT PANEL POINTS WITHOUT MEETING THESE REQUIREMENTS. A LIMIT OF FOUR CONCENTRATED 100# MAX. POINT LOADS PER JOIST OR GIRDER WILL BE PERMITTED ON SPANS OF 12' & GREATER. ONE CONCENTRATED 100# MAX. LOAD ON SPANS LESS THAN 12'. UNLESS SPECIFICALLY NOTED OTHERWISE ON THE DRAWINGS. JOIST BRIDGING SHALL NEVER BE USED TO SUPPORT HANGING LOADS.

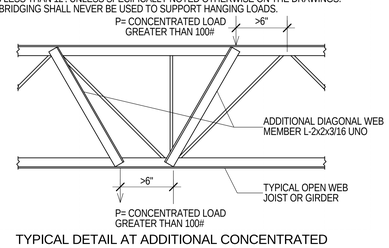

D6 / SF511 TYPICAL DETAIL AT ADDITIONAL CONCENTRATED POINT LOAD
NO SCALE

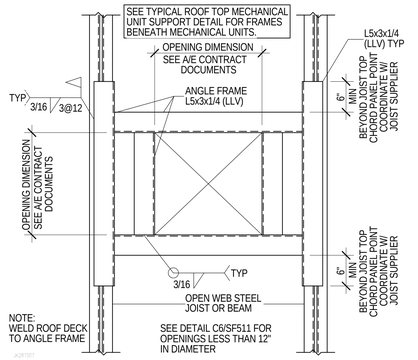

D5 / SF511 TYPICAL ROOF OPENING DETAIL (PLAN VIEW)
NO SCALE

WHERE THE MECHANICAL UNIT WEIGHS LESS THAN 600#, THE L6x4x5/16 SUPPORT ANGLES MAY CHANGED TO L5x3x1/4 (LLV).

SOLID BLOCK THE FLUTES OF THE STEEL DECK BENEATH THE CURB OF THE MECHANICAL UNIT. THIS MAY BE DONE WITH A HSS1.1/2x1.1/2x1/4 x6" LONG TACK WELDED TO THE STEEL DECK OR WITH SOLID BLOCKING CONNECTED TO THE STEEL DECK.

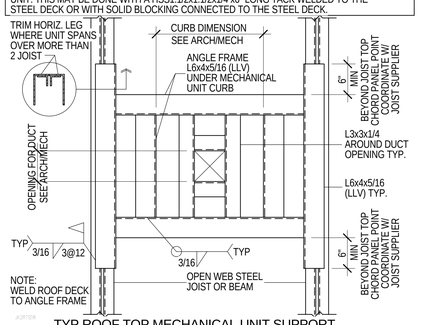

D4 / SF511 TYP ROOF TOP MECHANICAL UNIT SUPPORT DETAIL (PLAN VIEW)
NO SCALE

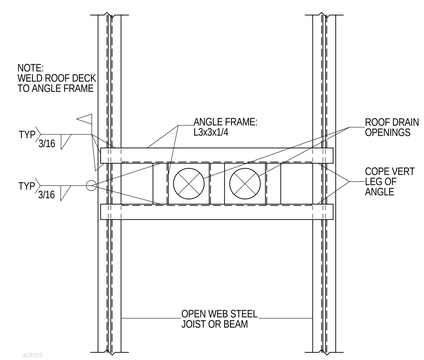

D3 / SF511 TYPICAL ROOF DRAIN OPENING (PLAN VIEW)
NO SCALE

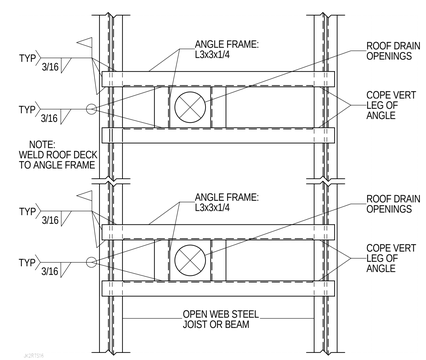

D2 / SF511 TYPICAL ROOF DRAIN OPENING (PLAN VIEW)
NO SCALE

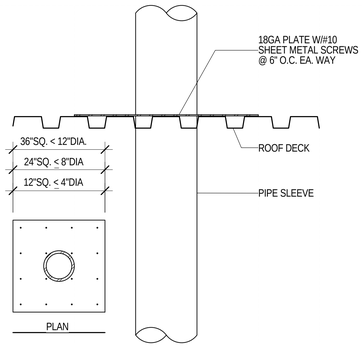

C6 / SF511 TYPICAL PIPE SLEEVE HOLE THRU ROOF DECK
NO SCALE

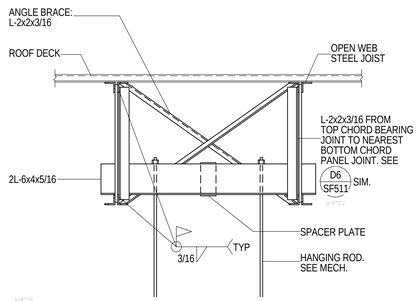

C5 / SF511 TYPICAL HANGING MECHANICAL UNIT SUPPORT DETAIL
NO SCALE

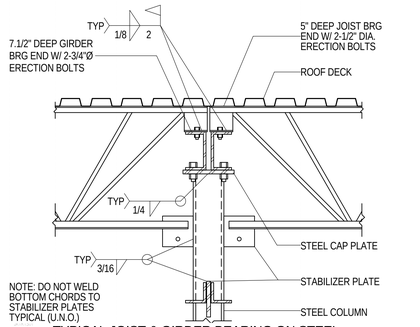

C4 / SF511 TYPICAL JOIST & GIRDER BEARING ON STEEL COLUMN
NO SCALE

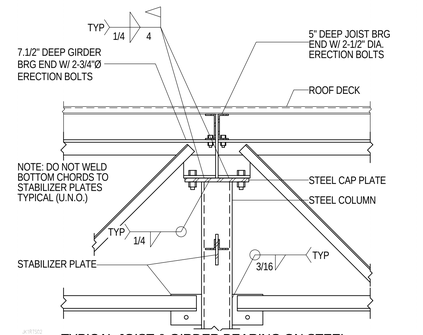

C3 / SF511 TYPICAL JOIST & GIRDER BEARING ON STEEL COLUMN
NO SCALE

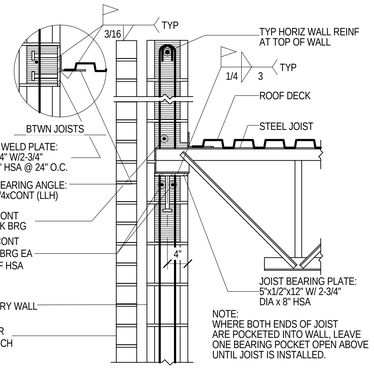

B6 / SF511 TYP JOIST/DECK BEARING AT MASONRY WALL
NO SCALE

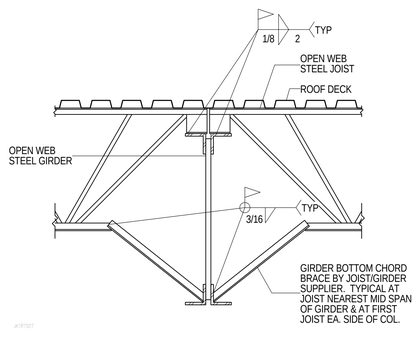

B5 / SF511 TYPICAL JOIST BEARING AT GIRDER
NO SCALE

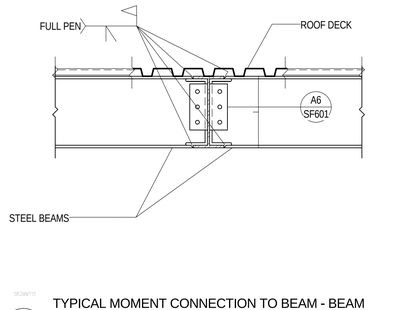

B4 / SF511 TYPICAL MOMENT CONNECTION TO BEAM - BEAM TWO SIDES
NO SCALE

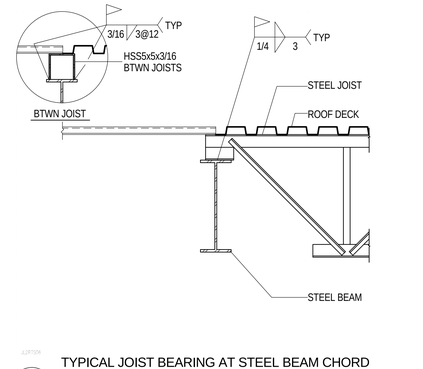

B3 / SF511 TYPICAL JOIST BEARING AT STEEL BEAM CHORD TIE/DRAG STRUT
NO SCALE

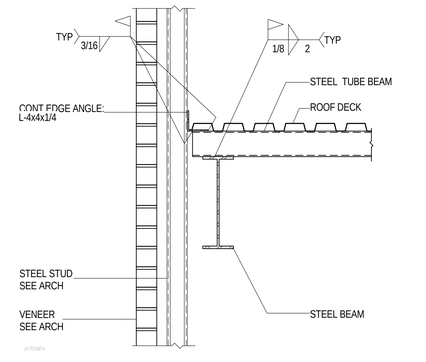

B2 / SF511 TYPICAL JOIST BEARING AT STEEL BEAM
NO SCALE

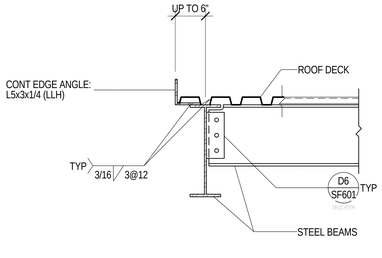

A6 / SF511 TYPICAL STEEL ROOF BEAM AT ROOF EDGE DETAIL UP TO 6"
NO SCALE

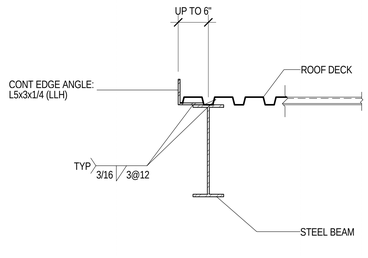

A5 / SF511 TYPICAL STEEL ROOF BEAM AT ROOF EDGE DETAIL UP TO 6"
NO SCALE

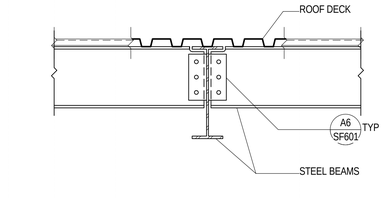

A4 / SF511 TYPICAL STEEL ROOF BEAM CONNECTION - TWO SIDES
NO SCALE

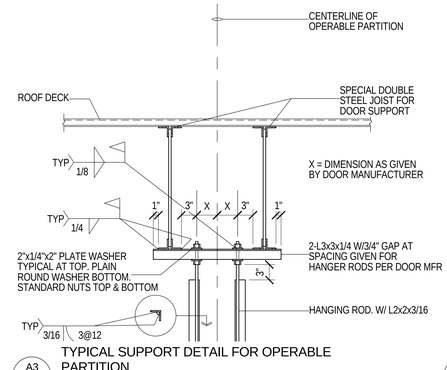

A3 / SF511 TYPICAL SUPPORT DETAIL FOR OPERABLE PARTITION
NO SCALE

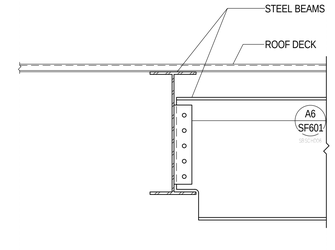

A2 / SF511 STEEL BEAM BEARING AT STEEL BEAM
NO SCALE

GSBS | ARCHITECTURE | LANDSCAPE ARCHITECTURE | PLANNING | INTERIOR DESIGN
375 West 200 South Suite 100
Salt Lake City
Utah 84101
Tel 801.521.8600
Fax 801.521.7913
GSBS-PC.COM

LICENSED CERTIFIED STRUCTURAL ENGINEER NO. 144210 RONALD JAMES REAVELEY UTAH
1 February 2008

REAVELEY ENGINEERS + ASSOCIATES
Consulting Structural Engineers

Revision Schedule

#	DATE	REVISION

NORTH SALT LAKE READINESS CENTER AND CIVIL SUPPORT TEAM

Salt Lake City, UT

ROOF FRAMING DETAILS

PROJECT NO. 2005.003
DATE 2/01/2008
DRAWN YW
CHECKED DA
BINDING ORDER 87

SF511

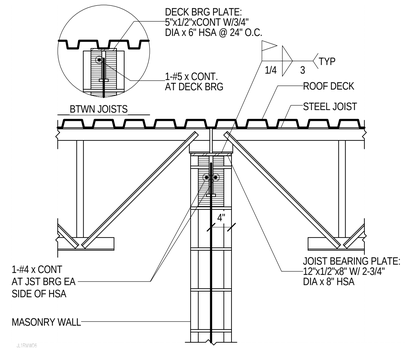

D6 / SF512 TYP JOIST/DECK BEARING AT MASONRY WALL
NO SCALE

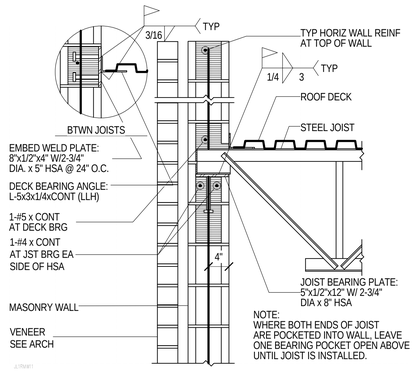

D5 / SF512 TYP JOIST/DECK BEARING AT MASONRY WALL
NO SCALE

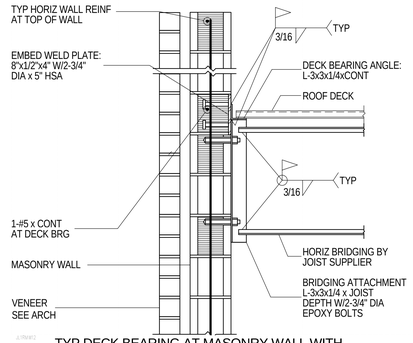

D4 / SF512 TYP DECK BEARING AT MASONRY WALL WITH BRIDGING ATTACHMENT
NO SCALE

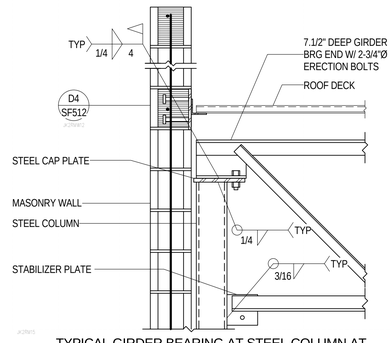

D3 / SF512 TYPICAL GIRDER BEARING AT STEEL COLUMN AT MASONRY WALL
NO SCALE

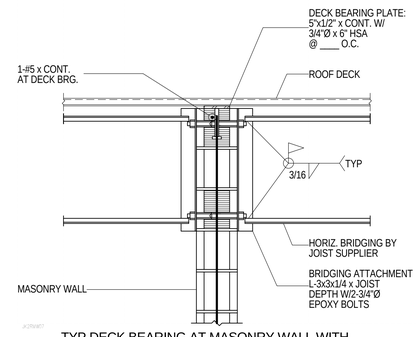

D2 / SF512 TYP DECK BEARING AT MASONRY WALL WITH BRIDGING ATTACHMENT
NO SCALE

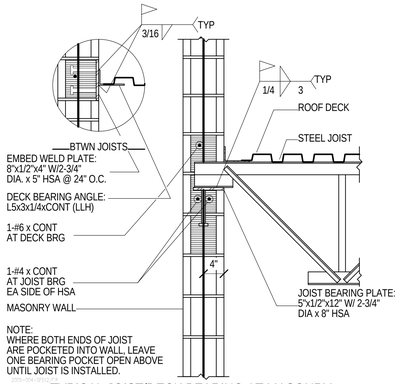

C6 / SF512 TYPICAL JOIST/DECK BEARING AT MASONRY BRICK WALL
NO SCALE

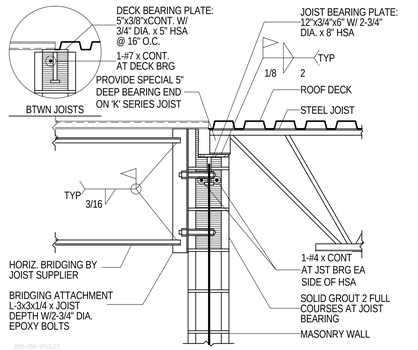

C5 / SF512 JOIST DECK BEARING AT MASONRY WALL
NO SCALE

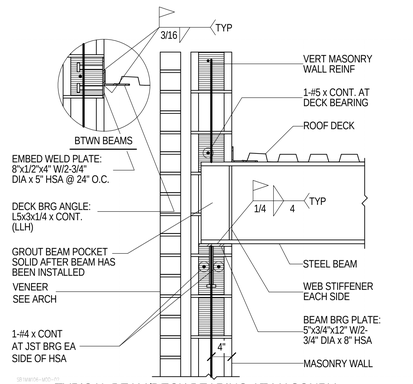

C4 / SF512 TYPICAL BEAM/DECK BEARING AT MASONRY WALL
NO SCALE

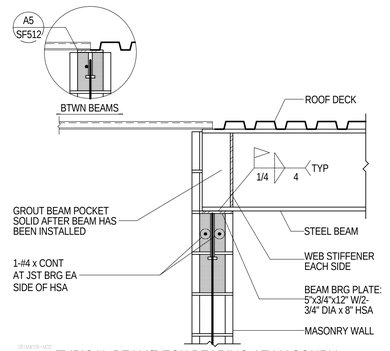

C3 / SF512 TYPICAL BEAM/DECK BEARING AT MASONRY WALL
NO SCALE

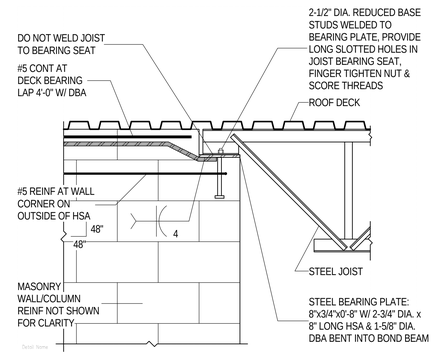

C2 / SF512 STEEL JOIST TO MASONRY WALL W/ SLIP
NO SCALE

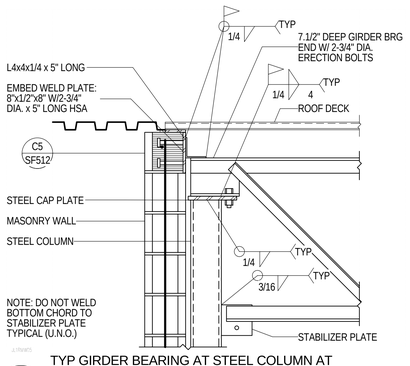

B6 / SF512 TYP GIRDER BEARING AT STEEL COLUMN AT MASONRY WALL
NO SCALE

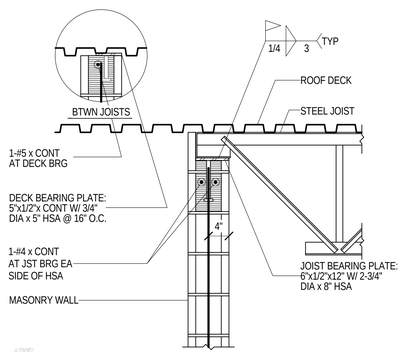

B5 / SF512 TYP JOIST/DECK BEARING AT MASONRY WALL
NO SCALE

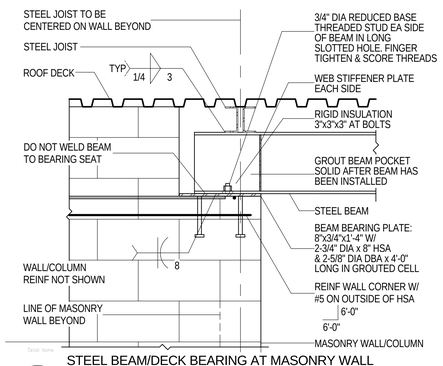

B4 / SF512 STEEL BEAM/DECK BEARING AT MASONRY WALL W/ SLIP CONDITION
NO SCALE

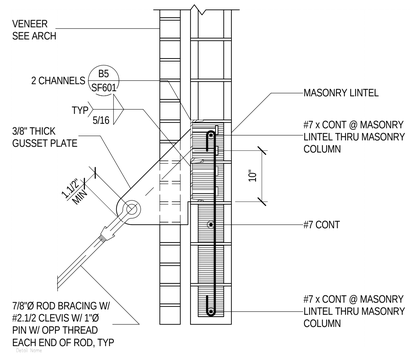

B3 / SF512 LINTEL & LIGHT SHELF SUPPORT AT LEVEL 2
NO SCALE

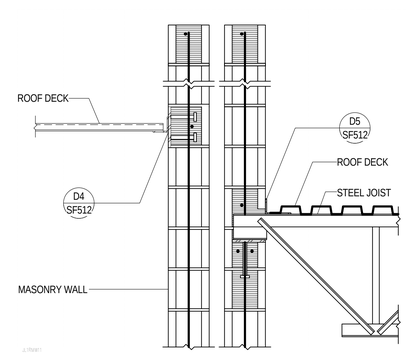

B2 / SF512 TYP JOIST/DECK BEARING AT MASONRY WALL
NO SCALE

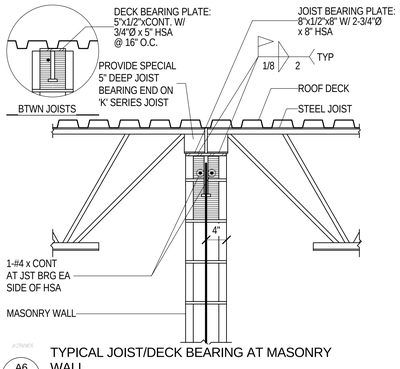

A6 / SF512 TYPICAL JOIST/DECK BEARING AT MASONRY WALL
NO SCALE

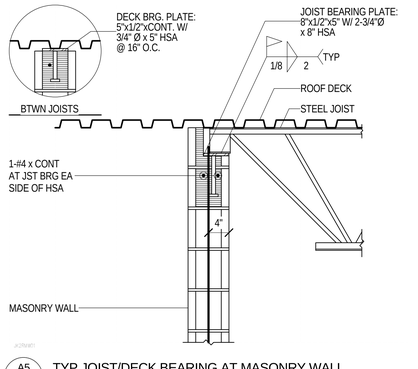

A5 / SF512 TYP JOIST/DECK BEARING AT MASONRY WALL
NO SCALE

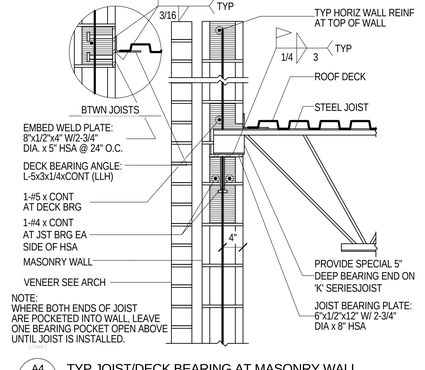

A4 / SF512 TYP JOIST/DECK BEARING AT MASONRY WALL
NO SCALE

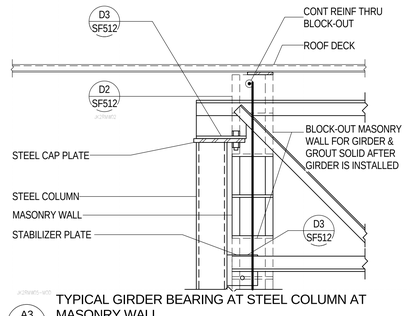

A3 / SF512 TYPICAL GIRDER BEARING AT STEEL COLUMN AT MASONRY WALL
NO SCALE

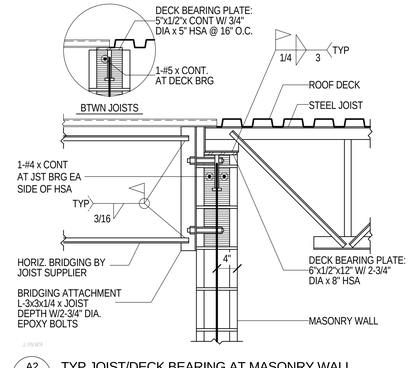

A2 / SF512 TYP JOIST/DECK BEARING AT MASONRY WALL
NO SCALE

GSBS | ARCHITECTURE | LANDSCAPE ARCHITECTURE | PLANNING | INTERIOR DESIGN
375 West 200 South Suite 100
Salt Lake City
Utah 84101
Tel 801.521.8600
Fax 801.521.7913
GSBS-PC.COM

LICENSED CERTIFIED STRUCTURAL ENGINEER NO. 144210 RONALD JAMES REAVELEY UTAH
1 February 2008

REAVELEY ENGINEERS + ASSOCIATES
Consulting Structural Engineers

Revision Schedule

#	DATE	REVISION

NORTH SALT LAKE READINESS CENTER AND CIVIL SUPPORT TEAM

Salt Lake City, UT

ROOF FRAMING DETAILS

PROJECT NO. 2005.003	SF512
DATE 2/01/2008	
DRAWN YW	
CHECKED DA	BINDING ORDER 88

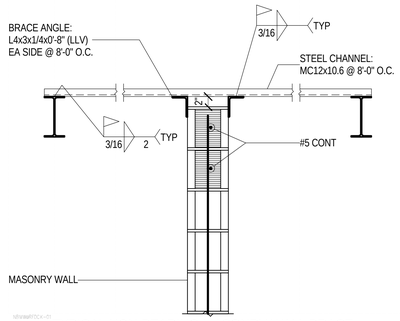

D6 / SF513 TYPICAL NON-BEARING MASONRY WALL BRACE AT UNDERSIDE OF ROOF DECK
NO SCALE

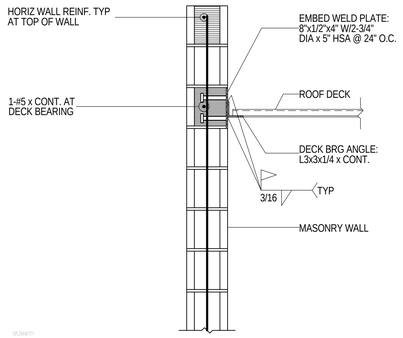

D5 / SF513 TYPICAL DECK BEARING AT MASONRY WALL
NO SCALE

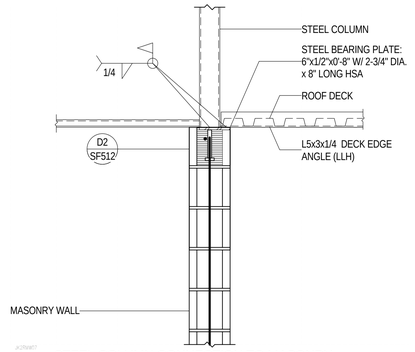

D4 / SF513 STEEL COLUMN CONNECTION TO MASONRY WALL AT SMALL LIGHT MONITOR
NO SCALE

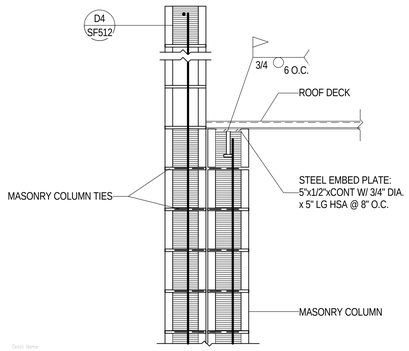

D3 / SF513 ROOF DECK TO MASONRY WALL
NO SCALE

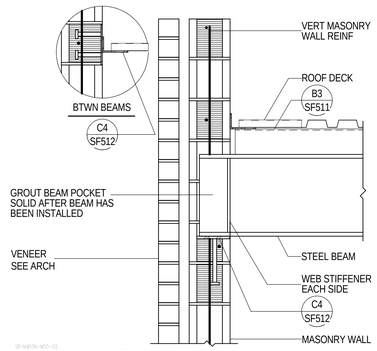

D2 / SF513 TYPICAL BEAM/DECK BEARING AT MASONRY WALL
NO SCALE

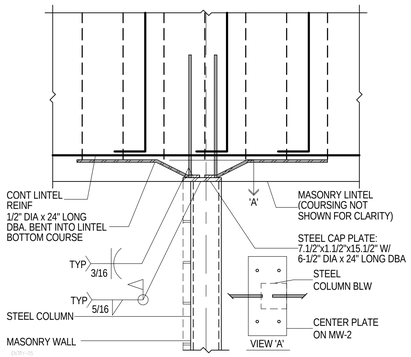

C6 / SF513 TYPICAL STEEL COLUMN TO MASONRY LINTEL
NO SCALE

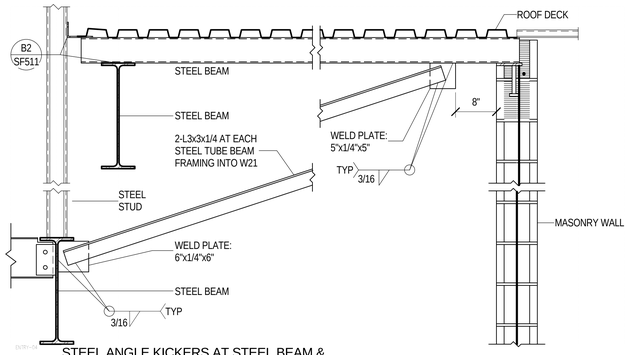

C5 / SF513 STEEL ANGLE KICKERS AT STEEL BEAM & MASONRY WALL
NO SCALE

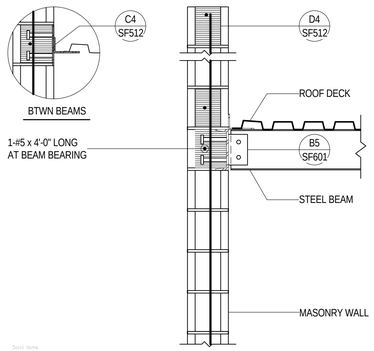

C3 / SF513 STEEL BEAM TO MASONRY WALL
NO SCALE

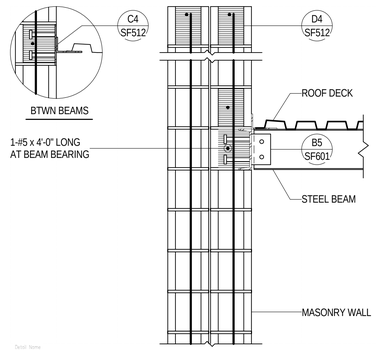

C2 / SF513 STEEL BEAM TO MASONRY WALL
NO SCALE

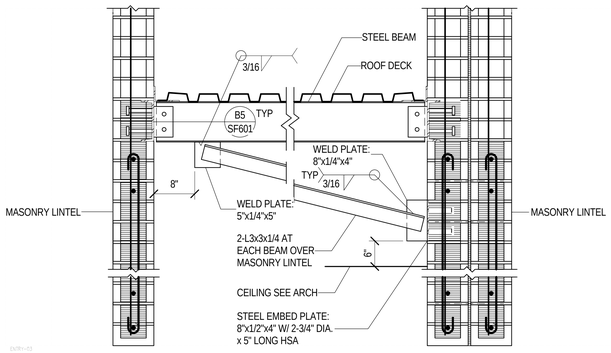

B6 / SF513 STEEL ANGLE KICKERS AT MASONRY LINTEL
NO SCALE

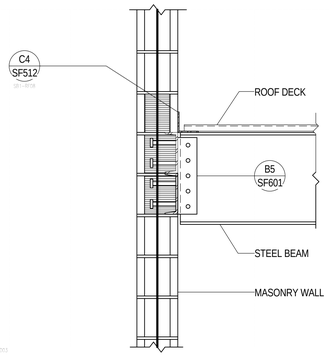

B4 / SF513 TYPICAL STEEL BEAM TO STEEL COLUMN
NO SCALE

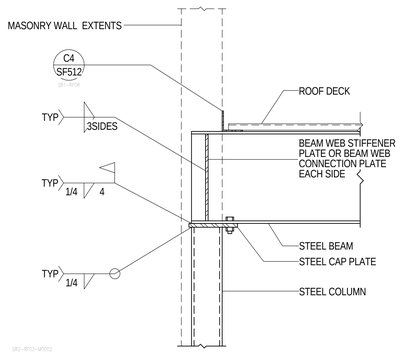

B3 / SF513 TYPICAL STEEL BEAM TO STEEL COLUMN
NO SCALE

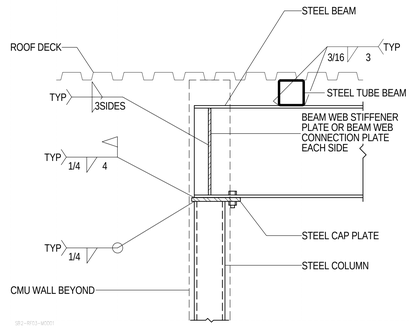

B2 / SF513 TYPICAL STEEL BEAM TO STEEL COLUMN
NO SCALE

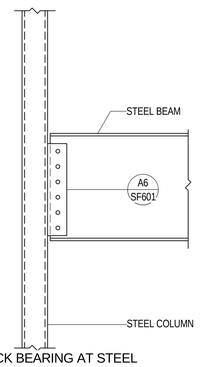

A6 / SF513 TYPICAL BEAM/DECK BEARING AT STEEL COLUMN AT MASONRY WALL
NO SCALE

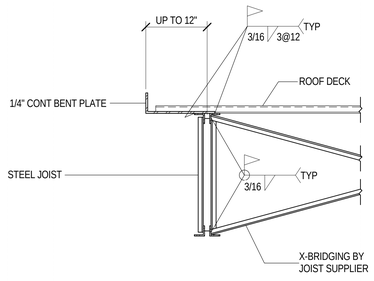

A5 / SF513 TYPICAL EDGE JOIST W/ BRIDGING
NO SCALE

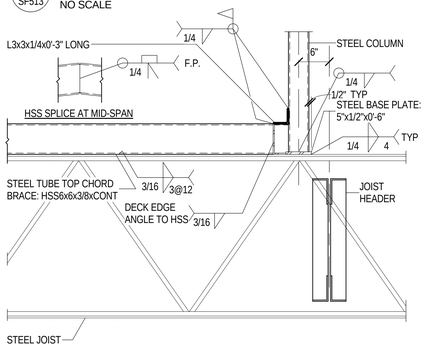

A4 / SF513 STLCOL TO STEEL JOIST
NO SCALE

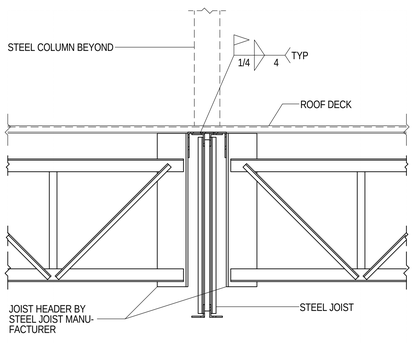

A3 / SF513 TYPICAL STEEL JOIST HEADER BEARING AT STEEL JOIST
NO SCALE

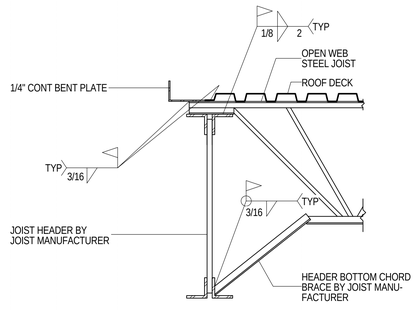

A2 / SF513 TYPICAL JOIST BEARING AT GIRDER
NO SCALE

GSBS | ARCHITECTURE | LANDSCAPE ARCHITECTURE | PLANNING | INTERIOR DESIGN
375 West 200 South Suite 100
Salt Lake City
Utah 84101
Tel 801.521.8600
Fax 801.521.7913
GSBS-PC.COM

CERTIFIED STRUCTURAL ENGINEER
NO. 144210
RONALD JAMES REAVELEY
UTAH
1 February 2008

REAVELEY
ENGINEERS + ASSOCIATES
Consulting Structural Engineers

Revision Schedule

#	DATE	REVISION

NORTH SALT LAKE READINESS CENTER AND CIVIL SUPPORT TEAM

Salt Lake City, UT

ROOF FRAMING DETAILS

PROJECT NO. 2005.003	SF513
DATE 2/01/2008	
DRAWN YW	
CHECKED DA	BINDING ORDER 89

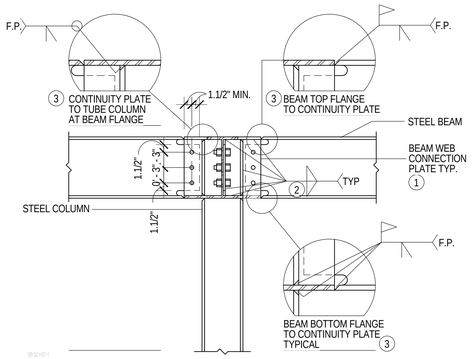

D6 / SF601 TYP BOLTED WEB PLATE FOR MOMENT FRAME CONN. TO TUBE COLUMNS W/ BOLT SCHED.

NO SCALE

MOMENT FRAME BOLT SCHEDULE

MAXIMUM BEAM SIZE IN EACH BEAM DEPTH GROUP	A-325SC BOLTS	
	NO. PER LEG	SIZE
W12x22	3	7/8" DIA

NOTES:

1. BEAM WEB CONNECTION PLATES. THICKNESS EQUALS THE BEAM WEB THICKNESS PLUS 1/8" (3/8" MIN.)
2. FILLET WELDS SHALL BE AS FOLLOWS:

   TWO SIDES: 5/8 PLATE THICKNESS (1/4" MIN)
3. THICKNESS EOUALS BEAM FLANGE THICKNESS OF THE THICKEST FLANGE OF THE BEAMS FRAMING INTO THE COLUMN FLANGE OR WEB, PLUS 1/8" (3/8" MIN).
4. BOLT EDGE DISTANCE SHALL BE 1.1/2" MIN. AT ALL EDGES. BOLT SPACING SHALL BE 3" MIN.

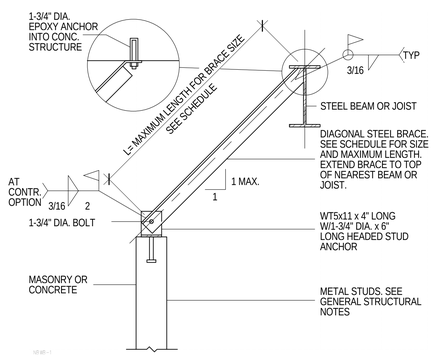

D4 / SF601 TYPICAL NON-BEARING MASONRY OR CONCRETE WALL BRACING DETAIL & SCHEDULE

NO SCALE

NON-BEARING MASONRY OR CONCRETE WALL BRACING NOTES

1. ALL NON-BEARING WALLS AND PARTITIONS SHALL BE BRACED AT THE TOP TO RESIST LATERAL FORCES.
2. WALL AND PARTITIONS MAY BE BRACED BY INTERSECTING WALLS PROVIDED THAT THE WALLS OR PARTITIONS THAT SUPPORT THE WALL ARE EQUAL TO OR GREATER IN HEIGHT THAN THE WALL WHICH THEY BRACE. THE LENGTH OF THE MASONRY SUPPORT WALL SHALL BE 4'-0" MINIMUM. THE MAXIMUM LENGTH OF WALL WHICH MAY BE BRACED WITH OTHER WALLS IS SIXTEEN FEET (16'-0") FOR MASONRY WALLS.
3. WALLS WHICH DO NOT MEET THE REOUIREMENTS OF NOTE #2 SHALL BE BRACED ACCORDING TO THE FOLLOWING RULE.
   A. WALLS AND PARTITIONS THAT ARE TERMINATED JUST ABOVE THE CEILING SHALL BE BRACED ACCORDING TO THIS DETAIL. SPACING OF BRACES SHALL NOT EXCEED 8'-0" FROM ANOTHER BRACE OR INTERSECTING WALL. SEE BRACE SCHEDULE FOR CORRECT SIZE AND MAXIMUM LENGTH.

NON-BEARING MASONRY OR CONCRETE WALL BRACE SCHEDULE

BRACE SIZE	MAX LENGTH "L"
L-2.1/2x2.1/2x3/16	8'-0"
L-3x3x3/16	9'-6"
L-3.1/2x3.1/2x1/4	11'-0"
L-4x4x1/4	13'-0"
L-5x5x5/16	16'-3"
L-6x6x5/16	19'-9"

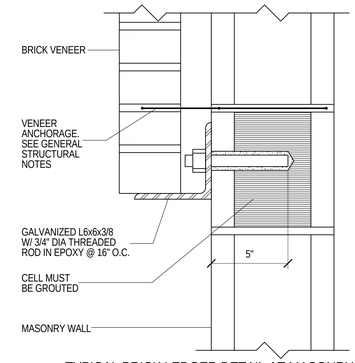

D2 / SF601 TYPICAL BRICK LEDGER DETAIL AT MASONRY WALL

NO SCALE

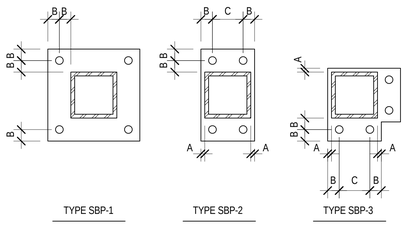

A = 1/2" MIN.

B = 1 1/2" (PER TABLE J3.5 OF THE MANUAL OF STEEL CONSTRUCTION FOR BOLTS LARGER THAN 7/8" DIAMETER)

C = 3" MIN.

C6 / SF601 TYPICAL STEEL BASE PLATES - PLAN VIEW

NO SCALE

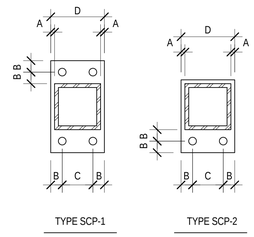

A = 1/2" MIN.
B = 1 1/2" MIN.
C = GAGE OF CONNECTED MEMBER
D = COLUMN WIDTH + 1", BEAM OR GIRDER WIDTH + 1", OR BOLT GAGE + 3", WHICHEVER IS GREATER.

C5 / SF601 TYPICAL STEEL CAP PLATES - REFLECTED PLAN VIEW

NO SCALE

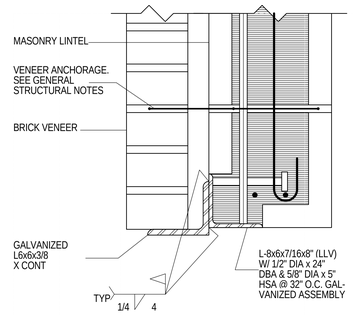

C3 / SF601 TYPICAL BRICK LEDGER DETAIL ON MASONRY LINTEL

NO SCALE

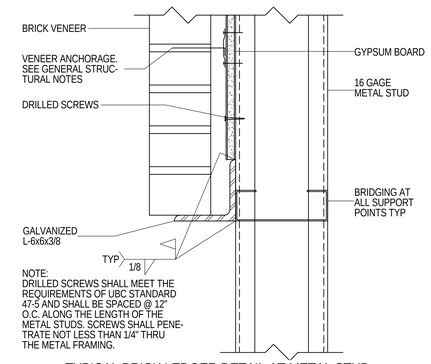

C2 / SF601 TYPICAL BRICK LEDGER DETAIL AT METAL STUD WALL

NO SCALE

STEEL COLUMN SCHEDULE

MARK	SIZE	STEEL BASE PLATE	STEEL CAP PLATE	REMARKS
SC-1	HSS8x8x1/4"	1" SBP-2	3/4" SCP-2	
SC-2	HSS8x8x1/2"	1" SBP-2	3/4" SCP-2	
SC-3	HSS8x8x1/4"	1" SBP-1	3/4" SCP-1	
SC-4	HSS5x5x5/16"	1" SBP-2	3/4" SCP-2	
SC-5	HSS5x5x3/8"	1" SBP-1	SEE DETAIL	
SC-6	HSS5x5x3/8"	1" SBP-2	3/4" SCP-2	

NOTES:

1. UNLESS NOTED OTHERWISE, ALL COLUMNS SHALL BE INSTALLED W/4-3/4" DIAMETER A.B. W/ 3" (MIN) HOOKS. PROJECT ANCHOR BOLTS 3" (MIN) ABOVE THE TOP OF THE BASE PLATE. EMBEDMENT SHALL BE 9" (MIN). ALL BOLTS SHALL BE INSTALLED W/ HARDENED WASHERS BENEATH THE NUT. ANY BOLT HOLES LARGER THAN THE BOLT DIAMETER PLUS 5/16" SHALL HAVE 5/16" PLATE WASHERS INSTALLED BENEATH THE HARDENED WASHERS.
2. ALL BOLTS IN CAP PLATES SHALL BE 3/4" DIA, A325N BOLTS TYPICAL U.N.O.
3. COLUMN SPLICES SHALL BE LOCATED PER SPLICE DETAILS, TYPICAL, U.N.O.
4. WELDS SHALL NOT BE MADE TO ANCHOR BOLTS.

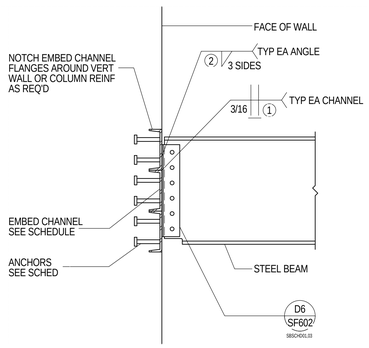

B5 / SF601 TYPICAL EMBED CHANNEL CONNECTION SCHEDULE

NO SCALE

CONNECTION SCHEDULE

BEAM DEPTH	EMBED CHANNEL	ANCHORS
TO 10"	1-C8x18.75x12"	4-3/4"Ø x 5" STUDS
TO 16"	2-C8x18.75x12"	8-3/4"Ø x 5" STUDS
TO 24"	3-C8x18.75x12"	12-3/4"Ø x 5" STUDS

1. WELD MULTIPLE EMBEDS TOGETHER WITH BUTT WELD EACH SIDE, FULL LENGTH.
2. FILLET WELDS SHALL BE ANGLE THICKNESS MINUS 1/16" (1/4" MIN.)

B2 / SF601 TYPICAL BRICK LEDGER DETAIL AT METAL STUD WALL

NO SCALE

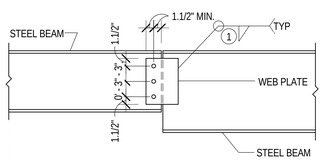

BEAM TO BEAM WEB PLATE CONNECTION

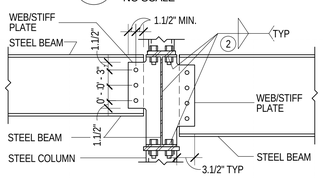

BEAM TO COLUMN WEB/STIFFENER PLATE CONNECTION

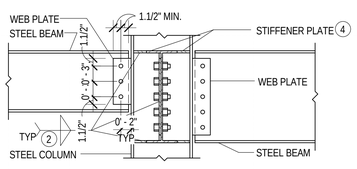

BEAM TO COLUMN WEB PLATE CONNECTION

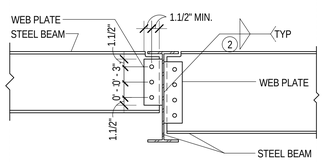

BEAM TO BEAM WEB PLATE CONNECTION

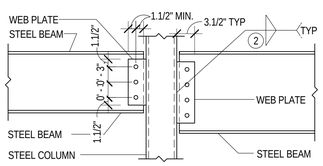

BEAM TO COLUMN WEB PLATE CONNECTION

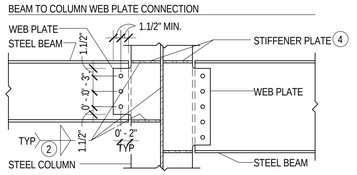

BEAM TO COLUMN WEB PLATE CONNECTION

A6 / SF601 TYPICAL BOLTED WEB PLATE CONNECTION W/ BOLT SCHEDULE (SINGLE SHEAR)

NO SCALE

A325 BOLT SCHEDULE

MAXIMUM BEAM SIZE IN EACH BEAM DEPTH GROUP	WEB PLATE THICKNESS	A325N BOLTS	
		NUMBER	SIZE
W8	3/8"	2	7/8"
W10	3/8"	2	7/8"
W12	3/8"	3	7/8"
W14	3/8"	3	7/8"
W16	3/8"	4	7/8"
W18	3/8"	5	7/8"
W21	3/8"	6	7/8"
W24	3/8"	7	7/8"

NOTES:

1. FILLET WELDS ONE SIDE SHALL EQUAL THE PLATE THICKNESS MINUS 1/16" (1/4" MIN.)
2. FILLET WELDS TWO SIDES SHALL BE 3/4 THE PLATE THICKNESS (1/4" MIN.) EACH SIDE
3. BOLT EDGE DISTANCE SHALL BE 1.1/2" MIN. AT ALL EDGES. BOLT SPACING SHALL BE 3" MIN.
4. THICKNESS EQUALS BEAM FLANGE THICKNESS OF BEAM FRAMING INTO COLUMN WEB. (3/8" MIN.)

STEEL ANGLE LINTEL SCHEDULE

BEARING EQUALS 1" PER FOOT OF OPENING OR 6" MINIMUM TYPICAL

OPENING SIZE	ANGLE SIZE
0'-0" - 7'-0"	L3.1/2x3.1/2x1/4
7'-0" - 9'-0"	L4x3.1/2x1/4
9'-0" - 10'-0"	L5x3.1/2x1/4

NOTES:

LINTELS ARE DESIGNED TO SUPPORT UNIFORM LOADS CONSISTING ONLY OF WEIGHT OF WALL WITHIN A 60 DEGREE ISOSCELES TRIANGLE AREA ABOVE OPENING.

ALL STEEL LINTELS ARE TO HAVE LONG LEG VERTICAL.

LINTEL SCHEDULE FOR 4" VENEER

ALL ANGLE LINTELS SHALL BE GALVANIZED.

GSBS | ARCHITECTURE | LANDSCAPE ARCHITECTURE | PLANNING | INTERIOR DESIGN

375 West 200 South Suite 100
Salt Lake City
Utah 84101

Tel 801.521.8600
Fax 801.521.7913

GSBS-PC.COM

LICENSED CERTIFIED STRUCTURAL ENGINEER NO. 144210 RONALD JAMES REAVELEY UTAH

1 February 2008

REAVELEY ENGINEERS + ASSOCIATES
Consulting Structural Engineers

Revision Schedule

#	DATE	REVISION

NORTH SALT LAKE READINESS CENTER AND CIVIL SUPPORT TEAM

Salt Lake City, UT

STRUCTURAL SCHEDULES

PROJECT NO. 2005.003	SF601
DATE 2/01/2008	
DRAWN YW	
CHECKED DA	BINDING ORDER 90

DRAWINGS INDEX

SHEET NUMBER	SHEET TITLE	REVISIONS			
		- -	- -	- -	- -
MH001	INDEX & LEGENDS				
MH101	FIRST LEVEL MECHANICAL PLAN				
MH101A	FIRST LEVEL MECHANICAL PLAN GARAGE				
MH102	SECOND LEVEL MECHANICAL PLAN				
MH103	ROOF MECHANICAL PLAN				
MH201	MECHANICAL CONTROLS				
MH202	MECHANICAL CONTROLS				
MH203	MECHANICAL CONTROLS				
MH401	ENLARGED MECHANICAL ROOM				
MH501	MECHANICAL DETAILS				
MH502	MECHANICAL DETAILS				
MH601	EQUIPMENT SCHEDULES				
PL101	FIRST LEVEL PLUMBING PLAN				
PL102	SECOND LEVEL PLUMBING PLAN				
PL103	ROOF PLUMBING PLAN				
PL201	PLUMBING SCHEMATICS				
PL401	ENLARGED PLUMBING PLANS				
PL402	ENLARGED PLUMBING PLANS				
PL501	PLUMBING DETAILS				
PL601	PLUMBING SCHEDULES				

ABBREVIATIONS

ø	ROUND OR DIAMETER	LWT	LEAVING WATER TEMPERATURE
AD	ACCESS DOOR	MAX	MAXIMUM
AF	AIRFOIL	MBH	THOUSAND BRITISH THERMAL UNITS/HOUR
AFF	ABOVE FINISHED FLOOR	MECH	MECHANICAL
ALT	ALTERNATE	MIN	MINIMUM
BI	BACKWARD INCLINED	NC	NOISE CRITERIA OR NORMALLY CLOSED
BOD	BOTTOM OF DUCT	NIC	NOT IN CONTRACT
BOP	BOTTOM OF PIPE	NO	NUMBER
BTU/H	BRITISH THERMAL UNITS PER HOUR	NOM	NOMINAL
CAP	CAPACITY	NTS	NOT TO SCALE
CFM	CUBIC FEET PER MINUTE	OA	OUTSIDE AIR
CV	CONSTANT VOLUME	OBD	OPPOSED BLADE DAMPER
DB	DRY BULB	OD	OVERFLOW DRAIN
DN	DOWN	OFCI	OWNER FURNISHED, CONTRACTOR INSTALLED
DIA	DIAMETER	OFOI	OWNER FURNISHED, OWNER INSTALLED
DSN	DOWN SPOUT NOZZLE	PD	PRESSURE DROP
DW	DISHWASHER	POC	POINT OF CONNECTION
(E)	EXISTING	PRV	PRESSURE REDUCING VALVE
EA	EXHAUST AIR	PSI	POUNDS PER SQUARE INCH
EAT	ENTERING AIR TEMPERATURE	PSIG	POUNDS PER SQUARE INCH GAUGE
EFF	EFFICIENCY	RA	RETURN AIR
ELEV	ELEVATION	RAD	RADIUS
ENCL	ENCLOSURE	RD	ROOF DRAIN
ESP	EXTERNAL STATIC PRESSURE	RPBP	REDUCED PRESSURE BACKFLOW PREVENTER
ET	EXPANSION TANK	SA	SUPPLY AIR
EWC	ELECTRIC WATER COOLER	SEN	SENSIBLE
EWT	ENTERING WATER TEMPERATURE	SIM	SIMILAR
FCO	FLOOR CLEANOUT	SL	SEA LEVEL
FD	FLOOR DRAIN	SP	STATIC PRESSURE
FO	FLAT OVAL	SQ FT	SQUARE FEET
FPM	FEET PER MINUTE	SS	SERVICE SINK OR STAINLESS STEEL
FS	FLOOR SINK	TOD	TOP OF DUCT
FT	FEET	TSP	TOTAL STATIC PRESSURE
FV	FACE VELOCITY	U	URINAL
GA	GAUGE	VAV	VARIABLE AIR VOLUME
GAL	GALLON	VD	VOLUME DAMPER
GD	GARAGE DRAIN	VFD	VARIABLE FREQUENCY DRIVE
GPM	GALLONS PER MINUTE	VOL	VOLUME
HP	HORSEPOWER	VTR	VENT THROUGH ROOF
HR	HOUR	W/	WITH
HT	HEIGHT	W/O	WITHOUT
IN	INCH	WB	WET BULB
INWC	INCHES OF WATER COLUMN	WC	WATER CLOSET
INWG	INCHES OF WATER GAUGE	MVD	MANUAL VOLUME DAMPER
L	LAVATORY OR LOUVER	WCO	WALL CLEANOUT
LAT	LEAVING AIR TEMPERATURE	WPD	WATER PRESSURE DROP
LBS	POUNDS	WT	WEIGHT

MECHANICAL LEGEND

NOTE: ALL ITEMS MAY NOT APPEAR ON DRAWINGS

GATE VALVE		OVERFLOW DRAIN	OD
OS & Y PATTERN GATE VALVE		STORM DRAIN ABOVE GRADE	SD
BALL VALVE		STORM DRAIN BELOW GRADE	SD
BUTTERFLY VALVE		FIRE SERVICE	F
MOTORIZED VALVE OPERATOR	M	NATURAL GAS	G
GAS COCK		PROPANE	P
PLUG VALVE		HEAT TRACING	
CHECK VALVE (SWING OR LIFT AS REQ'D)		CHILLED WATER SUPPLY	CHS
SOLENOID VALVE		CHILLED WATER RETURN	CHR
AUTOMATIC CONTROL VALVE (2-WAY)		CONDENSER WATER SUPPLY	CS
AUTOMATIC CONTROL VALVE (3-WAY)		CONDENSER WATER RETURN	CR
PRESSURE REDUCING VALVE		HEATING WATER SUPPLY	HWS
P & T RELIEF VALVE		HEATING WATER RETURN	HWR
AIR VENT (AUTOMATIC)		RADIANT FLOOR SUPPLY	RFS
CURB COCK		RADIANT FLOOR RETURN	RFR
THERMAL EXPANSION VALVE		STEAM	S
STRAINER		STEAM CONDENATE RETURN	SCR
CALIBRATED BALANCE VALVE		REFRIGERANT LIQUID	RL
VENTURI FLOW METER		REFRIGERANT SUCTION	RS
REDUCER		HOT GAS	HG
PET COCK OR GAUGE COCK		HOT GAS BYPASS	HGBP
PRESSURE GAUGE W/GAUGE COCK		DUCT SIZE (IN), FIRST FIGURE IS SIDE SHOWN	18/12
THERMOMETER		BURIED OR UNDERFLOOR DUCT	
TEMPERATURE & PRESSURE TEST PLUG		DUCT W/ ACOUSTICAL LINING	
IN-LINE PUMP		FLEXIBLE DUCT (HELICAL)	
FLOW SWITCH	F	SPIN-IN FITTING W/ MVD	
AQUASTAT	A	FLEXIBLE DUCT CONNECTION	
TEMPERATURE SENSING WELL	T	SUPPLY SLOT DIFFUSER	
HOSE BIBB OR SILLCOCK		SUPPLY DIFFUSER	
YARD HYDRANT	HYD	RETURN GRILLE	
FLOOR DRAIN		RADIAL SUPPLY DIFFUSERS	
FLOOR SINK		RETURN AIR DUCT SECTION	
MANHOLE		RETURN AIR DUCT UP	
WALL CLEANOUT	CH	RETURN AIR DUCT DOWN	
FLOOR OR GRADE CLEANOUT		SUPPLY AIR DUCT SECTION	
GRADE CLEANOUT W/ CONCRETE PAD		SUPPLY AIR DUCT UP	
VENT THROUGH ROOF		SUPPLY AIR DUCT DOWN	
POST TYPE FDC CONNECTION		EXHAUST AIR DUCT SECTION	
WALL TYPE FDC CONNECTION		EXHAUST AIR DUCT UP	
FIRE HOSE CABINET		EXHAUST AIR DUCT DOWN	
FIRE DEPT. HORN & LIGHT		ACCESS PANEL	
EXPANSION JOINT		MANUAL VOLUME DAMPER	D
FLEXIBLE PIPE CONNECTION		GRAVITY BACKDRAFT DAMPER	
REDUCED PRESSURE BACKFLOW PREVENTER	RPBP	MOTORIZED DAMPER	M
DIRECTION OF FLOW		AIR FLOW STATION	F
ELBOW DOWN		FIRE DAMPER	F
ELBOW UP		SMOKE DAMPER	S
PIPE CAP		COMBINATION FIRE/SMOKE DAMPER	FS
TEE DOWN		DUCT TRANSITION	
UNION		ELBOW W/ TURNING VANES	
DOMESTIC COLD WATER		TEE W/ 45° ENTRY	
DOMESTIC HOT WATER		WYE W/ 45° ENTRY	
HOT WATER CIRC.		THERMOSTAT OR TEMP SENSOR	T
TEMPERED WATER	T	HUMIDISTAT OR HUMIDITY SENSOR	H
SANITARY (PLBG) VENT		POINT OF REMOVAL FROM EXISTING	
SANITARY SEWER ABOVE GRADE		POINT OF CONNECTION TO EXISTING	
SANITARY SEWER BELOW GRADE		DETAIL TAG	DETAIL NO. / DRAWING NO.
GREASE WASTE ABOVE GRADE	GW		
GREASE WASTE BELOW GRADE	GW	KEYED NOTE	NOTE NO.
DRAIN	D		
ROOF DRAIN	RD	SECTION CUT LINE	SECTIONS NO. / DRAWING NO.

Copyright (C) 2006 by Colvin Engineering Associates, Inc. Salt Lake City, Utah. All rights reserved. Unauthorized copying and/or use is illegal and subject to prosecution.

GSBS | ARCHITECTURE | LANDSCAPE ARCHITECTURE | PLANNING | INTERIOR DESIGN

375 West 200 South Suite 100
Salt Lake City
Utah 84101

Tel 801.521.8600
Fax 801.521.7913

GSBS-PC.COM

Kyle T. Kirkham
REGISTERED
6280323
2/1/2008
PROFESSIONAL ENGINEER
State of Utah

Colvin Engineering Associates, Inc.
244 West 300 North Suite 200
Salt Lake City, Utah 84103
Phone: (801) 322-2400 / Fax: (801) 322-2418

No.	DATE	REVISION

NORTH SALT LAKE READINESS CENTER AND CIVIL SUPPORT TEAM

Salt Lake City, UT

BID SET

INDEX, LEGENDS

PROJECT NO. 2006-095.00	MH001
DATE 2/1/2008	
DRAWN MCJ	
CHECKED KTK	BINDING ORDER 91

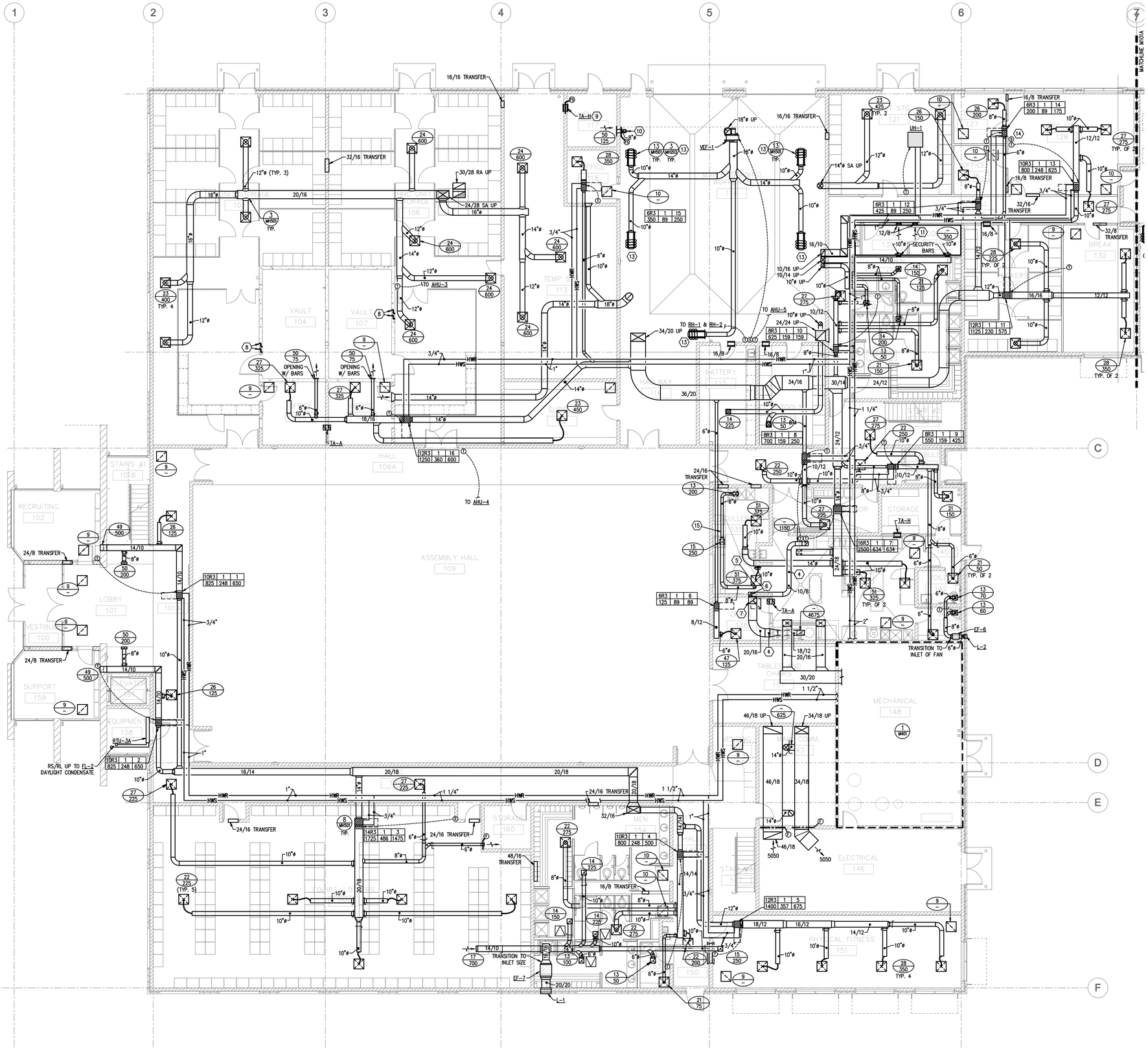

KEYED NOTES

1. MOUNT UNITS 13' ABOVE FINISHED FLOOR.
2. 8" WALL CAP.
3. 20" WALL CAP.
4. TYPE I EXHAUST WELDED 18 GA FIRE MASTER WRAP.
5. 6"ø EXHAUST DUCT UP TO EF-3.
6. 10/8 EXHAUST DUCT UP TO EF-4.
7. 20/16 TYPE I EXHAUST DUCT UP TO EF-5.
8. PROVIDE (2) 1 1/2" Z-DUCTS THRU WALL FROM VAULT TO UNIT STORAGE. LOCATE Z-DUCTS AT 12" AFF AND 12" BELOW VAULTED CEILING. CENTER SECTION TO BE MINIMUM 6" LONG.
9. TRANSFER DUCT MUST BE MOUNTED WITHIN 12" AFF.
10. DIFFUSER MUST BE MOUNTED WITHIN 12" AFF.
11. DRAWINGS ARE SHOWN SCHEMATICALLY DO NOT RUN ANY PIPE IN COMMUNICATION ROOMS.
12. TRANSITION SUPPLY DUCTS TO SUPPLY AIR INLETS OF KITCHEN HOOD.
13. MOUNT REEL ON WALL APPROXIMATELY 14' ABOVE FINISHED FLOOR.
14. MAINTAINED MUSHROOM KILL SWITCH. SEE MH201, SCHEMATIC 4.
15. TYPE II VENT, 304 STAINLESS STEEL.

GENERAL NOTES

A. ALL RETURN AIR TRANSFERS TO BE LOCATED IN BEAM POCKET.
B. COORDINATE ALL GRILLES WITH ARCHITECTURAL CEILING PLANS. SEE AE121.
C. SEE DETAILS 2,3,5 ON MH501 FOR DUCT INSTALLATION.

1 FIRST FLOOR MECHANICAL PLAN
SCALE: 1/8" = 1'-0"

GSBS | ARCHITECTURE | LANDSCAPE ARCHITECTURE | PLANNING | INTERIOR DESIGN
375 West 200 South Suite 100
Salt Lake City
Utah 84101
Tel 801.521.8600
Fax 801.521.7913
GSBS-PC.COM

Kyle T. Kisebach
REGISTERED
36280323
2/1/2008
PROFESSIONAL ENGINEER
State of Utah

Colvin Engineering Associates, Inc.
244 West 300 North Suite 200
Salt Lake City, Utah 84103
Phone 801 322-2400 / Fax 801 322-2418

No.	DATE	REVISION

NORTH SALT LAKE READINESS CENTER AND CIVIL SUPPORT TEAM

Salt Lake City, UT

BID SET

FIRST FLOOR MECHANICAL PLAN

PROJECT NO. 2006-095.00
DATE 2/1/2008
DRAWN MCJ
CHECKED KTK
BINDING ORDER 92

MH101

Copyright (C) 2006 by Colvin Engineering Associates, Inc. Salt Lake City, Utah. All rights reserved. Unauthorized copying and/or use is illegal and subject to prosecution.

KEYED NOTES

1. ROUTE DUCTS THROUGH JOISTS.
2. 6"ø DRYER VENT, EXIT WALL AT MINIMUM OF 24" GROUND
3. MOUNT REEL ON WALL APPROXIMATELY 14' ABOVE FINISHED FLOOR.
4. MOUNT REEL APPROXIMATELY 14' ABOVE FINISHED FLOOR.
5. MOUNT RADIANT HEAT APPROXIMATELY 14' ABOVE FINISHED FLOOR.

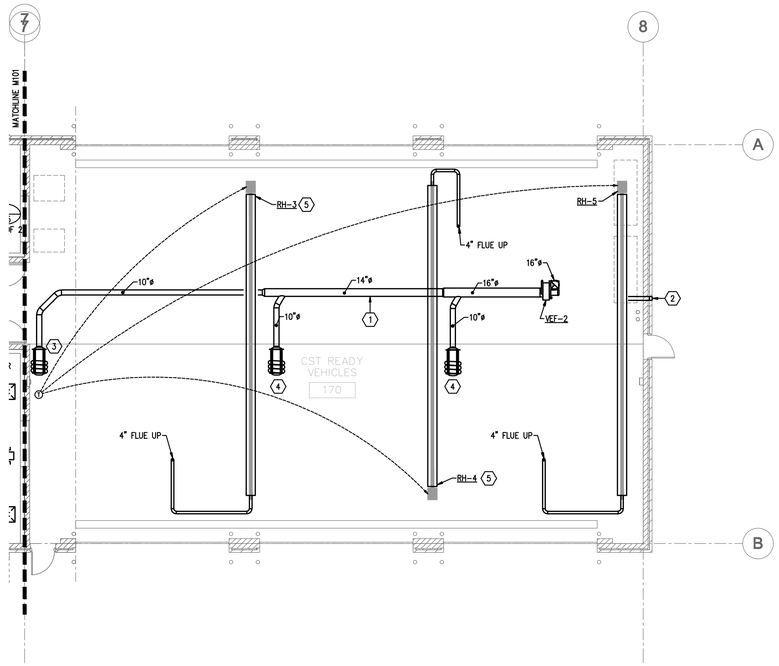

1 FIRST FLOOR MECHANICAL PLAN GARAGE
SCALE: 1/8" = 1'-0"

Copyright (C) 2006 by Colvin Engineering Associates, Inc. Salt Lake City, Utah. All rights reserved. Unauthorized copying and/or use is illegal and subject to prosecution.

GSBS | ARCHITECTURE | LANDSCAPE ARCHITECTURE | PLANNING | INTERIOR DESIGN
375 West 200 South Suite 100
Salt Lake City
Utah 84101
Tel 801.521.8600
Fax 801.521.7913
GSBS-PC.COM

Kyle T. Kisamore
REGISTERED
6280323
2/1/2008
PROFESSIONAL ENGINEER
State of Utah

Colvin Engineering Associates, Inc.
244 West 300 North Suite 200
Salt Lake City, Utah 84103
Phone 801 322-2400 / Fax 801 322-2418

No.	DATE	REVISION

NORTH SALT LAKE READINESS CENTER AND CIVIL SUPPORT TEAM

Salt Lake City, UT

BID SET

FIRST FLOOR MECHANICAL PLAN GARAGE

PROJECT NO. 2006-095.00
DATE 2/1/2008
DRAWN MCJ
CHECKED KTK

MH101A

BINDING ORDER 93

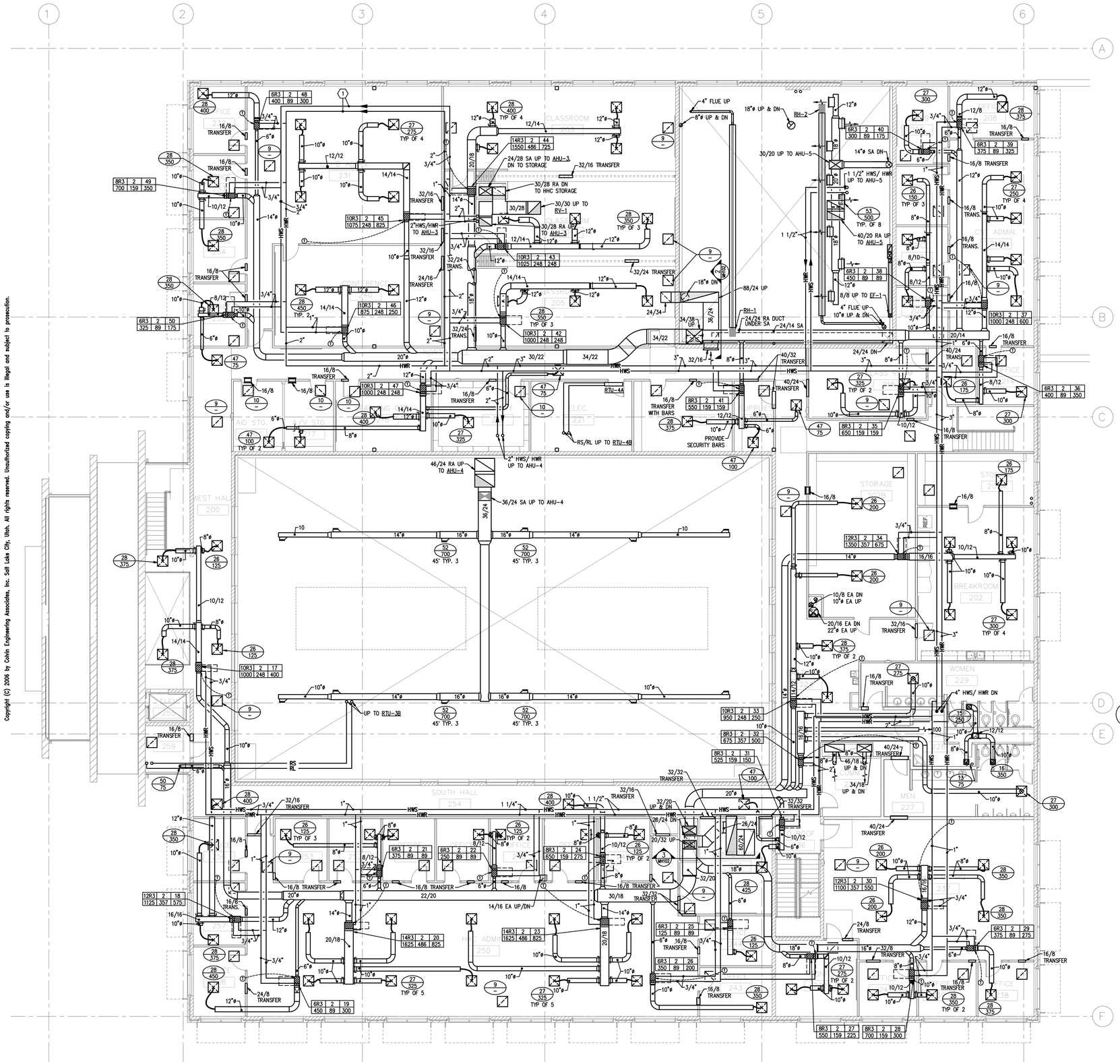

1 SECOND FLOOR MECHANICAL PLAN
SCALE: 1/8" = 1'-0"

KEYED NOTES

1. LOCATION OF HEATING WATER LOOP DIFFERENTIAL PRESSURE SENSOR.

GENERAL NOTES

A. ALL RETURN AIR DUCT TRANSFERS ARE TO BE LOCATED IN BEAM POCKET.

B. ALL RETURN AIR GRILLES ARE SCHEDULE 10 UNLESS OTHERWISE NOTED. SEE M601 FOR AIR DEVICE SCHEDULE.

C. COORDINATE ALL GRILLES WITH ARCHITECTURAL CEILING PLANS. SEE AE128.

D. SEE DETAILS 2,3,5 ON MH501 FOR DUCT INSTALLATION.

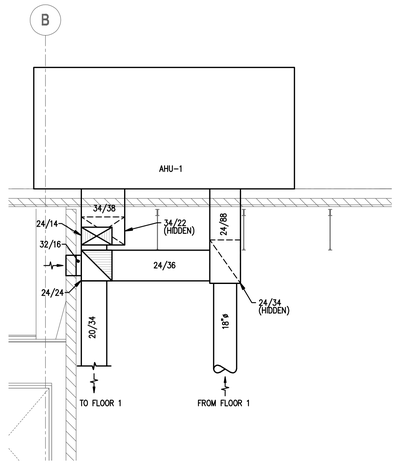

2 AHU-1 DUCT SECTION
SCALE: 1/4" = 1'-0"

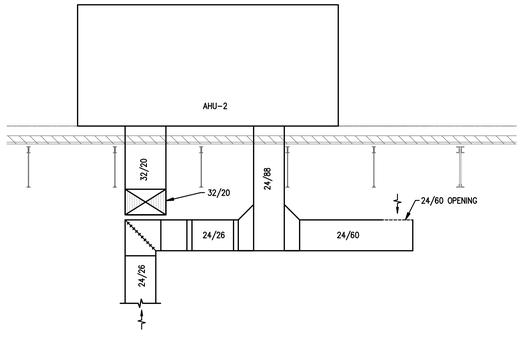

3 AHU-2 DUCT SECTION
SCALE: 1/4" = 1'-0"

GSBS | ARCHITECTURE | LANDSCAPE ARCHITECTURE | PLANNING | INTERIOR DESIGN
375 West 200 South Suite 100
Salt Lake City
Utah 84101
Tel 801.521.8600
Fax 801.521.7913
GSBS-PC.COM

Kyle T. Kisbaugh
REGISTERED
36280323
2/1/2008
PROFESSIONAL ENGINEER
STATE OF UTAH

Colvin Engineering Associates, Inc.
244 West 200 North Suite 200
Salt Lake City, Utah 84103
Phone: 801.322.5400 / Fax: 801.322.5418

No.	DATE	REVISION

Copyright (C) 2006 by Colvin Engineering Associates, Inc. Salt Lake City, Utah. All rights reserved. Unauthorized copying and/or use is illegal and subject to prosecution.

NORTH SALT LAKE READINESS CENTER AND CIVIL SUPPORT TEAM

Salt Lake City, UT

BID SET

SECOND FLOOR MECHANICAL PLAN

PROJECT NO. 2006-095.00	MH102
DATE 2/1/2008	
DRAWN MCJ	
CHECKED KTK	BINDING ORDER 94

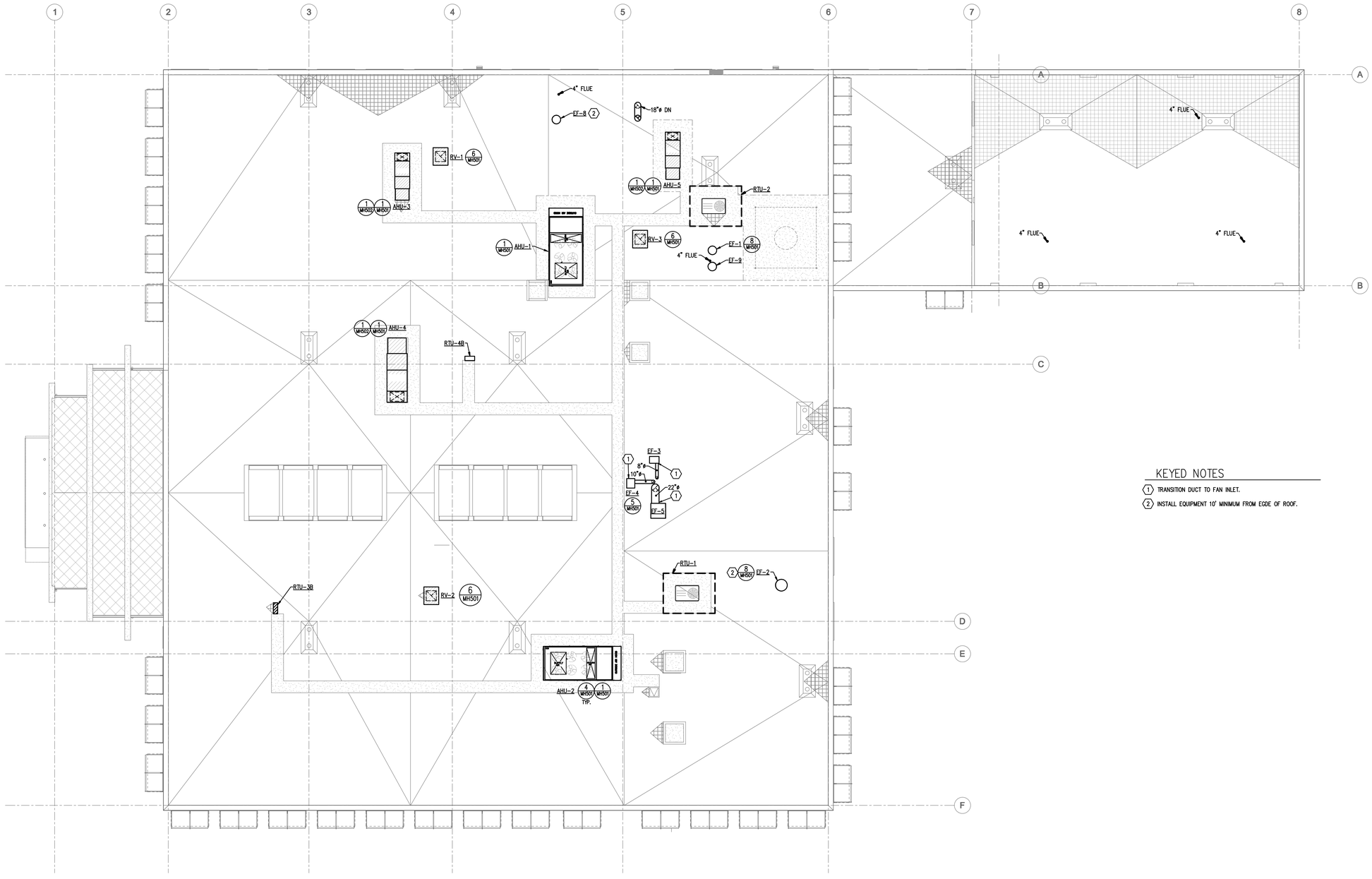

KEYED NOTES

1. TRANSITION DUCT TO FAN INLET.
2. INSTALL EQUIPMENT 10' MINIMUM FROM EGDE OF ROOF.

1 ROOF MECHANICAL PLAN

SCALE: 3/32" = 1'-0"

Copyright (C) 2006 by Colvin Engineering Associates, Inc. Salt Lake City, Utah. All rights reserved. Unauthorized copying and/or use is illegal and subject to prosecution.

GSBS ARCHITECTURE | LANDSCAPE ARCHITECTURE | PLANNING | INTERIOR DESIGN

375 West 200 South Suite 100
Salt Lake City
Utah 84101

Tel 801.521.8600
Fax 801.521.7913

GSBS-PC.COM

Kyle T. Kirkwood
REGISTERED
PROFESSIONAL ENGINEER
No. 6280323
2/1/2008
State of Utah

Colvin Engineering Associates, Inc.
244 West 300 North Suite 200
Salt Lake City, Utah 84103
Phone 801 322-2400 / Fax 801 322-2419

No.	DATE	REVISION

NORTH SALT LAKE READINESS CENTER AND CIVIL SUPPORT TEAM

Salt Lake City, UT

BID SET

ROOF MECHANICAL PLAN

PROJECT NO. 2006-095.00
DATE 2/1/2008
DRAWN MCJ
CHECKED KTK

MH103

BINDING ORDER 95

EXHAUST FAN SEQUENCES
TYP. EXHAUST FAN:
1) INPUT DEVICE: DDC SYSTEM TIME SCHEDULE 2) OUTPUT DEVICE: FAN MOTOR 3) ACTION: ENERGIZE FANS AND OPEN DAMPERS DURING OCCUPIED PERIODS

EXHAUST FAN SEQUENCES
FLAM. 117 & BATTERY 115 ROOM EXHAUST FAN SEQUENCE:
1) INPUT DEVICE: MANUAL KILL SWITCH LOCATED OUTSIDE OF ROOM ADJACENT TO ACCESS DOOR. LABEL: "VENTILATION SYSTEM EMERGENCY SHUTOFF" 2) OUTPUT DEVICE: EF-8 MOTOR & EF-9 MOTOR 3) ACTION: WHEN KILL SWITCH IS DEPRESSED: A) ALARM DDC B) DE-ENERGIZE EXHAUST FAN MOTOR C) CLOSE DAMPER 4) DISPLAY: KILL SWITCH POSITION

1 TYP. EXHAUST DDC CONTROL SCHEMATICS
NO SCALE

GENERAL NOTES

A. ALL POINTS SPECIFIED IN SCHEMATICS OR SEQUENCES MUST BY SHOWN ON DDC PAGE AND BE CONTROLLABLE

B. TRENDING MUST BE ENABLED FOR ALL SYSTEMS.

REHEAT VAV BOX CONTROL SEQUENCE
OCCUPANCY CONTROL: 1) INPUT DEVICE: DDC SOFTWARE 2) OUTPUT DEVICE: VAV CONTROLLER 3) ACTION: REPORT OCCUPANCY AND ENABLE OCCUPIED TEMPERATURE SET POINT A) WINTER OCCUPIED TEMPERATURE: 68 DEG F B) WINTER UNOCCUPIED TEMPERATURE: 55 DEG F C) SUMMER OCCUPIED TEMPERATURE: 78 DEG F D) SUMMER UNOCCUPIED TEMPERATURE: 85 DEG F ROOM TEMPERATURE CONTROL: 1) INPUT DEVICE: ROOM THERMOSTAT 2) OUTPUT DEVICE: ELECTRONIC DAMPER ACTUATOR, CONTROL-VALVE OPERATOR 3) ACTION: A) IF ROOM TEMPERATURE > UPPER LIMIT OF THROTTLING RANGE, MODULATE DAMPER AND CLOSE CONTROL VALVE B) IF ROOM TEMPERATURE < LOWER LIMIT OF THROTTLING RANGE, MODULATE DAMPER TO CONTROL ROOM TEMPERATURE AND MODULATE CONTROL VALVE TO MAINTAIN 90 DEG F SUPPLY TEMPERATURE MINIMUM VENTILATION CONTROL: 1) INPUT DEVICE: ROOM CO2 SENSOR, VAV CONTROLLER 2) ELECTRONIC DAMPER ACTUATOR 3) ACTION: A) IF CO2 SENSOR IS INSTALLED IN ROOM, SET MIN OSA TO MAINTAIN 200 PPM DIFFERENCE BETWEEN OUTSIDE AND RETURN CO2 LEVELS B) IF NO CO2 SENSOR IS IN ROOM, SET MINIMUM CFM PER MH101, MH101A, MH102, MH102A DISPLAY: 1) ROOM/AREA SERVED 2) ROOM OCCUPIED/UNOCCUPIED 3) ROOM TEMPERATURE INDICATION 4) ROOM TEMPERATURE SET POINT, OCCUPIED 5) ROOM TEMPERATURE SET POINT, UNOCCUPIED 6) AIR-DAMPER POSITION AS PERCENT OPEN 7) CONTROL-VALVE POSITION AS PERCENT OPEN 8) AIR-DAMPER MINIMUM POSITION

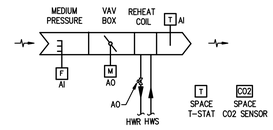

2 REHEAT VAV BOX DDC CONTROL SCHEMATIC
NO SCALE

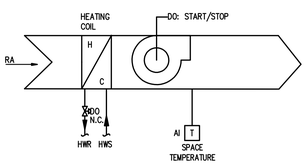

ROOM TEMPERATURE CONTROL SEQUENCE:
1) INPUT DEVICE: ROOM THERMOSTAT 2) OUTPUT DEVICE: SUPPLY FAN, HEATING COIL VALVE 3) ACTION: CYCLE FAN TO MAINTAIN SPACE TEMPERATURE. OPEN VALVE ONLY WHEN FAN IS ENERGIZED. 4) DISPLAY: A) ROOM TEMPERATURE INDICATION B) ROOM TEMPERATURE SETPOINT

3 UNIT HEATER DDC CONTROL SCHEMATIC
NO SCALE

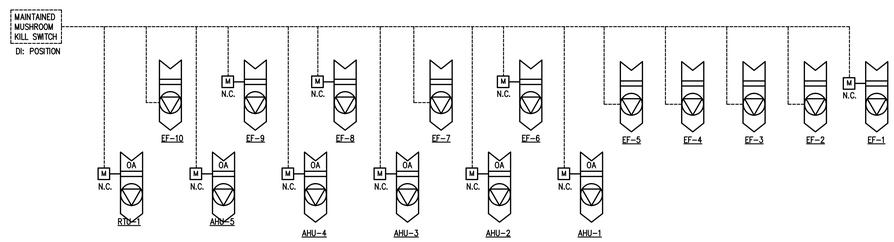

EMERGENCY SHUTDOWN CONTROL SEQUENCE:
1) INPUT DEVICE: MANUAL KILL SWITCH, CONFIRM LOCATION WITH OWNER 2) OUTPUT DEVICE: ALL OUTSIDE AIR DAMPERS, EXHAUST FAN DAMPERS, EXHAUST FANS, RELIEF FANS. 3) ACTION: WHEN KILL SWITCH IS DEPRESSED: A) ALARM DDC B) DE-ENERGIZE ALL FANS C) CLOSE ALL DAMPERS 4) DISPLAY: KILL SWITCH POSITION

4 EMERGENCY AIR SYSTEM SHUTDOWN
NO SCALE

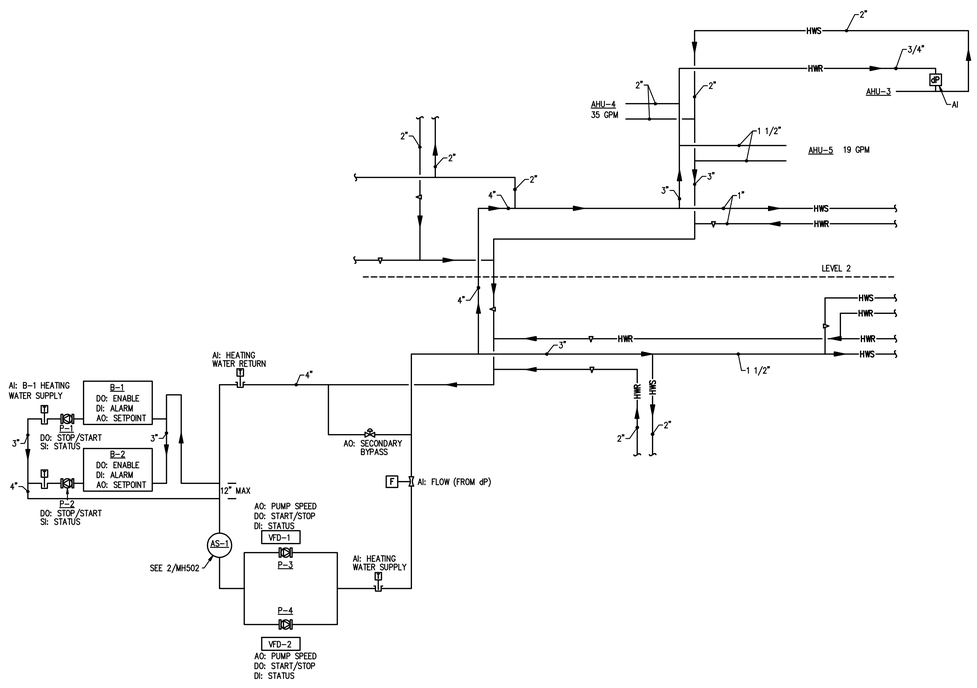

5 BOILER SCHEMATIC
NO SCALE

HEATING WATER CONTROL SEQUENCES		
SUPPLY TEMPERATURE	PRIMARY CIRCULATING PUMPS	SECONDARY CIRCULATING PUMPS
SUPPLY TEMPERATURE CONTROL: 1) INPUT DEVICE: DDC SOFTWARE 2) OUTPUT DEVICE: BOILER 3) ACTION: MODULATE BOILER TO MAINTAIN HEATING-WATER SUPPLY TEMPERATURE 4) DISPLAY: A) HEATING-WATER SUPPLY TEMPERATURE B) HEATING-WATER SUPPLY TEMPERATURE SET POINT C) BOILER FIRING RATE D) BOILER ALARM SUPPLY TEMPERATURE RESET CONTROL: 1) INPUT DEVICE: OUTDOOR-AIR SENSOR 2) OUTPUT DEVICE: DDC SYSTEM SOFTWARE OR BOILER PACKAGED CONTROLLER 3) ACTION: RESET HEATING-WATER SUPPLY TEMPERATURE IN STRAIGHT-LINE RELATIONSHIP WITH OUTDOOR-AIR TEMPERATURE FOR THE FOLLOWING CONDITIONS: A) 140 DEG F HEATING WATER WHEN OUTDOOR-AIR TEMPERATURE IS 0 DEG F B) 120 DEG F HEATING WATER WHEN OUTDOOR-AIR TEMPERATURE IS 75 DEG F 4) DISPLAY: A) OUTDOOR-AIR TEMPERATURE B) HEATING-WATER SUPPLY TEMPERATURE C) HEATING-WATER SUPPLY TEMPERATURE SET POINT	PUMP CONTROL: 1) INPUT DEVICE: DDC SYSTEM 2) OUTPUT DEVICE: DDC SYSTEM COMMAND TO PUMP RELAY 3) ACTION: ENERGIZE PUMP AT BOILER ENABLE 4) DISPLAY: A) BOILER ENABLE B) OPERATING STATUS OF PRIMARY CIRCULATING PUMPS	PUMP CONTROL: 1) INPUT DEVICE: DIFFERENTIAL PRESSURE TRANSDUCER AT AHU-3 2) OUTPUT DEVICE: VFD SPEED 3) ACTION: MAINTAIN DIFFERENTIAL PRESSURE SETPOINTS (DETERMINED BY TAB CONTRACTOR) 4) DISPLAY: DIFFERENTIAL PRESSURE SETPOINT BOILER MINIMUM FLOW MAINTENANCE CONTROL: 1) INPUT DEVICE: SECONDARY LOOP FLOW; DDC REPORT OF # OF ENABLED BOILERS 2) OUTPUT DEVICE: MODULATING BYPASS VALVE 3) ACTION: MAINTAIN MINIMUM BOILER FLOW IN SECONDARY LOOP 4) DISPLAY: MINIMUM BOILER FLOW REQUIRED

Copyright (C) 2006 by Colvin Engineering Associates, Inc. Salt Lake City, Utah. All rights reserved. Unauthorized copying and/or use is illegal and subject to prosecution.

GSBS | ARCHITECTURE | LANDSCAPE ARCHITECTURE | PLANNING | INTERIOR DESIGN
375 West 200 South Suite 100
Salt Lake City
Utah 84101
Tel 801.521.8600
Fax 801.521.7913
GSBS-PC.COM

Kyle T. Kimball
REGISTERED
6280323
1/1/2008
PROFESSIONAL ENGINEER
State of Utah

Colvin Engineering Associates, Inc.
244 West 300 North Suite 200
Salt Lake City, Utah 84103
Phone: (801) 322-2400 / Fax: (801) 322-2418

No.	DATE	REVISION

NORTH SALT LAKE READINESS CENTER AND CIVIL SUPPORT TEAM

Salt Lake City, UT

BID SET

CONTROL & FLOW SCHEMATICS

PROJECT NO. 2006-095.00
DATE 2/1/2008
DRAWN MCJ
CHECKED KTK

MH201

BINDING ORDER 96

GENERAL NOTES

(A) ALL POINTS SPECIFIED IN SCHEMATICS OR SEQUENCES MUST BY SHOWN ON DDC PAGE AND BE CONTROLLABLE

(B) TRENDING MUST BE ENABLED FOR ALL SYSTEMS.

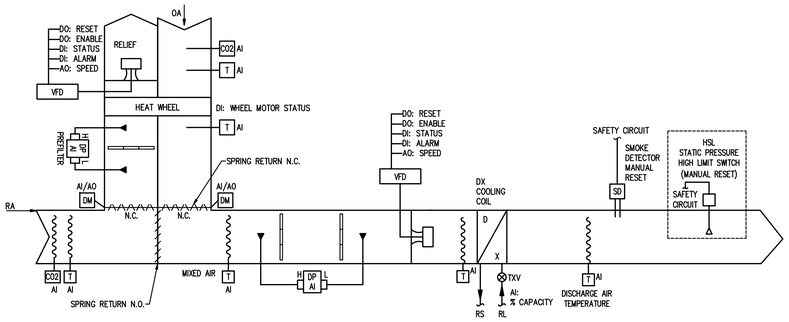

1 VAV AHU DDC CONTROL SCHEMATIC (AHU-1,2)

NO SCALE

VAV AHU CONTROL SEQUENCES

SUPPLY FAN

VOLUME CONTROL:
1) INPUT DEVICE: DIFFERENTIAL-PRESSURE SWITCH SENSING SUPPLY-DUCT STATIC PRESSURE REFERENCED TO CONDITIONED-SPACE STATIC PRESSURE.
2) OUTPUT DEVICE: DDC SYSTEM ANALOG OUTPUT TO VFD.
3) ACTION: MAINTAIN CONSTANT SUPPLY-DUCT STATIC PRESSURE

SAFETIES:
1) INPUT DEVICE: SUPPLY-DUCT STATIC-PRESSURE TRANSMITTER, RETURN AIR DUCT-MOUNTED SMOKE DETECTOR
2) OUTPUT DEVICE: HARD WIRED TO MOTOR STARTER; DDC SYSTEM ALARM
3) ACTION: ALLOW FANS TO BE ENERGIZED IF DUCT FREE OF COMBUSTION PRODUCTS AND STATIC PRESSURE IS BELOW EXCESSIVE-STATIC-PRESSURE SET POINT (AUTO RESET)

DISPLAY:
1) SUPPLY-FAN-DISCHARGE STATIC-PRESSURE INDICATION
2) SUPPLY-FAN-DISCHARGE STATIC-PRESSURE SET POINT
3) SUPPLY-FAN AIRFLOW RATE
4) SUPPLY-FAN SPEED

RELIEF FAN

VOLUME CONTROL:
1) INPUT DEVICE: DIFFERENTIAL-PRESSURE SWITCH SENSING BUILDING STATIC PRESSURE REFERENCED TO OUTDOOR STATIC PRESSURE
2) OUTPUT DEVICE: DDC SYSTEM ANALOG OUTPUT TO VFD.
3) ACTION: MAINTAIN BUILDING STATIC PRESSURE, 0.05" W.C.

DISPLAY:
1) BUILDING STATIC-PRESSURE INDICATION
2) BUILDING STATIC-PRESSURE SET POINT

HEAT RECOVERY WHEEL

1) INPUT DEVICE: OSA POSITION
2) OUTPUT DEVICE: HEAT WHEEL MOTOR
3) ACTION: ENERGIZE HEAT WHEEL WHEN OUTSIDE AIR DAMPER IS NOT CLOSED AND SUPPLY FAN IS ENERGIZED

ECONOMIZER

DEMAND CONTROL VENTILATION
1) INPUT DEVICE: CO2 DIFFERENTIAL SENSORS
2) OUTPUT DEVICE: OSA AND RELIEF DAMPERS
3) ACTION: LOWER MINIMUM OSA TO MAINTAIN 200 PPM DIFFERENCE BETWEEN OUTSIDE AND RETURN CO2 LEVELS

MINIMUM POSITION (DETERMINED BY TAB CONTRACTOR):
1) INPUT DEVICE: DDC SYSTEM TIME SCHEDULE
2) OUTPUT DEVICE: DDC SYSTEM ANALOG OUTPUT TO MODULATING DAMPER ACTUATORS
3) ACTION: OPEN OUTDOOR-AIR DAMPERS TO MINIMUM POSITION DURING OCCUPIED PERIODS

TEMPERATURE CONTROL:
1) INPUT DEVICE: ELECTRONIC TEMPERATURE SENSOR
2) OUTPUT DEVICE: DDC SYSTEM ANALOG OUTPUT TO MODULATING DAMPER ACTUATORS
3) ACTION: MODULATE OUTDOOR-, RETURN-, AND RELIEF-AIR DAMPERS TO MAINTAIN AIR TEMPERATURE SET POINT OF 55 DEG F

COOLING RESET CONTROL:
1) INPUT DEVICE: OUTDOOR- AND RETURN-AIR, DUCT-MOUNTED ELECTRONIC TEMPERATURE SENSORS
2) OUTPUT DEVICE: DDC SYSTEM ANALOG OUTPUT TO MODULATING DAMPER ACTUATORS
3) ACTION: SET OUTDOOR-AIR DAMPERS TO MAINTAIN MINIMUM POSITION WHEN OUTDOOR-AIR TEMPERATURE EXCEEDS RETURN-AIR TEMPERATURE

UNOCCUPIED TIME SCHEDULE CONTROL:
1) INPUT DEVICE: DDC SYSTEM TIME SCHEDULE
2) OUTPUT DEVICE: DDC SYSTEM ANALOG OUTPUT TO MODULATING DAMPER ACTUATORS
3) ACTION: POSITION OUTDOOR- AND RELIEF-AIR DAMPERS CLOSED AND RETURN-AIR DAMPERS OPEN.

DISPLAY:
1) MIXED-AIR-TEMPERATURE INDICATION
2) MIXED-AIR-TEMPERATURE SET POINT
3) MIXED-AIR DAMPER POSITION

FILTER

DIFFERENTIAL PRESSURE CONTROL:
1) INPUT DEVICE: DIFFERENTIAL-PRESSURE SWITCHES
2) OUTPUT DEVICE: DDC SYSTEM OUTPUT
3) ACTION: SIGNAL ALARM WHEN PRESSURE REACHES 3X PRESSURE DIFFERENCE WITH CLEAN FILTER

DISPLAY:
1) FILTER AIR-PRESSURE-DROP INDICATION
2) FILTER HIGH-AIR-PRESSURE SET POINT

GENERAL AHU CONTROL

1) PROVIDE OPTIMUM START/STOP (OSS)

OCCUPIED TIME SCHEDULE:
1) INPUT DEVICE: DDC SYSTEM TIME SCHEDULE
2) OUTPUT DEVICE: BINARY OUTPUT
3) ACTION: ENABLE CONTROL

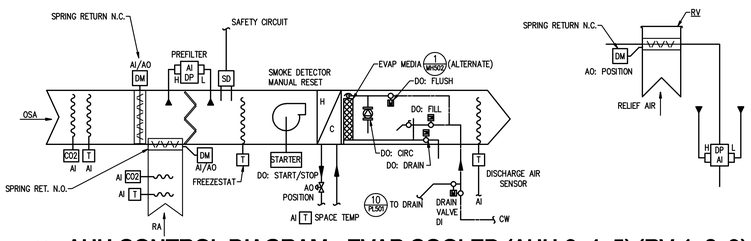

2 AHU CONTROL DIAGRAM - EVAP COOLED (AHU-3, 4, 5) (RV-1, 2, 3)

SCALE: NONE

AHU CONTROL SEQUENCES

SUPPLY FAN

ROOM TEMPERATURE
1) INPUT DEVICE: ROOM T-STAT, DDC TIME SCHEDULE
2) OUTPUT DEVICE: SUPPLY FAN MOTOR
3) ACTION:
   A) ENERGIZE FAN TO MAINTAIN MINIMUM VENTILATION AND SPECIFIED SPACE TEMPERATURES
      I) AHU-3: OCCUPIED HEATING: 55 DEG F / UNOCCUPIED HEATING: 55 DEG F
      II) AHU-4: OCCUPIED HEATING: 68 DEG F / UNOCCUPIED HEATING: 55 DEG F
   C) ENERGIZE AHU-5 FAN TO MAINTAIN MINIMUM VENTILATION

FREEZE PROTECTION
1) INPUT DEVICE: FREEZESTAT
2) OUTPUT DEVICE: OSA DAMPER MOTOR
3) ACTION: CLOSE OSA DAMPER IF TEMPERATURE DROPS BELOW 40 DEG F (HARDWIRE); ALARM DDC

SMOKE DETECTION SHUTDOWN
1) INPUT DEVICE: DUCT-MOUNTED SMOKE DETECTOR, LOCATED IN RETURN AIR
2) OUTPUT DEVICE: HARD WIRED THROUGH MOTOR STARTER; DDC SYSTEM ALARM
3) ACTION: SHUTDOWN FAN ON SMOKE DETECTION; ALARM FACP

EVAPORATIVE COOLER (ADD ALTERNATE)

ENABLE
1) INPUT DEVICE: ELECTRONIC TEMPERATURE SENSOR, T1
2) OUTPUT DEVICE: FILL VALVE, CIRCULATION PUMP, DRAIN VALVE
3) ACTION: WHEN TEMPERATURE FROM SENSOR T1 RISES ABOVE 80°F OPEN FILL VALVE, ENERGIZE CIRCULATION PUMP AND CLOSE DRAIN VALVE
4) DISPLAY: DISCHARGE AIR TEMPERATURE SET POINT, T1.

DISABLE
1) INPUT DEVICE: HUMIDISTAT
2) OUTPUT DEVICE: FILL VALVE, CIRCULATION PUMP, DRAIN VALVE
3) ACTION: WHEN RA RELATIVE HUMIDITY > 60% DE-ENERGIZE CIRCULATION PUMP AND CLOSE FILL VALVE
4) DISPLAY: RELATIVE HUMIDITY

FLUSHING PROCEDURE
1) INPUT DEVICE: DDC SYSTEM
2) OUTPUT DEVICE: FLUSH VALVE, FILL VALVE, DRAIN VALVE.
3) ACTION: DURING PERIODS OF USE, FLUSH EVAP MEDIA EVERY TWO DAYS BY CLOSING FILL VALVE AND OPENING FLUSH VALVE AND DRAIN VALVE. FLUSH FOR 30 SECONDS.

HYDRONIC HEATING COIL

SUPPLY-AIR TEMPERATURE
1) INPUT DEVICE: ELECTRONIC TEMPERATURE SENSOR
2) OUTPUT DEVICE: NORMALLY OPEN MODULATING CONTROL VALVE
3) ACTION:
   A) MAINTAIN SPACE TEMPERATURE
      I) AHU-3: OCCUPIED HEATING: 55 DEG F / UNOCCUPIED HEATING: 55 DEG F
      II) AHU-4: OCCUPIED HEATING: 68 DEG F / UNOCCUPIED HEATING: 55 DEG F
   C) AHU-5: TEMPER AIR TO ROOM TEMPERATURE
      NOTE: AHU-5 SPACE TEMPERATURE WILL BE CONTROLLED BY RH-1 & RH-2

TEMPERATURE RESET
1) INPUT DEVICE: DDC SYSTEM WITH INPUT FROM ROOM THERMOSTATS
2) OUTPUT DEVICE: DDC SYSTEM
3) ACTION: RESET SUPPLY-AIR TEMPERATURE IN RESPONSE TO GREATEST HEATING DEMAND

UNOCCUPIED TIME SCHEDULE
1) INPUT DEVICE: DDC SYSTEM TIME SCHEDULE AND OUTPUT
2) OUTPUT DEVICE: DDC SYSTEM BINARY OUTPUT
3) ACTION: ENABLE NORMAL CONTROL WHEN FAN IS CYCLED ON

DISPLAY
1) FAN DISCHARGE AIR-TEMPERATURE SET POINT

ECONOMIZER

DEMAND CONTROL VENTILATION
1) INPUT DEVICE: CO2 DIFFERENTIAL SENSORS
2) OUTPUT DEVICE: OSA AND RELIEF DAMPERS
3) ACTION:
   A) DURING HEATING MODE SET MIN OSA TO MAINTAIN 200 PPM DIFFERENCE BETWEEN OUTSIDE AND RETURN CO2 LEVELS
   B) DURING COOLING MODE SET OSA TO 100% & CLOSE RA DAMPER

TEMPERATURE CONTROL:
1) INPUT DEVICE: SPACE TEMPERATURE
2) OUTPUT DEVICE: DDC SYSTEM TO MODULATING DAMPER ACTUATORS
3) ACTION: MODULATE OUTDOOR-, RETURN-, AND RELIEF-AIR DAMPERS TO MAINTAIN AIR TEMPERATURE SET POINT

UNOCCUPIED TIME SCHEDULE:
1) INPUT DEVICE: DDC SYSTEM TIME SCHEDULE
2) OUTPUT DEVICE: DDC SYSTEM TO MODULATING DAMPER ACTUATORS
3) ACTION: POSITION OUTDOOR- AND RELIEF-AIR DAMPERS CLOSED AND RETURN-AIR DAMPERS OPEN.

MIXED-AIR DISPLAY:
1) MIXED-AIR-TEMPERATURE INDICATION
2) MIXED-AIR-TEMPERATURE SET POINT
3) MIXED-AIR DAMPER POSITION

RELIEF VENT

1) INPUT DEVICE: DIFFERENTIAL PRESSURE SWITCH SENSING BUILDING STATIC PRESSURE REFERENCED TO OUT DOOR STATIC PRESSURE.
2) OUTPUT DEVICE: DDC SYSTEM ANALOG OUTPUT TO MODULATING DAMPER ACTUATORS.
3) ACTION: MAINTAIN CONSTANT AREA STATIC PRESSURE, 0.05" W.C..
4) DISPLAY: AREA STATIC PRESSURE INDICATION AND SET POINT.

FILTER

DIFFERENTIAL PRESSURE CONTROL:
1) INPUT DEVICE: DIFFERENTIAL-PRESSURE SWITCHES
2) OUTPUT DEVICE: DDC SYSTEM OUTPUT
3) ACTION: SIGNAL ALARM WHEN PRESSURE REACHES 3X PRESSURE DIFFERENCE WITH CLEAN FILTER

DISPLAY:
1) FILTER AIR-PRESSURE-DROP INDICATION
2) FILTER HIGH-AIR-PRESSURE SET POINT

GENERAL AHU CONTROL SEQUENCES

1) COORDINATION OF AIR-HANDLING UNIT SEQUENCES: ENSURE THAT HEATING COIL, MIXED-AIR AND EVAP MEDIA CONTROLS HAVE COMMON INPUTS AND DO NOT OVERLAP IN FUNCTION
2) PROVIDE OPTIMUM START/STOP (OSS)

OCCUPIED TIME SCHEDULE
1) INPUT DEVICE: DDC SYSTEM TIME SCHEDULE
2) OUTPUT DEVICE: BINARY OUTPUT
3) ACTION: ENABLE CONTROL

Copyright (C) 2006 by Colvin Engineering Associates, Inc. Salt Lake City, Utah. All rights reserved. Unauthorized copying and/or use is illegal and subject to prosecution.

GSBS | ARCHITECTURE | LANDSCAPE ARCHITECTURE | PLANNING | INTERIOR DESIGN
375 West 200 South Suite 100
Salt Lake City
Utah 84101
Tel 801.521.8600
Fax 801.521.7913
GSBS-PC.COM

Kyle T. Kimball
Registered
Professional Engineer
No. 6280323
State of Utah

Colvin Engineering Associates, Inc.
244 West 300 North Suite 200
Salt Lake City, Utah 84103
Phone 801 322-5400 / Fax 801 322-5410

No.	DATE	REVISION

NORTH SALT LAKE READINESS CENTER AND CIVIL SUPPORT TEAM

Salt Lake City, UT

BID SET

CONTROL & FLOW SCHEMATICS

PROJECT NO. 2006-095.00
DATE 2/1/2008
DRAWN MCJ
CHECKED KTK
MH202
BINDING ORDER 97

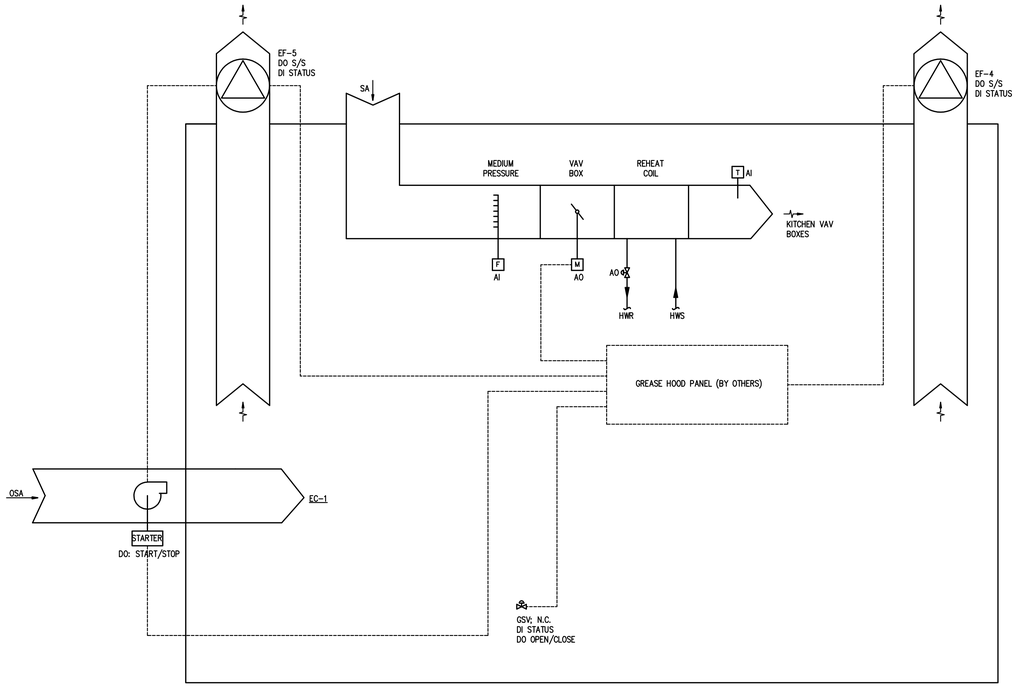

1 KITCHEN SUPPLY AND EXHAUST AIR SCHEMATIC

NO SCALE

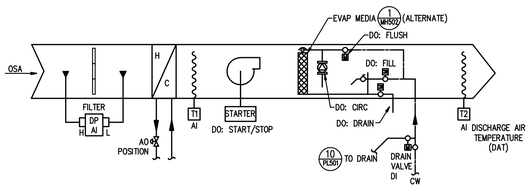

2 EVAPORATIVE COOLER CONTROL SCHEMATIC (EC-1)

NO SCALE

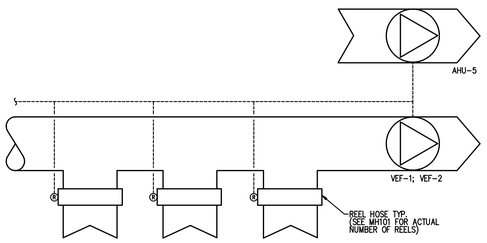

3 VEHICLE EXHAUST CONTROL SCHEMATIC

NO SCALE

GENERAL NOTES

A. ALL POINTS SPECIFIED IN SCHEMATICS OR SEQUENCES MUST BY SHOWN ON DDC PAGE AND BE CONTROLLABLE

B. TRENDING MUST BE ENABLED FOR ALL SYSTEMS.

KITCHEN SUPPLY AND EXHAUST AIR SEQUENCES	
EMERGENCY SHUTDOWN	ROOM PRESSURE CONTROL
IN CASE OF FIRE 1) INPUT DEVICE: GREASE HOOD PANEL (SUPPLIED BY OTHERS) 2) OUTPUT DEVICE: KITCHEN VAV BOX DAMPER, EF-4, EF-5 EXHAUST FAN MOTORS, GAS SOLENOID VALVE EC-1 SUPPLY FAN. 3) ACTION: WHEN GREASE HOOD PANEL SENSES FIRE: A) ALARM DDC B) DE-ENERGIZE EXHAUST FANS AND EC-1 SUPPLY FAN C) CLOSE GAS SOLENOID VALVE D) CLOSE VAV SUPPLY AIR DAMPER 4) DISPLAY : A) GAS SOLENOID VALVE POSITION. B) GREASE HOOD PANEL ALARM SYSTEM.	MAIN HOOD OPERATION 1) INPUT DEVICE: HOOD PANEL 2) OUTPUT DEVICE: EC-1 FAN MOTOR, EF-5 FAN MOTOR. 3) ACTION: WHEN HOOD IS ENERGIZED, TURN ON EC-1 FAN MOTOR AND EF-5 FAN MOTOR. GRIDDLE HOOD OPERATION 1) INPUT DEVICE: GRIDDLE HOOD 2) OUTPUT DEVICE: KITCHEN VAV BOX DAMPER 3) ACTION: A) WHEN HOOD IS ON RESET VAV BOX MIN AIR EQUAL TO 1600 CFM. B) WHEN HOOD IS OFF RESET VAV BOX MIN AIR EQUAL TO 634 CFM. 4) NOTE: REFER TO CONTROL SCHEMATIC 2/MH201 FOR FURTHER DETAILS ON VAV OPERATION NOTE: REFER TO CONTROL SCHEMATIC 2/MH203 FOR FURTHER DETAILS ON EC-1 OPERATION.

EVAPORATIVE COOLER CONTROL SEQUENCES	
EVAPORATIVE COOLER (ADD ALTERNATE)	HYDRONIC HEATING COIL
ENABLE 1) INPUT DEVICE: ELECTRONIC TEMPERATURE SENSOR, T1 2) OUTPUT DEVICE: FILL VALVE, CIRCULATION PUMP, DRAIN VALVE 3) ACTION: WHEN TEMPERATURE FROM SENSOR T1 RISES ABOVE 80°F OPEN FILL VALVE, ENERGIZE CIRCULATION PUMP AND CLOSE DRAIN VALVE 4) DISPLAY: DISCHARGE AIR TEMPERATURE SET POINT, T1. DISABLE 1) INPUT DEVICE: HUMIDISTAT 2) OUTPUT DEVICE: FILL VALVE, CIRCULATION PUMP, DRAIN VALVE 3) ACTION: WHEN RA RELATIVE HUMIDITY > 60% DE-ENERGIZE CIRCULATION PUMP AND CLOSE FILL VALVE 4) DISPLAY: RELATIVE HUMIDITY FLUSHING PROCEDURE 1) INPUT DEVICE: DDC SYSTEM 2) OUTPUT DEVICE: FLUSH VALVE, FILL VALVE, DRAIN VALVE. 3) ACTION: DURING PERIODS OF USE, FLUSH EVAP MEDIA EVERY TWO DAYS BY CLOSING FILL VALVE AND OPENING FLUSH VALVE AND DRAIN VALVE. FLUSH FOR 30 SECONDS.	SUPPLY AIR TEMPERATURE 1) INPUT DEVICE: DAT SENSOR, T2 2) OUTPUT DEVICE: NORMALLY CLOSED MODULATING CONTROL VALVE. 3) ACTION: MAINTAIN SUPPLY AIR TEMPERATURE SET POINT OF 64°F DISPLAY: 1) FAN DISCHARGE AIR TEMPERATURE HEATING SET POINT, T2. FILTER DIFFERENTIAL PRESSURE CONTROL: 1) INPUT DEVICE: DIFFERENTIAL-PRESSURE SWITCHES 2) OUTPUT DEVICE: DDC SYSTEM OUTPUT 3) ACTION: SIGNAL ALARM ON LOW- AND HIGH-PRESSURE CONDITIONS DISPLAY: 1) FILTER AIR-PRESSURE-DROP INDICATION 2) FILTER LOW-AIR-PRESSURE SET POINT 3) FILTER HIGH-AIR-PRESSURE SET POINT
GENERAL AHU CONTROL SEQUENCES	SUPPLY AIR FAN SEQUENCE
1) COORDINATION OF AIR HANDLING UNIT SEQUENCES: ENSURE EVAPORATIVE COOLER AND HEATING COIL CONTROLS HAVE COMMON INPUTS AND DO NOT OVERLAP IN FUNCTION.	NOTE: REFER TO CONTROL SCHEMATIC 1/MH203 FOR FURTHER DETAILS ON FAN OPERATION.

VEHICLE EXHAUST CONTROL SEQUENCE
FAN SWITCH
1) INPUT: VEHICLE EXHAUST HOSE REEL SWITCHES 2) OUTPUT: VEHICLE EXHAUST FAN MOTOR (VEF-1; VEF-2) 3) ACTION: A) WHEN ANY HOSE REEL IS PULLED DOWN ENERGIZE EXHAUST FAN MOTOR. B) WHEN ALL HOSE REELS ARE RETRACTED DE-ENERGIZE EXHAUST FAN MOTOR.
MAKE-UP AIR
1) INPUT: FAN MOTOR (VEF-1) 2) OUTPUT: SUPPLY AIR MOTOR (AHU-5) 3) ACTION: WHEN VEF-1 MOTOR IS ENERGIZED SET AHU-5 MINIMUM CFM EQUAL TO EXHAUST CFM

Copyright (C) 2006 by Colvin Engineering Associates, Inc. Salt Lake City, Utah. All rights reserved. Unauthorized copying and/or use is illegal and subject to prosecution.

GSBS ARCHITECTS | ARCHITECTURE | LANDSCAPE ARCHITECTURE | PLANNING | INTERIOR DESIGN
375 West 200 South Suite 100
Salt Lake City
Utah 84101
Tel 801.521.8600
Fax 801.521.7913
GSBS-PC.COM

Kyle T. Kirkwood
REGISTERED
6280323
12/1/2008
PROFESSIONAL ENGINEER
State of Utah

Colvin Engineering Associates, Inc.
244 West 300 North Suite 200
Salt Lake City, Utah 84103
Phone 801 322-2402 / Fax 801 322-2418

No.	DATE	REVISION

NORTH SALT LAKE READINESS CENTER AND CIVIL SUPPORT TEAM

Salt Lake City, UT

BID SET

CONTROL & FLOW SCHEMATICS

PROJECT NO. 2006-095.00
DATE 2/1/2008
DRAWN MCJ
CHECKED KTK

MH203

BINDING ORDER 98

KEYED NOTES

1. COORDINATE LOCATION OF L-3 WITH STRUCTURAL CONTRACTOR. ALIGN EDGE OF L-3 WITH MASONRY COLUMN. SEE 2/MH401.

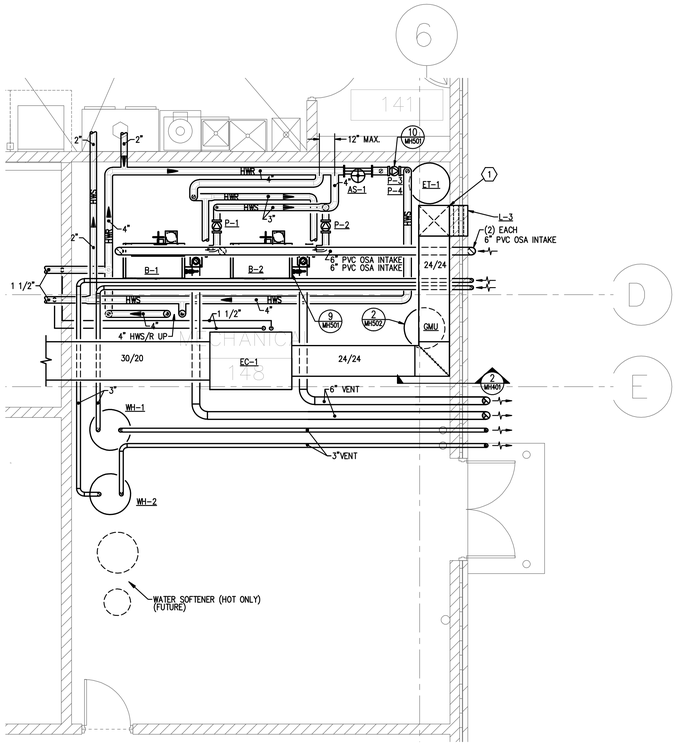

1 ENLARGED FIRST LEVEL MECHANICAL ROOM PIPING

SCALE: 1/4" = 1'-0"

3' 0 2' 4' 6' 8'

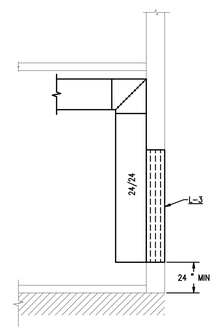

2 LOUVER SECTION

SCALE: 1/4" = 1'-0"

3' 0 2' 4' 6' 8'

Copyright (C) 2006 by Colvin Engineering Associates, Inc. Salt Lake City, Utah. All rights reserved. Unauthorized copying and/or use is illegal and subject to prosecution.

GSBS | ARCHITECTURE | LANDSCAPE ARCHITECTURE | PLANNING | INTERIOR DESIGN

375 West 200 South Suite 100
Salt Lake City
Utah 84101

Tel 801.521.8600
Fax 801.521.7913

GSBS-PC.COM

Kyle T. Kirkwood
REGISTERED
6280323
2/1/2008
PROFESSIONAL ENGINEER
STATE OF UTAH

Colvin Engineering Associates, Inc.
244 West 300 North Suite 200
Salt Lake City, Utah 84103
Phone: (801) 322-2400 / Fax: (801) 322-2418

No.	DATE	REVISION

THE GREAT SEAL OF THE STATE OF UTAH 1896

UTAH NATIONAL GUARD

NORTH SALT LAKE READINESS CENTER AND CIVIL SUPPORT TEAM

Salt Lake City, UT

BID SET

ENLARGED MECHANICAL PIPING

PROJECT NO. 2006-095.00
DATE 2/1/2008
DRAWN MCJ
CHECKED KTK

MH401

BINDING ORDER 99

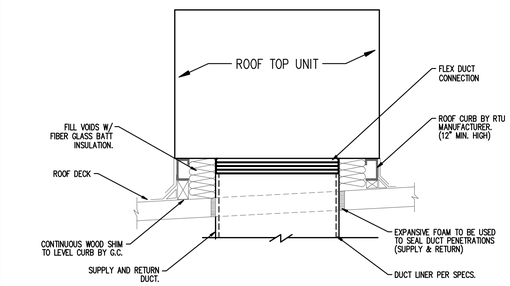

1 ROOF TOP UNIT CURB DETAIL

NO SCALE

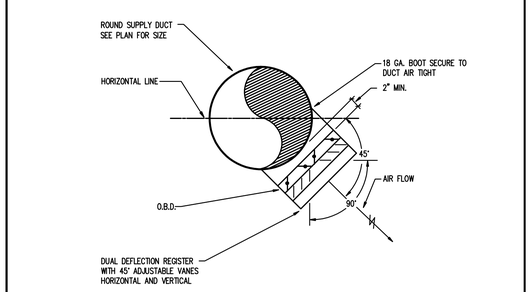

2 DUCT MOUNTED DIFFUSER DETAIL

NO SCALE

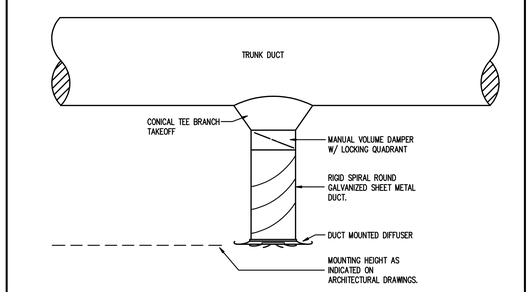

3 TYPICAL DUCT MOUNTING DETAIL

NO SCALE

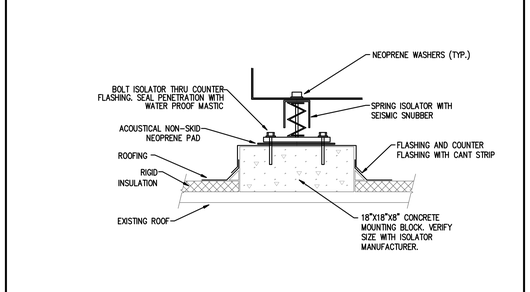

4 CONCRETE SUPPORT PAD DETAIL

NO SCALE

SIZE	OPENING (INXIN)	W (IN)	H (IN)	MAX. TRANSFER (CFM)	APPROX. ΔP (INWC)
TA-A	16 X 8	16	8	320	0.02
TA-B	16 X 16	16	8	660	0.02
TA-C	16 X 16	16	16	850	0.02
TA-D	32 X 8	32	8	850	0.02
TA-E	32 X 16	32	8	1300	0.02
TA-F	48 X 24	48	16	3000	0.02
TA-G	48 X 32	48	32	3800	0.02

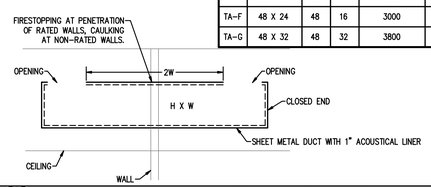

5 TRANSFER AIR DUCT (PLENUM/PLENUM)

NO SCALE

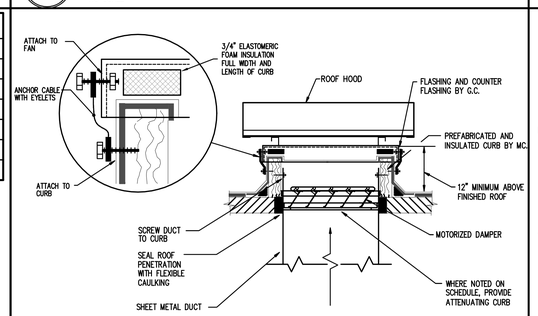

6 ROOF HOOD AND CURB DETAIL

NO SCALE

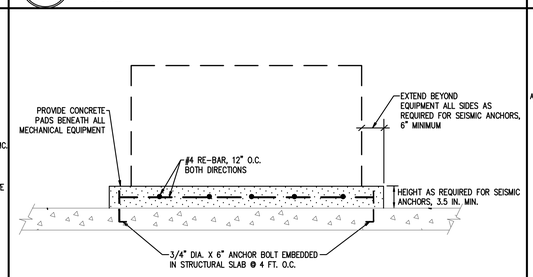

7 HOUSEKEEPING PAD DETAIL

NO SCALE

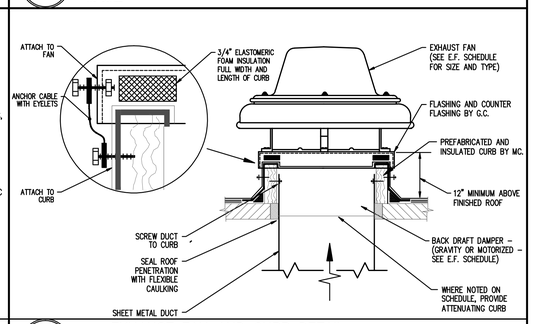

8 EXHAUST FAN AND CURB DETAIL

NO SCALE

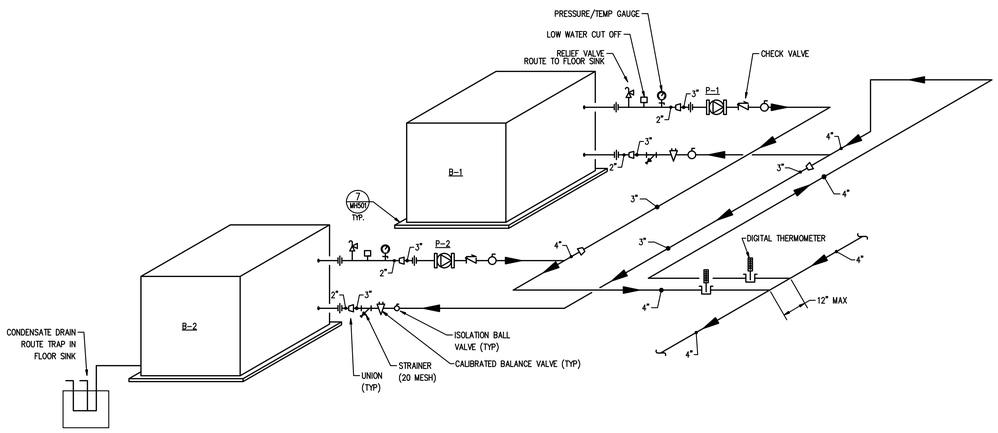

9 BOILER PIPING DETAIL

NO SCALE

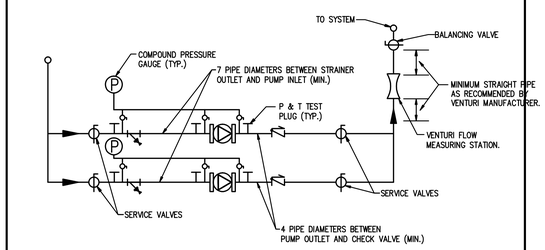

10 PARALLEL INLINE PUMP PIPING DETAIL

NO SCALE

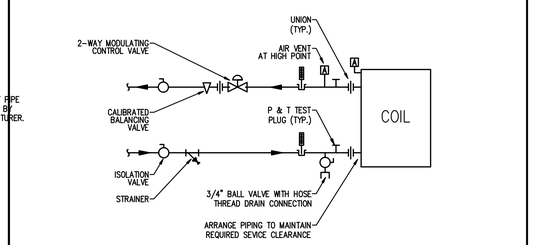

11 COIL PIPING DIAGRAM (2-WAY VALVE)

NO SCALE

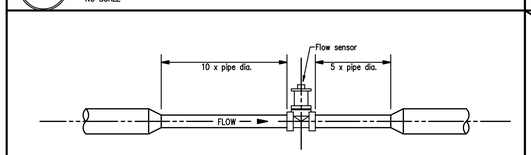

Flow rates for Schedule 40 pipe

Schedule 40											
Pipe size (in.):	1 1/2"	2	3	4	6	8	10	12	14	16	18
Min. Gpm:	6	10	23	40	62	90	156	350	422	550	697

These typical minimum flows are valid for most pipe schedules and classes.
For other pipe sizes, the volumetric flow rate (gpm) at 1 ft/sec can be calculated thus:

$$q = 2.45 \times D^2$$

Where

q = Volumetric flow rate in gpm;
D = Pipe inside diameter (in.)

12 FLOW MEASURING STATION INSTALLATION DETAIL

NO SCALE

NOT USED

13

NO SCALE

Copyright (C) 2006 by Colvin Engineering Associates, Inc. Salt Lake City, Utah. All rights reserved. Unauthorized copying and/or use is illegal and subject to prosecution.

GSBS | ARCHITECTURE | LANDSCAPE ARCHITECTURE | PLANNING | INTERIOR DESIGN
375 West 200 South Suite 100
Salt Lake City
Utah 84101
Tel 801.521.8600
Fax 801.521.7913
GSBS-PC.COM

Kyle T. Kirkham REGISTERED 6280323 2/1/2008 PROFESSIONAL ENGINEER State of Utah

Colvin Engineering Associates, Inc.
244 West 300 North Suite 200
Salt Lake City, Utah 84103
Phone: (801) 322-2400 / Fax: (801) 322-2418

No.	DATE	REVISION

NORTH SALT LAKE READINESS CENTER AND CIVIL SUPPORT TEAM

Salt Lake City, UT

BID SET

MECHANICAL DETAILS

PROJECT NO. 2006-095.00
DATE 2/1/2008
DRAWN MCI
CHECKED KTK

MH501

BINDING ORDER 100

DISTRIBUTION PIPE DESIGN FOR FULL FACE COVERAGE					
MEDIA DEPTH (INCHES)	MAX. HEADER LENGTH** (FEET)	HEADER DESIGN FLOW RATE (GPM/FT)	PIPE DIAMETER (INCHES)	HOLE DIAMETER (INCHES)	HOLE SPACING (INCHES)
4 OR 6	12	.67–1.0	1/2	1/8	3
8 OR 12	16	.75–1.75	1	5/32	3
** DISTANCE FROM THE CENTER "T" TO THE END OF THE PIPE, HEADER SHALL BE CENTER FED.					

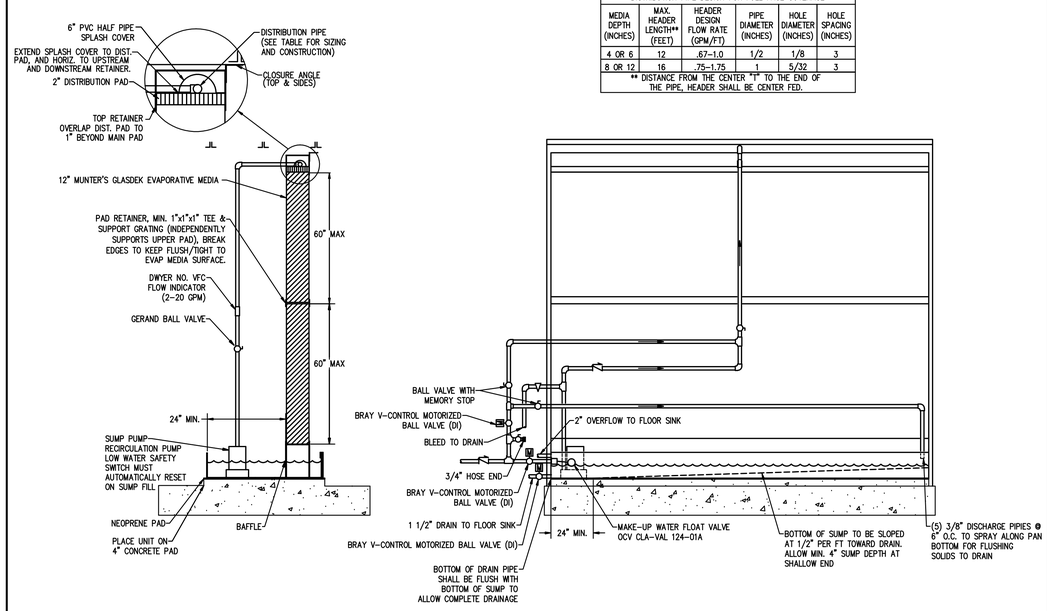

1 EVAPORATIVE MEDIA DETAIL (SINGLE MEDIA)

NO SCALE

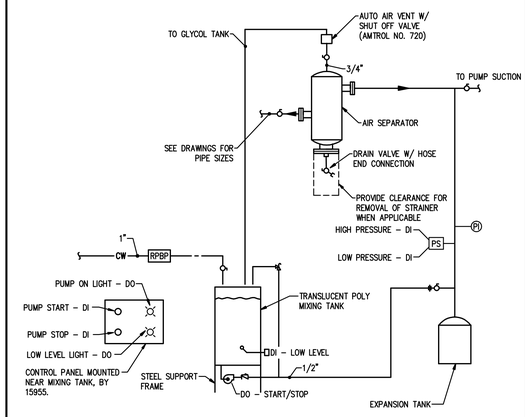

CONTROL SEQUENCE: ADJUSTABLE LOW PRESSURE SWITCH SHALL INITIATE A SOFTWARE ALARM THROUGH THE DDC CONTROL SYSTEM. MOMENTARY PUSH BUTTON SHALL START MAKE-UP PUMP. PUMP SHALL BE STOPPED BY ADJUSTABLE HIGH PRESSURE SWITCH OR MOMENTARY PUSH BUTTON STOP SWITCH. FLOAT SWITCH IN MIXING TANK SHALL INITIATE A SOFTWARE ALARM AND TURN ON AN INDICATOR LIGHT ON THE PUMP CONTROL PANEL, WHEN LEVEL DROPS BELOW 1/4 FULL.

2 GLYCOL MAKE-UP SYSTEM DETAIL – DDC CONTROLS

NO SCALE

Copyright (C) 2006 by Colvin Engineering Associates, Inc. Salt Lake City, Utah. All rights reserved. Unauthorized copying and/or use is illegal and subject to prosecution.

GSBS
ARCHITECTURE | LANDSCAPE ARCHITECTURE | PLANNING | INTERIOR DESIGN
375 West 200 South Suite 100
Salt Lake City
Utah 84101
Tel 801.521.8600
Fax 801.521.7913
GSBS-PC.COM

Kyle T. Kimball
REGISTERED
36280323
12/1/2008
MECHANICAL ENGINEER
State of Utah

Colvin Engineering Associates, Inc.
244 West 300 North Suite 200
Salt Lake City, Utah 84103
Phone 801 322-2400 / Fax 801 322-2418

No.	DATE	REVISION

NORTH SALT LAKE READINESS CENTER AND CIVIL SUPPORT TEAM

Salt Lake City, UT

BID SET

MECHANICAL DETAILS

PROJECT NO. 2006-095.00
DATE 2/1/2008
DRAWN MCJ
CHECKED KTK

MH502

BINDING ORDER 101

AIR DEVICE SCHEDULE

PLAN CODE — GRILLE CFM

PLAN CODE	TYPE & DUTY	FACE SIZE	NECK SIZE	CEILING TYPE	RATING CFM	MAX. S.P. (IN. W.C.)	N.C. LEVEL MAX	MIN. THROW (FT) (T50)	4-WAY MIN. THROW (T50)	2-WAY MIN. THROW (T50)	MANUFACTURER & MODEL NO.	REMARKS
9	PERFORATED RETURN	24" X 24"	22" X 22"	GRID	1200	0.05	17	–	–	–	TITUS PXP	
10	PERFORATED RETURN	24" X 12"	22"X 10"	GRID	600	0.06	10	–	–	–	TITUS PXP	
13	PERFORATED EXHAUST GRILLE	8" X 8"	6" X 6"	MATCH CEILING	120	0.12	10	–	–	–	TITUS 8F	
14	PERFORATED EXHAUST GRILLE	10" X 10"	8" X 8"	MATCH CEILING	225	0.12	12	–	–	–	TITUS 8F	
15	PERFORATED EXHAUST GRILLE	12" X 12"	10" X 10"	MATCH CEILING	360	0.12	14	–	–	–	TITUS 8F	
16	PERFORATED EXHAUST GRILLE	14" x 14"	12" X 12"	MATCH CEILING	550	0.12	16	–	–	–	TITUS 8F	
17	PERFORATED EXHAUST GRILLE	16" X 16"	14" x 14"	MATCH CEILING	750	0.12	17	–	–	–	TITUS 8F	
21	RADIAL BLADE DIFFUSER	12"	8"	SURFACE	210	.14	29	8	–	–	AIR DIFFUSION PRODUCTS, INC. DNR	
22	RADIAL BLADE DIFFUSER	15"	10"	SURFACE	330	.14	29	10	–	–	AIR DIFFUSION PRODUCTS, INC. DNR	
23	RADIAL BLADE DIFFUSER	18"	12"	SURFACE	470	.14	30	12	–	–	AIR DIFFUSION PRODUCTS, INC. DNR	
24	RADIAL BLADE DIFFUSER	21"	14"	SURFACE	640	.14	30	14	–	–	AIR DIFFUSION PRODUCTS, INC. DNR	
26	RADIAL BLADE DIFFUSER	24" X 24"	8"	MATCH CEILING	210	.14	29	8	–	–	AIR DIFFUSION PRODUCTS, INC. DNR	
27	RADIAL BLADE DIFFUSER	24" X 24"	10"	MATCH CEILING	330	.14	29	10	–	–	AIR DIFFUSION PRODUCTS, INC. DNR	
28	RADIAL BLADE DIFFUSER	24" X 24"	12"	MATCH CEILING	470	.14	30	12	–	–	AIR DIFFUSION PRODUCTS, INC. DNR	
47	RADIAL BLADE DIFFUSER	24" X 24"	6"	MATCH CEILING	200	0.08	21	8	–	–	KRUEGER KSD	
49	WALL DIFFUSER	14" X 12"	12" X 10"	SURFACE	500	.06	22	41	–	–	KRUEGER 880	NO OBD
50	WALL DIFFUSER	12" X 8"	10" X 6"	SURFACE	260	.07	20	30	–	–	KRUEGER 880	NO OBD
51	MODULAR CORE DIFFUSER	24" X 24"	10" X 10"	MATCH CEILING	400	.05	21	18	–	–	KRUEGER 1240	1-CORE
52	DRUM LOUVER	–	8" X 18"	DUCT MOUNT	700	.20	29	49	–	–	KRUEGER DMD	
53	DRUM LOUVER	–	8" X 12"	DUCT MOUNT	500	.22	29	40	–	–	KRUEGER DMD	

(1) VERIFY FRAME TYPE OF ALL AIR DEVICES WITH ARCHITECTURAL REFLECTED CEILING PLAN BEFORE ORDERING.

VAV REHEAT

PERFORMANCE AT 4500 FT. ELEVATION. SEE 11/MH501

PLAN CODE / MAX COOLING CFM / MIN. COOLING CFM — FLOOR / BOX NO. / MAX HEATING CFM

PLAN CODE	INLET SIZE (IN)	MAX. COOLING AIR FLOW (CFM)	MAX. NC	ΔP @ MAX. AIR FLOW (IN WC)	MIN. CONTROL (CFM)	HW COIL EAT (°F)	MIN LAT (°F)	MAX. HEATING (CFM)	ROWS	MAX. GPM @140°F	MAX. WPD (FT.)	COIL MBH
6R3	6	500	20	.5	89	55	88	500	3	0.9	0.4	15.2
8R3	8	730	15	.6	159	55	88	730	3	1.5	0.5	22.0
10R3	10	1080	18	.6	248	55	88	1080	3	2.1	0.7	32.4
12R3	12	1500	17	.6	357	55	88	1500	3	2.5	1.2	45.0
14R3	14	2150	18	.6	486	55	88	2150	3	3.3	1.5	64.5

AIR/ DIRT SEPARATOR

PLAN CODE	SYSTEM SERVED	CONNECTION SIZE	MAX. GPM	P.D. (FT)	MAX. DIMENSIONS DIA. (IN.)	H (IN.)	FLANGE TO FLANGE (IN.)	DRY WT (LBS)	STRAINER FREE AREA (SQ. INCHES)	MANUFACTURER * & MODEL NO.
AS-1	HEATING WATER	3"	170	1	8.6	32	21	150	66	SPIROTHERM VDT-400

GAS FIRED RADIANT HEATER SCHEDULE

PLAN CODE	INPUT MBH	LOCATION	GAS PRESSURE	FLUE SIZE	ELECTRICAL VOLT/PH	AMPS	LENGTH	MAX. OPERATING WEIGHT (LBS.)	MANUFACTURER & MODEL NO.	REMARKS
RH-1	75-115	MAINT. TRAINING	11"	4"	120/1	1.3	40'	300	ROBERTS GORDON CTH-3-115	MODULATING BURNER
RH-2	75-115	MAINT. TRAINING	11"	4"	120/1	1.3	40'	300	ROBERTS GORDON CTH-3-115	MODULATING BURNER
RH-3	75-115	CST VEHICLE	11"	4"	120/1	1.3	40'	300	ROBERTS GORDON CTH-3-115	MODULATING BURNER
RH-4	75-115	CST VEHICLE	11"	4"	120/1	1.3	40'	300	ROBERTS GORDON CTH-3-115	MODULATING BURNER
RH-5	75-115	CST VEHICLE	11"	4"	120/1	1.3	40'	300	ROBERTS GORDON CTH-3-115	MODULATING BURNER

PUMP SCHEDULE (P)

PLAN CODE	TYPE	DUTY	FLOW (GPM)	PRESSURE (FT)	PUMP SPEED (RPM)	SIZE	FLUID	MOTOR LOAD (BHP)	SIZE (HP)	VOLTAGE & PHASE	PUMP & MOTOR WT. (LBS)	MANUFACTURER & MODEL NO.	REMARKS
P-1	INLINE	PRIMARY HW	64	22	1750	N/A	40% PG	N/A	1	277/1	60	BELL & GOSSETT SERIES 90	CLOSE COUPLED –
P-2	INLINE	PRIMARY HW	64	22	1750	N/A	40% PG	N/A	1	277/1	60	BELL & GOSSETT SERIES 90	CLOSE COUPLED –
P-3	INLINE	SECONDARY HW	128	60	1512	2X2X10	40% PG	3.4	5	460/3	200	BELL & GOSSETT 80SC	SPLIT COUPLED VFD SEE 10/MH501
P-4	INLINE	SECONDARY HW	128	60	1512	2X2X10	40% PG	3.4	5	460/3	200	BELL & GOSSETT 80SC	SPLIT COUPLED VFD SEE 10/MH501
P-5	INLINE	DOMESTIC WATER RECIRC.	5	7	1750	N/A	WATER	–	52(W)	120/1	10	BELL & GOSSETT NBF-10S	ALL BRONZE

FURNISH PUMPS THAT ARE DRIVEN BY VFD WITH FULL-SIZED IMPELLER (UNTRIMMED).

AIR HANDLER (AHU)

PLAN CODE	AREA SERVED	AIR DELIVERY TOTAL (CFM)	OUTSIDE (MIN) (CFM)	EXTERNAL S.P. (IN. H_2O)	FAN H.P.	VOLTAGE & PHASE	AIR FILTER EFFICIENCY (MERV)	MAX. FACE VELOCITY (FPM)	DAMPERS RETURN VOLUME (CFM)	MAX. VELOCITY (FPM)	OSA VOLUME (CFM)	MAX. VELOCITY (FPM)	HEATING FLOW (GPM)	FLUID	EFT (F)	EAT (F)	Q (MBH)	MIN. ROWS	AIRWASHER (1) FACE VEL. FPM	MEDIA THICKNESS	PUMP VOLT/PHASE	RELIEF	REMARKS
AHU-3	STORAGE	5,800	3,300	0.6	3	208/3	7	350	5,800	1,500	5,800	1,500	24	40% PG	130	27	213	2	500	12	277/1	RV-1	PROVIDE INLET HOOD, CLEANABLE INLET FILTER RACK, DOUBLE WALL CONSTRUCTION SEE 11/MH501
AHU-4	ASSEMBLY HALL	8,400	3,000	0.5	5	208/3	7	350	8,400	1,500	8,400	1,500	35	40% PG	130	43	309	2	500	12	277/1	RV-2	PROVIDE INLET HOOD, CLEANABLE INLET FILTER RACK, DOUBLE WALL CONSTRUCTION SEE 11/MH501
AHU-5	MAINT TRAINING WORK BAYS	4,000	3,200	0.5	2	208/3	7	350	4,000	1,500	4,000	1,500	19	40% PG	130	17	165	2	500	12	277/1	RV-3	PROVIDE INLET HOOD, CLEANABLE INLET FILTER RACK, DOUBLE WALL CONSTRUCTION SEE 11/MH501

(1) AIRWASHER BY ALTERNATE, SEE 1/MH502

EXPANSION TANK SCHEDULE (ET)

PLAN CODE	SYSTEM SERVED	WATER TEMP. (°F)	% GLYCOL	TANK VOL. (GAL)	ACCEPTANCE VOL. (GAL)	PRE-CHARGE (PSI)	DIA. (IN.)	H (IN.)	PRESSURE RATING	MANUFACTURER & MODEL NO.	REMARKS
ET-1	HEATING WATER	180	40	79	79	12	24	55	125#	WESSELS NLA 300	REPLACEABLE BLADDER

RELIEF VENT SCHEDULE (RV)

PLAN CODE	SERVICE FUNCTION	CFM (ALT.)	PRESSURE DROP (IN WC.)	THROAT L X W	MAX. SIZE L X H X W	MAX. WEIGHT (LBS)	MANUFACTURER & MODEL NO.	REMARKS
RV-1	AHU-3 RELIEF	5,800	0.02	48 X 60	72 X 28 X 87	425	COOK 48 X 60 GR	24V MOTORIZED DAMPER SEE 6/MH501
RV-2	AHU-4 RELIEF	8,400	0.03	48 X 48	75 X 23 X 67	350	COOK 48 X 48 GR	24V MOTORIZED DAMPER SEE 6/MH501
RV-3	AHU-5 RELIEF	4000	0.06	30 X 30	75 X 20 X 53	300	COOK 30 X 60 GR	24V MOTORIZED DAMPER SEE 6/MH501

UNIT HEATER SCHEDULE (UH)

PLAN CODE	CFM @ ELEV.	MIN. HEATING CAP. (MBH) (LOW SPD)	GPM	MAX. WPD (FT)	EWT/LWT (°F)	EAT (°F)	MOTOR HP	VOLTAGE & PHASE	MOUNTING	MANUFACTURER & MODEL NO
UH-1	400	6.5	1.0	5	140/120	55	1/6	115/1	CEILING MOUNT 10' AFF	TRANE MODEL P

LOUVER SCHEDULE (L)

PLAN CODE	CFM	VELOCITY FPM	FREE AREA SQ. FT.	MAX. DIMENSIONS (W x H) (IN)	MANUFACTURER & MODEL NO.
L-1	1950	500	3.8	40 x 32	RUSKIN ELF375DX
L-2	125	500	0.25	16 x 8	RUSKIN ELF375DX
L-3	4675	500	9.35	24 x 88	RUSKIN ELF375DX

AIR HANDLER UNIT SCHEDULE (AHU)

PLAN CODE	MANUFACTURER MODEL	CFM @ ELEV	TSP (IN WC)	NET COOLING MBH	SENSIBLE MBH	EDB/EWB LDB	AMB.	EER @ARI	NAT. GAS HEATING OUTPUT MBH	INPUT MBH	STAGING	SCROLL COMPRESSORS NO.	EVAPORATOR FAN MOTOR NO.	HP	TYPE	SIZE	POWER SUPPLY VOLTAGE/ PHASE	MCA AMPS	MAX FUSE	MAX. WEIGHT (LBS)	MAX. SIZE LxWxH (IN)	REMARKS
AHU-1	AAON RN 50	20700	4.5	525	395	76/62 55	105	11.1	550	687	MODULATING	4	2	15	BI PLUG	27"	460/3	152	175	9000	204x101x95	ALL FANS ON VFD, R-410A HEAT WHEEL W/ DEFROST: 84% EFF DIGITAL SCROLL COMPRESSORS
AHU-2	AAON RN 50	20700	4.5	525	395	76/62 55	105	11.1	550	687	MODULATING	4	2	15	BI PLUG	27"	460/3	152	175	9000	204x101x95	ALL FANS ON VFD, R-410A HEAT WHEEL W/ DEFROST: 84% EFF DIGITAL SCROLL COMPRESSORS

FORCED DRAFT BOILER SCHEDULE (B)

PLAN CODE	MBH CAPACITY OUTPUT @ 4400 FT.	OUTPUT @ SEA LEVEL	INPUT @ SEA LEVEL	ASME PRESS. RATING	OPERATING PRESSURE	FLUE TYPE	FLUE SIZE	GPM	PRESS. DROP (FT.HD.)	MAX. SIZE DEPTH (IN)	WIDTH (IN)	HEIGHT (IN)	OPERATING WT.(LBS)	BURNER FLA	VOLTAGE & PHASE	GAS PRESSURE	MAKE & MODEL	REMARKS
B-1	913	975	1060	75	30	AL29-4C	6"	64	13	27	49	42	900	4.2	120/1	4"-14"	AERCO MLX-1060	SEE 9/MH501
B-2	913	975	1060	75	30	AL29-4C	6"	64	13	27	49	42	900	4.2	120/1	4"-14"	AERCO MLX-1060	SEE 9/MH501

(1) BOILER CAPACITY AT SITE ELEVATION AND GAS HEAT OUTPUT = 890 BTU/ CF

EXHAUST FAN SCHEDULE (EF)

PLAN CODE	AREA SERVED	TYPE	CFM @ ELEV.	ESP (@ ELEV.)	FAN RPM	MOTOR H.P.	VOLTAGE & PHASE	SONES	DAMPER (GRAVITY OR MOTOR)	METHOD OF CONTROL	OPENING SIZE	MAX. OPERATING WT. (LBS.)	MANUFACTURER / MODEL	REMARKS
EF-1	TOILET ROOMS	ROOF CENTRIF.	400	.25	1355	1/8	120/1	5.4	MOTOR	DDC OCCUPANCY	18X18	100	COOK 90R15DH	PROVIDE DISCONNECT, FACTORY CURB, SPEED CONTROL, BIRDSCREEN, SPR. ISOL. SEE 8/MH501
EF-2	TOILET ROOMS	ROOF CENTRIF.	625	.25	1500	1/8	120/1	9.4	MOTOR	DDC OCCUPANCY	18X18	100	COOK 100R15DH	PROVIDE DISCONNECT, FACTORY CURB, SPEED CONTROL, BIRDSCREEN, SPR. ISOL. SEE 8/MH501
EF-3	DISHWASHER HOOD	ROOF CENTRIF.	450	1.54	2800	3/4	120/1	N/A	NONE	WALL SWITCH	–	300	COOK 70 CPS	SEE 4/MH501
EF-4	KITCHEN HOOD	ROOF UB CENTRIF.	1200	2.35	2300	3/4	120/1	N/A	NONE	GREASE HOOD PANEL	–	350	COOK 120 CPS	DISCONNECT, VENTED CURB, UL762, GREASE COLLECTION PACKAGE SEE 4/MH501
EF-5	KITCHEN HOOD	ROOF UB CENTRIF.	4700	2.15	1200	3.0	208/3	N/A	NONE	GREASE HOOD PANEL	–	–	COOK 225 CPS-A	DISCONNECT, UL762, GREASE COLLECTION PACKAGE SEE 4/MH501
EF-6	TOILET ROOMS	INLINE CENTRIF.	125	0.25	1100	80W	120/1	2.2	MOTOR	DDC OCCUPANCY	NA	50	COOK GN-144	–
EF-7	TOILET/ LOCKER	INLINE CENTRIF.	2250	0.28	1023	1/2	120/1	12	MOTOR	DDC OCCUPANCY	NA	225	COOK 165SQN10D	DISCONNECT SPEED CONTROL, SPRING ISOLATORS
EF-8	FLAM	ROOF CENTRIF.	125	.5	1432	1/6	120/1	8.1	MOTOR	EMERGENCY SWITCH	NA	100	COOK ACE-B	DISCONNECT SPEED CONTROL, SPRING ISOLATORS SEE 8/MH501, 1/MH201
EF-9	BATTERY	ROOF CENTRIF.	275	.5	1715	1/8	120/1	7.1	MOTOR	EMERGENCY SWITCH	13.5" X 13.5"	60	COOK ACE-D	SEE 8/MH501, 1/MH201

SPLIT SYSTEM FAN COIL (FC) AND AIR COOLED CONDENSING UNIT (ACU)

AREA SERVED	MIN. ARI COOLING CAP (MBH)	MIN. SEER	INDOOR UNIT PLAN CODE	TYPE	ELECTRICAL	DIMENSIONS	WEIGHT (LBS)	OUTDOOR UNIT PLAN CODE	REFRIG.	ELECTRICAL	DIMENSIONS	WEIGHT (LBS)	MANUFACTURER \ MODEL	REMARKS
EQUIPMENT 158	36	10.0	RTU-3A	WALL MOUNT	208/1	62" x 15" x 8"	75	RTU-3B	R-22	208/1	13" x 29" x 33"	180	TRANE MCW536 INDOOR TRANE TTK536 OUTDOOR	DIGITAL THERMOSTAT LOW AMBIENT (-20°F) KIT
ELECTRICAL 221	21	10.0	RTU-4A	WALL MOUNT	208/1	42" x 12" x 8"	40	RTU-4B	R-22	208/1	13" x 29" x 33"	150	TRANE MCW524 INDOOR TRANE TTK524 OUTDOOR	DIGITAL THERMOSTAT LOW AMBIENT (-20°F) KIT

VEHICLE EXHAUST SYSTEM SCHEDULE (VEF)

PLAN CODE	REEL QTY	TYPE	FAN TYPE	CFM	ESP (@ ELEV.)	MOTOR H.P.	VOLTAGE & PHASE	HOSE EACH	METHOD OF CONTROL	OPENING SIZE	MAX. OPERATING WT. (LBS./REEL)	MANUFACTURER / MODEL	REMARKS
VEF-1	6	OVERHEAD HOSE REEL	INLINE CENTRIFUGAL	3200 800/REEL	7.75" WC	7.5	208/3	6" X 33'	SEE MH203 SCHEMATIC 3	8" WALL CAP	150	NEDERMAN / NIF404 FAN	MODEL 865S WIDE SPRING RECOIL HOSE REEL PROVIDE WALL BRACKET & VEHICLE NOZZLE
VEF-2	3	OVERHEAD HOSE REEL	INLINE CENTRIFUGAL	2400 800/REEL	8.2" WC	5	208/3	6" X 33'	SEE MH203 SCHEMATIC 3	8" WALL CAP	150	NEDERMAN / NIF403 FAN	MODEL 865S WIDE SPRING RECOIL HOSE REEL PROVIDE WALL BRACKET & VEHICLE NOZZLE

HEATING FAN COIL UNIT SCHEDULE (FC)

PLAN CODE	CFM	ESP (IN WC)	FAN HP	VOLT/PH	HEATING COIL CAPACITY (MBH)	EAT/LAT (°F)	EWT/LWT (°F)	FLUID	GPM	WATER PD (FT)	AIR PD (IN WC)	MAX. DIMENSIONS LENGTH (IN)	WIDTH (IN)	HEIGHT (IN)	OPERATING WT. (LBS.)	MANUFACTURER & MODEL NO	NOTES/ACCESSORIES
FC-1	2400	0.5	1 1/2	208/3	138	32/92	120/80	40% P.G.	7	6	0.375	40	48	22	400	IEC HBC-20	UNIT MTD DISCONNECT; 2" PLEATED FILTERS UNIT RATING AT 4500 FT SEE 11/MH501

ROOF TOP UNIT SCHEDULE (RTU)

PLAN CODE	MANUFACTURER & MODEL NO.	NOMINAL TONS	ELEVATION (FT.)	CFM @ ELEV	ESP (IN WC)	S.F. H.P.	COOLING MBH	SENS. MBH	EAT	AMB	COMPRESSORS NO.	POWER SUPPLY VOLTAGE/ PHASE	MCA AMPS	MOCP AMPS	MAX. WEIGHT (LBS)	MAX. SIZE L (IN)	W (IN)	H (IN)	REMARKS
RTU-1	TRANE THC102A3	8.5	4300	2,600	0.75	1	2.9	–	62	105	1	208/3	45.4	60	1200	89	54	47	–
RTU-2	TRANE THC036A3	3	4300	1200	0.50	1	12	–	62	105	1	208/3	19	30	750	69.9	44.3	36.3	–

EVAPORATIVE COOLER

PLAN CODE	AREA SERVED	ALTITUDE (FT)	AIR DELIVERY TOTAL (CFM)	EXTERNAL S.P. (IN. H_2O)	FAN H.P.	VOLTAGE & PHASE	AIR FILTER EFFICIENCY (MERV)	MEDIA THICKNESS (IN)	HEATING FLOW (GPM)	FACE VELOCITY (FT/MIN)	FLUID	EFT (F)	LFT (F)	WPD (FT)	EAT (F)	LAT (F)	APD (IN WG)	MIN. ROWS	EVAPORATIVE MEDIA FACE VEL. FPM	MEDIA THICKNESS	PUMP VOLT/PHASE	REMARKS
EC-1	FOOD PREP	4200	4675	0.9	1 1/2	460/3	7	1	15.7	437	40% PG	140	100	8.4	5	64	0.12	2	437	8"	120/1	SEE 10/PL501

GSBS | ARCHITECTURE | LANDSCAPE ARCHITECTURE | PLANNING | INTERIOR DESIGN

375 West 200 South Suite 100
Salt Lake City
Utah 84101

Tel 801.521.8600
Fax 801.521.7913

GSBS-PC.COM

Kyle T. Kisebach REGISTERED PROFESSIONAL ENGINEER 6280323 2/1/2008 State of Utah

Colvin Engineering Associates, Inc.
244 West 300 North Suite 200
Salt Lake City, Utah 84103
Phone (801) 322-2400 / Fax (801) 322-2416

No.	DATE	REVISION

THE GREAT SEAL OF THE STATE OF UTAH 1896

UTAH NATIONAL GUARD

NORTH SALT LAKE READINESS CENTER AND CIVIL SUPPORT TEAM

Salt Lake City, UT

BID SET

MECHANICAL SCHEDULES

PROJECT NO. 2006-095.00
DATE 2/1/2008
DRAWN MCJ
CHECKED KTK

MH601

BINDING ORDER 102

Copyright (C) 2006 by Colvin Engineering Associates, Inc. Salt Lake City, Utah. All rights reserved. Unauthorized copying and/or use is illegal and subject to prosecution.

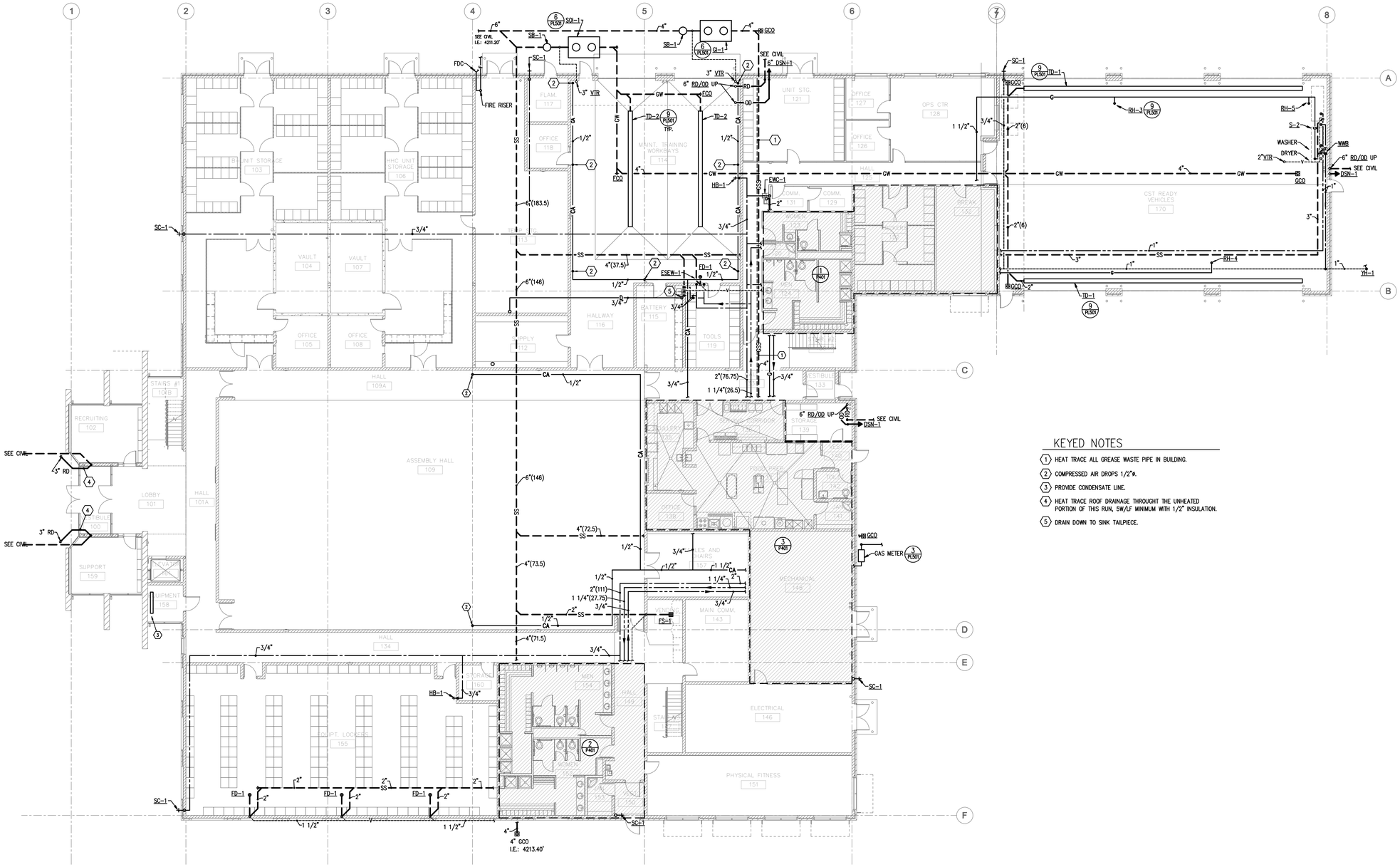

KEYED NOTES

1. HEAT TRACE ALL GREASE WASTE PIPE IN BUILDING.
2. COMPRESSED AIR DROPS 1/2"ø.
3. PROVIDE CONDENSATE LINE.
4. HEAT TRACE ROOF DRAINAGE THROUGHT THE UNHEATED PORTION OF THIS RUN, 5W/LF MINIMUM WITH 1/2" INSULATION.
5. DRAIN DOWN TO SINK TAILPIECE.

1 FIRST FLOOR PLUMBING PLAN

SCALE: 3/32" = 1'-0"

6' 0 4' 8' 12' 16' 24'

Copyright (C) 2006 by Colvin Engineering Associates, Inc. Salt Lake City, Utah. All rights reserved. Unauthorized copying and/or use is illegal and subject to prosecution.

GSBS | ARCHITECTURE | LANDSCAPE ARCHITECTURE | PLANNING | INTERIOR DESIGN

375 West 200 South Suite 100
Salt Lake City
Utah 84101

Tel 801.521.8600
Fax 801.521.7913

GSBS-PC.COM

Kyle T. Kirkham
REGISTERED
#6280323
2/1/2008
PROFESSIONAL ENGINEER
STATE OF UTAH

Colvin Engineering Associates, Inc.
244 West 300 North Suite 200
Salt Lake City, Utah 84103
Phone 801 322-3400 / Fax 801 322-3418

No.	DATE	REVISION

NORTH SALT LAKE READINESS CENTER AND CIVIL SUPPORT TEAM

Salt Lake City, UT

BID SET

FIRST FLOOR PLUMBING PLAN

PROJECT NO. 2006-095.00	PL101
DATE 2/1/2008	
DRAWN MCI	
CHECKED KTK	BINDING ORDER 103

KEYED NOTES

1. CONNECTJ 3/4" CONDENSATE DRAIN TO ROOF DRAIN (RD).
2. 4" CONDENSATE DRAIN DOWN. SEE P401 FOR CONTINUATION.

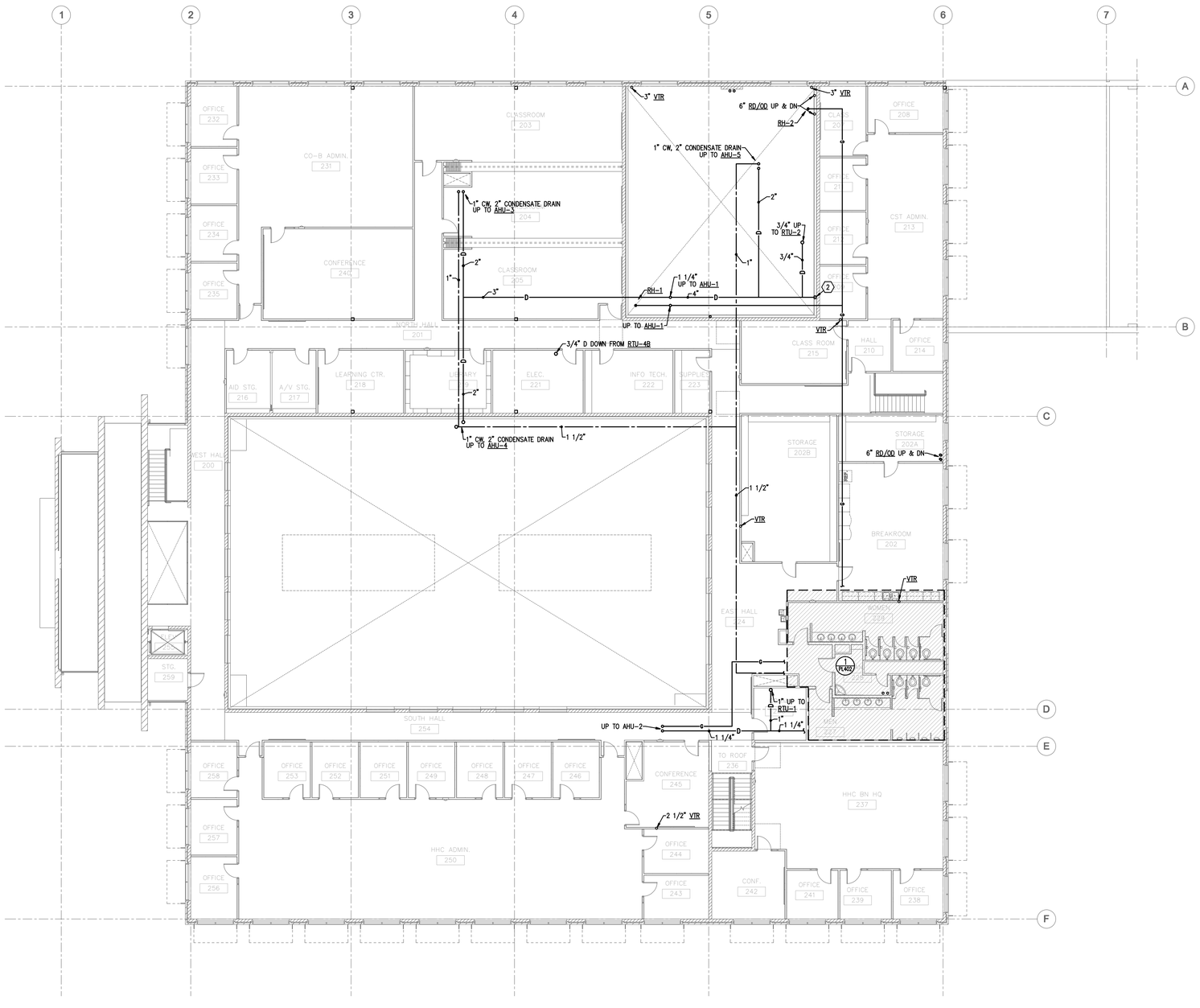

1 SECOND FLOOR PLUMBING PLAN

SCALE: 3/32" = 1'-0"

GSBS | ARCHITECTURE | LANDSCAPE ARCHITECTURE | PLANNING | INTERIOR DESIGN

375 West 200 South Suite 100
Salt Lake City
Utah 84101

Tel 801.521.8600
Fax 801.521.7913

GSBS-PC.COM

Kyle T. Kisebach
REGISTERED
36280323
2/1/2008
PROFESSIONAL ENGINEER
STATE OF UTAH

Colvin Engineering Associates, Inc.
244 West 300 North Suite 200
Salt Lake City, Utah 84103
Phone: (801) 322-3400 / Fax: (801) 322-3418

No.	DATE	REVISION

Copyright (C) 2006 by Colvin Engineering Associates, Inc. Salt Lake City, Utah. All rights reserved. Unauthorized copying and/or use is illegal and subject to prosecution.

NORTH SALT LAKE READINESS CENTER AND CIVIL SUPPORT TEAM

Salt Lake City, UT

BID SET

SECOND FLOOR PLUMBING PLAN

PROJECT NO. 2006-095.00	PL102
DATE 2/1/2008	
DRAWN MCJ	
CHECKED KTK	BINDING ORDER 104

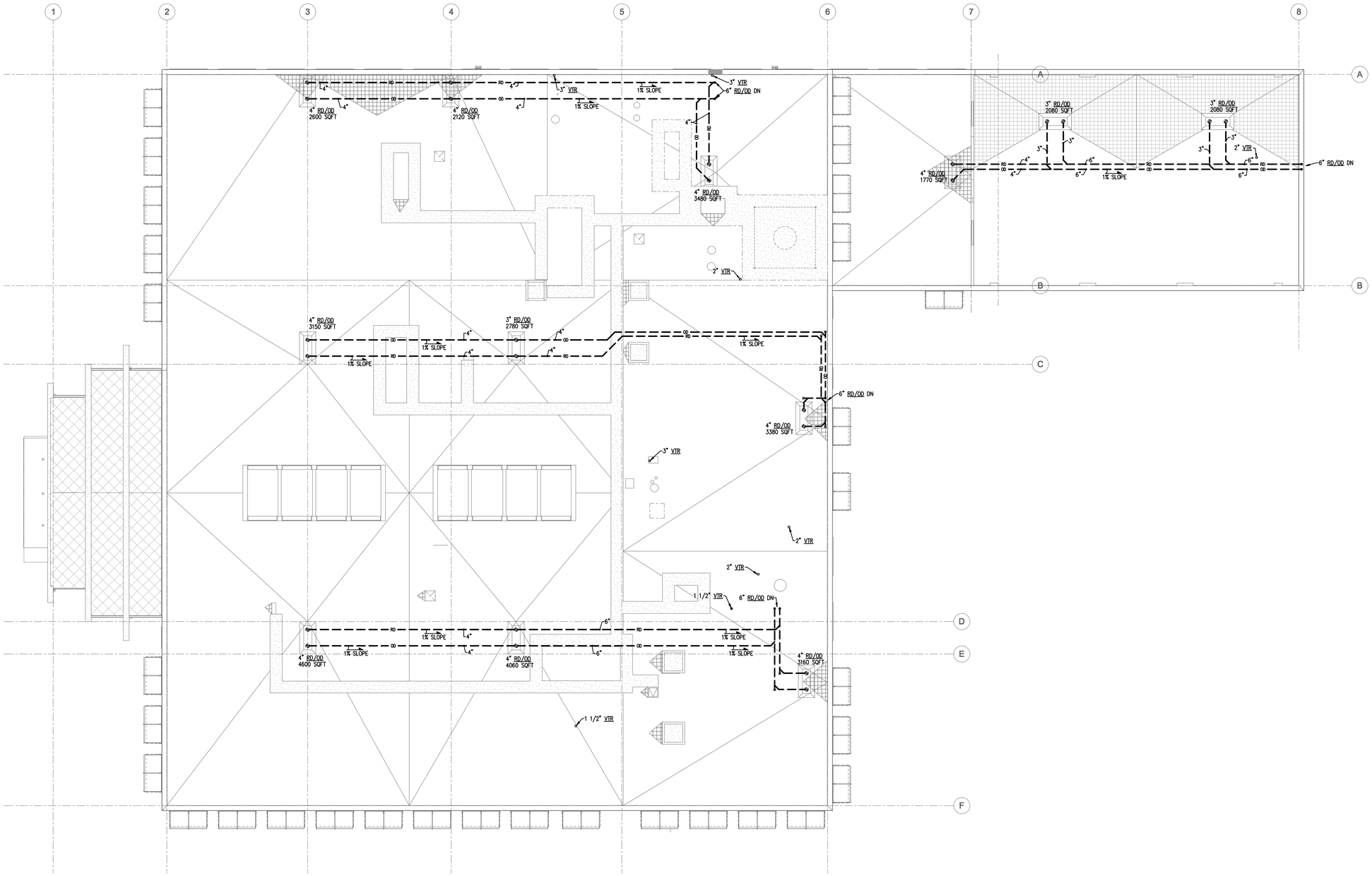

1 ROOF PLUMBING PLAN

SCALE: 3/32" = 1'-0"

6' 0 4' 8' 12' 16' 24'

Copyright (C) 2006 by Colvin Engineering Associates, Inc. Salt Lake City, Utah. All rights reserved. Unauthorized copying and/or use is illegal and subject to prosecution.

GSBS | ARCHITECTURE | LANDSCAPE ARCHITECTURE | PLANNING | INTERIOR DESIGN

375 West 200 South Suite 100
Salt Lake City
Utah 84101

Tel 801.521.8600
Fax 801.521.7913

GSBS-PC.COM

Kyle T. Kisamoto
REGISTERED
362280323
3/1/2008
Professional Engineer
State of Utah

Colvin Engineering Associates, Inc.
244 West 300 North Suite 200
Salt Lake City, Utah 84103
Phone (801) 322-2400 / Fax (801) 322-2418

No.	DATE	REVISION

NORTH SALT LAKE READINESS CENTER AND CIVIL SUPPORT TEAM

Salt Lake City, UT

BID SET

ROOF PLUMBING PLAN

PROJECT NO. 2006-095.00	PL103
DATE 2/1/2008	
DRAWN MCJ	
CHECKED KTK	BINDING ORDER 105

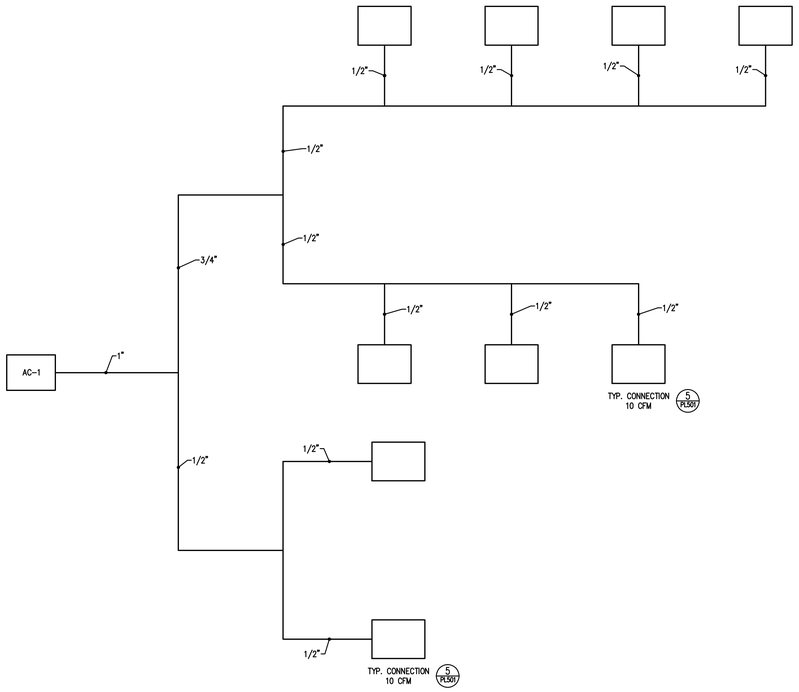

2 COMPRESSED AIR SCHEMATIC

SCALE: NONE

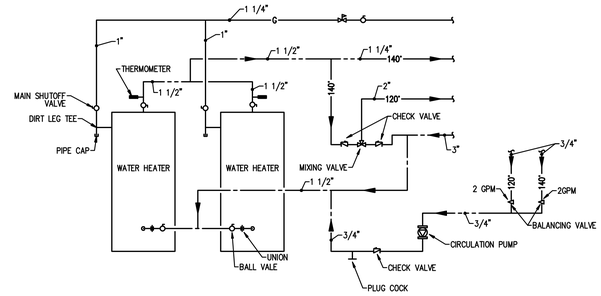

3 WATER HEATER SCHEMATIC

SCALE: NONE

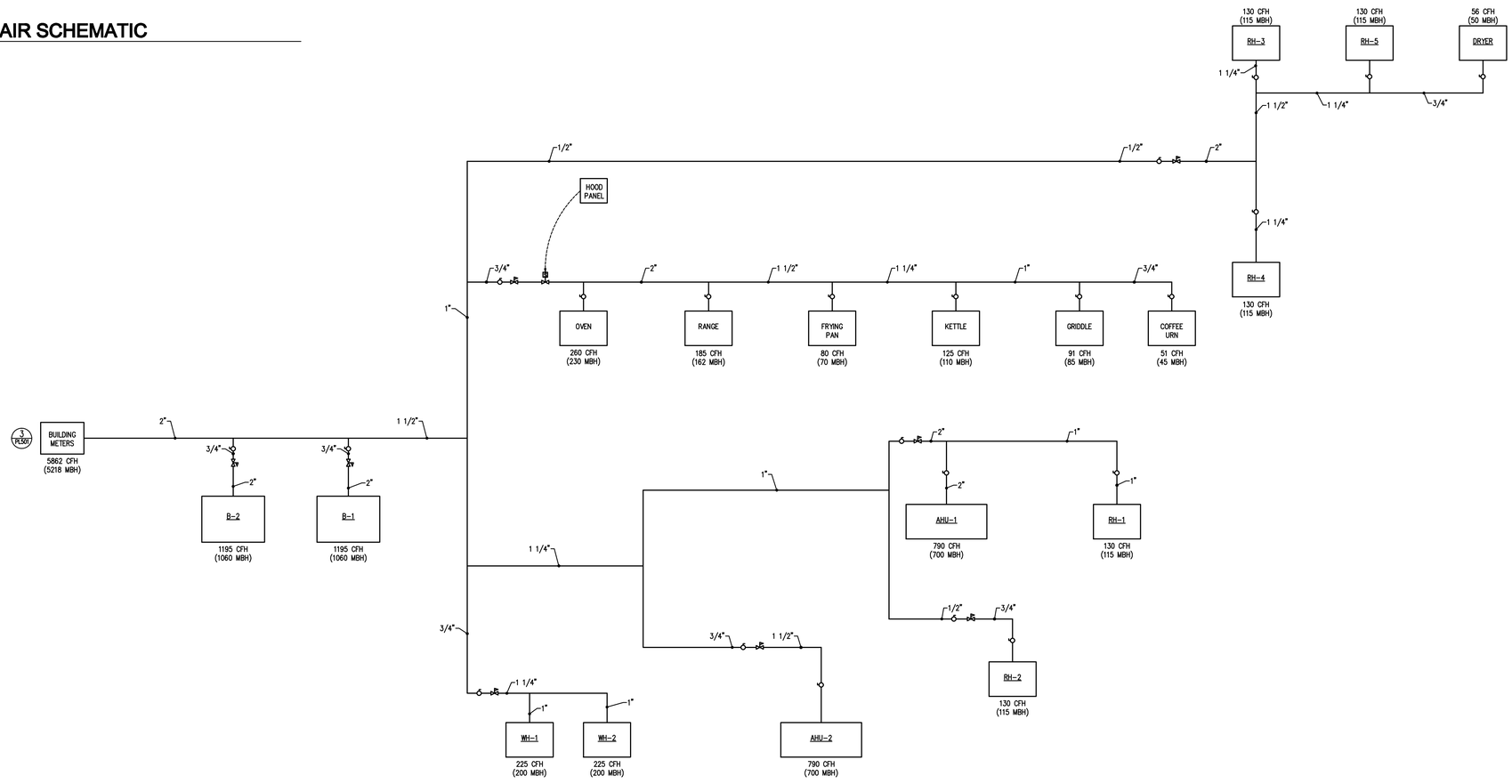

1 GAS PIPING SCHEMATIC

SCALE: NONE

Copyright (C) 2006 by Colvin Engineering Associates, Inc. Salt Lake City, Utah. All rights reserved. Unauthorized copying and/or use is illegal and subject to prosecution.

GSBS | ARCHITECTURE | LANDSCAPE ARCHITECTURE | PLANNING | INTERIOR DESIGN

375 West 200 South Suite 100
Salt Lake City
Utah 84101

Tel 801.521.8600
Fax 801.521.7913

GSBS-PC.COM

Kyle T. Kisamore
REGISTERED
PROFESSIONAL ENGINEER
6280323
5/1/2008
State of Utah

Colvin Engineering Associates, Inc.
244 West 300 North Suite 200
Salt Lake City, Utah 84103
Phone 801 322-9400 / Fax 801 322-9419

No.	DATE	REVISION

NORTH SALT LAKE READINESS CENTER AND CIVIL SUPPORT TEAM

Salt Lake City, UT

BID SET

SCHEMATICS

PROJECT NO. 2006-095.00	PL201
DATE 2/1/2008	
DRAWN MCJ	
CHECKED KTK	BINDING ORDER 106

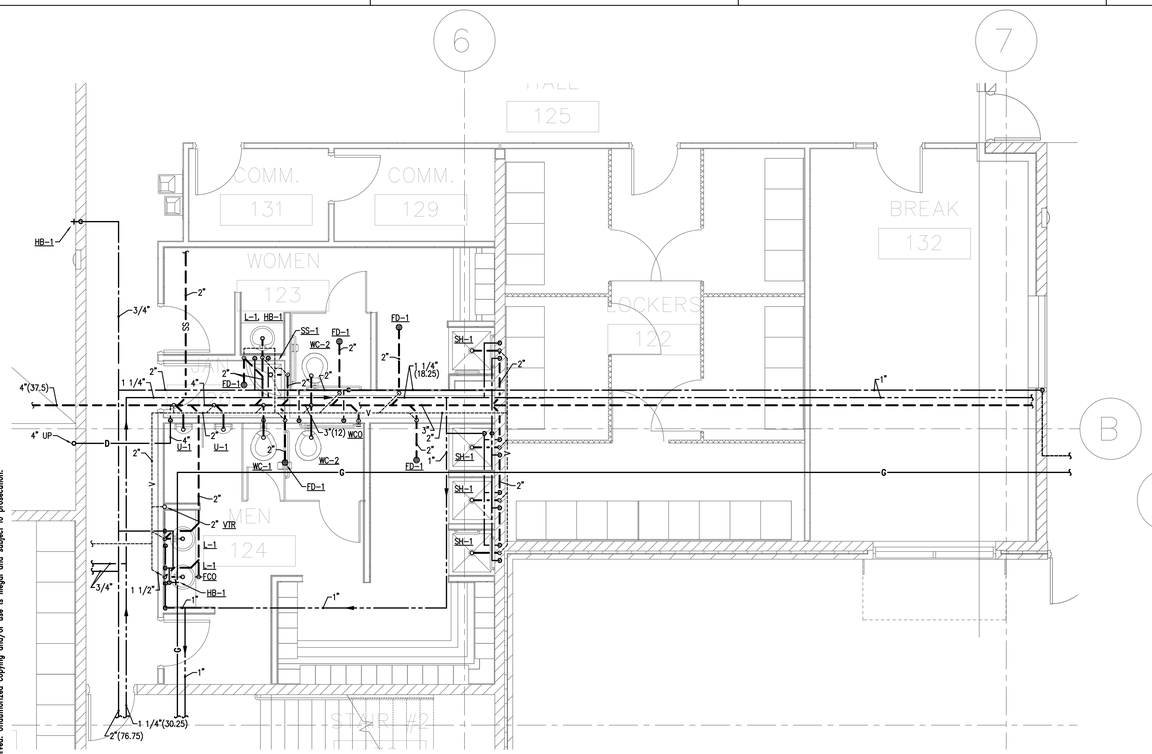

1 ENLARGED FIRST LEVEL RESTROOM PLUMBING

SCALE: 1/4" = 1'-0"

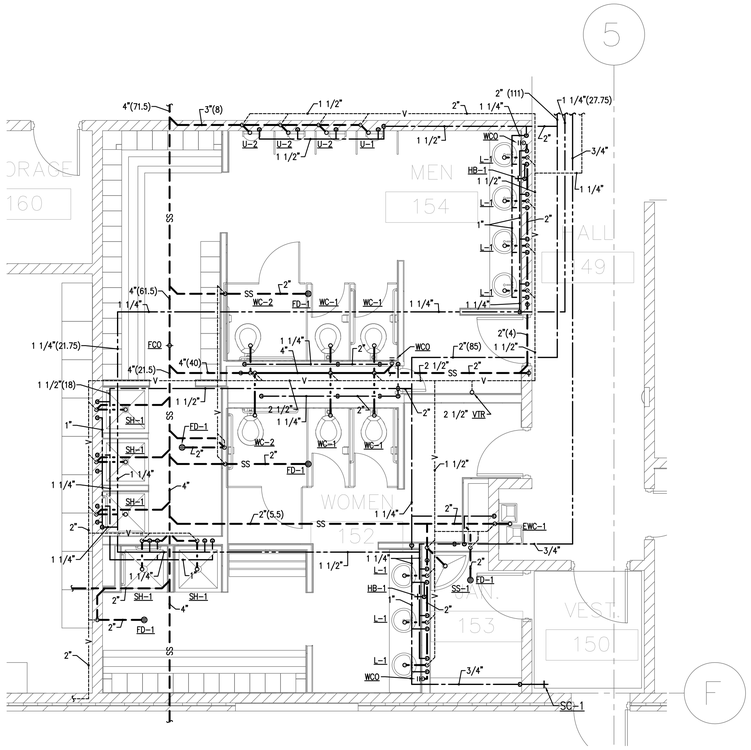

2 ENLARGED FIRST LEVEL RESTROOM PLUMBING

SCALE: 1/4" = 1'-0"

KEYED NOTES

1. 1 1/4" HW AND 2" CW UP TO LEVEL TWO RESTROOM.
2. 3/4" HW RECIRCULATION LINE UP TO LEVEL TWO RESTROOM.
3. FOR FUTURE AIR COMPRESSOR.
4. PROVIDE BYPASS FOR FUTURE WATER SOFTENER.
5. 1" DRAIN. 3/4" CW TO EVAPORATIVE COOLER. PROVIDE BACKFLOW PREVENTOR ON CW LINE.
6. 1 1/4" HW LINE TO WATER WASH HOOD. PROVIDE 2" INDIRECT DRAIN TO GSS VIA FLOOR SINK/TRENCH DRAIN.

GENERAL NOTES

A. HEAT TRACE ALL GSS PIPING IN BUILDING.

B. SEE KITCHEN PLANS FOR DIMENSION OF FLOOR SINKS, FLOOR DRAINS AND ALL STUB-OUTS FOR CW, HW, GAS, ETC.

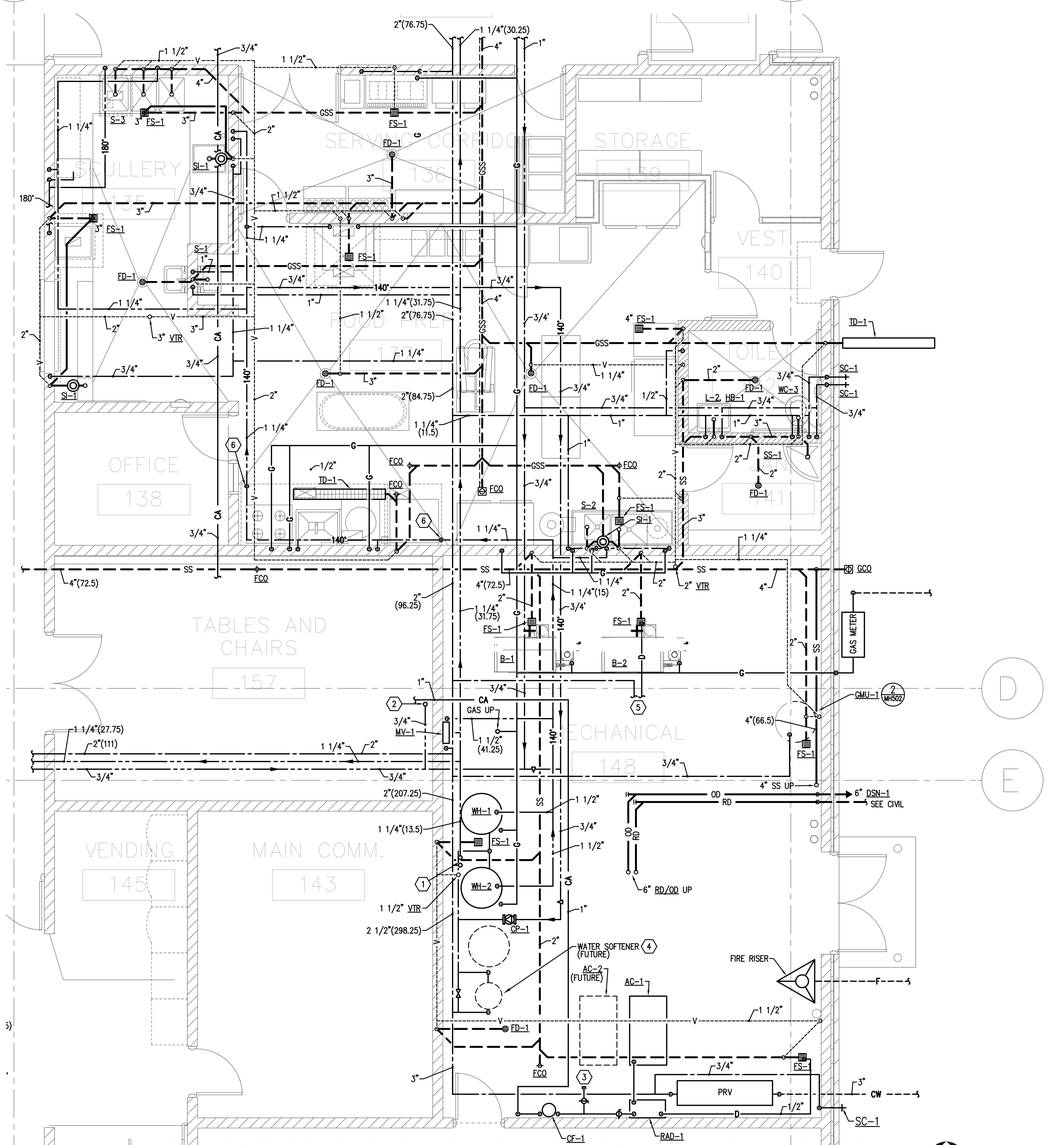

3 ENLARGED FIRST LEVEL KITCHEN AND MECHANICAL ROOM PLUMBING

SCALE: 1/4" = 1'-0"

Copyright (C) 2006 by Colvin Engineering Associates, Inc. Salt Lake City, Utah. All rights reserved. Unauthorized copying and/or use is illegal and subject to prosecution.

GSBS | ARCHITECTURE | LANDSCAPE ARCHITECTURE | PLANNING | INTERIOR DESIGN

375 West 200 South Suite 100
Salt Lake City
Utah 84101

Tel 801.521.8600
Fax 801.521.7913

GSBS-PC.COM

Kyle T. Kisabeth
REGISTERED
6280323
2/1/2008
PROFESSIONAL ENGINEER
STATE OF UTAH

Colvin Engineering Associates, Inc.
244 West 300 North Suite 200
Salt Lake City, Utah 84103
Phone (801) 322-2400 / Fax (801) 322-2418

No.	DATE	REVISION

NORTH SALT LAKE READINESS CENTER AND CIVIL SUPPORT TEAM

Salt Lake City, UT

BID SET

ENLARGED PLUMBING

PROJECT NO. 2006-095.00	PL401
DATE 2/1/2008	
DRAWN MCJ	
CHECKED KTK	BINDING ORDER 107

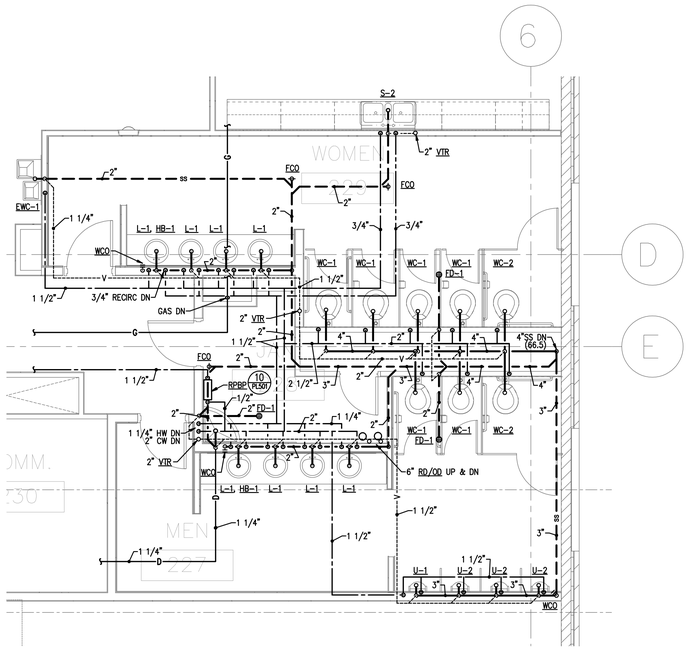

1 ENLARGED SECOND LEVEL RESTROOM PLUMBING

SCALE: 1/4" = 1'-0"

3' 0 2' 4' 6' 8'

Copyright (C) 2006 by Colvin Engineering Associates, Inc. Salt Lake City, Utah. All rights reserved. Unauthorized copying and/or use is illegal and subject to prosecution.

GSBS | ARCHITECTURE | LANDSCAPE ARCHITECTURE | PLANNING | INTERIOR DESIGN

375 West 200 South Suite 100
Salt Lake City
Utah 84101

Tel 801.521.8600
Fax 801.521.7913

GSBS-PC.COM

Kyle T. Kisamoto
REGISTERED
PROFESSIONAL ENGINEER
No. 6280323
5/1/2008
State of Utah

Colvin Engineering Associates, Inc.
244 West 300 North Suite 200
Salt Lake City, Utah 84103
Phone 801 322-0400 / Fax 801 322-0419

No.	DATE	REVISION

NORTH SALT LAKE READINESS CENTER AND CIVIL SUPPORT TEAM

Salt Lake City, UT

BID SET

ENLARGED PLUMBING PLANS

PROJECT NO. 2006-095.00
DATE 2/1/2008
DRAWN MCJ
CHECKED KTK

PL402

BINDING ORDER 108

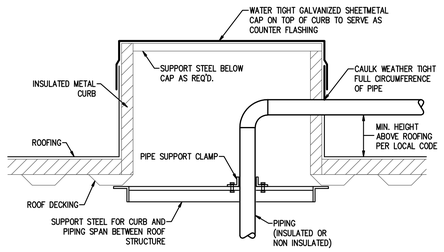

1 PIPE PENETRATION THRU ROOF DETAIL

NO SCALE

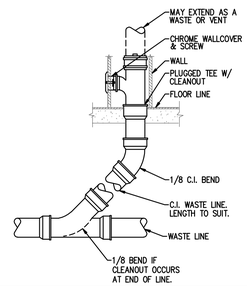

2 WALL CLEANOUT DETAIL

NO SCALE

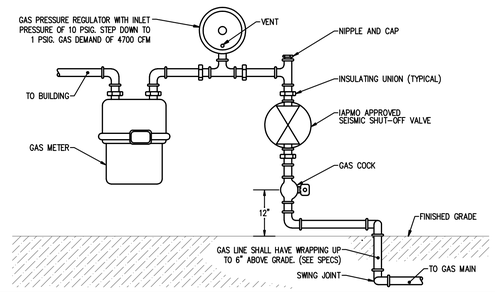

3 GAS METER SERVICE CONNECTION DETAIL

NO SCALE

NOT USED

4

NO SCALE

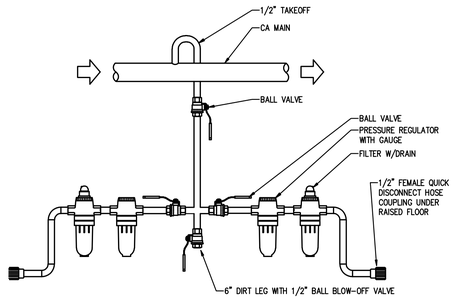

5 COMPRESSED AIR STATION DETAIL

NO SCALE

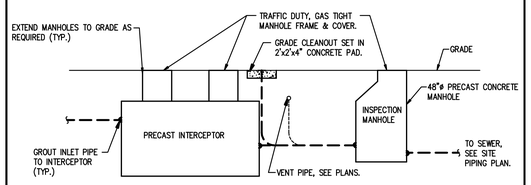

6 INTERCEPTOR DETAIL

NO SCALE

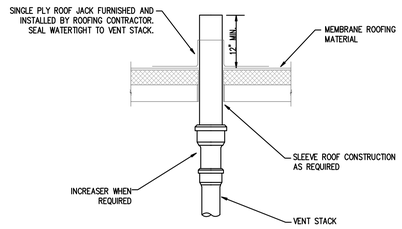

7 VENT THROUGH ROOF DETAIL

NO SCALE

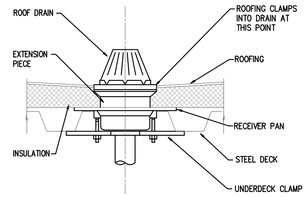

8 ROOF DRAIN DETAIL

NO SCALE

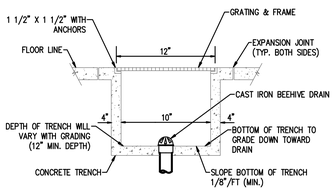

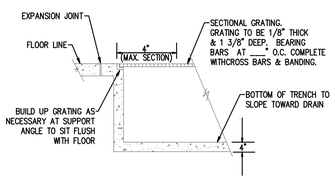

9 TRENCH DRAIN DETAIL

NO SCALE

Copyright (C) 2006 by Colvin Engineering Associates, Inc. Salt Lake City, Utah. All rights reserved. Unauthorized copying and/or use is illegal and subject to prosecution.

GSBS | ARCHITECTURE | LANDSCAPE ARCHITECTURE | PLANNING | INTERIOR DESIGN

375 West 200 South Suite 100
Salt Lake City
Utah 84101

Tel 801.521.8600
Fax 801.521.7913

GSBS-PC.COM

Kyle T. Kirkwood
Registered
Professional Engineer
State of Utah
No. 6280323
1/1/2008

Colvin Engineering Associates, Inc.
244 West 300 North Suite 200
Salt Lake City, Utah 84103
Phone 801 322-9400 / Fax 801 322-9419

No.	DATE	REVISION

NORTH SALT LAKE READINESS CENTER AND CIVIL SUPPORT TEAM

Salt Lake City, UT

BID SET

MECHANICAL DETAILS

PROJECT NO. 2006-095.00
DATE 2/1/2008
DRAWN MCJ
CHECKED KTK

PL501

BINDING ORDER 109

AIR COMPRESSOR
AC-1 (PACKAGED SYSTEM)

AIR COMPRESSOR (AC)

PLAN CODE	DUTY	ACFM @ 125 PSI	DISCHARGE PSIG	RECEIVER CAP. (GAL)	ELECTRICAL VOLT/PH/HERTZ.	ELECTRICAL MIN. HP	MANUFACTURER & MODEL NO
AC-1	GENERAL SHOP USE	38	125	SEE BELOW	460/3/60	10	INGRSOLL-RAND UP6-10-125

REFRIGERATED AIR DRYER SCHEDULE (RAD)

PLAN CODE	DUTY	TEMP. AMB.	SCFM	ELECTRICAL INPUT KW	ELECTRICAL VOLT/PH/HERTZ.	TYPE	MANUFACTURER & MODEL NO	REMARKS
RAD-1	AC-1	80	38	0.7	460/3/60	DX REFRIGERATED	IR DS 50	PROVIDE WITH PREPIPED AUTOMATIC CONDENSATE DRAIN VALVE

AIR RECEIVER (AR)

PLAN CODE	DUTY	CAPACITY FT³/V	TEST PSIG	TANK VOLUME (GAL)	DIMENSION (IN) WIDTH	DIMENSION (IN) LENGTH	DIMENSION (IN) HEIGHT	TYPE	MANUFACTURER & MODEL NO	REMARKS
AR-1	AC-1	38	250	80	29	54	61	HORIZONTAL	PACKAGED	VIBRATING MOUNTING PADS

COALESCING FILTER (CF)

PLAN CODE	DUTY	SCFM	PARTICLE SIZE
CF-1	AC-1	38	3 MICRON

GAS FIRED WATER HEATER SCHEDULE (WH)
NOTE: DIRECT VENT SEALED COMBUSTION

PLAN CODE	INPUT (BTUH)	OUTPUT (BTUH)	EFFICIENY %	FUEL	CAP. (GAL)	RECOVERY RATE (GPH)	TEMP. RISE (°F)	FLUE DIA.	FLUE TYPE	MAX. DIMENSIONS DIAMETER (IN)	MAX. DIMENSIONS HEIGHT (IN)	ELECTRICAL REQUIREMENTS	MANUFACTURER & MODEL NO.
WH-1	199,900	176,000	96	NG	100	230	100	4	4" PVC	28	76	6.3 FLA @ 120/1	A.O. SMITH BTH 199
WH-2	199,900	176,000	96	NG	100	230	100	4	4" PVC	28	76	6.3 FLA @ 120/1	A.O. SMITH BTH 199

PLUMBING FIXTURE SCHEDULE

PLAN CODE	DESCRIPTION	ROUGH-IN SIZE C.W.	ROUGH-IN SIZE H.W.	ROUGH-IN SIZE TEMPERED	ROUGH-IN SIZE WASTE	ROUGH-IN SIZE VENT	REMARKS
WC-1	WATER CLOSET, ADA COMPLIANT WALL MOUNT, MANUAL FLUSH VALVE, SIPHON JET, VITREOUS CHINA 1.6 GPF	1"	–	–	3"	2"	ZURN Z5615 FOR 1.28 GPF SEAT: OLSONITE #10CC/SS FLUSH VALVE: SLOAN WES-111 COLOR: WHITE FLOOR TO RIM: 17"
WC-2	WATER CLOSET, STANDARD WALL MOUNT, MANUAL FLUSH VALVE, SIPHON JET, VITREOUS CHINA 1.6 GPF	1"	–	–	3"	2"	ZURN Z5615 FOR 1.28 GPF SEAT: OLSONITE #10CC/SS FLUSH VALVE: SLOAN WES-111 COLOR: WHITE FLOOR TO RIM: 15"
WC-3	WATER CLOSET, ADA COMPLIANT, FLOOR MOUNT, MANUAL FLUSH VALVE, SIPHON JET, VITREOUS CHINA 1.6 GPF	1"	–	–	3"	2"	AMERICAN STANDARD "MADERA" 3043.102 SEAT: OLSONITE #10CC/SS FLUSH VALVE: ZURN Z-6000AV-WS1 COLOR: WHITE FLOOR TO RIM: 17"
U-1	URINAL, ADA COMPLIANT, VITREOUS CHINA, SIPHON JET, MANUAL FLUSH VALVE, 0.125 GPF	3/4"	–	–	2"	1 1/2"	ZURN Z5798.205 (1/8 GALLON PER FLUSH) FLUSH VALVE: ZURN Z5798 COLOR: WHITE FLOOR TO RIM: 17"
U-2	URINAL, STANDARD, VITREOUS CHINA, SIPHON JET, MANUAL FLUSH VALVE, 0.125 GPF	3/4"	–	–	2"	1 1/2"	ZURN Z5798.205 (1/8 GALLON PER FLUSH) FLUSH VALVE: ZURN Z5798 COLOR: WHITE FLOOR TO RIM: 24"
L-1	OVAL, VITREOUS CHINA, COUNTERTOP MOUNTED LAVATORY, 4" CENTERSET, CHROME METERING FAUCET WITH GRID DRAIN, 0.25 GPC FLOW	1/2"	–	1/2"	1 1/2"	1 1/2"	AMERICAN STANDARD "AQUALYN" 0475.020 FAUCET: SLOAN EAF-275-ISM
L-2	WALL MOUNT, RECTANGULAR LAVATORY, VITREOUS CHINA, 4" CENTERSET, CHROME WRISTBLADE HANDLE GOOSENECK FAUCET WITH POP-UP DRAIN, 0.5 GPM FLOW	1/2"	–	1/2"	1 1/2"	1 1/2"	AMERICAN STANDARD "LUCERNE" 0355.012 FAUCET: AMERICAN STANDARD "MONTERREY" 7501.170
S-1	WALL MOUNT, RECTANGULAR SINK, VITREOUS CHINA, 4" CENTERSET, CHROME WRISTBLADE HANDLE FAUCET WITH GRID DRAIN, 0.5 GPM FLOW	1/2"	–	1/2"	1 1/2"	1 1/2"	AMERICAN STANDARD "LUCERNE" 0355.012 FAUCET: AMERICAN STANDARD 5502.170
S-2	DOUBLE COMPARTMENT, RECTANGULAR STAINLESS STEEL, COUNTER MOUNT SINK, GOOSENECK SWING SPOUT WITH WING HANDLES, 18 GA.	1/2"	1/2"	–	1 1/2"	1 1/4"	BOWL: 24: W X 28: D X 14" H FAUCET: ELKAY LK-232-S-BH-5 STRAINER: ELKAY LK-35
S-3	FOUR COMPARTMENT, RECTANGULAR 304 STAINLESS STEEL, FLOOR MOUNT, 18 GA., NSF LISTED	1/2"	1/2"	–	1 1/2"	1 1/4"	BOWLS: EACH 28" D X 30"W X 16" H(4 TOTAL) FAUCETS: GOOSENECK WITH WIDESPREAD HANDLES (1 PER BASIN, 4 TOTAL STRAINER: ELKAY LK-35
SH-1	PRESSURE BALANCING MIXING VALVE WITH LEVER HANDLE, COMBINATION INTEGRAL DIVERTER AND VOLUME CONTROL, FLEX METAL HOSE SLIDE ROD WITH HAND SHOWER, ADA COMPLIANT, TEMPERATURE LIMIT STOPS, STOPS	1/2"	1/2"	–	–	–	SYMMONS 96-600-B30-L-V-X-295
SS-1	SERVICE SINK, ENAMELED CAST IRON, WITH RIM GAURD, 3" GRID DRAIN AND FAUCET WITH VACUUM BREAKER, STOPS, TOP BRACE, CHROME FINISH.	3/4"	3/4"	–	3"	2"	SINK: KOHLER K-6710 FAUCET: KOKLER K-8907
EWC-1	BI-LEVEL, SURFACE MOUNT ELECTRIC WATER COOLER	3/8"	–	–	1 1/4"	1 1/4"	ELKAY #EBFATL8C (ADA), STAINLESS STEEL, 8.0 GPH, F.L.A. = 3.7, 115 V/1 PH/ 60 HZ.
FD-1	5" – 7" ROUND CAST IRON FLOOR DRAIN, NICKEL BRONZE STRAINER, VANDAL PROOF SECURITY SCREWS, DEEP SEAL TRAP	–	–	–	NOTED	–	MIFAB F1000
FS-1	12" X 12" X 8"D CAST IRON FLOOR SINK, ENAMEL INTERIOR FINISH, NICKEL BRONZE GRATE, SEDIMENT BUCKET	–	–	–	NOTED	–	MIFAB FS1700
RD	ROOF DRAIN	–	–	–	NOTED	–	J.R. SMITH FIG. 1340T, SEE 8/PL501
OD	OVERFLOW DRAIN	–	–	–	NOTED	–	J.R. SMITH FIG. 1340T, SEE 8/PL501
DSN	DOWNSPOUT NOZZLE	–	–	–	NOTED	–	J.R. SMITH FIG. 1770-BS BRONZE DOWNSPOUT WITH BIRD SCREEN.
WCO	BRONZE WALL CLEANOUT	–	–	–	NOTED	–	MIFAB C1430, SEE 2/PL501
FCO	BRONZE FLOOR CLEANOUT	–	–	–	NOTED	–	MIFAB C1100-R
GCO	GRADE CLEAN OUT, ROUND TOP WITH DUCTILE IRON COVER	–	–	–	NOTED	–	MIFAB C1100-XR-4
HB-1	BRASS HOSE BIBB, CHROME PLATE FINISH, VACUUM BREAKER, WALL FLANGE.	3/4"	–	–	–	–	CHICAGO FAUCETS 952 LOOSE KEY HANDLE 293-6
ESEW-1	EMERGENCY SHOWER WITH EYE WASH STATION	1"	1"	–	–	–	DRENCH SHOWER & EYE/FACE WASH: BRADLEY S19-310HFP PROVIDE THERMOSTATIC MIXING VALVE
SOI-1	SAND OIL INTERCEPTOR	–	–	–	4"	3"	500 GALLON DURACRETE OR APPROVED EQUAL, SEE 6/PL501
GI-1	GREASE INTERCEPTOR	–	–	–	4"	3"	1500 GALLON, DURACRETE OR APPROVED EQUAL, SEE 6/PL501
YH-1	YARD HYDRANT	1"	–	–	–	–	WOODFORD MFG MODEL Y1, 5' BURY DEPTH
WWB	WASHER WALL BOX	1"	1"	–	2"	2"	GUY GRAY STAINLESS STEEL, SURFACE MOUNT
SI-1	GARBAGE DISPOSAL	–	–	–	–	–	INSINKERATOR MODEL # SS-300 3 HP MOTOR
TD	TRENCH DRAIN	–	–	–	AS NOTED	–	ACO TRENCH DRAINS KS100S, SEE 9/PL501
SB-1	SAMPLING BOX	–	–	–	–	–	24" DIAMETER, H20 LID
SC-1	SILLCOCK	1/2"	–	–	–	–	ZURN Z-1320 FREEZE PROOF, VACUUM BREAKER, LOCKABLE WALL BOX

Copyright (C) 2006 by Colvin Engineering Associates, Inc. Salt Lake City, Utah. All rights reserved. Unauthorized copying and/or use is illegal and subject to prosecution.

GSBS ARCHITECTURE | LANDSCAPE ARCHITECTURE | PLANNING | INTERIOR DESIGN
375 West 200 South Suite 100
Salt Lake City
Utah 84101
Tel 801.521.8600
Fax 801.521.7913
GSBS-PC.COM

Kyle T. Kimball
REGISTERED
6280323
1/1/2008
PROFESSIONAL ENGINEER
State of Utah

Colvin Engineering Associates, Inc.
244 West 300 North Suite 200
Salt Lake City, Utah 84103
Phone 801 322-9400 / Fax 801 322-9419

No.	DATE	REVISION

NORTH SALT LAKE READINESS CENTER AND CIVIL SUPPORT TEAM

Salt Lake City, UT

BID SET

PLUMBING SCHEDULES

PROJECT NO. 2006-095.00
DATE 2/1/2008
DRAWN MCJ
CHECKED KTK

PL601

BINDING ORDER 110

SYMBOL LEGEND

SYMBOL	DESCRIPTION
REFERENCE AND LINE SYMBOLS	
A5 / E-501	DETAIL INDICATOR: A5 INDICATES DETAIL NUMBER, E-501 INDICATES DRAWING SHEET WHERE DETAIL IS SHOWN.
A5 / E-201	ELEVATION OR SECTION INDICATOR, EXTERIOR: A5 INDICATES ELEVATION OR SECTION NUMBER, E-201 INDICATES DRAWING SHEET WHERE ELEVATION OR SECTION IS SHOWN.
A5 / E-201	ELEVATION OR SECTION INDICATOR, INTERIOR: A5 INDICATES ELEVATION OR SECTION NUMBER, E-201 INDICATES DRAWING SHEET WHERE ELEVATION OR SECTION IS SHOWN.
100	ROOM OR SPACE NUMBER.
1	KEYNOTE INDICATOR.
1	REVISION INDICATOR.
CU-1	EQUIPMENT INDICATOR.
	BREAK, STRAIGHT: TO BREAK PARTS OF DRAWING.
	BREAK, ROUND.
MATCH LINE / SEE XX/X-XXX	MATCH LINE INDICATOR: CENTER, EXTRA WIDE LINE.
	NEW LINE: MEDIUM LINE.
	HIDDEN FEATURES LINE: HIDDEN, THIN LINE.
WIRING METHODS	
	WIRING.
	WIRING TURNED UP OR TOWARDS OBSERVER.
	WIRING TURNED DOWN OR AWAY FROM OBSERVER.
A-1,3,5	BRANCH CIRCUIT HOME RUN TO PANELBOARD: NUMBER OF ARROWS INDICATES NUMBER OF CIRCUITS. LETTER AND NUMBER NOTATIONS IDENTIFY PANEL AND CIRCUIT NUMBERS. USE #12 CONDUCTORS, EXCEPT #10 CONDUCTORS SHALL BE INSTALLED IF DISTANCES EXCEED THOSE SPECIFIED IN SECTION 16120.
1 A-1,3,5	BRANCH CIRCUIT HOME RUN TO PANELBOARD: NUMBER OF ARROWS INDICATES NUMBER OF CIRCUITS. LETTER AND NUMBER NOTATIONS IDENTIFY PANEL AND CIRCUIT NUMBERS. NUMBER IN BOX REFERS TO THE CONDUCTOR AND CONDUIT SCHEDULE. FOR BRANCH WIRING USE #12 CONDUCTORS, EXCEPT #10 CONDUCTORS SHALL BE INSTALLED IF DISTANCES EXCEED THOSE SPECIFIED IN SECTION 16120.
— X —	WIRING AND/OR RACEWAY: THIN LINE. WHERE "X" = : CATV = CABLE TELEVISION CCTV = CLOSED CIRCUIT TELEVISION FA = FIRE ALARM FO = FIBER OPTICS I = INTERCOM NC = NURSE CALL P = POWER RC = RIGID CONDUIT S = SOUND T = TELEPHONE TV = TELEVISION OTHERS AS NOTED IN OTHER SCHEDULES. RACEWAYS AND WIRING SHALL BE SIZED AS SHOWN AND/OR SPECIFIED.
	LOW VOLTAGE WIRING: DIVIDE, MEDIUM LINE.
	EMERGENCY BRANCH CIRCUIT WIRING.
	CONDUIT STUB. DIMENSION RECORD DRAWINGS AND MARK.
1	CONDUCTOR & CONDUIT ("CC") SCHEDULE INDICATOR. REFER TO ONE-LINE DIAGRAM.
J	JUNCTION BOX.
J SC	JUNCTION BOX, SYSTEMS FURNITURE COMMUNICATION CONNECTION.
J SP	JUNCTION BOX, SYSTEMS FURNITURE POWER CONNECTION.
PB	PULL BOX.
C C	CABLE TRAY.
W W	WIREWAY.
	EARTH GROUND (ONE-LINE DIAGRAM).
J C	JUNCTION BOX, CEILING.
	LADDER RACK.
LIGHTING (REFER TO FIXTURE SCHEDULE FOR SYMBOLS)	
(W-3)	FIXTURE IDENTIFICATION: (W-3) INDICATES FIXTURE TYPE AS SCHEDULED.
(W-3)	FIXTURE IDENTIFICATION, CONNECTED TO GENERATOR AS INDICATED: (W-3) INDICATES FIXTURE TYPE AS SCHEDULED.
EM	EMERGENCY.
NL	NIGHT LIGHT: DO NOT SWITCH.
↑	EGRESS DIRECTION ARROW.
LV	LOW VOLTAGE LIGHTING TRANSFORMER.
LIGHTING CONTROL	
	OCCUPANCY SENSOR, DUAL TECHNOLOGY, CEILING.
	OCCUPANCY SENSOR, DUAL TECHNOLOGY, WALL.
U	OCCUPANCY SENSOR, ULTRASONIC, CEILING.
PCX	INTERIOR LIGHT LEVEL SENSING PHOTOCELL, ADJUSTABLE.
PC	OCCUPANCY SENSOR, DUAL TECHNOLOGY WITH INTEGRAL ADJUSTABLE PHOTOCELL, CEILING.
PC	DIRECTIONAL OCCUPANCY SENSOR, DUAL TECHNOLOGY WITH INTEGRAL ADJUSTABLE PHOTOCELL, CEILING.
P	EXTERIOR PHOTOCELL.
TC	TIME CLOCK.

SYMBOL LEGEND

SYMBOL	DESCRIPTION
WIRING DEVICES	
	RECEPTACLE, DUPLEX: NEMA 5-20R.
A	RECEPTACLE, DUPLEX, ABOVE COUNTER: NEMA 5-20R.
C	RECEPTACLE, DUPLEX, CEILING: NEMA 5-20R.
D	RECEPTACLE, DUPLEX, DEDICATED CIRCUIT: NEMA 5-20R.
DF	RECEPTACLE, DUPLEX, DRINKING FOUNTAIN: CONCEAL WATER COOLER RECEPTACLE BEHIND WATER COOLER. SEE DIVISION 15 SHOP DRAWINGS FOR INSTALLATION REQUIREMENTS.
	RECEPTACLE, DUPLEX WITH GROUND FAULT CIRCUIT INTERRUPTER: NEMA 5-20R.
WP	RECEPTACLE, DUPLEX WITH GROUND FAULT CIRCUIT INTERRUPTER, WEATHERPROOF: NEMA 5-20R.
	RECEPTACLE, QUADRAPLEX: NEMA 5-20R.
	RECEPTACLE, SPECIAL PURPOSE. PROVIDE RECEPTACLE TO MATCH EQUIPMENT PLUG.
	MULTI-OUTLET ASSEMBLY: NEMA 5-20R.
D	CORD REEL. SEE DETAIL.
FB#	FLUSH FLOOR BOX. "#" SHOWN ON DRAWINGS. REFER TO WIRING DEVICE SCHEDULE IN SECTION 16140 FOR CONFIGURATION AND DEVICES.
	SWITCH, DIMMER.
X $	SWITCH, SINGLE POLE ("x" INDICATES FIXTURES CONTROLLED).
X $3	SWITCH, THREE-WAY ("x" INDICATES FIXTURES CONTROLLED).
X $4	SWITCH, FOUR-WAY ("x" INDICATES FIXTURES CONTROLLED).
FIRE ALARM	
FSA	FIRE SYSTEM ANNUNCIATOR.
FCP	FIRE ALARM CONTROL PANEL, SEMI-RECESSED.
CM	CONTROL MODULE.
MM	MONITOR MODULE.
P	FIRE ALARM MANUAL PULL STATION.
R	SHUT DOWN RELAY: INSTALL RELAY IN CONTROL CIRCUIT OF EQUIPMENT TO BE CONTROLLED IN THE EVENT OF A FIRE.
	DETECTOR, SMOKE.
	DETECTOR, SMOKE, DUCT WITH HOUSING AND SAMPLING TUBE.
	DETECTOR, HEAT.
75	STROBE. SUBSCRIPT INDICATES CANDELA RATING.
WP	ALARM, HORN/SPEAKER, WEATHERPROOF.
75	ALARM, HORN/STROBE, ONE ASSEMBLY. SUBSCRIPT INDICATES CANDELA RATING.
	DETECTOR, FLOW SWITCH: FLOW SWITCHES SHALL BE PROVIDED AND INSTALLED WITH FIRE SPRINKLER SYSTEM AND SHALL BE CONNECTED TO LOCATIONS SHOWN ON THE FIRE SPRINKLER SHOP DRAWINGS.
	DETECTOR, TAMPER SWITCH WITH VALVE: TAMPER SWITCHES SHALL BE PROVIDED AND INSTALLED WITH FIRE SPRINKLER SYSTEM AND SHALL BE CONNECTED TO LOCATIONS SHOWN ON THE FIRE SPRINKLER SHOP DRAWINGS.
SD	SMOKE DAMPER.
FSD	FIRE AND SMOKE DAMPER.
TV DISTRIBUTION	
	TV OUTLET.
STRUCTURED CABLING	
X	TELEPHONE, WALL MOUNTED ("X" INDICATES QUANTITY OF CABLES).
P	TELEPHONE, WALL MOUNTED: PAY PHONE.
W	TELEPHONE, WALL MOUNTED: WALL PHONE.
X	OUTLET, DATA COMMUNICATION ("X" INDICATES QUANTITY OF CABLES).
	OUTLET, BUILDING STANDARD COMBINATION TELEPHONE/DATA COMMUNICATION.
	TELEPHONE TERMINAL BOARD, FIRE TREATED PLYWOOD PAINTED.
	LAN RACK, FLOOR STANDING.
TECHNOLOGY SYSTEMS	
S 6	SPEAKER, 6".
S 12	SPEAKER, 12".
	SCREEN, PROJECTION, CEILING MOUNTED.
	PROJECTOR, CEILING MOUNTED.
	AV EQUIPMENT RACK.
V	VIDEO CONFERENCING CAMERA.
CP	AV CONNECTION PANEL
TP	TOUCH PANEL, CONTROL.
KP	KEYPAD, CONTROL.
M42	MONITOR, 42", FLATSCREEN, W/SPEAKERS.

SYMBOL LEGEND

SYMBOL	DESCRIPTION
ELECTRICAL POWER AND DISTRIBUTION	
	MOTOR.
	DISCONNECT SWITCH, FUSED.
	DISCONNECT SWITCH, UNFUSED.
	STARTER, COMBINATION WITH DISCONNECT SWITCH.
	STARTER OR MOTOR CONTROLLER.
	PUSHBUTTON.
	PUSHBUTTONS, MOTOR CONTROL.
	PANELBOARD CABINET, FLUSH MOUNTED.
	PANELBOARD CABINET, SURFACE MOUNTED, 1 SECTION.
	PANELBOARD CABINET, SURFACE MOUNTED, 2 SECTION.
DP#__	DISTRIBUTION PANEL OR SWITCHBOARD.
LP	LIGHTING RELAY, CONTACTOR PANEL, OR DIMMING ENCLOSURE.
$ST	SWITCH, TOGGLE MOTOR STARTER WITH OVERLOAD PROTECTION.
75	TRANSFORMER: NUMBER INDICATES kVA.
HC	ACCESSIBLE DOOR ENTRY PUSH PLATE OPERATOR.
ELECTRICAL POWER AND DISTRIBUTION	
	DISCONNECT, FUSED (ONE-LINE DIAGRAM).
	DISCONNECT, NONFUSED (ONE-LINE DIAGRAM).
	CIRCUIT BREAKER, MOLDED CASE (ONE-LINE DIAGRAM).
	CIRCUIT BREAKER, MOLDED CASE WITH SHUNT TRIP (ONE-LINE DIAGRAM).
	CIRCUIT BREAKER, SOLID STATE (ONE-LINE DIAGRAM).
GFP	CIRCUIT BREAKER, SOLID STATE WITH GROUND FAULT PROTECTION (ONE-LINE DIAGRAM).
	MOTOR.
	TRANSFORMER (ONE-LINE DIAGRAM).
225/3 "1H"	PANELBOARD WITH MAIN LUGS ONLY. BUS SIZE AND PHASE AS SHOWN (ONE-LINE DIAGRAM).
225/3 "1H"	PANELBOARD WITH MAIN CIRCUIT BREAKER. SIZE AND PHASE AS SHOWN (ONE-LINE DIAGRAM).
225/3 "1H" 60/3	PANELBOARD WITH MAIN AND SUB FEED CIRCUIT BREAKER (ONE-LINE DIAGRAM).
225/3 "1H" 225/3 "1H"	PANELBOARD WITH SUB FEED LUGS (ONE-LINE DIAGRAM).
225/3 "1H" "1H"	PANELBOARD WITH CIRCUIT BREAKER AND SUB FEED LUGS (ONE-LINE DIAGRAM).
	CT CABINET PER UTILITY'S REQUIREMENTS (ONE-LINE DIAGRAM).
	TRANSFER SWITCH (ONE-LINE DIAGRAM).
DMM	DIGITAL MULTIMETER (ONE-LINE DIAGRAM).
	SERVICE ENTRANCE SURGE PROTECTION (ONE-LINE DIAGRAM).
G	GENERATOR, POWER (ONE-LINE DIAGRAM).
M	METER.

ABBREVIATIONS

NOTE: ALL ABBREVIATIONS MAY NOT BE USED.

1P	SINGLE POLE	KV	KILOVOLT
1PH	SINGLE-PHASE	KVA	KILOVOLT AMPERE
1WAY	ONE-WAY	kVAR	KILOVOLT AMPERE REACTIVE
2/C	TWO-CONDUCTOR		
2WAY	TWO-WAY	kW	KILOWATT
3/C	THREE-CONDUCTOR	kWh	KILOWATT HOUR
3PH	THREE-PHASE	LED	LIGHT EMITTING DIODE
3WAY	THREE-WAY	LFMC	LIQUID TIGHT FLEXIBLE METAL CONDUIT
4OUT	QUADRUPLE RECEPTACLE OUTLET	LFNC	LIQUID TIGHT FLEXIBLE NONMETALLIC CONDUIT
4PDT	FOUR-POLE DOUBLE THROW	LPS	LOW PRESSURE SODIUM
4PST	FOUR-POLE SINGLE THROW	LRA	LOCKED ROTOR AMPS
		LTG	LIGHTING
4W	FOUR-WIRE	LV	LOW VOLTAGE
4WAY	FOUR-WAY	MATV	MASTER ANTENNA TELEVISION SYSTEM
A	ABOVE COUNTER		
AC	ARMORED CABLE	MAX	MAXIMUM
ADA	AMERICANS WITH DISABILITIES ACT	MC	METAL CLAD
		MCA	MINIMUM CIRCUIT AMPS
ADJ	ADJACENT	MCB	MAIN CIRCUIT BREAKER
AFF	ABOVE FINISHED FLOOR	MCC	MOTOR CONTROL CENTER
AFG	ABOVE FINISHED GRADE	MCP	MOTOR CIRCUIT PROTECTION
AIC	AMPERE INTERRUPTING CAPACITY	MDP	MAIN DISTRIBUTION PANEL
ALUM	ALUMINUM		
AMP	AMPERE	MG	MOTOR GENERATOR
ANN	ANNUNCIATOR	MH	MANHOLE
AP	ACCESS POINT (WIRELESS DATA)	MIN	MINIMUM
		MLO	MAIN LUGS ONLY
AR	AS REQUIRED	MOCP	MAXIMUM OVERCURRENT PROTECTION
ASC	AMPS SHORT CIRCUIT		
ATS	AUTOMATIC TRANSFER SWITCH	NA	NOT APPLICABLE
		NC	NORMALLY CLOSED
AV	AUDIO VISUAL	NEC	NATIONAL ELECTRICAL CODE
AWG	AMERICAN WIRE GAGE		
BB XFMR	BUCK-BOOST TRANSFORMER	NEMA	NATIONAL ELECTRICAL MANUFACTURERS ASSOCIATION
C	CEILING MOUNTED		
CATV	COMMUNITY ANTENNA TELEVISION	NFC	NATIONAL FIRE CODE
		NFPA	NATIONAL FIRE PROTECTION ASSOCIATION
CB	CIRCUIT BREAKER		
CCBA	CUSTOM COLOR AS SELECTED BY ARCHITECT	NIC	NOT IN CONTRACT
		NL	NIGHT LIGHT
CCTV	CLOSED CIRCUIT TELEVISION	NO	NORMALLY OPEN
		NTS	NOT TO SCALE
CFBA	CUSTOM FINISH AS SELECTED BY ARCHITECT	OC	ON CENTER
		OCP	OVER CURRENT PROTECTION
CF/CI	CONTRACTOR FURNISHED/CONTRACTOR INSTALLED	OF/CI	OWNER FURNISHED/CONTRACTOR INSTALLED
CF/OI	CONTRACTOR FURNISHED/OWNER INSTALLED	OF/OI	OWNER FURNISHED/OWNER INSTALLED
CKT	CIRCUIT		
CM	CONSTRUCTION MANAGER	OFP	OBTAIN FROM PLANS
CND	CONDUIT	OH DR	OVERHEAD (COILING) DOOR
CO	CONVENIENCE OUTLET		
COR	CONTRACTING OFFICER'S REPRESENTATIVE	OL	OVERLOAD
		PB	PUSHBUTTON
CP	CONTROL PANEL	PF	POWER FACTOR
CT	CURRENT TRANSFORMER	PH	PHASE
CTV	CABLE TELEVISION	PNL	PANEL
CU	COPPER	PT	POTENTIAL TRANSFORMER
dBA	UNIT OF SOUND LEVEL	PTZ	PAN/TILT/ZOOM
DPDT	DOUBLE POLE DOUBLE THROW	QTY	QUANTITY
		R	REMOVE
DS	DISCONNECT SWITCH	RCP	REFLECTED CEILING PLAN
EA	EACH	RMC	RIGID METAL CONDUIT
EM	EMERGENCY	RNC	RIGID NONMETALLIC CONDUIT
EMT	ELECTRICAL METALLIC TUBING	RPM	REVOLUTIONS PER MINUTE
		RR	REMOVE AND RELOCATE
ENT	ELECTRICAL NONMETALLIC TUBING	SCA	SHORT CIRCUIT AMPS
		SCBA	STANDARD COLOR AS SELECTED BY ARCHITECT
EPO	EMERGENCY POWER OFF EQUIPMENT		
EQUIP	EQUIPMENT		
EXIST	EXISTING	SF	SQUARE FOOT (FEET)
F	FURNITURE MOUNTED	SFBA	STANDARD FINISH AS SELECTED BY ARCHITECT
FA	FIRE ALARM		
FCP	FIRE ALARM CONTROL PANEL	SPDT	SINGLE POLE, DOUBLE THROW
FLA	FULL LOAD AMPS	SPEC	SPECIFICATION
FMC	FLEXIBLE METALCONDUIT	SPST	SINGLE POLE, SINGLE THROW
FOB	FREIGHT ON BOARD		
FVNR	FULL VOLTAGE NON-REVERSING	S/S	START/STOP
		ST	SINGLE THROW
FVR	FULL VOLTAGE REVERSING	SWBD	SWITCHBOARD
G	GROUND	SWGR	SWITCHGEAR
GEN	GENERATOR	TL	TWIST LOCK
GFCI	GROUND FAULT CIRCUIT INTERRUPTER	TP	TELEPHONE POLE
		TP	TWISTED PAIR
GFP	GROUND FAULT PROTECTION	TTB	TELEPHONE TERMINAL BOARD
HD	HEAVY DUTY	TV	TELEVISION
HID	HIGH INTENSITY DISCHARGE	TVSS	TRANSIENT VOLTAGE SURGE SUPPRESSER
HOA	HAND-OFF-AUTOMATIC	TYP	TYPICAL
HP	HORSE POWER	UF	UNDERFLOOR
HPF	HIGH POWER FACTOR	UGND	UNDERGROUND
HPS	HIGH PRESSURE SODIUM	UPS	UNINTERRUPTIBLE POWER SUPPLY
HV	HIGH VOLTAGE		
HZ	HERTZ	V	VOLTS
IG	ISOLATED GROUND	VA	VOLT AMPERE
IMC	INTERMEDIATE METAL CONDUIT	VFC	VARIABLE FREQUENCY CONTROLLER
IN/IS	INSULATED/ISOLATED	W/	WITH
I/O	INPUT/OUTPUT	W/O	WITHOUT
IR	INFRARED	WP	WEATHERPROOF
J-BOX	JUNCTION BOX	XFMR	TRANSFORMER

DEFINITIONS

NOTE: ALL DEFINITIONS MAY NOT BE USED.

INDICATED: THE TERM "INDICATED" REFERS TO GRAPHIC REPRESENTATIONS, NOTES, OR SCHEDULES ON THE DRAWINGS, OTHER PARAGRAPHS OR SCHEDULES IN THE SPECIFICATIONS, AND SIMILAR REQUIREMENTS IN THE CONTRACT DOCUMENTS. WHERE TERMS SUCH AS "SHOWN", "NOTED", "SCHEDULED", AND "SPECIFIED" ARE USED, IT IS TO HELP THE READER LOCATE THE REFERENCE, NO LIMITATION ON LOCATION IS INTENDED.

DIRECTED: TERMS SUCH AS "DIRECTED", "REQUESTED", AUTHORIZED", "SELECTED", "APPROVED", "REQUIRED", AND "PERMITTED" MEAN "DIRECTED BY THE ENGINEER", "REQUESTED BY THE ENGINEER", AND SIMILAR PHRASES.

APPROVED: THE TERM "APPROVED", WHERE USED IN CONJUNCTION WITH THE ENGINEER'S ACTION ON THE CONTRACTOR'S SUBMITTALS, APPLICATIONS, AND REQUESTS, IS LIMITED TO THE ENGINEER'S DUTIES AND RESPONSIBILITIES AS STATED IN GENERAL AND SUPPLEMENTARY CONDITIONS.

FURNISH: THE TERM "FURNISH" IS USED TO MEAN "SUPPLY AND DELIVER TO THE PROJECT SITE, READY FOR UNLOADING, UNPACKING, ASSEMBLY, INSTALLATION, AND SIMILAR OPERATIONS."

INSTALL: THE TERM "INSTALL" IS USED TO DESCRIBE OPERATIONS AT PROJECT SITE INCLUDING THE ACTUAL "UNLOADING, UNPACKING, ASSEMBLY, ERECTION, PLACING, ANCHORING, APPLYING, WORKING TO DIMENSION, FINISHING, CURING, PROTECTING, CLEANING, AND SIMILAR OPERATIONS."

PROVIDE: THE TERM "PROVIDE" MEANS "TO FURNISH AND INSTALL, COMPLETE AND READY FOR THE INTENDED USE."

INSTALLER: AN "INSTALLER" IS THE CONTRACTOR OR AN ENTITY ENGAGED BY THE CONTRACTOR, EITHER AS AN EMPLOYEE, SUBCONTRACTOR, OR SUB-SUBCONTRACTOR, FOR PERFORMANCE OF A PARTICULAR CONSTRUCTION ACTIVITY, INCLUDING INSTALLATION, ERECTION, APPLICATION, AND SIMILAR OPERATIONS. INSTALLERS ARE REQUIRED TO BE EXPERIENCED IN THE OPERATIONS THEY ARE ENGAGED TO PERFORM.

TECHNOLOGY SYSTEMS: THE TERM "TECHNOLOGY SYSTEMS" IS USED TO DESCRIBE ALL LOW VOLTAGE SYSTEMS GENERALLY REFERRED TO AS "SPECIAL SYSTEMS". THESE SYSTEMS INCLUDE BUT ARE NOT NECESSARILY LIMITED TO ALL SYSTEMS WHICH UTILIZE VOLTAGES OF LESS THAN 71 VOLTS SUCH AS SOUND SYSTEMS, VIDEO SYSTEMS, TV SYSTEMS, SECURITY SYSTEMS, VOICE AND DATA CABLING SYSTEMS, ETC...

GENERAL ELECTRICAL NOTES

1. CLARIFICATION METHODS: AT THE TIME OF BIDDING, BIDDERS SHALL FAMILIARIZE THEMSELVES WITH THE DRAWINGS AND SPECIFICATIONS. ANY QUESTIONS, MISUNDERSTANDINGS, CONFLICTS, DELETIONS, DISCONTINUED PRODUCTS, CATALOG NUMBER DISCREPANCIES, DISCREPANCIES BETWEEN THE EQUIPMENT SUPPLIED AND THE INTENT OR FUNCTION OF THE EQUIPMENT, ETC, SHALL BE SUBMITTED TO THE ARCHITECT/ENGINEER IN WRITING FOR CLARIFICATION PRIOR TO ISSUANCE OF THE FINAL ADDENDUM AND BIDDING OF THE PROJECT. WHERE DISCREPANCIES OR MULTIPLE INTERPRETATIONS OCCUR, THE MOST STRINGENT (WHICH IS GENERALLY RECOGNIZED AS THE MOST COSTLY) THAT MEETS THE INTENT OF THE DOCUMENTS SHALL BE ENFORCED.

2. OWNER FURNISHED ITEMS: THE OWNER WILL FURNISH MATERIAL AND EQUIPMENT AS INDICATED IN THE CONTRACT DOCUMENTS TO BE INCORPORATED INTO THE WORK. THESE ITEMS ARE ASSIGNED TO THE INSTALLER AND COSTS FOR RECEIVING, HANDLING, STORAGE, IF REQUIRED, AND INSTALLATION ARE INCLUDED IN THE CONTRACT SUM.

   A. THE INSTALLER'S RESPONSIBILITIES ARE THE SAME AS IF THE INSTALLER FURNISHED THE MATERIALS OR EQUIPMENT.

   B. THE OWNER WILL ARRANGE AND PAY FOR DELIVERY OF OWNER FURNISHED ITEMS FREIGHT ON BOARD JOB SITE AND THE INSTALLER WILL INSPECT DELIVERIES FOR DAMAGE. IF OWNER FURNISHED ITEMS ARE DAMAGED, DEFECTIVE OR MISSING, DOCUMENT DAMAGED ITEMS WITH THE TRANSPORT COMPANY AND THE OWNER WILL ARRANGE FOR REPLACEMENT. THE OWNER WILL ALSO ARRANGE FOR MANUFACTURER'S FIELD SERVICES, AND THE DELIVERY OF MANUFACTURER'S WARRANTIES AND BONDS TO THE INSTALLER.

   C. THE INSTALLER IS RESPONSIBLE FOR DESIGNATING THE DELIVERY DATES OF OWNER FURNISHED ITEMS AND FOR RECEIVING, UNLOADING AND HANDLING OWNER FURNISHED ITEMS AT THE SITE. THE INSTALLER IS RESPONSIBLE FOR PROTECTING OWNER FURNISHED ITEMS FROM DAMAGE, INCLUDING DAMAGE FROM EXPOSURE TO THE ELEMENTS, AND TO REPAIR OR REPLACE ITEMS DAMAGED AS A RESULT OF HIS OPERATIONS.

3. EXPOSED STRUCTURE AREAS (EXCLUDING MECHANICAL, ELECTRICAL, AND COMMUNICATION SPACES): INSTALL RACEWAYS BETWEEN DECK AND STRUCTURE WHEREVER POSSIBLE IN EXPOSED STRUCTURE CEILING AREAS. ROUTE RACEWAYS IN CONCEALED AREAS WHEREVER POSSIBLE. REFER ALL CONDITIONS WHERE RACEWAYS MUST BE INSTALLED WHICH CANNOT COMPLY WITH THESE REQUIREMENTS TO THE ARCHITECT.

4. SUBMITTALS: PROVIDE SUBMITTALS IN THREE RING BINDERS WITH JOB NAME, SUBCONTRACTOR, AND VOLUME ON THE BINDING. PREPARE TABS FOR EACH SPECIFICATION SECTION REQUIRING SUBMITTALS. PREPARE INDEX OF EQUIPMENT SUBMITTED IN EACH TAB.

5. REFLECTED CEILING PLANS: COORDINATE THE LOCATION OF LIGHT FIXTURES WITH THE ARCHITECTURAL REFLECTED CEILING PLANS. REFER ALL DISCREPANCIES TO THE ARCHITECT AND ENGINEER.

ELECTRICAL SHEET INDEX

SHEET NO	SHEET TITLE
EE001	SYMBOL LEGEND/SHEET INDEX
EE501	TYPICAL MOUNTING HEIGHT DETAILS
EE502	DETAILS
ES101	ELECTRICAL SITE PLAN
ES401	ENLARGED SITE PLANS
ES501	SITE DETAILS
ES502	SITE DETAILS
EP101	POWER PLAN LEVEL ONE
EP102	POWER PLAN LEVEL TWO
EP103	LEVEL ONE, STORAGE/UNHEATED POWER & LIGHTING PLANS
EP104	ROOF POWER PLAN
EP401	ENLARGED KITCHEN POWER PLAN
EP601	ONE-LINE DIAGRAM
EP602	MECHANICAL EQUIPMENT SCHEDULE
EP603	PANEL SCHEDULES
EP604	PANEL SCHEDULES
EP605	PANEL SCHEDULES
EP606	PANEL SCHEDULES
EL101	LIGHTING PLAN LEVEL ONE
EL102	LIGHTING PLAN LEVEL TWO
EL501	LIGHTING DETAILS & SCHEDULES
EL601	LIGHTING FIXTURE SCHEDULE
ET101	TECHNOLOGY PLAN LEVEL ONE
ET102	TECHNOLOGY PLAN LEVEL TWO
ET103	LEVEL ONE, CST READY VEHICLES TECHNOLOGY PLAN
ET401	ENLARGED COMMUNICATIONS ROOM DETAILS
ET601	TECHNOLOGY SCHEDULES & RISER DIAGRAMS
ET602	TECHNOLOGY DETAILS & RISER DIAGRAMS
EY101	SECURITY PLAN LEVEL ONE
EY102	SECURITY PLAN LEVEL TWO
EY103	LEVEL ONE, CST READY VEHICLES SECURITY PLAN
EY601	SECURITY RISER DIAGRAMS & DETAILS
EJ101	LIGHTNING PROTECTION PLAN
EJ501	LIGHTNING PROTECTION DETAILS
FA101	FIRE ALARM PLAN LEVEL ONE
FA102	FIRE ALARM PLAN LEVEL TWO
FA103	LEVEL ONE, STORAGE/UNHEATED FIRE ALARM PLANS
FA601	FIRE ALARM RISER DIAGRAM

GSBS | ARCHITECTURE | LANDSCAPE ARCHITECTURE | PLANNING | INTERIOR DESIGN

375 West 200 South Suite 100
Salt Lake City
Utah 84101

Tel 801.521.8600
Fax 801.521.7913

GSBS-PC.COM

LICENSED PROFESSIONAL ENGINEER
No. 181563
DAVID E. WESEMANN
STATE OF UTAH
02/01/08

SPECTRUM ENGINEERS
175 S MAIN ST, STE 300
SALT LAKE CITY, UT 84111
P:801.328.5151 F:801.328.5155

No.	DATE	REVISION

NORTH SALT LAKE READINESS CENTER AND CIVIL SUPPORT TEAM

Salt Lake City, UT

SYMBOL LEGEND/ SHEET INDEX

PROJECT NO. 2005.003	EE001
DATE 02/01/2008	
DRAWN PSS	
CHECKED	BINDING ORDER 111

File Name: P:\2006\20060331\1Drawings\Sheet\111-31EE-001.dwg Last Plotted: 2008/02/11 @ 4:41 PM By: pss

GENERAL SHEET NOTES

1. DETERMINE MOUNTING HEIGHTS OF ELECTRICAL AND ELECTRONIC EQUIPMENT IN THE FOLLOWING ORDER OF PRIORITY:

   1 – ELEVATIONS (ARCHITECTURAL, ELECTRICAL, MECHANICAL, ETC).
   2 – EQUIPMENT SHOP DRAWINGS.
   3 – FIELD INSTRUCTIONS.

2. LOCATE RECEPTACLES SERVING THE SAME TYPE OF USE AT A UNIFORM HEIGHT UNLESS DIRECTED OTHERWISE.
3. MECHANICAL, ELECTRICAL, AND COMMUNICATION ROOMS: COORDINATE LOCATION OF LIGHTING AND POWER RECEPTACLES WITH EQUIPMENT, PIPING, AND DUCTWORK. DO NOT INSTALL RECEPTACLES BEHIND EQUIPMENT OR WHERE OTHERWISE INACCESSIBLE. POSITION LIGHTING REGARDLESS OF WHERE SHOWN ON DRAWING TO PROVIDE PROPER ILLUMINATION.
4. MOUNT RECEPTACLE BOXES FOR SWITCHES AND RECEPTACLES WITH LONG AXIS OF THE DEVICE VERTICAL UNLESS OTHERWISE INDICATED.
5. SET BOXES WITH PLASTER RINGS FLUSH WITH FINISHED SURFACE.
6. LOCATE BOX COVERS OR DEVICE PLATES SO THEY WILL NOT SPAN DIFFERENT TYPES OF BUILDING FINISHES EITHER VERTICALLY OR HORIZONTALLY.
7. VERIFY ALL DOOR CONDITIONS ON ARCHITECTURAL DRAWINGS PRIOR TO INSTALLING SWITCHES.
8. LOCATE WIRING DEVICES WHICH ARE ADJACENT AND ARE COMPATIBLE VOLTAGES IN ONE PLATE.

⬡SHEET KEYNOTES

1. LOCATE RECEPTACLES BEHIND DRINKING FOUNTAINS.
2. REFER TO ARCHITECTURAL ELEVATIONS FOR PLACEMENT OF OUTLETS.
3. LOCATE AT BOTTOM OF BEAMS (OR JOISTS) OR AT CEILING. (REDUCE SPACING BY .5 PERPENDICULAR TO BEAM OR JOIST DIRECTION.) FOR OTHER CONDITIONS, REFER TO NFPA 72.
4. LOCATE SMOKE DETECTOR ANYWHERE IN SHADED AREA.
5. LOCATE AT BOTTOM OF BEAMS IF EITHER D/H < .1 OR W/H < .4; OTHERWISE, LOCATE IN BEAM POCKET.

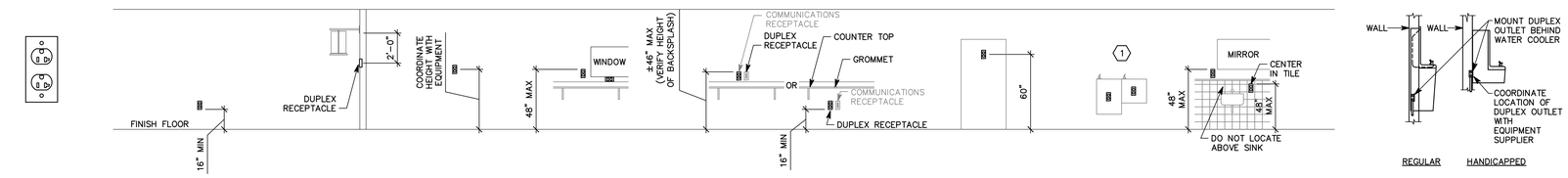

DUPLEX RECEPTACLES | GENERAL USE: NO SPECIAL REQUIREMENTS | WALL BRACKET TV | DEDICATED RECEPTACLE FOR SPECIAL EQUIPMENT | ABOVE COUNTER – TYPICAL | RECEPTACLES ABOVE OR BELOW COUNTER | FULL HEIGHT REFRIGERATOR | DRINKING FOUNTAIN | TILE WALLS | DRINKING FOUNTAIN – SIDE ELEVATIONS

REFER TO ARCHITECTURAL ELEVATIONS FOR PLACEMENT OF OUTLETS.

D6 RECEPTACLE MOUNTING DETAILS
NTS

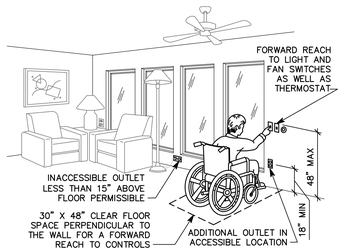

C6 ADA DETAIL
NTS

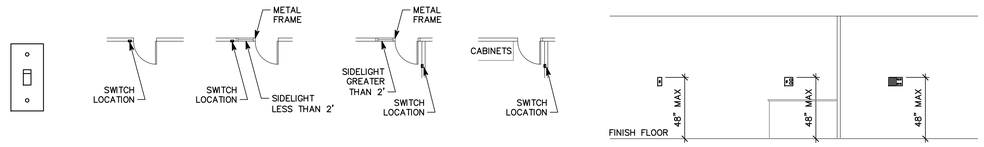

SWITCHES | STANDARD DOOR | DOOR WITH SIDELIGHT LESS THAN 2' | DOOR WITH SIDELIGHT GREATER THAN 2' | DOOR WITH NO PLACE FOR SWITCH AT LATCH SIDE | GENERAL USE: ADA | COMBINATION 48" MAX PLATE FOR SWITCH AND RECEPTACLE IN RESIDENTIAL BATHROOM | LIGHTING CONTROL STATION

C5 SWITCH MOUNTING DETAILS
NTS

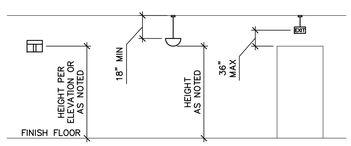

WALL MOUNTED LIGHT FIXTURE | PENDANT LIGHT FIXTURE | PENDANT EXIT SIGNS

B6 LIGHTING MOUNTING DETAILS
NTS

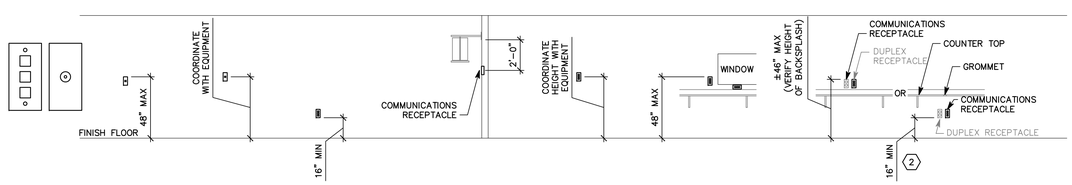

COMMUNICATION RECEPTACLES | WALL PHONE | PAY PHONE | GENERAL USE: NO SPECIAL REQUIREMENTS | WALL BRACKET TV | DEDICATED RECEPTACLE FOR SPECIAL EQUIPMENT | ABOVE COUNTER – TYPICAL | RECEPTACLES ABOVE OR BELOW COUNTER

B5 COMMUNICATION MOUNTING DETAILS
NTS

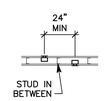

BOXES ON OPPOSITE SIDES OF WALL

B2 BOX MOUNTING DETAILS
NTS

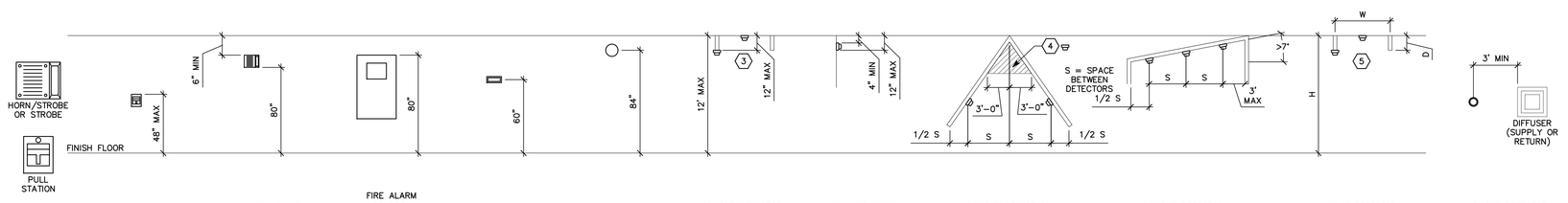

FIRE ALARM | PULL STATION | HORN, CHIME, OR STROBE | FIRE ALARM CONTROL PANEL "FCP" | FIRE SYSTEM ANNUNCIATOR "FSA" | BELL | SMOKE DETECTOR BETWEEN BEAMS | WALL MOUNTED SMOKE DETECTOR | SMOKE DETECTOR ON SLOPED CEILING (PEAKED) | SMOKE DETECTOR ON SLOPED CEILING (SHED) | HEAT DETECTOR BETWEEN BEAMS | SMOKE DETECTOR ADJACENT TO SUPPLY AIR

A6 FIRE ALARM MOUNTING DETAILS
NTS

GSBS | ARCHITECTURE | LANDSCAPE ARCHITECTURE | PLANNING | INTERIOR DESIGN

375 West 200 South Suite 100
Salt Lake City
Utah 84101

Tel 801.521.8600
Fax 801.521.7913

GSBS-PC.COM

LICENSED PROFESSIONAL ENGINEER No. 181563 DAVID E. WESEMANN STATE OF UTAH 02/01/08

SPECTRUM ENGINEERS
175 S MAIN ST, STE 300
SALT LAKE CITY, UT 84111
P:801.328.5151 F:801.328.5155

No.	DATE	REVISION

NORTH SALT LAKE READINESS CENTER AND CIVIL SUPPORT TEAM

Salt Lake City, UT

TYPICAL MOUNTING HEGHT DETAILS

PROJECT NO. 2005.003	EE501
DATE 02/01/2008	
DRAWN PSS	
CHECKED	BINDING ORDER 112

File Name: P:\2006\20060331\1Drawings\Sheet\112-31EE-501.dwg Last Plotted: 2008/02/11 @ 4:41 PM By: pss

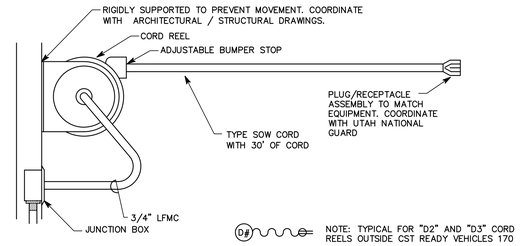

E4 WALL MOUNTED CORD REEL DETAIL
NTS

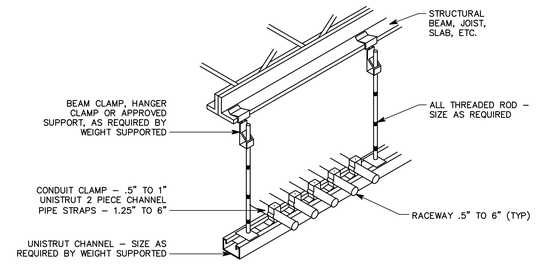

E2 TYPICAL CONDUIT RACK DETAIL
NTS

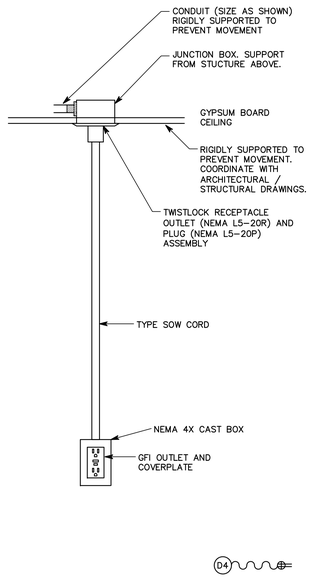

C4 CORD DROP DETAIL
NTS

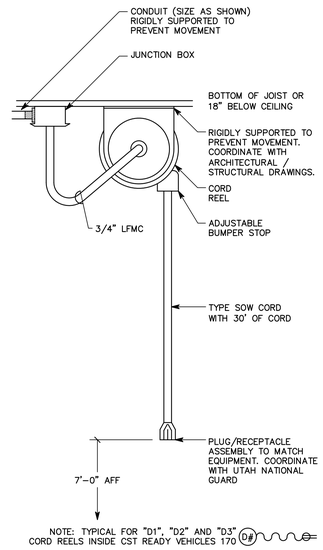

C3 CEILING MOUNTED CORD REEL DETAIL
NTS

NOTE: TIE WIRE SHALL NOT BE USED AS A COMPONENT OF ANY RACEWAY HANGER SYSTEM.

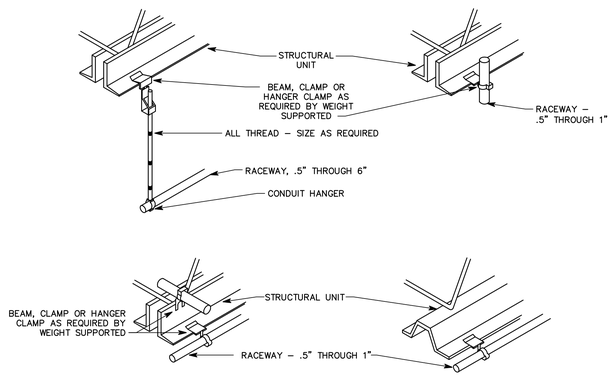

C2 TYPICAL RACEWAY SUPPORT METHODS DETAIL
NTS

(FIXTURE TYPE CSL)

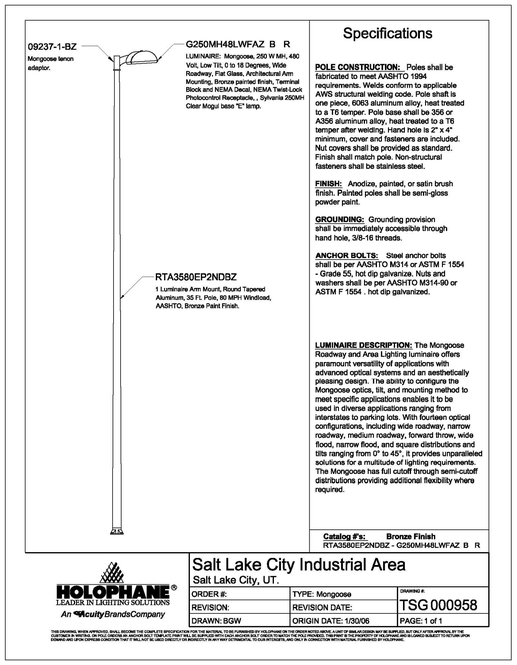

Specifications

POLE CONSTRUCTION: Poles shall be fabricated to meet AASHTO 1994 requirements. Welds conform to applicable AWS structural welding code. Pole shall is one piece, 6063 aluminum alloy, heat treated to a T6 temper. Pole base shall be 356 or A356 aluminum alloy, heat treated to a T6 temper after welding. Hand hole is 2" x 4" minimum, cover and fasteners are included. Nut covers shall be provided as standard. Finish shall match pole. Non-structural fasteners shall be stainless steel.

FINISH: Anodize, painted, or satin brush finish. Painted poles shall be semi-gloss powder paint.

GROUNDING: Grounding provision shall be immediately accessible through hand hole, 3/8-16 threads.

ANCHOR BOLTS: Steel anchor bolts shall be per AASHTO M314 or ASTM F 1554 - Grade 55, hot dip galvanize. Nuts and washers shall be per AASHTO M314-90 or ASTM F 1554 . hot dip galvanized.

LUMINAIRE DESCRIPTION: The Mongoose Roadway and Area Lighting luminaire offers paramount versatility of applications with advanced optical systems and an aesthetically pleasing design. The ability to contigure the Mongoose optics, tilt, and mounting method to meet specific applications enables it to be used in diverse applications ranging from interstates to parking lots. With fourteen optical configurations, including wide roadway, narrow roadway, medium roadway, forward throw, wide flood, narrow flood, and square distributions and tilts ranging from 0° to 45°, it provides unparalleled solutions for a multitude of lighting requirements. The Mongoose has full cutoff through semi-cutoff distributions providing additional flexibility where required.

Catalog #'s: RTA3580EP2NDBZ - G250MH48LWFAZ B R **Bronze Finish**

HOLOPHANE® LEADER IN LIGHTING SOLUTIONS
An EaculityBrandsCompany

Salt Lake City Industrial Area Salt Lake City, UT.		
ORDER #:	TYPE: Mongoose	DRAWING #: TSG 000958
REVISION:	REVISION DATE:	
DRAWN: BGW	ORIGIN DATE: 1/30/06	PAGE: 1 of 1

THIS DRAWING, WHEN APPROVED, SHALL BECOME THE COMPLETE SPECIFICATION FOR THE MATERIAL TO BE FURNISHED BY HOLOPHANE ON THE ORDER NOTED ABOVE. A LIST OF IMMLACCEDER SAY BE SUPPLIED, BUT ONLY AFTER APPROVAL BY THE CUSTOMER. ANY DEVIATIONS FROM THE SPECIFICATION SHOWN ON THIS DRAWING MUST BE SPECIFICALLY NOTED IN WRITING. ALL DIMENSIONS ARE NOMINAL UNLESS SUBJECT TO TOLERANCE. DRAWING AND SPECIFICATION CONTAIN CONFIDENTIAL TEXT. IT SHALL NOT BE USED DIRECTLY OR INDIRECTLY IN ANY WAY DETRIMENTAL TO OUR INTERESTS, AND ONLY IN CONNECTION WITH MATERIAL FURNISHED BY HOLOPHANE.

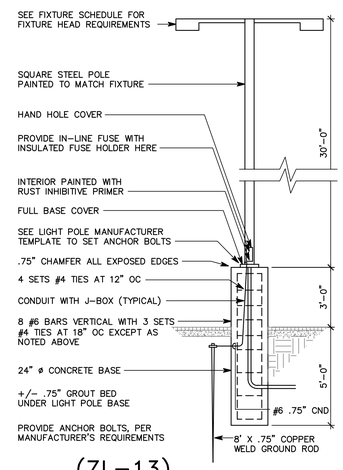

(ZL-13) A3 PARKING LOT LIGHT POLE BASE DETAIL
NTS

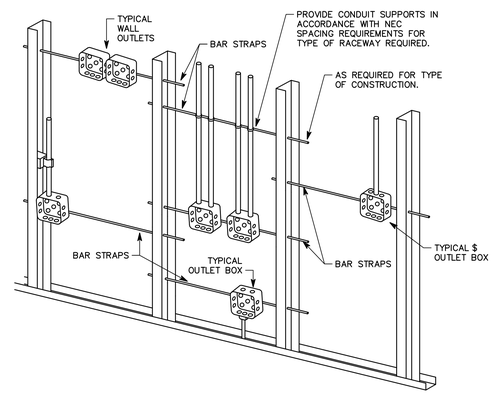

GENERAL NOTES

1. TYPICAL FOR WOOD AND METAL STUD ROUGH-IN.
2. PLASTER RINGS NOT SHOWN.
3. LOCATE ALL OUTLET BOXES IN ACCORDANCE WITH ARCHITECTURAL AND MECHANICAL DRAWINGS AND WITH ALL APPLICABLE SHOP DRAWINGS.
4. IN ACCORDANCE WITH IBC 711.3.2 EXCEPTION 1, OUTLETS ON OPPOSITE SIDES OF WALLS OR PARTITIONS IN THE SAME STUD SPACE IN A RATED FIRE SEPARATION WALL MUST BE SEPARATED BY A MINIMUM OF 24" HORIZONTAL DISTANCE.
5. IN NON-RATED WALLS, OUTLETS ON OPPOSITE SIDES OF WALLS OR PARTITIONS MUST BE SEPARATED BY 16" FOR SOUND ATTENUATION.

A2 TYPICAL ROUGH-IN REQUIREMENTS DETAIL
NTS

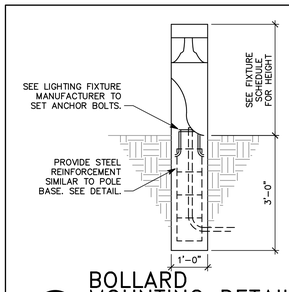

A4 BOLLARD MOUNTING DETAIL
NTS

GSBS | ARCHITECTURE | LANDSCAPE ARCHITECTURE | PLANNING | INTERIOR DESIGN
375 West 200 South Suite 100
Salt Lake City
Utah 84101
Tel 801.521.8600
Fax 801.521.7913
GSBS-PC.COM

LICENSED PROFESSIONAL ENGINEER No. 181563 DAVID E. WESEMANN STATE OF UTAH 02/01/08

SPECTRUM ENGINEERS
175 S MAIN ST, STE 300
SALT LAKE CITY, UT 84111
P:801.328.5151 F:801.328.5155

No.	DATE	REVISION

NORTH SALT LAKE READINESS CENTER AND CIVIL SUPPORT TEAM

Salt Lake City, UT

DETAILS

PROJECT NO. 2005.003	EE502
DATE 02/01/2008	
DRAWN PSS	
CHECKED	BINDING ORDER 113

File Name: P:\2006\20060331\1Drawings\Sheet\113-31EE-502.dwg Last Plotted: 2008/02/11 @ 4:41 PM By: pss

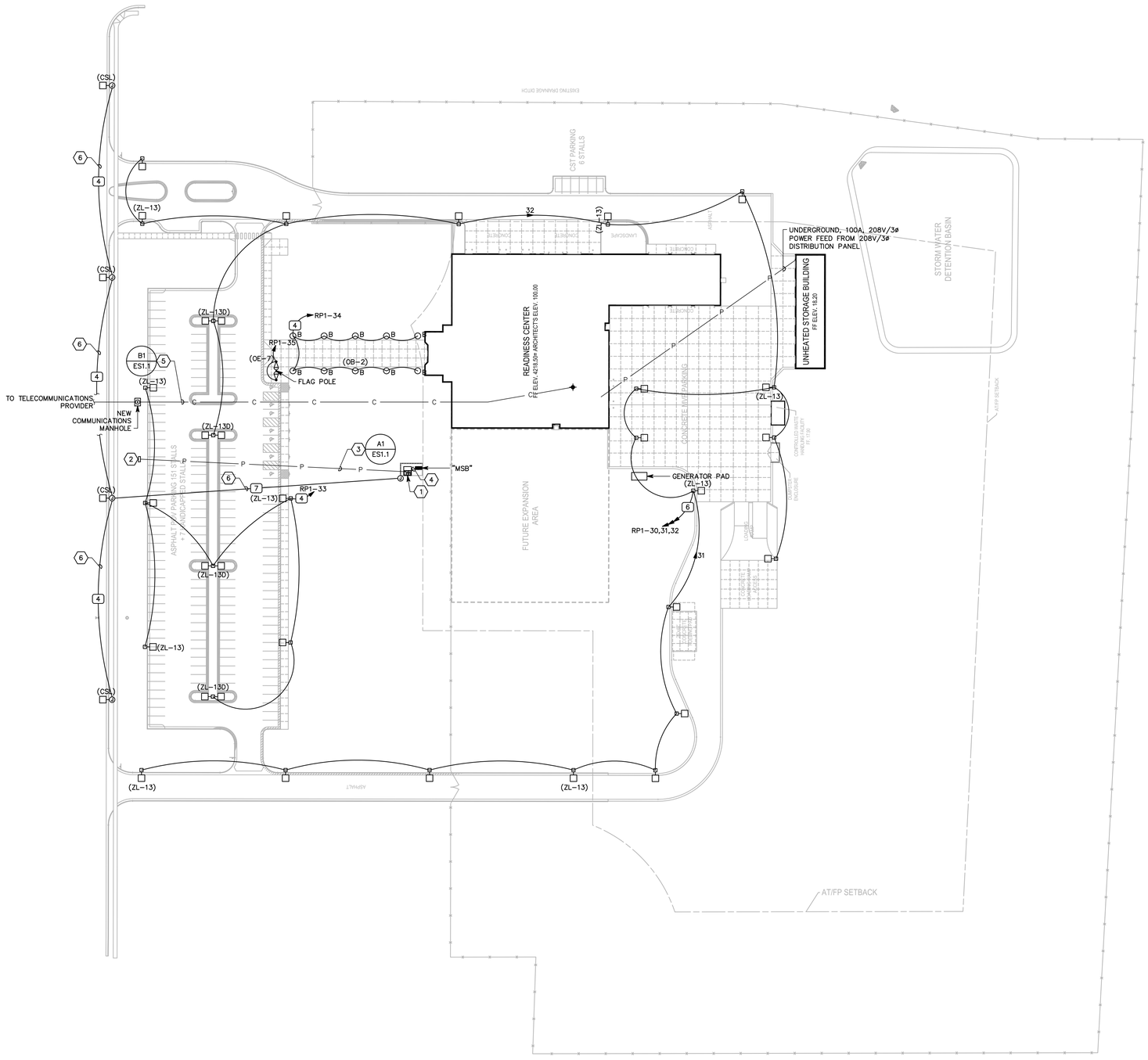

A4 ELECTRICAL SITE PLAN
SCALE: 1"=50'-0"

0 25' 50' 100'

SHEET KEYNOTES

1. NEW UTILITY TRANSFORMER COORDINATE REQUIREMENTS WITH ROCKY MOUNTAIN POWER.
2. EXISTING GROUND SLEEVE.
3. UNDERGROUND PRIMARY.
4. UNDERGROUND SECONDARY. SEE ONE-LINE DIAGRAM.
5. MAIN COMMUNICATIONS CONDUITS 4-EACH 4-INCH.
6. SEE SITE LIGHTING DETAILS ON SHEET ES5.2 FOR FURTHER INFORMATION ON CONNECTION TO STREET LIGHTS. ALL CONDUITS IN THESE RUNS SHALL BE 2-INCHES.

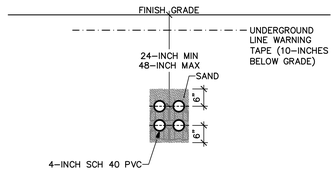

B1 UNDERGROUND COMMUNICATION FEEDER CONDUIT DETAIL
NTS

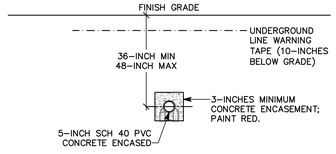

A1 UNDERGROUND PRIMARY FEEDER CONDUIT DETAIL
NTS

GSBS | ARCHITECTURE | LANDSCAPE ARCHITECTURE | PLANNING | INTERIOR DESIGN
375 West 200 South Suite 100
Salt Lake City
Utah 84101
Tel 801.521.8600
Fax 801.521.7913
GSBS-PC.COM

LICENSED PROFESSIONAL ENGINEER
No. 181563
DAVID E. WESEMANN
STATE OF UTAH
02/01/08

SPECTRUM ENGINEERS
175 S MAIN ST, STE 300
SALT LAKE CITY, UT 84111
P:801.328.5151 F:801.328.5155

No.	DATE	REVISION

NORTH SALT LAKE READINESS CENTER AND CIVIL SUPPORT TEAM

Salt Lake City, UT

ELECTRICAL SITE PLAN

PROJECT NO. 2005.003	ES101
DATE 02/01/2008	
DRAWN PSS	
CHECKED	BINDING ORDER 114

File Name: P:\2006\20060331\1Drawings\Sheet\114-31ES-101.dwg Last Plotted: 2008/02/11 @ 4:41 PM By: pss

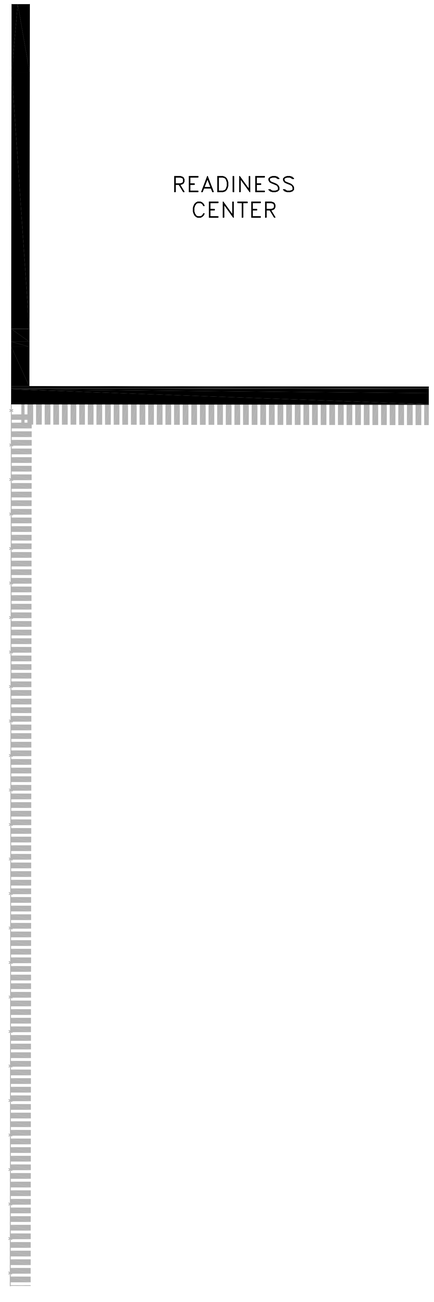

A4 ENLARGED TRANSFORMER PAD LOCATION
SCALE: 1/4" = 1'-0"

GSBS | ARCHITECTURE | LANDSCAPE ARCHITECTURE | PLANNING | INTERIOR DESIGN

375 West 200 South Suite 100
Salt Lake City
Utah 84101

Tel 801.521.8600
Fax 801.521.7913

GSBS-PC.COM

LICENSED PROFESSIONAL ENGINEER
No. 181563
DAVID E. WESEMANN
STATE OF UTAH
02/01/08

SPECTRUM ENGINEERS
175 S MAIN ST, STE 300
SALT LAKE CITY, UT 84111
P:801.328.5151 F:801.328.5155

No.	DATE	REVISION

NORTH SALT LAKE READINESS CENTER AND CIVIL SUPPORT TEAM

Salt Lake City, UT

ENLARGED SITE PLANS

PROJECT NO. 2005.003	ES401
DATE 02/01/2008	
DRAWN PSS	
CHECKED	BINDING ORDER 115

File Name: P:\2006\20060331\1Drawings\Sheet\115-31ES-401.dwg Last Plotted: 2008/02/11 @ 4:40 PM By: pss

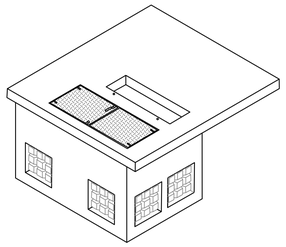

FIGURE 1 – PADVAULT

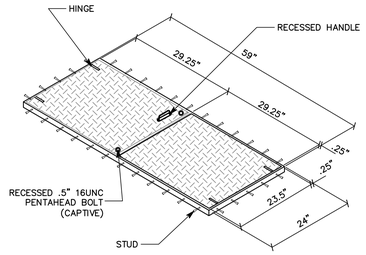

FIGURE 5 – ACCESS DOOR DETAIL

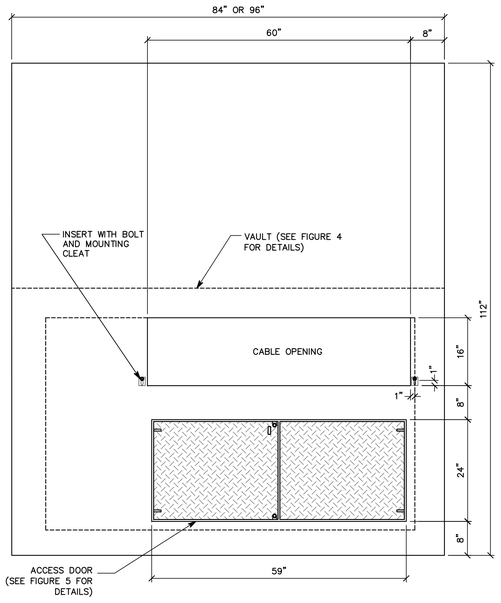

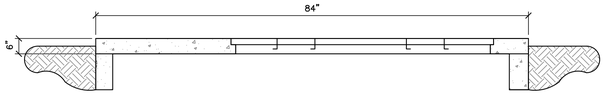

FIGURE 2 – PADVAULT PAD WITH ACCESS 84" OR 96" WIDE

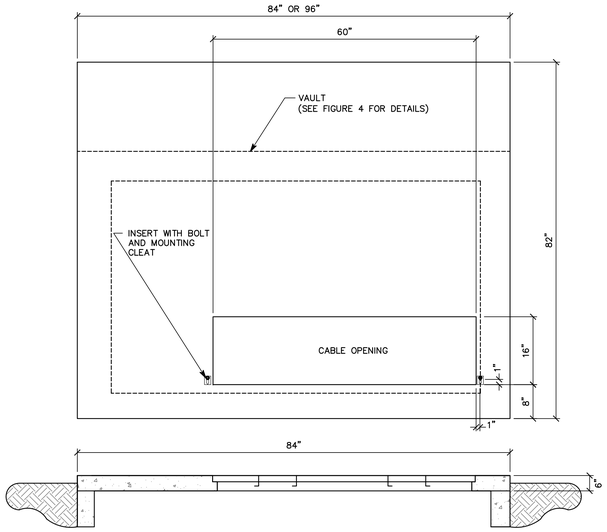

FIGURE 3 – FLAT-PAD OR PADVAULT WITHOUT ACCESS 84" OR 96" WIDE

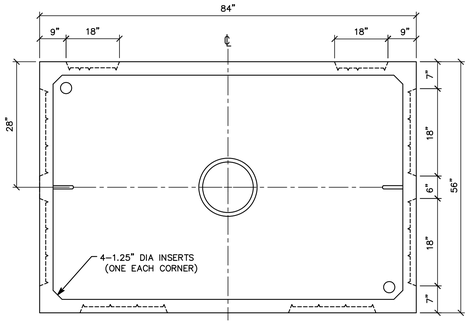

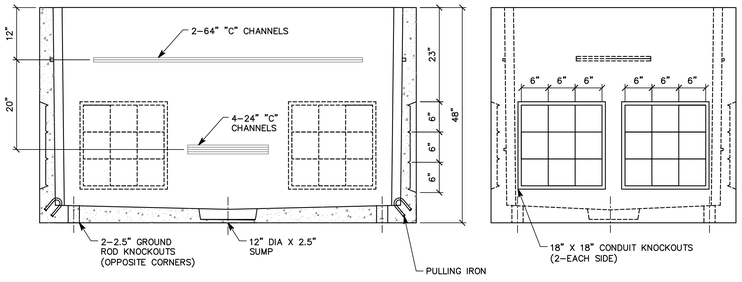

FIGURE 4 – PADVAULT ENCLOSURE

MATERIAL SPECIFICATION

1. SCOPE

THIS MATERIAL SPECIFICATION OUTLINES THE MINIMUM REQUIREMENTS FOR PADVAULTS TO BE USED IN CONJUNCTION WITH PACIFICORP–OWNED THREE–PHASE TRANSFORMERS (SEE FIGURE 1). THE MATERIAL SPECIFICATION APPLIES WHETHER THE PADVAULT IS TO BE INSTALLED BY COMPANY PERSONNEL, CONTRACTOR, CUSTOMER, OR THE SUPPLIER.

2. APPLICABLE DOCUMENTS

THE LATEST REVISIONS OF THE DOCUMENTS, STANDARDS, CODES, AND REQUIREMENTS LISTED IN 2.1, PACIFICORP, AND 2.2, CODES AND STANDARDS, IN EFFECT ON THE DATE OF INVITATION TO BID APPLY TO THE EXTENT SPECIFIED HEREIN.

2.1 PACIFICORP

ZG 301 GENERAL EQUIPMENT BASE AND ENCLOSURE REQUIREMENTS
ZG 311 CONCRETE REQUIREMENTS

2.2 CODES AND STANDARDS

WESTERN UNDERGROUND COMMITTEE GUIDE 2.13, SECURITY FOR PADMOUNTED EQUIPMENT ENCLOSURES

APPLICABLE CODES
ANSI STANDARDS
IEEE STANDARDS
NEMA STANDARDS

3. GENERAL

3.1 APPLICATION INFORMATION

THIS MATERIAL SPECIFICATION STATES MATERIAL AND CONSTRUCTION REQUIREMENTS THAT ARE APPLICABLE TO ALL THREE–PHASE TRANSFORMER PADVAULTS.

3.2 AUTHORIZED MATERIAL SPECIFICATION

THIS MATERIAL SPECIFICATION IS NOT CONSIDERED VALID UNTIL EACH PAGE CONTAINS THE APPPROVAL SIGNATURE OR INITIALS OF THE PERSONS NAMED IN THE TITLE BLOCKS.

4. APPLICABLE STOCK ITEM NUMBERS

MATERIALS BEING SUBMITTED FOR THE FOLLOWING PACIFICORP STOCK ITEM NUMBERS ARE SUBJECT TO EVALUATION IN ACCORDANCE WITH REQUIREMENTS IN THIS MATERIAL SPECIFICATION.

1790021, PAD, FLAT, TRANSFORMER, 3–PHASE, 75–500 KVA
1790023, PADVAULT, TRANSFORMER, 3–PHASE, 75–500 KVA
1790024, PADVAULT, TRANSFORMER, 3–PHASE, 500–2500 KVA

5. DESIGN AND MANUFACTURING REQUIREMENTS

THE PURPOSE OF A THREE–PHASE TRANSFORMER PADVAULT IS TO SUPPORT A THREE–PHASE TRANSFORMER.

5.1 PADVAULT LAYOUT

THE THREE–PHASE TRANSFORMER PADVAULT IS COMPOSED OF TWO PIECES: (1) THE PAD, AND (2) THE ENCLOSURE. UNLESS OTHERWISE APPROVED BY PACIFICORP ENGINEERING, ALL DIMENSIONS AND PLACEMENT OF HARDWARE SHALL CONFORM TO THOSE SHOWN IN FIGURE 2, FIGURE 3, OR FIGURE 4, SHOWN ON THIS SHEET. THE PAD WITHOUT ACCESS (FIGURE 3) MAY BE USED BY ITSELF WHERE FLAT–PAD CONSTRUCTION IS NECESSARY. THE ENCLOSURE IS COMMON TO ALL PADVAULTS COVERED BY THIS MATERIAL SPECIFICATION, ZG 531, PADVAULT–THREE–PHASE SECTIONALIZING CABINET, AND ZG 551, PADVAULT–THREE–PHASE FUSING CABINET.

5.2 INSERTS

TWO .375" 16UNC STAINLESS STEEL OR NYLON THREADED INSERTS AND STAINLESS STEEL BOLTS WITH CLEATS FOR MOUNTING THE TRANSFORMER SHALL BE PLACED IN THE PAD AS SHOWN IN FIGURE 2 AND FIGURE 3.

5.3 PULLING ATTACHMENTS

CABLE PULLING ATTACHMENTS SHALL BE INSTALLED OPPOSITE OF EACH SET OF CONDUIT BREAKOUTS SUCH THAT BLOCKS MAY BE ATTACHED FOR A STRAIGHT CABLE PULL. PULLING ATTACHMENTS SHALL HAVE A MINIMUM PULLOUT STRENGTH OF 6000 POUNDS. ATTACHMENTS SHALL ALLOW THE ATTACHMENT OF A CLEVIS WITH A ONE–INCH DIAMETER THROUGH BOLT. PULLING ATTACHMENTS MAY BE DESIGNED BY THE MANUFACTURER TO MEET THESE REQUIREMENTS.

5.4 CONDUIT ENTRANCES

BANKS OF NINE (9) SIX–INCH SQUARE BREAKOUTS SHALL BE USED FOR CONDUIT ENTRANCES. TWO BANKS OF KNOCKOUTS SHALL BE PLACED IN EACH SIDE AND IN EACH END OF THE ENCLOSURE.

5.5 LIFTING ATTACHMENTS

ENOUGH LIFTING ATTACHMENTS SHALL BE PROVIDED TO ENSURE SAFE INSTALLATION OF ALL PIECES AT THE SITE.

5.6 INSTALLATION

THIS UNIT SHALL BE INSTALLED AT THE SITE BY THE SUPPLIER OR CONTRACTOR. ALL EARTH UNDER THE PADVAULT SHALL BE COMPACTED AND LEVEL PRIOR TO SETTING THE PADVAULT. A CLEAN GRAVEL BASE UNDER THE PAD MAY BE NECCESSARY IN AREAS WHERE POOR DRAINAGE EXISTS. THE JOINT BETWEEN THE PAD AND ENCLOSURE SHALL BE SEALED USING TAR OR MASTIC. THE TOP OF THE PAD SHOULD BE TWO TO FOUR INCHES ABOVE FINAL GRADE, WHEN INSTALLED.

6. TESTING

6.1 TEST COMPLIANCE

PADVAULTS SUBMITTED UNDER THIS MATERIAL SPECIFICATION SHALL MEET ALL TESTS AND REQUIREMENTS CONTAINED IN ZG 301, GENERAL EQUIPMENT BASE AND ENCLOSURE REQUIREMENTS, ZG 311, CONCRETE REQUIREMENTS, AND THIS MATERIAL SPECIFICATION. PADVAULTS WILL ALSO COMPLY WITH REQUIREMENTS IN APPLICABLE NATIONAL STANDARDS.

6.2 SECURITY TEST

TRANSFORMER PADVAULTS MUST BE ABLE TO PASS THE FOLLOWING SECURITY TEST. THE SECURITY TEST IS DESIGNED TO ENSURE THAT PADMOUNT EQUIPMENT, WHICH COMPLIES WITH WESTERN UNDERGROUND COMMITTEE GUIDE 2.13, SECURITY FOR PADMOUNTED EQUIPMENT ENCLOSURES, IS NOT COMPROMISED BY UNEVEN PAD SETTING.

WITH THE APPROPRIATE TRANSFORMER MOUNTED, ATTEMPT TO PASS A #14 AWG SOFT–DRAWN COPPER WIRE THROUGH THE INTERFACE BETWEEN THE CABINET AND PAD. IF THE WIRE CAN BE PASSED THROUGH, THE PADVAULT HAS FAILED THE TEST AND IS NOT ACCEPTABLE.

A5 THREE–PHASE TRANSFORMER PADVAULT (ROCKY MOUNTAIN POWER STANDARD)

NTS

GSBS | ARCHITECTURE | LANDSCAPE ARCHITECTURE | PLANNING | INTERIOR DESIGN

375 West 200 South Suite 100
Salt Lake City
Utah 84101

Tel 801.521.8600
Fax 801.521.7913

GSBS-PC.COM

LICENSED PROFESSIONAL ENGINEER
No. 181563
DAVID E. WESEMANN
STATE OF UTAH
02/01/08

SPECTRUM ENGINEERS
175 S MAIN ST, STE 300
SALT LAKE CITY, UT 84111
P:801.328.5151 F:801.328.5155

No.	DATE	REVISION

NORTH SALT LAKE READINESS CENTER AND CIVIL SUPPORT TEAM

Salt Lake City, UT

SITE DETAILS

PROJECT NO. 2005.003	ES501
DATE 02/01/2008	
DRAWN PSS	
CHECKED	BINDING ORDER 116

File Name: P:\2006\20060331\1Drawings\Sheet\116-31ES-501.dwg Last Plotted: 2008/02/11 @ 4:40 PM By: pss

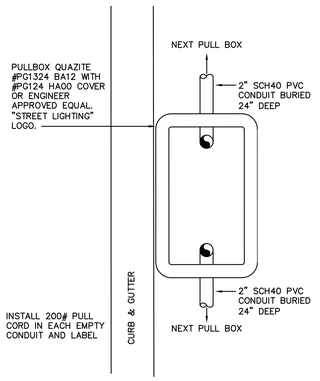

(FIXTURE TYPE CSL)
C6 STREET LIGHT PULL BOX DETAIL
NO SCALE

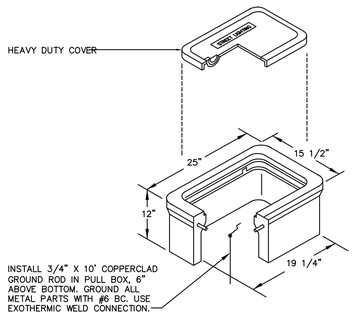

QUAZITE BOX #PG1324 BA12 WITH COVER #PG1324 HA00 OR APPROVED EQUAL.

COVER LOGO "STREET LIGHTING"

REST BOTTOM OF PULL BOX FIRMLY ON A 12 INCH THICK BED OF 1 INCH CRUSHED ROCK, EXTENDING A MINIMUM OF 6" BEYOND THE OUTSIDE EDGE OF BOX PER APWA – 16525.

(FIXTURE TYPE CSL)
C5 STREET LIGHT PULL BOX DETAIL
NO SCALE

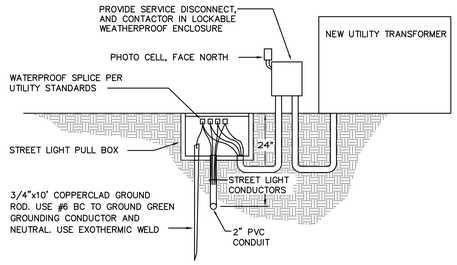

C4 TERMINAL TRANSFORMER FEED DETAIL – SINGLE CIRCUIT (FIXTURE TYPE CSL)
NO SCALE

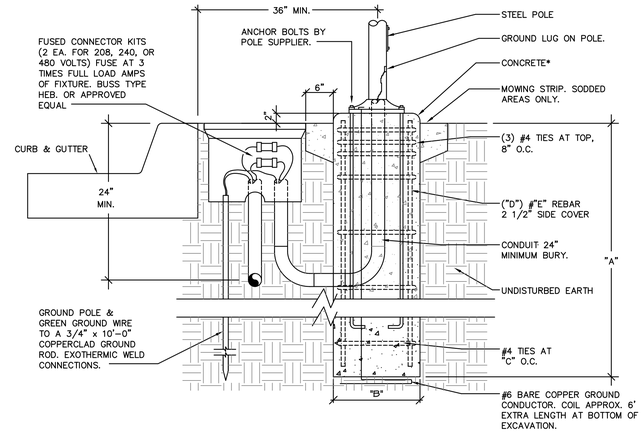

ELEVATION

POLE SIZE	DEPTH "A"	DIAMETER "B"	REBAR TIES O.C. "C"	NO. OF VERT. REBAR "D"	REBAR SIZE "E"
10'-15'	4'-6"	18"	8"	6	#6
16'-25'	6'-0"	24"	8"	8	#7
26'-50'	9'-0"	30"	8"	12	#7

*CONCRETE
CLASS 4000 PER APWA 03304
PLACEMENT PER APWA 03310
CURE PER APWA 03390

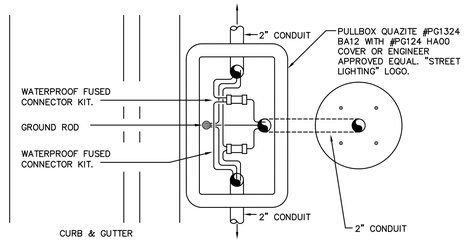

PLAN VIEW

(FIXTURE TYPE CSL)
C2 STREET LIGHT POLE, CONCRETE ANCHOR BASE AND PULL BOX
NO SCALE

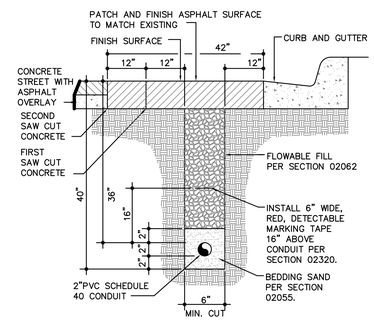

(FIXTURE TYPE CSL)
A6 TRENCH DETAIL – IN STREET
NO SCALE

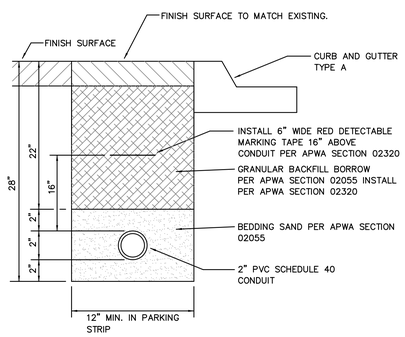

(FIXTURE TYPE CSL)
A5 TRENCH DETAIL – NON-TRAFFIC AREA
NO SCALE

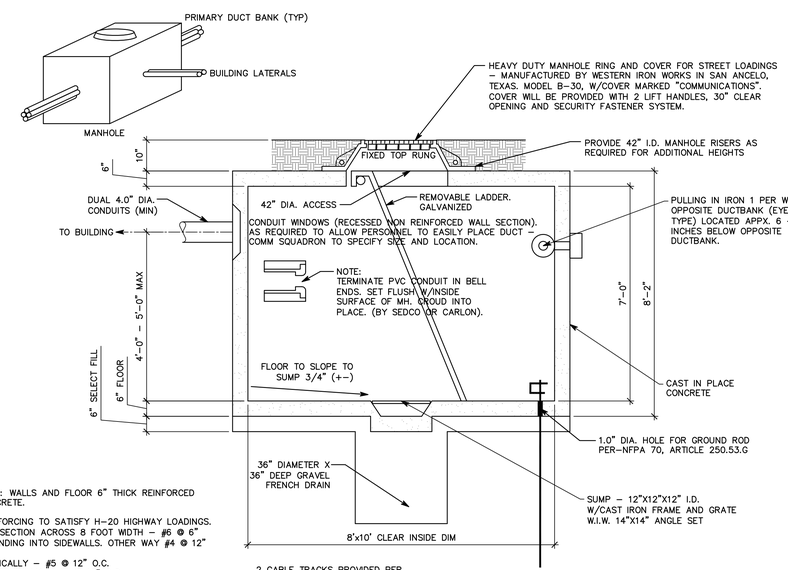

NOTE: WALLS AND FLOOR 6" THICK REINFORCED CONCRETE.

REINFORCING TO SATISFY H-20 HIGHWAY LOADINGS.
TOP SECTION ACROSS 8 FOOT WIDTH – #6 @ 6" EXTENDING INTO SIDEWALLS. OTHER WAY #4 @ 12" O.C.
VERTICALLY – #5 @ 12" O.C.
HORIZONTALLY – #4 @ 12" O.C.
BOTTOM SECTION #4 @ 12" O.C.E.W. THROUGHOUT
SUMP SHALL BE MONOLITHIC.

2 CABLE TRACKS PROVIDED PER LONG WALL. JOSYLN 5125
INSIDE DIAMETER OF CONDUIT WILL BE MINIMUM OF 4 INCHES.

A3 MANHOLE DETAILS FIGURE 2
NTS

GSBS | ARCHITECTURE | LANDSCAPE ARCHITECTURE | PLANNING | INTERIOR DESIGN
375 West 200 South Suite 100
Salt Lake City
Utah 84101
Tel 801.521.8600
Fax 801.521.7913
GSBS-PC.COM

LICENSED PROFESSIONAL ENGINEER No. 181563 DAVID E. WESEMANN STATE OF UTAH 02/01/08

SPECTRUM ENGINEERS
175 S MAIN ST, STE 300
SALT LAKE CITY, UT 84111
P:801.328.5151 F:801.328.5155

No.	DATE	REVISION

NORTH SALT LAKE READINESS CENTER AND CIVIL SUPPORT TEAM

Salt Lake City, UT

SITE DETAILS

PROJECT NO. 2005.003	ES502
DATE 02/01/2008	
DRAWN PSS	
CHECKED	BINDING ORDER 117

File Name: P:\2006\20060331\1Drawings\Sheet\117-31ES-502.dwg Last Plotted: 2008/02/11 @ 4:40 PM By: pss

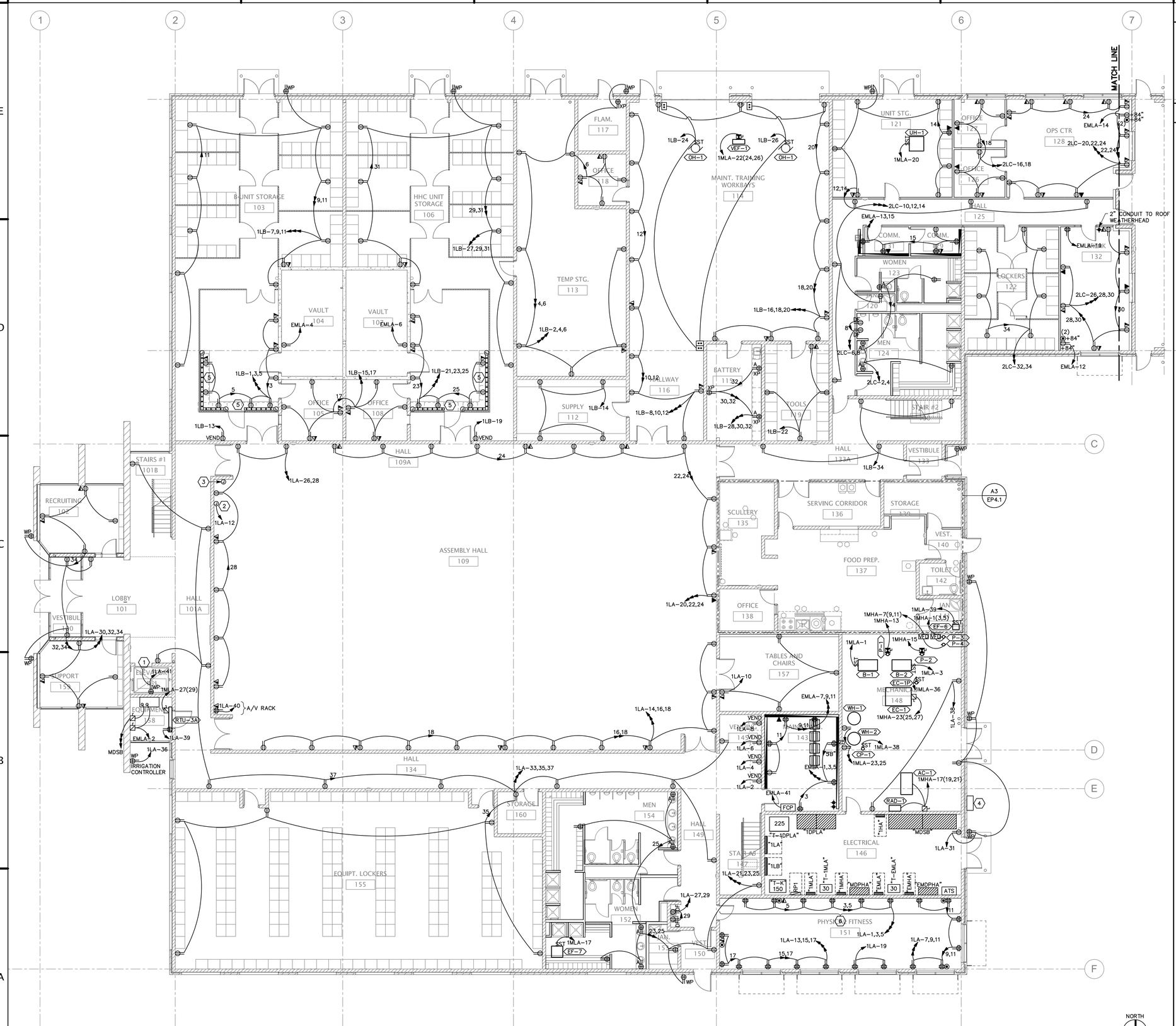

A6 POWER PLAN LEVEL ONE

SCALE: 1/8"=1'-0"

0 4' 8' 16'

GENERAL SHEET NOTES

1. ALL NEUTRAL CONDUCTORS FOR 20-AMP MULTI-WIRE BRANCH CIRCUITS SHALL BE #10 CU OR SIZED TO 175% OF THE RATING OF THE PHASE CONDUCTORS, WHICHEVER IS LARGER.

SHEET KEYNOTES

1. CONNECT TO ELEVATOR PIT LIGHTS.
2. PROVIDE POWER FOR MOTORIZED SCREEN. COORDINATE HEIGHT WITH SCREEN INSTALLER.
3. PROVIDE JUNCTION BOX AT SWITCH HEIGHT IN THE WALL FOR THE MOTORIZED SCREEN CONTROLLER. PROVIDE 1-INCH CONDUIT WITH CONTROL WIRES UP TO MOTORIZED SCREEN. COORDINATE REQUIREMENTS WITH SCREEN INSTALLER.
4. PROVIDE 36"x36"x16"D NEMA 3R JUNCTION BOX FOR FUTURE CONNECTION OF CST DISTRIBUTION TO A FUTURE MANUAL TRANSFER SWITCH. ROUTE FEEDERS TO PANEL "2HB" THROUGH THIS JUNCTION BOX. COIL UP 6-FEET OF SLACK IN THE JUNCTION BOX PRIOR TO EXTENDING THE CONDUCTORS TO PANEL "2HB".
5. PROVIDE DUAL CHANNEL SURFACE MOUNTED RACEWAY WIREMOLD 4000 OR EQUIVALENT. MOUNT TO FENDING ABOVE COUNTER AREA. COORDINATE WITH FENCED ENCLOSURE INSTALLER.
6. MOUNT DEVICES ON THIS WALL BELOW THE MIRROR AT 15-INCHES AFF TO CENTER OF DEVICE. FIELD VERIFY.

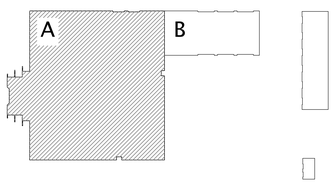

Key Plan

GSBS | ARCHITECTURE | LANDSCAPE ARCHITECTURE | PLANNING | INTERIOR DESIGN
375 West 200 South Suite 100
Salt Lake City
Utah 84101
Tel 801.521.8600
Fax 801.521.7913
GSBS-PC.COM

LICENSED PROFESSIONAL ENGINEER No. 181563 DAVID E. WESEMANN STATE OF UTAH 02/01/08

SPECTRUM ENGINEERS
175 S MAIN ST, STE 300
SALT LAKE CITY, UT 84111
P:801.328.5151 F:801.328.5155

No.	DATE	REVISION

NORTH SALT LAKE READINESS CENTER AND CIVIL SUPPORT TEAM

Salt Lake City, UT

POWER PLAN LEVEL ONE

PROJECT NO. 2005.003	EP101
DATE 02/01/2008	
DRAWN PSS	
CHECKED	BINDING ORDER 118

File Name: P:\2006\20060331\Drawings\Sheet\118-31EP-101.dwg Last Plotted: 2008/02/11 @ 4:40 PM By: pss

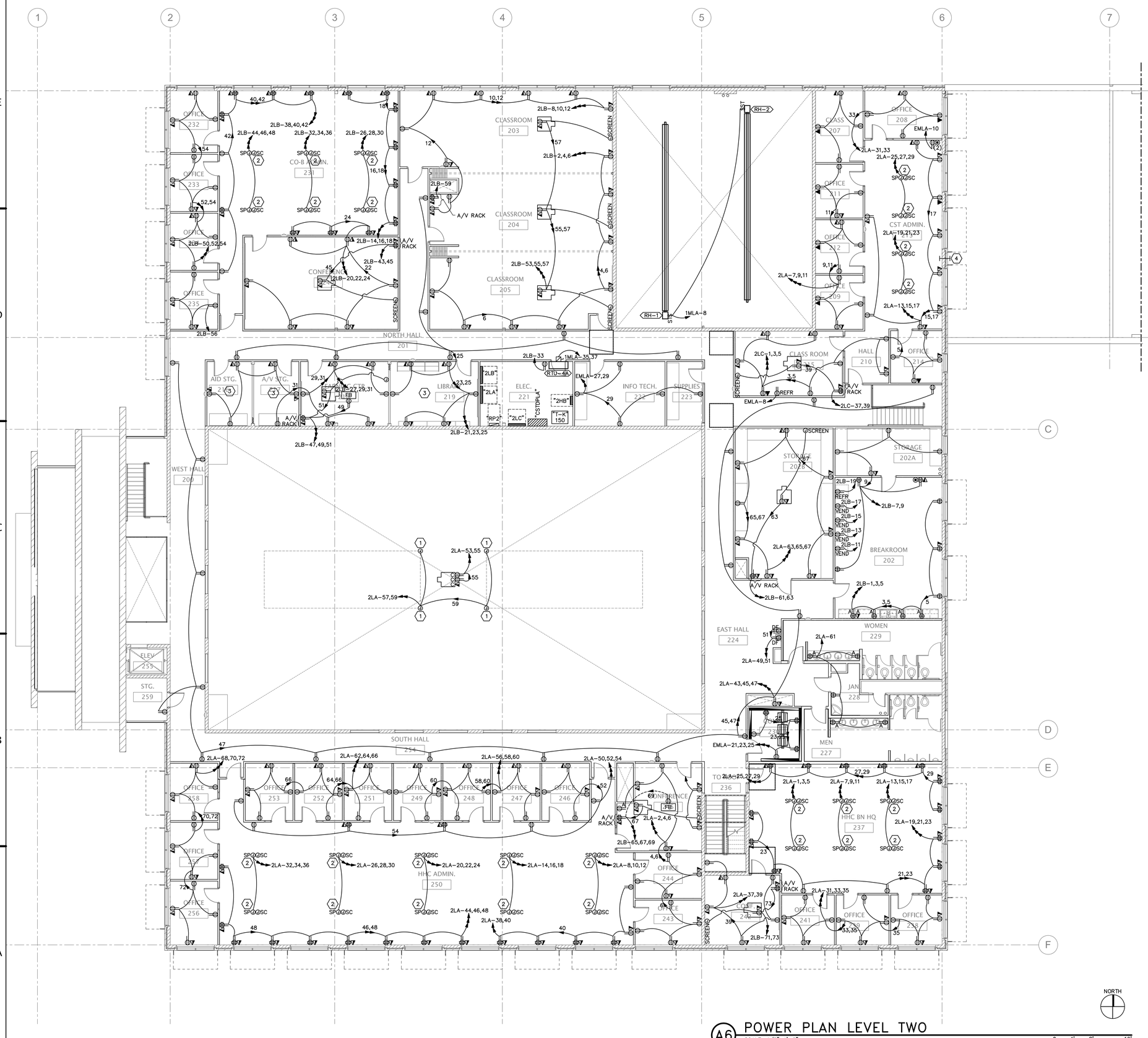

A6 POWER PLAN LEVEL TWO

SCALE: 1/8"=1'-0"

0 4' 8' 16'

SHEET KEYNOTES

1. POWER FOR MOTORIZED SHADES – ADD ALTERNATE BID ITEM.
2. POWER AND COMMUNICATIONS JUNCTION BOXES TO BE MOUNTED ABOVE THE CEILING. CONTRACTOR SHALL COORDINATE POWER POLE DROPS WITH SYSTEMS FURNITURE AND SHALL PROVIDE ALL FINAL POWER AND COMMUNICATIONS CONNECTIONS TO SYSTEMS FURNITURE.
3. COORDINATE POWER AND COMMUNICATIONS OUTLETS IN THIS ROOM WITH MILLWORK. MOUNT OUTLETS IN THE KICKPLATES OF SHELVING WHERE SHELVING IS AGAINST THE WALL WHERE OUTLETS ARE SHOWN. COORDINATE WITH MILLWORK INSTALLER.
4. PROVIDE 2" STUBOUT FOR RADIO ANTENNA MAST.

GSBS | ARCHITECTURE | LANDSCAPE ARCHITECTURE | PLANNING | INTERIOR DESIGN

375 West 200 South Suite 100
Salt Lake City
Utah 84101

Tel 801.521.8600
Fax 801.521.7913

GSBS-PC.COM

LICENSED PROFESSIONAL ENGINEER No. 181563 DAVID E. WESEMANN STATE OF UTAH 02/01/08

SPECTRUM ENGINEERS
175 S MAIN ST, STE 300
SALT LAKE CITY, UT 84111
P:801.328.5151 F:801.328.5155

No.	DATE	REVISION

NORTH SALT LAKE READINESS CENTER AND CIVIL SUPPORT TEAM

Salt Lake City, UT

POWER PLAN LEVEL TWO

PROJECT NO. 2005.003	EP102
DATE 02/01/2008	
DRAWN PSS	
CHECKED	BINDING ORDER 119

File Name: P:\2006\20060331\1Drawings\Sheet\119-31EP-102.dwg Last Plotted: 2008/02/11 @ 4:40 PM By: pss

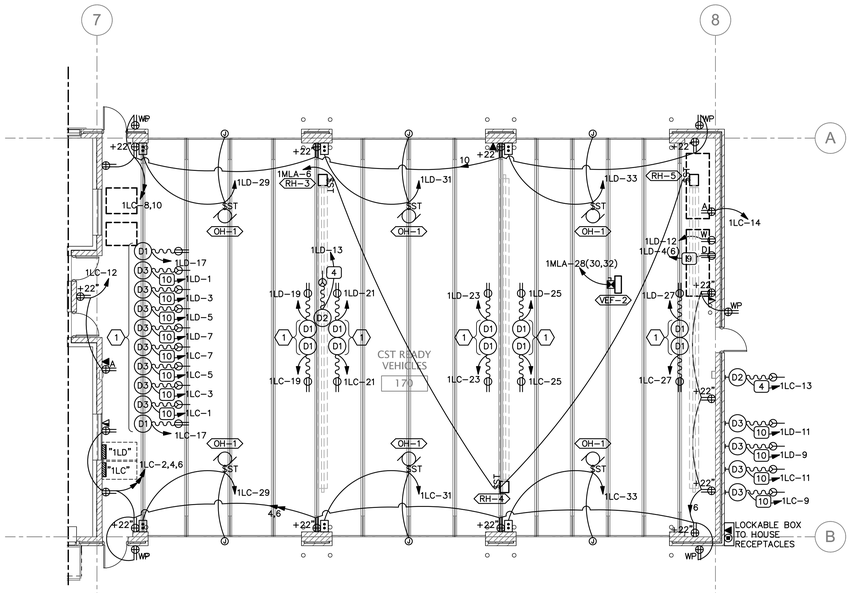

C6 POWER PLAN LEVEL ONE
SCALE: 1/8"=1'-0"

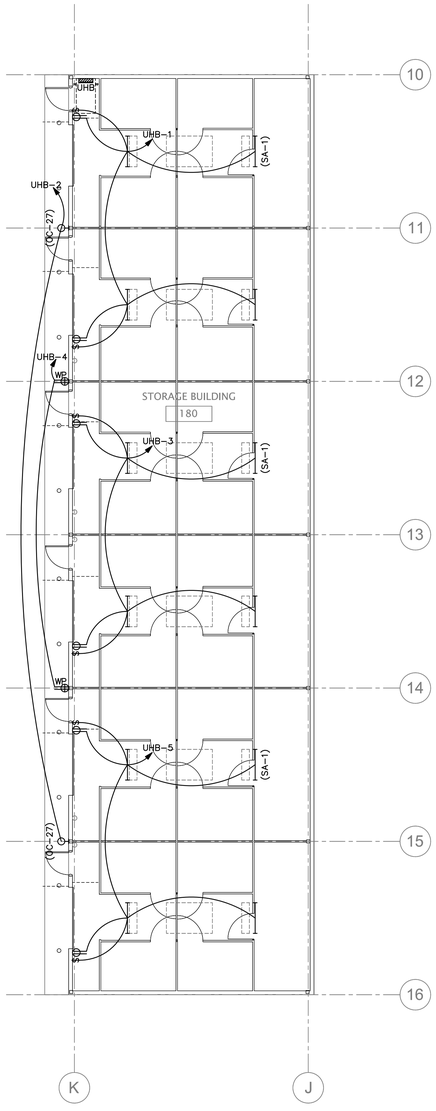

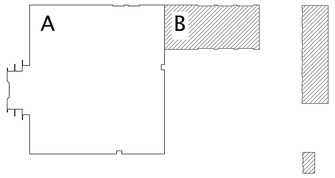

Key Plan

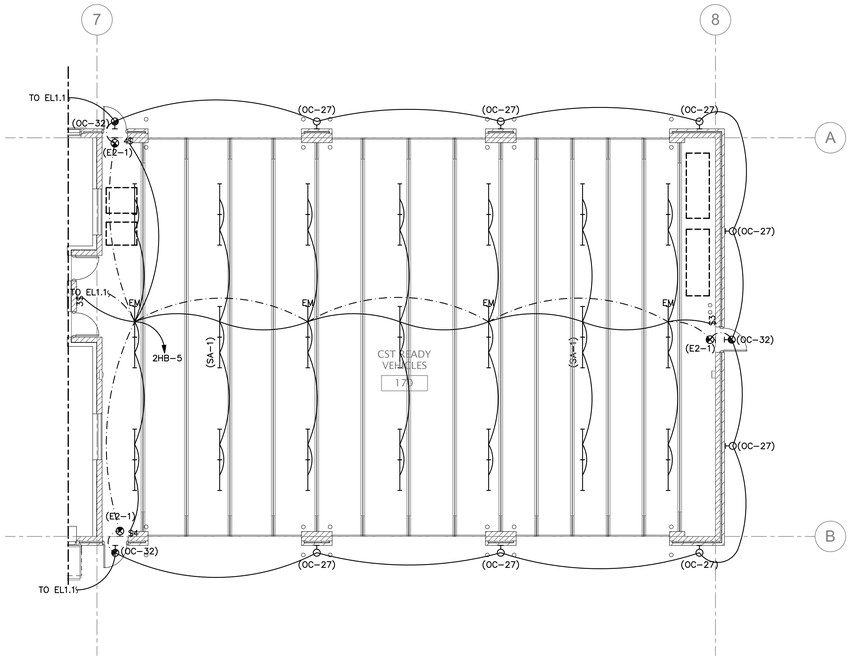

A6 LIGHTING PLAN LEVEL ONE
SCALE: 1/8"=1'-0"

A6 UNHEATED BUILDING POWER & LIGHTING PLAN
SCALE: 1/8"=1'-0"

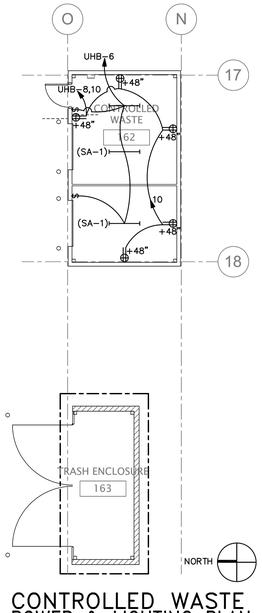

A1 CONTROLLED WASTE POWER & LIGHTING PLAN
SCALE: 1/8"=1'-0"

GENERAL SHEET NOTES

1. ALL FIXTURES THAT ARE HALF SHADED OR LABELED "EM" SHALL BE EQUIPPED WITH A GENERATOR TRANSFER DEVICE INTEGRAL TO THE FIXTURE.

⬡SHEET KEYNOTES

1. COORDINATE MOUNTING LOCATIONS OF CORD REELS WITH FINAL VEHICLE CONFIGURATION. COORDINATE WITH UTAH NATIONAL GUARD CIVIL SUPPORT TEAM.

GSBS | ARCHITECTURE | LANDSCAPE ARCHITECTURE | PLANNING | INTERIOR DESIGN

375 West 200 South Suite 100
Salt Lake City
Utah 84101

Tel 801.521.8600
Fax 801.521.7913

GSBS-PC.COM

LICENSED PROFESSIONAL ENGINEER No. 181563 DAVID E. WESEMANN STATE OF UTAH 02/01/08

SPECTRUM ENGINEERS
175 S MAIN ST, STE 300
SALT LAKE CITY, UT 84111
P:801.328.5151 F:801.328.5155

No.	DATE	REVISION

NORTH SALT LAKE READINESS CENTER AND CIVIL SUPPORT TEAM

Salt Lake City, UT

LEVEL ONE, STORAGE/ UNHEATED POWER & LIGHTING PLANS

PROJECT NO. 2005.003
DATE 02/01/2008
DRAWN PSS
CHECKED

EP103

BINDING ORDER 120

File Name: P:\2006\20060331\1Drawings\Sheet\120-31EP-103.dwg Last Plotted: 2008/02/11 @ 4:40 PM By: pss

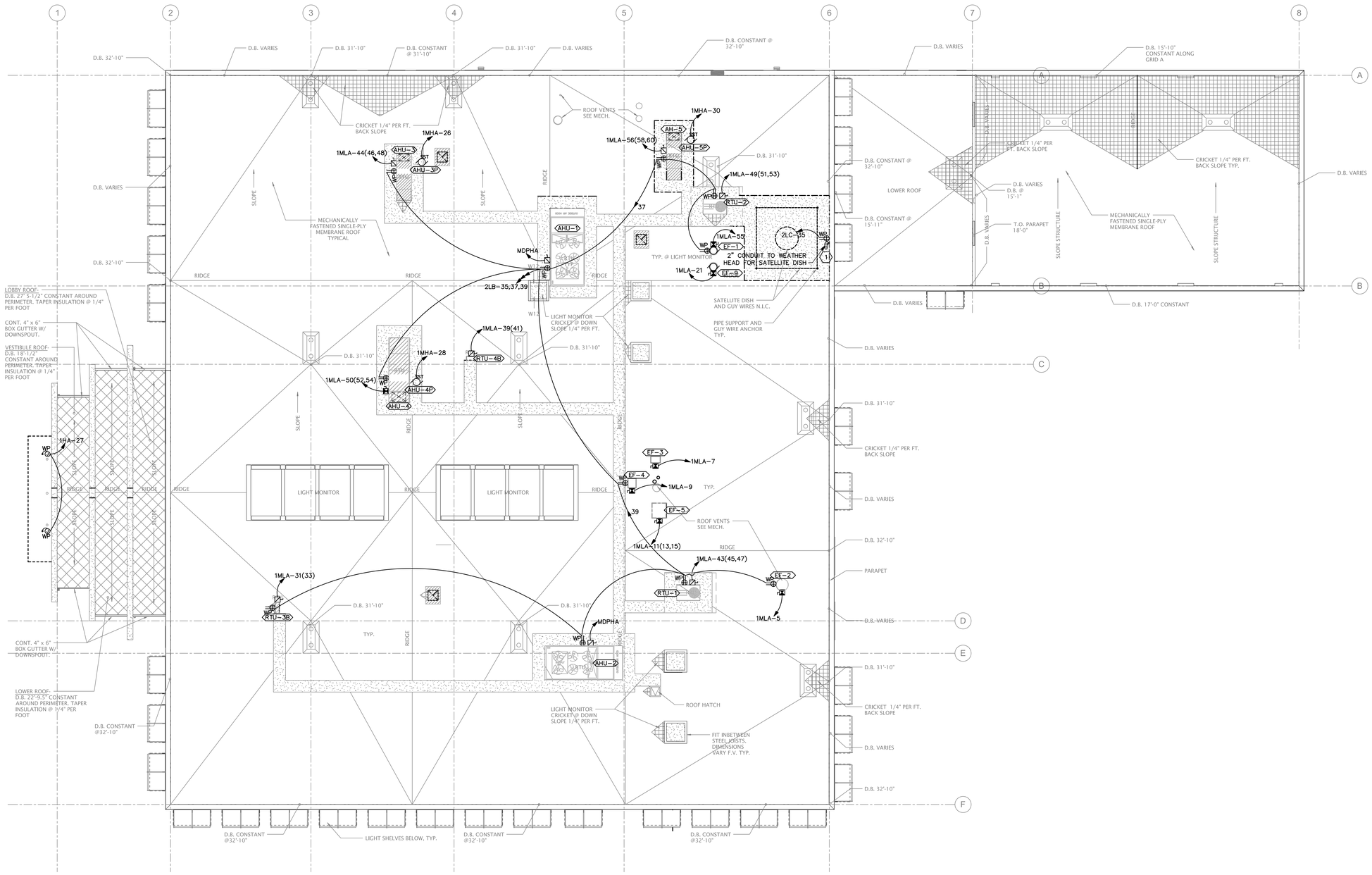

SHEET KEYNOTES

1. COORDINATE EXACT LOCATION OF CONDUIT & WEATHERHEAD WITH UTAH NATIONAL GUARD.
2. PROVIDE 277-VOLT POWER CONNECTION TO HEAT TRACE ON ROOF. COORDINATE WITH HEAT TRACE INSTALLER.

NORTH

A6 ROOF POWER PLAN
SCALE: 3/32"=1'-0"

0 4' 8' 16'

GSBS | ARCHITECTURE | LANDSCAPE ARCHITECTURE | PLANNING | INTERIOR DESIGN

375 West 200 South Suite 100
Salt Lake City
Utah 84101

Tel 801.521.8600
Fax 801.521.7913

GSBS-PC.COM

LICENSED PROFESSIONAL ENGINEER
No. 181563
DAVID E. WESEMANN
STATE OF UTAH
02/01/08

SPECTRUM ENGINEERS
175 S MAIN ST, STE 300
SALT LAKE CITY, UT 84111
P:801.328.5151 F:801.328.5155

No.	DATE	REVISION

NORTH SALT LAKE READINESS CENTER AND CIVIL SUPPORT TEAM

Salt Lake City, UT

ROOF POWER PLAN

PROJECT NO. 2005.003	EP104
DATE 02/01/2008	
DRAWN PSS	
CHECKED	BINDING ORDER 121

File Name: P:\2006\20060331\1Drawings\Sheet\121-31EP-104.dwg Last Plotted: 2008/02/11 @ 4:40 PM By: pss

KITCHEN EQUIPMENT SCHEDULE (FOR REFERENCE AND COORDINATION)

QTY	NO.	BID	DESCRIPTION	REMARKS	UTILITIES
2	1	NO	DISPENSER, RECTANGULAR, SERVICE TRAY AUTO, S.S.	8 SILVERWARE HOLDERS, FOR DISPENSING TRAYS, MOBILE	
2	2	NO	DISPENSERS, TABLEWARE, S.S.	CANTILEVERED, CARRIER, SIZE 2 (20"X20"), RACKS, MODEL A (MOBILE CASTERS) W/TUMBLERS	
1	3	YES	STAND, DRINK, S.S.	MARINE EDGE TOP, W/TRAY SLIDE, DRAIN TROUGH AND DRAIN LINE. 48" W x 28" D x 34" H	1" DRAIN TO FLOOR SINK
1	4	YES	GLASS FILLER WATER COOLER	MOUNTED ON THE STAND, DRINK (HOT) COUNTER, STAINLESS STEEL	3/4" DRAIN TO FLOOR SINK
1	5	NO	DISPENSER, JUICE	TYPE II, STYLE B, SIZE 11, COUNTER MOUNTED, SEPARATE TOGGLE SWITCH REQUIRED FOR INDEPENDENT BOWL OPERATIONS	ELECTRIC 115V. 60 HZ, 1 PH. 1/5 HP
1	6	NO	URN, COFFEE, TWIN, AUTO, 6 GALLON CAPACITY	STYLE 2(COUNTER OR STAND MOUNTED, TWIN OR SINGLE URN) SIZE 3(3 GALLON CAPACITY COMPARTMENT), TYPE III (GAS HEAT), USE WITH ITEM #3, FURNISH TO OPERATE ON NATURAL GAS	GAS 45,000 BTU, ELECTRIC 115V, 60 HZ, 1 PH, 1/2" C.W. INLET
1	7	YES	ICE DISPENSER, LOAD, W/AUTOMATIC DISPENSING HEAD, S.S.	STAINLESS STEEL EXTERIOR, STAINLESS STEEL EVAPORATOR, MANUAL FILL ACCESS DOOR. AIR-COOLED STORAGE BIN TO HAVE 500 LB. CAPACITY	ELECTRIC 115V, 60 HZ, 1 PH, 15 AMPS, 1/4 HP
1	8	NO	COLD FOOD COUNTER, MOBILE, MECH. REF., SELF CONTAINED, 3 COMPARTMENTS	SIZE 3(3 FOOD STORAGE PAN CAPACITY), W/ BUMPERS AND CASTERS, SNEEZE GUARD W/ TRAY RAIL ON BOTH SIDES. 60" W x 30" D x 34" H.	ELECTRIC 110V, 60 HZ, 1 PH, 1/2" DRAIN
1			9 THROUGH 14 NOT USED		
1	15	YES	COUNTER, SERVING Q/6'-0" OPENING W/SNEEZE GUARD AND PASTRY DISPLAY	STAINLESS STEEL, USED TO SUPPORT ITEMS 16 AND 17, SNEEZE GUARD AND DOUBLE DECK PASTRY DISPLAY. 8'-0" W x 30" D x 34" H	NONE
	16	YES	COLD PAN, DROP IN, MECH. REF., 1 PIECE CONSTRUCTION	CONDENSING UNITS LOCATED BELOW COLD PAN, ON/OFF SWITCH, W/ADAPTER BARS, 3 OPENING CAPACITY, STAINLESS STEEL	ELECTRIC 115V, 60 HZ, 1/4 HP, 6 AMPS
1	17	YES	TABLE, HOT FOOD, DROP-IN S.S. W/DRAIN, SIZE 3, 1500 WATTS/OPENING	SIZE 4(4 FOOD STORAGE COMPARTMENTS) 12" X20" X 20" FOOD STORAGE PANS, TYPE B (WITH DRAIN), 1500 WATTS OPENING, WET HEAT W/ 1 1/2" MANIFOLD	ELECTRIC 220V, 60 HZ, 3 HP, 9KW
1	18	YES	TRAY SLIDE, S.S., WALL MOUNT	TRAY SLIDE W/ SUPPORTS TO ACCOMMODATE 14" W X 18" L TRAY, USE W/ ITEMS 15, 16, 17. 7'-0" W x 18" D. EXTEND OVER WALL OPENING	NONE
1	19	NO	CABINET, FOOD WARMING, REACH-IN	MODIFIED COMMERCIAL 2 COMPARTMENTAL, EACH COMPARTMENT SHALL HOLD 10 OR MORE 12" X 20" X 2" FOOD SERVICE PANS AND A MINIMUM OF THIRTEEN 18" X 26" BUN PANS, OR TRAYS OF 12" X 20" X 2" FOOD SERVICE PANS	ELECTRIC 208V, 60 HZ, 1 PH
1	20	YES	GRIDDLE, SELF HEATING W/STAND	TYPE II, SIZE 2 GRIDDLE STAND, LEG MOUNTED. 36" W PROVIDE FLEX GAS HOSE & TETHER	GAS 81,000 BTU, ELECTRIC 115V, 60HZ, 1 PH. CONTROL
1	21	YES	HOOD, EXHAUST, S.S. WITH MAKE-UP AIR PLENUM	W/VAPOR PROOF FLUORESCENT LIGHTS, W/ ENCLOSURE PANELS, (ENDS CLOSED) W/FIRE SUPPRESSION SYSTEM, (CHEMICAL MOUNTED OVER GRIDDLE). 5' W x 4' D	ELECTRIC MOTOR (SEE MECHANICAL SYSTEM), WATER
1			22 THROUGH 24 NOT USED		
1	25	YES	DISH TABLE	CONSTRUCTED OF 14 GAUGE STAINLESS STEEL, W/6" BACKSPLASH, W/SCRAP TROUGH. 9'-6" x 2'-6"	NONE
1	26	YES	GARBAGE DISPOSAL	3 HP STAINLESS STEEL, CENTER, CIRCUIT BREAKER, AUTOMATIC REVERSING, POSITIVE FLUSH, 6"-8" DIAMETER THROAT CUT-OUT,USED W/ ITEM #25 DISHWASHING AREA	ELECTRIC 208V, 60HZ, 3 PH, 1/2 CW
1	27	YES	SPRAY ASSEMBLY, WALL MOUNT	W/WALL BRACKET, (HORIZONTAL WATER SUPPLY) SPRAY W/WATER MIXING CONTROL VALVE, (7 1/4" TO 8 1/4" ON CENTER), SELF-CLOSING SPRAY VALVE	1/2" HW, CW IPS FEMALE INLET
	28		NOT USED		
1	29	YES	SHELF, WALL MOUNT	CONSTRUCTED OF ONE INCH STAINLESS STEEL TUBING W/STAINLESS STEEL BRACKET SUPPORTS, 16 GA. S.S. 2" BACKSPLASH, ROUNDED CORNERS ALL EDGES TURNED UP 1 1/2", TO BE USED W/D-33. 7'-0" W	
1	30	YES	DISHWASHING MACHINE, COMMERCIAL STATIONARY, ELECTRIC	STYLE II, SIZE 50-20, (20" X 20") RACKS, (STRAIGHT FEED), 50 RACKS/HOUR, (W/O DETERGENT METER)	ELECTRIC 208V, 60HZ, 3 PH, 1 HP, 50KW HEATING ELEMENTS, 18 KW BOOSTER, 1/2" INLET, 2" DRAIN
1	31	YES	HOOD, EXHAUST, DISHWASHER CONDENSATE	USE W/ ITEM #30. 4'-0" W x 2'-6" D.	NONE
	32	YES	DISHTABLE, CLEAN, S.S. W/LOWER STORAGE SHELF	USE W/ ITEM #30. AS/PLAN	NONE
1	33	YES	SINK, S.S., 14 GALLON NO. 3/ 4 FIN. 3, 3 COMPARTMENT W/DRAIN BOARDS AND SWING FAUCET	W/SWING FAUCETS AND MECH. LEVER DRAINS, SINK COMPARTMENTS WILL BE 20" W X 24" D 16" H W/ ADJUSTABLE BULLET FOOT, W/9" BACKSPLASH, COVED CORNERS, SINGLE FAUCET FOR THIRD SINK, 180° WATER (PART OF ITEM #32)	1/2" HW AND CW, 1 1/2" DRAIN
1	34	YES	GARBAGE DISPOSAL	3 HP, CONTROL CENTER, CIRCUIT BREAKER, AUTO REVERSING, POSITIVE FLUSH, 6"-8" DIA. THROAT CUT OUT	ELECTRIC 208V, 60HZ, 3 PH, 1/2" CW, 2" WASTE DRAIN
1	35	YES	SPRAY ASSEMBLY, WALL MOUNT, PRE-RINSE	W/WALL BRACKET, (HORIZ. WATER SUPPLY) SPRAY UNIT W/ WATER MIXING CONTROL VALVE, (7 1/4" TO 8 1/4" ON CENTER) SELF CLOSING SPRAY VALVE	1/2" HW AND CW IPS FEMALE INLET
1	36	YES	HEATER, SINK	9 KW, 180 DEGREE HOT WATER BOOSTER, FOR FINAL RINSE COMPARTMENT OF THE POT AND PAN SINK, ITEM #33	ELECTRIC 208V, 60HZ, 1 PH, 9 KW, 3/4" INLET
1	37		NOT USED		
1	38	YES	HOOD, EXHAUST, S.S.	FOR FINAL RINSE COMPARTMENT OF THE POT AND PAN SINK	ELECTRIC MOTOR (SEE MECHANICAL PLAN)
1	39	YES	FLOOR TROUGH	USED FOR CAN WASHING AREA	3" DRAIN
1	40	YES	SPRAY ASSEMBLY, WALL MOUNT, PRE-RINSE	W/WALL BRACKET, (HORIZONTAL WATER SUPPLY), SPRAY UNIT W/WATER MIXING CONTROL VALVE, (7 1/4" TO 8 1/4" ON CENTER), SELF-CLOSING SPRAY VALVE	1/2" HW AND CW IPS FEMALE INLET
1	41	YES	HEATER, HOT WATER, BOOSTER	15 KW, 180 DEGREE HOT WATER FOR THE DISHWASHING MACHINE (MECHANICAL TO PROVIDE 140° INLET WATER)	ELECTRIC 208V, 60 HZ, 3 PH, 15 KW
1			42 THROUGH 44 NOT USED		
1	45	YES	KETTLE, STEAM JACKETED, S.S., 20 GALLON, GAS HEATED	SIZE 2, LEG MOUNTED, W/3" TANGENT DRAW-OFF ASSEMBLY, HINGED COVER, SWING SPOUT, (FURNISH TO OPERATE ON NATURAL GAS) QUICK GAS DISCONNECT REQUIRED & GAS HOSE W/ TETHER.	GAS 110,000 BTU, 115V, 60HZ, 1 PH, 1/2" CW INLET
1	46	YES	PAN, FRYING AND BRAISING, TILTING TYPE, S.S., 7" DEEP, 30 GALLON CAPACITY, GAS	TYPE II (W/O EXTENSION FRAMES AND TRAYS) CLASS B (NON-INSUL PAN SIDEWALLS) STYLE A (FLR. MOUNTED)SIZE 2 (40" L X 23" D X 7" H PAN DEPTH), MODEL A (W/O CASTERS) W/ ENCLOSED TILTING MECHANISM, W/ HINGED COVER, BURNER INDICATOR LIGHTS ARE REQUIRED, (FURNISHED TO OPERATE ON NATURAL GAS) QUICK GAS DISCONNECT IS REQUIRED & GAS HOSE W/ TETHER.	GAS 70,000 BTU, 115V, 60HZ, 1 PH, CONTROLS
1	47	YES	METER, WATER W/MIXING VALVE	WITH HOT AND COLD WATER MIXING VALVE, TEMP CONTROLS, CAPACITY 70 LBS./MINUTE, W/MOUNTING BRACKETS, 100/200/400 LBS. W/STANDARD DIAL SETTING	ELECTRIC 120V, 60HZ, 1 PH, 1/2" HW AND CW
1	48	YES	RANGE, HEAVY DUTY, GAS, COMMERCIAL, OPEN TOP, W/4 OPEN BURNERS	Q/OVEN 4 BURNERS, STAINLESS STEEL FRONT AND SIDES, Q/6" ADJUSTABLE LEGS, FURNISHED TO OPERATE ON NATURAL GAS. QUICK GAS DISCONNECT IS REQUIRED & GAS HOSE W/ TETHER.	GAS 162,000 BTU, 115V, 60 HZ, 1 PH, CONTROLS
1	49	YES	OVEN, BAKING AND ROASTING, S.S., FORCED CONC\\ECTION, GAS, 2 COMP.	TYPE II (TWO OVEN COMPARTMENTS) SIZE 1 (STAND. OVEN CAVITY) W/2 SPEED BLOWER MOTOR, STAINLESS STEEL INTERIOR, STAINLESS STEEL EXTERIOR, DOORS TO HAVE HEAT RESISTING SAFETY VIEWING GLASS, FURNISHED TO OPERATE ON NATURAL GAS, QUICK GAS DISCONNECT REQUIRED & GAS NOSE W/ TETHER.	GAS 230,000 BTU, 115V, 60HZ, 1 PH, 1 1/2HP, 2KW
1	50	YES	HOOD, EXHAUST, S.S.	W/VAPOR PROOF FLUORESCENT LIGHTS, W/ENCLOSED PANES, (ENDS CLOSED), W/ BAFFLES, NFPA 13 AND 96 FIRE EXTINGUISHING SYSTEM, WATER OR DRY CHEMICALS, W/GREASE AUTO WASHDOWN SYSTEM AND CLEAN ACCESS DOOR FOR CLEANOUT. 14'-0" x 4'-6" D	ELECTRIC, WATER
	51		NOT USED		
1	52	YES	FLOOR TROUGH, W/GRATE	USED W/ ITEMS 45 AND 46. 6'-0" W.	3" DRAIN
1	53	YES	SINK, S.S., VEGETABLE PREP., #3 OR #4 FIN., COVED CORNERS, ASTM SERIES	2 COMPARTMENTS, W/DRAIN BOARDS W/SWING FAUCETS AND MECHANICAL LEVER DRAIN, SINK COMPARTMENT WILL BE 24" W X 28" D X 14" H, WITH ONE 1/4" WIRE MESH MESH BASKET 20" W X 20" D X 12" H, STAINLESS STEEL	1/2" HW AND CW, SWING WATER SPOUT, 1" DRAIN
1	54	YES	GARBAGE DISPOSAL MACHINE COMMERCIAL, 3 HP	3 HP, CONTROL CENTER, CIRCUIT BREAKER, AUTO REVERSING, POSITIVE FLUSH 6"-8" DIAMETER THROAT CUT OUT	ELECTRIC 208V, 60HZ, 3 PH, 1/2" INLET, 2" WASTE DRAIN
1	55	YES	VEGETABLE PEELING MACHINE, 30 LB. CAPACITY, W/GARBAGE DISPOSAL	STYLE 2 (FLOOR MOUNTED) 30 LBS OF POTATOES PER CHARGE), COMPLETE W/DISPOSAL, WASTE AND DISPOSER STAND BASE, STAINLESS STEEL BASE AND ABRASIVE OR RIVVED WALL CYLINDER	ELECTRIC 115V, 60HZ, LPH, 1 1/4 HP, DISPOSAL MOTOR, 1/2 HP, 1/2" CW, 2 1/2" DRAIN
	56	NO	SHELF, S.S., WALL MOUNT	CONSTRUCTED OF ONE INCH STAINLESS STEEL TUBING W/STAINLESS STEEL BRACKETS SUPPORTS, 16 GA. STAINLESS STEEL, 2" BACKSPLASH, ROUNDED CORNERS, ALL EDGES TURNED UP 1 1/2", TO USED W/D-3-3. PROVIDE FLOOR MOUNT TABLE WITH THIS ITEM.	
	57	NO	ICE MAKING MACHINE, CUBE, AUTO, MECHANICAL, SELF CONTAINED, REFRIG.	TYPE II (AIR COOLED CONDENSER) 400 LB. CAPACITY, GRADE B, (STAINLESS STEEL CAB., 300 SERIES ONLY)	ELECTRIC 208V, 60HZ, 1 PH, 2 HP, 4" FLOOR DRAIN
1	58	YES	SINK, HAND LAV., S.S.	#3 OR #4 FIN., CITED DIM. W/SOAP/TOWEL DISPENSER, WRIST ON/OFF LEVER	1/2" HW AND CW, 1 1/2" DRAIN
1	59	NO	TABLE, FOOD PREP, S.S.	TYPE III (ROLLED RIM TOP) SIZE 1, 72" X 30" X 36", W/UNDERSHELF, GRADE A (STAINLESS STEEL TOP, FRAME AND LEGS, STYLE II, FIXED IN PLACE W/ELECTRIC OUTLETS	ELECTRIC 110V, 60HZ, 1 PH
1	60	NO	RACK, TABLE, S.S., KITCHEN UTENSILS, TABLE MOUNT, W/SLIDING HOOKS	USE W/ ITEM #59. 6'-0" W.	NONE, MOUNT ON PREP TABLE
1	61		NOT USED		
2	62	NO	TABLE, S.S., MOBILE, FOOD PREP, ROLLED RIM TOP	TYPE III, ROLLED RIM TOP, SIZE 3, (48" L X 30" W X 36" H) CLASS I (W/UNDERSHELF) GRADE A , STAINLESS STEEL, STYLE II, W/CASTERS	3/4" DRAIN REQUIRED TO SUPPORT DRAIN TROUGH TO FLOOR DRAIN
1	63	NO	MIXING MACHINE, FOOD, ELEC. (VERT.), COMM. TYPE, 20 QT. CAPACITY	SIZE 20 (20 QUART BOWL CAPACITY) BENCH MOUNTED W/VEGETABLE CUTTING, SLICING ATTACHMENTS	ELECTRIC 110V, 60HZ, 1 PH, 1/4 HP
1	64	NO	STAND, MIXER, W/ATTACHMENT, METAL RACK	FOR USE W/ #63, W/UNDERSHELF	NONE
	65	NO	OPENER, CAN, HEAVY DUTY, ELEC.	TYPE I, PORTABLE, W/LID LIFTER, USE W/ ITEM 59	ELECTRIC 115V, 60HZ, 1 PH
1	66	NO	MEAT SLICING MACHINE, AUTO. ELEC.	80 SLICES PER MINUTE, SIZE 1, BENCH REQUIRED	ELECTRIC 115V, 60HZ, 1 PH, 1/3 HP
1	67	NO	FROZEN FOOD CAB., MECH., REF., COMM.,SELF-CONTAINED, REACH IN, ELECTRIC, 20 CUBIC FEET	20 CUBIC FEET, MINIMUM, W/LEGS. DOUBLE SECTION.	ELECTRIC 115V, 60HZ, 1 PH, 1/4 HP
1	68	NO	REFRIGERATOR, MECH., COMMERCIAL, SELF-CONTAINED, REACH IN, ELEC.	TYPE H, SIZE 45 CUBIC FEET., (MIN) STYLE 1, W/LEGS, STAINLESS STEEL, EXTERIOR AND INTERIOR. DOUBLE SECTION.	ELECTRIC 208V, 60HZ, 3 PH, 1/2 HP
1	69	NO	REFRIGERATOR, MECH., COMMERCIAL, SELF-CONTAINED, REACH-IN, ELEC.	TYPE H, SIZE 45 CUBIC FEET., (MIN) STYLE 1, W/LEGS, STAINLESS STEEL, EXTERIOR AND INTERIOR. DOUBLE SECTION.	ELECTRIC 208V, 60HZ, 3 PH, 1/2 HP
1	70		NOT USED		
4	71	NO	SHELVING, S.S., MOBILE, FOOD SERVICE	TYPE II MOBILE, STYLE 1 (WIRE CONSTRUCTION) W/5 ADJUSTABLE SHELVES, W/5" CASTERS. W/BUMPER GUARDS	NONE
	72	NO	SHELVING, S.S., MOBILE, FOOD SERVICE	TYPE II MOBILE, STYLE 1 (WIRE CONSTRUCTION) W/5 ADJUSTABLE SHELVES, W/5" CASTERS. W/BUMPER GUARDS	NONE
	73	NO	LOCKERS, WALL, METAL	LOCKERS ARE NO LONGER PART OF THIS CONTRACT	NONE
	74	NO	TRUCK, HAND, POT AND PAN RACK, S.S.	TYPE I (4 SHELVES, 2 FIXED AND 2 ADJUSTABLE), 800 LB. CAPACITY, W/BUMPERS AND CASTERS	NONE
	75	YES	AIR CURTAIN, FLY CONTROL MACHINE	AIR VELOCITY, MEASURED 3 FT. ABOVE THE FLOOR WILL BE 600 FPM FOR PERSONNEL ENTRANCE WAYS AND REC. DOORS, AUTO ON/OFF SWITCH, COMPLETE WIDTH OF DOOR, ABOVE INTERIOR OF DOOR	ELECTRIC 208V, 60HZ, 1 PH, 1/2 HP

NOTES:
1. YES = EQUIPMENT AUTHORIZED TO BE INSTALLED (i.e. ATTACHED TO THE FLOOR AND /OR PERMANENTLY CONNECTED TO THE BUILDING STRUCTURE OR UTILITY SYSTEM) AS PART OF THE CONSTRUCTION CONTRACT.
2. NO = EQUIPMENT WHICH WILL BE PROVIDED THROUGH SUPPLY CHANNELS AND OWNER INSTALLED AND WHICH SHOULD NOT BE INCLUDED IN THE CONSTRUCTION CONTRACT, BUT WHICH SHOULD BE CONSIDERED IN THE SPACE LAYOUT AND OPERATIONAL PLAN. N.I.C.

ELECTRICAL KITCHEN EQUIPMENT SCHEDULE

EQUIPMENT #	EQUIPMENT DESCRIPTION	VOLTAGE	PHASE	HP	KW	FLA	CIRCUIT BREAKER	DISC. SWITCH	NOTES
5	DISPENSER, JUICE	120	1	1/5			20/1	CORD & PLUG	1,2,3
6	COFFEE URN (GAS)	120	1				20/1	CORD & PLUG	1,2,3
7	ICE DISPENSER	120	1	1/4			15/1	CORD & PLUG	1,2,3
8	COLD FOOD COUNTER	120	1				20/1	CORD & PLUG	1,2,3
16	COLD PAN	120	1	1/4		6	20/1	CORD & PLUG	1,2,3
17	HOT FOOD TABLE	220		3	9		40/3		1,2,3
19	FOOD WARMING CABINET	208	1						1,2,3
20	GRIDDLE (GAS)	120	1				20/1	CORD & PLUG	1,2,3
21	HOOD								1,2,3
26	GARBAGE DISPOSAL	208	3	3					1,2,3
30	DISHWASHING MACHINE	208	3	1	50		200/3		1,2,3
30A	DISHWASHING MACHINE BOOSTER HEATER	208	3		18		70/3		1,2,3
34	GARBAGE DISPOSAL	208	3	3					1,2,3
36	SINK BOOSTER HEATER	208	3		9		40/3		1,2,3
38	HOOD								1,2,3
41	BOOSTER HEATER	208	3		15		60/3		1,2,3
45	STEAM KETTLE (GAS)	120	1				20/1	CORD & PLUG	1,2,3
46	FRYING PAN (GAS)	120	1				20/1	CORD & PLUG	1,2,3
47	WATER METER MIXING VALVE	120	1				20/1	CORD & PLUG	1,2,3
48	RANGE (GAS)	120	1				20/1	CORD & PLUG	1,2,3
49	OVEN (GAS)	120	1				20/1	CORD & PLUG	1,2,3
50	HOOD								1,2,3
51	HOOD								1,2,3
54	GARBAGE DISPOSAL	208	3	3					1,2,3
55	VEGETABLE PEELING MACHINE	120	1	1.25			30/1	CORD & PLUG	1,2,3
55A	VEGETABLE PEELING MACHINE DISPOSAL	120	1	1/2			20/1	CORD & PLUG	1,2,3
57	ICE MAKING MACHINE	208	1						1,2,3
59	FOOD PREP TABLE	120	1				20/1	CORD & PLUG	1,2,3
63	MIXING MACHINE	120	1	1/4			20/1	CORD & PLUG	1,2,3
65	CAN OPENER	120	1				20/1	CORD & PLUG	1,2,3
66	MEAT SLICER	120	1	1/3			20/1	CORD & PLUG	1,2,3
67	FROZEN FOOD CABINET	120	1	1/4			20/1	CORD & PLUG	1,2,3
68	REFRIGERATOR	120	1	1/2			20/1	CORD & PLUG	1,2,3
69	REFRIGERATOR	120	1	1/2			20/1	CORD & PLUG	1,2,3
75	FLY CONTROL AIR CURTAIN MACHINE	208	1	1/2					1,2,3

NOTES:
1. PROVIDE CORD AND PLUG TO MATCH EQUIPMENT
2. PROVIDE ALL CONNECTIONS AND DISCONNECT MOUNTING HEIGHTS PER MANUFACTURERS PUBLISHED DATA. FIELD VERIFY ALL CONDITIONS FOR EQUIPMENT.
3. VERIFY MAXIMUM OVERCURRENT PROTECTION WITH NAMEPLATE DATA.

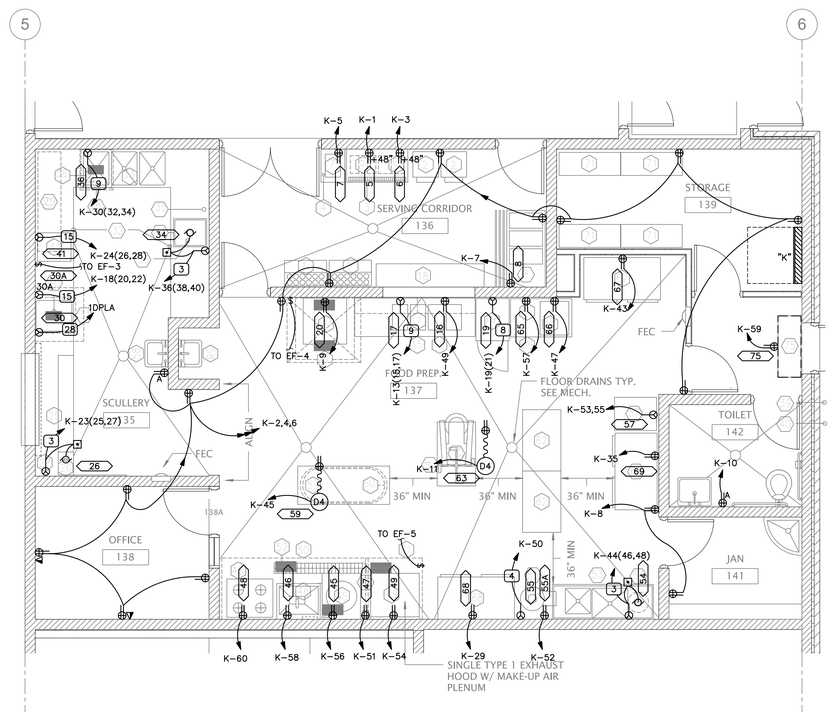

A3 ENLARGED KICHEN POWER PLAN
SCALE: 1/4"=1'-0"

GSBS | ARCHITECTURE | LANDSCAPE ARCHITECTURE | PLANNING | INTERIOR DESIGN
375 West 200 South Suite 100
Salt Lake City
Utah 84101
Tel 801.521.8600
Fax 801.521.7913
GSBS-PC.COM

LICENSED PROFESSIONAL ENGINEER No. 181563 DAVID E. WESEMANN STATE OF UTAH 02/01/08

SPECTRUM ENGINEERS
175 S MAIN ST, STE 300
SALT LAKE CITY, UT 84111
P:801.328.5151 F:801.328.5155

No.	DATE	REVISION

NORTH SALT LAKE READINESS CENTER AND CIVIL SUPPORT TEAM

Salt Lake City, UT

ENLARGED KITCHEN POWER PLAN

PROJECT NO. 2005.003	EP401
DATE 02/01/2008	
DRAWN PSS	
CHECKED	BINDING ORDER 122

File Name: P:\2006\20060331\1Drawings\Sheet\122-31EP-401.dwg Last Plotted: 2008/02/11 @ 4:39 PM By: pss

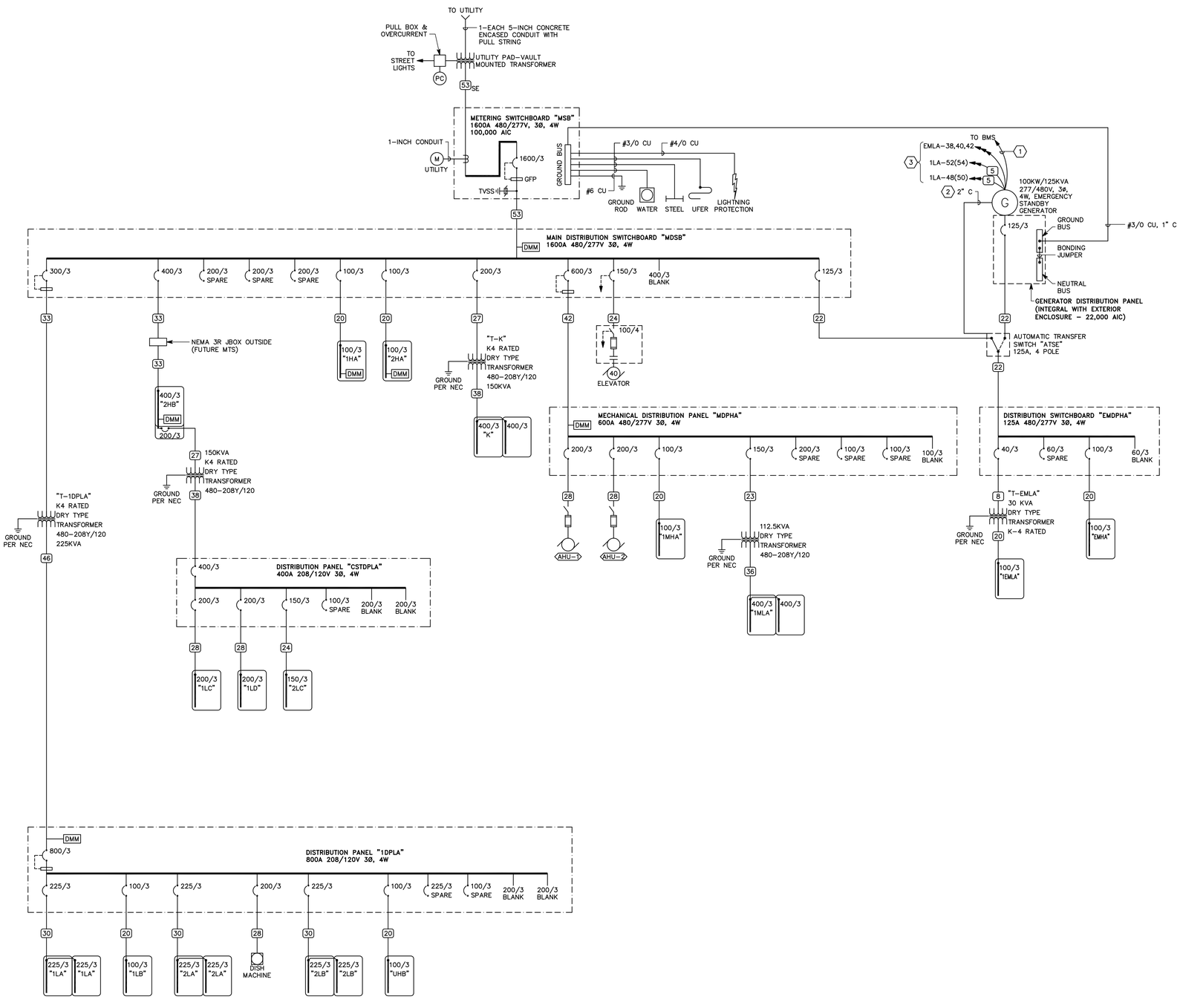

A6 ONE-LINE DIAGRAM
NTS

GENERAL SHEET NOTES

1. PROVIDE NEMA 3R ENCLOSURES FOR EQUIPMENT LOCATED OUTDOORS. REFER TO PLANS FOR EQUIPMENT LOCATIONS.
2. REFER TO PLANS FOR CONSTRAINTS ON PHYSICAL DIMENSIONS AND CLEARANCE REQUIREMENTS OF EQUIPMENT. PROVIDE EQUIPMENT DIMENSIONS THAT FALL WITHIN THE CONSTRAINTS OF EACH SPECIFIC LOCATION.
3. ALL EQUIPMENT SHALL BE CONSTRUCTED AND BRACED FOR THE SEISMIC CONDITIONS OF THE PROJECT. REFER TO SPECIFICATIONS SECTION 16071 FOR REQUIREMENTS.
4. ALL DIGITAL METERS (DMM) SHALL BE PROVIDED WITH SOFTWARE, HARDWARE REQUIRED TO OPERATE WITH THE BUILDING AUTOMATION SYSTEM (BAS). COORDINATE WITH BAS INSTALLER AND PROGRAMMER.

⬡SHEET KEYNOTES

1. PROVIDE 1-EACH 1.5-INCH CONDUIT WITH PULL STRING TO BUILDING MANAGEMENT SYSTEM (BMS) FOR INTERFACE WIRING.
2. PROVIDE CONTROL WIRING IN RACEWAY PER MANUFACTURERS WRITTEN INSTRUCTIONS.
3. CIRCUITS FOR GENERATOR AUXILIARIES. COORDINATE EXACT ELECTRICAL REQUIREMENTS WITH GENERATOR SHOP DRAWINGS.

CONDUCTOR AND CONDUIT SCHEDULE

** SCHEDULE NUMBER
SUBSCRIPT (NOTE 5)
(E.G.) 5 IG

SYM	AMP	CONDUIT SIZE	CONDUCTOR(NOTE 1) QTY	SIZE	G	IG	SE	NOTES
1	20	.75	2	12	12	12	8	2
2	20	.75	3	12	12	12	8	2,3
3	20	.75	4	12	12	12	8	2,3
4	30	.75	2	10	10	10	8	2
5	30	.75	3	10	10	10	8	2
6	30	.75	4	10	10	10	8	2
7	40	1	2	8	10	8	6	2
8	40	1	3	8	10	8	6	2
9	40	1	4	8	10	8	6	2
10	55	1	2	6	10	8	4	2
11	55	1	3	6	10	8	4	2
12	55	1.25	4	6	10	8	4	2
13	70	1	2	4	8	4	2	2
14	70	1.25	3	4	8	4	2	2
15	70	1.25	4	4	8	4	2	2
16	85	1.25	2	3	8	3	2	2
17	85	1.25	3	3	8	3	2	2
18	85	1.25	4	3	8	3	2	2
19	95	1.25	3	2	8	2	2	2
20	95	1.50	4	2	8	2	2	2
21	130	1.50	3	1	6	2	2	2
22	130	1.50	4	1	6	2	2	2
23	150	2	3	1/0	6	2	1/0	2
24	150	2	4	1/0	6	2	1/0	2
25	175	2	3	2/0	6	2	2/0	2
26	175	2	4	2/0	6	2	2/0	2
27	200	2	3	3/0	6	2	2/0	2
28	200	2.50	4	3/0	6	2	2/0	2
29	230	2.50	3	4/0	4	2	2/0	2
30	230	2.50	4	4/0	4	2	2/0	2
31	255	2.50	3	250	4	1	2/0	2
32	255	2.50	4	250	4	1	2/0	2
33	310	3	3	350	3	1/0	3/0	2
34	310	3	4	350	3	1/0	3/0	2
35	380	3.50	3	500	3	3/0	3/0	2
36	380	4	4	500	3	3/0	3/0	2
37	400	2 EA 2	3	3/0	3	3/0	3/0	2
38	400	2 EA 2.50	4	3/0	3	3/0	3/0	2
39	510	2 EA 2.50	3	250	1	4/0	3/0	2
40	510	2 EA 3	4	250	1	4/0	3/0	2
41	620	2 EA 3	3	350	1/0	4/0	3/0	2,4
42	620	2 EA 3	4	350	1/0	4/0	3/0	2,4
43	760	2 EA 3.50	3	500	1/0	4/0	3/0	2,4
44	760	2 EA 4	4	500	1/0	4/0	3/0	2,4
45	855	3 EA 3	3	300	2/0	4/0	3/0	2,4
46	855	3 EA 3	4	300	2/0	4/0	3/0	2,4
47	1000	3 EA 3.50	3	400	2/0	4/0	3/0	4
48	1000	3 EA 3.50	4	400	2/0	4/0	3/0	4
49	1140	3 EA 4	3	500	3/0	4/0	3/0	4
50	1140	3 EA 4	4	500	3/0	4/0	3/0	4
51	1240	4 EA 3	3	350	3/0	4/0	3/0	4
52	1240	4 EA 3	4	350	3/0	4/0	3/0	4
53	1675	5 EA 3.50	4	400	4/0	4/0	4/0	4
54	2010	6 EA 3.50	4	400	250	250	250	4
55	2660	7 EA 4	4	500	350	350	350	4
56	3040	8 EA 4	4	500	500	500	500	4
57	4180	11 EA 4	4	500	500	500	500	4
58		5 EA 4						6
59		5						6
60		10 EA 4						6

CONDUCTOR AND CONDUIT SCHEDULE NOTES

1. CONDUCTORS SHOWN ARE SHOWN FOR EACH CONDUIT WITH MODIFICATIONS AS NOTED IN NOTE 5. ALL CONDUCTORS SHOWN ARE THWN UNLESS OTHERWISE NOTED.
2. PROVIDE EQUIPMENT GROUND CONDUCTORS PER TABLE 250-122 WHEN CIRCUIT BREAKERS ARE SIZED GREATER THAN AMPERE RATING SHOWN IN TABLE.
3. PROVIDE #10 NEUTRALS FOR MULTIWIRE BRANCH CIRCUITS SERVING COMPUTERS.
4. GROUND (G) CONDUCTOR MAY BE DELETED ON SERVICE ENTRANCE CONDUCTORS.
5. WHEN SYMBOL SUBSCRIPT INDICATES "IG", INCLUDE "IG" OR INSULATED GROUND CONDUCTOR SCHEDULED ALONG WITH GROUND OR EQUIPMENT GROUND CONDUCTOR. WHEN SYMBOL SUBSCRIPT INDICATES "SE", SUBSTITUTE "SE" CONDUCTOR FOR "G" CONDUCTOR SHOWN WHICH IS SIZED FOR THE GROUNDING OF THE SECONDARY OF THE SEPARATELY DERIVED SYSTEMS.
6. RACEWAY ONLY. CONDUCTORS PROVIDED BY UTILITY.

GSBS | ARCHITECTURE | LANDSCAPE ARCHITECTURE | PLANNING | INTERIOR DESIGN
375 West 200 South Suite 100
Salt Lake City
Utah 84101
Tel 801.521.8600
Fax 801.521.7913
GSBS-PC.COM

LICENSED PROFESSIONAL ENGINEER No. 181563 DAVID E. WESEMANN STATE OF UTAH 02/01/08

SPECTRUM ENGINEERS
175 S MAIN ST, STE 300
SALT LAKE CITY, UT 84111
P:801.328.5151 F:801.328.5155

No.	DATE	REVISION

NORTH SALT LAKE READINESS CENTER AND CIVIL SUPPORT TEAM

Salt Lake City, UT

ONE-LINE DIAGRAM

PROJECT NO. 2005.003	EP601
DATE 02/01/2008	
DRAWN PSS	
CHECKED	BINDING ORDER 123

File Name: P:\2006\20060331\1Drawings\Sheet\123-31EP-601.dwg Last Plotted: 2008/02/11 @ 4:39 PM By: pss

EQUIPMENT SCHEDULE

MARK	ITEM DESCRIPTION	LOAD DATA							WIRE AND CONDUIT SIZE (CC-INDICATES CONDUCTOR AND CONDUIT SCHEDULE)	OVERCURRENT PROTECTION								NOTES	MARK
												DISCONNECT SWITCH				CIRCUIT BREAKER					
		HP	kW	MCA	FLA	VOLT	PH	Hz		FURN BY	SWITCH TYPE	NEMA RATING	FUSED SWITCH	FUSE RATING	FUSE CLASS	CB	PANEL	RATING		
AC-1	AIR COMPRESSOR	10			14	480	3	60	CC#2	E	20/3	1	YES	20A	RK5	20/3		HACR	1	AC-1
AHU-1	AIR HANDLER			152		480	3	60	CC#27	E	200/3	3R	YES	175A	RK5	200/3		HACR	1	AHU-1
AHU-2	AIR HANDLER			152		480	3	60	CC#27	E	200/3	3R	YES	175A	RK5	200/3		HACR	1	AHU-2
AHU-3	AIR HANDLER	3				208	3	60	CC#2	E	30/3	3R	YES	6A	RK5	20/3		HACR	1	AHU-3
AHU-3P	AIR HANDLER PUMP					277	1	60	CC#1	E	THERMAL SWITCH					20/1		HACR	1,3	AHU-3P
AHU-4	AIR HANDLER	5				208	3	60	CC#2	E	30/3	3R	YES	10A	RK5	20/3		HACR	1	AHU-4
AHU-4P	AIR HANDLER PUMP					277	1	60	CC#1	E	THERMAL SWITCH					20/1		HACR	1,3	AHU-4P
AHU-5	AIR HANDLER	2				208	3	60	CC#2	E	30/3	3R	YES	10A	RK5	20/3		HACR	1	AHU-5
AHU-5P	AIR HANDLER PUMP					277	1	60	CC#1	E	THERMAL SWITCH					20/1		HACR	1,3	AHU-5P
B-1	BOILER				4.2	120	1	60	CC#1	E	THERMAL SWITCH					20/1		HACR	1,3	B-1
B-2	BOILER				4.2	120	1	60	CC#1	E	THERMAL SWITCH					20/1		HACR	1,3	B-2
CP-1	CIRCULATION PUMP					120	1	60	CC#1	E	THERMAL SWITCH					20/1		HACR	1,3	CP-1
EC-1	EVAPORATIVE COOLER	1.5				480	3	60	CC#2	E	30/3	1	YES	5A	RK5	20/3		HACR	1	EC-1
EC-1P	EVAP COOLER PUMP				4.2	120	1	60	CC#1	E	THERMAL SWITCH					20/1		HACR	1,3	EC-1P
EF-1	EXHAUST FAN	1/8				120	1	60	CC#1	E	30/2	3R	YES	3A	RK5	20/3		HACR	1,2	EF-1
EF-2	EXHAUST FAN	1/8				120	1	60	CC#1	E	30/2	3R	YES	10A	RK5	20/3		HACR	1,2	EF-2
EF-3	EXHAUST FAN	3/4				120	1	60	CC#1	E	30/2	3R	YES	6A	RK5	20/3		HACR	1,2	EF-3
EF-4	EXHAUST FAN	3/4				120	1	60	CC#1	E	30/2				RK5	20/1		HACR	1,2	EF-4
EF-5	EXHAUST FAN	3				208	3	60	CC#2	E	30/3	3R	YES	3A	RK5	20/3		HACR	1,2	EF-5
EF-6	EXHAUST FAN		80W			120	1	60	CC#1	E	THERMAL SWITCH					20/1		HACR	1,3	EF-6
EF-7	EXHAUST FAN	1/2				120	1	60	CC#1	E	THERMAL SWITCH					20/1		HACR	1,3	EF-7
EF-8	EXHAUST FAN	1/6				120	1	60	CC#1	E	30/2	3R	YES	6A	RK5	20/1		HACR	1,2	EF-8
EF-9	EXHAUST FAN	1/8				120	1	60	CC#1	E	30/2	3R	YES	6A	RK5	20/1		HACR	1,2	EF-9
EWC-1	ELECTRIC WATER COOLER				3.7	120	1	60	CC#1	Q	CORD AND PLUG					20/1		HACR	1	EWC-1
FC-1	FAN COIL	1.5				208	3	60	CC#2	E	30/3	3R	YES	10A	RK5	20/1		HACR	1,2	FC-1
P-1	PUMP	1				277	1	60	CC#1	E	30/2	1	YES	7.5A	RK5	20/1		HACR	1,2	P-1
P-2	PUMP	1				277	1	60	CC#1	E	30/2	1	YES	7.5A	RK5	20/1		HACR	1,2	P-2
P-3	PUMP	5				480	3	60	CC#2	E	VFD					15/3		HACR	1	P-3
P-4	PUMP	5				480	3	60	CC#2	E	VFD					15/3		HACR	1	P-4
P-5	PUMP		52W			120	1	60	CC#1	E	THERMAL SWITCH					20/1		HACR	1	P-5
RAD-1	REFRIGERATED AIR DRYER		0.70			480	3	60	CC#2	E	30/3	1	YES	6A	RK5	20/3		HACR	1	RAD-1
RH-1	GAS FIRED RADIANT HEAT				1.3	120	1	60	CC#1	E	THERMAL SWITCH					20/1		HACR	1	RH-1
RH-2	GAS FIRED RADIANT HEAT				1.3	120	1	60	CC#1	E	THERMAL SWITCH					20/1		HACR	1	RH-2
RH-3	GAS FIRED RADIANT HEAT				1.3	120	1	60	CC#1	E	THERMAL SWITCH					20/1		HACR	1	RH-3
RH-4	GAS FIRED RADIANT HEAT				1.3	120	1	60	CC#1	E	THERMAL SWITCH					20/1		HACR	1	RH-4
RH-5	GAS FIRED RADIANT HEAT				1.3	120	1	60	CC#1	E	THERMAL SWITCH					20/1		HACR	1	RH-5
RTU-1	ROOF TOP UNIT			45.4		208	3	60	CC#14	E	60/3	3R	YES	60A	RK5	60/3		HACR	1	RTU-1
RTU-2	ROOF TOP UNIT			19.0		208	3	60	CC#5	E	30/3	3R	YES	30A	RK5	30/3		HACR	1	RTU-2
RTU-3A	(INDOOR UNIT)					208	1	60	CC#8	E	60/2	1	YES	40A	RK5	60/2		HACR	1	RTU-3A
RTU-3B	(OUTDOOR UNIT)					208	1	60	CC#8	E	60/2	3R	YES	40A	RK5	60/2		HACR	1	RTU-3B
RTU-4A	(INDOOR UNIT)					208	1	60	CC#8	E	60/2	1	YES	40A	RK5	60/2		HACR	1	RTU-4A
RTU-4B	(OUTDOOR UNIT)					208	1	60	CC#8	E	60/2	3R	YES	40A	RK5	60/2		HACR	1	RTU-4B
OH-1	OVERHEAD DOOR	3/4						60	CC#2	E	THERMAL SWITCH	1				20/1		HACR	1	OH-1
UH-1	UNIT HEATER	1/6				115	1	60	CC#1	E	THERMAL SWITCH	1				20/1		HACR	1,2	UH-1
VEF-1	VEHICLE EXHAUST FAN	7.5			24.2	208	3	60	CC#8	E	60/3	1	YES	35.0A	RK5	40/3		HACR	1,2	VEF-1
VEF-2	VEHICLE EXHAUST FAN	5			16.7	208	3	60	CC#5	E	30/3	1	YES	20A	RK5	30/3		HACR	1	VEF-2
WH-1	WATER HEATER				6.3	120	1	60	CC#1	Q	CORD AND PLUG					20/1		HACR	1	WH-1
WH-2	WATER HEATER				6.3	120	1	60	CC#1	Q	CORD AND PLUG					20/1		HACR	1	WH-2

NOTES:
1. LOCATE DISCONNECT ADJACENT TO UNIT.
2. PROVIDE WITH SIZE 1, FVNR STARTER WITH HOA SWITCH, RED AND GREEN PILOT LIGHTS, 2 NORMALLY OPEN CONTACTS AND 2 NORMALLY CLOSED CONTACTS
3. PROVIDE WITH STARTER RATED THERMAL SWITCH.

EQUIPMENT SCHEDULE KEY

E	DIVISION 16
Q	FURNISHED WITH THE EQUIPMENT
*	COORDINATE WITH THE DIVISION 15 TEMPERATURE CONTROL INSTALLER
**	AUTOMATIC CONTROL WIRING BY DIVISION 15

GSBS | ARCHITECTURE | LANDSCAPE ARCHITECTURE | PLANNING | INTERIOR DESIGN

375 West 200 South Suite 100
Salt Lake City
Utah 84101

Tel 801.521.8600
Fax 801.521.7913

GSBS-PC.COM

LICENSED PROFESSIONAL ENGINEER
No. 181563
DAVID E. WESEMANN
STATE OF UTAH
02/01/08

SPECTRUM ENGINEERS
175 S MAIN ST, STE 300
SALT LAKE CITY, UT 84111
P:801.328.5151 F:801.328.5155

No.	DATE	REVISION

NORTH SALT LAKE READINESS CENTER AND CIVIL SUPPORT TEAM

Salt Lake City, UT

MECHANICAL EQUIPMENT SCHEDULE

PROJECT NO. 2005.003	EP602
DATE 02/01/2008	
DRAWN PSS	
CHECKED	BINDING ORDER 124

File Name: P:\2006\20060331\1Drawings\Sheet\124-31EP-602.dwg Last Plotted: 2008/02/11 @ 4:39 PM By: pss

PANEL "1HA"

VOLTS/PHASE/WIRE:	PANEL SIZE & TYPE:	MAIN SIZE & TYPE:	LOCATION:	CABINET:	NOTES:
277/480 V, 3 PH 4 WIRE	22" W x 6" D, BOLT-ON	100 AMPERE MAIN LUG		SURFACE	

ACCESSORIES: PANEL DIRECTORY, IDENTIFICATION, GROUNDING BAR, HINGED COVER

CKT NO	OCP AMP	OCP POLE	LOAD (kVA) LTG	LOAD (kVA) CO	LOAD (kVA) PWR	DESCRIPTION	LCL kVA	PHASE LOAD A	PHASE LOAD B	PHASE LOAD C	LCL kVA	DESCRIPTION	LOAD (kVA) LTG	LOAD (kVA) CO	LOAD (kVA) PWR	OCP AMP	OCP POLE	CKT NO
1	20	1	2.2			FIRST FLOOR LIGHTING	2.8	5.0			3.5	RP1-30	2.8			20	1	2
3	20	1	2.7			FIRST FLOOR LIGHTING	3.4		5.5		3.5	RP1-31	2.8			20	1	4
5	20	1	1.9			FIRST FLOOR LIGHTING	2.4			4.7	3.5	RP1-32	2.8			20	1	6
7	20	1	2.3			FIRST FLOOR LIGHTING	2.9	5.5			4.0	RP1-33	3.2			20	1	8
9	20	1	1.6			FIRST FLOOR LIGHTING	2.0		4.1		3.1	RP1-34	2.5			20	1	10
11	20	1				SPARE	0.0			2.5	3.1	RP1-25	2.5			20	1	12
13	20	1				SPARE	0.0	2.5			3.1	RP1-26	2.5			20	1	14
15	20	1	2.0			RELAY PANEL RP1	2.5		3.5		1.9	RP1-27	1.5			20	1	16
17	20	1	2.0			RELAY PANEL RP1	2.5			4.5	3.1	RP1-28	2.5			20	1	18
19	20	1	2.0			RELAY PANEL RP1	2.5	4.8			3.5	RP1-29	2.8			20	1	20
21	20	1	2.0			RELAY PANEL RP1	2.5		2.0		0.0	SPARE				20	1	22
23	20	1	2.0			RELAY PANEL RP1	2.5			2.0	0.0	SPARE				20	1	24
25	20	1	2.0			RELAY PANEL RP1	2.5	2.0			0.0	SPARE				20	1	26
27	*20	1				HEAT TRACE	0.0		0.0		0.0	SPARE				20	1	28
29	20	1				SPARE	0.0			0.0	0.0	SPARE				20	1	30
31	20	1				SPARE	0.0	0.0			0.0	SPARE				20	1	32
33	20	1				SPARE	0.0		0.0		0.0	SPARE				20	1	34
35	20	1				SPARE	0.0			0.0	0.0	SPARE				20	1	36
37	20	1				SPARE	0.0	0.0			0.0	SPARE				20	1	38
39	20	1				SPARE	0.0		0.0		0.0	SPARE				20	1	40
41	20	1				SPARE	0.0			0.0	0.0	SPARE				20	1	42
TOTALS:						CONNECTED kVA PER PHASE		20	15	14		CONNECTED TOTAL kVA				49		
						CONNECTED AMPS PER PHASE		72	55	50		CONNECTED AVERAGE AMPS PER PHASE				59		

NEC DIVERSIFIED LOAD CALCULATIONS

LIGHTING 49kVA @125% =	61 kVA	ALL OTHER LOADS @100% =	0 kVA	DIVERSIFIED TOTAL kVA =	61
RECEPTACLES 0kVA @100% =	0 kVA	25% OF LARGEST MOTOR =	0 kVA	AVERAGE AMPS PER PHASE =	73
REMAINDER 0kVA @ 50% =	0 kVA				

*–PROVIDE 30mA GFI BREAKER

PANEL "1LA"

VOLTS/PHASE/WIRE:	PANEL SIZE & TYPE:	MAIN SIZE & TYPE:	LOCATION:	CABINET:	NOTES:
120/208 V, 3 PH 4 WIRE	22" W x 6" D, BOLT-ON	225 AMPERE MAIN LUG		SURFACE	

ACCESSORIES: PANEL DIRECTORY, IDENTIFICATION, GROUNDING BAR, SUBFEED LUGS, HINGED COVER

CKT NO	OCP AMP	OCP POLE	LOAD (kVA) LTG	LOAD (kVA) CO	LOAD (kVA) PWR	DESCRIPTION	LCL kVA	PHASE LOAD A	PHASE LOAD B	PHASE LOAD C	LCL kVA	DESCRIPTION	LOAD (kVA) LTG	LOAD (kVA) CO	LOAD (kVA) PWR	OCP AMP	OCP POLE	CKT NO
1	20	1		0.8		PHYSICAL FITNESS 151	0.8	2.4			1.6	VENDING 145			1.6	20	1	2
3	20	1		0.8		PHYSICAL FITNESS 151	0.8		2.4		1.6	VENDING 145			1.6	20	1	4
5	20	1		0.8		PHYSICAL FITNESS 151	0.8			2.4	1.6	VENDING 145			1.6	20	1	6
7	20	1		0.8		PHYSICAL FITNESS 151	0.8	2.4			1.6	VENDING 145			1.6	20	1	8
9	20	1		0.8		PHYSICAL FITNESS 151	0.8		1.6		0.8	TABLES AND CHAIRS 157		0.8		20	1	10
11	20	1		0.8		PHYSICAL FITNESS 151	0.8			1.8	1.0	MOTORIZED SCREEN			1.0	20	1	12
13	20	1		0.8		PHYSICAL FITNESS 151	0.8	1.6			0.8	ASSEMBLY HALL 109		0.8		20	1	14
15	20	1		0.8		PHYSICAL FITNESS 151	0.8		1.6		0.8	ASSEMBLY HALL 109		0.8		20	1	16
17	20	1		0.8		PHYSICAL FITNESS 151	0.8			1.6	0.8	ASSEMBLY HALL 109		0.8		20	1	18
19	20	1		0.8		PHYSICAL FITNESS 151	0.8	1.4			0.6	ASSEMBLY HALL 109		0.6		20	1	20
21	20	1		0.6		STAIR 147/JAN 153	0.6		1.4		0.8	ASSEMBLY HALL 109		0.8		20	1	22
23	20	1		0.6		WOMEN 152	0.6			1.4	0.8	ASSEMBLY HALL 109		0.8		20	1	24
25	20	1		0.6		MEN 154	0.6	1.4			0.8	ASSEMBLY HALL 109		0.8		20	1	26
27	20	1			1.5	DRINKING FOUNTAIN	1.5		2.1		0.6	ASSEMBLY HALL 109		0.6		20	1	28
29	20	1			1.5	DRINKING FOUNTAIN	1.5			2.3	0.8	SUPPORT 159		0.8		20	1	30
31	20	1		1.0		ELEC 146/MECH 148	1.0	2.0			1.0	VESTIBULE 100		1.0		20	1	32
33	20	1				HALL 134	0.0		0.8		0.8	RECRUITING 102		0.8		20	1	34
35	20	1				EQUIP LOCKERS 155	0.0			0.5	0.5	IRRIGATION CTRLS			0.5	20	1	36
37	20	1				HALL 101A	0.0	0.4			0.4	MECH RM		0.4		20	1	38
39	20	1				EQUIPMENT 158	0.0		0.4		0.4	ASSEMBLY HALL A/V RACK		0.4		20	1	40
41	20	1	0.2	0.2		ELEVATOR PIT	0.5			0.4	0.0	SPARE				20	1	42
43	20	1				SPARE	0.0	0.0			0.0	SPARE				20	1	44
45	20	1				SPARE	0.0		0.0		0.0	SPARE				20	1	46
47	20	1				SPARE	0.0			2.0	2.0	GENERATOR BLOCK HTR			2.0	30	2	48
49	20	1				SPARE	0.0	2.0			2.0	----			2.0	–	–	50
51	20	1				SPARE	0.0		2.5		2.5	GENERATOR SPACE HTR			2.5	30	2	52
53	20	1				SPARE	0.0			2.5	2.5	----			2.5	–	–	54
55	20	1				SPARE	0.0	0.0			0.0	SPARE				20	1	56
57	20	1				SPARE	0.0		0.0		0.0	SPARE				20	1	58
59	20	1				SPARE	0.0			0.0	0.0	SPARE				20	1	60
61	20	1				SPARE	0.0	0.0			0.0	SPARE				20	1	62
63	20	1				SPARE	0.0		0.0		0.0	SPARE				20	1	64
65	20	1				SPARE	0.0			0.0	0.0	SPARE				20	1	66
67	20	1				SPARE	0.0	0.0			0.0	SPARE				20	1	68
69	20	1				SPARE	0.0		0.0		0.0	SPARE				20	1	70
71	20	1				SPARE	0.0			0.0	0.0	SPARE				20	1	72
73	20	1				SPARE	0.0	0.0			0.0	SPARE				20	1	74
75	20	1				SPARE	0.0		0.0		0.0	SPARE				20	1	76
77	20	1				SPARE	0.0			0.0	0.0	SPARE				20	1	78
79	20	1				BLANK	0.0	0.0			0.0	BLANK				20	1	80
81	20	1				BLANK	0.0		0.0		0.0	BLANK				20	1	82
83	20	1				BLANK	0.0			0.0	0.0	BLANK				20	1	84
TOTALS:						CONNECTED kVA PER PHASE		14	13	15		CONNECTED TOTAL kVA				41		
						CONNECTED AMPS PER PHASE		113	107	124		CONNECTED AVERAGE AMPS PER PHASE				115		

NEC DIVERSIFIED LOAD CALCULATIONS

LIGHTING 0kVA @125% =	0 kVA	ALL OTHER LOADS @100% =	20 kVA	DIVERSIFIED TOTAL kVA =	36
RECEPTACLES 10kVA @100% =	10 kVA	25% OF LARGEST MOTOR =	0 kVA	AVERAGE AMPS PER PHASE =	99
REMAINDER 11kVA @ 50% =	6 kVA				

PANEL "1LB"

VOLTS/PHASE/WIRE:	PANEL SIZE & TYPE:	MAIN SIZE & TYPE:	LOCATION:	CABINET:	NOTES:
120/208 V, 3 PH 4 WIRE	22" W x 6" D, BOLT-ON	100 AMPERE MAIN LUG		SURFACE	

ACCESSORIES: PANEL DIRECTORY, IDENTIFICATION, GROUNDING BAR, SUBFEED LUGS, HINGED COVER

CKT NO	OCP AMP	OCP POLE	LOAD (kVA) LTG	LOAD (kVA) CO	LOAD (kVA) PWR	DESCRIPTION	LCL kVA	PHASE LOAD A	PHASE LOAD B	PHASE LOAD C	LCL kVA	DESCRIPTION	LOAD (kVA) LTG	LOAD (kVA) CO	LOAD (kVA) PWR	OCP AMP	OCP POLE	CKT NO
1	20	1		0.4		B-UNIT STOR 103	0.4	1.2			0.8	TEMP STG. 113		0.8		20	1	2
3	20	1		0.6		B-UNIT STOR 103	0.6		1.6		1.0	TEMP STG. 113		1.0		20	1	4
5	20	1		0.6		B-UNIT STOR 103	0.6			1.4	0.8	OFFICE 118		0.8		20	1	6
7	20	1		0.6		B-UNIT STOR 103	0.6	1.2			0.6	HALLWAY 116		0.6		20	1	8
9	20	1		0.8		B-UNIT STOR 103	0.8		1.4		0.6	MAINT TRAIN WKBY 114		0.6		20	1	10
11	20	1		0.8		B-UNIT STOR 103	0.8			1.4	0.6	MAINT TRAIN WKBY 114		0.6		20	1	12
13	20	1			1.6	B-UNIT STOR 103 VEND	1.6	2.4			0.8	SUPPLY 112		0.8		20	1	14
15	20	1		0.8		OFFICE 108	0.8		1.6		0.8	MAINT TRAIN WKBY 114		0.8		20	1	16
17	20	1		0.8		OFFICE 105	0.8			1.4	0.6	MAINT TRAIN WKBY 114		0.6		20	1	18
19	20	1			1.6	HHC UNIT STG 106 VEND	1.6	2.4			0.8	MAINT TRAIN WKBY 114		0.8		20	1	20
21	20	1		0.4		HHC UNIT STG 106	0.4		2.0		1.6	OH-1 114			1.6	20	1	22
23	20	1		0.6		HHC UNIT STG 106	0.6			2.2	1.6	OH-1 114			1.6	20	1	24
25	20	1		0.6		HHC UNIT STG 106	0.6	1.4			0.8	TOOLS 119		0.8		20	1	26
27	20	1		0.6		HHC UNIT STG 106	0.6		0.8		0.2	BATTERY 115		0.2		20	1	28
29	20	1		0.8		HHC UNIT STG 106	0.8			1.0	0.2	BATTERY 115		0.2		20	1	30
31	20	1		0.8		HHC UNIT STG 106	0.8	1.0			0.2	BATTERY 115		0.2		20	1	32
33	20	1				SPARE	0.0		0.0		0.0	HALL 133A				20	1	34
35	20	1				SPARE	0.0			0.0	0.0	SPARE				20	1	36
37	20	1				SPARE	0.0	0.0			0.0	SPARE				20	1	38
39	20	1				SPARE	0.0		0.0		0.0	SPARE				20	1	40
41	20	1				SPARE	0.0			0.0	0.0	SPARE				20	1	42
TOTALS:						CONNECTED kVA PER PHASE		10	7	7		CONNECTED TOTAL kVA				24		
						CONNECTED AMPS PER PHASE		80	62	62		CONNECTED AVERAGE AMPS PER PHASE				68		

NEC DIVERSIFIED LOAD CALCULATIONS

LIGHTING 0kVA @125% =	0 kVA	ALL OTHER LOADS @100% =	6 kVA	DIVERSIFIED TOTAL kVA =	20
RECEPTACLES 10kVA @100% =	10 kVA	25% OF LARGEST MOTOR =	0 kVA	AVERAGE AMPS PER PHASE =	57
REMAINDER 8kVA @ 50% =	4 kVA				

PANEL "1LC"

VOLTS/PHASE/WIRE:	PANEL SIZE & TYPE:	MAIN SIZE & TYPE:	LOCATION:	CABINET:	NOTES:
120/208 V, 3 PH 4 WIRE	22" W x 6" D, BOLT-ON	200 AMPERE MAIN LUG		SURFACE	

ACCESSORIES: PANEL DIRECTORY, IDENTIFICATION, GROUNDING BAR, SUBFEED LUGS, HINGED COVER

CKT NO	OCP AMP	OCP POLE	LOAD (kVA) LTG	LOAD (kVA) CO	LOAD (kVA) PWR	DESCRIPTION	LCL kVA	PHASE LOAD A	PHASE LOAD B	PHASE LOAD C	LCL kVA	DESCRIPTION	LOAD (kVA) LTG	LOAD (kVA) CO	LOAD (kVA) PWR	OCP AMP	OCP POLE	CKT NO
1	50	1			4.0	CORD REEL	4.0	4.8			0.8	CONVEN OUTLETS		0.8		20	1	2
3	50	1			4.0	CORD REEL	4.0		4.8		0.8	CONVEN OUTLETS		0.8		20	1	4
5	50	1			4.0	CORD REEL	4.0			4.8	0.8	CONVEN OUTLETS		0.8		20	1	6
7	50	1			4.0	CORD REEL	4.0	4.8			0.8	CONVEN OUTLETS		0.8		20	1	8
9	50	1			4.0	CORD REEL	4.0		4.8		0.8	CONVEN OUTLETS		0.8		20	1	10
11	50	1			4.0	CORD REEL	4.0			4.4	0.4	CONVEN OUTLETS		0.4		20	1	12
13	30	1			4.0	CORD REEL	4.0	4.2			0.2	OUTLET		0.2		20	1	14
15	50	1				SPARE	0.0		0.0		0.0	SPARE				20	1	16
17	20**	1		0.2		CORD REEL	0.2			0.2	0.0	SPARE				20	1	18
19	20**	1		0.2		CORD REEL	0.2	0.2			0.0	SPARE				20	1	20
21	20**	1		0.2		CORD REEL	0.2		0.2		0.0	SPARE				20	1	22
23	20**	1		0.2		CORD REEL	0.2			0.2	0.0	SPARE				20	1	24
25	20**	1		0.2		CORD REEL	0.2	0.2			0.0	SPARE				20	1	26
27	20**	1		0.2		CORD REEL	0.2		0.2		0.0	SPARE				20	1	28
29	20	1			1.5	OH-1	1.5			1.5	0.0	SPARE				20	1	30
31	20	1			1.5	OH-1	1.5	1.5			0.0	BLANK				20	1	32
33	20	1			1.5	OH-1	1.5		1.5		0.0	BLANK				20	1	34
35	20	1				SPARE	0.0			0.0	0.0	BLANK				20	1	36
37	20	1				SPARE	0.0	0.0			0.0	BLANK				20	1	38
39	20	1				SPARE	0.0		0.0		0.0	BLANK				20	1	40
41	20	1				SPARE	0.0			0.0	0.0	BLANK				20	1	42
TOTALS:						CONNECTED kVA PER PHASE		16	12	11		CONNECTED TOTAL kVA				38		
						CONNECTED AMPS PER PHASE		131	96	93		CONNECTED AVERAGE AMPS PER PHASE				106		

NEC DIVERSIFIED LOAD CALCULATIONS

LIGHTING 0kVA @125% =	0 kVA	ALL OTHER LOADS @100% =	33 kVA	DIVERSIFIED TOTAL kVA =	38
RECEPTACLES 6kVA @100% =	6 kVA	25% OF LARGEST MOTOR =	0 kVA	AVERAGE AMPS PER PHASE =	106
REMAINDER 0kVA @ 50% =	0 kVA				

** – PROVIDE GFI CIRCUIT BREAKER

PANEL "1LD"

VOLTS/PHASE/WIRE:	PANEL SIZE & TYPE:	MAIN SIZE & TYPE:	LOCATION:	CABINET:	NOTES:
120/208 V, 3 PH 4 WIRE	22" W x 6" D, BOLT-ON	200 AMPERE MAIN LUG		SURFACE	

ACCESSORIES: PANEL DIRECTORY, IDENTIFICATION, GROUNDING BAR, SUBFEED LUGS, HINGED COVER

CKT NO	OCP AMP	OCP POLE	LOAD (kVA) LTG	LOAD (kVA) CO	LOAD (kVA) PWR	DESCRIPTION	LCL kVA	PHASE LOAD A	PHASE LOAD B	PHASE LOAD C	LCL kVA	DESCRIPTION	LOAD (kVA) LTG	LOAD (kVA) CO	LOAD (kVA) PWR	OCP AMP	OCP POLE	CKT NO
1	50	1			4.0	CORD REEL	4.0	4.0			0.0	SPARE				20	1	2
3	50	1			4.0	CORD REEL	4.0		6.5		2.5	DRYER			2.5	40	2	4
5	50	1			4.0	CORD REEL	4.0			6.5	2.5	----			2.5	–	–	6
7	50	1			4.0	CORD REEL	4.0	4.0			0.0	SPARE				20	1	8
9	50	1			4.0	CORD REEL	4.0		4.0		0.0	SPARE				20	1	10
11	50	1			4.0	CORD REEL	4.0			5.5	1.5	WASHER			1.5	20	1	12
13	30	1			4.0	CORD REEL	4.0	4.0			0.0	SPARE				20	1	14
15	30	1				SPARE	0.0		0.0		0.0	SPARE				20	1	16
17	20**	1		0.2		CORD REEL	0.2			0.2	0.0	SPARE				20	1	18
19	20**	1		0.2		CORD REEL	0.2	0.2			0.0	SPARE				20	1	20
21	20**	1		0.2		CORD REEL	0.2		0.2		0.0	SPARE				20	1	22
23	20**	1		0.2		CORD REEL	0.2			0.2	0.0	SPARE				20	1	24
25	20**	1		0.2		CORD REEL	0.2	0.2			0.0	SPARE				20	1	26
27	20**	1		0.2		CORD REEL	0.2		0.2		0.0	SPARE				20	1	28
29	20	1			1.5	OH-1	1.5			1.5	0.0	SPARE				20	1	30
31	20	1			1.5	OH-1	1.5	1.5			0.0	BLANK				20	1	32
33	20	1			1.5	OH-1	1.5		1.5		0.0	BLANK				20	1	34
35	20	1				SPARE	0.0			0.0	0.0	BLANK				20	1	36
37	20	1				SPARE	0.0	0.0			0.0	BLANK				20	1	38
39	20	1				SPARE	0.0		0.0		0.0	BLANK				20	1	40
41	20	1				SPARE	0.0			0.0	0.0	BLANK				20	1	42
TOTALS:						CONNECTED kVA PER PHASE		14	12	14		CONNECTED TOTAL kVA				40		
						CONNECTED AMPS PER PHASE		116	103	116		CONNECTED AVERAGE AMPS PER PHASE				112		

NEC DIVERSIFIED LOAD CALCULATIONS

LIGHTING 0kVA @125% =	0 kVA	ALL OTHER LOADS @100% =	39 kVA	DIVERSIFIED TOTAL kVA =	40
RECEPTACLES 1kVA @100% =	1 kVA	25% OF LARGEST MOTOR =	0 kVA	AVERAGE AMPS PER PHASE =	112
REMAINDER 0kVA @ 50% =	0 kVA				

** – PROVIDE GFI CIRCUIT BREAKER

GSBS | ARCHITECTURE | LANDSCAPE ARCHITECTURE | PLANNING | INTERIOR DESIGN

375 West 200 South Suite 100
Salt Lake City
Utah 84101

Tel 801.521.8600
Fax 801.521.7913

GSBS-PC.COM

LICENSED PROFESSIONAL ENGINEER
No. 181563
DAVID E. WESEMANN
STATE OF UTAH
02/01/08

SPECTRUM ENGINEERS
175 S MAIN ST, STE 300
SALT LAKE CITY, UT 84111
P:801.328.5151 F:801.328.5155

No.	DATE	REVISION

NORTH SALT LAKE READINESS CENTER AND CIVIL SUPPORT TEAM

Salt Lake City, UT

PANEL SCHEDULES

PROJECT NO. 2005.003	EP603
DATE 02/01/2008	
DRAWN PSS	
CHECKED	BINDING ORDER 125

File Name: P:\2006\20060331\1Drawings\Sheet\125-31EP-603.dwg Last Plotted: 2008/02/11 @ 4:39 PM By: pss

PANEL "2HA"

VOLTS/PHASE/WIRE:	PANEL SIZE & TYPE:	MAIN SIZE & TYPE:	LOCATION:	CABINET:	NOTES:
277/480 V, 3 PH 4 WIRE	22" W x 6" D, BOLT–ON	100 AMPERE MAIN LUG		SURFACE	

ACCESSORIES: PANEL DIRECTORY, IDENTIFICATION, GROUNDING BAR, HINGED COVER

CKT	OCP		LOAD (kVA)			DESCRIPTION	LCL	PHASE LOAD			LCL	DESCRIPTION	LOAD (kVA)			OCP		CKT
NO	AMP	POLE	LTG	CO	PWR		kVA	A	B	C	kVA		LTG	CO	PWR	AMP	POLE	NO
1	20	1	3.1			HHC OFFICES	3.9	5.1			2.5	RELAY PANEL RP2	2.0			20	1	2
3	20	1	3.1			HHC OFFICES	3.9		5.1		2.5	RELAY PANEL RP2	2.0			20	1	4
5	20	1	2.9			STORAGE/HHC BN HQ	3.6			4.9	2.5	RELAY PANEL RP2	2.0			20	1	6
7	20	1	3.0			LEARNING CTR/CONF 240	3.8	5.0			2.5	RELAY PANEL RP2	2.0			20	1	8
9	20	1	1.6			CLASS 204, 205	2.0		3.6		2.5	RELAY PANEL RP2	2.0			20	1	10
11	20	1				SPARE	0.0			0.0	0.0	SPARE				20	1	12
13	20	1				SPARE	0.0	0.0			0.0	SPARE				20	1	14
15	20	1				SPARE	0.0		0.0		0.0	SPARE				20	1	16
17	20	1				SPARE	0.0			0.0	0.0	SPARE				20	1	18
19	20	1				SPARE	0.0	0.0			0.0	SPARE				20	1	20
21	20	1				SPARE	0.0		0.0		0.0	SPARE				20	1	22
23	20	1				SPARE	0.0			0.0	0.0	SPARE				20	1	24
25	20	1				SPARE	0.0	0.0			0.0	SPARE				20	1	26
27	20	1				SPARE	0.0		0.0		0.0	SPARE				20	1	28
29	20	1				SPARE	0.0			0.0	0.0	SPARE				20	1	30
31	20	1				SPARE	0.0	0.0			0.0	SPARE				20	1	32
33	20	1				SPARE	0.0		0.0		0.0	SPARE				20	1	34
35	20	1				SPARE	0.0			0.0	0.0	SPARE				20	1	36
37	20	1				SPARE	0.0	0.0			0.0	SPARE				20	1	38
39	20	1				SPARE	0.0		0.0		0.0	SPARE				20	1	40
41	20	1				SPARE	0.0			0.0	0.0	SPARE				20	1	42

TOTALS: CONNECTED kVA PER PHASE **10 9 5** — CONNECTED TOTAL kVA **24**
CONNECTED AMPS PER PHASE **37 31 18** — CONNECTED AVERAGE AMPS PER PHASE **29**

NEC DIVERSIFIED LOAD CALCULATIONS
LIGHTING 24kVA @125% = **30** kVA — ALL OTHER LOADS @100% = **0** kVA — DIVERSIFIED TOTAL kVA = **30**
RECEPTACLES 0kVA @100% = **0** kVA — 25% OF LARGEST MOTOR = **0** kVA — AVERAGE AMPS PER PHASE = **36**
REMAINDER 0kVA @ 50% = **0** kVA

PANEL "2HB"

VOLTS/PHASE/WIRE:	PANEL SIZE & TYPE:	MAIN SIZE & TYPE:	LOCATION:	CABINET:	NOTES:
277/480 V, 3 PH 4 WIRE	22" W x 6" D, BOLT–ON	400 AMPERE MAIN LUG		SURFACE	

ACCESSORIES: PANEL DIRECTORY, IDENTIFICATION, GROUNDING BAR, HINGED COVER

CKT	OCP		LOAD (kVA)			DESCRIPTION	LCL	PHASE LOAD			LCL	DESCRIPTION	LOAD (kVA)			OCP		CKT
NO	AMP	POLE	LTG	CO	PWR		kVA	A	B	C	kVA		LTG	CO	PWR	AMP	POLE	NO
1	20	1	1.8			CST 2ND FLOOR	2.3	3.3			1.9	RELAY PANEL RP2	1.5			20	1	2
3	20	1	2.7			CST 1ST FLOOR	3.4		4.2		1.9	RELAY PANEL RP2	1.5			20	1	4
5	20	1	2.0			CST READY VEHICLES	2.5			3.5	1.9	RELAY PANEL RP1	1.5			20	1	6
7	20	1				SPARE	0.0	0.0			0.0	SPARE				20	1	8
9	20	1				SPARE	0.0		0.0		0.0	SPARE				20	1	10
11	20	1				SPARE	0.0			0.0	0.0	SPARE				20	1	12
13	20	1				SPARE	0.0	0.0			0.0	SPARE				20	1	14
15	20	1				SPARE	0.0		0.0		0.0	SPARE				20	1	16
17	20	1				SPARE	0.0			0.0	0.0	SPARE				20	1	18
19	20	1				SPARE	0.0	0.0			0.0	SPARE				20	1	20
21	20	1				SPARE	0.0		0.0		0.0	SPARE				20	1	22
23	20	1				SPARE	0.0			0.0	0.0	SPARE				20	1	24
25	20	1				SPARE	0.0	0.0			0.0	SPARE				20	1	26
27	20	1				SPARE	0.0		0.0		0.0	SPARE				20	1	28
29	20	1				SPARE	0.0			0.0	0.0	SPARE				20	1	30
31	20	1				SPARE	0.0	0.0			0.0	SPARE				20	1	32
33	20	1				SPARE	0.0		0.0		0.0	SPARE				20	1	34
35	20	1				SPARE	0.0			0.0	0.0	SPARE				20	1	36
37	20	1				SPARE	0.0	39.0			39.0	CSTDPLA (T–CSTDPLA)	0.0	10.8	28.2	200	3	38
39	20	1				SPARE	0.0		32.5		32.5	––––	0.0	11.0	21.5	–	–	40
41	20	1				SPARE	0.0			33.2	33.2	––––	0.0	9.0	24.2	–	–	42

TOTALS: CONNECTED kVA PER PHASE **42 37 37** — CONNECTED TOTAL kVA **116**
CONNECTED AMPS PER PHASE **153 133 133** — CONNECTED AVERAGE AMPS PER PHASE **139**

NEC DIVERSIFIED LOAD CALCULATIONS
LIGHTING 11kVA @125% = **14** kVA — ALL OTHER LOADS @100% = **74** kVA — DIVERSIFIED TOTAL kVA = **108**
RECEPTACLES 10kVA @100% = **10** kVA — 25% OF LARGEST MOTOR = **0** kVA — AVERAGE AMPS PER PHASE = **130**
REMAINDER 21kVA @ 50% = **10** kVA

PANEL "2LA"

VOLTS/PHASE/WIRE:	PANEL SIZE & TYPE:	MAIN SIZE & TYPE:	LOCATION:	CABINET:	NOTES:
120/208 V, 3 PH 4 WIRE	22" W x 6" D, BOLT–ON	225 AMPERE MAIN LUG		SURFACE	

ACCESSORIES: PANEL DIRECTORY, IDENTIFICATION, GROUNDING BAR, SUBFEED LUGS, HINGED COVER

CKT	OCP		LOAD (kVA)			DESCRIPTION	LCL	PHASE LOAD			LCL	DESCRIPTION	LOAD (kVA)			OCP		CKT
NO	AMP	POLE	LTG	CO	PWR		kVA	A	B	C	kVA		LTG	CO	PWR	AMP	POLE	NO
1	20	1		0.8		HHC BN HQ 237 CLG	0.8	1.6			0.8	CONFERENCE 245		0.8		20	1	2
3	20	1		0.8		HHC BN HQ 237 CLG	0.8		1.6		0.8	OFFICE 244		0.8		20	1	4
5	20	1		0.8		HHC BN HQ 237 CLG	0.8			1.6	0.8	OFFICE 243		0.8		20	1	6
7	20	1		0.8		HHC BN HQ 237 CLG	0.8	1.6			0.8	HHC ADMIN 250 CLG		0.8		20	1	8
9	20	1		0.8		HHC BN HQ 237 CLG	0.8		1.6		0.8	HHC ADMIN 250 CLG		0.8		20	1	10
11	20	1		0.8		HHC BN HQ 237 CLG	0.8			1.6	0.8	HHC ADMIN 250 CLG		0.8		20	1	12
13	20	1		0.8		HHC BN HQ 237 CLG	0.8	1.6			0.8	HHC ADMIN 250 CLG		0.8		20	1	14
15	20	1		0.8		HHC BN HQ 237 CLG	0.8		1.6		0.8	HHC ADMIN 250 CLG		0.8		20	1	16
17	20	1		0.8		HHC BN HQ 237 CLG	0.8			1.6	0.8	HHC ADMIN 250 CLG		0.8		20	1	18
19	20	1		1.2		HHC BN HQ 237	1.2	2.0			0.8	HHC ADMIN 250 CLG		0.8		20	1	20
21	20	1		0.8		HHC BN HQ 237	0.8		1.6		0.8	HHC ADMIN 250 CLG		0.8		20	1	22
23	20	1		0.8		HHC BN HQ 237	0.8			1.6	0.8	HHC ADMIN 250 CLG		0.8		20	1	24
25	20	1		1.2		HHC BN HQ 237	1.2	2.0			0.8	HHC ADMIN 250 CLG		0.8		20	1	26
27	20	1		0.8		HHC BN HQ 237	0.8		1.6		0.8	HHC ADMIN 250 CLG		0.8		20	1	28
29	20	1		0.8		HHC BN HQ 237	0.8			1.6	0.8	HHC ADMIN 250 CLG		0.8		20	1	30
31	20	1		0.8		OFFICE 241	0.8	1.6			0.8	HHC ADMIN 250 CLG		0.8		20	1	32
33	20	1		0.8		OFFICE 239	0.8		1.6		0.8	HHC ADMIN 250 CLG		0.8		20	1	34
35	20	1		0.8		OFFICE 238	0.8			1.6	0.8	HHC ADMIN 250 CLG		0.8		20	1	36
37	20	1		0.6		CONF 242	0.6	1.4			0.8	HHC ADMIN 250		0.8		20	1	38
39	20	1		0.6		CONF 242	0.6		1.8		1.2	HHC ADMIN 250		1.2		20	1	40
41	20	1				SPARE	0.0			0.0	0.0	SPARE				20	1	42
43	20	1		1.2		EAST HALL 224	1.2	2.4			1.2	HHC ADMIN 250		1.2		20	1	44
45	20	1		1.0		SOUTH HALL 254	1.0		2.2		1.2	HHC ADMIN 250		1.2		20	1	46
47	20	1		1.2		WEST HALL 200	1.2			2.4	1.2	HHC ADMIN 250		1.2		20	1	48
49	20	1			1.2	DRINKING FOUNTAIN	1.2	2.0			0.8	HHC ADMIN 250		0.8		20	1	50
51	20	1			1.2	DRINKING FOUNTAIN	1.2		2.0		0.8	OFFICE 246		0.8		20	1	52
53	20	1		0.2		ASMBLY HALL CLG	0.2			1.0	0.8	HHC ADMIN 250		0.8		20	1	54
55	20	1		0.2		ASMBLY HALL CLG	0.2	1.0			0.8	OFFICE 247		0.8		20	1	56
57	20	1			1.0	MOTORIZED SHADE	1.0		1.8		0.8	OFFICE 248		0.8		20	1	58
59	20	1			1.0	MOTORIZED SHADE	1.0			1.8	0.8	OFFICE 249		0.8		20	1	60
61	20	1		1.0		MEN 224/WOMEN 229	1.0	1.8			0.8	OFFICE 251		0.8		20	1	62
63	20	1		0.4		STORAGE 202B	0.4		1.2		0.8	OFFICE 252		0.8		20	1	64
65	20	1		0.6		STORAGE 202B	0.6			1.4	0.8	OFFICE 253		0.8		20	1	66
67	20	1		0.6		STORAGE 202B	0.6	1.4			0.8	OFFICE 258		0.8		20	1	68
69	20	1				SPARE	0.0		0.8		0.8	OFFICE 257		0.8		20	1	70
71	20	1				SPARE	0.0			0.8	0.8	OFFICE 256		0.8		20	1	72
73	20	1				SPARE	0.0	0.0			0.0	SPARE				20	1	74
75	20	1				SPARE	0.0		0.0		0.0	SPARE				20	1	76
77	20	1				SPARE	0.0			0.0	0.0	SPARE				20	1	78
79	20	1				SPARE	0.0	0.0			0.0	SPARE				20	1	80
81	20	1				SPARE	0.0		0.0		0.0	SPARE				20	1	82
83	20	1				SPARE	0.0			0.0	0.0	SPARE				20	1	84

TOTALS: CONNECTED kVA PER PHASE **20 19 17** — CONNECTED TOTAL kVA **57**
CONNECTED AMPS PER PHASE **170 162 142** — CONNECTED AVERAGE AMPS PER PHASE **158**

NEC DIVERSIFIED LOAD CALCULATIONS
LIGHTING 0kVA @125% = **0** kVA — ALL OTHER LOADS @100% = **4** kVA — DIVERSIFIED TOTAL kVA = **36**
RECEPTACLES 10kVA @100% = **10** kVA — 25% OF LARGEST MOTOR = **0** kVA — AVERAGE AMPS PER PHASE = **99**
REMAINDER 42kVA @ 50% = **21** kVA

PANEL "2LB"

VOLTS/PHASE/WIRE:	PANEL SIZE & TYPE:	MAIN SIZE & TYPE:	LOCATION:	CABINET:	NOTES:
120/208 V, 3 PH 4 WIRE	22" W x 6" D, BOLT–ON	225 AMPERE MAIN LUG		SURFACE	

ACCESSORIES: PANEL DIRECTORY, IDENTIFICATION, GROUNDING BAR, SUBFEED LUGS, HINGED COVER

CKT	OCP		LOAD (kVA)			DESCRIPTION	LCL	PHASE LOAD			LCL	DESCRIPTION	LOAD (kVA)			OCP		CKT
NO	AMP	POLE	LTG	CO	PWR		kVA	A	B	C	kVA		LTG	CO	PWR	AMP	POLE	NO
1	20	1		0.4		BREAKROOM 202	0.4	1.0			0.6	CLASSROOM 204		0.6		20	1	2
3	20	1		0.4		BREAKROOM 202	0.4		1.0		0.6	CLASSROOM 205		0.6		20	1	4
5	20	1		0.6		BREAKROOM 202	0.6			1.2	0.6	CLASSROOM 205		0.6		20	1	6
7	20	1		0.6		BREAKROOM 202	0.6	1.2			0.6	CLASSROOM 203		0.6		20	1	8
9	20	1		0.8		STORAGE 202A	0.8		1.4		0.6	CLASSROOM 203		0.6		20	1	10
11	20	1			1.2	BREAKROOM 202 VEND	1.2			1.8	0.6	CLASSROOM 204		0.6		20	1	12
13	20	1			1.2	BREAKROOM 202 VEND	1.2	2.0			0.8	CO–B ADMIN 231		0.8		20	1	14
15	20	1			1.2	BREAKROOM 202 VEND	1.2		2.0		0.8	CO–B ADMIN 231		0.8		20	1	16
17	20	1			1.2	BREAKROOM 202 VEND	1.2			2.0	0.8	CO–B ADMIN 231		0.8		20	1	18
19	20	1			1.5	BREAKROOM 202 REF	1.5	2.3			0.8	CONFERENCE 240		0.8		20	1	20
21	20	1		0.6		LIBRARY 219	0.6		1.4		0.8	CONFERENCE 240		0.8		20	1	22
23	20	1		0.4		LIBRARY 219	0.4			1.2	0.8	CO–B ADMIN 231		0.8		20	1	24
25	20	1		1.4		NORTH HALL 201	1.4	2.6			1.2	CO–B ADMIN 231 CLG		1.2		20	1	26
27	20	1		0.4		LEARNING CTR 218	0.4		1.6		1.2	CO–B ADMIN 231 CLG		1.2		20	1	28
29	20	1		0.6		LEARNING CTR 218	0.6			1.8	1.2	CO–B ADMIN 231 CLG		1.2		20	1	30
31	20	1		1.2		A/V STG 217/AID STG 216	1.2	2.4			1.2	CO–B ADMIN 231 CLG		1.2		20	1	32
33	20	1		0.2		ELEC 221	0.2		1.4		1.2	CO–B ADMIN 231 CLG		1.2		20	1	34
35	20	1		0.8		ROOF OUTLETS	0.8			2.0	1.2	CO–B ADMIN 231 CLG		1.2		20	1	36
37	20	1		0.6		ROOF OUTLETS	0.6	1.4			0.8	CO–B ADMIN 231		0.8		20	1	38
39	20	1		0.8		ROOF OUTLETS	0.8		1.6		0.8	CO–B ADMIN 231		0.8		20	1	40
41	20	1				SPARE	0.0			0.8	0.8	CO–B ADMIN 231		0.8		20	1	42
43	20	1		0.4		CONF 240 A/V RACK	0.4	1.6			1.2	CO–B ADMIN 231 CLG		1.2		20	1	44
45	20	1			1.0	CONF 240 A/V PROJ	1.0		2.2		1.2	CO–B ADMIN 231 CLG		1.2		20	1	46
47	20	1		0.4		LEARNING CTR A/V RACK	0.4			1.6	1.2	CO–B ADMIN 231 CLG		1.2		20	1	48
49	20	1		0.2		LEARNING CTR A/V FB	0.2	1.0			0.8	OFFICE 234		0.8		20	1	50
51	20	1			1.0	LEARNING CTR A/V PROJ	1.0		1.8		0.8	OFFICE 233		0.8		20	1	52
53	20	1			1.0	CLASS 205 AV PROJ	1.0			1.8	0.8	OFFICE 232		0.8		20	1	54
55	20	1			1.0	CLASS 204 AV PROJ	1.0	1.8			0.8	OFFICE 235		0.8		20	1	56
57	20	1			1.0	CLASS 203 AV PROJ	1.0		1.0		0.0	SPARE				20	1	58
59	20	1		0.4		CLASS 204 AV RACK	0.4			0.4	0.0	SPARE				20	1	60
61	20	1		0.4		STOR 202B AV RACK	0.4	0.4			0.0	SPARE				20	1	62
63	20	1			1.0	STOR 202B AV PROJ	1.0		1.0		0.0	SPARE				20	1	64
65	20	1		0.4		CONF 245 AV RACK	0.4			0.4	0.0	SPARE				20	1	66
67	20	1			1.0	CONF 245 AV PROJ	1.0	1.0			0.0	SPARE				20	1	68
69	20	1		0.2		CONF 245 AV FB	0.2		0.2		0.0	SPARE				20	1	70
71	20	1		0.4		CONF 242 AV RACK	0.4			0.4	0.0	SPARE				20	1	72
73	20	1			1.0	CONF 242 AV PROJ	1.0	1.0			0.0	SPARE				20	1	74
75	20	1				SPARE	0.0		0.0		0.0	SPARE				20	1	76
77	20	1				SPARE	0.0			0.0	0.0	SPARE				20	1	78
79	20	1				BLANK	0.0	0.0			0.0	BLANK				20	1	80
81	20	1				BLANK	0.0		0.0		0.0	BLANK				20	1	82
83	20	1				BLANK	0.0			0.0	0.0	BLANK				20	1	84

TOTALS: CONNECTED kVA PER PHASE **20 17 15** — CONNECTED TOTAL kVA **52**
CONNECTED AMPS PER PHASE **164 138 128** — CONNECTED AVERAGE AMPS PER PHASE **144**

NEC DIVERSIFIED LOAD CALCULATIONS
LIGHTING 0kVA @125% = **0** kVA — ALL OTHER LOADS @100% = **14** kVA — DIVERSIFIED TOTAL kVA = **38**
RECEPTACLES 10kVA @100% = **10** kVA — 25% OF LARGEST MOTOR = **0** kVA — AVERAGE AMPS PER PHASE = **105**
REMAINDER 27kVA @ 50% = **14** kVA

PANEL "2LC"

VOLTS/PHASE/WIRE:	PANEL SIZE & TYPE:	MAIN SIZE & TYPE:	LOCATION:	CABINET:	NOTES:
120/208 V, 3 PH 4 WIRE	22" W x 6" D, BOLT–ON	150 AMPERE MAIN LUG		SURFACE	

ACCESSORIES: PANEL DIRECTORY, IDENTIFICATION, GROUNDING BAR, SUBFEED LUGS, HINGED COVER

CKT	OCP		LOAD (kVA)			DESCRIPTION	LCL	PHASE LOAD			LCL	DESCRIPTION	LOAD (kVA)			OCP		CKT
NO	AMP	POLE	LTG	CO	PWR		kVA	A	B	C	kVA		LTG	CO	PWR	AMP	POLE	NO
1	20	1		0.8		CLASSROOM 215	0.8	1.4			0.6	MEN 124		0.6		20	1	2
3	20	1		0.8		CLASSROOM 215	0.8		1.2		0.4	WOMEN 123		0.4		20	1	4
5	20	1		0.8		OFFICE 214	0.8			2.0	1.2	DRINKING FOUNTAIN			1.2	20	1	6
7	20	1		0.8		OFFICE 209	0.8	2.0			1.2	DRINKING FOUNTAIN			1.2	20	1	8
9	20	1		0.8		OFFICE 212	0.8		2.0		1.2	HALL 125		1.2		20	1	10
11	20	1		0.8		OFFICE 211	0.8			1.8	1.0	UNIT STG 121		1.0		20	1	12
13	20	1		0.6		CST ADMIN 213	0.6	1.4			0.8	UNIT STG 121		0.8		20	1	14
15	20	1		0.6		CST ADMIN 213	0.6		1.4		0.8	OFFICE 126		0.8		20	1	16
17	20	1		0.6		CST ADMIN 213	0.6			1.4	0.8	OFFICE 127		0.8		20	1	18
19	20	1		0.8		CST ADMIN 213 CLG	0.8	1.6			0.8	OPS CTR 128		0.8		20	1	20
21	20	1		0.8		CST ADMIN 213 CLG	0.8		1.4		0.6	OPS CTR 128		0.6		20	1	22
23	20	1		0.8		CST ADMIN 213 CLG	0.8			1.4	0.6	OPS CTR 128		0.6		20	1	24
25	20	1		0.8		CST ADMIN 213 CLG	0.8	1.4			0.6	BREAK 132		0.6		20	1	26
27	20	1		0.8		CST ADMIN 213 CLG	0.8		1.2		0.4	BREAK 132		0.4		20	1	28
29	20	1		0.8		CST ADMIN 213 CLG	0.8			1.4	0.6	BREAK 132		0.6		20	1	30
31	20	1		0.8		CLASS 207	0.8	1.6			0.8	LOCKERS 122		0.8		20	1	32
33	20	1		0.8		OFFICE 208	0.8		1.4		0.6	LOCKERS 122		0.6		20	1	34
35	20	1		0.2		ROOF OUTLET	0.2			0.2	0.0	SPARE				20	1	36
37	20	1				CLASS 215 AV RACK	0.0	0.0			0.0	SPARE				20	1	38
39	20	1				CLASS 215 AV PROJ	0.0		0.0		0.0	SPARE				20	1	40
41	20	1				SPARE	0.0			0.0	0.0	SPARE				20	1	42
43	20	1				SPARE	0.0	0.0			0.0	SPARE				20	1	44
45	20	1				SPARE	0.0		0.0		0.0	SPARE				20	1	46
47	20	1				SPARE	0.0			0.0	0.0	SPARE				20	1	48
49	20	1				SPARE	0.0	0.0			0.0	SPARE				20	1	50
51	20	1				SPARE	0.0		0.0		0.0	SPARE				20	1	52
53	20	1				SPARE	0.0			0.0	0.0	SPARE				20	1	54
55	20	1				SPARE	0.0	0.0			0.0	SPARE				20	1	56
57	20	1				SPARE	0.0		0.0		0.0	SPARE				20	1	58
59	20	1				SPARE	0.0			0.0	0.0	SPARE				20	1	60

TOTALS: CONNECTED kVA PER PHASE **9 9 8** — CONNECTED TOTAL kVA **26**
CONNECTED AMPS PER PHASE **78 72 68** — CONNECTED AVERAGE AMPS PER PHASE **73**

NEC DIVERSIFIED LOAD CALCULATIONS
LIGHTING 0kVA @125% = **0** kVA — ALL OTHER LOADS @100% = **2** kVA — DIVERSIFIED TOTAL kVA = **19**
RECEPTACLES 10kVA @100% = **10** kVA — 25% OF LARGEST MOTOR = **0** kVA — AVERAGE AMPS PER PHASE = **54**
REMAINDER 14kVA @ 50% = **7** kVA

GSBS | ARCHITECTURE | LANDSCAPE ARCHITECTURE | PLANNING | INTERIOR DESIGN
375 West 200 South Suite 100
Salt Lake City
Utah 84101
Tel 801.521.8600
Fax 801.521.7913
GSBS-PC.COM

No. 181563
DAVID E. WESEMANN
LICENSED PROFESSIONAL ENGINEER — STATE OF UTAH
02/01/08

SPECTRUM ENGINEERS
175 S MAIN ST, STE 300
SALT LAKE CITY, UT 84111
P:801.328.5151 F:801.328.5155

No.	DATE	REVISION

NORTH SALT LAKE READINESS CENTER AND CIVIL SUPPORT TEAM

Salt Lake City, UT

PANEL SCHEDULES

PROJECT NO. 2005.003
DATE 02/01/2008
DRAWN PSS
CHECKED
EP604
BINDING ORDER 126

PANEL "1MHA"

VOLTS/PHASE/WIRE:	PANEL SIZE & TYPE:	MAIN SIZE & TYPE:	LOCATION:	CABINET:	NOTES:
277/480 V, 3 PH 4 WIRE	22" W x 6" D, BOLT-ON	100 AMPERE MAIN LUG		SURFACE	

ACCESSORIES: PANEL DIRECTORY, IDENTIFICATION, GROUNDING BAR, SUBFEED LUGS, HINGED COVER

CKT	OCP		LOAD (kVA)					LCL	PHASE LOAD			LCL		LOAD (kVA)			OCP		CKT
NO	AMP	POLE	LTG	CO	PWR	DESCRIPTION		kVA	A	B	C	kVA	DESCRIPTION	LTG	CO	PWR	AMP	POLE	NO
1	20	3			0.8	P-3		0.8	1.4			0.6	AHU-3			0.6	20	3	2
3	–	–			0.8	----		0.8		1.4		0.6	----			0.6	–	–	4
5	–	–			0.8	----		0.8			1.4	0.6	----			0.6	–	–	6
7	20	3			0.8	P-4		0.8	2.9			2.1	AHU-4			2.1	20	3	8
9	–	–			0.8	----		0.8		2.9		2.1	----			2.1	–	–	10
11	–	–			0.8	----		0.8			2.9	2.1	----			2.1	–	–	12
13	20	1			0.7	P-1		0.7	2.8			2.1	AHU-5			2.1	20	3	14
15	20	1			0.7	P-2		0.7		2.8		2.1	----			2.1	–	–	16
17	20	3			3.8	AC-1		3.8			5.9	2.1	----			2.1	–	–	18
19	–	–			3.8	----		3.8	5.9			2.1	AHU-6			2.1	20	3	20
21	–	–			3.8	----		3.8		5.9		2.1	----			2.1	–	–	22
23	20	3			0.8	EC-1		0.8			2.9	2.1	----			2.1	–	–	24
25	–	–			0.8	----		0.8	1.0			0.2	AHU-3P			0.2	20	1	26
27	–	–			0.8	----		0.8		1.0		0.2	AHU-4P			0.2	20	1	28
29	30	3				SPARE		0.0			0.2	0.2	AHU-5P			0.2	20	1	30
31	–	–				----		0.0	0.0			0.0	SPARE				20	1	32
33	–	–				----		0.0		0.0		0.0	SPARE				20	1	34
35	20	1				SPARE		0.0			0.0	0.0	SPARE				20	1	36
37	20	1				SPARE		0.0	0.0			0.0	SPARE				20	1	38
39	20	1				SPARE		0.0		0.0		0.0	SPARE				20	1	40
41	20	1				SPARE		0.0			0.0	0.0	SPARE				20	1	42
TOTALS:						CONNECTED kVA PER PHASE			14	14	13		CONNECTED TOTAL kVA				41		
						CONNECTED AMPS PER PHASE			51	51	48		CONNECTED AVERAGE AMPS PER PHASE				50		

NEC DIVERSIFIED LOAD CALCULATIONS

LIGHTING 0kVA @125% =	0 kVA	ALL OTHER LOADS @100% = 41 kVA	DIVERSIFIED TOTAL kVA = 41
RECEPTACLES 0kVA @100% =	0 kVA	25% OF LARGEST MOTOR = 0 kVA	AVERAGE AMPS PER PHASE = 50
REMAINDER 0kVA @ 50% =	0 kVA		

PANEL "EMLA"

VOLTS/PHASE/WIRE:	PANEL SIZE & TYPE:	MAIN SIZE & TYPE:	LOCATION:	CABINET:	NOTES:
120/208 V, 3 PH 4 WIRE	22" W x 6" D, BOLT-ON	100 AMPERE MAIN CB		SURFACE	

ACCESSORIES: PANEL DIRECTORY, IDENTIFICATION, GROUNDING BAR, HINGED COVER

CKT	OCP		LOAD (kVA)					LCL	PHASE LOAD			LCL		LOAD (kVA)			OCP		CKT
NO	AMP	POLE	LTG	CO	PWR	DESCRIPTION		kVA	A	B	C	kVA	DESCRIPTION	LTG	CO	PWR	AMP	POLE	NO
1	20	1			0.4	MAIN COMM 143		0.4	0.8			0.5	ELEVATOR LIGHTS	0.4			20	1	2
3	20	1			0.4	MAIN COMM 143		0.4		0.6		0.2	VAULT 104		0.2		20	1	4
5	20	1			0.4	MAIN COMM 143		0.4			0.6	0.2	VAULT 102		0.2		20	1	6
7	20	1			0.4	MAIN COMM 143		0.4	1.2			0.8	REFRIG 215			0.8	20	1	8
9	20	1			0.4	MAIN COMM 143		0.4		0.6		0.2	EM OUTLET 219		0.2		20	1	10
11	20	1			0.6	MAIN COMM 143		0.6			0.8	0.2	EM OUTLET 128		0.2		20	1	12
13	20	1			0.6	COMM 131		0.6	0.8			0.2	EM OUTLET 132		0.2		20	1	14
15	20	1			0.8	COMM 129		0.8		0.8		0.0	SPARE				20	1	16
17	20	1				SPARE		0.0			0.0	0.0	SPARE				20	1	18
19	20	1			0.4	BREAK 132		0.4	0.4			0.0	SPARE				20	1	20
21	20	1			0.6	COMM 230		0.6		0.6		0.0	SPARE				20	1	22
23	20	1			0.4	COMM 230		0.4			0.4	0.0	SPARE				20	1	24
25	20	1			0.6	COMM 230		0.6	0.6			0.0	SPARE				20	1	26
27	20	1			0.4	INFO TECH 222		0.4		0.4		0.0	SPARE				20	1	28
29	20	1			0.6	INFO TECH 222		0.6			0.6	0.0	SPARE				20	1	30
31	20	1				SPARE		0.0	0.0			0.0	SPARE				20	1	32
33	20	1				SPARE		0.0		0.0		0.0	SPARE				20	1	34
35	20	1				SPARE		0.0			0.0	0.0	SPARE				20	1	36
37	20	1			0.5	1ST FLOOR FA RELAYS		0.5	1.5			1.0	GENERATOR AUXILIARIES			1.0	20	1	38
39	20	1			0.5	2ND FLOOR FA RELAYS		0.5		1.5		1.0	GENERATOR AUXILIARIES			1.0	20	1	40
41	20	1			1.0	FIRE ALARM CONTROL PNL		1.0			2.0	1.0	GENERATOR AUXILIARIES			1.0	20	1	42
TOTALS:						CONNECTED kVA PER PHASE			5	5	4		CONNECTED TOTAL kVA				14		
						CONNECTED AMPS PER PHASE			44	38	37		CONNECTED AVERAGE AMPS PER PHASE				39		

NEC DIVERSIFIED LOAD CALCULATIONS

LIGHTING 0kVA @125% =	1 kVA	ALL OTHER LOADS @100% = 6 kVA	DIVERSIFIED TOTAL kVA = 14
RECEPTACLES 8kVA @100% =	8 kVA	25% OF LARGEST MOTOR = 0 kVA	AVERAGE AMPS PER PHASE = 40
REMAINDER 0kVA @ 50% =	0 kVA		

PANEL "1MLA"

VOLTS/PHASE/WIRE:	PANEL SIZE & TYPE:	MAIN SIZE & TYPE:	LOCATION:	CABINET:	NOTES:
120/208 V, 3 PH 4 WIRE	22" W x 6" D, BOLT-ON	400 AMPERE MAIN BKR		SURFACE	

ACCESSORIES: PANEL DIRECTORY, IDENTIFICATION, GROUNDING BAR, SUBFEED LUGS, HINGED COVER

CKT	OCP		LOAD (kVA)					LCL	PHASE LOAD			LCL		LOAD (kVA)			OCP		CKT
NO	AMP	POLE	LTG	CO	PWR	DESCRIPTION		kVA	A	B	C	kVA	DESCRIPTION	LTG	CO	PWR	AMP	POLE	NO
1	20	1			0.5	BOILER		0.5	0.5			0.0	SPARE				20	1	2
3	20	1			0.5	BOILER		0.5		0.6		0.1	P-5			0.1	20	1	4
5	20	1			0.6	EF-2		0.6			1.1	0.5	RH-3,4,5			0.5	20	1	6
7	20	1			1.7	EF-3		1.7	2.1			0.4	RH-1,2			0.4	20	1	8
9	20	1			1.7	EF-4		1.7		2.1		0.4	SPARE			0.4	20	1	10
11	20	3			1.3	EF-5		1.3			1.7	0.4	SPARE			0.4	20	1	12
13	–	–			1.3	----		1.3	2.1			0.8	FC-1			0.8	20	3	14
15	–	–			1.3	----		1.3		2.1		0.8	----			0.8	–	–	16
17	20	1			0.9	EF-7		0.9			1.7	0.8	----			0.8	–	–	18
19	20	1			0.6	EF-8		0.6	1.6			1.0	UH-1			1.0	20	1	20
21	20	1			0.6	EF-9		0.6		3.6		3.0	VEF-1			3.0	40	3	22
23	20	1			0.8	WH-1		0.8			3.8	3.0	----			3.0	–	–	24
25	20	1			0.8	WH-2		0.8	3.8			3.0	----			3.0	–	–	26
27	60	2			2.5	RTU-3A		2.5		4.5		2.0	VEF-2			2.0	30	1	28
29	–	–			2.5	----		2.5			4.5	2.0	----			2.0	–	1	30
31	60	2			2.5	RTU-3B		2.5	4.5			2.0	----			2.0	–	1	32
33	–	–			2.5	----		2.5		2.6		0.1	EF-6			0.1	20	1	34
35	60	2			2.5	RTU-4A		2.5			2.5	0.0	EC-1P				20	1	36
37	–	–			2.5	----		2.5	2.6			0.1	CP-1			0.1	20	1	38
39	60	2			2.5	RTU-4B		2.5		2.5		0.0	SPARE				20	1	40
41	–	–			2.5	----		2.5			2.5	0.0	SPARE				20	1	42
43	60	3			5.5	RTU-1		5.5	6.8			1.3	AHU-3			1.3	20	3	44
45	–	–			5.5	----		5.5		6.8		1.3	----			1.3	–	–	46
47	–	–			5.5	----		5.5			6.8	1.3	----			1.3	–	–	48
49	30	3			2.3	RTU-2		2.3	4.3			2.0	AHU-4			2.0	30	3	50
51	–	–			2.3	----		2.3		4.3		2.0	----			2.0	–	–	52
53	–	–			2.3	----		2.3			4.3	2.0	----			2.0	–	–	54
55	20	1			0.6	EF-1		0.6	1.5			0.9	AHU-5			0.9	20	3	56
57	20	1				SPARE		0.0		0.9		0.9	----			0.9	–	–	58
59	20	1				SPARE		0.0			0.9	0.9	----			0.9	–	–	60
61	20	1				SPARE		0.0	0.0			0.0	SPARE				20	1	62
63	20	1				SPARE		0.0		0.0		0.0	SPARE				20	1	64
65	20	1				SPARE		0.0			0.0	0.0	SPARE				20	1	66
67	20	1				SPARE		0.0	0.0			0.0	SPARE				20	1	68
69	20	1				SPARE		0.0		0.0		0.0	SPARE				20	1	70
71	20	1				SPARE		0.0			0.0	0.0	SPARE				20	1	72
73	20	1				SPARE		0.0	0.0			0.0	SPARE				20	1	74
75	20	1				SPARE		0.0		0.0		0.0	SPARE				20	1	76
77	20	1				SPARE		0.0			0.0	0.0	SPARE				20	1	78
79	20	1				SPARE		0.0	0.0			0.0	SPARE				20	1	80
81	20	1				SPARE		0.0		0.0		0.0	SPARE				20	1	82
83	20	1				SPARE		0.0			0.0	0.0	SPARE				20	1	84
TOTALS:						CONNECTED kVA PER PHASE			30	30	30		CONNECTED TOTAL kVA				90		
						CONNECTED AMPS PER PHASE			248	250	248		CONNECTED AVERAGE AMPS PER PHASE				249		

NEC DIVERSIFIED LOAD CALCULATIONS

LIGHTING 0kVA @125% =	0 kVA	ALL OTHER LOADS @100% = 90 kVA	DIVERSIFIED TOTAL kVA = 90
RECEPTACLES 0kVA @100% =	0 kVA	25% OF LARGEST MOTOR = 0 kVA	AVERAGE AMPS PER PHASE = 249
REMAINDER 0kVA @ 50% =	0 kVA		

PANEL "EMHA"

VOLTS/PHASE/WIRE:	PANEL SIZE & TYPE:	MAIN SIZE & TYPE:	LOCATION:	CABINET:	NOTES:
277/480 V, 3 PH 4 WIRE	22" W x 6" D, BOLT-ON	100 AMPERE MAIN LUG		SURFACE	

ACCESSORIES: PANEL DIRECTORY, IDENTIFICATION, GROUNDING BAR, HINGED COVER

CKT	OCP		LOAD (kVA)					LCL	PHASE LOAD			LCL		LOAD (kVA)			OCP		CKT
NO	AMP	POLE	LTG	CO	PWR	DESCRIPTION		kVA	A	B	C	kVA	DESCRIPTION	LTG	CO	PWR	AMP	POLE	NO
1	20	1	2.2			FIRST FLOOR LIGHTING		2.8	4.9			2.7	RTU-3			2.7	20	1	2
3	20	1	2.3			FIRST FLOOR LIGHTING		2.9		5.0		2.7	----			2.7	20	1	4
5	20	1	2.8			SECOND FLOOR LIGHTING		3.5			5.5	2.7	----			2.7	20	1	6
7	20	1	1.5			SECOND FLOOR LIGHTING		1.9	1.5			0.0	SPARE				20	1	8
9	20	1	2.1			ASSEMBLY HALL		2.6		2.1		0.0	SPARE				20	1	10
11	20	1				SPARE		0.0			0.0	0.0	SPARE				20	1	12
13	20	1				SPARE		0.0	0.0			0.0	SPARE				20	1	14
15	20	1				SPARE		0.0		0.0		0.0	SPARE				20	1	16
17	20	1				SPARE		0.0			0.0	0.0	SPARE				20	1	18
19	20	1				SPARE		0.0	0.0			0.0	SPARE				20	1	20
21	20	1				SPARE		0.0		0.0		0.0	SPARE				20	1	22
23	20	1				SPARE		0.0			0.0	0.0	SPARE				20	1	24
25	20	1				SPARE		0.0	0.0			0.0	SPARE				20	1	26
27	20	1				SPARE		0.0		0.0		0.0	SPARE				20	1	28
29	20	1				SPARE		0.0			0.0	0.0	SPARE				20	1	30
31	20	1				SPARE		0.0	0.0			0.0	SPARE				20	1	32
33	20	1				SPARE		0.0		0.0		0.0	SPARE				20	1	34
35	20	1				SPARE		0.0			0.0	0.0	SPARE				20	1	36
37	20	1				SPARE		0.0	0.0			0.0	SPARE				20	1	38
39	20	1				SPARE		0.0		0.0		0.0	SPARE				20	1	40
41	20	1				SPARE		0.0			0.0	0.0	SPARE				20	1	42
TOTALS:						CONNECTED kVA PER PHASE			6	7	6		CONNECTED TOTAL kVA				19		
						CONNECTED AMPS PER PHASE			23	26	20		CONNECTED AVERAGE AMPS PER PHASE				23		

NEC DIVERSIFIED LOAD CALCULATIONS

LIGHTING 11kVA @125% =	14 kVA	ALL OTHER LOADS @100% = 8 kVA	DIVERSIFIED TOTAL kVA = 22
RECEPTACLES 0kVA @100% =	0 kVA	25% OF LARGEST MOTOR = 0 kVA	AVERAGE AMPS PER PHASE = 26
REMAINDER 0kVA @ 50% =	0 kVA		

GSBS | ARCHITECTURE | LANDSCAPE ARCHITECTURE | PLANNING | INTERIOR DESIGN

375 West 200 South Suite 100
Salt Lake City
Utah 84101

Tel 801.521.8600
Fax 801.521.7913

GSBS-PC.COM

LICENSED PROFESSIONAL ENGINEER No. 181563 DAVID E. WESEMANN STATE OF UTAH 02/01/08

SPECTRUM ENGINEERS
175 S MAIN ST, STE 300
SALT LAKE CITY, UT 84111
P:801.328.5151 F:801.328.5155

No.	DATE	REVISION

NORTH SALT LAKE READINESS CENTER AND CIVIL SUPPORT TEAM

Salt Lake City, UT

PANEL SCHEDULES

PROJECT NO. 2005.003	EP605
DATE 02/01/2008	
DRAWN PSS	
CHECKED	BINDING ORDER 127

File Name: P:\2006\20060331\1Drawings\Sheet\127-31EP-605.dwg Last Plotted: 2008/02/11 @ 4:39 PM By: pss

MAIN DISTRIBUTION SWITCHBOARD "MDSB"

VOLTS/PHASE/WIRE: 277/480 V, 3 PH 4 WIRE | MAIN SIZE & TYPE: 1600 AMPERE MAIN MLO | LOCATION: | NOTES: 65,000 AIC

ACCESSORIES: IDENTIFICATION, GROUNDING BAR

CKT NO	OCP AMP	OCP POLE	LOAD (kVA) LTG	LOAD (kVA) CO	LOAD (kVA) PWR	PANEL / EQUIPMENT	LCL kVA	PHASE LOAD A	PHASE LOAD B	PHASE LOAD C	LCL kVA	PANEL / EQUIPMENT	LOAD (kVA) LTG	LOAD (kVA) CO	LOAD (kVA) PWR	OCP AMP	OCP POLE	CKT NO
1	400	3	0.7	49.0	32.0	1DPLA (T-1DPLA)	81.8	93.4			12.7	EMDPHA	4.1	2.6	5.0	125	3	2
–	–	–	0.3	42.8	31.3	----	74.4		86.0		12.7	----	4.4	3.0	4.2	–	–	–
–	–	–	0.7	39.8	31.8	----	72.4			82.2	10.6	----	2.8	2.4	4.7	–	–	–
3	150	3			14.4	ELEVATOR	14.4	42.6			28.2	K (T-K)	0.0	1.4	26.8	200	3	4
–	–	–			14.4	----	14.4		41.6		27.2	----	0.0	1.0	26.2	–	–	–
–	–	–			14.4	----	14.4			42.1	27.7	----	0.0	1.0	26.7	–	–	–
5	200	3				SPARE	0.0	42.3			43.1	2HB	3.3	10.8	28.2	400	3	6
–	–	–				----	0.0		36.7		37.8	----	4.2	11.0	21.5	–	–	–
–	–	–				----	0.0			36.7	37.6	----	3.5	9.0	24.2	–	–	–
7	200	3				SPARE	0.0	19.8			24.8	1HA	19.8	0.0	0.0	100	3	8
–	–	–				----	0.0		15.1		18.9	----	15.1	0.0	0.0	–	–	–
–	–	–				----	0.0			13.7	17.1	----	13.7	0.0	0.0	–	–	–
9	200	3				SPARE	0.0	10.1			12.6	2HA	10.1	0.0	0.0	200	3	10
–	–	–				----	0.0		8.7		10.9	----	8.7	0.0	0.0	–	–	–
–	–	–				----	0.0			4.9	6.1	----	4.9	0.0	0.0	–	–	–
11	400	3				BLANK	0.0	128			128	MDPHA	0.0	0.0	128	600	3	12
–	–	–				----	0.0		128		128	----	0.0	0.0	128	–	–	–
–	–	–				----	0.0			127	127	----	0.0	0.0	127	–	–	–

TOTALS: CONNECTED kVA PER PHASE **336 316 307** — CONNECTED TOTAL kVA **959**
CONNECTED AMPS PER PHASE **1213 1141 1107** — CONNECTED AVERAGE AMPS PER PHASE **1154**

NEC DIVERSIFIED LOAD CALCULATIONS
LIGHTING 96kVA @125% = **120** kVA — ALL OTHER LOADS @100% = **689** kVA — DIVERSIFIED TOTAL kVA = **901**
RECEPTACLES 10kVA @100% = **10** kVA — 25% OF LARGEST MOTOR = **0** kVA — AVERAGE AMPS PER PHASE = **1084**
REMAINDER 164kVA @ 50% = **82** kVA

DISTRIBUTION PANELBOARD "1DPLA"

VOLTS/PHASE/WIRE: 120/208 V, 3 PH 4 WIRE | MAIN SIZE & TYPE: 600 AMPERE MAIN MCB | LOCATION: | NOTES: 22,000 AIC

ACCESSORIES: IDENTIFICATION, GROUNDING BAR, INSULATED GROUND BAR

CKT NO	OCP AMP	OCP POLE	LOAD (kVA) LTG	LOAD (kVA) CO	LOAD (kVA) PWR	PANEL / EQUIPMENT	LCL kVA	PHASE LOAD A	PHASE LOAD B	PHASE LOAD C	LCL kVA	PANEL / EQUIPMENT	LOAD (kVA) LTG	LOAD (kVA) CO	LOAD (kVA) PWR	OCP AMP	OCP POLE	CKT NO
1	225	3	0.0	8.4	5.2	1LA	13.6	34.0			20.4	2LA	0.0	19.2	1.2	200	3	2
–	–	–	0.0	7.2	5.6	----	12.8		32.2		19.4	----	0.0	17.2	2.2	–	–	–
–	–	–	0.2	5.6	9.1	----	15.0			31.9	17.0	----	0.0	16.0	1.0	–	–	–
3	100	3	0.0	6.4	3.2	1LB	9.6	29.7			20.1	2LB	0.0	14.4	5.7	225	3	4
–	–	–	0.0	5.8	1.6	----	7.4		23.2		15.8	----	0.0	10.6	5.2	–	–	–
–	–	–	0.0	5.8	1.6	----	7.4			23.0	15.6	----	0.0	12.2	3.4	–	–	–
5	100	3	0.7	1.0	0.0	UHB	1.8	18.4			16.7	DISH MACHINE 30				200	3	6
–	–	–	0.3	1.2	0.0	----	1.5		18.2		16.7	----				16.7	–	–	–
–	–	–	0.5	0.4	0.0	----	1.0			17.6	16.7	----				16.7	–	–	–
7	100	3				SPARE	0.0	0.0			0.0	SPARE				225	3	8
–	–	–					0.0		0.0		0.0					–	–	–
–	–	–					0.0			0.0	0.0					–	–	–
9	200	3				BLANK	0.0	0.0			0.0	BLANK				200	3	10
–	–	–					0.0		0.0		0.0					–	–	–
–	–	–					0.0			0.0	0.0					–	–	–

TOTALS: CONNECTED kVA PER PHASE **82 74 72** — CONNECTED TOTAL kVA **228**
CONNECTED AMPS PER PHASE **684 613 604** — CONNECTED AVERAGE AMPS PER PHASE **634**

NEC DIVERSIFIED LOAD CALCULATIONS
LIGHTING 2kVA @125% = **2** kVA — ALL OTHER LOADS @100% = **95** kVA — DIVERSIFIED TOTAL kVA = **168**
RECEPTACLES 10kVA @100% = **10** kVA — 25% OF LARGEST MOTOR = **0** kVA — AVERAGE AMPS PER PHASE = **466**
REMAINDER 121kVA @ 50% = **61** kVA

DISTRIBUTION PANELBOARD "CSTDPLA"

VOLTS/PHASE/WIRE: 120/208 V, 3 PH 4 WIRE | MAIN SIZE & TYPE: 400 AMPERE MAIN MCB | LOCATION: | NOTES: 22,000 AIC

ACCESSORIES: IDENTIFICATION, GROUNDING BAR, INSULATED GROUND BAR

CKT NO	OCP AMP	OCP POLE	LOAD (kVA) LTG	LOAD (kVA) CO	LOAD (kVA) PWR	PANEL / EQUIPMENT	LCL kVA	PHASE LOAD A	PHASE LOAD B	PHASE LOAD C	LCL kVA	PANEL / EQUIPMENT	LOAD (kVA) LTG	LOAD (kVA) CO	LOAD (kVA) PWR	OCP AMP	OCP POLE	CKT NO
1	200	3	0.0	2.2	13.5	1LC	15.7	25.1			9.4	2LC	0.0	8.2	1.2	150	3	2
–	–	–	0.0	2.0	9.5	----	11.5		20.1		8.6	----	0.0	8.6	0.0	–	–	–
–	–	–	0.0	1.6	9.5	----	11.1			19.3	8.2	----	0.0	7.0	1.2	–	–	–
3	200	3	0.0	0.4	13.5	1LD	13.9	13.9			0.0	SPARE				100	3	4
–	–	–	0.0	0.4	12.0	----	12.4		12.4		0.0	----				–	–	–
–	–	–	0.0	0.4	13.5	----	13.9			13.9	0.0	----				–	–	–
5	200	3				BLANK	0.0	0.0			0.0	BLANK				200	3	6
–	–	–				----	0.0		0.0		0.0	----				–	–	–
–	–	–				----	0.0			0.0	0.0	----				–	–	–

TOTALS: CONNECTED kVA PER PHASE **39 33 33** — CONNECTED TOTAL kVA **105**
CONNECTED AMPS PER PHASE **325 271 277** — CONNECTED AVERAGE AMPS PER PHASE **291**

NEC DIVERSIFIED LOAD CALCULATIONS
LIGHTING 0kVA @125% = **0** kVA — ALL OTHER LOADS @100% = **74** kVA — DIVERSIFIED TOTAL kVA = **94**
RECEPTACLES 10kVA @100% = **10** kVA — 25% OF LARGEST MOTOR = **0** kVA — AVERAGE AMPS PER PHASE = **262**
REMAINDER 21kVA @ 50% = **10** kVA

DISTRIBUTION PANELBOARD "EMDPHA"

VOLTS/PHASE/WIRE: 277/480 V, 3 PH 4 WIRE | MAIN SIZE & TYPE: 125 AMPERE MAIN LUG | LOCATION: | NOTES: 42,000 AIC

ACCESSORIES: IDENTIFICATION, GROUNDING BAR

CKT NO	OCP AMP	OCP POLE	LOAD (kVA) LTG	LOAD (kVA) CO	LOAD (kVA) PWR	PANEL / EQUIPMENT	LCL kVA	PHASE LOAD A	PHASE LOAD B	PHASE LOAD C	LCL kVA	PANEL / EQUIPMENT	LOAD (kVA) LTG	LOAD (kVA) CO	LOAD (kVA) PWR	OCP AMP	OCP POLE	CKT NO
1	100	3	3.7	0.0	2.7	EMHA	7.3	11.7			5.4	TEMLA – EMLA	0.4	2.6	2.3	40	3	2
–	–	–	4.4	0.0	2.7	----	8.2		11.6		4.5	----	0.0	3.0	1.5	–	–	–
–	–	–	2.8	0.0	2.7	----	6.2			9.9	4.4	----	0.0	2.4	2.0	–	–	–
3	60	3				SPARE	0.0	0.0			0.0	BLANK				60	3	4
–	–	–				----	0.0		0.0		0.0	----				–	–	–
–	–	–				----	0.0			0.0	0.0	----				–	–	–

TOTALS: CONNECTED kVA PER PHASE **12 12 10** — CONNECTED TOTAL kVA **33**
CONNECTED AMPS PER PHASE **42 42 36** — CONNECTED AVERAGE AMPS PER PHASE **40**

NEC DIVERSIFIED LOAD CALCULATIONS
LIGHTING 11kVA @125% = **14** kVA — ALL OTHER LOADS @100% = **14** kVA — DIVERSIFIED TOTAL kVA = **36**
RECEPTACLES 8kVA @100% = **8** kVA — 25% OF LARGEST MOTOR = **0** kVA — AVERAGE AMPS PER PHASE = **43**
REMAINDER 0kVA @ 50% = **0** kVA

MECHANICAL DISTRIBUTION PANELBOARD "MDPHA"

VOLTS/PHASE/WIRE: 277/480 V, 3 PH 4 WIRE | MAIN SIZE & TYPE: 600 AMPERE MAIN LUG | LOCATION: | NOTES: 42,000 AIC

ACCESSORIES: IDENTIFICATION, GROUNDING BAR, INSULATED GROUND BAR

CKT NO	OCP AMP	OCP POLE	LOAD (kVA) LTG	LOAD (kVA) CO	LOAD (kVA) PWR	PANEL / EQUIPMENT	LCL kVA	PHASE LOAD A	PHASE LOAD B	PHASE LOAD C	LCL kVA	PANEL / EQUIPMENT	LOAD (kVA) LTG	LOAD (kVA) CO	LOAD (kVA) PWR	OCP AMP	OCP POLE	CKT NO
1	100	3	0.0	0.0	14.0	1MHA	14.0	42.4			28.4	1MLA (T-1MLA)	0.0	0.0	28.4	100	3	2
–	–	–	0.0	0.0	14.0	----	14.0		44.0		30.0	----	0.0	0.0	30.0	–	–	–
–	–	–	0.0	0.0	13.3	----	13.3			42.9	29.6	----	0.0	0.0	29.6	–	–	–
3	200	3			42.0	AHU-1	42.0	42.0			0.0	SPARE				100	3	4
–	–	–			42.0	----	42.0		42.0		0.0	----				–	–	–
–	–	–			42.0	----	42.0			42.0	0.0	----				–	–	–
5	200	3			42.0	AHU-2	42.0	42.0			0.0	SPARE				100	3	6
–	–	–			42.0	----	42.0		42.0		0.0	----				–	–	–
–	–	–			42.0	----	42.0			42.0	0.0	----				–	–	–
7	200	3				SPARE	0.0	0.0			0.0	BLANK				100	3	8
–	–	–				----	0.0		0.0		0.0	BLANK				–	–	–
–	–	–				----				0.0	0.0	BLANK				–	–	–

TOTALS: CONNECTED kVA PER PHASE **126 128 127** — CONNECTED TOTAL kVA **381**
CONNECTED AMPS PER PHASE **456 462 458** — CONNECTED AVERAGE AMPS PER PHASE **459**

NEC DIVERSIFIED LOAD CALCULATIONS
LIGHTING 0kVA @125% = **0** kVA — ALL OTHER LOADS @100% = **381** kVA — DIVERSIFIED TOTAL kVA = **384**
RECEPTACLES 0kVA @100% = **0** kVA — 25% OF LARGEST MOTOR = **3** kVA — AVERAGE AMPS PER PHASE = **462**
REMAINDER 0kVA @ 50% = **0** kVA

PANEL "K"

VOLTS/PHASE/WIRE: 120/208 V, 3 PH 4 WIRE | PANEL SIZE & TYPE: 22" W x 6" D, BOLT-ON | MAIN SIZE & TYPE: 400 AMPERE MAIN BKR | LOCATION: | CABINET: SURFACE | NOTES:

ACCESSORIES: PANEL DIRECTORY, IDENTIFICATION, GROUNDING BAR, SUBFEED LUGS, HINGED COVER

CKT NO	OCP AMP	OCP POLE	LOAD (kVA) LTG	LOAD (kVA) CO	LOAD (kVA) PWR	DESCRIPTION	LCL kVA	PHASE LOAD A	PHASE LOAD B	PHASE LOAD C	LCL kVA	DESCRIPTION	LOAD (kVA) LTG	LOAD (kVA) CO	LOAD (kVA) PWR	OCP AMP	OCP POLE	CKT NO
1	20	1			0.7	JUICE DISPENSER 5	0.7	1.7			1.0	CONVENIENCE OUTLETS		1.0		20	1	2
3	20	1			1.0	COFFEE URN 6	1.0		1.8		0.8	OFFICE 138		0.8		20	1	4
5	20	1			0.7	ICE DISPENSER 7	0.7			1.7	1.0	STORAGE 139		1.0		20	1	6
7	20	1			1.5	COLD FOOD CNTR 8	1.5	1.9			0.4	JAN 141		0.4		20	1	8
9	20*	1			0.5	GAS GRIDDLE 20	0.5		0.7		0.2	TOILET 142		0.2		20	1	10
11	20	1			0.7	MIXING MACHINE 63	0.7			0.7	0.0	SPARE				20	3	12
13	40	3			3.0	HOT FOOD TABLE 17	3.0	3.0			0.0	----				–	–	14
15	–	–			3.0	----	3.0		3.0		0.0	----				–	–	16
17	–	–			3.0	----	3.0			9.0	6.0	DISH MACHINE BOOST 30A			6.0	70	3	18
19	20	2			1.2	FOOD WARMING CAB 19	1.2	7.2			6.0	----			6.0	–	–	20
21	–	–			1.2	----	1.2		7.2		6.0	----			6.0	–	–	22
23	20	3			0.8	GARBAGE DISP 26	0.8			5.8	5.0	BOOSTER HEATER 41			5.0	60	3	24
25	–	–			0.8	----	0.8	5.8			5.0	----			5.0	–	–	26
27	–	–			0.8	----	0.8		5.8		5.0	----			5.0	–	–	28
29	20	1			0.8	REFRIGERATOR 68	0.8			3.8	3.0	SINK BOOSTER HTR 36			3.0	40	3	30
31	20	1				SPARE	0.0	3.0			3.0	----			3.0	–	–	32
33	20	1				SPARE	0.0		3.0		3.0	----			3.0	–	–	34
35	20	1			0.8	REFRIGERATOR 69	0.8			1.6	0.8	GARBAGE DISP 34			0.8	20	3	36
37	20	1				SPARE	0.0	0.8			0.8	----			0.8	–	–	38
39	20	1				SPARE	0.0		0.8		0.8	----			0.8	–	–	40
41	20	1				SPARE	0.0			0.0	0.0	SPARE				20	1	42
43	20	1			0.7	FRZ FOOD CABINET 67	0.7	1.5			0.8	GARBAGE DISP 54			0.8	20	1	44
45	20	1			1.5	FOOD PREP TABLE 59	1.5		2.3		0.8	----			0.8	20	1	46
47	20	1			0.9	MEAT SLICER 66	0.9			1.7	0.8	----			0.8	20	1	48
49	20	1			0.7	COLD PAN 16	0.7	0.7			0.0	VEG PEELING 55				30	1	50
51	20*	1			1.0	WATER MIX VALVE 47	1.0		1.0		0.0	VEG PEELING DISP 55A				20	1	52
53	20	2			1.5	ICE MAKING MACHINE 57	1.5			2.3	0.8	GAS OVEN 49			0.8	20*	1	54
55	–	–			1.5	----	1.5	2.3			0.8	GAS STEAM KETTLE 45			0.8	20*	1	56
57	20	1			1.0	CAN OPENER 65	1.0		1.8		0.8	GAS FRYING PAN 46			0.8	20*	1	58
59	20	2			0.5	FLY CONTROL 75	0.5			1.3	0.8	GAS RANGE 48			0.8	20*	1	60
61	–	–			0.5	----	0.5	0.5			0.0	SPARE				20	1	62
63	20	1				SPARE	0.0		0.0		0.0	SPARE				20	1	64
65	20	1				SPARE	0.0			0.0	0.0	SPARE				20	1	66
67	20	1				SPARE	0.0	0.0			0.0	SPARE				20	1	68
69	20	1				SPARE	0.0		0.0		0.0	SPARE				20	1	70
71	20	1				SPARE	0.0			0.0	0.0	SPARE				20	1	72
73	20	1				SPARE	0.0	0.0			0.0	SPARE				20	1	74
75	20	1				SPARE	0.0		0.0		0.0	SPARE				20	1	76
77	20	1				SPARE	0.0			0.0	0.0	SPARE				20	1	78
79	20	1				SPARE	0.0	0.0			0.0	SPARE				20	1	80
81	20	1				SPARE	0.0		0.0		0.0	SPARE				20	1	82
83	20	1				SPARE	0.0			0.0	0.0	SPARE				20	1	84

TOTALS: CONNECTED kVA PER PHASE **28 27 28** — CONNECTED TOTAL kVA **83**
CONNECTED AMPS PER PHASE **235 227 230** — CONNECTED AVERAGE AMPS PER PHASE **231**

NEC DIVERSIFIED LOAD CALCULATIONS
LIGHTING 0kVA @125% = **0** kVA — ALL OTHER LOADS @100% = **80** kVA — DIVERSIFIED TOTAL kVA = **83**
RECEPTACLES 3kVA @100% = **3** kVA — 25% OF LARGEST MOTOR = **0** kVA — AVERAGE AMPS PER PHASE = **231**
REMAINDER 0kVA @ 50% = **0** kVA

*–PROVIDE WITH SHUNT TRIP BREAKER AND TIE IN TO HOOD FIRE SUPRESSION SYSTEM AS REQUIRED.

PANEL "UHB"

VOLTS/PHASE/WIRE: 120/208 V, 3 PH 4 WIRE | PANEL SIZE & TYPE: 22" W x 6" D, BOLT-ON | MAIN SIZE & TYPE: 100 AMPERE MAIN LUG | LOCATION: | CABINET: SURFACE | NOTES:

ACCESSORIES: PANEL DIRECTORY, IDENTIFICATION, GROUNDING BAR, SUBFEED LUGS, HINGED COVER

CKT NO	OCP AMP	OCP POLE	LOAD (kVA) LTG	LOAD (kVA) CO	LOAD (kVA) PWR	DESCRIPTION	LCL kVA	PHASE LOAD A	PHASE LOAD B	PHASE LOAD C	LCL kVA	DESCRIPTION	LOAD (kVA) LTG	LOAD (kVA) CO	LOAD (kVA) PWR	OCP AMP	OCP POLE	CKT NO
1	20	1	0.3	0.4		STORAGE AREA 1 & 2	0.7	1.1			0.5	EXTERIOR LIGHTS	0.4			20	1	2
3	20	1	0.3	0.4		STORAGE AREA 3 & 4	0.7		1.1		0.4	EXTERIOR OUTLETS		0.4		20	1	4
5	20	1	0.3	0.4		STORAGE AREA 5 & 6	0.7			0.9	0.3	CONTROLLED WASTE LTS	0.2			20	1	6
7	20	1				SPARE	0.0	0.6			0.6	CONTROLLED WASTE		0.6		20	1	8
9	20	1				SPARE	0.0		0.4		0.4	CONTROLLED WASTE		0.4		20	1	10
11	20	1				SPARE	0.0			0.0	0.0	SPARE				20	1	12
13	20	1				SPARE	0.0	0.0			0.0	SPARE				20	1	14
15	20	1				SPARE	0.0		0.0		0.0	SPARE				20	1	16
17	20	1				SPARE	0.0			0.0	0.0	SPARE				20	1	18
19	20	1				SPARE	0.0	0.0			0.0	SPARE				20	1	20
21	20	1				SPARE	0.0		0.0		0.0	SPARE				20	1	22
23	20	1				SPARE	0.0			0.0	0.0	SPARE				20	1	24
25	20	1				BLANK	0.0	0.0			0.0	BLANK				20	1	26
27	20	1				BLANK	0.0		0.0		0.0	BLANK				20	1	28
29	20	1				BLANK	0.0			0.0	0.0	BLANK				20	1	30

TOTALS: CONNECTED kVA PER PHASE **2 1 1** — CONNECTED TOTAL kVA **4**
CONNECTED AMPS PER PHASE **14 12 7** — CONNECTED AVERAGE AMPS PER PHASE **11**

NEC DIVERSIFIED LOAD CALCULATIONS
LIGHTING 1kVA @125% = **2** kVA — ALL OTHER LOADS @100% = **0** kVA — DIVERSIFIED TOTAL kVA = **4**
RECEPTACLES 3kVA @100% = **3** kVA — 25% OF LARGEST MOTOR = **0** kVA — AVERAGE AMPS PER PHASE = **12**
REMAINDER 0kVA @ 50% = **0** kVA

GSBS | ARCHITECTURE | LANDSCAPE ARCHITECTURE | PLANNING | INTERIOR DESIGN
375 West 200 South Suite 100
Salt Lake City
Utah 84101
Tel 801.521.8600
Fax 801.521.7913
GSBS-PC.COM

LICENSED PROFESSIONAL ENGINEER No. 181563 DAVID E. WESEMANN STATE OF UTAH 02/01/08

SPECTRUM ENGINEERS
175 S MAIN ST, STE 300
SALT LAKE CITY, UT 84111
P:801.328.5151 F:801.328.5155

No.	DATE	REVISION

NORTH SALT LAKE READINESS CENTER AND CIVIL SUPPORT TEAM

Salt Lake City, UT

PANEL SCHEDULES

PROJECT NO. 2005.003
DATE 02/01/2008
DRAWN PSS
CHECKED
EP606
BINDING ORDER 128

File Name: P:\2006\20060331\1Drawings\Sheet\128-31EP-606.dwg Last Plotted: 2008/02/11 @ 4:38 PM By: pss

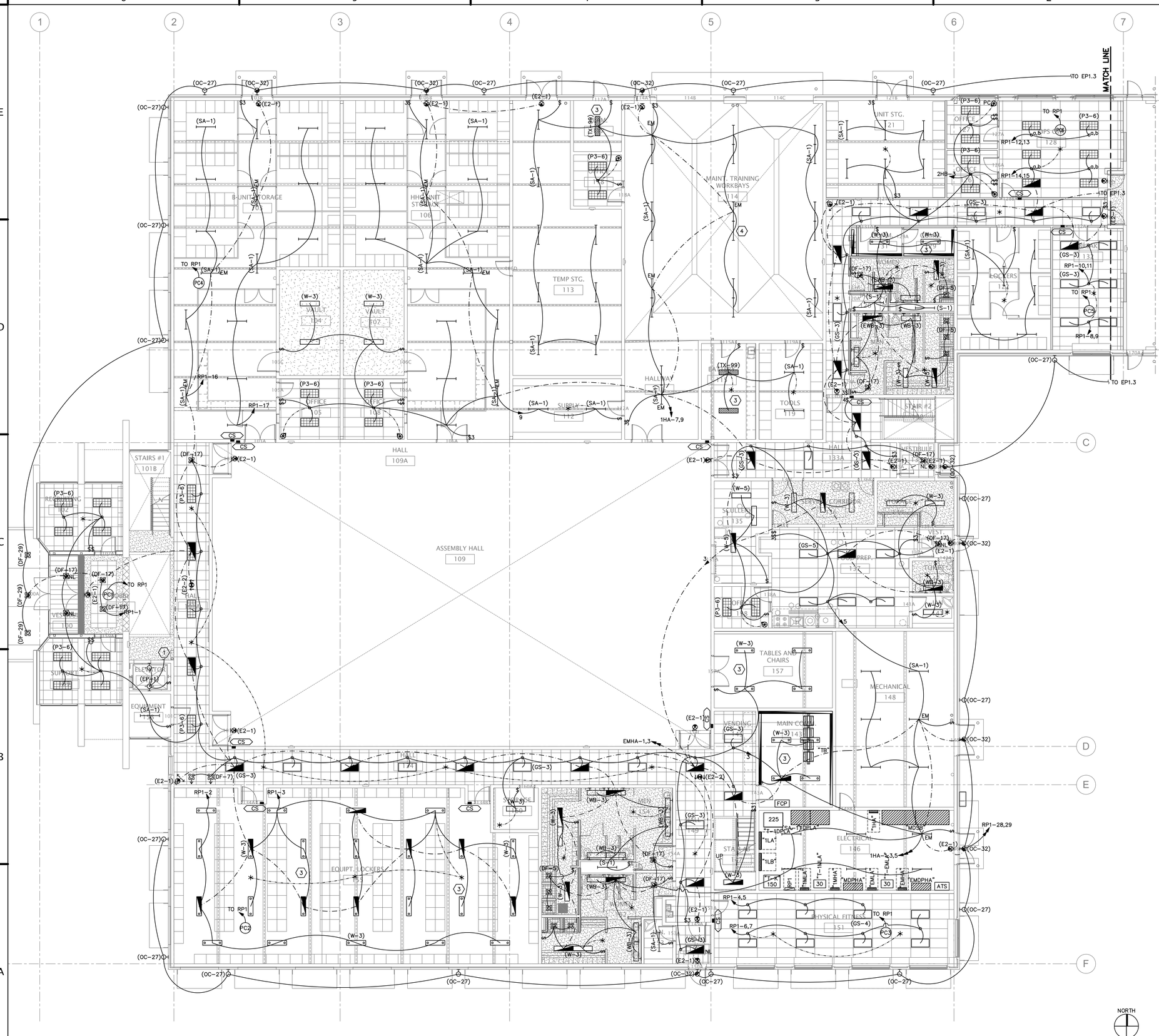

A6 LIGHTING PLAN LEVEL ONE
SCALE: 1/8"=1'-0"

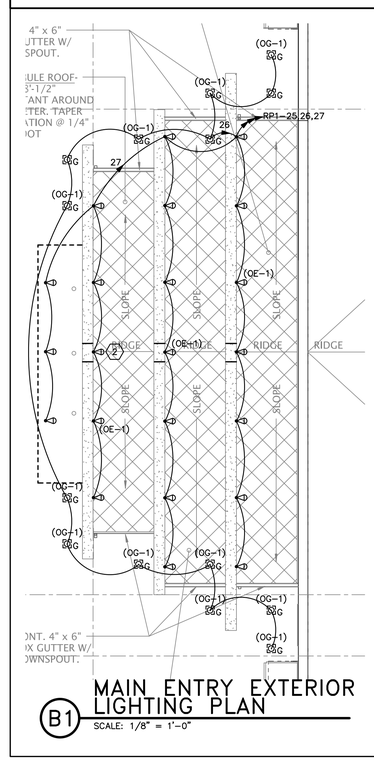

B1 MAIN ENTRY EXTERIOR LIGHTING PLAN
SCALE: 1/8" = 1'-0"

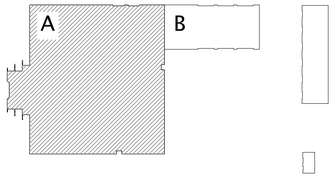

Key Plan

GENERAL SHEET NOTES

1. ALL FIXTURES THAT ARE HALF SHADED OR LABELED "EM" SHALL BE EQUIPPED WITH A GENERATOR TRANSFER DEVICE INTEGRAL TO THE FIXTURE.

⬡SHEET KEYNOTES

1. CONNECT TO ELEVATOR PIT OUTLETS.
2. PROVIDE WALL MOUNTING BRACKET. TYPICAL OF ALL "OE" FIXTURES.
3. CHAIN HANG WRAP FIXTURES AT +8-0" AFF, TYPICAL.
4. PROVIDE TANDEM CONNECTED FIXTURES CHAIN HUNG AT +19'-0" AFF, TYPICAL.

GSBS | ARCHITECTURE | LANDSCAPE ARCHITECTURE | PLANNING | INTERIOR DESIGN
375 West 200 South Suite 100
Salt Lake City
Utah 84101
Tel 801.521.8600
Fax 801.521.7913
GSBS-PC.COM

LICENSED PROFESSIONAL ENGINEER No. 181563 DAVID E. WESEMANN STATE OF UTAH
02/01/08

SPECTRUM ENGINEERS
175 S MAIN ST, STE 300
SALT LAKE CITY, UT 84111
P:801.328.5151 F:801.328.5155

No.	DATE	REVISION

NORTH SALT LAKE READINESS CENTER AND CIVIL SUPPORT TEAM

Salt Lake City, UT

LIGHTING PLAN LEVEL ONE

PROJECT NO. 2005.003	EL101
DATE 02/01/2008	
DRAWN PSS	
CHECKED	BINDING ORDER 129

File Name: P:\2006\20060331\1Drawings\Sheet\129-31EL-101.dwg Last Plotted: 2008/02/11 @ 4:38 PM By: pss

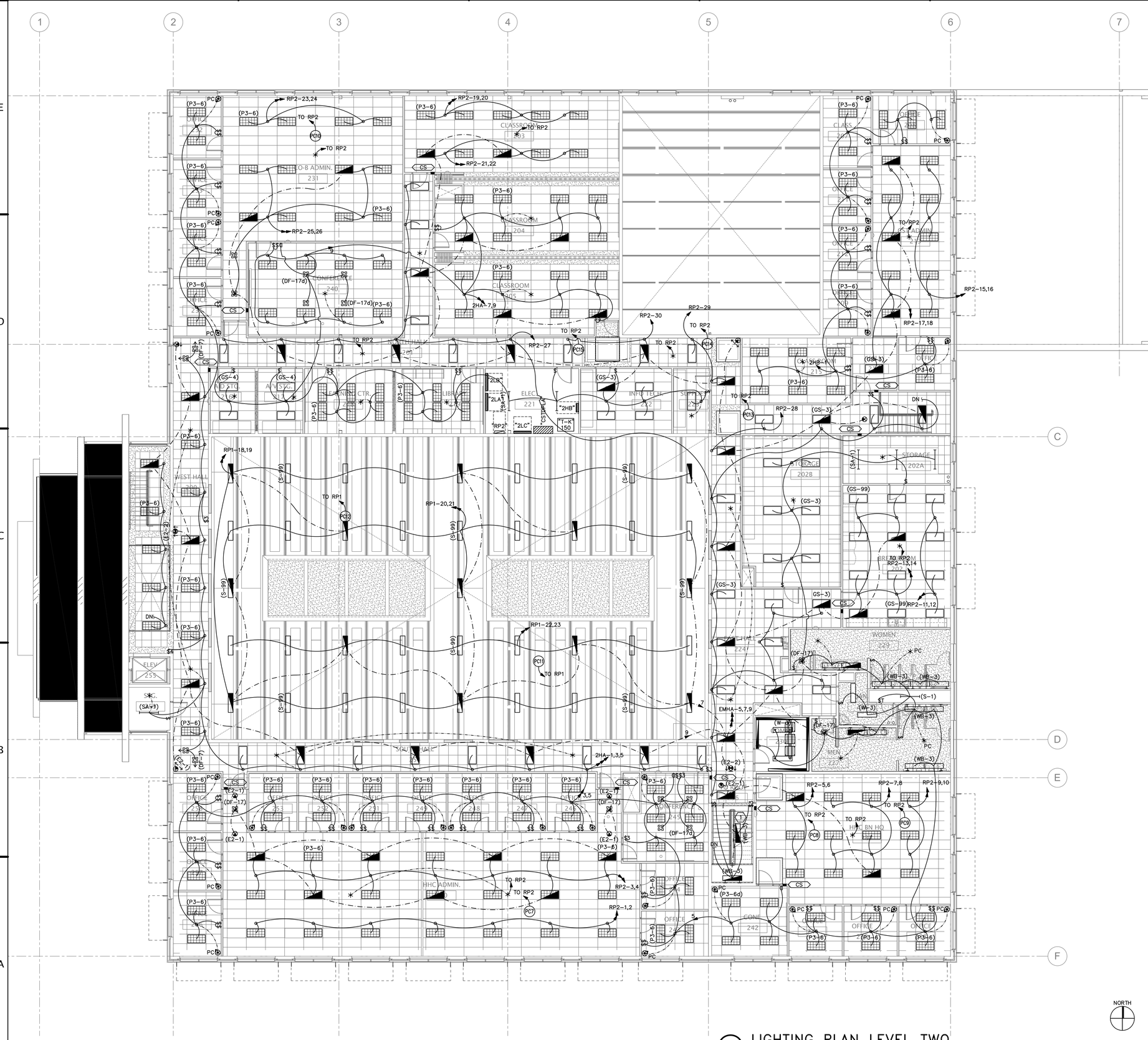

A6 LIGHTING PLAN LEVEL TWO

SCALE: 1/8"=1'-0"

0 4' 8' 16'

GENERAL SHEET NOTES

1. ALL HALF SHADED FIXTURES SHALL HAVE A GENERATOR TRANSFER DEVICE INSTALLED AND SHALL BE CONNECTED TO AN EMERGENCY CIRCUIT AS SHOWN.

SHEET KEYNOTES

1. MOUNT FIXTURE IN ROOF HATCH AREA.

GSBS | ARCHITECTURE | LANDSCAPE ARCHITECTURE | PLANNING | INTERIOR DESIGN

375 West 200 South Suite 100
Salt Lake City
Utah 84101

Tel 801.521.8600
Fax 801.521.7913

GSBS-PC.COM

LICENSED PROFESSIONAL ENGINEER
No. 181563
DAVID E. WESEMANN
STATE OF UTAH
02/01/08

SPECTRUM ENGINEERS

175 S MAIN ST, STE 300
SALT LAKE CITY, UT 84111
P:801.328.5151 F:801.328.5155

No.	DATE	REVISION

NORTH SALT LAKE READINESS CENTER AND CIVIL SUPPORT TEAM

Salt Lake City, UT

LIGHTING PLAN LEVEL TWO

PROJECT NO. 2005.003	EL102
DATE 02/01/2008	
DRAWN PSS	
CHECKED	BINDING ORDER 130

File Name: P:\2006\20060331\1Drawings\Sheet\130-31EL-102.dwg Last Plotted: 2008/02/11 @ 4:38 PM By: pss

CONTROL SCHEDULE

UTAH NATIONAL GUARD NORTH SALT LAKE READINESS CENTER

ROOM NUM	ROOM NAME	CONTROL DEVICE ID	CONTROL TYPE	CONTROL FACTOR CLOCK	SYSTEM PHOTOCEL	LOCAL PHOTOCELL	SYSTEM OCCUPANCY	LOCAL OCCUPANCY	LOAD (WATTS)	CIRCUIT NUMBER	COMMENTS
101	LOBBY	RP1–1	SWITCHED					X	120	1HA	
155	EQUIPMENT LOCKERS	RP1–2,3	SWITCHED					X	1495	1HA	
151	PHYSICAL FITNESS	RP1–4,5,6,7	SWITCHED					X	760	1HA	
103	B–UNIT STORAGE	RP1–16,17	SWITCHED					X	975	1HA	
132	BREAK	RP1–8,9,10,11	SWITCHED					X	390	2HB	
109	ASSEMBLY HALL	RP1–18,19,20,21,22,23	SWITCHED					X	8580	1HA	
128	OPS CTR	RP1–12,13,14,15	SWITCHED					X	855	2HB	
250	HHC ADMIN	RP2–1,2,3,4	SWITCHED					X	2125	2HA	
257	HHC BN HQ	RP2–5,6,7,8,9,10	SWITCHED					X	1140	2HA	
202	BREAK ROOM	RP2–11,12,13,14	SWITCHED					X	1140	2HA	
213	CST ADMIN	RP2–15,16,17,18	SWITCHED					X	950	2HB	
203	CLASSROOM	RP2–19,20,21,22	SWITCHED					X	950	2HA	
231	CO–B ADMIN	RP2–23,24,25,26	SWITCHED					X	1270	2HA	
201,224	NORTH AND EAST HALL	RP2–27	SWITCHED					X	1560	2HA	
224	EAST HALL	RP2–28,29,30	SWITCHED					X	390	2HA	
EXT.	PARKING LOT	RP1–30	SWTCHED	X	X				2800	1HA	PC ON TC OFF
EXT.	PARKING LOT	RP1–31	SWTCHED	X	X				2800	1HA	PC ON TC OFF
EXT.	PARKING LOT	RP1–32	SWTCHED	X	X				2800	1HA	PC ON TC OFF
EXT.	PARKING LOT	RP1–33	SWTCHED	X	X				3150	1HA	PC ON TC OFF
EXT.	BOLLARDS	RP1–34	SWTCHED	X	X				2500	1HA	PC ON TC OFF
EXT.	FLAG POLE	RP1–35	SWTCHED	X	X				400	1HA	PC ON TC OFF
EXT.	BUILDING LIGHTS	RP1–28	SWTCHED	X	X				2,520	1HA	PC ON TC OFF
EXT.	BUILDING LIGHTS	RP1–29	SWTCHED	X	X				2,790	1HA	PC ON TC OFF
EXT.	ENTRY CANOPY	RP1–25	SWTCHED	X	X				2520	1HA	PC ON TC OFF
EXT.	ENTRY GROUND	RP1–26	SWTCHED	X	X				2520	1HA	PC ON TC OFF
EXT.	ENTRY CANOPY	RP1–27	SWTCHED	X	X				1440	1HA	PC ON TC OFF

RELAY PANEL "RP1"

CONTROL #	TYPE	ROOM	PC CONTROL	ROOM OCC SENSOR	COMMENTS
RP1–1	SWITCHED	101	PC1	YES	
RP1–2	SWITCHED	155	PC2	YES	
RP1–3	SWITCHED	155		YES	
RP1–4	SWITCHED	151	PC3	YES	
RP1–5	SWITCHED	151	PC3	YES	
RP1–6	SWITCHED	151		YES	
RP1–7	SWITCHED	151		YES	
RP1–8	SWITCHED	132	PC5	YES	
RP1–9	SWITCHED	132	PC5	YES	
RP1–10	SWITCHED	132		YES	
RP1–11	SWITCHED	132		YES	
RP1–12	SWITCHED	128	PC6	YES	
RP1–13	SWITCHED	128	PC6	YES	
RP1–14	SWITCHED	128		YES	
RP1–15	SWITCHED	128		YES	
RP1–16	SWITCHED	103	PC4	YES	
RP1–17	SWITCHED	103		YES	
RP1–18	SWITCHED	109		YES	
RP1–19	SWITCHED	109		YES	
RP1–20	SWITCHED	109	PC12	YES	
RP1–21	SWITCHED	109	PC12	YES	
RP1–22	SWITCHED	109	PC11	YES	
RP1–23	SWITCHED	109	PC11	YES	
RP1–24	SPARE				
RP1–25	SWITCHED	ENTRY CANOPY	PCEX / TC	NO	PC ON TC OFF
RP1–26	SWITCHED	ENTRY GROUND	PCEX / TC	NO	PC ON TC OFF
RP1–27	SWITCHED	ENTRY CANOPY	PCEX / TC	NO	PC ON TC OFF
RP1–28	SWITCHED	BUILDING	PCEX / TC	NO	PC ON TC OFF
RP1–29	SWITCHED	BUILDING	PCEX / TC	NO	PC ON TC OFF
RP1–30	SWITCHED	EXTERIOR	PCEX / TC	NO	PC ON TC OFF
RP1–31	SWITCHED	EXTERIOR	PCEX / TC	NO	PC ON TC OFF
RP1–32	SWITCHED	EXTERIOR	PCEX / TC	NO	PC ON TC OFF
RP1–33	SWITCHED	EXTERIOR	PCEX / TC	NO	PC ON TC OFF
RP1–34	SWITCHED	EXT BOLLARDS	PCEX / TC	NO	PC ON TC OFF
RP1–35	SWITCHED	EXT FLAG	PCEX / TC	NO	PC ON TC OFF
RP1–36	SPARE				
RP1–37	SPARE				
RP1–38	SPARE				
RP1–39	SPARE				
RP1–40	SPARE				
RP1–41	SPARE				
RP1–42	SPARE				

RELAY PANEL "RP2"

CONTROL #	TYPE	ROOM	PC CONTROL	ROOM OCC SENSOR	COMMENTS
RP2–1	SWITCHED	250	PC7	YES	
RP2–2	SWITCHED	250	PC7	YES	
RP2–3	SWITCHED	250		YES	
RP2–4	SWITCHED	250		YES	
RP2–5	SWITCHED	237	PC8	YES	
RP2–6	SWITCHED	237	PC8	YES	
RP2–7	SWITCHED	237		YES	
RP2–8	SWITCHED	237		YES	
RP2–9	SWITCHED	237	PC9	YES	
RP2–10	SWITCHED	237	PC9	YES	
RP2–11	SWITCHED	202	PC9	YES	
RP2–12	SWITCHED	202	PC9	YES	
RP2–13	SWITCHED	202		YES	
RP2–14	SWITCHED	202		YES	
RP2–15	SWITCHED	213	PC9	YES	
RP2–16	SWITCHED	213	PC9	YES	
RP2–17	SWITCHED	213		YES	
RP2–18	SWITCHED	213		YES	
RP2–19	SWITCHED	203	PC10	YES	
RP2–20	SWITCHED	203	PC10	YES	
RP2–21	SWITCHED	203		YES	
RP2–22	SWITCHED	203		YES	
RP2–23	SWITCHED	231	PC10	YES	
RP2–24	SWITCHED	231	PC10	YES	
RP2–25	SWITCHED	231		YES	
RP2–26	SWITCHED	231		YES	
RP2–27	SWITCHED	224,201		YES	
RP2–28	SWITCHED	224	PC13	YES	
RP2–29	SWITCHED	201	PC14	YES	
RP2–30	SWITCHED	201	PC15	YES	
RP2–31	SPARE				
RP2–32	SPARE				
RP2–33	SPARE				
RP2–34	SPARE				
RP2–35	SPARE				
RP2–36	SPARE				
RP2–37	SPARE				
RP2–38	SPARE				
RP2–39	SPARE				
RP2–40	SPARE				
RP2–41	SPARE				
RP2–42	SPARE				

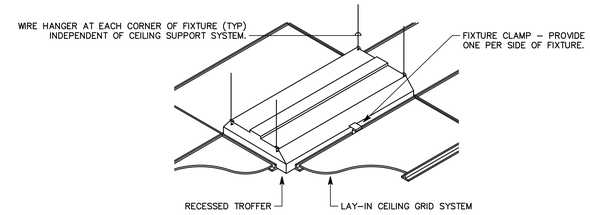

E2 RECESSED FIXTURE MOUNTING DETAIL
SCALE: N.T.S.

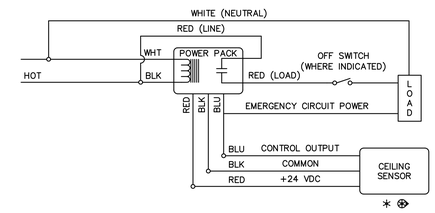

D2 TYPICAL ROOM WITH ONE CEILING SENSOR, WITH OR WITHOUT WALL SWITCH
NTS

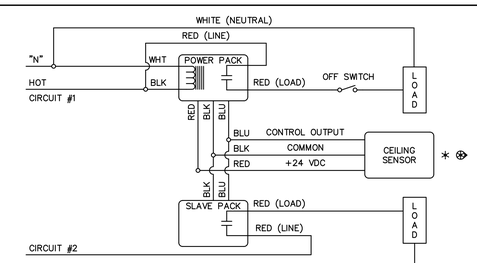

C2 TYPICAL ROOM WITH ONE CEILING SENSOR, CONTROLLING TWO CIRCUITS
NTS

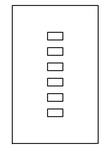

CONTROL STATION SHALL CONTROL RESPECTIVE ROOM/AREA. COORDINATE WITH USER FOR DESIRED CONTROL SCHEMES AND LABELING OF SWITCHES FOR EACH ROOM.

SCENE IS A USER PROGRAMMABLE LIGHTING SCHEME ALLOWING LIGHT LEVELS AVAILABLE TO BE CUSTOM PROGRAMMED (E.G. – A/V PRESENTATION, LECTURE, ENERGY SAVINGS MODE, ETC)

CS A3 WALL CONTROL STATION DETAIL
NTS

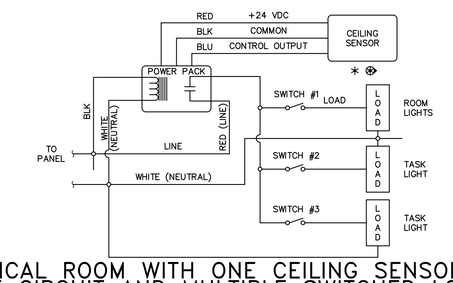

B2 TYPICAL ROOM WITH ONE CEILING SENSOR, ONE CIRCUIT AND MULTIPLE SWITCHED LOADS
NTS

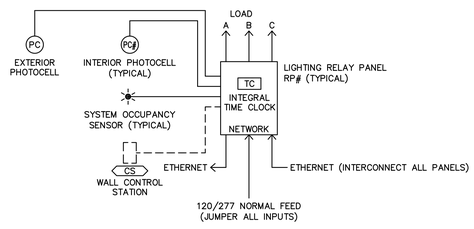

CONTROL WIRING PER MANUFACTURER'S WRITTEN REQUIREMENTS.
TYPICAL OF EACH RELAY PANEL PER TEAM AREA.

A4 RELAY ONELINE DIAGRAM
NTS

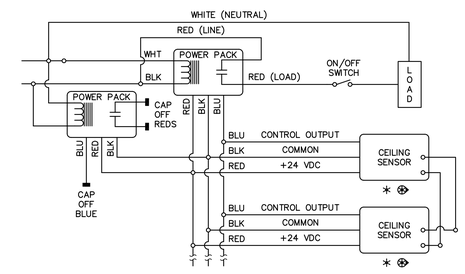

A2 TYPICAL ROOM WITH MULTIPLE CEILING SENSORS
NTS

GSBS | ARCHITECTURE | LANDSCAPE ARCHITECTURE | PLANNING | INTERIOR DESIGN

375 West 200 South Suite 100
Salt Lake City
Utah 84101

Tel 801.521.8600
Fax 801.521.7913

GSBS-PC.COM

LICENSED PROFESSIONAL ENGINEER No. 181563 DAVID E. WESEMANN STATE OF UTAH 02/01/08

SPECTRUM ENGINEERS
175 S MAIN ST, STE 300
SALT LAKE CITY, UT 84111
P:801.328.5151 F:801.328.5155

No.	DATE	REVISION

NORTH SALT LAKE READINESS CENTER AND CIVIL SUPPORT TEAM

Salt Lake City, UT

LIGHTING DETAILS & SCHEDULES

PROJECT NO. 2005.003	EL501
DATE 02/01/2008	
DRAWN PSS	
CHECKED	BINDING ORDER 131

File Name: P:\2006\20060331\1Drawings\Sheet\131-31EL-501.dwg Last Plotted: 2008/02/11 @ 4:38 PM By: pss

LIGHTING FIXTURE SCHEDULE

NOTE TO BIDDERS: COMPLY WITH SECTIONS 16511, 16521, AND 16570 OF THE SPECIFICATIONS.
REFER TO SPECIFICATIONS FOR IMPORTANT TECHNICAL REQUIREMENTS FOR LIGHTING FIXTURES, BALLASTS, AND LAMPS. THE CATALOG NUMBERS LISTED BELOW HAVE BEEN CAREFULLY PREPARED TO ASSIST BIDDERS IN SELECTING PRODUCTS TO ACHIEVE THE DESIGN CONCEPT, HOWEVER, PRIOR TO BIDDING, EACH MANUFACTURER SHALL COMPARE THE CATALOG NUMBERS SHOWN WITH THE DESCRIPTION AND REQUIREMENTS ON THE DRAWINGS, AND SHALL NOTIFY THE ARCHITECT/ENGINEER OF ANY DISCREPANCIES. SPECIFICALLY INCLUDED IN THIS EVALUATION SHALL BE THE VERIFYING OF PROPER MOUNTING KITS OR ACCESSORIES TO FACILITATE INSTALLATION AS SHOWN AT EACH LOCATION ON THE DRAWINGS. NO ALLOWANCE OR REDRESS WILL BE ALLOWED FOR DISCREPANCIES THAT WERE NOT REPORTED TO THE ARCHITECT/ENGINEER IN TIME FOR CORRECTION OR CLARIFICATION BEFORE THE BID. THE REPORTING OF ANY AMBIGUITY IS THE RESPONSIBILITY OF THE BIDDER. PROVIDE UNIT PRICES AND FIXTURE BRAND SELECTED FOR ADD/DELETE CHANGES FOR EACH FIXTURE TYPES SHOWN WITHIN 48 BUSINESS HOURS OF THE BID DATE. FAILURE TO COMPLY WITH THIS REQUIREMENT MAY DISQUALIFY THE PRODUCTS AND EMPOWER THE ENGINEER TO DETERMINE FAIR VALUE FOR FIXTURE AND INSTALLATION CHANGES, WITHOUT FURTHER INPUT FROM THE CONTRACTOR OR INSTALLER. SUBMITTAL PACKAGE SHALL INCLUDE LAMP MANUFACTURER AND CATALOG NUMBER ON EACH FIXTURE SHEET. ON ALL PENDANT MOUNTED FIXTURES, PROVIDE A SECOND SET OF PENDANTS, OF A DIFFERENT LENGTH, AS DIRECTED BY THE ARCHITECT/ENGINEER, PROVIDED AND INSTALLED AT NO ADDITIONAL CHARGE. ALL FIXTURES SHALL BE APPROVED BY UL OR ANOTHER ACCEPTABLE TESTING LAB FOR THE PURPOSE INTENDED AND WITH THE LAMP AND BALLAST PROPOSED. CONTRACTOR ALLOWANCE PRICES ARE ACCURATE WHEN THIS JOB WAS SPECIFIED, CONTRACTOR AND ELECTRICAL DISTRIBUTOR SHALL VERIFY THIS ALLOWANCE AND REPORT ANY PROBLEMS TO THE ENGINEER BEFORE THE BID. ALLOWANCE PRICE MAY OR MAY NOT INCLUDE LAMP(S) OR FREIGHT AS NOTED, AND DO NOT INCLUDE ANY TAXES. UNIVERSAL VOLTAGE (120/277) BALLASTS REQUIRED UNLESS NOTED OTHERWISE. DIMENSION SEQUENCE = (LENGTH X WIDTH X DEPTH) IN INCHES.

SYMBOL	MARK	FIXTURE CHARACTERISTICS BODY / AIR / MOUNTING / DOOR LENS/LOUVER/REFLECTOR/OTHER	LAMP	WATTS	VOLTS	MANUFACTURER	CATALOG NUMBER	NOTES
	ZL	LIGHT POLES: TOTALLY ENCLOSED RAINTIGHT, DUST-TIGHT AND CORROSION RESISTANT; POLE AS SHOWN IN DETAIL WITH HANDHOLE, COVER, BOLT COVER, AND BASE; PAINTED (COLOR TO BE SELECTED BY ARCHITECT / ENGINEER WHICH MAY DIFFER FROM CATALOG NUMBER SHOWN). MTB= 120,208,240,277 VOLT MULTI-TAP BALLAST. ALL BALLASTS HPF. ARM MOUNT. HORIZONTAL LAMP, SEGMENTED OPTICS.						
	ZL-13	SHOEBOX STYLE, CUTOFF	400PSMH	450W	MTB	GARDCO	H-19-1-3-400PSMH-MT-CBA	
		LUMINAIRE SINGLE HEAD,				SPERO	S6M-400PSMH-3M-A-MT-CBA	
		MULTI-TAP BALLAST; TYPE				HUBBELL	MSQ-A400W-HP8-1	
		III DISTRIBUTION.400PSMH				WIDELITE	S10P-400-3-QV-S-XXX	
		SEGMENTED REFLECTOR				SPAULDING	CM-PM5-M400PS-III-MT-SCBA	
		PULSE START				LITHONIA	KSF2 400M R3 TB SP04 SCWA	
						LSI	CHHM-3-400PSMH-F-MT-XXX	
	ZL-13D	SHOEBOX STYLE, CUTOFF	400PSMH	900W	MTB	GARDCO	H-19-1-3-400PSMH-MT-CBA	
		LUMINAIRE DUAL HEAD,				SPERO	S6M-400PSMH-3M-A-MT-CBA	
		MULTI-TAP BALLAST; TYPE				HUBBELL	MSQ-A400W-HP8-1	
		III DISTRIBUTION.400PSMH				WIDELITE	S10P-400-3-QV-S-XXX	
		SEGMENTED REFLECTOR				SPAULDING	CM-PM5-M400PS-III-MT-SCBA	
		PULSE START				LITHONIA	KSF2 400M R3 TB SP04 SCWA	
						LSI	CHHM-3-400PSMH-F-MT-XXX	

LIGHTING FIXTURE SCHEDULE

NOTE TO BIDDERS: COMPLY WITH SECTIONS 16511, 16521, AND 16570 OF THE SPECIFICATIONS.
REFER TO SPECIFICATIONS FOR IMPORTANT TECHNICAL REQUIREMENTS FOR LIGHTING FIXTURES, BALLASTS, AND LAMPS. THE CATALOG NUMBERS LISTED BELOW HAVE BEEN CAREFULLY PREPARED TO ASSIST BIDDERS IN SELECTING PRODUCTS TO ACHIEVE THE DESIGN CONCEPT, HOWEVER, PRIOR TO BIDDING, EACH MANUFACTURER SHALL COMPARE THE CATALOG NUMBERS SHOWN WITH THE DESCRIPTION AND REQUIREMENTS ON THE DRAWINGS, AND SHALL NOTIFY THE ARCHITECT/ENGINEER OF ANY DISCREPANCIES. SPECIFICALLY INCLUDED IN THIS EVALUATION SHALL BE THE VERIFYING OF PROPER MOUNTING KITS OR ACCESSORIES TO FACILITATE INSTALLATION AS SHOWN AT EACH LOCATION ON THE DRAWINGS. NO ALLOWANCE OR REDRESS WILL BE ALLOWED FOR DISCREPANCIES THAT WERE NOT REPORTED TO THE ARCHITECT/ENGINEER IN TIME FOR CORRECTION OR CLARIFICATION BEFORE THE BID. THE REPORTING OF ANY AMBIGUITY IS THE RESPONSIBILITY OF THE BIDDER. PROVIDE UNIT PRICES AND FIXTURE BRAND SELECTED FOR ADD/DELETE CHANGES FOR EACH FIXTURE TYPES SHOWN WITHIN 48 BUSINESS HOURS OF THE BID DATE. FAILURE TO COMPLY WITH THIS REQUIREMENT MAY DISQUALIFY THE PRODUCTS AND EMPOWER THE ENGINEER TO DETERMINE FAIR VALUE FOR FIXTURE AND INSTALLATION CHANGES, WITHOUT FURTHER INPUT FROM THE CONTRACTOR OR INSTALLER. SUBMITTAL PACKAGE SHALL INCLUDE LAMP MANUFACTURER AND CATALOG NUMBER ON EACH FIXTURE SHEET. ON ALL PENDANT MOUNTED FIXTURES, PROVIDE A SECOND SET OF PENDANTS, OF A DIFFERENT LENGTH, AS DIRECTED BY THE ARCHITECT/ENGINEER, PROVIDED AND INSTALLED AT NO ADDITIONAL CHARGE. ALL FIXTURES SHALL BE APPROVED BY UL OR ANOTHER ACCEPTABLE TESTING LAB FOR THE PURPOSE INTENDED AND WITH THE LAMP AND BALLAST PROPOSED. CONTRACTOR ALLOWANCE PRICES ARE ACCURATE WHEN THIS JOB WAS SPECIFIED, CONTRACTOR AND ELECTRICAL DISTRIBUTOR SHALL VERIFY THIS ALLOWANCE AND REPORT ANY PROBLEMS TO THE ENGINEER BEFORE THE BID. ALLOWANCE PRICE MAY OR MAY NOT INCLUDE LAMP(S) OR FREIGHT AS NOTED, AND DO NOT INCLUDE ANY TAXES. UNIVERSAL VOLTAGE (120/277) BALLASTS REQUIRED UNLESS NOTED OTHERWISE. DIMENSION SEQUENCE = (LENGTH X WIDTH X DEPTH) IN INCHES.

SYMBOL	MARK	FIXTURE CHARACTERISTICS BODY / AIR / MOUNTING / DOOR LENS/LOUVER/REFLECTOR/OTHER	LAMP	WATTS	VOLTS	MANUFACTURER	CATALOG NUMBER	NOTES
	OC	WALL PACK: ADJUSTABLE CUT OFF; FULL PERIMETER GASKETING: WET LOCATION; STAINLESS STEEL HINGES AND LATCHES; PROJECTING LENS; HPF BALLAST; SEE ELEVATION FOR MOUNTING HEIGHT, COLOR AS SPECIFIED BY ARCHITECT.						
	OC-27	150 PSMH, RECESSED J	150PSMH	200W	277/120V	MCPHILBEN	101-WT-175MH-XX	
		BOX. WIDE THROW, SQUARE,				LSI	GBWS-3-150MH-F-MT-XX-NO	
		DECORATIVE				LITHONIA	WST 150M WT TB	
						LUMARK	MHIP-T-150-MT-XX	
	OC-32	CF42, RECESSED J BOX.	CF42 RE835	50W	277/120V	MCPHILBEN	101MT-42TRF-CBA-DT	
		MEDIUM THROW, SQUARE,				LSI	GBWS-FTM-42CFL-F-120/277-XX-NO	
		DECORATIVE				LITHONIA	WST 42TRT MD MVOLT	
						LUMARK	PLIP-T-42-MT-XX	
						LSI	GBWS FTM 42CFL F UE XXX W/LAMP	
	OE	OUTDOOR FLOOD LIGHTS; FULLY GASKETED; WET LABEL; TYPES AND WATTAGES AS INDICATED. MOUNT AS INDICATED ON ELEVATIONS, COLOR PER ARCHITECT, VANDAL RESISTANT CONSTRUCTION. SECURE MOUNTING BRACKED AS REQUIRED, AIMING ADJUSTMENT WITH FIRM LOCKING DEVICE. MULTI-TAP BALLAST. FIXTURES SELECTED FOR APPEARANCE AS WELL AS PERFORMANCE. VISUAL SUBMITTAL REQUIRED FOR APPROVAL.						
	OE-1	150PSMH, FLOODLIGHT, WIDE	150PSMH	200W	MTBV	KIM	AFL11/150PSMHMT/SCBA	
		BEAM SPREAD, HORIZONTAL				GARDCO	DF7-J-HFL-150PSMH-MT-XX-CBA	
		ORIENTATION.				GREENLEE	SLS150MH-MT-HF-SCBA-PULSE START	
						WIDELITE	EFIP-150-HF-QV-MA2-XX	
						LSI	DRS-HF-150PSMH-F-MT-CBA-NO	
						LITHONIA	KFL2 150M RW TB XX SCWA	
						GE	CFSX15P0H1WXXXXK	
	OE-7	200PSMH, FLOODLIGHT, NARROW	200PSMH	250W	MTBV	KIM	AFL24/200MHPMT/XX	
		BEAM SPREAD.				GREENLEE	SLM200MH-MT-SP-SCBA-PULSE START	
						GARDCO	DF7-W-NSP-200PSMH-MT-XX-CBA	
						WIDELITE	EFIP-200-SP-QV-MA2-XX	
						LSI	DRM-SP-200PSMH-F-MT-CBA-NO	
						LITHONIA	KFL3 200M RN TB XX SCWA	
						GE	CFSX20P0H1NXXXXK	
	OG	GROUND LIGHT: ROUND WITH PRE-WIRED; ISOLATED SPLICE COMPARTMENT; INTEGRAL BALLAST COMPARTMENT LAMP STYLE PER MANUFACTURER'S REQUIREMENTS. INSTALLER TO PROVIDE CORRECT MOUNTING ACCESSORIES OR SLEEVES COORDINATED WITH GROUND MATERIAL, CONCRETE, GRAVEL, DIRT, ETC.						
	OG-1	ADJUSTABLE REFLECTOR;	150PSMH	200W	277/120V	KIM	LTV10-X-150MHMT-RG10	
		CONVEX GUARD AND CONVEX				HUBBELL	1150WL-1000RG	
		TEMPERED LENS.				GREENLEE	RDB-150MH-XXX-SPV-RGC-PULSE START	
						HYDREL	9100A PSMH150/XXX/SP/34/CVX/CVG	
						BRONZELITE	G8150PS-GB-X-X	
						CAL	4200-150PSMH-ED17-C-CR-DT	
						HADCO	N/A	
	P3	PARABOLIC LOUVER FIXTURES WITH 3" LOUVERS IN PLASTIC PROTECTORS AND FULL DEPTH REFLECTOR; SIZE AS NOTED; PROGRAM START ELECTRONIC BALLASTS PER SPECS; T8 LAMPS; ONE BALLAST PER FIXTURE UNLESS NOTED FOR SWITCHING; STATIC OR AIR RETURN AND HEAT REMOVAL; EARTHQUAKE CLIPS INSTALLED ON ON GRID FIXTURES; HINGED AND LATCHED DOOR; LOW IRIDESCENT LOUVER FINISH, VERTICAL GRAIN DIE STAMPED LOUVERS; TWO FORMED BALLAST COVERS; MAX 1300 CD/M2 ABOVE 45 DEGREES.						
	P3-6	2X4, 18 CELL LAY-IN; SEMI-	3-F32T8 RE835	95W	277/120V	LITHONIA	2PM3NGB-332-18LD-MVOLT-1/3TUBRHP-2R	
		SPECULAR SILVER, 3-LAMP.				DAYBRITE	2P3GS332-36SL-UNV-1/3-EB-SPEC	
		STATIC. 2 BALLASTS FOR DUAL				METALUX	2EP3GX-332S36I-UNV-PROGRAM START-2BC	
		LEVEL SWITCHING.				COLUMBIA	P4D24-332G-LD36-S-3EB8LHPRUNV	
						LSI	N2PG18 332 FD SSO10PS 2BC UE	
						LIGHTOLIER	DPS2G18LP332-U-03P	
						HEWILLIAMS	HE3G-D24-332-36S-EB8PXLH3*OS-UNV	
	P3-6d	2X4, 18 CELL LAY-IN; SEMI-	3-F32T8 RE835	95W	277/120V	LITHONIA	2PM3NGB-332-18LD-MVOLT-1/3TUBRHP-2R-DIM	
		SPECULAR SILVER, 3-LAMP.				DAYBRITE	2P3GS332-36SL-UNV-1/3-EB-SPEC-DIM	
		STATIC. 1% DIMMABLE BALLAST				METALUX	2EP3GX-332S36I-UNV-PROGRAM START-2BC-DIM	
						COLUMBIA	P4D24-332G-LD36-S-3EB8LHPRUNV-DIM	
						LSI	N2PG18 332 FD SSO10PS 2BC UE-DIM	
						LIGHTOLIER	DPS2G18LP332-U-03P-DIM	
						HEWILLIAMS	HE3G-D24-332-36S-EB8PXLH3*OS-UNV-DIM	
	S	FLUORESCENT STRIP LIGHT: STEEL CONSTRUCTION; WHITE PAINTED FINISH; SUITABLE FOR MOUNTING ON LOW DENSITY CEILINGS; PROGRAM START ELECTRONIC BALLASTS; T8 LAMPS; ONE BALLAST PER FIXTURE WHERE POSSIBLE, UNLESS TWO LEVEL SWITCHING IS SHOWN ON THE PLANS.						
	S-1	4', 1-LAMP.	1-F32T8 RE835	40W	277/120V	LITHONIA	C132-MVOLT-TUBRHP	
						LIGHTOLIER	SW132-U-SOP	
						METALUX	SS-132-UNV-PROGRAM START	
						DAYBRITE	T132-UNV-EB-SPEC	
						HUBBELL	S132UPS	
						COLUMBIA	CS4-132-EB8120/277 PROG	
	SA	GENERAL PURPOSE INDUSTRIAL: WHITE ENAMEL, APERTURED REFLECTOR; PROGRAM START ELECTRONIC BALLASTS; T8 LAMPS; ONE BALLAST PER FIXTURE WHERE POSSIBLE; UNLESS TWO LEVEL SWITCHING IS SHOWN ON THE PLANS; STEM MOUNTED WITH TONG HANGERS.						
	SA-1	4', 2-LAMP.	2-F32T8 RE835	65W	277/120V	LITHONIA	EJA232-MVOLT-TUBRHP-THUN	
						LIGHTOLIER	KWA232-U-SOP	
						METALUX	IA-232-UNV-PROGRAM START	
						HUBBELL	IG142R-PP10-UPS	
						COLUMBIA	CSR4-232U-EB8120/277 PROG-CSTH	
						DAYBRITE	IA232-UNV-1/2-EB-SPEC	
	S-99	FLUORESCENT HIGH BAY DUAL LEVEL SWITCHING	3-54WT5HO		277V		CONTRACTOR ALLOWANCE: $650.00 (INCLUDES LAMP, FRIEGHT & DISTRIBUTOR MARK-UP)	
	TX	SPECIAL FIXTURES AS INDICATED. MEET ALL REQUIREMENTS OF SPECIFICATIONS AND FIXTURE SCHEDULE. VISUAL AND FINISH APPROVAL REQUIRED.						
	TX-99	CLASS I, DIV 2 SURFACE MOUNTED 1X4, 3-LAMP FLUORESCENT FIXTURE	3-F32T8 RE835	95W	277/120V	MANUF	CONTRACTOR ALLOWANCE: $1200.00 (INCLUDES LAMP, FRIEGHT & DISTRIBUTOR MARK-UP)	
	W	LOW PROFILE WRAPAROUND: SURFACE MOUNTED SUITABLE FOR MOUNTING ON LOW DENSITY CEILINGS WRAPAROUND ACRYLIC PRISMATIC DIFFUSER; WHITE ENAMEL ENDPLATES; MINIMUM CU OF 70 @ 80/50/20 AND RCR=1; PROGRAM START ELECTRONIC BALLASTS; T8 LAMPS; ONE BALLAST PER FIXTURE WHERE POSSIBLE, UNLESS TWO LEVEL SWITCHING IS SHOWN ON THE PLANS.						
	W-3	NARROW BODY WRAPAROUND;	2-F32T8 RE835	65W	277/120V	LITHONIA	LB232-MVOLT-TUBPHP	
		2-LAMP, APPROX; 3" X 10"				DAYBRITE	CAN232-UNV-1/2-EB-SPEC	
		X 48".				METALUX	WS-232A-UNV-PROGRAM START	
						LIGHTOLIER	WA232-U-SOP	
						LSI	PR 232 SSO10PRS UE	
						COLUMBIA	WC4-232-EBPS120/277	
	W-5	WIDE BODY WRAPAROUND;	3-F32T8 RE835	95W	277/120V	LITHONIA	LB332-1/3MVOLT-TUBPHP	
		3-LAMP, APPROX; 3" X 16"				DAYBRITE	CAW332-UNV-1/3-EB-SPEC	
		X 48".				METALUX	WSA-332A-UNV-PROGRAM START	
						LIGHTOLIER	WB332-U-03P	
						LSI	PR 332 SSO10PRS UE	
						COLUMBIA	WCW4-332-3EBPS120/277	
	WB	WALL MOUNTED FLUORESCENT LOCATED ABOVE WALL ELEMENT (MIRROR/WHITEBOARD, ETC.): AS INDICATED ON DRAWINGS; WITH ACRYLIC INJECTION MOLDED; PROGRAM START ELECTRONIC BALLASTS; T8 LAMPS; ONE BALLAST PER FIXTURE WHERE POSSIBLE, UNLESS TWO LEVEL SWITCHING IS SHOWN ON THE PLANS.						
	WB-3	2-LAMP, WALL MOUNT 48",	2-F32T8 RE835	65W	277/120V	DAYBRITE	CD232W-UNV-1/2-EB-SPEC	
		STEEL ENCLOSURE, DOWNLIGHT				LIGHTOLIER	CWB232-WB-U-SOP	
		ONLY; ACRYLIC INJECTION				METALUX	BI-232-UNV-PROGRAM START	
		MOLDED PRISMATIC DIFFUSER.				L.A.L.	BSQ100-2-4R-INJ-WHT-T8EB-120/277-UPS	
						COLUMBIA	WAL4-232-EBPS120/277	
						LITHONIA	WP 232 DO MVOLT-TUBPHP	
						LSI	WB 232 SSO10PRS UE	

LIGHTING FIXTURE SCHEDULE

NOTE TO BIDDERS: COMPLY WITH SECTIONS 16511, 16521, AND 16570 OF THE SPECIFICATIONS.
REFER TO SPECIFICATIONS FOR IMPORTANT TECHNICAL REQUIREMENTS FOR LIGHTING FIXTURES, BALLASTS, AND LAMPS. THE CATALOG NUMBERS LISTED BELOW HAVE BEEN CAREFULLY PREPARED TO ASSIST BIDDERS IN SELECTING PRODUCTS TO ACHIEVE THE DESIGN CONCEPT, HOWEVER, PRIOR TO BIDDING, EACH MANUFACTURER SHALL COMPARE THE CATALOG NUMBERS SHOWN WITH THE DESCRIPTION AND REQUIREMENTS ON THE DRAWINGS, AND SHALL NOTIFY THE ARCHITECT/ENGINEER OF ANY DISCREPANCIES. SPECIFICALLY INCLUDED IN THIS EVALUATION SHALL BE THE VERIFYING OF PROPER MOUNTING KITS OR ACCESSORIES TO FACILITATE INSTALLATION AS SHOWN AT EACH LOCATION ON THE DRAWINGS. NO ALLOWANCE OR REDRESS WILL BE ALLOWED FOR DISCREPANCIES THAT WERE NOT REPORTED TO THE ARCHITECT/ENGINEER IN TIME FOR CORRECTION OR CLARIFICATION BEFORE THE BID. THE REPORTING OF ANY AMBIGUITY IS THE RESPONSIBILITY OF THE BIDDER. PROVIDE UNIT PRICES AND FIXTURE BRAND SELECTED FOR ADD/DELETE CHANGES FOR EACH FIXTURE TYPES SHOWN WITHIN 48 BUSINESS HOURS OF THE BID DATE. FAILURE TO COMPLY WITH THIS REQUIREMENT MAY DISQUALIFY THE PRODUCTS AND EMPOWER THE ENGINEER TO DETERMINE FAIR VALUE FOR FIXTURE AND INSTALLATION CHANGES, WITHOUT FURTHER INPUT FROM THE CONTRACTOR OR INSTALLER. SUBMITTAL PACKAGE SHALL INCLUDE LAMP MANUFACTURER AND CATALOG NUMBER ON EACH FIXTURE SHEET. ON ALL PENDANT MOUNTED FIXTURES, PROVIDE A SECOND SET OF PENDANTS, OF A DIFFERENT LENGTH, AS DIRECTED BY THE ARCHITECT/ENGINEER, PROVIDED AND INSTALLED AT NO ADDITIONAL CHARGE. ALL FIXTURES SHALL BE APPROVED BY UL OR ANOTHER ACCEPTABLE TESTING LAB FOR THE PURPOSE INTENDED AND WITH THE LAMP AND BALLAST PROPOSED. CONTRACTOR ALLOWANCE PRICES ARE ACCURATE WHEN THIS JOB WAS SPECIFIED, CONTRACTOR AND ELECTRICAL DISTRIBUTOR SHALL VERIFY THIS ALLOWANCE AND REPORT ANY PROBLEMS TO THE ENGINEER BEFORE THE BID. ALLOWANCE PRICE MAY OR MAY NOT INCLUDE LAMP(S) OR FREIGHT AS NOTED, AND DO NOT INCLUDE ANY TAXES. UNIVERSAL VOLTAGE (120/277) BALLASTS REQUIRED UNLESS NOTED OTHERWISE. DIMENSION SEQUENCE = (LENGTH X WIDTH X DEPTH) IN INCHES.

SYMBOL	MARK	FIXTURE CHARACTERISTICS BODY / AIR / MOUNTING / DOOR LENS/LOUVER/REFLECTOR/OTHER	LAMP	WATTS	VOLTS	MANUFACTURER	CATALOG NUMBER	NOTES
	CSL	CITY STREET LIGHT 35-FT POLE LIGHT	1-250WMH		480V		SEE DETAIL ON SHEET EE5.2	
	DF	FLUORESCENT DOWNLIGHT; THERMALLY PROTECTED HOUSING: TO ACCOMMODATE MULTIPLE TRIMS AND REFLECTOR ASSEMBLIES FOR LAMPS AS LISTED BELOW; ELECTRONIC BALLASTS; LOW IRIDESCENT REFLECTOR FINISH (EVEN IF NOT SHOWN IN CATALOG #); SELF FLANGING TRIM UNLESS NOTED.						
	DF-5	RECESSED SHOWER LIGHT;	1-Q13 RE835	25W	277/120V	INFINITY	PVSL68 113Q-EB (G24Q-1) 277 BH (16-1/4 X 12 X 7-7/8)	
		WHITE TRIM, DROP OPAL				HALO	H274-71PS (15 X 6-3/4 X 7)	
		LEXAN LENS, QUAD LAMP,				PRESCOLITE	CBX-TL30-120V-HPF (13 X 7-1/2 X 7-1/2)	
		6-9" APERTURE.				LITHONIA	LP6F 13DTT MVOLT GEB10 6LD1PF (13-1/2 X 12-1/4 X 7-3/8)	
						LIGHTOLIER	1102FHX/1178SH (12-3/4 X 6-13/16 X 7-1/2)	
						CAPRI	PL07/U-PSH17P	
	DF-7	RECESSED DOWNLIGHT; WALLWASH	2-13TT RE835	40W	277/120V	HALO	H7892-1E-LI	
		OPTICS, TT LAMPS, 6 3/4"				PRESCOLITE	PBX-TW94S-120V-HPF (11-1/2 X 7-1/2 X 7-1/2)	
		APERTURE, SPECULAR CLEAR				LITHONIA	LF6 2/13TT MVOLT GEB10 F6W1A (13-3/4 X 7 X 7-3/8)	
		TRIM FINISH, HORIZONTAL				LIGHTOLIER	1102T13U/1135T (15-11/16 X 9 X 3-7/8)	
		LAMP.				OMEGA	S62H13QPL-U-T6WH-WW-CS (11-11/16 X 11-7/16 X 5-3/4)	
						INFINITY	PH60 213Q-EB (G24Q-1) WW 277 BH (16-1/4 X 12 X 5-1/4)	
	DF-17	RECESSED DOWNLIGHT; VERTICAL,	1-CF-A32 RE835	50W	277/120V	LIGHTOLIER	8021CCLW/6132BU (12-3/4 X 10 X 9-3/8)	
		6" APERTURE, 32W CF-AMALGAM				LITHONIA	AFV 32TRT 6AR MVOLT (15-13/16 X 12-15/16 X 10-7/8)	
		LAMP, CLEAR.				OMEGA	S632PLT-U-T6-CS (11-11/16 X 11-7/16 X 11-3/8)	
						PRESCOLITE	CFT632EB-STF602 (16-1/4 X 14-7/16 X 10-9/16)	
						PORTFOLIO	C6032E-6051LI (12 X 11-1/2 X 9-1/2)	
						INFINITY	PV60 132T-EB (GX24Q-3) 277 BH (16-1/4 X 12 X 9-5/8)	
	DF-17d	RECESSED DOWNLIGHT; VERTICAL,	1-CF-A32 RE835	50W	277/120V	LIGHTOLIER	8021CCLW/6132BU (12-3/4 X 10 X 9-3/8)-DIM	
		6" APERTURE, 32W CF-AMALGAM				LITHONIA	AFV 32TRT 6AR MVOLT (15-13/16 X 12-15/16 X 10-7/8)-DIM	
		LAMP, CLEAR. 1% DIMMABLE				OMEGA	S632PLT-U-T6-CS (11-11/16 X 11-7/16 X 11-3/8)-DIM	
		BALLAST.				PRESCOLITE	CFT632EB-STF602 (16-1/4 X 14-7/16 X 10-9/16)-DIM	
						PORTFOLIO	C6032E-6051LI (12 X 11-1/2 X 9-1/2)-DIM	
						INFINITY	PV60 132T-EB (GX24Q-3) 277 BH (16-1/4 X 12 X 9-5/8)-DIM	
	DF-29	RECESSED DOWNLIGHT; 6-	1-CF-A32 RE835	50W	277/120V	PORTFOLIO	C6132E-6151LI (13 X 11-1/2 X 6-1/2)	
		7" APERTURE, HORIZONTAL,				LIGHTOLIER	8031CLW/6132BU (12-3/4 X 10 X 6-7/8)	
		32W CF-AMALGAM LAMP, CLEAR.				LITHONIA	AF 1/32TRT 6AR MVOLT (15-13/16 X 12-15/16 X 10-7/8)	
						OMEGA	S61H32-U-T61H-CS (11-11/16 X 11-7/16 X 5-3/4)	
						PRESCOLITE	CFT632HEB-STF602H (16-1/4 X 14-7/16 X 6-1/4)	
						INFINITY	PH60 132T-EB (GX24Q-3) 277 BH (16-1/4 X 12 X 5-1/4)	
	EM	EMERGENCY GENERATOR			120/277V3W	BODINE	GTD	
		TRANSFER DEVICE.				IOTA	ETS	
		BALLAST PACK, INDIVIDUAL				PRESCOLITE	ATSP	
		BALLAST DEVICE				SIDELITE	PSA	
	E2	EXIT SIGN: THERMOPLASTIC HOUSING; UNIVERSAL MOUNTING; UNIVERSAL ARROWS PER PLANS; LED, DIFFUSE LENS PANEL; GREEN LETTERS ON WHITE BACKGROUND. MUST MEET NFPA ILLUMINATION STANDARDS.						
	E2-1	SINGLE FACE:	LED	1W	120/277V	DUAL-LITE	LXSGW	
						EELP	XE 2 GW	
						LITHONIA	LQM S W 1 G 120/277	
						SURE-LITES	LPX60DGW	
						DAY-BRITE	CXL-1-GW	
						CHLORIDE	SLA1GW	
						LIGHTOLIER	LTA1GW	
	E2-2	DUAL FACE:	LED	2W	120/277V	DUAL-LITE	LXUGW	
						EELP	XE 2 GW	
						LITHONIA	LQM S W 3 G 120/277	
						SURE-LITES	LPX60DGW	
						DAY-BRITE	CXL-3-GW	
						CHLORIDE	SLA2GW	
						LIGHTOLIER	LTA2GW	
	EP	ELEVATOR PIT LIGHTS: INCANDESCENT VAPORTIGHT; COPPER-FREE CAST ALUMINUM BODY AND GUARD; CAST ALUMINUM ADAPTERS FOR MOUNTING AS NOTED, CLEAR TEMPERED GLASS GLOBE, U.L. LISTED FOR USE IN WET LOCATIONS.						
	EP-1	WALL ARM MOUNT ON FLUSH	100A/19	100W	120V	ARK	AVP21-200	
		OR RECESSED OUTLET BOX.				DAY-BRITE	VIS-100-I-12-W-G	
						RAL	VPWB100GG75	
						EXCELINE	RLW-100-IN-L-CG-C-1	
						SPERO	VW30-42-G	
	GS	TROFFERS: RECESSED FOR LAY-IN GRID; STATIC; HINGED AND LATCHED STEEL DOOR; .125 ACRYLIC PRISMATIC LENS, MINIMUN 1/8"; EARTHQUAKE CLIPS; MAX 5" DEEP; SPECIFICATION GRADE; PROGRAM START ELECTRONIC BALLASTS, T8 LAMPS; ONE BALLAST PER FIXTURE WHERE POSSIBLE, UNLESS TWO LEVEL SWITCHING IS SHOWN ON THE PLANS.						
	GS-3	2X4, 2 LAMP.	2-F32T8 RE835	65W	277/120V	LITHONIA	2 SP8G 232 A12125 MVOLT TUBRHP (4-1/2" DEPTH)	
						METALUX	2GP-232A125-UNV-EB81-PROGRAM START (3-3/4" DEPTH)	
						DAYBRITE	2DPG232-FS21-UNV-1/2EB-SPEC (4-3/8" DEPTH)	
						LSI	LA125 232 SD SSO10PS UE (4" DEPTH)	
						LIGHTOLIER	XT2GVI232-UNV-SOP (3-5/8" DEPTH)	
						COLUMBIA	ST824-232G-FSA12.125-EB8LHPRUNV (3-3/4" DEPTH)	
	GS-4	2X4, 3 LAMP.	3-F32T8 RE835	95W	277/120V	LITHONIA	2 SP8G 332 A12125 1/3 MVOLT TUBRHP (4-1/2" DEPTH)	
						METALUX	2GP-332A125-UNV-EB81-PROGRAM START (3-3/4" DEPTH)	
						DAYBRITE	2DPG332-FS21-UNV-1/3EB-SPEC (4-3/8" DEPTH)	
						COLUMBIA	ST824-332G-FSA12.125-3EB8LHPRUNV (3-3/4" DEPTH)	
						LIGHTOLIER	XT2GVI332-UNV-03P (3-5/8" DEPTH)	
						LSI	LA125 332 SD SSO10PS UE (4" DEPTH)	
	GS-99	2X4, 3 LAMP. DUAL LEVEL	3-F32T8 RE835	95W	277/120V	LITHONIA	2 SP8G 332 A12125 1/3 MVOLT TUBRHP (4-1/2" DEPTH)	
		SWITCHING LAMP SEPARATE				METALUX	2GP-332A125-UNV-EB81-PROGRAM START (3-3/4" DEPTH)	
		FROM EXTERIOR LAMPS				DAYBRITE	2DPG332-FS21-UNV-1/3EB-SPEC (4-3/8" DEPTH)	
						COLUMBIA	ST824-332G-FSA12.125-3EB8LHPRUNV (3-3/4" DEPTH)	
						LIGHTOLIER	XT2GVI332-UNV-03P (3-5/8" DEPTH)	
						LSI	LA125 332 SD SSO10PS UE (4" DEPTH)	
	OB	BOLLARDS: SEAMLESS CAST ALUMINUM HOUSING, WITH MOUNTING BASE AND ANCHOR BOLTS, ACRYLIC LENS, INTEGRAL MULTI-TAP BALLAST; FUSED, COLOR AS DIRECTED BY ARCHITECT CHOSEN FROM MANUFACTURERS? STANDARD PAINTED FINISHES.						
	OB-2	8" ROUND X 42" HIGH,	100PSMH	130W	MTBV	GARDCO	BRM-820-42-100-MH-MTB-X-F	
		EXTERNAL LOUVER OPTICS,				KIM	VRB1-100MHXXX-XXX-FUSED	
		SOLID DOME TOP.				LSI	BVRD-EL-100MH-XX-MT-XXX-NO-F	
						STERNER	AR-42-G-CL-DT-100-H-VND-SCBA	
						BRONZELITE	CL82XA0100PMT-FS	
						GREENLEE	ABR-100MH-MT-EL-CBA-DT(FUSED)	
						LITHONIA	KBA8 100M LV TB SF	

GSBS | ARCHITECTURE | LANDSCAPE ARCHITECTURE | PLANNING | INTERIOR DESIGN
375 West 200 South Suite 100
Salt Lake City
Utah 84101
Tel 801.521.8600
Fax 801.521.7913
GSBS-PC.COM

No. 181563
DAVID E. WESEMANN
02/01/08

SPECTRUM ENGINEERS
175 S MAIN ST, STE 300
SALT LAKE CITY, UT 84111
P:801.328.5151 F:801.328.5155

No.	DATE	REVISION

NORTH SALT LAKE READINESS CENTER AND CIVIL SUPPORT TEAM

Salt Lake City, UT

LIGHTING FIXTURE SCHEDULE

PROJECT NO. 2005.003	EL601
DATE 02/01/2008	
DRAWN PSS	
CHECKED	BINDING ORDER 132

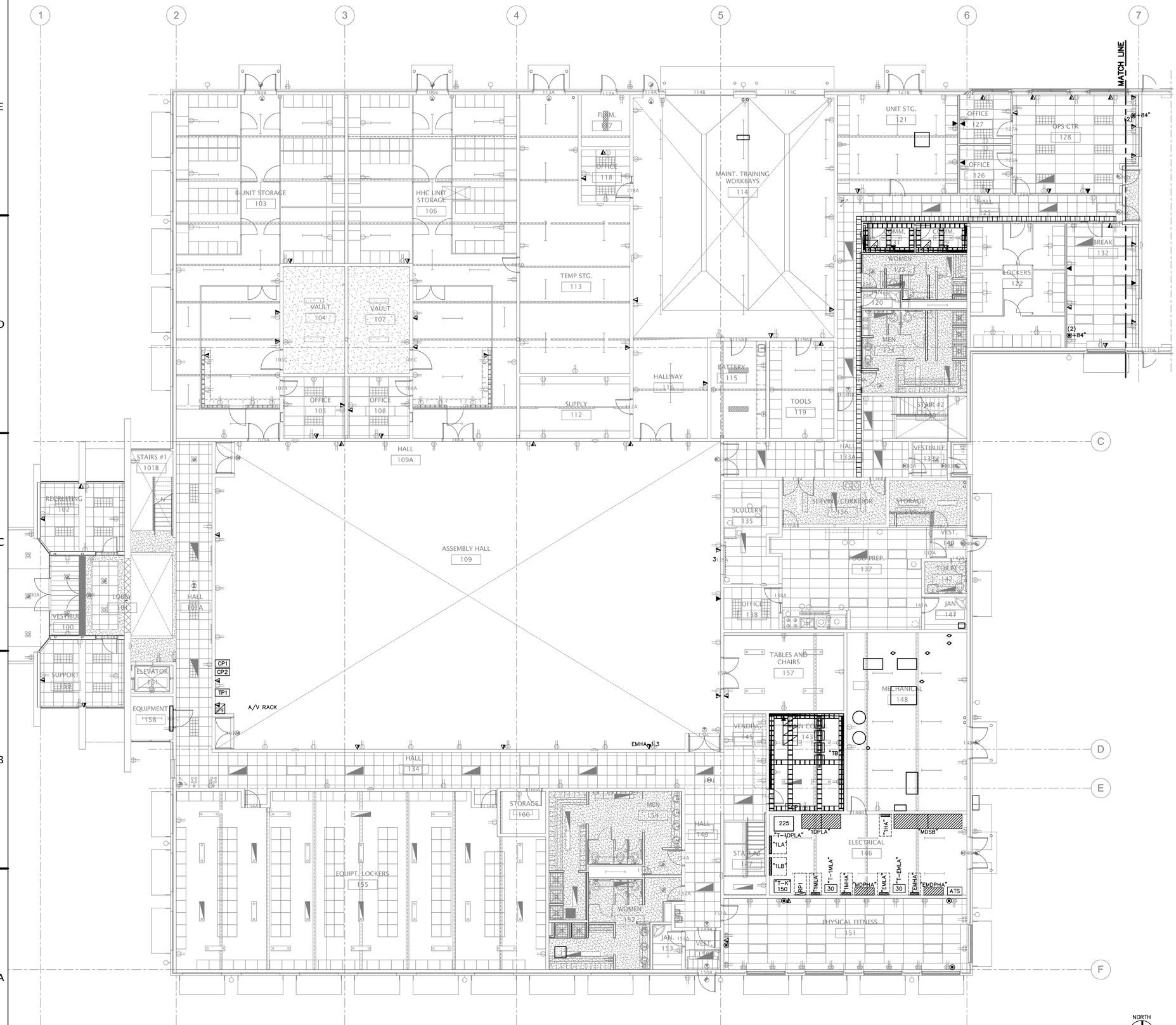

A6 TECHNOLOGY PLAN LEVEL ONE

SCALE: 1/8"=1'-0"

0 4' 8' 16'

GENERAL SHEET NOTES

1. LINE OF TEXT

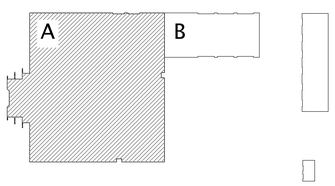

Key Plan

GSBS | ARCHITECTURE | LANDSCAPE ARCHITECTURE | PLANNING | INTERIOR DESIGN

375 West 200 South Suite 100
Salt Lake City
Utah 84101

Tel 801.521.8600
Fax 801.521.7913

GSBS-PC.COM

LICENSED PROFESSIONAL ENGINEER No. 181563 DAVID E. WESEMANN STATE OF UTAH 02/01/08

SPECTRUM ENGINEERS
175 S MAIN ST, STE 300
SALT LAKE CITY, UT 84111
P:801.328.5151 F:801.328.5155

No.	DATE	REVISION

NORTH SALT LAKE READINESS CENTER AND CIVIL SUPPORT TEAM

Salt Lake City, UT

TECHNOLOGY PLAN LEVEL ONE

PROJECT NO. 2005.003	ET101
DATE 02/01/2008	
DRAWN PSS	
CHECKED	BINDING ORDER 133

File Name: P:\2006\20060331\1Drawings\Sheet\133-31ET-101.dwg Last Plotted: 2008/02/11 @ 4:37 PM By: pss

A6 TECHNOLOGY PLAN LEVEL TWO

SCALE: 1/8"=1'-0"

0 4' 8' 16'

GENERAL SHEET NOTES

1. PROVIDE 1 EA 0.75" CONDUIT BETWEEN SPEAKERS AS SHOWN. PROVIDE 1 EA 0.75" CONDUIT TO EQUIPMENT RACK BELOW.

GSBS | ARCHITECTURE | LANDSCAPE ARCHITECTURE | PLANNING | INTERIOR DESIGN

375 West 200 South Suite 100
Salt Lake City
Utah 84101

Tel 801.521.8600
Fax 801.521.7913

GSBS-PC.COM

LICENSED PROFESSIONAL ENGINEER No. 181563 DAVID E. WESEMANN STATE OF UTAH 02/01/08

SPECTRUM ENGINEERS

175 S MAIN ST, STE 300
SALT LAKE CITY, UT 84111
P:801.328.5151 F:801.328.5155

No.	DATE	REVISION

NORTH SALT LAKE READINESS CENTER AND CIVIL SUPPORT TEAM

Salt Lake City, UT

TECHNOLOGY PLAN LEVEL TWO

PROJECT NO. 2005.003	ET102
DATE 02/01/2008	
DRAWN PSS	
CHECKED	BINDING ORDER 134

File Name: P:\2006\20060331\1Drawings\Sheet\134-31ET-102.dwg Last Plotted: 2008/02/11 @ 4:37 PM By: pss

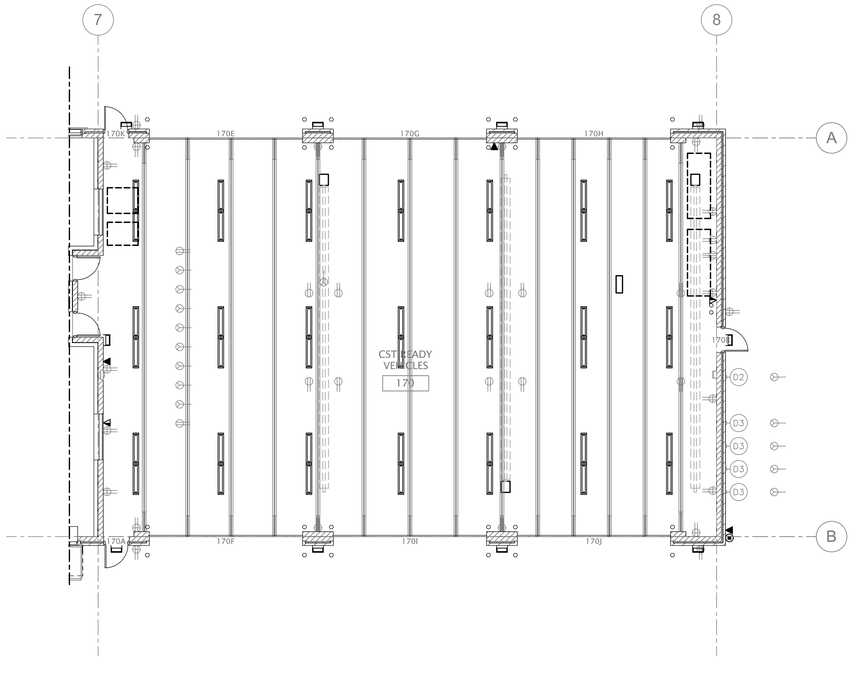

NORTH

A3 TECHNOLOGY PLAN LEVEL ONE

SCALE: 1/8"=1'-0"

0 4' 8' 16'

GSBS | ARCHITECTURE | LANDSCAPE ARCHITECTURE | PLANNING | INTERIOR DESIGN

375 West 200 South Suite 100
Salt Lake City
Utah 84101

Tel 801.521.8600
Fax 801.521.7913

GSBS-PC.COM

LICENSED PROFESSIONAL ENGINEER
No. 181563
DAVID E. WESEMANN
STATE OF UTAH
02/01/08

SPECTRUM ENGINEERS

175 S MAIN ST, STE 300
SALT LAKE CITY, UT 84111
P:801.328.5151 F:801.328.5155

No.	DATE	REVISION

NORTH SALT LAKE READINESS CENTER AND CIVIL SUPPORT TEAM

Salt Lake City, UT

LEVEL ONE,
CST READY
VEHICLES
TECHNOLOGY PLAN

PROJECT NO. 2005.003	ET103
DATE 02/01/2008	
DRAWN PSS	
CHECKED	BINDING ORDER 135

File Name: P:\2006\20060331\1Drawings\Sheet\135-31ET-103.dwg Last Plotted: 2008/02/11 @ 4:37 PM By: pss

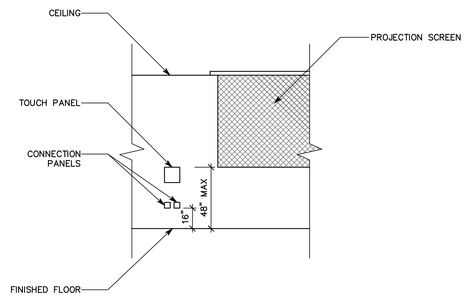

NOTES:

1. COORDINATE WHICH SIDE OF SCREEN DEVICES ARE MOUNTED WITH ET1.1 AND ET1.2.
2. VERIFY EXACT MOUNTING WITH OWNER PRIOR TO INSTALLATION.

C4 FRONT WALL ELEVATION (TYPICAL OF ROOMS 202B, 203, 204, 205, 215, 218, 240, 242, 245)

SCALE: 1/4"=1'-0"

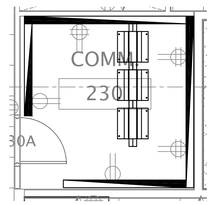

EQUIPMENT LAYOUT

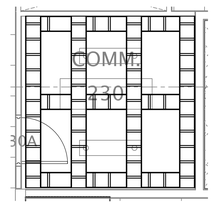

LADDER RACK LAYOUT

C2 ENLARGED COMM. ROOM 230 LAYOUT

SCALE: 1/4"=1'-0"

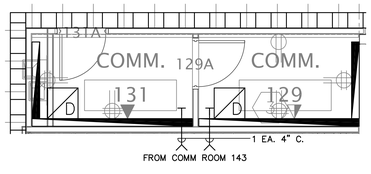

EQUIPMENT LAYOUT

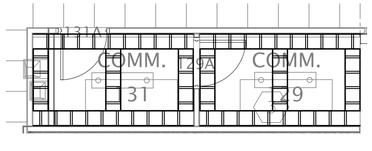

LADDER RACK LAYOUT

A4 ENLARGED COMM. ROOMS 129, 131 LAYOUT

SCALE: 1/4"=1'-0"

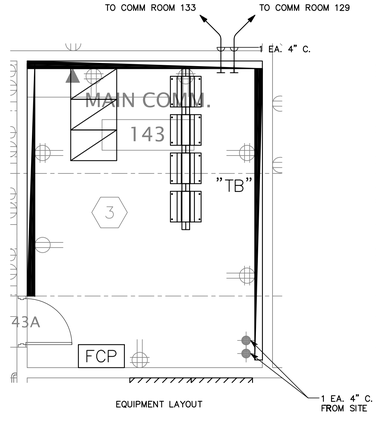

EQUIPMENT LAYOUT

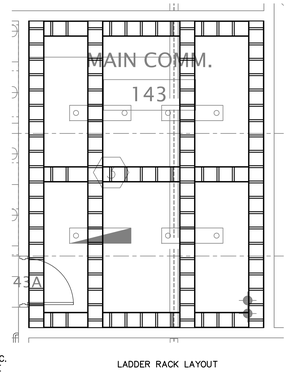

LADDER RACK LAYOUT

A2 ENLARGED MAIN COMM. ROOM 143 LAYOUT

SCALE: 1/4"=1'-0"

GSBS | ARCHITECTURE | LANDSCAPE ARCHITECTURE | PLANNING | INTERIOR DESIGN

375 West 200 South Suite 100
Salt Lake City
Utah 84101

Tel 801.521.8600
Fax 801.521.7913

GSBS-PC.COM

LICENSED PROFESSIONAL ENGINEER
No. 181563
DAVID E. WESEMANN
STATE OF UTAH
02/01/08

SPECTRUM ENGINEERS
175 S MAIN ST, STE 300
SALT LAKE CITY, UT 84111
P:801.328.5151 F:801.328.5155

No.	DATE	REVISION

NORTH SALT LAKE READINESS CENTER AND CIVIL SUPPORT TEAM

Salt Lake City, UT

ENLARGED COMMUNICATIONS ROOM DETAILS

PROJECT NO. 2005.003	ET401
DATE 02/01/2008	
DRAWN PSS	
CHECKED	BINDING ORDER 136

File Name: P:\2006\20060331\1Drawings\Sheet\136-31ET-401.dwg Last Plotted: 2008/02/11 @ 4:37 PM By: pss

AV/VOICE/DATA EQUIPMENT/CABLE LIST

SYMBOL	ITEM DESCRIPTION	MANUFACTURERS
X C6 VOICE	VOICE CABLING, CATEGORY 6	SEE SPECIFICATIONS (CAT6 YELLOW PLENUM RATED) ('X' INDICATES QUANTITY)
X C6 DATA	DATA CABLING, CATEGORY 6	SEE SPECIFICATIONS (CAT6 BLUE PLENUM RATED) ('X' INDICATES QUANTITY)
PPL	PATCH PANEL	SEE SPECIFICATIONS
V	BLUE METAL BACKBOARD (VOICE)	M183-B1 (VAR)
D	YELLOW METAL BACKBOARD (DATA)	M183-B5 (VAR)
SB	FULL SPOOL BOARDS	M187-B1 (VAR)
	WORK STATION OUTLET (1-LAN, 1-VOICE)	SEE SPECIFICATIONS
	TROJAN NETWORK DATA OUTLET, GRAY JACK	SEE SPECIFICATIONS
PB	PROTECTION BLOCKS	MARCONI R66P25QC
LIU	RACK MOUNTED LIU	SEE SPECIFICATIONS
LIU1	RACK MOUNTED LIU	SEE SPECIFICATIONS
	50 PAIR CATEGORY 5 RISER RATED CABLE	SEE SPECIFICATIONS
	100 PAIR CATEGORY 5 RISER RATED CABLE	SEE SPECIFICATIONS
	BUS BAR, 10", 20", W/ LUGS & MOUNTING ACCESSORIES	CHATSWORTH 10622-010/020
F(#)	6 STRAND FIBER, 50 MICRON MULTIMODE, 6 DTRAND FIBER, SINGLE MODE, AS NOTED	SEE SPECIFICATIONS
	CABLE RUNWAY-12", BLACK	CHATSWORTH 10250-712
	CABLE RUNWAY-18", BLACK	CHATSWORTH 10250-718
	CABLE RUNWAY RADIUS DROP, BLACK	CHATSWORTH 12100-712
	BUTT SPLICE KIT, BLACK	CHATSWORTH 11301-001
	JUNCTION SPLICE KIT, BLACK	CHATSWORTH 11302-001
	ADJ. JUNCTION SPLICE KIT, BLACK	CHATSWORTH 10616-001
	FOOT KIT, BLACK	CHATSWORTH 11309-701
	3" CHANNEL RACK TO RUNWAY, BLACK	CHATSWORTH 10595-712
	TRIANGLE BRACKETS 12", BLACK	CHATSWORTH
	EQUIPMENT RACK, OPEN FRAME 19", BLACK	CHATSWORTH 55053-703
	EQUIPMENT RACK, 4 POST, 19" BLACK	CHATSWORTH 15053-703
PS	EQUIPMENT RACK POWER STRIP, 20A	LEVITON 5500-192
VWM	VERTICAL WIRE MANAGERS, BLACK, SIDE & CENTER	SEE SPECIFICATIONS
HWM	HORIZONTAL WIRE MANAGERS, BLACK, 2 RU	SEE SPECIFICATIONS
	COPPER CATEGORY 6 PATCH CABLES	SEE SPECIFICATIONS
	CAT 6 J-HOOKS	CADDY CAT32Z34
	FIBER CONNECTOR, LC, MULTI-MODE	SEE SPECIFICATIONS
	FIBER OPTIC PATCH CABLES, MULTI-MODE, LC TO LC	SEE SPECIFICATIONS
	1" INNERDUCT-PLENUM RATED	SEE SPECIFICATIONS
	1.25" INNERDUCT-PLENUM RATED	SEE SPECIFICATIONS
	1.25" INNERDUCT-PLENUM RATED	SEE SPECIFICATIONS
	CABLE TRAY	SEE SPECIFICATIONS
S 12	SPEAKER, 12" W/BACKCAN, GRILLE, AND 70V TRANSFORMER	ATLAS SOUND 12CTX60 W/Q428SA/164-12A
S	SPEAKER, 6" W/BACKCAN, GRILLE, AND 70V TRANSFORMER	ATLAS SOUND FAP62T W/C-RING/V-RAIL

NOTE: ALL RACKS, LADDER, PATCH PANELS, AND ACCESSORIES SHALL BE BLACK IN COLOR.

AV CABLE SCHEDULE ASSEMBLY HALL 109

ORIGIN	DESTINATION	CABLE TYPE	QUANTITY	SPECIAL INSTRUCTIONS
CP1		I	1	
		L	4	
		M	2	
CP1		R	1	LOOP 3' IN EQUIPMENT RACK #1. LABEL AND DO NOT CUT.
CP2		L	4	
		C	1	
		D	2	PROVIDE EXTRON DVI-201TX/RX EXTENDERS AT EACH END.
TP1		C	2	
S 12		S	1	CIRCUIT AS SHOWN ON FLOOR PLANS
		C	1	

AV CABLE SCHEDULE CONF. 240, 242, STOR. 202B, CLASSROOM 215

ORIGIN	DESTINATION	CABLE TYPE	QUANTITY	SPECIAL INSTRUCTIONS
CP3		L	4	
		L	1	
CP1		I	1	LOOP 3' IN EQUIPMENT RACK #1. LABEL AND DO NOT CUT.
		R	1	
		C	1	
TP1		C	2	
S		S	1	CIRCUIT AS SHOWN ON FLOOR PLANS
CP2		Y	1	
		V	1	

AV CABLE SCHEDULE LEARNING CTR. 218, CONFERENCE 245

ORIGIN	DESTINATION	CABLE TYPE	QUANTITY	SPECIAL INSTRUCTIONS
CP3		I	1	
		L	4	
		R	1	
CP2		V	1	
		L	4	
		Y	1	
TP1		C	2	
S		S	1	CIRCUIT AS SHOWN ON FLOOR PLANS
		Y	1	
		C	1	
		C	1	
		I	1	
		R	1	
		Y	1	
		V	1	
FB		I	1	
		R	1	
		L	4	
		M	2	

AV CABLE SCHEDULE CLASSROOMS 203, 204, 205

ORIGIN	DESTINATION	CABLE TYPE	QUANTITY	SPECIAL INSTRUCTIONS
CP1		I	1	
		L	4	
		M	2	
CP2		Y	1	
		L	4	
		V	1	
TP1		C	2	
S		S	1	CIRCUIT AS SHOWN ON FLOOR PLANS
		C	1	
		I	1	
		R	1	
		Y	1	
		V	1	

GENERAL VOICE/DATA AND A/V NOTES

1. PROVIDE PLENUM RATED CABLE IN ALL AIR PLENUMS. IF A PLENUM RATED CABLE IS NOT SPECIFIED, PROVIDE THE PLENUM RATED EQUIVALENT TO THE SPECIFIED CABLE.
2. ALL CABLE, REGARDLESS OF LENGTH, INSTALLED UNDER THIS CONTRACT ARE TO BE LABELED.
3. THE EQUIPMENT LABELING IDENTIFIED ON DETAILS IN THESE DRAWINGS ARE EXAMPLES ONLY OF THE ACTUAL LABELING WHICH IS REQUIRED AS PART OF THIS CONTRACT. PRIOR TO FABRICATION, SUBMIT THE NOMENCLATURE FOR ALL LABELS TO THE OWNER FOR REVIEW. THIS REQUIREMENT INCLUDES BUT IS NOT LIMITED TO ALL CABLE LABELING, AND ALL EQUIPMENT LABELING.
4. FOR EVERY CABLE PULL SPECIFIED, COIL 10' OF EXCESS CABLE AT THE AT THE CLOSET END, NEATLY COIL, AND LABEL.
5. UNLESS OTHERWISE NOTED, INSTALL ALL CABLE INSIDE RACEWAY SYSTEMS. WHERE RACEWAY SYSTEMS HAVE NOT BEEN PROVIDED OR SPECIFIED, INSTALL CABLE THROUGH THE SPECIFIED "CADDY" CLIPS INSTALLED ABOVE ACCESSIBLE CEILINGS AT THE MINIMUM INTERVALS IDENTIFIED IN THE SPECIFICATIONS. SUPPORT "CADDY" CLIPS DIRECTLY FROM THE BUILDING STRUCTURE, NOT FROM OTHER BUILDING SYSTEM SUPPORT WIRES OR CABLE.
6. GROUND ALL EQUIPMENT RACKS AS DETAILED.
7. ALL CABLE, FIBER, AND UTP TO TERMINATE ON BOTH ENDS.
8. COORDINATE RACK LAYOUTS WITH OWNER PRIOR TO INSTALLATION.
9. WELL IN ADVANCE OF INSTALLATION, COORDINATE WORK WITH ALL OTHER TRADES SO THAT ELECTRICAL EQUIPMENT, OR ITS INTENDED USE, IS NOT OBSTRUCTED BY EQUIPMENT BEING PROVIDED BY OTHER DIVISIONS.
10. INSTALL ALL ELECTRONIC SYSTEMS EQUIPMENT IN COMPLIANCE WITH THE MANUFACTURER'S WRITTEN INSTRUCTIONS, SEISMIC CODES, AND INDUSTRY WIDE ACCEPTED PRACTICES. SUPPORT EQUIPMENT WEIGHT FROM BUILDING STRUCTURE. DURING THE SUBMITTAL PROCESS, PROVIDE SHOP DRAWINGS WHICH DETAIL PROPOSED MOUNTING FOR ALL SUCH EQUIPMENT.
11. 'A' INDICATES MOUNTING ABOVE COUNTER. VERIFY HEIGHT OF POWER OUTLET AND MOUNT DATA OUTLET NEXT TO POWER OUTLET.
12. ALL WORK SHALL BE IN COMPLIANCE WITH UTNG STANDARD UT-G6-C.
13. ALL WORK SHALL BE COORDINATED WITH UTAH NATIONAL GUARD.
14. ALL CONDUIT FOR VOICE/DATA, AND A/V CABLE SHALL BE INSTALLED IN ACCORDANCE WITH ANSI/TIA/EIA569-A.
15. PRIOR TO INSTALLATION, VERIFY A/V ROUGH-IN WITH OWNER.

⬡SHEET KEYNOTES

1. CONTRACTOR SHALL PROVIDE A ELEVATION LAYOUT DRAWING OF THE INSIDE OF THE COMMUNICATIONS CABINET INDICATING THE EQUIPMENT TO BE INSTALLED TO MIKE HANSEN (UTNG) FOR COORDINATION. COORDINATE REQUIREMENTS FOR UTNG PROVIDED EQUIPMENT AND INCLUDE THAT EQUIPMENT IN THE ELEVATION DRAWING.
2. PROVIDE AND MOUNT A 4' X 8' X 0.75" FIRE RESISTANT PLYWOOD BACKBOARD IN THE BACK OF THE CABINET. TRIM THE EDGES OF THE PLYWOOD TO FIT IN THE BOX. PAINT THE PLYWOOD AS DIRECTED BY UTAH NATIONAL GUARD.
3. CONDUIT SHALL BE CONTINUOUS AND ROUTED UNDER SLAB, WHERE POSSIBLE. RACEWAY SHALL NOT UTILIZE CABLE TRAY AND SHALL NOT HAVE JUNCTION BOXES.
4. PROVIDE A 2" X 12" X 1/4" GROUNDING BUSBAR ON INSULATORS. SEE SPECIFICATIONS.
5. COIL 50 FEET OF UNTESTED CABLE ABOVE THE CEILING FOR FUTURE SYSTEMS FURNITURE (TYPICAL OF ALL CABLES). CONTRACTOR SHALL INCLUDE LINE ITEM BID PRICE TO RETURN AND TERMINATE CABLES WHEN SYSTEMS FURNITURE ARRIVES. PROVIDE LINE ITEM BID PER VOICE/DATA OUTLET DROP TO FURNITURE.
6. IN ASSEMBLY HALL 109, ROUTE CONDUITS TO EQUIPMENT RACK (TYPICAL FOR ALL CONDUIT AND SYMBOLS IN ASSEMBLY HALL 109).
7. IN ASSEMBLY HALL 109, STUB CONDUITS TO MAIN COMM ROOM 143.

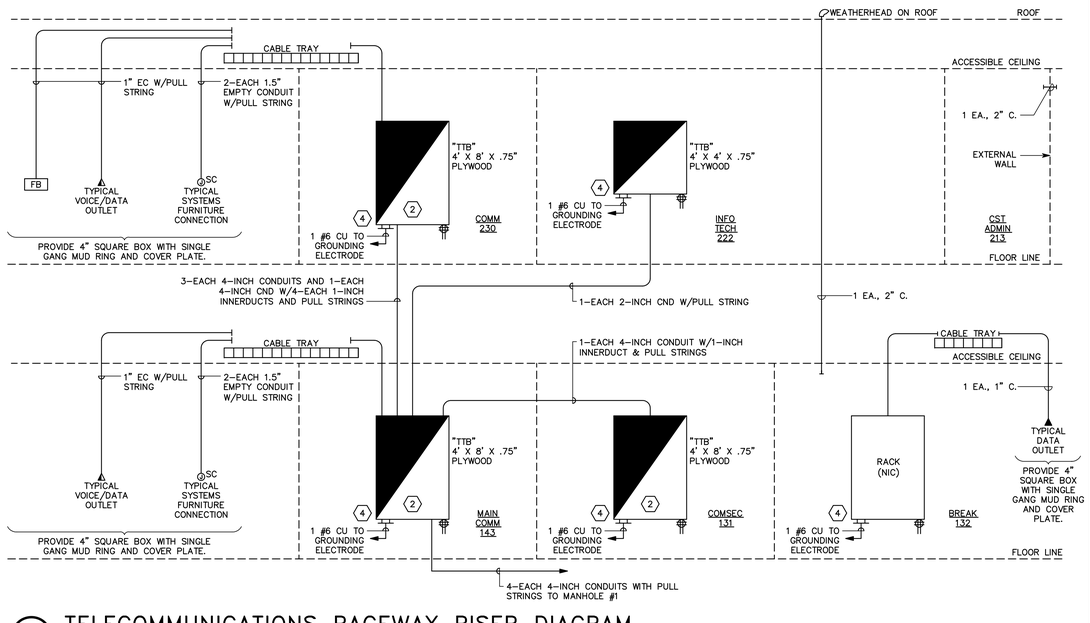

A6 TELECOMMUNICATIONS RACEWAY RISER DIAGRAM
NTS

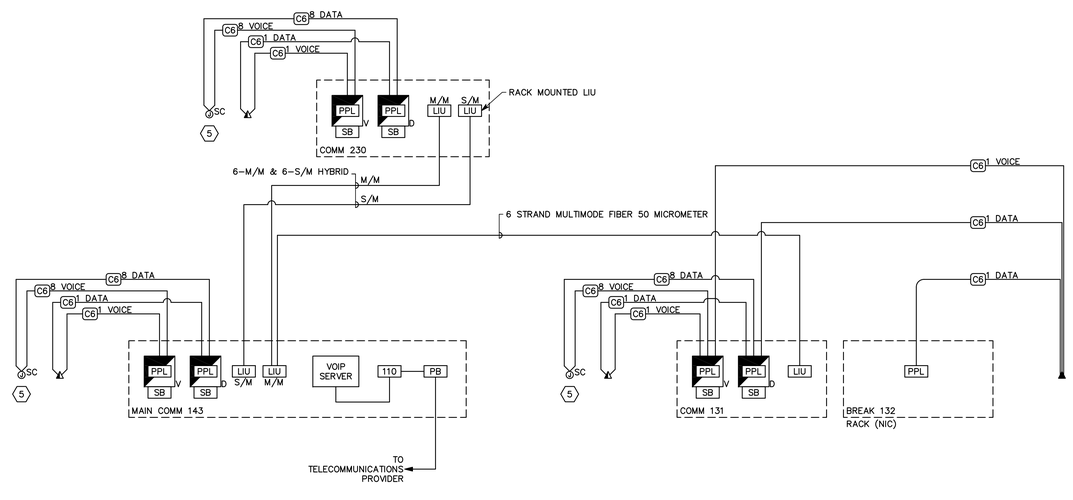

A3 TELECOMMUNICATIONS CABLING RISER DIAGRAM
NTS

GSBS | ARCHITECTURE | LANDSCAPE ARCHITECTURE | PLANNING | INTERIOR DESIGN
375 West 200 South Suite 100
Salt Lake City
Utah 84101
Tel 801.521.8600
Fax 801.521.7913
GSBS-PC.COM

LICENSED PROFESSIONAL ENGINEER No. 181563 DAVID E. WESEMANN STATE OF UTAH 02/01/08

SPECTRUM ENGINEERS
175 S MAIN ST, STE 300
SALT LAKE CITY, UT 84111
P:801.328.5151 F:801.328.5155

No.	DATE	REVISION

NORTH SALT LAKE READINESS CENTER AND CIVIL SUPPORT TEAM

Salt Lake City, UT

TECHNOLOGY SCHEDULES & RISER DIAGRAMS

PROJECT NO. 2005.003	ET601
DATE 02/01/2008	
DRAWN PSS	
CHECKED	BINDING ORDER 137

File Name: P:\2006\20060331\1Drawings\Sheet\137-31ET-601.dwg Last Plotted: 2008/02/11 @ 4:36 PM By: pss

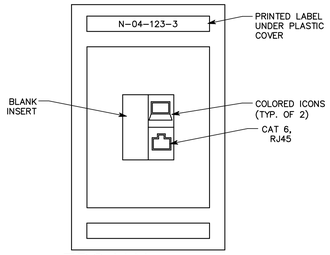

E6 TROJAN NETWORK ONLY
NTS

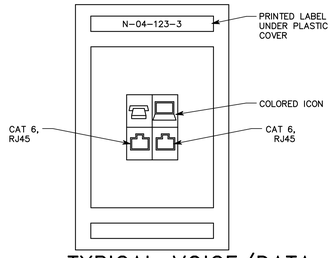

E5 TYPICAL VOICE/DATA PLATE DETAIL
NTS

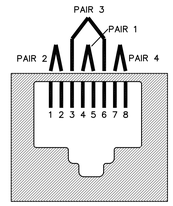

T568B

PAIR ID	PIN #
T1	5
R1	4
T2	1
R2	2
T3	3
R3	6
T4	7
R4	8

COLOR SCHEME
PAIR 1 – BLUE
PAIR 2 – ORANGE
PAIR 3 – GREEN
PAIR 4 – BROWN

E4 RJ45 WIRING DETAIL
NTS

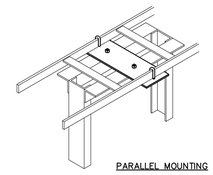

PARALLEL MOUNTING

E3 3" CHANNEL RACK-TO-RUNWAY MOUNT
NTS

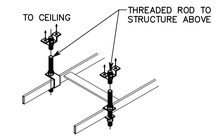

E2 OVERHEAD SUPPORT DETAIL
NTS

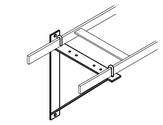

E1 TRIANGLE BRACKET DETAIL
NTS

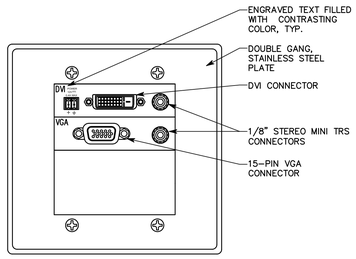

D6 CONNECTION PANEL #3
NTS

CP3

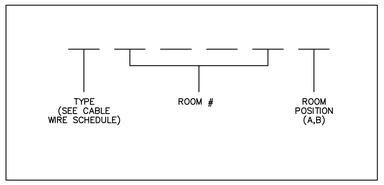

NOTES:

1. ALL CABLE/WIRE, REGARDLESS OF LENGTH, SHALL BE LABELED WITH A UNIQUE IDENTIFYING CODE. LABEL SHALL BE PERMANENT AND SHALL BE MACHINE PRINTED (NOT HAND PRINTED). SUBMIT PROPOSED LABEL MATERIAL FOR APPROVAL.

2. PRIOR TO LABEL CREATION, SUBMIT FOR APPROVAL PROPOSED ROOM NUMBER SCHEME FOR CABLE LABELS.

D5 CABLE LABEL DETAIL
NTS

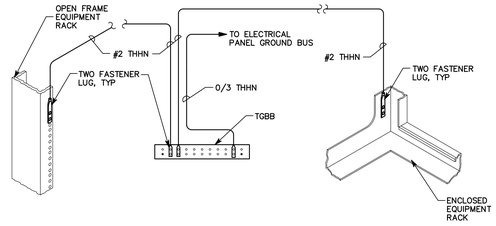

D3 TYPICAL RACK GROUNDING DETAIL
NTS

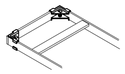

D1 CABLE RUNWAY END CLOSING DETAIL
NTS

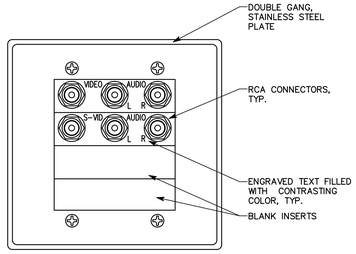

C6 CONNECTION PANEL #2
NTS

CP2

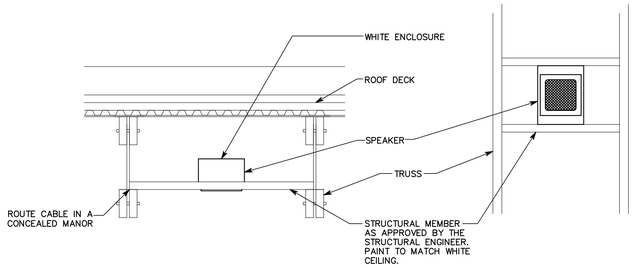

C5 ASSEMBLY HALL 109 SPEAKER MOUNTING DETAIL
NTS

S12

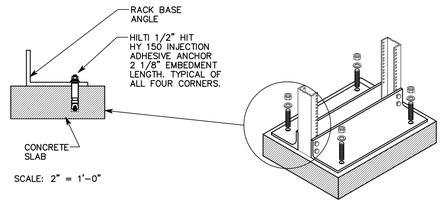

SCALE: 2" = 1'-0"

C3 EQUIPMENT RACK ANCHORAGE DETAIL
NTS

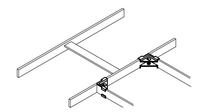

C1 CABLE RUNWAY SPLICE DETAIL
NTS

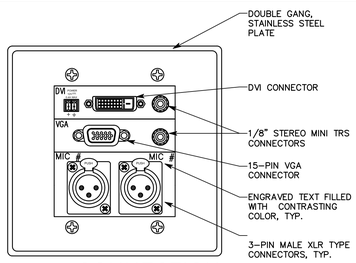

B6 CONNECTION PANEL #1
NTS

CP1

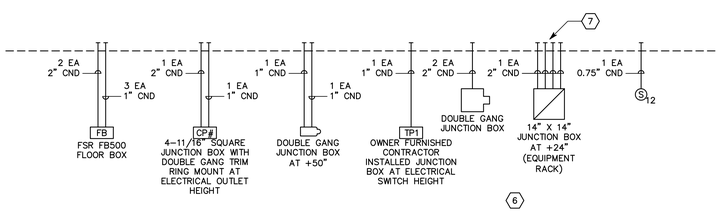

B5 AV CONDUIT RISER DIAGRAM
NTS

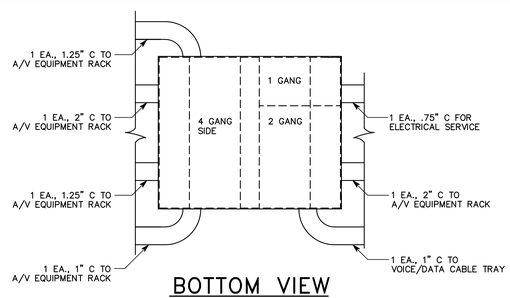

BOTTOM VIEW

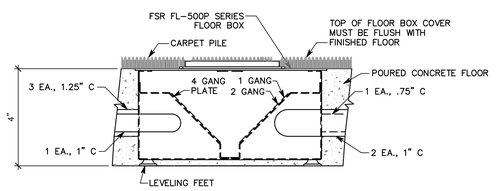

SIDE VIEW

NOTE: WHERE BOX IS MOUNTED ON THE UPPER FLOORS, PROVIDE A LOCATION WHERE THE DEPTH BETWEEN THE STRUCTURAL SLAB AND THE TOPPING SLAB WILL PROVIDE SUFFICIENT DEPTH TO MOUNT THE BOX. IF THE BOX IS TO BE MOVED MORE THAN 3", NOTIFY THE ARCHITECT/ENGINEER.

A3 FLOOR BOX CONDUIT TERMINATION DETAIL
NTS

FB

B1 SWIVEL SPLICE KIT FOR ELEVATION TRANSITION
NTS

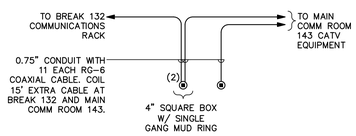

A6 CATV RISER DIAGRAM
NTS

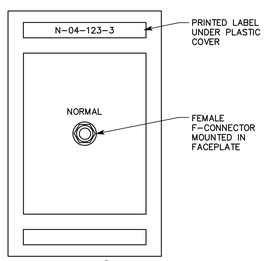

SINGLE

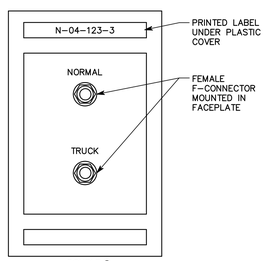

DOUBLE

A5 CATV PLATE DETAILS
NTS

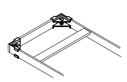

A1 CABLE RUNWAY END CLOSING DETAIL
NTS

GSBS | ARCHITECTURE | LANDSCAPE ARCHITECTURE | PLANNING | INTERIOR DESIGN

375 West 200 South Suite 100
Salt Lake City
Utah 84101

Tel 801.521.8600
Fax 801.521.7913

GSBS-PC.COM

LICENSED PROFESSIONAL ENGINEER
No. 181563
DAVID E. WESEMANN
STATE OF UTAH
02/01/08

SPECTRUM ENGINEERS
175 S MAIN ST, STE 300
SALT LAKE CITY, UT 84111
P:801.328.5151 F:801.328.5155

No.	DATE	REVISION

NORTH SALT LAKE READINESS CENTER AND CIVIL SUPPORT TEAM

Salt Lake City, UT

TECHNOLOGY DETAILS & RISER DIAGRAMS

PROJECT NO. 2005.003	ET602
DATE 02/01/2008	
DRAWN PSS	
CHECKED	BINDING ORDER 138

File Name: P:\2006\20060331\1Drawings\Sheet\138-31ET-602.dwg Last Plotted: 2008/02/11 @ 4:36 PM By: pss

GENERAL SHEET NOTES

1. PROVIDE ADDITIONAL LOOPS TO THE MASS NOTIFICATION SYSTEM AS REQUIRED BY THE MANUFACTURER'S PUBLISHED DATA.

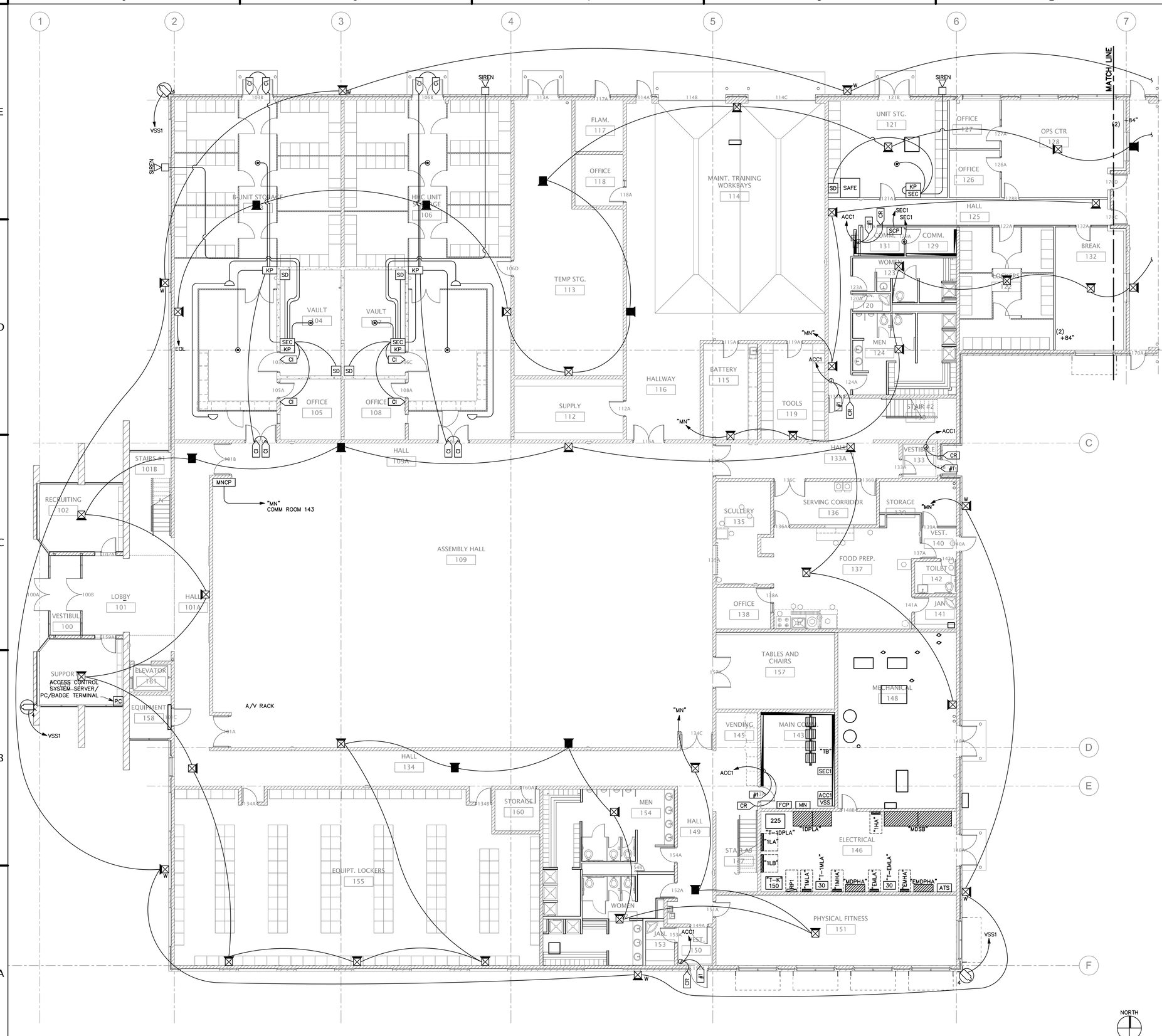

A6 SECURITY PLAN LEVEL ONE

SCALE: 1/8"=1'-0"

0 4' 8' 16'

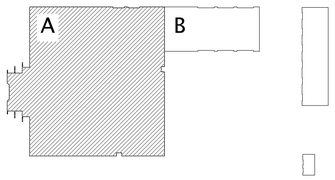

Key Plan

LEGEND

SYMBOL	DESCRIPTION
CI	DOOR CONTACT SWITCH
CR	CARD READER
#1	ACCESS DOOR (SEE SCHEDULE)
	MOTION DETECTORS
KP	KEYPAD
SCP	SECURITY CONTROL CONSOLE
SD	SEISMIC DETECTOR
	AREA NOTIFICATION (ANE)
	SIREN
	VIDEO SURVEILLANCE CAMERA (FIXED)
	VIDEO SURVEILLANCE CAMERA (P/T/Z)
ACC1	DOOR CONTROLLER
VSS	VIDEO SURVEILLANCE HEADEND
	MASS NOTIFICATION SPEAKER STROBE (AMBER COLOR)
	MASS NOTIFICATION SPEAKER ONLY
W	MASS NOTIFICATION SPEAKER STROBE; W=WET LOCATION

GSBS | ARCHITECTURE | LANDSCAPE ARCHITECTURE | PLANNING | INTERIOR DESIGN

375 West 200 South Suite 100
Salt Lake City
Utah 84101

Tel 801.521.8600
Fax 801.521.7913

GSBS-PC.COM

LICENSED PROFESSIONAL ENGINEER No. 181563 DAVID E. WESEMANN STATE OF UTAH 02/01/08

SPECTRUM ENGINEERS

175 S MAIN ST, STE 300
SALT LAKE CITY, UT 84111
P:801.328.5151 F:801.328.5155

No.	DATE	REVISION

NORTH SALT LAKE READINESS CENTER AND CIVIL SUPPORT TEAM

Salt Lake City, UT

SECURITY PLAN LEVEL ONE

PROJECT NO. 2005.003	EY101
DATE 02/01/2008	
DRAWN PSS	
CHECKED	BINDING ORDER 139

File Name: P:\2006\20060331\Drawings\Sheet\139-31EY-101.dwg Last Plotted: 2008/02/11 @ 4:36 PM By: pss

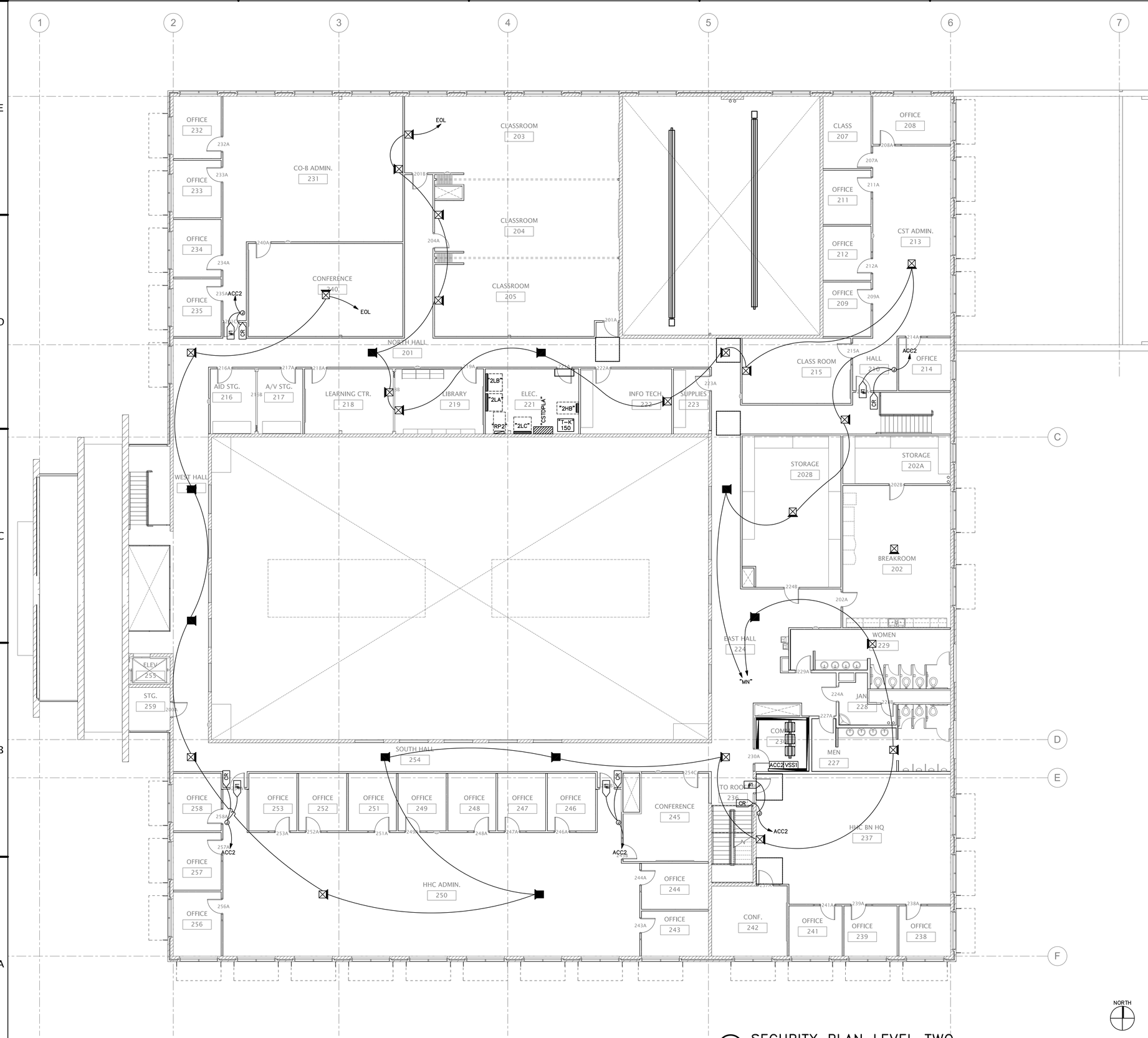

A6 SECURITY PLAN LEVEL TWO

SCALE: 1/8"=1'-0"

0 4' 8' 16'

GENERAL SHEET NOTES

1. PROVIDE ADDITIONAL LOOPS TO THE MASS NOTIFICATION SYSTEM AS REQUIRED BY THE MANUFACTURER'S PUBLISHED DATA.

LEGEND

SYMBOL	DESCRIPTION
CI	DOOR CONTACT SWITCH
CR	CARD READER
#1	ACCESS DOOR (SEE SCHEDULE)
	MOTION DETECTORS
KP	KEYPAD
SCP	SECURITY CONTROL CONSOLE
SEC	SECURITY PANEL
SD	SEISMIC DETECTOR
	AREA NOTIFICATION (ANE)
	SIREN
	VIDEO SURVEILLANCE CAMERA (FIXED)
	VIDEO SURVEILLANCE CAMERA (P/T/Z)
ACC	DOOR CONTROLLER
VSS	VIDEO SURVEILLANCE HEADEND

GSBS | ARCHITECTURE | LANDSCAPE ARCHITECTURE | PLANNING | INTERIOR DESIGN

375 West 200 South Suite 100
Salt Lake City
Utah 84101

Tel 801.521.8600
Fax 801.521.7913

GSBS-PC.COM

LICENSED PROFESSIONAL ENGINEER No. 181563 DAVID E. WESEMANN STATE OF UTAH 02/01/08

SPECTRUM ENGINEERS

175 S MAIN ST, STE 300
SALT LAKE CITY, UT 84111
P:801.328.5151 F:801.328.5155

No.	DATE	REVISION

NORTH SALT LAKE READINESS CENTER AND CIVIL SUPPORT TEAM

Salt Lake City, UT

SECURITY PLAN LEVEL TWO

PROJECT NO. 2005.003	EY102
DATE 02/01/2008	
DRAWN PSS	
CHECKED	BINDING ORDER 140

File Name: P:\2006\20060331\1Drawings\Sheet\140-31EY-102.dwg Last Plotted: 2008/02/11 @ 4:36 PM By: pss

CARD ACCESS DOOR TYPE SCHEDULE

DOOR TYPE #	SYMBOL	DESCRIPTION	PROTECTED SIDE ELEVATION	UNPROTECTED SIDE ELEVATION	LOCK TYPE(S)	INCLUDES:
TYPE 1:	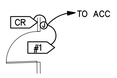	SINGLE DOOR, 1 CARD READER, (FREE EGRESS)	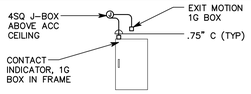 (NOTE: THIS IS A SEPARATE CONTACT INDICATOR FROM THE SECURITY CONTRACT INDICATORS SHOWN ON THE DRAWINGS)	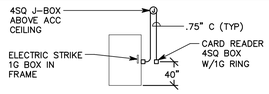	ELECTRIC STRIKE	* CARD READER * EXIT MOTION DETECTOR * CONTACT INDICATOR * LOCK PWR (LOCK BY DOOR HDWR)
	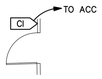	SECURITY DOOR	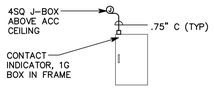	N/A		

SHEET KEYNOTES

1. PROVIDE ROUGH-IN ONLY FOR SECURITY CONTROL PANEL (SCP), DOOR CONTACTS, & MOTION DETECTORS. INTER-CONNECT CONDUITS WITH PULL STRINGS AS SHOWN.

LEGEND

SYMBOL	DESCRIPTION
CI	DOOR CONTACT SWITCH
CR	CARD READER
#1	ACCESS DOOR (SEE SCHEDULE)
	MOTION DETECTORS
KP	KEYPAD
SEC	SECURITY PANEL
SD	SEISMIC DETECTOR
	AREA NOTIFICATION (ANE)
	SIREN
	VIDEO SURVEILLANCE CAMERA (FIXED)
	VIDEO SURVEILLANCE CAMERA (P/T/Z)
ACC	DOOR CONTROLLER
VSS	VIDEO SURVEILLANCE HEADEND
	MASS NOTIFICATION SPEAKER STROBE (AMBER COLOR)
	MASS NOTIFICATION SPEAKER ONLY
W	MASS NOTIFICATION SPEAKER STROBE; W=WET LOCATION

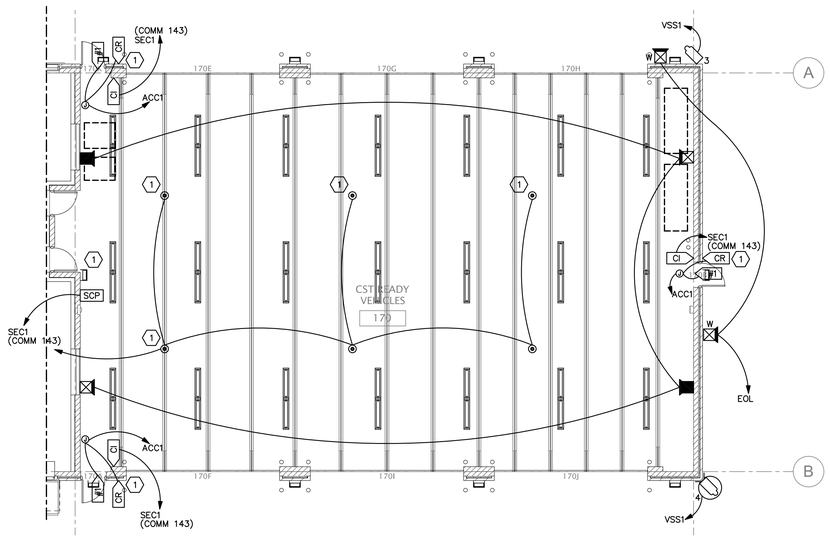

NORTH

A3 SECURITY PLAN LEVEL ONE

SCALE: 1/8"=1'-0"

0 4' 8' 16'

GSBS | ARCHITECTURE | LANDSCAPE ARCHITECTURE | PLANNING | INTERIOR DESIGN

375 West 200 South Suite 100
Salt Lake City
Utah 84101

Tel 801.521.8600
Fax 801.521.7913

GSBS-PC.COM

LICENSED PROFESSIONAL ENGINEER No. 181563 DAVID E. WESEMANN STATE OF UTAH 02/01/08

SPECTRUM ENGINEERS

175 S MAIN ST, STE 300
SALT LAKE CITY, UT 84111
P:801.328.5151 F:801.328.5155

No.	DATE	REVISION

NORTH SALT LAKE READINESS CENTER AND CIVIL SUPPORT TEAM

Salt Lake City, UT

LEVEL ONE, CST READY VEHICLES SECURITY PLAN

PROJECT NO. 2005.003	EY103
DATE 02/01/2008	
DRAWN PSS	
CHECKED	BINDING ORDER 141

File Name: P:\2006\20060331\1Drawings\Sheet\141-31EY-103.dwg Last Plotted: 2008/02/11 @ 4:36 PM By: pss

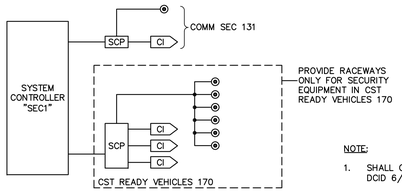

NOTE:

1. SHALL COMPLY WITH ALL DCID 6/9 REQUIREMENTS.

E5 COMM SEC SECURITY SYSTEM DIAGRAM

NTS

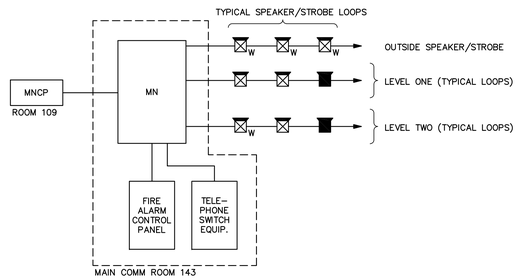

NOTES:

1. PROVIDE SYSTEM EQUIPMENT MODULES AND/OR OPTIONS TO DIVIDE SPEAKER/STROBE LOOPS INTO INDIVIDUAL ZONES.

2. SPEAKER/STROBE LOOPS SHALL BE SUPERVISED.

3. MASS NOTIFICATION SYSTEM SHALL INTERFACE WITH FIRE ALARM SYSTEM TO PROVIDE THE FOLLOWING FUNCTIONS:

a. PROVIDE INPUT CLOSURE FOR ACTIVATION OF THE MASS NOTIFICATION SYSTEM IN THE EVENT OF A FIRE ALARM.

b. PROVIDE THE MEANS TO "SILENCE" THE FIRE ALARM HORN SIGNAL DURING THE TIME VOICE ANNOUNCEMENTS ARE MADE THROUGH THE MASS NOTIFICATION SYSTEM. RESTORE HORN SIGNAL WHEN VOICE MESSAGES HAVE BEEN COMPLETED.

C5 MASS NOTIFICATION SYSTEM DIAGRAM

NTS

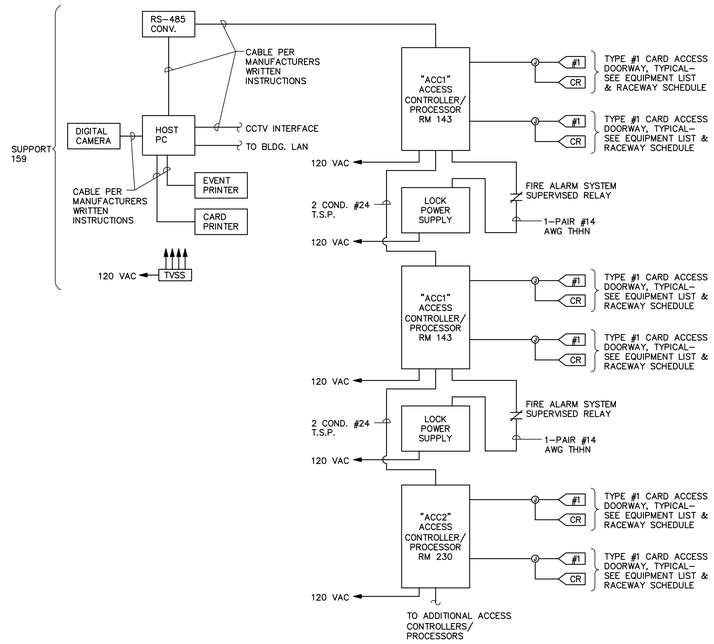

NOTES:

1. ACCESS CONTROL SYSTEM BASED UPON TWO CARD READERS PER ACCESS CONTROLLER/PROCESSOR. ALTERNATE CONFIGURATIONS ACCEPTABLE PROVIDED CONTRACTOR ALLOWS FOR ANY INCREASED WIRING OR EQUIPMENT AND PROVIDES SUBMITTAL DRAWINGS SHOWING NEW CONFIGURATION.

2. ACCESS CONTROLLER "ACC" INDICATED SHALL INCLUDE ANY ISOLATION MODULES, BUFFER MODULES, EXTERNAL POWER SUPPLIES, INPUT/OUTPUT MODULES, OR FORMAT CONVERTER MODULES (NOT SHOWN) REQUIRED TO SUPPORT CARD READER OR KEYPAD TYPES INDICATED, FOR COMPLETE AND FUNCTIONING CARD READER AND DOOR CONTROL.

3. PROVIDE SEPARATE WIRE PAIRS FOR REQUEST TO EXIT AND DOOR CONTACT INDICATOR, FROM ACCESS DOOR TO ACCESS CONTROLLER "ACC" PANEL. SINGLE PAIR, FROM ACCESS DOOR TO CONTROLLER PANEL, FOR REQUEST TO EXIT AND DOOR CONTACT INDICATOR, NOT ACCEPTABLE.

4. REQUEST TO EXIT AND DOOR CONTACT INDICATOR CIRCUITS SHALL BE SUPERVISED FOR OPEN CIRCUIT OR SHORT CIRCUIT FAULTS BETWEEN THE DEVICE CONTACTS AND ACCESS CONTROLLER.

C3 CARD ACCESS SYSTEM DIAGRAM

NTS

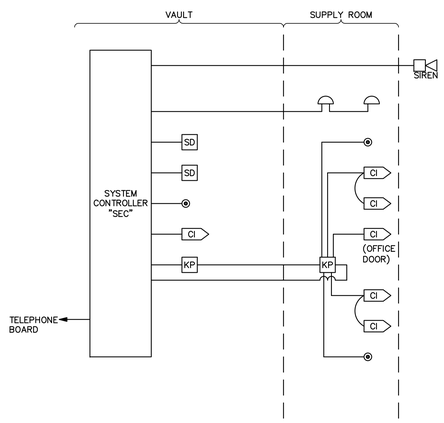

A5 STORAGE/VAULT SECURITY SYSTEM DIAGRAM

NTS

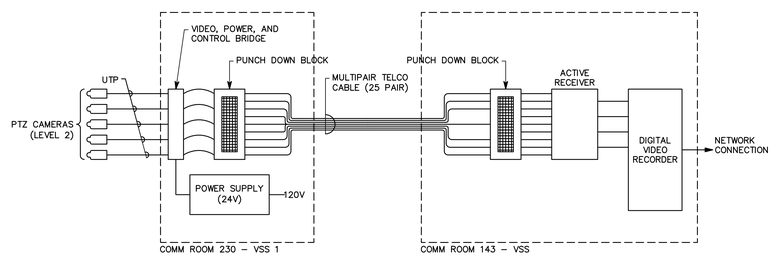

A3 VIDEO SURVEILLANCE SYSTEM (CCTV) SINGLE LINE DIAGRAM

NTS

GSBS | ARCHITECTURE | LANDSCAPE ARCHITECTURE | PLANNING | INTERIOR DESIGN

375 West 200 South Suite 100
Salt Lake City
Utah 84101

Tel 801.521.8600
Fax 801.521.7913

GSBS-PC.COM

LICENSED PROFESSIONAL ENGINEER No. 181563 DAVID E. WESEMANN STATE OF UTAH 02/01/08

SPECTRUM ENGINEERS
175 S MAIN ST, STE 300
SALT LAKE CITY, UT 84111
P:801.328.5151 F:801.328.5155

No.	DATE	REVISION

NORTH SALT LAKE READINESS CENTER AND CIVIL SUPPORT TEAM

Salt Lake City, UT

SECURITY RISER DIAGRAMS & DETAILS

PROJECT NO. 2005.003	EY601
DATE 02/01/2008	
DRAWN PSS	
CHECKED	BINDING ORDER 142

File Name: P:\2006\20060331\1Drawings\Sheet\142-31EY-601.dwg Last Plotted: 2008/02/11 @ 4:35 PM By: pss

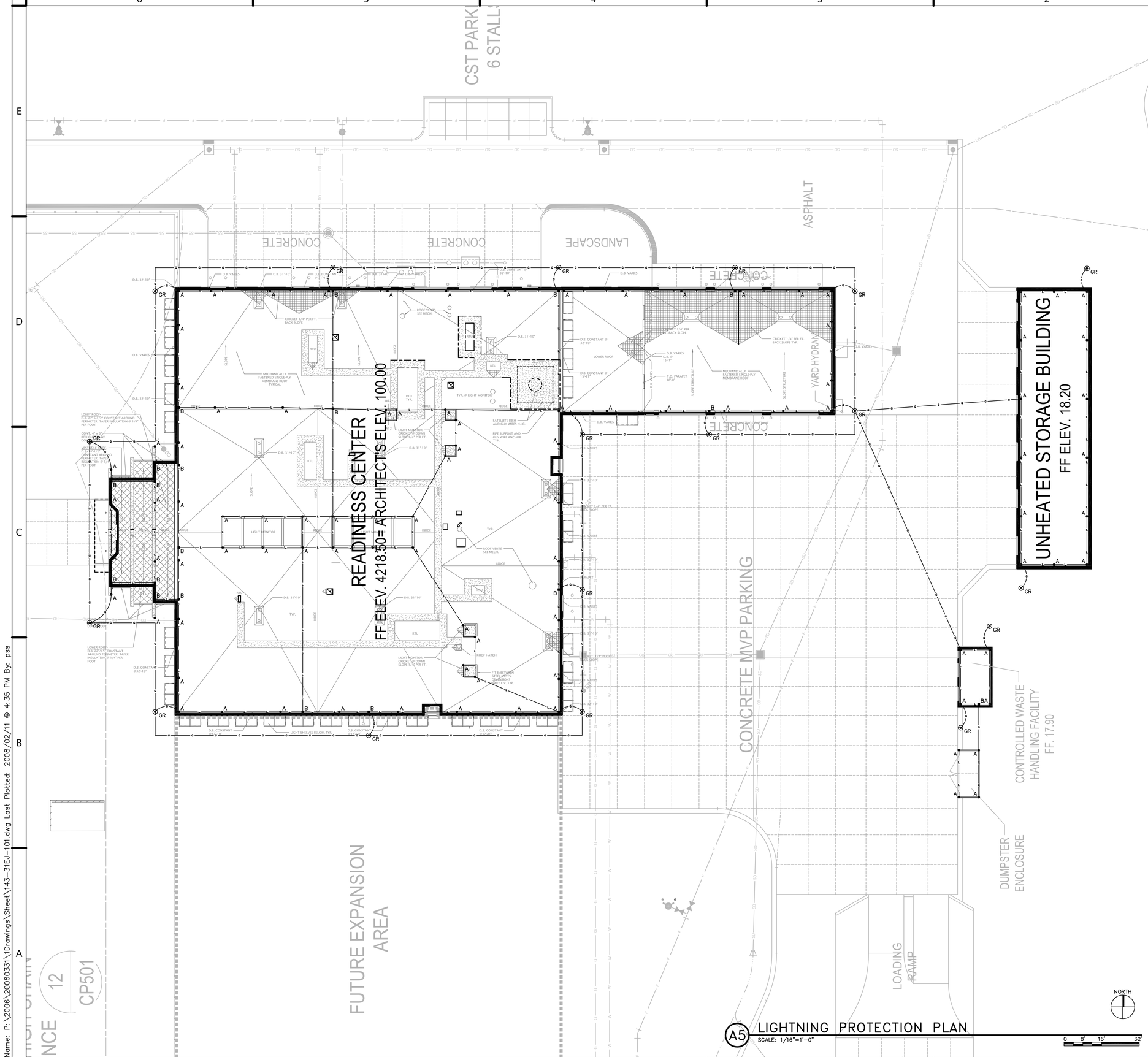

A5 LIGHTNING PROTECTION PLAN

SCALE: 1/16"=1'-0"

0 8' 16' 32'

GSBS | ARCHITECTURE | LANDSCAPE ARCHITECTURE | PLANNING | INTERIOR DESIGN

375 West 200 South Suite 100
Salt Lake City
Utah 84101

Tel 801.521.8600
Fax 801.521.7913

GSBS-PC.COM

LICENSED PROFESSIONAL ENGINEER
No. 181563
DAVID E. WESEMANN
STATE OF UTAH
02/01/08

SPECTRUM ENGINEERS
175 S MAIN ST, STE 300
SALT LAKE CITY, UT 84111
P:801.328.5151 F:801.328.5155

No.	DATE	REVISION

NORTH SALT LAKE READINESS CENTER AND CIVIL SUPPORT TEAM

Salt Lake City, UT

LIGHTNING PROTECTION PLAN

PROJECT NO. 2005.003	EJ101
DATE 02/01/2008	
DRAWN PSS	
CHECKED	BINDING ORDER 143

File Name: P:\2006\20060331\1Drawings\Sheet\143-31EJ-101.dwg Last Plotted: 2008/02/11 @ 4:35 PM By: pss

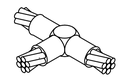

E3 TAC – CADWELD MOLD
NTS

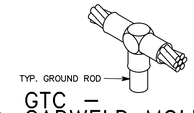

E2 GTC – CADWELD MOLD
NTS

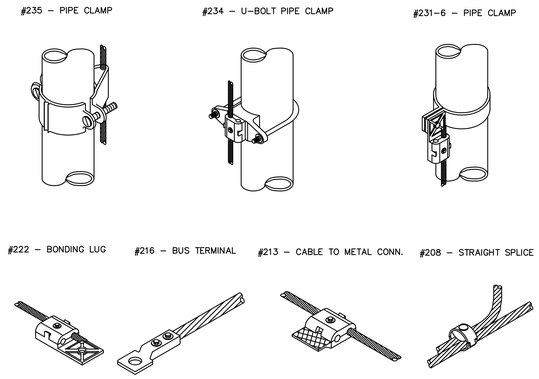

D3 MISCELLANEOUS BONDS & CLAMPS
NTS

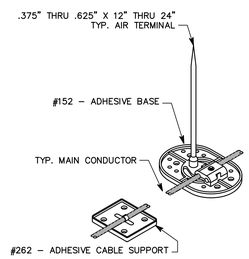

C3 152 – ADHESIVE BASE
NTS

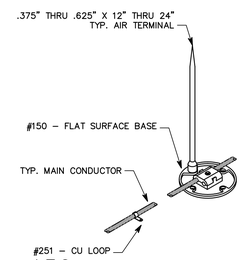

C2 150 – FLAT SURFACE BASE
NTS

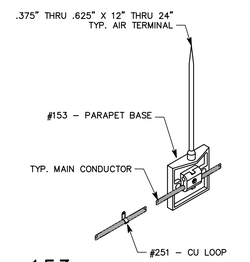

C1 153 – PARAPET BASE
NTS

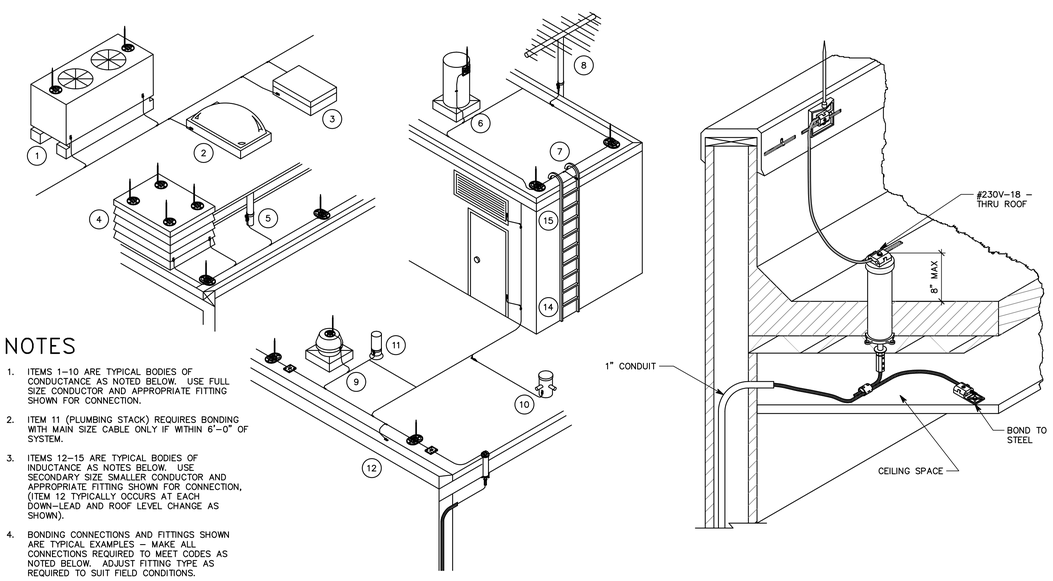

NOTES

1. ITEMS 1–10 ARE TYPICAL BODIES OF CONDUCTANCE AS NOTED BELOW. USE FULL SIZE CONDUCTOR AND APPROPRIATE FITTING SHOWN FOR CONNECTION.
2. ITEM 11 (PLUMBING STACK) REQUIRES BONDING WITH MAIN SIZE CABLE ONLY IF WITHIN 6'–0" OF SYSTEM.
3. ITEMS 12–15 ARE TYPICAL BODIES OF INDUCTANCE AS NOTES BELOW. USE SECONDARY SIZE SMALLER CONDUCTOR AND APPROPRIATE FITTING SHOWN FOR CONNECTION, (ITEM 12 TYPICALLY OCCURS AT EACH DOWN–LEAD AND ROOF LEVEL CHANGE AS SHOWN).
4. BONDING CONNECTIONS AND FITTINGS SHOWN ARE TYPICAL EXAMPLES – MAKE ALL CONNECTIONS REQUIRED TO MEET CODES AS NOTED BELOW. ADJUST FITTING TYPE AS REQUIRED TO SUIT FIELD CONDITIONS.

A3 BONDING DETAIL
NTS

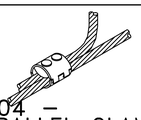

A4 #204 – PARALLEL CLAMP
NTS

GENERAL AND INSTALLATION NOTES

1. LOCATE AIR TERMINALS AS SHOWN. TAKE CARE TO INSURE THAT ALL POINTS ARE WITHIN 2'–0" OF OUTSIDE BUILDING EDGE, OUTSIDE CORNERS, AND RIDGE ENDS, AND THAT MAXIMUM SPACING DOES NOT EXCEED 20'–0", AND THAT MINIMUM PROJECTION ABOVE OBJECT PROTECTED IS 10", (POINTS PROJECTING 24" MAY BE SPACED @ 25' MAX).
2. MAINTAIN HORIZONTAL OR DOWNWARD COURSING OF MAIN CONDUCTOR AND INSURE THAT ALL BENDS HAVE AT LEAST AND 8" RADIUS AND DO NOT EXCEED 90 DEGREES.
3. ATTACH ALL EXPOSED ROOF, DOWNLEAD AND BONDING CABLES AT 3"–0" ON CENTER MAXIMUM. VERIFY COMPATIBILITY OF ADHESIVE ON MEMBRANE ROOF APPLICATION PRIOR TO INSTALLATION.
4. GROUND ELECTRODES SHALL BE INSTALLED AS SHOWN BUT IN NO INSTANCE SHALL THEY BE LESS THAN 1'–0" BELOW GRADE AND 2'–0" FROM FOUNDATION WALL. DRIVEN RODS SHALL PENETRATE EARTH AT LEAST 10'–0".
5. BOND TO WATER SERVICE AND OTHER PIPING SYSTEMS AS SHOWN AND AS REQUIRED BY CODES.
6. INTERCONNECT LIGHTNING PROTECTION GROUND TO ELECTRIC, TELEPHONE, AND OTHER BUILDING GROUND SYSTEMS AS SHOWN OR AS REQUIRED BY CODE.
7. SYSTEM SHALL BE INSTALLED AS SHOWN TO INSURE PROPER CODE COMPLIANCE AND SYSTEM CERTIFICATION. ANY MAJOR VARIANCE SHALL ENTAIL RESUBMITTAL AND NEW APPROVAL.
8. "AS BUILT" DRAWINGS SHALL BE SUBMITTED IN ACCORDANCE WITH CERTIFICATION PROCEDURES.
9. ALL MATERIALS TO BE UNDERWRITER'S LABORATORIES APPROVED WITH "A" LABELS ON CONDUCTORS @ 10'–0" INTERVALS AND "B" LABELS ON ALL AIR TERMINALS.
10. COMPLETED INSTALLATION AS SHOWN SHALL BEAR U.L. MASTER LABEL "C" TO BE SECURED BY SYSTEM INSTALLER PER UL96A.
11. ALL MATERIALS SHOWN AND INTENDED FOR USE ARE TO BE MANUFACTURED BY VFC LIGHTNING PROTECTION, INC., 400 W 1598 N UNIT B, LAYTON UTAH 84041.
12. INSTALLATION SHALL COMPLY IN ALL PRESPECTS TO L.P.I CODE 175. INSTALLATION SHALL BE MADE OR UNDER THE SUPERVISION OF AN L.P.I CERTIFIED MASTER INSTALLER.

GSBS | ARCHITECTURE | LANDSCAPE ARCHITECTURE | PLANNING | INTERIOR DESIGN
375 West 200 South Suite 100
Salt Lake City
Utah 84101
Tel 801.521.8600
Fax 801.521.7913
GSBS-PC.COM

LICENSED PROFESSIONAL ENGINEER
No. 181563
DAVID E. WESEMANN
STATE OF UTAH
02/01/08

SPECTRUM ENGINEERS
175 S MAIN ST, STE 300
SALT LAKE CITY, UT 84111
P:801.328.5151 F:801.328.5155

No.	DATE	REVISION

NORTH SALT LAKE READINESS CENTER AND CIVIL SUPPORT TEAM

Salt Lake City, UT

LIGHTNING PROTECTION DETAILS

PROJECT NO. 2005.003	EJ501
DATE 02/01/2008	
DRAWN PSS	
CHECKED	BINDING ORDER 144

File Name: P:\2006\20060331\1Drawings\Sheet\144–31EJ–501.dwg Last Plotted: 2008/02/11 @ 4:35 PM By: pss

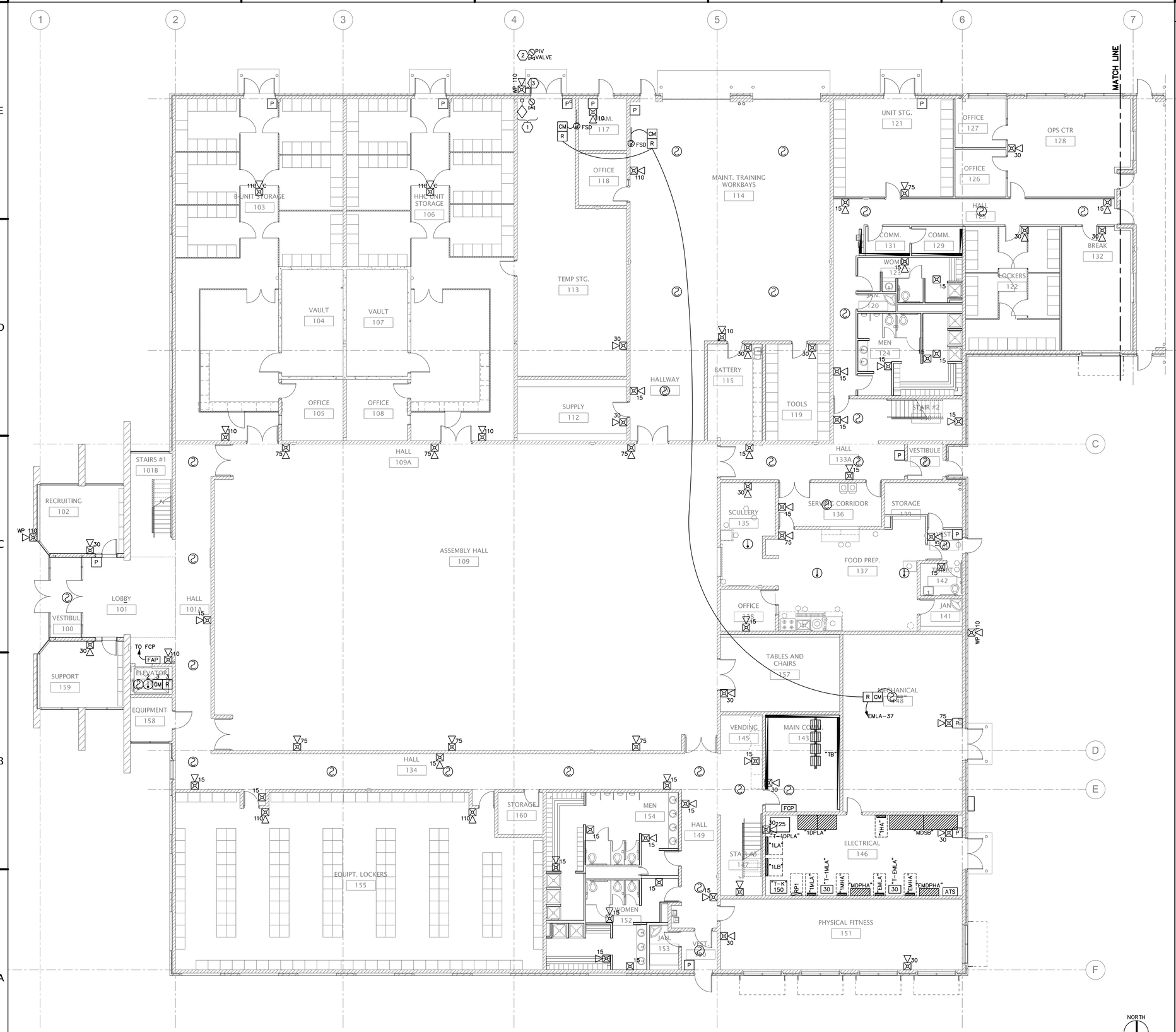

A6 FIRE ALARM PLAN LEVEL ONE

SCALE: 1/8"=1'-0"

0 4' 8' 16'

SHEET KEYNOTES

1. MONITOR FLOW AND TAMPER SWITCHES. COORDINATE EXACT QUAINTLY AND LOCATIONS WITH FIRE SPRINKLER INSTALLER.
2. MONITOR PIV VALVE. COORDINATE EXACT LOCATION WITH SITE UTILITY PLAN CU101.
3. PROVIDE ELECTRONIC BELL AND HORN/STROBE DIRECTLY ABOVE THE FIRE DEPARTMENT CONNECTION (F.D.C.) POINT.

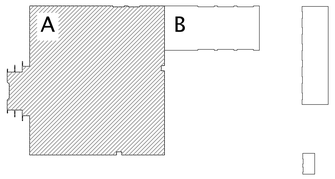

Key Plan

GSBS | ARCHITECTURE | LANDSCAPE ARCHITECTURE | PLANNING | INTERIOR DESIGN

375 West 200 South Suite 100
Salt Lake City
Utah 84101

Tel 801.521.8600
Fax 801.521.7913

GSBS-PC.COM

LICENSED PROFESSIONAL ENGINEER No. 181563 DAVID E. WESEMANN STATE OF UTAH 02/01/08

SPECTRUM ENGINEERS

175 S MAIN ST, STE 300
SALT LAKE CITY, UT 84111
P:801.328.5151 F:801.328.5155

No.	DATE	REVISION

NORTH SALT LAKE READINESS CENTER AND CIVIL SUPPORT TEAM

Salt Lake City, UT

FIRE ALARM PLAN LEVEL ONE

PROJECT NO. 2005.003	FA101
DATE 02/01/2008	
DRAWN PSS	
CHECKED	BINDING ORDER 145

File Name: P:\2006\20060331\Drawings\Sheet\145-31FA-101.dwg Last Plotted: 2008/02/11 @ 4:35 PM By: pss

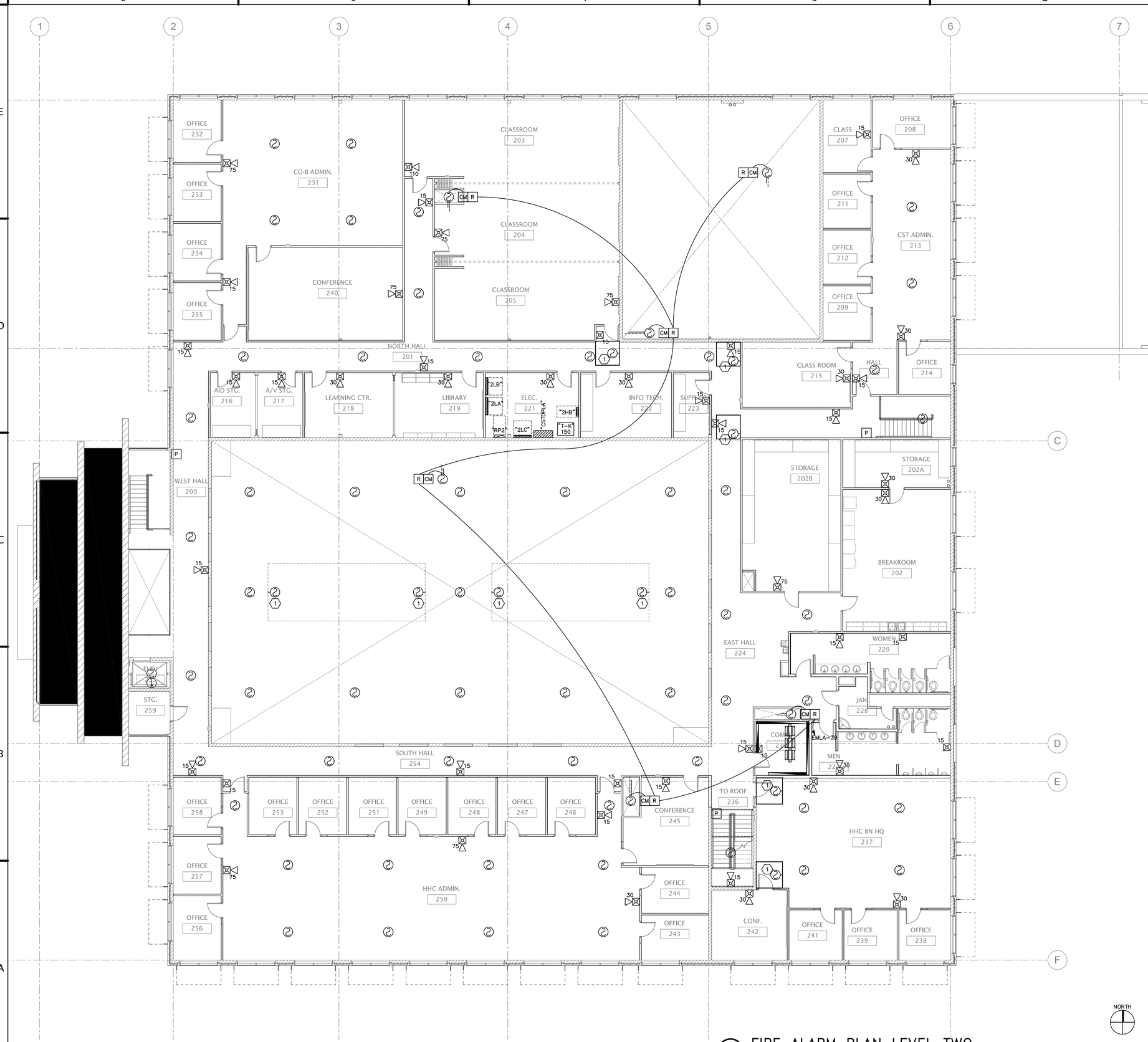

A6 FIRE ALARM PLAN LEVEL TWO

SCALE: 1/8"=1'-0"

SHEET KEYNOTES

1. WALL MOUNT SMOKE DETECTOR WITHIN 2-FEET OF THE TOP OF THE LIGHT WELL.

GSBS | ARCHITECTURE | LANDSCAPE ARCHITECTURE | PLANNING | INTERIOR DESIGN

375 West 200 South Suite 100
Salt Lake City
Utah 84101

Tel 801.521.8600
Fax 801.521.7913

GSBS-PC.COM

LICENSED PROFESSIONAL ENGINEER No. 181563 DAVID E. WESEMANN STATE OF UTAH 02/01/08

SPECTRUM ENGINEERS

175 S MAIN ST, STE 300
SALT LAKE CITY, UT 84111
P:801.328.5151 F:801.328.5155

No.	DATE	REVISION

NORTH SALT LAKE READINESS CENTER AND CIVIL SUPPORT TEAM

Salt Lake City, UT

FIRE ALARM PLAN LEVEL TWO

PROJECT NO. 2005.003	FA102
DATE 02/01/2008	
DRAWN PSS	
CHECKED	BINDING ORDER 146

File Name: P:\2006\20060331\1Drawings\Sheet\146-31FA-102.dwg Last Plotted: 2008/02/11 @ 4:35 PM By: pss

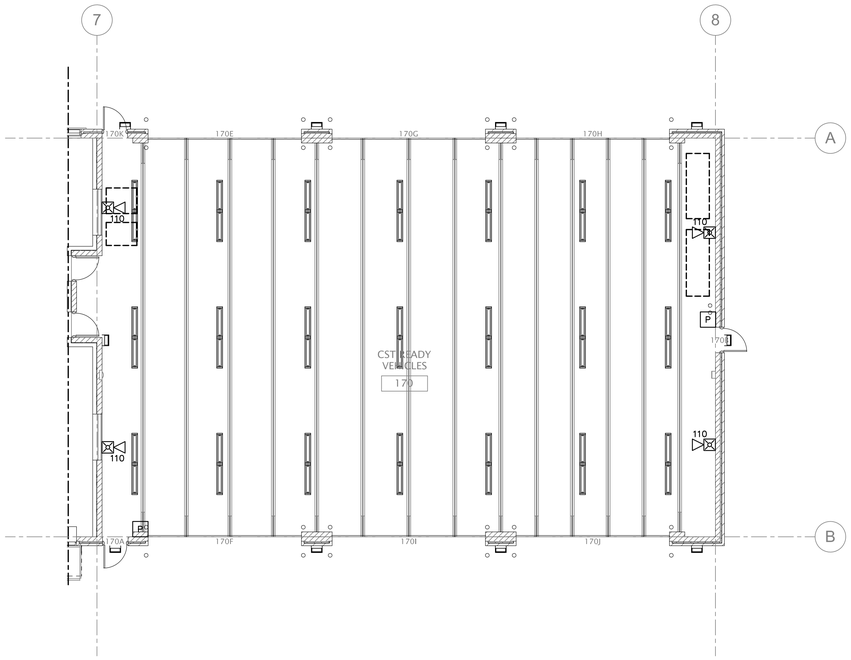

NORTH

C6 FIRE ALARM PLAN LEVEL ONE

SCALE: 1/8"=1'-0"

0 4' 8' 16'

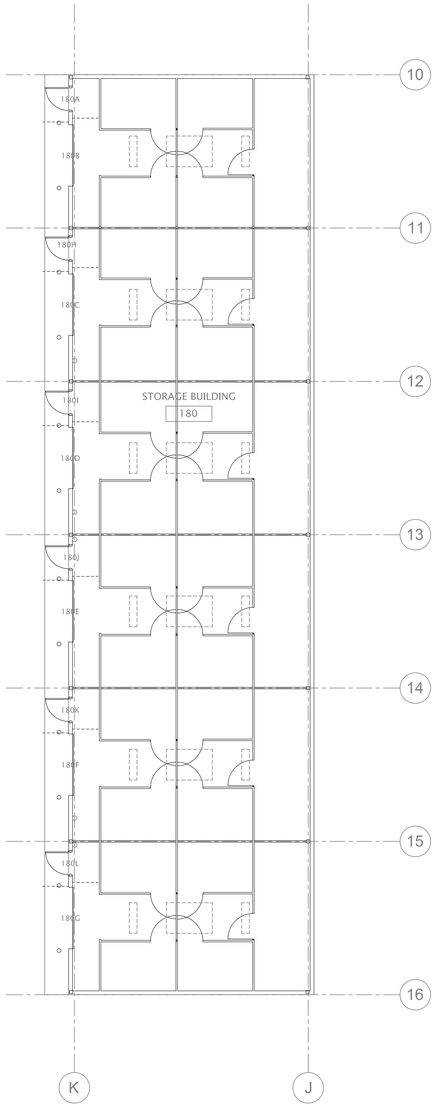

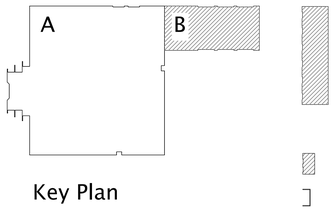

Key Plan

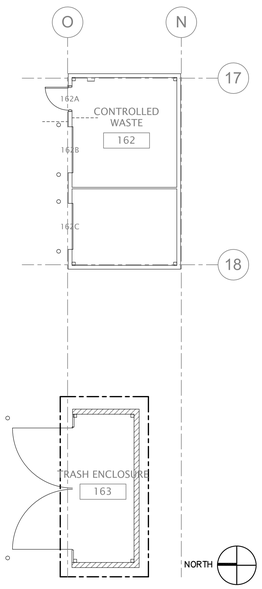

NORTH

A6 UNHEATED BUILDING FIRE ALARM PLAN

SCALE: 1/8"=1'-0"

0 4' 8' 16'

NORTH

A1 CONTROLLED WASTE FIRE ALARM PLAN

SCALE: 1/8"=1'-0"

0 4' 8' 16'

GSBS | ARCHITECTURE | LANDSCAPE ARCHITECTURE | PLANNING | INTERIOR DESIGN

375 West 200 South Suite 100
Salt Lake City
Utah 84101

Tel 801.521.8600
Fax 801.521.7913

GSBS-PC.COM

LICENSED PROFESSIONAL ENGINEER
No. 181563
DAVID E. WESEMANN
STATE OF UTAH
02/01/08

SPECTRUM ENGINEERS

175 S MAIN ST, STE 300
SALT LAKE CITY, UT 84111
P:801.328.5151 F:801.328.5155

No.	DATE	REVISION

NORTH SALT LAKE READINESS CENTER AND CIVIL SUPPORT TEAM

Salt Lake City, UT

LEVEL ONE, STORAGE/ UNHEATED FIRE ALARM PLANS

PROJECT NO. 2005.003	FA103
DATE 02/01/2008	
DRAWN PSS	
CHECKED	BINDING ORDER 147

File Name: P:\2006\20060331\1Drawings\Sheet\147-31FA-103.dwg Last Plotted: 2008/02/11 @ 4:35 PM By: pss

WIRING SCHEDULE

FUNCTION	< 500'	< 1000'	1000'–3000'	> 3000'
ADDRESSABLE LOOP	#18 TSP	#18 TSP	#16 TSP	#14 TSP
POWER LOOP	#14 THWN	#14 THWN	#12 THWN	#10 THWN
SPARE LOOP	#14 THWN	#14 THWN	#12 THWN	#10 THWN
STROBE HORNS	#14 THWN	#14 THWN	#12 THWN	#10 THWN
MAGNETIC DOOR HOLDER	#12 THWN	#10 THWN		
SPEAKERS	#16 TSP	#16 TSP	#14 TSP	#14 TSP

NOTIFICATION SCHEDULE

SYMBOL	STROBE SIZE	COVERAGE	AVERAGE CURRENT	MAXIMUM PER CIRCUIT ALONE
15	15 CD	20'x20'	.085A	17
30	30 CD	30'x30'	.135A	11
75	75 CD	40'x40'	.200A	7
110	110 CD	50'x50'	.225A	6

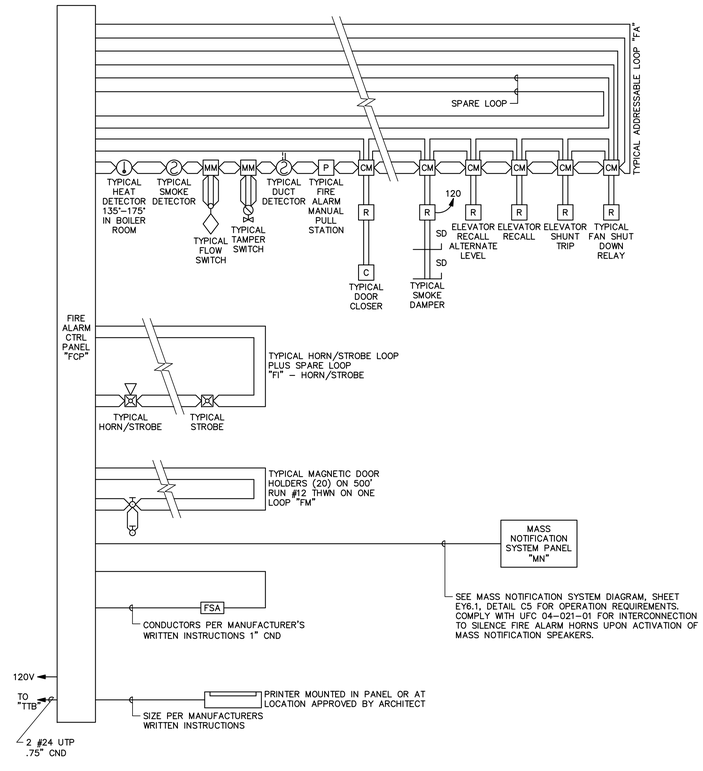

A4 FIRE ALARM RISER
NTS

GENERAL SHEET NOTES

1. PLANS ARE BASED UPON 99 MONITOR AND CONTROL DEVICES PER ADDRESSABLE LOOP. OTHER CONFIGURATIONS ARE ACCEPTABLE SUBJECT TO CONTRACTOR ALLOWING FOR INCREASED WIRING REQUIREMENTS AND SUBMITTAL DRAWINGS SHOWING NEW WIRING CONFIGURATION. MAXIMUM INITIAL DEVICES PER LOOP SHALL NOT EXCEED 75% MAXIMUM ALLOWABLE.
2. PLANS ARE BASED UPON THE WIRING SCHEDULE SHOWN. WHERE MANUFACTURER'S REQUIREMENTS EXCEED REQUIREMENTS SHOWN, INCLUDE ADDITIONAL ASSOCIATED COSTS AND SUBMITTAL DRAWINGS INDICATING NEW WIRING CONFIGURATION.
3. PLANS ARE BASED UPON 2 AMPS AT 24 VDC, NOT TO EXCEED 75% (1.50 AMPS AVAILABLE), POWER SUPPLY CAPACITY PER NOTIFICATION CIRCUIT. NOTIFICATION DEVICE LOADS ARE BASED UPON NOTIFICATION DEVICE SCHEDULE SHOWN. INCLUDE ADDITIONAL ASSOCIATED COSTS FOR INCREASED WIRING AND POWER SUPPLY CAPACITY IF LOADS OF ACTUAL DEVICES PROVIDED EXCEED CIRCUIT CAPACITY, OR IF LOAD OUTPUT OF ACTUAL POWER SUPPLIES PROVIDED IS SIZED DIFFERENTLY. PROVIDE SUBMITTAL DRAWINGS SHOWING NEW WIRING CONFIGURATION.
4. FLOW AND TAMPER CONFIGURATION BASED UPON FIRE SPRINKLER DESIGN CONCEPT. FIELD VERIFY ACTUAL REQUIREMENTS. INCLUDE ANY ADDITIONAL MONITOR MODULES REQUIRED BY ACTUAL DESIGN REQUIREMENTS.
5. HEAT DETECTORS WHEN INSTALLED IN ELEVATOR SHAFTS OR MECHANICAL ROOMS FOR ELEVATOR SHUT DOWN SHALL HAVE HEAT DETECTOR WITH LOWER RESPONSE TIME INDEX THAN SPRINKLER HEAD.
6. PROVIDE POWER SUPPLY CAPACITY AS REQUIRED FOR DOOR HOLD OPENS SHOWN.
7. BATTERY CAPACITY TO BE ADEQUATE TO OPERATE 15 MINUTES AFTER 24 HOURS PLUS 25% SPARE CAPACITY.
8. VFD REQUIRES TWO RELAYS, ONE FOR SMOKE CONTROL, ONE SPARE.
9. RUN SPARE LOOPS IN SAME CONDUIT. DO NOT EXCEED 40% AREA FILL OF CONDUITS.
10. PROVIDE DUCT DETECTORS FOR SUPPLY AND RETURN AIR SYSTEMS OVER 2000 CFM. INSTALL DUCT DETECTORS PER NFPA 72 REQUIREMENTS AND PROVIDE ADDITIONAL DUCT DETECTORS DEPENDING UPON FINAL DUCT ARRANGEMENT.
11. PROVIDE DUCT DETECTOR AT EACH FLOOR, PRIOR TO CONNECTION TO A COMMON RETURN AND PRIOR TO RECIRCULATING OR FRESH AIR INLET IN AIR RETURN SYSTEMS OVER 15,000 CFM CAPACITY AND SERVING MORE THAN ONE STORY.
12. PROVIDE MANUAL PULL STATIONS IN BOILER ROOMS AND KITCHENS.
13. PROVIDE ONE YEAR OFF SITE MONITORING INCLUDING ALL INTERFACE DEVICES AND MONITORING CHARGES. COORDINATE WITH BUILDING OWNER'S OFF SITE MONITORING COMPANY.
14. LOCATE SMOKE DETECTORS MINIMUM 3' FROM AIR SUPPLY AND RETURN LOUVERS.
15. PROVIDE SYNCHRONIZED STROBES THROUGHOUT FACILITY. PROVIDE SYNCHRONIZATION MODULES PER MANUFACTURER'S REQUIREMENTS. INCLUDE ADDITIONAL WIRING, IF REQUIRED.
16. INITIATING AND INDICATING LOOPS SHALL NOT SERVE AN AREA OF GREATER THAN 22,500 SQUARE FEET. PROVIDE ADDITIONAL LOOPS FOR AREAS LARGER THAN THIS.
17. ALL OUTPUT DEVICES ARE DESIGNED ON SYSTEMS WITH 2 AMP POWER SUPPLY.
18. HORN/STROBE BASED ON 120 MILLIAMPS, DOOR HOLDERS BASED ON 70 MILLIAMPS.
19. INSTALL DUCT DETECTORS PER NFPA 72 REQUIREMENTS AND PROVIDE ADDITIONAL DUCT DETECTORS DEPENDING UPON FINAL DUCT ARRANGEMENT.

GSBS | ARCHITECTURE | LANDSCAPE ARCHITECTURE | PLANNING | INTERIOR DESIGN
375 West 200 South Suite 100
Salt Lake City
Utah 84101
Tel 801.521.8600
Fax 801.521.7913
GSBS-PC.COM

LICENSED PROFESSIONAL ENGINEER No. 181563 DAVID E. WESEMANN STATE OF UTAH 02/01/08

SPECTRUM ENGINEERS
175 S MAIN ST, STE 300
SALT LAKE CITY, UT 84111
P:801.328.5151 F:801.328.5155

No.	DATE	REVISION

NORTH SALT LAKE READINESS CENTER AND CIVIL SUPPORT TEAM

Salt Lake City, UT

FIRE ALARM RISER DIAGRAM

PROJECT NO. 2005.003	FA601
DATE 02/01/2008	
DRAWN PSS	
CHECKED	BINDING ORDER 148

File Name: P:\2006\20060331\1Drawings\Sheet\148-31FA-601.dwg Last Plotted: 2008/02/11 @ 4:34 PM By: pss