ajc architects

703 east 1700 south
salt lake city, utah 84105
ph: 801.466.8818
fx: 801.466.4411
ajc@ajcarchitects.com

0502

APRIL 18, 2005
CONSTRUCTION
DOCUMENTS

ATE CENTER UTAH STATE PRISON

DRAPER, UTAH

OWNER

UTAH STATE DIVISION OF
FACILITIES CONSTRUCTION AND MANAGEMENT

State Office Building Room 4110
Salt Lake City, Utah 84114
PH#: (801) 537-9116
FAX: (801) 538-3267
CONTACT: Vic Middleton; Project Manager

CIVIL

Mcneil Engineering
6895 South 900 East
Midvale Utah, 84047
PH#: (801) 255-7700
FAX: (801) 255-8071
CONTACT: Ken Petty

LANDSCAPE

STRUCTURAL

Bsumek Mu and Associates P.C.
345 South 400 East
Salt Lake City, Utah 84111
PH#: (801) 575-8223
FAX: (801) 532-3778
CONTACT: Reinhardt Bsumek

MECHANICAL
PLUMBING

WHW Engineering Inc.
1354 East 3300 South
Salt Lake City, Utah 84106
PH#: (801) 466-4021
FAX: (801) 466-8536
CONTACT: Winn Packer

ELECTRICAL

Thomas and Kolkman Engineering assoc.
46 West 1700 South
Salt Lake City, Utah 84115
PH#: (801) 484-8161
FAX: (801) 484-3538
CONTACT: Bill Grandy

VICINITY MAP

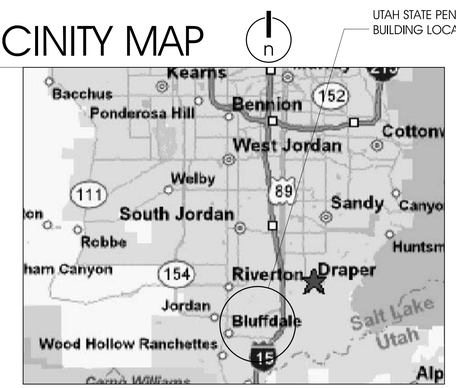

DRAWING INDEX:

COVER SHEET	GI001	1
GENERAL NOTES LEGEND AND ABBREVIATIONS	CG101	2
HORIZONTAL CONTROL PLAN	C101	3
GRADING PLAN	C201	4
UTILITY PLAN	C401	5
MISCELLANEOUS SITE DETAILS	C501	6
STRUCTURAL GENERAL NOTES	SE001	7
OVERALL FOOTING AND FOUNDATION PLAN	SE101	8
FOOTING AND FOUNDATION PLAN AUTO SHOP	SE102	9
FOOTING AND FOUNDATION PLAN WOOD SHOP	SE103	10
STRUCTURAL DETAILS	SE501	11
GENERAL NOTES, SYMBOLS AND LEGENDS AND ABBREVIATIONS	GI002	12
DEMOLITION SITE PLAN	AS101	13
CONSTRUCTION SITE PLAN	AS102	14
OVERALL FLOOR PLAN	AE101	15
FLOOR PLAN AUTO SHOP	AE102	16
FLOOR PLAN WOOD SHOP	AE103	17
OVERALL REFLECTED CEILING PLAN / ROOF PLAN	AE104	18
EQUIPMENT PLAN	AE105	19
EXTERIOR ELEVATIONS	AE201	20
BUILDING SECTIONS	AE301	21
WALL SECTIONS	AE302	22
OFFICE AREA PLANS, INTERIOR ELEVATIONS	AE401	23
DETAILS	AE501	24
DETAILS	AE502	25
DOOR / FINISH SCHEDULES	AE601	26
MECHANICAL LEGEND AND GENERAL NOTES	MG101	27
MECHANICAL FLOOR PLAN	ME101	28
MECHANICAL SCHEDULES AND DETAILS	ME501	29
MECHANICAL DETAILS	ME502	30
MECHANICAL DETAILS	ME503	31
PLUMBING NOTES AND LEGENDS	PG101	32
PLUMBING FLOOR PLAN	PE101	33
PLUMBING DETAILS	PE501	34
PLUMBING SCHEDULES AND DETAILS	PE601	35
ELECTRICAL SITE PLAN	ES101	36
LIGHTING PLAN - AUTO SHOP	EL101	37
LIGHTING PLAN - WOOD SHOP	EL102	38
POWER PLAN - AUTO SHOP	EP101	39
POWER PLAN - WOOD SHOP	EP102	40
ENLARGED PLAN, RISERS AND CONTROL DIAGRAMS	E-601	41
SYMBOL LIST AND SCHEDULE	E-602	42
EQUIPMENT AND PANEL SCHEDULES	E-603	43
FIRE ALARM SYSTEM PLAN, NOTES AND SCHEDULES	FA101	44

CODE SUMMARY

BASED ON THE 2003 IBC

	OCCUPANCY TYPES	PROPOSED OCCUPANCY	
• OCCUPANCY CLASSIFICATION	FABRICATION SHOP AUTO SHOP	F-1 - NON SEPARATED PER 302.3.1 S-1	SECTION 302
• CONSTRUCTION TYPE	TYPE II-B	FIRE SPRINKLERS PROVIDED	SECTION 601
• ALLOWABLE AREA / HEIGHT	BASIC: 15,500 SF / 2 STORY / 55 FT. ACTUAL SF = 30,000 - ALLOWABLE INCREASE WITH SPRINKLER = 300%		TABLE 503
• OCCUPANCY SEPARATION	NOT REQUIRED		TABLE 302.3.3
• FIRE RATINGS IN HOURS	STRUCTURAL FRAME 0 HR. BEARING WALLS *EXTERIOR WALLS 0 HR. INTERIOR WALLS 0 HR. FLOOR CONSTRUCTION 0 HR. ROOF CONSTRUCTION 0 HR.		TABLE 601
	*EXTERIOR WALLS 0 HR.	> 30 FT.	TABLE 602
• OCCUPANT LOAD EXIT REQUIREMENTS	F OCCUPANCY	1/100 GROSS - GRADE FLOOR AREAS = 300 OCCUPANTS	TABLE 1004.1.2.
	TRAVEL DISTANCE	MAX. ALLOWABLE = 250' W/ SPRINKLER SYSTEM	TABLE 1015.1
	EXIT WIDTH	300 X .15 = 45" MIN. REQUIRED 128" PROVIDED	TABLE 1005.1
	(2) EXITS REQUIRED (4) EXITS PROVIDED		
• PLUMBING FIXTURE REQUIREMENTS	TOILET FIXTURES REQUIRED = 1/100 : LAVS REQUIRED = 1/100 FIXTURES PROVIDED = 6 TOTAL : LAVS PROVIDED = 6 TOTAL 1 DRINKING FOUNTAIN PROVIDED AND 1 MOP SINK PROVIDED		

ARCHITECT/AJC PROJECT # 0502

ajc architects

703 east 1700 south
salt lake city, utah 84105
ph: 801.466.8818
fx: 801.466.4411
ajc@ajcarchitects.com

OWNER INFORMATION

State of Utah
Department of Administrative Services

Division of Facilities
Construction & Management
4110 State Office Building
Salt Lake City, Utah 84114
Phone: (801) 538 - 3018
Fax: (801) 538 - 3267

Internet: http://www.dfcm.utah.gov

PROJECT DESCRIPTION

ATE CENTER AT
UTAH STATE PRISON

DRAPER, UTAH

SHEET NAME:

REVISIONS

MARK	DATE	DESCRIPTION

ISSUE DATA

ISSUE DATE:	APRIL 18, 2005
ISSUE TYPE:	CON. DOCS.
DRAWN BY:	BJA
CHECKED BY:	KRR
CAD FILE NAME:	0502GI001
DFCM PROJECT #	04256100
STATE PROPERTY #	
COPYRIGHT:	STATE OF UTAH

SHEET NUMBER:

GI001

SHEET 1 44 TOTAL PAGES

GENERAL NOTES

1.1 COMPLIANCE

1. ALL WORK TO CONFORM TO GOVERNING MUNICIPALITY'S STANDARDS, SPECIFICATIONS AND REQUIREMENTS.
2. ALL CONSTRUCTION AND MATERIALS SHALL BE IN ACCORDANCE WITH THESE CONTRACT DOCUMENTS AND THE MOST RECENT, ADOPTED EDITIONS OF THE FOLLOWING: INTERNATIONAL BUILDING CODE (IBC), THE INTERNATIONAL PLUMBING CODE, STATE DRINKING WATER REGULATIONS, APWA MANUAL OF STANDARD PLANS AND SPECIFICATIONS, ADA ACCESSIBILITY GUIDELINES.
3. ALL CONSTRUCTION SHALL BE AS SHOWN ON THESE PLANS. ANY REVISIONS MUST HAVE PRIOR WRITTEN APPROVAL.

1.2 PERMITTING AND INSPECTIONS

1. PRIOR TO STARTING CONSTRUCTION, THE CONTRACTOR SHALL BE RESPONSIBLE FOR MAKING SURE THAT ALL REQUIRED PERMITS AND APPROVALS HAVE BEEN OBTAINED. NO CONSTRUCTION OR FABRICATION SHALL BEGIN UNTIL THE CONTRACTOR HAS RECEIVED THOROUGHLY REVIEWED PLANS AND OTHER DOCUMENTS APPROVED BY ALL OF THE PERMITTING AUTHORITIES.
2. CONTRACTOR IS RESPONSIBLE FOR SCHEDULING AND NOTIFYING ARCHITECT/ENGINEER OR INSPECTING AUTHORITY 48 HOURS IN ADVANCE OF COVERING UP ANY PHASE OF CONSTRUCTION REQUIRING OBSERVATION.
3. ANY WORK IN THE PUBLIC RIGHT-OF-WAY WILL REQUIRE PERMITS FROM THE APPROPRIATE, CITY, COUNTY OR STATE AGENCY CONTROLLING THE ROAD AND WITH APPROPRIATE INSPECTIONS.

1.3 COORDINATION & VERIFICATION

1. ALL DIMENSIONS, GRADES & UTILITY DESIGNS SHOWN ON THE PLANS SHALL BE VERIFIED BY THE CONTRACTOR PRIOR TO CONSTRUCTION. CONTRACTOR SHALL NOTIFY ARCHITECT/ENGINEER OF ANY DISCREPANCIES PRIOR TO PROCEEDING WITH CONSTRUCTION FOR NECESSARY PLAN OR GRADE CHANGES. NO EXTRA COMPENSATION SHALL BE PAID TO THE CONTRACTOR FOR WORK HAVING TO BE REDONE DUE TO DIMENSIONS OR GRADES SHOWN INCORRECTLY ON THESE PLANS, IF NOT VERIFIED AND NOTIFICATION OF CONFLICTS HAVE NOT BEEN BROUGHT TO THE ATTENTION OF THE ARCHITECT/ENGINEER.
2. CONTRACTOR MUST VERIFY ALL EXISTING CONDITIONS BEFORE BIDDING AND BRING UP ANY QUESTIONS BEFOREHAND. NO ALLOWANCE WILL BE MADE FOR DISCREPANCIES OR OMISSIONS THAT CAN BE EASILY OBSERVED.
3. CONTRACTOR TO COORDINATE WITH ALL OTHER DISCIPLINES, INCLUDING BUT NOT LIMITED TO: LANDSCAPE PLANS, SITE ELECTRICAL SITE LIGHTING PLANS AND ELECTRICAL SERVICE TO THE BUILDING(S), MECHANICAL PLANS FOR LOCATION OF SERVICES TO THE BUILDING(S), INCLUDING FIRE PROTECTION, ARCHITECTURAL SITE PLAN FOR DIMENSIONS, ACCESSIBLE ROUTES, ETC., NOT SHOWN ON CIVIL PLANS.
4. CONTRACTOR IS TO COORDINATE LOCATION OF NEW TELEPHONE SERVICE, GAS SERVICE, CABLE, ETC. TO BUILDING WITH THE APPROPRIATE UTILITY COMPANY. FOR TELEPHONE, CONTRACTOR TO FURNISH CONDUIT, PLYWOOD BACKBOARD, AND GROUND WIRE, AS REQUIRED.

1.4 SAFETY AND PROTECTION

1. CONTRACTOR IS SOLELY RESPONSIBLE FOR THE MEANS AND METHODS OF CONSTRUCTION,
2. CONTRACTOR IS RESPONSIBLE FOR THE SAFETY OF THE PROJECT AND SHALL MEET ALL OSHA REQUIREMENTS.
3. CONTRACTOR IS RESPONSIBLE FOR CONFORMING TO LOCAL AND FEDERAL CODES GOVERNING SHORING AND BRACING OF EXCAVATIONS AND TRENCHES, AND FOR THE PROTECTION OR WORKERS AND PUBLIC.
4. CONTRACTOR SHALL TAKE ALL MEASURES NECESSARY TO PROTECT ALL EXISTING PUBLIC AND PRIVATE PROPERTY, ROADWAYS, AND UTILITY IMPROVEMENTS. DAMAGE TO EXISTING IMPROVEMENTS CAUSED BY THE CONTRACTOR MUST BE REPAIRED BY THE CONTRACTOR AT HIS/HER EXPENSE TO THE SATISFACTION OF THE OWNER OF SAID IMPROVEMENTS.
5. CONTRACTOR IS REQUIRED TO KEEP ALL CONSTRUCTION ACTIVITIES WITHIN THE APPROVED PROJECT LIMITS. THIS INCLUDES, BUT IS NOT LIMITED TO, VEHICLE AND EQUIPMENT STAGING, MATERIAL STORAGE AND LIMITS OF TRENCH EXCAVATION.
6. IT IS THE CONTRACTOR'S RESPONSIBILITY TO OBTAIN PERMISSION AND/OR EASEMENTS FROM THE APPROPRIATE GOVERNMENT AGENCY AND/OR INDIVIDUAL PROPERTY OWNER(S) FOR WORK OR STAGING OUTSIDE OF THE PROJECT LIMITS.
7. CONTRACTOR SHALL PROVIDE BARRICADES, SIGNS, FLASHERS, OTHER EQUIPMENT AND FLAG PERSONS NECESSARY TO INSURE THE SAFETY OF WORKERS AND VISITORS. ALL CONSTRUCTION SIGNING, BARRICADING, AND TRAFFIC DELINEATION SHALL CONFORM TO THE "MANUAL ON UNIFORM TRAFFIC CONTROL DEVICES", LATEST EDITION.
8. CONTRACTOR SHALL COMPLY WITH LOCAL NOISE ORDINANCE STANDARDS.
9. CONTRACTOR IS RESPONSIBLE FOR DUST CONTROL ACCORDING TO GOVERNING AGENCY STANDARDS.
10. CONTRACTOR SHALL TAKE ALL NECESSARY AND PROPER PRECAUTIONS TO PROTECT ADJACENT PROPERTIES FROM ANY AND ALL DAMAGE THAT MAY OCCUR FROM STORM WATER RUNOFF AND/OR DEPOSITION OF DEBRIS RESULTING FROM ANY AND ALL WORK IN CONNECTION WITH CONSTRUCTION. SUBMIT A STORM WATER POLLUTION PREVENTION PLAN, IF REQUIRED.
11. WORK IN PUBLIC STREETS, ONCE BEGUN, SHALL BE PROSECUTED TO COMPLETION WITHOUT DELAY AS TO PROVIDE MINIMUM INCONVENIENCE TO ADJACENT PROPERTY OWNERS AND TO THE TRAVELING PUBLIC.
12. CONTRACTOR SHALL PROVIDE ALL NECESSARY HORIZONTAL AND VERTICAL TRANSITIONS BETWEEN NEW CONSTRUCTION AND EXISTING SURFACES TO PROVIDE FOR PROPER DRAINAGE AND FOR INGRESS AND EGRESS TO NEW CONSTRUCTION.
13. NATURAL VEGETATION AND SOIL COVER SHALL NOT BE DISTURBED PRIOR TO ACTUAL CONSTRUCTION OF A REQUIRED FACILITY OR IMPROVEMENT. MASS CLEARING OF THE SITE IN ANTICIPATION OF CONSTRUCTION SHALL BE AVOIDED. CONSTRUCTION TRAFFIC SHALL BE LIMITED TO ONE APPROACH TO THE SITE. THE APPROACH SHALL BE DESIGNATED BY THE OWNER OR GOVERNING AGENCY.
14. THE CONTRACTOR SHALL TAKE REASONABLE MEASURE TO PROTECT EXISTING IMPROVEMENTS FROM DAMAGE AND ALL SUCH IMPROVEMENTS DAMAGED BY THE CONTRACTOR'S OPERATION SHALL BE REPAIRED OR RECONSTRUCTED TO THE ENGINEER/OWNER'S SATISFACTION AT THE EXPENSE OF THE CONTRACTOR.

GENERAL NOTES CONTINUED

1.5 MATERIALS

1. SITE CONCRETE SHALL BE A MINIMUM 6.5 BAG MIX, 4000 P.S.I. @ 28 DAYS, 4" MAXIMUM SLUMP WITH 5 + OR – 1% AIR ENTRAINMENT, UNLESS SPECIFIED OTHERWISE. –SEE SPECIFICATION
   A. SLABS-ON-GRADE WILL BE TYPICALLY SCORED (1/4 THE DEPTH) AT INTERVALS NOT TO EXCEED THEIR WIDTH OR 12 TIMES THEIR DEPTH, WHICHEVER IS LESS. SCORING WILL BE PLACED TO PREVENT RANDOM CRACKING. FULL DEPTH EXPANSION JOINTS WILL BE PLACED AGAINST ANY OBJECT DEEMED TO BE FIXED, CHANGES IN DIRECTION AND AT EQUAL INTERVALS NOT TO EXCEED 50 FEET.
   B. CONCRETE WATERWAYS, CURBWALLS, MOWSTRIPS, CURB AND GUTTER, ETC. WILL TYPICALLY BE SCORED (1/4 THE DEPTH AT INTERVALS NOT TO EXCEED 10 FEET AND HAVE FULL DEPTH EXPANSION JOINTS AT EQUAL SPACING NOT TO EXCEED 50 FEET.
   C. UNLESS OTHERWISE NOTED, ALL SLABS-ON-GRADE WILL HAVE A MINIMUM 8" TURNED-DOWN EDGE TO HELP CONTROL FROST HEAVE.
   D. UNLESS OTHERWISE NOTED, ALL ON-GRADE CONCRETE WILL BE PLACED ON A MINIMUM 4" GRAVEL BASE OVER A WELL COMPACTED (90%) SUBGRADE.
   E. ALL EXPOSED SURFACES WILL HAVE A TEXTURED FINISH, RUBBED OR BROOMED. ANY "PLASTERING" OF NEW CONCRETE WILL BE DONE WHILE IT IS STILL "GREEN".
   F. ALL JOINTS (CONTROL, CONSTRUCTION OR EXPANSION JOINTS, ETC.) WILL BE SEALED WITH A ONE PART POLYURETHANE SEALANT (SEE SPECIFICATION).
2. ASPHALTIC CONCRETE PAVEMENT SHALL BE A MINIMUM 3" OVER 6" OF COMPACTED (95%) ROAD BASE OVER PROPERLY PREPARED AND COMPACTED (90%) SUBGRADE, UNLESS NOTED OTHERWISE. –SEE SPECIFICATIONS, AND DETAIL 'D1' SHEET C5.01
   A. ASPHALT COMPACTION SHALL BE A MINIMUM 96% (MARSHALL DESIGN).
   B. SURFACE COARSE SHALL BE ½ " MINUS. MIX DESIGN TO BE SUBMITTED FOR APPROVAL AT LEAST TWO WEEKS PRIOR TO ANTICIPATED PAVING SCHEDULE.
   C. AC PAVEMENT TO BE A ¼" ABOVE LIP OF ALL GUTTER AFTER COMPACTION.
   D. THICKNESSES OVER 3" WILL BE LAID IN TWO LIFTS WITH THE FIRST LIFT BEING AN APPROVED ¾" MINUS DESIGN.

1.6 GRADING / SOILS

1. SITE GRADING SHALL BE PERFORMED IN ACCORDANCE WITH THESE PLANS AND SPECIFICATIONS AND THE RECOMMENDATIONS SET FORTH IN THE SOILS REPORT, WHICH BY REFERENCE ARE A PART OF THE REQUIRED CONSTRUCTION DOCUMENTS AND IN CASE OF CONFLICT SHALL TAKE PRECEDENCE, UNLESS SPECIFICALLY NOTED OTHERWISE ON THE PLANS, OR IN THE SPECIFICATIONS. THE CONTRACTOR SHALL NOTIFY THE ENGINEER OF ANY DISCREPANCY BETWEEN THE SOILS REPORT AND THESE PLANS AND SPECIFICATIONS.
2. THE CONTRACTOR SHALL BE RESPONSIBLE FOR REMOVING AND REPLACING ALL SOFT, YIELDING OR UNSUITABLE MATERIALS AND REPLACING WITH SUITABLE MATERIALS AS SPECIFIED IN THE SOILS REPORT.
3. ALL EXCAVATED OR FILLED AREAS SHALL BE COMPACTED TO 95% OF MODIFIED PROCTOR MAXIMUM DENSITY PER ASTM TEST D-1557, EXCEPT UNDER BUILDING FOUNDATIONS WHERE IT SHALL BE 98% MIN. OF MAXIMUM DENSITY. MOISTURE CONTENT AT TIME OF PLACEMENT SHALL NOT EXCEED 2% ABOVE NOR 3% BELOW OPTIMUM.
4. CONTRACTOR SHALL SUBMIT A COMPACTION REPORT PREPARED BY A QUALIFIED REGISTERED SOILS ENGINEER, VERIFYING THAT ALL FILLED AREAS AND SUBGRADE AREAS WITH THE BUILDING PAD AREA AND AREAS TO BE PAVED, HAVE BEEN COMPACTED IN ACCORDANCE WITH THESE PLANS AND SPECIFICATIONS AND THE RECOMMENDATIONS SET FORTH IN THE SOILS REPORT.
5. SITE CLEARING SHALL INCLUDE THE LOCATING AND REMOVAL OF ALL UNDERGROUND TANKS, PIPES, VALVES, ETC.
6. ALL EXISTING VALVES, MANHOLES, ETC. SHALL BE RAISED OR LOWERED TO GRADE AS REQUIRED.

1.7 UTILITIES

1. THE LOCATIONS OF UNDERGROUND FACILITIES SHOWN ON THESE PLANS ARE BASED ON FIELD SURVEYS AND LOCAL UTILITY COMPANY RECORDS. IT SHALL BE THE CONTRACTOR'S FULL RESPONSIBILITY TO CONTACT THE VARIOUS UTILITY COMPANIES EITHER DIRECT OR THROUGH BLUE STAKE TO LOCATE THEIR FACILITIES PRIOR TO STARTING CONSTRUCTION.
2. CONTRACTOR TO VERIFY BY POTHOLING BOTH THE VERTICAL AND HORIZONTAL LOCATION OF ALL EXISTING UTILITIES PRIOR TO INSTALLING ANY NEW LINES. NO ADDITIONAL COMPENSATION SHALL BE PAID TO THE CONTRACTOR FOR DAMAGE AND REPAIR TO THESE FACILITIES CAUSED BY HIS WORK FORCE.
3. CONTRACTOR MUST START AT LOW END OF ALL NEW GRAVITY UTILITY LINES. MECHANICAL SUB-CONTRACTOR MUST BE PROVIDED CIVIL SITE DRAWINGS FOR COORDINATION AND TO CHECK THE FLOW FROM THE LOWEST POINT IN BUILDING TO THE FIELD VERIFIED CONNECTION AT THE EXISTING MAIN. NO EXTRA COMPENSATION IS TO BE PAID TO THE CONTRACTOR FOR WORK HAVING TO BE REDONE DUE TO FAILURE TO COMPLY WITH THESE REQUIREMENTS.
4. CONTRACTOR IS TO VERIFY LOCATION, DEPTH, SIZE, TYPE, AND OUTSIDE DIAMETERS OF UTILITIES IN THE FIELD BY POTHOLING A MINIMUM OF 300 FEET AHEAD, PIPELINE CONSTRUCTION TO AVOID CONFLICTS WITH DESIGNED PIPELINE GRADE AND ALIGNMENT. EXISTING UTILITY INFORMATION SHOWN ON PLANS OR OBTAINED FROM UTILITY COMPANIES OR BLUE STAKED MUST BE ASSUMED AS APPROXIMATE, REQUIRING FIELD VERIFICATION.
5. CULINARY WATER AND FIRE SERVICE LINES TO BE CONSTRUCTED IN ACCORDANCE WITH LOCAL GOVERNING MUNICIPALITY STANDARDS AND SPECIFICATIONS.
6. SANITARY SEWER MAINS AND LATERALS TO BE CONSTRUCTED IN ACCORDANCE WITH LOCAL GOVERNING MUNICIPALITY SEWER DISTRICT STANDARDS AND SPECIFICATIONS.
7. STORM SEWER TO BE CONSTRUCTED IN ACCORDANCE WITH THE GOVERNING MUNICIPALITY STANDARDS AND SPECIFICATIONS.
8. ALL STORM DRAIN AND IRRIGATION CONDUITS SHALL BE INSTALLED WITH WATER TIGHT JOINTS AND CONNECTIONS.
9. ALL STORM DRAIN PIPE PENETRATIONS INTO BOXES SHALL BE CONSTRUCTED WITH WATER TIGHT SEALS ON THE OUTSIDE AND GROUTED SMOOTH WITH A NON-SHRINK GROUT ON THE INSIDE. CONDUITS SHALL BE CUT OFF FLUSH WITH THE INSIDE OF THE BOX.
10. NO CHANGE IN THE DESIGN OF UTILITIES AS SHOWN WILL BE MADE BY THE CONTRACTOR WITHOUT THE WRITTEN APPROVAL OF THE GOVERNING MUNICIPALITY, OR OTHER AUTHORITY HAVING JURISDICTION OVER THAT UTILITY.
11. ALL STORM DRAIN CONDUITS AND BOXES SHALL BE CLEAN AND FREE OF ROCKS, DIRT, AND CONSTRUCTION DEBRIS PRIOR TO FINAL INSPECTION.

GENERAL NOTES CONTINUED

1.8 SURVEY CONTROL

1. CONTRACTOR MUST PROVIDE A REGISTERED LAND SURVEYOR OR PERSONS UNDER THE SUPERVISION OF A REGISTERED LAND SURVEYOR TO SET STAKES FOR THE ALIGNMENT AND GRADE OF EACH MAIN AND/OR FACILITY AS SHOWN ON THE PLANS. THE STAKES SHALL BE MARKED WITH THE HORIZONTAL LOCATION (STATION) AND VERTICAL LOCATION (GRADE) WITH CUTS AND/OR FILLS TO THE APPROVED GRADE OF THE MAIN AND OR FACILITY AS SHOWN ON THE PLANS.
2. THE CONTRACTOR SHALL PROTECT ALL STAKES AND MARKERS FOR VERIFICATION PURPOSES.
3. CONTRACTOR WILL BE RESPONSIBLE FOR FURNISHING, MAINTAINING, OR RESTORING ALL MONUMENTS AND REFERENCE MARKS WITHIN THE PROJECT SITE.

1.9 AMERICAN DISABILITIES ACT

1. PEDESTRIAN / ADA ROUTES SHALL MEET THE FOLLOWING SPECIFICATIONS:
   *ROUTES SHALL HAVE A 2.00% (1:50) MAXIMUM CROSS SLOPE.
   *ROUTES SHALL HAVE A 5.00% (1:20) MAXIMUM RUNNING SLOPE.
   *RAMPS SHALL HAVE A 8.33% (1:12) MAXIMUM RUNNING SLOPE.
2. ADA PARKING STALLS AND ADJACENT ROUTES SHALL HAVE A 2.00% MAXIMUM SURFACE SLOPE IN ANY DIRECTION.
3. THE CONTRACTOR SHALL ADHERE TO THE ABOVE SPECIFICATIONS. IN THE EVENT OF A DISCREPANCY IN THE CONSTRUCTION DOCUMENTS, THE CONTRACTOR SHALL NOTIFY THE ARCHITECT/ENGINEER PRIOR TO ANY CONSTRUCTION.

LEGEND

NEW	EXISTING		NEW	EXISTING	
		MONUMENT LINE			SECTION CORNER (FOUND)
		CENTER LINE			SECTION CORNER (NOT FOUND)
		SUBJECT PROPERTY LINE			STREET MONUMENT
		ADJACENT PROPERTY LINE			BRASS CAP MONUMENT
		EASEMENT LINE	PP	PP	POWER POLE
X	X	FENCE LINE	UP	UP	UTILITY POLE
P	P	POWER LINE	GUY	GUY	GUY ANCHOR
T	T	TELEPHONE LINE	TRANS	TRANS	POWER TRANSFORMER
ATMS	ATMS	ATMS CABLE			TRAFFIC SIGNAL CABINET
FO	FO	FIBER-OPTIC CABLE	LP	LP	LIGHT POLE
G	G	NATURAL GAS LINE	TB	TB	TELEPHONE RISER
W	W	WATER LINE	T	T	TELEPHONE MANHOLE
SW	SW	SECONDARY WATER LINE			TRAFFIC SIGNAL BOX
S	S	SANITARY SEWER LINE			WATER MANHOLE
SD	SD	STORM DRAIN LINE			WATER VALVE
IRR	IRR	IRRIGATION LINE	WM	WM	WATER METER
RD	RD	ROOF DRAIN LINE			FIRE HYDRANT
		DITCH FLOWLINE	S	S	SANITARY SEWER MANHOLE
	4572	CONTOUR LINE	SSCO	SSCO	SANITARY SEWER CLEANOUT
		CURB & GUTTER (STD)	SD	SD	STORM DRAIN MANHOLE
		CURB & GUTTER (OUTFALL)			STORM DRAIN CURB INLET
		CONCRETE PAVEMENT			STORM DRAIN CATCH BASIN
		STD. DUTY ASPHALT	SD	SD	STORM DRAIN CLEANOUT
		HEAVY DUTY ASPHALT			STORM DRAIN COMBO BOX
			44.00 TOC	4521.38	SPOT ELEVATION
					FLOW DIRECTION
					CONIFEROUS TREE
					DECIDUOUS TREE
			MB	MB	MAILBOX
					SIGN

ABBREVIATIONS

AC	ACRE
B&C	BAR & CAP
BM	BENCHMARK
℄	CENTERLINE
CP	CONTROL POINT
CU FT	CUBIC FOOT
CU YD	CUBIC YARD
CONC	CONCRETE
CONST	CONSTRUCTION
CMP	CORRUGATED METAL PIPE
DIA or ø	DIAMETER
E	EAST
EOA	EDGE OF ASPHALT
ELEV	ELEVATION
EX	EXISTING
FFE	FINISHED FLOOR ELEVATION
FG	FINISHED GRADE
FT	FEET
HDPE	HDPE
HW	HIGH WATER
HWY	HIGHWAY
IE	INVERT ELEVATION
IRR	IRRIGATION
LF	LINEAR FEET
MAX	MAXIMUM
MIN	MINIMUM
MON	MONUMENT
N	NORTH
NTS	NOT TO SCALE
OG	ORIGINAL GROUND
PC	POINT OF CURVATURE
PCC	POINT OF COMPOUND CURVE
PI	POINT OF INTERSECTION
PRC	POINT OF REVERSE CURVE
PT	POINT OF TANGENCY
POC	POINT OF CONNECTION
PWR	POWER
⅊	PROPERTY LINE
PVC	POLYVINAL CLORIDE PIPE
R	RANGE
RCP	REINFORCED CONCRETE PIPE
REV	REVISION
ROW	RIGHT-OF-WAY
SLB&M	SALT LAKE BASE & MERIDIAN
S	SOUTH
SS	SANITARY SEWER
SD	STORM DRAIN
SEC	SECTION
SPEC	SPEC
SQ	SQUARE
SQ FT	SQUARE FEET
SQ YD	SQUARE YARD
STA	STATION
STD	STANDARD
STM	STORM
T	TOWNSHIP
TBC	TOP BACK OF CURB
TOA	TOP OF ASPHALT
TOC	TOP OF CONCRETE
TOFW	TOP OF FOUNDATION WALL
TOS	TOP OF SIDEWALK
TOW	TOP OF WALL
TRANS	TRANSFORMER
U.N.O.	UNLESS NOTED OTHERWISE
WTR	WATER
WV	WATER VALVE
W	WEST

AJC PROJECT # 0502

ajc architects

703 east 1700 south
salt lake city, utah 84105
ph: 801.466.8818
fx: 801.466.4411
ajc@ajcarchitects.com

McNEIL ENGINEERING AND LAND SURVEYING
PROFESSIONAL CIVIL ENGINEERING & LAND SURVEYING SERVICES
6895 SOUTH 900 EAST MIDVALE, UTAH 84047
TEL. (801) 255-7700 FAX (801) 255-8071
E-MAIL info@mcneileng.com WEB SITE AT www.mcneileng.com

OWNER INFORMATION

State of Utah
Department of Administrative Services

Division of Facilities Construction & Management
4110 State Office Building
Salt Lake City, Utah 84114
Phone: (801) 538 - 3018
Fax: (801) 538 - 3267

Internet: http://www.dfcm.utah.gov

ATE CENTER AT UTAH STATE PRISON

DRAPER, UTAH

SHEET NAME:

GENERAL NOTES, LEGEND AND ABBREVIATIONS

REVISIONS

MARK DATE DESCRIPTION

ISSUE DATE: APRIL 18, 2005
ISSUE TYPE: CON. DOCS.
DRAWN BY: JHF
CHECKED BY: KAP
CAD FILE NAME:
DFCM PROJECT # 04256100
STATE PROPERTY #
COPYRIGHT: STATE OF UTAH

SHEET NUMBER:

CG101

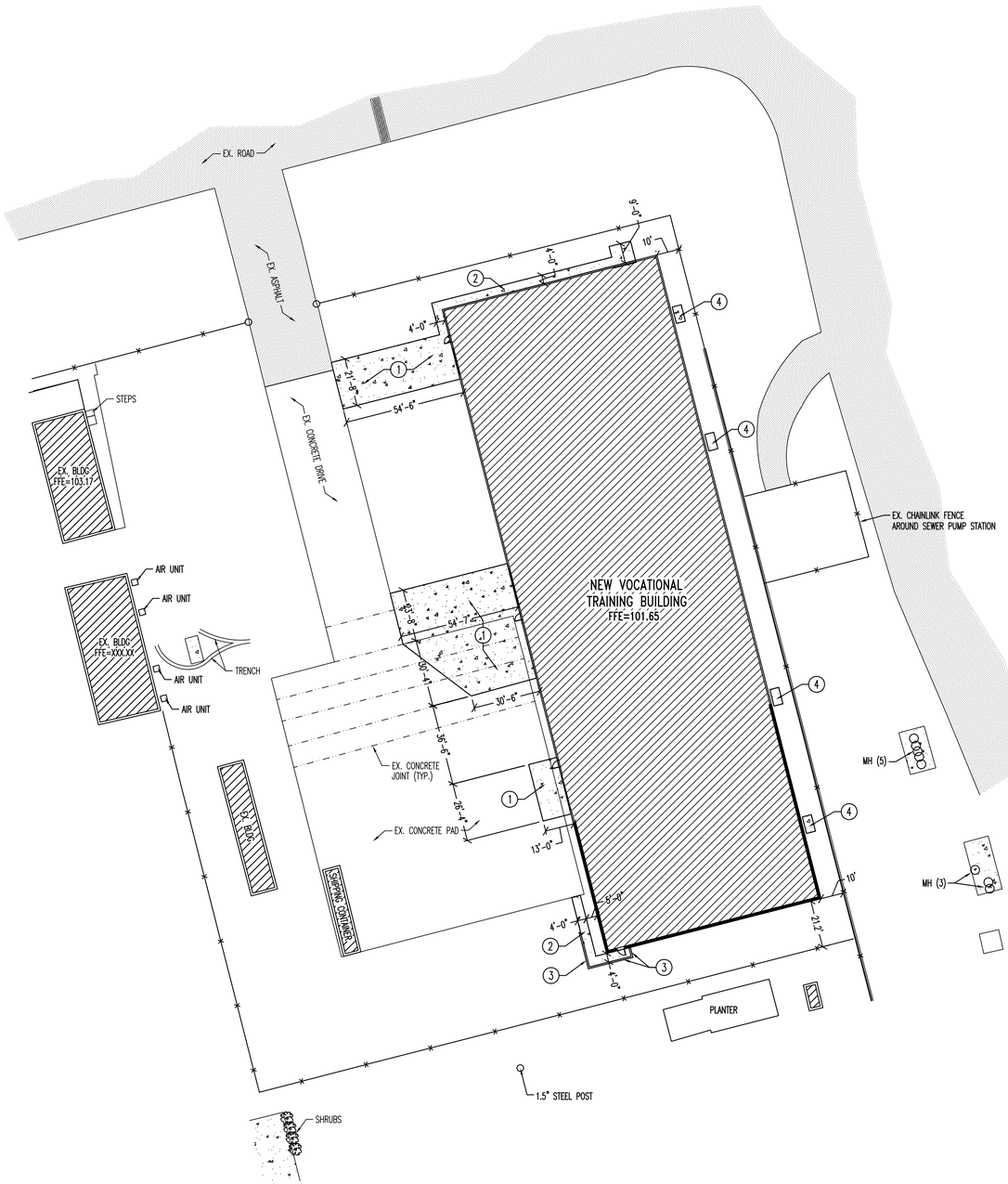

HORIZONTAL CONTROL PLAN

SCALE: 1" = 30'-0"

A1
C101

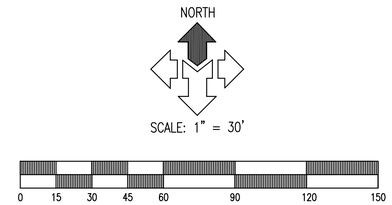

GENERAL NOTES:

ALL DIMENSIONS ARE TO THE FACE OF CURB, UNLESS OTHERWISE NOTED

SEE ARCHITECT'S SITE PLAN FOR ADDITIONAL DIMENSIONS AND INFORMATION

ALL WORK TO COMPLY WITH GOVERNING AGENCY'S STANDARDS AND SPECIFICATIONS

ALL IMPROVEMENTS MUST COMPLY WITH ADA STANDARDS AND RECOMMENDATIONS.

SCOPE OF WORK:

PROVIDE, INSTALL AND/OR CONSTRUCT THE FOLLOWING PER THE SPECIFICATIONS GIVEN OR REFERENCED AND THE DETAILS NOTED AND AS SHOWN ON THE CONSTRUCTION DRAWINGS:

1. CONCRETE PAVEMENT WITH GRANULAR BASE PER DETAIL 'C1', SHEET C501.
2. CONCRETE SIDEWALK PER DETAIL 'D1', SHEET C501.
3. 8" CONCRETE RETAINING WALL PER DETAIL 'C2', SHEET C501.
4. NEW 7'-8" x 4'-2" CONCRETE COOLER PAD. 4" CONCRETE OVER 4" BASE COURSE.

AJC PROJECT # 0502

ajc architects

703 east 1700 south
salt lake city, utah 84105
ph: 801.466.8818
fx: 801.466.4411
ajc@ajcarchitects.com

McNEIL ENGINEERING AND LAND SURVEYING
PROFESSIONAL CIVIL ENGINEERING & LAND SURVEYING SERVICES
6895 SOUTH 900 EAST MIDVALE, UTAH 84047
TEL. (801) 255-7700 FAX (801) 255-8071
E-MAIL info@mcneileng.com WEB SITE AT www.mcneileng.com

OWNER INFORMATION

State of Utah
Department of Administrative Services

Division of Facilities
Construction & Management
4110 State Office Building
Salt Lake City, Utah 84114
Phone: (801) 538 - 3018
Fax: (801) 538 - 3267

Internet: http://www.dfcm.utah.gov

ATE CENTER AT UTAH STATE PRISON

DRAPER, UTAH

SHEET NAME:

HORIZONTAL CONTROL PLAN

REVISIONS

MARK	DATE	DESCRIPTION

ISSUE DATE: APRIL 18, 2005
ISSUE TYPE: CON. DOCS.
DRAWN BY: JHF
CHECKED BY: KAP
CAD FILE NAME:
DFCM PROJECT # 04256100
STATE PROPERTY #
COPYRIGHT: STATE OF UTAH

SHEET NUMBER:

C101

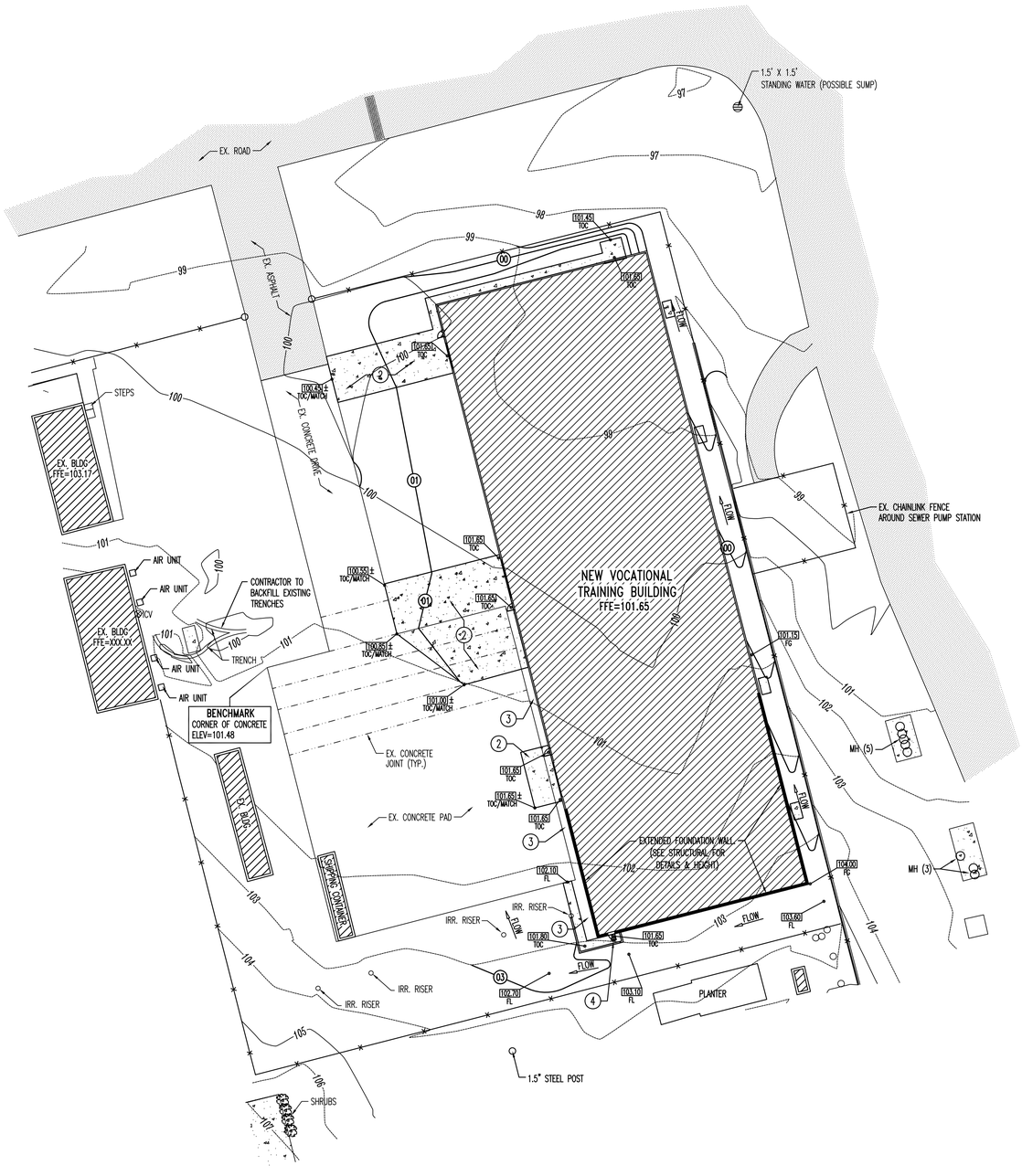

GRADING PLAN

SCALE: 1" = 30'-0"

A1
C201

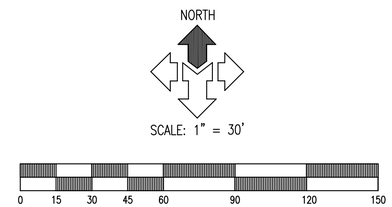

GENERAL NOTES:

SITE GRADING SHALL BE PERFORMED IN ACCORDANCE WITH THESE PLANS AND SPECIFICATIONS AND THE RECOMMENDATIONS SET FORTH IN THE SOILS REPORT THE CONTRACTOR SHALL BE RESPONSIBLE FOR REMOVING AND REPLACING ALL SOFT, YIELDING OR UNSUITABLE MATERIALS AND REPLACING WITH SUITABLE MATERIALS AS SPECIFIED IN THE SOILS REPORT. ALL EXCAVATED OR FILLED AREAS SHALL BE COMPACTED TO 95% OF MODIFIED PROCTOR MAXIMUM DENSITY PER ASTM TEST D-1557 EXCEPT UNDER BUILDING FOUNDATION WHERE IT SHALL BE 98% MIN. OF MAXIMUM DENSITY. MOISTURE CONTENT AT TIME OF PLACEMENT SHALL NOT EXCEED 2% ABOVE NOR 3% BELOW OPTIMUM. CONTRACTOR SHALL SUBMIT A COMPACTION REPORT PREPARED BY A QUALIFIED REGISTERED SOILS ENGINEER, VERIFYING THAT ALL FILLED AREAS AND SUBGRADE AREAS WITHIN THE BUILDING PAD AREA AND AREAS TO BE PAVED, HAVE BEEN COMPACTED IN ACCORDANCE WITH THESE PLANS & SPECS AND THE RECOMMENDATIONS SET FORTH IN THE SOILS REPORT.

THE CONTRACTOR IS TO USE BEST MANAGEMENT PRACTICES FOR PROVIDING EROSION CONTROL FOR CONSTRUCTION OF THIS PROJECT. SPECIFIC DETAILS SHOWN ON SHEET C2.02 SHALL BE USED IN COMBINATION WITH OTHER ACCEPTED LOCAL PRACTICES.

EXISTING UNDERGROUND UTILITIES AND IMPROVEMENTS ARE SHOWN IN THEIR APPROXIMATE LOCATIONS BASED UPON RECORD INFORMATION AVAILABLE AT THE TIME OF PREPARATION OF PLANS. LOCATIONS MAY NOT HAVE BEEN VERIFIED IN THE FIELD AND NO GUARANTEE IS MADE AS TO ACCURACY OR COMPLETENESS OF THE INFORMATION SHOWN. IT SHALL BE RESPONSIBILITY OF THE CONTRACTOR TO DETERMINE THE EXISTENCE AND LOCATION OF THOSE UTILITIES SHOWN ON THESE PLANS OR INDICATED IN THE FIELD BY LOCATING SERVICES. ANY ADDITIONAL COSTS INCURRED AS A RESULT OF CONTRACTOR'S FAILURE TO VERIFY LOCATIONS OF EXISTING UTILITIES PRIOR TO BEGINNING OF CONSTRUCTION IN THEIR VICINITY SHALL BE BORNE BY THE CONTRACTOR AND ASSUMED INCLUDED IN THE CONTRACT.

SCOPE OF WORK:

PROVIDE, INSTALL AND/OR CONSTRUCT THE FOLLOWING PER THE SPECIFICATIONS GIVEN OR REFERENCED AND THE DETAILS NOTED AND AS SHOWN ON THE CONSTRUCTION DRAWINGS:

1. GRADE SITE TO ELEVATIONS AND CONTOURS SHOWN ON PLAN.
2. CONCRETE PAVEMENT WITH UNTREATED BASE COURSE PER DETAIL 'C1', SHEET C501.
3. 8" THICK BED OF WASHED GRAVEL.
4. INSTALL NEW FLOOR DRAIN WITH 1 CU.YD. GRAVEL.

AJC PROJECT # 0502

ajc architects

703 east 1700 south
salt lake city, utah 84105
ph: 801.466.8818
fx: 801.466.4411
ajc@ajcarchitects.com

McNEIL ENGINEERING AND LAND SURVEYING
PROFESSIONAL CIVIL ENGINEERING & LAND SURVEYING SERVICES
6895 SOUTH 900 EAST MIDVALE, UTAH 84047
TEL. (801) 255-7700 FAX (801) 255-8071
E-MAIL info@mcneileng.com WEB SITE AT www.mcneileng.com

State of Utah
Department of Administrative Services
Division of Facilities Construction & Management
4110 State Office Building
Salt Lake City, Utah 84114
Phone: (801) 538 - 3018
Fax: (801) 538 - 3267
Internet: http://www.dfcm.utah.gov

ATE CENTER AT UTAH STATE PRISON

DRAPER, UTAH

SHEET NAME:

GRADING PLAN

REVISIONS

MARK	DATE	DESCRIPTION

ISSUE DATE: APRIL 18, 2005
ISSUE TYPE: CON. DOCS.
DRAWN BY: JHF
CHECKED BY: KAP
CAD FILE NAME:
DFCM PROJECT # 04256100
STATE PROPERTY #
COPYRIGHT: STATE OF UTAH

SHEET NUMBER:

C201

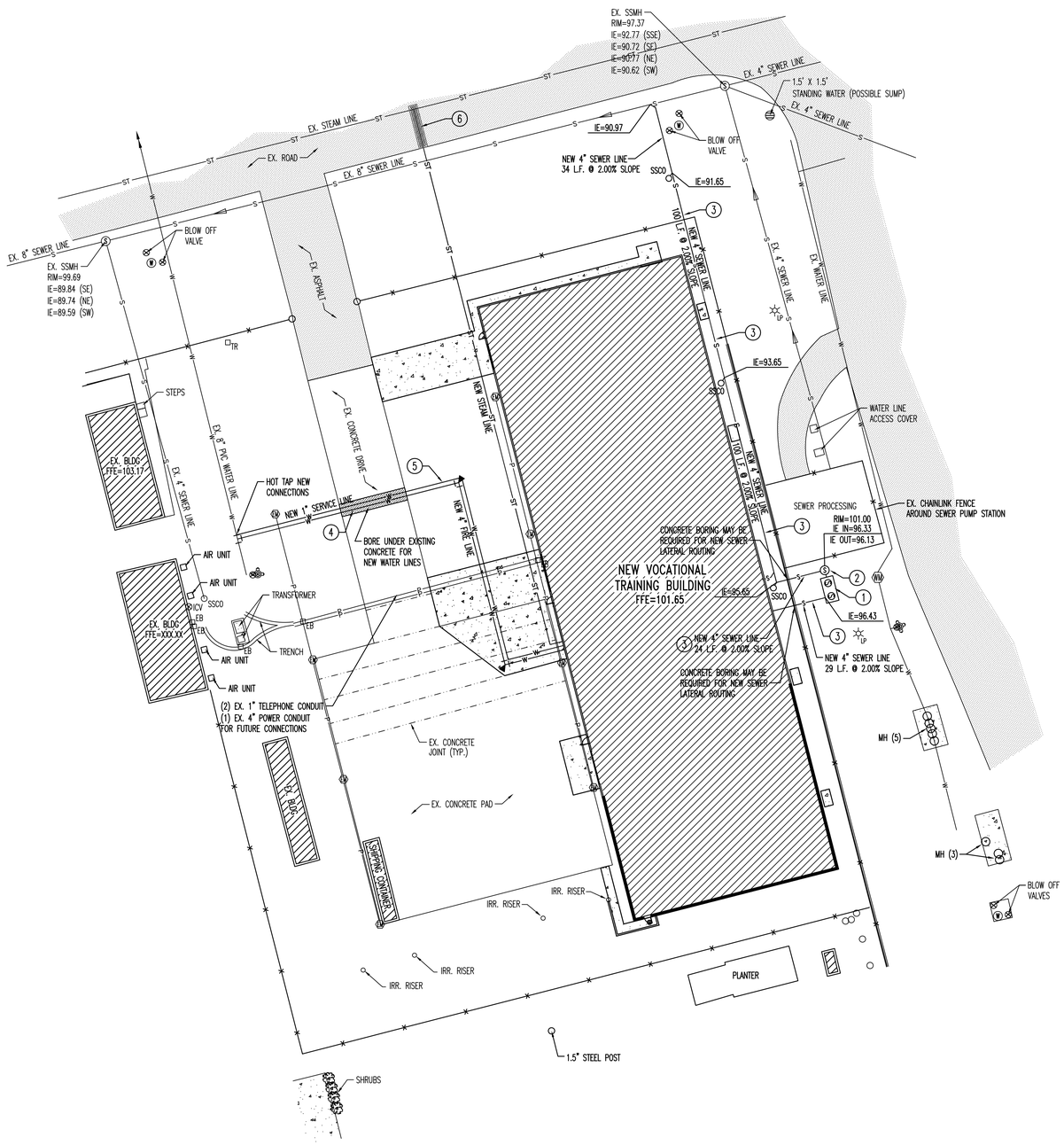

UTILITY PLAN

SCALE: 1" = 30'-0"

A1
C401

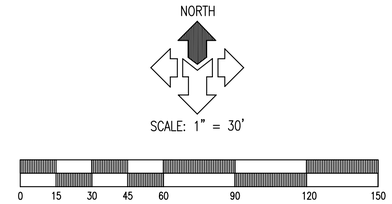

GENERAL NOTES:

CONTRACTOR IS TO COORDINATE ALL UTILITIES WITH MECHANICAL DRAWINGS.

ALL NEW WATER CONSTRUCTION TO BE DONE IN ACCORDANCE WITH LOCAL GOVERNING MUNICIPALITY STANDARDS & SPECIFICATIONS.

ALL NEW SANITARY SEWER CONSTRUCTION TO BE DONE IN ACCORDANCE WITH LOCAL GOVERNING MUNICIPALITY STANDARDS & SPECIFICATIONS.

CONTRACTOR IS TO COORDINATE LOCATIONS OF NEW TELEPHONE SERVICE TO BUILDING WITH QWEST. A PVC CONDUIT, PLYWOOD BACKBOARD, AND GROUND WIRE IS REQUIRED FOR SERVICE THROUGH PROPERTY, COORDINATE SIZES AND LOCATION WITH QWEST.

CONTRACTOR IS TO SUBMIT SITE PLAN TO QUESTAR GAS FOR DESIGN OF GAS LINE SERVICE TO BUILDING. CONTRACTOR TO COORDINATE WITH QUESTAR GAS FOR CONTRACTOR LIMITS OF WORK VERSES QUESTAR GAS LIMITS.

LOCATION OF ALL UNDERGROUND UTILITIES SHOWN ARE APPROXIMATE LOCATIONS. CONTRACTOR IS TO VERIFY CONNECTION POINTS WITH EXISTING UTILITIES. CONTRACTOR IS RESPONSIBLE FOR ANY DAMAGE CAUSED TO EXISTING UTILITIES AND UTILITY STRUCTURE THAT ARE TO REMAIN.

UTILITY ALERT PHONE NUMBERS
- WATER & SEWER –
- NATURAL GAS – QUESTAR GAS
- ELECTRICAL POWER – UTAH POWER
- TELEPHONE – QWEST

SCOPE OF WORK:

PROVIDE, INSTALL AND/OR CONSTRUCT THE FOLLOWING PER THE SPECIFICATIONS GIVEN OR REFERENCED AND THE DETAILS NOTED AND AS SHOWN ON THE CONSTRUCTION DRAWINGS:

1. NEW GREASE INTERCEPTOR. SEE DETAIL 'A1', SHEET C501.
2. NEW 4'ø SAMPLING MANHOLE BOX. SEE DETAIL 'A4' SHEET C501.
3. 4" PVC SDR-35 SANITARY SEWER LATERAL, INCLUDING NEW CLEANOUTS AT 100-FOOT MAXIMUM SPACING. SEE DETAIL 'C4', SHEET C501 FOR TRENCHING. SEE DETAIL 'D4', SHEET C501 FOR CLEANOUTS.
4. NEW 4" PVC C-900 FIRE LINE. CONNECT TO EXISTING WATER LINE.
5. NEW 1" TYPE 'K' COPPER WATER SERVICE LINE. CONNECT TO EXISITNG WATER LINE.
6. ASPHALT STREET REPAIR. SEE DETAIL 'C4', SHEET C501.
7. NATURAL GAS LINE. CONTRACTOR TO COORDINATE SIZE DESIGN AND INSTALLATION BY QUESTAR GAS WITH OTHER CONSTRUCTION.
8. TELEPHONE LINE. CONTRACTOR TO PROVIDE TRENCHING 30" DEEP X 24" WIDE FOR QWEST AND THEN BACKFILL AS REQUIRED.

AJC PROJECT # 0502

ajc architects

703 east 1700 south
salt lake city, utah 84105
ph: 801.466.8818
fx: 801.466.4411
ajc@ajcarchitects.com

McNEIL ENGINEERING AND LAND SURVEYING
PROFESSIONAL CIVIL ENGINEERING & LAND SURVEYING SERVICES
6895 SOUTH 900 EAST MIDVALE, UTAH 84047
TEL. (801) 255-7700 FAX (801) 255-8071
E-MAIL info@mcneileng.com WEB SITE AT www.mcneileng.com

State of Utah
Department of Administrative Services
Division of Facilities Construction & Management
4110 State Office Building
Salt Lake City, Utah 84114
Phone: (801) 538 - 3018
Fax: (801) 538 - 3267
Internet: http://www.dfcm.utah.gov

ATE CENTER AT UTAH STATE PRISON

DRAPER, UTAH

SHEET NAME:

UTILITY PLAN

REVISIONS

MARK	DATE	DESCRIPTION

ISSUE DATE: APRIL 18, 2005
ISSUE TYPE: CON. DOCS.
DRAWN BY: JHF
CHECKED BY: KAP
CAD FILE NAME:
DFCM PROJECT # 04256100
STATE PROPERTY #
COPYRIGHT: STATE OF UTAH

SHEET NUMBER:

C401

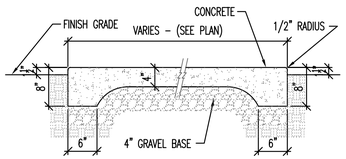

STD. SIDEWALK (D1)
N.T.S.

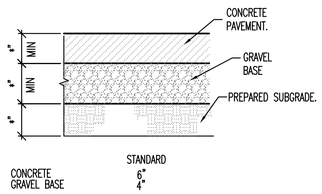

CONCRETE PAVEMENT SECTION (QL)
N.T.S.

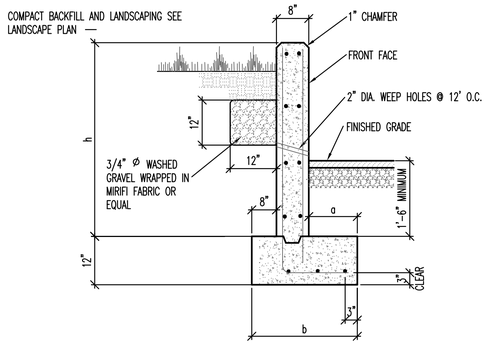

RETAINING WALL SCHEDULE						
WALL DIMENSIONS			REINFORCING BARS			
			BACK FACE		FRONT-FACE	FOOTING
h	a	b	VERTICAL	HORIZONTAL	EACH-WAY	LONGITUDE
3'-0"	8"	2'-0"	#5 @ 16" O.C.	#4 @ 24" O.C.	#4 @ 24" O.C.	(2) #4
4'-0"	1'-2"	2'-6"	#5 @ 16" O.C.	#4 @ 24" O.C.	#4 @ 24" O.C.	(2) #4
5'-0"	1'-8"	3'-0"	#5 @ 16" O.C.	#4 @ 24" O.C.	#4 @ 24" O.C.	(3) #4
6'-0"	2'-8"	4'-0"	#5 @ 12" O.C.	#4 @ 18" O.C.	#4 @ 18" O.C.	(4) #4
6'-6"	3'-2"	4'-6"	#5 @ 12" O.C.	#4 @ 12" O.C.	#4 @ 16" O.C.	(5) #4

NOTES:

1. PROVIDE 2"ø WEEP HOLES @ 12' O.C. AND CONTROL JOINTS @ 12' O.C.

1" WIDE x 3/4" DEEP.

2. PROVIDE EXPANSION JOINTS @ 48' O.C. (FULL BREAK). SLEEVE HORIZONTAL STEEL

RETAINING WALL SECTION (C2)
SCALE: 3/4"= 1'- 0"

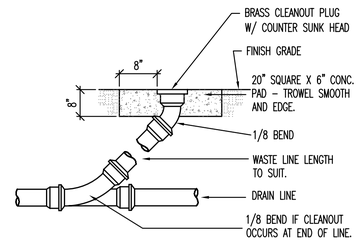

CLEANOUT DETAIL (D4)
N.T.S.

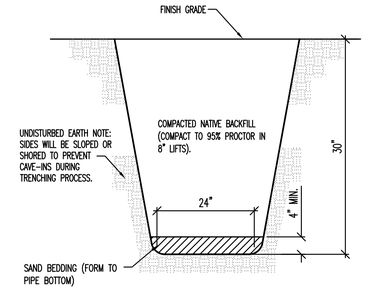

TYPICAL UTILITY TRENCH (D5)
N.T.S.

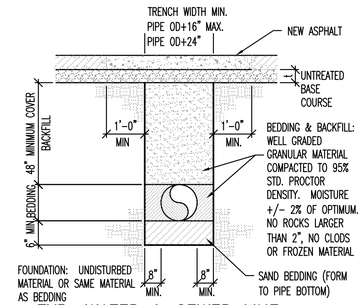

TYP. WATER & SEWER LINE TRENCH SECTION (C4)
N.T.S.

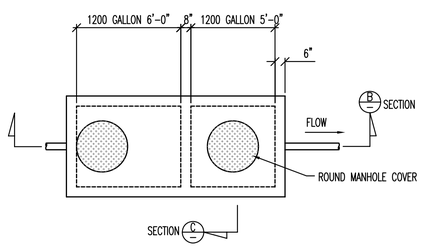

PLAN - GREASE INTERCEPTOR

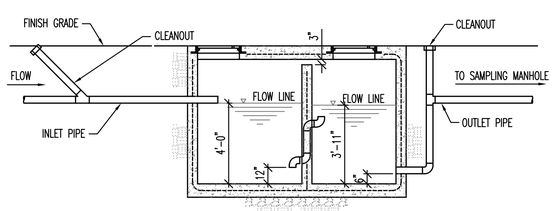

SECTION - GREASE INTERCEPTOR

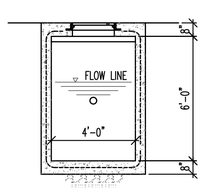

GREASE INTERCEPTOR (A1)
SCALE: N.T.S.

NOTES

1. PIPING, CLEANOUT CONFIGURATION, SIZE AND TYPE OF PIPING MATERIAL AS PER CITY OR SANITARY DISTRICT. INSPECTION BY SVWRD PRIOR TO BACKFILLING IS REQUIRED.
2. INTERCEPTOR PIPING AND OTHER ASSOCIATED PIPING CHANGES THAT ARE NECESSARY TO INSTALL INTERCEPTOR MUST BE IN ACCORDANCE WITH LOCAL REGULATIONS.
3. INTERCEPTOR MUST BE PROPERLY VENTED IN ACCORDANCE WITH UNIFORM PLUMBING CODE STANDARDS.
4. CONCRETE SHALL HAVE A MINIMUM 28 DAY COMPRESSIVE STRENGTH OF 4000 PSI.
5. REINFORCEMENT STEEL SHALL BE ASTM A615 GRADE 60.
6. THE CONCRETE COVER OVER REINFORCEMENT STEEL SHALL BE A MINIMUM OF 1-1/2 INCHES.
7. THE STRUCTURE SHALL BE DESIGNED BY A REGISTERED PROFESSIONAL ENGINEER LICENSED IN THE STATE OF UTAH.
8. THE STRUCTURE SHALL BE DESIGNED FOR THE FOLLOWING LOADING CRITERIA:
   A) WALLS DESIGNED FOR A SATURATED EQUIVALENT FLUID AT-REST SOIL PRESSURE OF 90 PCF PLUS TRUCK SURCHARGES.
   B) TRUCK LOADING USING AN AASHTO H-20 TRUCK LOAD.
9. MANWAY FRAME & COVER SHALL BE A TRAFFIC TYPE CASTING FOR H-20 TRUCK LOAD.
10. THE INLET PIPE SHALL BE AT AN ELEVATION 1" HIGHER THAT THE OUTLET PIPE
11. WHERE THE SEWER LINE ALREADY EXISTS, THE SEWER INVERT INTO AND OUT OF THE INTERCEPTOR SHALL BE 4'-0" ABOVE THE INTERCEPTOR FLOOR.
12. THE BAFFLE IN THE INTERCEPTOR SHALL BE WITHIN 3" OF THE CEILING.
13. COVERS SHALL BE CIRCULAR AND BE SOLID.
14. SANITARY WASTE FROM TOILETS MUST NOT BE PLUMBED THROUGH THE INTERCEPTOR.

NOTES

1. PIPING, CLEANOUT CONFIGURATION, SIZE AND TYPE OF PIPING MATERIAL AS PER CITY OR SANITARY DISTRICT. INSPECTION BY SVWRD PRIOR TO BACKFILLING IS REQUIRED.
2. WIDTH OF TROUGH IN THE MANHOLE MUST BE THE SAME SIZE AS THE INLET PIPE INTO MANHOLE. DEPTH OF TROUGH MUST BE THE SAME AS 1/2 OF INLET PIPE DIAMETER.
3. CONCRETE SHALL HAVE A MINIMUM 28 DAY COMPRESSIVE STRENGTH OF 4000 PSI.
4. REINFORCEMENT STEEL SHALL BE ASTW A615 GRADE 60.
5. THE CONCRETE COVER OVER REINFORCEMENT STEEL SHALL BE A MINIMUM OF 1-1/2 INCHES.
6. THE STRUCTURE SHALL BE DESIGNED BY A REGISTERED PROFESSIONAL ENGINEER LICENSED IN THE STATE OF UTAH.
7. THE STRUCTURE SHALL BE DESIGNED FOR THE FOLLOWING LOADING CRITERIA:
   A) WALLS DESIGNED FOR A SATURATED EQUIVALENT FLUID AT-REST SOIL PRESSURE OF 90 PCF PLUS TRUCK SURCHARGES.
   B) TRUCK LOADING USING AN AASHTO H-20 TRUCK LOAD.
8. MANHOLES OVER 4 FEET IN DEPTH WILL HAVE STAINLESS OR PLASTIC STEPS.
9. ALL MANHOLES MUST HAVE ROUND NOTCHED COVERS WITH PICK HOLE FOR REMOVAL.
10. FOR NEW CONSTRUCTION, BOTTOM OF INLET PIPE INTO MANHOLE MUST BE AT LEAST 3 INCHES ABOVE THE BOTTOM OF THE TROUGH THRU THE MANHOLE.

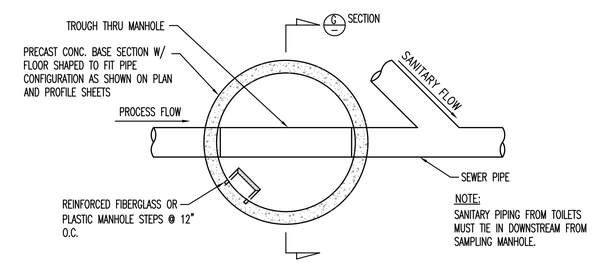

PLAN - MANHOLE

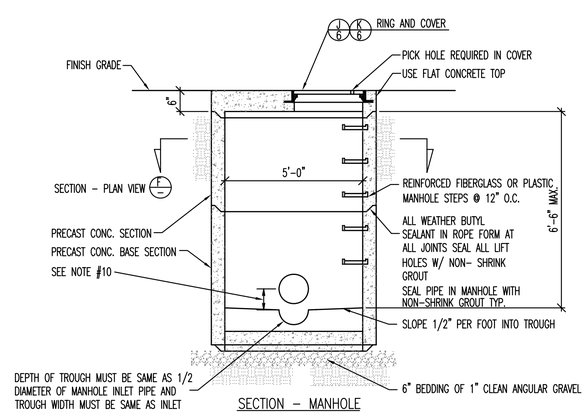

SECTION - MANHOLE

SAMPLING MANHOLE BOX 3' TO 7' DEEP (A4)
SCALE: N.T.S.

AJC PROJECT # 0502

ajc architects

703 east 1700 south
salt lake city, utah 84105
ph: 801.466.8818
fx: 801.466.4411
ajc@ajcarchitects.com

McNEIL ENGINEERING AND LAND SURVEYING
PROFESSIONAL CIVIL ENGINEERING & LAND SURVEYING SERVICES
6895 SOUTH 900 EAST MIDVALE, UTAH 84047
TEL. (801) 255-7700 FAX (801) 255-8071
E-MAIL info@mcneileng.com WEB SITE AT www.mcneileng.com

State of Utah
Department of Administrative Services
Division of Facilities Construction & Management
4110 State Office Building
Salt Lake City, Utah 84114
Phone: (801) 538 - 3018
Fax: (801) 538 - 3267
Internet: http://www.dfcm.utah.gov

ATE CENTER AT UTAH STATE PRISON

DRAPER, UTAH

SHEET NAME:

MISCELLANEOUS SITE DETAILS

REVISIONS

MARK	DATE	DESCRIPTION

ISSUE DATE: APRIL 18, 2005
ISSUE TYPE: CON. DOCS.
DRAWN BY: JHF
CHECKED BY: KAP
CAD FILE NAME:
DFCM PROJECT # 04256100
STATE PROPERTY #
COPYRIGHT: STATE OF UTAH

SHEET NUMBER:

C501

ALL IDEAS, DESIGNS, ARRANGEMENTS AND PLANS INDICATED OR REPRESENTED BY THIS DRAWING ARE OWNED BY AND THE PROPERTY OF AJC ARCHITECTS PC AND WERE CREATED, EVOLVED, AND DEVELOPED FOR USE ON AND IN CONNECTION WITH THE SPECIFIED PROJECT. NONE OF THE IDEAS, DESIGNS, ARRANGEMENTS AND PLANS INDICATED OR REPRESENTED BY THIS DRAWING ARE OWNED BY OR DISCLOSED TO ANY PERSON, FIRM, OR CORPORATION FOR ANY PURPOSE WHATSOEVER WITHOUT WRITTEN CONSENT OF AJC ARCHITECTS PC. WRITTEN DIMENSIONS ON THESE DRAWINGS SHALL HAVE PRECEDENCE OVER SCALE DIMENSIONS. CONTRACTORS SHALL VERIFY AND BE RESPONSIBLE FOR ALL DIMENSIONS AND CONDITIONS ON THE JOB AND THE OFFICE MUST BE NOTIFIED OF ANY VARIATION FROM THE DIMENSIONS AND CONDITIONS SHOWN BY THESE DRAWINGS. WARNING: REPRODUCTION OR ABSENCE IS A CRIMINAL OFFENSE UNDER 18 U.S.C. SEC. 506. UNAUTHORIZED DISCLOSURE MAY CONSTITUTE TRADE SECRET MISAPPROPRIATION IN VIOLATION OF I.C.24-2-3-11.1 ET. SEQ. AND OTHER LAWS.

I. Basis of Design

B1. Governing Building Code: 2003 International Building Code (IBC)

B2. Gravity Loading
A. Pg= 43 psf
Pf= 30 psf
Ce= 1.0
Is= 1.1
Ct= 1.0

B3. Earthquake
A. Seismic Use Group., II, IE = 1.25
B. SDS = 0.903, SD1 = 0.610, Ss = 1.354, S1 = 0.61
C. Site Class = D
D. Lateral Force Resisting System = Steel Braced Frame
E. Base shear = 0.161 (ASD) R= 5
F. Analysis procedure = Equivalent Lateral-Force Procedure
G. Seismic design category = D

B4. Wind velocity.....90 miles per hour (3 second gust speed) exposure C.
Net uplift force at roof equals 17 psf.
Importance Factor Iw.....1.15

B5. Foundation
A. Subsurface Conditions:
Soils report was obtained by the owner. The contractor shall comply with recommendations of the soils report. The report is not a warranty of all subsurface conditions. Contact Soils Engineer if you have questions.

B. Soil Report by: PSI, Inc. dated December 15, 2004.

C. Soil Bearing Pressure.....2000 psf.

II. Site Work

SW1. A minimum of 18" of topsoil shall be removed from the entire building site including all vegetation and debris.

SW2. The soils engineer shall inspect the site to verify 2500 psf soil pressure used prior to placing any footing forms. Report to architect any findings which may affect foundation and footing stability.

SW3. All bearing earth to be undisturbed earth or compacted fill. The area on which the fill is placed must be frost free. The fill shall then be placed in layers not to exceed 8 inches in depth and compacted.

SW4. All fill and back fill shall be compacted to a minimum of 95% of maximum relative density for footings and 90% for all other structural fill based on AASHTO T180.

SW5. Any fill to be placed under the building and footings shall be a well graded granular material within the limits of the following gradation, unless otherwise specified by Soils Engineer:

Sieve Size	Percent Passing
4"	100
1"	60-90
#4	30-60
#40	10-30
#200	5-12

SW6. All water shall be removed from foundation excavation prior to placing of concrete. Do not pour concrete under water.

SW7. Any unusual soil conditions (water, clay, soft layers, etc.) encountered during excavation for footings shall be immediately brought to the attention of the architect and soils engineer.

SW8. All foundation excavations shall be protected from all detrimental changes in environmental conditions such as rain and freezing.

SW9. Contractor shall coordinate the architectural, structural, and civil drawings for top of footing elevations and footing steps and excavations.

SW10. Contractor shall verify all existing and future grades. Footings shall be poured to maintain the minimum frost protection or confinement indicated on details. Footing steps shall be provided as per typical details where required by site conditions.

SW11. See geotechnical report for subgrade preparation typical.

III. Concrete and Reinforcing

C1. All work and materials shall comply with all areas of ACI318 and ACI 347 Publications and applicable ASTM Publications.

C2. Compressive strength of concrete at 28 days shall be as follows: (only 1-grade of concrete shall be poured on the job at one time). Use type II cement in contact with ground.

	Minimum Compressive Strength(psi) (At 28 Days)	Slump (+/- 1/2")	% Air Entrainment	Maximum Aggregate Size	Special Inspection Required
Footings	3000	4	NO	1 1/2"	NO
Foundations	4000	4	NO	3/4"	NO
Int.Slab on Grade	4000	3	NO	1 1/2"	NO
Ext.Slab on Grade	4000	3	5 1/2% to 7 1/2%	1 1/2"	NO
Suspended Slab	4000	4		3/4"	YES
Concrete Topping	3000	3.5	N/R	3/8"	NO
Other	4000	4	NO	3/4"	YES

C3. Hardrock aggregates shall conform to ASTM C-33. Their Maximum size shall be 3/4" except 1-1/2" shall be used for footings and slabs on grade.

C4. Where noted on drawings all lightweight concrete shall have aggregates conforming to ASTM C330 and shall have a maximum air dry density of 110 +/- 5 pcf at 28 days.
Submit test reports to Structural Engineer for review prior to pouring concrete. Tests shall include compression, air, slump, wet density and dry density. If wet density is greater than 120 psf batch shall be rejected. All tests shall be made at mixing truck.

C5. Admixtures
A. Concrete mix shall include flyash as per ASTM C618 class "F" except that maximum loss on ignition shall be limited to 1% to yield specified quantities. Flyash replacement of cement shall be limited to 20% by weight.

C6. The contractor shall submit mix design and 3, 7, and 28 days strength tests for review by the structural engineer before any concrete is poured at the job site.

C7. All concrete that is placed by pumping shall be medium range-plasticized with water reducing admixture which shall comply with specifications for chemical admixtures for concrete, ASTM designation C-494 non-chloride and shall be used in strict accordance with manufacturer's recommendations.
Product specification publication shall be submitted to structural engineer for review.

C8. Unless otherwise noted all reinforcement bars shall be securely anchored to the forms and spaced from them as follows: Minimum Coverage
A. Cast against & exposed to earth.....3 inches
B. Concrete exposed to earth or weather:
#6 though #18 bars.....2 inches
#5 bar and smaller.....1 1/2 inches
C. Not exposed to weather or in contact with ground: slabs, walls, joists:.....3/4 inches

C9. Reinforcing Steel
A. All reinforcing steel shall be bent, detailed and chaired as per the "ACI Manual of Standard Practice for Detailing Reinforcing Concrete Structures."
B. All reinforcing steel to be welded shall comply with ASTM A706.
C. All reinforcing steel shall be of new stock deformed bars conforming to ASTM A-615 grade 60 unless otherwise noted. Placement of bars in accordance with ACI 315 and ACI 318. Use bar supports per ACI 315 chapter 7 for all rebar and welded wire fabric. As per ACI 318, Section 7.5.1: "All reinforcement shall be accurately placed and adequately supported before concrete is placed and shall be secured against displacement within tolleranced permitted in 7.5.2." Wet stabbing reinforcing is not allowed.
D. Unless otherwise indicated, all anchors welded to steel plates or angles that are embedded in masonry or concrete shall be deformed bar anchors conforming to A36 Steel or ASTM A706.
E. Minimum lap lengths shall be, unless noted otherwise on drawings: #3=18" #4=19" #5=24" #6=29" #7=42" #8=48" #9=54" #10=58" #11=65".
Epoxy coated bar laps, see note M.
Leightweight concrete bar laps, multiply above values by 1.3.
See shear wall schedule for seismic lap lengths.
All vertical reinforcing bars (unless noted otherwise) shall be doweled to footing with 90 degree standard hook.
F. Reinforcing for concrete walls as follows:(unless otherwise noted on drawings)

Thickness	Horizontal Reinf	Vertical Reinf
6"	#4 at 16" o.c. each face	#4 at 18" o.c. each face
8"	#4 at 12" o.c. each face	#4 at 18" o.c. each face
10"	#4 at 15" o.c. each face	#4 at 18" o.c. each face
12"	#4 at 10" o.c. each face	#4 at 16" o.c. each face

G. All dowels shall have at least 38 bar diameter embedment.
H. Break out dowels may be used where required by contractor, however dowels shall be Grade 40 and spacing of dowels shall be decreased by 1/3.
I. Provide corner bars at all intersecting corners. Use same size bar and spacing as horizontal wall reinforcing.
J. Add 2-#5 bars around all openings (unless otherwise noted) and extend 24" beyond corner of openings. Add also 2-#5 x 4'-0 diagonally at corners. For reinforcing over opening see opening details on drawings.
K. When called for on the drawings or when directed by engineer bars that are to be epoxy doweled are to be put in holes larger than the bar diameter (1/4" larger for rebar and 1/8" larger for threaded bars). The holes shall be ten bar diameters deep for 4000 psi concrete or above and 15 bar diameters for concrete below 4000 psi and masonry. Fill holes with "Sika-Dur 31" Hi-Mod epoxy gel (or equal as approved by engineer).
All epoxy dowels and epoxy anchors are to be either threaded or deformed bars as per the drawings. Apply epoxy as per manufacturer's recommendations. Mixing shall be done using a power mixer. For cold weather application gel shall be mixed at 70 degrees and kept at 40 degrees for 72 hours after application. Impact type drilling tools shall not be used for drilling holes or tightening anchors and shear bolt nuts into or through brick.

C10. Concrete tests shall be made by testing laboratory approved by the architect, with copies of all reports being mailed to the architect and the contractor. In general, one test shall be made for each 50 cubic yards of concrete, or each days' pour if less than 50 yards, or as directed by Architect. Each test shall consist of 5 cylinders of which one shall be tested at 7 days, 2 tested at 28 days, and two retained in reserve for later tests, if required. Specimens shall be made and tested in accordance with ASTM C-172, C-31 and C-39 standards. Slump and Air entrainment test shall also be made with each set of cylinders taken. Contractor shall provide the cylinders. The testing laboratory shall transport all cylinders. The owner shall pay for all tests.

C11. Before concrete is poured, check with all trades to insure proper placement of all openings, sleeves, curbs, conduits, bolts, inserts, etc. relating to work.

C12. Drypack concrete shall be one part Portland cement and one part sand with sufficient water to allow a small amount of paste to come to the surface. Use for grouting joists and beam pockets unless otherwise noted.

C13. Under steel column base plates, concrete grout shall be non-shrink with sufficient water to allow pouring. Ultimate compressive strength (F'C) at 28 days shall = 4,000 psi. Grout shall be non-metallic, meeting CRD-C621 and in accordance with the manufacturer's published specification for mixing and placing.

C14. Formwork not supporting weight of concrete, such as sides of beams, walls, columns, and similar parts of the work, may be removed after cumulatively curing at not less than 50 degrees for 24 hours after placing concrete, provided concrete is sufficiently hard to not be damaged by form removal operations, and provided curing and protection operations are maintained. Formwork supporting weight of concrete, such as beam soffits, joints, slabs and other structural elements, may not be removed in less than 14 days or until concrete has attained 75% of its design minimum compressive strength at 28 days. Support formwork from facing materials with structural members spaced sufficiently close to prevent deflection. Fit forms placed in successive units for continuous surfaces to be accurately aligned free from irregularities and within allowable tolerances.
Provide 1/16" camber per every 2.5 feet in concrete formwork of exposed to view concrete unless otherwise indicated by Architect/Engineer.

C15. Provide a continuous 2" x 4" key in all wall footings. Unless noted otherwise on drawings.

C16. All exposed to view concrete shall be stoned smooth while green, or as directed by Architect. No grout plaster shall be permitted.
Exposed to view concrete shall have 3/4" deep "V" groove placed vertically at 8'-0" o.c. or as directed by Architect.

C17. Protect freshly placed concrete from premature drying and excessive cold or hot temperature as per ACI 318 and maintain without drying at a relatively constant temperature for a period of time necessary for hydration of cement and proper hardening.

C18. Cold weather curing and protection requirements for concrete shall conform to the requirements of IBC Section 1905 when depositing concrete at freezing temperature or below, the concrete mix shall have a temperature of at least 50 degrees but not more than 80 degrees. The concrete shall be maintained at a temperature of not less than 50 degrees and in a moist condition for not less than 7 days after placing or as directed by the structural engineer. The use of chemicals or additives to prevent freezing will not be permitted. Contractor shall prevent frost from penetrating under footings or interior slabs on grade or postpone concrete pour. Refer also to specifications and to any directive by structural engineer for additional cold weather requirements.

C19. Architect/Engineer shall be notified 48 hours prior to pouring any concrete in order to observe reinforcing placement.

C20. All concrete shall be properly vibrated in place using internal vibrating rods.

C21. Non-shored suspended concrete slabs shall be screeded off of non-deflecting elements or make adjustments for slab joist-beam deflections. Submit deflection design for review.

C22. Unless otherwise noted all concrete slabs apply a liquid type membrane forming curing compound complying with ASTM C 309, type 1, class A Moisture loss shall be not more than 0.055 gr./sq. cm. applied at 200 sq.ft./gal. When temperature is 75 degrees or more during placement do not use membrane but moist cure slab for 7 days continuous minimum or see ACI Committee 305 Report "Hot Weather Concreting". Submit method of curing for approval.

C23. All suspended concrete slabs shall be reinforced with 6x6 - W2.9 x W2.9 welded wire mesh with #4 slab dowels at 16 inches on center unless noted otherwise on drawings.

V. Structural Steel

S1. All structural steel work shall comply with the latest edition of the AISC "Standard Specifications for the Design, Fabrication and Erection of Structural Steel for Buildings", and "Code of Standard Practice". ASTM A-992 FY=50 ksi minimum specified for structural shapes, A36 steel for miscellaneous steel, and ASTM A-500 grade B for structural tubes, typical U.N.O. Cambering shall meet the standard mill practice shown on AISC "Manual of Steel Construction".

S2. Welding
A. All welding to be made by certified welders using E-70 series electrodes. (For all welding of ASTM A-572 steel, E70X8 electrodes shall be used and welding shall be as per AWS D1.1 "Structural Welding Code".)
B. All welders to be currently certified for all type of welds on this project under latest AWS D1.1, Structural Welding Code. Welders to have passed the Qualification Requirements within preceding 6 month period.
C. Welds made against concrete are to be done under the supervision of an approved testing agency and that fillet welds should be made in 1/8" passes 2" long at 4" o.c
D. All steel to steel connections not shown bolted which is continuous, shall be welded to develop full strength capacity of connecting members.
E. Minimum size of fillet weld (unless noted otherwise on drawings):

Material thickness of thicker part joined	Minimum size of of fillet weld
to 1/4" inclusive	1/8" all around
over 1/4" to 1/2"	3/16" all around
over 1/2" to 3/4"	1/4" all around
over 3/4" to 1 1/2"	5/16" all around

F. Unless otherwise noted, all structural steel to steel connections shall be made in such a manner to develop full shear capacity of connecting members as per AISC specifications.
G. Field paint all abraded and welded surfaces for joists and metal deck. Use SSPC - Paint 20 (Galvanic).
H. Unless otherwise indicated, all anchors welded to steel plates or angles that are embedded in masonry or concrete shall be deformed bar anchors conforming to A36 Steel or ASTM A706.
I. All deck bearing angles or plates shall have full penetration welds at splices and corners typical unless noted otherwise.
J. All full penetration welds shall be tested by x-ray or ultrasonic procedures by an independent testing agency approved by the architect. Where testing procedures are not physically possible, visual inspection before and during welding shall be done by an independent testing agency.
K. 10% of all shop and field welds shall be done under the direct supervision of an independent testing agency approved by the architect and tested by magnetic particle procedures.
L. Copies of all tests results are to be sent to structural engineer. Welds found to be defective shall be corrected at no extra cost to the owner.
M. All weld testing shall be paid for by the owner.

VII. General Conditions

G1. If discrepancies exist between specifications, general notes and drawings use the more expensive option.

G2. All dimensions on structural drawings shall be checked and verified against architectural drawings. All dimensions relating to existing site, buildings, installations or construction shall be field verified, all discrepancies shall be submitted to the architect. Do not proceed with fabrication and erection of materials affected until discrepancies are resolved.

G3. All omissions or discrepancies in the working drawings and or specifications shall be brought to the attention of the Architect and/or Structural Engineer before proceeding with any work involved.

G4. Shoring
A. Until all permanent members, including walls, slabs, floors and roof are in place and all connections are completed, stability of structure and all parts thereof shall be contractor's responsibility. During construction contractor shall keep construction loads within the design load limits shown on drawings. After construction is completed building owner shall keep loads on roof and floor within design limits shown on drawings.
B. Do not backfill walls until floor at top of wall is in place or adequate temporary bracing is provided.
C. Contractor shall provide shoring design calculations and drawings stamped by a Utah Registered Professional Engineer.

G5. All Construction shall be in accordance with the IBC 2003 and supplements unless higher standard is called for.

VIII. Special Inspections

Special inspections shall be done by Special Inspectors that are qualified and approved for each area of work stated below or as required by the Building Official. The special inspector shall observe the work assigned for conformance with the approved design drawings and specifications. The special inspector shall submit reports to the owner, the Building Official, the Contractor, Architect, and Bsumek Mu and Associates. The special inspectors shall conform to and fulfill all other responsibilities as outlined in section 1704 of the IBC 2003. The special inspector shall submit written reports of observations stating time, date, location of work and observation of work being done.

A. Special inspections are required for the following work:
1. Concrete and reinforcing placement. Except for the following conditions:
a. Slab on grade more than 1'-0" away from pier tie beams.
b. Site work concrete where no special hazards exist.
2. Bolts installed in concrete.
3. Bolting inspection, follow IBC Table 1704.3, Periodic.

ARCHITECT AJC Project #0502

ajc architects

703 east 1700 south
salt lake city, utah 84105
ph: 801.466.8818
fx: 801.466.4411
ajc@ajcarchitects.com

OWNER INFORMATION

State of Utah
Department of Administrative Services

Division of Facilities Construction & Management
4110 State Office Building
Salt Lake City, Utah 84114
Phone: (801) 538 - 3018
Fax: (801) 538 - 3267

Internet: http://www.dfcm.utah.gov

PROJECT DESCRIPTION

ATE CENTER AT UTAH STATE PRISON

DRAPER, UTAH

SHEET NAME:

STRUCTURAL GENERAL NOTES

REVISIONS

MARK	DATE	DESCRIPTION

ISSUE DATA

ISSUE DATE: APRIL 18, 2005
ISSUE TYPE: CON. DOCS.
DRAWN BY: DJK
CHECKED BY: RB

DFCM PROJECT # 04256100
STATE PROPERTY #
COPYRIGHT: STATE OF UTAH

SHEET NUMBER:

SE001

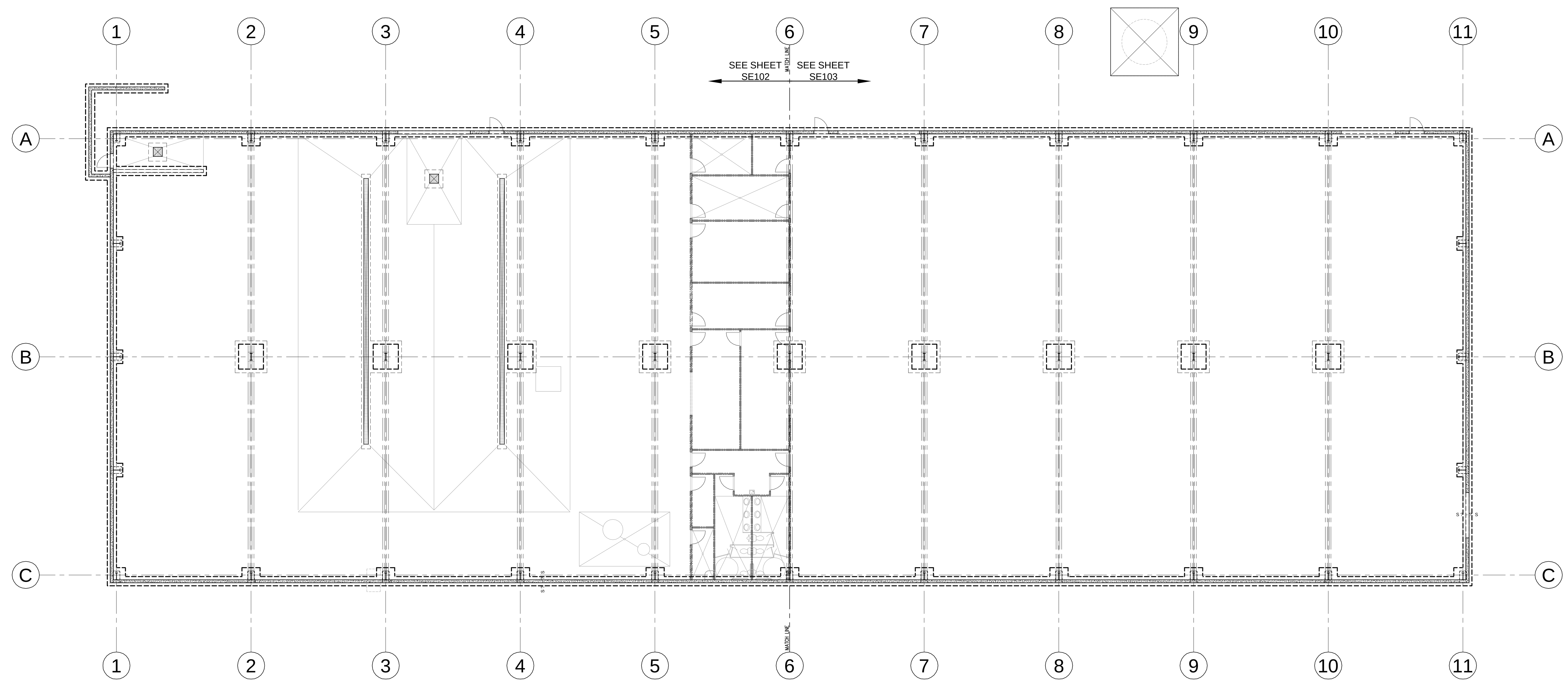

OVERALL FOOTING & FOUNDATION PLAN

SCALE: 1/16" = 1'–0"   0 8' 16' 32'

FOOTING SCHEDULE				Soil Pressure			Spot Footing= Cont. Footing= 2000 PSF				
Mark	Width	Length	Thick	Crosswise Reinforcement				Lengthwise Reinforcement				Remarks
				No.	Size	Length	Space	No.	Size	Length	Space	
FC2.0	2'–0"	CONT.	12"					2	#5	CONT.	16"	
FS3.0	3'–0"	3'–0"	12"	3	#5	2'–6"	12"	3	#5	2'–6"	12"	
FS4.0	4'–0"	4'–0"	12"	4	#5	3'–6"	12"	4	#5	3'–6"	12"	
FS5.5	5'–6"	5'–6"	15"	6	#5	10'–0"±	12"	6	#5	10'–0"±	12"	SEE DETAIL B4/SE501

NOTES: ALL EXTERIOR FOOTINGS SHALL BE PLACED A MINIMUM OF 30" DOWN FROM FINISH GRADE TO BOTTOM OF FOOTING FOR FROST PROTECTION, UNLESS NOTED OTHERWISE ON SECTION OR PLAN.
SEE SHEETS SE102 AND SE103 FOR FOOTING MARKS.
SEE A2/SE501 FOR TYPICAL DETAIL AT STEP FOOTINGS INDICATED ON PLAN BY S---S.

CONCRETE PIER SCHEDULE

CONCRETE PIER		REINFORCING			CONFIGURATION
MARK	SIZE	VERTICAL	TIES	TIE SPACING	
CP-1	18"x30"	(6) #8	(2) #4 TIE SETS	12" OC, W/ (3) TIE SETS @ 3" OC AT TOP	SEE DIAGRAM BELOW
CP-2	18"x30"	(6) #8	(2) #4 TIE SETS	12" OC, W/ (3) TIE SETS @ 3" OC AT TOP	SEE DIAGRAM BELOW
CP-3	18"x30"	(6) #8	(2) #4 TIE SETS	12" OC, W/ (3) TIE SETS @ 3" OC AT TOP	SEE DIAGRAM BELOW

CONCRETE PIER NOTES

1. Piers shall be poured monolithically with the foundation wall,. where occurs.
2. Top of pier elevation shall match finish slab elevation.
3. Coordinate anchor bolt locations and requirements with metal building manufacturer.
Note: Metal Building Manufacturer shall supply anchor bolts sufficient to develop horizontal shear loads into concrete.

CP-1 CP-2 CP-3

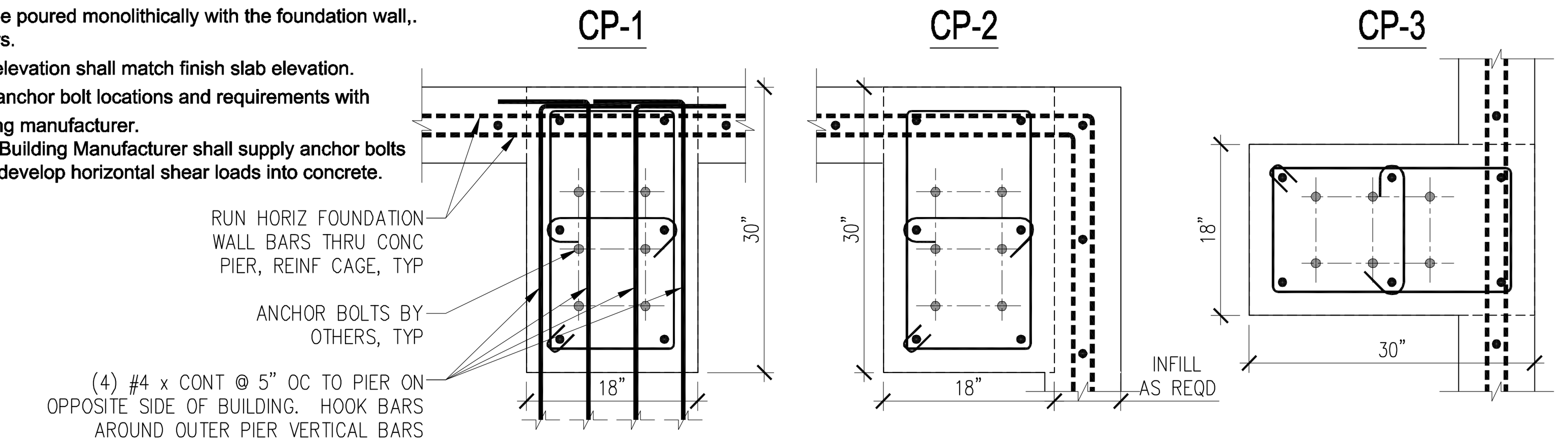

PLAN NOTES

1. 6" CONCRETE SLAB–ON–GRADE. PLACE SLAB OVER 6" LAYER OF GRAVEL BASE. SEE TYPICAL DETAIL C1/SE501 FOR CRACK CONTROL AND CONSTRUCTION JOINTS.
2. ELEVATION 100'–0" EQUALS SITE ELEVATION 101.65'.
FG DENOTES FINISH GRADE ELEVATION (RELATIVE TO FSE = 100'–0"). COORDINATE ELEVATIONS W/ CIVIL AND ARCHITECTURAL DRAWINGS.
3. FSE = 100'–0", TYPICAL, UNLESS NOTED OTHERWISE. COORDINATE WITH ARCHITECTURAL DRAWINGS FOR MISCELLANEOUS SLAB SLOPES, RECESSES, ETC., THAT MAY OCCUR.
4. FOUNDATION WALLS SHALL BE 8" THICK, TYP, U.N.O.
5. SEE SHEET SE102 AND SE103 FOR ELEVATIONS OF FOOTINGS AND FOUNDATION WALLS.

ARCHITECT AJC Project #0502
ajc architects
703 east 1700 south
salt lake city, utah 84105
ph: 801.466.8818
fx: 801.466.4411
ajc@ajcarchitects.com

OWNER INFORMATION

State of Utah
Department of Administrative Services
Division of Facilities Construction & Management
4110 State Office Building
Salt Lake City, Utah 84114
Phone: (801) 538 - 3018
Fax: (801) 538 - 3267
Internet: http://www.dfcm.utah.gov

PROJECT DESCRIPTION

ATE CENTER AT UTAH STATE PRISON

DRAPER, UTAH

SHEET NAME:

OVERALL FOOTING & FOUNDATION PLAN

REVISIONS

MARK DATE DESCRIPTION

ISSUE DATA

ISSUE DATE: APRIL 18, 2005
ISSUE TYPE: CON. DOCS.
DRAWN BY: DJK
CHECKED BY: RB

DFCM PROJECT # 04256100
STATE PROPERTY #
COPYRIGHT: STATE OF UTAH

SHEET NUMBER:

SE101

SHEET 8 OF 44 TOTAL PAGES

ALL IDEAS, DESIGNS, ARRANGEMENTS AND PLANS INDICATED OR REPRESENTED BY THIS DRAWING ARE OWNED BY AND THE PROPERTY OF AJC ARCHITECTS PC AND WERE CREATED, EVOLVED, AND DEVELOPED FOR USE ON AND IN CONNECTION WITH THE SPECIFIED PROJECT. NONE OF THE IDEAS, DESIGNS, ARRANGEMENTS OR PLANS SHALL BE USED BY OR DISCLOSED TO ANY PERSON, FIRM, OR CORPORATION FOR ANY PURPOSE WHATSOEVER WITHOUT WRITTEN CONSENT OF AJC ARCHITECTS PC. WRITTEN DIMENSIONS ON THESE DRAWINGS SHALL HAVE PRECEDENCE OVER SCALE DIMENSIONS. CONTRACTORS SHALL VERIFY AND BE RESPONSIBLE FOR ALL DIMENSIONS AND CONDITIONS ON THE JOB AND THIS OFFICE MUST BE NOTIFIED OF ANY VARIATION FROM THE DIMENSIONS AND CONDITIONS SHOWN BY THESE DRAWINGS. WARNING: REPRODUCTION HEREOF IS A CRIMINAL OFFENSE UNDER 18 U.S.C. SEC. 506. UNAUTHORIZED DISCLOSURE MAY CONSTITUTE TRADE SECRET MISAPPROPRIATION IN VIOLATION OF I.C.24-2-31-1 ET. SEQ. AND OTHER LAWS.

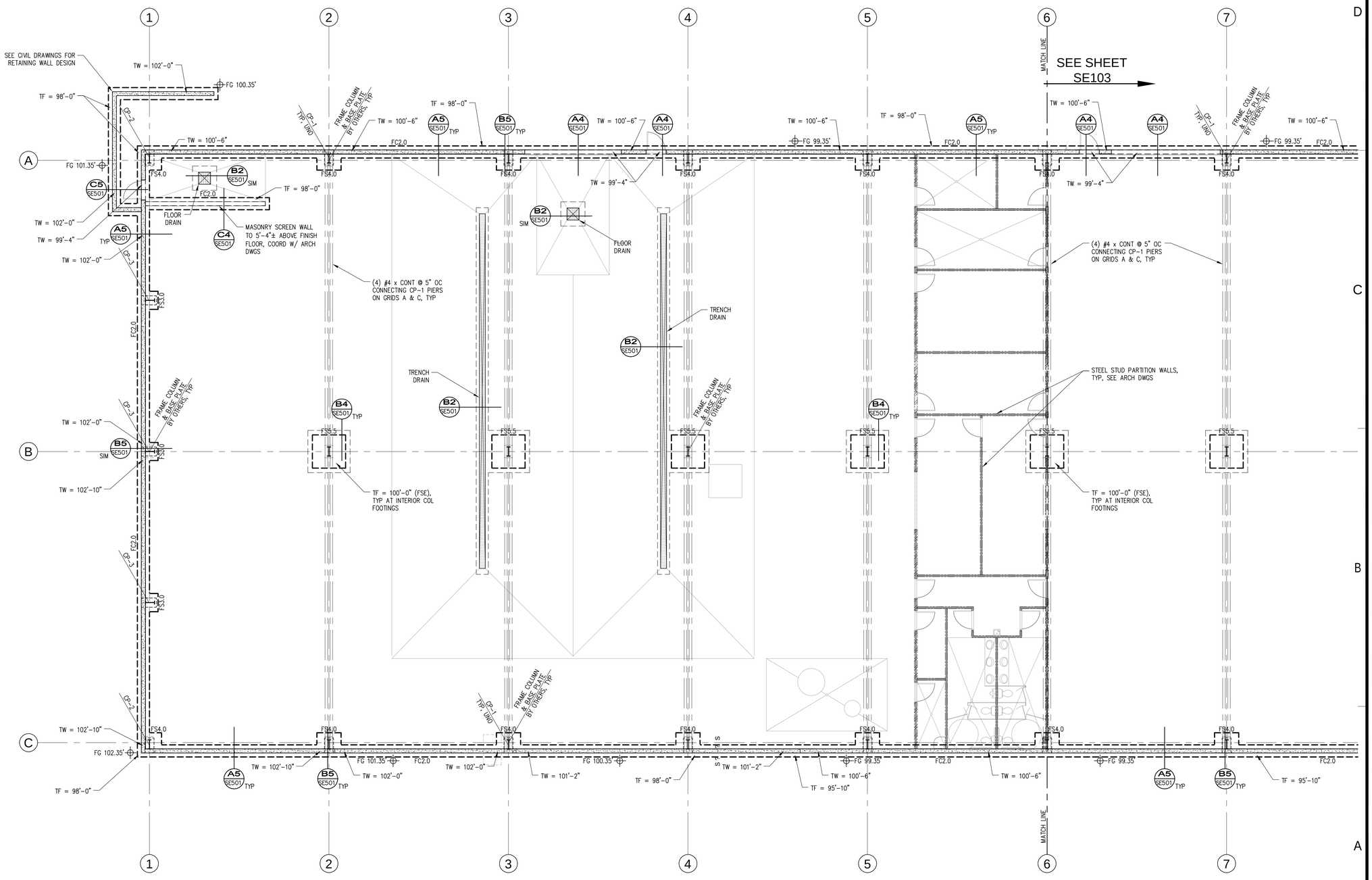

FOOTING & FOUNDATION PLAN - AUTO SHOP

SCALE: 1/8" = 1'-0"

PLAN NOTES

1. SEE PLAN NOTES ON SHEET SE101.

ALL IDEAS, DESIGNS, ARRANGEMENTS AND PLANS INDICATED OR REPRESENTED BY THIS DRAWING ARE OWNED BY AND THE PROPERTY OF AJC ARCHITECTS PC AND WERE CREATED, EVOLVED, AND DEVELOPED FOR USE ON AND IN CONNECTION WITH THE SPECIFIED PROJECT. NONE OF THE IDEAS, DESIGNS, ARRANGEMENTS OR PLANS SHALL BE USED BY OR DISCLOSED TO ANY PERSON, FIRM, OR CORPORATION FOR ANY PURPOSE WHATSOEVER WITHOUT WRITTEN CONSENT OF AJC ARCHITECTS PC. WRITTEN DIMENSIONS ON THESE DRAWINGS SHALL HAVE PRECEDENCE OVER SCALE DIMENSIONS. CONTRACTORS SHALL VERIFY AND BE RESPONSIBLE FOR ALL DIMENSIONS AND CONDITIONS ON THE JOB AND THIS OFFICE MUST BE NOTIFIED OF ANY VARIATION FROM THE DIMENSIONS AND CONDITIONS SHOWN BY THESE DRAWINGS. WARNING: REPRODUCTION VIDEOS IS A CRIMINAL OFFENSE UNDER 18 U.S.C. SEC. 506. UNAUTHORIZED DISCLOSURE MAY CONSTITUTE TRADE SECRET MISAPPROPRIATION IN VIOLATION OF UCA 24-3-1 ET. SEQ. AND OTHER LAWS.

ARCHITECT AJC Project #0502

ajc architects

703 east 1700 south
salt lake city, utah 84105
ph: 801.466.8818
fx: 801.466.4411
ajc@ajcarchitects.com

OWNER INFORMATION

State of Utah
Department of Administrative Services

Division of Facilities Construction & Management
4110 State Office Building
Salt Lake City, Utah 84114
Phone: (801) 538 - 3018
Fax: (801) 538 - 3267

Internet: http://www.dfcm.utah.gov

PROJECT DESCRIPTION

ATE CENTER AT UTAH STATE PRISON

DRAPER, UTAH

SHEET NAME:

FOOTING & FOUNDATION PLAN AUTO SHOP

REVISIONS

MARK	DATE	DESCRIPTION

ISSUE DATA

ISSUE DATE:	APRIL 18, 2005
ISSUE TYPE:	CON. DOCS.
DRAWN BY:	DJK
CHECKED BY:	RB
DFCM PROJECT #	04256100
STATE PROPERTY #	
COPYRIGHT:	STATE OF UTAH

SHEET NUMBER:

SE102

ALL IDEAS, DESIGNS, ARRANGEMENTS AND PLANS INDICATED OR REPRESENTED BY THIS DRAWING ARE OWNED BY AND THE PROPERTY OF AJC ARCHITECTS PC AND WERE CREATED, EVOLVED, AND DEVELOPED FOR USE ON AND IN CONNECTION WITH THE SPECIFIED PROJECT. NONE OF THE IDEAS, DESIGNS, ARRANGEMENTS OR PLANS SHALL BE USED BY OR DISCLOSED TO ANY PERSON, FIRM, OR CORPORATION FOR ANY PURPOSE WHATSOEVER WITHOUT WRITTEN CONSENT OF AJC ARCHITECTS PC. WRITTEN DIMENSIONS ON THESE DRAWINGS SHALL HAVE PRECEDENCE OVER SCALE DIMENSIONS. CONTRACTORS SHALL VERIFY AND BE RESPONSIBLE FOR ALL DIMENSIONS AND CONDITIONS ON THE JOB AND THE OFFICE MUST BE NOTIFIED OF ANY VARIATION FROM THE DIMENSIONS AND CONDITIONS SHOWN BY THESE DRAWINGS. WARNING: REPRODUCTION VIDEOS IS A CRIMINAL OFFENSE UNDER 18 U.S.C. SEC. 506. UNAUTHORIZED DISCLOSURE MAY CONSTITUTE TRADE SECRET MISAPPROPRIATION IN VIOLATION OF UCA 24-3-1 ET. SEQ. AND OTHER LAWS.

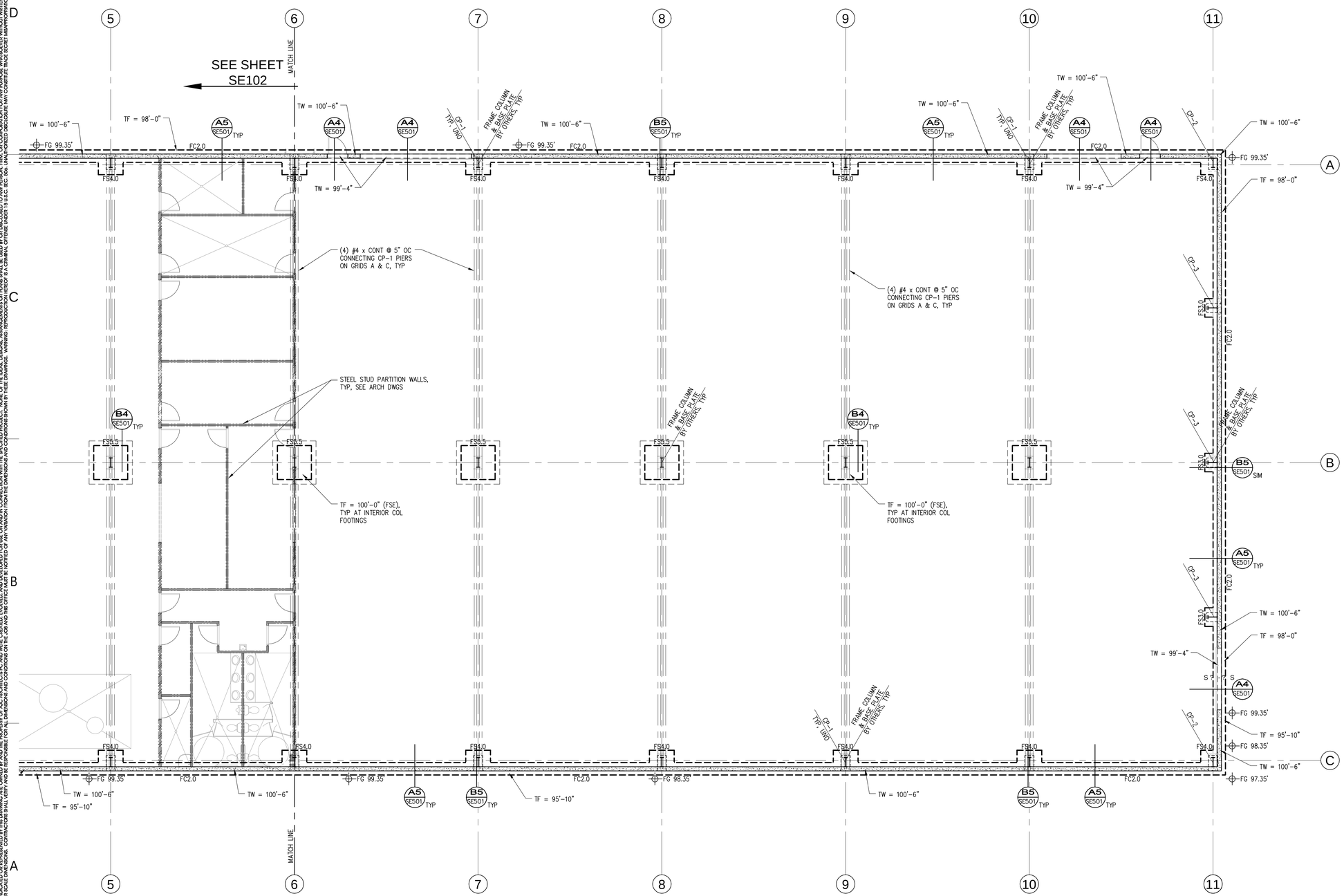

FOOTING & FOUNDATION PLAN - WOOD SHOP

SCALE: 1/8" = 1'-0" 0 4' 8' 16'

PLAN NOTES

1. SEE PLAN NOTES ON SHEET SE101.

ARCHITECT AJC Project #0502

ajc architects

703 east 1700 south
salt lake city, utah 84105
ph: 801.466.8818
fx: 801.466.4411
ajc@ajcarchitects.com

OWNER INFORMATION

State of Utah
Department of Administrative Services

Division of Facilities Construction & Management
4110 State Office Building
Salt Lake City, Utah 84114
Phone: (801) 538 - 3018
Fax: (801) 538 - 3267

Internet: http://www.dfcm.utah.gov

PROJECT DESCRIPTION

ATE CENTER AT UTAH STATE PRISON

DRAPER, UTAH

SHEET NAME:

FOOTING & FOUNDATION PLAN WOOD SHOP

REVISIONS

MARK	DATE	DESCRIPTION

ISSUE DATA

ISSUE DATE:	APRIL 18, 2005
ISSUE TYPE:	CON. DOCS.
DRAWN BY:	DJK
CHECKED BY:	RB
DFCM PROJECT #	04256100
STATE PROPERTY #	
COPYRIGHT:	STATE OF UTAH

SHEET NUMBER:

SE103

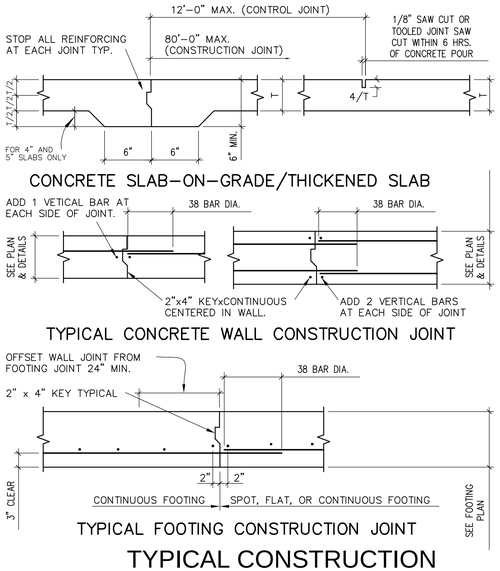

C1 TYPICAL CONSTRUCTION JOINT DETAIL

SCALE: NONE

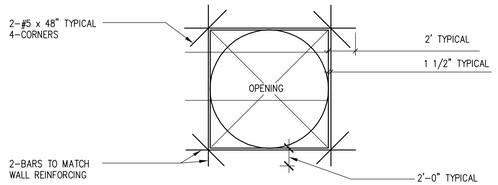

REINFORCING SCHEDULE	
SLAB	
OPENING SIZE	REINFORCEMENT
12" TO 18"	1-#4 ALL AROUND TOP AND BOTTOM
19" TO 29"	2-#4 ALL AROUND TOP AND BOTTOM
30" TO 48"	2-#5 ALL AROUND TOP AND BOTTOM
49" TO UP	SEE DRAWING.
OPENING SIZE	REINFORCEMENT
UP TO 7'-0"	2-#6's
7'-0" TO 10'-0"	2-#7's
10'-0" TO 12'-0"	2-#8's

NOTES:
WHENEVER TOP OR BOTTOM REBARS (SHOW ON PLAN) ARE INTERRUPTED BY A SLAB OPENING PLACE BARS OF SAME SIZE AND LENGTH EACH SIZE OF OPENING

C2 TYPICAL REINFORCEMENT AT OPENINGS IN SLABS WALLS OR FOOTINGS

SCALE: NONE

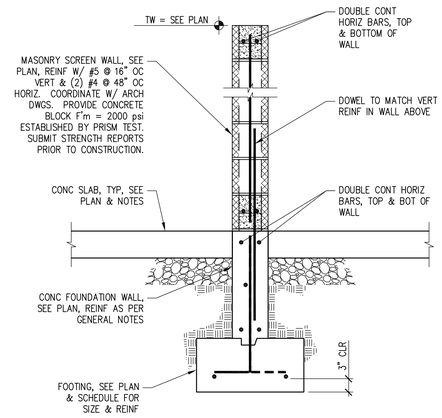

C4 MASONRY SCREEN WALL DETAIL

SCALE: 3/4" = 1'-0"

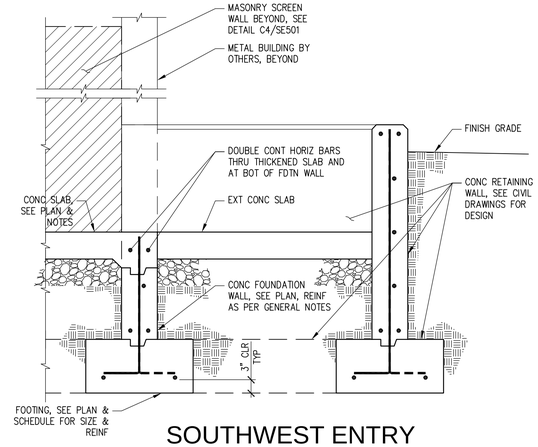

C5 SOUTHWEST ENTRY FOUNDATION WALL DETAIL

SCALE: 3/4" = 1'-0"

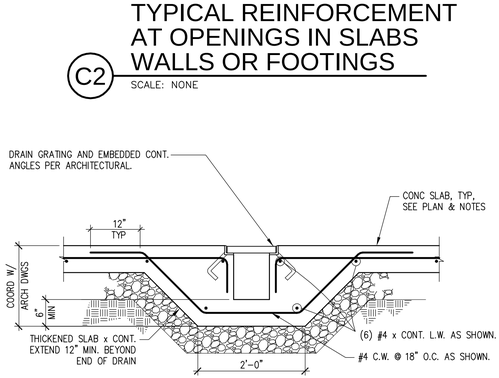

B2 THICKENED SLAB DETAIL AT TRENCH OR DRAIN

SCALE: 3/4" = 1'-0"

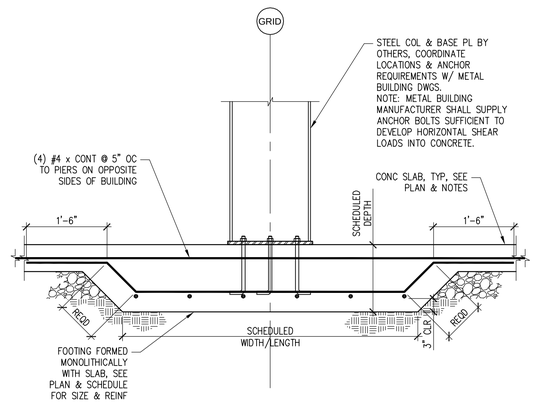

B4 TYPICAL INTERIOR COLUMN BASE DETAIL

SCALE: 3/4" = 1'-0"

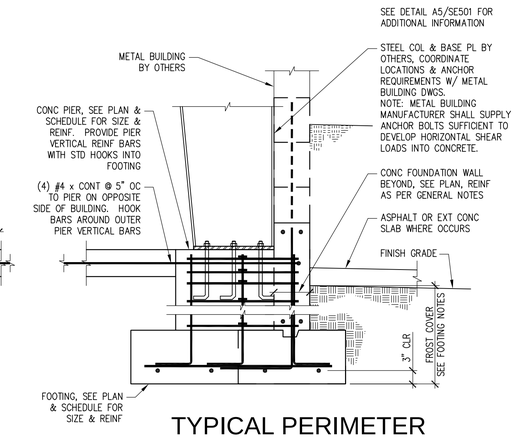

B5 TYPICAL PERIMETER COLUMN BASE DETAIL

SCALE: 3/4" = 1'-0"

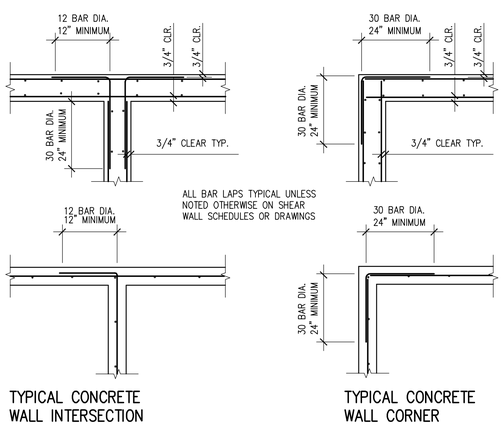

A1 TYPICAL BAR LAP DETAIL

SCALE: NONE

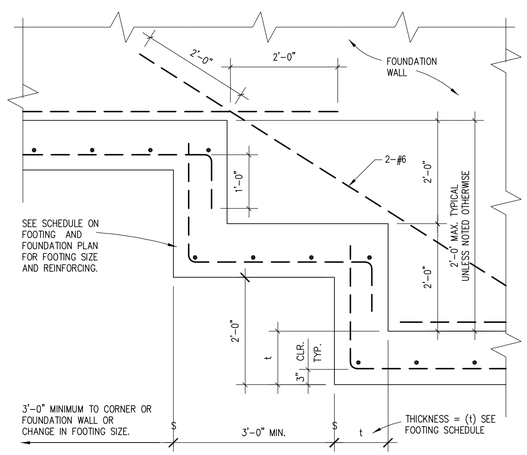

A2 TYPICAL STEP FOOTING DETAIL

SCALE: NONE

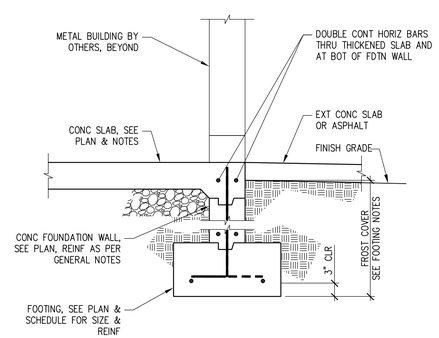

A4 TYPICAL FOUNDATION WALL AT DOOR OPENING

SCALE: 3/4" = 1'-0"

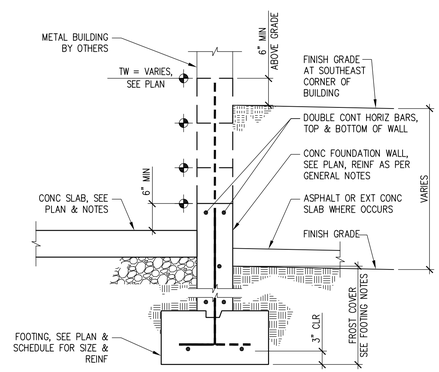

A5 TYPICAL FOUNDATION WALL DETAIL

SCALE: 3/4" = 1'-0"

ALL IDEAS, DESIGNS, ARRANGEMENTS AND PLANS INDICATED OR REPRESENTED BY THIS DRAWING ARE OWNED BY AND THE PROPERTY OF AJC ARCHITECTS PC AND WERE CREATED, EVOLVED, AND DEVELOPED FOR USE ON AND IN CONNECTION WITH THE SPECIFIED PROJECT. NONE OF THE IDEAS, DESIGNS, ARRANGEMENTS AND PLANS INDICATED OR REPRESENTED BY THIS DRAWING ARE TO BE USED BY OR DISCLOSED TO ANY PERSON, FIRM, OR CORPORATION FOR ANY PURPOSE WHATSOEVER WITHOUT WRITTEN CONSENT OF AJC ARCHITECTS PC. WRITTEN DIMENSIONS ON THESE DRAWINGS SHALL HAVE PRECEDENCE OVER SCALE DIMENSIONS. CONTRACTORS SHALL VERIFY AND BE RESPONSIBLE FOR ALL DIMENSIONS AND CONDITIONS ON THE JOB AND THE OFFICE MUST BE NOTIFIED OF ANY VARIATION FROM THE DIMENSIONS AND CONDITIONS SHOWN BY THESE DRAWINGS. WARNING: REPRODUCTION VIDEOCAT IS A CRIMINAL OFFENSE UNDER 18 U.S.C. SEC. 506. UNAUTHORIZED DISCLOSURE MAY CONSTITUTE TRADE SECRET MISAPPROPRIATION IN VIOLATION OF UC 24-2-311 ET. SEQ. AND OTHER LAWS.

ARCHITECT AJC Project #0502

ajc architects

703 east 1700 south
salt lake city, utah 84105
ph: 801.466.8818
fx: 801.466.4411
ajc@ajcarchitects.com

OWNER INFORMATION

State of Utah
Department of Administrative Services

Division of Facilities Construction & Management
4110 State Office Building
Salt Lake City, Utah 84114
Phone: (801) 538 - 3018
Fax: (801) 538 - 3267

Internet: http://www.dfcm.utah.gov

PROJECT DESCRIPTION

ATE CENTER AT UTAH STATE PRISON

DRAPER, UTAH

SHEET NAME:

STRUCTURAL DETAILS

REVISIONS

MARK	DATE	DESCRIPTION

ISSUE DATA

ISSUE DATE:	APRIL 18, 2005
ISSUE TYPE:	CON. DOCS.
DRAWN BY:	DJK
CHECKED BY:	RB
DFCM PROJECT #	04256100
STATE PROPERTY #	
COPYRIGHT:	STATE OF UTAH

SHEET NUMBER:

SE501

ABBREVIATIONS

AB	ANCHOR BOLTS
ABBREV	ABBREVIATION (S)
APPR	APPROVED
ACOUS	ACOUSTICAL
AC	ASPHALT CONCRETE
A/C	AIR CONDITIONING
AD	ACCESS DOOR
AFF.	ABOVE FINISHED FLOOR
ALUM	ALUMINUM
BD	BOARD
BLDG	BUILDING
BLK	BLOCK
BM	BEAM
B.O.B.	BOTTOM OF BEAM
BOT	BOTTOM
C/C	CENTER TO CENTER
CER	CERAMIC
CH	CEILING HEIGHT
CEM	CEMENT
CLG	CEILING
CLOS.	CLOSET
CLR	CLEAR
CMU	CONCRETE MASONRY UNIT
COL	COLUMN
COMPO	COMPOSITION
CONC	CONCRETE
CONN	CONNECTION
CONT	CONTINUOUS
CORR	CORRIDOR
CSK	COUNTERSINK
DEL	DELETE
DET	DETAIL
DF	DOUGLAS FIR
DF	DRINKING FOUNTAIN
DIA	DIAMETER
DIAG	DIAGONAL
DIM	DIMENSION
DIR	DIRECTION
DBL	DOUBLE
DN	DOWN
DO	DOOR OPENING
DR	DOOR
DS	DOWNSPOUT
DWG	DRAWING
EA	EACH
ELEC	ELECTRICAL
ELEV or EL	ELEVATION
ELEV	ELEVATOR
EQ	EQUAL
EQUIP	EQUIPMENT
EXIST	EXISTING
EJ	EXPANSION JOINT
EXT	EXTERIOR
EWC	ELEC WATER COOLER
FF	FINISH FLOOR
FHC	FIRE HOSE CABINET
FIN	FINISH
FLR	FLOOR
FO	FINISHED OPENING
FOC	FACE OF CONCRETE
FOS	FACE OF STUD
FOW	FACE OF WALL
FDN	FOUNDATION
FRP	FIBER REINFORCED PLASTIC
FD	FLOOR DRAIN
FS	FLOOR SINK
FS	FULL SIZE
FSD	FULL SIZE DETAIL
FT	FEET
FH	FULL HEIGHT
GA	GAUGE
GC	GENERAL CONTRACTOR
GL	GLASS
GALV or GV	GALVANIZED
GR	GRADE
GYP BD	GYPSUM BOARD
GSD	GRANITE SCHOOL DISTRICT
H	HIGH
HDWD	HARDWOOD
HORIZ	HORIZONTAL
HM	HOLLOW METAL
HP	HIGH POINT
ID	INSIDE DIAMETER
INSUL	INSULATION
INT	INTERIOR
JAN	JANITOR
LAV	LAVATORY
LEV	LEVEL
LTG	LIGHTING
LTWT	LIGHT WEIGHT
MAINT	MAINTENANCE
MAT'L	MATERIAL
MAX	MAXIMUM
MB	MACHINE BOLT
MECH	MECHANICAL
MET	METAL
MEZZ	MEZZANINE
MFR	MANUFACTURER
MISC	MISCELLANEOUS
MO	MASONRY OPENING
MIN	MINIMUM
MULL	MULLION
(N)	NEW
N.I.C.	NOT IN CONTRACT
NO.	NUMBER
N.T.S.	NOT TO SCALE
NR	NON-RATED
OC	ON CENTER
OCC	OPERATOR CONTROL CENTER
OD	OUTSIDE DIAMETER
OF	OVERFLOW
OFF	OFFICE
OFI	OWNER FURNISH ITEM
OFCI	OWNER FURNISHED OWNER INSTALLED
OH	OPPOSITE HAND
OPNG	OPENING
OPP	OPPOSITE
PC	PORTLAND CEMENT
PL	PLATE
PLAS	PLASTER
PLYWD	PLYWOOD
PR	PAIR
PREP	PREPARATION
PROJ	PROJECTION
PT	PRESSURE TREATED
PTDF	PRESSURE TREATED DOUGLAS FIR
QT	QUARRY TILE
R	RISER
R or RAD	RADIUS
RD	ROOF DRAIN
REF	REFERENCE
REFL	REFLECTED
REINF	REINFORCE
REQ'D	REQUIRED
RES	RESILIENT
RM	ROOM
R.O.	ROUGH OPENING
REDWD	REDWOOD
SECT	SECTION
SHT	SHEET
SIM	SIMILAR
SIMUL	SIMULATED
SPECS	SPECIFICATIONS
SS	STAINLESS STEEL
STA	STATION
STD	STANDARD
STL	STEEL
SQ	SQUARE
STRUCT	STRUCTURAL
SUSP	SUSPENDED
SYM	SYMMETRICAL
T	TREAD
TBC	TOP BACK OF CURB
TDC	TRAFFIC DECK COVERING
T & G	TONGUE & GROOVE
TEMP	TEMPERED
TEL	TELEPHONE
THK	THICK
T.O.C.	TOP OF CONCRETE or CURB
T.O.F.	TOP OF FOOTING
T.O.P.	TOP OF PARAPET
T.O.S.	TOP OF STEEL
TYP	TYPICAL
T.O.W.	TOP OF WALL
UNO	UNLESS NOTED OTHERWISE
VER	VERTICAL
W	WIDE
W/	WITH
WC	WATER CLOSET
WD	WOOD
WI	WROUGHT IRON
WL	WATER LEVEL
WP	WORKING POINT
WP	WATERPROOFING

MATERIALS LEGEND (TYPICAL PLAN VIEWS)

NEW CONSTRUCTION

ALL NEW CONSTRUCTION IS SHOWN HATCHED AS ILLUSTRATED BELOW
ALL NEW CONSTRUCTION IS FULLY NOTED AS SHOWN BELOW
ALL WORK IS NEW UNLESS LABELED "EXISTING"

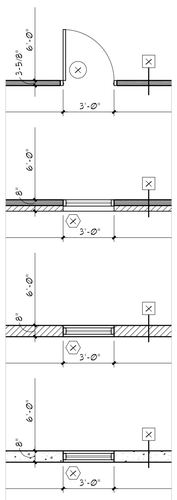

METAL OR WOOD STUD FRAMED WALL
- ACTUAL WIDTH OF WALL DIMENSIONED
- WIDTH OF WALL DIMENSIONED TO FACE OF STUD
- DOORS DIMENSIONED TO NOMINAL DOOR SIZE EXCLUDING FRAME
- WINDOWS DIMENSIONED TO NOMINAL FRAME SIZE - NOT ROUGH OPENING

METAL OR WOOD STUD FRAMED WALL W/ MASONRY OR STONE VENEER
- WIDTH OF WALL DIMENSIONED FROM FACE OF STUD TO OVERALL NOMINAL WIDTH.
- WIDTH OF WALL DIMENSIONED TO FACE OF STUD AT INTERIOR.
- DOORS DIMENSIONED TO NOMINAL DOOR SIZE EXCLUDING FRAME
- WINDOWS DIMENSIONED TO NOMINAL FRAME SIZE - NOT ROUGH OPENING

MASONRY WALL
- WIDTH OF WALL DIMENSIONED TO NOMINAL SIZE.
- DOORS DIMENSIONED TO NOMINAL DOOR SIZE EXCLUDING FRAME
- WINDOWS DIMENSIONED TO NOMINAL FRAME SIZE - NOT ROUGH OPENING

CONCRETE WALL
- ACTUAL WIDTH OF WALL DIMENSIONED
- DOORS DIMENSIONED TO NOMINAL DOOR SIZE EXCLUDING FRAME
- WINDOWS DIMENSIONED TO NOMINAL FRAME SIZE - NOT ROUGH OPENING

EXISTING CONDITIONS

ALL EXISTING CONSTRUCTION IS SHOWN WITHOUT HATCH AS ILLUSTRATED BELOW
ALL EXISTING CONSTRUCTION IS LABELED "EXISTING" BY KEYNOTE OR OTHERWISE
ALL DIMENSIONS TO EXISTING ARE APPROXIMATE ONLY AND ARE TO BE FIELD VERIFIED BY THE CONTRACTOR.

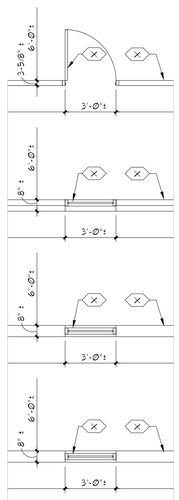

EXISTING
METAL OR WOOD STUD FRAMED WALL
- WIDTH OF WALL DIMENSIONED TO FINISHED FACE.
- DOORS DIMENSIONED TO NOMINAL DOOR SIZE EXCLUDING FRAME
- WINDOWS DIMENSIONED TO NOMINAL FRAME SIZE

EXISTING
METAL OR WOOD STUD FRAMED WALL W/ MASONRY OR STONE VENEER
- WIDTH OF WALL DIMENSIONED FROM FINISH FACE TO OVERALL NOMINAL WIDTH.
- DOORS DIMENSIONED TO NOMINAL DOOR SIZE EXCLUDING FRAME
- WINDOWS DIMENSIONED TO NOMINAL FRAME SIZE

EXISTING
MASONRY WALL (TO REMAIN)
- WIDTH OF WALL DIMENSIONED TO NOMINAL SIZE.
- DOORS DIMENSIONED TO NOMINAL DOOR SIZE EXCLUDING FRAME
- WINDOWS DIMENSIONED TO NOMINAL FRAME SIZE

EXISTING
CONCRETE WALL (TO REMAIN)
- NOMINAL WIDTH OF WALL DIMENSIONED
- DOORS DIMENSIONED TO NOMINAL DOOR SIZE EXCLUDING FRAME
- WINDOWS DIMENSIONED TO NOMINAL FRAME SIZE

NEW CONSTRUCTION AT EXISTING

NEW CONSTRUCTION SHOWN HATCHED W/ THICKER LINE
ALL EXISTING COMPONENTS SHOWN THIN LINE SOLID, NO HATCH.

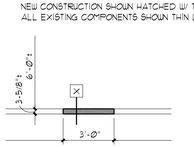

DEMOLITION AT EXISTING CONDITIONS

ALL EXISTING COMPONENTS SHOWN THIN LINE SOLID, NO HATCH.
ALL COMPONENTS TO BE DEMOLISHED ARE SHOWN DASHED, THIN LINE

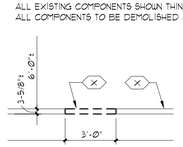

SYMBOLS

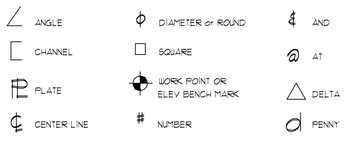

DETAIL TAGS

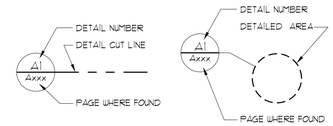

DETAIL TAGS

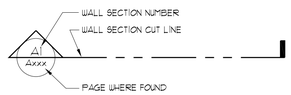

WALL SECTION TAG

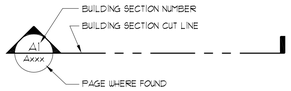

BUILDING SECTION TAG

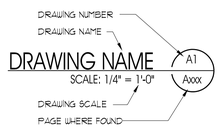

DRAWING TITLE

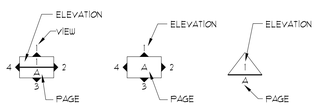

INTERIOR ELEVATION TAGS

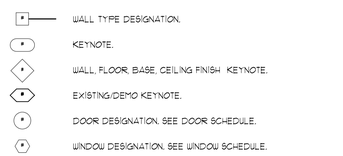

MISCELLANEOUS KEYED NOTE SYMBOLS

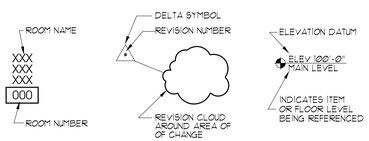

ROOM NAME TAG | REVISION CLOUD | DATUM TAG

GENERAL NOTES:

0.1 THE GENERAL CONTRACTOR SHALL HEREAFTER BE REFERRED TO AS "GENERAL CONTRACTOR" OR "GC". THE OWNER MAY HEREAFTER BE REFERRED TO AS "OWNER"

0.2 PLEASE NOTE:
THE GENERAL CONTRACTOR IS RESPONSIBLE FOR ALL WORK REGARDLESS OF THE LOCATION OF THE INFORMATION IN THE DOCUMENTS. THE GENERAL CONTRACTOR SHALL UTILIZE THE CONSTRUCTION DRAWINGS AND WRITTEN SPECIFICATIONS FOR ALL REQUIRED INFORMATION TO PROVIDE COMPLETE CONSTRUCTION OF THIS PROJECT. ITEMS LISTED IN DRAWINGS MAY NOT BE INCLUDED IN SPECIFICATIONS. ITEMS LISTED IN SPECIFICATIONS MAY NOT BE INCLUDED IN DRAWINGS.

0.3 UNLESS OTHERWISE INDICATED IN THE CONSTRUCTION DOCUMENTS AS BEING NOT IN CONTRACT (N.I.C.) OR EXISTING, ALL ITEMS, MATERIALS AND INSTALLATION OF SAME ARE PART OF THE CONTRACT AS DEFINED BY THE CONSTRUCTION DOCUMENTS. THE GC SHALL PROVIDE AND INSTALL ALL ACCESSORIES, COMPONENTS AND ASSEMBLIES REQUIRED FOR THE WORK DEPICTED OR SPECIFIED.

0.4 THE GENERAL CONTRACTOR SHALL FIELD VERIFY ALL CONDITIONS AND DIMENSIONS PRIOR TO BEGINNING ANY WORK AND SHALL BE RESPONSIBLE FOR ALL WORK AND MATERIALS INCLUDING THOSE FURNISHED BY SUBCONTRACTORS. THE GC SHALL ACCEPT PREMISES AS FOUND. OWNER WILL MAINTAIN THE EXISTING CONDITION OF THE SITE AND EXISTING STRUCTURES AT THE TIME OF BIDDING.

0.5 DISCREPANCIES BETWEEN PORTIONS OF THE CONTRACT DOCUMENTS ARE NOT INTENDED. THE GENERAL CONTRACTOR IS TO CLARIFY WITH THE ARCHITECT ANY SUCH DISCREPANCIES PRIOR TO COMMENCING WORK.

0.6 DIMENSIONS TAKE PRECEDENCE OVER DRAWINGS; DO NOT SCALE DRAWINGS TO DETERMINE ANY LOCATIONS. THE ARCHITECT SHALL BE NOTIFIED OF ANY DISCREPANCY PRIOR TO CONTINUING WITH WORK.

0.7 ALL PLAN DIMENSIONS ARE FROM GRIDLINE OR FACE OF STUD OR FACE OF BLOCK UNLESS OTHERWISE INDICATED. SEE SECTION ON "DIMENSIONING" THIS SHEET.

0.8 THE CONTRACTOR SHALL REPORT TO THE ARCHITECT ALL CONDITIONS REQUIRING COORDINATION/ CHANGES WITH THE CONTRACT DOCUMENTS. COORDINATION / APPROVAL SHALL TAKE PLACE BEFORE THE WORK BEGINS. ALL CHANGES TO THE CONTRACT COST SHALL BE APPROVED THROUGH A CHANGE ORDER

0.9 DETAILED DRAWINGS AND LARGER SCALE DRAWINGS TAKE PRECEDENCE OVER SMALL SCALE DRAWINGS.

0.10 THE ARCHITECT WILL REVIEW SHOP DRAWINGS AND SAMPLES FOR CONFORMANCE WITH DESIGN CONCEPT OF THE PROJECT. THE ARCHITECT'S REVIEW OF A SEPARATE ITEM SHALL NOT INDICATE APPROVAL OF AN ASSEMBLY IN WHICH THE ITEM FUNCTIONS. THE ARCHITECT WILL NOT REVIEW SHOP DRAWINGS UNTIL THE GC HAS REVIEWED AND STAMPED THE SHOP DRAWING/SUBMITTAL. THE GC IS RESPONSIBLE FOR FIELD VERIFYING ALL DIMENSIONS SHOWN ON THE SHOP DRAWINGS. THE ARCHITECT'S REVIEW OF THE SHOP DRAWINGS SHALL NOT OVERRIDE THE CONDITIONS DESCRIBED IN THE CONTRACT DOCUMENTS UNLESS SPECIFICALLY NOTED OTHERWISE BY THE ARCHITECT

0.11 FOR CONSTRUCTION DETAILS NOT SHOWN, USE THE MANUFACTURER'S STANDARD DETAILS OR APPROVED SHOP DRAWINGS / DATA SHEETS IN ACCORDANCE WITH THE PROJECT SPECIFICATIONS.

0.12 THE GENERAL CONTRACTOR SHALL REFER AND CONFORM TO ALL RECOMMENDATIONS AND FINDINGS AS SET FORTH IN THE GEOTECHNICAL REPORT. THE ARCHITECT ACCEPTS NO RESPONSIBILITY FOR THE ACCURACY OF THE FINDINGS OR FOR THE FINAL RECOMMENDATIONS.

0.13 FOR GRADING, TRENCHING ETC, CONTACT THE ARCHITECT FOR INSTRUCTIONS PRIOR TO THE CONTINUATION OF WORK SHOULD ANY UNUSUAL CONDITIONS BECOME APPARENT DURING GRADING OR FOUNDATION CONSTRUCTION. EXISTING ELEVATIONS AND LOCATIONS TO BE JOINED SHALL BE VERIFIED BY THE GENERAL CONTRACTOR BEFORE CONSTRUCTION.

1.1 ALL WORK, MATERIALS AND METHODS SHALL BE IN CONFORMANCE WITH THE CODES, ORDINANCES AND REGULATIONS OF ALL GOVERNMENTAL AGENCIES HAVING JURISDICTION AT THE PROJECT LOCATION. THE GENERAL CONTRACTOR MUST COMPLY WITH THE CONTRACTOR REGISTRATION REQUIREMENTS OF ALL GOVERNING AUTHORITIES.

1.2 ALL PROJECT CONSTRUCTION SHALL CONFORM WITH ANSI A-117.1-1998, AND THE AMERICANS WITH DISABILITIES ACT (ADA).

1.3 THE GENERAL CONTRACTOR SHALL NOTIFY ALL APPLICABLE LOCAL GOVERNING AUTHORITIES AND UTILITY COMPANIES PRIOR TO COVERING UP ANY WORK REQUIRING INSPECTION.

1.4 THE GENERAL CONTRACTOR SHALL MAINTAIN ALL REQUIRED EXITS AND FIRE LANES IN WORKING ORDER.

1.5 THE GENERAL CONTRACTOR SHALL PROVIDE AND INSTALL FIRE EXTINGUISHERS, GOVERNING CODES AND THE FIRE MARSHALL, HAVING JURISDICTION SHALL DICTATE SIZE, TYPE, QUANTITY AND LOCATIONS OF BOTH TEMPORARY AND PERMANENT FIRE EXTINGUISHERS.

1.6 MINIMUM FLAME SPREAD CLASSIFICATION OF INTERIOR FINISH SHALL CONFORM TO THE BUILDING CODE AND LOCAL GOVERNING BUILDING CODES/ORDINANCES.

2.1 THE GENERAL CONTRACTOR SHALL PROVIDE AND IS SOLELY RESPONSIBLE AND LIABLE FOR PUBLIC AND EMPLOYEE PROTECTION AS NECESSARY AND AS REQUIRED BY THE CODES, INCLUDING EXTERIOR AND INTERIOR PEDESTRIAN TRAFFIC BARRIERS. ALL WORK SHALL CONFORM TO THE ORDINANCES AND REGULATIONS OF GOVERNMENTAL AGENCIES HAVING JURISDICTION AT THE PROJECT.

2.2 ALL DEBRIS SHALL BE REMOVED FROM PREMISES AND ALL AREAS SHALL BE LEFT IN A CLEAN (BROOM) CONDITION AT ALL TIMES.

2.3 IT SHALL BE THE RESPONSIBILITY OF THE GENERAL CONTRACTOR TO LOCATE ALL EXISTING UTILITIES, WHETHER SHOWN HEREIN OR NOT, AND TO PROTECT THEM FROM DAMAGE. THE GENERAL CONTRACTOR SHALL BEAR ALL EXPENSE OF REPAIR OR REPLACEMENT OF UTILITIES OR OTHER PROPERTY DAMAGED BY OPERATIONS IN CONJUNCTION WITH THE PROSECUTION OF THE WORK.

2.4 APPROVED PLANS SHALL BE KEPT IN A PLAN BOX AND SHALL NOT BE USED BY WORKMEN. ALL CONSTRUCTION SETS SHALL REFLECT THE SAME INFORMATION. THE GENERAL CONTRACTOR SHALL ALSO MAINTAIN, IN GOOD CONDITION, ONE COMPLETE SET OF PLANS WITH ALL REVISIONS, ADDENDA AND CHANGE ORDERS, ON THE PREMISES AT ALL TIMES. THESE ARE TO BE KEPT UNDER THE CARE OF THE JOB SUPERINTENDENT.

2.5 THE GENERAL CONTRACTOR SHALL BE RESPONSIBLE FOR AND SHALL REPLACE OR REMEDY ANY FAULTY, IMPROPER OR INFERIOR MATERIALS OR WORKMANSHIP WHICH SHALL APPEAR WITHIN ONE (1) YEAR (OR AS OTHERWISE SPECIFIED) FOR A SPECIFIC COMPONENT AFTER THE DATE OF SUBSTANTIAL COMPLETION, EXCEPTION: THE ROOFING SUBCONTRACTOR SHALL FURNISH AND MAINTAIN AN AGREEMENT CO-SIGNED BY THE GENERAL CONTRACTOR TO MAINTAIN THE ROOFING IN A WATERTIGHT CONDITION FOR A PERIOD AS LISTED IN THE SPECIFICATIONS, STARTING AFTER DATE OF SUBSTANTIAL COMPLETION.

2.6 CONTRACTOR SHALL PROVIDE TEMPORARY WATER, POWER, TOILET FACILITIES AND ON SITE PHONE OR CELLULAR.

2.7 WHERE GAS SERVICE IS BEING PROVIDED, THE GC SHALL PROVIDE AN OUTSIDE GAS SHUT-OFF VALVE CONSPICUOUSLY MARKED.

2.8 ALL EXPOSED ELECTRICAL EQUIPMENT SHALL BE PAINTED TO MATCH ADJACENT SURFACES.

2.9 THE GENERAL CONTRACTOR IS TO ASSURE THAT NO REBAR OR REINFORCEMENT IS PRESENT PRIOR TO CORE DRILLING OR PLACING BOLTS OR ANY OTHER ITEM WHICH COULD DISTURB THE STRUCTURAL SLAB OR FOUNDATION WALLS.

2.10 PROVIDE GALVANIC PROTECTION BETWEEN DISSIMILAR MATERIALS WHERE REQUIRED.

2.11 ALL PENETRATIONS THROUGH ANY SURFACE SHALL BE THOROUGHLY SEALED WITH APPROPRIATE SEALANT MATERIAL.

2.12 UNLESS OTHERWISE NOTED, ALL EXTERIOR AND INTERIOR METAL, TRIM, TREILLAGE, RAILINGS, MOLDINGS, FRAMES, CASTING ETC., SHALL BE PAINTED.

2.13 FOR PLUMBING, FIRE SPRINKLER AND ELECTRICAL SYSTEMS, PROVIDE APPROVED ASSEMBLIES WITH SELF CLOSING DEVICES FOR ANY PENETRATIONS IN RATED CONSTRUCTION.

MATERIALS LEGEND (TYPICAL SECTION VIEWS)

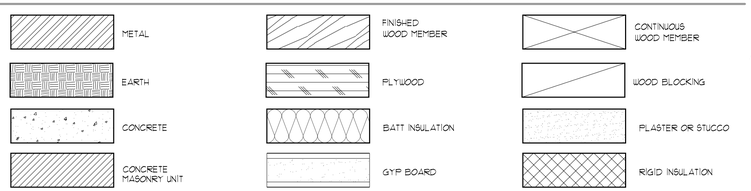

ARCHITECT/AJC PROJECT # 0502

ajc architects

703 east 1700 south
salt lake city, utah 84105
ph: 801.466.8818
fx: 801.466.4411
ajc@ajcarchitects.com

OWNER INFORMATION

State of Utah
Department of Administrative Services

Division of Facilities Construction & Management
4110 State Office Building
Salt Lake City, Utah 84114
Phone: (801) 538 - 3018
Fax: (801) 538 - 3267

Internet: http://www.dfcm.utah.gov

PROJECT DESCRIPTION

ATE CENTER AT UTAH STATE PRISON

DRAPER, UTAH

SHEET NAME:

GEN. NOTES, SYMBOLS, LEGENDS AND ABBREVIATIONS

REVISIONS

MARK	DATE	DESCRIPTION

ISSUE DATA

ISSUE DATE:	APRIL 18, 2005
ISSUE TYPE:	CON. DOCS.
DRAWN BY:	BJA
CHECKED BY:	KRR
CAD FILE NAME:	0502AE101
DFCM PROJECT #	04256100
STATE PROPERTY #	
COPYRIGHT:	STATE OF UTAH

SHEET NUMBER:

GI002

SHEET 12 OF 44 TOTAL PAGES

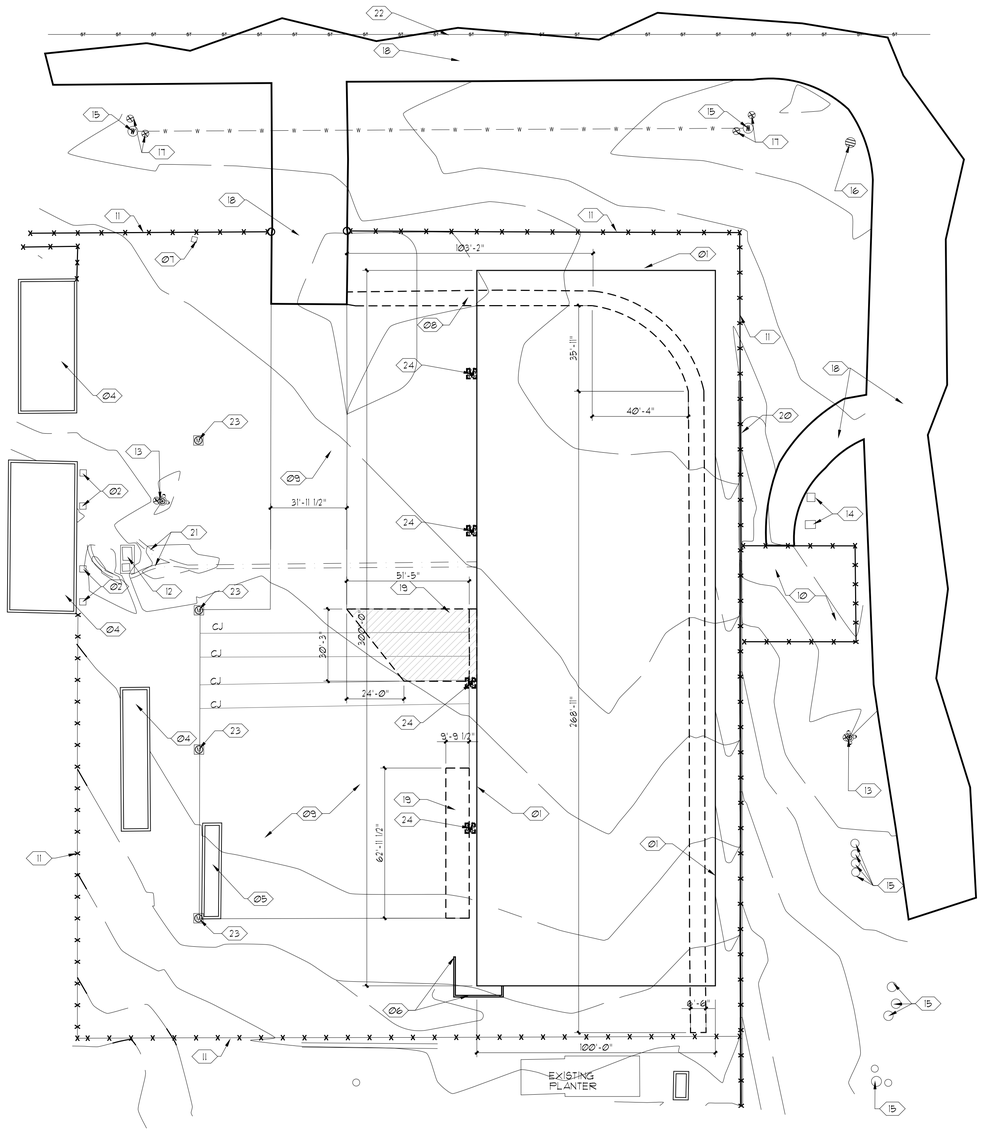

DEMOLITION SITE PLAN

SCALE: 1"=30'-0"

A4 / AS101

NORTH

PLAN NORTH

GENERAL NOTES AND LEGEND:

*FOR SHEET AS100 ONLY.

- SEE SHEET G000 FOR GENERAL NOTES.
- SEE COVER SHEET FOR DRAWING INDEX.
- DO NOT SCALE DRAWINGS.
- CONTRACTOR SHALL VERIFY ALL DIMENSIONS AND CONDITIONS BEFORE BEGINNING WORK AND SHALL REPORT TO THE ARCHITECT ANY ERRORS, INCONSISTENCIES OR OMISSIONS BEFORE BEGINNING WORK. SEE GENERAL NOTES AND SPECIFICATIONS.
- **SITE PLAN ROTATED 180 DEGREES FROM CIVIL PLANS**

EXISTING / DEMO KEYED NOTE LEGEND:

*FOR SHEET AS100 ONLY.

01. LOCATION OF NEW BUILDING PRE-ENGINEERED METAL BUILDING SHOWN FOR REFERENCE ONLY
02. EXISTING AIR UNIT TO REMAIN - PROTECT.
03. APPROXIMATE LOCATION OF EXISTING STEAM LINE - SEE CIVIL.
04. EXISTING BUILDING TO REMAIN.
05. EXISTING STORAGE CONTAINER TO REMAIN.
06. LOCATION OF NEW RETAINING WALL SHOWN FOR REFERENCE ONLY.
07. EXISTING TELEPHONE TERMINAL RISER TO REMAIN - SEE ELECTRICAL SITE PLAN E510.
08. EXISTING CONCRETE WALK TO BE REMOVED.
09. EXISTING CONCRETE PAVING TO REMAIN - PROTECT.
10. EXISTING SEWAGE STATION TO REMAIN - PROTECT.
11. EXISTING FENCE TO REMAIN - PROTECT.
12. LOCATION OF EXISTING TRANSFORMER AND PAD - SEE ELECTRICAL SITE PLAN E510.
13. EXISTING FIRE HYDRANT TO REMAIN - PROTECT.
14. EXISTING WATER LINE ACCESS COVER TO REMAIN - PROTECT.
15. EXISTING MAINTENANCE HOLE COVER TO REMAIN - PROTECT.
16. EXISTING SUMP TO REMAIN - PROTECT.
17. EXISTING BLOWOFF VALVE TO REMAIN - PROTECT.
18. EXISTING ASPHALT PAVING TO REMAIN - PROTECT.
19. SAWCUT AND REMOVE EXISTING CONCRETE SLAB ON GRADE SHOWN DASHED.
20. EXISTING LOW WALL TO REMAIN - PROTECT.
21. EXISTING OPEN TRENCH.
22. EXISTING STEAM LINE.
23. ELECTRICAL METER TO REMAIN.
24. ELECTRICAL METER TO BE REMOVED / REINSTALLED - SEE ELECTRICAL DRAWINGS.

NOTE: EXISTING CONTOURS SHOWN FOR REFERENCE ONLY, SEE GRADING PLAN SHEET C201AND UTILITY PLAN SHEET C401.

ARCHITECTAJC PROJECT # 0502

ajc architects

703 east 1700 south
salt lake city, utah 84105
ph: 801.466.8818
fx: 801.466.4411
ajc@ajcarchitects.com

OWNER INFORMATION

State of Utah
Department of Administrative Services

Division of Facilities
Construction & Management
4110 State Office Building
Salt Lake City, Utah 84114
Phone: (801) 538 - 3018
Fax: (801) 538 - 3267

Internet: http://www.dfcm.utah.gov

PROJECT DESCRIPTION

ATE CENTER AT UTAH STATE PRISON

DRAPER, UTAH

SHEET NAME:

DEMOLITION SITE PLAN

REVISIONS

MARK	DATE	DESCRIPTION

ISSUE DATA

ISSUE DATE:	APRIL 18, 2005
ISSUE TYPE:	CON. DOCS.
DRAWN BY:	BJA
CHECKED BY:	KRR
CAD FILE NAME:	0502AS101
DFCM PROJECT #	04256100
STATE PROPERTY #	
COPYRIGHT:	STATE OF UTAH

SHEET NUMBER:

AS101

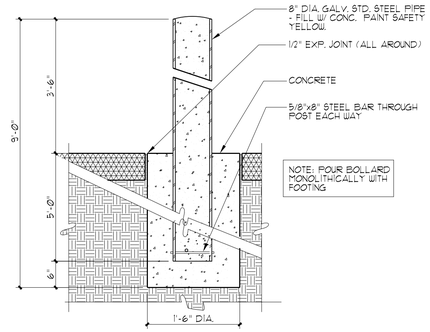

BOLLARD DETAIL

D3 / AS102

SCALE: 1" = 1'-0"

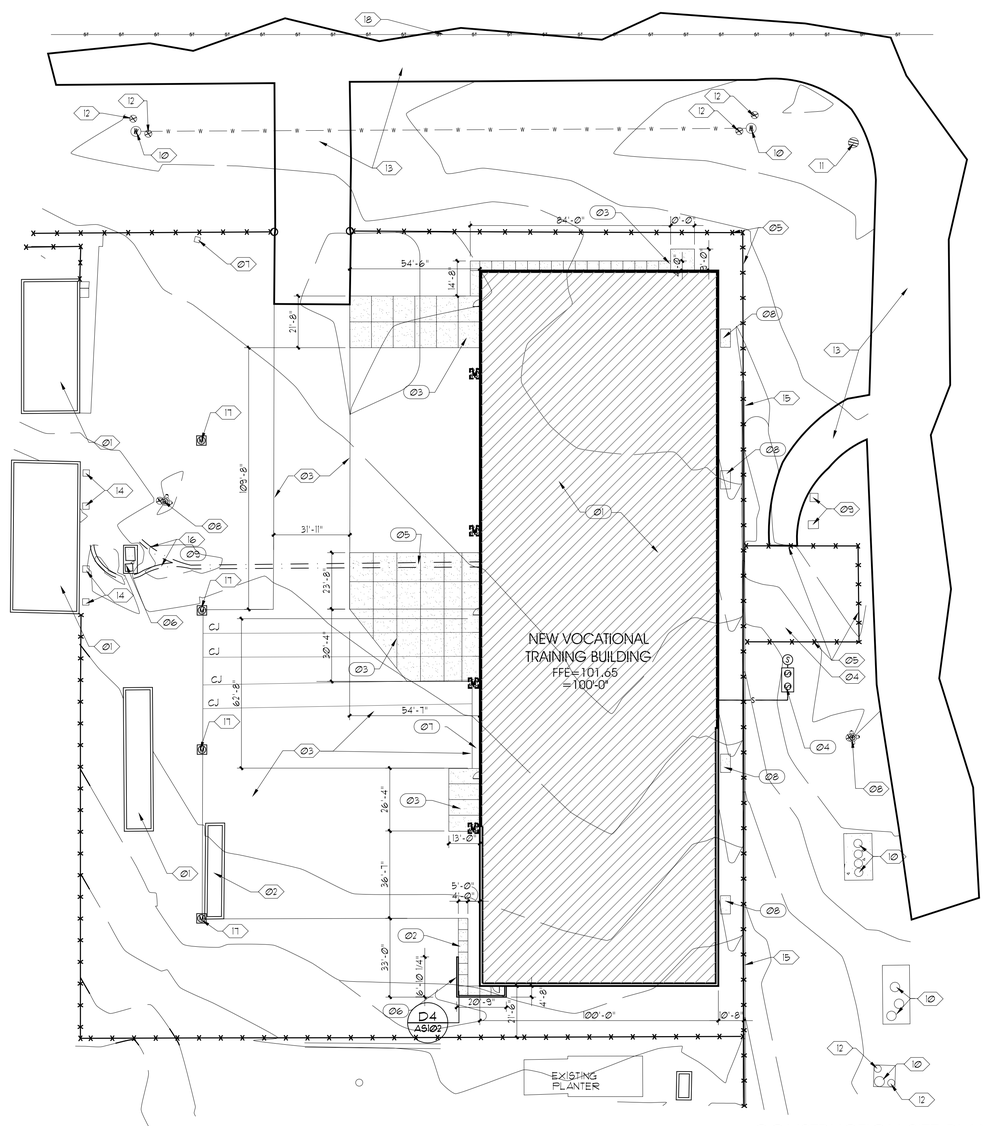

CONSTRUCTION SITE PLAN

A4 / AS102

SCALE: 1"=30'-0"

NORTH PLAN NORTH

GENERAL NOTES AND LEGEND:

*FOR SHEET AS102 ONLY.

- SEE SHEET G.1 FOR GENERAL NOTES.
- SEE COVER SHEET FOR DRAWING INDEX.
- DO NOT SCALE DRAWINGS.
- CONTRACTOR SHALL VERIFY ALL DIMENSIONS AND CONDITIONS BEFORE BEGINNING WORK AND SHALL REPORT TO THE ARCHITECT ANY ERRORS, INCONSISTENCIES OR OMISSIONS BEFORE BEGINNING WORK. SEE GENERAL NOTES AND SPECIFICATIONS.
- SEE SHEES AE102 AND AE103 FOR LOCATIONS OF DOWNSPOUTS AND SPLASH BLOCKS

EXISTING / DEMO KEYED NOTE LEGEND:

*FOR SHEET AS102 ONLY.

01 EXISTING BUILDING TO REMAIN.
02 EXISTING STORAGE CONTAINER TO REMAIN.
03 EXISTING CONCRETE PAVING TO REMAIN - PROTECT.
04 EXISTING SEWAGE STATION TO REMAIN - PROTECT.
05 EXISTING FENCE TO REMAIN - PROTECT.
06 LOCATION OF EXISTING TRANSFORMER AND PAD - SEE ELECTRICAL SITE PLAN SHEET E5101.
07 EXISTING TELEPHONE TERMINAL RISER TO REMAIN - SEE ELECTRICAL SITE PLAN E5101.
08 EXISTING FIRE HYDRANT TO REMAIN - PROTECT.
09 EXISTING WATER LINE ACCESS COVER TO REMAIN - PROTECT.
10 EXISTING MAINTENANCE HOLE COVER TO REMAIN - PROTECT.
11 EXISTING SUMP TO REMAIN - PROTECT.
12 EXISTING BLOWOFF VALVE TO REMAIN - PROTECT.
13 EXISTING ASPHALT PAVING TO REMAIN - PROTECT.
14 EXISTING AIR UNIT TO REMAIN - PROTECT.
15 EXISTING LOW WALL TO REMAIN - PROTECT.
16 EXISTING OPEN TRENCH.
17 EXISTING ELECTRICAL METER TO REMAIN - PROTECT
18 EXISTING STEAM LINE

KEYED NOTE LEGEND:

*FOR SHEET AS102 ONLY.

01 PRE ENGINEERED METAL BUILDING - SEE SHEET AE101 FOR FLOOR PLAN.
02 4" CONCRETE WALK OVER 4" FREE DRAINING GRAVEL - SEE CIVIL.
03 6" CONCRETE APRON - SEE CIVIL.
04 GREASE / OIL SEPARATOR - SEE CIVIL.
05 LINE OF UNDERGROUND CONDUITS - SEE ELECTRICAL DRAWINGS.
06 NEW REINFORCED CMU RETAINING WALL.
07 NEW GRAVEL INFILL - SEE CIVIL DRAWINGS.
08 EVAP COOLER PADS, SEE MECH. PLANS.
09 INFILL UNUSED PORTIONS OF EXISTING OPEN TRENCH. COORDINATE WITH UTILITY TRENCHING INFILL REQUIREMENTS FOR ALL USED PORTIONS OF TRENCH.

ARCHITECTAJC PROJECT # 0502

ajc architects

703 east 1700 south
salt lake city, utah 84105
ph: 801.466.8818
fx: 801.466.4411
ajc@ajcarchitects.com

OWNER INFORMATION

State of Utah
Department of Administrative Services

Division of Facilities Construction & Management
4110 State Office Building
Salt Lake City, Utah 84114
Phone: (801) 538 - 3018
Fax: (801) 538 - 3267

Internet: http://www.dfcm.utah.gov

PROJECT DESCRIPTION

ATE CENTER AT UTAH STATE PRISON

DRAPER, UTAH

SHEET NAME:

CONSTRUCTION SITE PLAN

REVISIONS

MARK	DATE	DESCRIPTION

ISSUE DATA

ISSUE DATE:	APRIL 18, 2005
ISSUE TYPE:	CON. DOCS.
DRAWN BY:	BJA
CHECKED BY:	KRR
CAD FILE NAME:	0502AS101
DFCM PROJECT #	04256100
STATE PROPERTY #	
COPYRIGHT:	STATE OF UTAH

SHEET NUMBER:

AS102

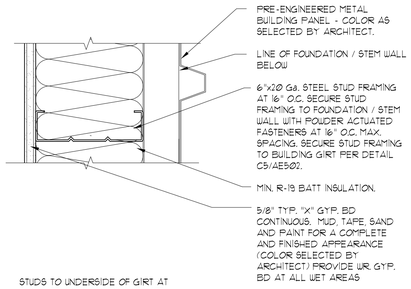

WALL TYPE 3 (C2 / AE101)
SCALE: 3"=1'-0"

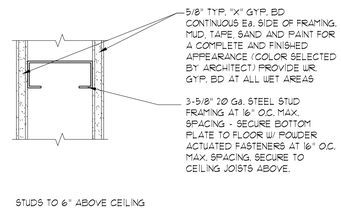

WALL TYPE 2 (C3 / AE101)
SCALE: 3"=1'-0"

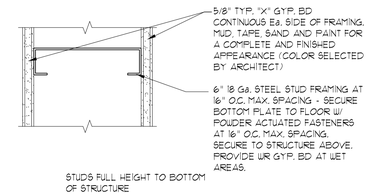

WALL TYPE 1 (C4 / AE101)
SCALE: 3"=1'-0"

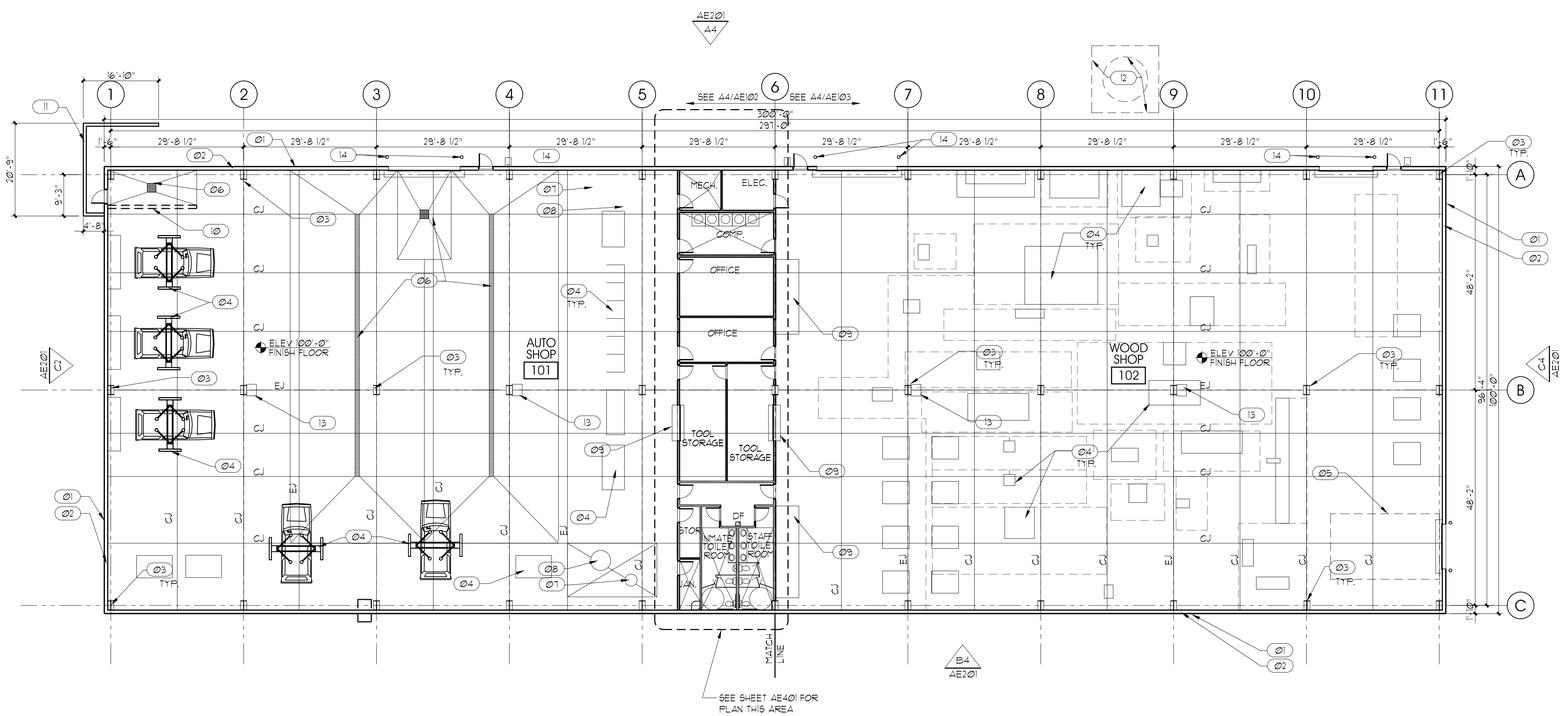

OVERALL FLOOR PLAN (A4 / AE101)
SCALE: 1/16"=1'-0"
PLAN NORTH

GENERAL NOTES AND LEGEND:

*FOR SHEET AE101 ONLY.

- SEE SHEET G1002 FOR GENERAL NOTES AND ALTERNATES.
- SEE COVER SHEET FOR DRAWING INDEX.
- DO NOT SCALE DRAWINGS.
- CONTRACTOR SHALL VERIFY ALL DIMENSIONS AND CONDITIONS BEFORE BEGINNING WORK AND SHALL REPORT TO THE ARCHITECT ANY ERRORS, INCONSISTENCIES OR OMISSIONS BEFORE BEGINNING WORK. SEE GENERAL NOTES AND SPECIFICATIONS.
- SEE SHEETS AE102 AND AE103 FOR DOOR DESIGNATIONS
- **NOTE FLOOR PLAN ROTATED 90 DEGREES FROM SITE PLAN**
- SEE ENLARGED PLANS FOR DIMENSIONS NOT SHOWN ON THIS OVERALL FLOOR PLAN.
- SEE ENLARGED PLANS FOR BUILDING SECTION MARKS.
- SEE ENLARGED PLAN A4/AE102 FOR ELEVATIONS AT DRAINS AND SLAB SLOPE.
- ARCHITECTURAL FINISH FLOOR ELEVATION 100'-0" = 1065' SITE ELEVATION
- SEE ENLARGED PLANS A4/AE102, A4/AE103 AND B4/AE401 FOR WALL TYPE MARKD.

KEYED NOTE LEGEND:

*FOR SHEETAE101 ONLY.

01. PRE-ENGINEERED METAL BUILDING WALL PANEL(COLOR SELECTED BY ARCHITECT).
02. 8" PRE-ENGINEERED METAL BUILDING GIRT-PAINT (COLOR SELECTED BY ARCHITECT).
03. PRE-ENGINEERED METAL BUILDING COLUMN - PAINT (COLOR SELECTED BY ARCHITECT).
04. EQUIPMENT TO BE PROVIDED AND INSTALLED BY OWNER (NIC) - CLEARANCES SHOWN FOR REFERENCE ONLY.
05. LINE OF PREFABRICATED PAINT BOOTH TO BE PROVIDED AND INSTALLED BY OWNER (NIC).
06. FLOOR / TRENCH DRAIN - SEE PLUMBING DRAWINGS FOR ROUGH IN.
07. EYE WASH STATION - SEE PLUMBING DRAWINGS FOR ROUGH IN.
08. GANG WASH SINK - SEE PLUMBING DRAWINGS FOR ROUGH IN.
09. MILLWORK - NIC.
10. 8" MASONRY PARTITION WALL (NIC).
11. RETAINING WALL - SEE CIVIL DRAWINGS AND ARCHITECTURAL CONSTRUCTION SITE PLAN A5102.
12. DUST COLLECTION SYSTEM PROVIDED AND INSTALLED BY OWNER - CONTRACTOR TO COORDINATE ALL REQUIRED PENETRATIONS THROUGH SLAB AND FOUNDATION WALL WITH OWNER PRIOR TO POURING FOOTINGS, FOUNDATION WALLS AND SLAB.
13. FIRE EXTINGUISHER - G.C. TO COORDINATE EXACT LOCATION OFFICIAL HAVING JURISDICTION.
14. BOLLARD - SEE SHEETS AE102 AND AE103. SEE DETAIL D3/A5102.

ARCHITECT/AJC PROJECT # 0502

ajc architects

703 east 1700 south
salt lake city, utah 84105
ph: 801.466.8818
fx: 801.466.4411
ajc@ajcarchitects.com

OWNER INFORMATION

State of Utah
Department of Administrative Services

Division of Facilities Construction & Management
4110 State Office Building
Salt Lake City, Utah 84114
Phone: (801) 538 - 3018
Fax: (801) 538 - 3267

Internet: http://www.dfcm.utah.gov

PROJECT DESCRIPTION

ATE CENTER AT UTAH STATE PRISON

DRAPER, UTAH

SHEET NAME:

OVERALL FLOOR PLAN

REVISIONS

MARK	DATE	DESCRIPTION

ISSUE DATA

ISSUE DATE:	APRIL 18, 2005
ISSUE TYPE:	CON. DOCS.
DRAWN BY:	BJA
CHECKED BY:	KRR
CAD FILE NAME:	0502AE101
DFCM PROJECT #	04256100
STATE PROPERTY #	
COPYRIGHT:	STATE OF UTAH

SHEET NUMBER:

AE101

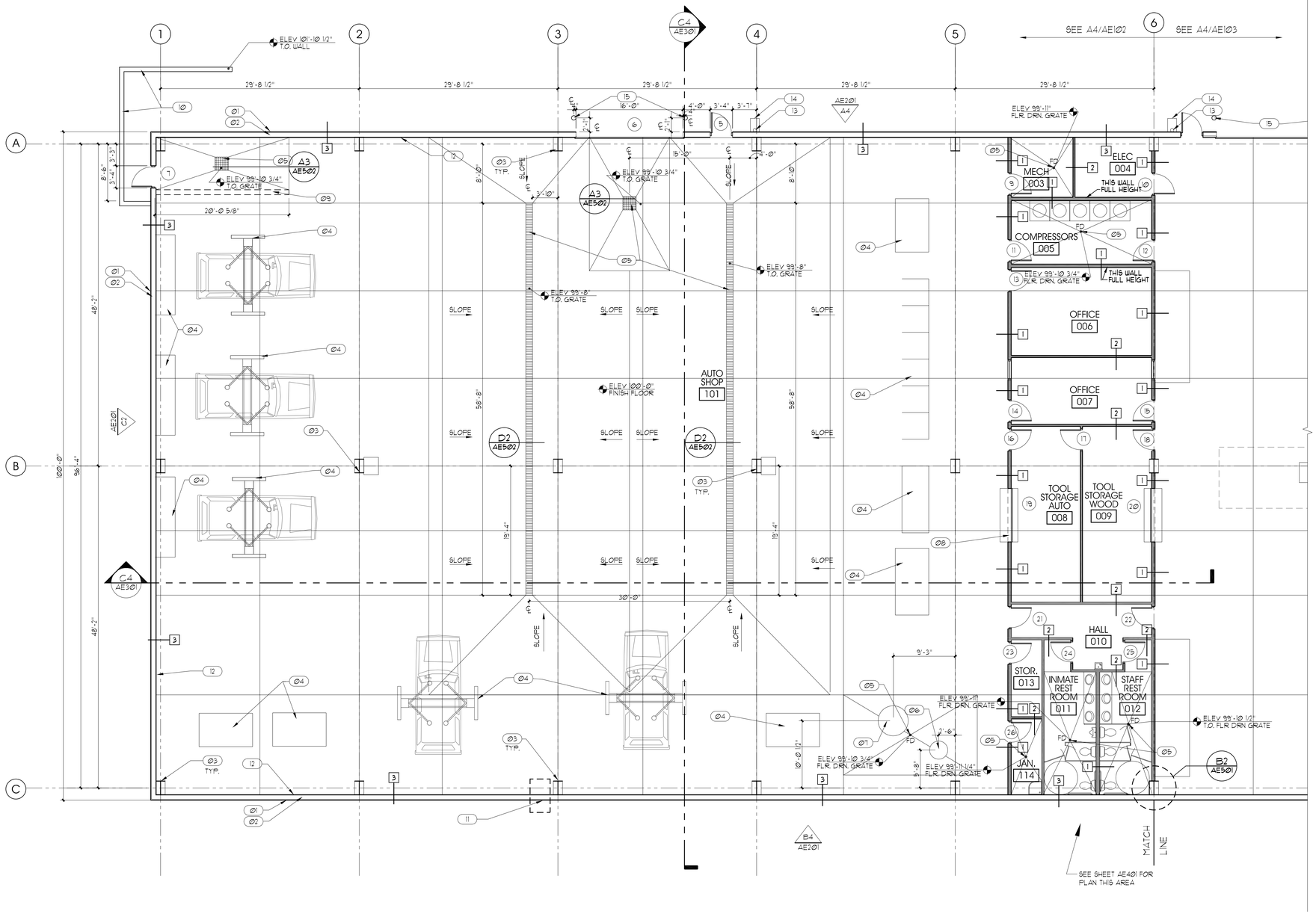

ENLARGED FLOOR PLAN - AUTO SHOP

SCALE: 1/8"=1'-0"

A4 / AE102 — PLAN NORTH

GENERAL NOTES AND LEGEND:

*FOR SHEET AE101 ONLY.

- SEE SHEET G.1 FOR GENERAL NOTES.
- SEE COVER SHEET FOR DRAWING INDEX.
- DO NOT SCALE DRAWINGS.
- CONTRACTOR SHALL VERIFY ALL DIMENSIONS AND CONDITIONS BEFORE BEGINNING WORK AND SHALL REPORT TO THE ARCHITECT ANY ERRORS, INCONSISTENCIES OR OMISSIONS BEFORE BEGINNING WORK. SEE GENERAL NOTES AND SPECIFICATIONS.
- **NOTE FLOOR PLAN ROTATED 90 DEGREES FROM SITE PLAN**
- SEE SHEET AE601 FOR DOOR SCHEDULES
- GENERAL CONTRACTOR TO PROVIDE FIRE EXTINGUISGERS AND CABINETS PER GOVERNING AUTHORITY

KEYED NOTE LEGEND:

*FOR SHEET AE101 ONLY.

01	PRE-ENGINEERED METAL BUILDING WALL PANEL(COLOR SELECTED BY ARCHITECT).
02	8" PRE-ENGINEERED METAL BUILDING GIRT-PAINT (COLOR SELECTED BY ARCHITECT).
03	PRE-ENGINEERED METAL BUILDING COLUMN - PAINT (COLOR SELECTED BY ARCHITECT). SEE STRUCTURAL.
04	EQUIPMENT TO BE PROVIDED AND INSTALLED BY OWNER (NIC).
05	FLOOR / AREA / TRENCH DRAIN - SEE PLUMBING DRAWINGS FOR ROUGH IN.
06	EYE WASH STATION - SEE PLUMBING DRAWINGS FOR ROUGH IN. STUB-UP WATER LINE FROM BELOW SLAB.
07	GANG WASH SINK - SEE PLUMBING DRAWINGS FOR ROUGH IN. STUB-UP WATER LINE FROM BELOW SLAB.
08	MILLWORK - NIC.
09	8" MASONRY PARTITION WALL (NIC).
10	RETAINING WALL - SEE CIVIL DRAWINGS AND ARCHITECTURAL CONSTRUCTION SITE PLAN A5101.
11	APPROXIMATE LOCATION OF EXHAUST FAN - BY OWNER.
12	LINE OF 5/8" TYP. "X" GYP. BD CONTINUOUS AROUND INTERIOR OF BUILDING TO 8'-0"AFF. PROVIDE 6" 20 Ga. STEEL STUD FRAMING AT 16" O.C. MAX. SPACING TO 8'-0" AFF.
13	PRE-FINISHED METAL DOWN SPOUT BY PRE-ENGINEERED METAL BUILDING MANUFACTURER. COLOR SELECTED BY ARCHITECT.
14	PRECAST CONCRETE SPLASH BLOCK (16"x24").
15	8" DIAM. CONCRETE FILLED BOLLARD - PAINT SAFETY YELLOW. SEE DETAIL D3/A5101.

ARCHITECTAJC PROJECT # 0502

ajc architects

703 east 1700 south
salt lake city, utah 84105
ph: 801.466.8818
fx: 801.466.4411
ajc@ajcarchitects.com

OWNER INFORMATION

State of Utah
Department of Administrative Services

Division of Facilities Construction & Management
4110 State Office Building
Salt Lake City, Utah 84114
Phone: (801) 538 - 3018
Fax: (801) 538 - 3267

Internet: http://www.dfcm.utah.gov

PROJECT DESCRIPTION

ATE CENTER AT UTAH STATE PRISON

DRAPER, UTAH

SHEET NAME:

ENLARGED FLOOR PLAN
AUTO SHOP

REVISIONS

MARK	DATE	DESCRIPTION

ISSUE DATA

ISSUE DATE:	APRIL 18, 2005
ISSUE TYPE:	CON. DOCS.
DRAWN BY:	BJA
CHECKED BY:	KRR
CAD FILE NAME:	0502AE101
DFCM PROJECT #	04256100
STATE PROPERTY #	
COPYRIGHT:	STATE OF UTAH

SHEET NUMBER:

AE102

SHEET 16 OF 44 TOTAL PAGES

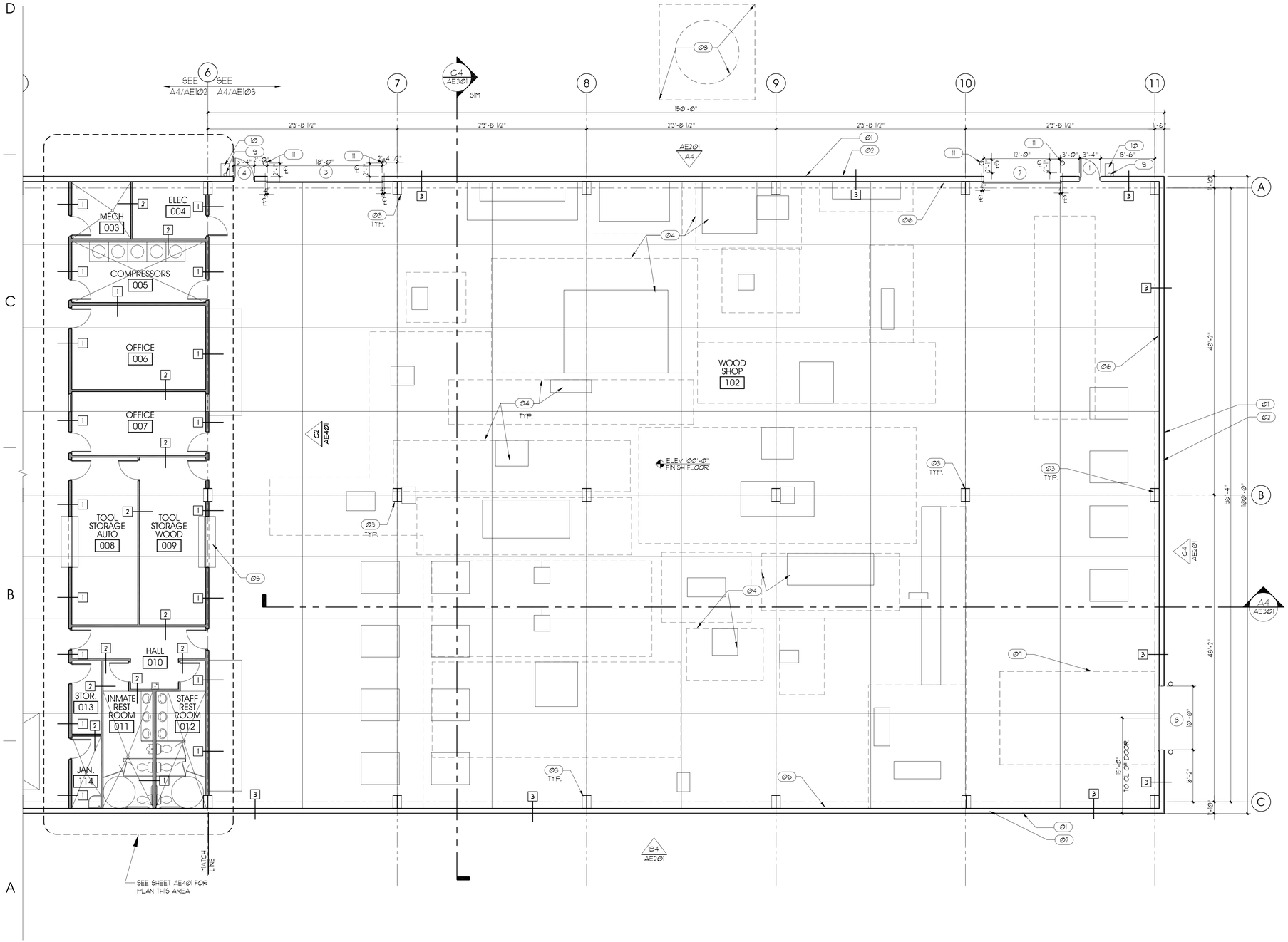

ENLARGED FLOOR PLAN - WOOD SHOP

SCALE: 1/8"=1'-0"

A4 / AE103 — PLAN NORTH

GENERAL NOTES AND LEGEND:

*FOR SHEET AE103 ONLY.

- SEE SHEET G1002 FOR GENERAL NOTES.
- SEE COVER SHEET FOR DRAWING INDEX.
- DO NOT SCALE DRAWINGS.
- CONTRACTOR SHALL VERIFY ALL DIMENSIONS AND CONDITIONS BEFORE BEGINNING WORK AND SHALL REPORT TO THE ARCHITECT ANY ERRORS, INCONSISTENCIES OR OMISSIONS BEFORE BEGINNING WORK. SEE GENERAL NOTES AND SPECIFICATIONS.
- **NOTE FLOOR PLAN ROTATED 90 DEGREES FROM SITE PLAN**
- SEE SHEET AE601 FOR DOOR SCHEDULE.

KEYED NOTE LEGEND:

*FOR SHEET AE103 ONLY.

01	PRE-ENGINEERED METAL BUILDING WALL PANEL/COLOR SELECTED BY ARCHITECT.
02	8" PRE-ENGINEERED BUILDING METAL GIRT-PAINT (COLOR SELECTED BY ARCHITECT).
03	PRE-ENGINEERED METAL BUILDING COLUMN - PAINT (COLOR SELECTED BY ARCHITECT). SEE STRUCTURAL.
04	EQUIPMENT TO BE PROVIDED AND INSTALLED BY OWNER (NIC) - CLEARANCES SHOWN DASHED ARE FOR CLARIFICATION ONLY.
05	MILLWORK - NIC.
06	LINE OF 5/8" TYP. "X" GYP. BD CONTINUOUS AROUND INTERIOR OF BUILDING TO 8'-0"AFF. PROVIDE 6" 20 Ga. STEEL STUD FRAMING AT 16" O.C. MAX. SPACING.
07	LINE OF PREFABRICATED PAINT BOOTH PROVIDED AND INSTALLED BY OWNER (NIC).
08	DUST COLLECTION SYSTEM AND PAD BY OWNER - CONTRACTOR TO COORDINATE ALL REQUIRED PENETRATIONS THROUGH SLAB AND FOUNDATION WALL WITH OWNER PRIOR TO POURING FOOTINGS, FOUNDATION WALLS AND SLAB.
9	PRE-FINISHED METAL DOWN SPOUT BY PRE-ENGINEERED METAL BUILDING MANUFACTURER. COLOR SELECTED BY ARCHITECT.
10	PRECAST CONCRETE SPLASH BLOCK (16"x24")
11	8" DIAM. CONCRETE FILLED BOLLARD - PAINT SAFETY YELLOW. SEE DETAIL D3/AS102.

ARCHITECT/AJC PROJECT # 0502

ajc architects

703 east 1700 south
salt lake city, utah 84105
ph: 801.466.8818
fx: 801.466.4411
ajc@ajcarchitects.com

OWNER INFORMATION

State of Utah
Department of Administrative Services

Division of Facilities Construction & Management
4110 State Office Building
Salt Lake City, Utah 84114
Phone: (801) 538 - 3018
Fax: (801) 538 - 3267

Internet: http://www.dfcm.utah.gov

PROJECT DESCRIPTION

ATE CENTER AT UTAH STATE PRISON

DRAPER, UTAH

SHEET NAME:

ENLARGED FLOOR PLAN WOOD SHOP

REVISIONS

MARK	DATE	DESCRIPTION

ISSUE DATA

ISSUE DATE:	APRIL 18, 2005
ISSUE TYPE:	CON. DOCS.
DRAWN BY:	BJA
CHECKED BY:	KRR
CAD FILE NAME:	0502AE103
DFCM PROJECT #	04256100
STATE PROPERTY #	
COPYRIGHT:	STATE OF UTAH

SHEET NUMBER:

AE103

SHEET 17 OF 44 TOTAL PAGES

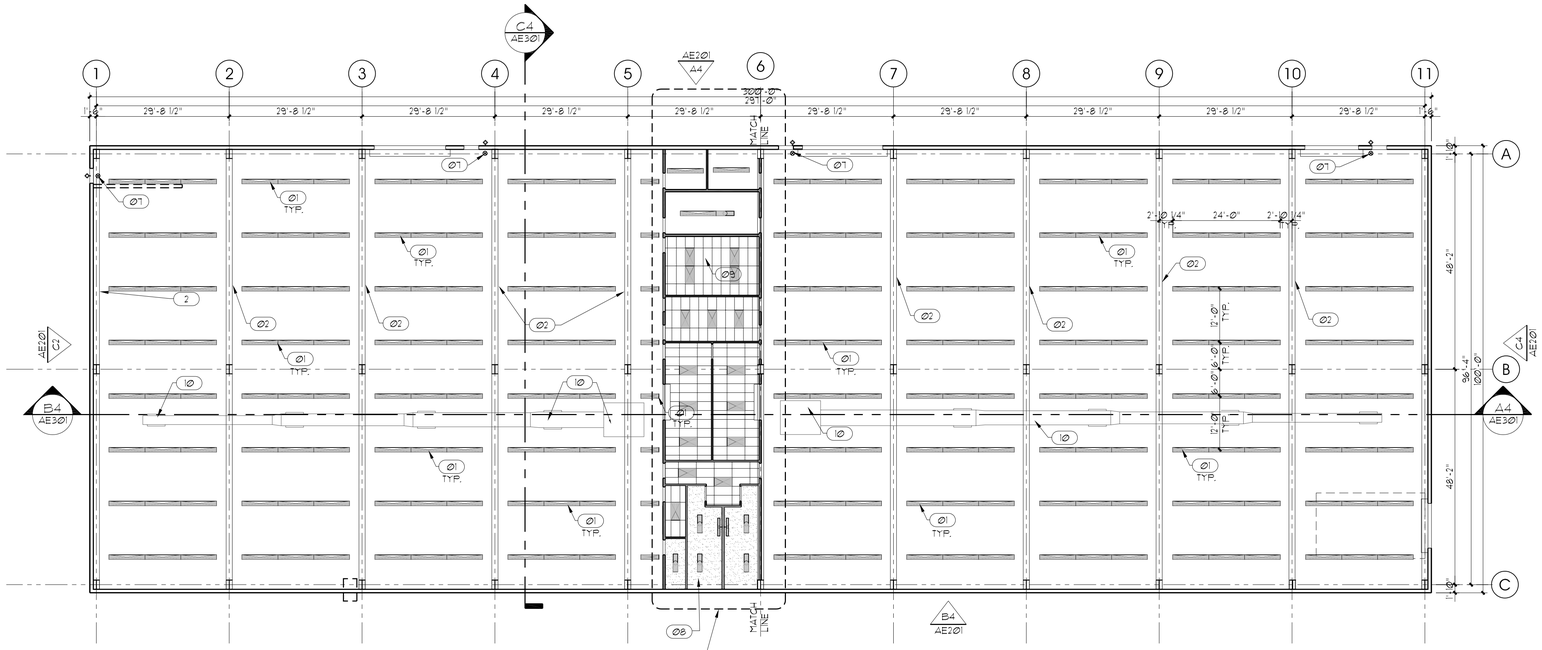

NOTE:

ALL EQUIPMENT AND DUCTWORK TO BE SUSPENDED FROM PRE- ENGINEERED METAL BUILDING STRUCTURE. GENERAL CONTRACTOR TO COORDINATE LOADS AND LOCATIONS WITH PRE-ENGINEERED METAL BUILDING MANUFACTURER

SEE SHEET AE401 FOR LARGE SCALE PLAN THIS AREA

OVERALL REFLECTED CEILING PLAN

SCALE: 1/16"=1'-0"

C4 AE104 — PLAN NORTH

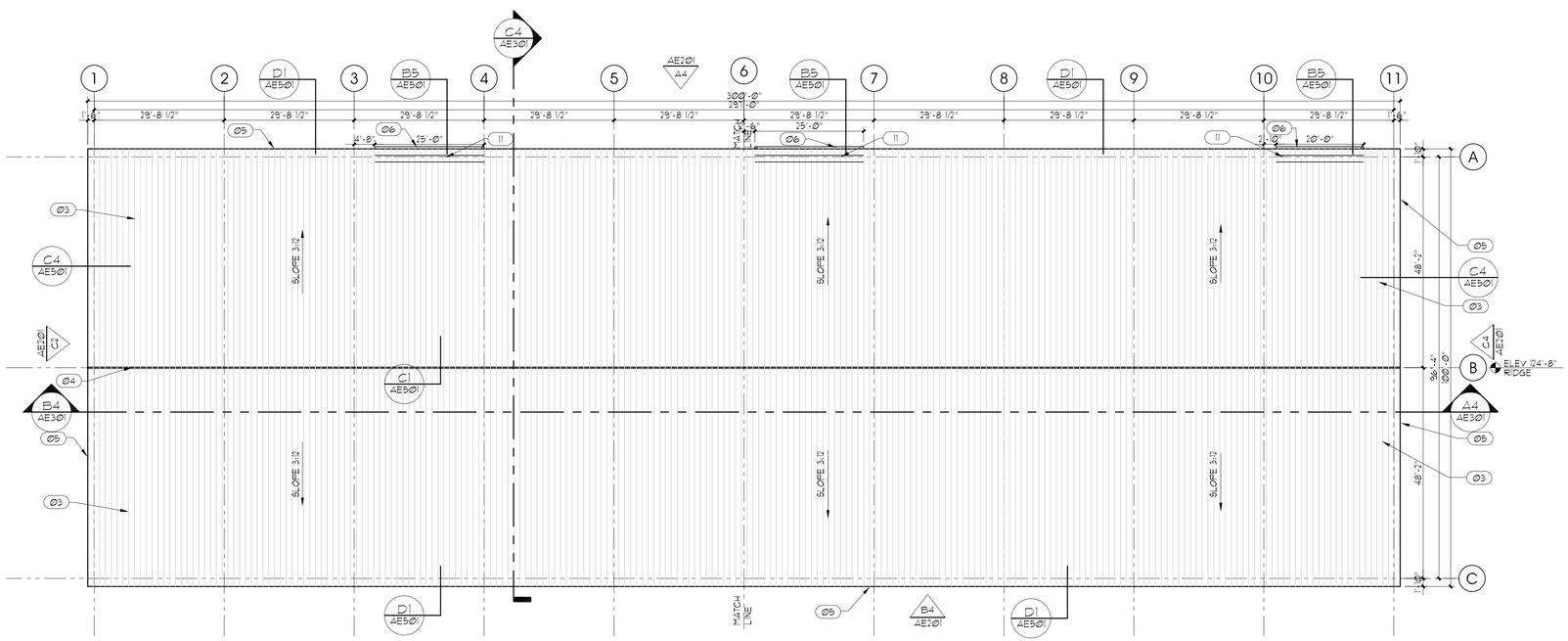

ROOF PLAN

SCALE: 1/16"=1'-0"

A4 AE104 — PLAN NORTH

GENERAL NOTES AND LEGEND:

*FOR SHEET AE104 ONLY.

- SEE SHEET G1001 FOR GENERAL NOTES.
- SEE COVER SHEET FOR DRAWING INDEX.
- DO NOT SCALE DRAWINGS.
- CONTRACTOR SHALL VERIFY ALL DIMENSIONS AND CONDITIONS BEFORE BEGINNING WORK AND SHALL REPORT TO THE ARCHITECT ANY ERRORS, INCONSISTENCIES OR OMISSIONS BEFORE BEGINNING WORK. SEE GENERAL NOTES AND SPECIFICATIONS.
- **NOTE: CEILING AND ROOF PLANS ROTATED 90 DEGREES FROM SITE PLAN**
- SEE DETAIL D1/AE502 FOR SUSPENDED CEILING BRACING.

KEYED NOTE LEGEND:

*FOR SHEET AE104 ONLY.

Ø1	NEW SUSPENDED LIGHT FIXTURE - SEE ELECTRICAL DRAWINGS AND LIST OF ALTERNATES ON SHEET G1002. BOTTOM OF FIXTURE TO BE AT 12'-0" AFF.
Ø2	LINE OF PRE-ENGINEERED METAL BUILDING BEAM ABOVE. PAINTED - COLOR SELECTED BY ARCHITECT.
Ø3	PRE-FINISHED METAL ROOF PANEL BY PRE-ENGINEERED METAL BUILDING MANUFACTURER - COLOR SELECTED BY ARCHITECT.
Ø4	PRE-FINISHED METAL RIDGE CAP BY PRE-ENGINEERED METAL BUILDING MANUFACTURER - COLOR TO MATCH ROOF PANELS.
Ø5	PRE-FINISHED METAL RAKE / DRIP EDGE FLASHING BY PRE-ENGINEERED METAL METAL BUILDING MANUFACTURER COLOR TO MATCH ROOF AND WALL PANEL COLOR AS SELECTED BY ARCHITECT.
Ø6	PRE-FINISHED GUTTER AND DOWNSPOUT AT DOORS ONLY - COLOR TO MATCH WALL PANELS.
Ø7	LIGHTED EXIT SIGNS SEE ELECTRICAL DRAWINGS AND LIST OF ALTERNATES ON SHEET G1002.
Ø8	5/8" TYP. "X" GYP. BD. CEILING SUSPENDED. SEE FINISH SCHEDULE SHEET AE601.
Ø9	2'x4' LAY IN ACOUSTIC PANEL CEILING IN METAL "T" GRID - SEE FINISH SCHEDULE SHEET AE601.
10	HVAC DUCTING AND UNITS - SEE MECHANICAL PLANS.
11	PROVIDE (2) ROWS OF SNOW GUARDS CONTINUOUS OVER DOORS.

ARCHITECTAJC PROJECT # 0502

ajc architects

703 east 1700 south
salt lake city, utah 84105
ph: 801.466.8818
fx: 801.466.4411
ajc@ajcarchitects.com

OWNER INFORMATION

State of Utah
Department of Administrative Services

Division of Facilities Construction & Management
4110 State Office Building
Salt Lake City, Utah 84114
Phone: (801) 538 - 3018
Fax: (801) 538 - 3267

Internet: http://www.dfcm.utah.gov

PROJECT DESCRIPTION

ATE CENTER AT UTAH STATE PRISON

DRAPER, UTAH

SHEET NAME:

OVERALL REFLECTED CEILING PLAN AND ROOF PLAN

REVISIONS

MARK	DATE	DESCRIPTION

ISSUE DATA

ISSUE DATE:	APRIL 18, 2005
ISSUE TYPE:	CON. DOCS.
DRAWN BY:	BJA
CHECKED BY:	KRR
CAD FILE NAME:	0502AE103
DFCM PROJECT #	04256100
STATE PROPERTY #	
COPYRIGHT:	STATE OF UTAH

SHEET NUMBER:

AE104

SHEET 18 OF 44 TOTAL PAGES

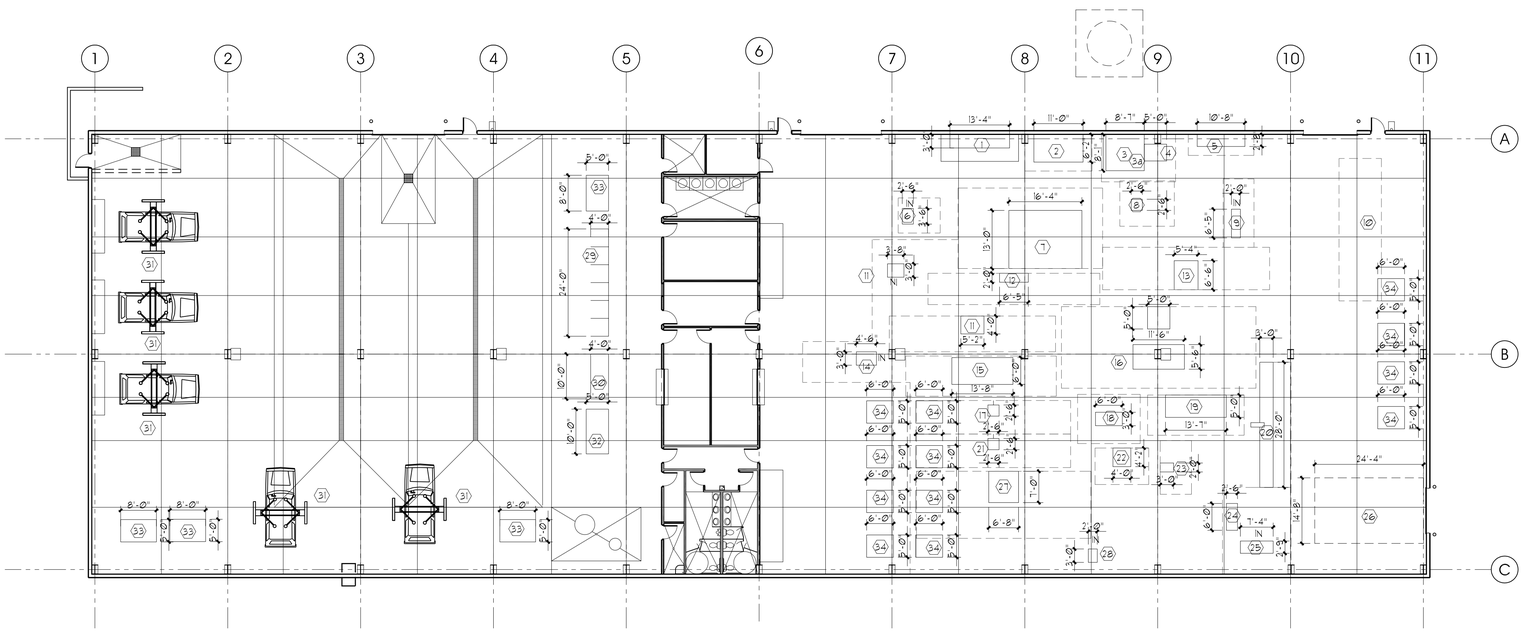

EQUIPMENT PLAN
SCALE: 1/16"=1'-0"
A4 / AE501
PLAN NORTH

GENERAL NOTES AND LEGEND:

*FOR SHEET AE105 ONLY.

- SEE SHEET G000 FOR GENERAL NOTES.
- SEE COVER SHEET FOR DRAWING INDEX.
- DO NOT SCALE DRAWINGS.
- CONTRACTOR SHALL VERIFY ALL DIMENSIONS AND CONDITIONS BEFORE BEGINNING WORK AND SHALL REPORT TO THE ARCHITECT ANY ERRORS, INCONSISTENCIES OR OMISSIONS BEFORE BEGINNING WORK. SEE GENERAL NOTES AND SPECIFICATIONS.
- **NOTE FLOOR PLAN ROTATED 90 DEGREES FROM SITE PLAN**
- EQUIPMENT PLAN BASED ON INFORMATION PROVIDED BY OWNER - GENERAL CONTRACTOR TO VERIFY LAYOUT WITH OWNER PRIOR TO CONSTRUCTION.

EQUIPMENT LEGEND:

*FOR SHEET AE105 ONLY.

1. SAFETY SPEED PANEL ROUTER
2. BRISSE BORING MACHINE
3. NORTHWOOD CNC ROUTER
3a. CNC VACUUM
4. CNC CONTROLLER
5. BLUM BORING MACHINE
6. DELTA 20 BAND SAW
7. DELTA 10" TABLE SAW
8. DELTA DRILL PRESS
9. DELTA 6" JOINTER
10. DELTA RADIAL ARM SAW
11. ROCKWELL TABLE SAW
12. ROCKWELL JOINTER
13. TIME SAVER DRUM BELT SANDER
14. POWERMATIC SURFACE PLANER
15. CELRISA EDGE BANDER
16. WENIG STICKER
17. DELTA 3/4" SPINDLE SHAPER
18. DELTA 6" EDGE SANDER
19. ULING CASE CLAMP
20. RADIAL ARM SAW
21. DELTA 1" SPINDLE SHAPER
22. WENIG PROFILE GRINDER
23. BAND SAW
24. LATHE (WITH STAND)
25. CLAMP BOX
26. PAINT BOOTH EXHAUST FAN
27. DELTA 10" TABLE SAW
28. DELTA DRILL PRESS
29. WELDING STATIONS (6) TOTAL
30. WELDING TABLE
31. AUTO LIFT (5 TOTAL)
32. WORK BENCH
33. WORK BENCH (4 TOTAL)
34. WORK BENCH (12 TOTAL)

ARCHITECT/AJC PROJECT # 0502

ajc architects

703 east 1700 south
salt lake city, utah 84105
ph: 801.466.8818
fx: 801.466.4411
ajc@ajcarchitects.com

OWNER INFORMATION

State of Utah
Department of Administrative Services

Division of Facilities
Construction & Management
4110 State Office Building
Salt Lake City, Utah 84114
Phone: (801) 538 - 3018
Fax: (801) 538 - 3267

Internet: http://www.dfcm.utah.gov

PROJECT DESCRIPTION

ATE CENTER AT UTAH STATE PRISON

DRAPER, UTAH

SHEET NAME:

EQUIPMENT PLAN

REVISIONS

MARK	DATE	DESCRIPTION

ISSUE DATA

ISSUE DATE:	APRIL 18, 2005
ISSUE TYPE:	CON. DOCS.
DRAWN BY:	BJA
CHECKED BY:	KRR
CAD FILE NAME:	0502AE101
DFCM PROJECT #	04256100
STATE PROPERTY #	
COPYRIGHT:	STATE OF UTAH

SHEET NUMBER:

AE105

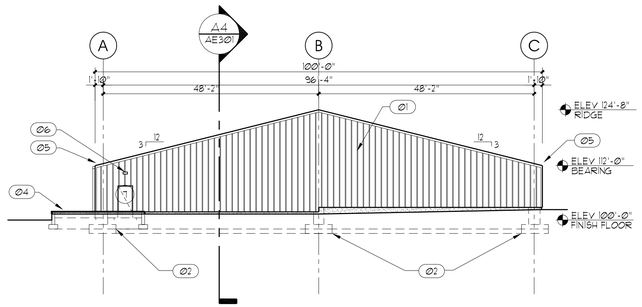

SOUTH ELEVATION (C2 / AE201)
SCALE: 1/16"=1'-0"

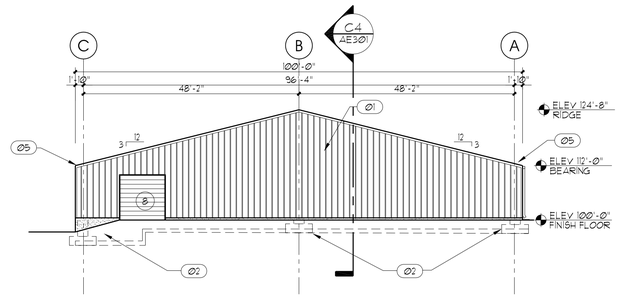

NORTH ELEVATION (C4 / AE201)
SCALE: 1/16"=1'-0"

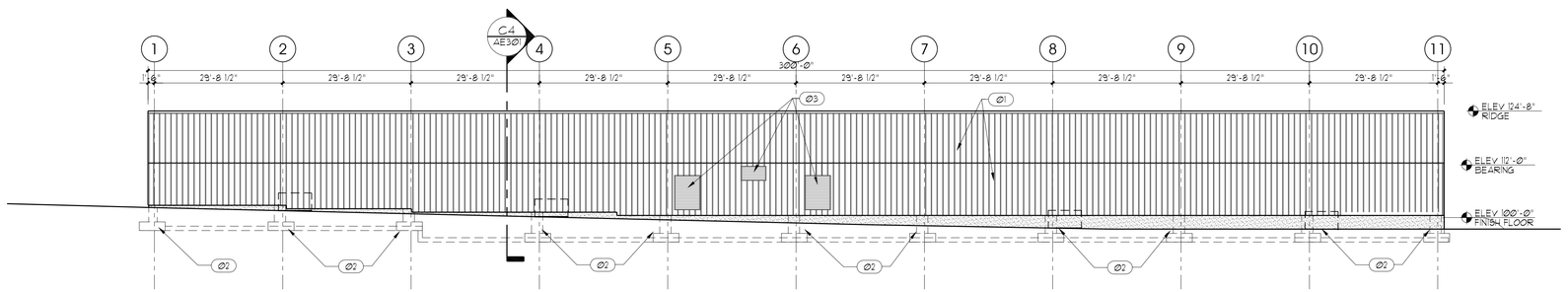

EAST ELEVATION (B4 / AE201)
SCALE: 1/16"=1'-0"

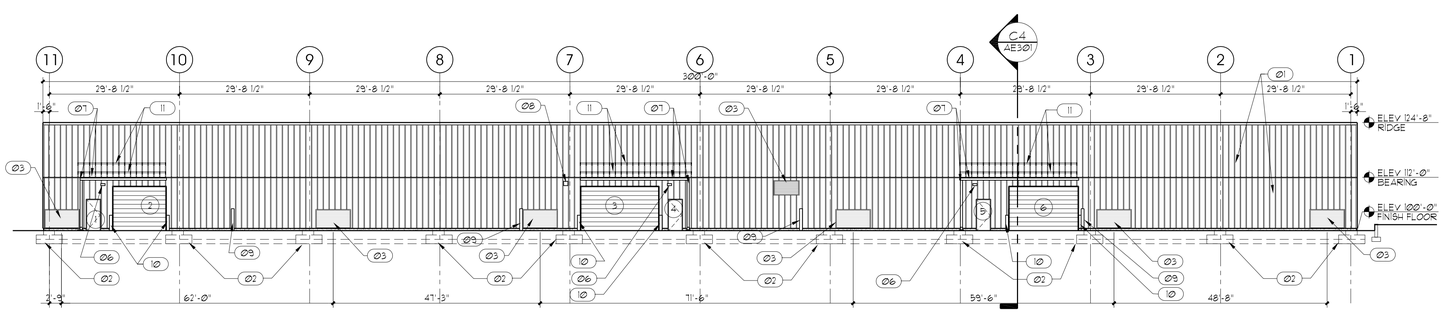

WEST ELEVATION (A4 / AE201)
SCALE: 1/16"=1'-0"

GENERAL NOTES AND LEGEND:

*FOR SHEET AE201 ONLY.

- SEE SHEET G1001 FOR GENERAL NOTES.
- SEE COVER SHEET FOR DRAWING INDEX.
- DO NOT SCALE DRAWINGS.
- CONTRACTOR SHALL VERIFY ALL DIMENSIONS AND CONDITIONS BEFORE BEGINNING WORK AND SHALL REPORT TO THE ARCHITECT ANY ERRORS, INCONSISTENCIES OR OMISSIONS BEFORE BEGINNING WORK. SEE GENERAL NOTES AND SPECIFICATIONS.
- SEE SHEET AE601 FOR DOOR SCHEDULE

KEYED NOTE LEGEND:

*FOR SHEET AE201 ONLY.

01 PRE-ENGINEERED METAL BUILDING.

02 LINE OF CONCRETE FOOTING, FOUNDATION AND PIER BEYOND-SEE STRUCTURAL DRAWINGS.

03 MECHANICAL VENT-SEE MECHANICAL DRAWINGS. COORDINATE ROUGH OPENING SIZE WITH VENTS SELECTED.

04 CONCRETE RETAINING WALL BEYOND - SEE CIVIL DRAWINGS.

05 PRE-FINISHED METAL RAKE / DRIP EDGE BY PRE-ENGINEERED METAL BUILDING MANUFACTURER - COLOR SELECTED BY ARCHITECT.

06 EXTERIOR LIGHTING - SEE ELECTRICAL DRAWINGS.

07 PRE-FINISHED METAL GUTTER AND DOWNSPOUT BY PRE-ENGINEERED METAL BUILDING MANUFACTURER. COLOR SELECTED BY ARCHITECT.

08 WEATHER PROOF ALARM HORN - SEE ELECTRICAL DRAWINGS.

09 LINE OF REINSTALLED PEDESTAL MOUNTED ELECTRICAL METER/PANEL - SEE ELECTRICAL DRAWINGS.

10 8" DIAM. CONCRETE FILLED BOLLARD - PAINT SAFETY YELLOW. SEE DETAIL D3/A5102.

11 SNOW GUARDS TO BE CONTINUOUS AT GUTTER AREAS.

ARCHITECT'AJC PROJECT # 0502

ajc architects

703 east 1700 south
salt lake city, utah 84105
ph: 801.466.8818
fx: 801.466.4411
ajc@ajcarchitects.com

OWNER INFORMATION

State of Utah
Department of Administrative Services

Division of Facilities
Construction & Management
4110 State Office Building
Salt Lake City, Utah 84114
Phone: (801) 538 - 3018
Fax: (801) 538 - 3267

Internet: http://www.dfcm.utah.gov

PROJECT DESCRIPTION

ATE CENTER AT
UTAH STATE PRISON

DRAPER, UTAH

SHEET NAME:

EXTERIOR
ELEVATIONS

REVISIONS

MARK	DATE	DESCRIPTION

ISSUE DATA

ISSUE DATE:	APRIL 18, 2005
ISSUE TYPE:	CON. DOCS.
DRAWN BY:	BJA
CHECKED BY:	KRR
CAD FILE NAME:	0502AE201
DFCM PROJECT #	04256100
STATE PROPERTY #	
COPYRIGHT:	STATE OF UTAH

SHEET NUMBER:

AE201

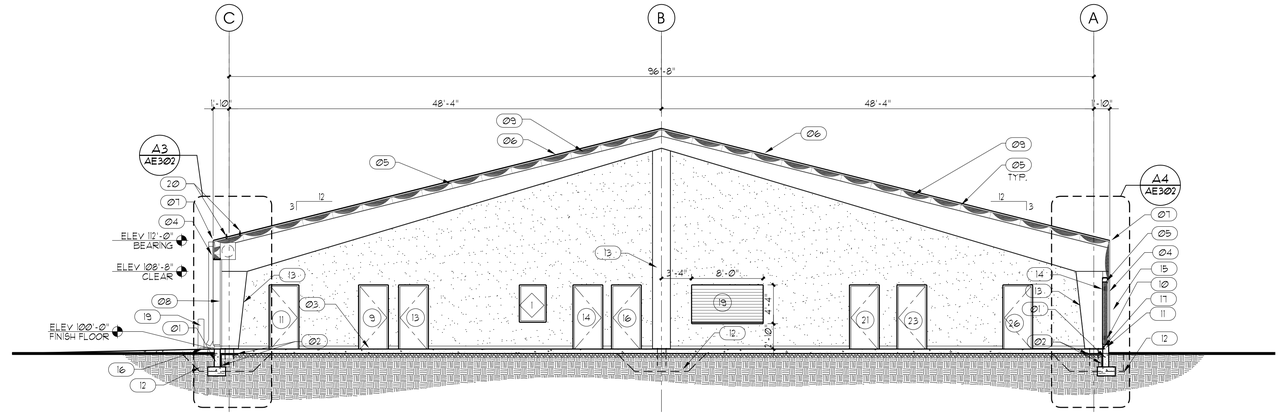

BUILDING SECTION C4/AE301
SCALE: 1/8"=1'-0"

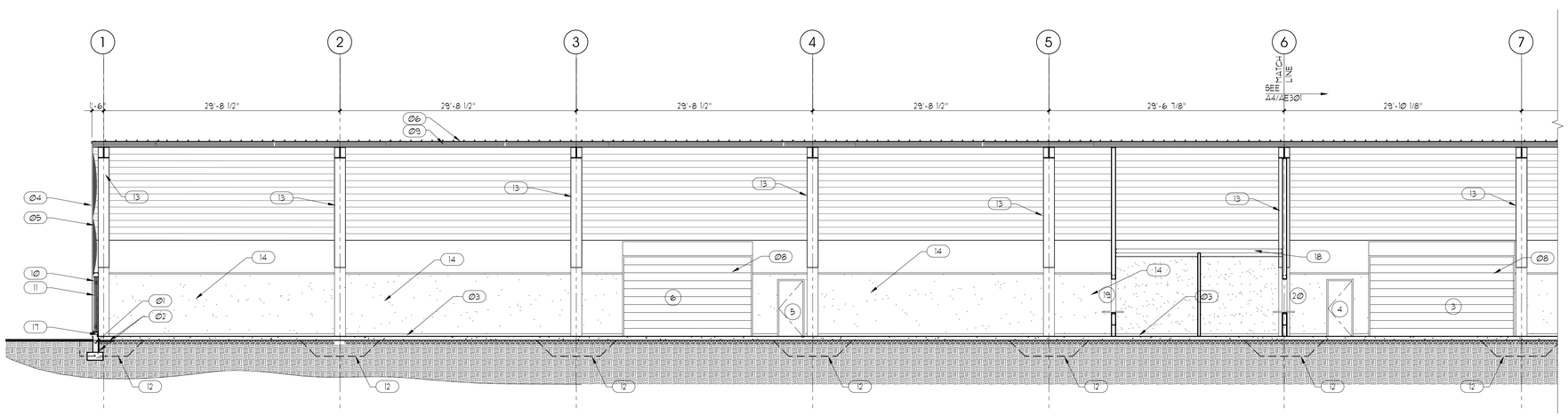

BUILDING SECTION B4/AE301
SCALE: 1/8"=1'-0"

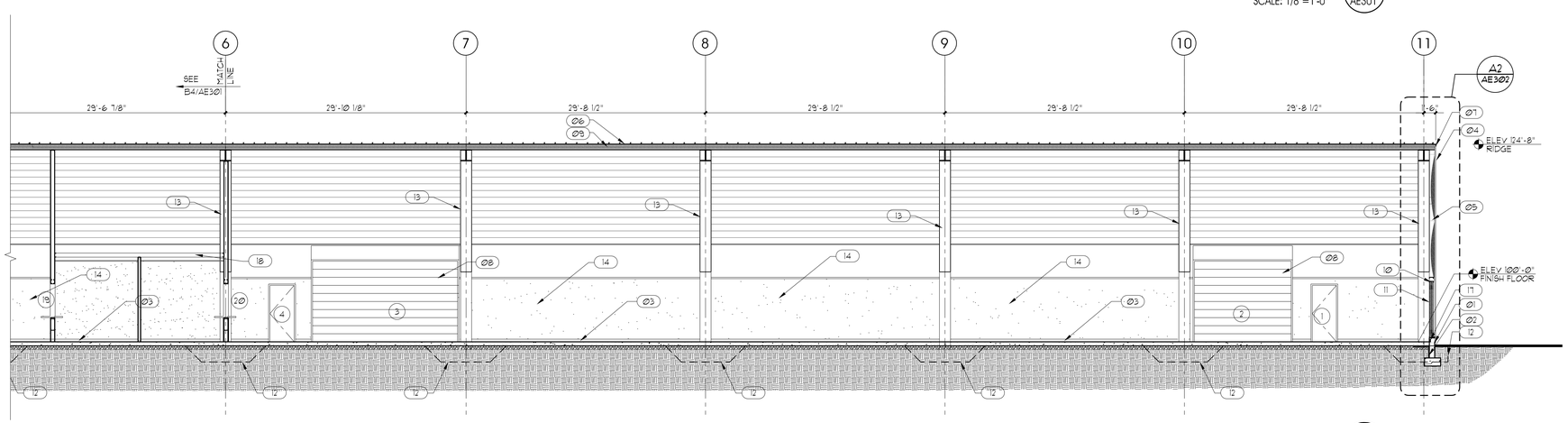

BUILDING SECTION A4/AE301
SCALE: 1/8"=1'-0"

GENERAL NOTES AND LEGEND:

*FOR SHEET AE301 ONLY.

- SEE SHEET G1001 FOR GENERAL NOTES.
- SEE COVER SHEET FOR DRAWING INDEX.
- DO NOT SCALE DRAWINGS.
- CONTRACTOR SHALL VERIFY ALL DIMENSIONS AND CONDITIONS BEFORE BEGINNING WORK AND SHALL REPORT TO THE ARCHITECT ANY ERRORS, INCONSISTENCIES OR OMISSIONS BEFORE BEGINNING WORK. SEE GENERAL NOTES AND SPECIFICATIONS.
- SEE SHEET AE601 FOR DOOR SCHEDULE

KEYED NOTE LEGEND:

*FOR SHEET AE301 ONLY.

01 CONTINUOUS CONCRETE FOOTING AND FOUNDATION WITH DAMPROOFING - SEE STRUCTURAL.

02 2" RIGID BOARD FOUNDATION INSULATION - CONTINUE BELOW SLAB TO 2'-0" INSIDE FOUNDATION WALL.

03 6" CONCRETE SLAB OVER 6" GRANULAR FILL.

04 PRE-FINISHED METAL BUILDING WALL PANELS BY PRE-ENGINEERED METAL BUILDING MANUFACTURER - COLOR SELECTED BY ARCHITECT.

05 PRE-FINISHED GIRTS BY PRE-ENGINEERED METAL BUILDING MANUFACTURER - COLOR BY ARCHITECT.

06 PRE-FINISHED METAL ROOF PANELS BY PRE-ENGINEERED METAL BUILDING MANUFACTURER - COLOR BY ARCHITECT.

07 PRE-FINISHED METAL RAKE / DRIP EDGE BY PRE-ENGINEERED BUILDING MANUFACTURER - COLOR BY ARCHITECT

08 INSULATED OVERHEAD COILING DOOR - COLOR SELECTED BY ARCHITECT.

09 R-38 VINYL FACED BATT INSULATION BY PRE-ENGINEERED METAL BUILDING MANUFACTURER

10 6" STEEL STUD FRAMING AT 16" OC TO 8'-0" AFF. COORDINATE STEEL STUD FRAMING WITH PRE-ENGINEERED METAL BUILDING GIRTS.

11 R-19 VINYL FACED BATT INSULATION BY PRE-ENGINEERED METAL BUILDING MANUFACTURER

12 THICKENED SLAB FOOTING BEYOND - SEE STRUCTURAL DRAWINGS.

13 STEEL COLUMNS BY PRE-ENGINEERED METAL BUILDING MANUFACTURER - SEE STRUCTURAL DRAWINGS.

14 5/8" TYP. "X" GYP. BD. PAINTED - COLOR BY ARCHITECT.

15 PRE-FINISHED METAL GUTTER AND DOWNSPOUT BY PRE-ENGINEERED METAL BUILDING MANUFACTURER.

16 PRECAST CONCRETE SPLASH BLOCK.

17 PTFTDT NAILER CAST INTO FOUNDATION WALL FOR GYP. BD. ATTACHMENT.

18 SEE B1/AE401 FOR FRAMING PLAN TO BRACE WALLS ABOVE CEILING LINE.

19 8" DIAM. CONCRETE FILLED BOLLARD - PAINT SAFETY YELLOW. SEE DETAIL D3/A5101.

20 SNOW GUARDS TO BE CONTINUOUS AT GUTTERS.

ARCHITECTAJC PROJECT # 0502

ajc architects

703 east 1700 south
salt lake city, utah 84105
ph: 801.466.8818
fx: 801.466.4411
ajc@ajcarchitects.com

OWNER INFORMATION

State of Utah
Department of Administrative Services

Division of Facilities
Construction & Management
4110 State Office Building
Salt Lake City, Utah 84114
Phone: (801) 538 - 3018
Fax: (801) 538 - 3267

Internet: http://www.dfcm.utah.gov

PROJECT DESCRIPTION

ATE CENTER AT UTAH STATE PRISON

DRAPER, UTAH

SHEET NAME:

BUILDING SECTIONS

REVISIONS

MARK	DATE	DESCRIPTION

ISSUE DATA

ISSUE DATE:	APRIL 18, 2005
ISSUE TYPE:	CON. DOCS.
DRAWN BY:	BJA
CHECKED BY:	KRR
CAD FILE NAME:	0502AE301
DFCM PROJECT #	04256100
STATE PROPERTY #	
COPYRIGHT:	STATE OF UTAH

SHEET NUMBER:

AE301

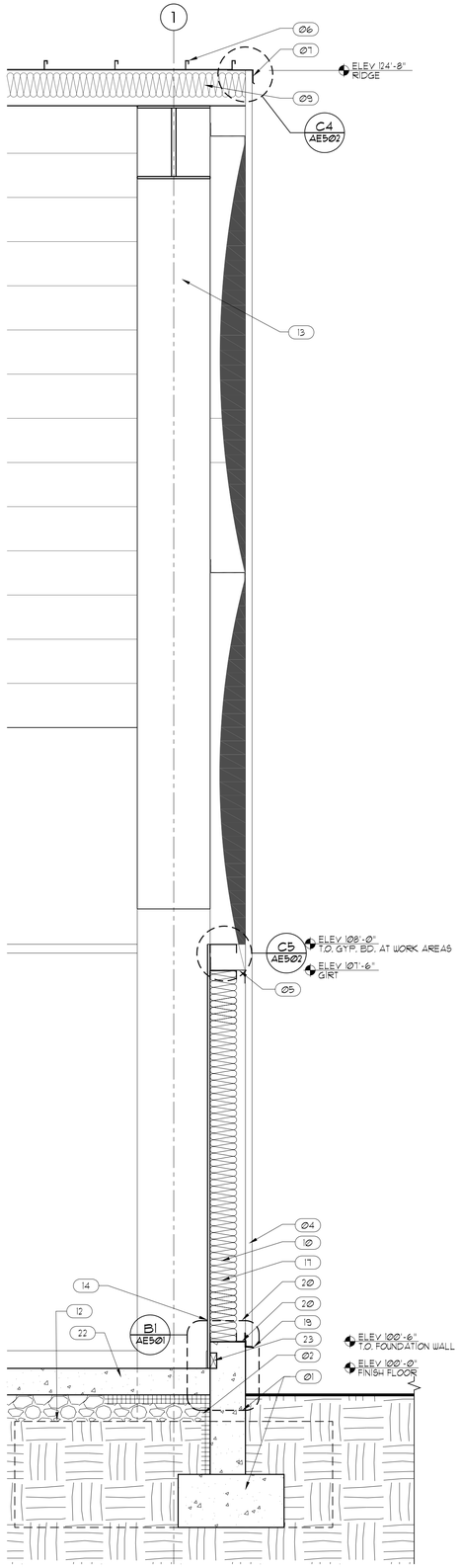

END WALL SECTION (A2 / AE302)
SCALE: 3/4"=1'-0"

NOTE: GENERAL CONTRACTOR TO VERIFY SIZE OF HOUSING FOR OVERHEAD COILING DOOR. CONTRACTOR TO COORDINATE REQUIRED CLEARANCES WITH PRE-ENGINEERED METAL BUILDING STRUCTURAL SYSTEM.

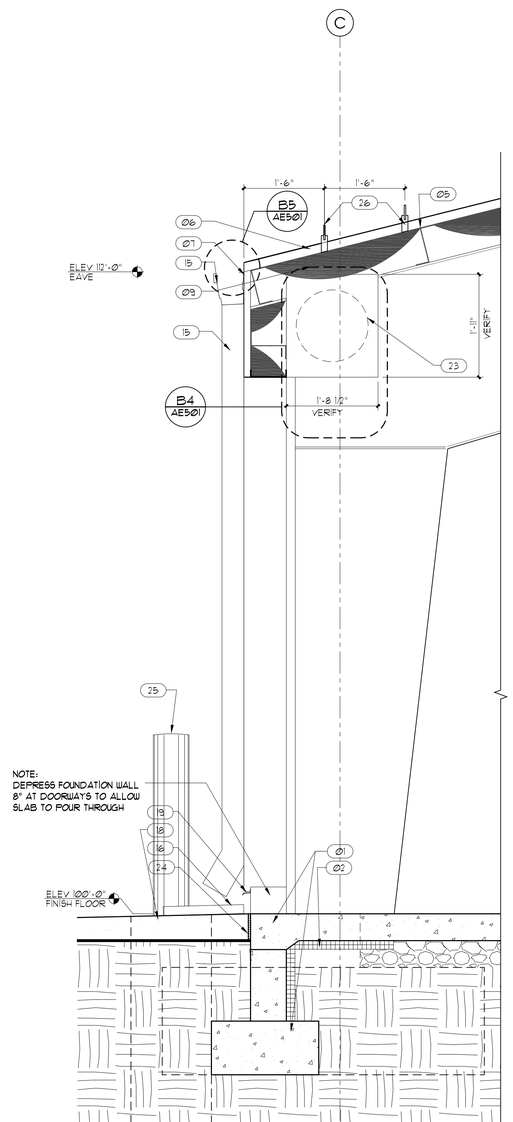

SIDE WALL SECTION (A3 / AE302)
SCALE: 3/4"=1'-0"

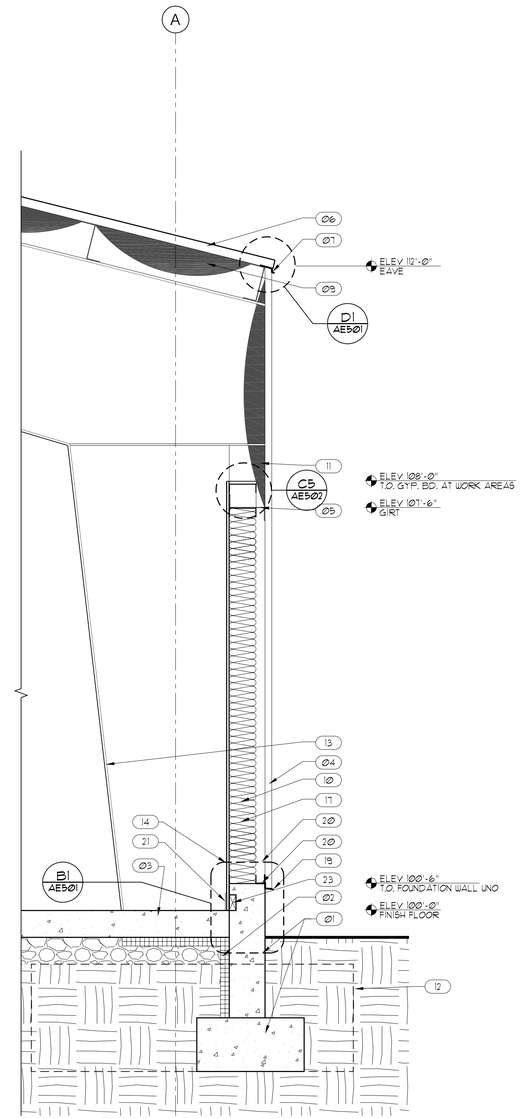

SIDE WALL SECTION (A4 / AE302)
SCALE: 3/4"=1'-0"

GENERAL NOTES AND LEGEND:

*FOR SHEET AE302 ONLY.

- SEE SHEET G1 FOR GENERAL NOTES.
- SEE COVER SHEET FOR DRAWING INDEX.
- DO NOT SCALE DRAWINGS.
- CONTRACTOR SHALL VERIFY ALL DIMENSIONS AND CONDITIONS BEFORE BEGINNING WORK AND SHALL REPORT TO THE ARCHITECT ANY ERRORS, INCONSISTENCIES OR OMISSIONS BEFORE BEGINNING WORK. SEE GENERAL NOTES AND SPECIFICATIONS.

KEYED NOTE LEGEND:

*FOR SHEET AE302 ONLY.

01 CONTINUOUS CONCRETE FOOTING AND FOUNDATION WITH DAMPROOFING - SEE STRUCTURAL.

02 2" RIGID BOARD FOUNDATION INSULATION - CONTINUE BELOW SLAB TO 2'-0" INSIDE FOUNDATION WALL.

03 6" CONCRETE SLAB OVER 6" GRANULAR FILL.

04 PRE-FINISHED METAL BUILDING WALL PANELS BY PRE-ENGINEERED METAL BUILDING MANUFACTURER - COLOR SELECTED BY ARCHITECT.

05 PRE-FINISHED GIRTS BY PRE-ENGINEERED METAL BUILDING MANUFACTURER - COLOR BY ARCHITECT.

06 PRE-FINISHED METAL ROOF PANELS BY PRE-ENGINEERED METAL BUILDING MANUFACTURER - COLOR BY ARCHITECT.

07 PRE-FINISHED METAL RAKE / DRIP EDGE BY PRE-ENGINEERED BUILDING MANUFACTURER - COLOR BY ARCHITECT

08 INSULATED OVERHEAD COILING DOOR - COLOR SELECTED BY ARCHITECT.

09 R-38 VINYL FACED BATT INSULATION BY PRE-ENGINEERED METAL BUILDING MANUFACTURER.

10 6" 18 Ga. STEEL STUD FRAMING AT 16" O.C. TO 8'-0" AFF. COORDINATE STEEL STUD FRAMING WITH PRE-ENGINEERED METAL BUILDING GIRTS.

11 R-19 VINYL FACED BATT INSULATION BY PRE-ENGINEERED METAL BUILDING MANUFACTURER.

12 SPOT FOOTING BEYOND - SEE STRUCTURAL DRAWINGS.

13 STEEL COLUMNS BY PRE-ENGINEERED METAL BUILDING MANUFACTURER - SEE STRUCTURAL DRAWINGS.

14 5/8" TYP. "X" GYP. BD. PAINTED - COLOR BY ARCHITECT.

15 PRE-FINISHED METAL GUTTER AND DOWNSPOUT BY PRE-ENGINEERED METAL BUILDING MANUFACTURER.

16 PRECAST CONCRETE SPLASH BLOCK.

17 MIN. R-38 BATT INSULATION.

18 LINE OF CONCRETE APRON BEYOND - SEE CIVIL DRAWINGS.

19 CONTINUOUS PRE-FINISHED METAL DRIP EDGE BY PRE-ENGINEERED METAL BUILDING MANUFACTURER.

20 CLIP ANGLE BY PRE-ENGINEERED METAL BUILDING MANUFACTURER.

21 RUBBER BASE - SEE FINISH SCHEDULE SHEET AE601

22 NOT USED.

23 PTRTDF BLOCKING CAST INTO FOUNDATION WALL FOR GYP. BD. ATTACHMENT.

24 1/2" EXPANSION JOINT WITH TRAFFIC TYPE SEALANT - TYPICAL AT ALL DOORS.

25 8" DIAM. CONCRETE FILLED BOLLARD - PAINT SAFETY YELLOW. SEE DETAIL D3/AS101. BOLLARD FOUNDATION TO BE INDEPENDANT OF CONTINUOUS BUILDING FOUNDATION.

26 SNOW GUARDS TO BE CONTINUOUS AT GUTTERS.

ARCHITECTAJC PROJECT # 0502

ajc architects

703 east 1700 south
salt lake city, utah 84105
ph: 801.466.8818
fx: 801.466.4411
ajc@ajcarchitects.com

OWNER INFORMATION

State of Utah
Department of Administrative Services

Division of Facilities
Construction & Management
4110 State Office Building
Salt Lake City, Utah 84114
Phone: (801) 538 - 3018
Fax: (801) 538 - 3267

Internet: http://www.dfcm.utah.gov

PROJECT DESCRIPTION

ATE CENTER AT
UTAH STATE PRISON

DRAPER, UTAH

SHEET NAME:

WALL
SECTIONS

REVISIONS

MARK	DATE	DESCRIPTION

ISSUE DATA

ISSUE DATE:	APRIL 18, 2005
ISSUE TYPE:	CON. DOCS.
DRAWN BY:	BJA
CHECKED BY:	KRR
CAD FILE NAME:	0502AE302
DFCM PROJECT #	04256100
STATE PROPERTY #	
COPYRIGHT:	STATE OF UTAH

SHEET NUMBER:

AE302

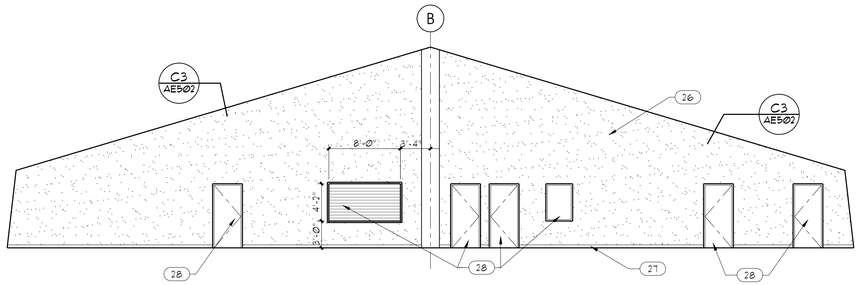

INTERIOR ELEVATION AT WOOD SHOP (C2 / AE401)
SCALE: 1/8"=1'-0"

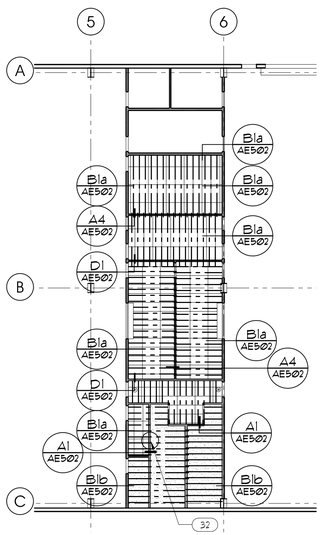

CEILING FRAMING PLAN (B1 / AE401)
SCALE: 1/16"=1'-0"

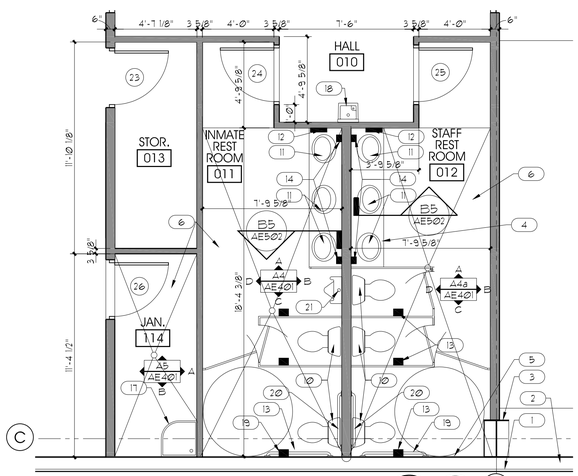

LG. SCALE PLAN AT TOILET ROOMS (B2 / AE401)
SCALE: 1/4"=1'-0"

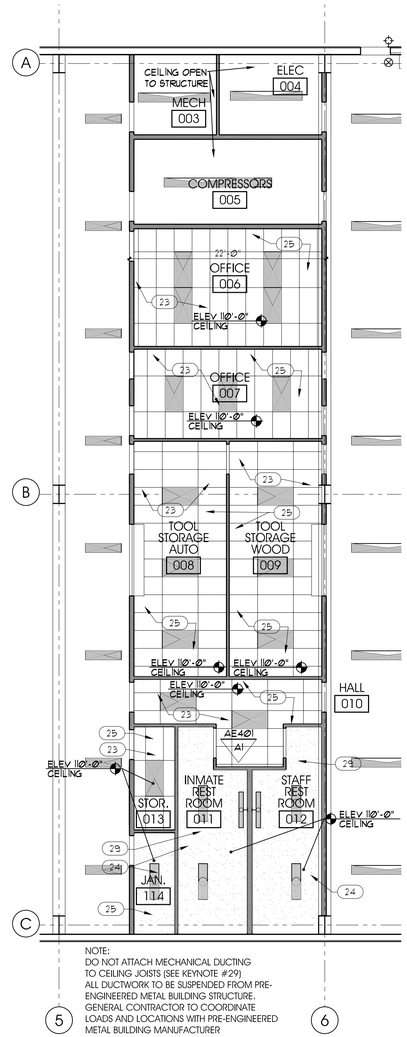

NOTE:
DO NOT ATTACH MECHANICAL DUCTING TO CEILING JOISTS (SEE KEYNOTE #29)
ALL DUCTWORK TO BE SUSPENDED FROM PRE-ENGINEERED METAL BUILDING STRUCTURE.
GENERAL CONTRACTOR TO COORDINATE LOADS AND LOCATIONS WITH PRE-ENGINEERED METAL BUILDING MANUFACTURER

OFFICE AREA REFLECTED CEILING PLAN (B3 / AE401)
SCALE: 1/8"=1'-0"

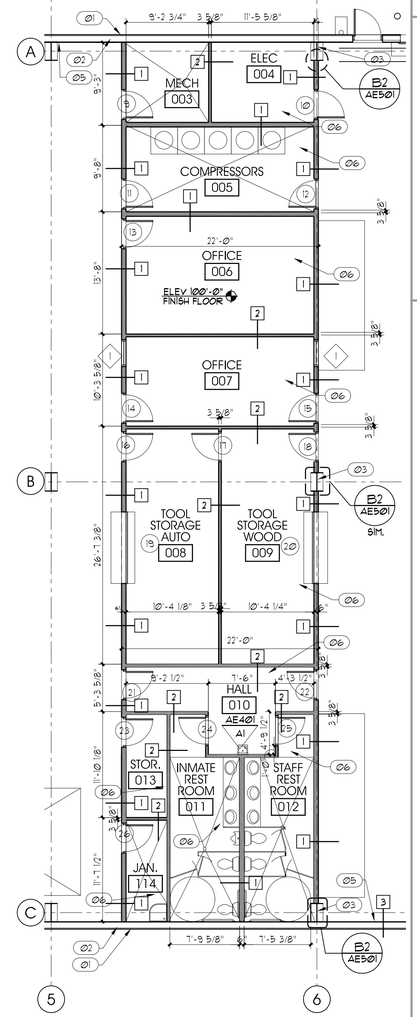

PLAN AT OFFICE AREA (B4 / AE401)
SCALE: 1/8"=1'-0"

GENERAL NOTES AND LEGEND:

-FOR SHEET AE401 ONLY.

- SEE SHEET G1 FOR GENERAL NOTES.
- SEE COVER SHEET FOR DRAWING INDEX.
- DO NOT SCALE DRAWINGS.
- CONTRACTOR SHALL VERIFY ALL DIMENSIONS AND CONDITIONS BEFORE BEGINNING WORK AND SHALL REPORT TO THE ARCHITECT ANY ERRORS, INCONSISTENCIES OR OMISSIONS BEFORE BEGINNING WORK. SEE GENERAL NOTES AND SPECIFICATIONS.
- SEE LIST OF ALTERNATES SHEET G1002 FOR BUILD OUT AND FINISHING CENTRAL OFFICE AREA

KEYED NOTE LEGEND:

-FOR SHEET AE401 ONLY.

01 PRE-ENGINEERED METAL BUILDING WALL PANEL(COLOR SELECTED BY ARCHITECT).
02 8" PRE-ENGINEERED BUILDING METAL GIRT-PAINT (COLOR SELECTED BY ARCHITECT).
03 PRE-ENGINEERED METAL BUILDING COLUMN - PAINT (COLOR SELECTED BY ARCHITECT). SEE STRUCTURAL.
04 PLASTIC LAMINATE COUNTER - SEE SECTION INDICATED.
05 LINE OF 5/8" TYP. "X" GYP. BD CONTINUOUS AROUND INTERIOR OF BUILDING TO 8'-0"AFF. PROVIDE 6" 20 Ga. STEEL STUD FRAMING AT 16" O.C. MAX. SPACING.
06 SEALED CONCRETE FLOOR - SEE FINISH SCHEDULE SHEET AE601.
07 CERAMIC TILE WAINSCOT SEE FINISH SCHEDULE SHEET AE601. PROVIDE BULLNOSE EDGE - TYPICAL
08 EPOXY PAINT OVER 5/8" TYP. "X" WR GYP. BD. FULL HEIGHT IN WET AREAS.
9 GYP. BD. PAINTED - SEE FINISH SHEET AE601
10 FLOOR MOUNTED WATER CLOSET - SEE PLUMBING DRAWINGS.
11 LAV - SEE PLUMBING DRAWINGS.
12 PAPER TOUELL DISPENSER - BOBRICK B-359 OR EQUAL.
13 TOILET PAPER DISPENSER - BOBRICK B-2888 OR EQUAL.
14 SOAP DISPENSER - BOBRICK B-211 OR EQUAL.
15 MIRROR - BOBRICK B-165 6036 OR EQUAL.
16 MOP RACK - BOBRICK B-239 OR EQUAL.
17 JANATOR SINK - SEE PLUMBING DRAWINGS.
18 WATER COOLER - SEE PLUMBING DRAWINGS.
19 42" GRAB BAR - BOBRICK B-6806x42" OR EQUAL.
20 36" GRAB BAR - BOBRICK B-6806x36" OR EQUAL.
21 ACCESSIBLE URINAL - SEE PLUMBING DRAWINGS.
22 SOLID PHENOLIC TOILET PARTITION COLOR SELECTED BY ARCHITECT
23 ACOUSTIC PANEL LAY IN CEILING WITH METAL GRID.
24 GYP. BD. CEILING - SECURE TO UNDERSIDE OF CEILING JOISTS.
25 PROVIDE 6" x 18Ga. STEEL STUD CEILING JOISTS AT 16" O.C. THIS AREA - BRACE PARTITION WALLS TO JOISTS PER DETAILS INDICATED. SUSPEND ACOUSTIC TILE CEILING SYSTEM AND LIGHTING FROM JOISTS.
26 5/8" TYP. "X" GYP. BD. PAINTED COLOR SELECTED BY ARCHITECT
27 RUBBER BASE - COLOR SELECTED BY ARCHITECT
28 DOOR / WINDOW - SEE PLANS AND DOOR / WINDOW SCHEDULE SHEET AE601
29 PROVIDE 3 5/8" 18Ga. STEEL STUD CEILING JOISTS AT 16" O.C. THIS AREA. SECURE CEILING TO JOISTS AT 16" O.C. Ea. WAY.
30 FRP PANEL WAINSCOT - COLOR WHITE.
31 LINE OF BRACE BEYOND - SEE SECTION INDICATED.
32 LOCATION OF WATER HEATER - PROVIDE 3/4" CDX OVER STEEL JOISTS AS PLATFORM - SEE PLUMBING DRAWINGS.
33 4" RUBBER BASE

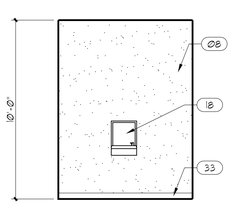

INTERIOR ELVATION (A1 / AE401)
SCALE: 1/14"=1'-0"

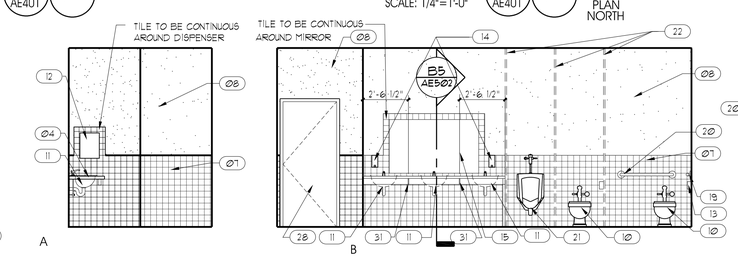

INTERIOR ELEVATIONS AT INMATE RESTROOM (A4 / AE401)
SCALE: 1/14"=1'-0"

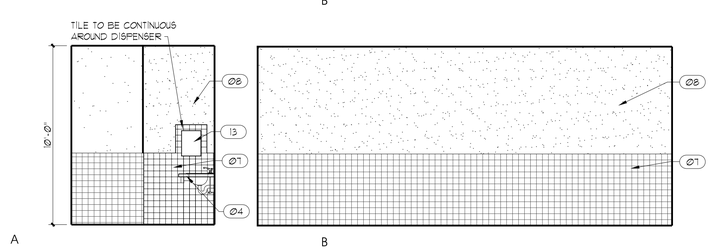

INTERIOR ELEVATIONS AT STAFF TOILET ROOM (A4a / AE401)
SCALE: 1/14"=1'-0"

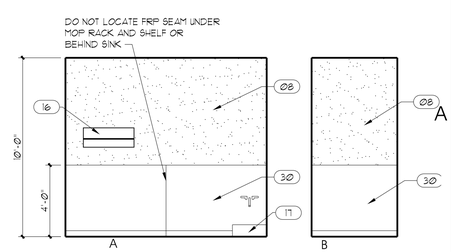

INTERIOR ELEVATIONS AT JAN. CLOSET (A5 / AE401)
SCALE: 1/14"=1'-0"

ARCHITECTAJC PROJECT # 0502

ajc architects

703 east 1700 south
salt lake city, utah 84105
ph: 801.466.8818
fx: 801.466.4411
ajc@ajcarchitects.com

OWNER INFORMATION

State of Utah
Department of Administrative Services

Division of Facilities Construction & Management
4110 State Office Building
Salt Lake City, Utah 84114
Phone: (801) 538 - 3018
Fax: (801) 538 - 3267

Internet: http://www.dfcm.utah.gov

PROJECT DESCRIPTION

ATE CENTER AT UTAH STATE PRISON

DRAPER, UTAH

SHEET NAME:

OFFICE AREA PLANS, INTERIOR ELEVATIONS

REVISIONS

MARK	DATE	DESCRIPTION

ISSUE DATA

ISSUE DATE:	APRIL 18, 2005
ISSUE TYPE:	CON. DOCS.
DRAWN BY:	BJA
CHECKED BY:	KRR
CAD FILE NAME:	0502AE101
DFCM PROJECT #	04256100
STATE PROPERTY #	
COPYRIGHT:	STATE OF UTAH

SHEET NUMBER:

AE401

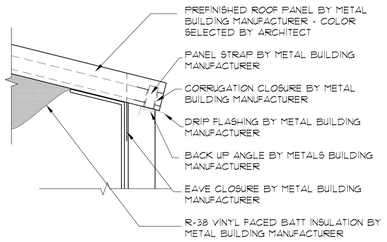

WALL TO ROOF PANEL (D1)
SCALE: 3" = 1'-0" (AE501)

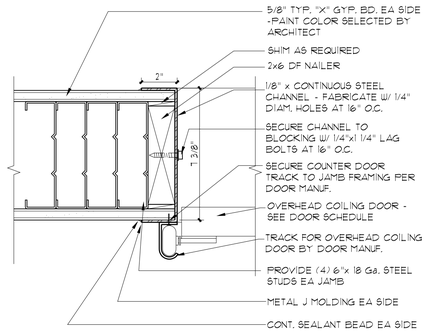

COUNTER DOOR JAMB (D2)
SCALE: 3" = 1'-0" (AE501)

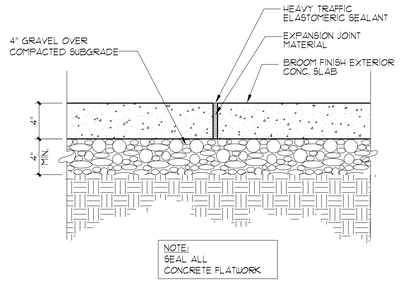

EXPANSION JOINT DETAIL (D3)
SCALE: 1 1/2" = 1'-0" (AE501)

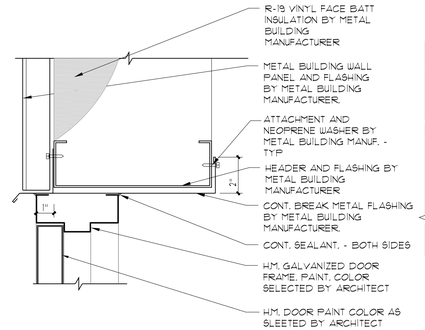

DOOR HEAD (D4)
SCALE: 3" = 1'-0" (AE501)

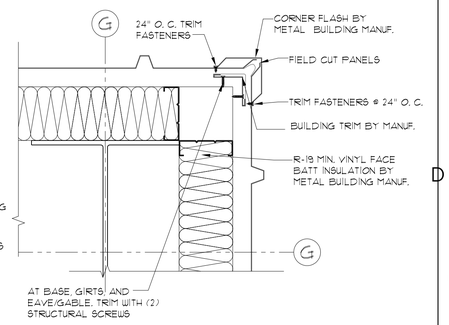

OUTSIDE CORNER DETAIL (D5)
SCALE: 1 1/2" = 1'-0" (AE501)

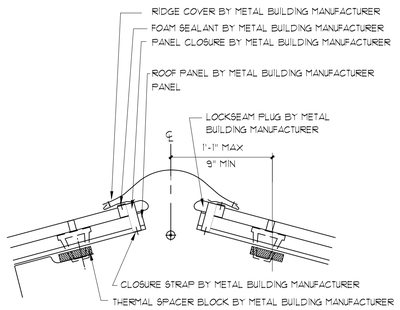

RIDGE DETAIL (C1)
SCALE: 3" = 1'-0" (AE501)

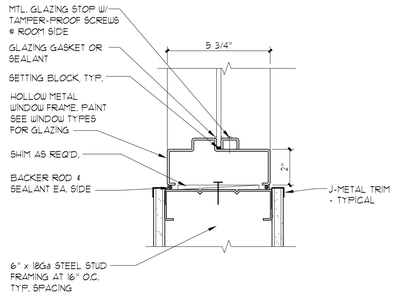

HM WINDOW JAMB / SILL (C2)
SCALE: 3" = 1'-0" (AE501)

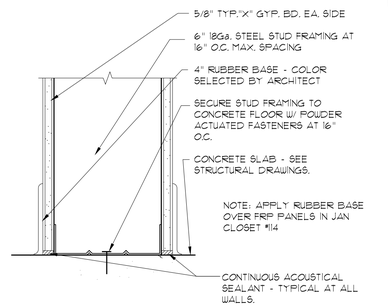

WALL BASE DETAIL (C3)
SCALE: 3" = 1'-0" (AE501)

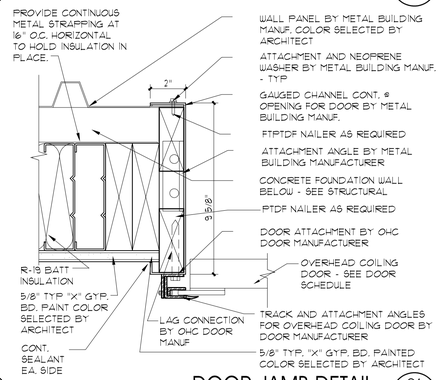

DOOR JAMB DETAIL (C4)
SCALE: 3" = 1'-0" (AE501)

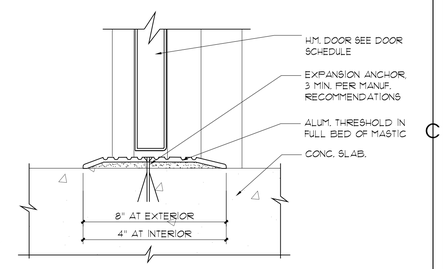

THRESHOLD (C5)
SCALE: 3" = 1'-0" (AE501)

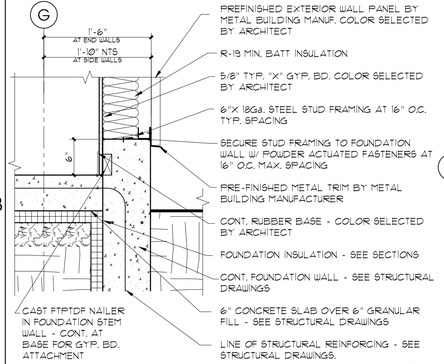

WALL BASE DETAIL (B1)
SCALE: 1" = 1'-0" (AE501)

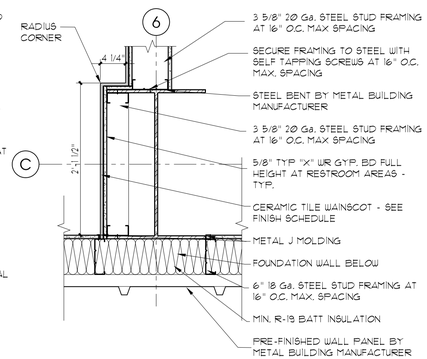

FURR- OUT DETAIL (B2)
SCALE: 1" = 1'-0" (AE501)

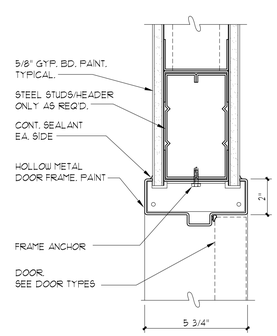

DOOR HEAD DETAIL (B3)
SCALE: 3" = 1'-0" (AE501)

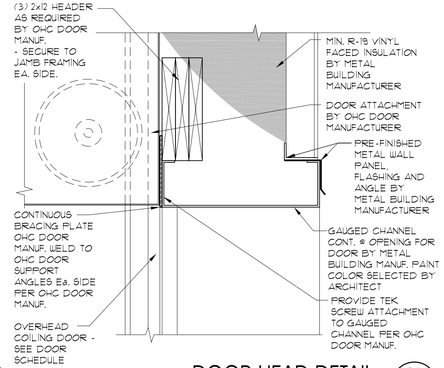

DOOR HEAD DETAIL (B4)
SCALE: 1 1/2" = 1'-0" (AE501)

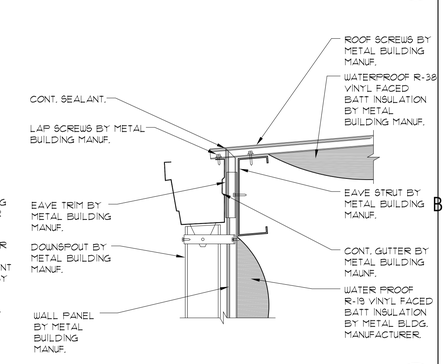

GUTTER DETAIL (B5)
SCALE: 1 1/2" = 1'-0" (AE501)

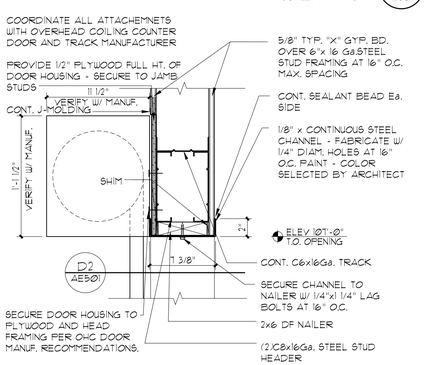

COUNTER DOOR HEAD (A1)
SCALE: 1 1/2" = 1'-0" (AE501)

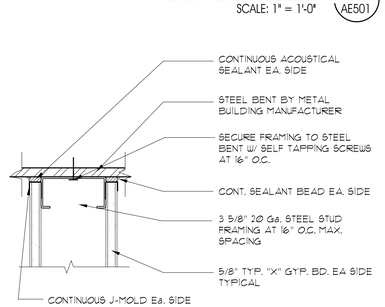

WALL DETAIL (A2)
SCALE: 3" = 1'-0" (AE501)

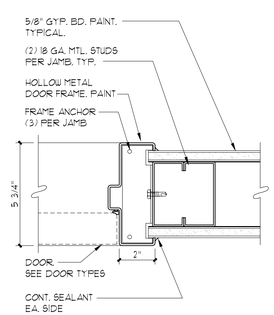

DOOR JAMB DETAIL (A3)
SCALE: 3" = 1'-0" (AE501)

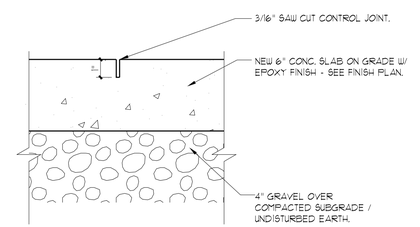

CONTROL JOINT (A4)
SCALE: 3" = 1'-0" (AE501)

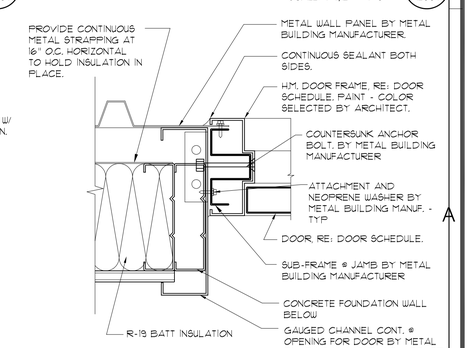

DOOR JAMB DETAIL (A5)
SCALE: 3" = 1'-0" (AE501)

ARCHITECTAJC PROJECT # 0502

ajc architects
703 east 1700 south
salt lake city, utah 84105
ph: 801.466.8818
fx: 801.466.4411
ajc@ajcarchitects.com

OWNER INFORMATION

State of Utah
Department of Administrative Services
Division of Facilities Construction & Management
4110 State Office Building
Salt Lake City, Utah 84114
Phone: (801) 538 - 3018
Fax: (801) 538 - 3267

Internet: http://www.dfcm.utah.gov

PROJECT DESCRIPTION

ATE CENTER AT UTAH STATE PRISON

DRAPER, UTAH

SHEET NAME:

SHELL DETAILS

REVISIONS

MARK	DATE	DESCRIPTION

ISSUE DATA

ISSUE DATE:	APRIL 18, 2005
ISSUE TYPE:	CON. DOCS.
DRAWN BY:	BJA
CHECKED BY:	KRR
CAD FILE NAME:	0502AE501
DFCM PROJECT #	04256100
STATE PROPERTY #	
COPYRIGHT:	STATE OF UTAH

SHEET NUMBER:

AE501

SHEET 24 OF 44 TOTAL PAGES

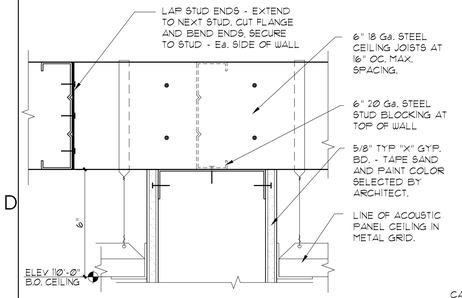

PROVIDE WR. GYP. BD. ON WALLS AT ALL WET AREAS. DO NOT SECURE MECHANICAL EQUIPMENT TO CEILING JOISTS.

WALL BRACING DETAIL (D1)
SCALE: 3" = 1'-0" (AE502)

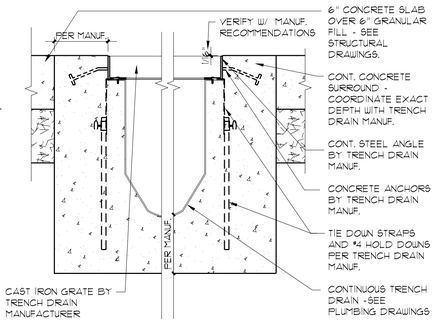

TRENCH DRAIN DETAIL (D2)
SCALE: 1 1/2" = 1'-0" (AE502)

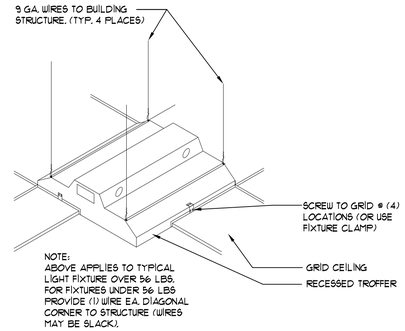

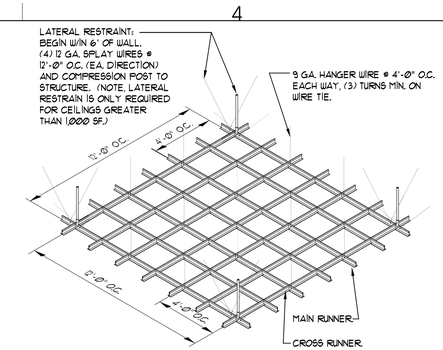

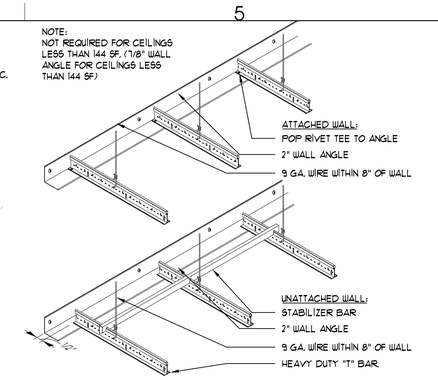

SUSPENDED ACOUSTIC PANEL CEILING AND LIGHTING DETAILS (D5)
SCALE: 3" = 1'-0" (AE502)

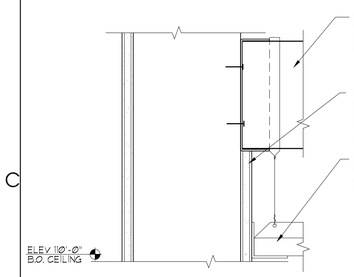

PROVIDE WR. GYP. BD. ON WALLS AT ALL WET AREAS. DO NOT SECURE MECHANICAL EQUIPMENT TO CEILING JOISTS.

WALL BRACING DETAIL (C1)
SCALE: 3" = 1'-0" (AE502)

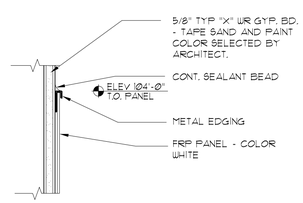

FRP PANEL DETAIL (C2)
SCALE: 3" = 1'-0" (AE502)

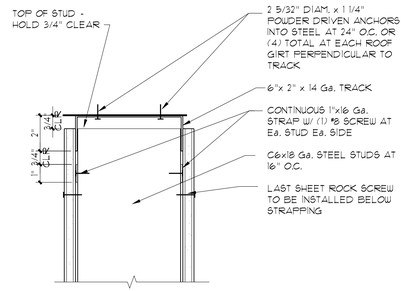

SLIP JOINT DETAIL (C3)
SCALE: 3" = 1'-0" (AE502)

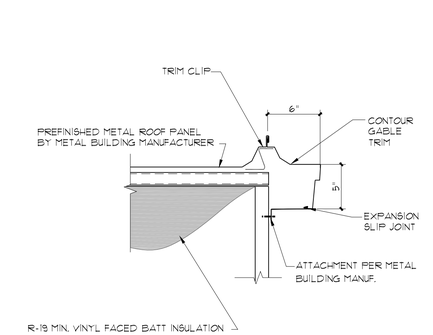

GABLE TRIM DETAIL (C4)
SCALE: 1 1/2" = 1'-0" (AE502)

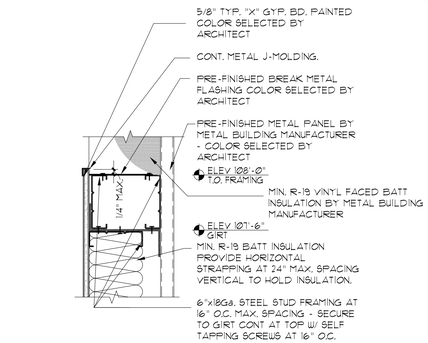

GYP. BD. WAINSCOT DETAIL (C5)
SCALE: 1 1/2" = 1'-0" (AE502)

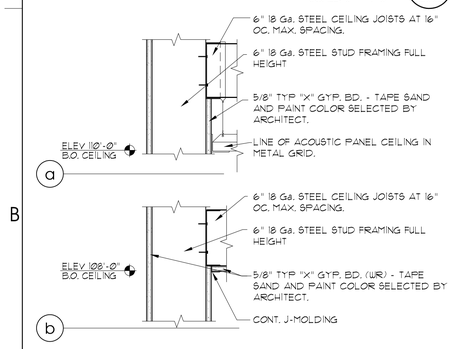

PROVIDE WR. GYP. BD. ON WALLS AT ALL WET AREAS. DO NOT SECURE MECHANICAL EQUIPMENT TO CEILING JOISTS.

WALL BRACING DETAIL (B1)
SCALE: 1 1/2" = 1'-0" (AE502)

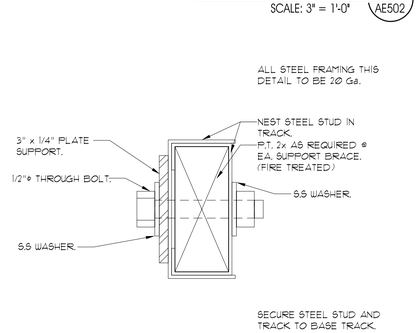

COUNTER BRACING DETAIL (B2)
SCALE: 6" = 1'-0" (AE502)

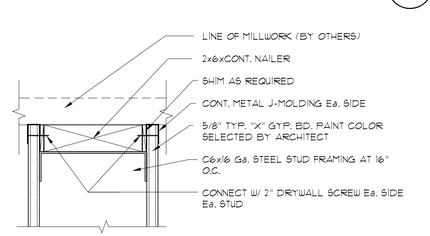

MILLWORK NAILER DETAIL (B3)
SCALE: 3" = 1'-0" (AE502)

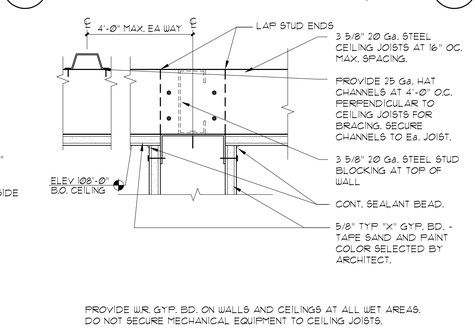

PROVIDE WR. GYP. BD. ON WALLS AND CEILINGS AT ALL WET AREAS. DO NOT SECURE MECHANICAL EQUIPMENT TO CEILING JOISTS.

WALL BRACING DETAIL (B4)
SCALE: 3" = 1'-0" (AE502)

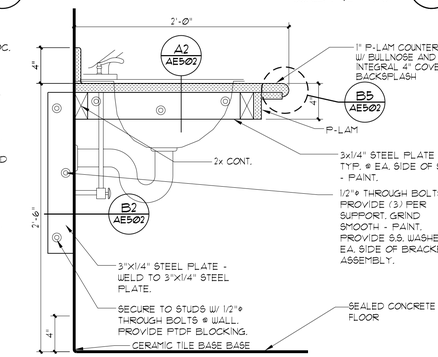

COUNTER SECTION (B5)
SCALE: 1 1/2" = 1'-0" (AE502)

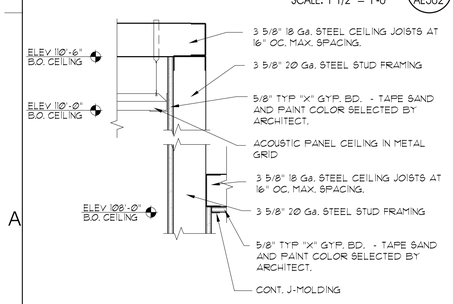

WALL BRACING DETAIL (A1)
SCALE: 1 1/2" = 1'-0" (AE502)

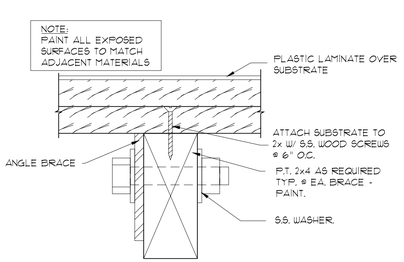

COUNTER BRACING DETAIL (A2)
SCALE: 6" = 1'-0" (AE502)

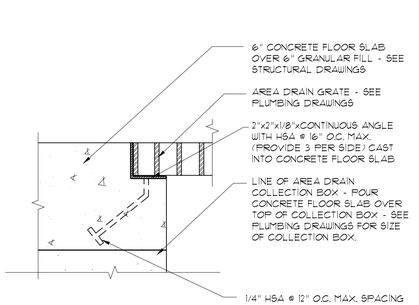

DRAIN DETAIL (A3)
SCALE: 3" = 1'-0" (AE502)

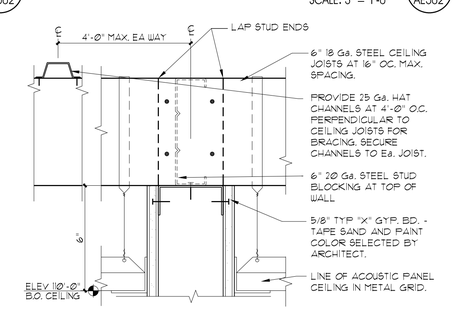

PROVIDE WR. GYP. BD. ON WALLS AT ALL WET AREAS. DO NOT SECURE MECHANICAL EQUIPMENT TO CEILING JOISTS.

WALL BRACING DETAIL (A4)
SCALE: 3" = 1'-0" (AE502)

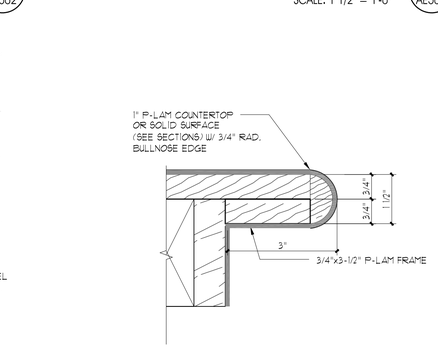

COUNTER EDGE DETAIL (A5)
SCALE: 6" = 1'-0" (AE502)

ARCHITECTAJC PROJECT # 0502

ajc architects

703 east 1700 south
salt lake city, utah 84105
ph: 801.466.8818
fx: 801.466.4411
ajc@ajcarchitects.com

OWNER INFORMATION

State of Utah
Department of Administrative Services

Division of Facilities Construction & Management
4110 State Office Building
Salt Lake City, Utah 84114
Phone: (801) 538 - 3018
Fax: (801) 538 - 3267

Internet: http://www.dfcm.utah.gov

PROJECT DESCRIPTION

ATE CENTER AT UTAH STATE PRISON

DRAPER, UTAH

SHEET NAME:

SHELL DETAILS

REVISIONS

MARK	DATE	DESCRIPTION

ISSUE DATA

ISSUE DATE:	APRIL 18, 2005
ISSUE TYPE:	CON. DOCS.
DRAWN BY:	BJA
CHECKED BY:	KRR
CAD FILE NAME:	0502AE501
DFCM PROJECT #	04256100
STATE PROPERTY #	
COPYRIGHT:	STATE OF UTAH

SHEET NUMBER:

AE502

ROOM FINISH NOTES:

1- PROVIDE FRP PANELS TO HEIGHT OF 4'-0" AFF. AT WET WALLS AND AS SHOWN ON INTERIOR ELEVATIONS (EXCEPT AT TOILET ROOMS).

2- CERAMIC WALL TILE (CTW) SHALL BE TO 4'-8" AFF. PAINT WALL FROM TOP OF TILE TO CEILING W/ EPOXY PAINT.

3- PROVIDE CEMENTITIOUS BACKER BOARD @ ALL CERAMIC TILE & FRP AREAS.

4- ALL RESTROOMS TO RECEIVE EPOXY PAINT.

5- ALL COLORS TO BE SELECTED BY ARCHITECT.

6- ALL FLOOR TILE TO BE SLIP RESISTANT.

SIGN NOTES:

● ALL SIGNAGE SHALL MEET ANSI REQUIREMENTS, INCLUDING (BUT NOT LIMITED TO):

A- CHARACTERS MUST CONTRAST FROM BACKGROUND BY AT LEAST 70%.

B- BRAILLE CHARACTERS MUST MEET STANDARD DIMENSIONS ACCORDING TO ADAAG A430.4. GRADE 2 BRAILLE.

C- CHARACTERS AND BACKGROUND SHALL BE NON-GLARE.

D- SIGNS SHALL BE INSTALLED ON THE WALL ADJACENT TO THE LATCH SIDE OF THE DOOR INCLUDING DOUBLE LEAF DOORS. IN THE EVENT THIS IS NOT POSSIBLE IN CERTAIN CONDITIONS, NOTIFY ARCHITECT AND WAIT FOR INSTRUCTIONS.

E- SUPPLY ONE SIGN FOR EACH RESTROOM DOOR MINIMUM.

F- SUBMIT SAMPLE, COLOR & LAYOUT OPTIONS AND SIGN SCHEDULE FOR REVIEW AND APPROVAL

INTERIOR FINISH LEGEND

SYMBOL	FINISH	NOTE
	FLOOR	
EC	EXPOSED CONCRETE. SEALED	SEE SPEC.
CFT	CERAMIC FLOOR TILE -1, (2"x2")	SEE SPEC.
	BASE	
RB	4" RUBBER BASE	ROPPE P-100 BLACK OR EQUAL
CTB	CERAMIC TILE BASE -1, (4"x4") W/ SANITARY COVE	DAL TILE 0100 WHITE OR EQUAL
	WALLS	
EXP	EXPOSED STRUCTURE PAINTED WITH VINYL FACE BATT INSULATION	-
GP	GYPSUM BOARD, PAINTED	-
CTW	CERAMIC WALL TILE -1, (4"x4") TILE WAINSCOT TO BE 4'-8" AFF. WITH GP-1 EPOXY PAINT ABOVE TILE.	-
FRP	FRP PANELS TO 48" AFF W/ EPOXY PAINT ABOVE.	
	CEILINGS	
		-
EXP	EXPOSED STRUCTURE. PAINTED WITH VINYL FACE BATT INSULATION	SEE SPEC.
ATI	ACOUSTICAL PANEL-1, LAY-IN, (2'x4')	SEE SPEC.
GC	GYPSUM BOARD, PAINTED -1	
	MISC.	

HARDWARE SCHEDULE CONT.

QTY	ITEM	MODEL	FINISH	MANUFACTURER
	GROUP 3			
3 EA.	HINGE	5BB1 4.5x4.5	630	H.B. IVES
1 EA.	ENTRANCE LOCK	CL3351 NZD C6 594A2	626	CORBIN RUSSWIN
1 EA.	WALL STOP	WS 407	630	H.B. IVES
3 EA	SILENCER	SR64	GRY	H.B. IVES
	GROUP 4			
3 EA.	HINGE	5BB1 4.5x4.5	652	H.B. IVES
1 EA.	CLASSROOM LOCK	CL3355 NZD C6 594A2	626	CORBIN RUSSWIN
1 EA.	CLOSER	P4041	689	LCN
1 EA.	KICKPLATE	8400 10"x2" LDW	630	H.B. IVES
1 EA.	WALL STOP	WS 407	630	H.B. IVES
3 EA	SILENCER	SR64	GRY	H.B. IVES
	GROUP 5			
3 EA.	HINGE	5BB1 4.5x4.5	652	H.B. IVES
1 EA.	CLASSROOM LOCK	CL3355 NZD C6 594A2	626	CORBIN RUSSWIN
1 EA.	WALL STOP	WS 407	630	H.B. IVES
3 EA	SILENCER	SR64	GRY	H.B. IVES
	GROUP 6			
3 EA.	HINGE	5BB1 4.5x4.5	652	H.B. IVES
1 EA.	STOREROOM LOCK	CL3357 NZD C6 594A2	626	CORBIN RUSSWIN
1 EA.	WALL STOP	WS 407	630	H.B. IVES
3 EA	SILENCER	SR64	GRY	H.B. IVES
1 EA.	CLOSER	P4041	689	LCN
	GROUP 7			
3 EA.	HINGE	5BB1 4.5x4.5	652	H.B. IVES
1 EA.	STOREROOM LOCK	CL3357 NZD C6 594A2	626	CORBIN RUSSWIN
1 EA.	WALL STOP	WS 407	630	H.B. IVES
3 EA	SILENCER	SR64	GRY	H.B. IVES
	GROUP 7			
1 EA.	NOTE	HARDWARE BY DOOR MANUFACTURER		

DOOR SCHEDULE NOTES & ABBREVIATIONS:

(1) W/ ADA OPENER SUPPLIED AND INSTALLED BY OWNER

HM	HOLLOW METAL	PT	PAINT
MTL	METAL	FA	FACTORY FINISH

ROOM FINISH SCHEDULE

RM NO.	ROOM NAME	BASE: RUBBER-1 (RB)	BASE: CERAMIC TILE BASE-SANITARY (CTB)	FLOORING: SEALED CONCRETE (CF1)	FLOORING: CERAMIC TILE (CFT)	WALL NORTH: GYP. BD PAINT-1 (GP1)	WALL NORTH: EXPOSED STRUCTURE PAINT (EXP)	WALL NORTH: CWT-1 (CWT)	WALL NORTH: FRP PANELS TO 48" AFF (FRP)	WALL EAST: GYP. BD PAINT-1 (GP1)	WALL EAST: GYP. BD PAINT-2 (GP2)	WALL EAST: CWT-1 (CWT)	WALL EAST: FRP PANELS TO 48" AFF (FRP)	WALL SOUTH: GYP. BD PAINT-1 (GP1)	WALL SOUTH: GYP. BD PAINT-2 (GP2)	WALL SOUTH: CWT-1 (CWT)	WALL SOUTH: FRP PANELS TO 48" AFF (FRP)	WALL WEST: GYP. BD PAINT-1 (GP1)	WALL WEST: GYP. BD PAINT-2 (GP2)	WALL WEST: CWT-1 (CWT)	WALL WEST: FRP PANELS TO 48" AFF (FRP)	CEILING: ACOUSTICAL PANEL (ATI)	CEILING: GYP. BD PAINT-2 (GC)	CEILING: EXPOSED TO STRUCTURE PAINT (EXP)	NOTES
	MAIN LEVEL																								
001	AUTO SHOP	●		●		●	●			●	●			●	●			●	●					●	
002	WOOD SHOP	●		●		●	●			●	●			●	●			●	●					●	
003	MECHANICAL ROOM	●		●		●				●				●				●						●	
004	ELECTRICAL ROOM	●		●		●				●				●				●						●	
005	COMPRESSOR ROOM	●		●		●				●				●				●						●	
006	OFFICE	●		●		●				●				●				●				●			
007	OFFICE	●		●		●				●				●				●				●			
008	TOOL STORAGE AUTO	●		●		●				●				●				●					●		
009	TOOL STORAGE WOOD	●		●		●				●				●				●					●		
010	HALL	●		●		●				●				●				●					●		
011	INMATE REST ROOM		●		●	●		●		●		●		●		●		●		●			●		
012	STAFF REST ROOM		●		●	●		●		●		●		●		●		●		●			●		
013	STORAGE	●		●		●				●				●				●					●		
014	JANITOR CLOSET	●		●		●			●	●			●	●				●					●		RUBBER BASE ALL WALLS EPOXY PAINT ALL WALLS

DOOR SCHEDULE

DOOR NO.	DOOR SIZE	FIRE RATING (MIN.)	DOOR: TYPE	DOOR: MATERIAL	DOOR: FINISH	FRAME: TYPE	FRAME: FINISH	SEE DOOR TYPES FOR TYPICAL DETAILS. SEE BELOW FOR NON-TYP. DETAILS: HEAD	JAMB	JAMB	THRESHOLD	HARDWARE	DOOR NOTES
	MAIN LEVEL												
1	3'-0" x 7'-0"	-	A	MTL	PT	1	PT	-	-	-	-	1	
2	12'-0"x10'-0"	-	B	MTL	PT	2	PT	-	-	-	-	8	
3	18'-0"x10'-0"	-	B	MTL	PT	2	PT	-	-	-	-	8	
4	3'-0" x 7'-0"	-	A	MTL	PT	1	PT	-	-	-	-	1	
5	3'-0" x 7'-0"	-	A	MTL	PT	1	PT	-	-	-	-	1	
6	16'-0"x10'-0"	-	B	MTL	PT	2	PT	-	-	-	-	8	
7	3'-0" x 7'-0"	-	A	MTL	PT	1	PT	-	-	-	-	1	
8	10'-0"x10'-0"	-	B	MTL	PT	2	PT	-	-	-	-	8	
9	3'-0" x 7'-0"	-	C	WD	PT	1	PT	-	-	-	CS/AE501	6	
10	3'-0" x 7'-0"	-	C	WD	PT	1	PT	-	-	-	-	6	
11	3'-0" x 7'-0"	-	C	WD	PT	1	PT	-	-	-	CS/AE501	6	
12	3'-0" x 7'-0"	-	C	WD	PT	1	PT	-	-	-	CS/AE501	6	
13	3'-0" x 7'-0"	-	C	WD	PT	1	PT	-	-	-	-	3	
14	3'-0" x 7'-0"	-	C	WD	PT	1	PT	-	-	-	-	3	
15	3'-0" x 7'-0"	-	C	WD	PT	1	PT	-	-	-	-	3	
16	3'-0" x 7'-0"	-	C	WD	PT	1	PT	-	-	-	-	4	
17	3'-0" x 7'-0"	-	C	WD	PT	1	PT	-	-	-	-	5	
18	3'-0" x 7'-0"	-	C	WD	PT	1	PT	-	-	-	-	4	
19	8'-0" x 4'-2"	-	D	MTL	PT	3	PT	-	-	-	-	8	
20	8'-0" x 4'-2"	-	D	MTL	PT	3	PT	-	-	-	-	8	
21	3'-0" x 7'-0"	-	C	WD	PT	1	PT	-	-	-	-	4	
22	3'-0" x 7'-0"	-	C	WD	PT	1	PT	-	-	-	-	4	
23	3'-0" x 7'-0"	-	C	WD	PT	1	PT	-	-	-	CS/AE501	7	
24	3'-0" x 7'-0"	-	C	WD	PT	1	PT	-	-	-	CS/AE501	2	
25	3'-0" x 7'-0"	-	C	WD	PT	1	PT	-	-	-	CS/AE501	2	
26	3'-0" x 7'-0"	-	C	WD	PT	1	PT	-	-	-	CS/AE501	7	

HARDWARE SCHEDULE

QTY	ITEM	MODEL	FINISH	MANUFACTURER
	GROUP 1	MODEL		
3 EA.	HINGE	5BB1 4.5x4.5 NRP	630	H.B. IVES
1 EA.	PANIC HARDWARE	CD99L 996L	626	VON DUPRIN
1 EA.	MORTISE CYLANDER	1080-594A2	626	CORBIN RUSSWIN
1 EA.	RIM CYLANDER	3080-594A2	626	CORBIN RUSSWIN
1 EA.	CLOSER	4041 SCUSH	689	LCN
1 EA.	KICKPLATE	8400 10"x2" LDW	630	H.B. IVES
1 EA.	HEAD SEAL	700 SA	AL	NATIONAL GUARD
1 PR.	JAMB SEAL	1605	AL	NATIONAL GUARD
1 EA	DOOR SWEEP	C627A	AL	NATIONAL GUARD
1 EA.	THRESHOLD	425	AL	NATIONAL GUARD - SEE DETAIL C5/AE501
	GROUP 2			
3 EA.	HINGE	5BB1 HW 4.5x4.5	652	H.B. IVES
1 EA.	DEADLOCK	DL4017 LE56 CYLINDER	626	CORBIN RUSSWIN
1 EA.	MORTISE CYLINDER	1080-594A2	626	CORBIN RUSSWIN
1 EA.	PUSH PLATE	8200-0 4"x16"	630	H.B. IVES
1 EA.	PULL PLATE	8302-0 4"x16"	630	H.B. IVES
1 EA.	CLOSER	P4041	689	LCN
1 EA.	KICKPLATE	8400 10"x2" LDW	630	H.B. IVES
1 EA.	WALL STOP	WS 407	630	H.B. IVES
3 EA	SILENCER	SR64	GRY	H.B. IVES

WINDOW SCHEDULE

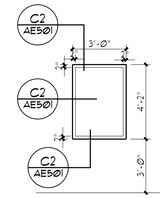

HOLLOW METAL FRAME -PRIMERED AND PAINTED
1/4" TEMPERED GLAZING CLEAR

FRAME TYPES

FINISH FLOOR DOOR TYPES

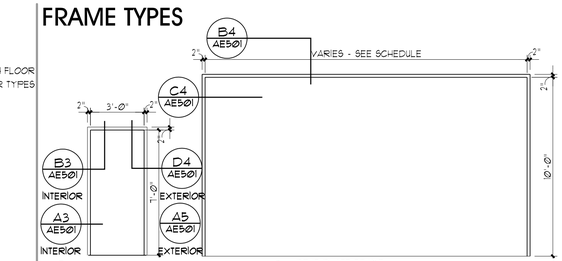

1 HOLLOW METAL FRAME GALVANIZED AND PAINTED AT EXTERIOR DOORS PRIMERED AND PAINTED AT INTERIOR DOORS

2 BENT PLATE FRAME GALVANIZED AND PAINTED BY PRE-ENGINEERED METAL BUILDING MANUF.

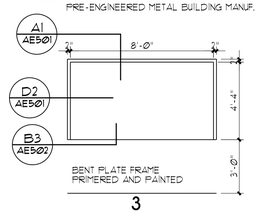

BENT PLATE FRAME PRIMERED AND PAINTED

3

DOOR TYPES

FINISH FLOOR DOOR TYPES

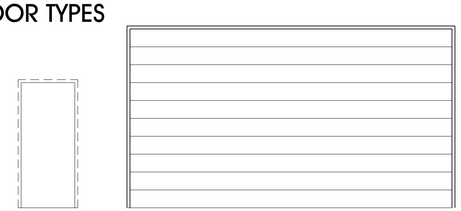

A FRAME TYPE 1 METAL DOOR GRADE III GALVANIZED AT EXTERIOR PAINTED

B PRE-FINISHED INSULATED OVERHEAD COILING DOOR

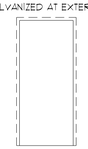

C FRAME TYPE 1 SOLID CORE WOOD DOOR PAINT GRADE

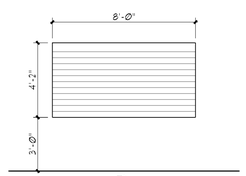

D PRE-FINISHED COUNTER DOOR

ARCHITECTAJC PROJECT # 0502

ajc architects

703 east 1700 south
salt lake city, utah 84105
ph: 801.466.8818
fx: 801.466.4411
ajc@ajcarchitects.com

OWNER INFORMATION

State of Utah
Department of Administrative Services

Division of Facilities Construction & Management
4110 State Office Building
Salt Lake City, Utah 84114
Phone: (801) 538 - 3018
Fax: (801) 538 - 3267

Internet: http://www.dfcm.utah.gov

PROJECT DESCRIPTION

ATE CENTER AT UTAH STATE PRISON

DRAPER, UTAH

SHEET NAME:

DOOR / FINISH SCHEDULES

REVISIONS

MARK	DATE	DESCRIPTION

ISSUE DATA

ISSUE DATE:	APRIL 18, 2005
ISSUE TYPE:	CON. DOCS.
DRAWN BY:	BJA
CHECKED BY:	KRR
CAD FILE NAME:	0502AE601
DFCM PROJECT #	04256100
STATE PROPERTY #	
COPYRIGHT:	STATE OF UTAH

SHEET NUMBER:

AE601

MECHANICAL LEGEND

SYMBOL	ABR.	DESCRIPTION	SYMBOL	ABR.	DESCRIPTION
GENERAL TERMINOLOGY			WETSIDE CONTINUED		
	AP	ACCESS PANEL		BV	BALL VALVE
		EXISTING EQUIPMENT TO REMAIN	P	PRV	PRESSURE RELIEF VALVE
		NEW EQUIPMENT			STRAINER
T	T'STAT	WALL MOUNTED THERMOSTAT	BO		STRAINER W/ PLUGGED BLOW OFF
A / M-5		SECTION LETTER DESIGNATION / SECTION DRAWN ON THIS SHEET		CW	CULINARY COLD WATER
				HW	CULINARY HOT WATER
2 / M-5		DETAIL NUMBER DESIGNATION / DETAIL DRAWN ON THIS SHEET			PRESSURE GAUGE AND GAUGE COCK -WATER
AH / 1		MECHANICAL EQUIPMENT DESIGNATION / EQUIPMENT ITEM DESIGNATION			PRESSURE GAUGE AND GAUGE COCK -STEAM
D-1 / CFM		REGISTER, GRILLE OR DIFFUSER DESIGNATION WITH BALANCING CFM LISTED BELOW			THERMOMETER AND THERMOWELL
R-1		GRILLE, OR LOUVER DESIGNATION WHERE BALANCING NOT REQUIRED			ANCHOR POINT
1		REVISION DESIGNATOR AND NUMBER	T IBT		INVERTED BUCKET STEAM TRAP
1		KEY NOTE DESIGNATOR AND NUMBER	TT		THERMOSTATIC STEAM TRAP
	POC	POINT OF CONNECTION	F&T		FLOAT & THERMOSTATIC STEAM TRAP
AFF		ABOVE FINISHED FLOOR			DIRECTION OF FLOW
GC		GENERAL CONTRACTOR			PITCH DOWN
MC		MECHANICAL CONTRACTOR			ELBOW UP
CC		CONTROL CONTRACTOR			ELBOW DOWN
EC		ELECTRICAL CONTRACTOR			TEE UP
FPC		FIRE PROTECTION CONTRACTOR			TEE DOWN
NIC		NOT IN CONTRACT			EXISTING PIPING TO REMAIN
NTS		NOT TO SCALE			NEW PIPING
C		COMMON			PIPE CAP OR PLUG
NC		NORMALLY CLOSED			CONCENTRIC REDUCER
NO		NORMALLY OPEN			ECCENTRIC REDUCER
					EXPANSION JOINT
WET SIDE			CD		CONDENSATE DRAIN
M		ELECTRIC MOTOR ACTUATOR	LPS		LOW PRESSURE STEAM
		THREADED OR SWEAT VALVE CONNECTION	LPR		LOW PRESSURE STEAM RETURN
		FLANGED VALVE CONNECTION	HPS		HIGH PRESSURE STEAM
		BUTTERFLY VALVE	HPR		HIGH PRESSURE STEAM RETURN
		GATE VALVE	CR		CONDENSATE RETURN
M		MOTORIZED 2-WAY CONTROL VALVE	PC		PUMPED CONDENSATE
	PRV	PRESSURE REDUCING VALVE			
	PRV	PRESSURE REDUCING VALVE W/ CHECK			

MECHANICAL GENERAL NOTES:

G-1 MECHANICAL INFORMATION IS NOT LIMITED TO THE MECHANICAL DRAWINGS. CONTRACTOR SHALL BE RESPONSIBLE FOR INFORMATION ON ALL OTHER CONSTRUCTION DOCUMENTS INCLUDING DRAWINGS BY OTHER DISCIPLINES AND SPECIFICATIONS.

A - EACH DRAWING SHEET AND THE SPECIFICATIONS HAVE BEEN PREPARED TO SUPPLEMENT EACH OTHER AND THEY SHALL BE INTERPRETED AS AN INTEGRAL UNIT WITH ITEMS SHOWN AND NOTED ON ONE AND NOT THE OTHER BEING FURNISHED AND INSTALLED AS THOUGH SHOWN AND CALLED OUT IN ALL PLACES. ITEMS IN SPECIFICATIONS OR DRAWINGS LISTED WHICH ARE DIFFERING IN EFFICIENCY OR QUALITY SHALL BE HELD TO THE GREATEST OF: EFFICIENCY, QUALITY OR GOVERNING CODE.

B - THE CONTRACTOR WILL BE HELD RESPONSIBLE FOR THE INSTALLATION OF THE SYSTEMS ACCORDING TO THE TRUE INTENT AND MEANING OF THE CONTRACT DOCUMENTS.

C - THE CONTRACTOR SHALL INSTALL ALL EQUIPMENT WITH PROPER SERVICE ACCESS AND CLEARANCES ACCORDING TO MANUFACTURERS RECOMMENDATIONS. THE CONTRACTOR SHALL REVIEW SUPPLIERS BID PACKAGES FOR COMPLETENESS AND COMPLIANCE TO THE SPECIFICATIONS, SCHEDULES, AND DESIGN INTENT (ALL EQUIPMENT AND METHODS). THE CONTRACTOR SHALL REMOVE AND REINSTALL CORRECTLY AT HIS OWN EXPENSE ANY EQUIPMENT NOT IN COMPLIANCE.

D - THE CONTRACTOR SHALL CONSULT MANUFACTURERS INSTALLATION INSTRUCTIONS FOR SIZES, METHODS, ACCESSORIES, AND CLEARANCES IN SPACE AVAILABLE PRIOR TO BIDDING PROJECT.

E - ANYTHING NOT CLEAR OR IN CONFLICT WILL BE EXPLAINED BY MAKING APPLICATION TO THE ENGINEER IN WRITING.

G-2 ANY AND ALL ALTERATIONS TO THE SYSTEM SHOWN SHALL BE THE RESPONSIBILITY OF THIS CONTRACTOR. ENGINEER SHALL BE NOTIFIED IN WRITING PRIOR TO CHANGES.

G-3 CONTRACTOR SHALL FIELD VERIFY ALL DIMENSIONS AND LOCATIONS.

G-4 THE WORKING DRAWINGS ARE DIAGRAMMATIC. THEY DO NOT SHOW EVERY OFFSET, BEND, OR ELBOW NECESSARY FOR THE COMPLETE INSTALLATION IN THE SPACE PROVIDED. ALL LOCATIONS FOR MECHANICAL EQUIPMENT SHALL BE FIELD VERIFIED AND COORDINATED WITH ALL DRAWINGS. THE CONTRACTOR SHALL PROVIDE PROVISIONS FOR BLOCK OUTS OR CORE DRILLS THROUGH STRUCTURE.

G-5 THE INSTRUCTION TO "PROVIDE" ALSO INCLUDES INSTALLATION.

G-6 SHEET METAL DUCT SIZES SHOWN ON DRAWINGS ARE FREE AREA DIMENSIONS.

G-7 PROVIDE AND INSTALL BALANCING DAMPERS IN ALL SUPPLY AIR BRANCH DUCTS. BALANCE TO CFM SHOWN ON PLAN.

G-8 PROVIDE TURNING VANES IN ALL ELBOWS OF RECTANGULAR DUCT.

G-9 C.F.M. LISTED IS ACTUAL AIR.

G-10 SUPPLIERS SHALL REVIEW ALL DRAWINGS AND THE SPECIFICATIONS PRIOR TO SUBMITTING PRICES TO THE CONTRACTOR. ALL QUESTIONS AND DISCREPANCIES SHALL BE BROUGHT TO THE ENGINEERS ATTENTION PRIOR TO BIDDING.

G-11 CONTRACTOR SHALL THOROUGHLY REVIEW AND SIGN SUBMITTALS FOR COMPLETENESS AND COMPLIANCE TO THE SPECIFICATIONS PRIOR TO ENGINEERS REVIEW. SUPPLIERS SHALL HIGHLIGHT OR MARK ALL INFORMATION REQUIRED TO SHOW COMPLIANCE TO THE SPECIFICATIONS. ALL REQUESTED EXCEPTIONS TO THE SPECIFICATIONS, OR SCHEDULES SHALL BE CLEARLY NOTED AND EXPLAINED. SUBMITTAL REVIEW AND ACCEPTANCE IS FOR DESIGN CONCEPT ONLY, AND DOES NOT AT ANY TIME RELIEVE THE CONTRACTOR OF RESPONSIBILITY TO MEET SPECIFICATIONS, CAPACITIES, OR DESIGN INTENT.

G-12 ALL MECHANICAL SHALL BE INSTALLED AND CONFORM TO THE 2003 EDITION OF THE IMC AND IPC WITH UTAH ANNOTATIONS AND DFCM REQUIREMENTS.

WHW
ENGINEERING INC.
PROFESSIONAL MECHANICAL ENGINEERING
1354 East 3300 South Suite 200
SALT LAKE CITY, UTAH 84106
(801)466-4021, FAX 466-8536
EMAIL: excellence@whw-engineering.com

AJC PROJECT # 0502
architects
703 east 1700 south
salt lake city, utah 84105
ph: 801.466.8818
fx: 801.466.4411
ajc@ajcarchitects.com

State of Utah
Department of Administrative Services
Division of Facilities Construction & Management
4110 State Office Building
Salt Lake City, Utah 84114
Phone: (801) 538 - 3018
Fax: (801) 538 - 3267
Internet: http://www.dfcm.utah.gov

ATE CENTER AT
UTAH STATE PRISON

DRAPER, UTAH

MECHANICAL GENERAL NOTES AND LEGEND

ISSUE DATA

ISSUE DATE:	APRIL 18, 2005
ISSUE TYPE:	CON. DOCS.
DRAWN BY:	LGD
CHECKED BY:	WP
DFCM PROJECT #	04256100
STATE PROPERTY #	
COPYRIGHT:	STATE OF UTAH

MG101

SHEET NOTES CONTINUED:

13. SEE LARGE SCALE PLAN THIS SHEET FOR CONTINUATION.
14. PROVIDE PROGRAMMABLE THERMOSTAT FOR AIR HANDLING UNIT. COORDINATE EXACT LOCATION WITH OWNER AND ALL OTHER DISCIPLINES.
15. PROVIDE COOLING ONLY THERMOSTAT FOR EXHAUST THIS ROOM.
16. SUPPORT FAN FROM STRUCTURE IN ROOMS WITHOUT CEILINGS.
17. PROVIDE 6 POSITION SWITCH FOR EACH EVAPORATIVE COOLER.
18. PROVIDE 2" VENT FROM CONDENSATE RECEIVER TANK TO OUTSIDE WALL. TERMINATE AT A MINIMUM 12' AFF. PROVIDE BIRD SCREEN AT OUTLET.

SHEET NOTES:

1. ROUTE TO EXISTING HIGH PRESSURE STEAM LINE, AND EXISTING CONDENSATE RETURN LINE. COORDINATE WITH CIVIL.
2. PROVIDE PRV STATION AT THIS LOCATION. COORDINATE WITH G.C. AND ARCHITECTURAL FOR WALL.
3. PROVIDE AIR HANDLER AND SUPPORT FROM ROOF. COORDINATE WITH STRUCTURAL. COORDINATE WITH G.C. TO PROVIDE THE PRE-ENGINEERED METAL BUILDING MANUFACTURER WITH THE EXACT LOCATION AND WIEGHTS OF UNITS. SEE DETAILS ME503.
4. PROVIDE FRESH AIR LOUVER AND DUCT TO AIR HANDLER.
5. PROVIDE AIR HANDLER FOR OFFICE AREA WITH STEAM HEATING COIL, AND EVAPORATIVE COOLING SECTION. SUPPORT FROM ROOF. COORDINATE WITH STRUCTURAL. COORDINATE WITH G.C. TO PROVIDE THE PRE-ENGINEERED METAL BUILDING MANUFACTURER WITH THE EXACT LOCATION AND WIEGHTS OF UNITS. SEE DETAILS ME503.
6. MOUNT EVAPORATIVE COOLER ON CONCRETE PAD BY G.C. RISE DUCT OUTSIDE BUILDING AND PENETRATE WALL.
7. PROVIDE CEILING MOUNTED EXHAUST FAN, AND WALL CAP. LOCATE WALL CAP HIGHER THAN FRESH AIR INTAKE LOUVERS.
8. PROVIDE RELIEF AIR DAMPER. INTERLOCK TO OPEN WITH EVAPORATIVE COOLERS.
9. PROVIDE RETURN GRILLE AND SOUND BOOT. OPEN TO CEILING RETURN PLENUM.
10. EXPOSED SPIRAL DUCT WITH INTERNAL PERFORATED LINER.
11. EXPOSED SPIRAL DUCT WITHOUT LINER.
12. TRANSITION FROM EVAPORATIVE COOLER OUTLET TO DUCT SIZE SHOWN. COORDINATE WALL PENETRATION WITH G.C. SEE DETAIL A2/ME503.

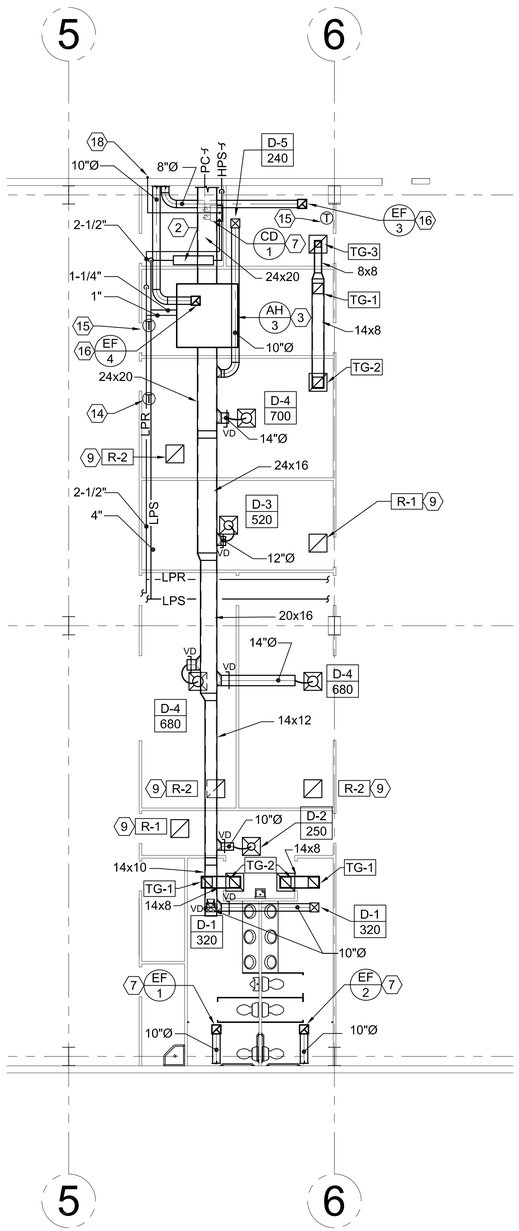

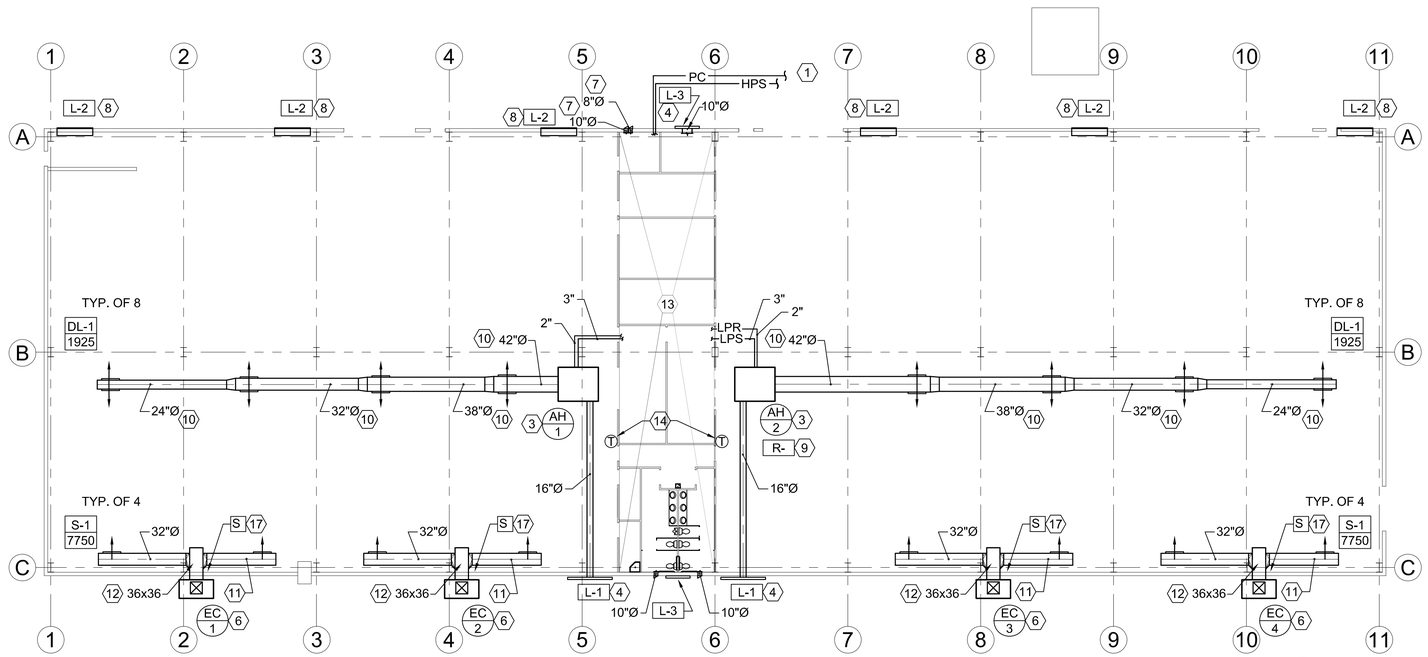

LARGE SCALE MECHANICAL FLOOR PLAN (A1 / ME101)
SCALE: 1/8"=1'-0"

MECHANICAL FLOOR PLAN (A1 / ME101)
SCALE: 1/16"=1'-0"

WHW ENGINEERING INC.
PROFESSIONAL MECHANICAL ENGINEERING
1354 East 3300 South Suite 200
SALT LAKE CITY, UTAH 84106
(801)466-4021, FAX 466-8536
EMAIL: excellence@whw-engineering.com

AJC PROJECT # 0502
architects
703 east 1700 south
salt lake city, utah 84105
ph: 801.466.8818
fx: 801.466.4411
ajc@ajcarchitects.com

State of Utah
Department of Administrative Services
Division of Facilities Construction & Management
4110 State Office Building
Salt Lake City, Utah 84114
Phone: (801) 538 - 3018
Fax: (801) 538 - 3267
Internet: http://www.dfcm.utah.gov

ATE CENTER AT UTAH STATE PRISON

DRAPER, UTAH

MECHANICAL FLOOR PLAN

ISSUE DATA

ISSUE DATE:	APRIL 18, 2005
ISSUE TYPE:	CON. DOCS.
DRAWN BY:	LGD
CHECKED BY:	WP
DFCM PROJECT #	04256100
STATE PROPERTY #	
COPYRIGHT:	STATE OF UTAH

ME101

EVAPORATIVE COOLER SCHEDULE

SYMBOL	PUMP WATTS	PUMP AMPS	PUMP #	PUMP Ø	PUMP HERTZ	PUMP VOLTS	CFM	EXTERNAL SP	LB'S	DUCT DISCHARGE	FAN HP	FAN PHASE	FAN HERTZ	FAN VOLT	FAN SPEED	MAKE & MODEL
EC 1	80	1.2	1	1	60	115	15,500	0.30	950	32"x32"	5 ④	3	60	208	2	MASTERCOOL MU628 ②③
EC 2	80	1.2	1	1	60	115	15,500	0.30	950	32"x32"	5 ④	3	60	208	2	MASTERCOOL MU628 ②③
EC 3	80	1.2	1	1	60	115	15,500	0.30	950	32"x32"	5 ④	3	60	208	2	MASTERCOOL MU628 ②③
EC 4	80	1.2	1	1	60	115	15,500	0.30	950	32"x32"	5 ④	3	60	208	2	MASTERCOOL MU628 ②③

① PROVIDE WITH 6 POSITION SWITCH.

② SEE SPECIFICATIONS FOR OTHER APPROVED MANUFACTURER.

③ PROVIDE WITH TWO 12" CELDECK INLET SECTIONS.

④ USE 2 SPEED SEPERATE WINDING MOTOR.

EXHAUST FAN SCHEDULE

SYMBOL	MANUFACTURER & MODEL NO.	SERVES	C.F.M.	STATIC PRESSURE IN. W.G.	MAX NOISE SONES	MOTOR V-Ø-Hz	MOTOR HP	MOTOR RPM	OPER. WT. (LBS)	COMMENTS
EF 1	PENN ZEPHYR Z8H	MENS RESTROOM	320	0.25	5.1	120/1/60	1/12	1550	20	PROVIDE WITH WALL CAP
EF 2	PENN ZEPHYR Z8H	WOMENS RESTROOM	320	0.25	5.1	120/1/60	1/12	1550	20	PROVIDE WITH WALL CAP
EF 3	PENN ZEPHYR Z5H	ELECTRICAL ROOM	110	0.25	2.8	120/1/60	0.016	1550	20	PROVIDE WITH WALL CAP
EF 4	PENN ZEPHYR Z8H	COMPRESSOR ROOM	320	0.25	5.1	120/1/60	1/12	1550	20	PROVIDE WITH WALL CAP

REGISTER, LOUVER & GRILLE SCHEDULE

SYMBOL	TYPE	SERVICE	MAX CFM ①	NOMINAL SIZE	THROAT SIZE	CEILING TYPE	COMMENTS ②
R-1	CEILING RETURN	RA	600	16x16	⑥	LAY-IN	PRICE 535 ③
R-2	CEILING RETURN	RA	700	18x18	⑥	LAY-IN	PRICE 535 ③
TG-1	CEILING TRANSFER	TA	430	14x14	14x14	NA	PRICE 535 ③
TG-2	CEILING TRANSFER	TA	430	14x14	14x14	LAY-IN	PRICE 535 ③
TG-3	CEILING TRANSFER	TA	110	8x8	8x8	NA	PRICE 535 ③
DL-1 CFM	DRUM LOUVER	SA	1925	42x15	42x15	NA	PRICE HCD ⑧
S-1 CFM	SUPPLY GRILLE	SA	7750	60x24	60x24	NA	PRICE 302 ⑧
L-1	WALL LOUVER	FA	2 SQ. FT. FREE AREA	2'x2'	NA	NA	④⑤
L-2	WALL LOUVER	RA	15 SQ. FT. FREE AREA	7.5'x4'	NA	NA	④⑤
L-3	WALL LOUVER	FA/RF	8 SQ. FT. FREE AREA	5.5'x3'	NA	NA	④⑤

REGISTER. LOUVER AND DIFFUSER SCHEDULE NOTE S:

① MAXIMUM NC = 25 @ MAXIMUM CFM NOTED.

② SEE SPECIFICATIONS FOR APPROVED MANUFACTURERS.

③ FINISH SHALL BE OFF-WHITE BAKED ENAMEL.

④ BAKED ENAMEL FINISH WITH COLOR AS DIRECTED BY ARCHITECT.

⑤ PROVIDE ALUMINUM BIRD SCREENS.

⑥ PROVIDE WITH RETURN AIR SOUND BOOT.

⑦ MOUNT TO SIDE OF SPIRAL DUCT. SEE ME101.

⑧ ALUMINUM POWDER COAT FINISH FOR DUCT MOUNTED GRILLES.

DIFFUSER SCHEDULE

③④

SYMBOL	TYPE	MAX CFM ②	FACE SIZE	NECK SIZE	CEILING TYPE ①	BLOW	PATTERN	AIR DIST./SIDE A (%)	AIR DIST./SIDE B (%)
D-1 CFM	CEILING	320	12x12	10"Ø	HARD	4-WAY	B A	25	25
D-2 CFM	CEILING	320	12x12	10"Ø	HARD	4-WAY	B A	25	25
D-3 CFM	CEILING	520	15x15	12"Ø	LAY-IN	4-WAY	B A	25	25
D-4 CFM	CEILING	700	18x18	14"Ø	LAY-IN	4-WAY	B A	25	25
D-5 CFM	CEILING	320	12x12	10"Ø	LAY-IN	4-WAY	B A	25	25

① PROVIDE LAY-IN CEILING AND BORDER / MODULE AS REQUIRED. SEE ARCHITECTURAL CEILING PLANS.

② MAXIMUM NC 25 AT CFM LISTED.

③ PRICE SMD OR EQUAL IN SPECIFICATIONS.

④ FINISH SHALL BE OFF WHITE BAKED ENAMEL.

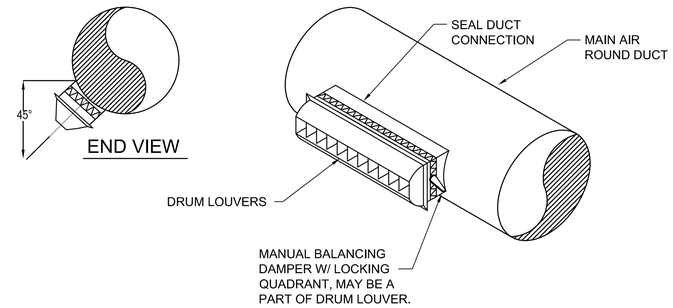

C5 DRUM LOUVER DETAIL
SCALE: NONE

CONDENSATE PUMP SCHEDULE

SYMBOL	TYPE	GPM	HEAD (PSIG)	EDR (SQ. FT.)	INLET	OUTLET	RPM	MOTOR HP	MOTOR ELECTRICAL	SERVES	MANUFACTURER & MODEL # ①
CD 1	CONDENSATE PUMP	6	50	4000	2"	3/4"	3500	1.5	208/3Ø/60	AHU'S	SHIPCO 45DCD353 ②

① SEE SPECIFICATIONS FOR OTHER APPROVED MANUFACTURERS.

② PROVIDE WITH 15 GALLON RECEIVER.

③ PROVIDE WITH STARTER & CONTROLS

AIR HANDLING UNIT SCHEDULE

SYMBOL	LOCATION	CFM	OA CFM	W (IN.)	L (IN.)	H (IN.)	WEIGHT (lbs.) ①	ESP ARR.	FAN MOTOR ② HP	FAN MOTOR VOLT	FAN MOTOR PHASE	FAN MOTOR CYCLE	STEAM HEATING COIL MAX AIR PD	STEAM HEATING COIL MBH	STEAM HEATING COIL STEAM PSIG	STEAM HEATING COIL EDB	STEAM HEATING COIL LDB	STEAM HEATING COIL AIR TEMP RISE	MANUFACTURER AND MODEL #
AH 1	AUTO SHOP	15,400	1,000	91	108	57	2500	0.5	10	208	3	60	0.20	708	5	50	100	50	TRANE MCCB030
AH 2	WOOD SHOP	15,400	1,000	91	108	57	2500	0.5	10	208	3	60	0.20	708	5	50	100	50	TRANE MCCB030
AH 3	OFFICES	3,710	920	60	113	34	1200	0.5	3	208	3	60	0.05	72	5	50	100	50	TRANE MCCB010 ③

① UNITS SHALL BE HUNG FROM CEILING. COORDINATE WITH SEISMIC SUPPORT MANUFACTURER AND STRUCTURAL DRAWINGS.

② COORDINATE WITH DIV 16.

③ PROVIDE WITH EVAPORATIVE COOLING MODULE AND 2 SPEED SEPERATE WINDING MOTOR. RUN HIGH SPEED FOR COOLING, AND LOW SPEED FOR HEATING.

WHW ENGINEERING INC.
PROFESSIONAL MECHANICAL ENGINEERING
1354 East 3300 South Suite 200
SALT LAKE CITY, UTAH 84106
(801)466-4021, FAX 466-8536
EMAIL: excellence@whw-engineering.com

AJC PROJECT # 0502
architects
703 east 1700 south
salt lake city, utah 84105
ph: 801.466.8818
fx: 801.466.4411
ajc@ajcarchitects.com

State of Utah
Department of Administrative Services
Division of Facilities Construction & Management
4110 State Office Building
Salt Lake City, Utah 84114
Phone: (801) 538 - 3018
Fax: (801) 538 - 3267
Internet: http://www.dfcm.utah.gov

ATE CENTER AT UTAH STATE PRISON

DRAPER, UTAH

MECHANICAL DETAILS AND SCHEDULES

ISSUE DATA

ISSUE DATE: APRIL 18, 2005
ISSUE TYPE: CON. DOCS.
DRAWN BY: LGD
CHECKED BY: WP

DFCM PROJECT # 04256100
STATE PROPERTY #
COPYRIGHT: STATE OF UTAH

ME501

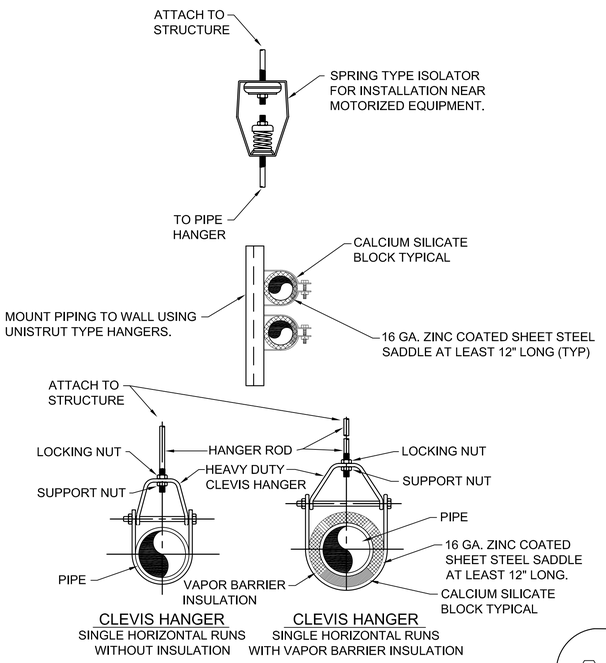

C1 PIPE HANGER DETAIL
SCALE: NONE

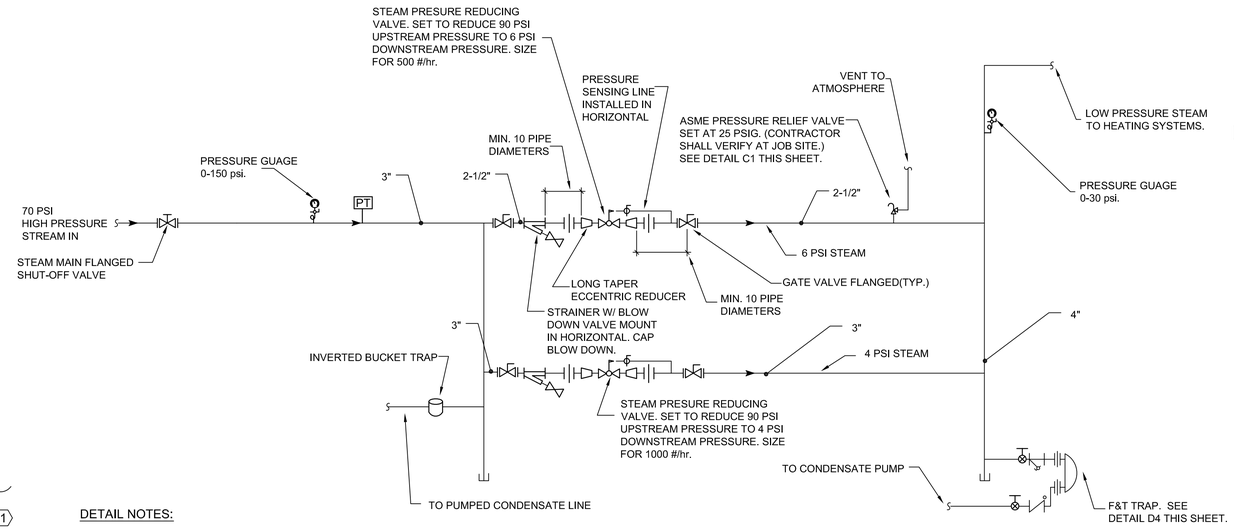

C4 STEAM PRESSURE REDUCING STATION DETAIL
SCALE: NONE

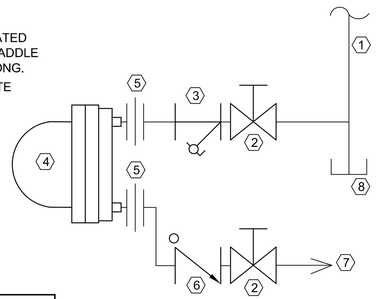

DETAIL NOTES:

1. DRIP LEG-FULL SIZE
2. GATE VALVE
3. STRAINER
4. F & T TRAP
5. UNION
6. CHECK VALVE
7. TO CONDENSATE PUMP
8. DIRT LEG WITH CAP

B2 F&T TRAP DETAIL
SCALE: NONE

LOW PRESSURE ROUND DUCT CONSTRUCTION SCHEDULE				
DUCT DIAMETER IN INCHES	MAXIMUM 2" W.G. STATIC POSITIVE		MAXIMUM 2" W.G. STATIC NEGATIVE	
	SPIRAL SEAM GAUGE	LONGITUDINAL SEAM GAUGE	SPIRAL SEAM GAUGE	LONGITUDINAL SEAM GAUGE
3 thru 8	28	28	28	24
9 thru 14	28	26	26	24
15 thru 26	26	24	24	22
27 thru 36	24	22	22	20
37 thru 50	22	20	20	18

B1 LOW PRESSURE ROUND DUCT CONSTRUCTION DETAIL
SCALE: NONE

NOTE: TAKE-OFFS SHOULD NOT BE INSTALLED CLOSER THAN TWO WIDTHS TO ELBOWS OR INTERSECTIONS

NOTE: AREA OF A x B SHALL BE EQUAL TO 1.5 x AREA BRANCH DUCT

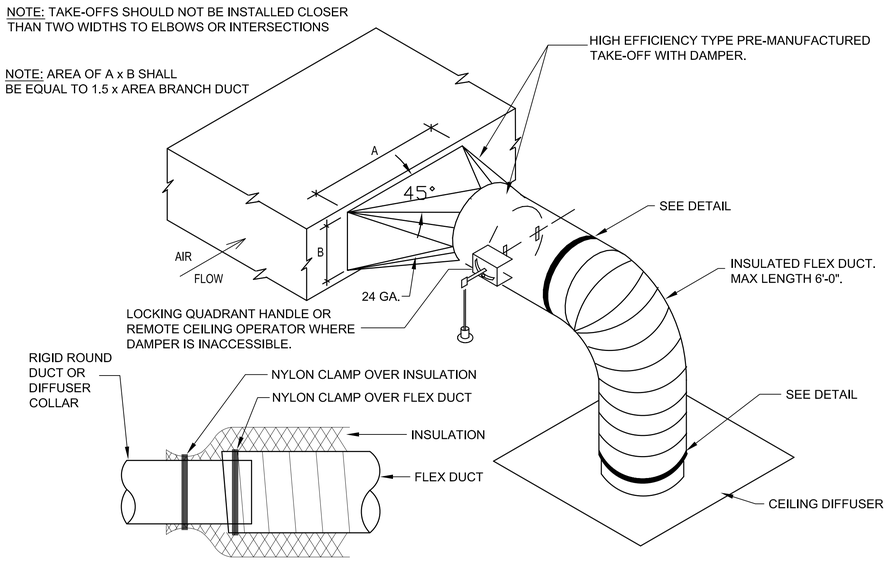

DETAIL
SCALE: NONE

A4 SQUARE-TO-ROUND TAKE-OFF DETAIL
SCALE: NONE

DIMENSION OF LONGEST SIDE, INCHES	SHEET METAL GAGE (ALL FOUR SIDES)	TRANSVERSE REINFORCING (1)					
		MINIMUM REINFORCING ANGLE SIZE AND MAXIMUM LONGITUDINAL SPACING BETWEEN TRANSVERSE JOINTS &/OR INTERMEDIATE REINFORCING	AT JOINTS				
			MIN. H. IN.	DRIVE SLIP / PLAIN S SLIP	HEMMED S SLIP	ALTER'NT BAR SLIP	REIN-FORCED BAR SLIP
				RECOM-MENDED GAGE	RECOM-MENDED GAGE	RECOM-MENDED GAGE	RECOM-MENDED GAGE
UP THRU 12	26	NONE REQUIRED	1	26	26	24	24
13 - 18	24	NONE REQUIRED	1	24	24	24	24
19 - 30	24	1"X1"X1/8" @ 60 IN	1	-	24	24	24
31 - 36	22	1"X1"X1/8" @ 60 IN	1	-	-	22	22

1. TRANSVERSE REINFORCING SIZE IS DETERMINED BY DIMENSION OF SIDE TO WHICH ANGLE IS APPLIED.

A1 DUCT CONSTRUCTION DETAIL
SCALE: NONE

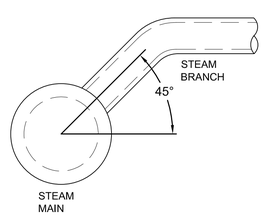

A2 STEAM PIPING TAKE-OFF DETAIL
SCALE: NONE

WHW ENGINEERING INC.
PROFESSIONAL MECHANICAL ENGINEERING
1354 East 3300 South Suite 200
SALT LAKE CITY, UTAH 84106
(801)466-4021, FAX 466-8536
EMAIL: excellence@whw-engineering.com

AJC PROJECT # 0502
architects
703 east 1700 south
salt lake city, utah 84105
ph: 801.466.8818
fx: 801.466.4411
ajc@ajcarchitects.com

State of Utah
Department of Administrative Services
Division of Facilities Construction & Management
4110 State Office Building
Salt Lake City, Utah 84114
Phone: (801) 538 - 3018
Fax: (801) 538 - 3267
Internet: http://www.dfcm.utah.gov

ATE CENTER AT UTAH STATE PRISON

DRAPER, UTAH

MECHANICAL DETAILS

ISSUE DATA

ISSUE DATE:	APRIL 18, 2005
ISSUE TYPE:	CON. DOCS.
DRAWN BY:	LGD
CHECKED BY:	WP
DFCM PROJECT #	04256100
STATE PROPERTY #	
COPYRIGHT:	STATE OF UTAH

ME502

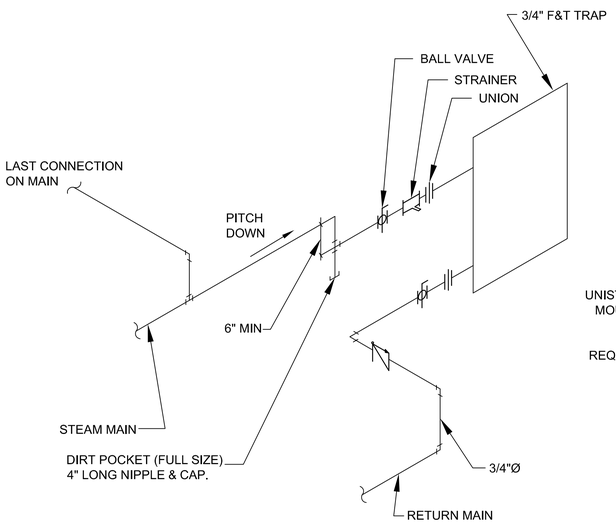

C1 DRIP AT END OF MAIN DETAIL
SCALE: NONE

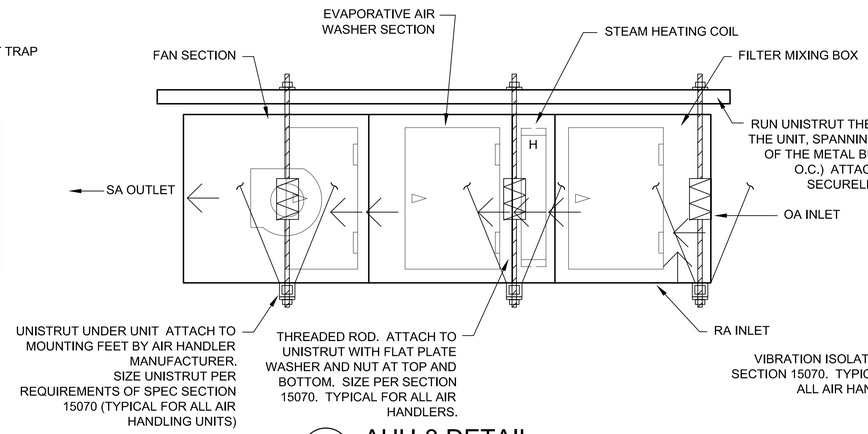

C3 AHU-3 DETAIL
SCALE: NOT TO SCALE

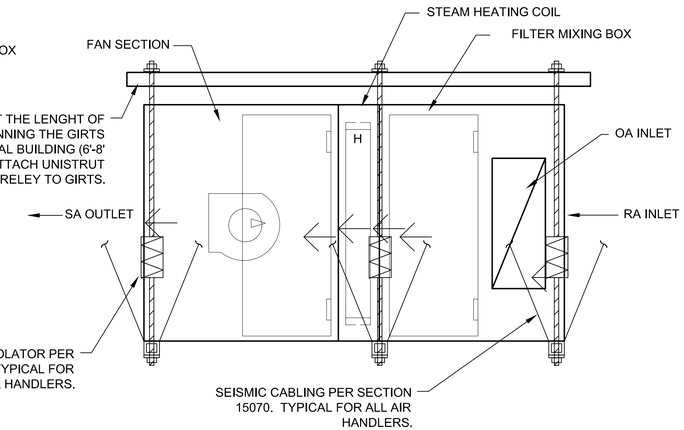

C4 AHU-1 & AHU-2 DETAIL
SCALE: NOT TO SCALE

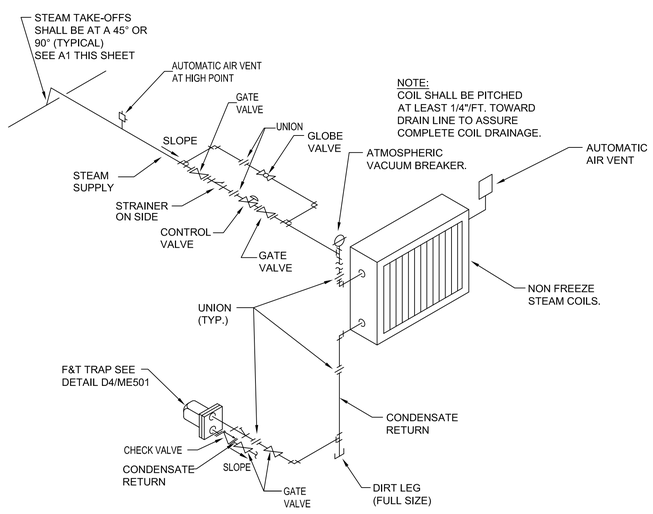

A1 STEAM COIL CONNECTION DETAIL
SCALE: NONE

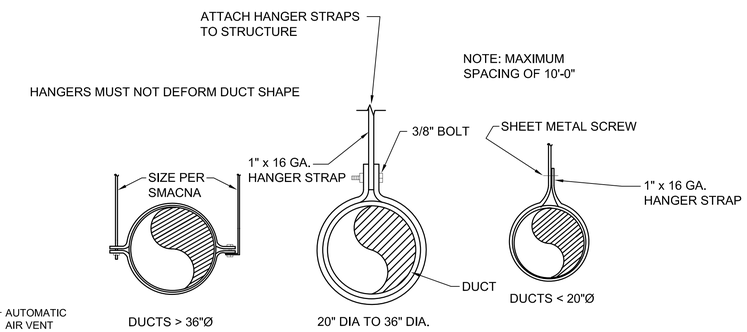

B3 ROUND DUCT SUPPORT DETAIL
SCALE: NONE

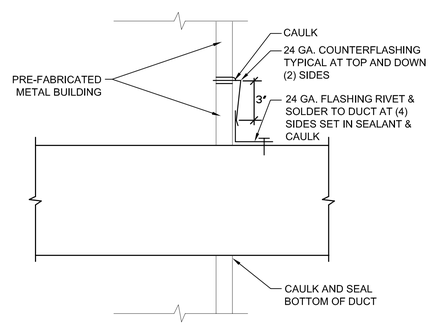

A2 DUCT THRU WALL DETAIL
SCALE: NONE

NOTE:
DUCT SHALL BE WRAPPED EXTERNALLY AS PER THE SPECIFICATIONS.

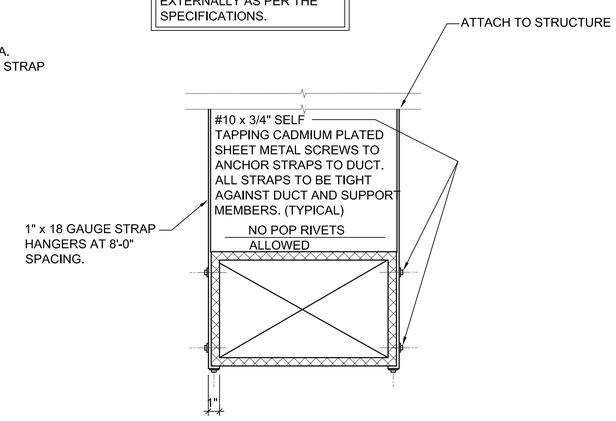

A4 DUCT STRAP HANGER DETAIL
SCALE: NONE

WHW ENGINEERING INC.
PROFESSIONAL MECHANICAL ENGINEERING
1354 East 3300 South Suite 200
SALT LAKE CITY, UTAH 84106
(801)466-4021, FAX 466-8536
EMAIL: excellence@whw-engineering.com

AJC PROJECT # 0502
architects
703 east 1700 south
salt lake city, utah 84105
ph: 801.466.8818
fx: 801.466.4411
ajc@ajcarchitects.com

State of Utah
Department of Administrative Services
Division of Facilities Construction & Management
4110 State Office Building
Salt Lake City, Utah 84114
Phone: (801) 538 - 3018
Fax: (801) 538 - 3267
Internet: http://www.dfcm.utah.gov

ATE CENTER AT UTAH STATE PRISON

DRAPER, UTAH

MECHANICAL DETAILS

ISSUE DATA

ISSUE DATE:	APRIL 18, 2005
ISSUE TYPE:	CON. DOCS.
DRAWN BY:	LGD
CHECKED BY:	WP
DFCM PROJECT #	04256100
STATE PROPERTY #	
COPYRIGHT:	STATE OF UTAH

ME503

PIPING LEGEND

MEANING	SYMBOL OR ABBREVIATION	MEANING	SYMBOL OR ABBREVIATION
HOT WATER LINE		WALL CLEANOUT	WCO
COLD WATER LINE		CLEANOUT	CO
RECIRCULATING HOT WATER LINE		CLEANOUT TO GRADE	COTG
HIGH TEMPERATURE HOT WATER LINE	180°	FLOOR CLEANOUT	FCO
VENT LINE		BALL VALVE	
WASTE LINE		UNION	
GAS LINE	G	PRIMARY ROOF DRAIN	PRD
VENT THRU WALL	VTW	SECONDARY ROOF DRAIN	SRD
CONNECTION TO EXISTING PIPING		CONDENSATE DRAIN	CD
SAND /OIL LINE, S/O		VENT	
		VENT UNDER FLOOR	SIZE" V UF

GENERAL LEGEND

NOT ALL SYMBOLS LISTED BELOW ARE USED ON THIS SET OF PLUMBING DRAWINGS

SYMBOL	ABR.	DESCRIPTION
	AFF	ABOVE FINISHED FLOOR
	AP	ACCESS PANEL
	CI	CAST IRON
	℄ EL.	CENTER LINE ELEVATION
	CC	CONTROL CONTRACTOR
	EC	ELECTRICAL CONTRACTOR
	FPC	FIRE PROTECTION CONTRACTOR
	GC	GENERAL CONTRACTOR
INV. ELEV.		INVERT ELEVATION
	MC	MECHANICAL CONTRACTOR
	NIC	NOT IN CONTRACT
	NTS	NOT TO SCALE
WH-1		PLUMBING FIXTURE AND/OR EQUIPMENT DESIGNATION (TYPICAL)

PLUMBING GENERAL NOTES:

GP-1 ALL PLUMBING SHALL BE INSTALLED AND CONFORM TO THE 2003 EDITION OF THE INTERNATIONAL PLUMBING CODE (IPC) WITH UTAH ANNOTATIONS AND LOCAL AUTHORITY REQUIREMENTS.

GP-2 ALL PIPING MATERIALS SHALL MEET ALL REQUIREMENTS OF IPC AND LOCAL AUTHORITY. PLASTIC PIPING SHALL BE ALLOWED ONLY WHERE ALLOWED BY CODE. PLASTIC PIPING SHALL NOT BE ROUTED THROUGH RETURN AIR PLENUMS OR OTHER AREAS PROHIBITED BY THE IMC, IPC OR NFPA CODES OR BY LOCAL AUTHORITY

G-P3 ALL MATERIALS SHALL BE NEW AND SHALL BE DOMESTIC MADE UNLESS SPECIFICALLY APPROVED OTHERWISE IN WRITING BY ARCHITECT OR OWNER.

GP-4 HOT AND COLD WATER PIPE SHALL BE TYPE L HARD DRAWN COPPER PIPING WITH WROUGHT COPPER FITTINGS. TYPE K UNDERGROUND WITH NO JOINTS WITHIN BUILDING. ALL PIPING AND FITTINGS SHALL BE DOMESTIC MADE. PIPING SHALL BE TESTED AT 125 PSI MINIMUM FOR 6 HOURS AND SHOW NO LEAKS.

GP-5 PROVIDE VACUUM BREAKERS AND BACKFLOW PREVENTERS WHERE REQUIRED BY CODE OR WHERE THERE MAY BE ANY POSSIBLE CHANCE FOR CROSS CONTAMINATION. PREVENTERS SHALL BE INSTALLED IN ACCORDANCE WITH UTAH CODE.

GP-6 ALL PLUMBING INFORMATION IS NOT LIMITED TO THE PLUMBING DRAWINGS. CONTRACTOR SHALL BE RESPONSIBLE FOR INFORMATION ON ALL OTHER CONSTRUCTION DOCUMENTS INCLUDING ARCHITECTURAL DRAWING, STRUCTURAL DRAWINGS, MECHANICAL DRAWINGS, AND ELECTRICAL DRAWINGS.

GP-7 THE WORKING DRAWINGS ARE DIAGRAMMATIC. BECAUSE OF THE SMALL SCALE OF THE DRAWING, THEY DO NOT SHOW EVERY OFFSET, BEND OR ELBOW NECESSARY FOR THE COMPLETE INSTALLATION IN THE SPACE PROVIDED. ALL PIPING SHALL BE CHECKED AND COORDINATED WITH THE ARCHITECTURAL, STRUCTURAL, MECHANICAL, AND ELECTRICAL DRAWINGS.

GP-8 COORDINATE ALL PIPING AND PLUMBING EQUIPMENT WITH ALL OTHER TRADES AND/OR CONTRACTORS PRIOR TO INSTALLATION.

GP-9 ANY AND ALL ALTERATION TO THE SYSTEM SHOWN SHALL BE THE RESPONSIBILITY OF THIS CONTRACTOR AND ARCHITECT/ENGINEER SHALL BE NOTIFIED IN WRITING PRIOR TO CHANGES.

GP-10 CLEANING AND DISINFECTING: ALL PIPING SHALL BE FLUSHED CLEAN BEFORE CONNECTION TO EQUIPMENT. DOMESTIC WATER LINES SHALL BE THOROUGHLY FLUSHED OUT WITH AN ALKALINE DETERGENT SOLUTION TO REMOVE PIPE DOPE, OIL, LOOSE MILL SCALE, AND OTHER EXTRANEOUS MATERIALS. AFTER THE WATER SYSTEM HAS BEEN FLUSHED CLEAN, THE SHUTOFF VALVE TO THE WATER MAIN SHALL BE CLOSED. ALL FIXTURE OUTLETS SHALL BE OPENED SLIGHTLY. A SOLUTION OF SODIUM HYPO CHLORITE AND CLEAN WATER SHALL BE INTRODUCED AT THE NEW TIE-IN TO THE EXISTING WATER PIPES DOWNSTREAM OF NEW VALVE, UNTIL RESIDUAL CHLORINE IS DETECTED AT ALL WATER FAUCETS, OUTLETS, ETC. THE SOLUTION SHALL CONSIST OF 1 GALLON OF 5% SODIUM HYPO CHLORITE (CLOROX OR PUREX) TO 200 GALLONS OF WATER. THE SOLUTION SHALL BE FLUSHED AND ALL AERATORS AND STRAINERS SHALL BE REMOVED, CLEANED AND REPLACED. CARE SHALL BE TAKEN TO NOT ALLOW SOLUTION TO ENTER EXISTING PIPING. AFTER STERILIZATION, FLUSH SOLUTION FROM SYSTEM WITH CLEAN WATER UNTIL RESIDUAL CHLORINE CONTENT IS LESS THAN 0.2 PARTS PER MILLION. WATER SYSTEM WILL NOT BE ACCEPTED UNTIL A NEGATIVE BACTERIOLOGICAL TEST IS MADE ON WATER TAKEN FROM SYSTEM. CHLORINE DOSING SHALL BE REPEATED AS NECESSARY UNTIL SUCH NEGATIVE TEST IS ACCOMPLISHED WHEN CONNECTED INTO EXISTING WATER LINES, CONTRACTOR SHALL PROPERLY PROTECT AND CAP THE EXISTING PIPING OR CONTRACTOR SHALL STAND THE COST OF CLEANING AND DISINFECTING THE EXISTING PIPING SYSTEM TO OWNER'S SATISFACTION. CONTRACTOR SHALL FURNISH TO OWNER AND ARCHITECT A WRITTEN REPORT CERTIFYING THAT PIPE CLEANING AND DISINFECTION HAS BEEN COMPETED AND ACCEPTED.

GP-11 ALL WATER SYSTEMS SHALL MEET THE REQUIREMENTS OF ANSI/NSF STANDARD 61 SECTION 9 (1998), CONCERNING METAL CONTAMINANTS IN THE WATER SYSTEM.

GP-12 WATER PIPING SHALL NOT BE ROUTED IN OUTSIDE WALLS OR ON EXTERIOR SIDE OF BUILDING INSULATION ENVELOPE.

WHW ENGINEERING INC.
PROFESSIONAL MECHANICAL ENGINEERING
1354 East 3300 South Suite 200
SALT LAKE CITY, UTAH 84106
(801)466-4021, FAX 466-8536
EMAIL: excellence@whw-engineering.com

AJC PROJECT # 0502
architects
703 east 1700 south
salt lake city, utah 84105
ph: 801.466.8818
fx: 801.466.4411
ajc@ajcarchitects.com

State of Utah
Department of Administrative Services
DFCM
Division of Facilities Construction & Management
4110 State Office Building
Salt Lake City, Utah 84114
Phone: (801) 538 - 3018
Fax: (801) 538 - 3267
Internet: http://www.dfcm.utah.gov

ATE CENTER AT UTAH STATE PRISON

DRAPER, UTAH

PLUMBING GENERAL NOTES AND LEGEND

ISSUE DATA

ISSUE DATE:	APRIL 18, 2005
ISSUE TYPE:	CON. DOCS.
DRAWN BY:	LGD
CHECKED BY:	WP
DFCM PROJECT #	04256100
STATE PROPERTY #	
COPYRIGHT:	STATE OF UTAH

PG101

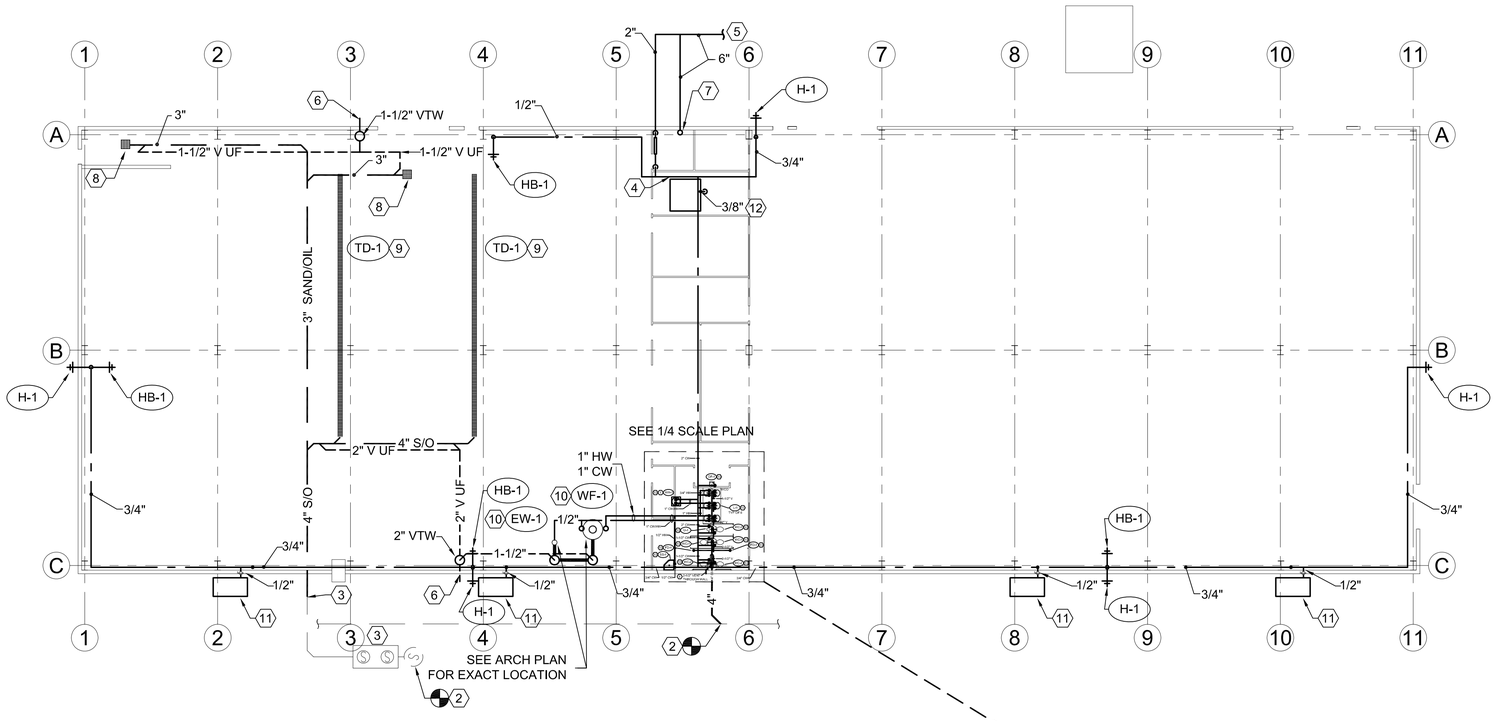

PLUMBING FLOOR PLAN

SCALE: 1/16"=1'-0"

A1 / ME101

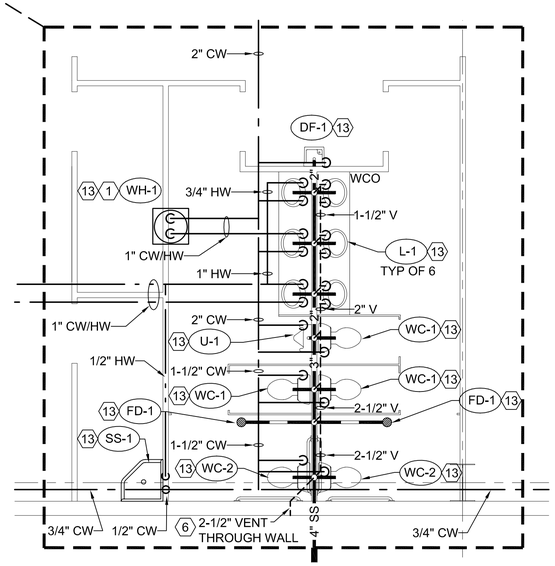

PARTIAL PLUMBING FLOOR PLAN

SCALE: 1/4"=1'-0"

A1 / ME101

SHEET NOTES:

1. PROVIDE ELECTRIC WATER HEATER ABOVE CEILING. COORDINATE WITH G.C. TO PROVIDE CEILING ACCESS.
2. TIE INTO EXISTING WASTE LINE AT THIS APPROXIMATE LOCATION. COORDINATE WITH CIVIL.
3. ROUTE NEW OIL AND SAND LINE TO 5' OUTSIDE OF BUILDING. OIL AND SAND INTERCEPTOR BY DIV 02. COORDINATE EXACT LOCATION.
4. PROVIDE CULINARY WATER PRV. COORDINATE WITH G.C. TO PROVIDE WALL.
5. COORDINATE WITH CIVIL FOR CONNECTION TO EXISTING WATER LINE.
6. ROUTE VENT PIPE TO SIDE WALL TERMINATION. PROVIDE BIRD SCREENS AT EACH VENT. MAINTAIN 10' CLEARANCE FROM AIR INTAKES.
7. PROVIDE FIRE RISER, FIRE DEPARTMENT CONNECTION, BELL, ETC. SEE RISER DETAIL AND SPECIFICATIONS. MAINTAIN ALL CODE REQUIRED CLEARANCES.
8. CONCRETE SUMP BOX BY G.C. SEE DETAIL D2/PE501.
9. INSTALL TRENCH DRAINS PRIOR TO POURING SLAB. COORDINATE WITH G.C. MAINTAIN SLOPE AS REQUIRED BY TRENCH MANUFACTURER.
10. ROUTE CULINARY HOT AND COLD WATER UNDERFLOOR TO WASH FOUNTAIN AND EYE WASH.
11. ROUTE DOMESTIC WATER TO EVAP. COOLERS. SEE MECHANICAL PLANS. PROVIDE INTERIOR SHUT-OFF AND DRAIN VALVE FOR EACH BRANCH TO COOLERS.
12. PROVIDE DOMESTIC WATER LINE TO EVAP. COOLER SECTION OF AIR HANDLER AHU-3. SEE MECHANICAL PLANS.
13. PROVIDE PLUMBING FIXTURES AS SHOWN.

WHW ENGINEERING INC.
PROFESSIONAL MECHANICAL ENGINEERING
1354 East 3300 South Suite 200
SALT LAKE CITY, UTAH 84106
(801)466-4021, FAX 466-8536
EMAIL: excellence@whw-engineering.com

AJC PROJECT # 0502
architects
703 east 1700 south
salt lake city, utah 84105
ph: 801.466.8818
fx: 801.466.4411
ajc@ajcarchitects.com

State of Utah
Department of Administrative Services
DFCM
Division of Facilities Construction & Management
4110 State Office Building
Salt Lake City, Utah 84114
Phone: (801) 538 - 3018
Fax: (801) 538 - 3267
Internet: http://www.dfcm.utah.gov

ATE CENTER AT UTAH STATE PRISON

DRAPER, UTAH

PLUMBING FLOOR PLAN

ISSUE DATA

ISSUE DATE:	APRIL 18, 2005
ISSUE TYPE:	CON. DOCS.
DRAWN BY:	LGD
CHECKED BY:	WP
DFCM PROJECT #	04256100
STATE PROPERTY #	
COPYRIGHT:	STATE OF UTAH

PE101

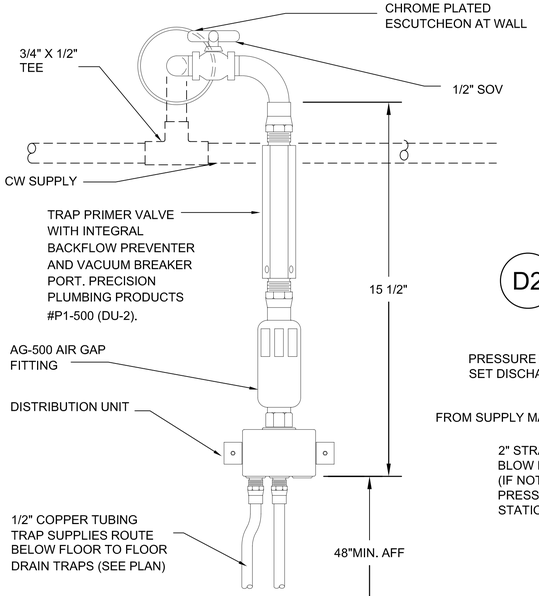

D4 TRAP PRIMER DETAIL
SCALE: NONE

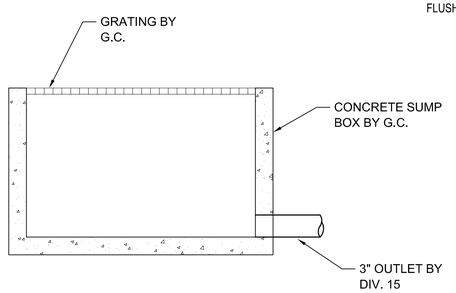

D2 CONCRETE SUMP DRAIN PIPING DETAIL
SCALE: NONE

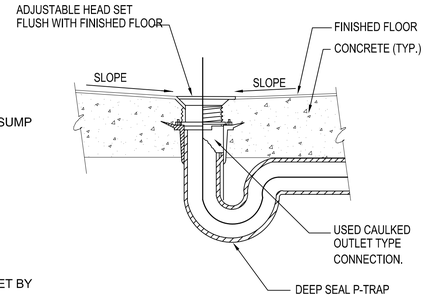

D3 FLOOR DRAIN DETAIL
SCALE: NONE

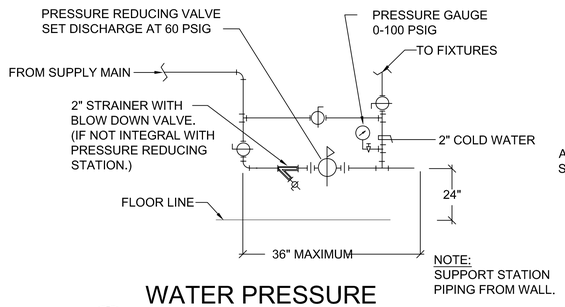

C2 WATER PRESSURE REDUCING STATION DETAIL
SCALE: NONE

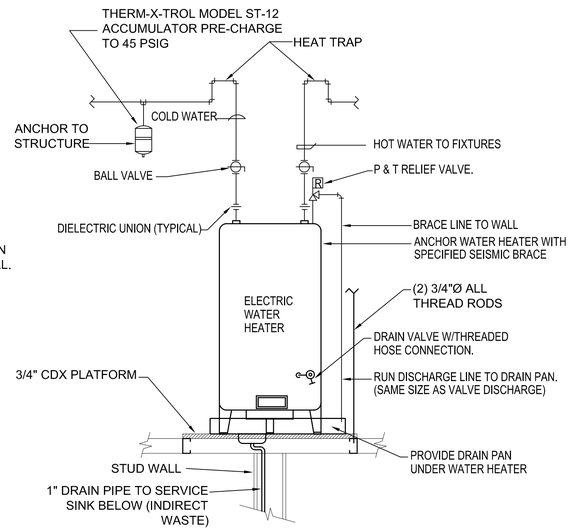

B3 ELECTRIC WATER HEATER INSTALLATION DETAIL
SCALE: NONE

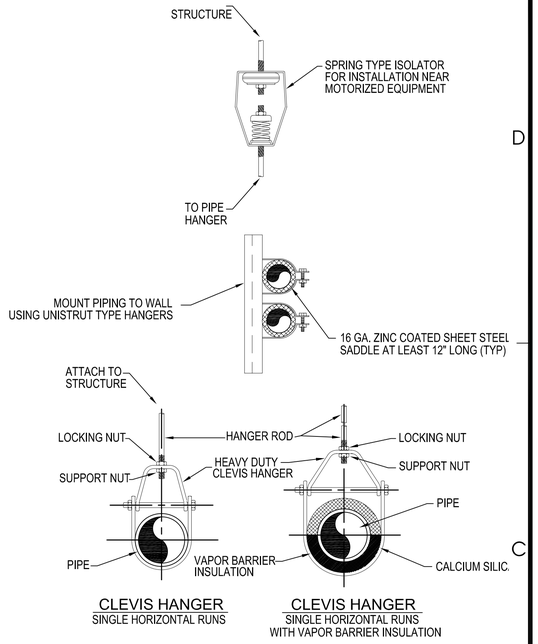

C5 PIPE HANGER DETAIL
SCALE: NONE

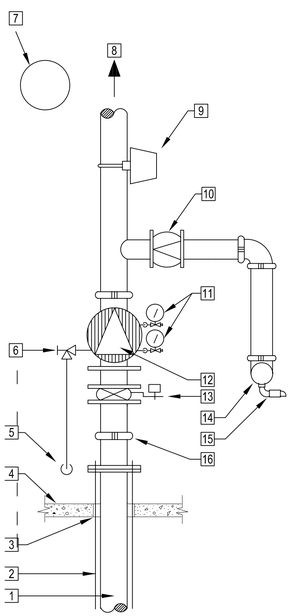

RISER LEGEND

1 – UNDERGROUND SUPPLY LINE
2 – ANCHOR RODS
3 – CORE DRILL FLOOR SLAB. PROVIDE CLEAR SPACE AROUND PIPE (PER NFPA-13) & FILL SPACE WITH WATERPROOF MASTIC.
4 – CONCRETE FLOOR
5 – PIPE TO OUTSIDE
6 – 2" ANGLE VALVE (MAIN DRAIN)
7 – 10" ELECTRIC BELL
8 – SUPPLY TO FIRE SPRINKLERS
9 – VANE TYPE WATER FLOW SWITCH
10 – 4" CHECK VALVE
11 – PRESSURE GAUGES, 1/4" 3-WAY VALVES, NIPPLES, PLUGS
12 – ALARM CHECK VALVE
13 – BUTTERFLY PATTERN GEAR OPERATED CONTROL VALVE WITH SUPERVISORY SWITCH
14 – 4" OUT TO 2-1/2 X 2-1/2 X 4 FIRE DEPARTMENT CONNECTION, EXCUTCHEON PLATE, AND BREAKABLE CAPS
15 – 1/2" AUTOMATIC BALL DRIP
16 – FLEX COUPLING WITHIN 2' OF FLOOR

A1 FIRE RISER DETAIL
SCALE: NONE

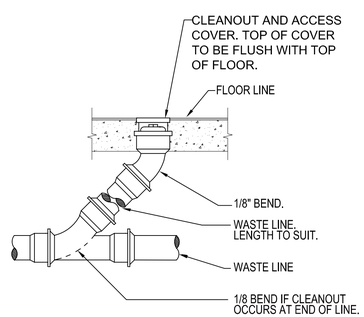

A2 FLOOR CLEANOUT DETAIL
SCALE: NONE

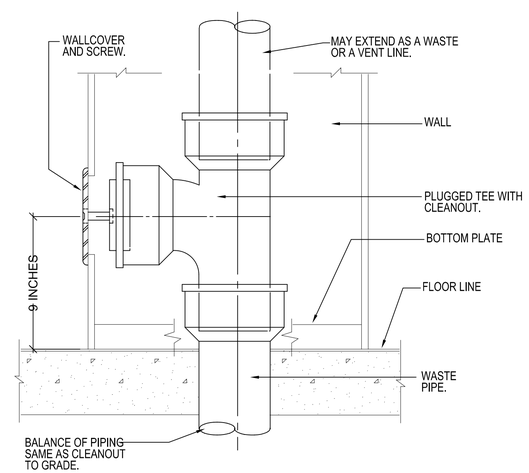

A4 WALL CLEANOUT DETAIL
SCALE: NONE

WHW ENGINEERING INC.
PROFESSIONAL MECHANICAL ENGINEERING
1354 East 3300 South Suite 200
SALT LAKE CITY, UTAH 84106
(801)466-4021, FAX 466-8536
EMAIL: excellence@whw-engineering.com

AJC PROJECT # 0502
architects
703 east 1700 south
salt lake city, utah 84105
ph: 801.466.8818
fx: 801.466.4411
ajc@ajcarchitects.com

State of Utah
Department of Administrative Services
Division of Facilities Construction & Management
4110 State Office Building
Salt Lake City, Utah 84114
Phone: (801) 538 - 3018
Fax: (801) 538 - 3267
Internet: http://www.dfcm.utah.gov

ATE CENTER AT UTAH STATE PRISON

DRAPER, UTAH

PLUMBING DETAILS

ISSUE DATA

ISSUE DATE:	APRIL 18, 2005
ISSUE TYPE:	CON. DOCS.
DRAWN BY:	LGD
CHECKED BY:	WP
DFCM PROJECT #	04256100
STATE PROPERTY #	

COPYRIGHT: STATE OF UTAH

PE501

PLUMBING FIXTURE SCHEDULE

MARK	FIXTURE	PIPE SIZE					REMARKS
		TRAP	WASTE	VENT	C.W.	H.W.	
WC-1	WATER CLOSET	INT.	4"	2"	1"	-	FLOOR MOUNTED, FLLUSH VALVE
WC-2	WATER CLOSET	INT.	4"	2"	1"	-	FLOOR MOUNTED, FLUSH VALVE, 17-1/2" RIM HEIGHT (ADA APPROVED)
U-1	URINAL	INT.	3"	2"	3/4"	-	WALL MOUNTED, FLUSH VALVE. (ADA APPROVED)
L-1	LAVATORY	1-1/2"	1-1/2"	1-1/2"	1/2"	1/2"	COUNTER TOP WITH LEVER HANDLES. (ADA APPROVED)
FD-1	FLOOR DRAIN	2"	2"	1-1/2"	-	-	WITH DEEP SEAL P-TRAP AND TRAP PRIMER
TD-1	TRENCH DRAIN	3"	3"	2"	-	-	ZURN MODEL #Z-874-12
EW-1	EYE WASH/DRENCH SHOWER	1-1/2"	1-1/2"	-	1/2"	-	BRADLEY MODEL #S19-310BF
WF-1	WASH FOUNTAIN	2"	2"	1-1/2"	1"	1"	BRADLEY MODEL #WF2708
SS-1	SERVICE SINK	3"	3"	2"	1/2"	1/2"	FLOOR TYPE CORNER SINK
HB-1	HOSE BIBB	-	-	-	1/2"	-	PROVIDE WITH LOOSE KEY HANDLE
H-1	WALL HYDRANT	-	-	-	3/4"	-	FREEZE PROOF WITH VACUUM BREAKER
DF-1	DRINKING FOUNTAIN	2"	2"	1-1/2"	1/2"	-	ELECTRIC, SINGLE LEVEL, ADA APPROVED
WH-1	ELECTRIC WATER HEATER	-	-	-	1"	1"	3 KW, 208/1Ø/60, 30 GALLON AO SMITH ECSF 30 OR EQUAL

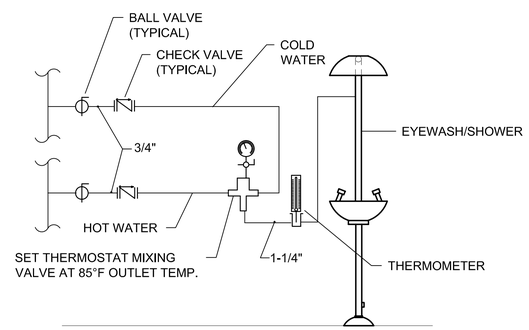

B4 EMERGENCY EYE WASH DETAIL
SCALE: NONE

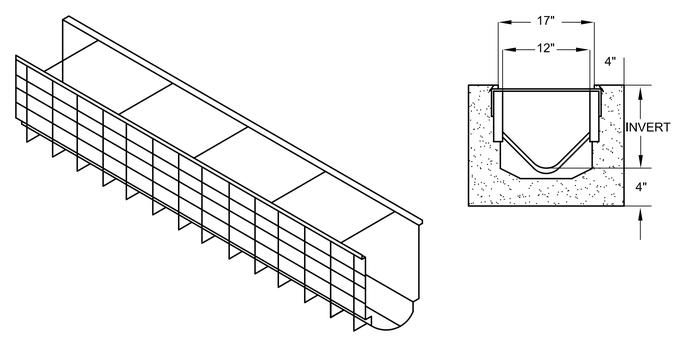

A4 TRENCH DRAIN DETAIL
SCALE: NONE

WHW
ENGINEERING INC.
PROFESSIONAL MECHANICAL ENGINEERING
1354 East 3300 South Suite 200
SALT LAKE CITY, UTAH 84106
(801)466-4021, FAX 466-8536
EMAIL: excellence@whw-engineering.com

AJC PROJECT # 0502
architects
703 east 1700 south
salt lake city, utah 84105
ph: 801.466.8818
fx: 801.466.4411
ajc@ajcarchitects.com

State of Utah
Department of Administrative Services
Division of Facilities
Construction & Management
4110 State Office Building
Salt Lake City, Utah 84114
Phone: (801) 538 - 3018
Fax: (801) 538 - 3267
Internet: http://www.dfcm.utah.gov

ATE CENTER AT
UTAH STATE PRISON

DRAPER, UTAH

PLUMBING DETAILS
AND SCHEDULES

ISSUE DATA

ISSUE DATE:	APRIL 18, 2005
ISSUE TYPE:	CON. DOCS.
DRAWN BY:	LGD
CHECKED BY:	WP
DFCM PROJECT #	04256100
STATE PROPERTY #	
COPYRIGHT:	STATE OF UTAH

PE601

TELEPHONE KEYED NOTES:

T1 EXISTING TELEPHONE PEDESTAL TERMINAL TO REMAIN.

T2 EXISTING TELEPHONE TERMINAL CABINET MOUNTED ON EXISTING BUILDING TO REMAIN.

T3 EXISTING (2) 3" PVC UNDERGROUND FROM EXISTING TELEPHONE PEDESTAL TERMINAL TO EXISTING TELEPHONE TERMINAL CABINET TO REMAIN.

T4 NEW TELE/DATA TERMINAL BOARD, SEE TELE/DATA RISER DIAGRAM, SHEET E-601 FOR REQUIREMENTS.

T5 APPROXIMATE LOCATION OF EXISTING 3" TELEPHONE AND (2) 1" FIRE ALARM CONDUIT STUB UPS FROM EXISTING TELEPHONE TERMINAL CABINET. REMOVE ABOVE GRADE CONDUIT. SALVAGE EXISTING GRC ELBOWS FOR USE IN NEW CONSTRUCTION.

T6 INTERCEPT EXISTING 3" TELEPHONE CONDUIT AND EXTEND UNDERGROUND TO NEW TELE/DATA TERMINAL BOARD.

T7 NEW FIRE ALARM CONTROL PANEL, SEE FIRE ALARM SYSTEM PLAN, SHEET FA101.

T8 INTERCEPT EXISTING (2) 1" FIRE ALARM CONDUITS AND EXTEND UNDERGROUND TO NEW FIRE ALARM CONTROL PANEL FOR CONNECTION TO FUTURE PRISON SIMPLEX/GRINNEL NETWORK SLC LOOP.

GENERAL NOTES:

1. BURY ALL UNDERGROUND CONDUITS MINIMUM 24" BELOW FINISH GRADE WITH RED MAGNETIC WARNING TAPE STATING "CAUTION - BURIED ELECTRICAL" 12 INCHES ABOVE THE CONDUIT.
2. USE GALVANIZED RIGID STEEL CONDUIT (GRC) FOR ALL CONDUIT THROUGH GRADE AND ELBOWS IN PVC CONDUIT RUNS. CORROSION PROTECT GRC CONDUIT IN ACCORDANCE WITH SPECIFICATION SECTION 16110.
3. PROVIDE MINIMUM 36" RADIUS GRC ELBOWS FOR NEW TELEPHONE SERVICE CONDUITS.
4. PROVIDE 1/4" NYLON PULL ROPE IN NEW TELEPHONE SERVICE CONDUITS.
5. COORDINATE ELECTRICAL SITE WORK WITH ARCHITECTURAL SITE PLAN, SHEET A5101, CIVIL PLANS, GENERAL CONTRACTOR, MECHANICAL CONTRACTOR AND LANDSCAPING CONTRACTOR. INSTALL UNDERGROUND CONDUITS SUCH THAT CONDUITS WILL NOT BE DAMAGED BY SUBSEQUENT INSTALLATION OF TREES AND SHRUBBERY.
6. COORDINATE INSTALLATION OF NEW TELEPHONE SERVICE WITH OWNER TELEPHONE VENDOR PRIOR TO BEGINNING WORK.
7. POWER OUTAGES TO THE EXISTING BUILDINGS WILL NOT BE ALLOWED EXCEPT AS DIRECTED BY OWNER. SUBMIT REQUESTS FOR POWER OUTAGES TO THE OWNER MINIMUM SEVEN (7) DAYS PRIOR TO ANY PROPOSED POWER OUTAGES. DO NOT TAKE ANY POWER OUTAGES WITHOUT OWNER'S PERMISSION.

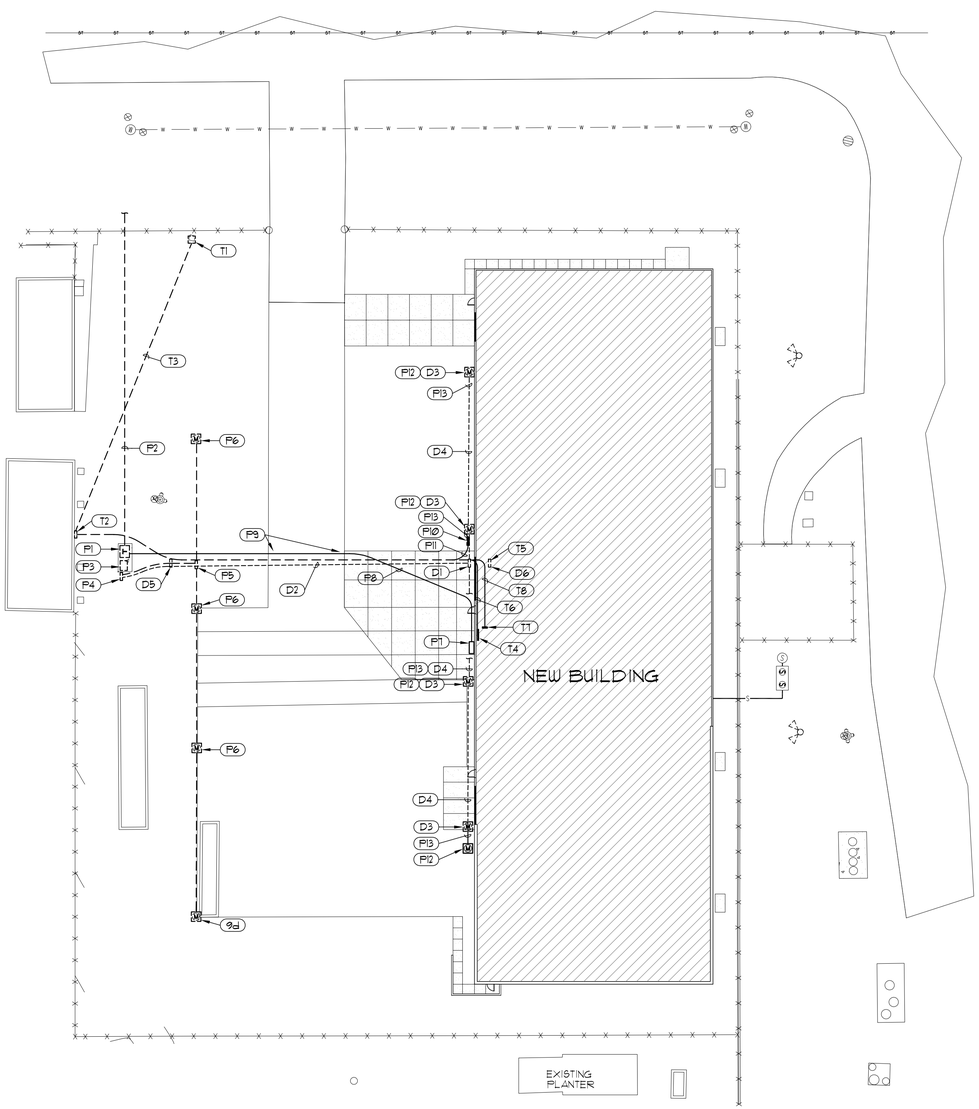

DEMOLITON KEYED NOTES:

D1 REMOVE EXISTING POWER PANEL #3 AS REQUIRED TO ALLOW CONSTRUCTION OF NEW BUILDING. SALVAGE PANEL FOR RELOCATION, SEE POWER KEYED NOTES.

D2 EXISTING 3" UNDERGROUND CONDUIT FROM EXISTING POWER PANEL #1 TO POWER PANEL #3 TO REMAIN. REMOVE EXISTING 4 #1/0, 1 #6 GND FROM EXISTING CONDUIT TO ALLOW RELOCATION OF EXISTING POWER PANEL #3. FIELD VERIFY EXISTING CONDUCTOR SIZE.

D3 REMOVE EXISTING PEDASTAL MOUNTED METER/PANEL AS REQUIRED TO ALLOW CONSTRUCTION OF NEW BUILDING. SALVAGE METER/PANEL FOR RELOCATION, SEE POWER KEYED NOTES.

D4 EXISTING 1" UNDERGROUND CONDUIT FROM EXISTING PANEL #3 TO EXISTING PEDASTAL MOUNTED METER/PANELS TO REMAIN. REMOVE EXISTING 3 #4, 1 #8 GND FROM EXISTING CONDUIT TO ALLOW RELOCATION OF EXISTING POWER PANEL #3. FIELD VERIFY EXISTING CONDUCTOR SIZE.

D5 EXISTING CONDUIT STUB-UP SITE #1. REMOVE 2" AND 3" ABOVE GRADE CONDUITS TO CONDUIT STUB-UP SITE #2. EXISTING 2-1/2" CONDUIT TO EXISTING DISTRIBUTION PANEL AND EXISTING 2" CONDUIT TO BLOCK 'A' STUB ARE TO REMAIN.

D6 EXISTING CONDUIT STUB-UP SITE #2. REMOVE 2" AND 3" ABOVE GRADE CONDUITS TO CONDUIT STUB-UP SITE #1. REMOVE (1) 1" AND (2) 2-1/2" ABOVE GRADE CONDUITS TO EXISTING DISTRIBUTION PANEL. EXISTING (2) 1" AND (1) 3" CONDUITS FROM EXISTING TELEPHONE TERMINAL CABINET ARE TO BE EXTENDED TO NEW BUILDING FIRE ALARM CONTROL PANEL AND NEW TELE/DATA TERMINAL BOARD, SEE TELEPHONE KEYED NOTES BELOW.

POWER KEYED NOTES:

P1 EXISTING PAD MOUNTED, OIL FILLED, DISTRIBUTION TRANSFORMER TO REMAIN, 500 KVA, 12,470GRDY/7200 TO 208Y/120 TO REMAIN.

P2 EXISTING UNDERGROUND PRIMARY ELECTRICAL SERVICE TO EXISTING PAD MOUNT TRANSFORMER TO REMAIN.

P3 EXISTING DISTRIBUTION PANEL, 1200 AMPERE, 120/208 V, 3ø, TO REMAIN.

P4 EXISTING POWER PANEL #1, 225 AMPERE, 120/208 V, 3ø, AND FEEDER TO EXISTING DISTRIBUTION PANEL TO REMAIN.

P5 EXISTING POWER PANEL #2 AND FEEDER TO EXISTING POWER PANEL #1 TO REMAIN.

P6 EXISTING PEDESTAL MOUNTED METER/PANEL AND FEEDER TO EXISTING POWER PANEL #2 TO REMAIN.

P7 NEW METERING SWITHBOARD WITH 3P-1600A MAIN BREAKER AND KILOWATTHOUR DEMAND METER, SEE POWER RISER DIAGRAM, SHEET E-601.

P8 NEW 20 #400 KCM, (5) 4" PVC UNDERGROUND SECONDARY ELECTRICAL SERVICE FROM EXISTING PAD MOUNT TRANSFORMER TO NEW METERING SWITCHBOARD.

P9 HORIZONTAL BORE UNDER EXISTING CONCRETE DRIVEWAY FOR INSTALLATION OF NEW UNDERGROUND ELECTRICAL SERVICE CONDUITS.

P10 INSTALL POWER PANEL #3 SALVAGED FROM DEMOLITION INCLUDING SUPPORT STRUCTURE. FIELD COORDINATE EXACT LOCATION WITH NEW BUILDING AND OWNER. INTERCEPT (4) EXISTING 1" PVC UNDERGROUND CONDUITS TO PEDESTAL METER/PANELS AND EXTEND TO RELOCATED PANEL #3.

P11 INTERCEPT EXISTING 3" UNDERGROUND CONDUIT FROM PANEL #1 AND EXTEND TO RELOCATED POWER PANEL #3. PROVIDE NEW 4 #1/0, 1 #6 GND FROM EXISTING PANEL #1 TO RELOCATED PANEL #3. FIELD VERIFY CONDUCTOR SIZE TO MATCH EXISTING CONDUCTORS.

P12 INSTALL PEDASTAL MOUNTED METER/PANEL SALVAGED FROM DEMOLITION INCLUDED PEDASTAL SUPPORT. FIELD COORDINATE EXACT LOCATION WITH NEW BUILDING AND OWNER.

P13 INTERCEPT EXISTING 1" UNDERGROUND CONDUIT FROM PANEL #3 AND EXTEND TO RELOCATED METER/PANEL. PROVIDE NEW 3 #6, 1 #8 GND, FROM EXISTING PANEL #3 TO RELOCATED METER/PANEL. CONDUCTORS REMOVED FROM DEMOLITION MAY BE USED WHERE OF SUFFICIENT LENGTH. FIELD VERIFY CONDUCTOR SIZE TO MATCH EXISTING CONDUCTORS.

ELECTRICAL SITE PLAN (A4 / ES101)
SCALE: 1" = 30'-0"

ARCHITECT AJC PROJECT # 0502

ajc architects

703 east 1700 south
salt lake city, utah 84105
ph: 801.466.8818
fx: 801.466.4411
ajc@ajcarchitects.com

CONSULTANT

ELECTRICAL:
THOMAS AND KOLKMAN
ENGINEERING COMPANY, INC.
64 WEST 17TH SOUTH
SALT LAKE CITY, UT, 84115
(801)484-8161 PH.
(801) 484-3538 FAX.
CONTACT: BILL GRANDY

OWNER INFORMATION

State of Utah
Department of Administrative Services

Division of Facilities
Construction & Management
4110 State Office Building
Salt Lake City, Utah 84114
Phone: (801) 538 - 3018
Fax: (801) 538 - 3267

Internet: http://dfcm.utah.gov

PROJECT DESCRIPTION

ATE CENTER AT UTAH STATE PRISON

DRAPER, UTAH

SHEET NAME:

ELECTRICAL SITE PLAN

REVISIONS

MARK	DATE	DESCRIPTION

ISSUE DATA

ISSUE DATE:	APRIL 18, 2005
ISSUE TYPE:	CON. DOCS.
DRAWN BY:	W.B.G.
CHECKED BY:	R.G.K.
CAD FILE NAME:	0502ES101
DFCM PROJECT #	04256100
STATE PROPERTY #	
COPYRIGHT:	STATE OF UTAH

SHEET NUMBER:

ES101

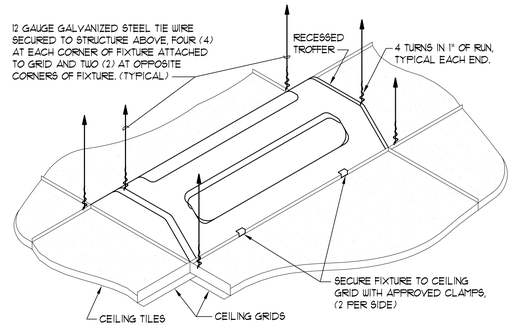

1. ALL LIGHTING FIXTURES SHALL BE POSITIVELY ATTACHED TO THE SUSPENDED CEILING SYSTEM. THE ATTACHMENT DEVICE SHALL HAVE A CAPACITY OF 100% OF THE LIGHTING FIXTURE WEIGHT ACTING ANY DIRECTION. 12 GA. HANGERS SHALL BE ATTACHED TO THE GRID MEMBERS WITHIN THREE INCHES OF EACH CORNER OF EACH FIXTURE. TANDEM FIXTURES MAY UTILIZE COMMON WIRES.
2. LIGHTING FIXTURES WEIGHING LESS THAN 56 LBS. SHALL HAVE IN ADDITION TO THE REQUIREMENTS OUTLINED ABOVE, TWO NO. 12 GA. HANGERS CONNECTED FROM THE FIXTURE HOUSING TO THE STRUCTURE ABOVE. THESE WIRES MAY BE SLACK.
3. LIGHTING FIXTURES WEIGHING 56 LBS. OR MORE SHALL BE SUPPORTED DIRECTLY FROM THE STRUCTURE ABOVE BY APPROVED HANGERS.
4. PENDANT HUNG LIGHTING FIXTURES SHALL BE SUPPORTED DIRECTLY FROM THE STRUCTURE ABOVE USING NO. 9 GA. WIRES OR APPROVED ALTERNATE SUPPORT WITHOUT USING CEILING SUSPENSION SYSTEM FOR DIRECT SUPPORT.
5. COORDINATE SUPPORT WIRE INSTALLATION WITH CEILING CONTRACTOR.
6. ABOVE REQUIREMENTS ARE A MINIMUM, PROVIDE SUPPORTS AS REQUIRED BY AUTHORITY HAVING JURISDICTION (AHJ). COORDINATE WITH AHJ PRIOR TO BEGINNING WORK.

TYPICAL LAY-IN TROFFER SUPPORT DETAIL

NOT TO SCALE

D4 / EL101

GENERAL NOTES:

* FOR SHEET EL101 ONLY

1. COORDINATE FIXTURE LOCATIONS WITH ARCHITECT'S REFLECTED CEILING PLAN, CEILING CONTRACTOR, BUILDING STRUCTURE, MECHANICAL EQUIPMENT & DUCTWORK LOCATIONS, ETC.
2. WHERE BRANCH CIRCUIT HOMERUNS INDICATE WIRE SIZES, USE THAT SIZE WIRE THROUGHOUT THE BRANCH CIRCUIT, INCLUDING SWITCH LEGS, ETC.
3. SECURE CEILING MOUNTED FIXTURES TO THE BOTTOM OF EXPOSED ROOF PURLINS OR TO UNISTRUT SPANS BETWEEN THE ROOF PURLINS AS REQUIRED.

KEYED NOTES:

* FOR SHEET EL101 ONLY

1. EXTERIOR EMERGENCY LIGHTING BATTERY UNIT. SEE FIXTURE SCHEDULE. CONNECT TO SAME BRANCH CIRCUIT AS EXTERIOR LIGHTING, AHEAD OF PHOTOCELL.
2. 2 #10, 1/2" C, 12 VDC, FROM REMOTE EMERGENCY LIGHT LAMP TO BATTERY UNIT. DO NOT INSTALL ANY OTHER WIRING IN THE RACEWAY SYSTEM WITH THE EMERGENCY LIGHTING BRANCH CIRCUIT.
3. PHOTOCELL TO CONTROL EXTERIOR LIGHTING INSTALL FACING NORTH AND AWAY FROM ANY DIRECT LIGHT SOURCES.
4. PROVIDE FIELD INSTALLED EMERGENCY BATTERY PACK IN FIXTURE INDICATED. CONNECT BATTERY PACK TO THE SAME BRANCH CIRCUIT AS THE LIGHT FIXTURE, AHEAD OF ANY LOCAL SWITCHES. SEE SPECIFICATION SECTION 16500 FOR BATTERY PACK REQUIREMENTS.
5. PROVIDE 360° CEILING OCCUPANCY SENSOR WITH SWITCHPACK IN ACCESSIBLE CEILING SPACE TO CONTROL ROOM LIGHTING INDICATED. CONNECT WALL SWITCH TO LOAD SIDE OF SWITCHPACK TO ALLOW LOCAL 'OFF' CONTROL OF THE ROOM LIGHTING.

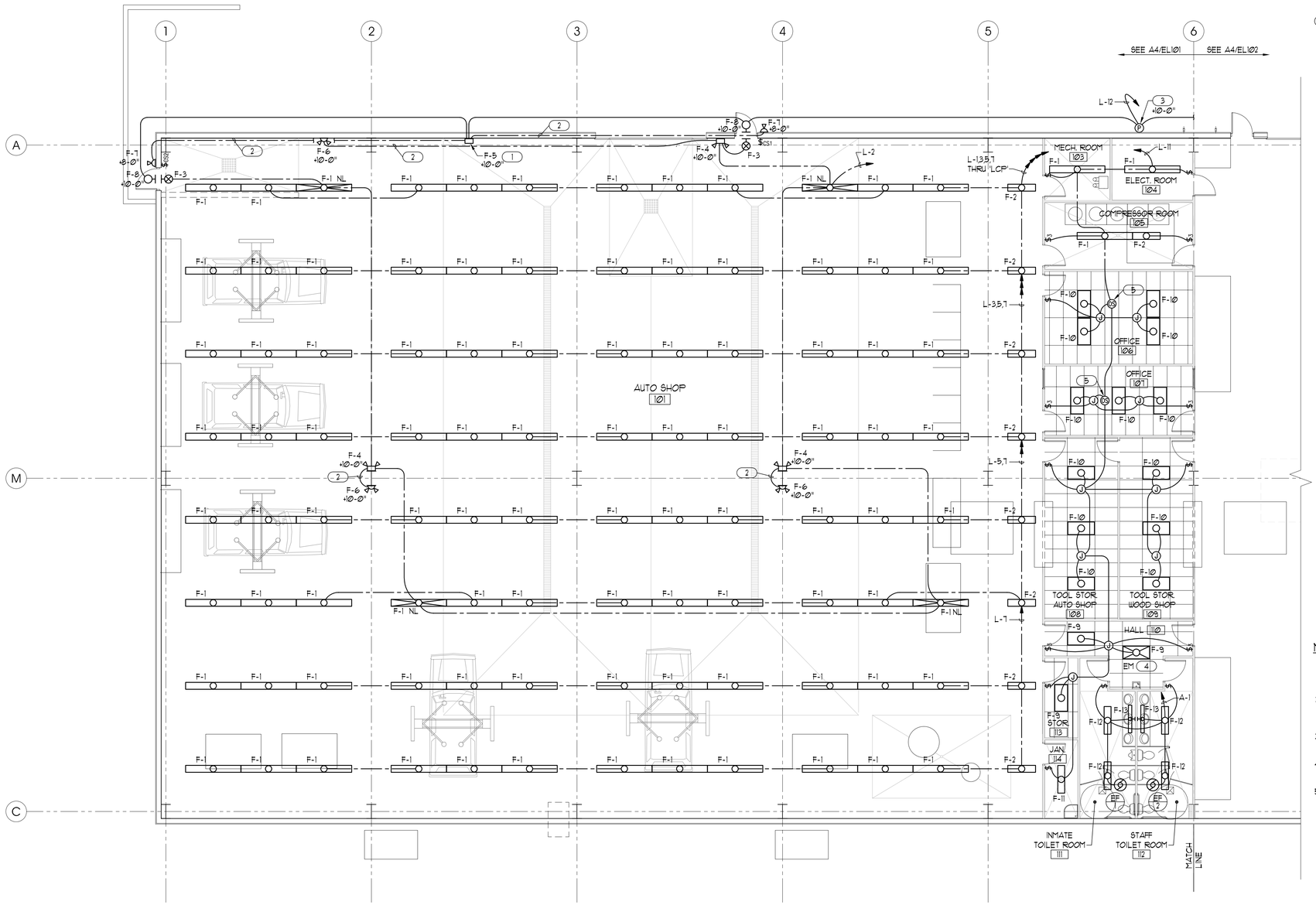

LIGHTING PLAN - AUTO SHOP

SCALE: 1/8" = 1'-0"

A4 / EL101

NEC CLASSIFIED HAZARDOUS LOCATIONS

1. AUTO SHOP IS A CLASS I, DIVISION 2, GROUP D, CLASSIFIED HAZARDOUS LOCATION TO 18" ABOVE THE FLOOR IN ACCORDANCE WITH NATIONAL ELECTRICAL CODE (NEC) ARTICLE 511.3 (B) (1).
2. ANY PIT OR DEPRESSION BELOW FLOOR LEVEL IN THE AUTO SHOP IS A CLASS I, DIVISION 1, GROUP D, CLASSIFIED HAZARDOUS LOCATION IN ACCORDANCE WITH NEC ARTICLE 511.3 (B) (3).
3. IN GENERAL, DO NOT INSTALL ANY ELECTRICAL EQUIPMENT, DEVICES, RACEWAYS, ETC., IN THE NEC CLASSIFIED HAZARDOUS LOCATIONS.
4. ANY RACEWAYS INSTALLED IN HAZARDOUS LOCATIONS SHALL BE GALVANIZED RIGID STEEL CONDUIT WITH THREADED FITTINGS.
5. ANY EQUIPMENT, DEVICES, ETC., INSTALLED IN HAZARDOUS LOCATIONS SHALL BE UL LISTED FOR THE CLASS, DIVISION, AND GROUP. MAXIMUM TEMPERATURE CLASSIFICATION OF EQUIPMENT, WHERE REQUIRED, SHALL BE T2A, 280° C (536° F), BASED ON USE OF GASOLINE.

ARCHITECT AJC PROJECT # 0502

ajc architects

703 east 1700 south
salt lake city, utah 84105
ph: 801.466.8818
fx: 801.466.4411
ajc@ajcarchitects.com

CONSULTANT

ELECTRICAL:
THOMAS AND KOLKMAN ENGINEERING COMPANY, INC.
64 WEST 17TH SOUTH
SALT LAKE CITY, UT. 84115
(801)484-8161 PH.
(801) 484-3538 FAX.
CONTACT: BILL GRANDY

OWNER INFORMATION

State of Utah
Department of Administrative Services

Division of Facilities Construction & Management
4110 State Office Building
Salt Lake City, Utah 84114
Phone: (801) 538 - 3018
Fax: (801) 538 - 3267

Internet: http://dfcm.utah.gov

PROJECT DESCRIPTION

ATE CENTER AT UTAH STATE PRISON

DRAPER, UTAH

SHEET NAME:

LIGHTING PLAN - AUTO SHOP

REVISIONS

MARK	DATE	DESCRIPTION

ISSUE DATA

ISSUE DATE:	APRIL 18, 2005
ISSUE TYPE:	CON. DOCS.
DRAWN BY:	W.B.G.
CHECKED BY:	R.G.K.
CAD FILE NAME:	0502E-101.dwg
DFCM PROJECT #	04256100
STATE PROPERTY #	
COPYRIGHT:	STATE OF UTAH

SHEET NUMBER:

EL101

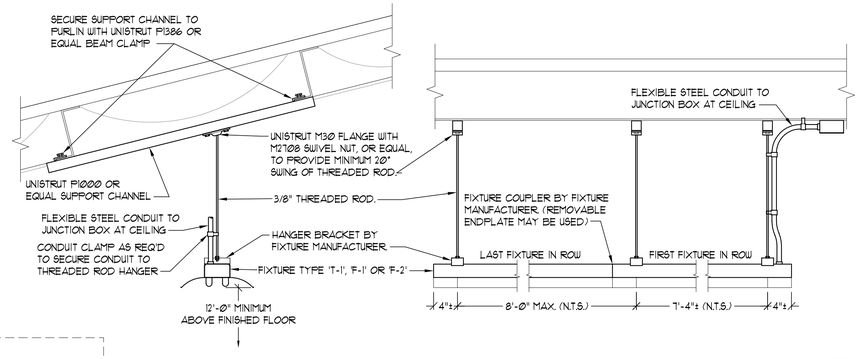

TYPICAL SHOP AREA FIXTURE MOUNTING DETAIL

SCALE: 1" = 1'-0"

D4 / EL102

GENERAL NOTES:

* FOR SHEET EL102 ONLY

1. COORDINATE FIXTURE LOCATIONS WITH ARCHITECT'S REFLECTED CEILING PLAN, CEILING CONTRACTOR, BUILDING STRUCTURE, MECHANICAL EQUIPMENT & DUCTWORK LOCATIONS, ETC.
2. WHERE BRANCH CIRCUIT HOMERUNS INDICATE WIRE SIZES, USE THAT SIZE WIRE THROUGHOUT THE BRANCH CIRCUIT, INCLUDING SWITCH LEGS, ETC.
3. SECURE CEILING MOUNTED FIXTURES TO THE BOTTOM OF EXPOSED ROOF PURLINS OR TO UNISTRUT SPANS BETWEEN THE ROOF PURLINS AS REQUIRED.

KEYED NOTES:

* FOR SHEET EL102 ONLY

1. EXTERIOR EMERGENCY LIGHTING BATTERY UNIT. SEE FIXTURE SCHEDULE. CONNECT TO SAME BRANCH CIRCUIT AS EXTERIOR LIGHTING, AHEAD OF PHOTOCELL.
2. 2 #10, 1/2" C, 12 VDC, FROM REMOTE EMERGENCY LIGHT LAMP TO BATTERY UNIT. DO NOT INSTALL ANY OTHER WIRING IN THE RACEWAY SYSTEM WITH THE EMERGENCY LIGHTING BRANCH CIRCUIT.
3. PAINT BOOTH. SEE NEC CLASSIFIED HAZARDOUS LOCATIONS NOTES BELOW FOR ELECTRICAL INSTALLATION REQUIREMENTS.

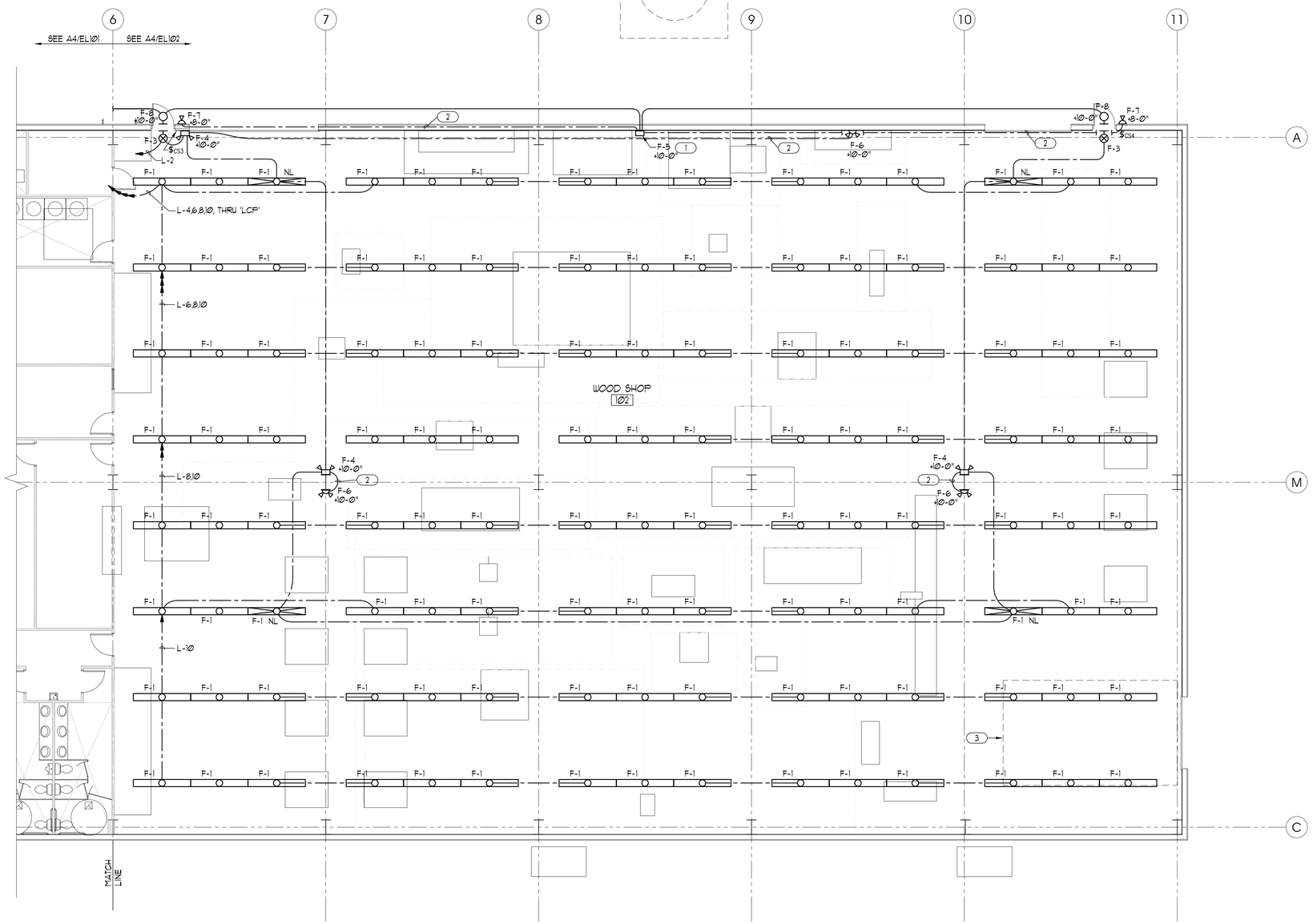

LIGHTING PLAN - WOOD SHOP

SCALE: 1/8" = 1'-0"

A4 / EL102

NEC CLASSIFIED HAZARDOUS LOCATIONS

1. THE AREA EXTENDING 5 FT HORIZONTALLY AND 3 FEET VERTICALLY FROM THE SPRAY PAINT BOOTH OPENING IS A CLASS I, DIVISION 2, CLASSIFIED HAZARDOUS LOCATION IN ACCORDANCE WITH NATIONAL ELECTRICAL CODE (NEC) ARTICLE 516.3 (B) (2).
2. DO NOT INSTALL ANY ELECTRICAL EQUIPMENT, DEVICES, RACEWAYS, ETC., IN THE NEC CLASSIFIED HAZARDOUS LOCATIONS. COORDINATE WITH OWNER FOR LOCATION AND DIMENSION OF OPENINGS TO THE SPRAY PAINT BOOTH.
3. ANY RACEWAYS INSTALLED IN HAZARDOUS LOCATIONS SHALL BE GALVANIZED RIGID STEEL CONDUIT WITH THREADED FITTINGS.
4. ANY EQUIPMENT, DEVICES, ETC., INSTALLED IN HAZARDOUS LOCATIONS SHALL BE UL LISTED FOR THE CLASS, DIVISION, AND GROUP. MAXIMUM TEMPERATURE CLASSIFICATION OF EQUIPMENT, WHERE REQUIRED, SHALL BE COORDINATED WITH OWNER TO NOT EXCEED THE AUTO-IGNITION TEMPERATURE OF MATERIAL USED IN THE SPRAY PAINT BOOTH.

ARCHITECT AJC PROJECT # 0502

ajc architects

703 east 1700 south
salt lake city, utah 84105
ph: 801.466.8818
fx: 801.466.4411
ajc@ajcarchitects.com

CONSULTANT

ELECTRICAL:
THOMAS AND KOLKMAN ENGINEERING COMPANY, INC.
64 WEST 17TH SOUTH
SALT LAKE CITY, UT, 84115
(801)484-8161 PH.
(801) 484-3538 FAX.
CONTACT: BILL GRANDY

OWNER INFORMATION

State of Utah
Department of Administrative Services

Division of Facilities Construction & Management
4110 State Office Building
Salt Lake City, Utah 84114
Phone: (801) 538 - 3018
Fax: (801) 538 - 3267

Internet: http://dfcm.utah.gov

PROJECT DESCRIPTION

ATE CENTER AT UTAH STATE PRISON

DRAPER, UTAH

SHEET NAME:

LIGHTING PLAN - WOOD SHOP

REVISIONS

MARK	DATE	DESCRIPTION

ISSUE DATA

ISSUE DATE:	APRIL 18, 2005
ISSUE TYPE:	CON. DOCS.
DRAWN BY:	W.B.G.
CHECKED BY:	R.G.K.
CAD FILE NAME:	0502E-101.dwg
DFCM PROJECT #	04256100
STATE PROPERTY #	
COPYRIGHT:	STATE OF UTAH

SHEET NUMBER:

EL102

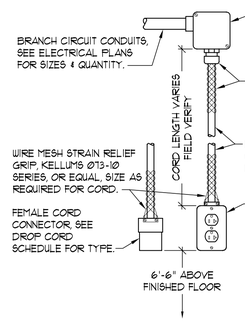

DROP CORD SCHEDULE

NEMA TYPE	CIRCUIT AMPS	RECEPTACLE OR CONNECTOR			CORD SIZE
		VOLTAGE	MANUFACTURER*	CAT. NO.	
(2) 5-20	20 AMP	125 V, 2P, 3W	WOODHEAD	3080-10	2 #12 W/GND
5-20	20 AMP	125 V, 2P, 3W	HUBBELL	HBL5369C	2 #12 W/GND
5-30	30 AMP	125 V, 2P, 3W	BRYANT	9530NC	2 #10 W/GND
6-20	20 AMP	250 V, 2P, 3W	HUBBELL	HBL5469C	2 #12 W/GND
6-30	30 AMP	250 V, 2P, 3W	BRYANT	9630NC	2 #10 W/GND
6-50	40 AMP	250 V, 2P, 3W	BRYANT	9650NC	2 #8 W/GND
	50 AMP				2 #6 W/GND
15-20	15-20 AMP	250 V, 3P, 4W	-	-	3 #12 W/GND
15-30	30 AMP	250 V, 3P, 4W	BRYANT	8430NP	3 #10 W/GND
15-50	40 AMP	250 V, 2P, 3W	BRYANT	9650NC	3 #8 W/GND
	50 AMP				3 #6 W/GND
15-60	60 AMP	250 V, 3P, 4W	-	-	3 #4 W/GND
L16-30	30 AMP	480 V, 3P, 4W	HUBBELL	HBL2733	3 #10 W/GND
L21-30	30 AMP	120/208 V, 4P, 5W	HUBBELL	HBL2513	3 #10 W/GND

* OR EQUAL OF ACCEPTABLE MANUFACTURERS LISTED IN SPECIFICATION SECTION 16140.

TYPICAL DROP CORD OUTLET DETAIL

D3 / EP101

SCALE: 1-1/2" = 1'-0"

GENERAL NOTES:

* FOR SHEET EP101 ONLY

1. COORDINATE MECHANICAL EQUIPMENT LOCATIONS WITH MECHANICAL PLANS AND MECHANICAL CONTRACTOR.
2. COORDINATE SHOP EQUIPMENT LOCATIONS, VOLTAGE, PHASE, AND LOAD WITH OWNER PRIOR TO ROUGHING IN ELECTRICAL SERVICE TO THE EQUIPMENT.
3. COORDINATE RECEPTACLE AND OUTLET LOCATIONS WITH MILLWORK AND OWNER'S FURNITURE LOCATIONS PRIOR TO ROUGHING IN.
4. WHERE BRANCH CIRCUIT HOMERUNS INDICATE WIRE SIZES, THE BRANCH CIRCUIT SHALL BE THAT SIZE WIRE THROUGHOUT, INCLUDING SWITCH LEGS, ETC..

KEYED NOTES:

* FOR SHEET EP101 ONLY

1. 2 SPEED, 2 WINDING STARTER FOR EVAPORATIVE COOLER, SEE TYPICAL EVAPORATIVE COOLER CONTROL WIRING DIAGRAM C2/E-601.
2. 6 POSITION CONTROL SWITCH FURNISHED WITH EVAPORATIVE COOLERS, TO BE INSTALLED AND WIRING COMPLETE BY ELECTRICAL CONTRACTOR, SEE TYPICAL EVAPORATIVE COOLER CONTROL WIRING DIAGRAM C2/E-601.
3. POWER RELAYS TO CONTROL RELIEF AIR DAMPERS FOR EVAPORATIVE COOLERS, SEE TYPICAL EVAPORATIVE COOLER CONTROL WIRING DIAGRAM C2/E-601.
4. RELIEF AIR DAMPER FURNISHED AND INSTALLED BY MECHANICAL CONTRACTOR, TO BE WIRED BY ELECTRICAL CONTRACTOR. SEE TYPICAL EVAPORATIVE COOLER CONTROL WIRING DIAGRAM C2/E-601.
5. CONNECT TO ELECTRIC WATER HEATER LOCATED ABOVE CEILING. SEE PLUMBING PLANS.
6. STARTER AND/OR CONTROL PANEL FURNISHED WITH SHOP EQUIPMENT TO BE INSTALLED AND WIRED COMPLETE BY CONTRACTOR INCLUDING CONTROLS AND INTERLOCKS.

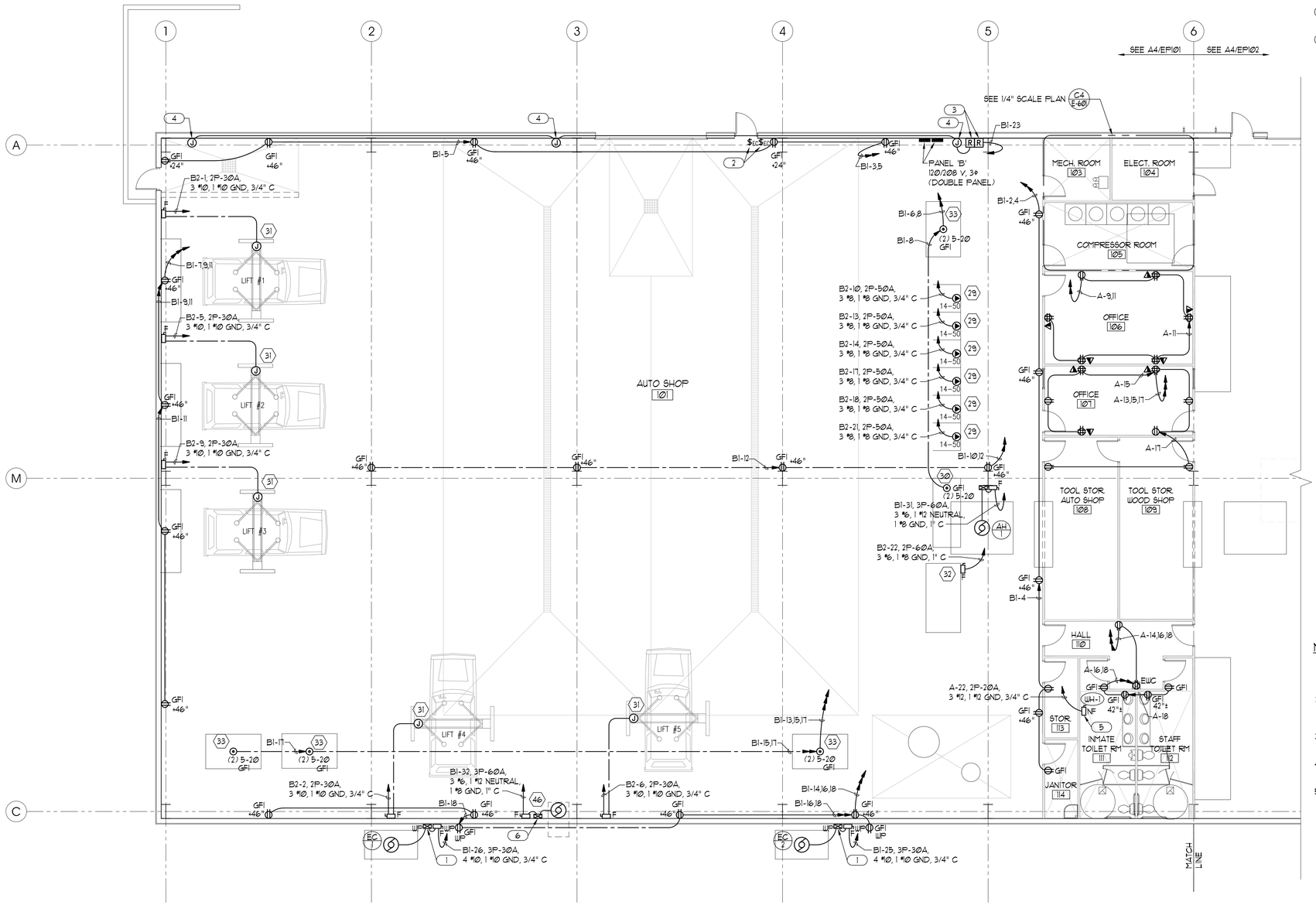

POWER PLAN - AUTO SHOP

A4 / EP101

SCALE: 1/8" = 1'-0"

NEC CLASSIFIED HAZARDOUS LOCATIONS

1. AUTO SHOP IS A CLASS I, DIVISION 2, GROUP D, CLASSIFIED HAZARDOUS LOCATION TO 18" ABOVE THE FLOOR IN ACCORDANCE WITH NATIONAL ELECTRICAL CODE (NEC) ARTICLE 511.3 (B) (1).
2. ANY PIT OR DEPRESSION BELOW FLOOR LEVEL IN THE AUTO SHOP IS A CLASS I, DIVISION 1, GROUP D, CLASSIFIED HAZARDOUS LOCATION IN ACCORDANCE WITH NEC ARTICLE 511.3 (B) (3).
3. IN GENERAL, DO NOT INSTALL ANY ELECTRICAL EQUIPMENT, DEVICES, RACEWAYS, ETC., IN THE NEC CLASSIFIED HAZARDOUS LOCATIONS.
4. ANY RACEWAYS INSTALLED IN HAZARDOUS LOCATIONS SHALL BE GALVANIZED RIGID STEEL CONDUIT WITH THREADED FITTINGS.
5. ANY EQUIPMENT, DEVICES, ETC., INSTALLED IN HAZARDOUS LOCATIONS SHALL BE UL LISTED FOR THE CLASS, DIVISION, AND GROUP. MAXIMUM TEMPERATURE CLASSIFICATION OF EQUIPMENT, WHERE REQUIRED, SHALL BE T2A, 280° C (536° F), BASED ON USE OF GASOLINE.

ARCHITECT AJC PROJECT # 0502

ajc architects

703 east 1700 south
salt lake city, utah 84105
ph: 801.466.8818
fx: 801.466.4411
ajc@ajcarchitects.com

CONSULTANT

ELECTRICAL:
THOMAS AND KOLKMAN ENGINEERING COMPANY, INC.
64 WEST 17TH SOUTH
SALT LAKE CITY, UT, 84115
(801)484-8161 PH.
(801) 484-3538 FAX.
CONTACT: BILL GRANDY

OWNER INFORMATION

State of Utah
Department of Administrative Services

Division of Facilities Construction & Management
4110 State Office Building
Salt Lake City, Utah 84114
Phone: (801) 538 - 3018
Fax: (801) 538 - 3267

Internet: http://dfcm.utah.gov

PROJECT DESCRIPTION

ATE CENTER AT UTAH STATE PRISON

DRAPER, UTAH

SHEET NAME:

POWER PLAN - AUTO SHOP

REVISIONS

MARK	DATE	DESCRIPTION

ISSUE DATA

ISSUE DATE:	APRIL 18, 2005
ISSUE TYPE:	CON. DOCS.
DRAWN BY:	W.B.G.
CHECKED BY:	R.G.K.
CAD FILE NAME:	0502E-101.dwg
DFCM PROJECT #	04256100
STATE PROPERTY #	
COPYRIGHT:	STATE OF UTAH

SHEET NUMBER:

EP101

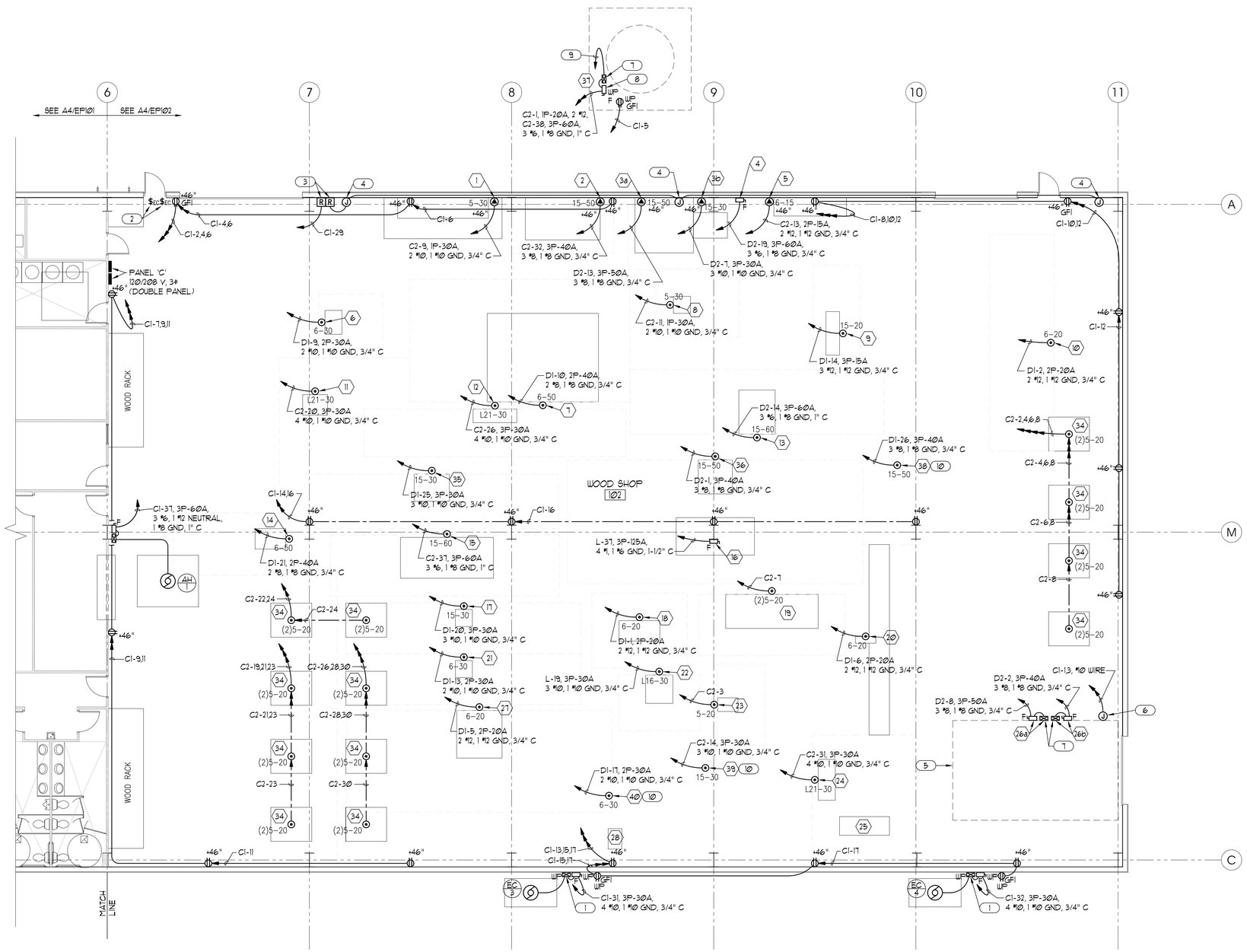

POWER PLAN - WOOD SHOP

SCALE: 1/8" = 1'-0"

A4 / EP102

GENERAL NOTES:

1. COORDINATE MECHANICAL EQUIPMENT LOCATIONS WITH MECHANICAL PLANS AND MECHANICAL CONTRACTOR.
2. COORDINATE SHOP EQUIPMENT LOCATIONS, VOLTAGE, PHASE, AND LOAD WITH OWNER PRIOR TO ROUGHING IN ELECTRICAL SERVICE TO THE EQUIPMENT.
3. COORDINATE RECEPTACLE AND OUTLET LOCATIONS WITH MILLWORK AND OWNER'S FURNITURE LOCATIONS PRIOR TO ROUGHING IN.
4. WHERE BRANCH CIRCUIT HOMERUNS INDICATE WIRE SIZES, THE BRANCH CIRCUIT SHALL BE THAT SIZE WIRE THROUGHOUT, INCLUDING SWITCH LEGS, ETC..

KEYED NOTES:

* FOR SHEET EP102 ONLY

1. 2 SPEED, 2 WINDING STARTER FOR EVAPORATIVE COOLER, SEE TYPICAL EVAPORATIVE COOLER CONTROL WIRING DIAGRAM C2/E-601.
2. 6 POSITION CONTROL SWITCH FURNISHED WITH EVAPORATIVE COOLERS, TO BE INSTALLED AND WIRING COMPLETE BY ELECTRICAL CONTRACTOR, SEE TYPICAL EVAPORATIVE COOLER CONTROL WIRING DIAGRAM C2/E-601.
3. POWER RELAYS TO CONTROL RELIEF AIR DAMPERS FOR EVAPORATIVE COOLERS, SEE TYPICAL EVAPORATIVE COOLER CONTROL WIRING DIAGRAM C2/E-601.
4. RELIEF AIR DAMPER FURNISHED AND INSTALLED BY MECHANICAL CONTRACTOR, TO BE WIRED BY ELECTRICAL CONTRACTOR. SEE TYPICAL EVAPORATIVE COOLER CONTROL WIRING DIAGRAM C2/E-601.
5. PAINT BOOTH. SEE NEC CLASSIFIED HAZARDOUS LOCATIONS NOTES BELOW FOR ELECTRICAL INSTALLATION REQUIREMENTS.
6. CONNECT TO PAINT BOOTH LIGHTS AND SPRAY GUN CONTROL CIRCUIT. FIELD VERIFY REQUIREMENTS.
7. STARTER AND/OR CONTROL PANEL FURNISHED WITH SHOP EQUIPMENT TO BE INSTALLED AND WIRED COMPLETE BY CONTRACTOR INCLUDING CONTROLS AND INTERLOCKS.
8. PROVIDE SAFETY SWITCH FOR DUST COLLECTOR WITH ELECTRICAL INTERLOCK (AUXILIARY CONTACT) FOR 120 VOLT CIRCUIT TO DUST COLLECTOR VIBRATOR, OR CONTRACTOR MAY PROVIDE SEPARATE SINGLE POLE SWITCH IN WEATHERPROOF ENCLOSURE.
9. 9 #12, 3/4" CONDUIT TO REMOTE START-STOP CONTROL STATION FOR DUST COLLECTOR. CONTRACTOR TO INSTALL AND CONNECT CONTROL STATION AS DIRECTED BY OWNER.
9. EQUIPMENT ITEM INCLUDED ON OWNER'S SHOP EQUIPMENT ELECTRICAL INFORMATION SCHEDULE, BUT NOT SHOWN ON ARCHITECT'S SHOP EQUIPMENT PLAN. CONTRACTOR TO VERIFY LOCATION WITH OWNER. SEE GENERAL NOTE 2 ABOVE.

NEC CLASSIFIED HAZARDOUS LOCATIONS

1. THE AREA EXTENDING 5 FT HORIZONTALLY AND 3 FEET VERTICALLY FROM THE SPRAY PAINT BOOTH OPENING IS A CLASS I, DIVISION 2, CLASSIFIED HAZARDOUS LOCATION IN ACCORDANCE WITH NATIONAL ELECTRICAL CODE (NEC) ARTICLE 516.3 (B) (2).
2. DO NOT INSTALL ANY ELECTRICAL EQUIPMENT, DEVICES, RACEWAYS, ETC., IN THE NEC CLASSIFIED HAZARDOUS LOCATIONS. COORDINATE WITH OWNER FOR LOCATION AND DIMENSION OF OPENINGS TO THE SPRAY PAINT BOOTH.
3. ANY RACEWAYS INSTALLED IN HAZARDOUS LOCATIONS SHALL BE GALVANIZED RIGID STEEL CONDUIT WITH THREADED FITTINGS.
4. ANY EQUIPMENT, DEVICES, ETC., INSTALLED IN HAZARDOUS LOCATIONS SHALL BE UL LISTED FOR THE CLASS, DIVISION, AND GROUP. MAXIMUM TEMPERATURE CLASSIFICATION OF EQUIPMENT, WHERE REQUIRED, SHALL BE COORDINATED WITH OWNER TO NOT EXCEED THE AUTO-IGNITION TEMPERATURE OF MATERIAL USED IN THE SPRAY PAINT BOOTH.

ARCHITECT AJC PROJECT # 0502

ajc architects

703 east 1700 south
salt lake city, utah 84105
ph: 801.466.8818
fx: 801.466.4411
ajc@ajcarchitects.com

CONSULTANT

ELECTRICAL:
THOMAS AND KOLKMAN
ENGINEERING COMPANY, INC.
64 WEST 17TH SOUTH
SALT LAKE CITY, UT. 84115
(801)484-8161 PH.
(801) 484-3538 FAX.
CONTACT: BILL GRANDY

OWNER INFORMATION

State of Utah
Department of Administrative Services

Division of Facilities
Construction & Management
4110 State Office Building
Salt Lake City, Utah 84114
Phone: (801) 538 - 3018
Fax: (801) 538 - 3267

Internet: http://dfcm.utah.gov

PROJECT DESCRIPTION

ATE CENTER AT UTAH STATE PRISON

DRAPER, UTAH

SHEET NAME:

POWER PLAN - WOOD SHOP

REVISIONS

MARK	DATE	DESCRIPTION

ISSUE DATA

ISSUE DATE:	APRIL 18, 2005
ISSUE TYPE:	CON. DOCS.
DRAWN BY:	W.B.G.
CHECKED BY:	R.G.K.
CAD FILE NAME:	0502E-101.dwg
DFCM PROJECT #	04256100
STATE PROPERTY #	
COPYRIGHT:	STATE OF UTAH

SHEET NUMBER:

EP102

EVAPORATIVE COOLER CONTROL EQUIPMENT:

DS1 SAFETY SWITCH, FUSED, IN NEMA 3R WEATHERPROOF ENCLOSURE. SEE SPECIFICATION SECTION 16440.

M MAGNETIC MOTOR STARTER, 2 SPEED, 2 WINDING, VARIABLE TORQUE, WITH (2) 3 POLE SIZE 1 CONTACTORS, RED "RUN" PILOT LIGHT, AND CONTROL CIRCUIT FUSE, IN NEMA 3R OR 4 WEATHERPROOF ENCLOSURE. SEE SPECIFICATION SECTION 16480.

FR FIRE ALARM SYSTEM FIRE SAFETY FUNCTION POWER RELAY. SEE FIRE ALARM SYSTEM PLAN, SHEET FA101.

SS1 SIX POSITION SELECTOR SWITCH, FURNISHED WITH EVAPORATIVE COOLER, TO BE INSTALLED AND WIRED COMPLETE BY ELECTRICAL CONTRACTOR.

PR POWER RELAY, WITH SINGLE POLE, SINGLE THROW CONTACTS RATED 30 AMPERES AT 300 VOLT, AND 120 VAC COIL IN NEMA 1 ENCLOSURE. EQUAL TO SQUARE D CLASS 8501 TYPE COE-V20 WITH CLASS 9999 TYPE UE1 ENCLOSURE.

L-2 RELIEF AIR LOUVER DAMPER OPERATOR, FURNISHED AND INSTALLED BY MECHANICAL CONTRACTOR, TO BE WIRED COMPLETE BY ELECTRICAL CONTRACTOR. INTERLOCK DAMPERS WITH TWO EVAPORATIVE COOLERS IN EACH SHOP AREA TO OPEN DAMPERS UPON OPERATION OF EITHER EVAPORATIVE COOLER.

CONTROL NOTES:

1. USE MINIMUM #14 STRANDED WIRE FOR ALL CONTROL CONDUCTORS. LABEL WIRE ACCORDING TO NUMBER ON CONTROL DIAGRAM. SEE SPECIFICATION SECTION 16195.
2. REFER TO ELECTRICAL PLANS FOR POWER WIRE SIZES.
3. PROVIDE ENGRAVED NAMEPLATE FOR "EXTERIOR LIGHTING CONTROL CABINET" IN ACCORDANCE WITH SPECIFICATION SECTION 16195. PROVIDE SELF-ADHESIVE LABEL TO INCLUDE CIRCUIT NUMBERS OF ALL CONTROL AND POWER CIRCUITS.
4. PROVIDE SELF-ADHESIVE LABELS TO IDENTIFY ALL CONTROL DEVICES ACCORDING TO WIRING DIAGRAM.
5. PROVIDE DEVICES AS SPECIFIED OR EQUAL OF ACCEPTABLE MANUFACTURERS LISTED IN SPECIFICATION SECTION 16480.

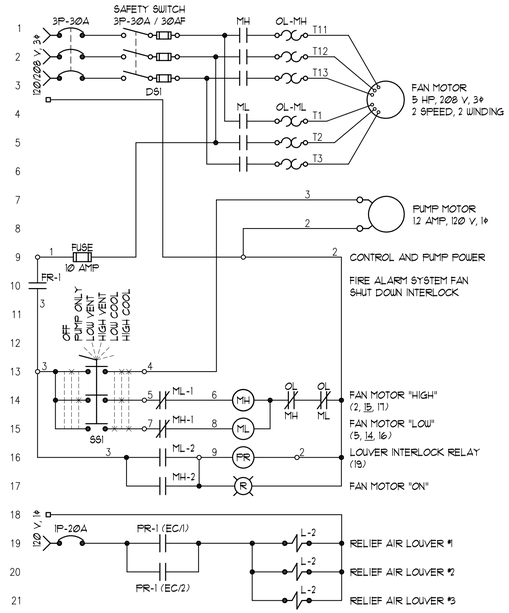

TYPICAL 2 SPEED EVAPORATIVE COOLER CONTROL WIRING DIAGRAM

C2 / E-601

SCHEMATIC

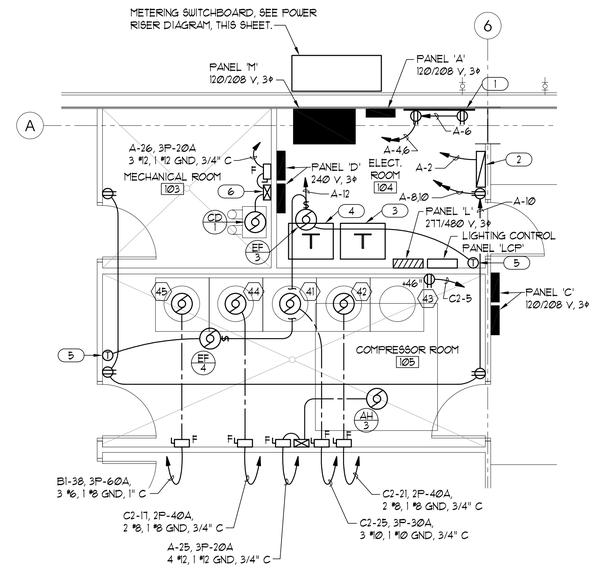

ENLARGED ELECTRICAL AND MECHANICAL ROOM POWER PLAN

C5 / E-601

SCHEMATIC

GENERAL NOTES:

* FOR ELECT. ROOM POWER PLAN C5/E-601 ONLY

1. COORDINATE MECHANICAL EQUIPMENT LOCATIONS WITH MECHANICAL PLANS AND MECHANICAL CONTRACTOR.
2. COORDINATE SHOP EQUIPMENT LOCATIONS, VOLTAGE, PHASE, AND LOAD WITH OWNER PRIOR TO ROUGHING IN ELECTRICAL SERVICE TO THE EQUIPMENT.
3. COORDINATE RECEPTACLE AND OUTLET LOCATIONS WITH MILLWORK AND OWNER'S FURNITURE LOCATIONS PRIOR TO ROUGHING IN.
4. WHERE BRANCH CIRCUIT HOMERUNS INDICATE WIRE SIZES, THE BRANCH CIRCUIT SHALL BE THAT SIZE WIRE THROUGHOUT, INCLUDING SWITCH LEGS, ETC..

KEYED NOTES:

* FOR ELECT. ROOM POWER PLAN C5/E-601 ONLY

1. TELE/DATA TERMINAL BOARD, SEE TELE/DATA CONDUIT RISER DIAGRAM, THIS SHEET.
2. FIRE ALARM CONTROL PANEL, SEE FIRE ALARM SYSTEM PLAN, SHEET FA101.
3. DRY TYPE TRANSFORMER 'T1', 112.5 KVA, 208 V, 3φ, 3W, TO 277/480 V, 3φ, 4W, FLOOR MOUNTED, APPROXIMATELY 30" W x 20" D x 30" H, 150 LBS.
4. DRY TYPE TRANSFORMER 'T2', 112.5 KVA, 208 V, 3φ, 3W, TO 120/240 V, 3φ, 4W, FLOOR MOUNTED, APPROXIMATELY 30" W x 20" D x 30" H, 150 LBS.
5. LINE VOLTAGE THERMOSTAT FURNISHED FURNISHED BY MECHANICAL, TO BE INSTALLED AND WIRED COMPLETE BY ELECTRICAL CONTRACTOR TO CONTROL EXHAUST FAN INDICATED.
6. DUPLEX CONDENSATE PUMP CONTROL PANEL FURNISHED BY MECHANICAL, TO BE INSTALLED AND WIRED COMPLETE BY ELECTRICAL CONTRACTOR.

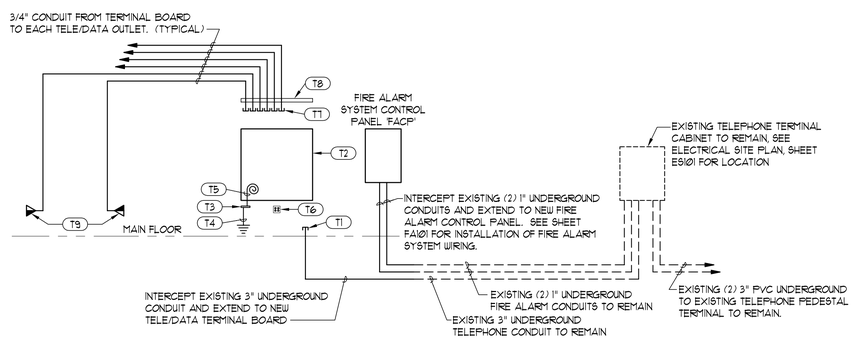

TELE/DATA RISER KEYED NOTES:

T1 STUB NEW UNDERGROUND CONDUITS TO 6"± ABOVE FLOOR, TERMINATE WITH GROUNDING BUSHING, AND BOND TO TERMINAL BOARD GROUND BUS.

T2 NEW 4' x 4' x 3/4" PLYWOOD TELE/DATA TERMINAL BOARD, MOUNT 6'-0" TO TOP. FINISH WITH 2 COATS OF WHITE FIRE-RETARDANT PAINT.

T3 GROUND BUS SUITABLE FOR (6) #10-#6 AWG COPPER CONDUCTORS.

T4 #6 AWG INSULATED GROUND CONDUCTOR TO GROUND BUS IN ELECTRICAL SERVICE DISCONNECT.

T5 LEAVE 6 FEET OF #6 AWG INSULATED GROUND CONDUCTOR COILED AT TERMINAL BOARD FOR CONNECTION TO TELEPHONE SURGE PROTECTION EQUIPMENT.

T6 DOUBLE DUPLEX RECEPTACLE, SEE POWER PLANS FOR CIRCUITING.

T7 TERMINATE ALL STATION CONDUITS WITH INSULATED BUSHING, NOT LESS THAN 12" ABOVE TOP OF TERMINAL BOARD.

T8 UNISTRUT P1000, OR EQUAL, SUPPORT CHANNEL WITH CLAMPS TO SUPPORT ALL CONDUIT. BOND TO GROUND BUS WITH #6 AWG INSULATED CONDUCTOR.

T9 TYPICAL TELE/DATA STATION OUTLET. SEE POWER PLANS FOR LOCATIONS AND QUANTITY.

TELE/DATA RISER GENERAL NOTES:

1. BURY UNDERGROUND CONDUITS MINIMUM 24" BELOW FINISH GRADE WITH RED MAGNETIC WARNING TAPE STATING "CAUTION - BURIED ELECTRICAL" 12 INCHES ABOVE THE CONDUIT.
2. USE GALVANIZED RIGID STEEL CONDUIT (GRC) FOR ALL CONDUIT THROUGH GRADE AND ELBOWS IN PVC CONDUIT RUNS. CORROSION PROTECT GRC CONDUIT IN ACCORDANCE WITH SPECIFICATION SECTION 16110.
3. PROVIDE 1/4" NYLON PULL ROPE IN 3" TELEPHONE SERVICE CONDUIT. PROVIDE PULL STRING IN 1" FIRE ALARM SYSTEM CONDUITS.
4. TELEPHONE/DATA CABLES AND EQUIPMENT WILL BE FURNISHED AND INSTALLED BY THE OWNER.
5. DO NOT APPLY POWER TO ANY TELEPHONE/ DATA SYSTEM EQUIPMENT EXCEPT UNDER SUPERVISION OF THE OWNER.
6. COORDINATE LOCATION OF ALL OUTLETS, EQUIPMENT, ETC., FOR THE TELEPHONE/DATA SYSTEM WITH THE OWNER PRIOR TO ROUGHING IN.
7. COORDINATE INSTALLATION OF NEW TELEPHONE SERVICE WITH OWNER PRIOR TO BEGINNING WORK.

TELEPHONE/DATA CONDUIT RISER DIAGRAM

B5 / E-601

SCHEMATIC

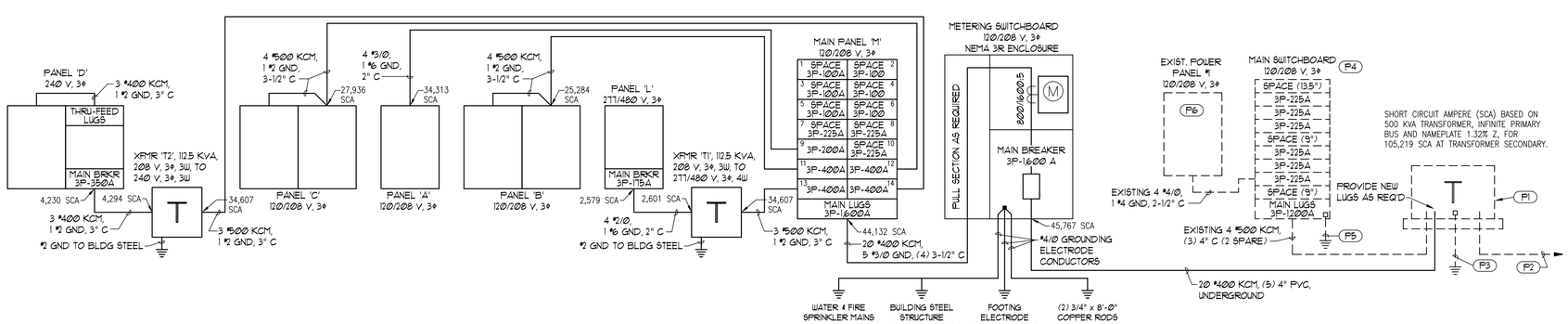

SHORT CIRCUIT AMPERE (SCA) BASED ON 500 KVA TRANSFORMER, INFINITE PRIMARY BUS AND NAMEPLATE 1.32% Z, FOR 105,219 SCA AT TRANSFORMER SECONDARY.

POWER RISER GENERAL NOTES:

1. BURY UNDERGROUND ELECTRICAL SERVICE CONDUITS MINIMUM 24" BELOW FINISH GRADE WITH RED MAGNETIC WARNING TAPE STATING "CAUTION - BURIED ELECTRICAL" 12 INCHES ABOVE THE CONDUIT.
2. USE GALVANIZED RIGID STEEL CONDUIT (GRC) FOR ALL CONDUIT THROUGH GRADE AND ELBOWS IN PVC CONDUIT RUNS. CORROSION PROTECT GRC CONDUIT IN ACCORDANCE WITH SPECIFICATION SECTION 16110.
3. COORDINATE INSTALLATION OF NEW ELECTRICAL SERVICE AND METERING WITH OWNER PRIOR TO BEGINNING WORK.

POWER RISER KEYED NOTES:

P1 EXISTING PAD MOUNTED, OIL FILLED, DISTRIBUTION TRANSFORMER, 500 KVA, 12,470GRDY/7,200 TO 208Y/120, 1.32% IMPEDANCE, TO REMAIN.

P2 EXISTING UNDERGROUND PRIMARY ELECTRICAL SERVICE TO EXISTING PAD MOUNT TRANSFORMER TO REMAIN.

P3 EXISTING TRANSFORMER GROUND TO REMAIN.

P4 EXISTING 1200 AMPERE, 120/208 V, 3φ, DISTRIBUTION PANEL TO REMAIN. BREAKERS ARE SPARES UNLESS SHOWN CONNECTED.

P5 EXISTING DISTRIBUTION PANEL GROUND TO REMAIN.

P6 EXISTING PANEL #1 TO REMAIN. PANEL SERVES EXISTING PEDESTAL MOUNTED METERS AND PANEL #2 TO REMAIN, AND PANEL #3 TO BE REMOVED. SEE ELECTRICAL SITE PLAN, SHEET ES101, FOR DEMOLITION REQUIREMENTS.

POWER RISER DIAGRAM

A5 / E-601

SCHEMATIC

ARCHITECT AJC PROJECT # 0502

ajc architects

703 east 1700 south
salt lake city, utah 84105
ph: 801.466.8818
fx: 801.466.4411
ajc@ajcarchitects.com

CONSULTANT

ELECTRICAL:
THOMAS AND KOLKMAN ENGINEERING COMPANY, INC.
64 WEST 17TH SOUTH
SALT LAKE CITY, UT, 84115
(801)484-8161 PH.
(801) 484-3538 FAX.
CONTACT: BILL GRANDY

OWNER INFORMATION

State of Utah
Department of Administrative Services

Division of Facilities Construction & Management
4110 State Office Building
Salt Lake City, Utah 84114
Phone: (801) 538 - 3018
Fax: (801) 538 - 3267

Internet: http://dfcm.utah.gov

PROJECT DESCRIPTION

ATE CENTER AT UTAH STATE PRISON

DRAPER, UTAH

SHEET NAME:

ENLARGED PLAN, RISERS AND CONTROL DIAGRAMS

REVISIONS

MARK	DATE	DESCRIPTION

ISSUE DATA

ISSUE DATE:	APRIL 18, 2005
ISSUE TYPE:	CON. DOCS.
DRAWN BY:	W.B.G.
CHECKED BY:	R.G.K.
CAD FILE NAME:	0502E-601.dwg
DFCM PROJECT #	04256100
STATE PROPERTY #	
COPYRIGHT:	STATE OF UTAH

SHEET NUMBER:

E-601

SHEET 41 OF 44 TOTAL PAGES

PANEL 'A'
TYPE 'NF', BOLT ON
3 POLE 225 AMP MAIN LUGS

35,000 A.I.C., SERIES OR FULLY RATED
120/208 VOLT, 3 PHASE, 4 WIRE
SURFACE MOUNTED

CIR NO.	BRKR P	BRKR AMPS	DESCRIPTION	NO. LTS	NO. REC	CIRCUIT LOAD	PHASE LOAD - VA PHASE A	PHASE B	PHASE C	CIRCUIT LOAD	NO. REC	NO. LTS	DESCRIPTION	BRKR P	BRKR AMPS	CIR NO.
1	1	20	LTS, RESTROOMS	6		750	1,050			300			FIRE ALARM CONTROL PANEL	1	20	2
3			LIGHTING CONTROL PANEL			200		380		180	1		REC, TELE TERMINAL BOARD			4
5			SPARE						180	180	1		REC, TELE TERMINAL BOARD			6
7			SPARE				180			180	1		REC, ELECTRICAL ROOM			8
9			REC, LARGE OFFICE		5	900		1,440		540	3		REC, COMP. & MECH ROOMS			10
11			REC, LARGE OFFICE		6	1,080			1,390	310			EXHAUST FANS, ELEC & COMP			12
13			REC, SECURITY OFFICE		4	720	1,080			360	2		REC, HALLWAY & EWC			14
15			REC, SECURITY OFFICE		5	900		1,260		360	2		REC, MEN'S RESTROOM			16
17			REC, TOOL STORAGE		2	360			720	360	2		REC, WOMEN'S RESTROOM			18
19			SPARE				0						SPARE	1	20	20
21			SPARE					1,500		1,500			RESTROOMS WATER HEATER	2	20	22
23	1	20	SPARE						1,500	1,500			-	-	-	24
25	3	20	AIR HANDLING UNIT AH/3			1,320	2,975			1,655			CONDENSATE PUMP CD/1	3	20	26
27	-	-	-			1,320		2,975		1,655			-	-	-	28
29	-	-	-			1,320			2,975	1,655			-	-	-	30
31	1		SPACE				0						SPACE	1		32
33								0								34
35									0							36
37							0									38
39								0								40
41	1		SPACE						0				SPACE	1		42
							5,285	7,555	6,765							

TOTAL CONNECTED LOAD: 19,605 VA 54 AMPS
CALCULATED FEEDER DEMAND, NEC 220: 21,159 VA 59 AMPS
FEEDER: 4 #3/0, 1 #6 GND, 2" C

PANEL 'B1'
TYPE 'NQOD', BOLT ON
3 POLE 400 AMP MAIN LUGS W/THRU-FEED LUGS

DOUBLE PANEL, SECTION I

35,000 A.I.C., SERIES OR FULLY RATED
120/208 VOLT, 3 PHASE, 4 WIRE
SURFACE MOUNTED

CIR NO.	BRKR P	BRKR AMPS	DESCRIPTION	NO. LTS	NO. REC	CIRCUIT LOAD	PHASE LOAD - VA PHASE A	PHASE B	PHASE C	CIRCUIT LOAD	NO. REC	NO. LTS	DESCRIPTION	BRKR P	BRKR AMPS	CIR NO.
1	1	20	SPARE				540			540	3		REC, NORTH WALL	1	20	2
3			REC, WEST WALL		3	540		1,080		540	3		REC, NORTH & STORAGE RMS			4
5			REC, WEST WALL		2	360			720	360	2		NW WORK TABLE DROP CORD			6
7			REC, SOUTH WALL WEST END		1	180	540			360	2		WELDING TABLE DROP CORD			8
9			REC, SOUTH WALL CENTER		1	180		540		360	2		REC, NORTH CENTER CLMS			10
11			REC, SOUTH WALL EAST END		2	360			720	360	2		REC, SOUTH CENTER CLMS			12
13			NE WORK BENCH DROP CORD		2	360	720			360	2		REC, EAST WALL, NORTH			14
15			SE WORK BENCH DROP CORD		2	360		720		360	2		REC, EAST WALL, CENTER			16
17			SE WORK BENCH DROP CORD		2	360			720	360	2		REC, EAST WALL, SOUTH			18
19			SPARE				0						SPARE			20
21			SPARE					0					SPARE			22
23	1	20	RELIEF AIR LOUVERS			300			300				SPARE	1	20	24
25	3	30	EVAP. COOLER EC/2 NORTH			2,100	4,200			2,100			EVAP. COOLER EC/1 SOUTH	3	30	26
27	-	-	-			2,100		4,200		2,100			-	-	-	28
29	-	-	-			2,100			4,200	2,100			-	-	-	30
31	3	60	AIR HANDLING UNIT AH/1			3,865	7,730			3,865			AUTO SHOP EXHAUST FAN 46	3	60	32
33	-	-	-			3,865		7,730		3,865			-	-	-	34
35	-	-	-			3,865			7,730	3,865			-	-	-	36
37	1		SPACE				3,865			3,865			AUTO SHOP AIR COMP. 45	3	60	38
39	1		SPACE					3,865		3,865			-	-	-	40
41	1		SPACE						3,865	3,865			-	-	-	42
							17,595	18,135	18,255							

TOTAL CONNECTED LOAD: 53,985 VA 150 AMPS
CALCULATED FEEDER DEMAND, NEC 220: 45,289 VA 126 AMPS
FEEDER: 4 #500 KCM, 1 #2 GND, 3-1/2" C

PANEL 'B2'
TYPE 'NQOD', BOLT ON
3 POLE 400 AMP MAIN LUGS

DOUBLE PANEL, SECTION II

35,000 A.I.C., SERIES OR FULLY RATED
120/208 VOLT, 3 PHASE, 4 WIRE
SURFACE MOUNTED

CIR NO.	BRKR P	BRKR AMPS	DESCRIPTION	NO. LTS	NO. REC	CIRCUIT LOAD	PHASE LOAD - VA PHASE A	PHASE B	PHASE C	CIRCUIT LOAD	NO. REC	NO. LTS	DESCRIPTION	BRKR P	BRKR AMPS	CIR NO.
1	2	30	AUTO LIFT #1 (31)			2,200	4,400			2,200			AUTO LIFT #4 (31)	2	30	2
3	-	-	-			2,200		4,400		2,200			-	-	-	4
5	2	30	AUTO LIFT #2 (31)			2,200			4,400	2,200			AUTO LIFT #5 (31)	2	30	6
7	-	-	-			2,200	4,400			2,200			-	-	-	8
9	2	30	AUTO LIFT #3 (31)			2,200		6,200		4,000			WELDER #1 (29)	2	50	10
11	-	-	-			2,200			6,200	4,000			-	-	-	12
13	2	50	WELDER #2 (29)			4,000	8,000			4,000			WELDER #3 (29)	2	50	14
15	-	-	-			4,000		8,000		4,000			-	-	-	16
17	2	50	WELDER #4 (29)			4,000			8,000	4,000			WELDER #5 (29)	2	50	18
19	-	-	-			4,000	8,000			4,000			-	-	-	20
21	2	50	WELDER #6 (29)			4,000		8,600		4,600			TRANSMISSION DYNO 32	2	60	22
23	-	-	-			4,000			8,600	4,600			-	-	-	24
25	1		SPACE				0						SPACE	1		26
27								0								28
29									0							30
31							0									32
33								0								34
35									0							36
37							0									38
39								0								40
41	1		SPACE						0				SPACE	1		42
					SECTION II		24,800	27,200	27,200							
					SECTIONS I & II		42,395	45,335	45,455							

TOTAL CONNECTED LOAD: SECTION II: 79,200 VA 220 AMPS
SECTIONS I & II: 133,185 VA 370 AMPS
CALCULATED FEEDER DEMAND, NEC 220: 114,489 VA 318 AMPS
FEEDER: 4 #500 KCM, 1 #2 GND, 3-1/2" C

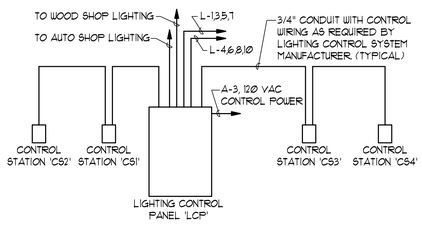

LIGHTING CONTROL SYSTEM RISER DIAGRAM (A3 / E-602)
SCHEMATIC

FIXTURE SCHEDULE

SYMBOL	MANUFACTURER	CATALOG NUMBER	DESCRIPTION	LAMP
F-1	COLUMBIA DAY-BRITE LIGHTOLIER LITHONIA LSI MIDWEST METALUX	CSR8-232-U-4EB8-277-CSTH TIA-232-277-1/4-EB-TH1 KW8A-232-277-SD-NAHW CSP TLA-232-277-1/4-GEB-THC F22-232-2-SSD-277-CH-12 8TIA-232-277-EB81-ATG-4-U	8 FT, 2 LAMP ROW, TANDEM, SURFACE MOUNTED INDUSTRIAL FLUORESCENT STRIPLIGHT WITH OPEN REFLECTOR, ONE 4 LAMP, <20% THD, 277 VOLT ELECTRONIC BALLAST AND TONG HANGER FOR 3/8" THREADED ROD.	4F32T8/TL835
F-2	COLUMBIA DAY-BRITE LIGHTOLIER LITHONIA LSI MIDWEST METALUX	CSR4-232-U-EB8-277 TA-232-277-1/2-EB-TH1 KW4A-232-277-SD-NAHW CSP LA-232-277-GEB-THC F22-232-SSD-277-CH-12 IA-232-277-EB81-ATG-4-U	4 FT, 2 LAMP ROW, TANDEM, SURFACE MOUNTED INDUSTRIAL FLUORESCENT STRIPLIGHT WITH OPEN REFLECTOR, ONE 2 LAMP, <20% THD, 277 VOLT ELECTRONIC BALLAST AND TONG HANGER FOR 3/8" THREADED ROD.	2F32T8/TL835
F-3	DUAL-LITE LIGHTGUARD LIGHTOLIER LITHONIA MCPHILBEN SURE-LITES	LX-S-G-W-E-I U-L-N-1-G-W-DT LT-N-1-G-W-SD LQM-S-W-1-G-120/277-ELN-SD CXXL-1-G-W LPX-7-O-7O-G-WH-SD	UNIVERSAL MOUNTED, SINGLE FACE, LIGHT EMITTING DIODE (LED) EXIT LIGHT WITH WHITE THERMOPLASTIC HOUSING, GREEN LETTERS ON STENCIL FACE, 120/277 VOLT INPUT, NICKEL CADMIUM BATTERY, CHARGER AND SELF-DIAGNOSTIC CIRCUITRY WITH INDICATORS AND TEST SWITCH.	FURNISHED W/ FIXTURE
F-4	DUAL-LITE LIGHTGUARD LIGHTOLIER LITHONIA MCPHILBEN SURE-LITES	LM541-12V-T-1212 V12-50-W-DSH1212W-2-DT E4-2-50L-2-PH1212W-W-SD IND1250-W-H1212-SD ES12L-50-W-PAWL-SD XR-12208-SD-12T12	WALL MOUNTED EMERGENCY LIGHTING UNIT WITH TWO 12 VOLT, 12 WATT, HALOGEN LAMP HEADS, REMOTE FEED CAPABILITY, WHITE STEEL HOUSING, MINIMUM 50 WATT 12 VOLT LEAD CALCIUM BATTERY, CHARGER, 120/277 VOLT INPUT, AND SELF-DIAGNOSTIC CIRCUITRY WITH INDICATORS AND TEST SWITCH.	FURNISHED W/ FIXTURE
F-5	DUAL-LITE LIGHTGUARD LIGHTOLIER LITHONIA MCPHILBEN SURE-LITES	LM661-12V-O V12-50-W-DTTD E4-2-50L-W-SDTD IND1250-W-RO-TD ES12L-50W-SD-TD2 XR-12208-SD-TDM-OHEADS	SAME AS F-4 EXCEPT WITHOUT LIGHT HEADS AND WITH 15 MINUTE HID TIME DELAY	NOT REQ'D
F-6	DUAL-LITE LIGHTGUARD LIGHTOLIER LITHONIA MCPHILBEN SURE-LITES	REMPWDT1212 DSH1212W-MW2 PH1212W-MW2 ELA-W-T-H1212 PAWL-MP2TW (2)12T12XXU	WALL MOUNTED REMOTE EMERGENCY LIGHT FIXTURE WITH TWO 12 WATT 12 VOLT HALOGEN LAMP HEADS MOUNTING PLATE AND WHITE FINISH.	FURNISHED W/ FIXTURE
F-7	DUAL-LITE LIGHTGUARD LIGHTOLIER LITHONIA MCPHILBEN SURE-LITES	N4X-T1212-MP-100 XXG-MG1WP IH1212-MG1WP ELA-NX-H1212 PNL-MP1TGWP 12T12WXX	WALL MOUNTED REMOTE EMERGENCY LIGHT FIXTURE WITH ONE 12 WATT 12 VOLT HALOGEN LAMP, WEATHERPROOF MOUNTING PLATE, AND GRAY FINISH. SUITABLE FOR OUTDOOR USE.	FURNISHED W/ FIXTURE
F-8	DAY-BRITE EXCELINE HUBBELL LITHONIA LSI INDUSTRIES LUMARK	WLP-175M-MT 333175MA-8 PGM-175H-128-1 TWH-175M-TB EG2-W8-175MH-PG-MT-BRZ MHGP-175H-MT	WALL MOUNTED METAL HALIDE 'WALLPACK' WITH CAST ALUMINUM HOUSING, PRISMATIC TEMPERED GLASS LENS, DARK BRONZE FINISH AND 277 VOLT HIGH POWER FACTOR BALLAST.	175 W MH
F-9	COLUMBIA DAY-BRITE LIGHTOLIER LITHONIA LSI MIDWEST METALUX	4PS24-232G-FSA12.125-EB8-277 2DPG232-FS21-277-1/2-EB SPS2GFSV1232-277-SD 2SP8G232-A12125-277GEB L-A125-232-SD-SSD-277 2GC232-A125-277EB81	2' x 4', 2 LAMP, LAY-IN FLUORESCENT FIXTURE WITH FLAT STEEL DOOR, 0.125" THICK ACRYLIC PRISMATIC LENS AND ONE 2 LAMP, 277 VOLT, <20% THD ELECTRONIC BALLAST.	2F32T8/TL835
F-10	COLUMBIA DAY-BRITE LIGHTOLIER LITHONIA LSI MIDWEST METALUX	4PS24-332G-FSA12.125-3EB8-277 2DPG332-FS21-277-1/3-EB SPS2GFSV1332-277-D3 2SP8G332-A12125-1/3-277GEB L-A125-332-SD-SSD-277 2GC332-A125-277EB81	2' x 4', 3 LAMP, LAY-IN FLUORESCENT FIXTURE WITH FLAT STEEL DOOR, 0.125" THICK ACRYLIC PRISMATIC LENS AND ONE 3 LAMP, 277 VOLT, <20% THD ELECTRONIC BALLAST.	3F32T8/TL835
F-11	COLUMBIA DAY-BRITE LIGHTOLIER LITHONIA LSI INDUSTRIES METALUX	WC4-232-EB8-277 CAN-232-R-277-1/2-EB WA4A-232-277-SD LB232-277GEB PR-232-SSD-277 WS232A-277-EB81	4 FT, 2 LAMP SURFACE MOUNTED 'WRAPAROUND' FLUORESCENT FIXTURE WITH ACRYLIC PRISMATIC LENS AND ONE 2 LAMP, 277 VOLT, <20% THD ELECTRONIC BALLAST.	2F32T8/TL835
F-12	COLUMBIA DAY-BRITE LIGHTOLIER LITHONIA LSI INDUSTRIES METALUX	WC4-232-EB8-120 CAN-232-R-120-1/2-EB WA4A-232-120-SD LB232-120GEB PR-232-SSD-120 WS232A-120-EB81	4 FT, 2 LAMP SURFACE MOUNTED 'WRAPAROUND' FLUORESCENT FIXTURE WITH ACRYLIC PRISMATIC LENS AND ONE 2 LAMP, 120 VOLT, <20% THD ELECTRONIC BALLAST	2F32T8/TL835
F-13	COLUMBIA DAY-BRITE LIGHTOLIER LITHONIA LSI INDUSTRIES METALUX	WAL4-2UD32-EB8-120 CB232-WH-120-1/2-EB CWBX232-120-SD WP-232-120GEB BR-232-SSD-120 BIU-232-120-EB81	4 FT, 2 LAMP WALL MOUNTED FLUORESCENT FIXTURE WITH ACRYLIC PRISMATIC LENS, UP & DOWNLIGHT, WHITE FINISH AND ONE 2 LAMP, 120 VOLT, <20% THD ELECTRONIC BALLAST.	2F32T8/TL835

LIGHTING CONTROL PANEL SCHEDULE

RELAY NO.	CIRCUIT NO.	LOAD DESCRIPTION	CONTROL STRATEGY ON	OFF
1	L-1	AUTO SHOP ROWS 1 & 2 (WEST)	MANUAL ON	TIMED OFF WITH BLINK WARNING & OVER-RIDE
2	L-3	AUTO SHOP ROWS 3 & 4	MANUAL ON	TIMED OFF WITH BLINK WARNING & OVER-RIDE
3	L-5	AUTO SHOP ROWS 5 & 6	MANUAL ON	TIMED OFF WITH BLINK WARNING & OVER-RIDE
4	L-7	AUTO SHOP ROWS 7 & 8 (EAST)	MANUAL ON	TIMED OFF WITH BLINK WARNING & OVER-RIDE
5	L-4	WOOD SHOP ROWS 1 & 2 (WEST)	MANUAL ON	TIMED OFF WITH BLINK WARNING & OVER-RIDE
6	L-6	WOOD SHOP ROWS 3 & 4	MANUAL ON	TIMED OFF WITH BLINK WARNING & OVER-RIDE
7	L-8	WOOD SHOP ROWS 5 & 6	MANUAL ON	TIMED OFF WITH BLINK WARNING & OVER-RIDE
8	L-10	WOOD SHOP ROWS 7 & 8 (EAST)	MANUAL ON	TIMED OFF WITH BLINK WARNING & OVER-RIDE
9		SPACE		
10		SPACE		
11		SPACE		
12		SPACE		
13		SPACE		
14		SPACE		
15		SPACE		
16		SPACE		

CONTROL STATION SCHEDULE

CONTROL STATION NO.	LOCATION	SWITCH NO.	LCP RELAY(S) CONTROLLED
CS1	AUTO SHOP, WEST DOOR	A	LCP-1
		B	LCP-2
		C	LCP-3
		D	LCP-4
		E	LCP-1, 2, 3, 4
CS2	AUTO SHOP, SOUTH DOOR	A	LCP-1
		B	LCP-2
		C	LCP-3
		D	LCP-4
		E	LCP-1, 2, 3, 4
CS3	WOOD SHOP, SOUTH DOOR	A	LCP-5
		B	LCP-6
		C	LCP-7
		D	LCP-8
		E	LCP-5, 6, 7, 8
CS3	WOOD SHOP, NORTH DOOR	A	LCP-5
		B	LCP-6
		C	LCP-7
		D	LCP-8
		E	LCP-5, 6, 7, 8

SYMBOL LIST

SYMBOL	DESCRIPTION
	CEILING MOUNTED FIXTURE
	WALL MOUNTED FIXTURE
	FLUORESCENT FIXTURE
	EXIT LIGHT WITH ARROW INDICATING DIRECTION OF EXIT
NL	FIXTURE CONNECTED TO UNSWITCHED 'NIGHT LIGHT' BRANCH CIRCUIT
EM	FIXTURE WITH EMERGENCY BATTERY PACK
	EMERGENCY LIGHTING UNIT INDICATING QUANTITY OF LAMP HEADS
	REMOTE EMERGENCY LIGHT FIXTURE INDICATING QUANTITY OF LAMP HEADS
$	SINGLE POLE SWITCH
$3	THREE WAY SWITCH
$CS1	LIGHTING CONTROL SYSTEM CONTROL STATION INDICATING STATION NUMBER
OS	CEILING MOUNTED OCCUPANCY SENSOR WITH SWITCHPACK
P	PHOTOCELL
J	JUNCTION BOX
	DUPLEX RECEPTACLE
	DOUBLE DUPLEX RECEPTACLE
GFI	RECEPTACLE WITH GROUND FAULT CIRCUIT INTERRUPTER
EWC	RECEPTACLE FOR ELECTRIC WATER COOLER
14-30	SPECIAL PURPOSE RECEPTACLE INDICATING NEMA DESIGNATION
6-30	DROP CORD INDICATING RECEPTACLE OR CONNECTOR NEMA DESIGNATION
	TELEPHONE/DATA OUTLET
	POWER PANELBOARD, 120/208 VOLT, OR 240 VOLT, 3 PHASE
	POWER PANELBOARD, 277/480 VOLT, 3 PHASE
T	TRANSFORMER
M	METER PEDESTAL
A-13,15	3 PHASE, 4 WIRE HOMERUN INDICATING PANEL AND CIRCUIT NUMBERS
	BRANCH CIRCUIT CONCEALED IN WALL, FLOOR, OR CEILING
	BRANCH CIRCUIT EXPOSED ON WALL OR CEILING
	EXISTING BRANCH CIRCUIT
	MOTOR
	MAGNETIC MOTOR STARTER OR CONTROL PANEL
F	DISCONNECT SWITCH, 'F' INDICATES FUSED, 'NF' INDICATES NON-FUSED
$TH	MANUAL MOTOR STARTING SWITCH W/ THERMAL OVERLOAD PROTECTION
$EC	EVAPORATIVE COOLER CONTROL SWITCH, 6 POSITION
R	ENCLOSED POWER RELAY
T	THERMOSTAT
AH	MECHANCAL EQUIPMENT SCHEDULE SYMBOL
2	SHOP EQUIPMENT SCHEDULE SYMBOL
F-2	FIXTURE SCHEDULE SYMBOL
2	KEYED NOTE SYMBOL
102	ROOM NUMBER
C4 / E-60	DETAIL DESIGNATION BY SHEET COORDINATES
	SHEET ON WHICH DETAIL IS SHOWN
WP	INDICATES ITEM IN WEATHERPROOF (NEMA 3R MINIMUM) ENCLOSURE

ARCHITECT AJC PROJECT # 0502

ajc architects

703 east 1700 south
salt lake city, utah 84105
ph: 801.466.8818
fx: 801.466.4411
ajc@ajcarchitects.com

CONSULTANT

ELECTRICAL:
THOMAS AND KOLKMAN
ENGINEERING COMPANY, INC.
64 WEST 17TH SOUTH
SALT LAKE CITY, UT. 84115
(801)484-6161 PH.
(801) 484-3538 FAX.
CONTACT: BILL GRANDY

OWNER INFORMATION

State of Utah
Department of Administrative Services

Division of Facilities
Construction & Management
4110 State Office Building
Salt Lake City, Utah 84114
Phone: (801) 538 - 3018
Fax: (801) 538 - 3267

Internet: http://dfcm.utah.gov

PROJECT DESCRIPTION

ATE CENTER AT
UTAH STATE PRISON

DRAPER, UTAH

SHEET NAME:

SYMBOL LIST AND
SCHEDULES

REVISIONS

MARK DATE DESCRIPTION

ISSUE DATA

ISSUE DATE: APRIL 18, 2005
ISSUE TYPE: CON. DOCS.
DRAWN BY: W.B.G.
CHECKED BY: R.G.K.
CAD FILE NAME: 0502E-602.dwg
DFCM PROJECT # 04256100
STATE PROPERTY #

COPYRIGHT: STATE OF UTAH

SHEET NUMBER:

E-602

PANEL 'C1' — DOUBLE PANEL, SECTION I — 35,000 A.I.C., SERIES OR FULLY RATED
TYPE 'NQOD', BOLT ON — 120/208 VOLT, 3 PHASE, 4 WIRE
3 POLE 400 AMP MAIN LUGS W/THRU-FEED LUGS — SURFACE MOUNTED

CIR NO.	BRKR P	BRKR AMPS	DESCRIPTION	NO. LTS	NO. REC	CIRCUIT LOAD	PHASE LOAD - VA PHASE A	PHASE B	PHASE C	CIRCUIT LOAD	NO. REC	NO. LTS	DESCRIPTION	BRKR P	BRKR AMPS	CIR NO.
1	1	20	PAINT BOOTH LIGHTS			1,500	1,680			180	1		REC, WEST WALL SOUTH END	1	20	2
3			PAINT BOOTH CONTROLS			500		680		180	1		REC, WEST WALL SOUTH END			4
5			REC, AT DUST COLLECTOR		1	180			360	180	1		REC, WEST WALL CENTER			6
7			REC, SOUTH WALL		2	360	720			360	2		REC, WEST WALL NORTH END			8
9			REC, EAST WALL SOUTH END		1	180		360		180	1		REC, SOUTH WALL WEST END			10
11			REC, EAST WALL SOUTH END		1	180			540	360	2		REC, SOUTH WALL CENTER			12
13			DELTA DRILL PRESS 28		1	1,495	1,855			360	2		REC, CENTER COLUMNS SOUTH			14
15			REC, EAST WALL NORTH END		2	360		720		360	2		REC, CENTER COLUMNS NORTH			16
17			REC, EAST WALL NORTH END		2	360			360				SPARE			18
19			SE WORK TABLE DROP CORD		2	360	360						SPARE			20
21			SE WORK TABLE DROP CORD		2	360		720		360	2		SE WORK TABLE DROP CORD			22
23			SE WORK TABLE DROP CORD		2	360			720	360	2		NE WORK TABLE DROP CORD			24
25			SPARE				360			360	2		NE WORK TABLE DROP CORD			26
27			SPARE					360		360	2		NE WORK TABLE DROP CORD			28
29	1	20	RELIEF AIR LOUVERS			300			660	360	2		NE WORK TABLE DROP CORD	1	20	30
31	3	30	EVAP. COOLER SOUTH			2,100	4,200			2,100			EVAP. COOLER NORTH	3	30	32
33	-	-	-			2,100		4,200		2,100			-	-	-	34
35	-	-	-			2,100			4,200	2,100			-	-	-	36
37	3	60	AIR HANDLING UNIT			3,865	3,865						SPACE	1		38
39	-	-	-			3,865		3,865					SPACE	1		40
41	-	-	-			3,865			3,865				SPACE	1		42
							13,040	10,905	10,705							

TOTAL CONNECTED LOAD: 34,630 VA 96 AMPS FEEDER: 4 #500 KCM, 1 #2 GND, 3-1/2" C
CALCULATED FEEDER DEMAND, NEC 220: 24,825 VA 69 AMPS

PANEL 'D1' — DOUBLE PANEL, SECTION I — 10,000 A.I.C., FULLY RATED
TYPE 'NQOD', BOLT ON — 240 VOLT, 3 PHASE, 3 WIRE
3 POLE 350 AMP MAIN BREAKER W/THRU-FEED LUGS — SURFACE MOUNTED

CIR NO.	BRKR P	BRKR AMPS	DESCRIPTION	NO. LTS	NO. REC	CIRCUIT LOAD	PHASE LOAD - VA PHASE A	PHASE B	PHASE C	CIRCUIT LOAD	NO. REC	NO. LTS	DESCRIPTION	BRKR P	BRKR AMPS	CIR NO.
1	2	20	DELTA 6" EDGE SANDER 18			1,250	2,745			1,495			DELTA RADIAL ARM SAW 10	2	20	2
3	-	-	-			1,250		2,745		1,495			-	-	-	4
5	2	20	DELTA 10" TABLE SAW 27			1,425			2,920	1,495			RADIAL ARM SAW 20	2	20	6
7	-	-	-			1,425	2,920			1,495			-	-	-	8
9	2	30	DELTA 20" BAND SAW 6			1,725		4,025		2,300			DELTA 10" TABLE SAW 7	2	40	10
11	-	-	-			1,725			4,025	2,300			-	-	-	12
13	2	30	DELTA 1" SHAPER 21			1,760	2,475			715			DELTA 6" JOINTER 9	3	15	14
15	-	-	-			1,760		2,475		715			-	-	-	16
17	2	40	TABLE SAW (YARD) 40			2,300			3,015	715			-	-	-	18
19	-	-	-			2,300	4,330			2,030			DELTA 3/4" SHAPER 17	3	30	20
21	2	40	POWERMATIC PLANER 14			2,410		4,440		2,030			-	-	-	22
23	-	-	-			2,410			4,440	2,030			-	-	-	24
25	3	30	NORFIELD 24" PLANER 21			1,830	4,350			2,520			DELTA DUST COLLECTOR 38	3	40	26
27	-	-	-			1,830		4,350		2,520			-	-	-	28
29	-	-	-			1,830			4,350	2,520			-	-	-	30
31	1		SPACE				0						SPACE	1		32
33								0								34
35									0							36
37							0									38
39								0								40
41	1		SPACE						0				SPACE	1		42
							16,820	18,035	18,750							

TOTAL CONNECTED LOAD: 53,605 VA 129 AMPS FEEDER: 3 #400 KCM, 1 #2 GND, 3" C
CALCULATED FEEDER DEMAND, NEC 220: 55,495 VA 134 AMPS

PANEL 'C2' — DOUBLE PANEL, SECTION II — 35,000 A.I.C., SERIES OR FULLY RATED
TYPE 'NQOD', BOLT ON — 120/208 VOLT, 3 PHASE, 4 WIRE
3 POLE 400 AMP MAIN LUGS — SURFACE MOUNTED

CIR NO.	BRKR P	BRKR AMPS	DESCRIPTION	NO. LTS	NO. REC	CIRCUIT LOAD	PHASE LOAD - VA PHASE A	PHASE B	PHASE C	CIRCUIT LOAD	NO. REC	NO. LTS	DESCRIPTION	BRKR P	BRKR AMPS	CIR NO.
1	1	20	DUST COLL. 37 VIBRATOR			1,200	1,560			360	2		NO. WORK TABLE DROP CORD	1	20	2
3			BAND SAW 23			1,125		1,485		360	2		NO. WORK TABLE DROP CORD			4
5			COMPRESSED AIR DRYER 43			445			805	360	2		NO. WORK TABLE DROP CORD			6
7	1	20	CLAMP TABLE 19 DROP CORD		2	360	720			360	2		NO. WORK TABLE DROP CORD			8
9	1	30	SAFETY PANEL ROUTER 1			1,800		1,800					SPARE			10
11	1	30	DELTA DRILL PRESS 8			2,200			2,200				SPARE	1	20	12
13	2	15	BLUME BORING MACHINE 5			370	2,325			1,955			COVAL DUST COLLECTOR 39	3	30	14
15	-	-	-			370		2,325		1,955			-	-	-	16
17	2	40	AIR COMP. 44 (SHOP AIR)			2,640			4,595	1,955			-	-	-	18
19	-	-	-			2,640	5,040			2,400			ROCKWELL TABLE SAW 11	3	30	20
21	2	40	AIR COMP. 42 (PAINT BOOTH)			2,640		5,040		2,400			-	-	-	22
23	-	-	-			2,640			5,040	2,400			-	-	-	24
25	3	30	SPEED AIRE COMPRESSOR 41			2,105	4,505			2,400			ROCKWELL JOINTER 12	3	30	26
27	-	-	-			2,105		4,505		2,400			-	-	-	28
29	-	-	-			2,105			4,505	2,400			-	-	-	30
31	3	30	LATHE 24			2,400	5,280			2,880			BRISSE BORING MACHINE 2	3	40	32
33	-	-	-			2,400		5,280		2,880			-	-	-	34
35	-	-	-			2,400			5,280	2,880			-	-	-	36
37	3	60	CELRISA EDGE BANDER 15			4,445	8,175			3,730			DUST COLLECTOR 37	3	60	38
39	-	-	-			4,445		8,175		3,730			-	-	-	40
41	-	-	-			4,445			8,175	3,730			-	-	-	42
			SECTION II				27,605	28,610	30,600							
			SECTIONS I & II				40,645	39,515	41,305							

TOTAL CONNECTED LOAD: SECTION II: 86,815 VA 241 AMPS
SECTIONS I & II: 121,465 VA 337 AMPS FEEDER: 4 #500 KCM, 1 #2 GND, 3-1/2" C
CALCULATED FEEDER DEMAND, NEC 220: 113,163 VA 314 AMPS

PANEL 'D2' — DOUBLE PANEL, SECTION II — 10,000 A.I.C., FULLY RATED
TYPE 'NQOD', BOLT ON — 240 VOLT, 3 PHASE, 3 WIRE
3 POLE 400 AMP MAIN LUGS — SURFACE MOUNTED

CIR NO.	BRKR P	BRKR AMPS	DESCRIPTION	NO. LTS	NO. REC	CIRCUIT LOAD	PHASE LOAD - VA PHASE A	PHASE B	PHASE C	CIRCUIT LOAD	NO. REC	NO. LTS	DESCRIPTION	BRKR P	BRKR AMPS	CIR NO.
1	3	40	ALTENDORF PANEL SAW 36			2,945	5,945			3,000			PAINT BOOTH HEATERS 26b	3	40	2
3	-	-	-			2,945		5,945		3,000			-	-	-	4
5	-	-	-			2,945			5,945	3,000			-	-	-	6
7	3	30	CNC VACUUM 3b			1,990	6,145			4,155			PAINT BOOTH EXHST FAN 26a	3	50	8
9	-	-	-			1,990		6,145		4,155			-	-	-	10
11	-	-	-			1,990			6,145	4,155			-	-	-	12
13	3	50	NORTHWOOD CNC ROUTER 3a			3,980	10,155			6,175			TIME SAVER BELT SANDER 13	3	60	14
15	-	-	-			3,980		10,155		6,175			-	-	-	16
17	-	-	-			3,980			10,155	6,175			-	-	-	18
19	3	60	CNC CONTROLLER 4			5,080	5,080						SPACE	1		20
21	-	-	-			5,080		5,080								22
23	-	-	-			5,080			5,080							24
25	1		SPACE				0									26
27								0								28
29									0							30
31							0									32
33								0								34
35									0							36
37							0									38
39								0								40
41	1		SPACE						0				SPACE	1		42
			SECTION II				27,325	27,325	27,325							
			SECTIONS I & II				44,145	45,360	46,075							

TOTAL CONNECTED LOAD: SECTION II: 81,975 VA 197 AMPS
SECTIONS I & II: 135,580 VA 326 AMPS FEEDER: 3 #400 KCM, 1 #2 GND, 3" C
CALCULATED FEEDER DEMAND, NEC 220: 138,696 VA 334 AMPS

PANEL 'L' — 14,000 A.I.C., FULLY RATED
TYPE 'NF', BOLT ON — 277/480 VOLT, 3 PHASE, 4 WIRE
3 POLE 175 AMP MAIN BREAKER — SURFACE MOUNTED

CIR NO.	BRKR P	BRKR AMPS	DESCRIPTION	NO. LTS	NO. REC	CIRCUIT LOAD	PHASE LOAD - VA PHASE A	PHASE B	PHASE C	CIRCUIT LOAD	NO. REC	NO. LTS	DESCRIPTION	BRKR P	BRKR AMPS	CIR NO.
1	1	20	LTS AUTO SHOP WEST 2 ROWS	24		2,760	3,880			1,120		18	EXIT, EM & NIGHT LIGHTS	1	20	2
3			LTS AUTO SHOP ROWS 3 & 4	26		3,000		6,360		3,360		28	LTS WOOD SHOP WEST 2 ROWS			4
5			LTS AUTO SHOP ROWS 5 & 6	24		2,760			6,360	3,600		30	LTS WOOD SHOP ROWS 3 & 4			6
7			LTS AUTO SHOP ROWS 7 & 8	26		3,000	6,360			3,360		28	LTS WOOD SHOP ROWS 5 & 6			8
9			SPARE					3,600		3,600		30	LTS WOOD SHOP ROWS 7 & 8			10
11			LTS CENTRAL OFFICE AREA	21		1,770			2,670	900		6	EXTERIOR LIGHTING			12
13			SPARE				0						SPARE			14
15			SPARE					0					SPARE			16
17	1	20	SPARE						0				SPARE	1	20	18
19	3	30	WEINIG PROFILE GRINDER 22			3,655	3,655						SPACE	1		20
21	-	-	-			3,655		3,655								22
23	-	-	-			3,655			3,655							24
25	1		SPACE				0									26
27								0								28
29									0							30
31							0									32
33								0								34
35	1		SPACE						0							36
37	3	125	WEINIG STICKER 16			20,500	20,500									38
39	-	-	-			20,500		20,500								40
41	-	-	-			20,500			20,500				SPACE	1		42
							34,395	34,115	33,185							

TOTAL CONNECTED LOAD: 101,695 VA 122 AMPS
CALCULATED FEEDER DEMAND, NEC 220: 109,003 VA 131 AMPS FEEDER: 4 #2/0, 1 #6 GND, 2" C

PANEL 'M' — 50,000 A.I.C., FULLY RATED
TYPE 'I-LINE' — 120/208 VOLT, 3 PHASE, 4 WIRE
3 POLE 1600 AMP MAIN LUGS — SURFACE MOUNTED

CIR NO.	BRKR P	BRKR AMPS	DESCRIPTION	NO. LTS	NO. REC	CIRCUIT LOAD	PHASE LOAD - VA PHASE A	PHASE B	PHASE C	CIRCUIT LOAD	NO. REC	NO. LTS	DESCRIPTION	BRKR P	BRKR AMPS	CIR NO.
1	3	100	SPACE				0						SPACE	3	100	2
	-	-	-					0					-	-	-	
	-	-	-						0				-	-	-	
3	3	100	SPACE				0						SPACE	3	100	4
	-	-	-					0					-	-	-	
	-	-	-						0				-	-	-	
5	3	100	SPACE				0						SPACE	3	100	6
	-	-	-					0					-	-	-	
	-	-	-						0				-	-	-	
7	3	225	SPACE				0						SPACE	3	225	8
	-	-	-					0					-	-	-	
	-	-	-						0				-	-	-	
9	3	200	PANEL 'A'			5,285	5,285						SPACE	3	225	10
	-	-	-			7,555		7,555					-	-	-	
	-	-	-			6,765			6,765				-	-	-	
11	3	400	PANEL 'B'			42,395	83,040			40,645			PANEL 'C'	3	400	12
	-	-	-			45,335		84,850		39,515			-	-	-	
	-	-	-			45,455			86,760	41,305			-	-	-	
13	3	400	PANEL 'L'			34,395	78,540			44,145			PANEL 'D'	3	400	14
	-	-	(VIA XFMR 'T1')			34,115		79,475		45,360			(VIA XFMR 'T2')	-	-	
	-	-	-			33,185			79,260	46,075			-	-	-	
							166,865	171,880	172,785							

TOTAL CONNECTED LOAD: 511,530 VA 1420 AMPS FEEDER: 20 #400 KCM, 5 #3/0 GND, (4) 3-1/2" C
CALCULATED FEEDER DEMAND, NEC 220: 484,221 VA 1344 AMPS

MECHANICAL EQUIPMENT SCHEDULE

EQUIP. NO.	DESCRIPTION	CIRCUIT NUMBER	VOLTS	PHASE	WATTS H.P.	BREAKER	STARTERS FURNISH	STARTERS INSTALL	STARTERS SIZE	AUX. CONT.	LOCATION
AH 1	AIR HANDLING UNIT	B1-31	208	3	10 HP	3P-60A	E	E	2	2 N.O. 2 N.C.	AUTO SHOP 101
AH 2	AIR HANDLING UNIT	C1-37	208	3	10 HP	3P-60A	E	E	2	2 N.O. 2 N.C.	WOOD SHOP 102
AH 3	AIR HANDLING UNIT	A-25	208	3	3 HP	3P-20A	E	E	1	2 N.O. 2 N.C.	COMPRESSORS 105
CD 1	CONDENSATE PUMP	A-26	208	3	1-1/2 HP	3P-15A	E	E	1	2 N.O. 2 N.C.	MECHANICAL ROOM 103
EC 1	EVAPORATIVE COOLER - 2 SPEED	B1-26	208	3	5 HP	3P-30A	E	E	1 250W	2 N.O. 2 N.C.	AUTO SHOP 101 (OUTSIDE)
EC 2	EVAPORATIVE COOLER - 2 SPEED	B1-25	208	3	5 HP	3P-30A	E	E	1 250W	2 N.O. 2 N.C.	AUTO SHOP 101 (OUTSIDE)
EC 3	EVAPORATIVE COOLER - 2 SPEED	C1-31	208	3	5 HP	3P-30A	E	E	1 250W	2 N.O. 2 N.C.	WOOD SHOP 102 (OUTSIDE)
EC 4	EVAPORATIVE COOLER - 2 SPEED	C1-32	208	3	5 HP	3P-30A	E	E	1 250W	2 N.O. 2 N.C.	WOOD SHOP 102 (OUTSIDE)
EF 1	CEILING EXHAUST FAN	A-1	120	1	1/12 HP 1.6 FLA	1P-20A	E	E	$	-	INMATE TOILET ROOM 111
EF 2	CEILING EXHAUST FAN	A-1	120	1	1/12 HP 1.6 FLA	1P-20A	E	E	$	-	STAFF TOILET ROOM 112
EF 3	CEILING EXHAUST FAN	A-12	120	1	Ø.16 HP 1.0 FLA	1P-20A	E	E	$	T'STAT	ELECTRICAL ROOM 104
EF 4	CEILING EXHAUST FAN	A-12	120	1	1/12 HP 1.6 FLA	1P-20A	E	E	$	T'STAT	COMPRESSOR ROOM 105
WH-1	ELECTRIC WATER HEATER	A-22	208	1	3 KW	2P-20A	M	M	M	-	ABOVE TOILET ROOM 111

E - ELECTRICAL CONTRACTOR
M - MECHANICAL CONTRACTOR

SHOP EQUIPMENT SCHEDULE

EQUIP. NO.	DESCRIPTION	CIRCUIT NUMBER	VOLTS	PHASE	LOAD	BREAKER	DEVICE	MNTG HEIGHT	REMARKS	NOTES	ROOM NO.
1	SAFETY SPEED PANEL ROUTER	C2-9	120	1	15 AMP	1P-30A	5-30	+46"		1	102
2	BRISSE BORING MACHINE	C2-32	208	3	24 AMP	3P-40A	15-50	+46"		1	102
3a	NORTHWOOD CNC ROUTER	D2-13	240	3	30 AMP	3P-50A	15-50	+46"		1	102
3b	CNC VACUUM	D2-7	240	3	15 AMP	3P-30A	15-30	+46"		1	102
4	CNC CONTROLLER	D2-19	240	3	40 AMP	3P-60A	60A	60"	FUSED	1	102
5	BLUME BORING MACHINE	C2-13	208	1	3.37 AMP	2P-15A	6-15	+46"		1	102
6	DELTA 20" BAND SAW	D1-9	240	1	15 AMP	2P-30A	6-30	+78"		1	102
7	DELTA 10" TABLE SAW	D1-10	240	1	20 AMP	2P-40A	6-50	+78"		1	102
8	DELTA DRILL PRESS	C2-11	120	1	20 AMP	1P-30A	5-30	+78"		1	102
9	DELTA 6" JOINTER	D1-14	240	3	5.4 AMP	3P-15A	15-20	+78"		1	102
10	DELTA RADIAL ARM SAW	D1-2	240	1	13 AMP	2P-20A	6-20	+78"		1	102
11	ROCKWELL TABLE SAW	C2-20	208	3	20 AMP	3P-30A	L21-30	+78"		1	102
12	ROCKWELL JOINTER	C2-26	208	3	VERIFY	3P-30A	L21-30	+78"		1	102
13	TIME SAVER DRUM BELT SANDER	D2-14	240	3	46.5 AMP	3P-60A	15-60	+78"		1	102
14	POWERMATIC SURFACE PLANER	D1-21	240	1	21 AMP	2P-40A	6-50	+78"		1	102
15	CELRISA EDGE BANDER	C2-37	208	3	35 AMP	3P-60A	15-60	+78"		1	102
16	WEINIG STICKER	L-37	480	3	74 AMP	3P-125A	200A	+60"	FUSED	1	102
17	DELTA 3/4" SPINDLE SHAPER	D1-20	240	3	15.3 AMP	3P-30A	15-30	+78"		1	102
18	DELTA 6" EDGE SANDER	D1-1	240	1	10 AMP	2P-20A	6-20	+78"		1	102
19	UNLING CASE CLAMP	C2-7	120	1	-	1P-20A	5-20	+78"	NO ELECTRICAL LOAD		102
20	RADIAL ARM SAW	D1-6	240	1	13 AMP	2P-20A	6-20	+78"		1	102
21	DELTA 1" SPINDLE SHAPER	D1-13	240	1	15.3 AMP	2P-30A	6-30	+78"		1	102
22	WEINIG PROFILE GRINDER	L-19	480	3	13.2 AMP	3P-30A	L16-30	+78"		1	102
23	BAND SAW	C2-3	120	1	9.8 AMP	1P-20A	5-20	+78"		1	102
24	LATHE (WITH STAND)	C2-31	208	3	VERIFY	3P-30A	L21-30	+78"		1	102
25	CLAMP BOX								NO ELECTRICAL REQ'D		102
26a	PAINT BOOTH EXHAUST FAN	D2-8	240	3	30 AMP	3P-50A	60A	+60"	FUSED	1	102
26b	PAINT BOOTH HEATERS	D2-2	240	3	9 KW	3P-40A	60A	+60"	FUSED	1	102
27	DELTA 10" TABLE SAW	D1-5	240	1	12.4 AMP	2P-20A	6-20	+78"		1	102
28	DELTA DRILL PRESS	C1-13	120	1	13 AMP	1P-20A	5-20	+48"		1	102
29	WELDER (6 TOTAL)	AS SHOWN	208	1	8 KW	2P-50A	14-50	+48"		1	101
30	WELDING TABLE	B1-8	120	1	-	1P-20A	5-20	+78"	FOR HAND TOOLS		101
31	AUTO LIFT (5 TOTAL)	AS SHOWN	208	1	20 AMP	2P-30A	30A	+60"	FUSED	1	101
32	TRANSMISSION DYNAMOMETER	B2-22	208	1	40 AMP	2P-60A	60A	+60"	FUSED	1	101
33	WORK BENCH (4 TOTAL)	AS SHOWN	120	1	-	1P-20A	5-20	+78"	FOR HAND TOOLS		101
34	WORK BENCH (12 TOTAL)	AS SHOWN	120	1	-	1P-20A	5-20	+78"	FOR HAND TOOLS		102
35	NORFIELD 20" SURFACE PLANER	D1-25	240	3	13.8 AMP	3P-30A	15-30	+78"		1	102
36	ALTENDORF PANEL SAW	D2-1	240	3	23.2 AMP	3P-40A	15-50	+78"		1	102
37	DUST COLLECTOR	C2-38	208	3	36 AMP	3P-60A	60A	+60"	FUSED, WP, OUTSIDE	1	-
38	DELTA DUST COLLECTOR	D1-26	240	3	19 AMP	3P-40A	15-50	+78"		1, 2	102
39	COVAL DUST COLLECTOR	C2-14	208	3	15.4 AMP	3P-30A	15-30	+78"		1, 2	102
40	TABLE SAW (YARD)	D1-17	240	1	20 AMP	2P-30A	6-30	+78"		1, 2	102
41	SPEED AIRE COMPRESSOR	C2-25	208	3	16.6 AMP	3P-30A	30A	+60"	FUSED	1	105
42	AIR COMPRESSOR (PAINT BOOTH)	C2-21	208	1	24 AMP	2P-40A	60A	+60"	FUSED	1	105
43	COMPRESSED AIR DRYER	C2-5	120	1	3.7 AMP	1P-20A	5-20	+48"		1	105
44	AIR COMPRESSOR (WOOD SHOP)	C2-17	208	1	24 AMP	2P-40A	60A	+60"	FUSED	1	105
45	AIR COMPRESSOR (AUTO SHOP)	B1-38	208	3	10 HP	3P-60A	60A	+60"	FUSED	1, 3	105
46	AUTO SHOP EXHAUST FAN	B1-32	208	3	10 HP	3P-60A	60A	+60"	FUSED	1, 3	101

SHOP EQUIPMENT SCHEDULE NOTES:

1. VERIFY ELECTRICAL LOAD, VOLTAGE, CONNECTION REQUIREMENTS, AND LOCATION OF ALL SHOP EQUIPMENT WITH EQUIPMENT SUPPLIER AND/OR OWNER PRIOR TO ROUGHING IN RACEWAY SYSTEM FOR THE EQUIPMENT.
2. EQUIPMENT ITEM INCLUDED ON OWNER'S SHOP EQUIPMENT ELECTRICAL INFORMATION SCHEDULE, BUT NOT SHOWN ON ARCHITECT'S SHOP EQUIPMENT PLAN. CONTRACTOR TO VERIFY LOCATION WITH OWNER. SEE NOTE 1.
3. ELECTRICAL INFORMATION IS NOT AVIALABLE. LOAD, VOLTAGE, AND PHASE ARE ESTIMATED BY ENGINEER. SEE NOTE 1.

ARCHITECT AJC PROJECT # 0502

ajc architects
703 east 1700 south
salt lake city, utah 84105
ph: 801.466.8818
fx: 801.466.4411
ajc@ajcarchitects.com

CONSULTANT
ELECTRICAL:
THOMAS AND KOLKMAN ENGINEERING COMPANY, INC.
64 WEST 17TH SOUTH
SALT LAKE CITY, UT. 84115
(801)484-8161 PH.
(801) 484-3538 FAX.
CONTACT: BILL GRANDY

OWNER INFORMATION
State of Utah
Department of Administrative Services
Division of Facilities Construction & Management
4110 State Office Building
Salt Lake City, Utah 84114
Phone: (801) 538 - 3018
Fax: (801) 538 - 3267
Internet: http://dfcm.utah.gov

PROJECT DESCRIPTION
ATE CENTER AT UTAH STATE PRISON

DRAPER, UTAH

SHEET NAME:
EQUIPMENT AND PANEL SCHEDULES

REVISIONS
MARK DATE DESCRIPTION

ISSUE DATA
ISSUE DATE: APRIL 18, 2005
ISSUE TYPE: CON. DOCS.
DRAWN BY: W.B.G.
CHECKED BY: R.G.K.
CAD FILE NAME: 0502E-603.dwg
DFCM PROJECT # 04256100
STATE PROPERTY #
COPYRIGHT: STATE OF UTAH

SHEET NUMBER:
E-603

FIRE ALARM SYSTEM WIRE LEGEND

SYMBOL	DESCRIPTION	WIRE SIZE AND TYPE	CONDUIT	NOTES
A	ADDRESSABLE SLC LOOP	#18 SHIELDED TWISTED PAIR	3/4"	1, 2
B	NOTIFICATION APPLIANCE CIRCUIT (NAC)	#12 UNSHIELDED TWISTED PAIR	3/4"	1, 2
C	24 VDC CONTROL RELAY CIRCUIT	2 #14 THHN	3/4"	1, 2
D	INITIATING DEVICE CIRCUIT (IDC)	2 #14 THHN	3/4"	1, 2

NOTES:

1. MINIMUM CONDUIT SIZE INDICATED, PROVIDE LARGER CONDUIT WHERE INDICATED OR WHERE REQUIRED FOR MAXIMUM 40% CONDUIT FILL.
2. MINIMUM WIRE SIZE INDICATED. PROVIDE LARGER SIZES WHERE REQUIRED FOR VOLTAGE DROP CONDITIONS, ETC. BASED ON CIRCUIT LOADING OF INSTALLED EQUIPMENT AND/OR AS REQUIRED BY THE FIRE ALARM SYSTEM MANUFACTURER'S REPRESENTATIVE.

FIRE ALARM DEVICE LEGEND

SYMBOL	DESCRIPTION	HEIGHT	NOTES
	NEW NOTIFICATION APPLIANCE CIRCUIT PANEL (NACP)	72" TOP	
F	ADDRESSABLE MANUAL PULL STATION	46" ¢	1
S	ADDRESSABLE SMOKE DETECTOR, PHOTOELECTRIC	CEILING	
S	ADDRESSABLE DUCT DETECTOR, PHOTOELECTRIC	AS REQ'D	2
M	ADDRESSABLE MONITOR MODULE	AS REQ'D	
C	ADDRESSABLE CONTROL / RELAY MODULE	AS REQ'D	
R	FIRE SAFETY FUNCTION POWER RELAY	AS REQ'D	
WP	WEATHERPROOF HORN	84" ¢	3, 4
15cd	COMBINATION SPEAKER/STROBE, INDICATING MINIMUM EFFECTIVE CANDLEPOWR (ECP)	84" ¢	3, 4
WF	FIRE SPRINKLER SYSTEM FLOW SWITCH	AS REQ'D	
WT	FIRE SPRINKLER VALVE SUPERVISORY SWITCH	AS REQ'D	

FIRE ALARM DEVICE LEGEND NOTES:

1. MOUNTING HEIGHT OF PULL STATIONS AND FIREFIGHT TELEPHONE JACKS MAY BE REDUCED TO NOT LESS THAN 42" TO BOTTOM, OR INCREASED TO NOT MORE THAN 54" TO TOP, ABOVE FINISHED FLOOR WITH WRITTEN APPROVAL OF THE ENGINEER AND AHJ.
2. USE SAMPLING TUBES PROVIDED BY DUCT DETECTOR MANUFACTURER.
3. PROVIDE NOTIFICATION APPLIANCES IN ACCORDANCE WITH NFPA 72-2002, UL 1971, ANSI S3.41 & ANSI 117.1.
4. MOUNTING HEIGHT OF STROBES MAY BE REDUCED TO NOT LESS THAN 80" TO BOTTOM, OR INCREASED TO NOT MORE THAN 96" TO TOP, ABOVE HIGHEST FLOOR LEVEL WITHIN THE SPACE OR SHALL BE INSTALLED 6" BELOW CEILING TO TOP OF STROBE, WHICHEVER IS LOWER, WITH WRITTEN APPROVAL OF THE ENGINEER AND AHJ.

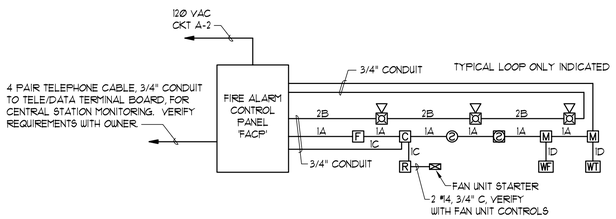

FIRE ALARM SYSTEM RISER DIAGRAM (C3 / FA101)
SCHEMATIC

REFERENCE NOTES:

* FOR SHEET FA101 ONLY

1. FIRE ALARM CONTROL PANEL 'FACP' INCLUDING POWER SUPPLIES NECESSARY FOR NOTIFICATION APPLIANCE CIRCUITS, AND DIGITAL ALARM COMMUNICATION TRANSMITTER FOR REMOTE SUPERVISING STATION MONITORING.
2. PROVIDE ADDRESSABLE MONITOR MODULES AT FIRE SPRINKLER RISER. CONNECT TO FLOW SWITCH(ES) AND SUPERVISORY SWITCH(ES) WITH CLASS 'A', STYLE 'A', INITIATING DEVICE CIRCUITS (WIRE LEGEND SYMBOL 'D'). COORDINATE REQUIREMENTS WITH FIRE SPRINKLER SYSTEM CONTRACTOR.
3. PROVIDE DUCT MOUNTED SMOKE DETECTORS ON RETURN AIR DUCT OF OFFICE AREA AIR HANDLING UNIT AH/3.
4. PROVIDE ADDRESSABLE RELAY MODULES AND/OR FIRE SAFETY FUNCTION POWER RELAYS FOR FAN SHUT DOWN OF ALL AIR HANDLING UNITS AND EVAPORATIVE COOLERS.
5. DUCT MOUNTED SMOKE DETECTORS ARE NOT REQUIRED FOR SHOP AREAS AIR HANDLING UNITS AND EVAPORATIVE COOLERS UNDER THE 'EXECPTION' TO IMC 606.2.
6. EXISTING (2) 1" PVC UNDERGROUND FIRE ALARM SYTEM CONDUITS STUBBED TO BUILDING SITE FROM EXISTING COMMUNICATION PULLBOX WEST OF NEW BUILDING, SEE ELECTRICAL SITE PLAN, SHEET E510. EXTEND EXISTING CONDUITS UNDERGROUND TO NEW FIRE ALARM CONTROL PANEL FOR CONNECTION TO FUTURE SIMPLEX/GRINNELL FIRE ALARM SYSTEM NETWORK.

SIGNALING LINE CIRCUITS (SLC)

CKT. NO.	DESCRIPTION
SLC-1	ATE CENTER BUILDING

NOTIFICATION APPLIANCE CIRCUITS (NAC)

CKT. NO.	DESCRIPTION
NAC-1	AUTO SHOP
NAC-2	WOOD SHOP
NAC-3	CENTER BUILDING ROOMS
NAC-4	SPARE

GENERAL NOTES:

1. INSTALL FIRE ALARM SYSTEM IN STRICT COMPLIANCE WITH APPLICABLE SECTIONS OF THE NATIONAL ELECTRICAL CODE (NEC ARTICLE 760), NATIONAL FIRE ALARM CODE, NFPA 72-2002, INTERNATIONAL FIRE CODE 2003, INTERNATION BUILDING CODE 2003, OTHER APPLICABLE NFPA STANDARDS, REGULATIONS OF LOCAL AUTHORITY HAVING JURISDICTION (AHJ) AND THE CONTRACT DOCUMENTS.
2. FIRE ALARM SYSTEM INSTALLATION SHALL BE APPROVED BY THE LOCAL AHJ.
3. FIRE ALARM SIGNALING LINE CIRCUITS (SLC) SHALL BE CLASS 'A', STYLE '6' IN ACCORDANCE WITH NFPA 72.
4. FIRE ALARM NOTIFICATION APPLIANCE CIRCUITS (NAC) SHALL BE CLASS 'A', STYLE 'Z' IN ACCORDANCE WITH NFPA 72.
5. PROVIDE AN EARTH GROUND TO THE FIRE ALARM CONTROL PANEL FOR GROUND FAULT DETECTION AND LIGHTNING PROTECTION OF THE DEVICES.
6. INSTALL CABLE SHIELD CONTINUOUS THROUGH-OUT EACH CIRCUIT AND ISOLATE SHIELD FROM GROUND. TERMINATE CABLE SHIELD AT FIRE ALARM CONTROL PANEL ONLY.
7. COORDINATE WIRE AND CONDUIT SIZES AND QUANTITIES WITH FIRE ALARM SYSTEM MANUFACTURER'S REPRESENTATIVE PRIOR TO INSTALLATION.
8. VERIFY THAT ALL FIRE ALARM SYSTEM WIRING IS CLEAR OF SHORTS, OPENS AND GROUNDS PRIOR TO MAKING CONNECTIONS TO THE FIRE ALARM CONTROL PANEL.
9. COORDINATE FAN SHUT DOWN CONNECTIONS WITH MECHANICAL CONTRACTOR. INSTALL FAN SHUT DOWN RELAYS WITHIN 3 FEET OF THE FAN UNIT STARTER.
10. COORDINATE DEVICE LOCATIONS WITH REFLECTED CEILING PLANS, BUILDING STRUCTURE, MECHANICAL EQUIPMENT, DUCTWORK, ETC. LOCATE SMOKE DETECTORS MINIMUM 3 FEET FROM SUPPLY AIR GRILLS.
11. REFER TO "NEC CLASSIFIED HAZARDOUS LOCATIONS" NOTES, SHEETS EP101 AND EP102 FOR ELECTRICAL INSTALLATION REQUIREMENTS IN HAZARDOUS LOCATIONS IN AUTO SHOP AND IN AREA OF FUTURE PAINT BOOTH.

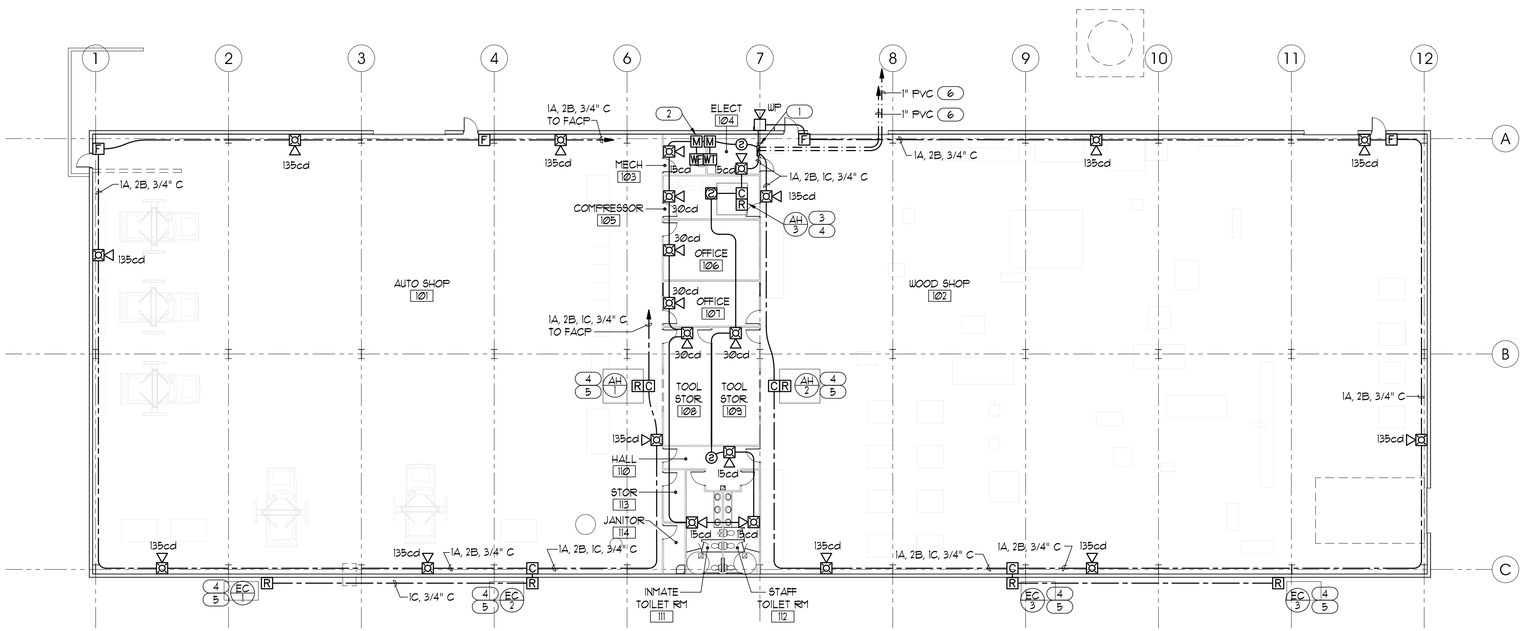

FIRE ALARM SYSTEM PLAN (A5 / FA101)
SCALE: 1/16" = 1'-0"

ARCHITECT AJC PROJECT # 0502

ajc architects

703 east 1700 south
salt lake city, utah 84105
ph: 801.466.8818
fx: 801.466.4411
ajc@ajcarchitects.com

CONSULTANT

ELECTRICAL:
THOMAS AND KOLKMAN ENGINEERING COMPANY, INC.
64 WEST 17TH SOUTH
SALT LAKE CITY, UT, 84115
(801)484-8161 PH.
(801) 484-3538 FAX.
CONTACT: BILL GRANDY

OWNER INFORMATION

State of Utah
Department of Administrative Services

Division of Facilities Construction & Management
4110 State Office Building
Salt Lake City, Utah 84114
Phone: (801) 538 - 3018
Fax: (801) 538 - 3267

Internet: http://dfcm.utah.gov

PROJECT DESCRIPTION

ATE CENTER AT UTAH STATE PRISON

DRAPER, UTAH

SHEET NAME:

FIRE ALARM SYSTEM PLAN, NOTES AND SCHEDULES

REVISIONS

MARK	DATE	DESCRIPTION

ISSUE DATA

ISSUE DATE:	APRIL 18, 2005
ISSUE TYPE:	CON. DOCS.
DRAWN BY:	W.B.G.
CHECKED BY:	R.G.K.
CAD FILE NAME:	0502FA101
DFCM PROJECT #	04256100
STATE PROPERTY #	
COPYRIGHT:	STATE OF UTAH

SHEET NUMBER:

FA101

SHEET 44 OF 44 TOTAL PAGES