1. Summary of Custom Weighting Factors and ECWTs

	Custom Weighting Factors				Custom Entering Condenser Temperatures (F)			
Chiller	**25%**	**50%**	**75%**	**100%**	**25%**	**50%**	**75%**	**100%**
CH-1 - Carrier 2000 Ton VFD	0.000	0.000	0.282	0.718	n/a	n/a	56.6	57.9
CH-2 - Trane 1250	0.000	0.000	0.341	0.659	n/a	n/a	56.6	58.8
CH-3 - Carrier 1250 Ton Constant	0.000	0.000	0.519	0.481	n/a	n/a	56.6	62.8
CH-4 - Trane 650	0.000	0.000	0.000	1.000	n/a	n/a	n/a	64.7

2. Input Data Summary

Weather

City ..... Salt Lake City, Utah
Schedule ..... On All Day: Weekday
..... On All Day: Saturday
..... On All Day: Sunday

Loads

User-Defined Load Profile

Chiller System

Name ..... Combination B
Chillers in Plant 4
Plant Control ..... Sequenced
Full Load LCHWT ..... 44.0 F
Tower Configuration ..... One Tower for System
Cooling Tower ..... 6 Cell Tower (1)
..... Detailed Cooling Tower Model
Free Cooling ..... Plate-Frame Heat Exchanger

Sequence	Chiller Name	FL Capacity (Tons)	Full Load Power
CH-1	Carrier 2000 Ton VFD	2,009	0.494 kW/Ton
CH-2	Trane 1250	1,250	0.473 kW/Ton
CH-3	Carrier 1250 Ton Constant	1,250	0.467 kW/Ton
CH-4	Trane 650	650	0.473 kW/Ton

3. Chiller System Operating Conditions

Bin Temp (F)	Bin MCWB (F)	Building Load (%)	Building Load (Tons)	Chillers On	Chiller Load (%)
97.5	61.5	100	5,150	4	100
92.5	60.5	95	4,905	4	95
87.5	59.5	90	4,659	4	90
82.5	57.9	86	4,414	3	98
77.5	55.9	81	4,169	3	92
72.5	54.2	76	3,925	3	87
67.5	51.9	71	3,679	3	82
62.5	49.5	67	3,434	3	76
57.5	47.1	62	3,188	2	98
52.5	43.8	57	2,943	2	90
47.5	40.4	42	2,172	1	108
42.5	36.9	37	1,927	0	0
37.5	33.4	33	1,682	0	0
32.5	29.4	28	1,437	0	0
27.5	25.1	23	1,192	0	0
22.5	20.8	18	947	0	0
17.5	16.0	14	701	0	0
12.5	11.2	9	456	0	0
7.5	5.9	4	211	0	0

4a. Custom PLV Worksheet for CH-1 (Carrier 2000 Ton VFD)

Avg DB	Cond Temp	Total	CWH	Total	Load	Load	25% Bin		50% Bin		75% Bin		100% Bin	
(F)	(F)	(Hrs)		(Ton-hrs)	(Tons)	(%)	(CWH)	(Ton-hrs)	(CWH)	(Ton-hrs)	(CWH)	(Ton-hrs)	(CWH)	(Ton-hrs)
97.5	66.1	82	5,419	164,451	2,005	100	0	0	0	0	0	0	5,419	164,451
92.5	65.0	245	15,930	467,972	1,910	95	0	0	0	0	0	0	15,930	467,972
87.5	63.9	263	16,818	477,159	1,814	90	0	0	0	0	0	0	16,818	477,159
82.5	62.4	313	19,518	615,569	1,967	98	0	0	0	0	0	0	19,518	615,569
77.5	60.4	392	23,669	728,145	1,858	92	0	0	0	0	0	0	23,669	728,145
72.5	58.6	517	30,319	904,128	1,749	87	0	0	0	0	30,319	904,128	0	0
67.5	56.3	525	29,584	860,575	1,639	82	0	0	0	0	29,584	860,575	0	0
62.5	55.0	575	31,625	879,767	1,530	76	0	0	0	0	31,625	879,767	0	0
57.5	55.0	721	39,655	1,416,933	1,965	98	0	0	0	0	0	0	39,655	1,416,933
52.5	55.0	685	37,675	1,242,729	1,814	90	0	0	0	0	0	0	37,675	1,242,729
47.5	55.0	752	41,360	1,633,344	2,172	108	0	0	0	0	0	0	41,360	1,633,344
42.5	n/a	0	0	0	0	0	0	0	0	0	0	0	0	0
37.5	n/a	0	0	0	0	0	0	0	0	0	0	0	0	0
32.5	n/a	0	0	0	0	0	0	0	0	0	0	0	0	0
27.5	n/a	0	0	0	0	0	0	0	0	0	0	0	0	0
22.5	n/a	0	0	0	0	0	0	0	0	0	0	0	0	0
17.5	n/a	0	0	0	0	0	0	0	0	0	0	0	0	0
12.5	n/a	0	0	0	0	0	0	0	0	0	0	0	0	0
7.5	n/a	0	0	0	0	0	0	0	0	0	0	0	0	0
Totals:		5,070	291,572	9,390,770			0	0	0	0	91,527	2,644,471	200,045	6,746,300
Cust Wgt Factors:								0.000		0.000		0.282		0.718
Custom Entering Condenser Temperatures (F):								n/a		n/a		56.6		57.9

4b. Custom PLV Worksheet for CH-2 (Trane 1250)

Avg DB (F)	Cond Temp (F)	Total (Hrs)	CWH	Total (Ton-hrs)	Load (Tons)	Load (%)	25% Bin		50% Bin		75% Bin		100% Bin	
							(CWH)	(Ton-hrs)	(CWH)	(Ton-hrs)	(CWH)	(Ton-hrs)	(CWH)	(Ton-hrs)
97.5	66.1	82	5,419	102,321	1,248	100	0	0	0	0	0	0	5,419	102,321
92.5	65.0	245	15,930	291,172	1,188	95	0	0	0	0	0	0	15,930	291,172
87.5	63.9	263	16,818	296,888	1,129	90	0	0	0	0	0	0	16,818	296,888
82.5	62.4	313	19,518	383,007	1,224	98	0	0	0	0	0	0	19,518	383,007
77.5	60.4	392	23,669	453,052	1,156	92	0	0	0	0	0	0	23,669	453,052
72.5	58.6	517	30,319	562,549	1,088	87	0	0	0	0	30,319	562,549	0	0
67.5	56.3	525	29,584	535,450	1,020	82	0	0	0	0	29,584	535,450	0	0
62.5	55.0	575	31,625	547,391	952	76	0	0	0	0	31,625	547,391	0	0
57.5	55.0	721	39,655	881,616	1,223	98	0	0	0	0	0	0	39,655	881,616
52.5	55.0	685	37,675	773,226	1,129	90	0	0	0	0	0	0	37,675	773,226
47.5	n/a	0	0	0	0	0	0	0	0	0	0	0	0	0
42.5	n/a	0	0	0	0	0	0	0	0	0	0	0	0	0
37.5	n/a	0	0	0	0	0	0	0	0	0	0	0	0	0
32.5	n/a	0	0	0	0	0	0	0	0	0	0	0	0	0
27.5	n/a	0	0	0	0	0	0	0	0	0	0	0	0	0
22.5	n/a	0	0	0	0	0	0	0	0	0	0	0	0	0
17.5	n/a	0	0	0	0	0	0	0	0	0	0	0	0	0
12.5	n/a	0	0	0	0	0	0	0	0	0	0	0	0	0
7.5	n/a	0	0	0	0	0	0	0	0	0	0	0	0	0
Totals:		4,318	250,212	4,826,671			0	0	0	0	91,527	1,645,390	158,685	3,181,281
Cust Wgt Factors:								0.000		0.000		0.341		0.659
Custom Entering Condenser Temperatures (F):								n/a		n/a		56.6		58.8

4c. Custom PLV Worksheet for CH-3 (Carrier 1250 Ton Constant)

Avg DB (F)	Cond Temp (F)	Total (Hrs)	CWH	Total (Ton-hrs)	Load (Tons)	Load (%)	25% Bin		50% Bin		75% Bin		100% Bin	
							(CWH)	(Ton-hrs)	(CWH)	(Ton-hrs)	(CWH)	(Ton-hrs)	(CWH)	(Ton-hrs)
97.5	66.1	82	5,419	102,321	1,248	100	0	0	0	0	0	0	5,419	102,321
92.5	65.0	245	15,930	291,172	1,188	95	0	0	0	0	0	0	15,930	291,172
87.5	63.9	263	16,818	296,888	1,129	90	0	0	0	0	0	0	16,818	296,888
82.5	62.4	313	19,518	383,007	1,224	98	0	0	0	0	0	0	19,518	383,007
77.5	60.4	392	23,669	453,052	1,156	92	0	0	0	0	0	0	23,669	453,052
72.5	58.6	517	30,319	562,549	1,088	87	0	0	0	0	30,319	562,549	0	0
67.5	56.3	525	29,584	535,450	1,020	82	0	0	0	0	29,584	535,450	0	0
62.5	55.0	575	31,625	547,391	952	76	0	0	0	0	31,625	547,391	0	0
57.5	n/a	0	0	0	0	0	0	0	0	0	0	0	0	0
52.5	n/a	0	0	0	0	0	0	0	0	0	0	0	0	0
47.5	n/a	0	0	0	0	0	0	0	0	0	0	0	0	0
42.5	n/a	0	0	0	0	0	0	0	0	0	0	0	0	0
37.5	n/a	0	0	0	0	0	0	0	0	0	0	0	0	0
32.5	n/a	0	0	0	0	0	0	0	0	0	0	0	0	0
27.5	n/a	0	0	0	0	0	0	0	0	0	0	0	0	0
22.5	n/a	0	0	0	0	0	0	0	0	0	0	0	0	0
17.5	n/a	0	0	0	0	0	0	0	0	0	0	0	0	0
12.5	n/a	0	0	0	0	0	0	0	0	0	0	0	0	0
7.5	n/a	0	0	0	0	0	0	0	0	0	0	0	0	0
Totals:		2,912	172,882	3,171,830			0	0	0	0	91,527	1,645,390	81,355	1,526,440
Cust Wgt Factors:								0.000		0.000		0.519		0.481
Custom Entering Condenser Temperatures (F):								n/a		n/a		56.6		62.8

4d. Custom PLV Worksheet for CH-4 (Trane 650)

Avg DB (F)	Cond Temp (F)	Total (Hrs)	CWH	Total (Ton-hrs)	Load (Tons)	Load (%)	25% Bin		50% Bin		75% Bin		100% Bin	
							(CWH)	(Ton-hrs)	(CWH)	(Ton-hrs)	(CWH)	(Ton-hrs)	(CWH)	(Ton-hrs)
97.5	66.1	82	5,419	53,207	649	100	0	0	0	0	0	0	5,419	53,207
92.5	65.0	245	15,930	151,409	618	95	0	0	0	0	0	0	15,930	151,409
87.5	63.9	263	16,818	154,382	587	90	0	0	0	0	0	0	16,818	154,382
82.5	n/a	0	0	0	0	0	0	0	0	0	0	0	0	0
77.5	n/a	0	0	0	0	0	0	0	0	0	0	0	0	0
72.5	n/a	0	0	0	0	0	0	0	0	0	0	0	0	0
67.5	n/a	0	0	0	0	0	0	0	0	0	0	0	0	0
62.5	n/a	0	0	0	0	0	0	0	0	0	0	0	0	0
57.5	n/a	0	0	0	0	0	0	0	0	0	0	0	0	0
52.5	n/a	0	0	0	0	0	0	0	0	0	0	0	0	0
47.5	n/a	0	0	0	0	0	0	0	0	0	0	0	0	0
42.5	n/a	0	0	0	0	0	0	0	0	0	0	0	0	0
37.5	n/a	0	0	0	0	0	0	0	0	0	0	0	0	0
32.5	n/a	0	0	0	0	0	0	0	0	0	0	0	0	0
27.5	n/a	0	0	0	0	0	0	0	0	0	0	0	0	0
22.5	n/a	0	0	0	0	0	0	0	0	0	0	0	0	0
17.5	n/a	0	0	0	0	0	0	0	0	0	0	0	0	0
12.5	n/a	0	0	0	0	0	0	0	0	0	0	0	0	0
7.5	n/a	0	0	0	0	0	0	0	0	0	0	0	0	0
Totals:		590	38,167	358,998			0	0	0	0	0	0	38,167	358,998
Cust Wgt Factors:								0.000		0.000		0.000		1.000
Custom Entering Condenser Temperatures (F):								n/a		n/a		n/a		64.7

KEY for Custom PLV Worksheet table(s):
[Avg DB] = Midpoint temperature for bin.
[Cond Temp] = Entering condenser temperature for bin. Entering water temperature for water-cooled chillers. Entering air temperature for air-cooled chillers.
[Tot Hrs] = Hours of operation in bin.
[CWH] = Condenser temperature hours. [Tot Hrs] times [Cond Temp]. Later used to derive the four average entering condenser temperature values for the PLV calculation.
[Load] = Chiller load for bin.
[Load (%)] = Chiller load as a percentage of full load capacity.
[Total (Ton-hrs)] = Chiller [Load] times [Tot Hrs]. Later used to derive the four weighting factors for the PLV calculation.
[Bin (CWH)] = [CWH] values separated into the four PLV bins: 25%, 50%, 75% and 100% load according to chiller load for each bin.
[Bin (Ton-hrs)] = Values separated into the four PLV bins: 25%, 50%, 75% and 100% load according to the chiller load for each bin.
[Cust Wgt Factor] = The four custom PLV weighting factors. [Total (Ton-hrs)] for PLV Bin divided by [Total (Ton-hrs)] for the chiller.
[Cust Ent Cond Temps] = The four custom condenser temperature values for the PLV calculation = [Total (CWH)] for PLV bin divided by [Tot Hrs] in the PLV bin.

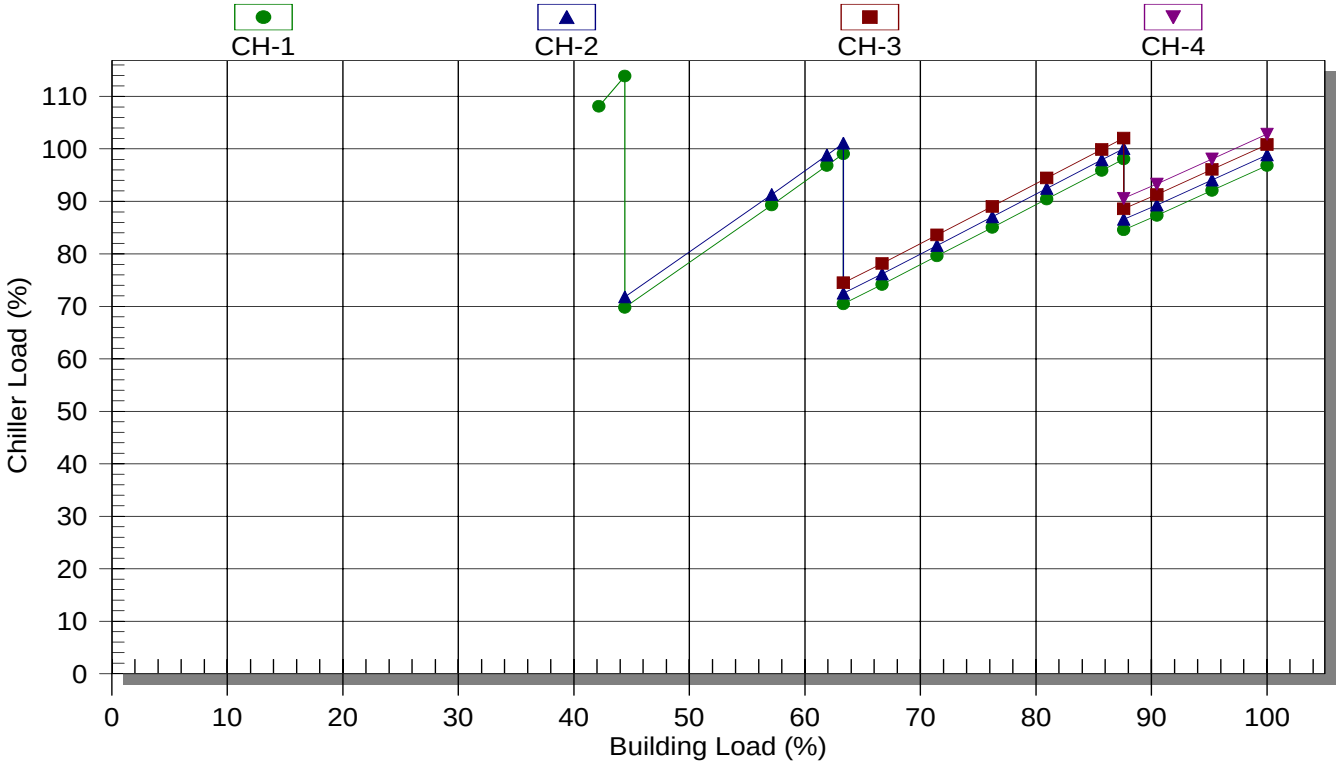

Note: Individual chiller curves in this graph have been adjusted up or down so the number of chillers operating at each point can be seen. If the curves had not been adjusted, all curves would lie on top of each other. Because of the adjustment each chiller load shown on the graph is only accurate to within a few percentage points plus or minus of the original calculated values.

2. Input Data Summary

Weather

City ..... Salt Lake City, Utah
Schedule ..... On All Day: Weekday
..... On All Day: Saturday
..... On All Day: Sunday

Loads

User-Defined Load Profile

Chiller System

Name ..... Combination B
Chillers in Plant 4
Plant Control ..... Sequenced
Full Load LCHWT ..... 44.0 F
Tower Configuration ..... One Tower for System
Cooling Tower ..... 6 Cell Tower (1)
..... Detailed Cooling Tower Model
Free Cooling ..... Plate-Frame Heat Exchanger

Sequence	Chiller Name	FL Capacity (Tons)	Full Load Power
CH-1	Carrier 2000 Ton VFD	2,009	0.494 kW/Ton
CH-2	Trane 1250	1,250	0.473 kW/Ton
CH-3	Carrier 1250 Ton Constant	1,250	0.467 kW/Ton
CH-4	Trane 650	650	0.473 kW/Ton

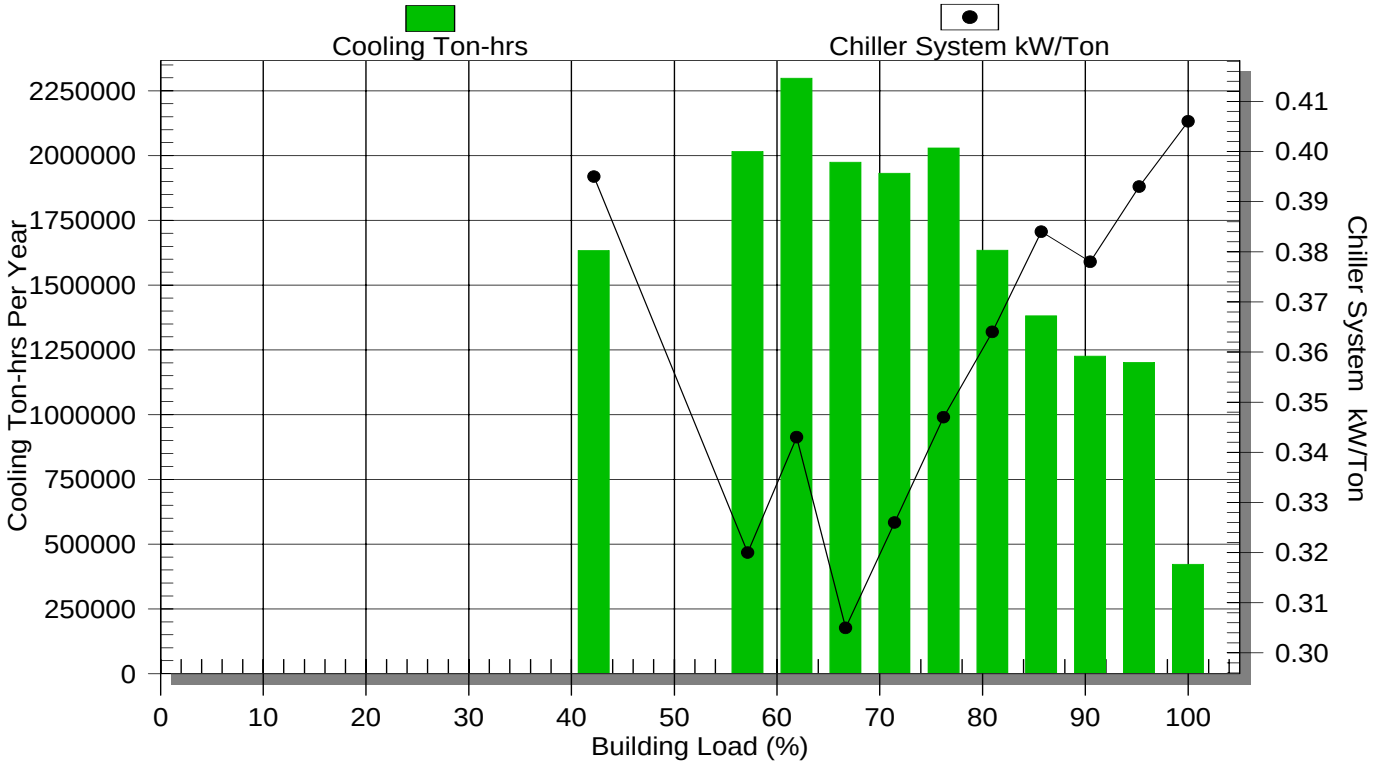

2. Input Data Summary

Weather

City ..... Salt Lake City, Utah
Schedule ..... On All Day: Weekday
..... On All Day: Saturday
..... On All Day: Sunday

Loads

User-Defined Load Profile

Chiller System

Name ..... Combination B
Chillers in Plant 4
Plant Control ..... Sequenced
Full Load LCHWT ..... 44.0 F
Tower Configuration ..... One Tower for System
Cooling Tower ..... 6 Cell Tower (1)
..... Detailed Cooling Tower Model
Free Cooling ..... Plate-Frame Heat Exchanger

Sequence	Chiller Name	FL Capacity (Tons)	Full Load Power
CH-1	Carrier 2000 Ton VFD	2,009	0.494 kW/Ton
CH-2	Trane 1250	1,250	0.473 kW/Ton
CH-3	Carrier 1250 Ton Constant	1,250	0.467 kW/Ton
CH-4	Trane 650	650	0.473 kW/Ton

1. Executive Summary

System Part Load Value (SPLV):	**PLV**
Combination B	0.349 kW/Ton
IPLV or NPLV (ARI 550/590-1998):	
Carrier 2000 Ton VFD	0.300 kW/Ton
Trane 1250	0.354 kW/Ton
Carrier 1250 Ton Constant	0.462 kW/Ton
Trane 650	0.354 kW/Ton

2. Input Data Summary

Weather

City ..... Salt Lake City, Utah
Schedule ..... On All Day: Weekday
..... On All Day: Saturday
..... On All Day: Sunday

Loads

User-Defined Load Profile

Chiller System

Name ..... Combination B
Chillers in Plant 4
Plant Control ..... Sequenced
Full Load LCHWT ..... 44.0 F
Tower Configuration ..... One Tower for System
Cooling Tower ..... 6 Cell Tower (1)
..... Detailed Cooling Tower Model
Free Cooling ..... Plate-Frame Heat Exchanger

Sequence	Chiller Name	FL Capacity (Tons)	Full Load Power
CH-1	Carrier 2000 Ton VFD	2,009	0.494 kW/Ton
CH-2	Trane 1250	1,250	0.473 kW/Ton
CH-3	Carrier 1250 Ton Constant	1,250	0.467 kW/Ton
CH-4	Trane 650	650	0.473 kW/Ton

3. Chiller System Operating Conditions

Bin Temp (F)	Bin MCWB (F)	Building Load (%)	Building Load (Tons)	Chillers On	Chiller Load (%)
97.5	61.5	100	5,150	4	100
92.5	60.5	95	4,905	4	95
87.5	59.5	90	4,659	4	90
82.5	57.9	86	4,414	3	98
77.5	55.9	81	4,169	3	92
72.5	54.2	76	3,925	3	87
67.5	51.9	71	3,679	3	82
62.5	49.5	67	3,434	3	76
57.5	47.1	62	3,188	2	98
52.5	43.8	57	2,943	2	90
47.5	40.4	42	2,172	1	108
42.5	36.9	37	1,927	0	0
37.5	33.4	33	1,682	0	0
32.5	29.4	28	1,437	0	0
27.5	25.1	23	1,192	0	0
22.5	20.8	18	947	0	0
17.5	16.0	14	701	0	0
12.5	11.2	9	456	0	0
7.5	5.9	4	211	0	0

4a. Chiller System Performance

	CH-1				CH-2				CH-3			
Bin Temp (F)	**Load (Tons)**	**(kW/ Ton)**	**Lchwt (F)**	**Cond Temp (F)**	**Load (Tons)**	**(kW/ Ton)**	**Lchwt (F)**	**Cond Temp (F)**	**Load (Tons)**	**(kW/ Ton)**	**Lchwt (F)**	**Cond Temp (F)**
97.5	2,005	0.397	44.00	66.08	1,248	0.400	44.00	66.08	1,248	0.429	44.00	66.08
92.5	1,910	0.378	44.00	65.02	1,188	0.386	44.00	65.02	1,188	0.426	44.00	65.02
87.5	1,814	0.355	44.00	63.95	1,129	0.373	44.00	63.95	1,129	0.423	44.00	63.95
82.5	1,967	0.373	44.00	62.36	1,224	0.366	44.00	62.36	1,224	0.418	44.00	62.36
77.5	1,858	0.344	44.00	60.38	1,156	0.346	44.00	60.38	1,156	0.414	44.00	60.38
72.5	1,749	0.312	44.00	58.64	1,088	0.340	44.00	58.64	1,088	0.411	44.00	58.64
67.5	1,639	0.269	44.00	56.35	1,020	0.336	44.00	56.35	1,020	0.408	44.00	56.35
62.5	1,530	0.224	44.00	55.00	952	0.332	44.00	55.00	952	0.409	44.00	55.00
57.5	1,965	0.341	44.00	55.00	1,223	0.346	44.00	55.00	0	0.000	44.00	n/a
52.5	1,814	0.307	44.00	55.00	1,129	0.342	44.00	55.00	0	0.000	44.00	n/a
47.5	2,172	0.395	44.00	55.00	0	0.000	44.00	n/a	0	0.000	44.00	n/a
42.5	0	0.000	44.00	n/a	0	0.000	44.00	n/a	0	0.000	44.00	n/a
37.5	0	0.000	44.00	n/a	0	0.000	44.00	n/a	0	0.000	44.00	n/a
32.5	0	0.000	44.00	n/a	0	0.000	44.00	n/a	0	0.000	44.00	n/a
27.5	0	0.000	44.00	n/a	0	0.000	44.00	n/a	0	0.000	44.00	n/a
22.5	0	0.000	44.00	n/a	0	0.000	44.00	n/a	0	0.000	44.00	n/a
17.5	0	0.000	44.00	n/a	0	0.000	44.00	n/a	0	0.000	44.00	n/a
12.5	0	0.000	44.00	n/a	0	0.000	44.00	n/a	0	0.000	44.00	n/a
7.5	0	0.000	44.00	n/a	0	0.000	44.00	n/a	0	0.000	44.00	n/a

Minimum ECWT condition has been reached for chiller(s): CH-1, CH-2, CH-3
Tower cycling assumed to hold minimum ECWT.

4b. Chiller System Performance

	CH-4				System	
Bin Temp (F)	**Load (Tons)**	**(kW/ Ton)**	**Lchwt (F)**	**Cond Temp (F)**	**Total (kW)**	**Total (kW/Ton)**
97.5	649	0.400	44.00	66.08	2090	0.406
92.5	618	0.386	44.00	65.02	1925	0.393
87.5	587	0.373	44.00	63.95	1763	0.378
82.5	0	0.000	44.00	n/a	1694	0.384
77.5	0	0.000	44.00	n/a	1517	0.364
72.5	0	0.000	44.00	n/a	1362	0.347
67.5	0	0.000	44.00	n/a	1200	0.326
62.5	0	0.000	44.00	n/a	1048	0.305
57.5	0	0.000	44.00	n/a	1093	0.343
52.5	0	0.000	44.00	n/a	943	0.320
47.5	0	0.000	44.00	n/a	858	0.395
42.5	0	0.000	44.00	n/a	0	0.000
37.5	0	0.000	44.00	n/a	0	0.000
32.5	0	0.000	44.00	n/a	0	0.000
27.5	0	0.000	44.00	n/a	0	0.000
22.5	0	0.000	44.00	n/a	0	0.000
17.5	0	0.000	44.00	n/a	0	0.000
12.5	0	0.000	44.00	n/a	0	0.000
7.5	0	0.000	44.00	n/a	0	0.000

5. SPLV Worksheet

Bin Temp (F)	Building Load (%)	Building Load (Tons)	Cooling Hours	Cooling (Ton-hrs)	Bin Wgt Factor	System (kW/Ton)	Bin Ratio
97.5	100	5,150	82	422,300	0.0238	0.406	0.0586
92.5	95	4,905	245	1,201,725	0.0677	0.393	0.1725
87.5	90	4,659	263	1,225,317	0.0690	0.378	0.1825
82.5	86	4,414	313	1,381,582	0.0778	0.384	0.2029
77.5	81	4,169	392	1,634,248	0.0921	0.364	0.2531
72.5	76	3,925	517	2,029,225	0.1143	0.347	0.3294
67.5	71	3,679	525	1,931,475	0.1088	0.326	0.3336
62.5	67	3,434	575	1,974,550	0.1113	0.305	0.3645
57.5	62	3,188	721	2,298,548	0.1295	0.343	0.3777
52.5	57	2,943	685	2,015,955	0.1136	0.320	0.3547
47.5	42	2,172	752	1,633,344	0.0920	0.395	0.2330
42.5	37	1,927	776	0	0.0000	0.000	0.0000
37.5	33	1,682	857	0	0.0000	0.000	0.0000
32.5	28	1,437	828	0	0.0000	0.000	0.0000
27.5	23	1,192	671	0	0.0000	0.000	0.0000
22.5	18	947	221	0	0.0000	0.000	0.0000
17.5	14	701	135	0	0.0000	0.000	0.0000
12.5	9	456	70	0	0.0000	0.000	0.0000
7.5	4	211	132	0	0.0000	0.000	0.0000
Total:			5,070	17,748,269	1.0000		2.8623

Bin Wgt Factor = Bin Ton-hrs / Total Ton-hrs
Bin Ratio = [Bin Wgt Factor] / [System kW/Ton]
SPLV = 1 / [sum of Bin Ratios]
SPLV = 1 / [2.8623] = 0.349 kW/Ton

6. Procedure for Calculating IPLV for Chillers

Procedure for Calculating IPLV for Water-Cooled Electric Chillers

Chiller Load (%)	LCHWT (F)	Cond Temp (F)	Wgt Factor	Chiller (kW/Ton)	Bin Ratio
100	44.00	85.00	0.01	A	0.01/A
75	44.00	75.00	0.42	B	0.42/B
50	44.00	65.00	0.45	C	0.45/C
25	44.00	65.00	0.12	D	0.12/D
Total:			1.00		

IPLV = 1 / [sum of Bin Ratios]
IPLV = 1 / [0.10/A + 0.42/B + 0.45/C + 0.12/D]
per ARI Standard 550/590-1998

1. Summary of Custom Weighting Factors and ECWTs

	Custom Weighting Factors				Custom Entering Condenser Temperatures (F)			
Chiller	**25%**	**50%**	**75%**	**100%**	**25%**	**50%**	**75%**	**100%**
CH-1 - Carrier 1500 Ton VFD	0.000	0.000	0.451	0.549	n/a	n/a	55.6	60.8
CH-2 - Trane 1250	0.000	0.000	0.451	0.549	n/a	n/a	55.6	60.8
CH-3 - Carrier 1250 Ton VFD	0.000	0.000	0.453	0.547	n/a	n/a	55.9	63.0
CH-4 - Trane 650	0.000	0.000	0.000	1.000	n/a	n/a	n/a	66.1

2. Input Data Summary

Weather

City ..... Salt Lake City, Utah
Schedule ..... On All Day: Weekday
..... On All Day: Saturday
..... On All Day: Sunday

Loads

User-Defined Load Profile

Chiller System

Name ..... Combination C
Chillers in Plant 4
Plant Control ..... Sequenced
Full Load LCHWT ..... 44.0 F
Tower Configuration ..... One Tower for System
Cooling Tower ..... 6 Cell Tower (1)
..... Detailed Cooling Tower Model
Free Cooling ..... Plate-Frame Heat Exchanger

Sequence	Chiller Name	FL Capacity (Tons)	Full Load Power
CH-1	Carrier 1500 Ton VFD	1,500	0.482 kW/Ton
CH-2	Trane 1250	1,250	0.473 kW/Ton
CH-3	Carrier 1250 Ton VFD	1,250	0.474 kW/Ton
CH-4	Trane 650	650	0.473 kW/Ton

3. Chiller System Operating Conditions

Bin Temp (F)	Bin MCWB (F)	Building Load (%)	Building Load (Tons)	Chillers On	Chiller Load (%)
97.5	61.5	100	4,650	4	100
92.5	60.5	95	4,429	4	95
87.5	59.5	90	4,207	4	90
82.5	57.9	86	3,986	3	100
77.5	55.9	81	3,765	3	94
72.5	54.2	76	3,543	3	89
67.5	51.9	71	3,321	3	83
62.5	49.5	67	3,100	3	78
57.5	47.1	62	2,879	3	72
52.5	43.8	57	2,657	2	97
47.5	40.4	42	1,961	2	71
42.5	36.9	37	1,740	0	0
37.5	33.4	33	1,518	0	0
32.5	29.4	28	1,297	0	0
27.5	25.1	23	1,076	0	0
22.5	20.8	18	855	0	0
17.5	16.0	14	633	0	0
12.5	11.2	9	412	0	0
7.5	5.9	4	191	0	0

4a. Custom PLV Worksheet for CH-1 (Carrier 1500 Ton VFD)

Avg DB (F)	Cond Temp (F)	Total (Hrs)	CWH	Total (Ton-hrs)	Load (Tons)	Load (%)	25% Bin		50% Bin		75% Bin		100% Bin	
							(CWH)	(Ton-hrs)	(CWH)	(Ton-hrs)	(CWH)	(Ton-hrs)	(CWH)	(Ton-hrs)
97.5	67.5	82	5,536	123,000	1,500	100	0	0	0	0	0	0	5,536	123,000
92.5	66.4	245	16,276	350,034	1,429	95	0	0	0	0	0	0	16,276	350,034
87.5	65.3	263	17,183	356,916	1,357	90	0	0	0	0	0	0	17,183	356,916
82.5	63.8	313	19,960	467,857	1,495	100	0	0	0	0	0	0	19,960	467,857
77.5	61.8	392	24,225	553,455	1,412	94	0	0	0	0	0	0	24,225	553,455
72.5	60.0	517	31,043	686,899	1,329	89	0	0	0	0	0	0	31,043	686,899
67.5	57.8	525	30,322	653,822	1,245	83	0	0	0	0	30,322	653,822	0	0
62.5	55.3	575	31,820	668,438	1,163	78	0	0	0	0	31,820	668,438	0	0
57.5	55.0	721	39,655	778,410	1,080	72	0	0	0	0	39,655	778,410	0	0
52.5	55.0	685	37,675	992,752	1,449	97	0	0	0	0	0	0	37,675	992,752
47.5	55.0	752	41,360	804,367	1,070	71	0	0	0	0	41,360	804,367	0	0
42.5	n/a	0	0	0	0	0	0	0	0	0	0	0	0	0
37.5	n/a	0	0	0	0	0	0	0	0	0	0	0	0	0
32.5	n/a	0	0	0	0	0	0	0	0	0	0	0	0	0
27.5	n/a	0	0	0	0	0	0	0	0	0	0	0	0	0
22.5	n/a	0	0	0	0	0	0	0	0	0	0	0	0	0
17.5	n/a	0	0	0	0	0	0	0	0	0	0	0	0	0
12.5	n/a	0	0	0	0	0	0	0	0	0	0	0	0	0
7.5	n/a	0	0	0	0	0	0	0	0	0	0	0	0	0
Totals:		5,070	295,055	6,435,949			0	0	0	0	143,157	2,905,036	151,898	3,530,913
Cust Wgt Factors:								0.000		0.000		0.451		0.549
Custom Entering Condenser Temperatures (F):								n/a		n/a		55.6		60.8

4b. Custom PLV Worksheet for CH-2 (Trane 1250)

Avg DB (F)	Cond Temp (F)	Total (Hrs)	CWH	Total (Ton-hrs)	Load (Tons)	Load (%)	25% Bin		50% Bin		75% Bin		100% Bin	
							(CWH)	(Ton-hrs)	(CWH)	(Ton-hrs)	(CWH)	(Ton-hrs)	(CWH)	(Ton-hrs)
97.5	67.5	82	5,536	102,500	1,250	100	0	0	0	0	0	0	5,536	102,500
92.5	66.4	245	16,276	291,695	1,191	95	0	0	0	0	0	0	16,276	291,695
87.5	65.3	263	17,183	297,430	1,131	90	0	0	0	0	0	0	17,183	297,430
82.5	63.8	313	19,960	389,881	1,246	100	0	0	0	0	0	0	19,960	389,881
77.5	61.8	392	24,225	461,213	1,177	94	0	0	0	0	0	0	24,225	461,213
72.5	60.0	517	31,043	572,416	1,107	89	0	0	0	0	0	0	31,043	572,416
67.5	57.8	525	30,322	544,852	1,038	83	0	0	0	0	30,322	544,852	0	0
62.5	55.3	575	31,820	557,031	969	78	0	0	0	0	31,820	557,031	0	0
57.5	55.0	721	39,655	648,675	900	72	0	0	0	0	39,655	648,675	0	0
52.5	55.0	685	37,675	827,293	1,208	97	0	0	0	0	0	0	37,675	827,293
47.5	55.0	752	41,360	670,305	891	71	0	0	0	0	41,360	670,305	0	0
42.5	n/a	0	0	0	0	0	0	0	0	0	0	0	0	0
37.5	n/a	0	0	0	0	0	0	0	0	0	0	0	0	0
32.5	n/a	0	0	0	0	0	0	0	0	0	0	0	0	0
27.5	n/a	0	0	0	0	0	0	0	0	0	0	0	0	0
22.5	n/a	0	0	0	0	0	0	0	0	0	0	0	0	0
17.5	n/a	0	0	0	0	0	0	0	0	0	0	0	0	0
12.5	n/a	0	0	0	0	0	0	0	0	0	0	0	0	0
7.5	n/a	0	0	0	0	0	0	0	0	0	0	0	0	0
Totals:		5,070	295,055	5,363,291			0	0	0	0	143,157	2,420,863	151,898	2,942,428
Cust Wgt Factors:								0.000		0.000		0.451		0.549
Custom Entering Condenser Temperatures (F):								n/a		n/a		55.6		60.8

4c. Custom PLV Worksheet for CH-3 (Carrier 1250 Ton VFD)

Avg DB (F)	Cond Temp (F)	Total (Hrs)	CWH	Total (Ton-hrs)	Load (Tons)	Load (%)	25% Bin		50% Bin		75% Bin		100% Bin	
							(CWH)	(Ton-hrs)	(CWH)	(Ton-hrs)	(CWH)	(Ton-hrs)	(CWH)	(Ton-hrs)
97.5	67.5	82	5,536	102,500	1,250	100	0	0	0	0	0	0	5,536	102,500
92.5	66.4	245	16,276	291,695	1,191	95	0	0	0	0	0	0	16,276	291,695
87.5	65.3	263	17,183	297,430	1,131	90	0	0	0	0	0	0	17,183	297,430
82.5	63.8	313	19,960	389,881	1,246	100	0	0	0	0	0	0	19,960	389,881
77.5	61.8	392	24,225	461,213	1,177	94	0	0	0	0	0	0	24,225	461,213
72.5	60.0	517	31,043	572,416	1,107	89	0	0	0	0	0	0	31,043	572,416
67.5	57.8	525	30,322	544,852	1,038	83	0	0	0	0	30,322	544,852	0	0
62.5	55.3	575	31,820	557,031	969	78	0	0	0	0	31,820	557,031	0	0
57.5	55.0	721	39,655	648,675	900	72	0	0	0	0	39,655	648,675	0	0
52.5	n/a	0	0	0	0	0	0	0	0	0	0	0	0	0
47.5	n/a	0	0	0	0	0	0	0	0	0	0	0	0	0
42.5	n/a	0	0	0	0	0	0	0	0	0	0	0	0	0
37.5	n/a	0	0	0	0	0	0	0	0	0	0	0	0	0
32.5	n/a	0	0	0	0	0	0	0	0	0	0	0	0	0
27.5	n/a	0	0	0	0	0	0	0	0	0	0	0	0	0
22.5	n/a	0	0	0	0	0	0	0	0	0	0	0	0	0
17.5	n/a	0	0	0	0	0	0	0	0	0	0	0	0	0
12.5	n/a	0	0	0	0	0	0	0	0	0	0	0	0	0
7.5	n/a	0	0	0	0	0	0	0	0	0	0	0	0	0
Totals:		3,633	216,020	3,865,692			0	0	0	0	101,797	1,750,558	114,223	2,115,135
Cust Wgt Factors:								0.000		0.000		0.453		0.547
Custom Entering Condenser Temperatures (F):								n/a		n/a		55.9		63.0

4d. Custom PLV Worksheet for CH-4 (Trane 650)

Avg DB (F)	Cond Temp (F)	Total (Hrs)	CWH	Total (Ton-hrs)	Load (Tons)	Load (%)	25% Bin		50% Bin		75% Bin		100% Bin	
							(CWH)	(Ton-hrs)	(CWH)	(Ton-hrs)	(CWH)	(Ton-hrs)	(CWH)	(Ton-hrs)
97.5	67.5	82	5,536	53,300	650	100	0	0	0	0	0	0	5,536	53,300
92.5	66.4	245	16,276	151,681	619	95	0	0	0	0	0	0	16,276	151,681
87.5	65.3	263	17,183	154,664	588	90	0	0	0	0	0	0	17,183	154,664
82.5	n/a	0	0	0	0	0	0	0	0	0	0	0	0	0
77.5	n/a	0	0	0	0	0	0	0	0	0	0	0	0	0
72.5	n/a	0	0	0	0	0	0	0	0	0	0	0	0	0
67.5	n/a	0	0	0	0	0	0	0	0	0	0	0	0	0
62.5	n/a	0	0	0	0	0	0	0	0	0	0	0	0	0
57.5	n/a	0	0	0	0	0	0	0	0	0	0	0	0	0
52.5	n/a	0	0	0	0	0	0	0	0	0	0	0	0	0
47.5	n/a	0	0	0	0	0	0	0	0	0	0	0	0	0
42.5	n/a	0	0	0	0	0	0	0	0	0	0	0	0	0
37.5	n/a	0	0	0	0	0	0	0	0	0	0	0	0	0
32.5	n/a	0	0	0	0	0	0	0	0	0	0	0	0	0
27.5	n/a	0	0	0	0	0	0	0	0	0	0	0	0	0
22.5	n/a	0	0	0	0	0	0	0	0	0	0	0	0	0
17.5	n/a	0	0	0	0	0	0	0	0	0	0	0	0	0
12.5	n/a	0	0	0	0	0	0	0	0	0	0	0	0	0
7.5	n/a	0	0	0	0	0	0	0	0	0	0	0	0	0
Totals:		590	38,995	359,645			0	0	0	0	0	0	38,995	359,645
Cust Wgt Factors:								0.000		0.000		0.000		1.000
Custom Entering Condenser Temperatures (F):								n/a		n/a		n/a		66.1

KEY for Custom PLV Worksheet table(s):
[Avg DB] = Midpoint temperature for bin.
[Cond Temp] = Entering condenser temperature for bin. Entering water temperature for water-cooled chillers. Entering air temperature for air-cooled chillers.
[Tot Hrs] = Hours of operation in bin.
[CWH] = Condenser temperature hours. [Tot Hrs] times [Cond Temp]. Later used to derive the four average entering condenser temperature values for the PLV calculation.
[Load] = Chiller load for bin.
[Load (%)] = Chiller load as a percentage of full load capacity.
[Total (Ton-hrs)] = Chiller [Load] times [Tot Hrs]. Later used to derive the four weighting factors for the PLV calculation.
[Bin (CWH)] = [CWH] values separated into the four PLV bins: 25%, 50%, 75% and 100% load according to chiller load for each bin.
[Bin (Ton-hrs)] = Values separated into the four PLV bins: 25%, 50%, 75% and 100% load according to the chiller load for each bin.
[Cust Wgt Factor] = The four custom PLV weighting factors. [Total (Ton-hrs)] for PLV Bin divided by [Total (Ton-hrs)] for the chiller.
[Cust Ent Cond Temps] = The four custom condenser temperature values for the PLV calculation = [Total (CWH)] for PLV bin divided by [Tot Hrs] in the PLV bin.

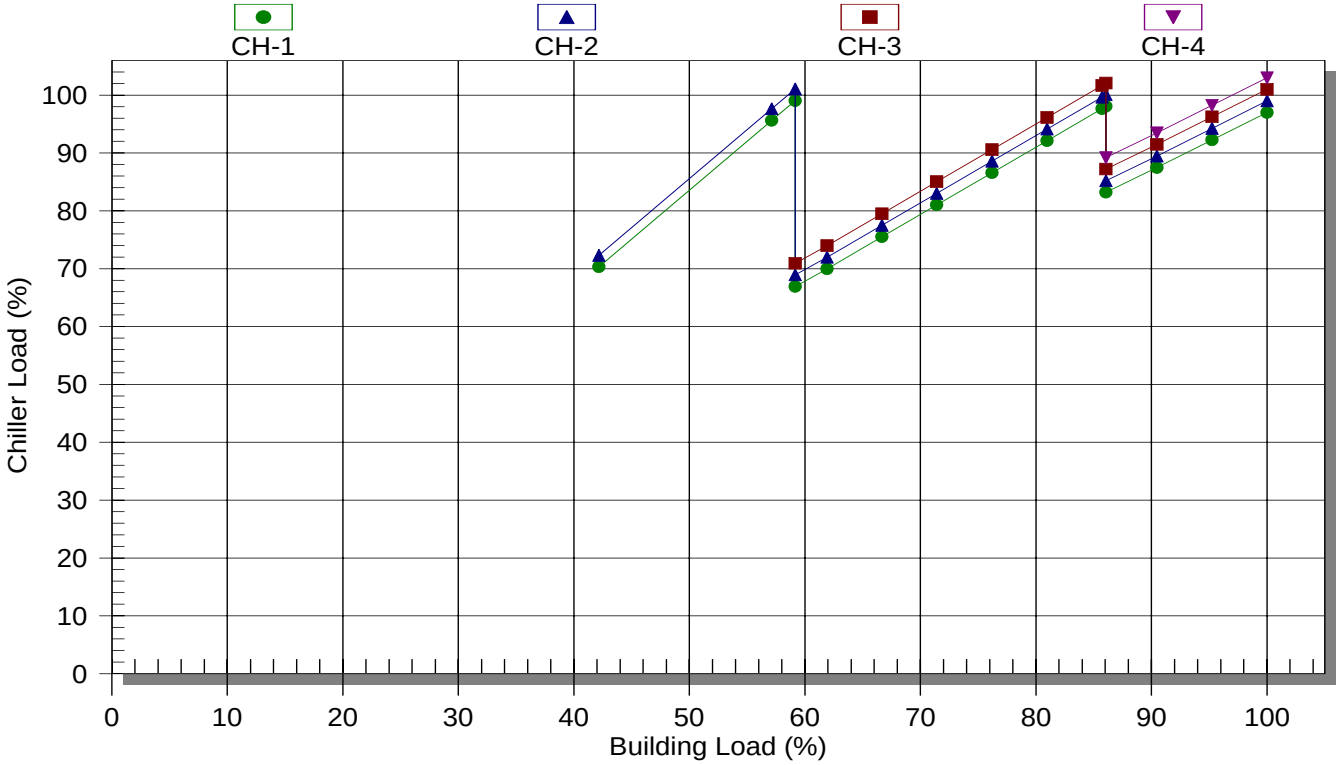

Note: Individual chiller curves in this graph have been adjusted up or down so the number of chillers operating at each point can be seen. If the curves had not been adjusted, all curves would lie on top of each other. Because of the adjustment each chiller load shown on the graph is only accurate to within a few percentage points plus or minus of the original calculated values.

2. Input Data Summary

Weather

City ..... Salt Lake City, Utah
Schedule ..... On All Day: Weekday
..... On All Day: Saturday
..... On All Day: Sunday

Loads

User-Defined Load Profile

Chiller System

Name ..... Combination C
Chillers in Plant 4
Plant Control ..... Sequenced
Full Load LCHWT ..... 44.0 F
Tower Configuration ..... One Tower for System
Cooling Tower ..... 6 Cell Tower (1)
..... Detailed Cooling Tower Model
Free Cooling ..... Plate-Frame Heat Exchanger

Sequence	Chiller Name	FL Capacity (Tons)	Full Load Power
CH-1	Carrier 1500 Ton VFD	1,500	0.482 kW/Ton
CH-2	Trane 1250	1,250	0.473 kW/Ton
CH-3	Carrier 1250 Ton VFD	1,250	0.474 kW/Ton
CH-4	Trane 650	650	0.473 kW/Ton

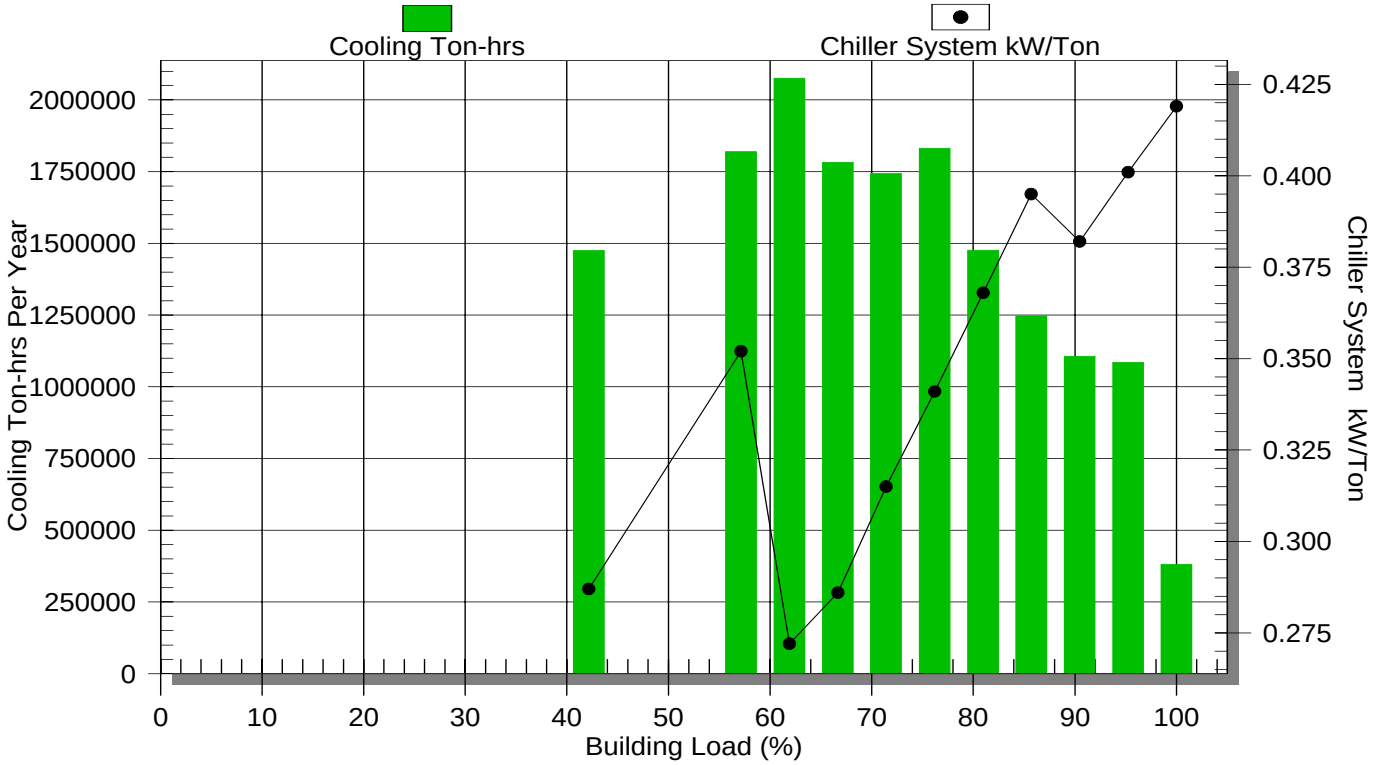

2. Input Data Summary

Weather

City ..... Salt Lake City, Utah
Schedule ..... On All Day: Weekday
..... On All Day: Saturday
..... On All Day: Sunday

Loads

User-Defined Load Profile

Chiller System

Name ..... Combination C
Chillers in Plant 4
Plant Control ..... Sequenced
Full Load LCHWT ..... 44.0 F
Tower Configuration ..... One Tower for System
Cooling Tower ..... 6 Cell Tower (1)
..... Detailed Cooling Tower Model
Free Cooling ..... Plate-Frame Heat Exchanger

Sequence	Chiller Name	FL Capacity (Tons)	Full Load Power
CH-1	Carrier 1500 Ton VFD	1,500	0.482 kW/Ton
CH-2	Trane 1250	1,250	0.473 kW/Ton
CH-3	Carrier 1250 Ton VFD	1,250	0.474 kW/Ton
CH-4	Trane 650	650	0.473 kW/Ton

1. Executive Summary

System Part Load Value (SPLV):	**PLV**
Combination C	0.329 kW/Ton
IPLV or NPLV (ARI 550/590-1998):	
Carrier 1500 Ton VFD	0.296 kW/Ton
Trane 1250	0.354 kW/Ton
Carrier 1250 Ton VFD	0.319 kW/Ton
Trane 650	0.354 kW/Ton

2. Input Data Summary

Weather

City ..... Salt Lake City, Utah
Schedule ..... On All Day: Weekday
..... On All Day: Saturday
..... On All Day: Sunday

Loads

User-Defined Load Profile

Chiller System

Name ..... Combination C
Chillers in Plant 4
Plant Control ..... Sequenced
Full Load LCHWT ..... 44.0 F
Tower Configuration ..... One Tower for System
Cooling Tower ..... 6 Cell Tower (1)
..... Detailed Cooling Tower Model
Free Cooling ..... Plate-Frame Heat Exchanger

Sequence	Chiller Name	FL Capacity (Tons)	Full Load Power
CH-1	Carrier 1500 Ton VFD	1,500	0.482 kW/Ton
CH-2	Trane 1250	1,250	0.473 kW/Ton
CH-3	Carrier 1250 Ton VFD	1,250	0.474 kW/Ton
CH-4	Trane 650	650	0.473 kW/Ton

3. Chiller System Operating Conditions

Bin Temp (F)	Bin MCWB (F)	Building Load (%)	Building Load (Tons)	Chillers On	Chiller Load (%)
97.5	61.5	100	4,650	4	100
92.5	60.5	95	4,429	4	95
87.5	59.5	90	4,207	4	90
82.5	57.9	86	3,986	3	100
77.5	55.9	81	3,765	3	94
72.5	54.2	76	3,543	3	89
67.5	51.9	71	3,321	3	83
62.5	49.5	67	3,100	3	78
57.5	47.1	62	2,879	3	72
52.5	43.8	57	2,657	2	97
47.5	40.4	42	1,961	2	71
42.5	36.9	37	1,740	0	0
37.5	33.4	33	1,518	0	0
32.5	29.4	28	1,297	0	0
27.5	25.1	23	1,076	0	0
22.5	20.8	18	855	0	0
17.5	16.0	14	633	0	0
12.5	11.2	9	412	0	0
7.5	5.9	4	191	0	0

4a. Chiller System Performance

	CH-1				CH-2				CH-3			
Bin Temp (F)	**Load (Tons)**	**(kW/ Ton)**	**Lchwt (F)**	**Cond Temp (F)**	**Load (Tons)**	**(kW/ Ton)**	**Lchwt (F)**	**Cond Temp (F)**	**Load (Tons)**	**(kW/ Ton)**	**Lchwt (F)**	**Cond Temp (F)**
97.5	1,500	0.433	44.00	67.51	1,250	0.412	44.00	67.51	1,250	0.413	44.00	67.51
92.5	1,429	0.411	44.00	66.43	1,191	0.398	44.00	66.43	1,191	0.394	44.00	66.43
87.5	1,357	0.386	44.00	65.34	1,131	0.384	44.00	65.34	1,131	0.374	44.00	65.34
82.5	1,495	0.411	44.00	63.77	1,246	0.380	44.00	63.77	1,246	0.390	44.00	63.77
77.5	1,412	0.380	44.00	61.80	1,177	0.359	44.00	61.80	1,177	0.363	44.00	61.80
72.5	1,329	0.347	44.00	60.04	1,107	0.341	44.00	60.04	1,107	0.332	44.00	60.04
67.5	1,245	0.312	44.00	57.76	1,038	0.337	44.00	57.76	1,038	0.298	44.00	57.76
62.5	1,163	0.271	44.00	55.34	969	0.333	44.00	55.34	969	0.258	44.00	55.34
57.5	1,080	0.249	44.00	55.00	900	0.333	44.00	55.00	900	0.239	44.00	55.00
52.5	1,449	0.358	44.00	55.00	1,208	0.345	44.00	55.00	0	0.000	44.00	n/a
47.5	1,070	0.248	44.00	55.00	891	0.334	44.00	55.00	0	0.000	44.00	n/a
42.5	0	0.000	44.00	n/a	0	0.000	44.00	n/a	0	0.000	44.00	n/a
37.5	0	0.000	44.00	n/a	0	0.000	44.00	n/a	0	0.000	44.00	n/a
32.5	0	0.000	44.00	n/a	0	0.000	44.00	n/a	0	0.000	44.00	n/a
27.5	0	0.000	44.00	n/a	0	0.000	44.00	n/a	0	0.000	44.00	n/a
22.5	0	0.000	44.00	n/a	0	0.000	44.00	n/a	0	0.000	44.00	n/a
17.5	0	0.000	44.00	n/a	0	0.000	44.00	n/a	0	0.000	44.00	n/a
12.5	0	0.000	44.00	n/a	0	0.000	44.00	n/a	0	0.000	44.00	n/a
7.5	0	0.000	44.00	n/a	0	0.000	44.00	n/a	0	0.000	44.00	n/a

Minimum ECWT condition has been reached for chiller(s): CH-1, CH-2, CH-3
Tower cycling assumed to hold minimum ECWT.

4b. Chiller System Performance

	CH-4				System	
Bin Temp (F)	**Load (Tons)**	**(kW/ Ton)**	**Lchwt (F)**	**Cond Temp (F)**	**Total (kW)**	**Total (kW/Ton)**
97.5	650	0.412	44.00	67.51	1949	0.419
92.5	619	0.398	44.00	66.43	1777	0.401
87.5	588	0.384	44.00	65.34	1608	0.382
82.5	0	0.000	44.00	n/a	1573	0.395
77.5	0	0.000	44.00	n/a	1385	0.368
72.5	0	0.000	44.00	n/a	1207	0.341
67.5	0	0.000	44.00	n/a	1047	0.315
62.5	0	0.000	44.00	n/a	887	0.286
57.5	0	0.000	44.00	n/a	783	0.272
52.5	0	0.000	44.00	n/a	935	0.352
47.5	0	0.000	44.00	n/a	563	0.287
42.5	0	0.000	44.00	n/a	0	0.000
37.5	0	0.000	44.00	n/a	0	0.000
32.5	0	0.000	44.00	n/a	0	0.000
27.5	0	0.000	44.00	n/a	0	0.000
22.5	0	0.000	44.00	n/a	0	0.000
17.5	0	0.000	44.00	n/a	0	0.000
12.5	0	0.000	44.00	n/a	0	0.000
7.5	0	0.000	44.00	n/a	0	0.000

5. SPLV Worksheet

Bin Temp (F)	Building Load (%)	Building Load (Tons)	Cooling Hours	Cooling (Ton-hrs)	Bin Wgt Factor	System (kW/Ton)	Bin Ratio
97.5	100	4,650	82	381,300	0.0238	0.419	0.0568
92.5	95	4,429	245	1,085,105	0.0677	0.401	0.1688
87.5	90	4,207	263	1,106,441	0.0690	0.382	0.1807
82.5	86	3,986	313	1,247,618	0.0779	0.395	0.1973
77.5	81	3,765	392	1,475,880	0.0921	0.368	0.2503
72.5	76	3,543	517	1,831,731	0.1143	0.341	0.3355
67.5	71	3,321	525	1,743,525	0.1088	0.315	0.3451
62.5	67	3,100	575	1,782,500	0.1112	0.286	0.3886
57.5	62	2,879	721	2,075,759	0.1295	0.272	0.4761
52.5	57	2,657	685	1,820,045	0.1136	0.352	0.3227
47.5	42	1,961	752	1,474,672	0.0920	0.287	0.3207
42.5	37	1,740	776	0	0.0000	0.000	0.0000
37.5	33	1,518	857	0	0.0000	0.000	0.0000
32.5	28	1,297	828	0	0.0000	0.000	0.0000
27.5	23	1,076	671	0	0.0000	0.000	0.0000
22.5	18	855	221	0	0.0000	0.000	0.0000
17.5	14	633	135	0	0.0000	0.000	0.0000
12.5	9	412	70	0	0.0000	0.000	0.0000
7.5	4	191	132	0	0.0000	0.000	0.0000
Total:			5,070	16,024,576	1.0000		3.0426

Bin Wgt Factor = Bin Ton-hrs / Total Ton-hrs
Bin Ratio = [Bin Wgt Factor] / [System kW/Ton]
SPLV = 1 / [sum of Bin Ratios]
SPLV = 1 / [3.0426] = 0.329 kW/Ton

6. Procedure for Calculating IPLV for Chillers

Procedure for Calculating IPLV for Water-Cooled Electric Chillers

Chiller Load (%)	LCHWT (F)	Cond Temp (F)	Wgt Factor	Chiller (kW/Ton)	Bin Ratio
100	44.00	85.00	0.01	A	0.01/A
75	44.00	75.00	0.42	B	0.42/B
50	44.00	65.00	0.45	C	0.45/C
25	44.00	65.00	0.12	D	0.12/D
Total:			1.00		

IPLV = 1 / [sum of Bin Ratios]
IPLV = 1 / [0.10/A + 0.42/B + 0.45/C + 0.12/D]
per ARI Standard 550/590-1998

1. Summary of Custom Weighting Factors and ECWTs

	Custom Weighting Factors				Custom Entering Condenser Temperatures (F)			
Chiller	**25%**	**50%**	**75%**	**100%**	**25%**	**50%**	**75%**	**100%**
CH-1 - Carrier 1500 Ton VFD	0.000	0.000	0.451	0.549	n/a	n/a	55.7	60.8
CH-2 - Trane 1250	0.000	0.000	0.451	0.549	n/a	n/a	55.7	60.8
CH-3 - Carrier 1250 Ton Constant	0.000	0.000	0.453	0.547	n/a	n/a	55.9	63.1
CH-4 - Trane 650	0.000	0.000	0.000	1.000	n/a	n/a	n/a	66.1

2. Input Data Summary

Weather

City ..... Salt Lake City, Utah
Schedule ..... On All Day: Weekday
..... On All Day: Saturday
..... On All Day: Sunday

Loads

User-Defined Load Profile

Chiller System

Name ..... Combination C-1
Chillers in Plant 4
Plant Control ..... Sequenced
Full Load LCHWT ..... 44.0 F
Tower Configuration ..... One Tower for System
Cooling Tower ..... 6 Cell Tower (2)
..... Detailed Cooling Tower Model
Free Cooling ..... Plate-Frame Heat Exchanger

Sequence	Chiller Name	FL Capacity (Tons)	Full Load Power
CH-1	Carrier 1500 Ton VFD	1,500	0.482 kW/Ton
CH-2	Trane 1250	1,250	0.473 kW/Ton
CH-3	Carrier 1250 Ton Constant	1,250	0.467 kW/Ton
CH-4	Trane 650	650	0.473 kW/Ton

3. Chiller System Operating Conditions

Bin Temp (F)	Bin MCWB (F)	Building Load (%)	Building Load (Tons)	Chillers On	Chiller Load (%)
97.5	61.5	100	4,650	4	100
92.5	60.5	95	4,429	4	95
87.5	59.5	90	4,207	4	90
82.5	57.9	86	3,986	3	100
77.5	55.9	81	3,765	3	94
72.5	54.2	76	3,543	3	89
67.5	51.9	71	3,321	3	83
62.5	49.5	67	3,100	3	78
57.5	47.1	62	2,879	3	72
52.5	43.8	57	2,657	2	97
47.5	40.4	42	1,961	2	71
42.5	36.9	37	1,740	0	0
37.5	33.4	33	1,518	0	0
32.5	29.4	28	1,297	0	0
27.5	25.1	23	1,076	0	0
22.5	20.8	18	855	0	0
17.5	16.0	14	633	0	0
12.5	11.2	9	412	0	0
7.5	5.9	4	191	0	0

4a. Custom PLV Worksheet for CH-1 (Carrier 1500 Ton VFD)

Avg DB (F)	Cond Temp (F)	Total (Hrs)	CWH	Total (Ton-hrs)	Load (Tons)	Load (%)	25% Bin		50% Bin		75% Bin		100% Bin	
							(CWH)	(Ton-hrs)	(CWH)	(Ton-hrs)	(CWH)	(Ton-hrs)	(CWH)	(Ton-hrs)
97.5	67.5	82	5,536	123,000	1,500	100	0	0	0	0	0	0	5,536	123,000
92.5	66.4	245	16,279	350,034	1,429	95	0	0	0	0	0	0	16,279	350,034
87.5	65.4	263	17,189	356,916	1,357	90	0	0	0	0	0	0	17,189	356,916
82.5	63.8	313	19,965	467,857	1,495	100	0	0	0	0	0	0	19,965	467,857
77.5	61.8	392	24,234	553,455	1,412	94	0	0	0	0	0	0	24,234	553,455
72.5	60.1	517	31,061	686,899	1,329	89	0	0	0	0	0	0	31,061	686,899
67.5	57.8	525	30,348	653,822	1,245	83	0	0	0	0	30,348	653,822	0	0
62.5	55.4	575	31,857	668,438	1,163	78	0	0	0	0	31,857	668,438	0	0
57.5	55.0	721	39,655	778,410	1,080	72	0	0	0	0	39,655	778,410	0	0
52.5	55.0	685	37,675	992,752	1,449	97	0	0	0	0	0	0	37,675	992,752
47.5	55.0	752	41,360	804,367	1,070	71	0	0	0	0	41,360	804,367	0	0
42.5	n/a	0	0	0	0	0	0	0	0	0	0	0	0	0
37.5	n/a	0	0	0	0	0	0	0	0	0	0	0	0	0
32.5	n/a	0	0	0	0	0	0	0	0	0	0	0	0	0
27.5	n/a	0	0	0	0	0	0	0	0	0	0	0	0	0
22.5	n/a	0	0	0	0	0	0	0	0	0	0	0	0	0
17.5	n/a	0	0	0	0	0	0	0	0	0	0	0	0	0
12.5	n/a	0	0	0	0	0	0	0	0	0	0	0	0	0
7.5	n/a	0	0	0	0	0	0	0	0	0	0	0	0	0
Totals:		5,070	295,159	6,435,949			0	0	0	0	143,219	2,905,036	151,939	3,530,913
Cust Wgt Factors:								0.000		0.000		0.451		0.549
Custom Entering Condenser Temperatures (F):								n/a		n/a		55.7		60.8

4b. Custom PLV Worksheet for CH-2 (Trane 1250)

Avg DB (F)	Cond Temp (F)	Total (Hrs)	CWH	Total (Ton-hrs)	Load (Tons)	Load (%)	25% Bin		50% Bin		75% Bin		100% Bin	
							(CWH)	(Ton-hrs)	(CWH)	(Ton-hrs)	(CWH)	(Ton-hrs)	(CWH)	(Ton-hrs)
97.5	67.5	82	5,536	102,500	1,250	100	0	0	0	0	0	0	5,536	102,500
92.5	66.4	245	16,279	291,695	1,191	95	0	0	0	0	0	0	16,279	291,695
87.5	65.4	263	17,189	297,430	1,131	90	0	0	0	0	0	0	17,189	297,430
82.5	63.8	313	19,965	389,881	1,246	100	0	0	0	0	0	0	19,965	389,881
77.5	61.8	392	24,234	461,213	1,177	94	0	0	0	0	0	0	24,234	461,213
72.5	60.1	517	31,061	572,416	1,107	89	0	0	0	0	0	0	31,061	572,416
67.5	57.8	525	30,348	544,852	1,038	83	0	0	0	0	30,348	544,852	0	0
62.5	55.4	575	31,857	557,031	969	78	0	0	0	0	31,857	557,031	0	0
57.5	55.0	721	39,655	648,675	900	72	0	0	0	0	39,655	648,675	0	0
52.5	55.0	685	37,675	827,293	1,208	97	0	0	0	0	0	0	37,675	827,293
47.5	55.0	752	41,360	670,305	891	71	0	0	0	0	41,360	670,305	0	0
42.5	n/a	0	0	0	0	0	0	0	0	0	0	0	0	0
37.5	n/a	0	0	0	0	0	0	0	0	0	0	0	0	0
32.5	n/a	0	0	0	0	0	0	0	0	0	0	0	0	0
27.5	n/a	0	0	0	0	0	0	0	0	0	0	0	0	0
22.5	n/a	0	0	0	0	0	0	0	0	0	0	0	0	0
17.5	n/a	0	0	0	0	0	0	0	0	0	0	0	0	0
12.5	n/a	0	0	0	0	0	0	0	0	0	0	0	0	0
7.5	n/a	0	0	0	0	0	0	0	0	0	0	0	0	0
Totals:		5,070	295,159	5,363,291			0	0	0	0	143,219	2,420,863	151,939	2,942,428
Cust Wgt Factors:								0.000		0.000		0.451		0.549
Custom Entering Condenser Temperatures (F):								n/a		n/a		55.7		60.8

4c. Custom PLV Worksheet for CH-3 (Carrier 1250 Ton Constant)

Avg DB (F)	Cond Temp (F)	Total (Hrs)	CWH	Total (Ton-hrs)	Load (Tons)	Load (%)	25% Bin		50% Bin		75% Bin		100% Bin	
							(CWH)	(Ton-hrs)	(CWH)	(Ton-hrs)	(CWH)	(Ton-hrs)	(CWH)	(Ton-hrs)
97.5	67.5	82	5,536	102,500	1,250	100	0	0	0	0	0	0	5,536	102,500
92.5	66.4	245	16,279	291,695	1,191	95	0	0	0	0	0	0	16,279	291,695
87.5	65.4	263	17,189	297,430	1,131	90	0	0	0	0	0	0	17,189	297,430
82.5	63.8	313	19,965	389,881	1,246	100	0	0	0	0	0	0	19,965	389,881
77.5	61.8	392	24,234	461,213	1,177	94	0	0	0	0	0	0	24,234	461,213
72.5	60.1	517	31,061	572,416	1,107	89	0	0	0	0	0	0	31,061	572,416
67.5	57.8	525	30,348	544,852	1,038	83	0	0	0	0	30,348	544,852	0	0
62.5	55.4	575	31,857	557,031	969	78	0	0	0	0	31,857	557,031	0	0
57.5	55.0	721	39,655	648,675	900	72	0	0	0	0	39,655	648,675	0	0
52.5	n/a	0	0	0	0	0	0	0	0	0	0	0	0	0
47.5	n/a	0	0	0	0	0	0	0	0	0	0	0	0	0
42.5	n/a	0	0	0	0	0	0	0	0	0	0	0	0	0
37.5	n/a	0	0	0	0	0	0	0	0	0	0	0	0	0
32.5	n/a	0	0	0	0	0	0	0	0	0	0	0	0	0
27.5	n/a	0	0	0	0	0	0	0	0	0	0	0	0	0
22.5	n/a	0	0	0	0	0	0	0	0	0	0	0	0	0
17.5	n/a	0	0	0	0	0	0	0	0	0	0	0	0	0
12.5	n/a	0	0	0	0	0	0	0	0	0	0	0	0	0
7.5	n/a	0	0	0	0	0	0	0	0	0	0	0	0	0
Totals:		3,633	216,124	3,865,692			0	0	0	0	101,859	1,750,558	114,264	2,115,135
Cust Wgt Factors:								0.000		0.000		0.453		0.547
Custom Entering Condenser Temperatures (F):								n/a		n/a		55.9		63.1

4d. Custom PLV Worksheet for CH-4 (Trane 650)

Avg DB (F)	Cond Temp (F)	Total (Hrs)	CWH	Total (Ton-hrs)	Load (Tons)	Load (%)	25% Bin		50% Bin		75% Bin		100% Bin	
							(CWH)	(Ton-hrs)	(CWH)	(Ton-hrs)	(CWH)	(Ton-hrs)	(CWH)	(Ton-hrs)
97.5	67.5	82	5,536	53,300	650	100	0	0	0	0	0	0	5,536	53,300
92.5	66.4	245	16,279	151,681	619	95	0	0	0	0	0	0	16,279	151,681
87.5	65.4	263	17,189	154,664	588	90	0	0	0	0	0	0	17,189	154,664
82.5	n/a	0	0	0	0	0	0	0	0	0	0	0	0	0
77.5	n/a	0	0	0	0	0	0	0	0	0	0	0	0	0
72.5	n/a	0	0	0	0	0	0	0	0	0	0	0	0	0
67.5	n/a	0	0	0	0	0	0	0	0	0	0	0	0	0
62.5	n/a	0	0	0	0	0	0	0	0	0	0	0	0	0
57.5	n/a	0	0	0	0	0	0	0	0	0	0	0	0	0
52.5	n/a	0	0	0	0	0	0	0	0	0	0	0	0	0
47.5	n/a	0	0	0	0	0	0	0	0	0	0	0	0	0
42.5	n/a	0	0	0	0	0	0	0	0	0	0	0	0	0
37.5	n/a	0	0	0	0	0	0	0	0	0	0	0	0	0
32.5	n/a	0	0	0	0	0	0	0	0	0	0	0	0	0
27.5	n/a	0	0	0	0	0	0	0	0	0	0	0	0	0
22.5	n/a	0	0	0	0	0	0	0	0	0	0	0	0	0
17.5	n/a	0	0	0	0	0	0	0	0	0	0	0	0	0
12.5	n/a	0	0	0	0	0	0	0	0	0	0	0	0	0
7.5	n/a	0	0	0	0	0	0	0	0	0	0	0	0	0
Totals:		590	39,004	359,645			0	0	0	0	0	0	39,004	359,645
Cust Wgt Factors:								0.000		0.000		0.000		1.000
Custom Entering Condenser Temperatures (F):								n/a		n/a		n/a		66.1

KEY for Custom PLV Worksheet table(s):
[Avg DB] = Midpoint temperature for bin.
[Cond Temp] = Entering condenser temperature for bin. Entering water temperature for water-cooled chillers. Entering air temperature for air-cooled chillers.
[Tot Hrs] = Hours of operation in bin.
[CWH] = Condenser temperature hours. [Tot Hrs] times [Cond Temp]. Later used to derive the four average entering condenser temperature values for the PLV calculation.
[Load] = Chiller load for bin.
[Load (%)] = Chiller load as a percentage of full load capacity.
[Total (Ton-hrs)] = Chiller [Load] times [Tot Hrs]. Later used to derive the four weighting factors for the PLV calculation.
[Bin (CWH)] = [CWH] values separated into the four PLV bins: 25%, 50%, 75% and 100% load according to chiller load for each bin.
[Bin (Ton-hrs)] = Values separated into the four PLV bins: 25%, 50%, 75% and 100% load according to the chiller load for each bin.
[Cust Wgt Factor] = The four custom PLV weighting factors. [Total (Ton-hrs)] for PLV Bin divided by [Total (Ton-hrs)] for the chiller.
[Cust Ent Cond Temps] = The four custom condenser temperature values for the PLV calculation = [Total (CWH)] for PLV bin divided by [Tot Hrs] in the PLV bin.

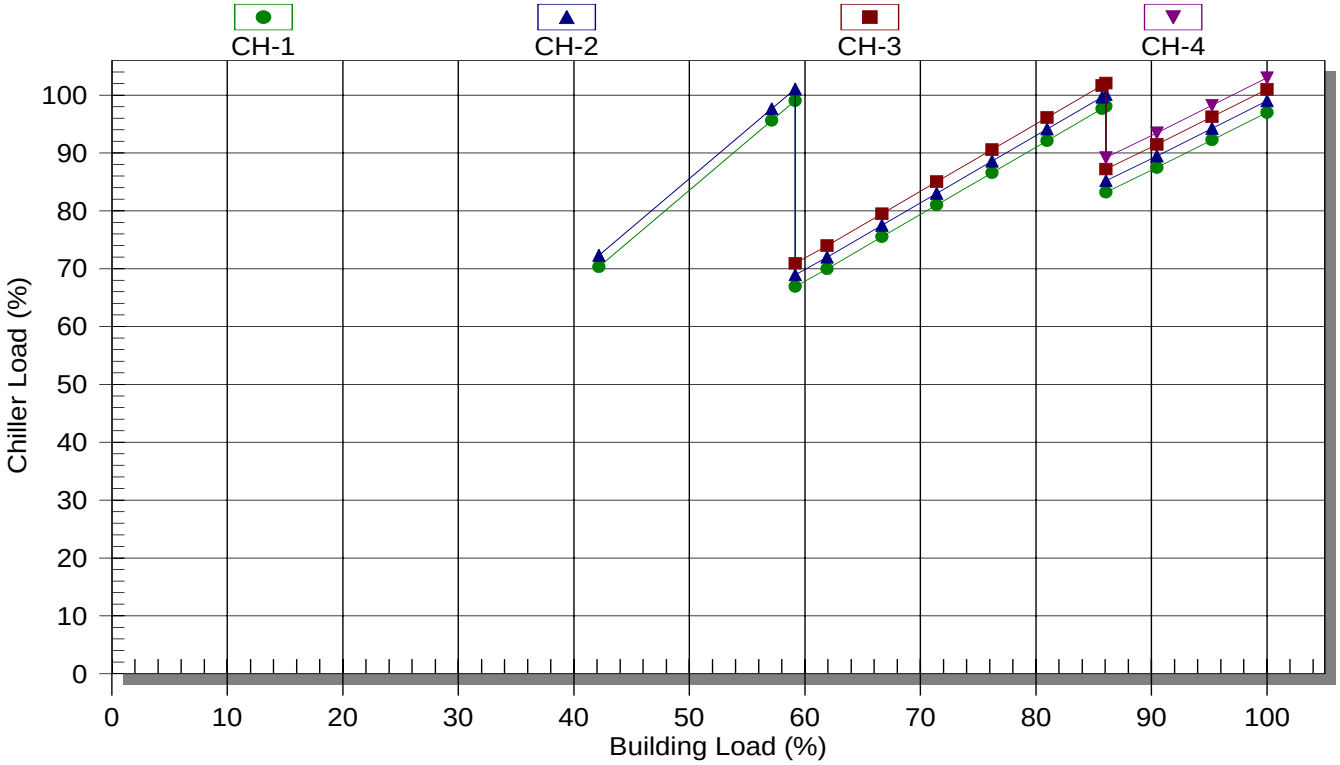

Note: Individual chiller curves in this graph have been adjusted up or down so the number of chillers operating at each point can be seen. If the curves had not been adjusted, all curves would lie on top of each other. Because of the adjustment each chiller load shown on the graph is only accurate to within a few percentage points plus or minus of the original calculated values.

2. Input Data Summary

Weather

City ..... Salt Lake City, Utah
Schedule ..... On All Day: Weekday
..... On All Day: Saturday
..... On All Day: Sunday

Loads

User-Defined Load Profile

Chiller System

Name ..... Combination C-1
Chillers in Plant 4
Plant Control ..... Sequenced
Full Load LCHWT ..... 44.0 F
Tower Configuration ..... One Tower for System
Cooling Tower ..... 6 Cell Tower (2)
..... Detailed Cooling Tower Model
Free Cooling ..... Plate-Frame Heat Exchanger

Sequence	Chiller Name	FL Capacity (Tons)	Full Load Power
CH-1	Carrier 1500 Ton VFD	1,500	0.482 kW/Ton
CH-2	Trane 1250	1,250	0.473 kW/Ton
CH-3	Carrier 1250 Ton Constant	1,250	0.467 kW/Ton
CH-4	Trane 650	650	0.473 kW/Ton

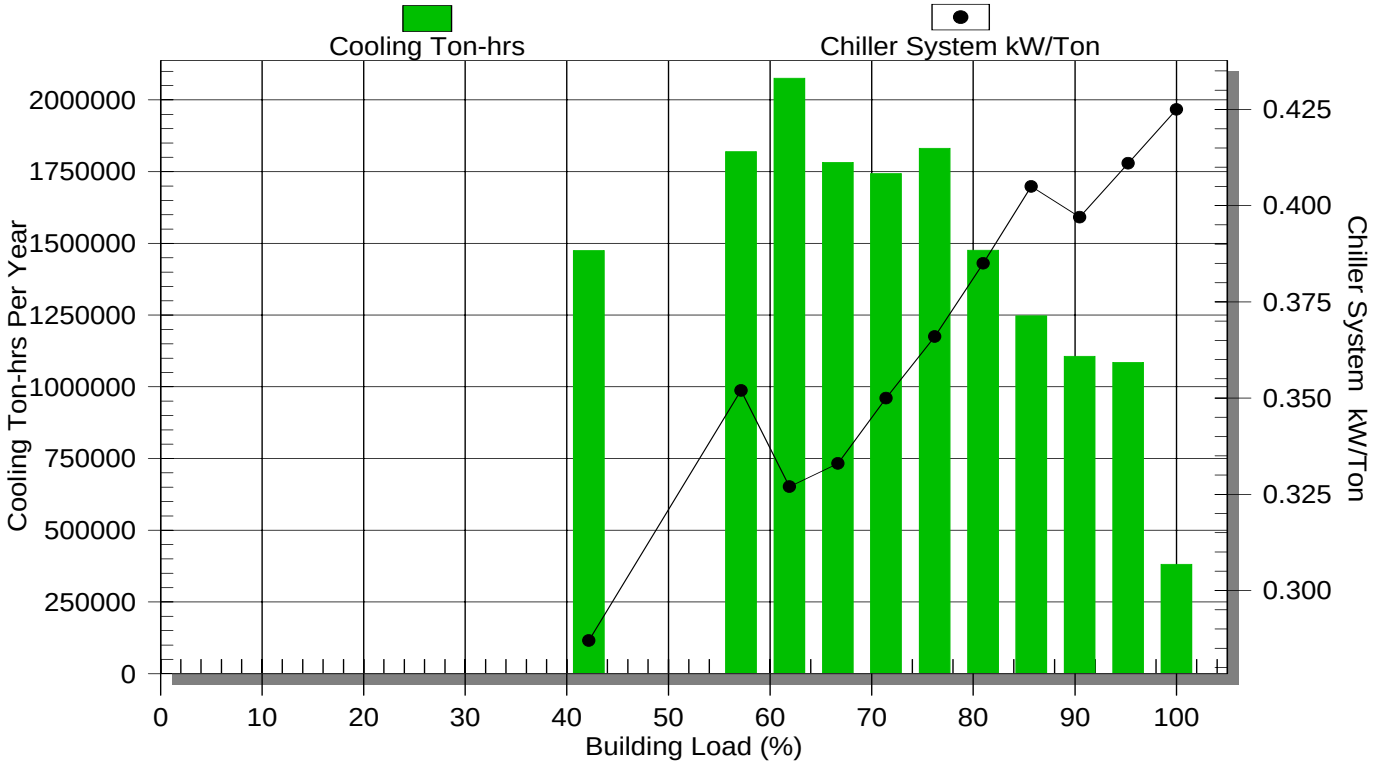

2. Input Data Summary

Weather

City ..... Salt Lake City, Utah
Schedule ..... On All Day: Weekday
..... On All Day: Saturday
..... On All Day: Sunday

Loads

User-Defined Load Profile

Chiller System

Name ..... Combination C-1
Chillers in Plant 4
Plant Control ..... Sequenced
Full Load LCHWT ..... 44.0 F
Tower Configuration ..... One Tower for System
Cooling Tower ..... 6 Cell Tower (2)
..... Detailed Cooling Tower Model
Free Cooling ..... Plate-Frame Heat Exchanger

Sequence	Chiller Name	FL Capacity (Tons)	Full Load Power
CH-1	Carrier 1500 Ton VFD	1,500	0.482 kW/Ton
CH-2	Trane 1250	1,250	0.473 kW/Ton
CH-3	Carrier 1250 Ton Constant	1,250	0.467 kW/Ton
CH-4	Trane 650	650	0.473 kW/Ton

1. Executive Summary

System Part Load Value (SPLV):	**PLV**
Combination C-1	0.354 kW/Ton
IPLV or NPLV (ARI 550/590-1998):	
Carrier 1500 Ton VFD	0.296 kW/Ton
Trane 1250	0.354 kW/Ton
Carrier 1250 Ton Constant	0.462 kW/Ton
Trane 650	0.354 kW/Ton

2. Input Data Summary

Weather

City ..... Salt Lake City, Utah
Schedule ..... On All Day: Weekday
..... On All Day: Saturday
..... On All Day: Sunday

Loads

User-Defined Load Profile

Chiller System

Name ..... Combination C-1
Chillers in Plant 4
Plant Control ..... Sequenced
Full Load LCHWT ..... 44.0 F
Tower Configuration ..... One Tower for System
Cooling Tower ..... 6 Cell Tower (2)
..... Detailed Cooling Tower Model
Free Cooling ..... Plate-Frame Heat Exchanger

Sequence	Chiller Name	FL Capacity (Tons)	Full Load Power
CH-1	Carrier 1500 Ton VFD	1,500	0.482 kW/Ton
CH-2	Trane 1250	1,250	0.473 kW/Ton
CH-3	Carrier 1250 Ton Constant	1,250	0.467 kW/Ton
CH-4	Trane 650	650	0.473 kW/Ton

3. Chiller System Operating Conditions

Bin Temp (F)	Bin MCWB (F)	Building Load (%)	Building Load (Tons)	Chillers On	Chiller Load (%)
97.5	61.5	100	4,650	4	100
92.5	60.5	95	4,429	4	95
87.5	59.5	90	4,207	4	90
82.5	57.9	86	3,986	3	100
77.5	55.9	81	3,765	3	94
72.5	54.2	76	3,543	3	89
67.5	51.9	71	3,321	3	83
62.5	49.5	67	3,100	3	78
57.5	47.1	62	2,879	3	72
52.5	43.8	57	2,657	2	97
47.5	40.4	42	1,961	2	71
42.5	36.9	37	1,740	0	0
37.5	33.4	33	1,518	0	0
32.5	29.4	28	1,297	0	0
27.5	25.1	23	1,076	0	0
22.5	20.8	18	855	0	0
17.5	16.0	14	633	0	0
12.5	11.2	9	412	0	0
7.5	5.9	4	191	0	0

4a. Chiller System Performance

	CH-1				CH-2				CH-3			
Bin Temp (F)	**Load (Tons)**	**(kW/ Ton)**	**Lchwt (F)**	**Cond Temp (F)**	**Load (Tons)**	**(kW/ Ton)**	**Lchwt (F)**	**Cond Temp (F)**	**Load (Tons)**	**(kW/ Ton)**	**Lchwt (F)**	**Cond Temp (F)**
97.5	1,500	0.433	44.00	67.52	1,250	0.412	44.00	67.52	1,250	0.433	44.00	67.52
92.5	1,429	0.411	44.00	66.45	1,191	0.398	44.00	66.45	1,191	0.430	44.00	66.45
87.5	1,357	0.387	44.00	65.36	1,131	0.384	44.00	65.36	1,131	0.427	44.00	65.36
82.5	1,495	0.411	44.00	63.78	1,246	0.380	44.00	63.78	1,246	0.422	44.00	63.78
77.5	1,412	0.380	44.00	61.82	1,177	0.359	44.00	61.82	1,177	0.417	44.00	61.82
72.5	1,329	0.348	44.00	60.08	1,107	0.341	44.00	60.08	1,107	0.413	44.00	60.08
67.5	1,245	0.312	44.00	57.80	1,038	0.337	44.00	57.80	1,038	0.410	44.00	57.80
62.5	1,163	0.271	44.00	55.40	969	0.333	44.00	55.40	969	0.409	44.00	55.40
57.5	1,080	0.249	44.00	55.00	900	0.333	44.00	55.00	900	0.413	44.00	55.00
52.5	1,449	0.358	44.00	55.00	1,208	0.345	44.00	55.00	0	0.000	44.00	n/a
47.5	1,070	0.248	44.00	55.00	891	0.334	44.00	55.00	0	0.000	44.00	n/a
42.5	0	0.000	44.00	n/a	0	0.000	44.00	n/a	0	0.000	44.00	n/a
37.5	0	0.000	44.00	n/a	0	0.000	44.00	n/a	0	0.000	44.00	n/a
32.5	0	0.000	44.00	n/a	0	0.000	44.00	n/a	0	0.000	44.00	n/a
27.5	0	0.000	44.00	n/a	0	0.000	44.00	n/a	0	0.000	44.00	n/a
22.5	0	0.000	44.00	n/a	0	0.000	44.00	n/a	0	0.000	44.00	n/a
17.5	0	0.000	44.00	n/a	0	0.000	44.00	n/a	0	0.000	44.00	n/a
12.5	0	0.000	44.00	n/a	0	0.000	44.00	n/a	0	0.000	44.00	n/a
7.5	0	0.000	44.00	n/a	0	0.000	44.00	n/a	0	0.000	44.00	n/a

Minimum ECWT condition has been reached for chiller(s): CH-1, CH-2, CH-3
Tower cycling assumed to hold minimum ECWT.

4b. Chiller System Performance

	CH-4				System	
Bin Temp (F)	**Load (Tons)**	**(kW/ Ton)**	**Lchwt (F)**	**Cond Temp (F)**	**Total (kW)**	**Total (kW/Ton)**
97.5	650	0.412	44.00	67.52	1974	0.425
92.5	619	0.398	44.00	66.45	1820	0.411
87.5	588	0.384	44.00	65.36	1668	0.397
82.5	0	0.000	44.00	n/a	1613	0.405
77.5	0	0.000	44.00	n/a	1450	0.385
72.5	0	0.000	44.00	n/a	1298	0.366
67.5	0	0.000	44.00	n/a	1164	0.350
62.5	0	0.000	44.00	n/a	1034	0.333
57.5	0	0.000	44.00	n/a	940	0.327
52.5	0	0.000	44.00	n/a	935	0.352
47.5	0	0.000	44.00	n/a	563	0.287
42.5	0	0.000	44.00	n/a	0	0.000
37.5	0	0.000	44.00	n/a	0	0.000
32.5	0	0.000	44.00	n/a	0	0.000
27.5	0	0.000	44.00	n/a	0	0.000
22.5	0	0.000	44.00	n/a	0	0.000
17.5	0	0.000	44.00	n/a	0	0.000
12.5	0	0.000	44.00	n/a	0	0.000
7.5	0	0.000	44.00	n/a	0	0.000

5. SPLV Worksheet

Bin Temp (F)	Building Load (%)	Building Load (Tons)	Cooling Hours	Cooling (Ton-hrs)	Bin Wgt Factor	System (kW/Ton)	Bin Ratio
97.5	100	4,650	82	381,300	0.0238	0.425	0.0560
92.5	95	4,429	245	1,085,105	0.0677	0.411	0.1648
87.5	90	4,207	263	1,106,441	0.0690	0.397	0.1741
82.5	86	3,986	313	1,247,618	0.0779	0.405	0.1924
77.5	81	3,765	392	1,475,880	0.0921	0.385	0.2391
72.5	76	3,543	517	1,831,731	0.1143	0.366	0.3121
67.5	71	3,321	525	1,743,525	0.1088	0.350	0.3105
62.5	67	3,100	575	1,782,500	0.1112	0.333	0.3336
57.5	62	2,879	721	2,075,759	0.1295	0.327	0.3967
52.5	57	2,657	685	1,820,045	0.1136	0.352	0.3227
47.5	42	1,961	752	1,474,672	0.0920	0.287	0.3207
42.5	37	1,740	776	0	0.0000	0.000	0.0000
37.5	33	1,518	857	0	0.0000	0.000	0.0000
32.5	28	1,297	828	0	0.0000	0.000	0.0000
27.5	23	1,076	671	0	0.0000	0.000	0.0000
22.5	18	855	221	0	0.0000	0.000	0.0000
17.5	14	633	135	0	0.0000	0.000	0.0000
12.5	9	412	70	0	0.0000	0.000	0.0000
7.5	4	191	132	0	0.0000	0.000	0.0000
Total:			5,070	16,024,576	1.0000		2.8228

Bin Wgt Factor = Bin Ton-hrs / Total Ton-hrs
Bin Ratio = [Bin Wgt Factor] / [System kW/Ton]
SPLV = 1 / [sum of Bin Ratios]
SPLV = 1 / [2.8228] = 0.354 kW/Ton

6. Procedure for Calculating IPLV for Chillers

Procedure for Calculating IPLV for Water-Cooled Electric Chillers

Chiller Load (%)	LCHWT (F)	Cond Temp (F)	Wgt Factor	Chiller (kW/Ton)	Bin Ratio
100	44.00	85.00	0.01	A	0.01/A
75	44.00	75.00	0.42	B	0.42/B
50	44.00	65.00	0.45	C	0.45/C
25	44.00	65.00	0.12	D	0.12/D
Total:			1.00		

IPLV = 1 / [sum of Bin Ratios]
IPLV = 1 / [0.10/A + 0.42/B + 0.45/C + 0.12/D]
per ARI Standard 550/590-1998

1. Summary of Custom Weighting Factors and ECWTs

	Custom Weighting Factors				Custom Entering Condenser Temperatures (F)			
Chiller	**25%**	**50%**	**75%**	**100%**	**25%**	**50%**	**75%**	**100%**
CH-1 - Carrier 2000 Ton VFD	0.000	0.000	0.400	0.600	n/a	n/a	56.9	59.4
CH-2 - Trane 1250	0.000	0.000	0.493	0.507	n/a	n/a	56.9	61.1
CH-3 - Carrier 1500 Ton Constant	0.000	0.000	0.599	0.401	n/a	n/a	56.9	64.3
CH-4 - Trane 650	0.000	0.000	0.000	1.000	n/a	n/a	n/a	66.1

2. Input Data Summary

Weather

City ..... Salt Lake City, Utah
Schedule ..... On All Day: Weekday
..... On All Day: Saturday
..... On All Day: Sunday

Loads

User-Defined Load Profile

Chiller System

Name ..... Combination D
Chillers in Plant 4
Plant Control ..... Sequenced
Full Load LCHWT ..... 44.0 F
Tower Configuration ..... One Tower for System
Cooling Tower ..... 6 Cell Tower (1)
..... Detailed Cooling Tower Model
Free Cooling ..... Plate-Frame Heat Exchanger

Sequence	Chiller Name	FL Capacity (Tons)	Full Load Power
CH-1	Carrier 2000 Ton VFD	2,009	0.490 kW/Ton
CH-2	Trane 1250	1,250	0.473 kW/Ton
CH-3	Carrier 1500 Ton Constant	1,500	0.458 kW/Ton
CH-4	Trane 650	650	0.473 kW/Ton

3. Chiller System Operating Conditions

Bin Temp (F)	Bin MCWB (F)	Building Load (%)	Building Load (Tons)	Chillers On	Chiller Load (%)
97.5	61.5	100	5,400	4	100
92.5	60.5	95	5,143	4	95
87.5	59.5	90	4,885	4	90
82.5	57.9	86	4,628	3	97
77.5	55.9	81	4,371	3	92
72.5	54.2	76	4,116	3	86
67.5	51.9	71	3,858	3	81
62.5	49.5	67	3,601	3	76
57.5	47.1	62	3,343	3	70
52.5	43.8	57	3,086	2	95
47.5	40.4	42	2,277	1	113
42.5	36.9	37	2,021	0	0
37.5	33.4	33	1,764	0	0
32.5	29.4	28	1,507	0	0
27.5	25.1	23	1,250	0	0
22.5	20.8	18	993	0	0
17.5	16.0	14	735	0	0
12.5	11.2	9	478	0	0
7.5	5.9	4	221	0	0

4a. Custom PLV Worksheet for CH-1 (Carrier 2000 Ton VFD)

Avg DB (F)	Cond Temp (F)	Total (Hrs)	CWH	Total (Ton-hrs)	Load (Tons)	Load (%)	25% Bin		50% Bin		75% Bin		100% Bin	
							(CWH)	(Ton-hrs)	(CWH)	(Ton-hrs)	(CWH)	(Ton-hrs)	(CWH)	(Ton-hrs)
97.5	67.5	82	5,537	164,464	2,006	100	0	0	0	0	0	0	5,537	164,464
92.5	66.5	245	16,282	468,000	1,910	95	0	0	0	0	0	0	16,282	468,000
87.5	65.4	263	17,192	477,181	1,814	90	0	0	0	0	0	0	17,192	477,181
82.5	63.8	313	19,967	611,508	1,954	97	0	0	0	0	0	0	19,967	611,508
77.5	61.8	392	24,237	723,321	1,845	92	0	0	0	0	0	0	24,237	723,321
72.5	60.1	517	31,066	898,318	1,738	86	0	0	0	0	31,066	898,318	0	0
67.5	57.8	525	30,349	855,039	1,629	81	0	0	0	0	30,349	855,039	0	0
62.5	55.4	575	31,852	874,088	1,520	76	0	0	0	0	31,852	874,088	0	0
57.5	55.0	721	39,655	1,017,503	1,411	70	0	0	0	0	39,655	1,017,503	0	0
52.5	55.0	685	37,675	1,303,113	1,902	95	0	0	0	0	0	0	37,675	1,303,113
47.5	55.0	752	41,360	1,712,304	2,277	113	0	0	0	0	0	0	41,360	1,712,304
42.5	n/a	0	0	0	0	0	0	0	0	0	0	0	0	0
37.5	n/a	0	0	0	0	0	0	0	0	0	0	0	0	0
32.5	n/a	0	0	0	0	0	0	0	0	0	0	0	0	0
27.5	n/a	0	0	0	0	0	0	0	0	0	0	0	0	0
22.5	n/a	0	0	0	0	0	0	0	0	0	0	0	0	0
17.5	n/a	0	0	0	0	0	0	0	0	0	0	0	0	0
12.5	n/a	0	0	0	0	0	0	0	0	0	0	0	0	0
7.5	n/a	0	0	0	0	0	0	0	0	0	0	0	0	0
Totals:		5,070	295,171	9,104,838			0	0	0	0	132,921	3,644,948	162,250	5,459,891
Cust Wgt Factors:								0.000		0.000		0.400		0.600
Custom Entering Condenser Temperatures (F):								n/a		n/a		56.9		59.4

4b. Custom PLV Worksheet for CH-2 (Trane 1250)

Avg DB (F)	Cond Temp (F)	Total (Hrs)	CWH	Total (Ton-hrs)	Load (Tons)	Load (%)	25% Bin		50% Bin		75% Bin		100% Bin	
							(CWH)	(Ton-hrs)	(CWH)	(Ton-hrs)	(CWH)	(Ton-hrs)	(CWH)	(Ton-hrs)
97.5	67.5	82	5,537	102,329	1,248	100	0	0	0	0	0	0	5,537	102,329
92.5	66.5	245	16,282	291,189	1,189	95	0	0	0	0	0	0	16,282	291,189
87.5	65.4	263	17,192	296,902	1,129	90	0	0	0	0	0	0	17,192	296,902
82.5	63.8	313	19,967	380,480	1,216	97	0	0	0	0	0	0	19,967	380,480
77.5	61.8	392	24,237	450,050	1,148	92	0	0	0	0	0	0	24,237	450,050
72.5	60.1	517	31,066	558,934	1,081	86	0	0	0	0	31,066	558,934	0	0
67.5	57.8	525	30,349	532,005	1,013	81	0	0	0	0	30,349	532,005	0	0
62.5	55.4	575	31,852	543,858	946	76	0	0	0	0	31,852	543,858	0	0
57.5	55.0	721	39,655	633,091	878	70	0	0	0	0	39,655	633,091	0	0
52.5	55.0	685	37,675	810,797	1,184	95	0	0	0	0	0	0	37,675	810,797
47.5	n/a	0	0	0	0	0	0	0	0	0	0	0	0	0
42.5	n/a	0	0	0	0	0	0	0	0	0	0	0	0	0
37.5	n/a	0	0	0	0	0	0	0	0	0	0	0	0	0
32.5	n/a	0	0	0	0	0	0	0	0	0	0	0	0	0
27.5	n/a	0	0	0	0	0	0	0	0	0	0	0	0	0
22.5	n/a	0	0	0	0	0	0	0	0	0	0	0	0	0
17.5	n/a	0	0	0	0	0	0	0	0	0	0	0	0	0
12.5	n/a	0	0	0	0	0	0	0	0	0	0	0	0	0
7.5	n/a	0	0	0	0	0	0	0	0	0	0	0	0	0
Totals:		4,318	253,811	4,599,636			0	0	0	0	132,921	2,267,887	120,890	2,331,749
Cust Wgt Factors:								0.000		0.000		0.493		0.507
Custom Entering Condenser Temperatures (F):								n/a		n/a		56.9		61.1

4c. Custom PLV Worksheet for CH-3 (Carrier 1500 Ton Constant)

Avg DB (F)	Cond Temp (F)	Total (Hrs)	CWH	Total (Ton-hrs)	Load (Tons)	Load (%)	25% Bin		50% Bin		75% Bin		100% Bin	
							(CWH)	(Ton-hrs)	(CWH)	(Ton-hrs)	(CWH)	(Ton-hrs)	(CWH)	(Ton-hrs)
97.5	67.5	82	5,537	122,795	1,498	100	0	0	0	0	0	0	5,537	122,795
92.5	66.5	245	16,282	349,427	1,426	95	0	0	0	0	0	0	16,282	349,427
87.5	65.4	263	17,192	356,283	1,355	90	0	0	0	0	0	0	17,192	356,283
82.5	63.8	313	19,967	456,576	1,459	97	0	0	0	0	0	0	19,967	456,576
77.5	61.8	392	24,237	540,061	1,378	92	0	0	0	0	0	0	24,237	540,061
72.5	60.1	517	31,066	670,720	1,297	86	0	0	0	0	31,066	670,720	0	0
67.5	57.8	525	30,349	638,406	1,216	81	0	0	0	0	30,349	638,406	0	0
62.5	55.4	575	31,852	652,629	1,135	76	0	0	0	0	31,852	652,629	0	0
57.5	55.0	721	39,655	759,709	1,054	70	0	0	0	0	39,655	759,709	0	0
52.5	n/a	0	0	0	0	0	0	0	0	0	0	0	0	0
47.5	n/a	0	0	0	0	0	0	0	0	0	0	0	0	0
42.5	n/a	0	0	0	0	0	0	0	0	0	0	0	0	0
37.5	n/a	0	0	0	0	0	0	0	0	0	0	0	0	0
32.5	n/a	0	0	0	0	0	0	0	0	0	0	0	0	0
27.5	n/a	0	0	0	0	0	0	0	0	0	0	0	0	0
22.5	n/a	0	0	0	0	0	0	0	0	0	0	0	0	0
17.5	n/a	0	0	0	0	0	0	0	0	0	0	0	0	0
12.5	n/a	0	0	0	0	0	0	0	0	0	0	0	0	0
7.5	n/a	0	0	0	0	0	0	0	0	0	0	0	0	0
Totals:		3,633	216,136	4,546,607			0	0	0	0	132,921	2,721,465	83,215	1,825,142
Cust Wgt Factors:								0.000		0.000		0.599		0.401
Custom Entering Condenser Temperatures (F):								n/a		n/a		56.9		64.3

4d. Custom PLV Worksheet for CH-4 (Trane 650)

Avg DB (F)	Cond Temp (F)	Total (Hrs)	CWH	Total (Ton-hrs)	Load (Tons)	Load (%)	25% Bin		50% Bin		75% Bin		100% Bin	
							(CWH)	(Ton-hrs)	(CWH)	(Ton-hrs)	(CWH)	(Ton-hrs)	(CWH)	(Ton-hrs)
97.5	67.5	82	5,537	53,211	649	100	0	0	0	0	0	0	5,537	53,211
92.5	66.5	245	16,282	151,419	618	95	0	0	0	0	0	0	16,282	151,419
87.5	65.4	263	17,192	154,389	587	90	0	0	0	0	0	0	17,192	154,389
82.5	n/a	0	0	0	0	0	0	0	0	0	0	0	0	0
77.5	n/a	0	0	0	0	0	0	0	0	0	0	0	0	0
72.5	n/a	0	0	0	0	0	0	0	0	0	0	0	0	0
67.5	n/a	0	0	0	0	0	0	0	0	0	0	0	0	0
62.5	n/a	0	0	0	0	0	0	0	0	0	0	0	0	0
57.5	n/a	0	0	0	0	0	0	0	0	0	0	0	0	0
52.5	n/a	0	0	0	0	0	0	0	0	0	0	0	0	0
47.5	n/a	0	0	0	0	0	0	0	0	0	0	0	0	0
42.5	n/a	0	0	0	0	0	0	0	0	0	0	0	0	0
37.5	n/a	0	0	0	0	0	0	0	0	0	0	0	0	0
32.5	n/a	0	0	0	0	0	0	0	0	0	0	0	0	0
27.5	n/a	0	0	0	0	0	0	0	0	0	0	0	0	0
22.5	n/a	0	0	0	0	0	0	0	0	0	0	0	0	0
17.5	n/a	0	0	0	0	0	0	0	0	0	0	0	0	0
12.5	n/a	0	0	0	0	0	0	0	0	0	0	0	0	0
7.5	n/a	0	0	0	0	0	0	0	0	0	0	0	0	0
Totals:		590	39,011	359,019			0	0	0	0	0	0	39,011	359,019
Cust Wgt Factors:								0.000		0.000		0.000		1.000
Custom Entering Condenser Temperatures (F):								n/a		n/a		n/a		66.1

KEY for Custom PLV Worksheet table(s):
[Avg DB] = Midpoint temperature for bin.
[Cond Temp] = Entering condenser temperature for bin. Entering water temperature for water-cooled chillers. Entering air temperature for air-cooled chillers.
[Tot Hrs] = Hours of operation in bin.
[CWH] = Condenser temperature hours. [Tot Hrs] times [Cond Temp]. Later used to derive the four average entering condenser temperature values for the PLV calculation.
[Load] = Chiller load for bin.
[Load (%)] = Chiller load as a percentage of full load capacity.
[Total (Ton-hrs)] = Chiller [Load] times [Tot Hrs]. Later used to derive the four weighting factors for the PLV calculation.
[Bin (CWH)] = [CWH] values separated into the four PLV bins: 25%, 50%, 75% and 100% load according to chiller load for each bin.
[Bin (Ton-hrs)] = Values separated into the four PLV bins: 25%, 50%, 75% and 100% load according to the chiller load for each bin.
[Cust Wgt Factor] = The four custom PLV weighting factors. [Total (Ton-hrs)] for PLV Bin divided by [Total (Ton-hrs)] for the chiller.
[Cust Ent Cond Temps] = The four custom condenser temperature values for the PLV calculation = [Total (CWH)] for PLV bin divided by [Tot Hrs] in the PLV bin.

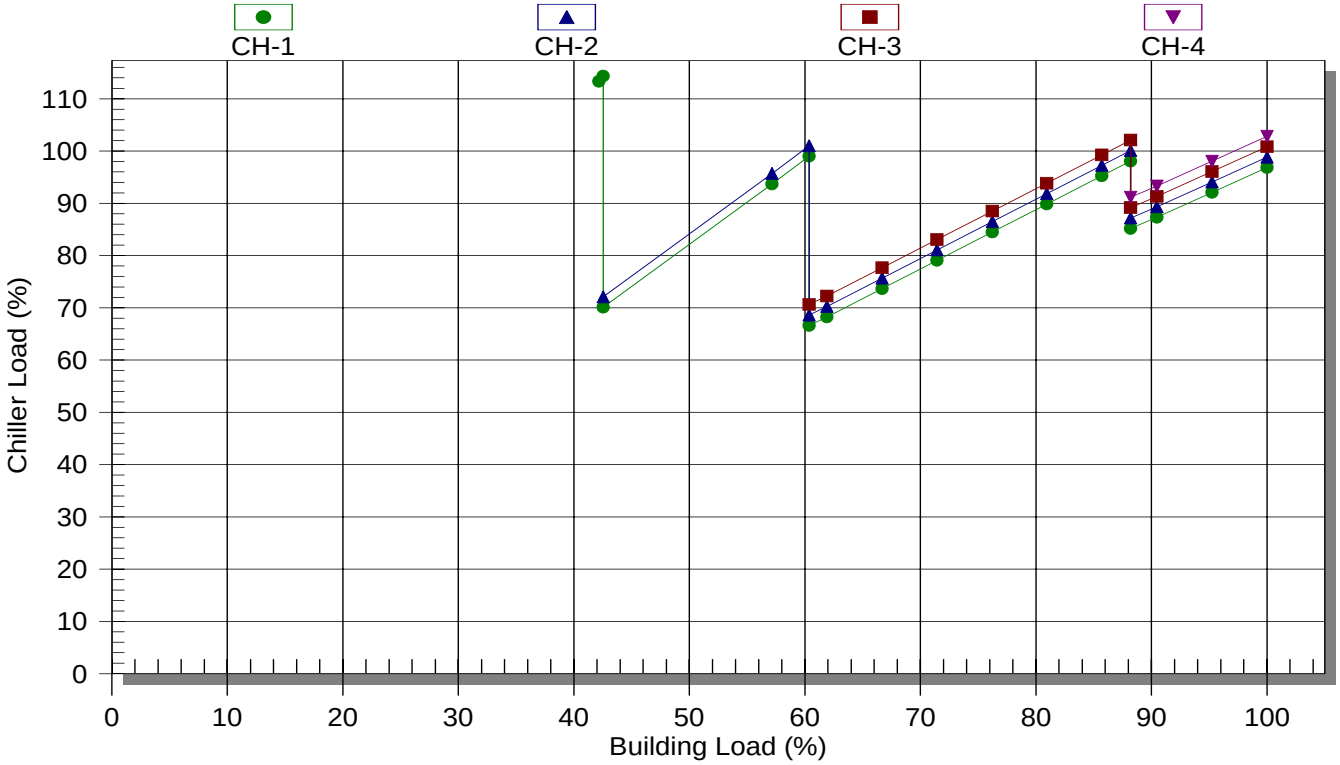

Note: Individual chiller curves in this graph have been adjusted up or down so the number of chillers operating at each point can be seen. If the curves had not been adjusted, all curves would lie on top of each other. Because of the adjustment each chiller load shown on the graph is only accurate to within a few percentage points plus or minus of the original calculated values.

2. Input Data Summary

Weather

City ..... Salt Lake City, Utah
Schedule ..... On All Day: Weekday
..... On All Day: Saturday
..... On All Day: Sunday

Loads

User-Defined Load Profile

Chiller System

Name ..... Combination D
Chillers in Plant 4
Plant Control ..... Sequenced
Full Load LCHWT ..... 44.0 F
Tower Configuration ..... One Tower for System
Cooling Tower ..... 6 Cell Tower (1)
..... Detailed Cooling Tower Model
Free Cooling ..... Plate-Frame Heat Exchanger

Sequence	Chiller Name	FL Capacity (Tons)	Full Load Power
CH-1	Carrier 2000 Ton VFD	2,009	0.490 kW/Ton
CH-2	Trane 1250	1,250	0.473 kW/Ton
CH-3	Carrier 1500 Ton Constant	1,500	0.458 kW/Ton
CH-4	Trane 650	650	0.473 kW/Ton

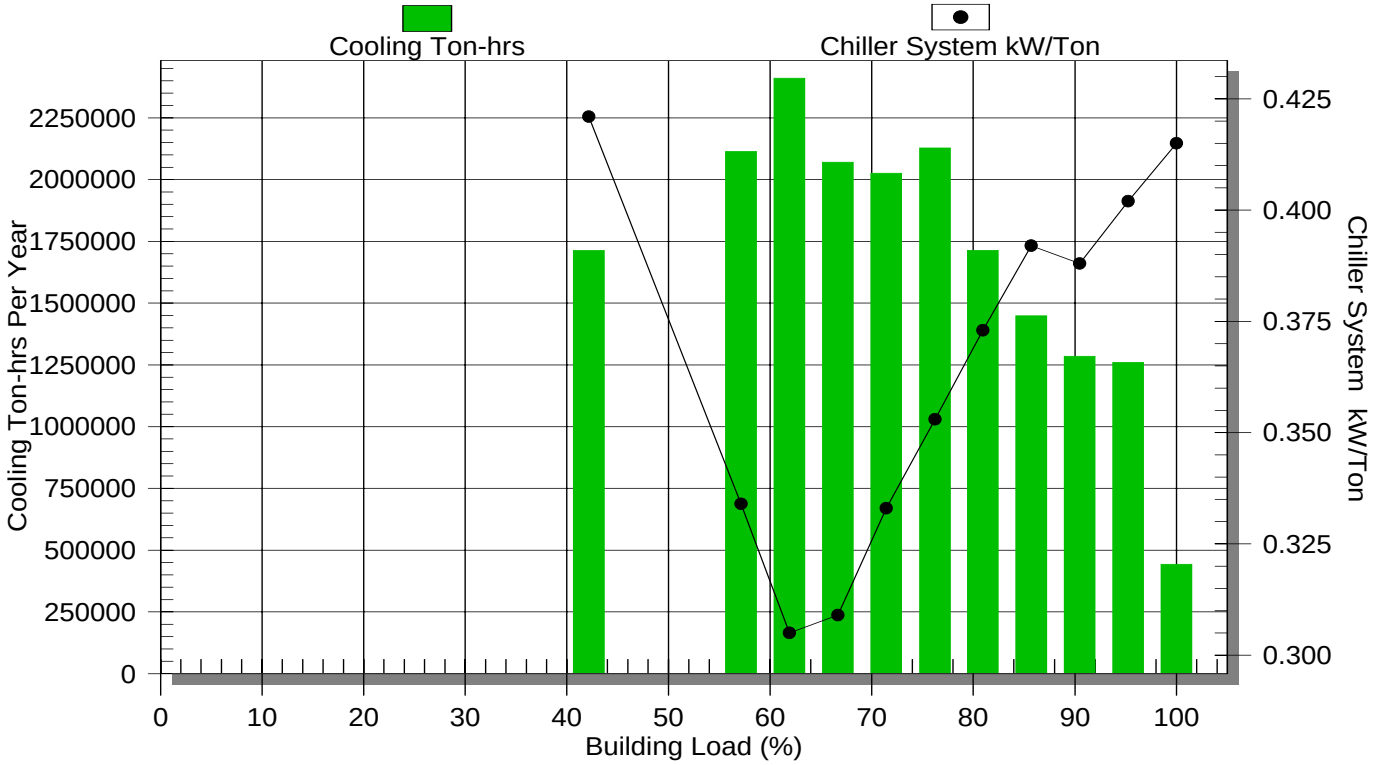

2. Input Data Summary

Weather

City ..... Salt Lake City, Utah
Schedule ..... On All Day: Weekday
..... On All Day: Saturday
..... On All Day: Sunday

Loads

User-Defined Load Profile

Chiller System

Name ..... Combination D
Chillers in Plant 4
Plant Control ..... Sequenced
Full Load LCHWT ..... 44.0 F
Tower Configuration ..... One Tower for System
Cooling Tower ..... 6 Cell Tower (1)
..... Detailed Cooling Tower Model
Free Cooling ..... Plate-Frame Heat Exchanger

Sequence	Chiller Name	FL Capacity (Tons)	Full Load Power
CH-1	Carrier 2000 Ton VFD	2,009	0.490 kW/Ton
CH-2	Trane 1250	1,250	0.473 kW/Ton
CH-3	Carrier 1500 Ton Constant	1,500	0.458 kW/Ton
CH-4	Trane 650	650	0.473 kW/Ton

1. Executive Summary

System Part Load Value (SPLV):	**PLV**
Combination D	0.352 kW/Ton
IPLV or NPLV (ARI 550/590-1998):	
Carrier 2000 Ton VFD	0.300 kW/Ton
Trane 1250	0.354 kW/Ton
Carrier 1500 Ton Constant	0.449 kW/Ton
Trane 650	0.354 kW/Ton

2. Input Data Summary

Weather

City ..... Salt Lake City, Utah
Schedule ..... On All Day: Weekday
..... On All Day: Saturday
..... On All Day: Sunday

Loads

User-Defined Load Profile

Chiller System

Name ..... Combination D
Chillers in Plant 4
Plant Control ..... Sequenced
Full Load LCHWT ..... 44.0 F
Tower Configuration ..... One Tower for System
Cooling Tower ..... 6 Cell Tower (1)
..... Detailed Cooling Tower Model
Free Cooling ..... Plate-Frame Heat Exchanger

Sequence	Chiller Name	FL Capacity (Tons)	Full Load Power
CH-1	Carrier 2000 Ton VFD	2,009	0.490 kW/Ton
CH-2	Trane 1250	1,250	0.473 kW/Ton
CH-3	Carrier 1500 Ton Constant	1,500	0.458 kW/Ton
CH-4	Trane 650	650	0.473 kW/Ton

3. Chiller System Operating Conditions

Bin Temp (F)	Bin MCWB (F)	Building Load (%)	Building Load (Tons)	Chillers On	Chiller Load (%)
97.5	61.5	100	5,400	4	100
92.5	60.5	95	5,143	4	95
87.5	59.5	90	4,885	4	90
82.5	57.9	86	4,628	3	97
77.5	55.9	81	4,371	3	92
72.5	54.2	76	4,116	3	86
67.5	51.9	71	3,858	3	81
62.5	49.5	67	3,601	3	76
57.5	47.1	62	3,343	3	70
52.5	43.8	57	3,086	2	95
47.5	40.4	42	2,277	1	113
42.5	36.9	37	2,021	0	0
37.5	33.4	33	1,764	0	0
32.5	29.4	28	1,507	0	0
27.5	25.1	23	1,250	0	0
22.5	20.8	18	993	0	0
17.5	16.0	14	735	0	0
12.5	11.2	9	478	0	0
7.5	5.9	4	221	0	0

4a. Chiller System Performance

	CH-1				CH-2				CH-3			
Bin Temp (F)	Load (Tons)	(kW/ Ton)	Lchwt (F)	Cond Temp (F)	Load (Tons)	(kW/ Ton)	Lchwt (F)	Cond Temp (F)	Load (Tons)	(kW/ Ton)	Lchwt (F)	Cond Temp (F)
97.5	2,006	0.404	44.00	67.53	1,248	0.412	44.00	67.53	1,498	0.434	44.00	67.53
92.5	1,910	0.385	44.00	66.46	1,189	0.398	44.00	66.46	1,426	0.429	44.00	66.46
87.5	1,814	0.363	44.00	65.37	1,129	0.384	44.00	65.37	1,355	0.425	44.00	65.37
82.5	1,954	0.378	44.00	63.79	1,216	0.378	44.00	63.79	1,459	0.423	44.00	63.79
77.5	1,845	0.349	44.00	61.83	1,148	0.357	44.00	61.83	1,378	0.416	44.00	61.83
72.5	1,738	0.318	44.00	60.09	1,081	0.340	44.00	60.09	1,297	0.411	44.00	60.09
67.5	1,629	0.277	44.00	57.81	1,013	0.336	44.00	57.81	1,216	0.406	44.00	57.81
62.5	1,520	0.224	44.00	55.39	946	0.332	44.00	55.39	1,135	0.403	44.00	55.39
57.5	1,411	0.214	44.00	55.00	878	0.335	44.00	55.00	1,054	0.404	44.00	55.00
52.5	1,902	0.327	44.00	55.00	1,184	0.344	44.00	55.00	0	0.000	44.00	n/a
47.5	2,277	0.421	44.00	55.00	0	0.000	44.00	n/a	0	0.000	44.00	n/a
42.5	0	0.000	44.00	n/a	0	0.000	44.00	n/a	0	0.000	44.00	n/a
37.5	0	0.000	44.00	n/a	0	0.000	44.00	n/a	0	0.000	44.00	n/a
32.5	0	0.000	44.00	n/a	0	0.000	44.00	n/a	0	0.000	44.00	n/a
27.5	0	0.000	44.00	n/a	0	0.000	44.00	n/a	0	0.000	44.00	n/a
22.5	0	0.000	44.00	n/a	0	0.000	44.00	n/a	0	0.000	44.00	n/a
17.5	0	0.000	44.00	n/a	0	0.000	44.00	n/a	0	0.000	44.00	n/a
12.5	0	0.000	44.00	n/a	0	0.000	44.00	n/a	0	0.000	44.00	n/a
7.5	0	0.000	44.00	n/a	0	0.000	44.00	n/a	0	0.000	44.00	n/a

Minimum ECWT condition has been reached for chiller(s): CH-1, CH-2, CH-3
Tower cycling assumed to hold minimum ECWT.

4b. Chiller System Performance

	CH-4				System	
Bin Temp (F)	**Load (Tons)**	**(kW/ Ton)**	**Lchwt (F)**	**Cond Temp (F)**	**Total (kW)**	**Total (kW/Ton)**
97.5	649	0.412	44.00	67.53	2243	0.415
92.5	618	0.398	44.00	66.46	2067	0.402
87.5	587	0.384	44.00	65.37	1894	0.388
82.5	0	0.000	44.00	n/a	1814	0.392
77.5	0	0.000	44.00	n/a	1628	0.373
72.5	0	0.000	44.00	n/a	1454	0.353
67.5	0	0.000	44.00	n/a	1285	0.333
62.5	0	0.000	44.00	n/a	1112	0.309
57.5	0	0.000	44.00	n/a	1020	0.305
52.5	0	0.000	44.00	n/a	1030	0.334
47.5	0	0.000	44.00	n/a	958	0.421
42.5	0	0.000	44.00	n/a	0	0.000
37.5	0	0.000	44.00	n/a	0	0.000
32.5	0	0.000	44.00	n/a	0	0.000
27.5	0	0.000	44.00	n/a	0	0.000
22.5	0	0.000	44.00	n/a	0	0.000
17.5	0	0.000	44.00	n/a	0	0.000
12.5	0	0.000	44.00	n/a	0	0.000
7.5	0	0.000	44.00	n/a	0	0.000

5. SPLV Worksheet

Bin Temp (F)	Building Load (%)	Building Load (Tons)	Cooling Hours	Cooling (Ton-hrs)	Bin Wgt Factor	System (kW/Ton)	Bin Ratio
97.5	100	5,400	82	442,800	0.0238	0.415	0.0573
92.5	95	5,143	245	1,260,035	0.0677	0.402	0.1685
87.5	90	4,885	263	1,284,755	0.0690	0.388	0.1781
82.5	86	4,628	313	1,448,564	0.0778	0.392	0.1985
77.5	81	4,371	392	1,713,432	0.0921	0.373	0.2471
72.5	76	4,116	517	2,127,972	0.1143	0.353	0.3237
67.5	71	3,858	525	2,025,450	0.1088	0.333	0.3267
62.5	67	3,601	575	2,070,575	0.1113	0.309	0.3604
57.5	62	3,343	721	2,410,303	0.1295	0.305	0.4243
52.5	57	3,086	685	2,113,910	0.1136	0.334	0.3402
47.5	42	2,277	752	1,712,304	0.0920	0.421	0.2187
42.5	37	2,021	776	0	0.0000	0.000	0.0000
37.5	33	1,764	857	0	0.0000	0.000	0.0000
32.5	28	1,507	828	0	0.0000	0.000	0.0000
27.5	23	1,250	671	0	0.0000	0.000	0.0000
22.5	18	993	221	0	0.0000	0.000	0.0000
17.5	14	735	135	0	0.0000	0.000	0.0000
12.5	9	478	70	0	0.0000	0.000	0.0000
7.5	4	221	132	0	0.0000	0.000	0.0000
Total:			5,070	18,610,100	1.0000		2.8435

Bin Wgt Factor = Bin Ton-hrs / Total Ton-hrs
Bin Ratio = [Bin Wgt Factor] / [System kW/Ton]
SPLV = 1 / [sum of Bin Ratios]
SPLV = 1 / [2.8435] = 0.352 kW/Ton

6. Procedure for Calculating IPLV for Chillers

Procedure for Calculating IPLV for Water-Cooled Electric Chillers

Chiller Load (%)	LCHWT (F)	Cond Temp (F)	Wgt Factor	Chiller (kW/Ton)	Bin Ratio
100	44.00	85.00	0.01	A	0.01/A
75	44.00	75.00	0.42	B	0.42/B
50	44.00	65.00	0.45	C	0.45/C
25	44.00	65.00	0.12	D	0.12/D
Total:			1.00		

IPLV = 1 / [sum of Bin Ratios]
IPLV = 1 / [0.10/A + 0.42/B + 0.45/C + 0.12/D]
per ARI Standard 550/590-1998

1. Summary of Custom Weighting Factors and ECWTs

	Custom Weighting Factors				Custom Entering Condenser Temperatures (F)			
Chiller	**25%**	**50%**	**75%**	**100%**	**25%**	**50%**	**75%**	**100%**
CH-1 - Carrier 2000 Ton VFD	0.000	0.000	0.555	0.445	n/a	n/a	56.4	61.1
CH-2 - Trane 1250	0.000	0.000	0.555	0.445	n/a	n/a	56.4	61.1
CH-3 - Carrier 1700 Ton Constant	0.000	0.000	0.598	0.402	n/a	n/a	56.9	64.3
CH-4 - Trane 650	0.000	0.000	0.000	1.000	n/a	n/a	n/a	66.1

2. Input Data Summary

Weather

City ..... Salt Lake City, Utah
Schedule ..... On All Day: Weekday
..... On All Day: Saturday
..... On All Day: Sunday

Loads

User-Defined Load Profile

Chiller System

Name ..... Combination E
Chillers in Plant 4
Plant Control ..... Sequenced
Full Load LCHWT ..... 44.0 F
Tower Configuration ..... One Tower for System
Cooling Tower ..... 6 Cell Tower (1)
..... Detailed Cooling Tower Model
Free Cooling ..... Plate-Frame Heat Exchanger

Sequence	Chiller Name	FL Capacity (Tons)	Full Load Power
CH-1	Carrier 2000 Ton VFD	2,009	0.490 kW/Ton
CH-2	Trane 1250	1,250	0.473 kW/Ton
CH-3	Carrier 1700 Ton Constant	1,732	0.470 kW/Ton
CH-4	Trane 650	650	0.473 kW/Ton

3. Chiller System Operating Conditions

Bin Temp (F)	Bin MCWB (F)	Building Load (%)	Building Load (Tons)	Chillers On	Chiller Load (%)
97.5	61.5	100	5,600	4	99
92.5	60.5	95	5,334	4	95
87.5	59.5	90	5,066	4	90
82.5	57.9	86	4,799	3	96
77.5	55.9	81	4,533	3	91
72.5	54.2	76	4,268	3	86
67.5	51.9	71	4,000	3	80
62.5	49.5	67	3,734	3	75
57.5	47.1	62	3,467	3	69
52.5	43.8	57	3,200	2	98
47.5	40.4	42	2,361	2	72
42.5	36.9	37	2,096	0	0
37.5	33.4	33	1,829	0	0
32.5	29.4	28	1,563	0	0
27.5	25.1	23	1,296	0	0
22.5	20.8	17	968	0	0
17.5	16.0	14	762	0	0
12.5	11.2	17	956	0	0
7.5	5.9	4	229	0	0

4a. Custom PLV Worksheet for CH-1 (Carrier 2000 Ton VFD)

Avg DB (F)	Cond Temp (F)	Total (Hrs)	CWH	Total (Ton-hrs)	Load (Tons)	Load (%)	25% Bin		50% Bin		75% Bin		100% Bin	
							(CWH)	(Ton-hrs)	(CWH)	(Ton-hrs)	(CWH)	(Ton-hrs)	(CWH)	(Ton-hrs)
97.5	67.5	82	5,537	163,541	1,994	99	0	0	0	0	0	0	5,537	163,541
92.5	66.5	245	16,282	465,374	1,899	95	0	0	0	0	0	0	16,282	465,374
87.5	65.4	263	17,192	474,509	1,804	90	0	0	0	0	0	0	17,192	474,509
82.5	63.8	313	19,966	604,627	1,932	96	0	0	0	0	0	0	19,966	604,627
77.5	61.8	392	24,237	715,260	1,825	91	0	0	0	0	0	0	24,237	715,260
72.5	60.1	517	31,067	888,193	1,718	86	0	0	0	0	31,067	888,193	0	0
67.5	57.8	525	30,351	845,302	1,610	80	0	0	0	0	30,351	845,302	0	0
62.5	55.4	575	31,857	864,240	1,503	75	0	0	0	0	31,857	864,240	0	0
57.5	55.0	721	39,655	1,006,193	1,396	69	0	0	0	0	39,655	1,006,193	0	0
52.5	55.0	685	37,675	1,351,251	1,973	98	0	0	0	0	0	0	37,675	1,351,251
47.5	55.0	752	41,360	1,094,484	1,455	72	0	0	0	0	41,360	1,094,484	0	0
42.5	n/a	0	0	0	0	0	0	0	0	0	0	0	0	0
37.5	n/a	0	0	0	0	0	0	0	0	0	0	0	0	0
32.5	n/a	0	0	0	0	0	0	0	0	0	0	0	0	0
27.5	n/a	0	0	0	0	0	0	0	0	0	0	0	0	0
22.5	n/a	0	0	0	0	0	0	0	0	0	0	0	0	0
17.5	n/a	0	0	0	0	0	0	0	0	0	0	0	0	0
12.5	n/a	0	0	0	0	0	0	0	0	0	0	0	0	0
7.5	n/a	0	0	0	0	0	0	0	0	0	0	0	0	0
Totals:		5,070	295,180	8,472,975			0	0	0	0	174,290	4,698,412	120,890	3,774,563
Cust Wgt Factors:								0.000		0.000		0.555		0.445
Custom Entering Condenser Temperatures (F):								n/a		n/a		56.4		61.1

4b. Custom PLV Worksheet for CH-2 (Trane 1250)

Avg DB (F)	Cond Temp (F)	Total (Hrs)	CWH	Total (Ton-hrs)	Load (Tons)	Load (%)	25% Bin		50% Bin		75% Bin		100% Bin	
							(CWH)	(Ton-hrs)	(CWH)	(Ton-hrs)	(CWH)	(Ton-hrs)	(CWH)	(Ton-hrs)
97.5	67.5	82	5,537	101,755	1,241	99	0	0	0	0	0	0	5,537	101,755
92.5	66.5	245	16,282	289,556	1,182	95	0	0	0	0	0	0	16,282	289,556
87.5	65.4	263	17,192	295,240	1,123	90	0	0	0	0	0	0	17,192	295,240
82.5	63.8	313	19,966	376,199	1,202	96	0	0	0	0	0	0	19,966	376,199
77.5	61.8	392	24,237	445,035	1,135	91	0	0	0	0	0	0	24,237	445,035
72.5	60.1	517	31,067	552,634	1,069	86	0	0	0	0	31,067	552,634	0	0
67.5	57.8	525	30,351	525,947	1,002	80	0	0	0	0	30,351	525,947	0	0
62.5	55.4	575	31,857	537,730	935	75	0	0	0	0	31,857	537,730	0	0
57.5	55.0	721	39,655	626,054	868	69	0	0	0	0	39,655	626,054	0	0
52.5	55.0	685	37,675	840,749	1,227	98	0	0	0	0	0	0	37,675	840,749
47.5	55.0	752	41,360	680,988	906	72	0	0	0	0	41,360	680,988	0	0
42.5	n/a	0	0	0	0	0	0	0	0	0	0	0	0	0
37.5	n/a	0	0	0	0	0	0	0	0	0	0	0	0	0
32.5	n/a	0	0	0	0	0	0	0	0	0	0	0	0	0
27.5	n/a	0	0	0	0	0	0	0	0	0	0	0	0	0
22.5	n/a	0	0	0	0	0	0	0	0	0	0	0	0	0
17.5	n/a	0	0	0	0	0	0	0	0	0	0	0	0	0
12.5	n/a	0	0	0	0	0	0	0	0	0	0	0	0	0
7.5	n/a	0	0	0	0	0	0	0	0	0	0	0	0	0
Totals:		5,070	295,180	5,271,886			0	0	0	0	174,290	2,923,353	120,890	2,348,533
Cust Wgt Factors:								0.000		0.000		0.555		0.445
Custom Entering Condenser Temperatures (F):								n/a		n/a		56.4		61.1

4c. Custom PLV Worksheet for CH-3 (Carrier 1700 Ton Constant)

Avg DB (F)	Cond Temp (F)	Total (Hrs)	CWH	Total (Ton-hrs)	Load (Tons)	Load (%)	25% Bin		50% Bin		75% Bin		100% Bin	
							(CWH)	(Ton-hrs)	(CWH)	(Ton-hrs)	(CWH)	(Ton-hrs)	(CWH)	(Ton-hrs)
97.5	67.5	82	5,537	140,992	1,719	99	0	0	0	0	0	0	5,537	140,992
92.5	66.5	245	16,282	401,209	1,638	95	0	0	0	0	0	0	16,282	401,209
87.5	65.4	263	17,192	409,084	1,555	90	0	0	0	0	0	0	17,192	409,084
82.5	63.8	313	19,966	521,261	1,665	96	0	0	0	0	0	0	19,966	521,261
77.5	61.8	392	24,237	616,641	1,573	91	0	0	0	0	0	0	24,237	616,641
72.5	60.1	517	31,067	765,729	1,481	86	0	0	0	0	31,067	765,729	0	0
67.5	57.8	525	30,351	728,752	1,388	80	0	0	0	0	30,351	728,752	0	0
62.5	55.4	575	31,857	745,079	1,296	75	0	0	0	0	31,857	745,079	0	0
57.5	55.0	721	39,655	867,460	1,203	69	0	0	0	0	39,655	867,460	0	0
52.5	n/a	0	0	0	0	0	0	0	0	0	0	0	0	0
47.5	n/a	0	0	0	0	0	0	0	0	0	0	0	0	0
42.5	n/a	0	0	0	0	0	0	0	0	0	0	0	0	0
37.5	n/a	0	0	0	0	0	0	0	0	0	0	0	0	0
32.5	n/a	0	0	0	0	0	0	0	0	0	0	0	0	0
27.5	n/a	0	0	0	0	0	0	0	0	0	0	0	0	0
22.5	n/a	0	0	0	0	0	0	0	0	0	0	0	0	0
17.5	n/a	0	0	0	0	0	0	0	0	0	0	0	0	0
12.5	n/a	0	0	0	0	0	0	0	0	0	0	0	0	0
7.5	n/a	0	0	0	0	0	0	0	0	0	0	0	0	0
Totals:		3,633	216,145	5,196,207			0	0	0	0	132,930	3,107,020	83,215	2,089,186
Cust Wgt Factors:								0.000		0.000		0.598		0.402
Custom Entering Condenser Temperatures (F):								n/a		n/a		56.9		64.3

4d. Custom PLV Worksheet for CH-4 (Trane 650)

Avg DB (F)	Cond Temp (F)	Total (Hrs)	CWH	Total (Ton-hrs)	Load (Tons)	Load (%)	25% Bin		50% Bin		75% Bin		100% Bin	
							(CWH)	(Ton-hrs)	(CWH)	(Ton-hrs)	(CWH)	(Ton-hrs)	(CWH)	(Ton-hrs)
97.5	67.5	82	5,537	52,913	645	99	0	0	0	0	0	0	5,537	52,913
92.5	66.5	245	16,282	150,569	615	95	0	0	0	0	0	0	16,282	150,569
87.5	65.4	263	17,192	153,525	584	90	0	0	0	0	0	0	17,192	153,525
82.5	n/a	0	0	0	0	0	0	0	0	0	0	0	0	0
77.5	n/a	0	0	0	0	0	0	0	0	0	0	0	0	0
72.5	n/a	0	0	0	0	0	0	0	0	0	0	0	0	0
67.5	n/a	0	0	0	0	0	0	0	0	0	0	0	0	0
62.5	n/a	0	0	0	0	0	0	0	0	0	0	0	0	0
57.5	n/a	0	0	0	0	0	0	0	0	0	0	0	0	0
52.5	n/a	0	0	0	0	0	0	0	0	0	0	0	0	0
47.5	n/a	0	0	0	0	0	0	0	0	0	0	0	0	0
42.5	n/a	0	0	0	0	0	0	0	0	0	0	0	0	0
37.5	n/a	0	0	0	0	0	0	0	0	0	0	0	0	0
32.5	n/a	0	0	0	0	0	0	0	0	0	0	0	0	0
27.5	n/a	0	0	0	0	0	0	0	0	0	0	0	0	0
22.5	n/a	0	0	0	0	0	0	0	0	0	0	0	0	0
17.5	n/a	0	0	0	0	0	0	0	0	0	0	0	0	0
12.5	n/a	0	0	0	0	0	0	0	0	0	0	0	0	0
7.5	n/a	0	0	0	0	0	0	0	0	0	0	0	0	0
Totals:		590	39,012	357,006			0	0	0	0	0	0	39,012	357,006
Cust Wgt Factors:								0.000		0.000		0.000		1.000
Custom Entering Condenser Temperatures (F):								n/a		n/a		n/a		66.1

KEY for Custom PLV Worksheet table(s):
[Avg DB] = Midpoint temperature for bin.
[Cond Temp] = Entering condenser temperature for bin. Entering water temperature for water-cooled chillers. Entering air temperature for air-cooled chillers.
[Tot Hrs] = Hours of operation in bin.
[CWH] = Condenser temperature hours. [Tot Hrs] times [Cond Temp]. Later used to derive the four average entering condenser temperature values for the PLV calculation.
[Load] = Chiller load for bin.
[Load (%)] = Chiller load as a percentage of full load capacity.
[Total (Ton-hrs)] = Chiller [Load] times [Tot Hrs]. Later used to derive the four weighting factors for the PLV calculation.
[Bin (CWH)] = [CWH] values separated into the four PLV bins: 25%, 50%, 75% and 100% load according to chiller load for each bin.
[Bin (Ton-hrs)] = Values separated into the four PLV bins: 25%, 50%, 75% and 100% load according to the chiller load for each bin.
[Cust Wgt Factor] = The four custom PLV weighting factors. [Total (Ton-hrs)] for PLV Bin divided by [Total (Ton-hrs)] for the chiller.
[Cust Ent Cond Temps] = The four custom condenser temperature values for the PLV calculation = [Total (CWH)] for PLV bin divided by [Tot Hrs] in the PLV bin.

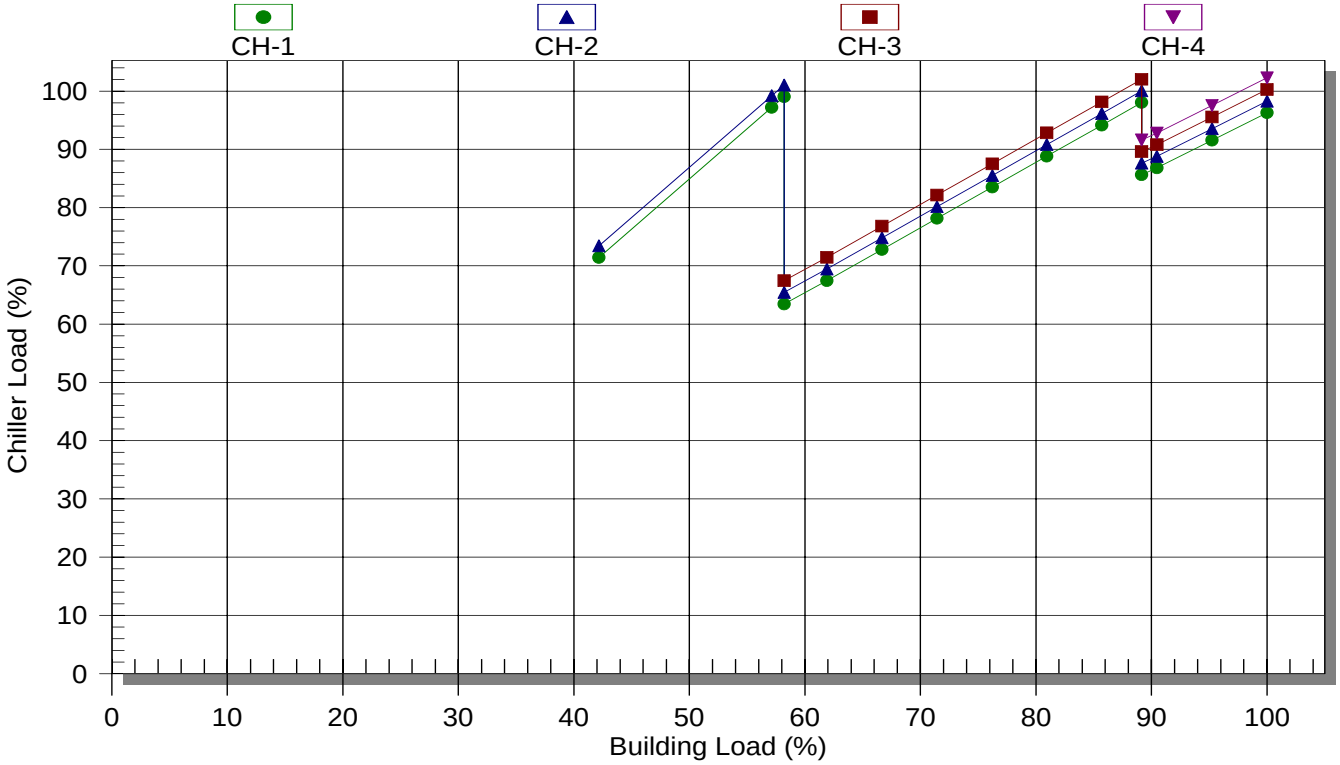

Note: Individual chiller curves in this graph have been adjusted up or down so the number of chillers operating at each point can be seen. If the curves had not been adjusted, all curves would lie on top of each other. Because of the adjustment each chiller load shown on the graph is only accurate to within a few percentage points plus or minus of the original calculated values.

2. Input Data Summary

Weather

City ..... Salt Lake City, Utah
Schedule ..... On All Day: Weekday
..... On All Day: Saturday
..... On All Day: Sunday

Loads

User-Defined Load Profile

Chiller System

Name ..... Combination E
Chillers in Plant 4
Plant Control ..... Sequenced
Full Load LCHWT ..... 44.0 F
Tower Configuration ..... One Tower for System
Cooling Tower ..... 6 Cell Tower (1)
..... Detailed Cooling Tower Model
Free Cooling ..... Plate-Frame Heat Exchanger

Sequence	Chiller Name	FL Capacity (Tons)	Full Load Power
CH-1	Carrier 2000 Ton VFD	2,009	0.490 kW/Ton
CH-2	Trane 1250	1,250	0.473 kW/Ton
CH-3	Carrier 1700 Ton Constant	1,732	0.470 kW/Ton
CH-4	Trane 650	650	0.473 kW/Ton

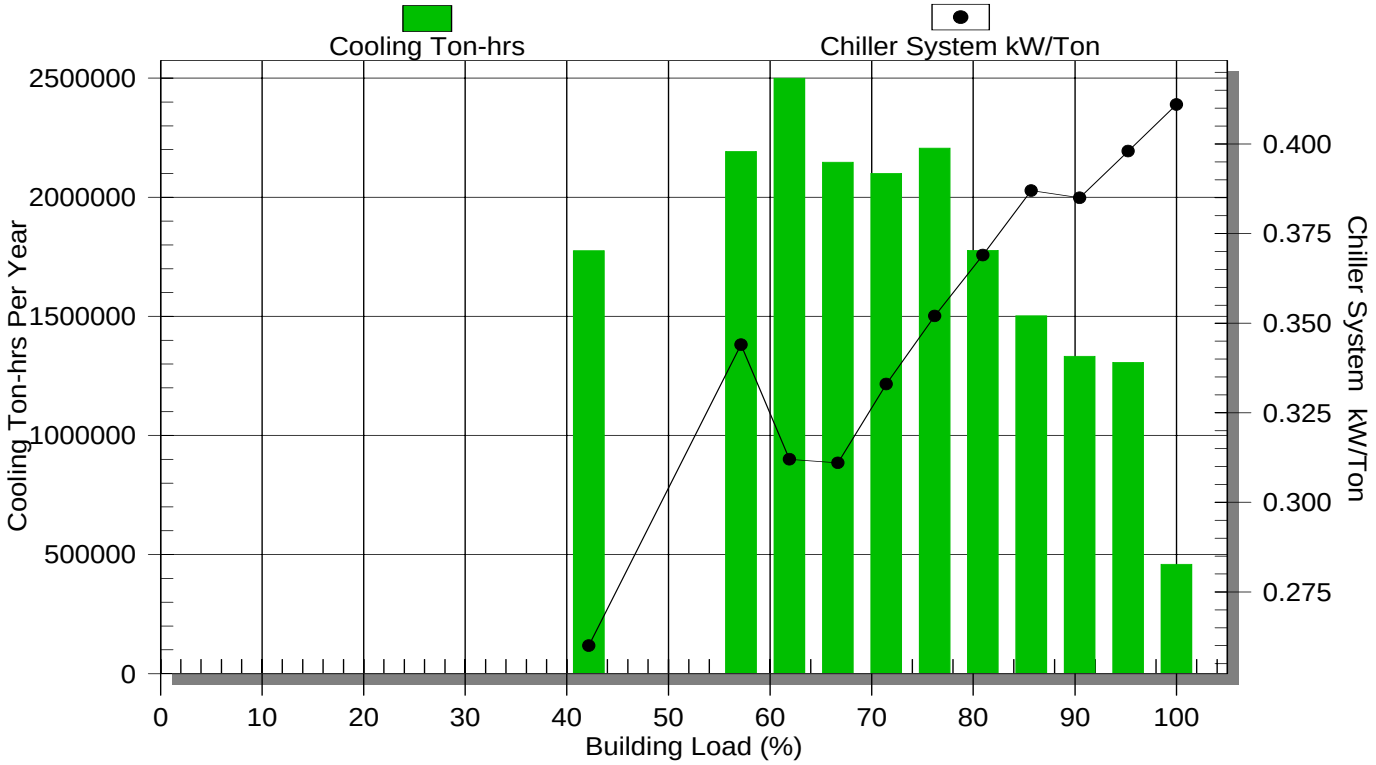

2. Input Data Summary

Weather

City ..... Salt Lake City, Utah
Schedule ..... On All Day: Weekday
..... On All Day: Saturday
..... On All Day: Sunday

Loads

User-Defined Load Profile

Chiller System

Name ..... Combination E
Chillers in Plant 4
Plant Control ..... Sequenced
Full Load LCHWT ..... 44.0 F
Tower Configuration ..... One Tower for System
Cooling Tower ..... 6 Cell Tower (1)
..... Detailed Cooling Tower Model
Free Cooling ..... Plate-Frame Heat Exchanger

Sequence	Chiller Name	FL Capacity (Tons)	Full Load Power
CH-1	Carrier 2000 Ton VFD	2,009	0.490 kW/Ton
CH-2	Trane 1250	1,250	0.473 kW/Ton
CH-3	Carrier 1700 Ton Constant	1,732	0.470 kW/Ton
CH-4	Trane 650	650	0.473 kW/Ton

1. Executive Summary

System Part Load Value (SPLV):	**PLV**
Combination E	0.337 kW/Ton
IPLV or NPLV (ARI 550/590-1998):	
Carrier 2000 Ton VFD	0.300 kW/Ton
Trane 1250	0.354 kW/Ton
Carrier 1700 Ton Constant	0.462 kW/Ton
Trane 650	0.354 kW/Ton

2. Input Data Summary

Weather

City ..... Salt Lake City, Utah
Schedule ..... On All Day: Weekday
..... On All Day: Saturday
..... On All Day: Sunday

Loads

User-Defined Load Profile

Chiller System

Name ..... Combination E
Chillers in Plant 4
Plant Control ..... Sequenced
Full Load LCHWT ..... 44.0 F
Tower Configuration ..... One Tower for System
Cooling Tower ..... 6 Cell Tower (1)
..... Detailed Cooling Tower Model
Free Cooling ..... Plate-Frame Heat Exchanger

Sequence	Chiller Name	FL Capacity (Tons)	Full Load Power
CH-1	Carrier 2000 Ton VFD	2,009	0.490 kW/Ton
CH-2	Trane 1250	1,250	0.473 kW/Ton
CH-3	Carrier 1700 Ton Constant	1,732	0.470 kW/Ton
CH-4	Trane 650	650	0.473 kW/Ton

3. Chiller System Operating Conditions

Bin Temp (F)	Bin MCWB (F)	Building Load (%)	Building Load (Tons)	Chillers On	Chiller Load (%)
97.5	61.5	100	5,600	4	99
92.5	60.5	95	5,334	4	95
87.5	59.5	90	5,066	4	90
82.5	57.9	86	4,799	3	96
77.5	55.9	81	4,533	3	91
72.5	54.2	76	4,268	3	86
67.5	51.9	71	4,000	3	80
62.5	49.5	67	3,734	3	75
57.5	47.1	62	3,467	3	69
52.5	43.8	57	3,200	2	98
47.5	40.4	42	2,361	2	72
42.5	36.9	37	2,096	0	0
37.5	33.4	33	1,829	0	0
32.5	29.4	28	1,563	0	0
27.5	25.1	23	1,296	0	0
22.5	20.8	17	968	0	0
17.5	16.0	14	762	0	0
12.5	11.2	17	956	0	0
7.5	5.9	4	229	0	0

4a. Chiller System Performance

	CH-1				CH-2				CH-3			
Bin Temp (F)	**Load (Tons)**	**(kW/ Ton)**	**Lchwt (F)**	**Cond Temp (F)**	**Load (Tons)**	**(kW/ Ton)**	**Lchwt (F)**	**Cond Temp (F)**	**Load (Tons)**	**(kW/ Ton)**	**Lchwt (F)**	**Cond Temp (F)**
97.5	1,994	0.403	44.00	67.53	1,241	0.412	44.00	67.53	1,719	0.419	44.00	67.53
92.5	1,899	0.383	44.00	66.46	1,182	0.398	44.00	66.46	1,638	0.416	44.00	66.46
87.5	1,804	0.362	44.00	65.37	1,123	0.384	44.00	65.37	1,555	0.414	44.00	65.37
82.5	1,932	0.375	44.00	63.79	1,202	0.377	44.00	63.79	1,665	0.409	44.00	63.79
77.5	1,825	0.346	44.00	61.83	1,135	0.357	44.00	61.83	1,573	0.406	44.00	61.83
72.5	1,718	0.314	44.00	60.09	1,069	0.340	44.00	60.09	1,481	0.404	44.00	60.09
67.5	1,610	0.272	44.00	57.81	1,002	0.335	44.00	57.81	1,388	0.403	44.00	57.81
62.5	1,503	0.220	44.00	55.40	935	0.331	44.00	55.40	1,296	0.404	44.00	55.40
57.5	1,396	0.213	44.00	55.00	868	0.335	44.00	55.00	1,203	0.409	44.00	55.00
52.5	1,973	0.343	44.00	55.00	1,227	0.346	44.00	55.00	0	0.000	44.00	n/a
47.5	1,455	0.215	44.00	55.00	906	0.333	44.00	55.00	0	0.000	44.00	n/a
42.5	0	0.000	44.00	n/a	0	0.000	44.00	n/a	0	0.000	44.00	n/a
37.5	0	0.000	44.00	n/a	0	0.000	44.00	n/a	0	0.000	44.00	n/a
32.5	0	0.000	44.00	n/a	0	0.000	44.00	n/a	0	0.000	44.00	n/a
27.5	0	0.000	44.00	n/a	0	0.000	44.00	n/a	0	0.000	44.00	n/a
22.5	0	0.000	44.00	n/a	0	0.000	44.00	n/a	0	0.000	44.00	n/a
17.5	0	0.000	44.00	n/a	0	0.000	44.00	n/a	0	0.000	44.00	n/a
12.5	0	0.000	44.00	n/a	0	0.000	44.00	n/a	0	0.000	44.00	n/a
7.5	0	0.000	44.00	n/a	0	0.000	44.00	n/a	0	0.000	44.00	n/a

Minimum ECWT condition has been reached for chiller(s): CH-1, CH-2, CH-3
Tower cycling assumed to hold minimum ECWT.

4b. Chiller System Performance

	CH-4				System	
Bin Temp (F)	**Load (Tons)**	**(kW/ Ton)**	**Lchwt (F)**	**Cond Temp (F)**	**Total (kW)**	**Total (kW/Ton)**
97.5	645	0.412	44.00	67.53	2301	0.411
92.5	615	0.398	44.00	66.46	2125	0.398
87.5	584	0.384	44.00	65.37	1951	0.385
82.5	0	0.000	44.00	n/a	1859	0.387
77.5	0	0.000	44.00	n/a	1674	0.369
72.5	0	0.000	44.00	n/a	1501	0.352
67.5	0	0.000	44.00	n/a	1333	0.333
62.5	0	0.000	44.00	n/a	1163	0.311
57.5	0	0.000	44.00	n/a	1081	0.312
52.5	0	0.000	44.00	n/a	1101	0.344
47.5	0	0.000	44.00	n/a	614	0.260
42.5	0	0.000	44.00	n/a	0	0.000
37.5	0	0.000	44.00	n/a	0	0.000
32.5	0	0.000	44.00	n/a	0	0.000
27.5	0	0.000	44.00	n/a	0	0.000
22.5	0	0.000	44.00	n/a	0	0.000
17.5	0	0.000	44.00	n/a	0	0.000
12.5	0	0.000	44.00	n/a	0	0.000
7.5	0	0.000	44.00	n/a	0	0.000

5. SPLV Worksheet

Bin Temp (F)	Building Load (%)	Building Load (Tons)	Cooling Hours	Cooling (Ton-hrs)	Bin Wgt Factor	System (kW/Ton)	Bin Ratio
97.5	100	5,600	82	459,200	0.0238	0.411	0.0579
92.5	95	5,334	245	1,306,708	0.0677	0.398	0.1700
87.5	90	5,066	263	1,332,358	0.0690	0.385	0.1793
82.5	86	4,799	313	1,502,087	0.0778	0.387	0.2010
77.5	81	4,533	392	1,776,936	0.0921	0.369	0.2493
72.5	76	4,268	517	2,206,556	0.1143	0.352	0.3250
67.5	71	4,000	525	2,100,000	0.1088	0.333	0.3266
62.5	67	3,734	575	2,147,050	0.1113	0.311	0.3573
57.5	62	3,467	721	2,499,707	0.1295	0.312	0.4154
52.5	57	3,200	685	2,192,000	0.1136	0.344	0.3302
47.5	42	2,361	752	1,775,472	0.0920	0.260	0.3538
42.5	37	2,096	776	0	0.0000	0.000	0.0000
37.5	33	1,829	857	0	0.0000	0.000	0.0000
32.5	28	1,563	828	0	0.0000	0.000	0.0000
27.5	23	1,296	671	0	0.0000	0.000	0.0000
22.5	17	968	221	0	0.0000	0.000	0.0000
17.5	14	762	135	0	0.0000	0.000	0.0000
12.5	17	956	70	0	0.0000	0.000	0.0000
7.5	4	229	132	0	0.0000	0.000	0.0000
Total:			5,070	19,298,074	1.0000		2.9658

Bin Wgt Factor = Bin Ton-hrs / Total Ton-hrs
Bin Ratio = [Bin Wgt Factor] / [System kW/Ton]
SPLV = 1 / [sum of Bin Ratios]
SPLV = 1 / [2.9658] = 0.337 kW/Ton

6. Procedure for Calculating IPLV for Chillers

Procedure for Calculating IPLV for Water-Cooled Electric Chillers

Chiller Load (%)	LCHWT (F)	Cond Temp (F)	Wgt Factor	Chiller (kW/Ton)	Bin Ratio
100	44.00	85.00	0.01	A	0.01/A
75	44.00	75.00	0.42	B	0.42/B
50	44.00	65.00	0.45	C	0.45/C
25	44.00	65.00	0.12	D	0.12/D
Total:			1.00		

IPLV = 1 / [sum of Bin Ratios]
IPLV = 1 / [0.10/A + 0.42/B + 0.45/C + 0.12/D]
per ARI Standard 550/590-1998

WSU Central Chilled Water Plant Submittals Index

Submittal - Page 1	(Page 2)	(Page 3)	(Page 4)	SUBMITTAL NUMBER
Rolairtrol_Flange_Strainer_pg_1.htm	PG_2.htm	PG_3.htm		A-326.1
ASME_Tanks_pg_1.htm	PG_2.htm			A-342
VSCS-12x14x12-12_pg_1_{}.htm	PG_2.htm			B-446.6
VSCS-12x14x17-12B_pg_1_{}.htm	PG_2.htm			B-447.1
VSCS-10x12x11_pg_1_{}.htm	PG_2.htm			B-446.4
VSCS-12x14x12-34L_pg_1_{}.htm	PG_2.htm			B-447.9
1510-6BC_pg_1_{}.htm	PG_2.htm			B-225.7
VSCS-10x12x11-34L_pg_1_{}.htm	PG_2.htm			B-447.6

Bell & Gossett

SUBMITTAL

A-326.1

JOB: WSU Central Chilled Water Plant
REPRESENTATIVE: Grittton & Associates

UNIT TAG:
ENGINEER:
CONTRACTOR:
ORDER NO.
SUBMITTED BY:
APPROVED BY:
DATE: 9/19/2005
DATE:
DATE:

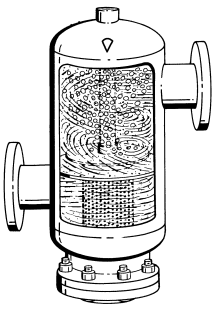

ROLAIRTROL®

Air Separator

Flanged with Strainer
Air Control and Elimination

DESCRIPTION

The Rolairtrol Air Separator is an ASME vessel designed with tangential openings to create a low velocity vortex where air is separated and removed from the circulating water.

MAXIMUM WORKING PRESSURE

125 PSIG (862 kPa)

MAXIMUM OPERATING TEMPERATURE

350°F (1770°C)

CONSTRUCTION

- Designed and constructed per ASME Section VIII, Division 1
- Shell: Steel
- System Strainer: Galvanized Steel with 3/16" (4.8mm) diameter perforations and 51% open area
- Air Collector Tube: Stainless steel with 5/32" (4mm) diameter perforations and 63% open area
- Baffle/Collector Tube Support Assembly: Steel
- Bottom Reducing Flange Gasket: Armide fiber

SCHEDULE

PART NUMBER	MODEL NUMBER	Capacity GPM (M3/Hr)	Flanged Tangential Opening Inches (MM)	TAGGING INFORMATION	QUANTITY
5360-03F-12-001	R–3F	190 (43.2)	3 (76.2)		
5360-04F-12-001	R–4F	300 (68.1)	4 (101.6)		
5360-05F-12-001	R–5F	500 (113.6)	5 (127.0)		
5360-06F-12-001	R–6F	700 (159.0)	6 (150.0)		
5360-08F-12-001	R–8F	1,300 (295.2)	8 (203.2)		
5360-10F-12-001	R–10F	2,000 (454.2)	10 (254.0)		
5360-12F-12-001	R–12F	2,750 (624.5)	12 (300.0)		
5360-14F-12-001	R–14F	3,400 (772.1)	14 (355.6)		
5360-16F-12-001	R–16F	4,400 (999.2)	16 (406.4)		
5360-18F-12-001	R–18F	5,200 (1,180.9)	18 (457.2)		
5360-20F-12-001	R–20F	6,300 (1,430.7)	20 (508.0)		
5360-22F-12-001	R–22F	7,400 (1,680.5)	22 (588.8)		
5360-24F-12-001	R–24F	8,500 (1,930.4)	24 (635.0)		1
5360-03F-12-002	R–3FB	190 (43.2)	3 (76.2)		
5360-04F-12-002	R–4FB	300 (68.1)	4 (101.6)		
5360-05F-12-002	R–5FB	500 (113.6)	5 (127.0)		
5360-06F-12-002	R–6FB	700 (159.0)	6 (150.0)		
5360-08F-12-002	R–8FB	1,300 (295.2)	8 (203.2)		
5360-10F-12-002	R–10FB	2,000 (454.2)	10 (254.0)		
5360-12F-12-002	R–12FB	2,750 (624.5)	12 (300.0)		
5360-14F-12-002	R–14FB	3,400 (772.1)	14 (355.6)		
5360-16F-12-002	R–16FB	4,400 (999.2)	16 (406.4)		
5360-18F-12-002	R–18FB	5,200 (1,180.9)	18 (457.2)		
5360-20F-12-002	R–20FB	6,300 (1,430.7)	20 (508.0)		
5360-22F-12-002	R–22FB	7,400 (1,680.5)	22 (588.8)		
5360-24F-12-002	R–24FB	8,500 (1,930.4)	24 (635.0)		

For 20"–36" sizes contact factory for performance characteristics.
Model numbers with a B suffix include bracket supports.

Bell & Gossett
ITT Industries
Engineered for life

ESP-REP v2005.08 © COPYRIGHT 2004 ITT INDUSTRIES, INC.

ROLAIRTROL - Flanged with Strainer

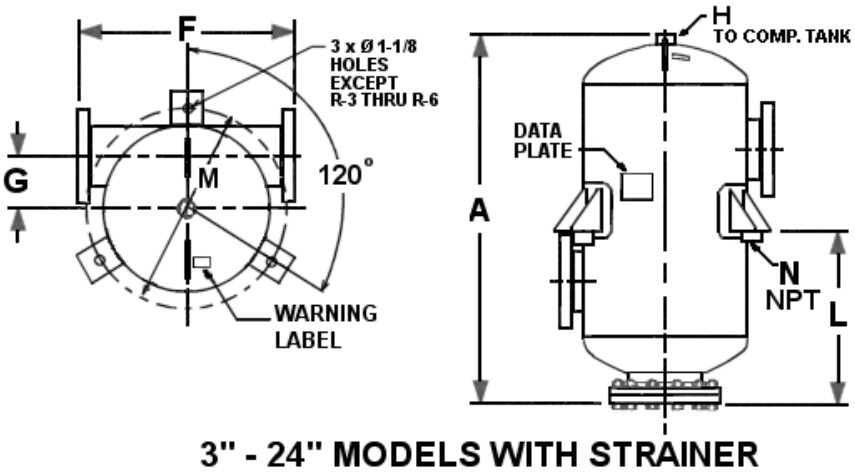

3" - 24" MODELS WITH STRAINER
AND OPTIONAL BRACKET SUPPORTS

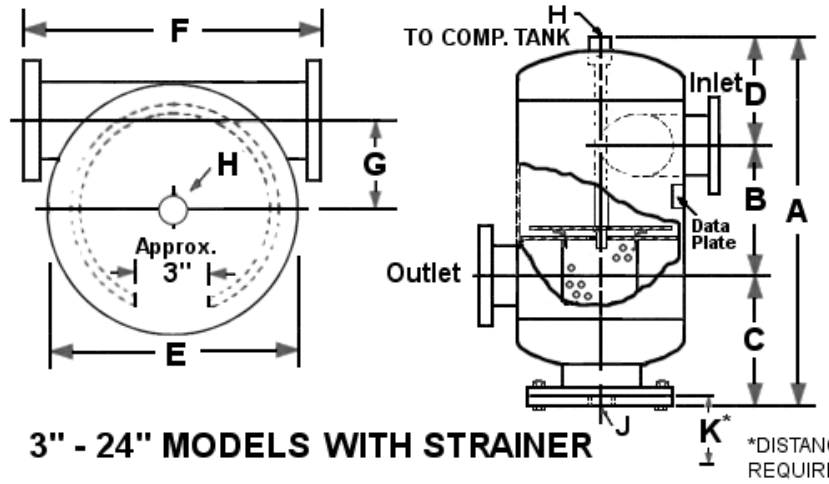

3" - 24" MODELS WITH STRAINER

*DISTANCE REQUIRED TO REMOVE STRAINER

Flange connections for field piping drilled and faced per 150# ANSI standards.

DIMENSIONS in Inches (MM) AND WEIGHTS in Lbs (kg.)

MODEL NUMBER	A	B	C	D	E	F	G	H	J	K	Cv	Strainer Free Area in Sq. Inches (mm²)	Approx. Volume in Gallons (Ltr.)	Approx. Shpg. Wt. in. Lbs. (Kg)	Flood Wt. Less Bracket in Lbs. (Kg)
R–3F (B)	25-11/16 (653)	8 (203)	9-5/8 (245)	8-1/16 (205)	10-3/4 (273)	22-3/4 (578)	3-5/8 (92)	1-1/4 (32)	1-1/2 (38)	12 (305)	80	66 (42,581)	7 (26)	122 (55)	186 (84)
R–4F (B)	30-3/4 (781)	10 (254)	11-1/4 (286)	9-1/2 (241)	12-3/4 (324)	20-1/2 (521)	4-1/8 (105)	1-1/4 (32)	2 (51)	14 (356)	135	140 (90,322)	13 (49)	165 (75)	270 (122)
R–5F (B)	36-1/8 (918)	12 (305)	13-3/16 (355)	10-15/16 (178)	16 (406)	23-3/4 (603)	5-1/4 (133)	1-1/2 (38)	2 (51)	17 (432)	215	140 (90,322)	25 (95)	220 (100)	425 (193)
R–6F (B)	42-3/4 (1,086)	14 (356)	15-1/2 (394)	13-1/4 (337)	18 (457)	25-3/4 (654)	5-11/16 (145)	1-1/2 (38)	2 (51)	20 (508)	305	220 (141,935)	34 (129)	300 (136)	580 (263)
R–8F (B)	53-13/16 (1,367)	18 (457)	19-1/4 (489)	16-9/16 (421)	24 (610)	31-3/4 (807)	7-11/16 (38)	2 (51)	2 (51)	23 (584)	532	310 (200,000)	90 (341)	460 (209)	1215 (551)
R–10F (B)	64-5/8 (1,641)	22 (559)	22-9/16 (573)	20-1/16 (510)	30 (762)	37-3/4 (959)	9-5/8 (244)	2 (51)	2 (51)	29 (737)	850	435 (280,645)	150 (568)	860 (390)	2115 (959)
R–12F (B)	77 (1,956)	27 (686)	27-3/8 (695)	22-5/8 (575)	36 (914)	46-3/4 (1,187)	11-5/8 (295)	2 (51)	2 (51)	34 (864)	1,180	590 (380,644)	291 (1,101)	1,200 (544)	3,630 (1,647)
R–14F (B)	89-7/8 (2,283)	31-1/2 (800)	32-1/2 (826)	25-7/8 (657)	42 (1,067)	54-1/2 (1,384)	14 (356)	2 (51)	2 (51)	37 (940)	1,445	715 (461,289)	506 (1,915)	1,780 (807)	6,000 (2,722)
R–16F (B)	102-3/4 (2,610)	36 (914)	36-1/2 (927)	30-1/4 (768)	48 (1,219)	62-1/2 (1,588)	16 (406)	2 (51)	2 (51)	42 (1,067)	1,885	919 (592,902)	764 (2,892)	2,425 (1,100)	8,800 (3,992)
R–18F (B)	123 (3,124)	40-1/2 (1,029)	44-3/4 (1,137)	37-3/4 (959)	54 (1,372)	70-1/4 (1,784)	18 (457)	2 (51)	2 (51)	52 (1,321)	2,340	1,521 (981,288)	1,173 (4,440)	3,410 (1,547)	13,200 (5,988)
R–20F (B)	135-7/8 (3,451)	45 (1,143)	49-1/8 (1,248)	41-3/4 (1,060)	60 (1,524)	78 (1,981)	20 (508)	2 (51)	2 (51)	56 (1,422)	2,945	1,989 (1,283,223)	1,647 (6,234)	5,310 (2,409)	19,055 (8,643)
R–22F (B)	148-1/8 (3,762)	49-5/8 (1,260)	52-3/4 (1,340)	45-3/4 (1,162)	66 (1,676)	85-7/8 (2,181)	22 (559)	2 (51)	2 (51)	60 (1,524)	3,725	2,322 (1,498,062)	2,070 (7,835)	6,400 (2,903)	23,680 (10,741)
R–24F (B)	159-3/8 (4,048)	54 (1,372)	56-1/8 (1,426)	49-1/4 (1,251)	72 (1,829)	93-1/2 (2,375)	24 (610)	2 (51)	2 (51)	64 (1,626)	4,325	2,841 (1,832,900)	2,639 (9,989)	7,530 (3,416)	29,560 (13,408)

MODEL NUMBER	L	M	N	Weights of Brackets
R-3FB	12-1/4 (311)	14 (356)	2 (51)	9 (4)
R–4FB	14-11/16 (373)	16-1/8 (410)	2 (51)	9 (4)
R–5FB	17-5/8 (448)	19-3/8 (492)	2 (51)	9 (4)
R–6FB	20-13/16 (529)	21-3/8 (543)	2 (51)	9 (4)
R–8FB	25-5/16 (643)	29-1/2 (749)	2 (51)	29 (13)
R–10FB	31-9/16 (802)	35-1/2 (902)	2 (51)	29 (13)
R–12FB	39-1/4 (997)	41-1/2 (1,054)	2 (51)	32 (15)
R–14FB	40-7/8 (1,038)	48-1/2 (1,232)	3 (76)	56 (25)
R–16FB	49 (1,245)	54-1/2 (1,384)	3 (76)	56 (25)
R–18FB	61-5/8 (1,565)	60-5/8 (1,540)	3 (76)	63 (29)
R–20FB	68-5/8 (1,743)	66-3/4 (1,695)	4 (102)	78 (35)
R–22FB	74-1/8 (1,883)	72-3/4 (1,848)	4 (102)	78 (35)
R–24FB	80-3/8 (2,042)	79 (2,007)	4 (102)	98 (44)

SUPPORT NOTES:

1. Model "R" Rolairtrol Air Separators have strainers which must be removed and cleaned after 24 hours operation, 30 days operation and as required to maintain proper system air separation. Before installing the model "R" Rolairtrol, refer to (K) in the dimensions and weights table, which notes minimum distances to be maintained between the blowdown connection and the floor or other equipment for strainer removal.
2. Rolairtrol sizes through an "R8" or "RL8" can be supported in the piping system as long as pipe hangers are attached to the tangential nozzles as close to the Rolairtrol shell as possible. Sizes larger than an "R8" or "RL8" will need to have additional supports such as a cradle under the Rolairtrol acting on a diameter as close to the Rolairtrol outside diameter as possible, or factory installed clips welded to the shell for overhead hanging, or floor mount support.
3. Lifting lugs are for the transportation and installation of the empty vessel, and are not to be used for complete or partial support of the flood vessel.
4. The RL skirt can support flooded vessel weight, but an R model bottom flange (strainer housing) cannot support the flooded weight of the vessel.
5. Welding to the pressure vessel boundary will void the ASME stamp.

MODEL NUMBERING

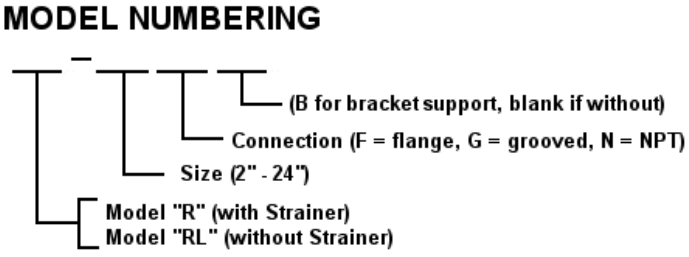

Rolairtrol® Air Separator Performance Coverage Chart

R MODELS (WITH STRAINER)

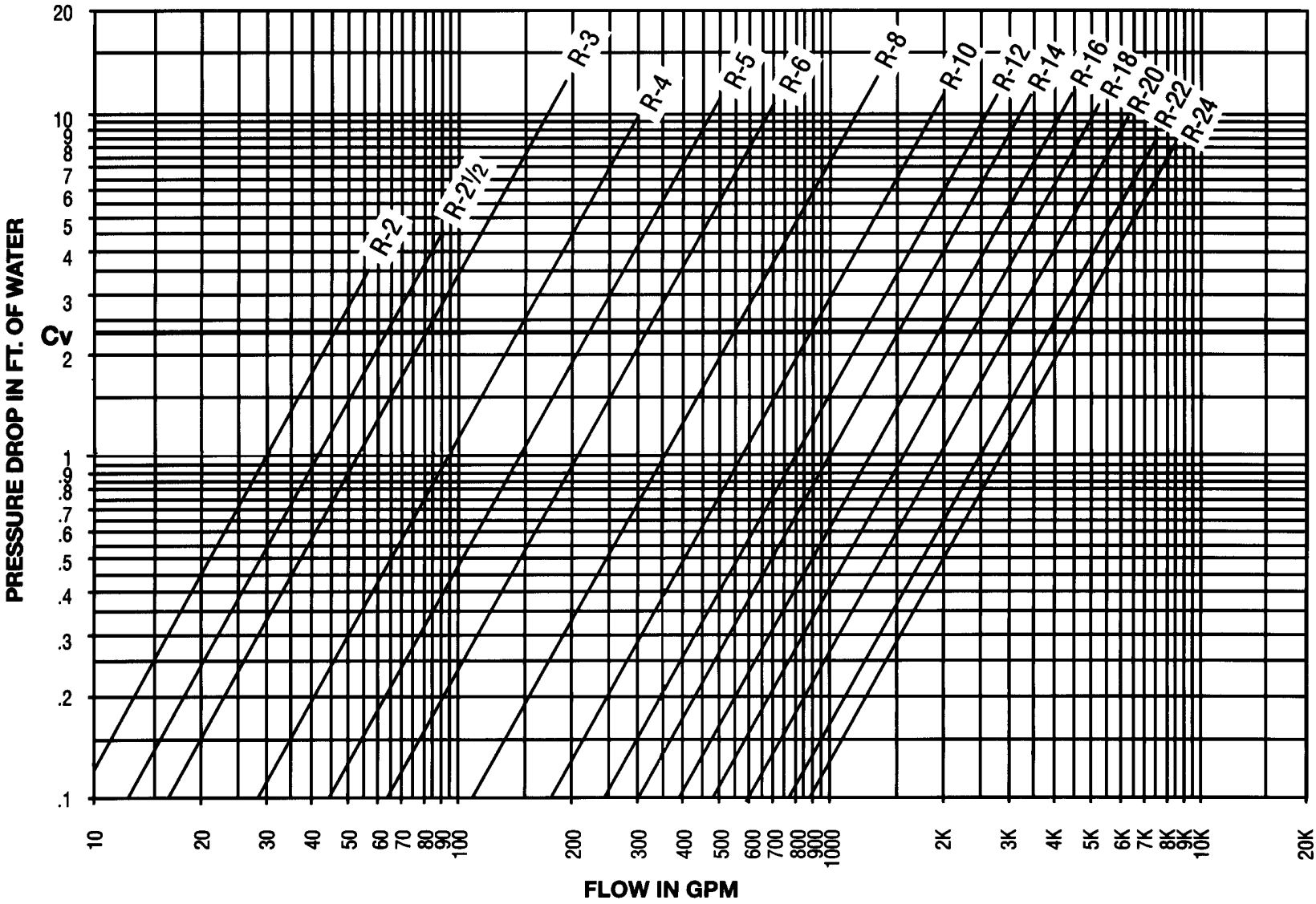

TYPICAL ROLAIRTROL SPECIFICATIONS

Furnish and install, as shown on plans, a centrifugal type air separator. The unit shall have ____ " inlet and outlet flanged connections tangential to the vessel shell. The unit shall have an internal stainless steel air collector tube with 5/32" (4mm) diameter perforations and 63 percent open area designed to direct accumulated air to the compression tank (air control system) or air vent (air elimination system) via an NPT vent connection at top of unit.

The unit shall have a removable galvanized steel system strainer with 3/16" (4.8mm) diameter perforations and a free area of not less than five times the cross-sectional area of the connecting pipe. The strainer shall be located at the bottom of the vessel to reduce floor space required for strainer removal.

A blowdown connection shall be provided to facilitate routine cleaning of the strainer and the separator. Specify B&G Model MBV- 1 Rolairtrol accessory for manual blowdown. Manufacturer to furnish data sheet specifying air collection efficiency and pressure drop at rated flow. **Refer to submittal A-329 for information on the MBV-1 manual blowdown valve.**

Vessel shell diameter to be three times the nominal inlet/outlet pipe diameter, with a minimum vessel volume for sufficient velocity reduction.

The air separator must be designed, constructed and stamped for 125 psig @ 350°F (862 kPa @ 177°C) in accordance with Section VIII, Division I of the ASME Boiler and Pressure Vessel Code, and registered with the National Board of Boiler and Pressure Vessel Inspectors. The air separator(s) shall be painted with one shop coat of light gray air dry enamel.

A manufacturer's Data Report for Pressure Vessels, Form U-1 as required by the provisions of the ASME Boiler and Pressure Vessel Code, shall be furnished for each air separator upon request.

Each air separator shall be ITT Bell & Gossett Model No. _____ Rolairtrol Air Separator for _____ GPM (_____ m^3), Shell Dia. _____" (_____ mm)and Min. Vessel Volume _____ Gal (_____ liters).

ITT Industries

Bell & Gossett

Bell & Gossett
8200 N. Austin Avenue, Morton Grove, IL 60053
Phone (847)966-3700
Facsimile (847)966-9052
www.bellgossett.com

ISO 9001 Certified

Bell & Gossett®

SUBMITTAL

A-342E

JOB: WSU Central Chilled Water Plant
REPRESENTATIVE: Grittton & Associates

UNIT TAG:
ENGINEER:
CONTRACTOR:

ORDER NO.
SUBMITTED BY:
APPROVED BY:

DATE: 9/19/2005
DATE:
DATE:

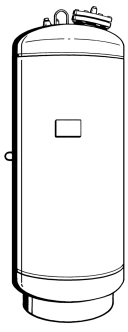

Series "B" (ASME) Pressurized Expansion Tanks Vertical

Not For Potable Water Systems

DESCRIPTION

Series "B" expansion tanks are ASME rated precharged bladder-type pressure vessels. The Series "B" tank is designed to absorb the expansion forces of heating/cooling system water while maintaining proper system pressurization under varying operating conditions. The heavy duty bladder contains system water thereby eliminating tank corrosion and waterlogging problems.

CONSTRUCTION

System Connection: Forged Steel
Shell: Carbon Steel
Bladder: Heavy Duty Butyl Rubber
Designed and Constructed per ASME Section VIII, Division 1

MAXIMUM OPERATING LIMITS

Maximum Design Pressure: 125 PSI (862kPa)
Design Temperature: 240°F (115°C)

SCHEDULE

PART NUMBER	MODEL NO.	TANK AND ACCEPTANCE VOLUME GALLONS (LITERS)	TAGGING INFORMATION	QUANTITY
116550	B-200	53 (200)		
116551	B-300	80 (300)		
116552	B-400	106 (400)		
116553	B-500	132 (500)		
116554	B-600	158 (600)		
116555	B-800	211 (800)		
116556	B-1000	264 (1000)		
116557	B-1200	317 (1200)		
116558	B-1400	370 (1400)		
116559	B-1600	422 (1600)		
116560	B-2000	528 (2000)		
116793	B-2500	660 (2500)		
116794	B-3000	792 (3000)		
116795	B-3500	925 (3500)		
116796	B-4000	1057 (4000)		
116819	B-5000	1321 (5000)		1
116841	B-7500	1980 (7500)		
116842	B-10000	2640 (10000)		
116843	B-15000	3963 (15000)		

TYPICAL SPECIFICATION

Furnish and install as shown on plans a _____ gallon (_____ liter) _____" (_____ mm) diameter x _____" (_____ mm) high pre-charged steel expansion tank with replaceable heavy duty Butyl rubber bladder. The tank shall have a _____" NPT system connection, _____" NPT drain, and a .302"-32 charging valve connection (standard tire valve) to facilitate the on-site charging of the tank to meet system requirements.

The tank shall be fitted with lifting rings and a floor mounting skirt for vertical installation.

The tank must be constructed in accordance with Section VIII of the ASME Boiler and Pressure Vessel Code and stamped 125 PSI (862 kPa) working pressure.

Each tank shall be ITT Industries – Bell & Gossett Model No. _____

Bell & Gossett

ITT Industries
Engineered for life

ESP-REP v2005.08 © COPYRIGHT 2004 ITT INDUSTRIES, INC.

ASME EXPANSION TANKS - PRESSURIZED (Air Elimination)

A-342E

FIG. 1

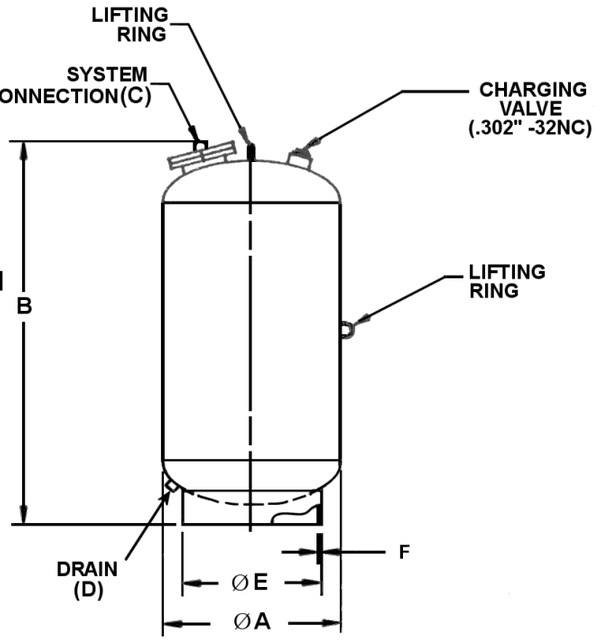

FIG. 2

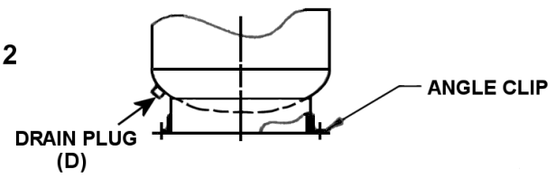

FIG. 3

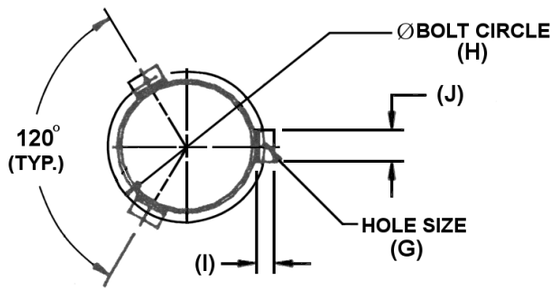

NOTE: Tanks are factory pre-charged at 12 psi (83 kPa)

Allow a minimum of 18"(457.2mm) clearance for system piping.

California code-sight glass and seismic restraints available on request.

Tanks can be installed in the horizontal position with the system connection located below the horizontal centerline of the tank.

OPTIONAL SEISMIC RESTRAINTS (FIG.2 & 3) – DIMENSIONS IN INCHES (MM)

TANK DIAMETER	G	H	I	J
24"	9/16 (14)	21 (533)	2 (51)	2 (51)
30"	7/8 (22)	28 (711)	4 (102)	4 (102)
36"	7/8 (22)	34 (864)	4 (102)	4 (102)
48"	7/8 (22)	46 (1168)	4 (102)	4 (102)
54"	7/8 (22)	46 (1168)	4 (102)	4 (102)
60"	7/8 (22)	46 (1168)	4 (102)	4 (102)
72"	1 (25)	58 (1473)	4 (102)	4 (102)

DIMENSIONS IN INCHES (MM) AND WEIGHTS IN LBS. (KG) (FIG. 1)

PART NUMBER	MODEL NUMBER	A	B	C NPTF	D	E	F	APPROX. SHPG. WT.	APPROX. WT* 100% FULL
116550	B-200	24 (610)	36-7/8 (936)	1	3/4	19 (483)	3/16 (5)	192 (87)	629 (285)
116551	B-300	24 (610)	50-7/8 (1292)	1	3/4	19 (483)	3/16 (5)	268 (122)	928 (421)
116552	B-400	24 (610)	64-3/4 (1644)	1	3/4	19 (483)	3/16 (5)	309 (140)	1184 (537)
116553	B-500	24 (610)	78 (1981)	1	3/4	19 (483)	3/16 (5)	328 (149)	1417 (643)
116554	B-600	30 (762)	63-3/4 (1619)	1-1/2	1	24 (610)	3/16 (5)	510 (232)	1814 (823)
116555	B-800	30 (762)	81-3/4 (2076)	1-1/2	1	24 (610)	3/16 (5)	656 (297)	2306 (1046)
116556	B-1000	36 (914)	73 (1854)	1-1/2	1-1/4	30 (762)	3/16 (5)	691 (313)	2869 (1301)
116557	B-1200	36 (914)	85-3/8 (2169)	1-1/2	1-1/4	30 (762)	3/16 (5)	779 (353)	3394 (1539)
116558	B-1400	36 (914)	97-3/4 (2483)	1-1/2	1-1/4	30 (762)	3/16 (5)	905 (410)	3958 (1795)
116559	B-1600	48 (1219)	69-1/8 (1756)	1-1/2	1-1/2	42 (1067)	1/4 (6)	1183 (537)	4665 (2116)
116560	B-2000	48 (1219)	84 (2145)	1-1/2	1-1/2	42 (1067)	1/4 (6)	1264 (573)	5620 (2549)
116793	B-2500	48 (1219)	100-7/8 (2562)	2	1-1/2	42 (1067)	1/4 (6)	1445 (655)	6890 (3125)
116794	B-3000	48 (1219)	118-1/8 (2562)	2	1-1/2	42 (1067)	1/4 (6)	1630 (739)	8164 (3703)
116795	B-3500	54 (1372)	111 (2820)	2	1-1/2	42 (1067)	1/4 (6)	2110 (957)	9741 (4418)
116796	B-4000	54 (1372)	124-1/2 (3163)	2	1-1/2	42 (1067)	1/4 (6)	2230 (1011)	10950 (4967)
116819	B-5000	60 (1524)	128 (3251)	2	1-1/2	42 (1067)	1/4 (6)	2450 (1111)	13403 (6079)
116841	B-7500	72 (1829)	127 (3326)	3	1-1/2	54 (1372)	3/8 (10)	4000 (1814)	20500 (9299)
116842	B-10000	72 (1829)	159 (4039)	3	1-1/2	54 (1372)	3/8 (10)	4900 (2223)	26890 (12197)
116843	B-15000	72 (1829)	233 (5918)	3	1-1/2	54 (1372)	3/8 (10)	6000 (2721)	39010 (17695)

Dimensions are subject to change. Not to be used for construction purposes unless certified.

*Approximate weight 100% full occurs if bag fails or if air charge is lost.

ITT Industries

Bell & Gossett

Bell & Gossett
8200 N. Austin Avenue, Morton Grove, IL 60053
Phone (847)966-3700
Facsimile (847)966-9052
www.bellgossett.com

ISO 9001 Certified

Bell & Gossett

SUBMITTAL

B-446.6B

JOB: WSU Central Chilled Water Plant

REPRESENTATIVE: Grittton & Associates

UNIT TAG:

ENGINEER:

CONTRACTOR:

ORDER NO.

SUBMITTED BY:

APPROVED BY:

DATE: 9/19/2005

DATE:

DATE:

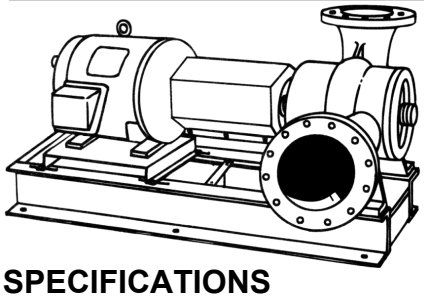

12x14x12½

VSCS® Centrifugal Pumps

Base Mounted - Double suction

SPECIFICATIONS

FLOW 5000 (GPM) HEAD 50 (FT)

HP 100 RPM 1800

VOLTS 230/460

CYCLE 60 PHASE 3

U.S. Motors ODP Inverter Duty

APPROX. WEIGHT 2430

SPECIALS:

TYPE OF SEAL

Stuffing Box Construction, 175 PSIG (12 Bar) working pressure, 125# ANSI flanges. External flush line to seal.

- ☐ Standard: -S Configuration, Durametalic RO, Buna/Carbon Ceramic
  120 psig (8 bar) max. suction pressure
  Temp. range: -20 to 225°F (-29 to 107 °C).
- ☐ Standard: -S Configuration, Durametalic RO, EPR/Tungsten-Carbon
  175 psig (12 bar) max. suction pressure, Temp. range: -20 to 300 °F* (-29 to 149 °C).
- ☐ Optional: -PF Configuration

Stuffing Box Construction, 300 PSIG (20 Bar) working pressure, 250# ANSI flanges. External flush line to seal.

- ☐ Standard: -S Configuration, Durametalic RO, EPR/Tungsten-Carbon, 275 PSIG (19 Bar) max. suction pressure, Temp. range: -20 to 300 °F* (-29 to 149 °C).

*For operating temperatures above 250°F, a cooled flush is required. On systems, cooling is accomplished by inserting the brazed place heat exchanger kit in the flush line to cool the fluid.

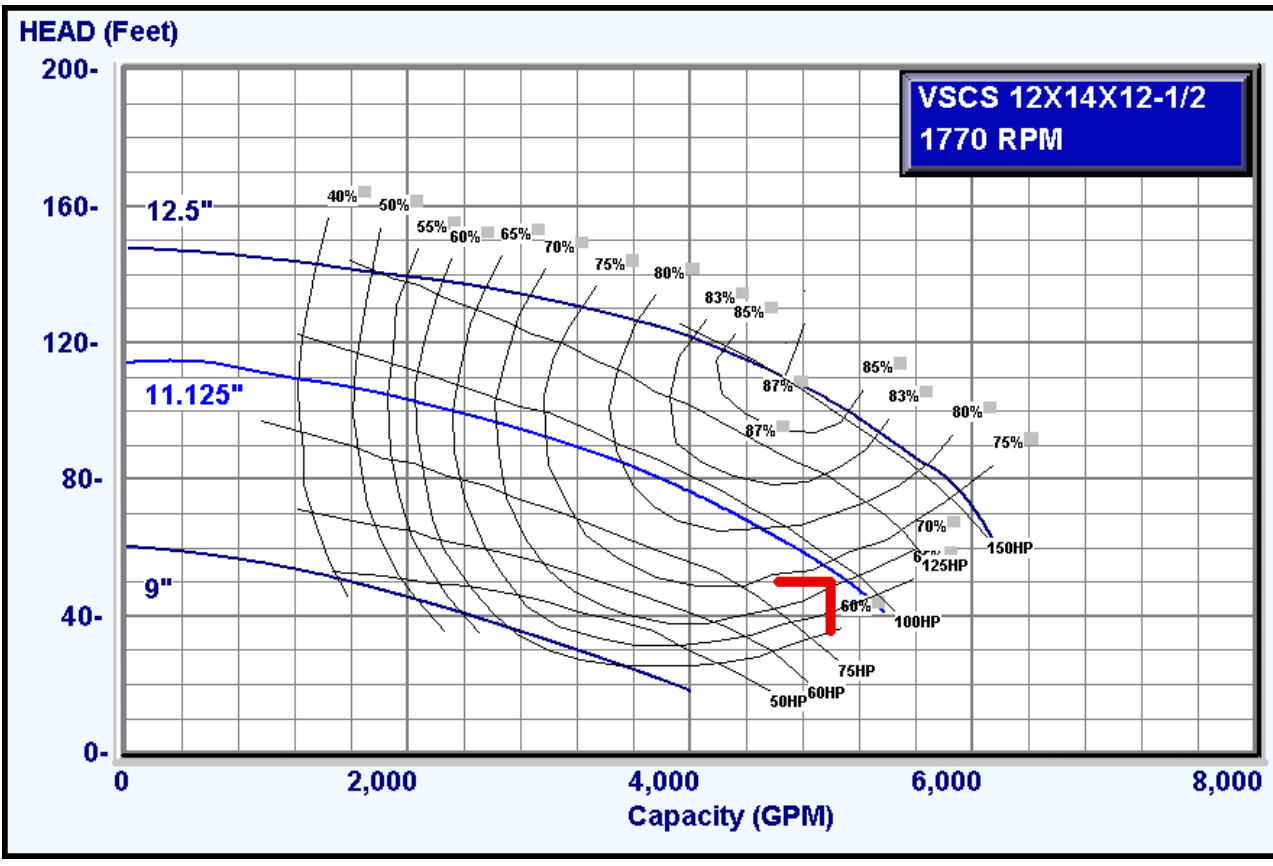

Design Capacity =5000.0 GPM
Design Head =50.0 Feet

Suction Size = 14 "
Suct. Velocity = 11.6 fps
Discharge Size = 12 "
Disc. Velocity = 14.2 fps

Min. Imp. Dia. = 9 "
Max. Imp. Dia. = 12.5 "
Cut Dia. = 11.125 "

Max. Flow = 5318 GPM
B.E.P. Flow = 3873 GPM

Eff. @ Duty-Point = 71.15 %
Motor Size =100 HP

B.H.P. @
Duty-Point = 89.71 BHP
Max. B.H.P. for
Imp. Cut = 92.85 BHP

Bell & Gossett

ITT Industries
Engineered for life

ESP-REP v2005.08 © COPYRIGHT 2004 ITT INDUSTRIES, INC.

Series VSCS 12x14x12½ Centrifugal Pump Submittal

B-446.6B

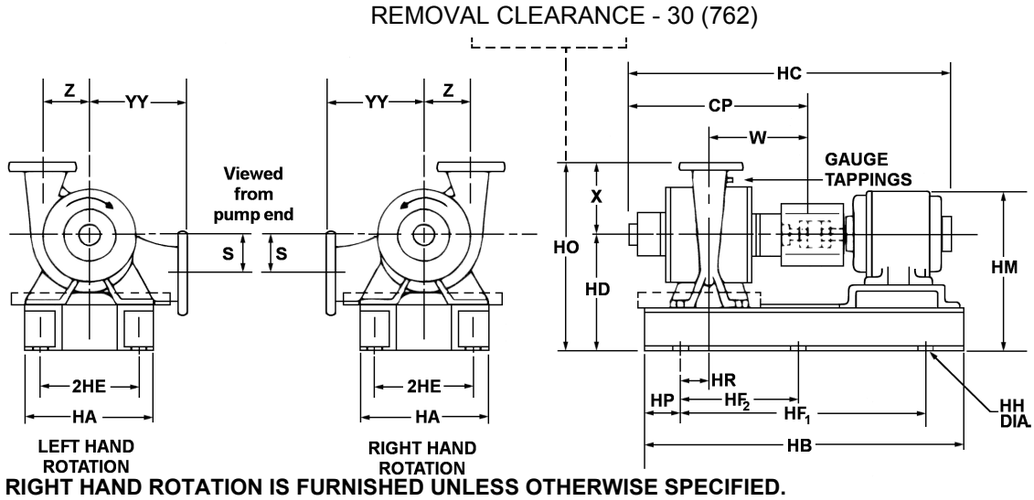

FLANGE DIMENSIONS IN INCHES (MM)

	SIZE	THICKNESS	O.D.
Discharge	12" (305)	2 (51)	20 (508)
Suction	14" (356)	2-1/8 (54)	22-3/8 (568)

RIGHT HAND ROTATION IS FURNISHED UNLESS OTHERWISE SPECIFIED.
NOTE: EPDM COUPLINGS ARE STANDARD ON PUMPS WITH MOTOR FRAME SIZES THRU 324T.

DIMENSIONS – Inches (mm)

STUFFING BOX VSCS, VSCS-PF, VSCS-S & VSCS-D

MOTOR FRAME	DIMENSIONS - INCHES (MM)																	
	CP	HA	HB	HC MAX.	HD	2HE	HF_1	HF_2	HH	HM MAX.	HO	HP	HR	S	W	X	YY	Z
284T	36-1/8 (918)	32 (813)	71 (1803)	67-3/4 (1721)	21-1/2 (546)	29-1/2 (749)	59 (1499)	29-1/2 (749)	1-1/8 (29)	29-1/2 (749)	39-1/2 (1003)	6 (152)	3-3/4 (95)	6-3/4 (171)	20-1/8 (511)	18 (457)	21 (533)	10-7/8 (276)
286T	36-1/8 (918)	32 (813)	71 (1803)	69-1/4 (1759)	21-1/2 (546)	29-1/2 (749)	59 (1499)	29-1/2 (749)	1-1/8 (29)	29-1/2 (749)	39-1/2 (1003)	6 (152)	3-3/4 (95)	6-3/4 (171)	20-1/8 (511)	18 (457)	21 (533)	10-7/8 (276)
324T	36-1/8 (918)	32 (813)	71 (1803)	71-1/4 (1810)	21-1/2 (546)	29-1/2 (749)	59 (1499)	29-1/2 (749)	1-1/8 (29)	30-5/8 (778)	39-1/2 (1003)	6 (152)	3-3/4 (95)	6-3/4 (171)	20-1/8 (511)	18 (457)	21 (533)	10-7/8 (276)
326T	36-1/8 (918)	32 (813)	71 (1803)	72-3/4 (1848)	21-1/2 (546)	29-1/2 (749)	59 (1499)	29-1/2 (749)	1-1/8 (29)	30-5/8 (778)	39-1/2 (1003)	6 (152)	3-3/4 (95)	6-3/4 (171)	20-1/8 (511)	18 (457)	21 (533)	10-7/8 (276)
364T	36-1/8 (918)	32 (813)	71 (1803)	75 (1905)	21-1/2 (546)	29-1/2 (749)	59 (1499)	29-1/2 (749)	1-1/8 (29)	31-3/4 (806)	39-1/2 (1003)	6 (152)	3-3/4 (95)	6-3/4 (171)	20-1/8 (511)	18 (457)	21 (533)	10-7/8 (276)
365T	36-1/8 (918)	32 (813)	71 (1803)	75-5/8 (1921)	21-1/2 (546)	29-1/2 (749)	59 (1499)	29-1/2 (749)	1-1/8 (29)	31-3/4 (806)	39-1/2 (1003)	6 (152)	3-3/4 (95)	6-3/4 (171)	20-1/8 (511)	18 (457)	21 (533)	10-7/8 (276)
364TS	36-1/8 (918)	32 (813)	71 (1803)	72-7/8 (1867)	21-1/2 (546)	29-1/2 (749)	59 (1499)	29-1/2 (749)	1-1/8 (29)	31-3/4 (806)	39-1/2 (1003)	6 (152)	3-3/4 (95)	6-3/4 (171)	20-1/8 (511)	18 (457)	21 (533)	10-7/8 (276)
365TS	36-1/8 (918)	32 (813)	71 (1803)	73-1/2 (1867)	21-1/2 (546)	29-1/2 (749)	59 (1499)	29-1/2 (749)	1-1/8 (29)	31-3/4 (806)	39-1/2 (1003)	6 (152)	3-3/4 (95)	6-3/4 (171)	20-1/8 (511)	18 (457)	21 (533)	10-7/8 (276)
404TS	36-1/8 (918)	32 (813)	71 (1803)	75-3/4 (1924)	21-1/2 (546)	29-1/2 (749)	59 (1499)	29-1/2 (749)	1-1/8 (29)	33-3/8 (848)	39-1/2 (1003)	6 (152)	3-3/4 (95)	6-3/4 (171)	20-1/8 (511)	18 (457)	21 (533)	10-7/8 (276)
405TS	36-1/8 (918)	32 (813)	71 (1803)	77-1/4 (1962)	21-1/2 (546)	29-1/2 (749)	59 (1499)	29-1/2 (749)	1-1/8 (29)	33-3/8 (848)	39-1/2 (1003)	6 (152)	3-3/4 (95)	6-3/4 (171)	20-1/8 (511)	18 (457)	21 (533)	10-7/8 (276)
444TS	36-1/8 (918)	32 (813)	71 (1803)	81-5/8 (2073)	21-1/2 (546)	29-1/2 (749)	59 (1499)	29-1/2 (749)	1-1/8 (29)	34 (864)	39-1/2 (1003)	6 (152)	3-3/4 (95)	6-3/4 (171)	20-1/8 (511)	18 (457)	21 (533)	10-7/8 (276)
445TS	36-1/8 (918)	32 (813)	71 (1803)	83-5/8 (2124)	21-1/2 (546)	29-1/2 (749)	59 (1499)	29-1/2 (749)	1-1/8 (29)	34 (864)	39-1/2 (1003)	6 (152)	3-3/4 (95)	6-3/4 (171)	20-1/8 (511)	18 (457)	21 (533)	10-7/8 (276)

Dimensions are subject to change. Not to be used for construction purposes unless certified.

ITT Industries

Bell & Gossett
Bell & Gossett
8200 N. Austin Avenue, Morton Grove, IL 60053
Phone (847)966-3700
Facsimile (847)966-9052
www.bellgossett.com

ISO 9001 Certified

This template is based on an IE Browser 1/2 inch margins on sides / .3 inch margins on top and bottom No header or footer info -->

Bell & Gossett

SUBMITTAL

B-447.1E

JOB: WSU Central Chilled Water Plant

REPRESENTATIVE: Grittton & Associates

UNIT TAG:
ENGINEER:
CONTRACTOR:

ORDER NO.
SUBMITTED BY:
APPROVED BY:

DATE: 9/19/2005
DATE:
DATE:

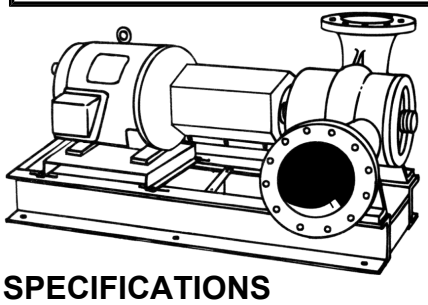

12x14x17-1/2B

VSCS Centrifugal Pumps

Base Mounted - Double suction

SPECIFICATIONS

FLOW	4500 (GPM)	HEAD	150 (FT)
HP	250	RPM	1800
VOLTS	460		
CYCLE	60	PHASE	3
Lincoln ODP Inverter Duty			
APPROX. WEIGHT	3796		
SPECIALS:			

TYPE OF SEAL

Standard Seal Construction, 175 PSIG (12 Bar) working pressure, 125# ANSI flanges. External flush line to seal.

☒ Standard: Crane Type 2, Buna/Carbon-Ceramic, 120 psig (6 bar) max. suction pressure Temp. range: -20 to 225°F (-29 to 107 °C).

☐ Optional: Crane Type 2, EPR/Carbon-Tungsten 170 psig (12 bar) max. suction pressure, Temp. range: -20 to 250°F (-29 to 121 °C).

Standard Seal Construction, 300 PSIG (20 Bar) working pressure, 250# ANSI flanges.

☐ Optional: Crane Type 2, EPR/Carbon-Tungsten, 170 psig (12 bar) max. suction pressure Temp. range: -20 to 250°F (-29 to 121 °C).

-S Construction, 300 PSIG (20 Bar) working pressure, 250# ANSI flanges. External flush line to seal.

☐ Standard: -S Configuration, Durametalic RO, EPR/Carbon-Tungsten, 240 psig (16 bar) max. suction pressure, Temp. range: -20 to 300 °F* (-29 to 149 °C).

*For operating temperatures above 250°F, a cooled flush is required. On systems, cooling is accomplished by inserting the brazed place heat exchanger kit in the flush line to cool the fluid.

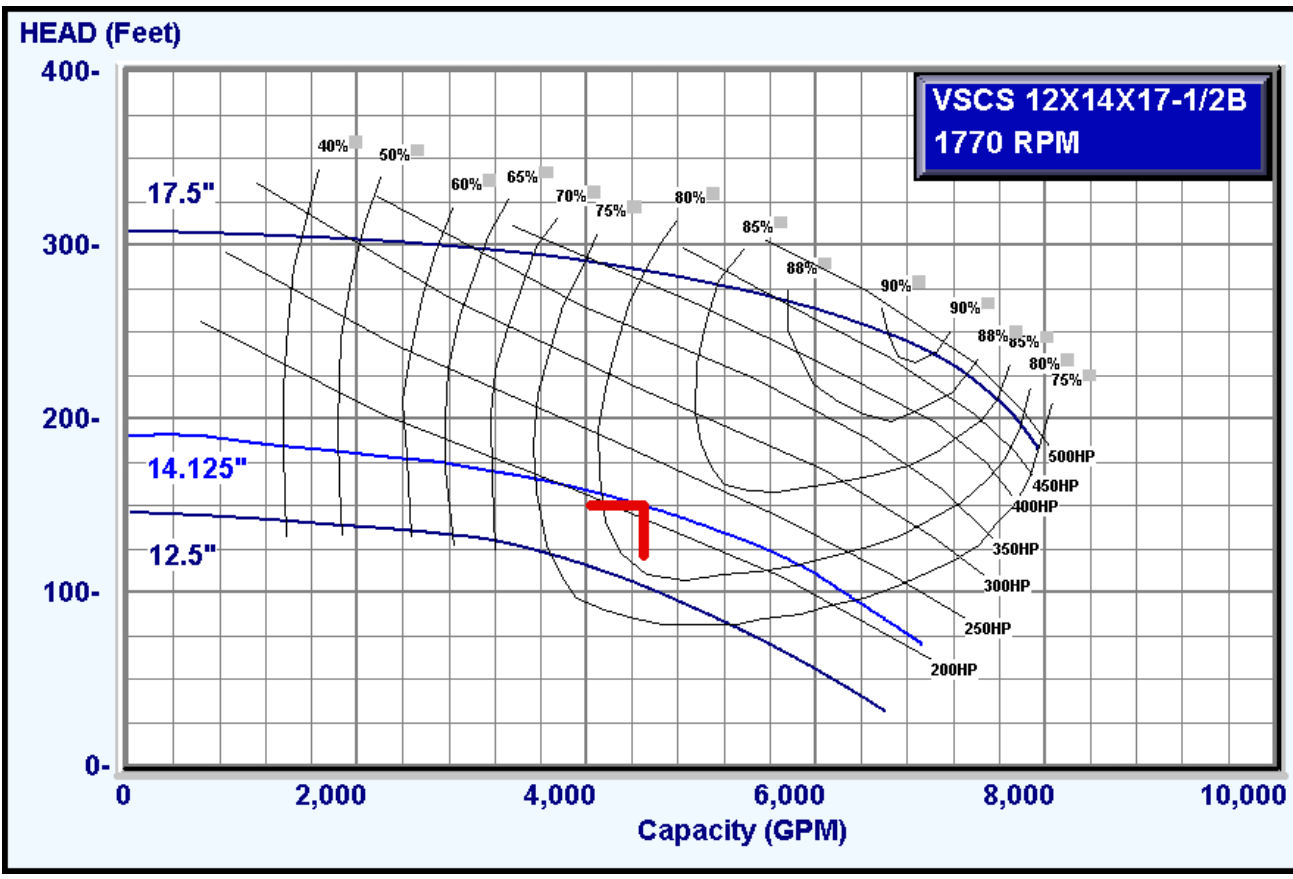

Design Capacity =4500.0 GPM
Design Head =150.0 Feet

Suction Size = 14 "
Suct. Velocity = 10.5 fps
Discharge Size = 12 "
Disc. Velocity = 12.8 fps

Min. Imp. Dia. = 12.5 "
Max. Imp. Dia. = 17.5 "
Cut Dia. = 14.125 "

Max. Flow = 6922 GPM
B.E.P. Flow = 4905 GPM

Eff. @ Duty-Point = 81.88 %
Motor Size =250 HP

B.H.P. @
Duty-Point = 208.42 BHP
Max. B.H.P. for
Imp. Cut = 214.73 BHP

Bell & Gossett

ITT Industries
Engineered for life

ESP-REP v2005.08 © COPYRIGHT 2004 ITT INDUSTRIES, INC.

This template is based on an IE Browser 1/2 inch margins on sides / .3 inch margins on top and bottom No header or footer info -->

Series VSCS 12x14x17-1/2B Centrifugal Pump Submittal B-447.1E

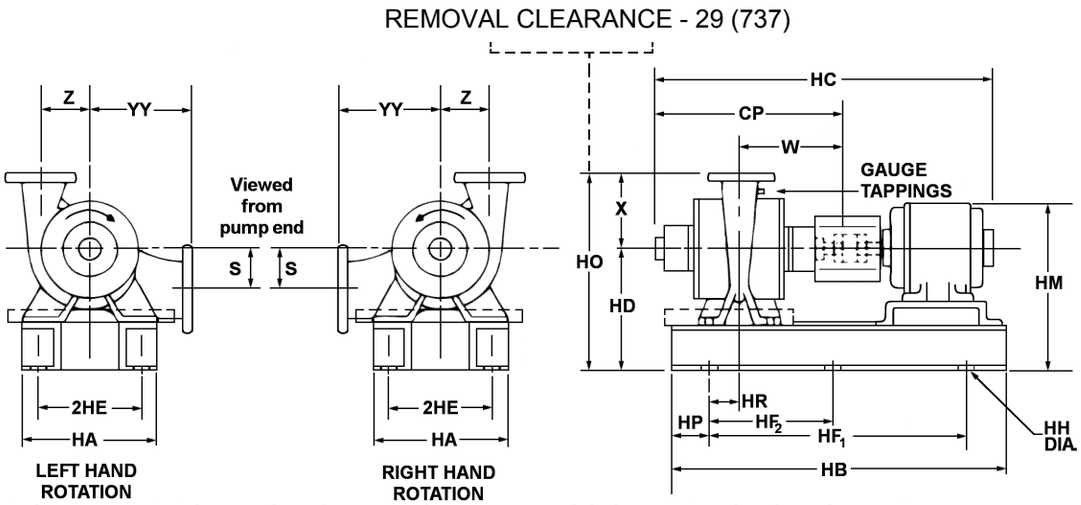

FLANGE DIMENSIONS IN INCHES (MM)			
	SIZE	THICKNESS	O.D.
Discharge	12" (305)	2 (51)	20 (508)
Suction	14" (356)	2-1/8 (54)	22-3/8 (568)

RIGHT HAND ROTATION IS FURNISHED UNLESS OTHERWISE SPECIFIED.
NOTE: EPDM COUPLINGS ARE STANDARD ON PUMPS WITH MOTOR FRAME SIZES THRU 324T.

DIMENSIONS – Inches (mm) **STANDARD SEAL VSCS & STUFFING BOX VSCS-S**

MOTOR FRAME	DIMENSIONS - INCHES (MM)																	
	CP	HA	HB	HC MAX.	HD	2HE	HF_1	HF_2	HH	HM MAX.	HO	HP	HR	S	W	X	YY	Z
404T	34 (864)	32 (813)	71 (1803)	76-5/8 (1946)	23-1/2 (597)	33 (838)	59 (1499)	29-1/2 (749)	1-1/8 (29)	35-3/8 (899)	45-1/4 (1149)	6 (152)	3-3/4 (95)	7-3/4 (197)	19-1/2 (495)	21-3/4 (552)	25 (635)	13-1/2 (343)
405T	34 (864)	32 (813)	71 (1803)	78-1/8 (1984)	23-1/2 (597)	33 (838)	59 (1499)	29-1/2 (749)	1-1/8 (29)	35-3/8 (899)	45-1/4 (1149)	6 (152)	3-3/4 (95)	7-3/4 (197)	19-1/2 (495)	21-3/4 (552)	25 (635)	13-1/2 (343)
444T	34 (864)	36 (914)	81 (2057)	83-1/4 (2115)	23-1/2 (597)	33 (838)	69 (1753)	34-1/2 (876)	1-1/8 (29)	36 (914)	45-1/4 (1149)	6 (152)	4-1/2 (114)	7-3/4 (197)	19-1/2 (495)	21-3/4 (552)	25 (635)	13-1/2 (343)
445T	34 (864)	36 (914)	71 (1803)	85-1/4 (2165)	23-1/2 (597)	33 (838)	69 (1753)	34-1/2 (876)	1-1/8 (29)	36 (914)	45-1/4 (1149)	6 (152)	4-1/2 (114)	7-3/4 (197)	19-1/2 (495)	21-3/4 (552)	25 (635)	13-1/2 (343)
444TS	34 (864)	36 (914)	81 (2057)	79-1/2 (2019)	23-1/2 (597)	33 (838)	69 (1753)	34-1/2 (876)	1-1/8 (29)	36 (914)	45-1/4 (1149)	6 (152)	4-1/2 (114)	7-3/4 (197)	19-1/2 (495)	21-3/4 (552)	25 (635)	13-1/2 (343)
445TS	34 (864)	36 (914)	81 (2057)	81-1/2 (2070)	23-1/2 (597)	33 (838)	69 (1753)	34-1/2 (876)	1-1/8 (29)	36 (914)	45-1/4 (1149)	6 (152)	4-1/2 (114)	7-3/4 (197)	19-1/2 (495)	21-3/4 (552)	25 (635)	13-1/2 (343)
250 HP & Larger Consult Factory	34 (864)	36 (914)	*	*	23-1/2 (597)	33 (838)	*	*	1-1/8 (29)	*	45-1/4 (1149)	6 (152)	4-1/2 (114)	7-3/4 (197)	19-1/2 (495)	21-3/4 (552)	25 (635)	13-1/2 (343)

Dimensions are subject to change. Not to be used for construction purposes unless certified.
***Varies with motor manufacturer. 250HP and over consult factory.**

Bell & Gossett

SUBMITTAL

B-446.4B

JOB: WSU Central Chilled Water Plant

REPRESENTATIVE: Grittton & Associates

UNIT TAG:

ENGINEER:

CONTRACTOR:

ORDER NO.

SUBMITTED BY:

APPROVED BY:

DATE: 9/19/2005

DATE:

DATE:

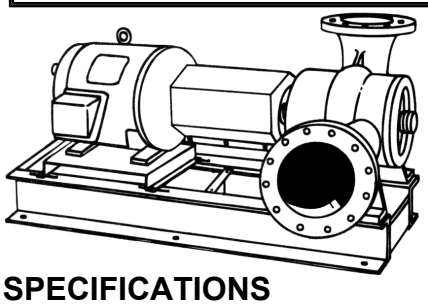

10x12x11

VSCS Centrifugal Pumps

Base Mounted - Double suction

SPECIFICATIONS

FLOW 3600 (GPM) HEAD 40 (FT)

HP 60 RPM 1800

VOLTS 230/460

CYCLE 60 PHASE 3

U.S. Motors ODP Inverter Duty

APPROX. WEIGHT 1910

SPECIALS:

TYPE OF SEAL

Standard Seal Construction, 175 PSIG (12 Bar) working pressure, 125# ANSI flanges.

std. flush(-F)

☒ ☐ Standard: Crane Type 21, Buna/Carbon-Ceramic, 90 psig (6 bar) max. suction pressure Temp. range: -20 to 225°F (-29 to 107 °C).

☐ ☐ Optional: Crane Type 21, EPR/Carbon-Tungsten 90 psig (6 bar) max. suction pressure, Temp. range: -20 to 250 °F (-29 to 121 °C).

☐ ☐ Optional: Crane Type 2, Buna/Carbon-Ceramic, 175 psig (6 bar) max. suction pressure Temp. range: -20 to 225 °F (-29 to 107 °C).

Standard Seal Construction, 300 PSIG (20 Bar) working pressure, 250# ANSI flanges.

☐ ☐ Standard: Crane Type 2, Buna/Carbon-Ceramic, 180 psig (12 bar) max. suction pressure Temp. range:-20 to 225°F (-29 to 107 °C).

☐ ☐ Optional: Crane Type 2, EPR/Carbon-Tungsten, 240 psig (16 bar) max. suction pressure Temp. range: -20 to 250 °F (-29 to 121 °C).

Stuffing Box Construction, 175 PSIG (12 Bar) working press., 125# ANSI flanges. External flush to seal.

☐ Standard: -S Configuration, Durametallic RO, EPR/Carbon-Tungsten, 175 psig (12 bar) max. suction pressure, Temp. range: -20 to 300 °F* (-29 to 149 °C).

☐ Optional: -PF Configuration
Packing (Non-Asbestos)

Stuffing Box Construction, 300 PSIG (20 Bar) working press., 250# ANSI flanges. External flush to seal.

☐ Standard: -S Configuration, Durametallic RO, EPR/Carbon-Tungsten, 300 PSIG (20 Bar) max. suction pressure, Temp. range: -20 to 300 °F* (-29 to 149 °C).

*For operating temperatures above 250°F, a cooled flush is required. On closed systems, cooling is accomplished by inserting the brazed place heat exchanger kit in the flush line to cool the fluid.

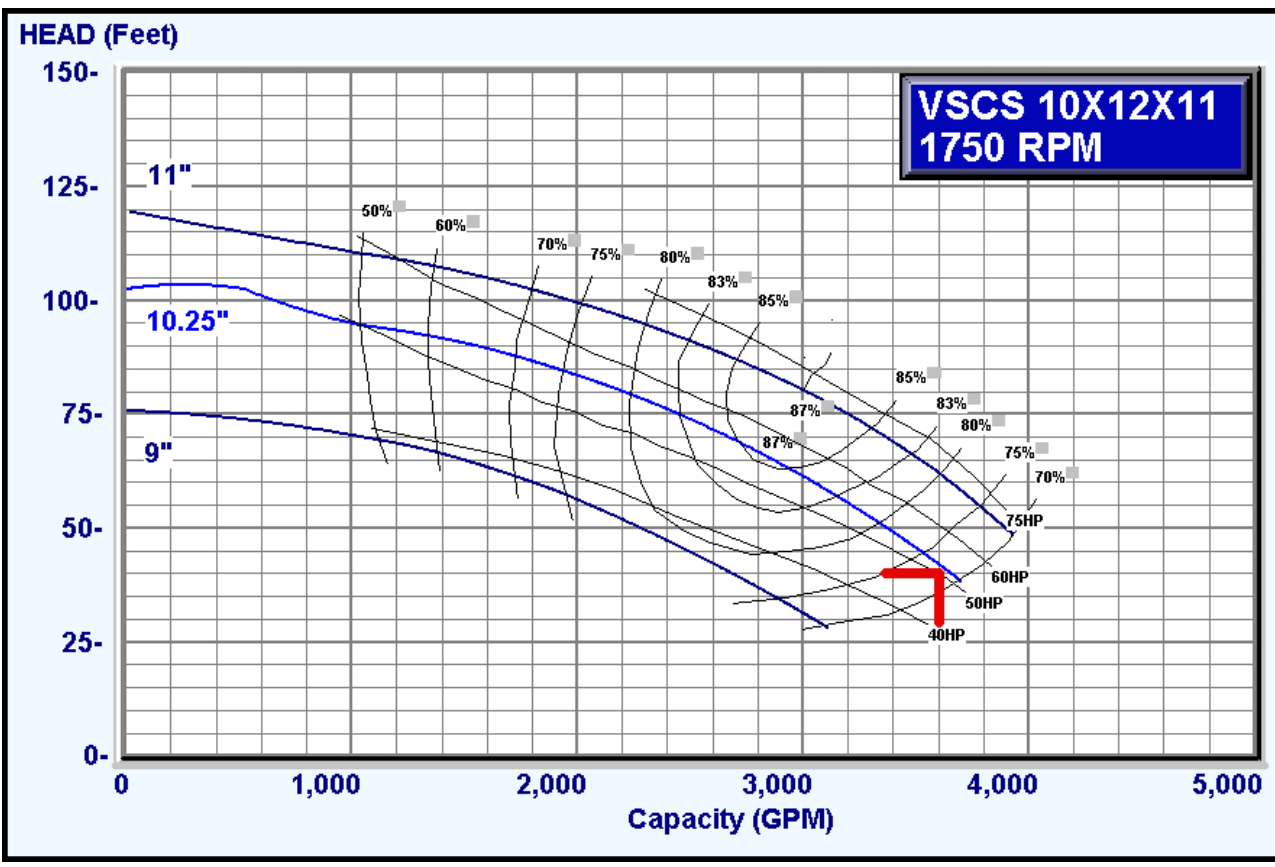

Design Capacity =3600.0 GPM
Design Head =40.0 Feet

Suction Size = 12 "
Suct. Velocity = 10.2 fps
Discharge Size = 10 "
Disc. Velocity = 14.6 fps

Min. Imp. Dia. = 9 "
Max. Imp. Dia. = 11 "
Cut Dia. = 10.25 "

Max. Flow = 3731 GPM
B.E.P. Flow = 2894 GPM

Eff. @ Duty-Point = 72.3 %
Motor Size =60 HP

B.H.P. @
Duty-Point = 51.3 BHP
Max. B.H.P. for
Imp. Cut = 55.45 BHP

Bell & Gossett

ITT Industries
Engineered for life

ESP-REP v2005.08 © COPYRIGHT 2004 ITT INDUSTRIES, INC.

Series VSCS 10x12x11 Centrifugal Pump Submittal

B-446.4B

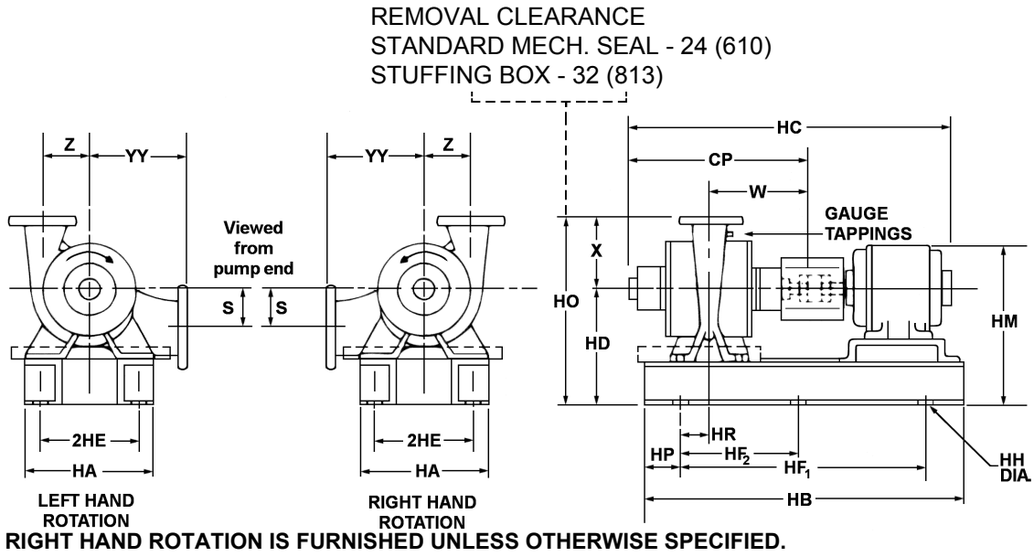

FLANGE DIMENSIONS IN INCHES (MM)			
	SIZE	THICKNESS	O.D.
Discharge	10" (254)	1-7/8 (48)	17 (432)
Suction	12" (305)	2 (51)	20 (508)

RIGHT HAND ROTATION IS FURNISHED UNLESS OTHERWISE SPECIFIED.
NOTE: EPDM COUPLINGS ARE STANDARD ON PUMPS WITH MOTOR FRAME SIZES THRU 324T.

DIMENSIONS – Inches (mm) **STANDARD SEAL VSCS, VSCS-F**

MOTOR FRAME	DIMENSIONS - INCHES (MM)																	
	CP	HA	HB	HC MAX.	HD	2HE	HF_1	HF_2	HH	HM MAX.	HO	HP	HR	S	W	X	YY	Z
256T	23-15/16 (608)	26 (660)	53-3/4 (1365)	54-7/8 (1394)	18-1/2 (470)	23-1/2 (597)	41-7/8 (1064)	20-7/8 (530)	1 (25)	25-3/8 (645)	34-1/2 (876)	6 (152)	3 (76)	4-1/4 (108)	13-1/2 (343)	16 (406)	18 (457)	10 (254)
284T	23-15/16 (608)	26 (660)	53-3/4 (1365)	55-1/2 (1410)	18-1/2 (470)	23-1/2 (597)	41-7/8 (1064)	20-7/8 (530)	1 (25)	25-3/8 (645)	34-1/2 (876)	6 (152)	3 (76)	4-1/4 (108)	13-1/2 (343)	16 (406)	18 (457)	10 (254)
286T	23-15/16 (608)	26 (660)	53-3/4 (1365)	57 (1448)	18-1/2 (470)	23-1/2 (597)	41-7/8 (1064)	20-7/8 (530)	1 (25)	26-1/2 (673)	34-1/2 (876)	6 (152)	3 (76)	4-1/4 (108)	13-1/2 (343)	16 (406)	18 (457)	10 (254)
324T	23-15/16 (608)	26 (660)	53-3/4 (1365)	59-1/8 (1502)	18-1/2 (470)	23-1/2 (597)	41-7/8 (1064)	20-7/8 (530)	1 (25)	26-1/2 (673)	34-1/2 (876)	6 (152)	3 (76)	4-1/4 (108)	13-1/2 (343)	16 (406)	18 (457)	10 (254)
326T	23-15/16 (608)	26 (660)	53-3/4 (1365)	60-5/8 (1540)	18-1/2 (470)	23-1/2 (597)	41-7/8 (1064)	20-7/8 (530)	1 (25)	27-5/8 (702)	34-1/2 (876)	6 (152)	3 (76)	4-1/4 (108)	13-1/2 (343)	16 (406)	18 (457)	10 (254)
364TS	23-15/16 (608)	26 (660)	53-3/4 (1365)	60-5/8 (1540)	18-1/2 (470)	23-1/2 (597)	41-7/8 (1064)	20-7/8 (530)	1 (25)	27-5/8 (702)	34-1/2 (876)	6 (152)	3 (76)	4-1/4 (108)	13-1/2 (343)	16 (406)	18 (457)	10 (254)
365TS	23-15/16 (608)	26 (660)	53-3/4 (1365)	61-3/8 (1559)	18-1/2 (470)	23-1/2 (597)	41-7/8 (1064)	20-7/8 (530)	1 (25)	28-3/4 (730)	34-1/2 (876)	6 (152)	3 (76)	4-1/4 (108)	13-1/2 (343)	16 (406)	18 (457)	10 (254)

STUFFING BOX VSCS-PF, VSCS-S, VSCS-D

MOTOR FRAME	DIMENSIONS - INCHES (MM)																	
	CP	HA	HB	HC MAX.	HD	2HE	HF_1	HF_2	HH	HM MAX.	HO	HP	HR	S	W	X	YY	Z
256T	31-9/16 (802)	26 (660)	53-3/4 (1365)	62-1/2 (1588)	18-1/2 (470)	23-1/2 (597)	41-7/8 (1064)	20-7/8 (530)	1 (25)	25-3/8 (645)	34-1/2 (876)	6 (152)	3 (76)	4-1/4 (108)	17-5/16 (440)	16 (406)	18 (457)	10 (254)
284T	31-9/16 (802)	26 (660)	59-1/4 (1505)	63-1/8 (1603)	18-1/2 (470)	23-1/2 (597)	47-1/4 (1200)	23-5/8 (600)	1 (25)	25-3/8 (645)	34-1/2 (876)	6 (152)	3 (76)	4-1/4 (108)	17-5/16 (440)	16 (406)	18 (457)	10 (254)
286T	31-9/16 (802)	26 (660)	59-1/4 (1505)	64-5/8 (1641)	18-1/2 (470)	23-1/2 (597)	47-1/4 (1200)	23-5/8 (600)	1 (25)	26-1/2 (673)	34-1/2 (876)	6 (152)	3 (76)	4-1/4 (108)	17-5/16 (440)	16 (406)	18 (457)	10 (254)
324T	31-9/16 (802)	26 (660)	59-1/4 (1505)	66-3/4 (1695)	18-1/2 (470)	23-1/2 (597)	47-1/4 (1200)	23-5/8 (600)	1 (25)	26-1/2 (673)	34-1/2 (876)	6 (152)	3 (76)	4-1/4 (108)	17-5/16 (440)	16 (406)	18 (457)	10 (254)
326T	31-9/16 (802)	26 (660)	59-1/4 (1505)	68-1/4 (1734)	18-1/2 (470)	23-1/2 (597)	47-1/4 (1200)	23-5/8 (600)	1 (25)	27-5/8 (702)	34-1/2 (876)	6 (152)	3 (76)	4-1/4 (108)	17-5/16 (440)	16 (406)	18 (457)	10 (254)
364TS	31-9/16 (802)	26 (660)	59-1/4 (1505)	68-1/4 (1734)	18-1/2 (470)	23-1/2 (597)	47-1/4 (1200)	23-5/8 (600)	1 (25)	27-5/8 (702)	34-1/2 (876)	6 (152)	3 (76)	4-1/4 (108)	17-5/16 (440)	16 (406)	18 (457)	10 (254)
365TS	31-9/16 (802)	26 (660)	59-1/4 (1505)	69 (1753)	18-1/2 (470)	23-1/2 (597)	47-1/4 (1200)	23-5/8 (600)	1 (25)	28-3/4 (730)	34-1/2 (876)	6 (152)	3 (76)	4-1/4 (108)	17-5/16 (440)	16 (406)	18 (457)	10 (254)

Dimensions are subject to change. Not to be used for construction purposes unless certified.

ITT Industries

Bell & Gossett
Bell & Gossett
8200 N. Austin Avenue, Morton Grove, IL 60053
Phone (847)966-3700
Facsimile (847)966-9052
www.bellgossett.com

ISO 9001 Certified

Bell & Gossett

SUBMITTAL

B-447.9B

JOB: WSU Central Chilled Water Plant

REPRESENTATIVE: Grittton & Associates

UNIT TAG:

ENGINEER:

CONTRACTOR:

ORDER NO.

SUBMITTED BY:

APPROVED BY:

DATE: 9/19/2005

DATE:

DATE:

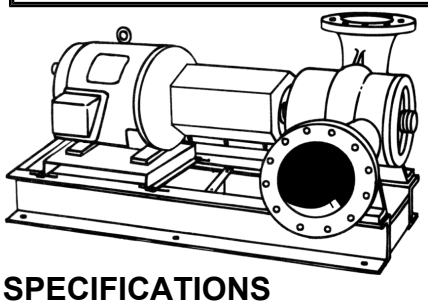

12x14x12¾L

VSCS Centrifugal Pumps

Base Mounted - Double suction

SPECIFICATIONS

FLOW 5000 (GPM) HEAD 40 (FT)

HP 100 RPM 1800

VOLTS 230/460

CYCLE 60 PHASE 3

U.S. Motors ODP Inverter Duty

APPROX. WEIGHT 2430

SPECIALS:

TYPE OF SEAL

Standard Seal Construction, 175 PSIG (12 Bar) working pressure, 125# ANSI flanges.

std. flush(-F)

☐ ☐ Standard: Crane Type 2, Buna/Carbon-Ceramic, 140 psig (10 bar) max. suction pressure Temp. range: -20 to 225°F (-29 to 107 °C).

☐ ☐ Optional: Crane Type 2, EPR/Carbon-Tungsten, 175 psig (12 bar) max. suction pressure Temp. range: -20 to 250 °F (-29 to 121 °C).

Standard Seal Construction, 300 PSIG (20 Bar) working pressure, 250# ANSI flanges.

☐ ☐ Optional: Crane Type 2, EPR/Carbon-Tungsten, 185 psig (13 bar) max. suction pressure Temp. range: -20 to 250 °F (-29 to 121 °C).

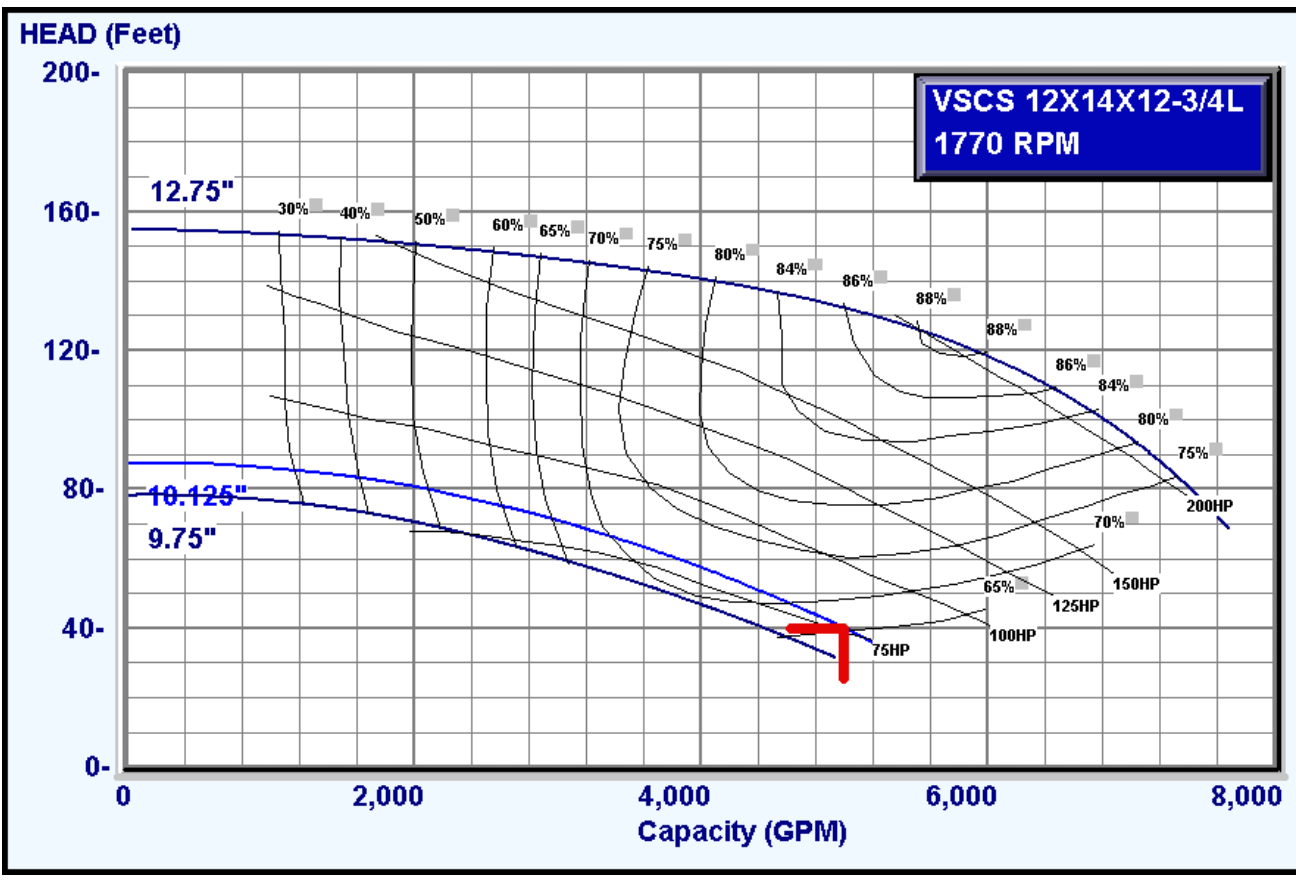

Design Capacity =5000.0 GPM
Design Head =40.0 Feet

Suction Size = 14 "
Suct. Velocity = 11.6 fps
Discharge Size = 12 "
Disc. Velocity = 14.2 fps

Min. Imp. Dia. = 9.75 "
Max. Imp. Dia. = 12.75 "
Cut Dia. = 10.125 "

Max. Flow = 5349 GPM
B.E.P. Flow = 3796 GPM

Eff. @ Duty-Point = 65.68 %
Motor Size =100 HP

B.H.P. @
Duty-Point = 76.97 BHP
Max. B.H.P. for
Imp. Cut = 83.71 BHP

Bell & Gossett

ITT Industries
Engineered for life

ESP-REP v2005.08 © COPYRIGHT 2004 ITT INDUSTRIES, INC.

Series VSCS 12x14x12¾L Centrifugal Pump Submittal

B-447.9B

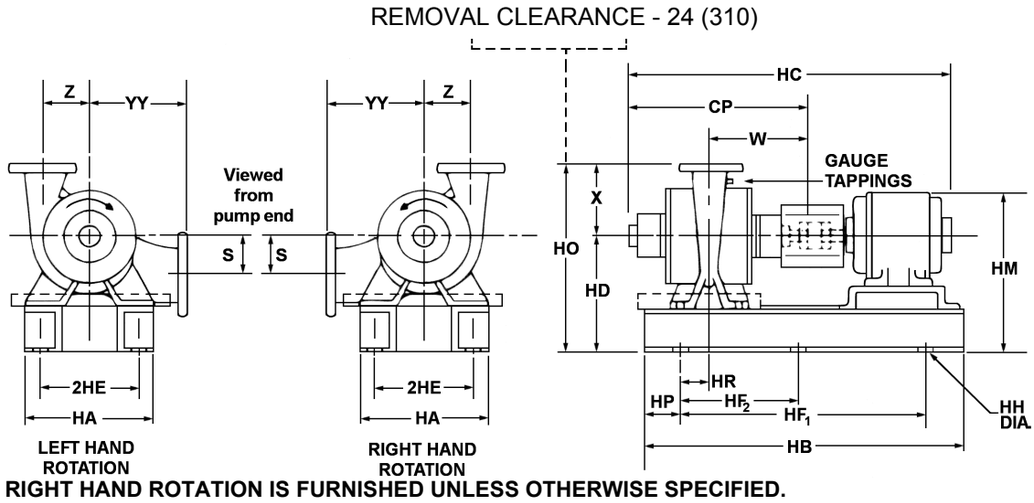

FLANGE DIMENSIONS IN INCHES (MM)			
	SIZE	THICKNESS	O.D.
Discharge	12" (305)	2" (51)	20" (508)
Suction	14" (356)	2-3/8" (60)	22-3/8" (568)

RIGHT HAND ROTATION IS FURNISHED UNLESS OTHERWISE SPECIFIED.
NOTE: EPDM COUPLINGS ARE STANDARD ON PUMPS WITH MOTOR FRAME SIZES THRU 324T.

DIMENSIONS - Inches (mm) **STANDARD SEAL VSCS, VSCS-F**

MOTOR FRAME	DIMENSIONS - INCHES (MM)																	
	CP	HA	HB	HC MAX.	HD	2 HE	HF_1	HF_2	HH	HM MAX.	HO	HP	HR	S	W	X	YY	Z
324T	29-1/8 (740)	32 (813)	71 (1803)	63-1/4 (1607)	21-1/2 (546)	29-1/2 (749)	59 (1499)	29-1/2 (749)	1-1/8 (29)	30-5/8 (778)	39-1/2 (1003)	6 (152)	3-3/4 (95)	6-3/4 (171)	16-5/8 (422)	18 (457)	21 (533)	10-7/8 (276)
326T	29-1/8 (740)	32 (813)	71 (1803)	65-3/4 (1670)	21-1/2 (546)	29-1/2 (749)	59 (1499)	29-1/2 (749)	1-1/8 (29)	30-5/8 (778)	39-1/2 (1003)	6 (152)	3-3/4 (95)	6-3/4 (171)	16-5/8 (422)	18 (457)	21 (533)	10-7/8 (276)
364T	29-1/8 (740)	32 (813)	71 (1803)	68 (1727)	21-1/2 (546)	29-1/2 (749)	59 (1499)	29-1/2 (749)	1-1/8 (29)	31-3/4 (806)	39-1/2 (1003)	6 (152)	3-3/4 (95)	6-3/4 (171)	16-5/8 (422)	18 (457)	21 (533)	10-7/8 (276)
365T	29-1/8 (740)	32 (813)	71 (1803)	68-5/8 (1743)	21-1/2 (546)	29-1/2 (749)	59 (1499)	29-1/2 (749)	1-1/8 (29)	31-3/4 (806)	39-1/2 (1003)	6 (152)	3-3/4 (95)	6-3/4 (171)	16-5/8 (422)	18 (457)	21 (533)	10-7/8 (276)
364TS	29-1/8 (740)	32 (813)	71 (1803)	65-7/8 (1673)	21-1/2 (546)	29-1/2 (749)	59 (1499)	29-1/2 (749)	1-1/8 (29)	31-3/4 (806)	39-1/2 (1003)	6 (152)	3-3/4 (95)	6-3/4 (171)	16-5/8 (422)	18 (457)	21 (533)	10-7/8 (276)
365TS	29-1/8 (740)	32 (813)	71 (1803)	66-1/2 (1689)	21-1/2 (546)	29-1/2 (749)	59 (1499)	29-1/2 (749)	1-1/8 (29)	31-3/4 (806)	39-1/2 (1003)	6 (152)	3-3/4 (95)	6-3/4 (171)	16-5/8 (422)	18 (457)	21 (533)	10-7/8 (276)
404T	29-1/8 (740)	32 (813)	71 (1803)	71-3/4 (1822)	21-1/2 (546)	29-1/2 (749)	59 (1499)	29-1/2 (749)	1-1/8 (29)	33-3/8 (848)	39-1/2 (1003)	6 (152)	3-3/4 (95)	6-3/4 (171)	16-5/8 (422)	18 (457)	21 (533)	10-7/8 (276)
404TS	29-1/8 (740)	32 (813)	71 (1803)	68-3/4 (1746)	21-1/2 (546)	29-1/2 (749)	59 (1499)	29-1/2 (749)	1-1/8 (29)	33-3/8 (848)	39-1/2 (1003)	6 (152)	3-3/4 (95)	6-3/4 (171)	16-5/8 (422)	18 (457)	21 (533)	10-7/8 (276)
405TS	29-1/8 (740)	32 (813)	71 (1803)	70-1/4 (1784)	21-1/2 (546)	29-1/2 (749)	59 (1499)	29-1/2 (749)	1-1/8 (29)	33-3/8 (848)	39-1/2 (1003)	6 (152)	3-3/4 (95)	6-3/4 (171)	16-5/8 (422)	18 (457)	21 (533)	10-7/8 (276)
444TS	29-1/8 (740)	32 (813)	71 (1803)	74-5/8 (1895)	21-1/2 (546)	29-1/2 (749)	59 (1499)	29-1/2 (749)	1-1/8 (29)	33-3/8 (848)	39-1/2 (1003)	6 (152)	3-3/4 (95)	6-3/4 (171)	16-5/8 (422)	18 (457)	21 (533)	10-7/8 (276)
445TS	29-1/8 (740)	32 (813)	71 (1803)	76-5/8 (1946)	21-1/2 (546)	29-1/2 (749)	59 (1499)	29-1/2 (749)	1-1/8 (29)	34 (864)	39-1/2 (1003)	6 (152)	3-3/4 (95)	6-3/4 (171)	16-5/8 (422)	18 (457)	21 (533)	10-7/8 (276)
250 HP Consult Factory	29-1/8 (740)	36 (914)	*	*	21-1/2 (546)	33 (838)	*	*	1-1/8 (29)	*	39-1/2 (1003)	6 (152)	4-1/2 (114)	6-3/4 (171)	16-5/8 (422)	18 (457)	21 (533)	10-7/8 (276)

***Varies with Motor Manufacturer. 250 HP & over consult factory.**
Dimensions are subject to change. Not to be used for construction purposes unless certified.

ITT Industries

Bell & Gossett
Bell & Gossett
8200 N. Austin Avenue, Morton Grove, IL 60053
Phone (847)966-3700
Facsimile (847)966-9052
www.bellgossett.com

ISO 9001 Certified

Bell & Gossett

SUBMITTAL

B-225.7C

JOB: WSU Central Chilled Water Plant

REPRESENTATIVE: Grittton & Associates

UNIT TAG:

ENGINEER:

CONTRACTOR:

ORDER NO.

SUBMITTED BY:

APPROVED BY:

DATE: 9/19/2005

DATE:

DATE:

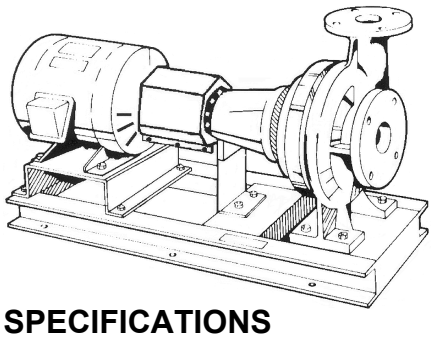

6BC
Series 1510
Centrifugal Pumps - Base Mounted

SPECIFICATIONS

FLOW 1600 (GPM) HEAD 30 (FT)

HP 20 RPM 1800

VOLTS 230/460

CYCLE 60 PHASE 3

U.S. Motors ODP Inverter Duty

APPROX. WEIGHT 735

SPECIALS

Note: Equipped with EPDM coupling

MATERIALS OF CONSTRUCTION

☒ BRONZE FITTED ☐ ALL IRON

FEATURES

☒ ANSI/OSHA Coupling Guard

☒ Center Drop Out Spacer Coupling

☒ Fabricated Heavy Duty Baseplate

MAXIMUM WORKING PRESSURE

☒ 175 psi (12 bar) W.P.
w/ 125# ANSI flange drilling

☐ 250 psi (17 bar) W.P.
w/ 250# ANSI flange drilling (requires 1510-S)

TYPE OF SEAL

☒ 1510 Standard Seal
(Buna-Carbon/Ceramic)

☐ 1510 -F Standard Seal w/ Flush Line
(Buna-Carbon/Ceramic)

☐ 1510 -S Stuffing Box construction w/ Flushed Mechanical Single Seal
(EPR-Tungsten Carbide/Carbon)

☐ 1510 -D Stuffing Box construction w/ Flushed Double Mechanical Seal
(EPR-Carbon/Ceramic)
Requires external water source

☐ 1510 -PF Stuffing Box Construction w/ Packing
(Graphite Impregnated Teflon)

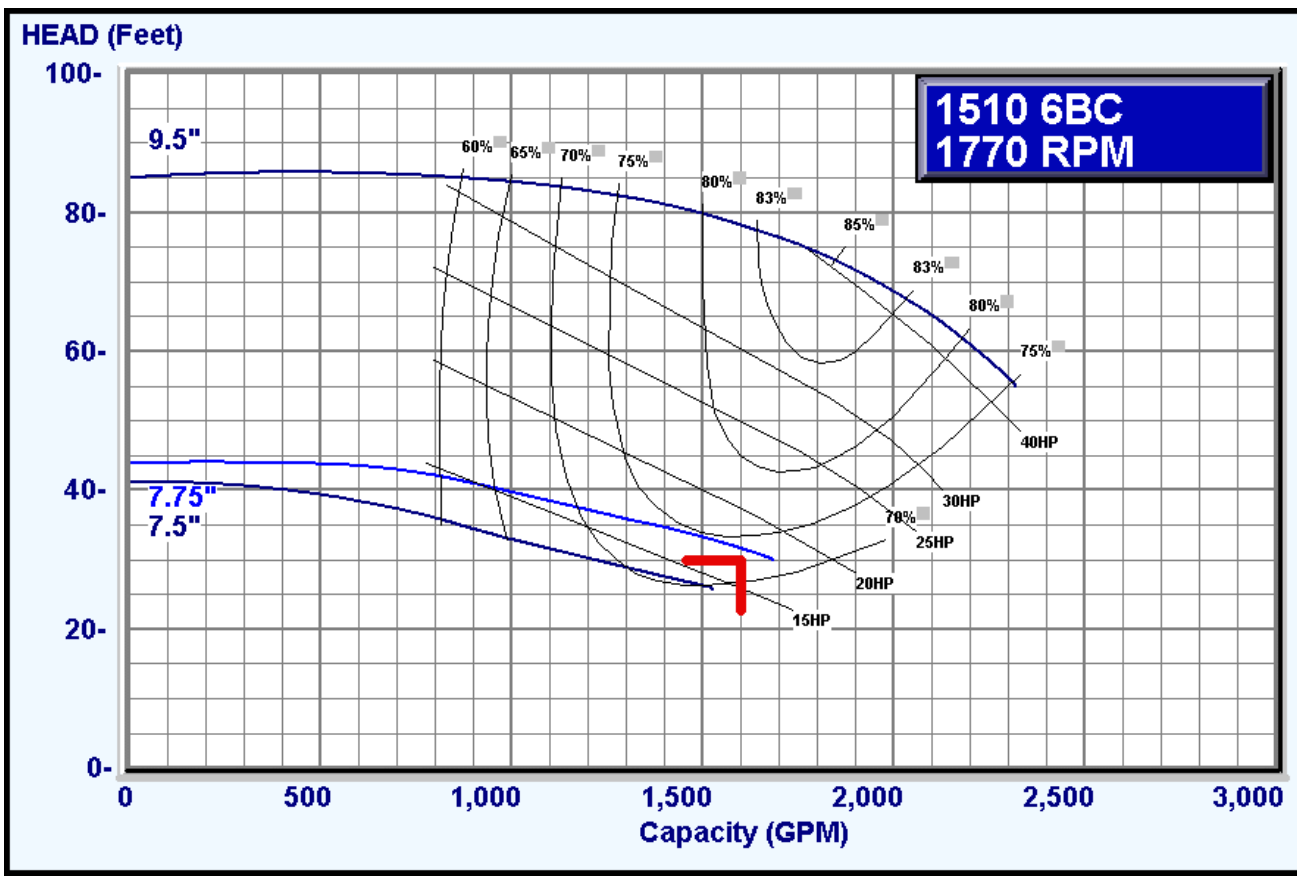

Design Capacity =1600.0 GPM
Design Head =30.0 Feet

Suction Size = 8 "
Suct. Velocity = 10.3 fps
Discharge Size = 6 "
Disc. Velocity = 17.8 fps

Min. Imp. Dia. = 7.5 "
Max. Imp. Dia. = 9.5 "
Cut Dia. = 7.75 "

Max. Flow = 1666 GPM
B.E.P. Flow = 1480 GPM

Eff. @ Duty-Point = 72.72 %
Motor Size =20 HP

B.H.P. @
Duty-Point = 16.98 BHP
Max. B.H.P. for
Imp. Cut = 17.66 BHP

Bell & Gossett

ITT Industries
Engineered for life

ESP-REP v2005.08 © COPYRIGHT 2004 ITT INDUSTRIES, INC.

Series 1510 6BC Centrifugal Pump Submittal

B-225.7C

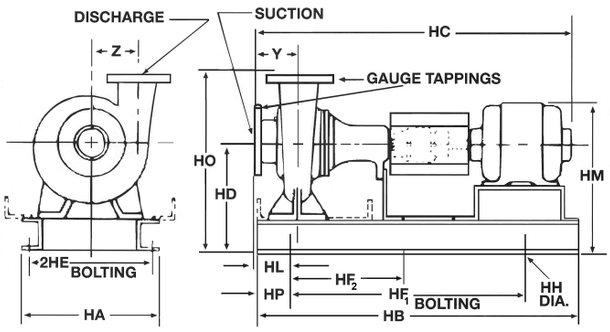

FLANGE DIMENSIONS IN INCHES (MM)			
	SIZE	THICKNESS	O.D.
Discharge	6" (152)	1-7/16" (37))	12-1/8" (308)
Suction	8" (203)	1-5/8" (41)	14-3/4" (375)

FLANGES ARE 125# ANSI - STANDARD
250# ANSI - AVAILABLE

DIMENSIONS - Inches (mm) **STANDARD SEAL 1510, 1510-F**

MOTOR FRAME	HA	HB	HC MAX	HD	2HE	HF_1	HF_2	HH	HL	HM MAX	HO	HP	Y	Z
	"L" FRAME													
254T	16 (406)	46-1/2 (1181)	50-5/8 (1286)	15 (381)	14 (356)	36-1/2 (927)	18-1/4 (464)	7/8 (22)	8-3/8 (213)	21-7/8 (556)	25-1/2 (648)	5 (127)	7 (178)	8-1/4 (210)
256T	16 (406)	46-1/2 (1181)	52-3/8 (1330)	15 (381)	14 (356)	36-1/2 (927)	18-1/4 (464)	7/8 (22)	8-3/8 (213)	21-7/8 (556)	25-1/2 (648)	5 (127)	7 (178)	8-1/4 (210)
284T	16 (406)	51-3/4 (1314)	53-1/8 (1349)	15 (381)	14 (356)	41-3/4 (1060)	20-7/8 (530)	7/8 (22)	8-3/8 (213)	23 (584)	25-1/2 (648)	5 (127)	7 (178)	8-1/4 (210)
286T	16 (406)	51-3/4 (1314)	54-5/8 (1387)	15 (381)	14 (356)	41-3/4 (1060)	20-7/8 (530)	7/8 (22)	8-3/8 (213)	23 (584)	25-1/2 (648)	5 (127)	7 (178)	8-1/4 (210)
324T	16 (406)	51-3/4 (1314)	56-7/8 (1445)	15 (381)	14 (356)	41-3/4 (1060)	20-7/8 (530)	7/8 (22)	8-3/8 (213)	24-1/8 (613)	25-1/2 (648)	5 (127)	7 (178)	8-1/4 (210)
326T	16 (406)	51-3/4 (1314)	58-3/8 (1483)	15 (381)	14 (356)	41-3/4 (1060)	20-7/8 (530)	7/8 (22)	8-3/8 (213)	24-1/8 (613)	25-1/2 (648)	5 (127)	7 (178)	8-1/4 (210)

STUFFING BOX 1510-PF, 1510-S, 1510-D

MOTOR FRAME	HA	HB	HC MAX	HD	2HE	HF_1	HF_2	HH	HL	HM MAX	HO	HP	Y	Z
	"L" FRAME													
254T	16 (406)	51-3/4 (1314)	53 (1346)	15 (381)	14 (356)	41-3/4 (1060)	20-7/8 (530)	7/8 (22)	8-3/8 (213)	21-7/8 (555)	25-1/2 (648)	5 (127)	7 (178)	8-1/4 (210)
256T	16 (406)	51-3/4 (1314)	54-3/4 (1391)	15 (381)	14 (356)	41-3/4 (1060)	20-7/8 (530)	7/8 (22)	8-3/8 (213)	21-7/8 (555)	25-1/2 (648)	5 (127)	7 (178)	8-1/4 (210)
284T	16 (406)	51-3/4 (1314)	55-1/2 (1410)	15 (381)	14 (356)	41-3/4 (1060)	20-7/8 (530)	7/8 (22)	8-3/8 (213)	23 (584)	25-1/2 (648)	5 (127)	7 (178)	8-1/4 (210)
286T	16 (406)	51-3/4 (1314)	57 (1448)	15 (381)	14 (356)	41-3/4 (1060)	20-7/8 (530)	7/8 (22)	8-3/8 (213)	23 (584)	25-1/2 (648)	5 (127)	7 (178)	8-1/4 (210)
324T	16 (406)	51-3/4 (1314)	59-1/4 (1505)	15 (381)	14 (356)	41-3/4 (1060)	20-7/8 (530)	7/8 (22)	8-3/8 (213)	24-1/8 (613)	25-1/2 (648)	5 (127)	7 (178)	8-1/4 (210)
326T	16 (406)	51-3/4 (1314)	60-3/4 (1543)	15 (381)	14 (356)	41-3/4 (1060)	20-7/8 (530)	7/8 (22)	8-3/8 (213)	24-1/8 (613)	25-1/2 (648)	5 (127)	7 (178)	8-1/4 (210)

Dimensions are subject to change. Not to be used for construction purposes unless certified.

ITT Industries

Bell & Gossett

Bell & Gossett
8200 N. Austin Avenue, Morton Grove, IL 60053
Phone (847)966-3700
Facsimile (847)966-9052
www.bellgossett.com

ISO 9001 Certified

Bell & Gossett

SUBMITTAL

B-447.6B

JOB: WSU Central Chilled Water Plant

REPRESENTATIVE: Grittton & Associates

UNIT TAG:

ENGINEER:

CONTRACTOR:

ORDER NO.

SUBMITTED BY:

APPROVED BY:

DATE: 9/19/2005

DATE:

DATE:

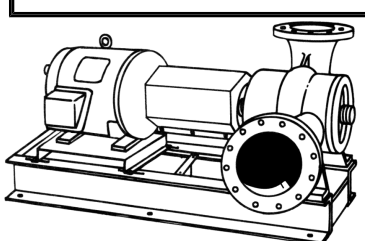

10x12x11¾L

VSCS Centrifugal Pumps

Base Mounted - Double suction

SPECIFICATIONS

FLOW 2500 (GPM) HEAD 40 (FT)

HP 30 RPM 1200

VOLTS 230/460

CYCLE 60 PHASE 3

U.S. Motors ODP Inverter Duty

APPROX. WEIGHT 1705

SPECIALS:

TYPE OF SEAL

Standard Seal Construction, 175 PSIG (12 Bar) working pressure, 125# ANSI flanges.

std. flush(-F)

- ☒ ☐ Standard: Crane Type 21, Buna/Carbon-Ceramic, 90 psig (6 bar) max. suction pressure Temp. range: -20 to 225°F (-29 to 107 °C).
- ☐ ☐ Optional: Crane Type 21, EPR/Carbon-Tungsten 90 psig (6 bar) max. suction pressure, Temp. range: -20 to 250 °F (-29 to 121 °C).
- ☐ ☐ Optional: Crane Type 2, Buna/Carbon-Ceramic, 175 psig (6 bar) max. suction pressure Temp. range: -20 to 225 °F (-29 to 107 °C).

Standard Seal Construction, 300 PSIG (20 Bar) working pressure, 250# ANSI flanges.

- ☐ ☐ Standard: Crane Type 2, Buna/Carbon-Ceramic, 180 psig (12 bar) max. suction pressure Temp. range:-20 to 225°F (-29 to 107 °C).
- ☐ ☐ Optional: Crane Type 2, EPR/Carbon-Tungsten, 240 psig (16 bar) max. suction pressure Temp. range: -20 to 250 °F (-29 to 121 °C).

Stuffing Box Construction, 175 PSIG (12 Bar) working press., 125# ANSI flanges. External flush to seal.

- ☐ Standard: -S Configuration, Durametallic RO, EPR/Carbon-Tungsten, 175 psig (12 bar) max. suction pressure, Temp. range: -20 to 300 °F* (-29 to 149 °C).
- ☐ Optional: -PF Configuration Packing (Non-Asbestos)

Stuffing Box Construction, 300 PSIG (20 Bar) working press., 250# ANSI flanges. External flush to seal.

- ☐ Standard: -S Configuration, Durametallic RO, EPR/Carbon-Tungsten, 300 PSIG (20 Bar) max. suction pressure, Temp. range: -20 to 300 °F* (-29 to 149 °C).

*For operating temperatures above 250°F, a cooled flush is required. On closed systems, cooling is accomplished by inserting the brazed place heat exchanger kit in the flush line to cool the fluid.

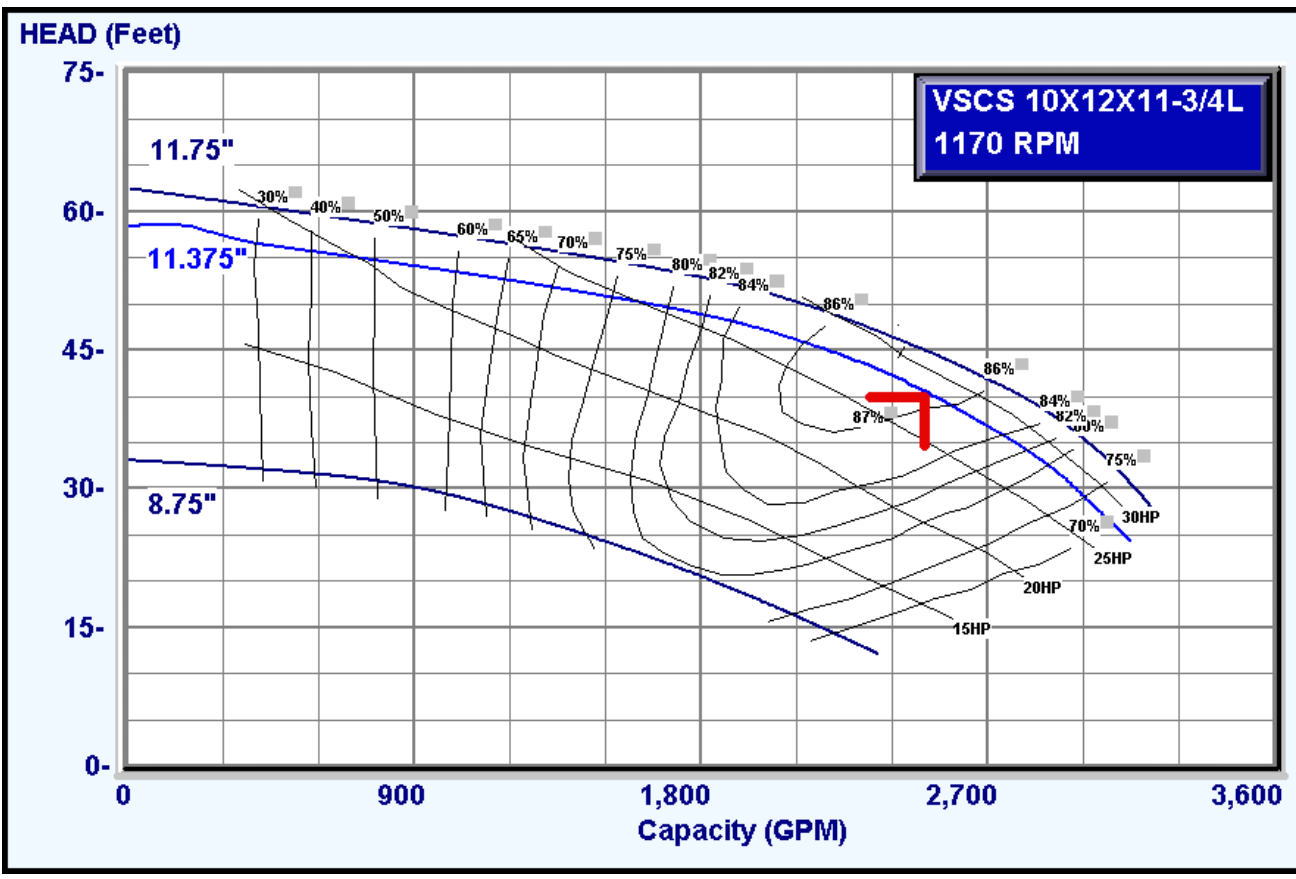

Design Capacity =2500.0 GPM
Design Head =40.0 Feet

Suction Size = 12 "
Suct. Velocity = 7.1 fps
Discharge Size = 10 "
Disc. Velocity = 10.2 fps

Min. Imp. Dia. = 8.75 "
Max. Imp. Dia. = 11.75 "
Cut Dia. = 11.375 "

Max. Flow = 3150 GPM
B.E.P. Flow = 2375 GPM

Eff. @ Duty-Point = 86.23 %
Motor Size =30 HP

B.H.P. @
Duty-Point = 29.49 BHP
Max. B.H.P. for
Imp. Cut = 29.87 BHP
Performance curve has been norr

Bell & Gossett

ITT Industries
Engineered for life

ESP-REP v2005.08 © COPYRIGHT 2004 ITT INDUSTRIES, INC.

Series VSCS 10x12x11¾L Centrifugal Pump Submittal

B-447.6B

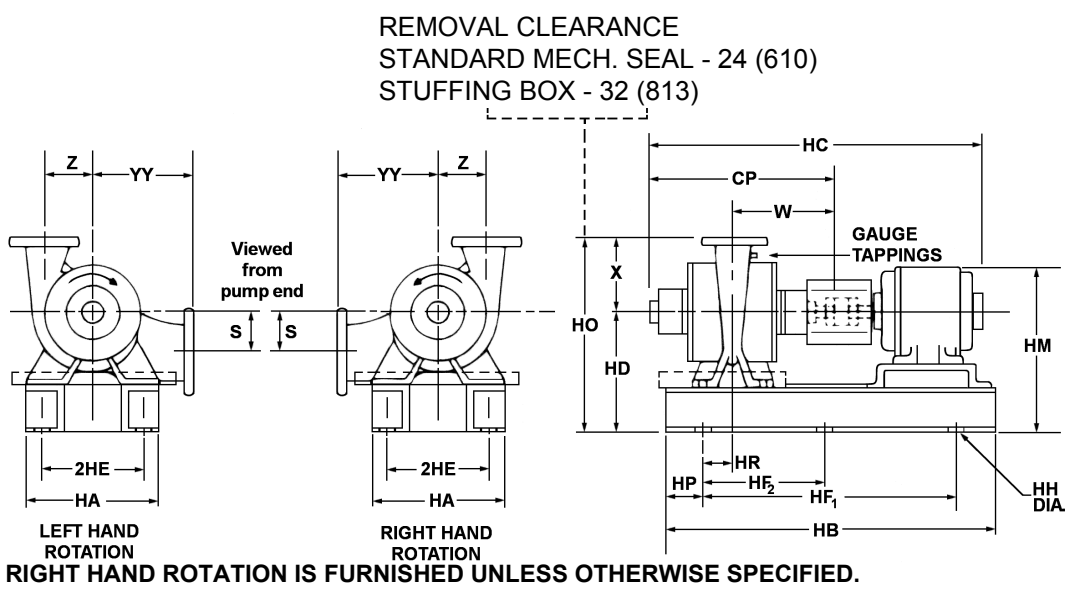

FLANGE DIMENSIONS IN INCHES (MM)			
	SIZE	THICKNESS	O.D.
Discharge	10" (254)	1-7/8" (48)	17" (432)
Suction	12" (305)	2" (51)	20" (508)

RIGHT HAND ROTATION IS FURNISHED UNLESS OTHERWISE SPECIFIED.
NOTE: EPDM COUPLINGS ARE STANDARD ON PUMPS WITH MOTOR FRAME SIZES THRU 324T.

DIMENSIONS – Inches (mm)

STANDARD SEAL VSCS, VSCS-F

MOTOR FRAME	DIMENSIONS - INCHES (MM)																	
	CP	HA	HB	HC MAX.	HD	2 HE	HF1	HF2	HH	HM MAX.	HO	HP	HR	S	W	X	YY	Z
256T	23-15/16 (608)	26 (660)	53-3/4 (1365)	54-7/8 (1394)	18-1/2 (470)	23-1/2 (597)	41-7/8 (1064)	20-7/8 (530)	1 (25)	25-3/8 (645)	34-1/2 (876)	6 (152)	3 (76)	4-1/4 (108)	13-1/2 (343)	16 (406)	18 (457)	10 (254)
284T	23-15/16 (608)	26 (660)	53-3/4 (1365)	55-1/2 (1410)	18-1/2 (470)	23-1/2 (597)	41-7/8 (1064)	20-7/8 (530)	1 (25)	26-1/2 (673)	34-1/2 (876)	6 (152)	3 (76)	4-1/4 (108)	13-1/2 (343)	16 (406)	18 (457)	10 (254)
286T	23-15/16 (608)	26 (660)	53-3/4 (1365)	57 (1448)	18-1/2 (470)	23-1/2 (597)	41-7/8 (1064)	20-7/8 (530)	1 (25)	26-1/2 (673)	34-1/2 (876)	6 (152)	3 (76)	4-1/4 (108)	13-1/2 (343)	16 (406)	18 (457)	10 (254)
324T	23-15/16 (608)	26 (660)	53-3/4 (1365)	59-1/8 (1502)	18-1/2 (470)	23-1/2 (597)	41-7/8 (1064)	20-7/8 (530)	1 (25)	27-5/8 (702)	34-1/2 (876)	6 (152)	3 (76)	4-1/4 (108)	13-1/2 (343)	16 (406)	18 (457)	10 (254)
326T	23-15/16 (608)	26 (660)	53-3/4 (1365)	60-5/8 (1540)	18-1/2 (470)	23-1/2 (597)	41-7/8 (1064)	20-7/8 (530)	1 (25)	27-5/8 (702)	34-1/2 (876)	6 (152)	3 (76)	4-1/4 (108)	13-1/2 (343)	16 (406)	18 (457)	10 (254)
364TS	23-15/16 (608)	26 (660)	53-3/4 (1365)	60-5/8 (1540)	18-1/2 (470)	23-1/2 (597)	41-7/8 (1064)	20-7/8 (530)	1 (25)	28-3/4 (730)	34-1/2 (876)	6 (152)	3 (76)	4-1/4 (108)	13-1/2 (343)	16 (406)	18 (457)	10 (254)
365TS	23-15/16 (608)	26 (660)	53-3/4 (1365)	61-3/8 (1559)	18-1/2 (470)	26-1/2 (673)	41-7/8 (1064)	20-7/8 (530)	1 (25)	28-3/4 (730)	34-1/2 (876)	6 (152)	3 (76)	4-1/4 (108)	13-1/2 (343)	16 (406)	18 (457)	10 (254)
404TS	23-15/16 (608)	26 (660)	59-1/4 (1505)	63-5/8 (1616)	18-1/2 (470)	23-1/2 (597)	47-1/4 (1200)	23-5/8 (600)	1 (25)	30-3/8 (772)	34-1/2 (876)	6 (152)	3 (76)	4-1/4 (108)	13-1/2 (343)	16 (406)	18 (457)	10 (254)
405TS	23-15/16 (608)	26 (660)	59-1/4 (1505)	65-1/8 (1654)	18-1/2 (470)	23-1/2 (597)	47-1/4 (1200)	23-5/8 (600)	1 (25)	30-3/8 (772)	34-1/2 (876)	6 (152)	3 (76)	4-1/4 (108)	13-1/2 (343)	16 (406)	18 (457)	10 (254)

STUFFING BOX VSCS-PF, VSCS-S, VSCS-D

MOTOR FRAME	DIMENSIONS - INCHES (MM)																	
	CP	HA	HB	HC MAX.	HD	2 HE	HF1	HF2	HH	HM MAX.	HO	HP	HR	S	W	X	YY	Z
256T	31-9/16 (802)	26 (660)	53-3/4 (1365)	62-1/2 (1588)	18-1/2 (470)	23-1/2 (597)	41-7/8 (1064)	20-7/8 (530)	1 (25)	25-3/8 (645)	34-1/2 (876)	6 (152)	3 (76)	4-1/4 (108)	17-5/16 (440)	16 (406)	18 (457)	10 (254)
284T	31-9/16 (802)	26 (660)	59-1/4 (1505)	63-1/8 (1603)	18-1/2 (470)	23-1/2 (597)	47-1/4 (1200)	23-5/8 (600)	1 (25)	26-1/2 (673)	34-1/2 (876)	6 (152)	3 (76)	4-1/4 (108)	17-5/16 (440)	16 (406)	18 (457)	10 (254)
286T	31-9/16 (802)	26 (660)	59-1/4 (1505)	64-5/8 (1641)	18-1/2 (470)	23-1/2 (597)	47-1/4 (1200)	23-5/8 (600)	1 (25)	26-1/2 (673)	34-1/2 (876)	6 (152)	3 (76)	4-1/4 (108)	17-5/16 (440)	16 (406)	18 (457)	10 (254)
324T	31-9/16 (802)	26 (660)	59-1/4 (1505)	66-3/4 (1695)	18-1/2 (470)	23-1/2 (597)	47-1/4 (1200)	23-5/8 (600)	1 (25)	27-5/8 (702)	34-1/2 (876)	6 (152)	3 (76)	4-1/4 (108)	17-5/16 (440)	16 (406)	18 (457)	10 (254)
326T	31-9/16 (802)	26 (660)	59-1/4 (1505)	68-1/4 (1734)	18-1/2 (470)	23-1/2 (597)	47-1/4 (1200)	23-5/8 (600)	1 (25)	27-5/8 (702)	34-1/2 (876)	6 (152)	3 (76)	4-1/4 (108)	17-5/16 (440)	16 (406)	18 (457)	10 (254)
364TS	31-9/16 (802)	26 (660)	59-1/4 (1505)	68-1/4 (1734)	18-1/2 (470)	23-1/2 (597)	47-1/4 (1200)	23-5/8 (600)	1 (25)	28-3/4 (730)	34-1/2 (876)	6 (152)	3 (76)	4-1/4 (108)	17-5/16 (440)	16 (406)	18 (457)	10 (254)
365TS	31-9/16 (802)	26 (660)	59-1/4 (1505)	69 (1753)	18-1/2 (470)	23-1/2 (597)	47-1/4 (1200)	23-5/8 (600)	1 (25)	28-3/4 (730)	34-1/2 (876)	6 (152)	3 (76)	4-1/4 (108)	17-5/16 (440)	16 (406)	18 (457)	10 (254)
404TS	31-9/16 (802)	26 (660)	59-1/4 (1505)	71-1/4 (1810)	18-1/2 (470)	23-1/2 (597)	47-1/4 (1200)	23-5/8 (600)	1 (25)	30-3/8 (772)	34-1/2 (876)	6 (152)	3 (76)	4-1/4 (108)	17-5/16 (440)	16 (406)	18 (457)	10 (254)
405TS	31-9/16 (802)	26 (660)	59-1/4 (1505)	72-3/4 (1848)	18-1/2 (470)	23-1/2 (597)	47-1/4 (1200)	23-5/8 (600)	1 (25)	30-3/8 (772)	34-1/2 (876)	6 (152)	3 (76)	4-1/4 (108)	17-5/16 (440)	16 (406)	18 (457)	10 (254)

Dimensions are subject to change. Not to be used for construction purposes unless certified.

ITT Industries

Bell & Gossett

Bell & Gossett
8200 N. Austin Avenue, Morton Grove, IL 60053
Phone (847)966-3700
Facsimile (847)966-9052
www.bellgossett.com

TÜV CERT DIN ISO 9001
ISO 9001 Certified