WEBER STATE UNIVERSITY
CENTRAL CHILLED WATER PLANT AND DISTRIBUTION SYSTEM STUDY

WEBER STATE UNIVERSITY
DIVISION OF FACILITIES CONSTRUCTION MANAGEMENT

October, 2005

WHW ENGINEERING INC.
1354 East 3300 South #200
Salt Lake City, Utah 84106
P 801.466.4021 – F 801.466.8536
excellence@whw-engineering.com

TABLE OF CONTENTS

Section 1 – Executive Summary
- 1.1 Executive Summary

Section 2 – History of Existing Chilled Water Plant
- 2.1 Central Chiller Plant Description
- 2.2 Existing Central Chiller Plant Flow Sheets
- 2.3 Existing Campus Buildings Load Summary

Section 3 – Existing Central Chiller Plant Conditions
- 3.1 Introduction
- 3.2 Central Plant Load Requirements
  - A. Existing Building Connected Loads
  - B. Projected Summer 2006 Loads
  - C. Projected Future Loads
- 3.3 Chiller Plant Capacity Requirement Summary
  - A. Existing Central Chilled Water Plant Capacity
  - B. New Required Central Chilled Water Plant Capacity
- 3.4 Conclusion

Section 4 – Chilled Water Campus Distribution System
- 4.1 Introduction
- 4.2 Campus Piping and Pumping Systems
  - A. Chilled Water Pipe Section Summary
  - B. Pipe Sections
  - C. Existing Campus Piping Distribution Map
- 4.3 Chilled Water Pumping System Summary

Section 5 – New Central Chilled Water Plant Options
- 5.1 Introduction
- 5.2 New Central Chilled Water Plant Chiller Combinations
- 5.3 Chiller Combination Cost Comparison
- 5.4 Plate and Frame Heat Exchanger (Free Cooling)
- 5.5 Thermal/Ice Storage Option

Section 6 – Recommendations
- 6.1 Recommended Central Plant Chiller Combination
  - A. Recommended Central Plant Chiller Combinations
  - B. Cooling Tower Addition
- 6.2 Recommended Campus Distribution System Upgrades
  - A. Campus Piping System Recommendations
  - B. Campus Pumping System Recommendations
- 6.3 Plate and Frame Exchanger (Free Cooling)
- 6.4 Refrigeration Safety

Section 7 – Cost Estimate
- 7.1 Chiller Plant
  - A. Combination A
  - B. Combination F
- 7.2 Plate & Frame Heat Exchanger Recommendation
- 7.3 Campus Piping System for Future Connected Load
- 7.4 New Campus Chilled Water System Summary

Appendices
- A.1 Campus Map

A.2 References
A.3 Potential New Chiller Computer Run Performance Data
A.4 Plate and Frame Heat Exchanger Information
A.5 Thermal/Ice Storage Information
A.6 Chiller Combinations Life Cycle and Optimizer Computer Run / Economic analysis – “Combo A, A-1” “Combo F, F-1”
A.7 ASHRAE Recommended Equipment Service Life

SECTION 1 – EXECUTIVE SUMMARY

1.1 Executive Summary

A. This study focuses on the existing and proposed chilled water systems for Weber State University. This study will identify existing chilled water distribution conditions, new and existing cooling requirements, and provide recommendations for the construction of a new central chilled water plant. The study will provide recommendations for new upgrades to the existing chilled water distribution systems. Capacities of existing and future buildings were taken from the Weber State University master plan. These capacities and totals can be found in Sections 2 and 3.

B. Weber State University originally began as Weber State Academy in 1889. It was made a State Junior College in 1933. Weber State College was updated to University status in 1991. Weber State University has since experienced a steady growth of students and educational facilities. The University is comprised of Thirty Six (36) main on-campus buildings, and Ten (10) auxiliary buildings. Among these buildings, Twenty One (21) on-campus buildings are connected to the campus Central Chilled Water Plant. This study will focus on the cooling requirements of the existing buildings, future planned campus buildings, and projected load increases. All discovered and known information will be summarized and the findings incorporated into the design of a new Central Chilled Water Plant.

C. The following are the main concerns, and recommendations for improving the Existing Chilled Water Distribution System and the construction of a new Future Central Chilled Water Plant:

1. The capacities of the existing three chillers and piping are adequate to handle the existing connected demand. See Section 3.4. However, the existing campus pumping system has reached its' operating limits. Pumps must operate at full capacity to meet current campus needs, without adequate back-up. If a primary pump is lost, the campus capacity is reduced by 50% of one chiller. This could be as much as 625 tons. If a secondary pump is lost, the entire campus cooling capacity will be reduced by 50%.
2. The capacities of the existing three chillers, cooling tower and piping are adequate for the combined existing load and the projected summer 2006 load as long as all three chillers are operating. See Section 3.4. Pumping system will be inadequate as it is currently operating. A higher chilled water Delta T needs to be used to compensate for the lack of pump capacity at future peak demands.
3. The capacities of the existing three chillers, pumps, cooling tower and piping are **not** adequate for the combined existing connected load, projected summer 2006 load and the future projected load. See Sections 3.3 and 3.4.

4. The new projected central chiller plant should be designed so that a back-up chiller or combination of chillers will always provide the capacity to cover the connected load.
5. Two of the existing chillers are manufactured by The Trane Co, the third chiller by Carrier Corp. The Trane chillers are in good condition and should be relocated to the new proposed central chiller plant. The Carrier chiller is beyond ASHRAE'S recommended service life and should be removed from service.
6. The different chiller combinations that are evaluated for the new central chiller plant in Section 5.2 are as follows:

Combination A:

1) Chiller #1 – New 1500 Ton with VFD
2) Chiller #2 – Existing 1250 Ton Trane Unit
3) Chiller #3 – New 1500 Ton with optional VFD
4) Chiller #4 – Existing 650 Ton Trane Unit

Combination B:

1) Chiller #1 – New 2000 ton with VFD
2) Chiller #2 – Existing 1250 Ton Trane Unit
3) Chiller #3 – New 1250 ton
4) Chiller #4 – Existing 650 Ton Trane Unit

Combination C:

1) Chiller #1 – New 1500 ton with VFD
2) Chiller #2 – Existing 1250 Ton Trane Unit
3) Chiller #3 – New 1250 ton with optional VFD
4) Chiller #4 – Existing 650 Ton Trane Unit

Combination D:

1) Chiller #1 – New 2000 ton with VFD
2) Chiller #2 – Existing 1250 Ton Trane Unit
3) Chiller #3 – New 1500 ton
4) Chiller #4 – Existing 650 Ton Trane Unit

Combination E:

1) Chiller #1 – New 2000 ton with VFD
2) Chiller #2 – Existing 1250 Ton Trane Unit
3) Chiller #3 – New 1700 ton
4) Chiller #4 – Existing 650 Ton Trane Unit

Combination F:

1) Chiller #1 – New 1700 ton with VFD

2) Chiller #2 – Existing 1250 Ton Trane Unit
3) Chiller #3 – New 1700 ton with optional VFD
4) Chiller #4 – Existing 650 Ton Trane Unit

7. Modify the campus chilled water loop as recommended in Section 4. This includes the following:
   a. Incorporate a primary chilled water circulation loop for each chiller.
   b. Provide a secondary loop with new pumps and variable frequency drives. Incorporate the campus loop pipe section modifications as part of the secondary loop.
   c. Provide a separate "decoupled" chilled water loop for the skybox and its' associated loads. Provide a plate and frame heat exchanger and associated pumps and specialties in the old chiller plant room to serve this loop.
8. Provide a new plate and frame heat exchanger to provide free cooling by utilizing condenser water from the cooling tower without activating the chillers.
9. Provide all new chilled and condenser water pumps with stand by pumps for the chilled water and condenser water systems.
10. Provide an automated control system to match a sequence of control approved by WSU. An example of a sequence is as follows:
    a. The first stage of cooling when the outdoor temperature is below 60 degrees F, shall be provided by the "Free Cooling" ie. plate and frame exchanger and the cooling tower. This stage of cooling shall be provided until the return water temperature can no longer be maintained. At this point, the "Free Cooling" shall be terminated and the lead chiller shall start.
    b. The lead chiller shall start and maintain operation until the return water temperature continues to rise at which time a return water temperature controller (adjustable) will start the other chillers depending on the combination recommended or approved by WSU.
11. The existing five cell cooling tower is not large enough to handle the combination of the existing connected load, the projected summer 2006 load, and the future projected load.
12. Provide a refrigerant detection, evacuation and personnel safety system. See Section 6.4.
13. Design engineers shall use WSU and DFCM standards to Architects and Engineers defining design criteria, equipment approval, etc. for the new central chiller plant.
14. The new chilled water distribution system and condenser water system within the new central chiller plant should be balanced by an independent testing and balancing agency after the new systems are installed.

15. Based on Sections 3 and 5, we recommend for the new central chilled water plant one of the following chiller combinations with the associated equipment listed below:

    a. Combination A

        1) Chiller #1 – New 1500 ton with VFD
        2) Chiller #2 – Existing 1250 Ton
        3) Chiller #3 – New 1500 ton with optional VFD
        4) Chiller #4 – Existing 650 Ton

    b. Combination F

        1) Chiller #1 – New 1700 ton with VFD
        2) Chiller #2 – Existing 1250 Ton
        3) Chiller #3 – New 1700 ton with optional VFD
        4) Chiller #4 – Existing 650 Ton

    c. Central Air Eliminator – Remove all existing building air eliminators.
    d. Central expansion tanks – Remove all existing building expansion tanks.
    e. Four inline mounted, constant volume chilled water primary loop circulating pumps for the chillers.
    f. Three main campus base mounted secondary distribution pumps with variable frequency drives.
    g. Three main condenser water pumps with variable frequency drives.
    h. Plate and frame heat exchanger for free cooling with an automatic change over to mechanical cooling.
    i. Cell addition to the existing cooling tower.
    j. Automation System.
    k. Re-using the existing 24 inch condenser water piping as the new chilled water piping distribution system. See Existing Campus Distribution Map Section 4.2 C.

D. The recommendations included in this report are based off of the WSU master plan information dated September 2005. Because many assumptions have been made concerning future buildings, i.e. future loads, locations, etc., and because of future individual building design changes, this report shall only be used as a guide and not a finished design for future buildings. WHW Engineering, Inc. assumes no design liability for future modifications to the existing campus plan. Equipment sizing, pipe sizing, loop modifications, field verification of existing conditions, and all other associated recommendations are the responsibility of the future design teams to verify, calculate, and design at the time of the associated future projects.

SECTION 2 – HISTORY OF EXISTING CHILLED WATER SYSTEM

2.1 Central Chiller Plant Description

A. Plant Use and Identification

1. The central chiller plant, located in the lower floor of the Science Lab Building, is used to house the central chilled water plant that distributes chilled water to 21 campus buildings. The equipment space is divided into two complete separate rooms.

2. The existing central chilled water plant, located in the basement of the Science Lab Building, was brought on line in 1969 with the first of two 650 ton lithium-bromide absorption chillers. In 1977 a 1250 ton (Carrier) centrifugal chiller was installed in a separate under floor mechanical room located on the south side of the Science Lab; however this chiller was not completely operational until 1988 at which time it became the primary campus chiller. The absorption chillers were taken out of service and later scrapped to make way for the installation of new future centrifugal chillers.

3. In 1994 a Trane model CVHE 650 Ton, R123 centrifugal chiller was installed in the east basement of the Science Lab to work in tandem with the existing 1250 ton (Carrier) chiller. The campus continued to expand and all the antiquated “stand alone” chiller systems were scrapped creating the need for a new chiller in the central chilled water plant. A new 1250 Ton R123 Trane chiller was purchased and installed in 2001. Due to the additional condenser water demand placed on the existing cooling tower, along with the deteriorated state of the existing towers, a new five cell cooling tower was installed. The new tower is located east of the existing central chiller plant in an area north of the stadium and east of the parking lot.

B. Cooling Equipment – Northeast Chiller Room

1. The equipment installed in the Northeast chiller room consists of the following:

Item 1: East side Chiller CH-2 – Trane Model CVHF-128, 1250 Ton, R-123 Refrigerant.

Item 2: West side Chiller CH-1 – Trane model CVHE 8890-123, 650 Ton, R-123 Refrigerant.

Item 3: Expansion Tank – None

Item 4: Air Eliminator – None

Item 5: Chilled Water Pump P-11; Vertical Inline – Armstrong 8x8x10; 1300 GPM @ 44 ft. Hd., 20 HP, 230/460 Volts, 1800 rpm.

Item 6: Chilled Water Pump P-12; Vertical Inline – Armstrong 8x8x10; 1300 GPM @ 44 ft. Hd., 20 HP, 230/460 Volts; 1800 rpm.

Item 7: Chilled Water Pump P-13; Vertical Inline – Armstrong 8x8x10; 1300 GPM @ 44 ft. Hd., 20 HP, 230/460 Volts; 1800 rpm.

Item 8: Chilled Water Pump P-14; Vertical Inline – Armstrong 8x8x10; 1300 GPM @ 44 ft. Hd., 20 HP, 230/460 Volts; 1800 rpm.

Item 9: Condenser Water Pump. P-7 – Armstrong Vertical Inline 8x8x11.5, 1950 GPM @ 89 ft. Hd.; 60 HP; 230/460 Volts; 1770 rpm.

Item 10: Condenser Water Pump. P-8 – Armstrong Vertical Inline 8x8x11.5, 1950 GPM @ 89 ft. Hd.; 60 HP; 230/460 Volts; 1770 rpm.

Item 11: Condenser Water Pump. P-9 – Armstrong Vertical Inline 8x8x11.5, 1950 GPM @ 89 ft. Hd.; 60 HP; 230/460 Volts; 1770 rpm.

Item 12: Condenser Water Pump. P-10 – Armstrong Vertical Inline 8x8x11.5, 1950 GPM @ 89 ft. Hd.; 60 HP; 230/460 Volts; 1770 rpm.

C. Cooling Equipment – Southwest Chiller Room

1. The equipment installed in the Southwest chiller room consists of the following:

Item 1: Chiller CH-3 – Carrier model 19FA, 1250 Tons–R-500 Refrigerant.

Item 2: Chilled Water Pump P-1 – Bell & Gossett, Model VSCS, 3000 GPM @ 120 ft. Hd., 125 HP, 460 Volt., 3 phase.

Item 3: Chilled Water Pump P-2 – Bell & Gossett, Model VSCS; 3000 GPM @ 120 ft. Hd., 125 HP, 460 Volt., 3 phase.

Item 4: Chilled Water Pump P-3 – Bell & Gossett, Model VSCS, 2733 GPM @ 45 ft. Hd., 60 HP, 230/460 Volt., 3 phase.

Item 5: Chilled Water Pump P-4 – Bell & Gossett, Model VSCS, 2108 GPM @ 75 ft. Hd., 60 HP, 230/460 Volts.

Item 6: Condenser Water Pump P-5 – Bell & Gossett VSCS, 2108 GPM, 75 ft. Hd., 60 HP, 230/460 Volt., 3 phase.

Item 7: Condenser Water Pump P-6 – Bell & Gossett VSCS, 2108 GPM, 75 ft. Hd., 60 HP, 230/460 Volt. 3 phase.

Item 8: Expansion Tank: Amtrol 1988, Vertical, size 1200-L; Model 116557, 12 PSI; two provided.

Item 9: VFD Drives for chilled water pumps, P-1 and P-2.

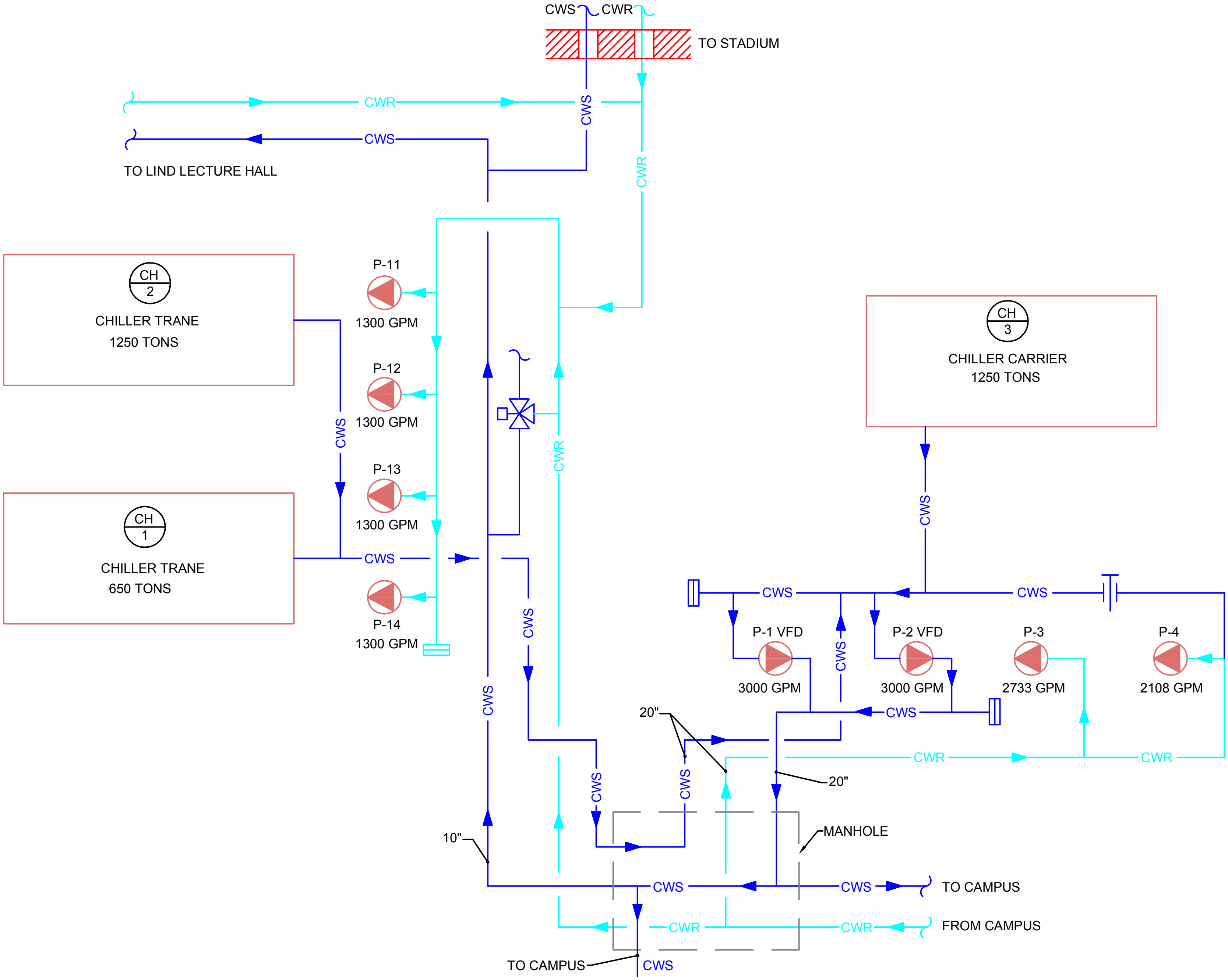

OVERALL CHILLED WATER PIPING FLOW SHEET

NOT TO SCALE

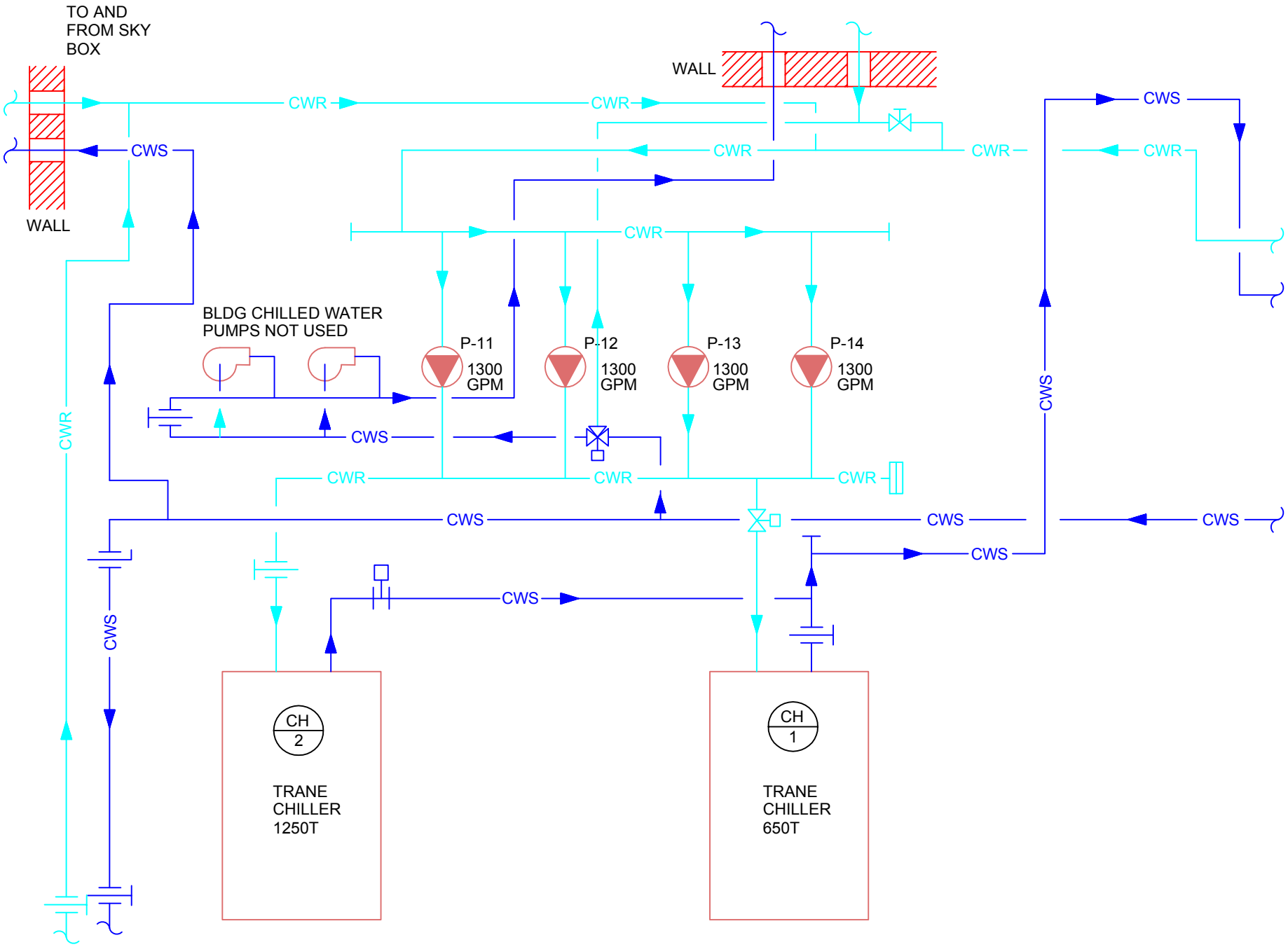

EXISTING CHILLED WATER FLOW SHEET TRANE CHILLERS

NOT TO SCALE

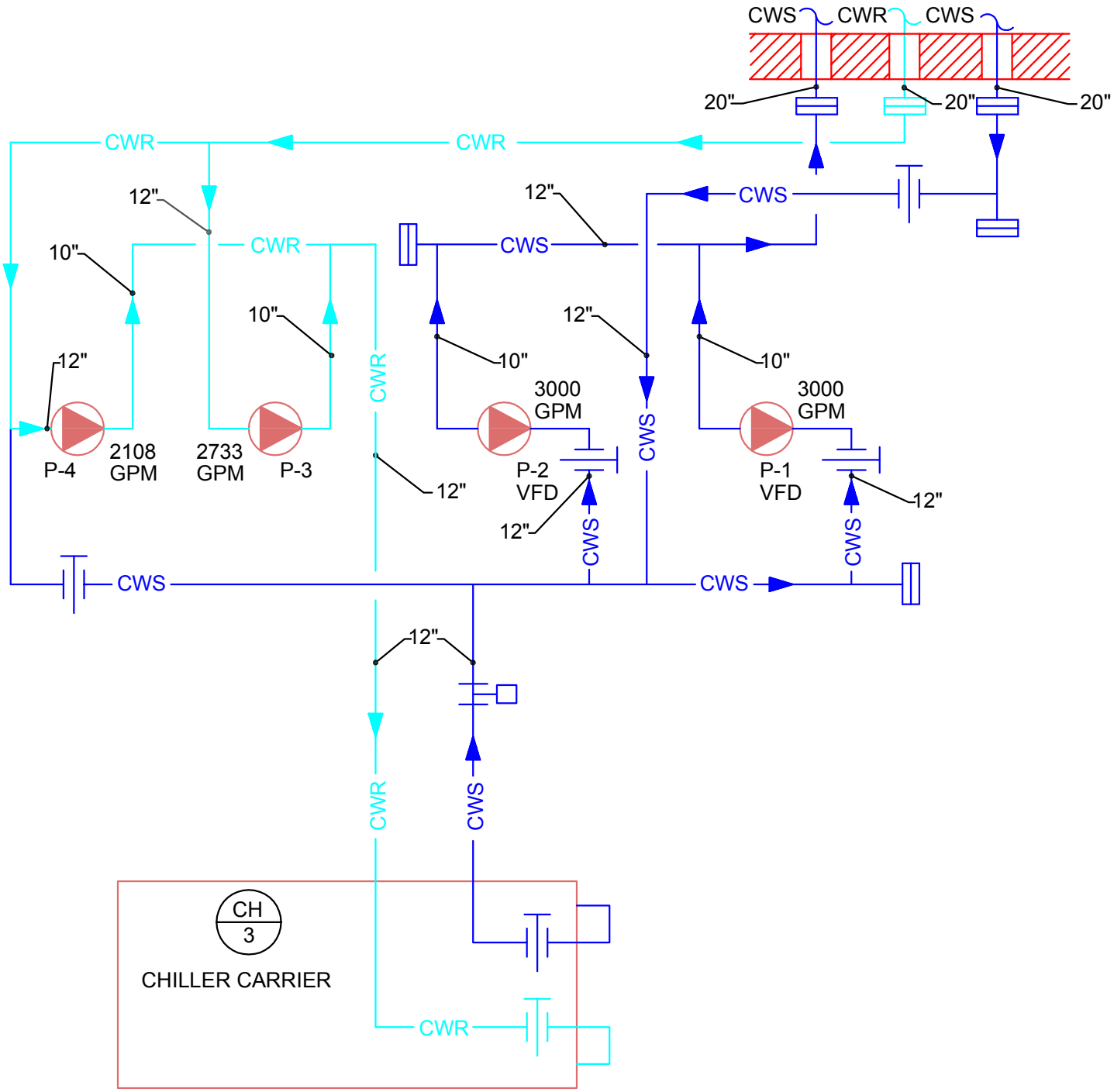

EXISTING CHILLED WATER FLOW SHEET CARRIER CHILLER

NOT TO SCALE

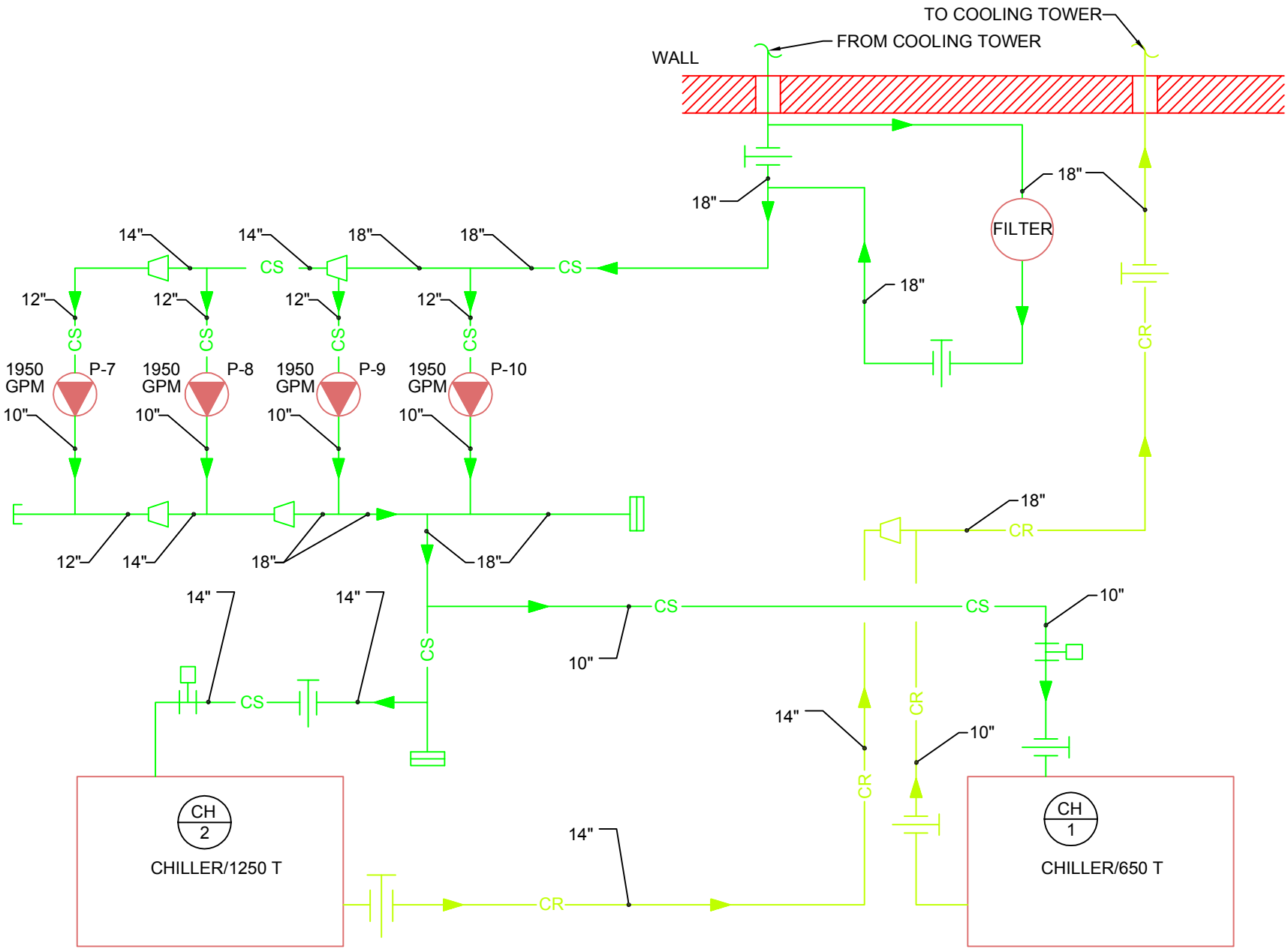

EXISTING CONDENSER WATER FLOW SHEET TRANE CHILLERS

NOT TO SCALE

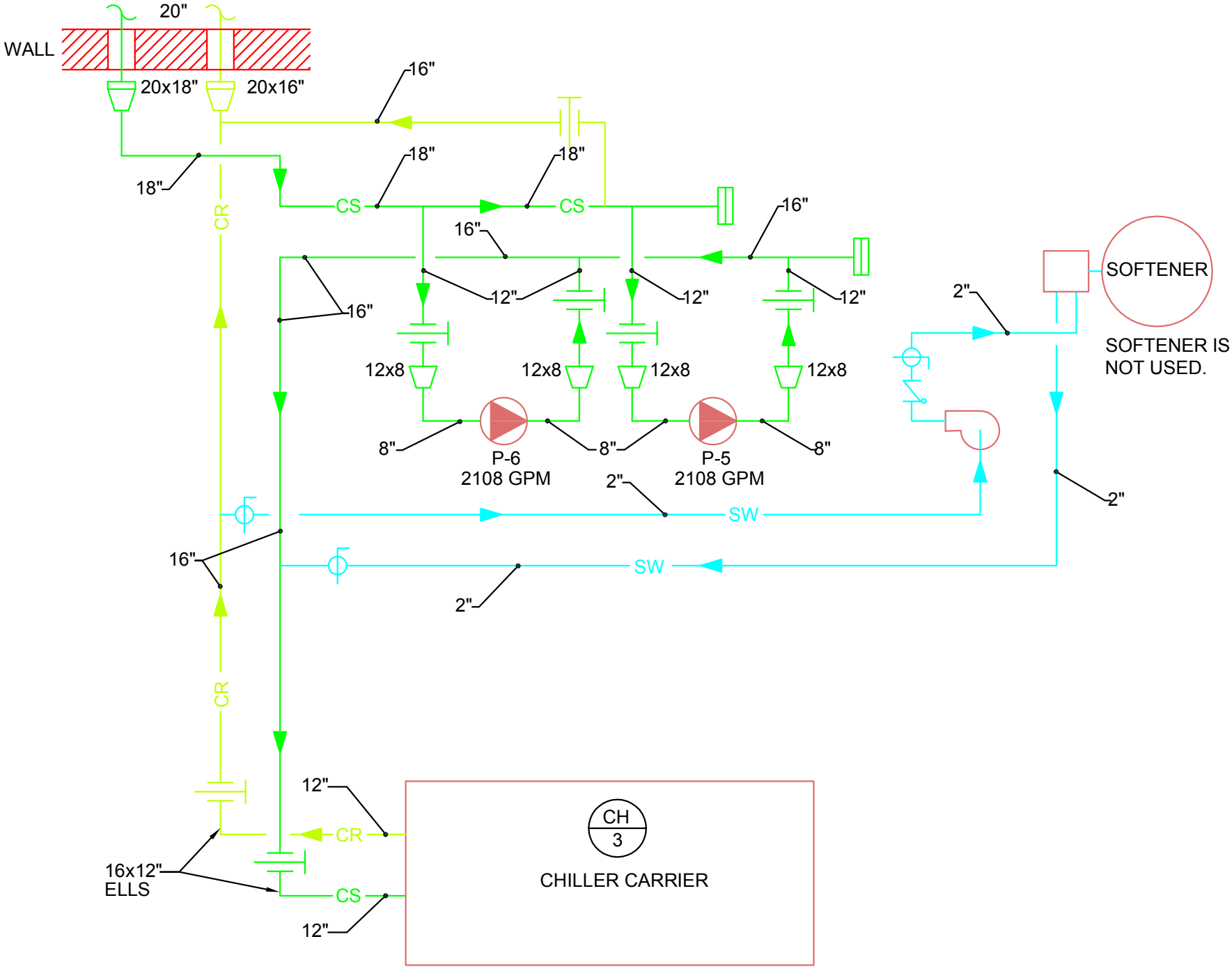

EXISTING CONDENSER WATER FLOW SHEET CARRIER CHILLER

NOT TO SCALE

2.3 EXISTING CAMPUS BUILDINGS LOAD SUMMARY

Building Name	Gross Sq. Feet	Connected to Central Cooling Plant	Gross Cooling Tons	GPM	Future Planning
Building # 1		No	0	0	Demolish / Future New Bldg. 320 Tons
Building # 2		No	0	0	Demolish
Building # 3		No	0	0	Demolish
Building # 4	39897	Yes	119	286	Demolish / Future New Bldg. 320 Tons
Science Lab	112650	Yes	285	684	Future Additional 285 Tons
Lind Lecture	48200	Yes	133	320	None
Miller Administration	45147	Yes	179	430	None
Social Science	106327	Yes	346	830	None
Wattis Business	52269	Yes	118	284	None
McKay Education Building	67785	Yes	312	749	None
Heating Plant	6206	Yes	18	43	None
Technical Education	18163	Yes	54	130	Future Additional 271 Tons
Engineering Technology	72910	Yes	141	339	Future Additional 32 Tons
Allied Health Ph. 1	61198	Yes	132	316	None
Allied Health Ph. 2	27058	Yes	99	238	None
Student Services	82700	Yes	123	296	None
Shepherd Union	172231	Yes	513	1232	S-06 Additional 40 Tons
Stewart Library	159276	Yes	389	933	S-06 Additional 15 Tons
Browning Center	160143	Yes	472	1133	None
Lampros Hall	18361	Yes	68	163	None
Kimball Visual Arts	70872	Yes	201	482	None
Stadium Offices	21247	Yes	93	223	None
HPEC	78846	Yes	208	499	None
Stadium Sky Box	39507	Yes	109	261	None
Campus Services		No			Future Additional 40 Tons
Swenson Gym		No			S-06 Additional 280 Tons
Track Locker Room		Yes	15	36	None

SECTION 3 – CENTRAL CHILLED WATER PLANT CONDITIONS

3.1 Introduction

A. The Existing Central Chiller Plant is located under the Science Lab Building #6 and consists of three centrifugal chillers. Two chillers are manufactured by Trane Co., with capacities of 1250 and 650 Tons respectively. The third chiller is manufactured by Carrier Corp., having a capacity of 1250 Tons.

The 650 Ton Trane chiller was installed in 1992, the 1250 Ton Trane unit in 2001. Trane chillers are in good condition. The Carrier chiller was installed in 1975 and is in fair to poor condition.

B. The following campus loads are indicated in both a numeric and graph format.

1. These loads include the existing campus load, the projected load for summer 2006, and the projected overall future load. The total of these are shown, as well as conclusions to the capacities required for both the new and existing chilled water plants.
2. The loads include approximations for a campus central system diversity factor. The campus currently sees around a 60% diversity factor. This means that the central plant peak operation is approximately 60% of the sum of the individual building peak loads. Because this is the current campus diversity factor, it has been applied to the existing loads as well as the summer of 2006 cooling loads; however, a 65% diversity factor is being used for the **entire** campus after 2006. This is done to add a safety factor and give some future flexibility. As the University continues to grow and develop, building schedules may change, new buildings may have different load profiles, and the campus diversity factor may change. When planning for a central chiller plant that is intended to serve the campus needs for the unforeseeable future, we feel it prudent to use a slightly higher diversity factor to account for some future flexibility.

3.2 CENTRAL PLANT LOAD REQUIREMENTS

A. EXISTING BUILDING CONNECTED LOADS

Building No.	Building Name	Area Sq. FT.	MBH	Gross Tons	10ΔT GPM	Diversity Factor	Net Tons	Net GPM
4	Building #4	39,897	1,430	119	286	60%	71.4	172
6	Science Lab	142,650	3,420	285	684	60%	171	410
7	Lind Lecture	48,200	1,600	133	319	60%	79.8	191
10	Miller Administration	45,147	2,152	179	430	60%	107.4	258
14	Social Science	106,327	4,150	346	830	60%	207.6	498
15	Wattis Business	52,269	1,420	118	283	60%	70.8	170
16	Education Building	67,785	3,744	312	749	60%	187.2	449
18	Heating Plant	6,206	216	18	43	60%	10.8	26
22	Technical Education	18,163	650	54	130	60%	32.4	78
23	Engineering Tech.	72,910	1,694	141	338	60%	84.6	203
34a	Allied Health PH.1	61,198	1,580	132	317	60%	79.2	190
34b	Allied Health PH.II	27,058	1,192	99	238	60%	59.4	143
35	Student services	82,700	1,480	123	295	60%	73.8	177
36	Shepherd Union	172,231	6,158	513	1231	60%	307.8	739
37	Stewart Library	159,276	4,667	389	934	60%	233.4	560
37	Browning Center	160,143	5,664	472	1133	60%	283.2	680
39	Lampros Hall	18,361	816	68	163	60%	40.8	98
40	Kimbal Visual Arts	70,872	2,409	201	482	60%	120.6	289
52	Stadium Offices	21,247	1,116	93	223	60%	55.8	134
51	HPEC	78,846	2,493	208	499	60%	124.8	299
	Track Locker Rooms		180	15	36	60%	9	22
55	Stadium Skybox	39,507	1,305	109	262	60%	65.4	157
	Sub-Total	**1,490,993**	**49,536**	**4,127**	**9,905**	**60%**	**2,476**	**5,943**

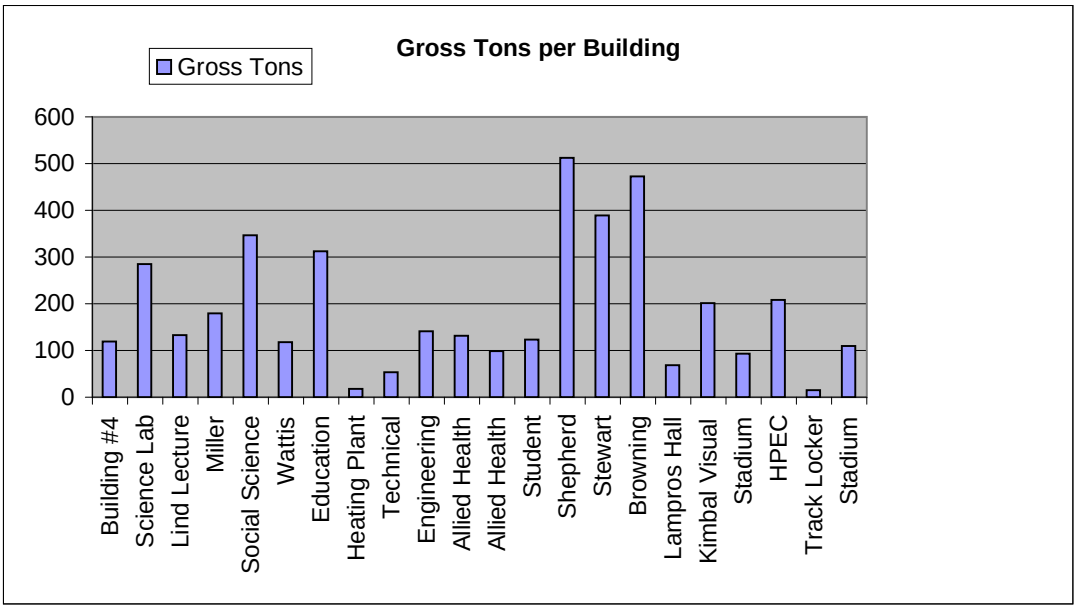

B. PROJECTED SUMMER 2006 LOADS

Building No.	Building Name	Area Sq. FT.	MBH	Gross Tons	10ΔT GPM	Diversity Factor	Net Tons	Net GPM
50	Swenson Gym	85,000	3,120	280	672	60%	168	403.2
36	Union Building Addition	14,000	480	40	96	60%	24	57.6
37	Library Addition	5,000	180	15	36	60%	9	21.6
	Sub-Total	**104,000**	**3,780**	**335**	**804**	**60%**	**201**	**482**

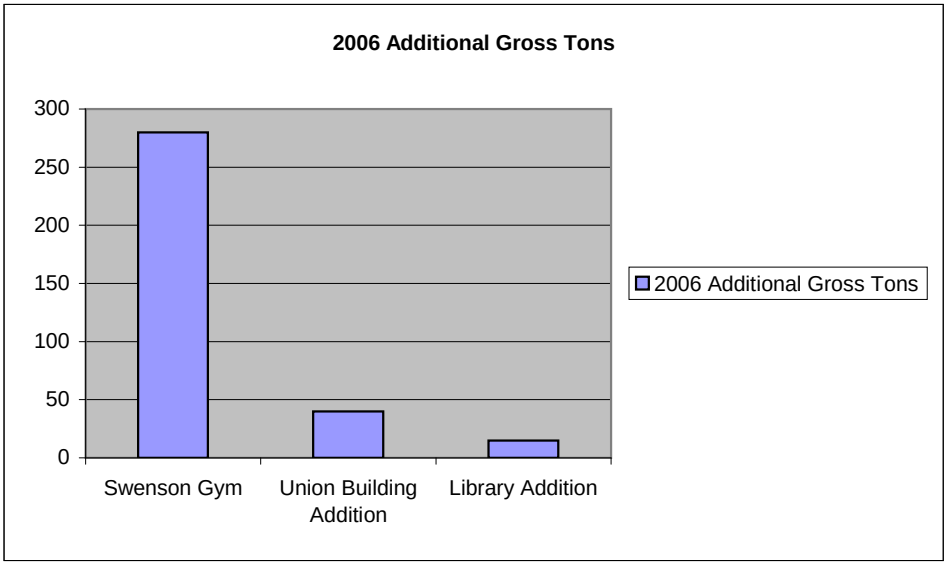

C. PROJECTED FUTURE LOADS

Building No.	Building Name	Area Sq. FT.	MBH	Gross Tons	10ΔT GPM	Diversity Factor	Net Tons	Net GPM
	New Humanities Classroom Building	120,000	3,840	320	768	65%	208	499
22	Top Floor Cooling Addition Tech Ed Building	69,813	3,252	271	650	65%	176.15	423
	**New Classroom Building for Buildings #3, #4	120,000	2,412	201	482	65%	130.65	314
	Campus Service Building	8,040	480	40	96	65%	26	62
	Engineering Tech. Bldg. A/C Addition	10,503	384	32	77	65%	21	50
6	Science Lab Addition	113,000	3,420	285	684	65%	185.25	445
	Sub-Total	**441,356**	**13,788**	**1,149**	**2,758**	65%	**747**	**1792**

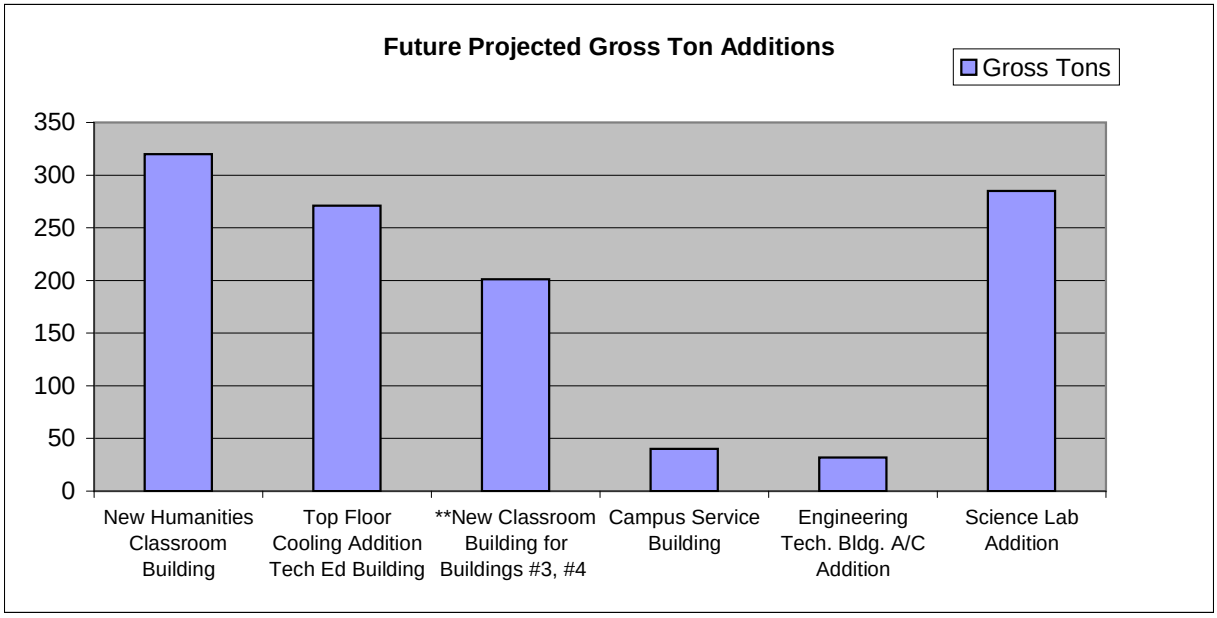

**Additional load required for the replacement of Bldg #4 with the new Humanities Building.

3.3 CHILLER PLANT CAPACITY REQUIREMENT SUMMARY

A. EXISTING CENTRAL CHILLED WATER PLANT CAPACITY

Chiller Manufacturer/Type	Size (Tons)	Line Loss Factor	Total Tons
Trane Centrifugal Chiller	1,250	95%	1,188
Carrier Centrifugal Chiller	1,250	95%	1,188
Trane Centrifugal Chiller	650	95%	618
		Total Existing Central Plant Capacity:	**2993**

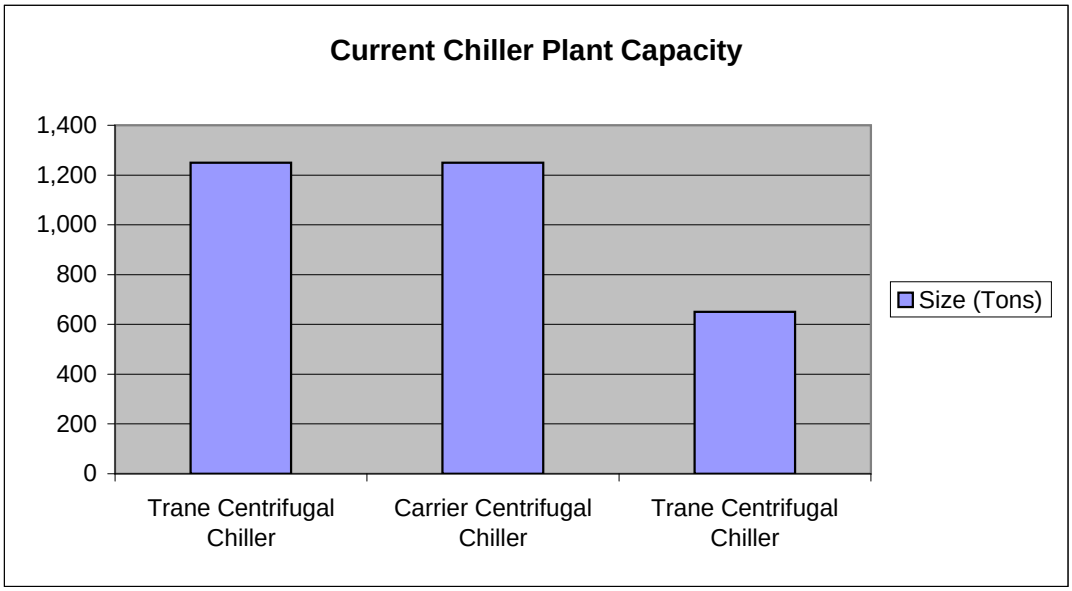

B. NEW REQUIRED CHILLED WATER PLANT CAPACITY

Connected Loads	Area Sq. FT.	MBH	Gross Tons	10ΔT GPM	Diversity	Net Tons	Net GPM
Existing Campus Load	1,490,993	49,536	4,127	9,905	60%	2,476	5,943
Summer 2006 Projected Load	104,000	3,780	335	804	60%	201	482
Future Projected Load For Future Buildings	441,356	13,788	1,149	2,758	65%	747	1792.44
Gross Totals	**2,036,349**	**67,104**	**5,611**	**13,467**		**3,424**	**8,218**

Overall Future Plant Capacity Requirements	Area Sq. FT.	MBH	Gross Tons	10ΔT GPM	Diversity	Net Tons	Net GPM
Overall Future Loads with New Diversity	**2,036,349**	**67,104**	**5,611**	**13,467**	**65%**	**3,647**	**8,753**

PROJECTED LOAD INCREASE			
Projected Gross Ton Requirements	**Req'd Gross Tons**	**Req'd Net Tons**	**Load Increase From Existing**
Existing Campus Load	4,127	2,476	0%
Summer 2006 Projected Load	4,462	2,677	8%
Overall Future Projected Load	5,611	3,647	47%

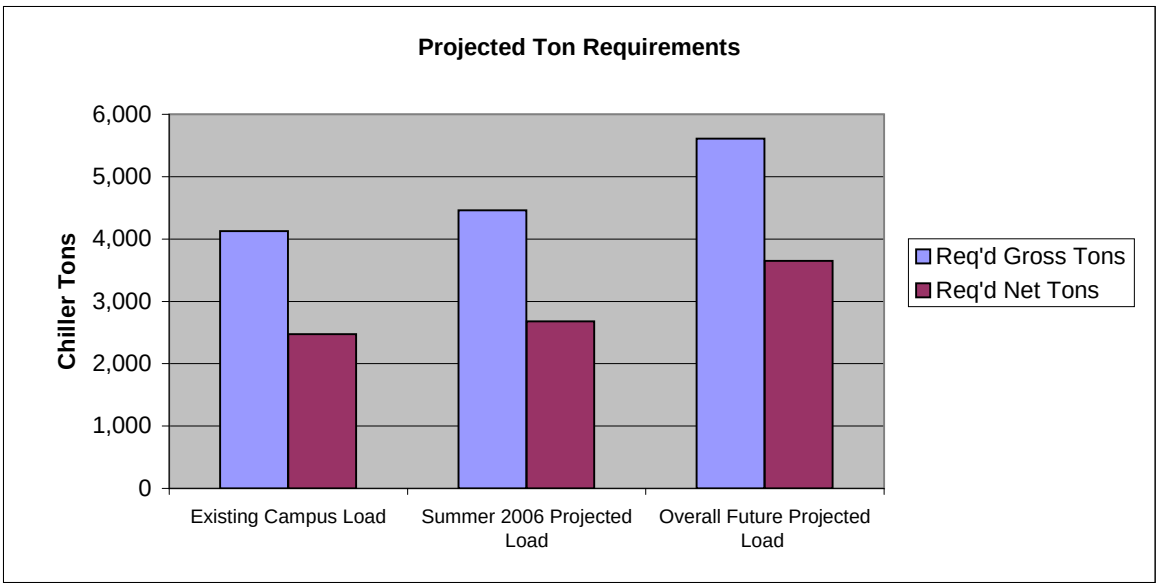

3.4 Conclusion

1. The existing chiller capacity is capable of serving the needs of the existing connected load:

   - Existing connected load: 2,476 Tons
   - Existing chiller plant capacity: 2,993 Tons
   - Excess capacity: 517 Tons

2. The existing chiller capacity is capable* of serving the needs of the existing connected load and the additional loads projected for the summer of 2006:

   - Existing connected load & 2006 addition: 2,677 Tons
   - Existing chiller plant capacity: 2,993 Tons
   - Excess capacity: 316 Tons

   *In order to meet this demand, all three chillers must be in operation and functioning to capacity. In an event that any one of the three chillers fail, the result would be a higher water temperature distribution system with significantly less cooling at each individual building.

   Note: Pumping system will be inadequate as it is currently operating. A higher chilled water Delta T will need to be used in attempt to compensate for lack of pumping capacity at peak loads.

3. The existing chiller capacity is **not** capable of serving the needs of the existing connected load, the additional projected summer load of 2006, and the additional future load.

   - Total projected future load: 3,647 Tons
   - Existing chiller plant capacity: 2,993 Tons
   - Capacity insufficiency: 654 Tons

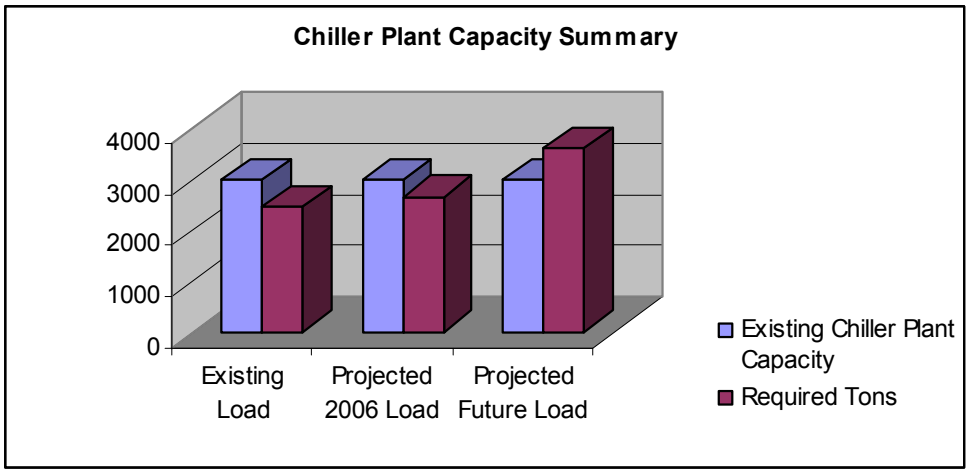

SECTION 4 – CHILLED WATER CAMPUS DISTRIBUTION SYSTEM

4.1 Introduction

A. This section will describe the existing and future chilled water piping distribution systems. This description includes maps, flow sheets, piping analysis sheets, comparison sheets between existing and future piping capacities, pipe sizing and recommendations.

B. The existing campus chilled water piping distribution system is a two pipe direct return system. Each building is equipped with two way valves or 3-way valves operating as two way valves. Piping is routed both in tunnels and directly buried.

C. The piping distribution system begins at the existing central chilled water plant located under the Science lab building. The piping is routed west where it separates into one branch going north and one going south. Both branches turn and head west. (See campus distribution map.) Chilled water piping is also distributed east to the stadium. The east side of campus is the high point and the west the low point of the system.

D. See the central chilled water flow sheets this section for existing piping arrangements. Pipe flow analysis sheets, indicate existing and future conditions. Pipe section nodes show pipe size, GPM, and required tons for that section of piping. Supply and return chilled water piping is shown on the map as one.

Tunnel to Kimball Arts

Tunnel to Student Services

4.2 CAMPUS PIPING AND PUMPING SYSTEMS

A. CHILLED WATER PIPE SECTION SUMMARY (see individual flow sheets and campus map for further detail)

Chilled Water Pipe Section Summary										
		Existing Gross CHW Load		Existing Net CHW Load**		Anticipated Future Gross CHW Load***		Anticipated Future Net CHW Load**		
Pipe Section	Existing Size	Tons	GPM	Tons	GPM	Tons	GPM	Tons	GPM	Recommended Minimum Future Size*
A-A.2	24" condenser	Existing pipe re-configured in future				*5611*	*13466*	*3647*	*8753*	24"
B-B.1	6"	285	684	285	684	285	684	285	684	6"
B-B.2	4"	133	319	133	319	133	319	133	319	4"
B-S	6"	217	521	217	521	217	521	217	521	6"
S-S.2	6"	217	521	217	521	217	521	217	521	6"
S.3-S.4	4"	93	223	93	223	93	223	93	223	4"
S.2-S.3	4"	108	259	108	259	108	259	108	259	4"
S.2-S.5	4"	109	262	109	262	109	262	109	262	4"
S.3-S.6	2"	15	36	15	36	15	36	15	36	2"
A.2-T	-	-	-	-	-	***5611***	***13466***	*3647*	*8753*	**24"**
T-T.1	-	-	-	-	-	***285***	***684***	***285***	***684***	**6"**
T-T.2	-	-	-	-	-	***5326***	***12782***	*3462*	*8309*	**24"**
T.2-C	20"	Existing pipe re-configured in future				*1133*	*2719*	*1133*	*2719*	10"
BC	20"	3492	8381	2270	5448	-	-	-	-	abandon/remove
CB****	10"	635	1524	635	1524	635	1524	635	1524	8"
CR	8"	195	468	195	468	498	1195	498	1195	8"
R-R.2	6"	141	338	141	338	*173*	*415*	*173*	*415*	5"
R-R.3	4"	54	130	54	130	***325***	***780***	***325***	***780***	**6"**
CD	20"	3297	7913	2143	5143	New configuration. Becomes T.2-D and T.2-C				
T.2-D	20"	Existing pipe re-configured in future				*4193*	*10063*	*2725*	*6541*	18"
D-D.1	20"	3297	7913	2143	5143	*4193*	*10063*	*2725*	*6541*	18"
D.1-D.2	6"	132	317	132	317	132	317	132	317	5"
D.1-E	20"	3165	7596	2057	4937	*4061*	*9746*	*2640*	*6335*	18"
EQ	10"	696	1670	592	1420	*991*	*2378*	*842*	*2022*	10"
Q-Q.1	10"	389	934	389	934	*404*	*970*	*404*	*970*	8"
Q-Q.2	10"	307	737	307	737	*587*	*1409*	*587*	*1409*	8"
Q.2-Q.3	4"	99	238	99	238	99	238	99	238	4"
Q.2-Q.4		208	499	208	499	*488*	*1171*	*488*	*1171*	8"
Q.4-Q.5	5"	208	499	208	499	208	499	208	499	5"
Q.4-Q.6	**(5" stub)**	-	-	-	-	***280***	***672***	***280***	***672***	**6"**
EF	20"	2469	5926	1605	3852	*3070*	*7368*	*1996*	*4789*	18"
F-F.2	5"	119	286	119	286	***320***	***768***	***320***	***768***	**6"**
FG	18"	2350	5640	1528	3666	*2750*	*6600*	*1788*	*4290*	16"
GH	18"	1658	3979	1078	2586	*2058*	*4939*	*1338*	*3210*	12"
GP	8"	692	1661	588	1412	692	1661	588	1412	8"
P-P.2	5"	152	365	152	365	152	365	152	365	5"
P-P.3	8"	472	1133	472	1133	472	1133	472	1133	8"
P-P.4	4"	68	163	68	163	68	163	68	163	4"
HI	12"	685	1644	582	1397	*725*	*1740*	*616*	*1479*	8"
I-I.2	8"	361	866	361	866	*401*	*962*	*401*	*962*	8"
I.2-I.3	-	-	-	-	-	***40***	***96***	***40***	***96***	**3"**
IJ	12"	324	778	324	778	324	778	324	778	8"
J-J.2	5"	123	295	123	295	123	295	123	295	5"
JK	10"	201	482	201	482	201	482	201	482	6"
K-K.2	3"	51	122	51	122	51	122	51	122	3"
K-K.3	6"	150	360	150	360	150	360	150	360	5"
HL	12"	973	2335	827	1985	*1333*	*3199*	*1133*	*2719*	12"
LM	10"	525	1260	525	1260	525	1260	525	1260	8"
M-M.2	5"	179	430	179	430	179	430	179	430	5"
M-M.3	8"	346	830	346	830	346	830	346	830	8"
LN	8"	448	1075	381	914	*808*	*1939*	*687*	*1648*	8"
N-N.2	6"	118	283	118	283	118	283	118	283	4"
NO	8"	330	792	330	792	*690*	*1656*	*690*	*1656*	8"
O-O.2	8"	312	749	312	749	312	749	312	749	6"
O-O.2.5	2.5"	18	43	18	43	***378***	***907***	***378***	***907***	**8"**
O2.5-O.3	2.5"	18	43	18	43	***58***	***139***	***58***	***139***	**3"**
O.3-O.3.5	2.5"	18	43	18	43	18	43	18	43	2"
O2.5-O.5	-	-	-	-	-	***320***	***768***	***320***	***768***	**6"**
O.3-O.4	-	-	-	-	-	***40***	***96***	***40***	***96***	**3"**

* Based on anticipated future net load, using the 2005 campus master plan. Pipe size recommendations are made using a maximum pressure drop of 5.0'/100 ft and maximum velocity of 8.0'/sec. The sizes and sections shown in red indicate either new sections of piping, or sections where the future recommended line size is larger than the existing line size. These recommendations only apply to the current anticipated development. If changes are made to the campus master plan, then recommended line sizes should be re-evaluated.

** The net chilled water load for the pipe sections is based on approximate diversity factors at the different sections. The individual building branch loads do not use a diversity factor. The existing building loads are shown in blue. The sub-mains that serve relatively few buildings do not use a diversity factor, and are shown in regular **black**. The diversity factor for the main chilled water lines is approximated at 65%. This is the same diversity as the central plant. These loads are shown in magenta. The diversity factor for the sub-mains serving large groups of buildings is approximated at 85%. These loads are shown in green.

*** Where section loads increase as a result of anticipated development, these new loads are shown in *italics*.

**** A 20" pipe runs from B to C, and a 10" pipe runs back from C to B, so both sections are listed.

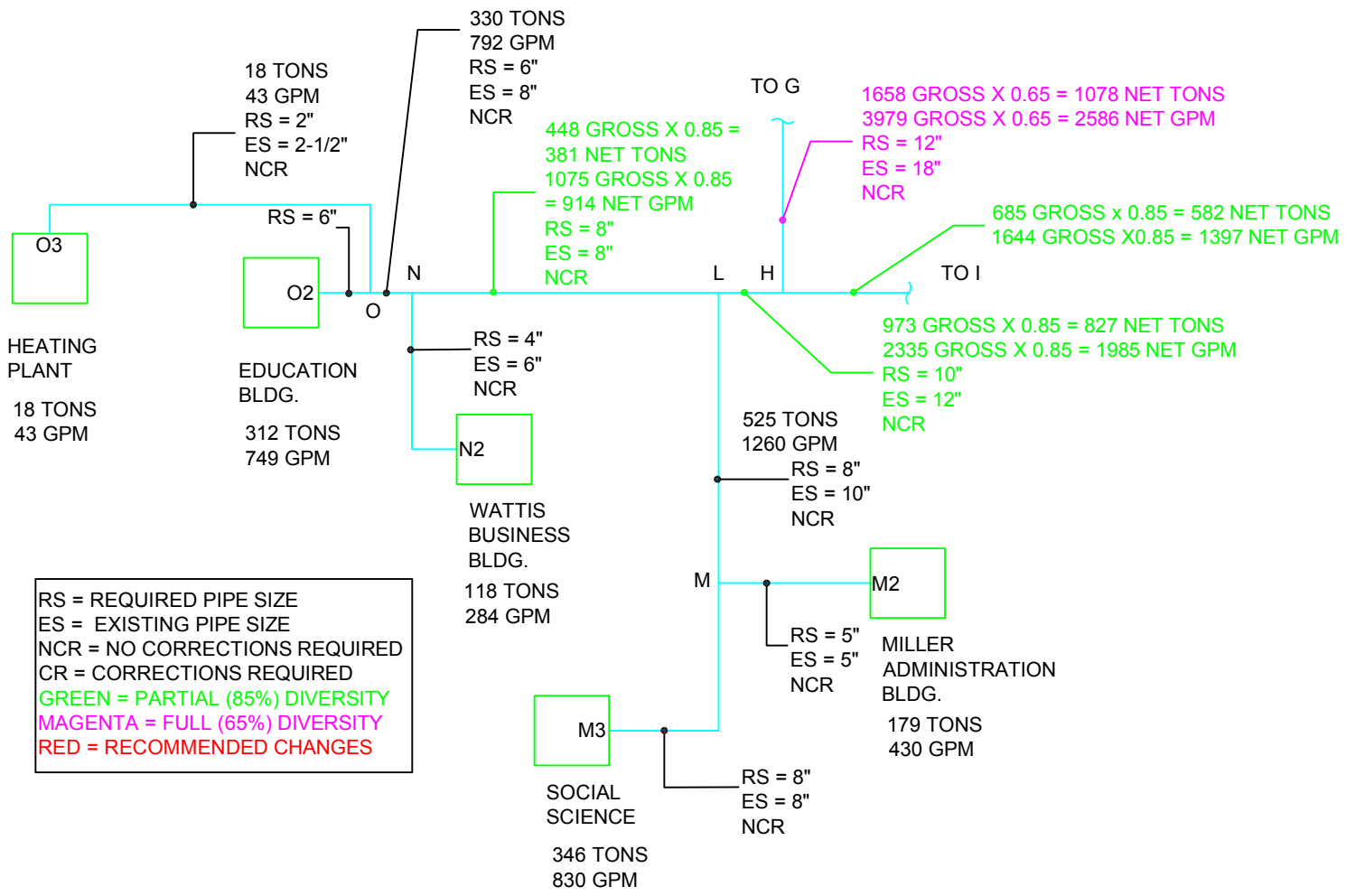

BRANCH #1 & #2 EXISTING

NOT TO SCALE

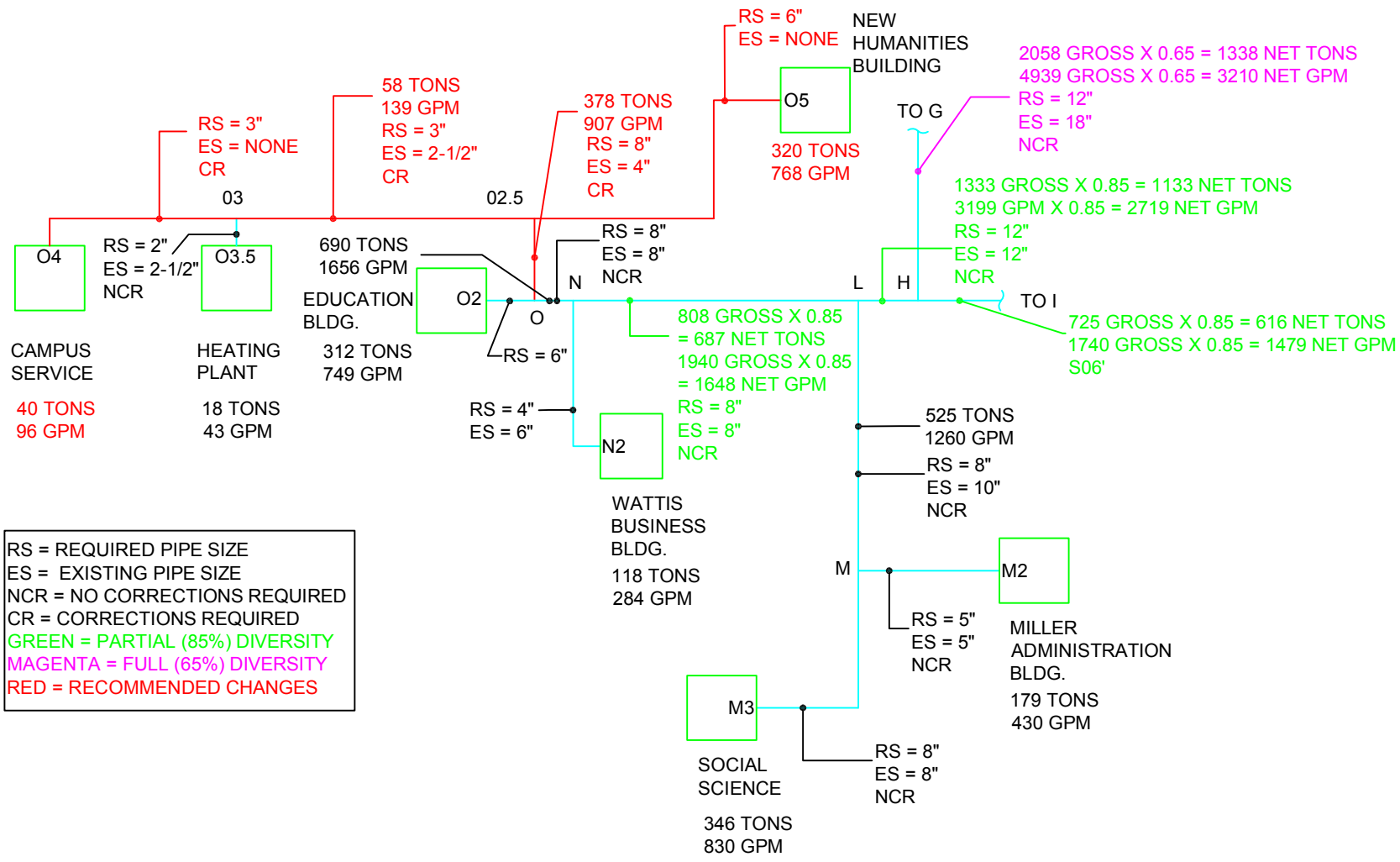

BRANCH #1 & #2A FUTURE

NOT TO SCALE

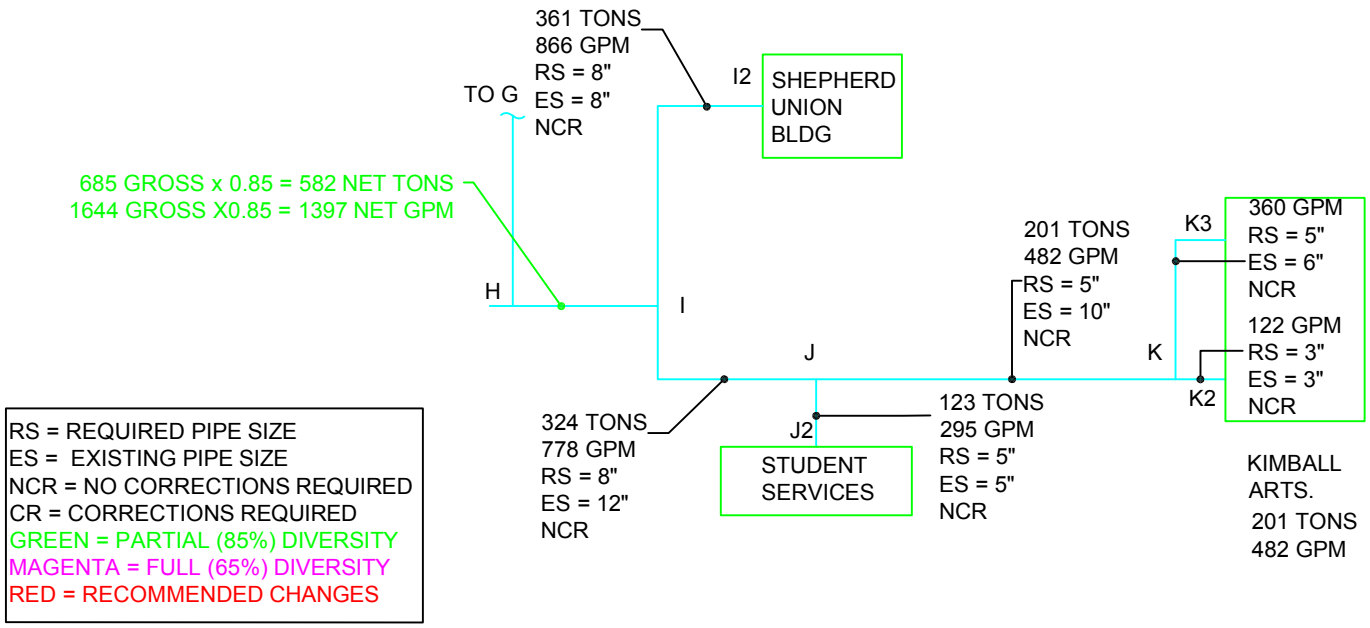

BRANCH #3 EXISTING

NOT TO SCALE

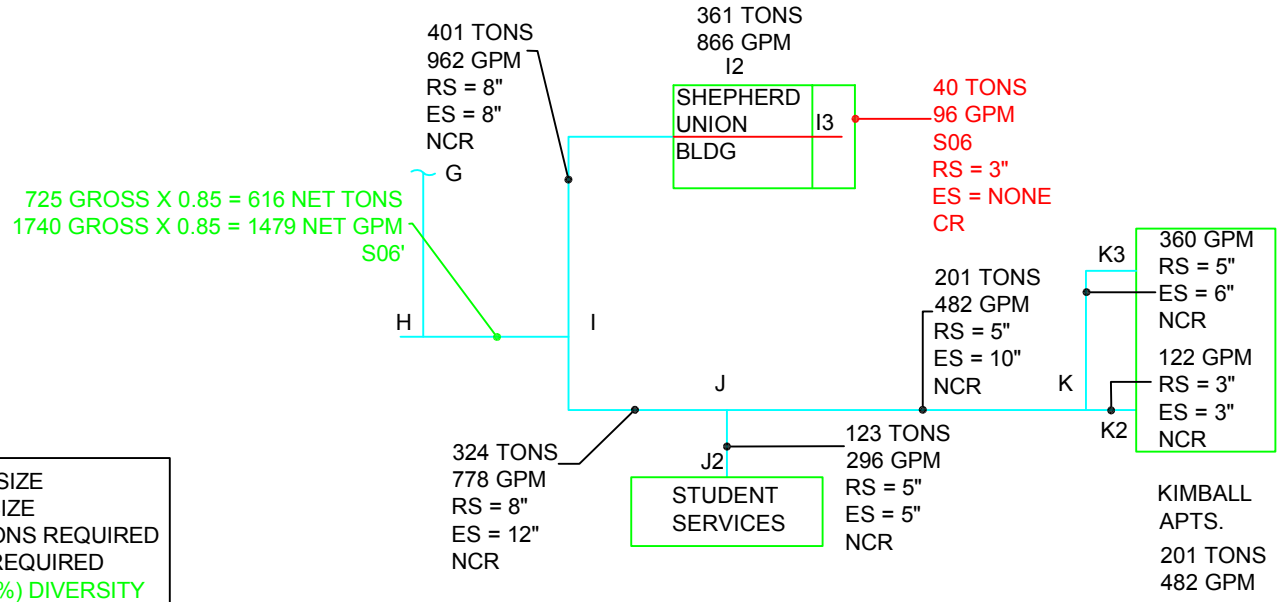

RS = REQUIRED PIPE SIZE
ES = EXISTING PIPE SIZE
NCR = NO CORRECTIONS REQUIRED
CR = CORRECTIONS REQUIRED
GREEN = PARTIAL (85%) DIVERSITY
MAGENTA = FULL (65%) DIVERSITY
RED = RECOMMENDED CHANGES

BRANCH #3A SUMMER 2006

NOT TO SCALE

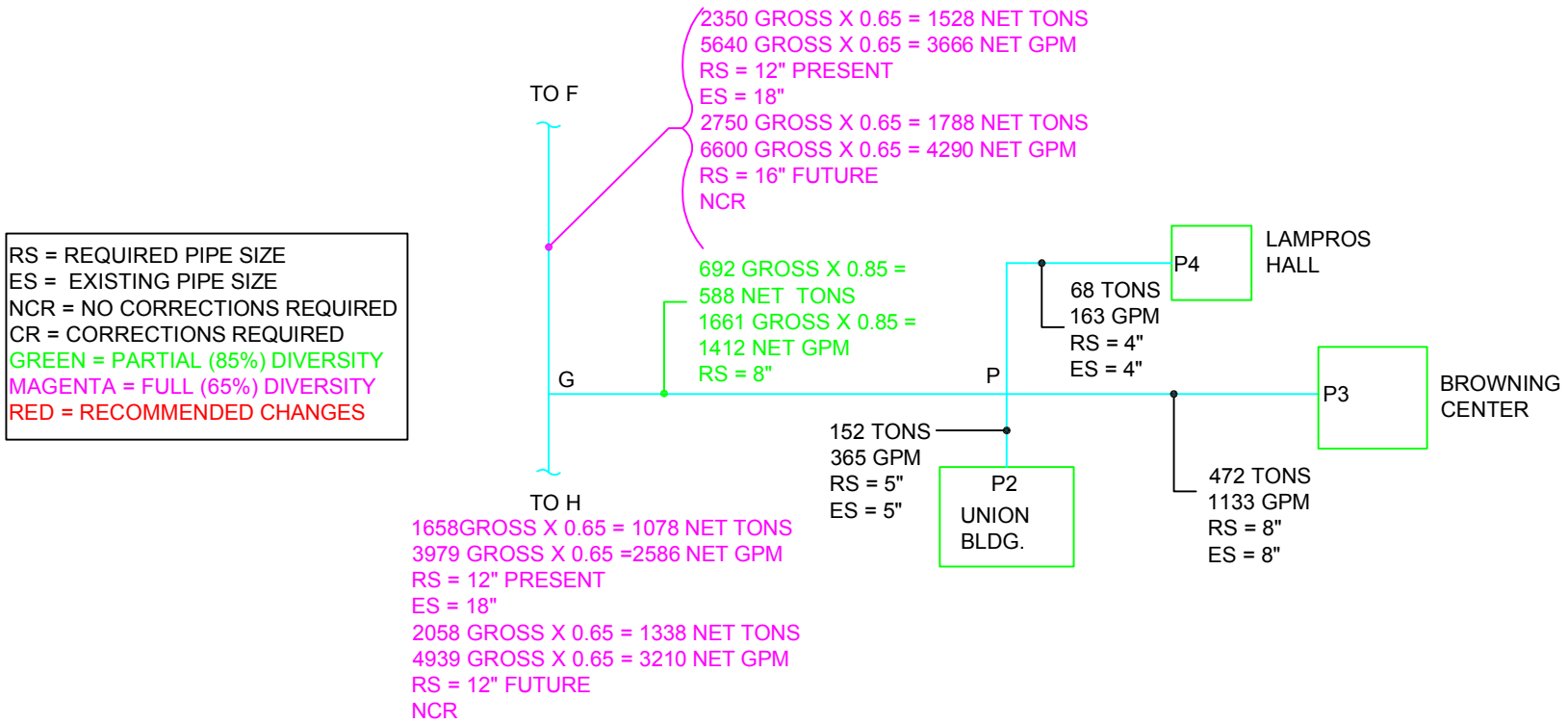

BRANCH #4 EXISTING AND FUTURE

NOT TO SCALE

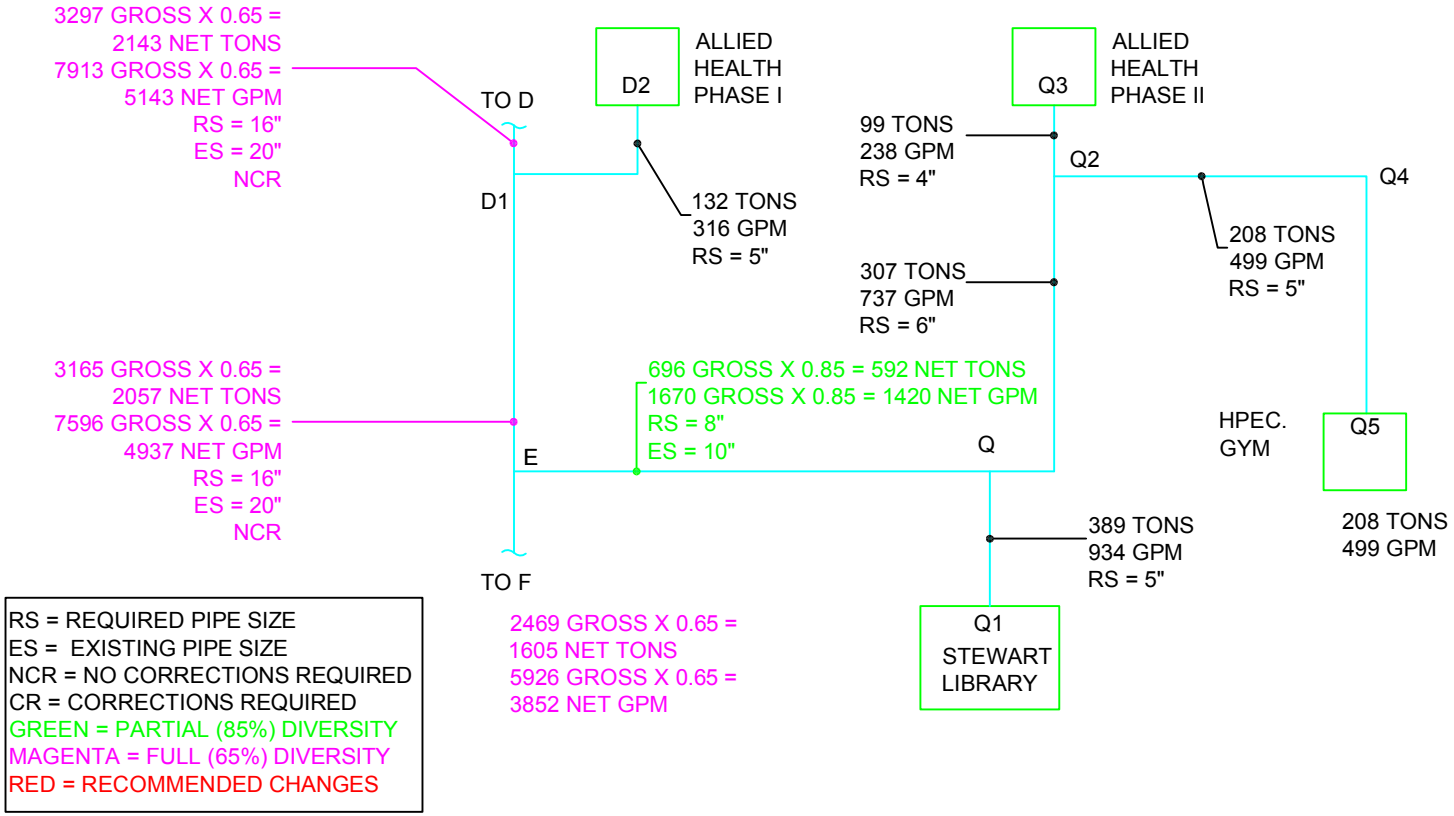

BRANCH #5 & #7 EXISTING

NOT TO SCALE

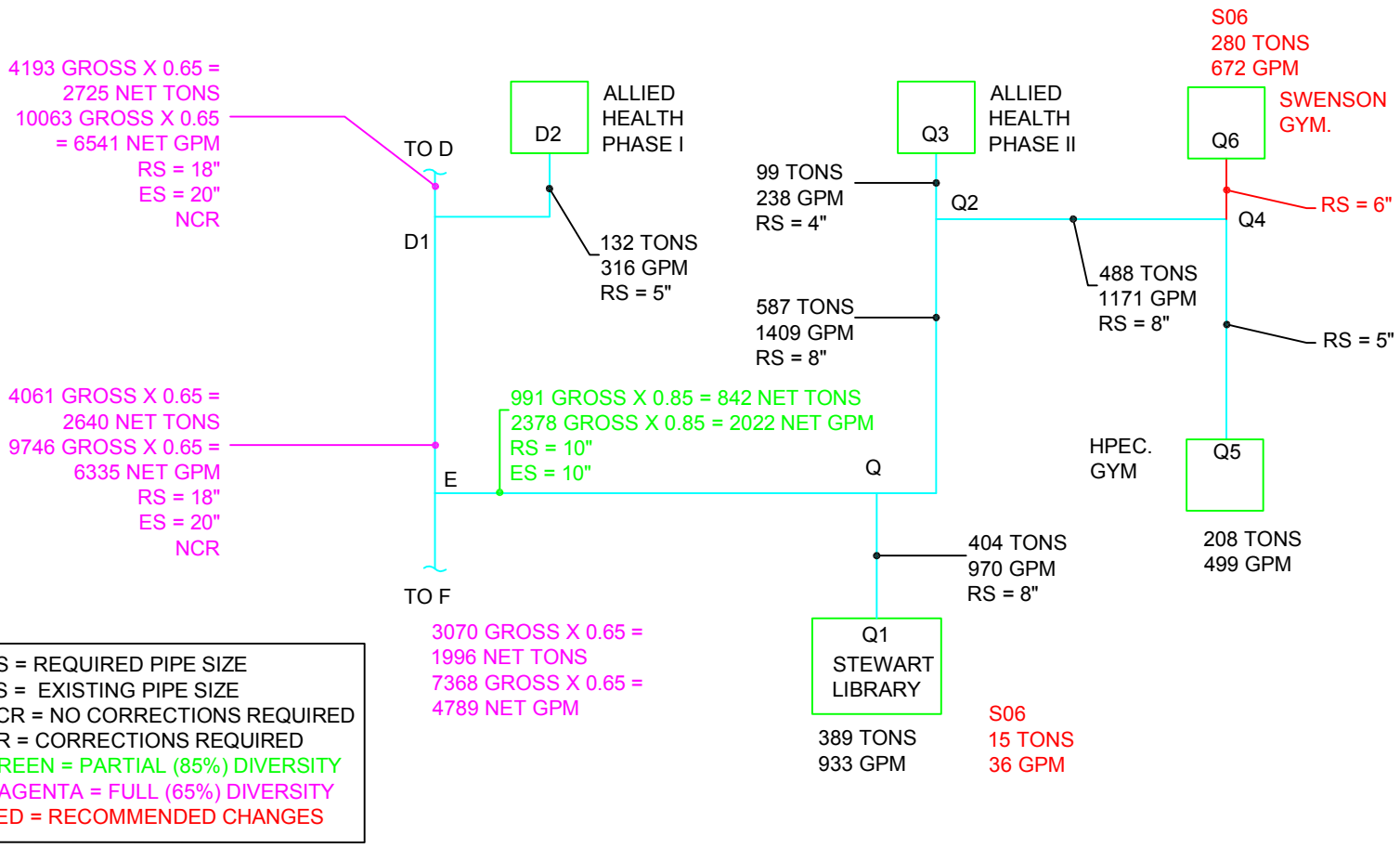

BRANCH #5 SUMMER 2006

NOT TO SCALE

RS = REQUIRED PIPE SIZE
ES = EXISTING PIPE SIZE
NCR = NO CORRECTIONS REQUIRED
CR = CORRECTIONS REQUIRED
GREEN = PARTIAL (85%) DIVERSITY
MAGENTA = FULL (65%) DIVERSITY
RED = RECOMMENDED CHANGES

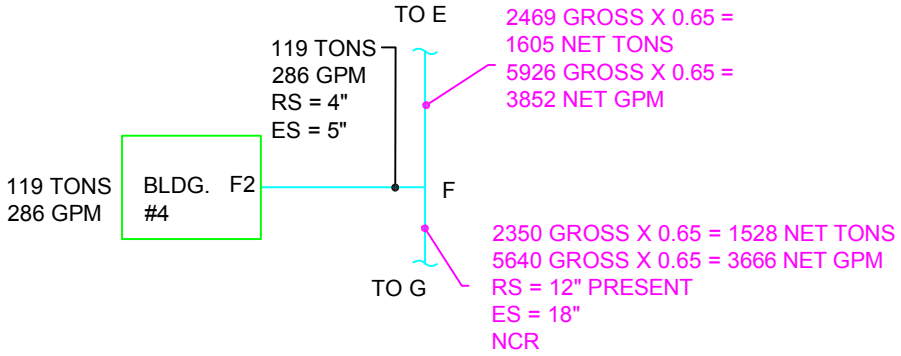

BRANCH #6 EXISTING

NOT TO SCALE

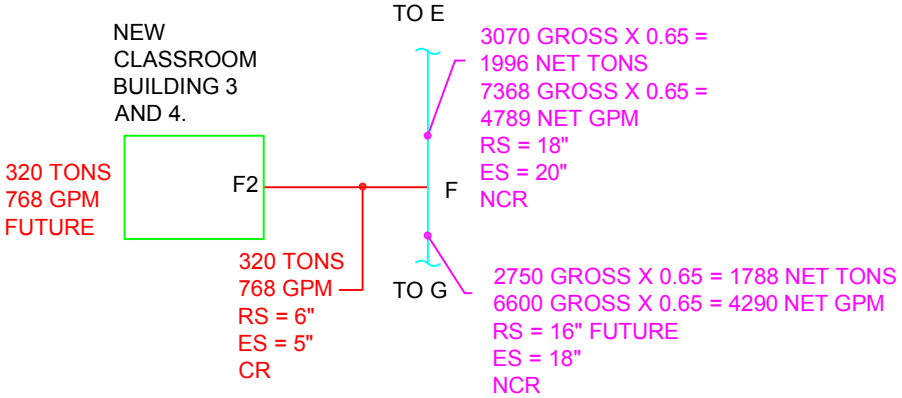

BRANCH #6A FUTURE

NOT TO SCALE

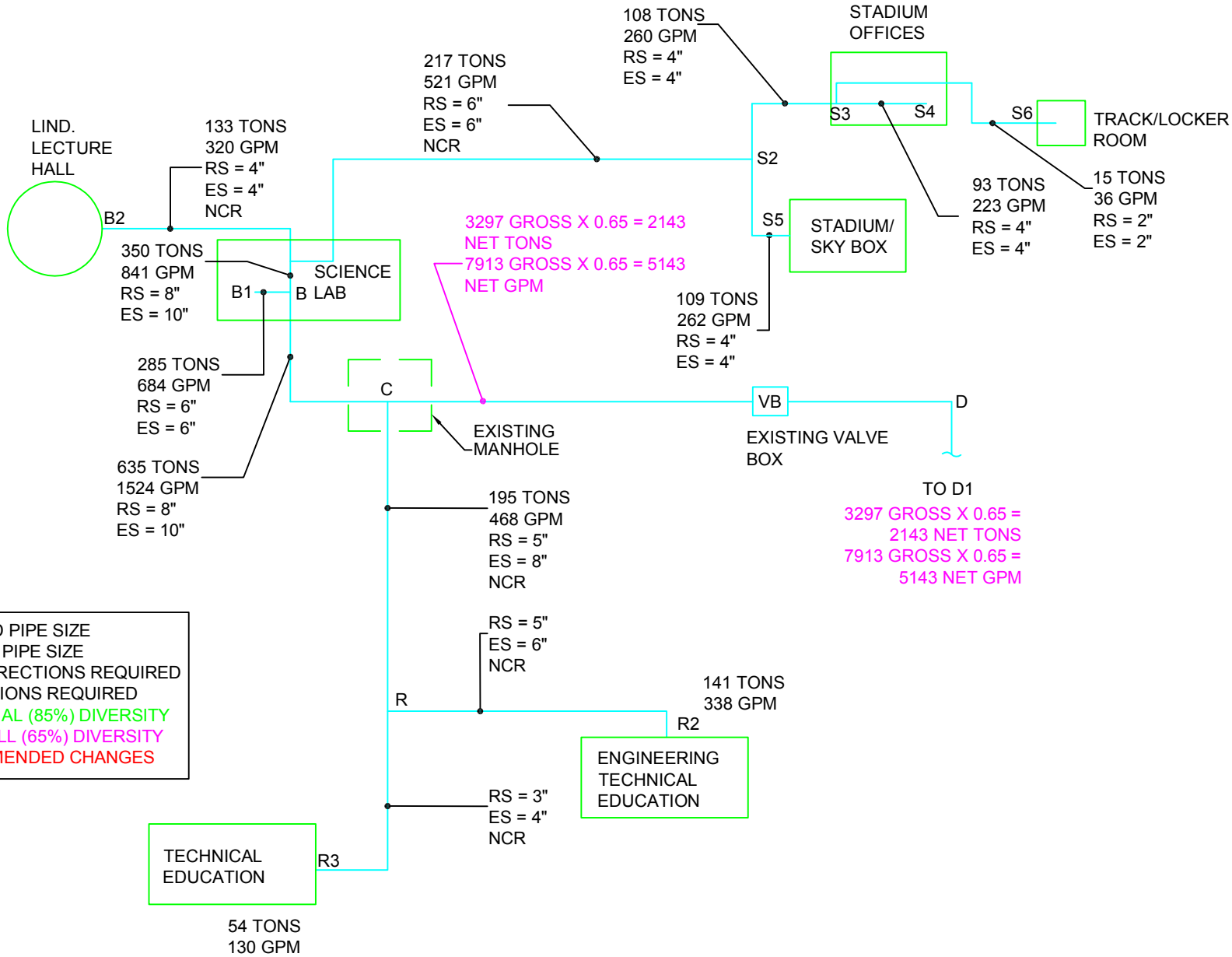

BRANCH #8 & #9 EXISTING

NOT TO SCALE

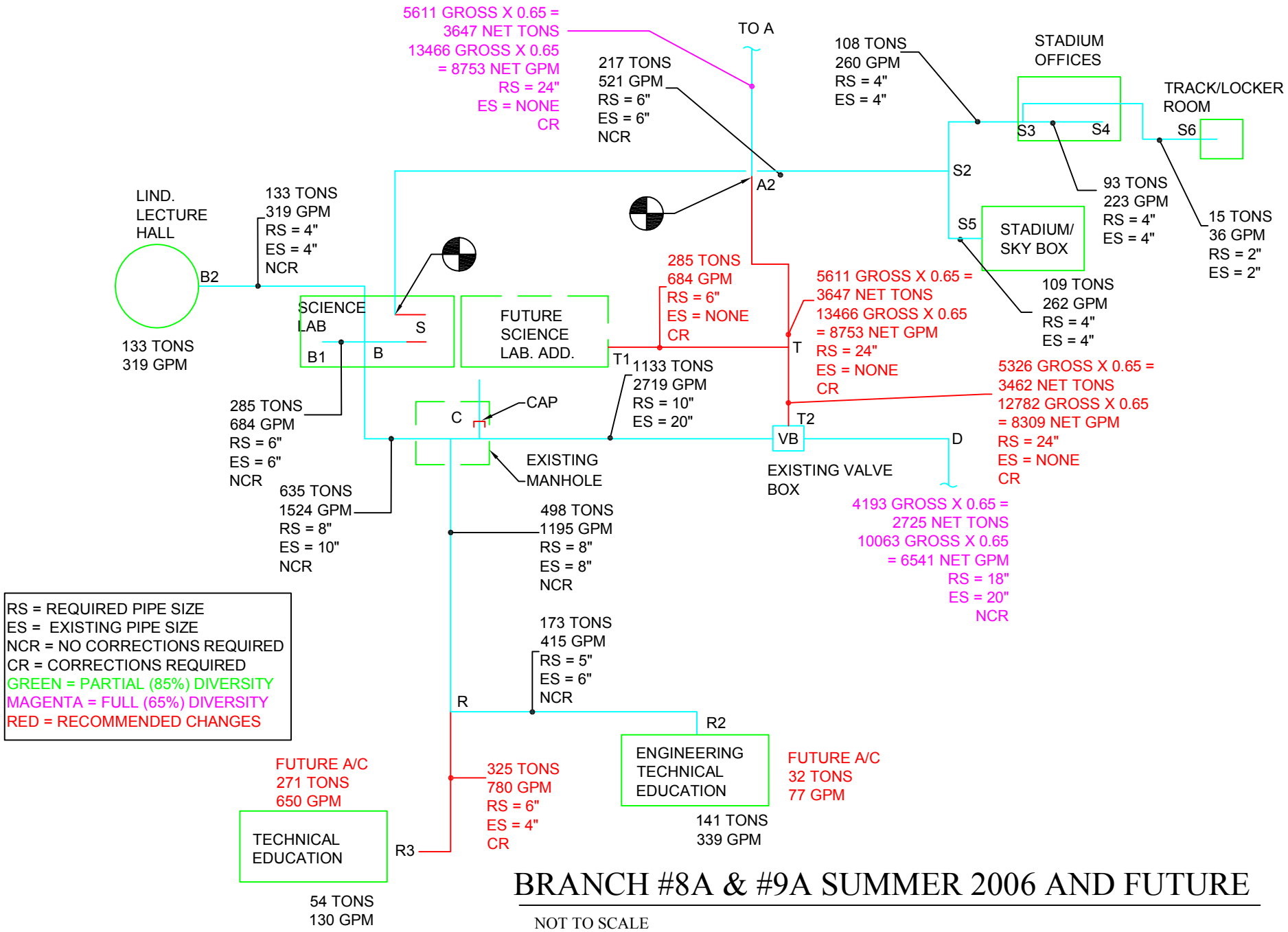

BRANCH #8A & #9A SUMMER 2006 AND FUTURE

NOT TO SCALE

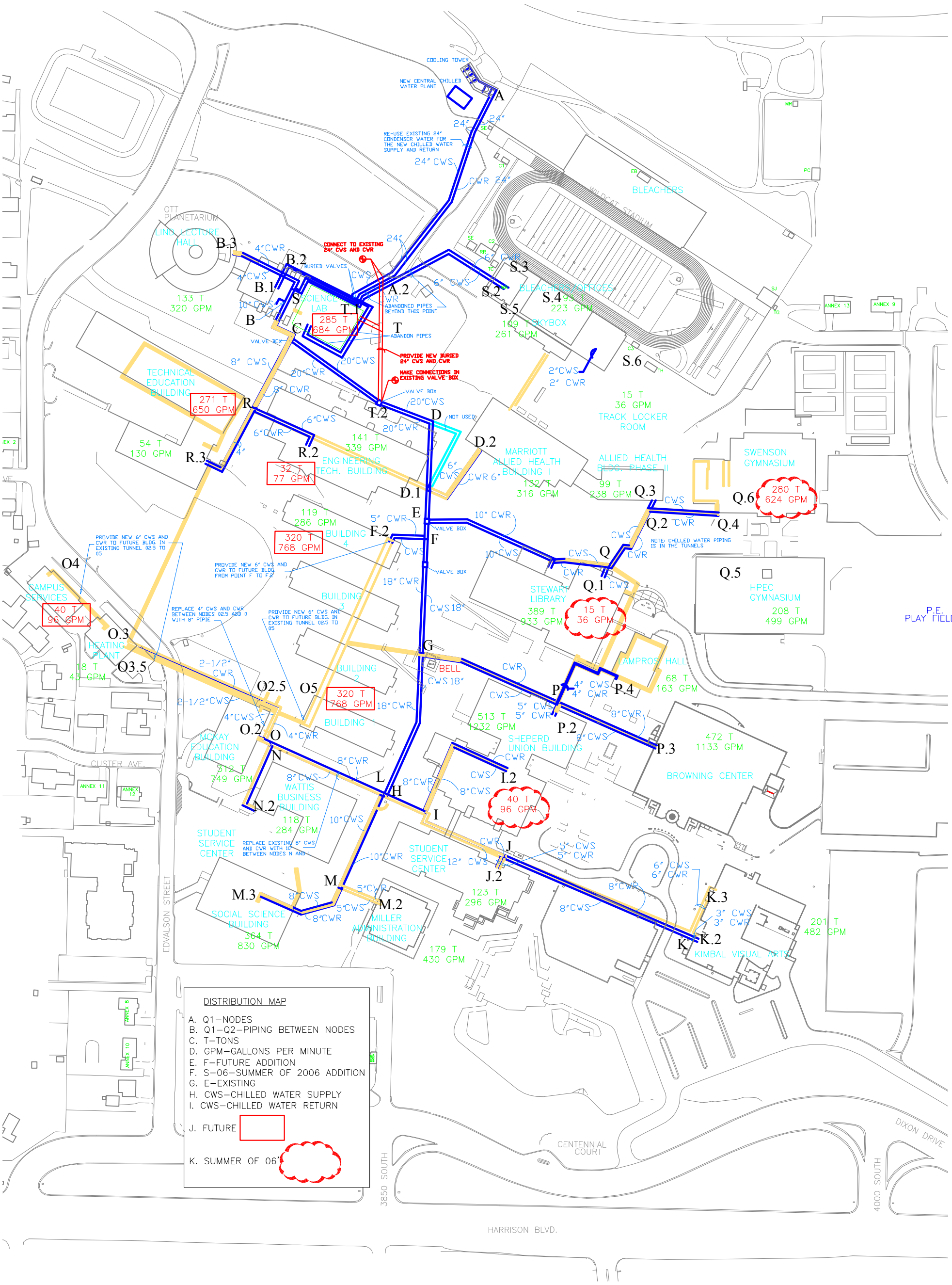

WEBER STATE UNIVERSITY
CAMPUS PIPIPING DISTRIBUTION MAP
CHILLED WATER LOOP

4.3 CHILLED WATER PUMPING SYSTEM SUMMARY

A. The existing chilled water plant pumping system consists of primary pump loops for each chiller, and a secondary pump loop for the campus:

1. Primary Loops: There are two primary pumps for each chiller. Each pump in the Trane room is sized for approximately 50% of the chiller capacity, or 1300 GPM each. The two primary pumps in the Carrier room are closer to 100% redundant. Pump P-4 is sized for 2733 GPM and pump P-3 is sized for 2108 GPM. Pump P-4 runs as the lead primary pump, and pump P-3 runs as a manual back-up for the chilled water or condenser water as necessary.

2. Secondary Loop:
   a. Pumps P-1 and P-2 are the main campus pumps. Each is sized for 3000 GPM and 120 ft of head. Both pumps have Variable Frequency Drives.
   b. The VFD is ramped based on the worst case scenario of three differential pressure sensors in the campus loop. Currently this differential pressure has been set high enough to satisfy the pressure demands of the Skybox and Kimball Fine Arts buildings. This high pressure is causing problems at some of the buildings closer to the plant and at lower elevations. Most of the relief valves in these areas have been changed, or adjusted to handle the higher pressure, but there are still occasional problems. In addition, many of the buildings closer to the central plant have

pressure reducing valves in the chilled water lines to protect against this problem.

c. Both of P-1 and P-2 pumps need to operate simultaneously to deliver **6000 GPM** in order to meet the peak chiller capacity. In fact, with a 10 degree delta T on the chilled water, the maximum pumping capacity is closer to **2500** tons. This is approximately **490** tons less than the maximum chiller capacity. In a case where the campus load exceeds 2500 tons, it will be necessary to use a larger delta T, and if possible, a colder supply water temperature to meet that additional demand.

Existing Campus Load	GPM
➢ Existing connected load:	5,943
➢ Chilled water pump capacity:	6,000
➢ Excess capacity:	57

Summer 2006 Load	
➢ Projected summer 2006 load:	6,425
➢ Chilled water pump capacity:	6,000
➢ Capacity insufficiency:	425

Projected Future Load	
➢ Projected future load:	8,753
➢ Chilled water pump capacity:	6,000
➢ Capacity insufficiency:	2,753

B. The individual buildings vary in their chilled water distribution systems. Some buildings have main chilled water pumps, some have coil pumps, and some do not have pumps. Some of the pumps are running, and some have been shut-off and bypassed. See section 2.3 for an individual building load summary.

Chilled Water Pump
Student Services Building

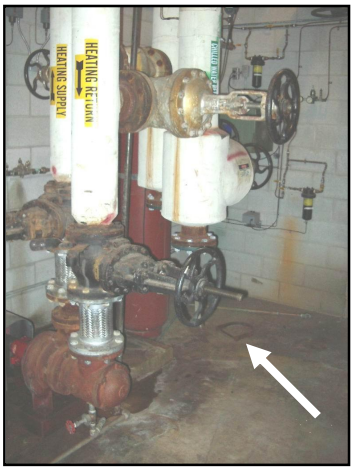

Chilled Water Pump Removed
Administration Building

No Pumps – Piped Directly to Coils
Kimball Arts

C. Chilled Water Pumping System Summary

1. The existing pumps in the Trane room are fairly new pumps and are in good condition. The existing pumps in the Carrier room are older and in fair condition.
2. The existing campus pumping system has reached its' operating limits. It must operate at full capacity to meet current campus needs, and does not have adequate back-up. If a primary pump is lost, the campus capacity is reduced by 50% of one chiller. This could be as much as 625 tons. If a secondary pump is lost, the entire campus cooling capacity will be reduced by 50%.
3. The individual building requirements of the Skybox and Kimball Fine Arts buildings are requiring the campus loop to run at a higher pressure than needed.
    a. The static pressure in the system is a result of the elevation difference between the highest point in the system and the lowest point plus the system fill pressure. Currently, the high point in the system is the air handler at the top of the Skybox. The elevation of the 1st floor of the Skybox is approximately 4760 feet, and the approximate elevation of the highest chilled water coil in the skybox is approximately 4810 feet. The lowest point in the system is around the Business Building, Social Science Building, and Administration Building. The basement mechanical room elevations are approximately 4600 feet. This will result in a static pressure of approximately 90 psig at the lowest point in the system. If the fill pressure is 10 psig higher than the static resulting from elevation, then total static pressure of the system will be around 100 psig at the lowest point in the system.
    b. The pump pressure is 120 feet, or approximately 52 psig. The actual pressure at any point in the system will be the static pressure plus the working pressure, minus the line losses. The low buildings in the system will have a pressure of 142 psig – line losses from the pump to the building. These line losses from the pumps to these buildings will be around 10-15 psig. This will result in an overall pressure of approximately 137 – 142 psig at these low points. Some buildings have pressure reducing valves that may limit this pressure, but some do not. The flanges and fittings in these buildings are rated at 125 psig. There is a safety factor, but it is definitely better to not use a safety factor, and make the corrections in the system necessary to reduce the overall pressure at these buildings below 125 psig. This could be done most effectively by de-coupling the high points, which is the Skybox loop. It may also be done by adding pressure reducing valves at all of the lower points, but doing so, may result in the low buildings not having enough pressure left over to return the water to the central plant.
4. See Section 6 for new plant recommendations, as well as pumping system recommendations.

SECTION 5 – NEW CENTRAL CHILLED WATER PLANT OPTIONS

5.1 Introduction

A. This section provides six different chiller combinations and capacities for the new central chilled water plant.

B. Options or recommendations for Free Cooling and Thermal Ice Storage are also provided in this section.

C. The combination graphs indicate the different operational stages and the corresponding capacity of the chillers at these stages.

D. See Appendix A.6 for chiller optimization and SPLV (**S**ystem **P**art **L**oad **V**alue efficiency) summaries. These runs also have VFD (**V**ariable **F**requency **D**rive) options and costs.

5.2 NEW CENTRAL CHILLED WATER PLANT CHILLER COMBINATIONS

New Central Chilled Water Plant Chiller Combinations: Combination A

Combination A			
Chiller #	New/Existing	Size (tons)	VFD
CH-1	New	1500	Yes
CH-2	Existing	1250	No
CH-3	New	1500	Optional***
CH-4	Existing	650	No
	Combination Capacity:	**4900**	

Campus Peak Tons Req'd	Combination Capacity	Excess Tons
3647	4900	1253

Stage	Chillers Operating	Standby Chillers	Stage Chiller Ton Capacity
0	0	1,2,3,4	0
1	1	2,3,4	1500
2	1,2	3,4	2750
3	1,3	2,4	3000
4	1,2,3	4	4250

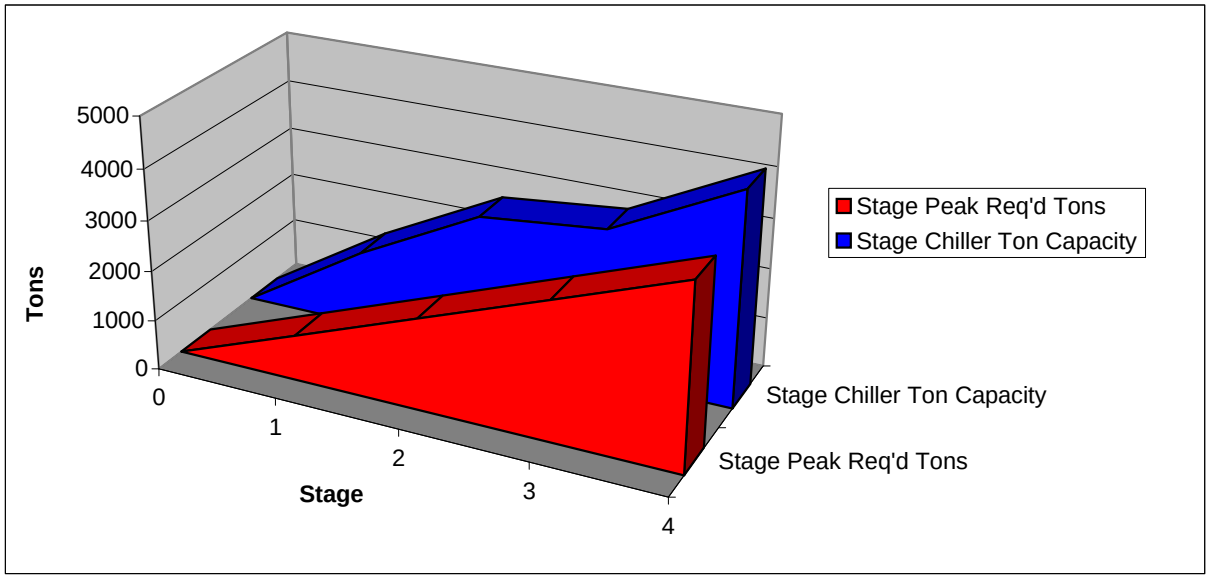

*Chiller manufactures provide twin compressors for chillers over 1500 Tons.

**Plate and Frame Exchanger will be provided for the first stage of cooling during spring, winter, and fall
See Appendix A.4 for cut sheets.

***See Appendix A.6. for option - Combination A and A-1 life cycle cost and optimization.

New Central Chilled Water Plant Chiller Combinations: Combination B

Combination B			
Chiller #	New/Existing	Size (tons)	VFD
CH-1	New	2000	Yes
CH-2	Existing	1250	No
CH-3	New	1250	No
CH-4	Existing	650	No
	Combination Capacity:	**5150**	

Campus Peak Tons Req'd	Combination Capacity	Excess Tons
3647	5150	1503

Stage	Chillers Operating	Standby Chillers	Stage Chiller Ton Capacity
0	0	1,2,3,4	0
1	1	2,3,4	2000
2	1,4	2,3	2650
3	1,2	3,4	3250
4	1,2,4	3	3900

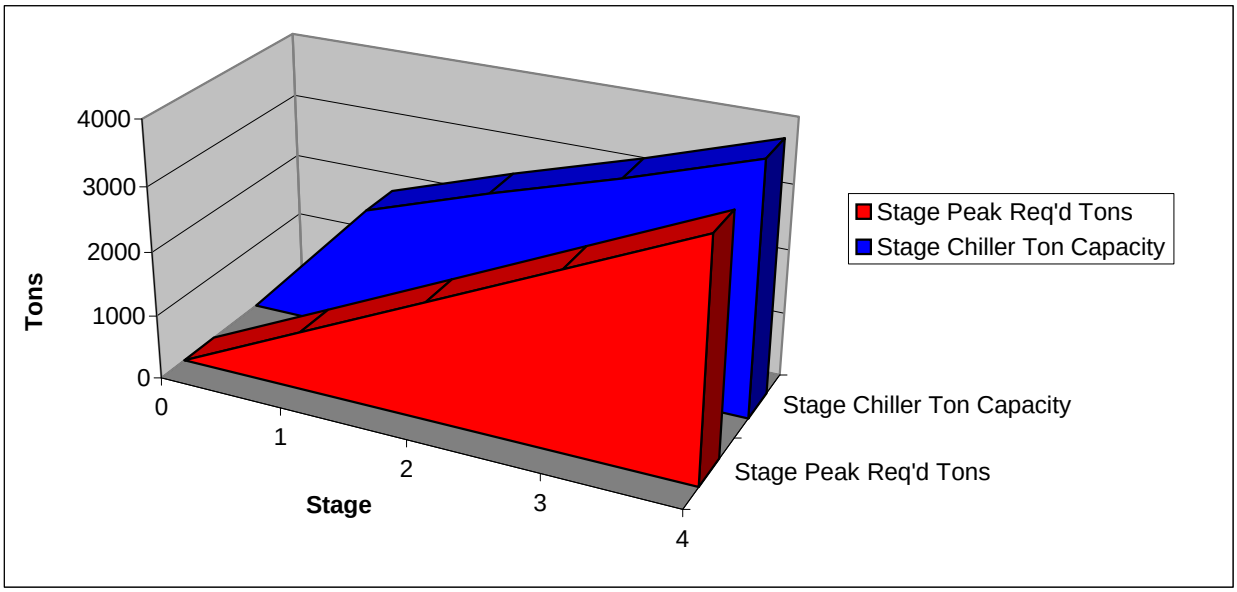

*Chiller manufactures provide twin compressors for chillers over 1500 Tons.

**Plate and Frame Exchanger will be provided for the first stage of cooling during spring, winter, and Fall
See Appendix A.4 for cut sheets.

New Central Chilled Water Plant Chiller Combinations: Combination C

Combination C			
Chiller #	New/Existing	Size (tons)	VFD
CH-1	New	1500	Yes
CH-2	Existing	1250	No
CH-3	New	1250	Optional***
CH-4	Existing	650	No
	Combination Capacity:	**4650**	

Campus Peak Tons Req'd	Combination Capacity	Excess Tons
3647	4650	1003

Stage	Chillers Operating	Standby Chillers	Stage Chiller Ton Capacity
0	0	1,2,3,4	0
1	1	2,3,4	1500
2	1,2	3,4	2750
3	1,2,4	3	3400
4	1,2,3	4	4000

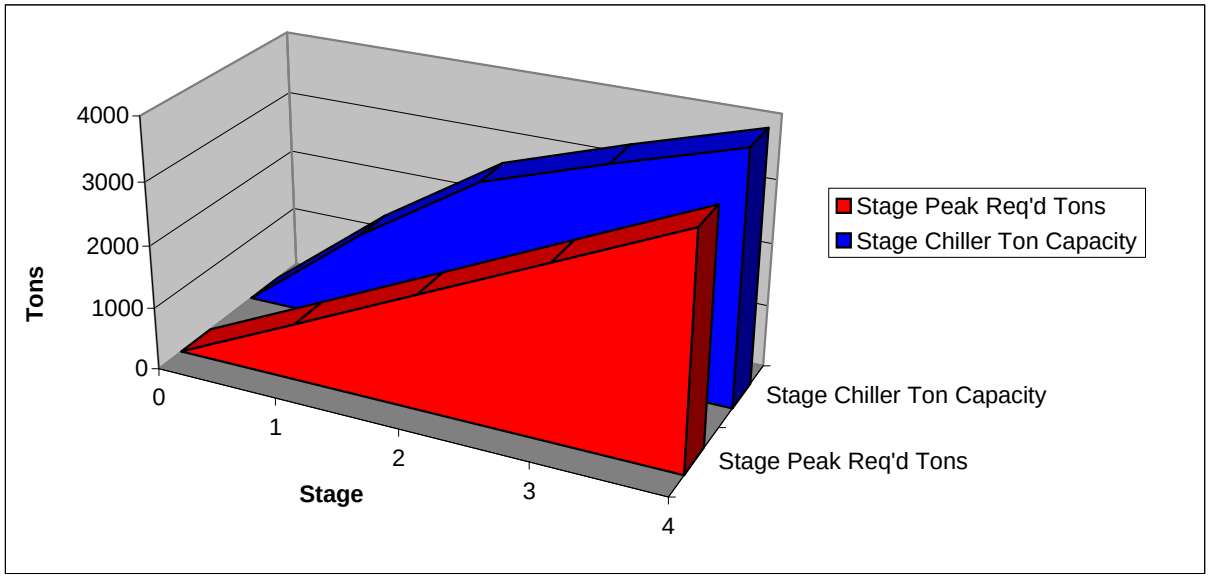

*Chiller manufactures provide twin compressors for chillers over 1500 Tons.

**Plate and Frame Exchanger will be provided for the first stage of cooling during spring, winter, and Fall
See Appendix A.4 for cut sheets.

***See Appendix A.6 for option - Combination C and C-1 life cycle cost and optimization.

New Central Chilled Water Plant Chiller Combinations: Combination D

Combination D			
Chiller #	New/Existing	Size (tons)	VFD
CH-1	New	2000	Yes
CH-2	Existing	1250	No
CH-3	New	1500	No
CH-4	Existing	650	No
	Combination Capacity:	**5400**	

Campus Peak Tons Req'd	Combination Capacity	Excess Tons
3647	5400	1753

Stage	Chillers Operating	Standby Chillers	Stage Chiller Ton Capacity
0	0	1,2,3,4	0
1	1	2,3,4	2000
2	1,4	2,3	2650
3	1,2	3,4	3250
4	1,2,4	3	3900

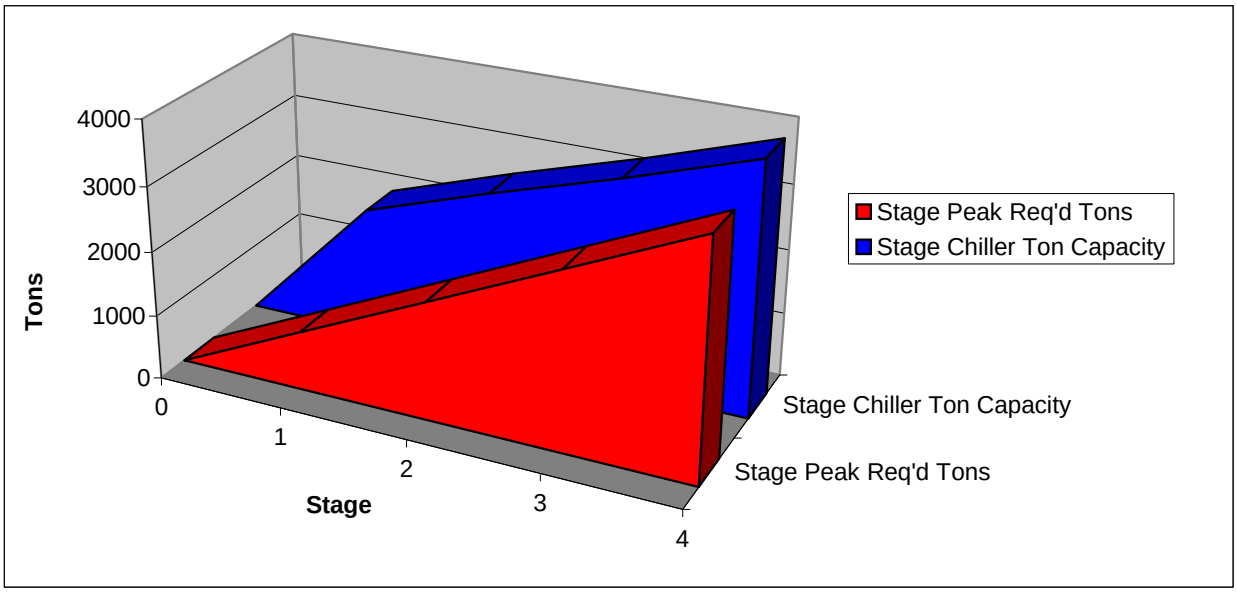

*Chiller manufactures provide twin compressors for chillers over 1500 Tons.

**Plate and Frame Exchanger will be provided for the first stage of cooling during spring, winter, and Fall
See Appendix A.4 for cut sheets.

New Central Chilled Water Plant Chiller Combinations: Combination E

Combination E			
Chiller #	New/Existing	Size (tons)	VFD
CH-1	New	2000	Yes
CH-2	Existing	1250	No
CH-3	New	1700	No
CH-4	Existing	650	No
	Combination Capacity:	**5600**	

Campus Peak Tons Req'd	Combination Capacity	Excess Tons
3647	5600	1953

Stage	Chillers Operating	Standby Chillers	Stage Chiller Ton Capacity
0	0	1,2,3,4	0
1	1	2,3,4	2000
2	1,2	3,4	3250
3	1,3	2,4	3700
4	1,3,4	2	4350

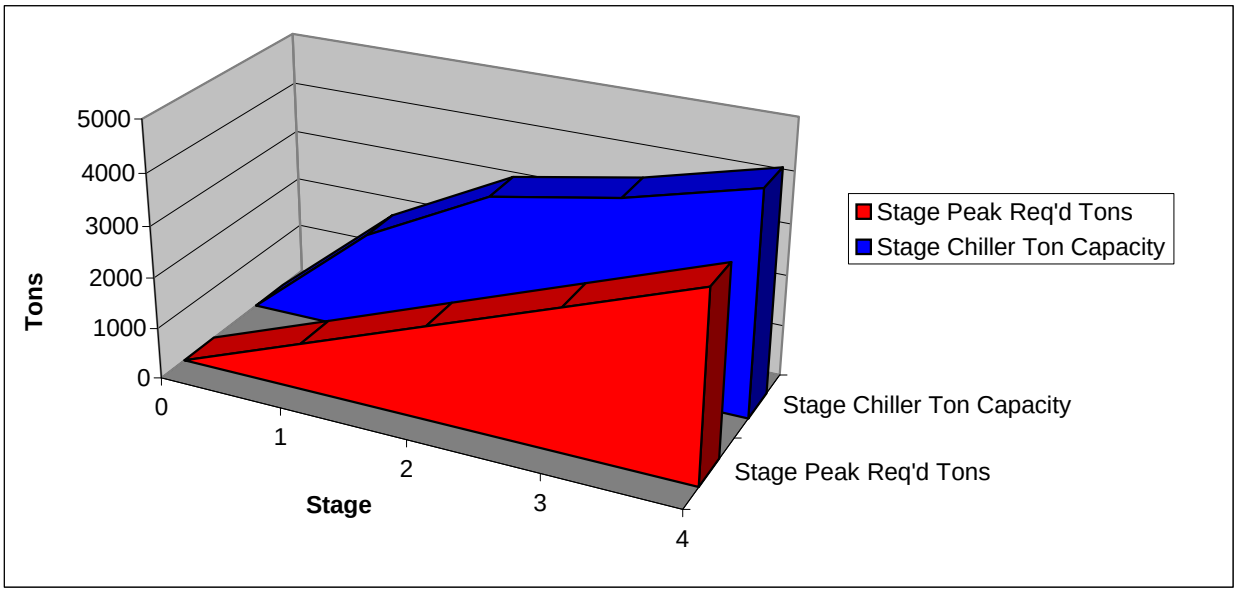

*Chiller manufactures provide twin compressors for chillers over 1500 Tons.

**Plate and Frame Exchanger will be provided for the first stage of cooling during spring, winter, and Fall
See Appendix A.4 for cut sheets.

New Central Chilled Water Plant Chiller Combinations: Combination F

Combination F			
Chiller #	New/Existing	Size (tons)	VFD
CH-1	New	1700	Yes
CH-2	Existing	1250	No
CH-3	New	1700	Optional***
CH-4	Existing	650	No
	Combination Capacity:	**5300**	

Campus Peak Tons Req'd	Combination Capacity	Excess Tons
3647	5300	1653

Stage	Chillers Operating	Standby Chillers	Stage Chiller Ton Capacity
0	0	1,2,3,4	0
1	1	2,3,4	1700
2	1,2	3,4	2950
3	1,2,4	3	3600
4	1,3,4	2	4050

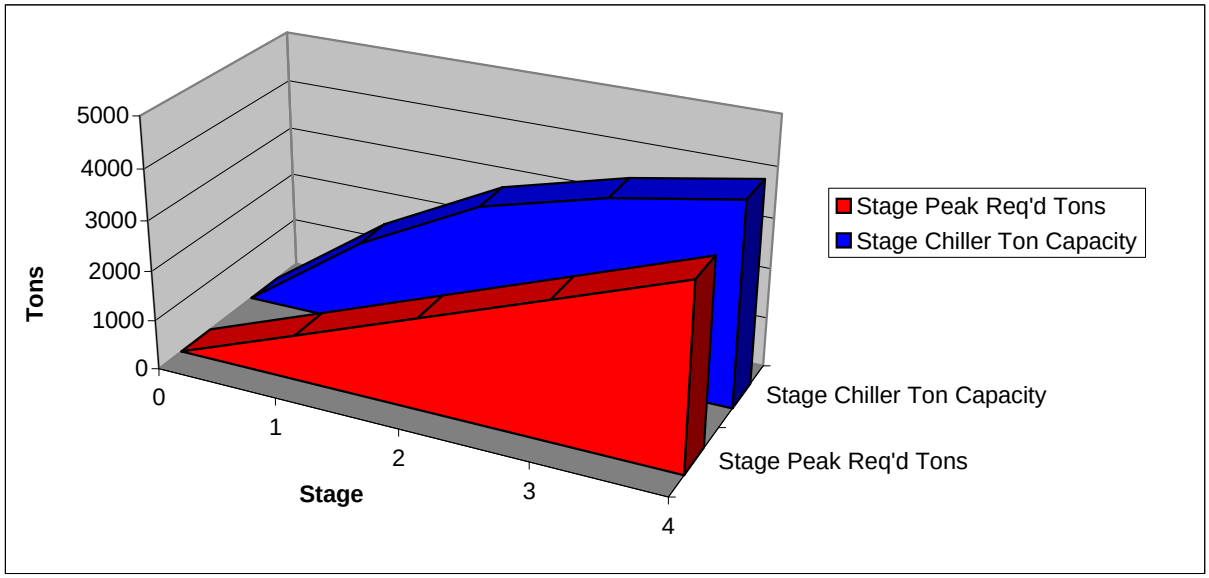

*Chiller manufactures provide twin compressors for chillers over 1500 Tons.

**Plate and Frame Exchanger will be provided for the first stage of cooling during spring, winter, and Fall
See Appendix A.4 for cut sheets.

***See Appendix A.6 for option - Combination F and F-1 life cycle cost and optimization.

5.3 Chiller Combination Cost Comparison

A. Combination A – (Two VFD's)

Approximate Chiller Cost:	$1,043,000
Approximate System Part Load Value:	0.320 KW/Ton

Combination A-1 – (One VFD, One Constant)

Approximate Chiller Cost:	$998,000
Approximate System Part Load Value:	0.352 KW/Ton

B. Combination B

Approximate Chiller Cost:	$1,076,000
Approximate System Part Load Value:	0.393 KW/Ton

C. Combination C

Approximate Chiller Cost:	$957,000
Approximate System Part Load Value:	0.329 KW/Ton

D. Combination D

Approximate Chiller Cost:	$1,143,000
Approximate System Part Load Value:	0.352 KW/Ton

E. Combination E

Approximate Chiller Cost:	$1,285,00
Approximate System Part Load Value:	0.337 KW/Ton

F. Combination F – (Two VFD's)

Approximate Chiller Cost:	$1,266,000
Approximate System Part Load Value:	0.293 KW/Ton

Combination F-1 – (One VFD, One Constant)

Approximate Chiller Cost:	$1,197,000
Approximate System Part Load Value:	0.336 KW/Ton

5.4 Plate and Frame Heat Exchanger (Free Cooling)

A. The campus is preparing to operate the chilled water system year round. One possible option to achieve significant energy savings during cooler periods such as winter, spring and fall is to use condenser water to cool the chilled water loop.

B. The condenser water can be used to cool the chilled water loop effectively through a Plate and Frame Heat Exchanger. The exchanger shall be sized for the capacity of the 1st stage chiller, when outdoor air wet bulb temperature is less than the chilled water set-point, minus the approach temperatures of the heat exchanger and the cooling tower.

C. The cooling tower can bring the condenser water loop temperature close to the outdoor wet bulb temperature. If the condenser water is used to maintain the normal chilled water set point of 45 degrees F, then the heat exchanger loop can handle the load when outdoor air wet bulb temperature is less than 40 degrees F. In Ogden, Utah, this condition is typically available from November through March, including ½ of April and ½ of October. This is an overall total of approximately 6 months a year where the chilled water demand could be met without the use of the chillers.

D. See recommendations Section 6.3 for further recommendations regarding the plate and frame heat exchanger. See section 6.2 B. for associated pumping recommendations.

E. See Appendix A.4 for preliminary Plate & Frame Heat Exchanger selection.

F. The change over between “free cooling” and mechanical cooling shall be accomplished automatically using electronic 3-way valves, return water temperature, and outdoor wet bulb temperature.

G. See Appendix A.6 for energy savings and approximate operating hours.

5.5 Thermal / Ice Storage Option

A. Due to the high peak demand cost, Weber State University has asked that the option for thermal storage be investigated. See Appendix A.5 for product literature.

B. The new efficient chillers are much more reliable then their older predecessors. See Appendix A.6 for KW/TON for part load conditions of the chillers.

C. The principle behind chilled water storage is to produce and store ice during off peak hours for use during the peak hours. This reduces on-peak electrical demand by shifting electrical demand to off-peak hours in order to obtain on-peak cooling at close to off-peak costs.

D. A common design mistake in using this system is under sizing the chillers so they are unable to handle the connected load when the ice storage system is down.

E. The best ice making machines, if this is used in lieu of using the chillers, can produce ice at 0.63 KW/TON.

F. Storage for the ice or chilled water consumes a large amount of real estate.

SECTION 6 – NEW CENTRAL CHILLER PLANT RECOMMENDATIONS

6.1 Recommended Central Chiller Plant Upgrades

A. Recommended Central Chiller Plant Chiller Combinations

1. Combinations "**A**" and "**F**" we feel are the best two choices for the new Central Chilled Water Plant.

2. Combination "**A"** is recommended for the following reasons:
   a. Using standard chiller sizes; not using two compressors with a one pass machine. This will likely achieve a more competitive bid and a lower initial cost per Ton.
   b. Requires less physical space, leaving more room for maintenance, etc.
   c. Even though this combination does not provide 100% back-up, it will provide sufficient back-up capacity (93%).
   d. Lower life cycle cost.
   e. This combination remains one of the more efficient combinations, although not quite as efficient as combination "F".

3. Combination "**F**" is recommended for the following reasons:
   a. More efficient (lower SLPV).
   b. Total 100% back-up without having to install larger chillers.
   c. Some chiller manufactures can supply the 1700 Ton chiller using only one compressor; however, some manufactures like Carrier might have a problem.

4. Life Cycle Cost Analysis

Life Cycle Cost Approximations

Combo	Peak kw/ton	SPLV	Overall Annual Energy Cost	Initial Cost	Payback Term (yrs)
Combo A	0.425	0.32	$157,389	$1,043,000	5.09
Combo A1	0.425	0.352	$166,233	$998,000	0.00
Combo F	0.4	0.293	$145,844	$1,197,000	9.76
Combo F1	0.405	0.336	$158,508	$1,152,000	19.94

Peak Demand $/KW	$8.78
Operating $/KW	$0.28634
Operating Hours/yr	5070

The life cycle cost analysis shows that chiller combination A-1 with 1 new 1500 ton chiller with a VFD and 1 new 1500 Ton chiller without a VFD is the lowest cost for the 1st 5 years. Typically a life cycle cost that does not pay back within 5 years is not considered;

however, with energy costs escalating, a payback term of 5.2 years is definitely worth considering. Combinations F and F-1 are not as economical according to the life cycle cost analysis. The advantage with combinations F and F-1 is the 100% back-up for all conditions. The University will need to decide which is a higher priority, the life cycle cost or the 100% back up. Based off of that decision, the design team can then proceed with the combination that best meets the University's highest priorities.

B. Cooling Tower Addition

1. A five (5) cell Cooling Tower, manufactured by Tower Engineering, Inc. was installed at the end of 2000 and the beginning of 2001. The cooling tower is located east of parking lot W5 and north of the stadium on the crest of the hill. The total cooling tower consists of three (3) cells located on the north side and two (2) cells, with VFD drives, located on the south side.

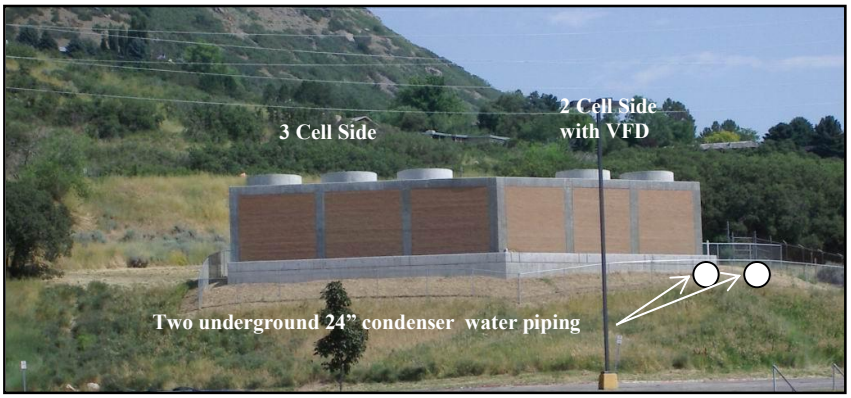

2. Each of the cooling tower's five (5) cells has a capacity of 700 Tons and 2100 GPM. The total capacity of the cooling tower is 3500 Tons and 10,500 GPM.

3. 24" condenser water piping is routed west and underground from the tower basin to the existing central chilled water plant located in the lower floor of the Science Lab Building.

4. The existing cooling tower capacity is not large enough to handle the new proposed central chilled water plant.

5. Design options were discussed with Tower Engineering, Inc. The following paragraphs are results of these discussions, as well as our recommendations for adding capacity to the existing tower.

6. Since the installation of the new cooling tower, a maintenance procedure was conducted in which the fill was removed, the tower cells cleaned, and the fill replaced. The contractor however, did **not** install the fill per the manufactures recommendations resulting in lower tower efficiency.

7. Tower Engineering, Inc., through their engineering technical service department, came up with two options for increasing the capacity of the existing cooling tower in order to meet the increased load of the new central chiller plant.

   a. Option 1:
      1) Remove the entire existing ceramic tile from the existing five (5) cell tower and replace with a new high performance combination (HPC) ceramic plaster tile that is 30% more efficient than the existing fill.
      2) The HPC fill will increase the existing tower capacity from 700 Tons per cell to 900 Tons per cell. The total capacity of the existing tower will increase from 3500 Tons to 4500 Tons. New fill shall be installed in accordance with Tower Engineering instructions.
      3) If the new HPC fill is used in all five (5) cells, only one (1) additional 900 Ton cell would be required. The retrofitted tower would become a six (6) cell tower with an overall capacity of 5,400 Tons and 13,200 GPM.

   b. Option 2:
      1) Remove the entire existing ceramic tile from all five (5) cells and replace with the same tile using the pattern approved by Tower Engineering.
      2) The capacity of the cooling tower after the fill is installed properly is 3,500 Tons and 10,500 GPM.
      2) Provide one (1) new 900 Ton cell with the (HPC) tile to the existing five (5) cells with existing ceramic tile, making the tower into a six (6) cell tower. The tower would then have an overall capacity of 4,400 Tons and 13,200 GPM.

   c. The peak capacity of the new condenser water system is 4,560 Tons and 10,950 GPM. Option 1 provides 5,400 Tons and 13,200 GPM, adequately handling the peak demand. Option 2 provides 4,400 Tons and 13,200 GPM which is slightly less than demand in Tons, but adequate for GPM. Option 1 provides back-up if one cell should fail. The excess capacity in option 1 will also allow for increased chiller capacity.

8. We recommend Option 1 for the following reasons:

   - 30% more efficient cooling tower.
   - Adequately handles the new system loads.
   - Future available capacity.

9. Cooling Tower capacity summary:

Existing Cooling Tower Capacity	Ton	GPM
700 Tons x 5 cells	3,500	
2100 GPM x 5 cells		10,500
Totals	**3,500**	**10,500**

New Modified Tower Capacity	Ton	GPM
900 Tons x 5 cells	4,500	
New 900 Ton additional cell	900	
2100 GPM x 5 cells		10,500
2700 GPM additional cell		2,700
Totals	**5,400**	**13,200**

10. We also recommend a modification to the 24" condenser water piping from the tower. We recommend a new 24" condenser water line be routed from the tower basin to the new central chilled water plant.

11. The two existing 24" condenser water lines routed to the existing central chilled water plant, located in the basement of the Science Lab Building, will be re-used as the chilled water piping in the new scheme.

6.2 Recommended Campus Distribution System Upgrades

A. Campus Piping System Recommendations

1. Piping System Recommendations:

   Leave the chilled water distribution system a secondary loop, direct return system from the campus buildings to the central chilled water plant.
   a. Direct return piping is the most economical arrangement because it requires a minimum amount of piping.
   b. Friction, in the piping, is the principal source of operating costs in closed water systems. This being the case, a direct return system has less pipe friction than any other equivalent system.
   c. The direct return system is a simple system and the most efficient pumping system for multiple building systems with a central chilled water plant.

2. Central plant chiller room piping design guidelines:

   a. Provide a primary loop system.
   b. Install the piping so that the energy consumption of the chillers is not increased. Chillers are more vulnerable to incorrect installation due to the fact that their energy consumption is greatly affected by the piping arrangement.
   c. Arrange the piping so that all chillers receive the same water temperature.
   d. Insure that the required water flow through the chillers is always maintained.
   e. Install the chillers and piping in accordance with the manufacturer's instructions and recommendations.

3. Remove and replace the undersized chilled water piping, located in the existing campus distribution system noted in Section 4.2 A.

B. Campus Pumping System Recommendations

1. The new central chilled water plant should consist of four (4) chillers and one (1) plate and frame heat exchanger.

2. Primary (Chiller) Pumps: Each chiller and the plate and frame heat exchanger shall have a dedicated primary constant volume in-line pump. The primary pumps, serving the plate and frame exchanger and one (1) of the large chillers, shall have a manual bypass allowing each pump to back up the other in case of pump failure.

3. Secondary (Campus) Pumps: The campus loop shall be served by three (3) base mounted vertical or horizontal split case pumps.

a. Each pump shall be sized for 50% of the overall future net load, or approximately 4377 GPM per pump. The overall head pressure shall be designed to meet the needs of the Skybox and Kimball buildings. This arrangement allows one (1) pump to fail, while the remaining pumps still provide 100% of the capacity. It will also allow 1 pump to handle the campus load when the demand is less than 50% of the overall peak.

b. Each pump shall have a variable frequency drive. The VFD shall run off a differential static pressure sensor. This sensor shall be located in the tunnels between the Business building and the Student Service Center. The differential pressure shall be set to meet the design flow rates required at the longest runs, which is currently the Kimball building. In the future, if pumps are added at this building, or if another building is added at a longer run, then the differential pressure set-point shall be re-set to meet the needs at the new longest run.

4. Tertiary (Building) Pumps: The buildings that are connected to the campus chilled water loop should be modified to be consistent across campus. Each building should have building chilled water pumps with variable frequency drives, and two way automatic valves. In addition:

a. **Tertiary pumps** should be added at buildings that currently do not have pumps, as well as at all new buildings. Tertiary pumps shall be repaired or replaced at buildings where they are already installed. Variable frequency drives shall be provided for these existing or replaced pumps. As tertiary pumps are added at the pump pressure critical path (lines with the highest pressure requirements), the secondary pump differential pressure set-point should be re-adjusted by a qualified Test and Balance Contractor to meet new pressure requirements. This will be determined by setting the differential pressure to maintain design flow at the buildings with the greatest pressure requirements. The buildings with the greatest pressure requirements will be those with the longest runs, and those without tertiary pumping systems.

b. **Automatic Bypass:** Because of the existing conditions at each building, the new secondary pumps will be sized for the current largest pressure requirements. This pressure is adequate to provide the full chilled water flow at most buildings, and as a result, their tertiary pumps have been permanently bypassed. Existing manual bypasses shall be replaced with automatic bypasses. Buildings that do not currently have a bypass, as well as new buildings, shall be provided with an automatic bypass. This bypass shall

include a 3-way valve upstream of the chilled water pump. This valve shall be controlled by the BMS. It shall bypass the pumps when the central pumping system is capable of meeting the chilled water demand. This shall be measured by chilled water return temperature. When the campus pumping system cannot meet the building chilled water demand, the bypass shall open to the pump, and the building chilled water pump VFD shall modulate to meet demand.

c. The first location to add the tertiary pumps is the Kimball Fine Arts building, because it is currently the longest run. Adding tertiary pumps at this building could reduce the overall system pressure requirements by as much as10-15 psig. If the campus chilled water loop goes to year round operation, this could save as much as $10,000 per year in pump energy costs.

d. The addition of the tertiary pumps and automatic bypass valves will give better building control, more flexibility, and better energy efficiency; however, these changes are not required immediately. The secondary loop will be designed to handle the existing system as is, allowing the changes to the building pumps to be made in the future as desired by the University.

5. <u>Skybox Pump Loop:</u>

a. The skybox buildings should be completely de-coupled from the rest of the campus chilled water loop. This can be done by providing a plate and frame heat exchanger at the old chiller room under the Science building. One side of the plate and frame will be fed by the campus system. The other side will be an entirely separate loop with two 100% redundant pumps, including air separator, expansion tank, water make-up, chemical treatment, etc. This pump loop can be tied into the existing 6” line that runs from the science building to the skybox buildings. This loop and its associated equipment shall be sized for the 217 tons and 521 GPM required at the skybox buildings. The plate and frame exchanger shall be sized with the ability to add plates in the future for increased capacity.

b. The new chiller plant location will be at an elevation of approximately 4750 feet. De-coupling the Skybox loop at the old plant will reduce the static pressure in the system by 60 feet, or approximately 26 psig. The additional line losses for the new plant location could be as high 30 feet, or 13 psig. Half of that will need to be added to the working pressure at the lower buildings to get the water back to the plant, and half of that will be lost between the plant and the buildings. In summary, after de-coupling the Skybox, and re-locating the chiller plant, the worst case

scenario total overall pressure at the lower buildings would be approximately 118 – 123 psig.

c. This total overall pressure at the low buildings could be further reduced by adding the tertiary pumps at the Kimball Fine Arts Building. Such pumps could reduce the system working pressure by an additional 10-15 psig.

6. Condenser Water Pumps: Provide 3 condenser water pumps with variable frequency drives. These pumps shall be sized for 50% of the overall condenser water load. The VFD shall modulate to maintain minimum flows at each chiller. This shall be coordinated with the chiller manufacturer, and integrated into the chiller controls.

6.3 Plate and Frame Heat Exchanger – Free Cooling

A. We recommend the installation of a plate and frame heat exchanger in the new central chilled water plant for free cooling.

1. The plate and frame heat exchanger, pumps and piping are to be routed in a parallel bypass circuit with the new chillers. Size the plate and frame for 1500 tons of free cooling at design conditions. The chiller optimizer runs found in Appendix A.6 are very favorable for the free cooling option.

2. The Design parameters recommended for free cooling are as follows:

   a. Select plate and frame exchanger at no more than two degrees F. approach.
   b. Pressure drop on chilled water side and condenser water side through the plate and frame exchanger shall match the pressure drop through the chillers.
   c. Provide automatic change over between the free cooling (evaporation) and the mechanical chilling cycles. The reason for the automation is that with automation the system will take advantage of every occurrence when outdoor conditions are suitable for free cooling.

B. We recommend the following change over sequence:

1. Cycle Changeover (Mechanical to Evaporative) –

   a. When wet bulb temperature is less than the chilled water set point minus the approach temperatures of the plate and frame heat exchanger and cooling tower the following sequence will occur:
      1) Chillers are stopped.
      2) Chilled water pump continues to run.
      3) Condenser auto valve on lead chiller is open to plate and frame heat exchanger.
      4) Cooling tower set point is changed to chilled water supply set point to cool the condenser water loop.
      5) When condenser water supply temperature is less than the chilled water return temperature, the lead chiller's chilled water auto valve is open to the plate and frame heat exchanger.

2. Cycle Changeover (Evaporative to Mechanical) –

   a. When wet bulb temperature plus the approach temperatures of the plate and frame heat exchanger and

the cooling tower is greater than the chilled water supply set point, the:

1) Lead chiller water auto valve will open to chiller.
2) Cooling tower set point will change to the mechanical cycle set point.
3) Lead chiller will start.
4) Lead chiller auto damper condenser valve will modulate to maintain the required head pressure.

6.4 Refrigeration Safety

A. Owner Liability

1. As an owner and user of refrigerants, DFCM, the engineer, and Weber State University are automatically liable for the requirements of ASHREA 15-1994 by being aware of the standard. In any new chiller equipment rooms, ASHRAE 15-1994 automatically applies.
2. ASHREA15-1994 requires that all chilled water plants be provided with some means for detecting and evacuating refrigerants from the space.

B. Room Evacuation and Ventilation

1. The new central cooling plant room must have a mechanical exhaust system interconnected to the refrigerant detector/sensor so that when the exposure limit of refrigerant is exceeded, an alarm will sound and the exhaust fan will activate. The ASHRAE formula for sizing ventilation capacities is $Q= 100 \times G^{0.5}$ where Q= air flow CFM and G= mass of refrigerant in lbs.

C. Emergency Breathing Apparatus

1. A self-contained breathing apparatus (SCBA) must be provided at entrances to the chiller room located on the outside of the room. The SCBA must be worn anytime the sensor has alarmed and someone needs to enter the room for any reason.

D. Chiller Room Requirements

1. Provide tight seal doors at any entrance into the new chiller plant.
2. All purge lines and relief devices from the chillers shall vent outside on the roof. Relief discharge must be located not less than 20 feet from ventilation openings and not less than 15 feet above ground level.
3. ASHRAE 15-1994 specifies that access to the chiller room should be restricted to authorized personnel.
4. Provide sensor/detectors in the chiller room at the noted locations:
   1) between the chillers at floor level.
   2) Refrigerant storage – floor area.
   3) Any point lower than floor.
5. Provide requirements noted in paragraph B-1 for chiller room evacuation.
6. Provide requirements noted in paragraph C-1 for self-contained breathing apparatus.

E. Refrigerant Storage

1. The total amount of refrigerant stored without relief valves piped in accordance with ASHRAE 15-1994 standard must not exceed 330 pounds.

WEBER STATE UNIVERSITY

CHILLED WATER STUDY COST ESTIMATE - Preliminary Opinion of Probable Costs

CHILLER PLANT - Combination A

7.1 A.

Item Description	Amount	Units	Materials	Labor	Cost	Total
Demolition						
Chiller - Carrier	1	LS		$ 3,500.00	$ 3,500.00	$ 3,500.00
Chiller - 1250 Ton Relocation	1	LS		$ 25,240.00	$ 25,240.00	$ 25,240.00
Chiller - 650 Ton Relocation	1	LS		$ 20,240.00	$ 20,240.00	$ 20,240.00
Piping	1	LS		$ 3,000.00	$ 3,000.00	$ 3,000.00
Pumps, Ex. Tanks, Electrical, Controls Softener	1	LS		$ 23,000.00	$ 23,000.00	$ 23,000.00
Concrete						
Concrete Pads	36	CU. YD.	$ 144.00	$ 66.00	$ 210.00	$ 7,560.00
Cooling Tower						
Cooling Tower	1	EA	$ 225,000.00	$ 100,000.00	$ 325,000.00	$ 325,000.00
Meters and Gauges						
Thermometers	40	EA	$ 90.00	$ 12.00	$ 102.00	$ 4,080.00
Pressure Gauges	40	EA	$ 36.00	$ 34.00	$ 70.00	$ 2,800.00
Thermowells	30	EA	$ 32.00	$ 25.00	$ 57.00	$ 1,710.00
Supports and Anchors						
Pipe Hangers	96	EA	$ 61.00	$ 15.00	$ 76.00	$ 7,296.00
Pipe Supports	30	EA	$ 200.00	$ 7.00	$ 207.00	$ 6,210.00
Flanges/Wall Supports @ Penetrations	4	EA	$ 920.00	$ 203.00	$ 1,123.00	$ 4,492.00
Electrical						
VFD 250 HP	3	EA	$ 27,380.00	$ 3,100.00	$ 30,480.00	$ 91,440.00
VFD 100 HP	4	EA	$ 11,715.00	$ 1,600.00	$ 13,315.00	$ 53,260.00
VFD 60 HP	1	EA	$ 8,458.00	$ 1,425.00	$ 9,883.00	$ 9,883.00
VFD 30 HP	1	EA	$ 4,675.00	$ 975.00	$ 5,650.00	$ 5,650.00
VFD 20 HP	1	EA	$ 3,300.00	$ 735.00	$ 4,035.00	$ 4,035.00
Mechanical Identification						
Painting	1	LS	$ 2,500.00	$ 1,800.00	$ 4,300.00	$ 4,300.00
Valve Tags	90	EA	$ 50.00	$ 50.00	$ 100.00	$ 9,000.00
Name Plates	20	EA	$ 40.00	$ 60.00	$ 100.00	$ 2,000.00
Insulation						
Pump Casings	1	LS	$ 1,800.00	$ 600.00	$ 2,400.00	$ 2,400.00
Chilled Water Piping	800	LF	$ 9.00	$ 8.00	$ 17.00	$ 13,600.00
Equipment	1	LS	$ 1,600.00	$ 900.00	$ 2,500.00	$ 2,500.00
Plumbing						
Water Make-Up C/W (all assoc. valves)	1	LS	$ 300.00	$ 300.00	$ 600.00	$ 600.00
Water Piping, Valves, Insulation	1	LS			$ 13,000.00	$ 13,000.00
Pumps						
Condenser Water - Chilled Water Main - Chilled Water Circulators	10	LS	$ 200,578.00	$ 65,968.00	$ 266,546.00	$ 266,546.00
Sky Box Pumps	2	EA	$ 6,900.00	$ 2,000.00	$ 8,900.00	$ 17,800.00
Chiller/Equipment						
1500 Ton Chiller W/VFD	2	EA	$ 521,500.00	$ 21,700.00	$ 543,200.00	$ 1,086,400.00
Air Eliminator	1	EA	$ 30,736.00	$ 2,500.00	$ 33,236.00	$ 33,236.00
Expansion Tank	1	EA	$ 25,147.00	$ 1,000.00	$ 26,147.00	$ 26,147.00
Sky Box Plate & Frame, Piping, Ex. Tank, Air Eliminator	1	LS	$ 45,679.00	$ 9,300.00	$ 54,979.00	$ 54,979.00
Water Treatment						
Condenser Water - Treatment,Chemicals,Pumps,Piping, Valves	1	LS	$ 3,000.00	$ 2,000.00	$ 5,000.00	$ 5,000.00
Hydronic Piping						
Chilled and Condenser Water Piping & Valves	1	LS			$ 398,000.00	$ 398,000.00

WEBER STATE UNIVERSITY

CHILLED WATER STUDY COST ESTIMATE - Preliminary Opinion of Probable Costs

CHILLER PLANT - Combination A

7.1 A.

Item Description	Amount	Units	Materials	Labor	Cost	Total
Test & Balance						
Chillers	4	EA		$ 500.00	$ 500.00	$ 2,000.00
Pumps	10	EA		$ 250.00	$ 250.00	$ 2,500.00
Exchanger	1	EA		$ 300.00	$ 300.00	$ 300.00
Cooling Tower	6	EA		$ 320.00	$ 320.00	$ 1,920.00
Misc. O&M Manuals	4	EA		$ 400.00	$ 400.00	$ 1,600.00
Controls						
Automation System	1	LS	$ 138,600.00	$ 71,400.00	$ 210,000.00	$ 210,000.00
ASHRAE 15-94						
Panel, Sensors, Leads, F.A. Ductwork, Damper, Exhaust Fan	1	LS	$ 30,000.00	$ 15,000.00	$ 45,000.00	$ 45,000.00
					Sub-Total	**$ 2,797,224.00**
					15% O & H	**$ 419,583.60**
					Total	**$ 3,216,807.60**

WEBER STATE UNIVERSITY

CHILLED WATER STUDY COST ESTIMATE - Preliminary Opinion of Probable Costs

CHILLER PLANT - Combination F

7.1 B.

Item Description	Amount	Units	Materials	Labor	Cost	Total
Demolition						
Chiller - Carrier	1	LS		$ 3,500.00	$ 3,500.00	$ 3,500.00
Chiller - 1250 Ton Relocation	1	LS		$ 25,240.00	$ 25,240.00	$ 25,240.00
Chiller - 650 Ton Relocation	1	LS		$ 20,240.00	$ 20,240.00	$ 20,240.00
Piping	1	LS		$ 3,000.00	$ 3,000.00	$ 3,000.00
Pumps, Ex. Tanks, Electrical, Controls Softener	1	LS		$ 23,000.00	$ 23,000.00	$ 23,000.00
Concrete						
Concrete Pads	36	CU. YD.	$ 144.00	$ 66.00	$ 210.00	$ 7,560.00
Cooling Tower						
Cooling Tower	1	EA	$ 100,000.00	$ 225,000.00	$ 325,000.00	$ 325,000.00
Meters and Gauges						
Thermometers	40	EA	$ 90.00	$ 12.00	$ 102.00	$ 4,080.00
Pressure Gauges	40	EA	$ 36.00	$ 34.00	$ 70.00	$ 2,800.00
Thermowells	30	EA	$ 32.00	$ 25.00	$ 57.00	$ 1,710.00
Supports and Anchors						
Pipe Hangers	96	EA	$ 61.00	$ 15.00	$ 76.00	$ 7,296.00
Pipe Supports	30	EA	$ 200.00	$ 7.00	$ 207.00	$ 6,210.00
Flanges/Wall Supports @ Penetrations	4	EA	$ 920.00	$ 203.00	$ 1,123.00	$ 4,492.00
Electrical						
VFD 250 HP	3	EA	$ 27,380.00	$ 3,100.00	$ 30,480.00	$ 91,440.00
VFD 100 HP	4	EA	$ 11,715.00	$ 1,600.00	$ 13,315.00	$ 53,260.00
VFD 60 HP	1	EA	$ 8,458.00	$ 1,425.00	$ 9,883.00	$ 9,883.00
VFD 30 HP	1	EA	$ 4,675.00	$ 975.00	$ 5,650.00	$ 5,650.00
VFD 20 HP	1	EA	$ 3,300.00	$ 735.00	$ 4,035.00	$ 4,035.00
Mechanical Identification						
Painting	1	LS	$ 2,500.00	$ 1,800.00	$ 4,300.00	$ 4,300.00
Valve Tags	90	EA	$ 50.00	$ 50.00	$ 100.00	$ 9,000.00
Name Plates	20	EA	$ 40.00	$ 60.00	$ 100.00	$ 2,000.00
Insulation						
Pump Casings	1	LS	$ 1,800.00	$ 600.00	$ 2,400.00	$ 2,400.00
Chilled Water Piping	800	LF	$ 9.00	$ 10.00	$ 19.00	$ 15,200.00
Equipment	1	LS	$ 1,600.00	$ 1,000.00	$ 2,600.00	$ 2,600.00
Plumbing						
Water Make-Up C/W (all assoc. valves)	1	LS	$ 300.00	$ 300.00	$ 600.00	$ 600.00
Water Piping, Valves, Insulation	1	LS			$ 13,000.00	$ 13,000.00
Pumps						
Condenser Water - Chilled Water Main - Chilled Water Circulators	10	LS	$ 200,578.00	$ 65,968.00	$ 266,546.00	$ 266,546.00
Sky Box Pumps	2	EA	$ 6,900.00	$ 2,000.00	$ 8,900.00	$ 17,800.00
Chiller/Equipment						
1700 Ton Chiller W/VFD	2	EA	$ 609,000.00	$ 24,000.00	$ 633,000.00	$ 1,266,000.00
Air Eliminator	1	EA	$ 30,736.00	$ 2,500.00	$ 33,236.00	$ 33,236.00
Expansion Tank	1	EA	$ 25,147.00	$ 1,000.00	$ 26,147.00	$ 26,147.00
Sky Box Plate & Frame, Piping, Ex. Tank, Air Eliminator	1	LS	$ 45,679.00	$ 9,300.00	$ 54,979.00	$ 54,979.00
Water Treatment						
Condenser Water - Treatment,Chemicals,Pumps,Piping, Valves	1	LS	$ 3,000.00	$ 2,000.00	$ 5,000.00	$ 5,000.00
Hydronic Piping						
Chilled and Condenser Water Piping & Valves	1	LS			$ 420,000.00	$ 420,000.00

WEBER STATE UNIVERSITY

CHILLED WATER STUDY COST ESTIMATE - Preliminary Opinion of Probable Costs

CHILLER PLANT - Combination F

7.1 B.

Item Description	Amount	Units	Materials	Labor	Cost	Total
Test & Balance						
Chillers	4	EA		$ 500.00	$ 500.00	$ 2,000.00
Pumps	10	EA		$ 250.00	$ 250.00	$ 2,500.00
Exchanger	1	EA		$ 300.00	$ 300.00	$ 300.00
Cooling Tower	6	EA		$ 320.00	$ 320.00	$ 1,920.00
Misc. O&M Manuals	4	EA		$ 400.00	$ 400.00	$ 1,600.00
Controls						
Automation System	1	LS	$ 138,600.00	$ 71,400.00	$ 210,000.00	$ 210,000.00
ASHRAE 15-94						
Panel, Sensors, Leads, F.A. Ductwork, Damper, Exhaust Fan	1	LS	$ 30,000.00	$ 15,000.00	$ 45,000.00	$ 45,000.00
					Sub-Total	**$ 3,000,524.00**
					15% O & H	**$ 450,078.60**
					Total	**$ 3,450,602.60**

WEBER STATE UNIVERSITY

CHILLED WATER STUDY COST ESTIMATE - Preliminary Opinion of Probable Costs

Plate & Frame Exchanger (Free Cooling) Recommendation

7.2

Item Description	Amount	Units	Materials	Labor	Cost	Total
Supports and Anchors						
Pipe Hangers	10	EA	$ 61.00	$ 15.00	$ 76.00	$ 760.00
Mechanical Identification						
Valve Tags	8	EA	$ 50.00	$ 50.00	$ 100.00	$ 800.00
Name Plates	2	EA	$ 40.00	$ 60.00	$ 100.00	$ 200.00
Insulation						
Chilled Water Piping	160	LF	$ 9.00	$ 8.00	$ 17.00	$ 2,720.00
Exchanger						
Plate & Frame Exchanger	1	EA	$ 90,000.00	$ 11,000.00	$ 101,000.00	$ 101,000.00
Hydronic Piping						
Chilled Water	160	LF	$ 88.00	$ 48.00	$ 136.00	$ 21,760.00
Condenser Water	160	LF	$ 88.00	$ 48.00	$ 136.00	$ 21,760.00
Test & Balance						
Cooling Tower	6	EA		$ 320.00	$ 320.00	$ 1,920.00
Condenser Water System	1	EA		$ 300.00	$ 300.00	$ 300.00
Controls						
Chilled Water System	1	LS	$ 2,000.00	$ 3,000.00	$ 5,000.00	$ 5,000.00
Condenser Water System	1	LS	$ 3,300.00	$ 3,700.00	$ 7,000.00	$ 7,000.00
					Sub-Total	**$ 163,220.00**
					15% O & H	**$ 24,483.00**
					Total	**$ 187,703.00**

WEBER STATE UNIVERSITY

CHILLED WATER STUDY COST ESTIMATE - Preliminary Opinion of Probable Costs

Campus Piping System For Future Connected Load

7.3

Item Description	Amount	Units	Materials	Labor	Cost	Total
Demolition						
Piping	1	LS		$ 10,000.00	$ 10,000.00	$ 10,000.00
Mechanical Identification						
Painting	1	LS	$ 200.00	$ 200.00	$ 400.00	$ 400.00
Valve Tags	1	EA	$ 50.00	$ 50.00	$ 100.00	$ 100.00
Insulation						
Chilled Water Piping	1000	LF	$ 9.00	$ 8.00	$ 17.00	$ 17,000.00
Water Treatment						
Flushing and Filling	1	LS	$ 1,000.00	$ 900.00	$ 1,900.00	$ 1,900.00
Hydronic Piping						
Chilled and Condenser Water Piping & Valves	1000	LF	$ 100.00	$ 60.00	$ 160.00	$ 160,000.00
					Sub-Total	**$ 189,400.00**
					15% O & H	**$ 28,410.00**
					Total	**$ 217,810.00**

WEBER STATE UNIVERSITY

CHILLED WATER STUDY COST ESTIMATE - Preliminary Opinion of Probable Costs

New Campus Chilled Water System Summary

7.4

Combination A

Item Description		Sub-Total		15% O & H		Total
Chiller Plant						
Chiller Plant - Combination A	$	2,797,224.00	$	419,583.60	$	3,216,807.60
Plate & Frame Recommendation						
Plate & Frame Exchanger (Free Cooling)	$	163,220.00	$	24,483.00	$	187,703.00
Campus Piping System For Future Connected Load						
Future Connected Load	$	189,400.00	$	28,410.00	$	217,810.00
	$	3,149,844.00	$	472,476.60	$	3,622,320.60

Sub-Total	$	3,149,844.00
15% O & H	$	472,476.60
Total	**$**	**3,622,320.60**

Combination F

Item Description		Sub-Total		15% O & H		Total
Chiller Plant						
Chiller Plant - Combination F	$	3,000,524.00	$	450,078.60	$	3,450,602.60
Plate & Frame Recommendation						
Plate & Frame Exchanger (Free Cooling)	$	163,220.00	$	24,483.00	$	187,703.00
Campus Piping System For Future Connected Load						
Future Connected Load	$	189,400.00	$	28,410.00	$	217,810.00
	$	3,353,144.00	$	502,971.60	$	3,856,115.60

Sub-Total	$	3,353,144.00
15% O & H	$	502,971.60
Total	**$**	**3,856,115.60**

WEBER STATE UNIVERSITY - OGDEN

WEBER STATE UNIVERSITY

2005
2006

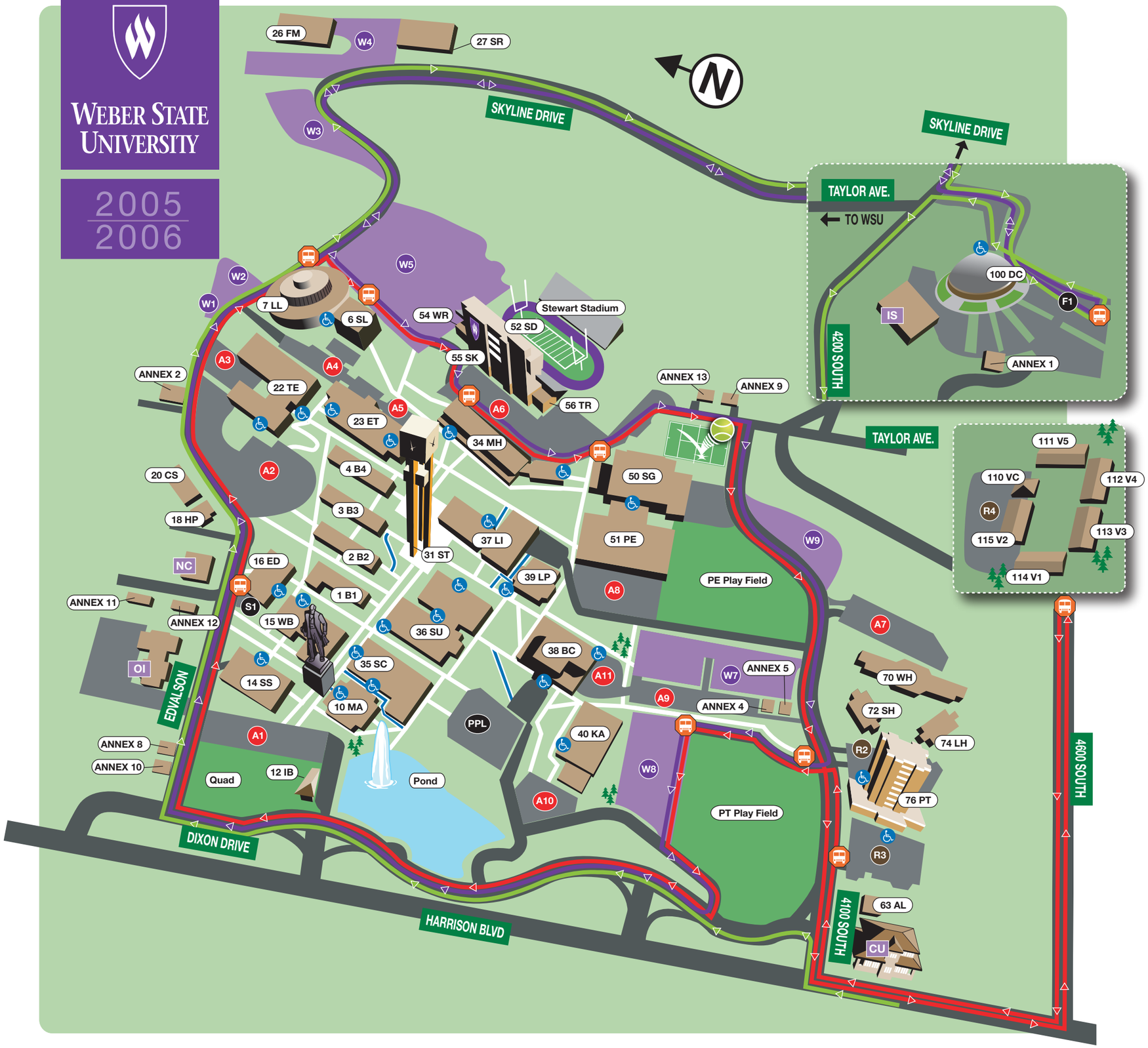

Building Directory

1.	B1	Building 1
2.	B2	Building 2
3.	B3	Building 3
4.	B4	Building 4
6.	SL	Science Lab
7.	LL	Lind Lecture
10.	MA	Miller Administration
12.	IB	Information Booth
14.	SS	Social Science
15.	WB	Wattis Business
16.	ED	McKay Education
18.	HP	Heat Plant
20.	CS	Campus Services
22.	TE	Technical Education
23.	ET	Engineering Technology
26.	FM	Facilities Management
27.	SR	Stores and Receiving/ Mail Room
31.	ST	Stewart Bell Tower
34.	MH	Marriott Health
35.	SC	Student Service Center
36.	SU	Shepherd Union
37.	LI	Stewart Library
38.	BC	Browning Center
39.	LP	Lampros Hall
40.	KA	Kimball Visual Arts Center
50.	SG	Swenson Building
51.	SB	Stromberg Center
52.	SD	Stromberg Stadium Offices
54.	WR	Stromberg Strength Training
55.	SK	Stewart Stadium Sky Suites
56.	TR	Davidson Track Locker Rooms
63.	AL	Lindquist Alumni Center
70.	WH	Wasatch Hall
72.	SH	Stansbury Hall
74.	LS	LaSal Hall
76.	PT	Promontory Tower
100.	DC	Dee Events Center
110.	VC	Village Community Center
111-115.	V1-5	University Village

Annex Directory

Annex 1	Police Academy
Annex 2	English
Annex 4	Police
Annex 5	Parking and Environmental Health & Safety
Annex 8	English/ESL
Annex 9	Wilderness Recreation
Annex 10	Upward Bound
Annex 11	ROTC
Annex 12	Skills Enhancement Center
Annex 13	Athletics

Parking Lots

A1	A1 Permit and Visitor Meters
A2	A2 Permit and Visitor Meters
A3	A3 Permit
A4	A4 Permit
A5	A5 Permit
A6	A6 Permit
A7	A7 Permit
A8	A8 Permit
A9	A9 Permit
A10	A10 Permit
A11	A11 Permit
DC	Dee Center A,W and R Permits (Shuttle Available)
PPL	Public Pay Lot
R2	Residence Halls/W and A Permits
R3	Residence Halls/W and A Permits
R4	Residence Halls and A Permits
S1	Children's School Permit
W1-9	W, R/W and A Permits

Non-campus Buildings

CU	Weber State Credit Union
OI	Ogden LDS Institute
NC	Newman Center
IS	Ice Sheet

Disabled Access

Ride the Wildcat Express Shuttle.

All Weber State University parking is by permit only. You can buy a $20 pass and always find a place to park in one of the 3,000 available spaces at the Dee Events Center. The shuttle leaves every five minutes from 7 a.m. to 2 p.m. and every 20 minutes from 2 - 6 p.m. From 6-11 p.m., you can call 543-1439 for shuttle service times.

- Campus Route
- University Village and Campus Route
- Express Route
- Shuttle-bus Stops

Weber State University
3850 University Circle
Ogden, UT 84408
801-626-6000
weber.edu

A.2 REFERENCES

A.2 References

A. References Used:

1. ASHRAE
2. Weber State University
3. Carrier Corporation
4. The Trane Company
5. Mueller Corporation
6. Bell & Gossett
7. RS Means Cost Data – 2005
8. Johnson Controls
9. Tower Engineering
10. Cameron Hydraulic Data
11. Current Industry Standards
12. Field Investigation

A.3 POTENTIAL NEW CHILLER COMPUTER RUN PERFORMANCE DATA

Centrifugal Chiller

Job Information

WHW - WSU Chiller Selections
Salt Lake City
(U41)Daniel Goulding

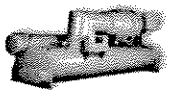

Tag	CTV-1	Model number	
Quantity	1		

Certified in accordance with the Water-Chilling Packages Using the Vapor Compression Cycle Certification Program, which is based on ARI Standard 550/590.
Sound pressure measured in accordance with ARI Standard 575-94.

ASHRAE 90.1 compliance Yes
ASHRAE 90.1 Full Load Requirement: 0.518 kW/ton
ASHRAE 90.1 Part Load Requirement: 0.494 kW/ton

Unit Information

Model	CVHF	Evap tube type	IMCU
Compressor size	1470	Evap tube thickness	0.025"
Motor size	957	Evap passes	2
Motor frequency	60 Hz	Cond shell size	210L
Motor voltage	460	Cond bundle size	1610
Impeller size	306	Cond tube type	IMCU
Orifice size	1970	Cond tube thickness	0.028"
Evap shell size	210L	Cond passes	2
Evap bundle size	2100		

Design Information

Cooling capacity	1500.0 tons	HCFC 123 refrigerant charge	2400 lb
Primary power	722.7 kW	Shipping weight	40371 lb
Primary efficiency	0.482 kW/ton	Operating weight	48824 lb
NPLV	0.425 kW/ton	Sound level	
Wye-delta starter type	Remote Mounted WyeD	Green Seal certification	Yes
Application type	Standard cooling	Free cooling option	No
		Heat rejected into equip room	12.34 MBh

Evaporator Information

Evap leaving temp	44.00 F
Evap flow rate	2559.9 gpm
Evap entering temp	58.00 F
Evap flow/capacity	1.71 gpm/ton
Evap water box type	non-marine
Evap pressure drop	10.94 ft H2O
Evap fouling factor	0.00010 hr-sq ft-deg F/Btu
Evap fluid type	water
Evap fluid concentration	N/A
Evap water box pressure	150 psig evap. water pressure
Evap min flow rate	811.20 gpm

Condenser Information

Cond entering temp	75.00 F
Cond flow rate	3438.8 gpm
Cond leaving temp	87.00 F
Cond flow/capacity	2.29 gpm/ton
Cond water box type	non-marine
Cond pressure drop	18.31 ft H2O
Cond fouling factor	0.00025 hr-sq ft-deg F/Btu
Cond fluid type	water
Cond fluid concentration	N/A
Cond water box pressure	150 psig cond. water pressure

Electrical Information

Motor LRA	6989 A	Min circuit ampacity	1247 A
Primary RLA	989.8 A	Max over current protection	2000 A

Centrifugal Chiller

Job Information

WHW - WSU Chiller Selections
Salt Lake City
(U41)Daniel Goulding

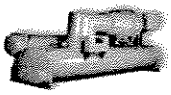

Tag	CTV-1	Model number	
Quantity	1		

Certified in accordance with the Water-Chilling Packages Using the Vapor Compression Cycle Certification Program, which is based on ARI Standard 550/590.
Sound pressure measured in accordance with ARI Standard 575-94.

ASHRAE 90.1 compliance Yes

ASHRAE 90.1 Full Load Requirement: 0.518 kW/ton
ASHRAE 90.1 Part Load Requirement: 0.494 kW/ton

Unit Information

Model	CVHF	Evap tube type	IMCU
Compressor size	1470	Evap tube thickness	0.025"
Motor size	957	Evap passes	2
Motor frequency	60 Hz	Cond shell size	250L
Motor voltage	460	Cond bundle size	2500
Impeller size	314	Cond tube type	IMCU
Orifice size	2245	Cond tube thickness	0.028"
Evap shell size	250E	Cond passes	2
Evap bundle size	2480		

Design Information

Cooling capacity	1700.0 tons	HCFC 123 refrigerant charge	3150 lb
Primary power	837.5 kW	Shipping weight	49341 lb
Primary efficiency	0.493 kW/ton	Operating weight	61035 lb
NPLV	0.426 kW/ton	Sound level	
Wye-delta starter type	Remote Mounted WyeD	Green Seal certification	Yes
Application type	Standard cooling	Free cooling option	No
		Heat rejected into equip room	14.30 MBh

Evaporator Information

Evap leaving temp	44.00 F
Evap flow rate	2901.3 gpm
Evap entering temp	58.00 F
Evap flow/capacity	1.71 gpm/ton
Evap water box type	non-marine
Evap pressure drop	13.16 ft H2O
Evap fouling factor	0.00010 hr-sq ft-deg F/Btu
Evap fluid type	water
Evap fluid concentration	N/A
Evap water box pressure	150 psig evap. water pressure
Evap min flow rate	888.20 gpm

Condenser Information

Cond entering temp	75.00 F
Cond flow rate	3909.2 gpm
Cond leaving temp	87.00 F
Cond flow/capacity	2.30 gpm/ton
Cond water box type	non-marine
Cond pressure drop	9.98 ft H2O
Cond fouling factor	0.00025 hr-sq ft-deg F/Btu
Cond fluid type	water
Cond fluid concentration	N/A
Cond water box pressure	150 psig cond. water pressure

Electrical Information

Motor LRA	6989 A	Min circuit ampacity	1438 A
Primary RLA	1142.5 A	Max over current protection	2500 A

CenTraVac Chiller CTV-1

NPLV = 0.425 (Constant Flow)

% Load	Capacity	Evap LWT	Evap FR	Evap EWT	Evap PD	Cond EWT	Cond FR	Cond LWT	Cond PD	kW	Amps	Efficiency
100	1500.0	44.00	2559.9	58.00	10.94	75.00	3438.8	87.00	18.31	722.7	989.8	0.482
75	1125.0	44.00	2559.9	54.50	10.95	70.00	3438.8	78.86	18.30	478.2	679.3	0.425
50	750.0	44.00	2559.9	50.99	10.97	65.00	3438.8	70.85	18.29	305.4	475.0	0.407
25	375.0	44.00	2559.9	47.50	10.98	65.00	3438.8	67.97	18.29	190.2	347.5	0.507

FCLT-LAX	MODL-CVHF	NTON-1470	INDP-NO
HRTZ-60	SRTY-RSTR	VOLT-460	CPKW-957
CPIM-306	EVSZ-210L	EVBS-2100	EVTM-IMCU
EVTH-25	EVWP-2	CDSZ-210L	CDBS-1610
CDTM-IMCU	CDTH-28	ORSZ-1970	TEST-AIR
TTOL-AIR	ASTT-NO		

CenTraVac Centrifugal Chiller, Version 25.08, REVL 55074

CenTraVac Chiller CTV-1

NPLV = 0.426 (Constant Flow)

% Load	Capacity	Evap LWT	Evap FR	Evap EWT	Evap PD	Cond EWT	Cond FR	Cond LWT	Cond PD	kW	Amps	Efficiency
100	1700.0	44.00	2901.3	58.00	13.16	75.00	3909.2	87.00	9.98	837.5	1142.5	0.493
75	1275.0	44.00	2901.3	54.50	13.18	70.00	3909.2	78.83	9.95	542.7	759.0	0.426
50	850.0	44.00	2901.3	51.00	13.19	65.00	3909.2	70.84	9.90	346.6	522.4	0.408
25	425.0	44.00	2901.3	47.50	13.21	65.00	3909.2	67.96	9.89	214.7	374.0	0.505

FCLT-LAX	MODL-CVHF	NTON-1470	INDP-NO
HRTZ-60	SRTY-RSTR	VOLT-460	CPKW-957
CPIM-314	EVSZ-250E	EVBS-2480	EVTM-IMCU
EVTH-25	EVWP-2	CDSZ-250L	CDBS-2500
CDTM-IMCU	CDTH-28	ORSZ-2245	TEST-AIR
TTOL-AIR	ASTT-NO		

CenTraVac Centrifugal Chiller, Version 25.08, REVL 55074

Centrifugal Chiller Duplex

Job Information

WHW - WSU Chiller Selections
Salt Lake City
(U41)Daniel Goulding

Tag	CDH-3	Model number
Quantity	1	

Certified in accordance with the Water-Chilling Packages Using the Vapor Compression Cycle Certification Program, which is based on ARI Standard 550/590.
Sound pressure measured in accordance with ARI Standard 575-94.

ASHRAE 90.1 compliance Yes

ASHRAE 90.1 Full Load Requirement: 0.495 kW/ton
ASHRAE 90.1 Part Load Requirement: 0.472 kW/ton

Unit Information

Model	CDHF	Evap shell size	210D
Compressor size	2000	Evap bundle size	1610
Motor size LH	453	Evap tube type	IMCU
Motor size RH	588	Evap tube thickness	0.028"
Motor frequency	60 Hz	Evaporator passes	1
Motor voltage	460	Cond shell size	210D
Impeller size LH	261	Cond bundle size	1900
Impeller size RH	271	Cond tube type	IMCU
Orifice size LH circuit	1265	Cond tube thickness	0.028"
Orifice size RH circuit	1400	Condenser passes	1

Design Information

Cooling capacity	2000.0 tons	HCFC 123 refrig charge LH	1900 lb
Primary power	911.0 kW	HCFC 123 refrig charge RH	1900 lb
Primary efficiency	0.455 kW/ton	Shipping weight	66713 lb
Primary power LH	407.1 kW	Operating weight	77532 lb
Primary power RH	503.9 kW	Sound level	0 dBA
NPLV	0.384 kW/ton	Heat rejected into equip room	15.55 MBh
Wye-delta starter type LH	Unit Mounted WyeD		
Wye-delta starter type RH	Unit Mounted WyeD		

Evaporator Information

Evap leaving temp	44.00 F
Evap flow rate	4800.0 gpm
Evap entering temp	53.95 F
Evap flow/capacity	2.40 gpm/ton
Evap water box arrgmt	In RH end - out LH end
Evap water box type	non-marine
Evap pressure drop	17.87 ft H2O
Evap fouling factor	0.00010 hr-sq ft-deg F/Btu
Evap fluid type	water
Evap fluid concentration	N/A
Evap water box pressure	150 psig evap. water pressure
Evap min flow rate	1218.20 gpm

Condenser Information

Cond entering temp	75.00 F
Cond flow rate	6000.0 gpm
Cond leaving temp	84.11 F
Cond flow/capacity	3.00 gpm/ton
Cond water box arrgmt	In LH end - out RH end
Cond water box type	non-marine
Cond pressure drop	7.34 ft H2O
Cond fouling factor	0.00025 hr-sq ft-deg F/Btu
Cond fluid type	water
Cond fluid concentration	N/A
Cond water box pressure	150 psig cond. water pressure

Electrical Information

Motor LRA LH comp	2987 A	MCA LH comp	722 A
Motor LRA RH comp	4389 A	MCA RH comp	898 A
Primary RLA LH	570.0 A	Max over current protection LH	1200 A
Primary RLA RH	710.3 A	Max over current protection RH	1200 A

CenTraVac Duplex Chiller CDH-3

NPLV = 0.384 (Constant Flow)

% Load	Capacity	Evap LWT	Evap FR	Evap EWT	Evap PD	Cond EWT	Cond FR	Cond LWT	Cond PD	kW	Amps LH	Amps RH	Efficiency
100	2000.0	44.00	4800.0	53.95	17.87	75.00	6000.0	84.11	7.34	911.0	570.0	710.3	0.455
75	1500.0	44.00	4800.0	51.46	17.90	70.00	6000.0	76.70	7.31	590.5	383.3	488.2	0.394
50	1000.0	44.00	4800.0	48.97	17.93	65.00	6000.0	69.43	7.28	382.6	277.2	357.4	0.383
25	500.0	44.00	4800.0	46.49	17.96	65.00	6000.0	67.21	7.27	176.2	280.4		0.352

MODL-CDHF	STRM-CVSK	NTON-2000	HRTZ-60
SRL1-606	SRL2-935	VOLT-460	CPM1-453
PNC1-TERM	PNC2-TERM	SPC1-606	CPD1-261
SPC2-935	CPM2-588	CPD2-271	EVSZ-210D
EVBS-1610	EVTM-IMCU	EVTH-28	EVWP-1
CDSZ-210D	CDBS-1900	CDTH-28	CDTM-IMCU
ORC1-1265	ORC2-1400		

CenTraVac Duplex Centrifugal Chiller, Version 25.08, REVL 55074

Evergreen Chiller Performance Outputs

Project Name: WHW Weber State
Sales Office: USAirconditioning Distributors

09/20/2005
10:34 AM

Tag Name: 1500 Ton with VFD

Chiller
- Chiller Model **19XR-8787592ELS64**
- Starter / VFD ..... **VFD - Freestanding**
- Refrigerant Type **R-134a**

Cooler
- Size **87**
- Waterbox Type ..... **Nozzle-in-Head, 150 psi**
- Passes **2**
- Tubing ..... **Turbo-EDE2 (TBE2), .025 in, Copper**
- Fluid Type ..... **Fresh Water**
- Fouling Factor (hr-sqft-F)/BTU **0.00010**

Compressor
- Size **592**

Flow Controls
- Float Valve Size **15**
- Flasc Orifice **73**

Weights
- Total Rigging Weight ..... **42895** lb
- Total Operating Weight ..... **49784** lb
- Refrigerant Weight ..... **2800** lb

Condenser
- Size **87**
- Waterbox Type ..... **Nozzle-in-Head, 150 psi**
- Passes **2**
- Tubing ..... **Spike Fin III (SPK3), .025 in, Copper**
- Fluid Type ..... **Fresh Water**
- Fouling Factor (hr-sqft-F)/BTU **0.00025**

Motor
- Size ..... **ELS**
- Line Voltage/Hertz **460-3-60**

Output Type	Full Load	Part Load	Part Load	Part Load
Percent Load	100.00	75.00	50.00	25.00
Chiller Capacity	1,500 Tons	1,125 Tons	750 Tons	375 Tons
Chiller Input kW	723 kW	384 kW	186 kW	142 kW
Chiller Input Power	0.482 kW/Ton	0.342 kW/Ton	0.248 kW/Ton	0.378 kW/Ton
NPLV	0.296 kW/Ton			
Cooler				
Entering Temp.	54.0 F	51.5 F	49.0 F	46.5 F
Leaving Temp.	44.0 F	44.0 F	44.0 F	44.0 F
Flow Rate	3595.8 gpm	3595.8 gpm	3595.8 gpm	3595.8 gpm
Pressure Drop	34.5 ft wg	34.7 ft wg	34.8 ft wg	35.0 ft wg
Condenser				
Leaving Temp.	85.0 F	77.3 F	69.7 F	67.5 F
Entering Temp.	75.0 F	70.0 F	65.0 F	65.0 F
Flow Rate	4101.0 gpm	4101.0 gpm	4101.0 gpm	4101.0 gpm
Pressure Drop	30.6 ft wg	31.0 ft wg	31.5 ft wg	31.5 ft wg
Motor				
Motor Input Power	706 kW	375 kW	180 kW	137 kW
Motor RLA	1066	688	422	356
Motor OLTA	1151			
Motor LRDA	6686			
Chiller RLA	996	554	307	252
Chiller Inrush Amps	996			
Max Fuse/CB Amps	2000			
Min Circuit Ampacity	1244			

Messages:

(1) Certified in accordance with the ARI Water-Chilling Packages using the Vapor Compression Cycle Certification Program, which is based on ARI Standard 550/590-2003.

Evergreen Chiller Performance Outputs

Project Name: WHW Weber State
Sales Office: USAirconditioning Distributors

09/20/2005
10:35 AM

Tag Name: 1500 Ton Constant Volume

Chiller
- Chiller Model **19XR-8787592ELS64**
- Starter / VFD ..... **Starter - Freestanding**
- Refrigerant Type **R-134a**

Cooler
- Size **87**
- Waterbox Type ..... **Nozzle-in-Head, 150 psi**
- Passes **2**
- Tubing ..... **Turbo-EDE2 (TBE2), .025 in, Copper**
- Fluid Type ..... **Fresh Water**
- Fouling Factor (hr-sqft-F)/BTU **0.00010**

Compressor
- Size **592**

Flow Controls
- Float Valve Size **15**
- Flasc Orifice **73**

Weights
- Total Rigging Weight ..... **42895** lb
- Total Operating Weight ..... **49784** lb
- Refrigerant Weight ..... **2800** lb

Condenser
- Size **87**
- Waterbox Type ..... **Nozzle-in-Head, 150 psi**
- Passes **2**
- Tubing ..... **Spike Fin III (SPK3), .025 in, Copper**
- Fluid Type ..... **Fresh Water**
- Fouling Factor (hr-sqft-F)/BTU **0.00025**

Motor
- Size ..... **ELS**
- Line Voltage/Hertz **460-3-60**

Output Type	Full Load	Part Load	Part Load	Part Load
Percent Load	100.00	75.00	50.00	25.00
Chiller Capacity	1,500 Tons	1,125 Tons	750 Tons	375 Tons
Chiller Input kW	686 kW	479 kW	334 kW	216 kW
Chiller Input Power	0.458 kW/Ton	0.426 kW/Ton	0.446 kW/Ton	0.577 kW/Ton
NPLV	0.449 kW/Ton			
Cooler				
Entering Temp.	54.0 F	51.5 F	49.0 F	46.5 F
Leaving Temp.	44.0 F	44.0 F	44.0 F	44.0 F
Flow Rate	3595.8 gpm	3595.8 gpm	3595.8 gpm	3595.8 gpm
Pressure Drop	34.5 ft wg	34.7 ft wg	34.8 ft wg	35.0 ft wg
Condenser				
Leaving Temp.	85.0 F	77.5 F	70.0 F	67.6 F
Entering Temp.	75.0 F	70.0 F	65.0 F	65.0 F
Flow Rate	4084.6 gpm	4084.6 gpm	4084.6 gpm	4084.6 gpm
Pressure Drop	30.3 ft wg	30.8 ft wg	31.2 ft wg	31.3 ft wg
Motor				
Motor Input Power	685 kW	478 kW	333 kW	215 kW
Motor RLA	998	742	579	473
Motor OLTA	1078			
Motor LRYA	2106			
Motor LRDA	6686			
Max Fuse/CB Amps	2000			
Min Circuit Ampacity	1247			

Messages:

(1) Certified in accordance with the ARI Water-Chilling Packages using the Vapor Compression Cycle Certification Program, which is based on ARI Standard 550/590-2003.

A.4 PLATE AND FRAME HEAT EXCHANGER INFORMATION

ITT Heat Transfer Plate & Frame Specification

WHW
001

Item: 6

		Hot side	Cold side
PHE-Type	P100-350-TKTM-20		
Flowrate	(g.p.m.)	3600.01	3596.20
Inlet temperature	(°F)	55.00	40.00
Outlet temperature	(°F)	45.00	50.00
Pressure drop	(PSI)	10.02	10.02
Heat exchanged	(Btu/h)	18061369	

Thermodynamic proporties:		Water	Water
Density	(Lb/Ft³)	62.37	62.39
Specific heat	(Btu/Lb*F)	1.00	1.00
Thermal conductivity	(Btu/h*Ft*F)	0.34	0.33
Mean viscosity	(cP)	1.32	1.43
Wall viscosity	(cP)	1.43	1.32
LMTD	(Ft²*h*F/kBtu)		
Excess Surface	%	0.00	
Inlet branch		F1	F3
Outlet branch		F4	F2

Design of Frame / Plates:

Plate arrangement (passes*channel)		1 x 174 + 0 x 0	
Plate arrangement (passes*channel)		1 x 175 + 0 x 0	
Number of plates		350	
Effective heat surface	(Ft²)	3,745.84	
Overall K-value Duty/Clean	(Btu/Ft²*h*F)	961.90	961.90
Plate material		0.0197 inch AISI 304	
Gasket material		NITRIL LOCK	
Max. working temperature	(°F)	230.00	
Working/test pressure	(PSI)	150.00	195.00
Liquid volume	(Ft³)	29.32	
Carry Bar Length	(Ft)	8.20	Max. No. of Plates 413
Net weight	(Lb)		
Frame type		IS	

Connections HOT side : 8.00 '' Unlined studded port,150 # ANSI
Connections COLD side: 8.00 '' Unlined studded port,150 # ANSI

ITT Heat Transfer 175 Standard Parkway Cheektowaga, NY
Tel: 800-447-7700 Fax: 716-897-1777

ITT Heat Transfer Plate & Frame Specification

WHW
001

Item: 6

		Hot side	Cold side
PHE-Type	P100-602-TMTL-43		
Flowrate	(g.p.m.)	3600.00	3596.20
Inlet temperature	(°F)	53.00	40.00
Outlet temperature	(°F)	43.00	50.00
Pressure drop	(PSI)	10.07	10.06
Heat exchanged	(Btu/h)	18061369	

Thermodynamic properties:		Water	Water
Density	(Lb/Ft³)	62.38	62.39
Specific heat	(Btu/Lb*F)	1.00	1.00
Thermal conductivity	(Btu/h*Ft*F)	0.34	0.33
Mean viscosity	(cP)	1.37	1.43
Wall viscosity	(cP)	1.43	1.37
LMTD	(Ft²*h*F/kBtu)		
Excess Surface	%	0.00	
Inlet branch		F1	F3
Outlet branch		F4	F2

Design of Frame / Plates:

Plate arrangement (passes*channel)		1 x 300 + 0 x 0	
Plate arrangement (passes*channel)		1 x 301 + 0 x 0	
Number of plates		602	
Effective heat surface	(Ft²)	6,458.34	
Overall K-value Duty/Clean	(Btu/Ft²*h*F)	928.16	928.16
Plate material		0.0197 inch AISI 304	
Gasket material		NITRIL LOCK	
Max. working temperature	(°F)	230.00	
Working/test pressure	(PSI)	150.00	195.00
Liquid volume	(Ft³)	50.50	
Carry Bar Length	(Ft)	13.12	Max. No. of Plates 686
Net weight	(Lb)		
Frame type		IS	

Connections HOT side : 8.00 '' Unlined studded port,150 # ANSI
Connections COLD side: 8.00 '' Unlined studded port,150 # ANSI

ITT Heat Transfer 175 Standard Parkway Cheektowaga, NY
Tel: 800-447-7700 Fax: 716-897-1777

FACTORY ORDER NO.

NOTE 1. DIMENSIONS IN INCHES AND [mm].

2. DIMENSIONS ARE SUBJECT TO CHANGE. REQUEST CERTIFIED PRINTS TO CONFIRM DIMENSIONS.

REV	REVISION NOTE	MADE	DATE

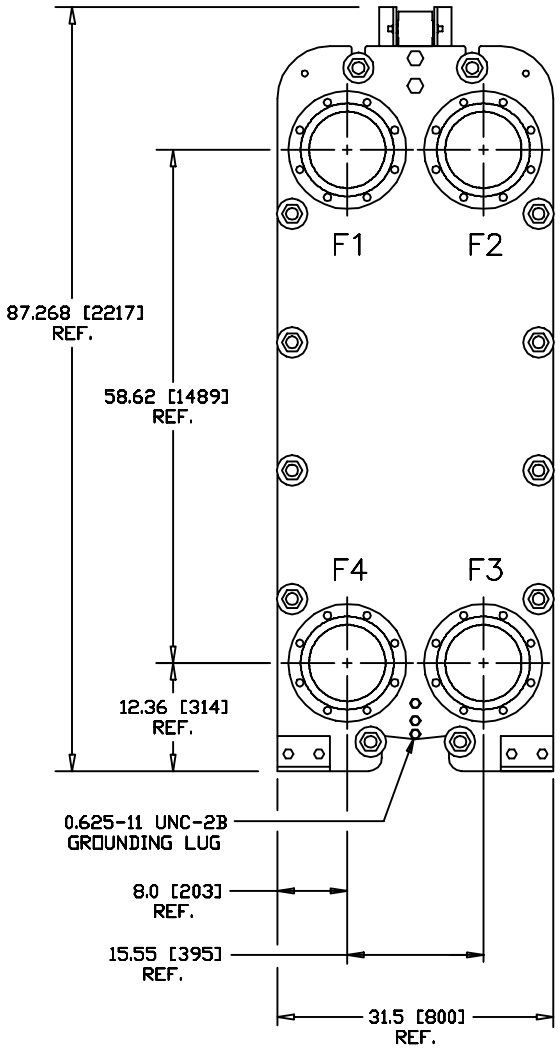

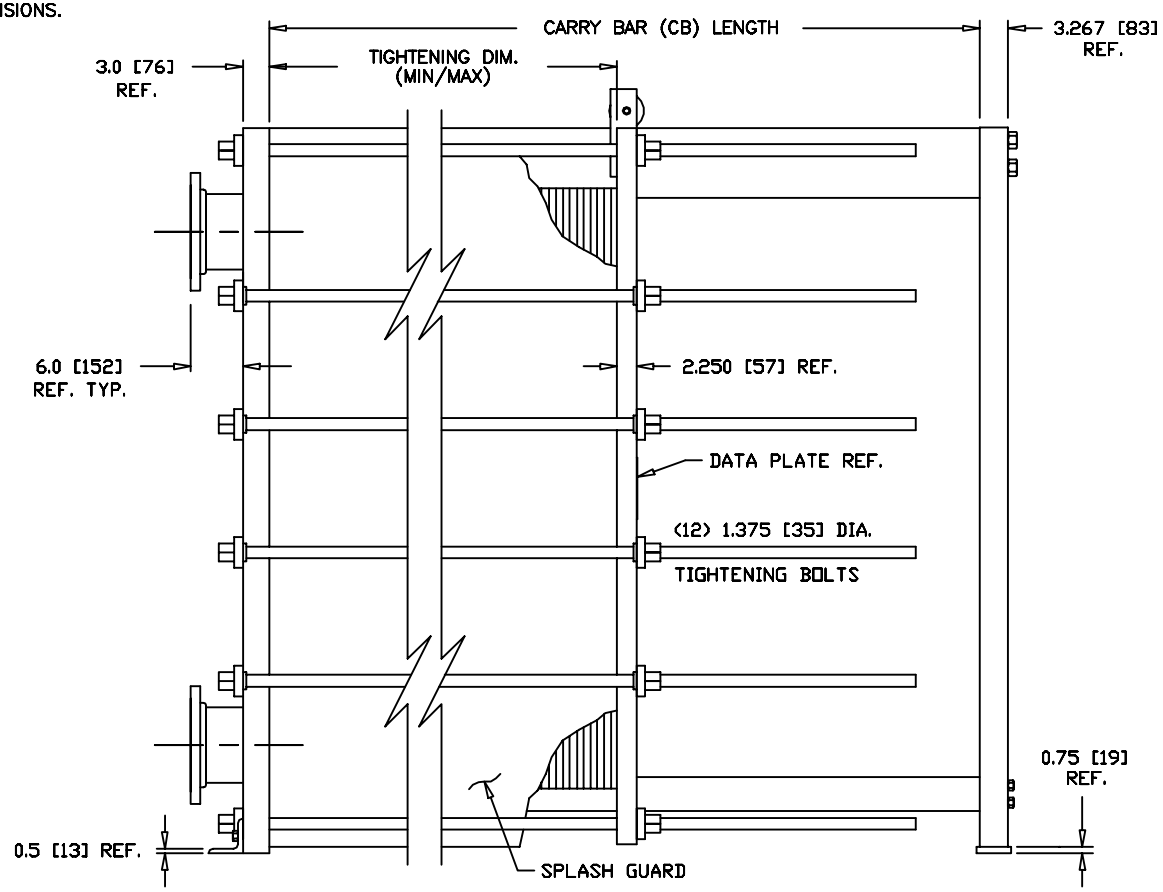

UNIT CONSTRUCTION		DESIGN CONDITIONS	SIDE 1	SIDE 2
THERMAL PLATES	–	DESIGN PRESS. (PSI)	150	150
GASKET TYPE	–	TEST PRESS. (PSI)	195	195
PLATE MIXTURE	–	DESIGN TEMP. (°F)	–	–
MIX (SIDE 1)	–	MIN. TEMP. (°F)	32	32
MIX (SIDE 2)	–	CONNECTIONS		
PLATE QTY.	–	PORT	LOCATION	TYPE AND DESCRIPTION
CARRY BAR	–	SIDE 1 (IN)	F1	STEEL, 8"–150# ANSI FLANGE
TIGHTENING BOLTS	STEEL (ZINC PLATED)	SIDE 1 (OUT)	F4	STEEL, 8"–150# ANSI FLANGE
SPLASH GUARD	ALUMINUM	SIDE 2 (IN)	F3	STEEL, 8"–150# ANSI FLANGE
WEIGHT DRY/FULL	--- / --- (LBS)	SIDE 2 (OUT)	F2	STEEL, 8"–150# ANSI FLANGE

This document contains material and/or information which is the property of ITT Industries Inc., and supplied only on a confidential basis. No transmittal or disclosure shall be made to any person, firm, or corporation without prior written approval of ITT Industries Inc., or its ITT Heat Transfer Technology unit.

MADE	DATE
CHECK	DATE
PLOT SCALE	0.094 : 1.0

Bell & Gossett
Buffalo, NY U.S.A.

TITLE MODEL P100

SIZE	PART NUMBER	REV
C		

MUELLER ACCU-THERM
PLATE HEAT EXCHANGER SPECIFICATION SHEET

PMC Spec. No.: 90430-01.01 | Sales Manager: /TB
Ref No.: | Date: 19 September, 2005

Design Data:	Hot Side:		Cold Side:	
Heat Transfer Media:	Water		Water	
Volume Flow Rate:	3600.0		3595.0	GPM
Mass Flow Rate:	1801851.1		1799664.6	LB/HR
Inlet Temperature:	55.0		40.0	°F
Outlet Temperature:	45.0		50.0	°F
Density	8.34		8.35	LB/GAL
Specific Heat:	1.001		1.003	BTU/LB F
Viscosity:	1.30		1.41	CPS
Thermal Conductivity:	0.334		0.330	BTU/FT H F
Pressure Drop:	10.1		10.2	PSI
Operating Pressure:	50		50	PSI G
Heat Transfer Rate:		18040736		BTU/H
Log Mean Temp Diff:		5.0		°F
Operating U-Value:		348		BTU/FT2 H F
Heat Transfer Area (All Frames):		10355.3		FT2

Mechanical Description:

Frame:	
Type	B-20 Carbon Steel
Design Code	ASME Section VIII, DIV. 1
Design Pressure	100 PSI G
Design Temp. Max/Min	150 °F / 32°F
Test Pressure	130 PSI G
Frames In Parallel/Series/Total	2/ 1/ 2
A-Dim. Min./Max.	55.73/ 59.64 Inch
Overall Length	124.64 Inch
Overall Width	34.88 Inch
Overall Height	104.50 Inch
Guide Bar Length	120.00 Inch
Compression Bolt Length	96.00 Inch
Weight Operating/Empty	9390/ 5876 LB

Plate:	
Type	120M H
Plate Material	0.4 MM 304 S/S
Plates/Frame	404
Passes-H/C	1/1
Channels-H/C	201/202
Gasket Material	NBR

Connections		Location
Hot In	6.00 Inch 316L S/S Studded	1F
Hot Out	6.00 Inch 316L S/S Studded	4F
Cold In	6.00 Inch 316L S/S Studded	3F
Cold Out	6.00 Inch 316L S/S Studded	2F

Notes:
Aluminum shroud omitted
The purchaser of the equipment bears total responsibility for suitability of use of all materials in this application.
We may have assumed some design values. If they differ from your requirements, a new design may be necessary.

MUELLER ACCU-THERM
PLATE HEAT EXCHANGER SPECIFICATION SHEET

PMC Spec. No.: 90430-01.01 | Sales Manager: /TB
Ref No.: | Date: 19 September, 2005

Design Data:	**Hot Side:**		**Cold Side:**	
Heat Transfer Media:	Water		Water	
Volume Flow Rate:	3600.0		3595.0	GPM
Mass Flow Rate:	1801851.1		1799664.6	LB/HR
Inlet Temperature:	55.0		40.0	°F
Outlet Temperature:	45.0		50.0	°F
Density	8.34		8.35	LB/GAL
Specific Heat:	1.001		1.003	BTU/LB F
Viscosity:	1.30		1.41	CPS
Thermal Conductivity:	0.334		0.330	BTU/FT H F
Pressure Drop:	10.1		10.2	PSI
Operating Pressure:	50		50	PSI G
Heat Transfer Rate:		18040736		BTU/H
Log Mean Temp Diff:		5.0		°F
Operating U-Value:		534		BTU/FT2 H F
Heat Transfer Area (All Frames):		6749.0		FT2

Mechanical Description:

Frame:	
Type	B-20 Carbon Steel
Design Code	ASME Section VIII, DIV. 1
Design Pressure	100 PSI G
Design Temp. Max/Min	150 °F / 32°F
Test Pressure	130 PSI G
Frames In Parallel/Series/Total	2/ 1/ 2
A-Dim. Min./Max.	36.42/ 38.98 Inch
Overall Length	88.63 Inch
Overall Width	34.88 Inch
Overall Height	104.50 Inch
Guide Bar Length	84.00 Inch
Compression Bolt Length	78.00 Inch
Weight Operating/Empty	7890/ 5593 LB

Plate:	
Type	120M HV
Plate Material	0.4 MM 304 S/S
Plates/Frame	264
Passes-H/C	1/1
Channels-H/C	131/132
Gasket Material	NBR

Connections		**Location**
Hot In	6.00 Inch 316L S/S Studded	1F
Hot Out	6.00 Inch 316L S/S Studded	4F
Cold In	6.00 Inch 316L S/S Studded	3F
Cold Out	6.00 Inch 316L S/S Studded	2F

Notes:
Aluminum shroud omitted
The purchaser of the equipment bears total responsibility for suitability of use of all materials in this application.
We may have assumed some design values. If they differ from your requirements, a new design may be necessary.

MUELLER ACCU-THERM
PLATE HEAT EXCHANGER SPECIFICATION SHEET

PMC Spec. No.: 90430-01.01 | Sales Manager: /TB
Ref No.: | Date: 19 September, 2005

Design Data:	**Hot Side:**	**Cold Side:**	
Heat Transfer Media:	Water	Water	
Volume Flow Rate:	3600.0	3595.0	GPM
Mass Flow Rate:	1801851.1	1799664.6	LB/HR
Inlet Temperature:	55.0	40.0	°F
Outlet Temperature:	45.0	50.0	°F
Density	8.34	8.35	LB/GAL
Specific Heat:	1.001	1.003	BTU/LB F
Viscosity:	1.30	1.41	CPS
Thermal Conductivity:	0.334	0.330	BTU/FT H F
Pressure Drop:	5.7	5.8	PSI
Operating Pressure:	50	50	PSI G
Heat Transfer Rate:	18040736		BTU/H
Log Mean Temp Diff:	5.0		°F
Operating U-Value:	407		BTU/FT2 H F
Heat Transfer Area (All Frames):	8857.6		FT2

Mechanical Description:

Frame:	
Type	B-20 Carbon Steel
Design Code	ASME Section VIII, DIV. 1
Design Pressure	100 PSI G
Design Temp. Max/Min	150 °F / 32°F
Test Pressure	130 PSI G
Frames In Parallel/Series/Total	2/ 1/ 2
A-Dim. Min./Max.	69.72/ 74.48 Inch
Overall Length	142.63 Inch
Overall Width	36.25 Inch
Overall Height	85.13 Inch
Guide Bar Length	138.00 Inch
Compression Bolt Length	132.00 Inch
Weight Operating/Empty	12358/ 9354 LB

Plate:	
Type	80M HV
Plate Material	0.5 MM 304 S/S
Plates/Frame	492
Passes-H/C	1/1
Channels-H/C	245/246
Gasket Material	NBR

Connections		**Location**
Hot In	6.00 Inch 316L S/S Studded	1F
Hot Out	6.00 Inch 316L S/S Studded	4F
Cold In	6.00 Inch 316L S/S Studded	3F
Cold Out	6.00 Inch 316L S/S Studded	2F

Notes:
Aluminum shroud omitted
The purchaser of the equipment bears total responsibility for suitability of use of all materials in this application.
We may have assumed some design values. If they differ from your requirements, a new design may be necessary.

MUELLER ACCU-THERM
PLATE HEAT EXCHANGER SPECIFICATION SHEET

PMC Spec. No.: 90430-01.01 | Sales Manager: /TB
Ref No.: | Date: 19 September, 2005

Design Data:	**Hot Side:**	**Cold Side:**	
Heat Transfer Media:	Water	Water	
Volume Flow Rate:	3600.0	3595.0	GPM
Mass Flow Rate:	1801851.1	1799664.6	LB/HR
Inlet Temperature:	55.0	40.0	°F
Outlet Temperature:	45.0	50.0	°F
Density	8.34	8.35	LB/GAL
Specific Heat:	1.001	1.003	BTU/LB F
Viscosity:	1.30	1.41	CPS
Thermal Conductivity:	0.334	0.330	BTU/FT H F
Pressure Drop:	7.6	7.7	PSI
Operating Pressure:	50	50	PSI G
Heat Transfer Rate:	18040736		BTU/H
Log Mean Temp Diff:	5.0		°F
Operating U-Value:	437		BTU/FT2 H F
Heat Transfer Area (All Frames):	8258.7		FT2

Mechanical Description:

Frame:	
Type	B-20 Carbon Steel
Design Code	ASME Section VIII, DIV. 1
Design Pressure	100 PSI G
Design Temp. Max/Min	150 °F / 32°F
Test Pressure	130 PSI G
Frames In Parallel/Series/Total	4/ 1/ 4
A-Dim. Min./Max.	43.98/ 46.81 Inch
Overall Length	105.89 Inch
Overall Width	26.75 Inch
Overall Height	85.50 Inch
Guide Bar Length	102.00 Inch
Compression Bolt Length	96.00 Inch
Weight Operating/Empty	5856/ 4430 LB

Plate:	
Type	60M HV
Plate Material	0.5 MM 304 S/S
Plates/Frame	310
Passes-H/C	1/1
Channels-H/C	154/155
Gasket Material	NBR

Connections		**Location**
Hot In	4.00 Inch 316L S/S Studded	1F
Hot Out	4.00 Inch 316L S/S Studded	4F
Cold In	4.00 Inch 316L S/S Studded	3F
Cold Out	4.00 Inch 316L S/S Studded	2F

Notes:
Aluminum shroud omitted
The purchaser of the equipment bears total responsibility for suitability of use of all materials in this application.
We may have assumed some design values. If they differ from your requirements, a new design may be necessary.

A.5 THERMAL/ICE STORAGE INFORMATION

TRANE™

Applications Engineering Manual

Ice Storage Systems

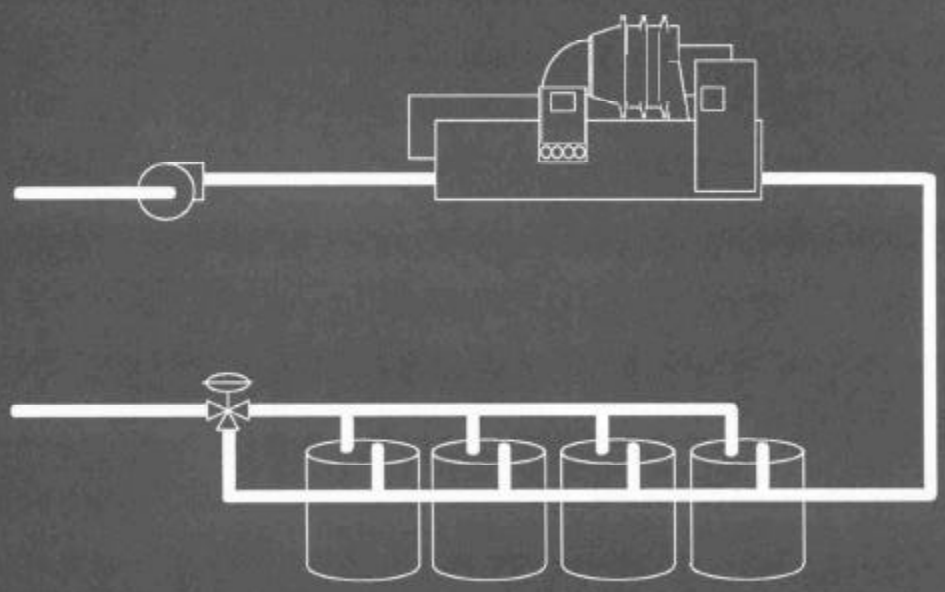

SYS-AM-10 (1087)

Ice Storage Systems

TABLE OF CONTENTS

PURPOSE 2
THERMAL STORAGE
- Why thermal storage? 2
- What storage media are commonly used? 2
- When is partial storage or total storage used? 3

ICE STORAGE
- What are the advantages of ice storage? 4
- How is the ice stored? 4
- How is the ice produced? 5
- When is ice produced? 7
- When is the ice melted? 8
- How much ice storage is required? 9

CHILLER
- What is the daytime chiller capacity? 9
- What is the nighttime chiller capacity? 9
- At what leaving glycol temperature is the chiller selected? 10

DESIGN
- How is the design day load determined? 10
- How are coincident nighttime cooling loads met? 11
- How is the capacity of the ice storage tank determined? 11
- How is the tube surface required for heat transfer determined? 12
- Does ethylene glycol affect pressure drop and heat transfer? 13
- Is the ice upstream or downstream of the chiller? 13
- Are two pumps required? 14
- When is a heat exchanger required? 15
- Where is the heat exchanger located? 15

CONTROL
- How is the chiller controlled 15
- How is the ice storage controlled? 16
- How is the heat exchanger controlled? 16

The Trane Company, La Crosse, Wisconsin 54601

©American Standard, Inc., 1987

PURPOSE

The purpose of this manual is to serve as an aid to the designer of ice storage systems employing ethylene glycol. Commonly asked questions of thermal storage design, ice storage capacity, chiller selection and system control are addressed.

THERMAL STORAGE

WHY THERMAL STORAGE?

The current market for cool thermal storage is created by electric utilities. The benefits derived by the utility may include increased revenue, lower cost production, or shifting summer demand. Electric utilities supplement persuasive marketing programs with attractive utility rates to sell the thermal storage concept. Many utilities will contribute cash rebates on the basis of "avoided demand" for thermal storage systems.

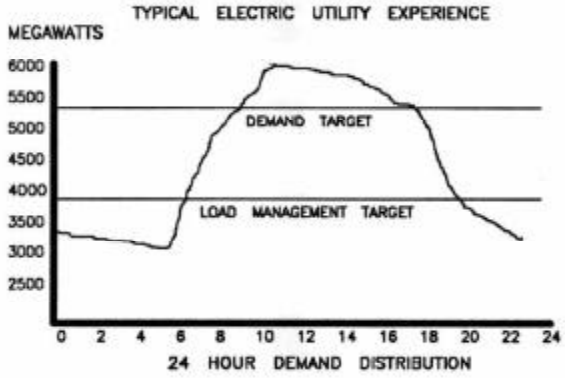

Figure 1

Electric utilities generate power from several different energy sources with energy cost ranging from low cost hydro and nuclear to expensive gas turbines. Lower energy cost nuclear and hydro plants have excess capacity during off-peak hours (typically 9pm to 9 am), while the cost of operating gas turbines for peaking often exceeds revenue from the power they generate. (figure 1) Lowering on-peak daytime demand and increasing off-peak nighttime demand enhances utility profitability. Load management just makes good economic sense. Thermal storage, pumped storage hydro projects, dual fuel rates, radio controlled water heaters all contribute to improved load management.

The increased capital cost of thermal storage systems can be offset by utility savings passed on to the owner. The vehicle to pass on savings may be high daytime demand charges (KW) that are waived during off-peak hours, discounts for off-peak power (KWH), or cash rebates for comfort systems that peak at a lower KW than some predetermined norm.

WHAT STORAGE MEDIA ARE COMMONLY USED?

Chilled water, ice, or phase change materials can be used as a storage medium. Few phase change materials (other than water) have left the laboratory, and even fewer have met with any real success. For most comfort cooling applications, water is hard to beat as a storage medium. It is simply an economic question, "should water be cooled or frozen?"

CHILLED WATER STORAGE

Conceptually, chilled water storage appears to be the simpler design. However, as several details are analyzed, the advantages of ice storage become more appealing. Chilled water storage is more than simply "a wide spot in the pipe." Water stores heat by increasing its temperature. The specific heat of water is one btu per degree pound. 12000 degree-pounds are required to store one tonhour of cooling. Maximizing the temperature rise of the system will reduced the mass of water required.

Chilled water storage is traditionally designed on a 20 degree temperature rise, which equates to almost 10 cubic feet of water per tonhour. Actually obtaining a 20 degree temperature rise may be very difficult. Chillers have very little difficulty cooling water to the minimum design temperature, typically 40 °F. However, the cooling system may not be able to raise the stored water temperature by the full 20 degrees. Leakage of cold supply water into the warmer return water can occur at any of several locations in the system. A leaking control valve, or control valve out of control can pass cool supply water into the return. Poor storage tank design can allow warm return water to bypass "trapped"

cool water, or warm return water can mix with cool supply water still in the tank and lessen its cooling potential. Designs to minimize these problems are often costly and difficult to control. Often the solution is to allow for a certain degree of tank "poisoning" and increase storage volume to compensate for this loss.

ICE STORAGE

The latent heat of fusion or the heat absorbed by one pound of ice when it melts is 144 btu per pound. This equates to less than 1.5 cubic feet of ice per tonhour. (Water weighs 62.4 pounds per cubic foot while ice weighs approximately 57 pounds per cubic foot.).

The volume of ice must be permeated with channels of fluid to transport heat into and out of the body of ice. These channels of fluid are usually pipe or tubing inside the ice or open space around the ice. The fluid in the pipe can be brine or refrigerant. Brine systems use ethylene glycol to transport heat into and out of the ice. Refrigerant systems circulate refrigerant through the pipe to remove heat from the tank, but circulate water through the free area around the ice when adding heat to the tank.

EUTECTIC SALTS

Eutectic (yoo-tek-tic) describes a mixture or compound easily fused or fusing at the lowest possible temperature. The eutectic salt used in thermal storage applications is a salt hydrate that fuses at 47 °F. In a crystalline form the salt fuses with several water molecules. In the amorphous form the salt disassociates from the water molecules, or "melts". Energy in the form of heat must be added to the hydrate to cause the disassociation.

The heat of fusion of this salt hydrate is 41 btu per pound, compared to 144 btu per pound heat of fusion for water, or a sensible heat gain of 20 btu per pound for chilled water storage. Eutectic salts can be used to store heat at a higher temperature than ice and lower volume than water.

The salt and water is packaged in plastic containers (approximately 8" by 24" by 1.75"). The container or "tray" is constructed with internal weight bearing supports and spacers to maintain vertical separation between trays. The trays can be stacked in a chilled water storage tank to increase the the capacity of the storage system. The tank design for a eutectic salt system must provide for uniform entrance velocity to the trays. The slow laminar flow into the tray section requires additional space for headers and supply diffusers.

WHEN IS PARTIAL STORAGE OR TOTAL STORAGE USED?

Thermal storage systems can be placed in two general classifications; partial storage and total storage. Partial storage (figure 2) only trims the peak refrigeration load and requires some chiller operation during on-peak periods. The storage volumes are manageable and the demand savings are attractive. Total storage systems (figure 3) must produce the entire daily refrigeration load the evening before. No chiller operation is allowed during on peak periods. Total storage systems require enormous volumes of thermal storage and are usually attractive only where time of day rates offer substantial discounts for off peak power, or where utility rebates are offered.

Figure 2

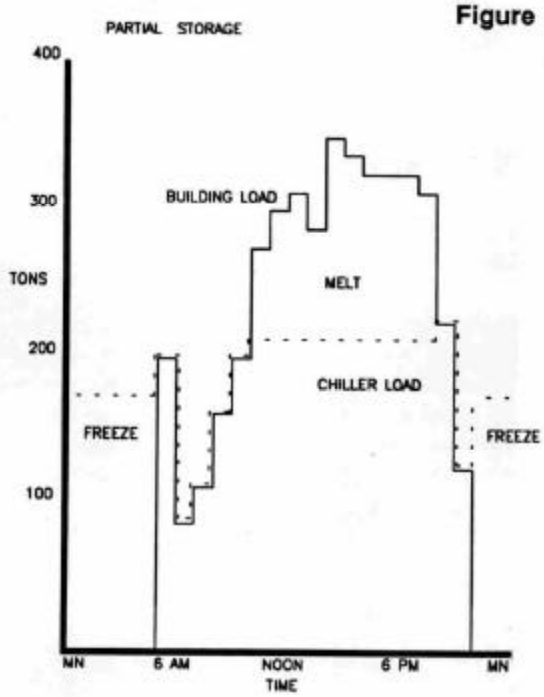

System costs and utility savings are both a function of storage capacity. A modest investment in storage capacity will result in some initial reduction in chiller tonnage and cost. However, the reduction in chiller cost is insufficient to cover the cost of the storage system and required system controls.

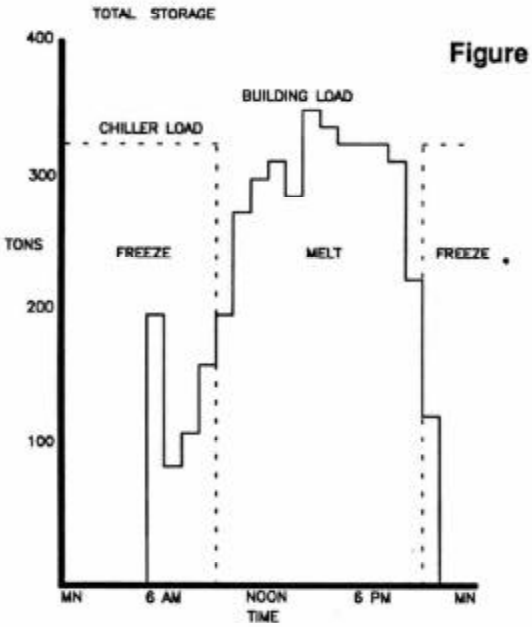

Figure 3

The investment in storage must generate a savings in utility cost to cover the cost of the investment and provide an adequate return. An energy and economic analysis is required. The optimum storage capacity may actually exceed the capacity that results in the smallest chiller selection.

ICE STORAGE

WHAT ARE THE ADVANTAGES OF ICE STORAGE?

Ice can reduce the storage volume by as much as a factor of five. Ice also reduces the weight of the storage system. A chilled water system typically weighs as much as 700 pounds per tonhour of storage; while an ice system weighs as little as 90 pounds per tonhour. The lighter weight of ice storage systems allow them to be placed almost anywhere in the building.

The performance of a manufactured ice storage tank is a known variable, eliminating much of the guess work and disappointment with chilled water storage. Manufactured ice storage tanks eliminate the cost of large field erected tanks.

The modular concept of ice storage tanks, the ease of pumping ethylene glycol, the reliability of packaged chillers, and the power of building automation combine for an effective and highly reliable ice storage system.

HOW IS THE ICE STORED?

The ice storage tank must perform three functions.

First the tank is a holding area for the ice. Simply a container.

Second, the ice tank requires a heat exchanger to separate the chilled water system, at a higher pressure, from the atmospheric pressure at which ice is usually stored.

Third, the tank performs a second heat exchange function in separating the non-freezing fluid (refrigerant or glycol) from the freezing medium, water. Several physical arrangements have evolved to meet these three functions.

ICE BUILDERS

Ice builders are large, open, insulated steel tanks containing several feet of steel pipe in a serpentine coil. Ice is built up on the outside of the pipe while refrigerant (R-22) or sometimes glycol is circulated through the pipe. The pipe material may be schedule 40 black steel pipe or extruded steel tubing. The ice may be built up to a thickness of 1 to 2.5 inches. Greater ice thickness equates to greater storage capacity, but lower efficiencies. Because of the inefficiencies, the current trend is to a lower ice thickness.

Ice is melted by circulating water around the ice. Separation between the cylinders of ice is maintained by pipe spacing and water agitation. Agitation promotes even ice melting and prevents ice bridging between pipes during freezing. Because of the spacing between pipes, half of the tank volume remains as water even when the storage system is fully charged. This excess water in the ice builder increases the volume and weight by a factor of two or more when compared to more compact ice storage systems.

The open ice tanks are usually located at lower levels or at grade because of their weight. Because the tanks are open, an additional heat exchanger is required to isolate the tanks from the static head of the chilled water system.

Ice builders are conventionally used with refrigerant based ice plants, which can be costly and complex. To avoid this expense, many ice

builder manufacturers have redesigned the metal tanks for use with ethylene glycol. However, this redesign does not reduce the weight or volume requirement of this type of ice storage system.

ICE BOTTLES

Ice bottles are similar to ice builders in that they build ice on the outside of schedule 40 steel pipe. The bottles are designed for either refrigerant or glycol circulation through the pipe. Ice is melted by circulating water around the cylinders of ice. Unlike the open ice builder, the bottle is a closed vessel. In essence the ice bottle is a large shell and tube heat exchanger with sufficient volume in the shell to contain the ice. Like a heat exchanger, the bottle is a pressurized vessel, eliminating the need for another heat exchanger between the ice and system chilled water.

ICE TANKS

Ice tanks are modular, insulated polyethylene tanks, approximately 8 feet in diameter and 8 feet in height. Each tank contains a coiled heat exchanger constructed of 5/8 inch polyethylene tubing. A glycol solution chilled to 22-24 °F is circulated through the tubing, freezing over 13000 pounds of water in each tank. The water remains in the tank to be frozen solid with no need for agitation. The ice is melted by circulating warm glycol through the tubing.

The open tanks remain at atmospheric pressure, however, the coiled heat exchanger is a closed system. The polyethylene, polyvinyl chloride construction of the heat exchanger is suitable for operating pressures up to 90 psi. A heat exchanger is required only if the designer wishes to eliminate ethylene glycol from the chilled water system or anticipates operating pressures in excess of 90 psi. Generally the additional glycol required is less expensive than a heat exchanger.

Ice tanks of this type are designed for glycol solutions only. A solution of 25 percent ethylene glycol and 75 percent water, by weight, is most commonly used. Lower than 25 percent may not provide adequate chiller protection. Concentrations greater than 25 percent needlessly reduce heat transfer and add pressure drop.

ICE FLAKES

Ice flakes are produced by a packaged ice maker. This ice storage system is unlike previously discussed systems in that the ice is stored in an open tank below the ice maker; not on the pipe or tube that produces the ice. The ice is produced on plates above the tank. Hot gas defrost is used to melt the ice off the plates. When free, the plates fracture into palm sized flakes of ice that fall into the tank below. This system is also called an ice harvester or ice shucker.

HOW IS THE ICE PRODUCED?

ICE PLANTS

The ice tank employed in an ice plant is a large insulated tank containing several feet of steel pipe. The ice is built up on the outside of the pipe while the refrigerant (R-22) is circulated through the tubes.

There are several methods to circulate the refrigerant within the ice builder pipe. Pumping large volumes of refrigerant (R-22) is possible but the pumping system must not allow premature formation of flash gas in the system. Refrigerant is circulated through the ice builder pipe by:

1. direct expansion
2. liquid recirculation (liquid overfeed)
3. gravity (flooded system)

Ice storage systems of this nature require very large refrigerant charges and incur substantial construction costs due to the number of field erected components. Due to these construction costs, many ice plants are difficult to justify except in larger tonnage applications.

DIRECT EXPANSION

Direct expansion employs the pressure difference between the high-side receiver and the suction line accumulator to transport refrigerant through the ice builder. Proper sizing of the suction line should minimize oil return problems. From a design viewpoint, direct expansion offers a simple and reliable system.

This method suffers from some inefficiencies compared to other systems. For example, 15 to 20 percent of the pipe length must be used to provide superheat and is not available for

making ice. This results in an additional cost penalty for additional surface and/or lower efficiencies due to lower suction temperatures.

LIQUID RECIRCULATION

Liquid recirculation systems use either the compressor or a separate liquid feed pump to circulate refrigerant. The recirculation rate is 2 to 3 times the evaporation rate. This causes liquid overfeed systems, as they are sometimes called, to return a two phase mixture from the ice tank to a low pressure receiver. From the low pressure receiver, refrigerant vapor is returned to the compressor while the refrigerant liquid is available for recirculation to the ice tank. The liquid level control meters additional refrigerant from the high pressure receiver to the low pressure receiver to make up refrigerant returned to the compressor. The design of the feed pump is critical in liquid recirculation systems. Proper design of the pumping system must be followed to prevent flashing of the refrigerant at the pump suction or in the pump itself. Semihermetic pumps or open pumps with specially designed seals are used to keep refrigerant losses to a minimum.

Pumping drums use hot gas from the compressor to recirculate refrigerant thereby eliminating the need for the refrigerant feed pump. The "pumper" is a smaller receiver that is located below the low pressure receiver. When vented to the low pressure receiver, liquid refrigerant drains by gravity into the pumper drum. The pumper is then isolated from the low pressure receiver by means of solenoid valves and hot gas is used to pressurize the pumper, forcing refrigerant from the pumper through the ice tank. Two pumping drums are used so one is filling while the other is draining. The "double pumper" replaces the expensive and high maintenance liquid feed pump.

GRAVITY SYSTEMS

Gravity feed systems eliminate the need for pumping refrigerant altogether. With gravity systems a low pressure receiver, or surge drum, is paired with each ice tank as a coil header. The vertical header carries the refrigerant to the ice tank inlet while a suction line returns refrigerant from the ice tank back to the surge drum. At the surge drum, vapor is returned to the compressor while liquid is recirculated to the ice tank. Due to the large refrigerant charge and the cost of multiple surge drums and controls, gravity flooded systems may be impractical in larger ice storage systems.

OIL RETURN AND ACCESSORIES

Oil return is a special concern with all liquid recirculation systems. At the low pressure receiver, refrigerant vapor is drawn off by the compressor but the oil remains in the receiver. When a liquid feed pump or pumper drum is used, sufficient pressure drop is available to employ an oil return system. The liquid line to the ice tank is tapped and a small amount of refrigerant is bled off to an expansion valve. The line downstream of the expansion valve is sized to maintain sufficient velocity to carry the entrained oil back to the compressor inlet. With a gravity flooded system, sufficient head is not available and a separate oil recovery system must be used. In addition to an oil return or oil recovery system, an oil separator in the compressor discharge line is a must.

Finally, there are ice tank accessories. To maintain uniform ice thickness, the water in the ice tank must be thoroughly mixed. An air pump is used to agitate the ice tank water during both the freezing and melting cycles. During the melt cycle, chilled water must circulate around the ice covered pipes. An ice thickness probe is required to prevent the ice tank from overfreezing or "bridging". Bridges of ice forming between the ice covered pipes will impede the flow of chilled water through the ice bundle during the melt cycle.

ICE FLAKES

Ice flakes are produced by a packaged ice maker. This system is also called an ice harvester or ice shucker. Ice harvesters are available as packaged systems. The ice plates, compressors, pumps, piping and controls, and sometimes the condenser ship as a package to be mounted above a field fabricated storage tank. The ice harvester components may ship separately for field assembly in larger applications.

Ice harvesters produce ice by removing heat from the tank of water located directly below the unit. Water drawn from the tank is sprayed directly on refrigerated plates by a water recirculation pump. The recirculation rate is approximately 10 to 11 gpm per ton of unit ice producing capacity. System return water at

higher temperatures is also sprayed on the refrigerated plates, warming the spray temperature. Warmer spray temperatures raise the suction temperature, increasing unit capacity, but reducing or completely eliminating ice production.

The ice harvester may also be used as as water chiller by supplying warmer water to the plates. However, coordinating chiller operation with a controlled rate of ice utilization is difficult. As either a chiller or an ice maker the ice and/ or chilled water discharge to the tank directly below. The ice harvester may have sufficient capacity to meet the load, however if the chilled water discharge is greater than 32 °F, ice will be consumed.

ETHYLENE GLYCOL SYSTEMS

Ethylene glycol, or brine as it is called, is simply used as a low temperature heat transfer medium to transfer heat from the ice storage tanks to a packaged chiller and from the cooling coils to either the ice storage tanks or the chiller. The use of freeze protected chilled water eliminates the design time, field construction, large refrigerant charges and leaks associated with ice plants.

Brine ice storage tanks create ice by circulating the low temperature brine through polyethylene tubing. The polyethylene tubing is coiled inside insulated polystyrene tanks. The water / ethylene glycol mixture is also used for cooling by circulating the warm brine through the tubing, melting the ice. The water that experiences a phase change remains in the tank. Since no water circulates around the tubing, the ice tank may be frozen solid. The problems of ice bridging and an air pump for agitation are eliminated. In this configuration the brine ice tank is a sealed system similar to a packaged chiller or a car battery.

The heat transfer surface of the brine ice tank can be increased to four to five times the area used in refrigerant ice tanks due to the low cost of polyethylene. The extended heat transfer area decreases the approach temperature required to make ice. Centrifugal or reciprocating chillers producing 23 to 26 °F brine are well suited for this application. Centrifugal chillers have an excellent track record in low temperature applications including food processing, cosmetics, pharmaceutical, clean rooms, other industrial applications, and of course, ice rinks.

WHEN IS ICE PRODUCED?

The second judgment is to determine the time allowed to make ice. The available time or "ice making window" is NOT simply the utility offpeak hours. If the utility does not offer lower kwh charges during offpeak hours, ice may be produced anytime ice production does not interfere with building comfort cooling or contribute to the building electrical demand. If a discount is offered for offpeak power (kwh), additional utility savings can be obtained by deferring as much cooling load as possible to offpeak hours.

Ice production can begin any time metered electrical demand is low and the ice building chiller is not required for incidental cooling

HOUR	CHILLER	UTILITY
MDN	FREEZE	OFF PEAK
3 AM		
6 AM	BUILDING PULLDOWN	
9 AM	COMFORT COOLING	
NOON	COOLING / MELT	ON PEAK
3 PM		
6 PM	COMFORT COOLING	
9 PM	FREEZE	OFF PEAK
MDN		

Figure 4

loads. (figure 4) The initiation of the ice build cycle is controlled by time, usually early evening, when the building is essentially shutdown. The ice cycle is terminated when the ice tanks are fully charged, electrical demand is high, or the chiller is required for comfort cooling; whichever occurs first.

There are many methods to determine the quantity of ice actually produced depending on the design of the ice storage tank. Water expands as it freezes. Simply measuring the water level in the tank can give an indication of the percent of ice produced. As ice is produced, the heat transfer rate diminishes, reducing the leaving glycol temperature from the ice tank. The ice making mode can be terminated when tank exit temperature reaches a predetermined temperature.

WHEN IS THE ICE MELTED?

There are several strategies for melting ice. The most common include; chiller priority, ice priority, and demand limited

Chiller Priority. Chiller priority systems place the chiller and the ice storage tanks in series with the ice downstream of the chiller (figure 5). The chiller and tempering valve on the ice storage tanks are both set at the desired chilled glycol setpoint. The chiller is preferentially loaded due to its upstream position. The ice storage tanks are bypassed as long as the chiller can meet the load. Only when chiller capacity is exceeded is ice allowed to supplement the chiller.

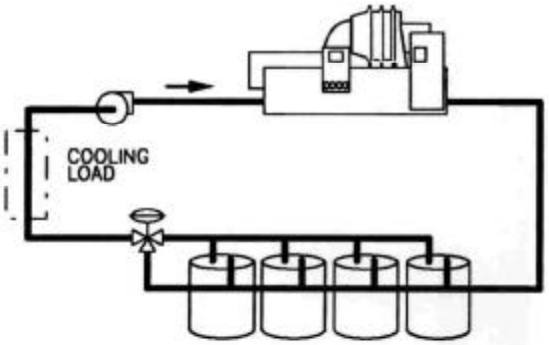

Figure 5

Chiller priority is the simplest of the ice melting strategies. Stable, reliable control is provided at all times. Chiller performance is maximized since the chiller receives the warmest return glycol. The fraction of the load met by ice can be altered by simply changing the chiller setpoint.

Ice is consumed only during peak load conditions with chiller priority. This strategy is best suited for utilities that do not offer lower offpeak rates. Producing ice is more expensive than cooling if the kwh cost is the same daytime and nighttime, therefore ice is consumed only when it actually reduces electrical demand.

Ice priority. Ice priority systems place the ice storage tanks and the chiller in series with the chiller downstream of the ice storage tanks (figure 6) . The chiller and tempering valve on the ice storage tanks are both set at the desired chilled glycol setpoint. The ice storage is preferentially loaded due to its upstream position. The chiller is idle as long as the ice storage can meet the load. Only when ice storage capacity is exceeded is the chiller allowed to supplement the ice storage.

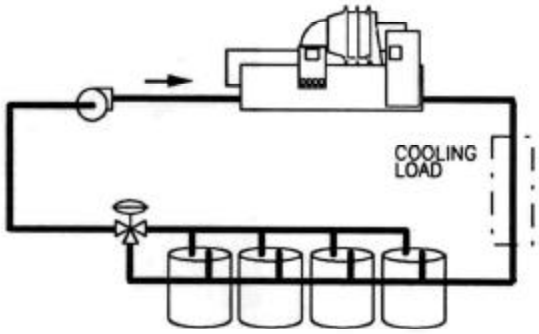

Figure 6

Ice priority will provide stable, reliable control at all times. The fraction of the load met by ice can be altered by simply changing the tempering valve setpoint. Ice consumption is maximized since the ice is preferentially loaded. This strategy is suitable for utilities that offer lower offpeak rates. It is beneficial to melt as much ice as possible since lower offpeak rates make producing ice less expensive than daytime cooling. Ice priority is well suited for low temperature air systems since lower leaving glycol temperature is guaranteed by the chiller.

Demand limited. Demand limited systems place the chiller and the ice storage tanks in series. Either cooling source, ice or chiller, may be upstream. The fraction of the load met by ice can be altered by simply changing the setpoint of the upstream cooling source.

Demand limited systems offer the advantages of both ice and chiller priority, while allowing the design flexibility of placing either cooling source downstream. The chiller contribution to the load is dictated by the building automation system. Prudent control of the chiller can maximize both demand reduction and the quantity of ice consumed. By maximizing the the quantity of ice consumed daily, demand limited systems maximize the savings from offpeak kwh rates. However, demand limited control is not possible without some form of building automation.

HOW MUCH ICE STORAGE IS REQUIRED?

Determination of how much of the onpeak load should be met with ice storage is arbitrary. As more of the "day" load is committed to ice storage, chiller "day" capacity and building electrical demand are reduced. (figure 7)

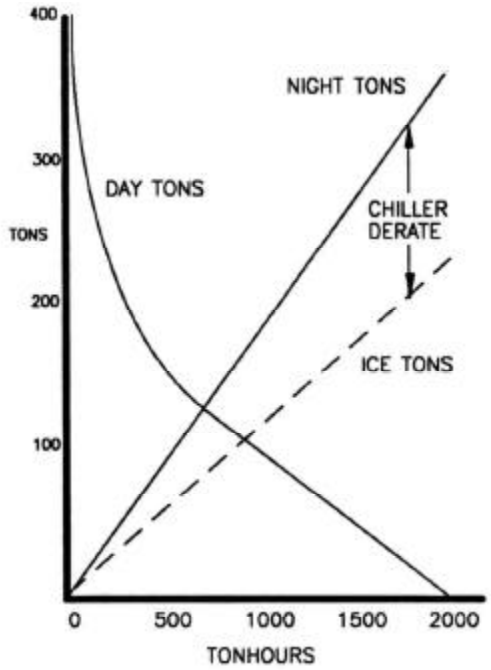

Figure 7

However, greater ice storage capacity requires greater chiller "night" capacity. The designer's first impulse is often to select the ice storage capacity that results in equal "day" and "night" nominal capacities. While this selection results in the smallest chiller net capacity, it does not necessarily represent the best life cycle cost system.

Additional ice storage capacity beyond the "balance point" increases chiller cost as well as storage cost. However, as chiller capacity and ice storage are increased, further demand reduction is achieved. The best life cycle cost ice storage system is reached when additional chiller and ice storage capacity do not result in justifiable savings. Many utilities will contribute to the cost of analysis to determined the justifiable amount of ice storage as well as cash rebates for further demand reduction.

CHILLER

WHAT IS THE DAY CHILLER CAPACITY?

The total onpeak cooling load must be met with some combination of ice and chiller. Total tonhours of cooling required during the onpeak hours less the tonhours of ice available equals the tonhours of cooling that must be met by the chiller. Chiller onpeak tonhours divided by onpeak hours equals the average chiller onpeak capacity. A chiller of this capacity is adequate if it receives this load each hour. Often this is not possible.

If onpeak hourly loads less than the average chiller load exist, the chiller may not be able to meet its onpeak cooling duty. Additional load is shifted to the ice, resulting in premature ice depletion. One solution is to increase the portion of onpeak cooling to ice. This results in a lower average onpeak chiller requirement. However a greater offpeak chiller capacity may now be required. An alternate solution is to simply increase onpeak chiller capacity. However this may impinge on demand reduction if left uncontrolled.

WHAT IS THE NIGHT CHILLER CAPACITY?

Ice producing chiller capacity depends on final leaving fluid temperature and the type of compressor employed. Reciprocating, helical rotary, and single stage centrifugal compressors usually suffer a greater derate than three stage centrifugal chillers. Exact chiller selections must be made only after all operating parameters are known. Derate factor is the ratio of ice producing capacity to nominal capacity.

$$\text{Derate factor} = \frac{\text{ice producing capacity}}{\text{nominal capacity}}$$

CHILLER	DERATE FACTOR
CVHB	0.65
CVHE	0.80
CGAC	0.60
CGWC	0.65
RTHA	0.70

The type of ice storage vessel used also influences chiller selection. The average charge rate is simply tonhours of storage divided by hours available to produce ice. However, the ice storage vessel does not freeze water at a

constant rate. As ice thickness increases the rate of freezing decreases. The decrease in charge rate reduces chiller load and increases the time required to recharge the storage system. The chiller selected must possess sufficient capacity to freeze the ice storage array in the allotted time period, and maintain stable operation throughout the entire charging cycle.

AT WHAT LEAVING GLYCOL TEMPERATURE IS THE CHILLER SELECTED?

The required leaving fluid temperature is determined by the type of ice storage vessel finally selected. For a given heat transfer rate the delta T may be balanced against the flowrate. In most cases, selecting a higher delta T, therefore a lower gpm, and a lower leaving chiller fluid temperature, allows more efficient ice production. However, leaving fluid temperatures below 20 °F may be counter productive. When the resulting pressure drop is excessive, alternate evaporator options should be considered.

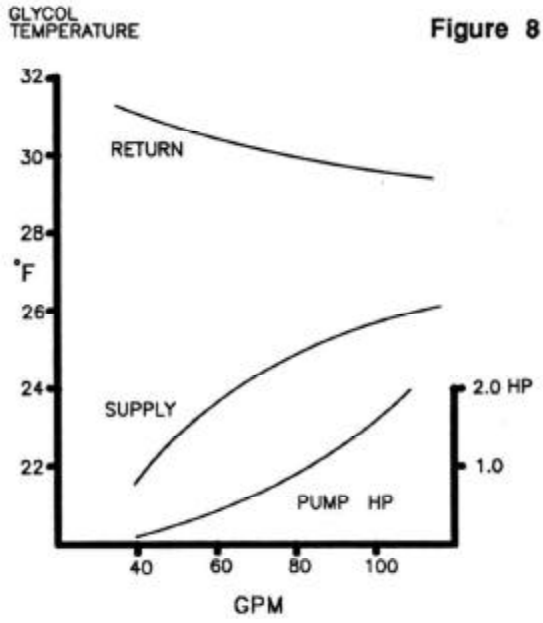

Figure 8 plots supply glycol temperature and gpm at a constant charge rate of 15 tons per hour per tank (Calmac™ Model 1190). The return glycol temperature increases at lower flow rates due to longer fluid retention time. The charging temperature has a profound affect on tank temperature rise and per tank pump horsepower. Higher tank temperature rise and lower pump horsepower require chiller leaving fluid temperatures between 22 - 24 °F. These lower leaving temperatures have in impact on chiller selection.

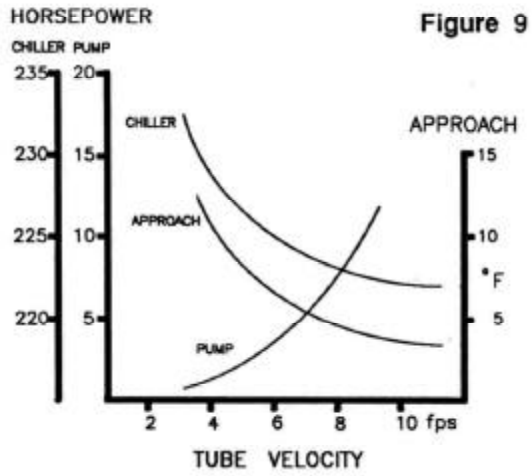

Lower leaving fluid temperatures require lower evaporator suction temperatures. The presence of ethylene glycol in the evaporator also lowers suction temperature. The selection of centrifugal chillers to produce lower leaving glycol temperatures is facilitated by closer evaporator approaches (figure 9). Tube velocity significantly influences the approach temperature. Tube velocity below 6 feet per second increases approach temperature and chiller horsepower. Tube velocity above 8 to 9 feet per second increases evaporator pressure drop and pump horsepower.

DESIGN

HOW IS THE DESIGN DAY LOAD DETERMINED?

The selection of ice storage capacity begins with an hourly, design day load profile. A design day load profile can be obtained by using the ULTRA LOAD PROGRAM or special execution of the TRACE PROGRAM. (See TRC-SFB-1 for instructions on obtaining a design day load profile from TRACE.)

The first two steps in selecting chiller capacity and tank capacity are critical judgments. Building diversity and time allowed for producing ice must be ascertained. Defining these two variables with complete certainty is difficult. Determining the peak load (tons) of a building

requires only a calculation of the magnitude of the load. Other than solar, little load diversity is considered. However, a determination of building daily load (tonhours) requires an indepth understanding of building utilization. Often this data is unavailable to the system designer, or exists only as a rough estimate at best. An optimistic estimate will result in a building short of cooling capacity, while a conservative estimate results only in added equipment expense.

The load profile developed must include allowance not only for loads added after building completion, like additional personal computers, but longer than planned duration of loads, like frustrated PC users staying after hours. Extended usage has no direct bearing on design load (tons), but does have direct impact on daily load (tonhours). Increased daily load (tonhours) has a direct bearing on chiller and storage capacity.

HOW ARE COINCIDENT NIGHTTIME COOLING LOADS MET?

Some building cooling loads persist during offpeak hours. Such loads include data processing centers, CAD-CAM work stations, building security areas, after hours building usage, and building cool down loads the following morning. These loads must be addressed by the ice storage system design. Viable options include accessory chillers, extended chiller delta T, or simply narrowing the ice production window.

Accessory chillers. Often persistent off peak cooling loads can be met with secondary chillers. Remotely located concentrated loads may be best met with dedicated chillers separate from the ice storage system. It may be desirable to transfer these loads to the primary ice storage system during onpeak hours. If persistent offpeak loads are scattered throughout the building, a centrally located standby chiller using the primary distribution system may be a solution. If the standby chiller uses the primary distribution system, ice production must be isolated from the primary distribution system. Accessory chillers are best suited for persistent offpeak loads of significant magnitude and lengthy duration. Minimal offpeak loads may be best met by expanding the chiller delta T.

Expanded chiller delta T. When the persistent offpeak cooling loads are minimal, it may be possible to meet those loads with cool ethylene glycol solution discharged from the ice storage tank. This fluid is rarely more than one or two degrees below freezing temperature and poses no threat of coil frosting or uncontrollable condensation to properly designed systems. Use of ice tank discharge chilled glycol during the freezing cycle not only increases the chiller load but increases the return glycol temperature. Care must be taken to assure the selected chiller can still produce chilled glycol temperatures required for freezing. Since cooling loads with this method uses higher kw per ton rates, it is best suited for loads of smaller magnitude.

Smaller ice production window. Often the offpeak cooling loads can be of significant magnitude but of short duration. Most buildings can be precooled before occupancy in as little as two hours. Since this cooling is before occupancy it does not contribute to demand, and often enjoys a lower offpeak electrical rate. At higher chiller loading, with warmer evaporator temperatures, lower condenser temperatures, and lower electric rates, this can be the least costly cooling of the day. Preoccupancy cool down requires significant chiller capacity; often leaving little or no capacity for ice production.

Many building have significant activity after "normal" closing hours. These loads occur while ambient drybulb and wetbulb temperatures are still high. By deferring ice production until later night time hours, the overlap of ice production and comfort cooling can be eliminated. The efficiency of ice production is increased by deferring a greater portion of the load until cooler condensing temperatures can be achieved. The hours of ice production may be only nine hours even when utility offpeak hours may be twelve hours or more.

HOW IS THE CAPACITY OF THE ICE STORAGE TANK DETERMINED?

The selection of ice storage tanks must meet several design parameters. These include:

1. Storage capacity
2. Discharge rate
3. Charge rate
4. Required discharge temperature
5. Pressure drop

The ice storage system finally selected must provide both the required capacity (tonhours) and rate (tons) of cooling. A casual review of the hourly design day load profile would suggest that the design discharge rate is simply design tons less the capacity of the chiller finally installed. This would be true if the chiller were the sole contributor to the building electrical demand. However, this is not always the case. The building electrical demand has several contributors. Electrical system diversity may not coincide with building load diversity.

An ice storage system that can handle more than its fair share of the cooling load for short periods of time, when the energy management system can benefit most from major reductions in demand, offers an added advantage. Such ice storage systems are called demand limited systems.

The desired discharge rate is the rate that provides the greatest reduction in demand for a modest investment. There is not any fast and easy formula for determining the maximum affordable discharge rate. System designs that minimize chiller capacity and discharge rate may reduce system cost, but also severely limit system flexibility in operation. The greatest long term benefit from ice storage systems is derived from systems that have the flexibility to adapt to changing building utilization. This may require some surplus chiller and ice capacity in the initial design.

Ice storage vessels that store ice on the same heat exchanger that produces the ice serve two functions: storage and heat transfer. These two functions are combined in a single ice storage tank. For Example, a Calmac™ 1190 tank is comprised of a tank and a heat exchanger. The tank contains 13150 pounds of water. The btu difference between 13150 pounds of water at 60 °F and 13150 pounds of ice at 28 °F is 2,288,000 btu or 190 tons. From a storage point of view, a Calmac™ 1190 ice storage tank always contains 190 tonhours of cooling when completely frozen. However, to gain access to that cooling the system must add heat to the tank through the heat exchanger.

The performance of the ice storage heat exchanger affects the discharge rate and discharge temperature. Heat exchanger performance is a function of flow rate through each tank. When the flow rate is dictated by the system, the flow rate through each can be altered by increasing or decreasing the number of tanks. The heat exchange surface per tank is dictated by the ice storage tank design. When the tube surface required for heat transfer exceeds the surface required for storage, additional tanks are required and the quantity of ice stored in each tank is less than the nominal storage capacity. The reduction of utilized ice storage capacity per tank is called K factor. Simply stated, K factor equals the tube surface required for ice storage divided by the surface required for heat transfer.

The number and type of ice storage vessels selected also influences the pressure drop of the glycol loop. Not only is the pressure drop of the ice tank a concern, but the flowrate required to produce the desired amount of ice in the allowable time has a direct bearing on the pressure drop for the entire glycol pumping system. There is a significant benefit gained by maximizing the temperature rise in the ice storage tank during the charge cycle.

HOW IS THE TUBE SURFACE REQUIRED FOR HEAT TRANSFER DETERMINED?

The tube surface required for heat transfer is a function of flowrate (gpm) and desired discharge temperature. The heat transfer rate is roughly equivalent to the product of flow (gpm) and temperature drop (delta T).

$$\text{Heat Transfer Rate} \cong \text{gpm} \bullet \text{delta T}$$

Since gpm and delta T are inversely proportional, a given heat transfer rate can produce a large delta T (low discharge temperature) at low gpm; or large gpm (greater discharge rate) at smaller delta T (higher discharge temperatures). When both large discharge rates and low discharge temperature are required, the heat transfer rate must be increased (lower K factor). The relationship of gpm and delta T during discharge is defined by K factor and is determined by the ice tank manufacturer by testing. Manufacturer's data will indicate the required K factor for the application.

A similar temperature rise and flowrate relationship exist during the freeze cycle. However, during the charging cycle the heat transfer rate can be increased by simply lowering the fluid temperature produced by the chiller. Since flowrate (gpm) and temperature rise (delta T) are still proportional, lowering the

	TAG	FPF	MBH	LDB	LWB	APD	GPM	WTR	WPD	EWT	GLYCOL
1	WATER	132	454.9	55.4	54.8	.36	93.0	9.8	19.3	45.0	0.0
2	GLYCOL	132	419.5	56.5	55.8	.36	93.0	9.7	21.7	45.0	25.0
3	MORE FINS	168	454.7	55.1	54.8	.40	93.0	10.5	21.7	45.0	25.0
4	LESS GPM	132	412.2	56.7	56.0	.36	88.0	10.0	19.3	45.0	25.0
5	LOWER EWT	132	454.4	55.4	54.8	.36	88.0	11.1	19.4	42.3	25.0

Figure 10

chiller leaving fluid temperature greatly reduces gpm and pumping horsepower.

Not all ice storage tank designs result in the same nominal heat transfer rate. Metal tanks, due to expense, contain less heat transfer surface per tonhour of storage capacity. This is indicated by the higher flowrates and lower fluid temperatures required to achieve freezing. However, most metal tank designs melt ice by direct contact with water, resulting in higher K factors. While metal tanks can maintain lower discharge temperatures, the heat transfer rate is still determined by available surface, and tank manufactures should be consulted to determine the required heat transfer surface.

DOES ETHYLENE GLYCOL AFFECT PRESSURE DROP AND HEAT TRANSFER?

The addition of ethylene glycol to the chilled water system will reduce heat transfer efficiency, and therefore coil and chiller capacity. The reduction in coil capacity is in the order of 4-6 percent. This lost capacity can be recouped by increased tube velocity, increased temperature difference, or increased coil surface area.

The addition of ethylene glycol also increases the system pressure drop. The increased pressure drop can be negated by increased coil and chiller delta T, improved piping design, or the selection of low pressure drop coils.

The effect of ethylene glycol can be observed in the following delta flow coil selection. A four row, 132 fins per foot, coil is selected to cool 12000 cfm at 80/67 entering air conditions with a face velocity of 400 foot per minute. 93 gpm of 45 degree chilled water is used.

When 25 percent ethylene glycol is substituted as the the cooling fluid, capacity is lost while leaving air temperature and water pressure drop increase. (figure 10) The capacity can be regained by increasing coil surface to 168 fins per foot, at an increase of 0.04 inches wg.

Selections 4 and 5 illustrate the effect of increasing water temperature rise. The flowrate is reduced to 88 gpm to alleviate water pressure drop. Entering water temperature is reduced by less than 3 degrees to regain original coil capacity.

The effect of ethylene glycol on heat transfer and pressure drop is minimal and can be easily compensated. The impact increases with increasing glycol concentrations; keep glycol concentration to a minimum. When addressed in the design, the impact of glycol is easily tolerated. By allowing a lower leaving chiller temperature and therefore greater delta T, glycol affords greater savings in pipe cost and pumping horsepower.

IS THE ICE UPSTREAM OR DOWNSTREAM OF THE CHILLER?

Starting with the ice production mode as a base, next determine the location of the cooling loads relative to the chiller, ice storage tanks, and system pump.

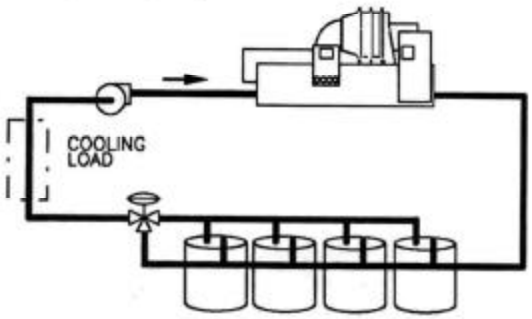

Figure 11

Ice downstream. This series arrangement is the most common. It allows the chiller to be preferentially loaded by returning chilled fluid from the cooling load directly to the chiller. (figure 11) This greatly simplifies controls by allowing both the chiller controls and the ice

storage controls to be set to the desired supply fluid temperature. Ice storage will contribute to meeting the load only after available chiller capacity is fully exploited. Ice contribution can be increased at any time by simply limiting the chiller.

This configuration allows the chiller to operate at higher leaving temperatures when chiller and ice are used concurrently. This increases chiller capacity and chiller performance during critical onpeak hours. By placing the ice storage tanks before the cooling load, warmer fluid (28 - 32 °F) is available for residual cooling loads during the ice production mode.

With the ice storage tanks downstream of the chiller, the ice storage discharge must produce leaving fluid temperatures suitable for cooling under all load conditions. For normal comfort cooling applications discharge fluid temperatures are suitable during most if not all of the discharge cycle. For applications requiring colder than normal fluid temperatures, the ice storage heat transfer surface can be increased (see K factor) or the chiller can be placed downstream of the ice storage tanks.

Ice upstream. By placing the chiller downstream of the ice storage tanks, colder than normal supply fluid temperatures can be guaranteed. (figure 12) This arrangement is found only in process cooling and low temperature air comfort cooling systems.

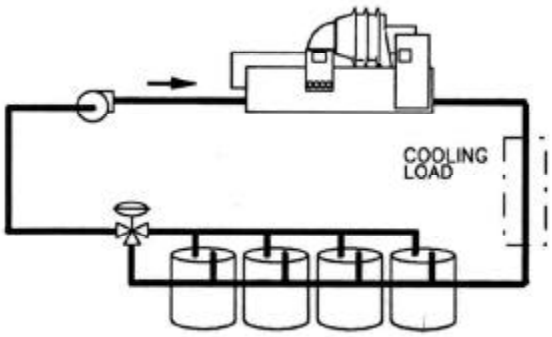

Figure 12

Controls are complicated by the necessity to constantly change the ice storage leaving fluid temperature control to obtain the desired ice contribution. Care must be taken to defer adequate load to the chiller and not consume the ice prematurely.

This configuration places the chiller at a disadvantage by demanding colder leaving fluid temperature while simultaneously denying the chiller of warmer entering fluid temperature. While this arrangement may provide the greatest storage capacity per tank, the added storage capacity comes at the cost of chiller performance. Maximizing per tank storage capacity in any arrangement is not difficult with an automated control system.

Either upstream or downstream, the chiller and ice are in series during all modes of cooling, providing the distribution system with greatly enhanced delta T capability. The larger system delta T reduces system cost and energy requirements. Neither arrangement requires a heat exchanger. Ethylene glycol solution is sent directly to the cooling coils.

Each arrangement supplies and returns cooling fluid from the same location. Drawing cooling fluid from one end of the chiller and returning it to the other end places the chiller, ice, and cooling load in parallel. Parallel configurations greatly complicate system hydronics and are usually reserved for systems with unusual requirements.

ARE TWO PUMPS REQUIRED?

Transfer of cold fluid to the cooling load may be accomplished by either a secondary pump or a diverting valve. (figure 13) A secondary pumping scheme is well suited for high system

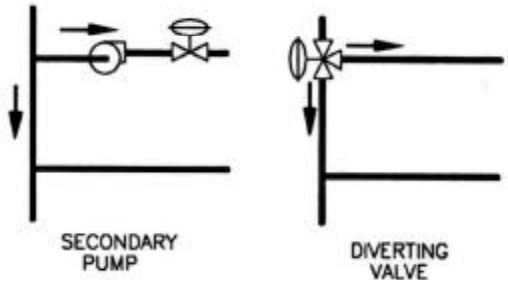

Figure 13

pressure losses or variable flow systems. A positive shutoff valve is required to prevent unwanted escape of cold fluid to the system during the ice production mode. A two position diverting valve may be a less complicated approach. However the pressure drop / gpm

relation of pump and system should be evaluated at both valve positions to assure flow remains within allowable limits.

WHEN IS A HEAT EXCHANGER REQUIRED?

Large campus type systems contain substantial volumes of water. Charging the entire chilled water loop with glycol solution may be an unwarranted expense. A heat exchanger can be employed to contain the glycol fluid to a small primary loop, separate from the main distribution system.

A heat exchanger may also be required to shield the Calmac™ ice storage tank from operating pressures in excess of 90 psi. A heat exchange may also be used to protect the glycol solution from a highly contaminated chilled water loop or a chilled water loop prone to leaking.

WHERE IS THE HEAT EXCHANGER LOCATED?

The heat exchanger can be located anywhere in the chilled water system where a chiller might be located. In large tonnage systems or in partial storage systems the ice storage system is only one of several sources of cooling. The location of the heat exchanger should assure compatibility with all other sources of cooling.

Equal loading is achieved by locating the the chilled water side of the heat exchanger between the chilled water return and supply. (figure 14) In this configuration the heat exchanger is parallel to other comfort cooling chillers in the chilled water system, or may act as the sole source of daytime cooling in total storage systems.

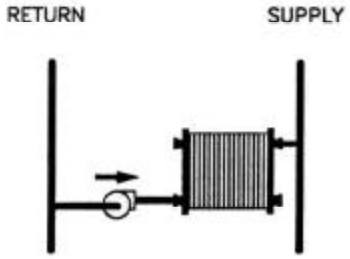

EQUAL LOADING

Figure 14

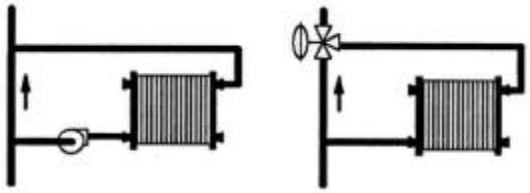

PREFERENTIAL LOADING

Figure 15

Preferential loading is achieved by returning water chilled by the heat exchanger to the same fluid stream from which it came. This can be accomplished by a diverting valve or a secondary pump. (figure 15) The ice storage system is preferentially loaded by placing the ice tanks in chilled water return. Placing the ice tanks in chilled water supply will preferentially load the chillers. Equally loaded or preferentially loaded, the heat exchanger capacity can be controlled by the glycol flow rate.

CONTROL

HOW IS THE CHILLER CONTROLLED?

Chiller control is a function of the type of ice storage system. Total storage systems and multiple chiller systems may operate the ice producing chiller at only one temperature. Additional chiller control may not be required when the chiller is selected and operated at only one condition. However, partial storage systems require the chiller to operate as both an ice maker and a conventional chiller. Control automation is required to initiate and terminate the production of ice.

The ice production cycle is initiated by time of day programming. In the ice producing mode the chiller is actually controlled by the ice storage tanks. The ice storage tanks must present a load greater than the ice producing capacity of the chiller. This allows the chiller to operate at maximum ice production capacity. It is undesirable to causes either a reciprocating or centrifugal chiller to unload during ice production.

Toward the end of the ice production cycle, as ice thickness reaches its maximum, chiller leaving fluid temperature and chiller delta T are lower. The chiller must operate safely at this final condition. In this mode, no chiller temperature controls are required to produce ice. The chiller simply operates at maximum capacity during the ice production cycle. Chiller controls only start and stop the chiller.

Ice production is terminated when the ice storage tanks reach full capacity, off peak rates end, or continued ice production interferes with building demand control or comfort cooling. Several methods are available to determine when the ice tanks are totally recharged. The simplest may be chiller return glycol temperature.

Transition from ice production to conventional chiller operation must proceed with out upsetting chiller safety controls. Rapid, major increases in return glycol temperature may increases motor amp draw faster than centrifugal chiller controls can respond, causing nuisance trips due motor current overload. Reciprocating chillers use a controller that has freeze protection "imbedded" in the temperature control. Reciprocating chillers may not return to conventional cooling duty until chiller leaving fluid temperature exceeds 35°F.

HOW IS THE ICE STORAGE CONTROLLED?

The discharge rate of the ice storage system is controlled by varying the fluid flow through the ice storage tanks. This is accomplish by a 3-way mixing or "tempering" valve. (figure 16)

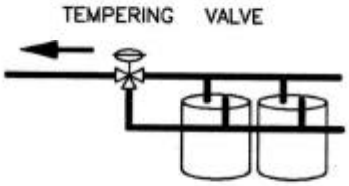

Figure 16

The valve attempts to maintain leaving fluid temperature by mixing cold fluid with warmer fluid bypassing the ice storage tanks. The valve is positioned to direct all the fluid through the tanks during the freezing cycle. In this mode, the tanks are a source of heat.

HOW IS THE HEAT EXCHANGER CONTROLLED?

The capacity of the heat exchanger can be controlled by any number of methods.

1. chilled water flow
2. glycol flow
3. chilled water temperature
4. glycol temperature.

A three way mixing valve in either the glycol loop or chilled water loop can be used for capacity control. A bypass valve is required on the glycol loop to prevent sending fluids at subfreezing temperatures to the heat exchanger during the freeze cycle. This same valve can be used to control heat exchanger capacity. The three way valve controls heat exchanger capacity by varying the quantity of glycol sent to the heat exchanger. (figure 17)

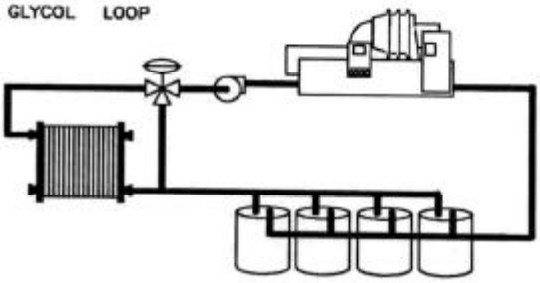

Figure 17

The capacity of the heat exchanger can also be controlled by the temperature or flow rate of chilled water. As the temperature of return water entering the heat exchanger increases, so does the capacity of the heat exchanger. During the melt cycle, the capacity of the heat exchanger is determined by the combined approach temperatures of the heat exchanger and the ice tanks. The temperature of the glycol determines the max capacity of the heat exchanger. Glycol temperatures vary between 33 to 45 °F during the melt cycle. A two to four degree approach at the heat exchanger will produce leaving chilled water temperatures between 35 and 49 °F if left uncontrolled. These temperatures are well within the range of normal comfort cooling applications. Control of the heat exchanger may not be required.. However, if the rate of melting is crucial to the control strategy, some form of capacity control is required.

A.6 CHILLER LIFE CYCLE AND OPTIMIZER COMPUTER RUNS / ECONOMIC ANALYSIS

5 Year Constant Dollar Cost Model

Chiller Combination A
Two new 1500 with vfds

Approximate Energy Cost

	Chilled Water		Condenser Water		Tons	KW/Ton	KW	Hours	kWH	Demand Cost	Energy Use Cost
	LWT ˚F	EWT ˚F	EWT ˚F	LWT ˚F						$8.78/kW/month	$0.0286340/kWH
	44	54	80		3647	0.425	1549.98	82	127098	$27,217.56	$3,639.32
	44	54	75		3282	0.406	1332.61	245	326490.4		$9,348.73
	44	54	80		2954	0.386	1140.27	263	299891.3	$20,023.16	$8,587.09
	44	54	75		2659	0.4	1063.47	313	332864.6		$9,531.25
	44	54	75		2393	0.372	890.12	392	348927.2	$7,815.26	$9,991.18
	44	54	70		2154	0.343	738.656	517	381885.3		$10,934.90
	44	54	75		1938	0.317	614.398	525	322559.2	$5,394.42	$9,236.16
	44	54	70		1744	0.287	500.628	575	287861.2		$8,242.62
	44	54	70		1570	0.273	428.586	721	309010.9		$8,848.22
	44	54	65		1413	0.267	377.25	685	258416.5		$7,399.50
	44	54	65		1272	0.29	368.773	752	277317.1	$3,237.82	$7,940.70

Annual Energy Cost	$157,387.87
5 Year Energy Cost:	$786,939.37
Chiller Purchase Price:	1,043,000
5 Year Life Cycle Evaluation Total:	$1,829,939.37

1. Executive Summary

System Part Load Value (SPLV):	**PLV**
Comination A	0.320 kW/Ton
IPLV or NPLV (ARI 550/590-1998):	
Carrier 1500 Ton VFD	0.296 kW/Ton
Trane 1250	0.354 kW/Ton
Carrier 1500 Ton VFD	0.296 kW/Ton
Trane 650	0.354 kW/Ton

2. Input Data Summary

Weather

City ..... Salt Lake City, Utah
Schedule ..... On All Day: Weekday
..... On All Day: Saturday
..... On All Day: Sunday

Loads

User-Defined Load Profile

Chiller System

Name ..... Comination A
Chillers in Plant 4
Plant Control ..... Sequenced
Full Load LCHWT ..... 44.0 F
Tower Configuration ..... One Tower for System
Cooling Tower ..... 6 Cell Tower(1)
..... Detailed Cooling Tower Model
Free Cooling ..... Plate-Frame Heat Exchanger

Sequence	Chiller Name	FL Capacity (Tons)	Full Load Power
CH-1	Carrier 1500 Ton VFD	1,500	0.482 kW/Ton
CH-2	Trane 1250	1,250	0.473 kW/Ton
CH-3	Carrier 1500 Ton VFD	1,500	0.482 kW/Ton
CH-4	Trane 650	650	0.473 kW/Ton

3. Chiller System Operating Conditions

Bin Temp (F)	Bin MCWB (F)	Building Load (%)	Building Load (Tons)	Chillers On	Chiller Load (%)
97.5	61.5	100	4,900	4	100
92.5	60.5	95	4,667	4	95
87.5	59.5	90	4,433	4	90
82.5	57.9	86	4,200	3	99
77.5	55.9	81	3,967	3	93
72.5	54.2	76	3,734	3	88
67.5	51.9	71	3,500	3	82
62.5	49.5	67	3,267	3	77
57.5	47.1	62	3,034	3	71
52.5	43.8	57	2,800	3	66
47.5	40.4	42	2,067	2	75
42.5	36.9	37	1,834	0	0
37.5	33.4	33	1,601	0	0
32.5	29.4	28	1,367	0	0
27.5	25.1	23	1,134	0	0
22.5	20.8	18	901	0	0
17.5	16.0	14	667	0	0
12.5	11.2	9	434	0	0
7.5	5.9	4	201	0	0

4a. Chiller System Performance

	CH-1				CH-2				CH-3			
Bin Temp (F)	Load (Tons)	(kW/ Ton)	Lchwt (F)	Cond Temp (F)	Load (Tons)	(kW/ Ton)	Lchwt (F)	Cond Temp (F)	Load (Tons)	(kW/ Ton)	Lchwt (F)	Cond Temp (F)
97.5	1,500	0.433	44.00	67.52	1,250	0.412	44.00	67.52	1,500	0.433	44.00	67.52
92.5	1,429	0.411	44.00	66.44	1,190	0.398	44.00	66.44	1,429	0.411	44.00	66.44
87.5	1,357	0.386	44.00	65.35	1,131	0.384	44.00	65.35	1,357	0.386	44.00	65.35
82.5	1,482	0.408	44.00	63.78	1,235	0.379	44.00	63.78	1,482	0.408	44.00	63.78
77.5	1,400	0.377	44.00	61.81	1,167	0.358	44.00	61.81	1,400	0.377	44.00	61.81
72.5	1,318	0.344	44.00	60.06	1,098	0.341	44.00	60.06	1,318	0.344	44.00	60.06
67.5	1,235	0.308	44.00	57.77	1,029	0.337	44.00	57.77	1,235	0.308	44.00	57.77
62.5	1,153	0.267	44.00	55.35	961	0.333	44.00	55.35	1,153	0.267	44.00	55.35
57.5	1,071	0.248	44.00	55.00	892	0.334	44.00	55.00	1,071	0.248	44.00	55.00
52.5	988	0.237	44.00	55.00	824	0.338	44.00	55.00	988	0.237	44.00	55.00
47.5	1,128	0.256	44.00	55.00	940	0.331	44.00	55.00	0	0.000	44.00	n/a
42.5	0	0.000	44.00	n/a	0	0.000	44.00	n/a	0	0.000	44.00	n/a
37.5	0	0.000	44.00	n/a	0	0.000	44.00	n/a	0	0.000	44.00	n/a
32.5	0	0.000	44.00	n/a	0	0.000	44.00	n/a	0	0.000	44.00	n/a
27.5	0	0.000	44.00	n/a	0	0.000	44.00	n/a	0	0.000	44.00	n/a
22.5	0	0.000	44.00	n/a	0	0.000	44.00	n/a	0	0.000	44.00	n/a
17.5	0	0.000	44.00	n/a	0	0.000	44.00	n/a	0	0.000	44.00	n/a
12.5	0	0.000	44.00	n/a	0	0.000	44.00	n/a	0	0.000	44.00	n/a
7.5	0	0.000	44.00	n/a	0	0.000	44.00	n/a	0	0.000	44.00	n/a

Minimum ECWT condition has been reached for chiller(s): CH-1, CH-2, CH-3
Tower cycling assumed to hold minimum ECWT.

4b. Chiller System Performance

	CH-4				System	
Bin Temp (F)	**Load (Tons)**	**(kW/ Ton)**	**Lchwt (F)**	**Cond Temp (F)**	**Total (kW)**	**Total (kW/Ton)**
97.5	650	0.412	44.00	67.52	2083	0.425
92.5	619	0.398	44.00	66.44	1894	0.406
87.5	588	0.384	44.00	65.35	1710	0.386
82.5	0	0.000	44.00	n/a	1678	0.400
77.5	0	0.000	44.00	n/a	1474	0.372
72.5	0	0.000	44.00	n/a	1282	0.343
67.5	0	0.000	44.00	n/a	1108	0.317
62.5	0	0.000	44.00	n/a	936	0.287
57.5	0	0.000	44.00	n/a	829	0.273
52.5	0	0.000	44.00	n/a	747	0.267
47.5	0	0.000	44.00	n/a	599	0.290
42.5	0	0.000	44.00	n/a	0	0.000
37.5	0	0.000	44.00	n/a	0	0.000
32.5	0	0.000	44.00	n/a	0	0.000
27.5	0	0.000	44.00	n/a	0	0.000
22.5	0	0.000	44.00	n/a	0	0.000
17.5	0	0.000	44.00	n/a	0	0.000
12.5	0	0.000	44.00	n/a	0	0.000
7.5	0	0.000	44.00	n/a	0	0.000

5. SPLV Worksheet

Bin Temp (F)	Building Load (%)	Building Load (Tons)	Cooling Hours	Cooling (Ton-hrs)	Bin Wgt Factor	System (kW/Ton)	Bin Ratio
97.5	100	4,900	82	401,800	0.0238	0.425	0.0560
92.5	95	4,667	245	1,143,345	0.0677	0.406	0.1668
87.5	90	4,433	263	1,165,992	0.0690	0.386	0.1790
82.5	86	4,200	313	1,314,645	0.0778	0.400	0.1948
77.5	81	3,967	392	1,555,008	0.0921	0.372	0.2478
72.5	76	3,734	517	1,930,256	0.1143	0.343	0.3329
67.5	71	3,500	525	1,837,650	0.1088	0.317	0.3437
62.5	67	3,267	575	1,878,525	0.1112	0.287	0.3883
57.5	62	3,034	721	2,187,308	0.1295	0.273	0.4740
52.5	57	2,800	685	1,918,293	0.1136	0.267	0.4259
47.5	42	2,067	752	1,554,459	0.0920	0.290	0.3175
42.5	37	1,834	776	0	0.0000	0.000	0.0000
37.5	33	1,601	857	0	0.0000	0.000	0.0000
32.5	28	1,367	828	0	0.0000	0.000	0.0000
27.5	23	1,134	671	0	0.0000	0.000	0.0000
22.5	18	901	221	0	0.0000	0.000	0.0000
17.5	14	667	135	0	0.0000	0.000	0.0000
12.5	9	434	70	0	0.0000	0.000	0.0000
7.5	4	201	132	0	0.0000	0.000	0.0000
Total:			5,070	16,887,281	1.0000		3.1267

Bin Wgt Factor = Bin Ton-hrs / Total Ton-hrs
Bin Ratio = [Bin Wgt Factor] / [System kW/Ton]
SPLV = 1 / [sum of Bin Ratios]
SPLV = 1 / [3.1267] = 0.320 kW/Ton

6. Procedure for Calculating IPLV for Chillers

Procedure for Calculating IPLV for Water-Cooled Electric Chillers

Chiller Load (%)	LCHWT (F)	Cond Temp (F)	Wgt Factor	Chiller (kW/Ton)	Bin Ratio
100	44.00	85.00	0.01	A	0.01/A
75	44.00	75.00	0.42	B	0.42/B
50	44.00	65.00	0.45	C	0.45/C
25	44.00	65.00	0.12	D	0.12/D
Total:			1.00		

IPLV = 1 / [sum of Bin Ratios]
IPLV = 1 / [0.10/A + 0.42/B + 0.45/C + 0.12/D]
per ARI Standard 550/590-1998

1. Summary of Custom Weighting Factors and ECWTs

	Custom Weighting Factors				Custom Entering Condenser Temperatures (F)			
Chiller	**25%**	**50%**	**75%**	**100%**	**25%**	**50%**	**75%**	**100%**
CH-1 - Carrier 1500 Ton VFD	0.000	0.000	0.558	0.442	n/a	n/a	55.6	63.0
CH-2 - Trane 1250	0.000	0.000	0.588	0.412	n/a	n/a	55.5	63.0
CH-3 - Carrier 1500 Ton VFD	0.000	0.000	0.558	0.442	n/a	n/a	55.6	63.0
CH-4 - Trane 650	0.000	0.000	0.000	1.000	n/a	n/a	n/a	66.1

2. Input Data Summary

Weather

City ..... Salt Lake City, Utah
Schedule ..... On All Day: Weekday
..... On All Day: Saturday
..... On All Day: Sunday

Loads

User-Defined Load Profile

Chiller System

Name ..... Comination A
Chillers in Plant 4
Plant Control ..... Sequenced
Full Load LCHWT ..... 44.0 F
Tower Configuration ..... One Tower for System
Cooling Tower ..... 6 Cell Tower(1)
..... Detailed Cooling Tower Model
Free Cooling ..... Plate-Frame Heat Exchanger

Sequence	Chiller Name	FL Capacity (Tons)	Full Load Power
CH-1	Carrier 1500 Ton VFD	1,500	0.482 kW/Ton
CH-2	Trane 1250	1,250	0.473 kW/Ton
CH-3	Carrier 1500 Ton VFD	1,500	0.482 kW/Ton
CH-4	Trane 650	650	0.473 kW/Ton

3. Chiller System Operating Conditions

Bin Temp (F)	Bin MCWB (F)	Building Load (%)	Building Load (Tons)	Chillers On	Chiller Load (%)
97.5	61.5	100	4,900	4	100
92.5	60.5	95	4,667	4	95
87.5	59.5	90	4,433	4	90
82.5	57.9	86	4,200	3	99
77.5	55.9	81	3,967	3	93
72.5	54.2	76	3,734	3	88
67.5	51.9	71	3,500	3	82
62.5	49.5	67	3,267	3	77
57.5	47.1	62	3,034	3	71
52.5	43.8	57	2,800	3	66
47.5	40.4	42	2,067	2	75
42.5	36.9	37	1,834	0	0
37.5	33.4	33	1,601	0	0
32.5	29.4	28	1,367	0	0
27.5	25.1	23	1,134	0	0
22.5	20.8	18	901	0	0
17.5	16.0	14	667	0	0
12.5	11.2	9	434	0	0
7.5	5.9	4	201	0	0

4a. Custom PLV Worksheet for CH-1 (Carrier 1500 Ton VFD)

Avg DB	Cond Temp	Total	CWH	Total	Load	Load	25% Bin		50% Bin		75% Bin		100% Bin	
(F)	(F)	(Hrs)		(Ton-hrs)	(Tons)	(%)	(CWH)	(Ton-hrs)	(CWH)	(Ton-hrs)	(CWH)	(Ton-hrs)	(CWH)	(Ton-hrs)
97.5	67.5	82	5,537	123,000	1,500	100	0	0	0	0	0	0	5,537	123,000
92.5	66.4	245	16,279	350,004	1,429	95	0	0	0	0	0	0	16,279	350,004
87.5	65.3	263	17,187	356,936	1,357	90	0	0	0	0	0	0	17,187	356,936
82.5	63.8	313	19,964	463,992	1,482	99	0	0	0	0	0	0	19,964	463,992
77.5	61.8	392	24,229	548,826	1,400	93	0	0	0	0	0	0	24,229	548,826
72.5	60.1	517	31,049	681,267	1,318	88	0	0	0	0	0	0	31,049	681,267
67.5	57.8	525	30,328	648,582	1,235	82	0	0	0	0	30,328	648,582	0	0
62.5	55.3	575	31,824	663,009	1,153	77	0	0	0	0	31,824	663,009	0	0
57.5	55.0	721	39,655	771,991	1,071	71	0	0	0	0	39,655	771,991	0	0
52.5	55.0	685	37,675	677,045	988	66	0	0	0	0	37,675	677,045	0	0
47.5	55.0	752	41,360	847,887	1,128	75	0	0	0	0	41,360	847,887	0	0
42.5	n/a	0	0	0	0	0	0	0	0	0	0	0	0	0
37.5	n/a	0	0	0	0	0	0	0	0	0	0	0	0	0
32.5	n/a	0	0	0	0	0	0	0	0	0	0	0	0	0
27.5	n/a	0	0	0	0	0	0	0	0	0	0	0	0	0
22.5	n/a	0	0	0	0	0	0	0	0	0	0	0	0	0
17.5	n/a	0	0	0	0	0	0	0	0	0	0	0	0	0
12.5	n/a	0	0	0	0	0	0	0	0	0	0	0	0	0
7.5	n/a	0	0	0	0	0	0	0	0	0	0	0	0	0
Totals:		5,070	295,086	6,132,540			0	0	0	0	180,842	3,608,514	114,244	2,524,026

4b. Custom PLV Worksheet for CH-2 (Trane 1250)

Avg DB (F)	Cond Temp (F)	Total (Hrs)	CWH	Total (Ton-hrs)	Load (Tons)	Load (%)	25% Bin		50% Bin		75% Bin		100% Bin	
							(CWH)	(Ton-hrs)	(CWH)	(Ton-hrs)	(CWH)	(Ton-hrs)	(CWH)	(Ton-hrs)
97.5	67.5	82	5,537	102,500	1,250	100	0	0	0	0	0	0	5,537	102,500
92.5	66.4	245	16,279	291,670	1,190	95	0	0	0	0	0	0	16,279	291,670
87.5	65.3	263	17,187	297,447	1,131	90	0	0	0	0	0	0	17,187	297,447
82.5	63.8	313	19,964	386,660	1,235	99	0	0	0	0	0	0	19,964	386,660
77.5	61.8	392	24,229	457,355	1,167	93	0	0	0	0	0	0	24,229	457,355
72.5	60.1	517	31,049	567,723	1,098	88	0	0	0	0	0	0	31,049	567,723
67.5	57.8	525	30,328	540,485	1,029	82	0	0	0	0	30,328	540,485	0	0
62.5	55.3	575	31,824	552,507	961	77	0	0	0	0	31,824	552,507	0	0
57.5	55.0	721	39,655	643,326	892	71	0	0	0	0	39,655	643,326	0	0
52.5	55.0	685	37,675	564,204	824	66	0	0	0	0	37,675	564,204	0	0
47.5	55.0	752	41,360	706,572	940	75	0	0	0	0	41,360	706,572	0	0
42.5	n/a	0	0	0	0	0	0	0	0	0	0	0	0	0
37.5	n/a	0	0	0	0	0	0	0	0	0	0	0	0	0
32.5	n/a	0	0	0	0	0	0	0	0	0	0	0	0	0
27.5	n/a	0	0	0	0	0	0	0	0	0	0	0	0	0
22.5	n/a	0	0	0	0	0	0	0	0	0	0	0	0	0
17.5	n/a	0	0	0	0	0	0	0	0	0	0	0	0	0
12.5	n/a	0	0	0	0	0	0	0	0	0	0	0	0	0
7.5	n/a	0	0	0	0	0	0	0	0	0	0	0	0	0
Totals:		5,070	295,086	5,110,450			0	0	0	0	180,842	3,007,095	114,244	2,103,355
Cust Wgt Factors:								0.000		0.000		0.588		0.412
Custom Entering Condenser Temperatures (F):								n/a		n/a		55.5		63.0

4c. Custom PLV Worksheet for CH-3 (Carrier 1500 Ton VFD)

Avg DB	Cond Temp	Total	CWH	Total	Load	Load	25% Bin		50% Bin		75% Bin		100% Bin	
(F)	(F)	(Hrs)		(Ton-hrs)	(Tons)	(%)	(CWH)	(Ton-hrs)	(CWH)	(Ton-hrs)	(CWH)	(Ton-hrs)	(CWH)	(Ton-hrs)
97.5	67.5	82	5,537	123,000	1,500	100	0	0	0	0	0	0	5,537	123,000
92.5	66.4	245	16,279	350,004	1,429	95	0	0	0	0	0	0	16,279	350,004
87.5	65.3	263	17,187	356,936	1,357	90	0	0	0	0	0	0	17,187	356,936
82.5	63.8	313	19,964	463,992	1,482	99	0	0	0	0	0	0	19,964	463,992
77.5	61.8	392	24,229	548,826	1,400	93	0	0	0	0	0	0	24,229	548,826
72.5	60.1	517	31,049	681,267	1,318	88	0	0	0	0	0	0	31,049	681,267
67.5	57.8	525	30,328	648,582	1,235	82	0	0	0	0	30,328	648,582	0	0
62.5	55.3	575	31,824	663,009	1,153	77	0	0	0	0	31,824	663,009	0	0
57.5	55.0	721	39,655	771,991	1,071	71	0	0	0	0	39,655	771,991	0	0
52.5	55.0	685	37,675	677,045	988	66	0	0	0	0	37,675	677,045	0	0
47.5	n/a	0	0	0	0	0	0	0	0	0	0	0	0	0
42.5	n/a	0	0	0	0	0	0	0	0	0	0	0	0	0
37.5	n/a	0	0	0	0	0	0	0	0	0	0	0	0	0
32.5	n/a	0	0	0	0	0	0	0	0	0	0	0	0	0
27.5	n/a	0	0	0	0	0	0	0	0	0	0	0	0	0
22.5	n/a	0	0	0	0	0	0	0	0	0	0	0	0	0
17.5	n/a	0	0	0	0	0	0	0	0	0	0	0	0	0
12.5	n/a	0	0	0	0	0	0	0	0	0	0	0	0	0
7.5	n/a	0	0	0	0	0	0	0	0	0	0	0	0	0
Totals:		4,318	253,726	5,284,653			0	0	0	0	139,482	2,760,627	114,244	2,524,026

4d. Custom PLV Worksheet for CH-4 (Trane 650)

Avg DB (F)	Cond Temp (F)	Total (Hrs)	CWH	Total (Ton-hrs)	Load (Tons)	Load (%)	25% Bin		50% Bin		75% Bin		100% Bin	
							(CWH)	(Ton-hrs)	(CWH)	(Ton-hrs)	(CWH)	(Ton-hrs)	(CWH)	(Ton-hrs)
97.5	67.5	82	5,537	53,300	650	100	0	0	0	0	0	0	5,537	53,300
92.5	66.4	245	16,279	151,668	619	95	0	0	0	0	0	0	16,279	151,668
87.5	65.3	263	17,187	154,672	588	90	0	0	0	0	0	0	17,187	154,672
82.5	n/a	0	0	0	0	0	0	0	0	0	0	0	0	0
77.5	n/a	0	0	0	0	0	0	0	0	0	0	0	0	0
72.5	n/a	0	0	0	0	0	0	0	0	0	0	0	0	0
67.5	n/a	0	0	0	0	0	0	0	0	0	0	0	0	0
62.5	n/a	0	0	0	0	0	0	0	0	0	0	0	0	0
57.5	n/a	0	0	0	0	0	0	0	0	0	0	0	0	0
52.5	n/a	0	0	0	0	0	0	0	0	0	0	0	0	0
47.5	n/a	0	0	0	0	0	0	0	0	0	0	0	0	0
42.5	n/a	0	0	0	0	0	0	0	0	0	0	0	0	0
37.5	n/a	0	0	0	0	0	0	0	0	0	0	0	0	0
32.5	n/a	0	0	0	0	0	0	0	0	0	0	0	0	0
27.5	n/a	0	0	0	0	0	0	0	0	0	0	0	0	0
22.5	n/a	0	0	0	0	0	0	0	0	0	0	0	0	0
17.5	n/a	0	0	0	0	0	0	0	0	0	0	0	0	0
12.5	n/a	0	0	0	0	0	0	0	0	0	0	0	0	0
7.5	n/a	0	0	0	0	0	0	0	0	0	0	0	0	0
Totals:		590	39,002	359,641			0	0	0	0	0	0	39,002	359,641
Cust Wgt Factors:								0.000		0.000		0.000		1.000
Custom Entering Condenser Temperatures (F):								n/a		n/a		n/a		66.1

KEY for Custom PLV Worksheet table(s):
[Avg DB] = Midpoint temperature for bin.
[Cond Temp] = Entering condenser temperature for bin. Entering water temperature for water-cooled chillers. Entering air temperature for air-cooled chillers.
[Tot Hrs] = Hours of operation in bin.
[CWH] = Condenser temperature hours. [Tot Hrs] times [Cond Temp]. Later used to derive the four average entering condenser temperature values for the PLV calculation.
[Load] = Chiller load for bin.
[Load (%)] = Chiller load as a percentage of full load capacity.
[Total (Ton-hrs)] = Chiller [Load] times [Tot Hrs]. Later used to derive the four weighting factors for the PLV calculation.
[Bin (CWH)] = [CWH] values separated into the four PLV bins: 25%, 50%, 75% and 100% load according to chiller load for each bin.
[Bin (Ton-hrs)] = Values separated into the four PLV bins: 25%, 50%, 75% and 100% load according to the chiller load for each bin.
[Cust Wgt Factor] = The four custom PLV weighting factors. [Total (Ton-hrs)] for PLV Bin divided by [Total (Ton-hrs)] for the chiller.
[Cust Ent Cond Temps] = The four custom condenser temperature values for the PLV calculation = [Total (CWH)] for PLV bin divided by [Tot Hrs] in the PLV bin.

5a. Average Weighting Factors and Entering Condenser Temperatures (CH-1, CH-3)

	25% Bin			50% Bin			75% Bin			100% Bin		
Chiller	**Hrs**	**CWH**	**Ton-hrs**	**Hrs**	**CWH**	**Ton-hrs**	**Hrs**	**CWH**	**Ton-hrs**	**Hrs**	**CWH**	**Ton-hrs**
CH-1	0	0	0	0	0	0	3,258	180,842	3,608,514	1,812	114,244	2,524,026
CH-3	0	0	0	0	0	0	2,506	139,482	2,760,627	1,812	114,244	2,524,026
Totals:	0	0	0	0	0	0	5,764	320,324	6,369,141	3,624	228,489	5,048,051
Cust Wgt Factor:			0.000			0.000			0.558			0.442
Cust Ent Cond Temps (F):			n/a			n/a			55.6			63.0

Grand Total Ton-hrs = 11,417,192

Average weighting factors and entering condenser temperatures are calculated because the following chillers are all identical: CH-1, CH-3. Over the life of the chiller plant, these chillers will be rotated to operate in each of the CH-1, CH-3 sequencing positions. Therefore, a lifecycle PLV must consider each chiller operating in each of these sequencing positions.

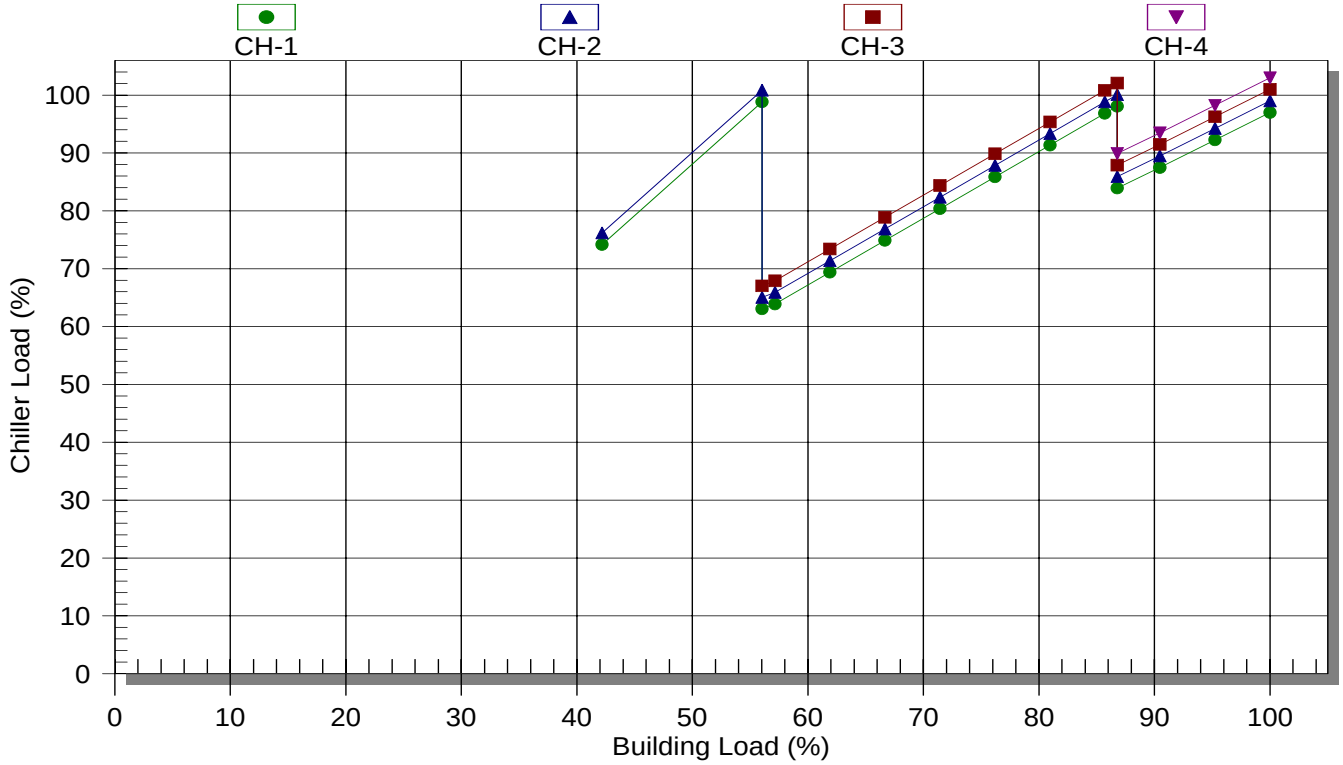

Note: Individual chiller curves in this graph have been adjusted up or down so the number of chillers operating at each point can be seen. If the curves had not been adjusted, all curves would lie on top of each other. Because of the adjustment each chiller load shown on the graph is only accurate to within a few percentage points plus or minus of the original calculated values.

2. Input Data Summary

Weather

City ..... Salt Lake City, Utah
Schedule ..... On All Day: Weekday
..... On All Day: Saturday
..... On All Day: Sunday

Loads

User-Defined Load Profile

Chiller System

Name ..... Comination A
Chillers in Plant 4
Plant Control ..... Sequenced
Full Load LCHWT ..... 44.0 F
Tower Configuration ..... One Tower for System
Cooling Tower ..... 6 Cell Tower(1)
..... Detailed Cooling Tower Model
Free Cooling ..... Plate-Frame Heat Exchanger

Sequence	Chiller Name	FL Capacity (Tons)	Full Load Power
CH-1	Carrier 1500 Ton VFD	1,500	0.482 kW/Ton
CH-2	Trane 1250	1,250	0.473 kW/Ton
CH-3	Carrier 1500 Ton VFD	1,500	0.482 kW/Ton
CH-4	Trane 650	650	0.473 kW/Ton

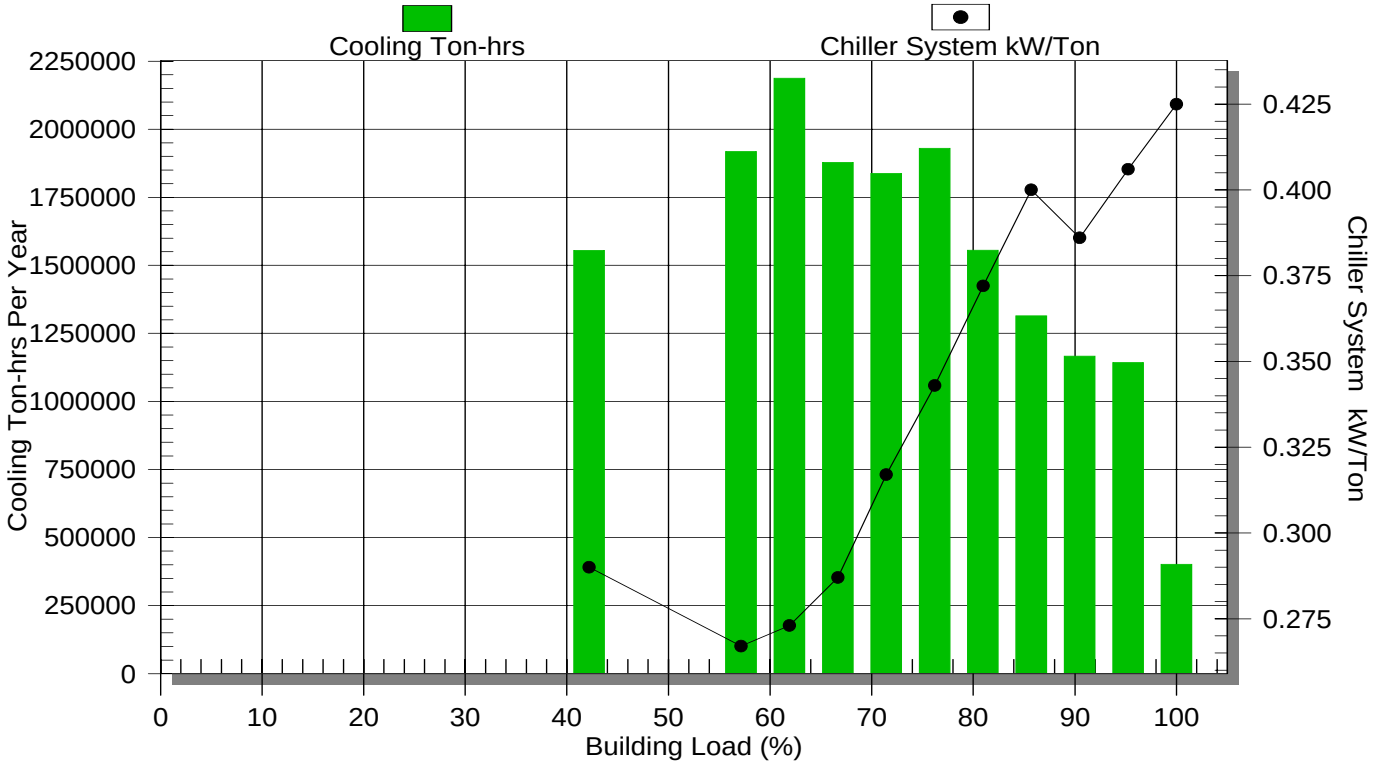

2. Input Data Summary

Weather

City ..... Salt Lake City, Utah
Schedule ..... On All Day: Weekday
..... On All Day: Saturday
..... On All Day: Sunday

Loads

User-Defined Load Profile

Chiller System

Name ..... Comination A
Chillers in Plant 4
Plant Control ..... Sequenced
Full Load LCHWT ..... 44.0 F
Tower Configuration ..... One Tower for System
Cooling Tower ..... 6 Cell Tower(1)
..... Detailed Cooling Tower Model
Free Cooling ..... Plate-Frame Heat Exchanger

Sequence	Chiller Name	FL Capacity (Tons)	Full Load Power
CH-1	Carrier 1500 Ton VFD	1,500	0.482 kW/Ton
CH-2	Trane 1250	1,250	0.473 kW/Ton
CH-3	Carrier 1500 Ton VFD	1,500	0.482 kW/Ton
CH-4	Trane 650	650	0.473 kW/Ton

5 Year Constant Dollar Cost Model

Chiller Combination A-1
One new 1500 with vfd, one without

Approximate Energy Cost

	Chilled Water		Condenser Water		Tons	KW/Ton	KW	Hours	kWH	Demand Cost	Energy Use Cost
	LWT ˚F	EWT ˚F	EWT ˚F	LWT ˚F						$8.78/kW/month	$0.0286340/kWH
	44	54	80		3647	0.425	1549.98	82	127098	$27,217.56	$3,639.32
	44	54	75		3282	0.412	1352.31	245	331315.4		$9,486.88
	44	54	80		2954	0.397	1172.77	263	308437.4	$20,593.77	$8,831.80
	44	54	75		2659	0.405	1076.76	313	337025.4		$9,650.39
	44	54	75		2393	0.386	923.62	392	362058.9	$8,109.38	$10,367.19
	44	54	70		2154	0.367	790.341	517	408606.2		$11,700.03
	44	54	75		1938	0.351	680.296	525	357155.4	$5,973.00	$10,226.79
	44	54	70		1744	0.334	582.612	575	335002.2		$9,592.45
	44	54	70		1570	0.328	514.932	721	371265.8		$10,630.82
	44	54	65		1413	0.326	460.613	685	315519.7		$9,034.59
	44	54	65		1272	0.29	368.773	752	277317.1	$3,237.82	$7,940.70

Annual Energy Cost	$166,232.50
5 Year Energy Cost:	$831,162.50
Chiller Purchase Price:	998,000
5 Year Life Cycle Evaluation Total:	$1,829,162.50

1. Executive Summary

System Part Load Value (SPLV):	**PLV**
Combination A-1	0.352 kW/Ton
IPLV or NPLV (ARI 550/590-1998):	
Carrier 1500 Ton VFD	0.296 kW/Ton
Trane 1250	0.354 kW/Ton
Carrier 1500 Ton Constant	0.449 kW/Ton
Trane 650	0.354 kW/Ton

2. Input Data Summary

Weather

City ..... Salt Lake City, Utah
Schedule ..... On All Day: Weekday
..... On All Day: Saturday
..... On All Day: Sunday

Loads

User-Defined Load Profile

Chiller System

Name ..... Combination A-1
Chillers in Plant 4
Plant Control ..... Sequenced
Full Load LCHWT ..... 44.0 F
Tower Configuration ..... One Tower for System
Cooling Tower ..... 6 Cell Tower(2)
..... Detailed Cooling Tower Model
Free Cooling ..... Plate-Frame Heat Exchanger

Sequence	Chiller Name	FL Capacity (Tons)	Full Load Power
CH-1	Carrier 1500 Ton VFD	1,500	0.482 kW/Ton
CH-2	Trane 1250	1,250	0.473 kW/Ton
CH-3	Carrier 1500 Ton Constant	1,500	0.458 kW/Ton
CH-4	Trane 650	650	0.473 kW/Ton

3. Chiller System Operating Conditions

Bin Temp (F)	Bin MCWB (F)	Building Load (%)	Building Load (Tons)	Chillers On	Chiller Load (%)
97.5	61.5	100	4,900	4	100
92.5	60.5	95	4,667	4	95
87.5	59.5	90	4,433	4	90
82.5	57.9	86	4,200	3	99
77.5	55.9	81	3,967	3	93
72.5	54.2	76	3,734	3	88
67.5	51.9	71	3,500	3	82
62.5	49.5	67	3,267	3	77
57.5	47.1	62	3,034	3	71
52.5	43.8	57	2,800	3	66
47.5	40.4	42	2,067	2	75
42.5	36.9	37	1,834	0	0
37.5	33.4	33	1,601	0	0
32.5	29.4	28	1,367	0	0
27.5	25.1	23	1,134	0	0
22.5	20.8	18	901	0	0
17.5	16.0	14	667	0	0
12.5	11.2	9	434	0	0
7.5	5.9	4	201	0	0

4a. Chiller System Performance

	CH-1				CH-2				CH-3			
Bin Temp (F)	**Load (Tons)**	**(kW/ Ton)**	**Lchwt (F)**	**Cond Temp (F)**	**Load (Tons)**	**(kW/ Ton)**	**Lchwt (F)**	**Cond Temp (F)**	**Load (Tons)**	**(kW/ Ton)**	**Lchwt (F)**	**Cond Temp (F)**
97.5	1,500	0.433	44.00	67.53	1,250	0.413	44.00	67.53	1,500	0.434	44.00	67.53
92.5	1,429	0.411	44.00	66.46	1,190	0.398	44.00	66.46	1,429	0.429	44.00	66.46
87.5	1,357	0.387	44.00	65.37	1,131	0.385	44.00	65.37	1,357	0.425	44.00	65.37
82.5	1,482	0.408	44.00	63.80	1,235	0.379	44.00	63.80	1,482	0.423	44.00	63.80
77.5	1,400	0.377	44.00	61.83	1,167	0.359	44.00	61.83	1,400	0.416	44.00	61.83
72.5	1,318	0.345	44.00	60.09	1,098	0.341	44.00	60.09	1,318	0.411	44.00	60.09
67.5	1,235	0.308	44.00	57.82	1,029	0.337	44.00	57.82	1,235	0.406	44.00	57.82
62.5	1,153	0.268	44.00	55.42	961	0.333	44.00	55.42	1,153	0.403	44.00	55.42
57.5	1,071	0.248	44.00	55.00	892	0.334	44.00	55.00	1,071	0.403	44.00	55.00
52.5	988	0.237	44.00	55.00	824	0.338	44.00	55.00	988	0.405	44.00	55.00
47.5	1,128	0.256	44.00	55.00	940	0.331	44.00	55.00	0	0.000	44.00	n/a
42.5	0	0.000	44.00	n/a	0	0.000	44.00	n/a	0	0.000	44.00	n/a
37.5	0	0.000	44.00	n/a	0	0.000	44.00	n/a	0	0.000	44.00	n/a
32.5	0	0.000	44.00	n/a	0	0.000	44.00	n/a	0	0.000	44.00	n/a
27.5	0	0.000	44.00	n/a	0	0.000	44.00	n/a	0	0.000	44.00	n/a
22.5	0	0.000	44.00	n/a	0	0.000	44.00	n/a	0	0.000	44.00	n/a
17.5	0	0.000	44.00	n/a	0	0.000	44.00	n/a	0	0.000	44.00	n/a
12.5	0	0.000	44.00	n/a	0	0.000	44.00	n/a	0	0.000	44.00	n/a
7.5	0	0.000	44.00	n/a	0	0.000	44.00	n/a	0	0.000	44.00	n/a

Minimum ECWT condition has been reached for chiller(s): CH-1, CH-2, CH-3
Tower cycling assumed to hold minimum ECWT.

4b. Chiller System Performance

	CH-4				System	
Bin Temp (F)	**Load (Tons)**	**(kW/ Ton)**	**Lchwt (F)**	**Cond Temp (F)**	**Total (kW)**	**Total (kW/Ton)**
97.5	650	0.413	44.00	67.53	2084	0.425
92.5	619	0.398	44.00	66.46	1921	0.412
87.5	588	0.385	44.00	65.37	1762	0.397
82.5	0	0.000	44.00	n/a	1700	0.405
77.5	0	0.000	44.00	n/a	1530	0.386
72.5	0	0.000	44.00	n/a	1370	0.367
67.5	0	0.000	44.00	n/a	1230	0.351
62.5	0	0.000	44.00	n/a	1093	0.334
57.5	0	0.000	44.00	n/a	995	0.328
52.5	0	0.000	44.00	n/a	913	0.326
47.5	0	0.000	44.00	n/a	599	0.290
42.5	0	0.000	44.00	n/a	0	0.000
37.5	0	0.000	44.00	n/a	0	0.000
32.5	0	0.000	44.00	n/a	0	0.000
27.5	0	0.000	44.00	n/a	0	0.000
22.5	0	0.000	44.00	n/a	0	0.000
17.5	0	0.000	44.00	n/a	0	0.000
12.5	0	0.000	44.00	n/a	0	0.000
7.5	0	0.000	44.00	n/a	0	0.000

5. SPLV Worksheet

Bin Temp (F)	Building Load (%)	Building Load (Tons)	Cooling Hours	Cooling (Ton-hrs)	Bin Wgt Factor	System (kW/Ton)	Bin Ratio
97.5	100	4,900	82	401,800	0.0238	0.425	0.0559
92.5	95	4,667	245	1,143,345	0.0677	0.412	0.1645
87.5	90	4,433	263	1,165,992	0.0690	0.397	0.1737
82.5	86	4,200	313	1,314,645	0.0778	0.405	0.1923
77.5	81	3,967	392	1,555,008	0.0921	0.386	0.2388
72.5	76	3,734	517	1,930,256	0.1143	0.367	0.3114
67.5	71	3,500	525	1,837,650	0.1088	0.351	0.3097
62.5	67	3,267	575	1,878,525	0.1112	0.334	0.3326
57.5	62	3,034	721	2,187,308	0.1295	0.328	0.3949
52.5	57	2,800	685	1,918,293	0.1136	0.326	0.3484
47.5	42	2,067	752	1,554,459	0.0920	0.290	0.3175
42.5	37	1,834	776	0	0.0000	0.000	0.0000
37.5	33	1,601	857	0	0.0000	0.000	0.0000
32.5	28	1,367	828	0	0.0000	0.000	0.0000
27.5	23	1,134	671	0	0.0000	0.000	0.0000
22.5	18	901	221	0	0.0000	0.000	0.0000
17.5	14	667	135	0	0.0000	0.000	0.0000
12.5	9	434	70	0	0.0000	0.000	0.0000
7.5	4	201	132	0	0.0000	0.000	0.0000
Total:			5,070	16,887,281	1.0000		2.8398

Bin Wgt Factor = Bin Ton-hrs / Total Ton-hrs
Bin Ratio = [Bin Wgt Factor] / [System kW/Ton]
SPLV = 1 / [sum of Bin Ratios]
SPLV = 1 / [2.8398] = 0.352 kW/Ton

6. Procedure for Calculating IPLV for Chillers

Procedure for Calculating IPLV for Water-Cooled Electric Chillers

Chiller Load (%)	LCHWT (F)	Cond Temp (F)	Wgt Factor	Chiller (kW/Ton)	Bin Ratio
100	44.00	85.00	0.01	A	0.01/A
75	44.00	75.00	0.42	B	0.42/B
50	44.00	65.00	0.45	C	0.45/C
25	44.00	65.00	0.12	D	0.12/D
Total:			1.00		

IPLV = 1 / [sum of Bin Ratios]
IPLV = 1 / [0.10/A + 0.42/B + 0.45/C + 0.12/D]
per ARI Standard 550/590-1998

1. Summary of Custom Weighting Factors and ECWTs

	Custom Weighting Factors				Custom Entering Condenser Temperatures (F)			
Chiller	**25%**	**50%**	**75%**	**100%**	**25%**	**50%**	**75%**	**100%**
CH-1 - Carrier 1500 Ton VFD	0.000	0.000	0.588	0.412	n/a	n/a	55.5	63.1
CH-2 - Trane 1250	0.000	0.000	0.588	0.412	n/a	n/a	55.5	63.1
CH-3 - Carrier 1500 Ton Constant	0.000	0.000	0.522	0.478	n/a	n/a	55.7	63.1
CH-4 - Trane 650	0.000	0.000	0.000	1.000	n/a	n/a	n/a	66.1

2. Input Data Summary

Weather

City ..... Salt Lake City, Utah
Schedule ..... On All Day: Weekday
..... On All Day: Saturday
..... On All Day: Sunday

Loads

User-Defined Load Profile

Chiller System

Name ..... Combination A-1
Chillers in Plant 4
Plant Control ..... Sequenced
Full Load LCHWT ..... 44.0 F
Tower Configuration ..... One Tower for System
Cooling Tower ..... 6 Cell Tower(2)
..... Detailed Cooling Tower Model
Free Cooling ..... Plate-Frame Heat Exchanger

Sequence	Chiller Name	FL Capacity (Tons)	Full Load Power
CH-1	Carrier 1500 Ton VFD	1,500	0.482 kW/Ton
CH-2	Trane 1250	1,250	0.473 kW/Ton
CH-3	Carrier 1500 Ton Constant	1,500	0.458 kW/Ton
CH-4	Trane 650	650	0.473 kW/Ton

3. Chiller System Operating Conditions

Bin Temp (F)	Bin MCWB (F)	Building Load (%)	Building Load (Tons)	Chillers On	Chiller Load (%)
97.5	61.5	100	4,900	4	100
92.5	60.5	95	4,667	4	95
87.5	59.5	90	4,433	4	90
82.5	57.9	86	4,200	3	99
77.5	55.9	81	3,967	3	93
72.5	54.2	76	3,734	3	88
67.5	51.9	71	3,500	3	82
62.5	49.5	67	3,267	3	77
57.5	47.1	62	3,034	3	71
52.5	43.8	57	2,800	3	66
47.5	40.4	42	2,067	2	75
42.5	36.9	37	1,834	0	0
37.5	33.4	33	1,601	0	0
32.5	29.4	28	1,367	0	0
27.5	25.1	23	1,134	0	0
22.5	20.8	18	901	0	0
17.5	16.0	14	667	0	0
12.5	11.2	9	434	0	0
7.5	5.9	4	201	0	0

4a. Custom PLV Worksheet for CH-1 (Carrier 1500 Ton VFD)

Avg DB	Cond Temp	Total	CWH	Total	Load	Load	25% Bin		50% Bin		75% Bin		100% Bin	
(F)	(F)	(Hrs)		(Ton-hrs)	(Tons)	(%)	(CWH)	(Ton-hrs)	(CWH)	(Ton-hrs)	(CWH)	(Ton-hrs)	(CWH)	(Ton-hrs)
97.5	67.5	82	5,537	123,000	1,500	100	0	0	0	0	0	0	5,537	123,000
92.5	66.5	245	16,282	350,004	1,429	95	0	0	0	0	0	0	16,282	350,004
87.5	65.4	263	17,192	356,936	1,357	90	0	0	0	0	0	0	17,192	356,936
82.5	63.8	313	19,968	463,992	1,482	99	0	0	0	0	0	0	19,968	463,992
77.5	61.8	392	24,239	548,826	1,400	93	0	0	0	0	0	0	24,239	548,826
72.5	60.1	517	31,068	681,267	1,318	88	0	0	0	0	0	0	31,068	681,267
67.5	57.8	525	30,355	648,582	1,235	82	0	0	0	0	30,355	648,582	0	0
62.5	55.4	575	31,865	663,009	1,153	77	0	0	0	0	31,865	663,009	0	0
57.5	55.0	721	39,655	771,991	1,071	71	0	0	0	0	39,655	771,991	0	0
52.5	55.0	685	37,675	677,045	988	66	0	0	0	0	37,675	677,045	0	0
47.5	55.0	752	41,360	847,887	1,128	75	0	0	0	0	41,360	847,887	0	0
42.5	n/a	0	0	0	0	0	0	0	0	0	0	0	0	0
37.5	n/a	0	0	0	0	0	0	0	0	0	0	0	0	0
32.5	n/a	0	0	0	0	0	0	0	0	0	0	0	0	0
27.5	n/a	0	0	0	0	0	0	0	0	0	0	0	0	0
22.5	n/a	0	0	0	0	0	0	0	0	0	0	0	0	0
17.5	n/a	0	0	0	0	0	0	0	0	0	0	0	0	0
12.5	n/a	0	0	0	0	0	0	0	0	0	0	0	0	0
7.5	n/a	0	0	0	0	0	0	0	0	0	0	0	0	0
Totals:		5,070	295,197	6,132,540			0	0	0	0	180,910	3,608,514	114,287	2,524,026
Cust Wgt Factors:								0.000		0.000		0.588		0.412
Custom Entering Condenser Temperatures (F):								n/a		n/a		55.5		63.1

4b. Custom PLV Worksheet for CH-2 (Trane 1250)

Avg DB (F)	Cond Temp (F)	Total (Hrs)	CWH	Total (Ton-hrs)	Load (Tons)	Load (%)	25% Bin		50% Bin		75% Bin		100% Bin	
							(CWH)	(Ton-hrs)	(CWH)	(Ton-hrs)	(CWH)	(Ton-hrs)	(CWH)	(Ton-hrs)
97.5	67.5	82	5,537	102,500	1,250	100	0	0	0	0	0	0	5,537	102,500
92.5	66.5	245	16,282	291,670	1,190	95	0	0	0	0	0	0	16,282	291,670
87.5	65.4	263	17,192	297,447	1,131	90	0	0	0	0	0	0	17,192	297,447
82.5	63.8	313	19,968	386,660	1,235	99	0	0	0	0	0	0	19,968	386,660
77.5	61.8	392	24,239	457,355	1,167	93	0	0	0	0	0	0	24,239	457,355
72.5	60.1	517	31,068	567,723	1,098	88	0	0	0	0	0	0	31,068	567,723
67.5	57.8	525	30,355	540,485	1,029	82	0	0	0	0	30,355	540,485	0	0
62.5	55.4	575	31,865	552,507	961	77	0	0	0	0	31,865	552,507	0	0
57.5	55.0	721	39,655	643,326	892	71	0	0	0	0	39,655	643,326	0	0
52.5	55.0	685	37,675	564,204	824	66	0	0	0	0	37,675	564,204	0	0
47.5	55.0	752	41,360	706,572	940	75	0	0	0	0	41,360	706,572	0	0
42.5	n/a	0	0	0	0	0	0	0	0	0	0	0	0	0
37.5	n/a	0	0	0	0	0	0	0	0	0	0	0	0	0
32.5	n/a	0	0	0	0	0	0	0	0	0	0	0	0	0
27.5	n/a	0	0	0	0	0	0	0	0	0	0	0	0	0
22.5	n/a	0	0	0	0	0	0	0	0	0	0	0	0	0
17.5	n/a	0	0	0	0	0	0	0	0	0	0	0	0	0
12.5	n/a	0	0	0	0	0	0	0	0	0	0	0	0	0
7.5	n/a	0	0	0	0	0	0	0	0	0	0	0	0	0
Totals:		5,070	295,197	5,110,450			0	0	0	0	180,910	3,007,095	114,287	2,103,355
Cust Wgt Factors:								0.000		0.000		0.588		0.412
Custom Entering Condenser Temperatures (F):								n/a		n/a		55.5		63.1

4c. Custom PLV Worksheet for CH-3 (Carrier 1500 Ton Constant)

Avg DB	Cond Temp	Total	CWH	Total	Load	Load	25% Bin		50% Bin		75% Bin		100% Bin	
(F)	(F)	(Hrs)		(Ton-hrs)	(Tons)	(%)	(CWH)	(Ton-hrs)	(CWH)	(Ton-hrs)	(CWH)	(Ton-hrs)	(CWH)	(Ton-hrs)
97.5	67.5	82	5,537	123,000	1,500	100	0	0	0	0	0	0	5,537	123,000
92.5	66.5	245	16,282	350,004	1,429	95	0	0	0	0	0	0	16,282	350,004
87.5	65.4	263	17,192	356,936	1,357	90	0	0	0	0	0	0	17,192	356,936
82.5	63.8	313	19,968	463,992	1,482	99	0	0	0	0	0	0	19,968	463,992
77.5	61.8	392	24,239	548,826	1,400	93	0	0	0	0	0	0	24,239	548,826
72.5	60.1	517	31,068	681,267	1,318	88	0	0	0	0	0	0	31,068	681,267
67.5	57.8	525	30,355	648,582	1,235	82	0	0	0	0	30,355	648,582	0	0
62.5	55.4	575	31,865	663,009	1,153	77	0	0	0	0	31,865	663,009	0	0
57.5	55.0	721	39,655	771,991	1,071	71	0	0	0	0	39,655	771,991	0	0
52.5	55.0	685	37,675	677,045	988	66	0	0	0	0	37,675	677,045	0	0
47.5	n/a	0	0	0	0	0	0	0	0	0	0	0	0	0
42.5	n/a	0	0	0	0	0	0	0	0	0	0	0	0	0
37.5	n/a	0	0	0	0	0	0	0	0	0	0	0	0	0
32.5	n/a	0	0	0	0	0	0	0	0	0	0	0	0	0
27.5	n/a	0	0	0	0	0	0	0	0	0	0	0	0	0
22.5	n/a	0	0	0	0	0	0	0	0	0	0	0	0	0
17.5	n/a	0	0	0	0	0	0	0	0	0	0	0	0	0
12.5	n/a	0	0	0	0	0	0	0	0	0	0	0	0	0
7.5	n/a	0	0	0	0	0	0	0	0	0	0	0	0	0
Totals:		4,318	253,837	5,284,653			0	0	0	0	139,550	2,760,627	114,287	2,524,026
Cust Wgt Factors:								0.000		0.000		0.522		0.478
Custom Entering Condenser Temperatures (F):								n/a		n/a		55.7		63.1

4d. Custom PLV Worksheet for CH-4 (Trane 650)

Avg DB (F)	Cond Temp (F)	Total (Hrs)	CWH	Total (Ton-hrs)	Load (Tons)	Load (%)	25% Bin		50% Bin		75% Bin		100% Bin	
							(CWH)	(Ton-hrs)	(CWH)	(Ton-hrs)	(CWH)	(Ton-hrs)	(CWH)	(Ton-hrs)
97.5	67.5	82	5,537	53,300	650	100	0	0	0	0	0	0	5,537	53,300
92.5	66.5	245	16,282	151,668	619	95	0	0	0	0	0	0	16,282	151,668
87.5	65.4	263	17,192	154,672	588	90	0	0	0	0	0	0	17,192	154,672
82.5	n/a	0	0	0	0	0	0	0	0	0	0	0	0	0
77.5	n/a	0	0	0	0	0	0	0	0	0	0	0	0	0
72.5	n/a	0	0	0	0	0	0	0	0	0	0	0	0	0
67.5	n/a	0	0	0	0	0	0	0	0	0	0	0	0	0
62.5	n/a	0	0	0	0	0	0	0	0	0	0	0	0	0
57.5	n/a	0	0	0	0	0	0	0	0	0	0	0	0	0
52.5	n/a	0	0	0	0	0	0	0	0	0	0	0	0	0
47.5	n/a	0	0	0	0	0	0	0	0	0	0	0	0	0
42.5	n/a	0	0	0	0	0	0	0	0	0	0	0	0	0
37.5	n/a	0	0	0	0	0	0	0	0	0	0	0	0	0
32.5	n/a	0	0	0	0	0	0	0	0	0	0	0	0	0
27.5	n/a	0	0	0	0	0	0	0	0	0	0	0	0	0
22.5	n/a	0	0	0	0	0	0	0	0	0	0	0	0	0
17.5	n/a	0	0	0	0	0	0	0	0	0	0	0	0	0
12.5	n/a	0	0	0	0	0	0	0	0	0	0	0	0	0
7.5	n/a	0	0	0	0	0	0	0	0	0	0	0	0	0
Totals:		590	39,012	359,641			0	0	0	0	0	0	39,012	359,641
Cust Wgt Factors:								0.000		0.000		0.000		1.000
Custom Entering Condenser Temperatures (F):								n/a		n/a		n/a		66.1

KEY for Custom PLV Worksheet table(s):
[Avg DB] = Midpoint temperature for bin.
[Cond Temp] = Entering condenser temperature for bin. Entering water temperature for water-cooled chillers. Entering air temperature for air-cooled chillers.
[Tot Hrs] = Hours of operation in bin.
[CWH] = Condenser temperature hours. [Tot Hrs] times [Cond Temp]. Later used to derive the four average entering condenser temperature values for the PLV calculation.
[Load] = Chiller load for bin.
[Load (%)] = Chiller load as a percentage of full load capacity.
[Total (Ton-hrs)] = Chiller [Load] times [Tot Hrs]. Later used to derive the four weighting factors for the PLV calculation.
[Bin (CWH)] = [CWH] values separated into the four PLV bins: 25%, 50%, 75% and 100% load according to chiller load for each bin.
[Bin (Ton-hrs)] = Values separated into the four PLV bins: 25%, 50%, 75% and 100% load according to the chiller load for each bin.
[Cust Wgt Factor] = The four custom PLV weighting factors. [Total (Ton-hrs)] for PLV Bin divided by [Total (Ton-hrs)] for the chiller.
[Cust Ent Cond Temps] = The four custom condenser temperature values for the PLV calculation = [Total (CWH)] for PLV bin divided by [Tot Hrs] in the PLV bin.

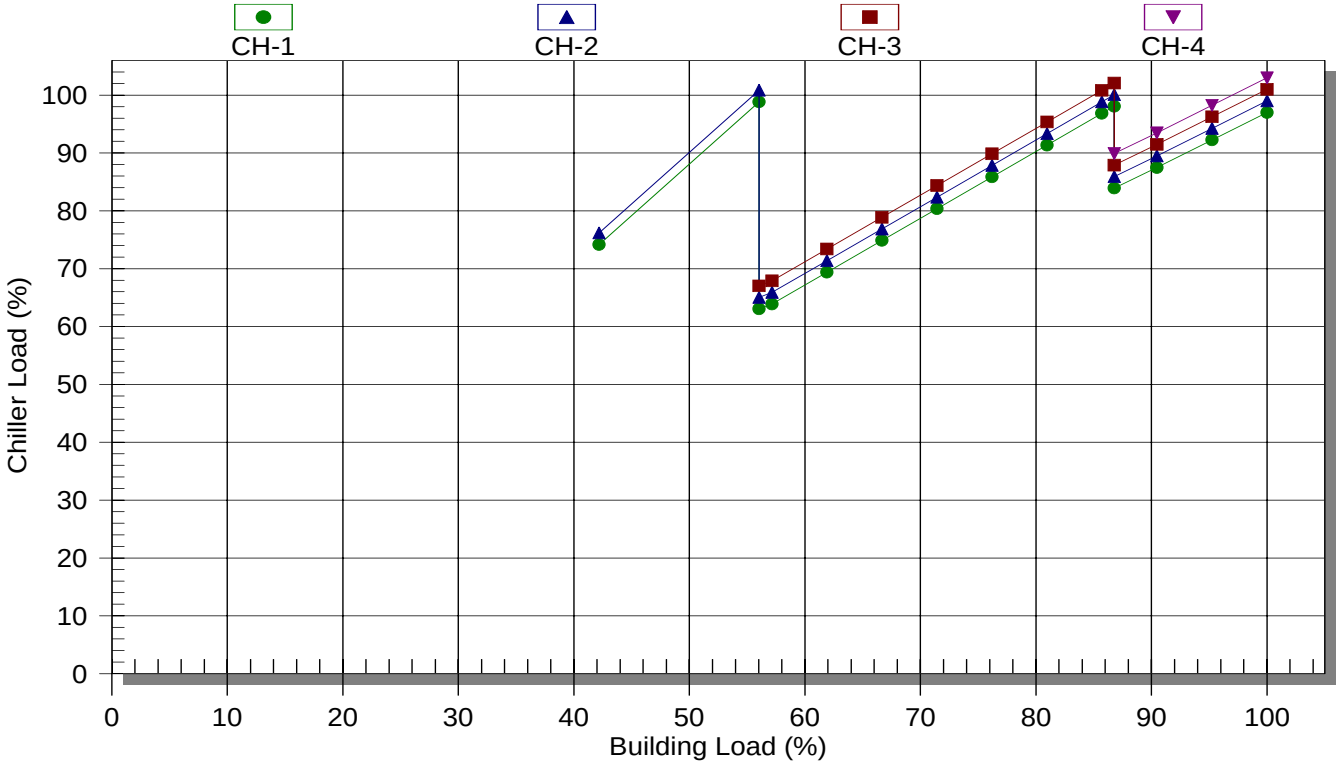

Note: Individual chiller curves in this graph have been adjusted up or down so the number of chillers operating at each point can be seen. If the curves had not been adjusted, all curves would lie on top of each other. Because of the adjustment each chiller load shown on the graph is only accurate to within a few percentage points plus or minus of the original calculated values.

2. Input Data Summary

Weather

City ..... Salt Lake City, Utah
Schedule ..... On All Day: Weekday
..... On All Day: Saturday
..... On All Day: Sunday

Loads

User-Defined Load Profile

Chiller System

Name ..... Combination A-1
Chillers in Plant 4
Plant Control ..... Sequenced
Full Load LCHWT ..... 44.0 F
Tower Configuration ..... One Tower for System
Cooling Tower ..... 6 Cell Tower(2)
..... Detailed Cooling Tower Model
Free Cooling ..... Plate-Frame Heat Exchanger

Sequence	Chiller Name	FL Capacity (Tons)	Full Load Power
CH-1	Carrier 1500 Ton VFD	1,500	0.482 kW/Ton
CH-2	Trane 1250	1,250	0.473 kW/Ton
CH-3	Carrier 1500 Ton Constant	1,500	0.458 kW/Ton
CH-4	Trane 650	650	0.473 kW/Ton

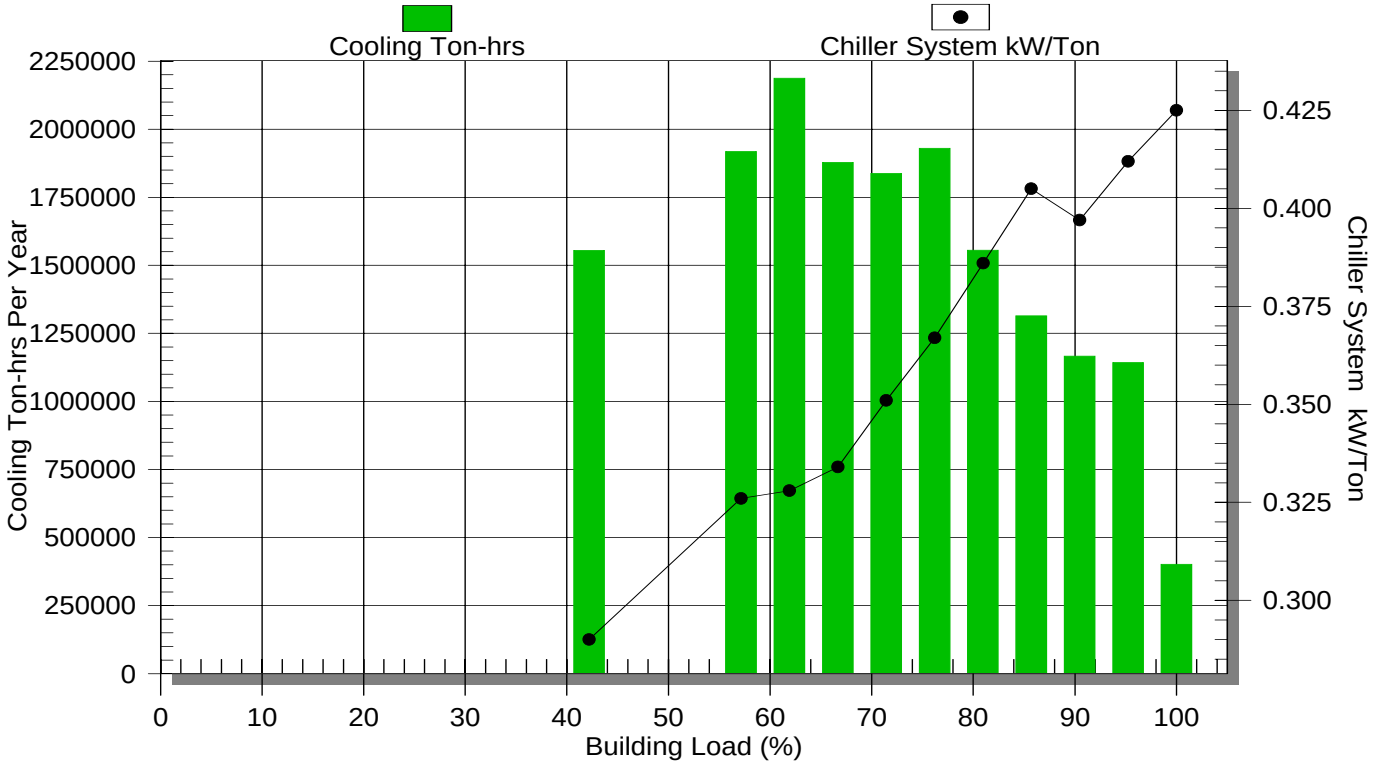

2. Input Data Summary

Weather

City ..... Salt Lake City, Utah
Schedule ..... On All Day: Weekday
..... On All Day: Saturday
..... On All Day: Sunday

Loads

User-Defined Load Profile

Chiller System

Name ..... Combination A-1
Chillers in Plant 4
Plant Control ..... Sequenced
Full Load LCHWT ..... 44.0 F
Tower Configuration ..... One Tower for System
Cooling Tower ..... 6 Cell Tower(2)
..... Detailed Cooling Tower Model
Free Cooling ..... Plate-Frame Heat Exchanger

Sequence	Chiller Name	FL Capacity (Tons)	Full Load Power
CH-1	Carrier 1500 Ton VFD	1,500	0.482 kW/Ton
CH-2	Trane 1250	1,250	0.473 kW/Ton
CH-3	Carrier 1500 Ton Constant	1,500	0.458 kW/Ton
CH-4	Trane 650	650	0.473 kW/Ton

5 Year Constant Dollar Cost Model

Chiller Combination F
Two new 1700 with vfds

Approximate Energy Cost

	Chilled Water		Condenser Water		Tons	KW/Ton	KW	Hours	kWH	Demand Cost	Energy Use Cost
	LWT ˚F	EWT ˚F	EWT ˚F	LWT ˚F						$8.78/kW/month	$0.0286340/kWH
	44	54	80		3647	0.4	1458.8	82	119621.6	$25,616.53	$3,425.24
	44	54	75		3282	0.382	1253.84	245	307190.5		$8,796.09
	44	54	80		2954	0.363	1072.33	263	282022.1	$18,830.07	$8,075.42
	44	54	75		2659	0.371	986.364	313	308731.9		$8,840.23
	44	54	75		2393	0.345	825.515	392	323601.8	$7,248.02	$9,266.01
	44	54	70		2154	0.319	686.972	517	355164.5		$10,169.78
	44	54	75		1938	0.287	556.253	525	292033.1	$4,883.91	$8,362.07
	44	54	70		1744	0.252	439.576	575	252756.1		$7,237.42
	44	54	70		1570	0.246	386.199	721	278449.4		$7,973.12
	44	54	65		1413	0.245	346.166	685	237123.7		$6,789.80
	44	54	65		1272	0.268	340.797	752	256279.3	$2,992.20	$7,338.30
								5070			

Annual Energy Cost	$145,844.22
5 Year Energy Cost:	$729,221.08
Chiller Purchase Price:	1,197,000
5 Year Life Cycle Evaluation Total:	$1,926,221.08

1. Executive Summary

System Part Load Value (SPLV):	**PLV**
Combination F	0.293 kW/Ton
IPLV or NPLV (ARI 550/590-1998):	
Carrier 1700 Ton VFD	0.300 kW/Ton
Trane 1250	0.354 kW/Ton
Carrier 1700 Ton VFD	0.300 kW/Ton
Trane 650	0.354 kW/Ton

2. Input Data Summary

Weather

City ..... Salt Lake City, Utah
Schedule ..... On All Day: Weekday
..... On All Day: Saturday
..... On All Day: Sunday

Loads

User-Defined Load Profile

Chiller System

Name ..... Combination F
Chillers in Plant 4
Plant Control ..... Sequenced
Full Load LCHWT ..... 44.0 F
Tower Configuration ..... One Tower for System
Cooling Tower ..... 6 Cell Tower (1)
..... Detailed Cooling Tower Model
Free Cooling ..... Plate-Frame Heat Exchanger

Sequence	Chiller Name	FL Capacity (Tons)	Full Load Power
CH-1	Carrier 1700 Ton VFD	1,700	0.490 kW/Ton
CH-2	Trane 1250	1,250	0.473 kW/Ton
CH-3	Carrier 1700 Ton VFD	1,700	0.490 kW/Ton
CH-4	Trane 650	650	0.473 kW/Ton

3. Chiller System Operating Conditions

Bin Temp (F)	Bin MCWB (F)	Building Load (%)	Building Load (Tons)	Chillers On	Chiller Load (%)
97.5	61.5	100	5,300	4	100
92.5	60.5	95	5,048	4	95
87.5	59.5	90	4,795	4	90
82.5	57.9	86	4,542	3	98
77.5	55.9	81	4,290	3	92
72.5	54.2	76	4,039	3	87
67.5	51.9	71	3,786	3	81
62.5	49.5	67	3,534	3	76
57.5	47.1	62	3,281	3	71
52.5	43.8	57	3,029	3	65
47.5	40.4	42	2,235	2	76
42.5	36.9	37	1,984	0	0
37.5	33.4	33	1,731	0	0
32.5	29.4	28	1,479	0	0
27.5	25.1	23	1,227	0	0
22.5	20.8	17	916	0	0
17.5	16.0	14	750	0	0
12.5	11.2	9	501	0	0
7.5	5.9	4	216	0	0

4a. Chiller System Performance

	CH-1				CH-2				CH-3			
Bin Temp (F)	**Load (Tons)**	**(kW/ Ton)**	**Lchwt (F)**	**Cond Temp (F)**	**Load (Tons)**	**(kW/ Ton)**	**Lchwt (F)**	**Cond Temp (F)**	**Load (Tons)**	**(kW/ Ton)**	**Lchwt (F)**	**Cond Temp (F)**
97.5	1,700	0.399	44.00	66.28	1,250	0.402	44.00	66.28	1,700	0.399	44.00	66.28
92.5	1,619	0.379	44.00	65.20	1,191	0.388	44.00	65.20	1,619	0.379	44.00	65.20
87.5	1,538	0.357	44.00	64.11	1,131	0.375	44.00	64.11	1,538	0.357	44.00	64.11
82.5	1,661	0.373	44.00	62.51	1,221	0.367	44.00	62.51	1,661	0.373	44.00	62.51
77.5	1,568	0.344	44.00	60.51	1,153	0.347	44.00	60.51	1,568	0.344	44.00	60.51
72.5	1,477	0.312	44.00	58.75	1,086	0.340	44.00	58.75	1,477	0.312	44.00	58.75
67.5	1,384	0.269	44.00	56.43	1,018	0.336	44.00	56.43	1,384	0.269	44.00	56.43
62.5	1,292	0.223	44.00	55.00	950	0.332	44.00	55.00	1,292	0.223	44.00	55.00
57.5	1,200	0.214	44.00	55.00	882	0.334	44.00	55.00	1,200	0.214	44.00	55.00
52.5	1,107	0.211	44.00	55.00	814	0.339	44.00	55.00	1,107	0.211	44.00	55.00
47.5	1,288	0.221	44.00	55.00	947	0.332	44.00	55.00	0	0.000	44.00	n/a
42.5	0	0.000	44.00	n/a	0	0.000	44.00	n/a	0	0.000	44.00	n/a
37.5	0	0.000	44.00	n/a	0	0.000	44.00	n/a	0	0.000	44.00	n/a
32.5	0	0.000	44.00	n/a	0	0.000	44.00	n/a	0	0.000	44.00	n/a
27.5	0	0.000	44.00	n/a	0	0.000	44.00	n/a	0	0.000	44.00	n/a
22.5	0	0.000	44.00	n/a	0	0.000	44.00	n/a	0	0.000	44.00	n/a
17.5	0	0.000	44.00	n/a	0	0.000	44.00	n/a	0	0.000	44.00	n/a
12.5	0	0.000	44.00	n/a	0	0.000	44.00	n/a	0	0.000	44.00	n/a
7.5	0	0.000	44.00	n/a	0	0.000	44.00	n/a	0	0.000	44.00	n/a

Minimum ECWT condition has been reached for chiller(s): CH-1, CH-2, CH-3
Tower cycling assumed to hold minimum ECWT.

4b. Chiller System Performance

	CH-4				System	
Bin Temp (F)	**Load (Tons)**	**(kW/ Ton)**	**Lchwt (F)**	**Cond Temp (F)**	**Total (kW)**	**Total (kW/Ton)**
97.5	650	0.402	44.00	66.28	2119	0.400
92.5	619	0.388	44.00	65.20	1929	0.382
87.5	588	0.375	44.00	64.11	1742	0.363
82.5	0	0.000	44.00	n/a	1687	0.371
77.5	0	0.000	44.00	n/a	1479	0.345
72.5	0	0.000	44.00	n/a	1290	0.319
67.5	0	0.000	44.00	n/a	1086	0.287
62.5	0	0.000	44.00	n/a	892	0.252
57.5	0	0.000	44.00	n/a	808	0.246
52.5	0	0.000	44.00	n/a	742	0.245
47.5	0	0.000	44.00	n/a	599	0.268
42.5	0	0.000	44.00	n/a	0	0.000
37.5	0	0.000	44.00	n/a	0	0.000
32.5	0	0.000	44.00	n/a	0	0.000
27.5	0	0.000	44.00	n/a	0	0.000
22.5	0	0.000	44.00	n/a	0	0.000
17.5	0	0.000	44.00	n/a	0	0.000
12.5	0	0.000	44.00	n/a	0	0.000
7.5	0	0.000	44.00	n/a	0	0.000

5. SPLV Worksheet

Bin Temp (F)	Building Load (%)	Building Load (Tons)	Cooling Hours	Cooling (Ton-hrs)	Bin Wgt Factor	System (kW/Ton)	Bin Ratio
97.5	100	5,300	82	434,600	0.0238	0.400	0.0595
92.5	95	5,048	245	1,236,760	0.0677	0.382	0.1772
87.5	90	4,795	263	1,261,085	0.0690	0.363	0.1901
82.5	86	4,542	313	1,421,646	0.0778	0.371	0.2095
77.5	81	4,290	392	1,681,680	0.0921	0.345	0.2671
72.5	76	4,039	517	2,088,163	0.1143	0.319	0.3580
67.5	71	3,786	525	1,987,650	0.1088	0.287	0.3794
62.5	67	3,534	575	2,032,050	0.1113	0.252	0.4410
57.5	62	3,281	721	2,365,601	0.1295	0.246	0.5262
52.5	57	3,029	685	2,074,865	0.1136	0.245	0.4636
47.5	42	2,235	752	1,680,720	0.0920	0.268	0.3432
42.5	37	1,984	776	0	0.0000	0.000	0.0000
37.5	33	1,731	857	0	0.0000	0.000	0.0000
32.5	28	1,479	828	0	0.0000	0.000	0.0000
27.5	23	1,227	671	0	0.0000	0.000	0.0000
22.5	17	916	221	0	0.0000	0.000	0.0000
17.5	14	750	135	0	0.0000	0.000	0.0000
12.5	9	501	70	0	0.0000	0.000	0.0000
7.5	4	216	132	0	0.0000	0.000	0.0000
Total:			5,070	18,264,820	1.0000		3.4148

Bin Wgt Factor = Bin Ton-hrs / Total Ton-hrs
Bin Ratio = [Bin Wgt Factor] / [System kW/Ton]
SPLV = 1 / [sum of Bin Ratios]
SPLV = 1 / [3.4148] = 0.293 kW/Ton

6. Procedure for Calculating IPLV for Chillers

Procedure for Calculating IPLV for Water-Cooled Electric Chillers

Chiller Load (%)	LCHWT (F)	Cond Temp (F)	Wgt Factor	Chiller (kW/Ton)	Bin Ratio
100	44.00	85.00	0.01	A	0.01/A
75	44.00	75.00	0.42	B	0.42/B
50	44.00	65.00	0.45	C	0.45/C
25	44.00	65.00	0.12	D	0.12/D
Total:			1.00		

IPLV = 1 / [sum of Bin Ratios]
IPLV = 1 / [0.10/A + 0.42/B + 0.45/C + 0.12/D]
per ARI Standard 550/590-1998

1. Summary of Custom Weighting Factors and ECWTs

	Custom Weighting Factors				Custom Entering Condenser Temperatures (F)			
Chiller	**25%**	**50%**	**75%**	**100%**	**25%**	**50%**	**75%**	**100%**
CH-1 - Carrier 1700 Ton VFD	0.000	0.000	0.677	0.323	n/a	n/a	55.8	63.0
CH-2 - Trane 1250	0.000	0.000	0.699	0.301	n/a	n/a	55.7	63.0
CH-3 - Carrier 1700 Ton VFD	0.000	0.000	0.677	0.323	n/a	n/a	55.8	63.0
CH-4 - Trane 650	0.000	0.000	0.000	1.000	n/a	n/a	n/a	64.9

2. Input Data Summary

Weather

City ..... Salt Lake City, Utah
Schedule ..... On All Day: Weekday
..... On All Day: Saturday
..... On All Day: Sunday

Loads

User-Defined Load Profile

Chiller System

Name ..... Combination F
Chillers in Plant 4
Plant Control ..... Sequenced
Full Load LCHWT ..... 44.0 F
Tower Configuration ..... One Tower for System
Cooling Tower ..... 6 Cell Tower (1)
..... Detailed Cooling Tower Model
Free Cooling ..... Plate-Frame Heat Exchanger

Sequence	Chiller Name	FL Capacity (Tons)	Full Load Power
CH-1	Carrier 1700 Ton VFD	1,700	0.490 kW/Ton
CH-2	Trane 1250	1,250	0.473 kW/Ton
CH-3	Carrier 1700 Ton VFD	1,700	0.490 kW/Ton
CH-4	Trane 650	650	0.473 kW/Ton

3. Chiller System Operating Conditions

Bin Temp (F)	Bin MCWB (F)	Building Load (%)	Building Load (Tons)	Chillers On	Chiller Load (%)
97.5	61.5	100	5,300	4	100
92.5	60.5	95	5,048	4	95
87.5	59.5	90	4,795	4	90
82.5	57.9	86	4,542	3	98
77.5	55.9	81	4,290	3	92
72.5	54.2	76	4,039	3	87
67.5	51.9	71	3,786	3	81
62.5	49.5	67	3,534	3	76
57.5	47.1	62	3,281	3	71
52.5	43.8	57	3,029	3	65
47.5	40.4	42	2,235	2	76
42.5	36.9	37	1,984	0	0
37.5	33.4	33	1,731	0	0
32.5	29.4	28	1,479	0	0
27.5	25.1	23	1,227	0	0
22.5	20.8	17	916	0	0
17.5	16.0	14	750	0	0
12.5	11.2	9	501	0	0
7.5	5.9	4	216	0	0

4a. Custom PLV Worksheet for CH-1 (Carrier 1700 Ton VFD)

Avg DB	Cond Temp	Total	CWH	Total	Load	Load	25% Bin		50% Bin		75% Bin		100% Bin	
(F)	(F)	(Hrs)		(Ton-hrs)	(Tons)	(%)	(CWH)	(Ton-hrs)	(CWH)	(Ton-hrs)	(CWH)	(Ton-hrs)	(CWH)	(Ton-hrs)
97.5	66.3	82	5,435	139,400	1,700	100	0	0	0	0	0	0	5,435	139,400
92.5	65.2	245	15,974	396,697	1,619	95	0	0	0	0	0	0	15,974	396,697
87.5	64.1	263	16,860	404,499	1,538	90	0	0	0	0	0	0	16,860	404,499
82.5	62.5	313	19,566	519,742	1,661	98	0	0	0	0	0	0	19,566	519,742
77.5	60.5	392	23,720	614,808	1,568	92	0	0	0	0	0	0	23,720	614,808
72.5	58.8	517	30,374	763,414	1,477	87	0	0	0	0	30,374	763,414	0	0
67.5	56.4	525	29,625	726,668	1,384	81	0	0	0	0	29,625	726,668	0	0
62.5	55.0	575	31,625	742,900	1,292	76	0	0	0	0	31,625	742,900	0	0
57.5	55.0	721	39,655	864,843	1,200	71	0	0	0	0	39,655	864,843	0	0
52.5	55.0	685	37,675	758,553	1,107	65	0	0	0	0	37,675	758,553	0	0
47.5	55.0	752	41,360	968,551	1,288	76	0	0	0	0	41,360	968,551	0	0
42.5	n/a	0	0	0	0	0	0	0	0	0	0	0	0	0
37.5	n/a	0	0	0	0	0	0	0	0	0	0	0	0	0
32.5	n/a	0	0	0	0	0	0	0	0	0	0	0	0	0
27.5	n/a	0	0	0	0	0	0	0	0	0	0	0	0	0
22.5	n/a	0	0	0	0	0	0	0	0	0	0	0	0	0
17.5	n/a	0	0	0	0	0	0	0	0	0	0	0	0	0
12.5	n/a	0	0	0	0	0	0	0	0	0	0	0	0	0
7.5	n/a	0	0	0	0	0	0	0	0	0	0	0	0	0
Totals:		5,070	291,869	6,900,074			0	0	0	0	210,315	4,824,929	81,554	2,075,145

4b. Custom PLV Worksheet for CH-2 (Trane 1250)

Avg DB (F)	Cond Temp (F)	Total (Hrs)	CWH	Total (Ton-hrs)	Load (Tons)	Load (%)	25% Bin		50% Bin		75% Bin		100% Bin	
							(CWH)	(Ton-hrs)	(CWH)	(Ton-hrs)	(CWH)	(Ton-hrs)	(CWH)	(Ton-hrs)
97.5	66.3	82	5,435	102,500	1,250	100	0	0	0	0	0	0	5,435	102,500
92.5	65.2	245	15,974	291,689	1,191	95	0	0	0	0	0	0	15,974	291,689
87.5	64.1	263	16,860	297,426	1,131	90	0	0	0	0	0	0	16,860	297,426
82.5	62.5	313	19,566	382,163	1,221	98	0	0	0	0	0	0	19,566	382,163
77.5	60.5	392	23,720	452,065	1,153	92	0	0	0	0	0	0	23,720	452,065
72.5	58.8	517	30,374	561,334	1,086	87	0	0	0	0	30,374	561,334	0	0
67.5	56.4	525	29,625	534,315	1,018	81	0	0	0	0	29,625	534,315	0	0
62.5	55.0	575	31,625	546,250	950	76	0	0	0	0	31,625	546,250	0	0
57.5	55.0	721	39,655	635,914	882	71	0	0	0	0	39,655	635,914	0	0
52.5	55.0	685	37,675	557,759	814	65	0	0	0	0	37,675	557,759	0	0
47.5	55.0	752	41,360	712,170	947	76	0	0	0	0	41,360	712,170	0	0
42.5	n/a	0	0	0	0	0	0	0	0	0	0	0	0	0
37.5	n/a	0	0	0	0	0	0	0	0	0	0	0	0	0
32.5	n/a	0	0	0	0	0	0	0	0	0	0	0	0	0
27.5	n/a	0	0	0	0	0	0	0	0	0	0	0	0	0
22.5	n/a	0	0	0	0	0	0	0	0	0	0	0	0	0
17.5	n/a	0	0	0	0	0	0	0	0	0	0	0	0	0
12.5	n/a	0	0	0	0	0	0	0	0	0	0	0	0	0
7.5	n/a	0	0	0	0	0	0	0	0	0	0	0	0	0
Totals:		5,070	291,869	5,073,584			0	0	0	0	210,315	3,547,742	81,554	1,525,842
Cust Wgt Factors:								0.000		0.000		0.699		0.301
Custom Entering Condenser Temperatures (F):								n/a		n/a		55.7		63.0

4c. Custom PLV Worksheet for CH-3 (Carrier 1700 Ton VFD)

Avg DB (F)	Cond Temp (F)	Total (Hrs)	CWH	Total (Ton-hrs)	Load (Tons)	Load (%)	25% Bin		50% Bin		75% Bin		100% Bin	
							(CWH)	(Ton-hrs)	(CWH)	(Ton-hrs)	(CWH)	(Ton-hrs)	(CWH)	(Ton-hrs)
97.5	66.3	82	5,435	139,400	1,700	100	0	0	0	0	0	0	5,435	139,400
92.5	65.2	245	15,974	396,697	1,619	95	0	0	0	0	0	0	15,974	396,697
87.5	64.1	263	16,860	404,499	1,538	90	0	0	0	0	0	0	16,860	404,499
82.5	62.5	313	19,566	519,742	1,661	98	0	0	0	0	0	0	19,566	519,742
77.5	60.5	392	23,720	614,808	1,568	92	0	0	0	0	0	0	23,720	614,808
72.5	58.8	517	30,374	763,414	1,477	87	0	0	0	0	30,374	763,414	0	0
67.5	56.4	525	29,625	726,668	1,384	81	0	0	0	0	29,625	726,668	0	0
62.5	55.0	575	31,625	742,900	1,292	76	0	0	0	0	31,625	742,900	0	0
57.5	55.0	721	39,655	864,843	1,200	71	0	0	0	0	39,655	864,843	0	0
52.5	55.0	685	37,675	758,553	1,107	65	0	0	0	0	37,675	758,553	0	0
47.5	n/a	0	0	0	0	0	0	0	0	0	0	0	0	0
42.5	n/a	0	0	0	0	0	0	0	0	0	0	0	0	0
37.5	n/a	0	0	0	0	0	0	0	0	0	0	0	0	0
32.5	n/a	0	0	0	0	0	0	0	0	0	0	0	0	0
27.5	n/a	0	0	0	0	0	0	0	0	0	0	0	0	0
22.5	n/a	0	0	0	0	0	0	0	0	0	0	0	0	0
17.5	n/a	0	0	0	0	0	0	0	0	0	0	0	0	0
12.5	n/a	0	0	0	0	0	0	0	0	0	0	0	0	0
7.5	n/a	0	0	0	0	0	0	0	0	0	0	0	0	0
Totals:		4,318	250,509	5,931,524			0	0	0	0	168,955	3,856,378	81,554	2,075,145

4d. Custom PLV Worksheet for CH-4 (Trane 650)

Avg DB (F)	Cond Temp (F)	Total (Hrs)	CWH	Total (Ton-hrs)	Load (Tons)	Load (%)	25% Bin		50% Bin		75% Bin		100% Bin	
							(CWH)	(Ton-hrs)	(CWH)	(Ton-hrs)	(CWH)	(Ton-hrs)	(CWH)	(Ton-hrs)
97.5	66.3	82	5,435	53,300	650	100	0	0	0	0	0	0	5,435	53,300
92.5	65.2	245	15,974	151,678	619	95	0	0	0	0	0	0	15,974	151,678
87.5	64.1	263	16,860	154,661	588	90	0	0	0	0	0	0	16,860	154,661
82.5	n/a	0	0	0	0	0	0	0	0	0	0	0	0	0
77.5	n/a	0	0	0	0	0	0	0	0	0	0	0	0	0
72.5	n/a	0	0	0	0	0	0	0	0	0	0	0	0	0
67.5	n/a	0	0	0	0	0	0	0	0	0	0	0	0	0
62.5	n/a	0	0	0	0	0	0	0	0	0	0	0	0	0
57.5	n/a	0	0	0	0	0	0	0	0	0	0	0	0	0
52.5	n/a	0	0	0	0	0	0	0	0	0	0	0	0	0
47.5	n/a	0	0	0	0	0	0	0	0	0	0	0	0	0
42.5	n/a	0	0	0	0	0	0	0	0	0	0	0	0	0
37.5	n/a	0	0	0	0	0	0	0	0	0	0	0	0	0
32.5	n/a	0	0	0	0	0	0	0	0	0	0	0	0	0
27.5	n/a	0	0	0	0	0	0	0	0	0	0	0	0	0
22.5	n/a	0	0	0	0	0	0	0	0	0	0	0	0	0
17.5	n/a	0	0	0	0	0	0	0	0	0	0	0	0	0
12.5	n/a	0	0	0	0	0	0	0	0	0	0	0	0	0
7.5	n/a	0	0	0	0	0	0	0	0	0	0	0	0	0
Totals:		590	38,269	359,640			0	0	0	0	0	0	38,269	359,640
Cust Wgt Factors:								0.000		0.000		0.000		1.000
Custom Entering Condenser Temperatures (F):								n/a		n/a		n/a		64.9

KEY for Custom PLV Worksheet table(s):
[Avg DB] = Midpoint temperature for bin.
[Cond Temp] = Entering condenser temperature for bin. Entering water temperature for water-cooled chillers. Entering air temperature for air-cooled chillers.
[Tot Hrs] = Hours of operation in bin.
[CWH] = Condenser temperature hours. [Tot Hrs] times [Cond Temp]. Later used to derive the four average entering condenser temperature values for the PLV calculation.
[Load] = Chiller load for bin.
[Load (%)] = Chiller load as a percentage of full load capacity.
[Total (Ton-hrs)] = Chiller [Load] times [Tot Hrs]. Later used to derive the four weighting factors for the PLV calculation.
[Bin (CWH)] = [CWH] values separated into the four PLV bins: 25%, 50%, 75% and 100% load according to chiller load for each bin.
[Bin (Ton-hrs)] = Values separated into the four PLV bins: 25%, 50%, 75% and 100% load according to the chiller load for each bin.
[Cust Wgt Factor] = The four custom PLV weighting factors. [Total (Ton-hrs)] for PLV Bin divided by [Total (Ton-hrs)] for the chiller.
[Cust Ent Cond Temps] = The four custom condenser temperature values for the PLV calculation = [Total (CWH)] for PLV bin divided by [Tot Hrs] in the PLV bin.

5a. Average Weighting Factors and Entering Condenser Temperatures (CH-1, CH-3)

	25% Bin			50% Bin			75% Bin			100% Bin		
Chiller	**Hrs**	**CWH**	**Ton-hrs**	**Hrs**	**CWH**	**Ton-hrs**	**Hrs**	**CWH**	**Ton-hrs**	**Hrs**	**CWH**	**Ton-hrs**
CH-1	0	0	0	0	0	0	3,775	210,315	4,824,929	1,295	81,554	2,075,145
CH-3	0	0	0	0	0	0	3,023	168,955	3,856,378	1,295	81,554	2,075,145
Totals:	0	0	0	0	0	0	6,798	379,269	8,681,307	2,590	163,109	4,150,290
Cust Wgt Factor:			0.000			0.000			0.677			0.323
Cust Ent Cond Temps (F):			n/a			n/a			55.8			63.0

Grand Total Ton-hrs = 12,831,597

Average weighting factors and entering condenser temperatures are calculated because the following chillers are all identical: CH-1, CH-3. Over the life of the chiller plant, these chillers will be rotated to operate in each of the CH-1, CH-3 sequencing positions. Therefore, a lifecycle PLV must consider each chiller operating in each of these sequencing positions.

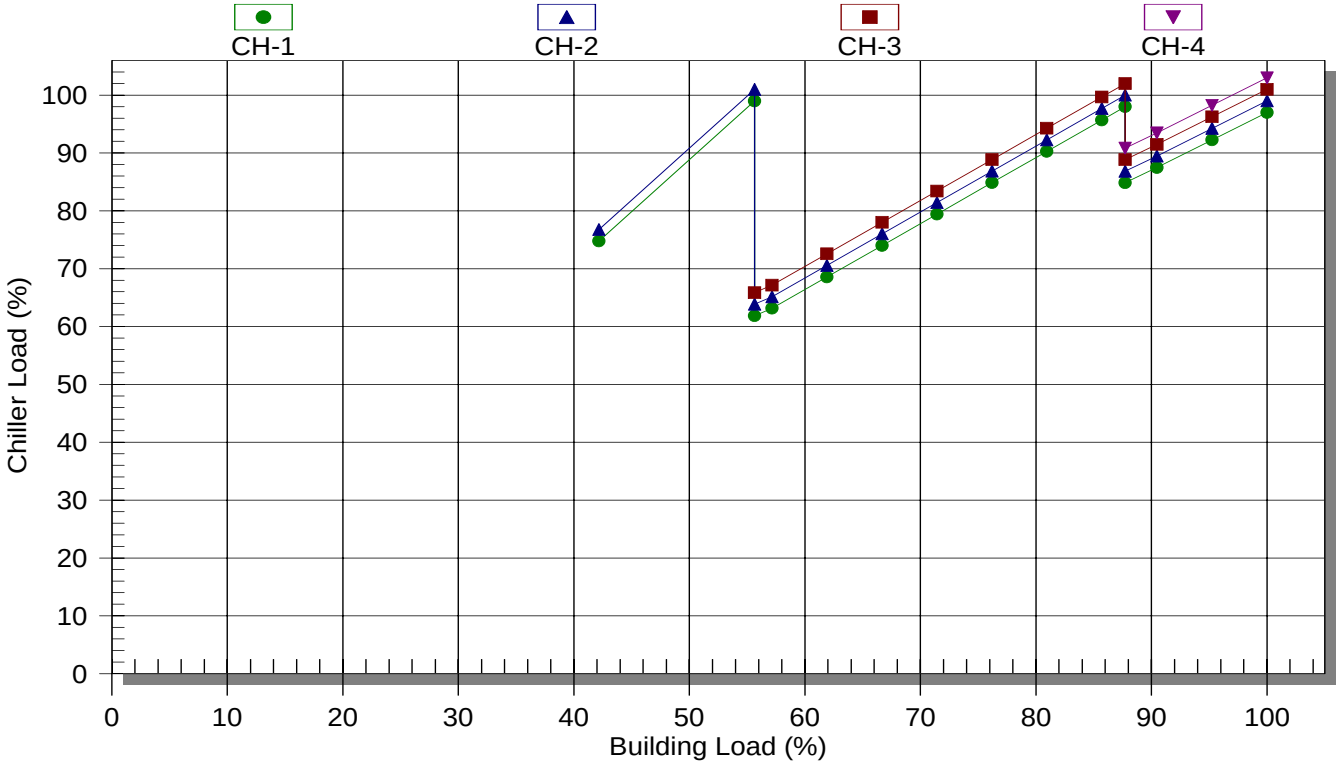

Note: Individual chiller curves in this graph have been adjusted up or down so the number of chillers operating at each point can be seen. If the curves had not been adjusted, all curves would lie on top of each other. Because of the adjustment each chiller load shown on the graph is only accurate to within a few percentage points plus or minus of the original calculated values.

2. Input Data Summary

Weather

City ..... Salt Lake City, Utah
Schedule ..... On All Day: Weekday
..... On All Day: Saturday
..... On All Day: Sunday

Loads

User-Defined Load Profile

Chiller System

Name ..... Combination F
Chillers in Plant 4
Plant Control ..... Sequenced
Full Load LCHWT ..... 44.0 F
Tower Configuration ..... One Tower for System
Cooling Tower ..... 6 Cell Tower (1)
..... Detailed Cooling Tower Model
Free Cooling ..... Plate-Frame Heat Exchanger

Sequence	Chiller Name	FL Capacity (Tons)	Full Load Power
CH-1	Carrier 1700 Ton VFD	1,700	0.490 kW/Ton
CH-2	Trane 1250	1,250	0.473 kW/Ton
CH-3	Carrier 1700 Ton VFD	1,700	0.490 kW/Ton
CH-4	Trane 650	650	0.473 kW/Ton

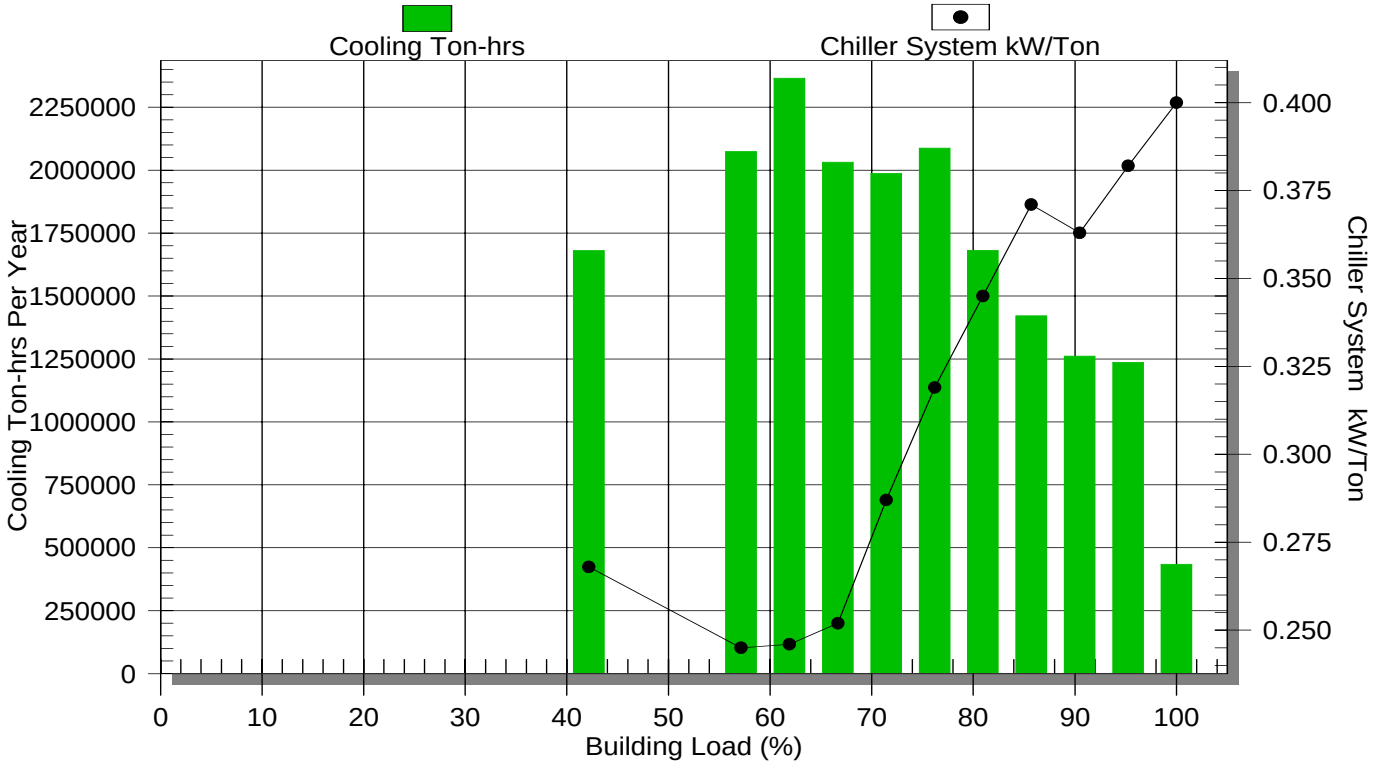

2. Input Data Summary

Weather

City ..... Salt Lake City, Utah
Schedule ..... On All Day: Weekday
..... On All Day: Saturday
..... On All Day: Sunday

Loads

User-Defined Load Profile

Chiller System

Name ..... Combination F
Chillers in Plant 4
Plant Control ..... Sequenced
Full Load LCHWT ..... 44.0 F
Tower Configuration ..... One Tower for System
Cooling Tower ..... 6 Cell Tower (1)
..... Detailed Cooling Tower Model
Free Cooling ..... Plate-Frame Heat Exchanger

Sequence	Chiller Name	FL Capacity (Tons)	Full Load Power
CH-1	Carrier 1700 Ton VFD	1,700	0.490 kW/Ton
CH-2	Trane 1250	1,250	0.473 kW/Ton
CH-3	Carrier 1700 Ton VFD	1,700	0.490 kW/Ton
CH-4	Trane 650	650	0.473 kW/Ton

5 Year Constant Dollar Cost Model

Chiller Combination F-1
One new 1700 with vfd, 1 without

Approximate Energy Cost

	Chilled Water		Condenser Water		Tons	KW/Ton	KW	Hours	kWH	Demand Cost	Energy Use Cost
	LWT ˚F	EWT ˚F	EWT ˚F	LWT ˚F						$8.78/kW/month	$0.0286340/kWH
	44	54	80		3647	0.405	1477.04	82	121116.9	$25,936.73	$3,468.06
	44	54	75		3282	0.393	1289.94	245	316036.3		$9,049.38
	44	54	80		2954	0.38	1122.55	263	295229.8	$19,711.92	$8,453.61
	44	54	75		2659	0.383	1018.27	313	318717.9		$9,126.17
	44	54	75		2393	0.366	875.764	392	343299.3	$7,689.20	$9,830.03
	44	54	70		2154	0.351	755.884	517	390792.3		$11,189.95
	44	54	75		1938	0.334	647.347	525	339857.3	$5,683.71	$9,731.47
	44	54	70		1744	0.317	552.959	575	317951.2		$9,104.21
	44	54	70		1570	0.318	499.233	721	359946.7		$10,306.71
	44	54	65		1413	0.321	453.548	685	310680.5		$8,896.02
	44	54	65		1272	0.268	340.797	752	256279.3	$2,992.20	$7,338.30
								5070			

Annual Energy Cost	$158,507.69
5 Year Energy Cost:	$792,538.44
Chiller Purchase Price:	1,152,000
5 Year Life Cycle Evaluation Total:	$1,944,538.44

1. Executive Summary

System Part Load Value (SPLV):	**PLV**
Combination F-1	0.336 kW/Ton
IPLV or NPLV (ARI 550/590-1998):	
Carrier 1700 Ton VFD	0.300 kW/Ton
Trane 1250	0.354 kW/Ton
Carrier 1700 Ton Constant	0.462 kW/Ton
Trane 650	0.354 kW/Ton

2. Input Data Summary

Weather

City ..... Salt Lake City, Utah
Schedule ..... On All Day: Weekday
..... On All Day: Saturday
..... On All Day: Sunday

Loads

User-Defined Load Profile

Chiller System

Name ..... Combination F-1
Chillers in Plant 4
Plant Control ..... Sequenced
Full Load LCHWT ..... 44.0 F
Tower Configuration ..... One Tower for System
Cooling Tower ..... 6 Cell Tower (2)
..... Detailed Cooling Tower Model
Free Cooling ..... Plate-Frame Heat Exchanger

Sequence	Chiller Name	FL Capacity (Tons)	Full Load Power
CH-1	Carrier 1700 Ton VFD	1,700	0.490 kW/Ton
CH-2	Trane 1250	1,250	0.473 kW/Ton
CH-3	Carrier 1700 Ton Constant	1,732	0.470 kW/Ton
CH-4	Trane 650	650	0.473 kW/Ton

3. Chiller System Operating Conditions

Bin Temp (F)	Bin MCWB (F)	Building Load (%)	Building Load (Tons)	Chillers On	Chiller Load (%)
97.5	61.5	100	5,300	4	99
92.5	60.5	95	5,048	4	95
87.5	59.5	90	4,795	4	90
82.5	57.9	86	4,542	3	97
77.5	55.9	81	4,290	3	92
72.5	54.2	76	4,039	3	86
67.5	51.9	71	3,786	3	81
62.5	49.5	67	3,534	3	75
57.5	47.1	62	3,281	3	70
52.5	43.8	57	3,029	3	65
47.5	40.4	42	2,235	2	76
42.5	36.9	37	1,984	0	0
37.5	33.4	33	1,731	0	0
32.5	29.4	28	1,479	0	0
27.5	25.1	23	1,227	0	0
22.5	20.8	17	916	0	0
17.5	16.0	14	750	0	0
12.5	11.2	9	501	0	0
7.5	5.9	4	216	0	0

4a. Chiller System Performance

	CH-1				CH-2				CH-3			
Bin Temp (F)	**Load (Tons)**	**(kW/ Ton)**	**Lchwt (F)**	**Cond Temp (F)**	**Load (Tons)**	**(kW/ Ton)**	**Lchwt (F)**	**Cond Temp (F)**	**Load (Tons)**	**(kW/ Ton)**	**Lchwt (F)**	**Cond Temp (F)**
97.5	1,690	0.397	44.00	66.28	1,242	0.401	44.00	66.28	1,722	0.416	44.00	66.28
92.5	1,609	0.377	44.00	65.21	1,183	0.388	44.00	65.21	1,640	0.413	44.00	65.21
87.5	1,529	0.355	44.00	64.13	1,124	0.374	44.00	64.13	1,558	0.411	44.00	64.13
82.5	1,649	0.371	44.00	62.52	1,213	0.367	44.00	62.52	1,680	0.406	44.00	62.52
77.5	1,558	0.342	44.00	60.53	1,145	0.347	44.00	60.53	1,587	0.403	44.00	60.53
72.5	1,467	0.309	44.00	58.78	1,078	0.339	44.00	58.78	1,494	0.401	44.00	58.78
67.5	1,375	0.266	44.00	56.48	1,011	0.336	44.00	56.48	1,401	0.400	44.00	56.48
62.5	1,283	0.219	44.00	55.00	944	0.331	44.00	55.00	1,307	0.403	44.00	55.00
57.5	1,191	0.213	44.00	55.00	876	0.335	44.00	55.00	1,214	0.409	44.00	55.00
52.5	1,100	0.210	44.00	55.00	809	0.339	44.00	55.00	1,121	0.416	44.00	55.00
47.5	1,288	0.221	44.00	55.00	947	0.332	44.00	55.00	0	0.000	44.00	n/a
42.5	0	0.000	44.00	n/a	0	0.000	44.00	n/a	0	0.000	44.00	n/a
37.5	0	0.000	44.00	n/a	0	0.000	44.00	n/a	0	0.000	44.00	n/a
32.5	0	0.000	44.00	n/a	0	0.000	44.00	n/a	0	0.000	44.00	n/a
27.5	0	0.000	44.00	n/a	0	0.000	44.00	n/a	0	0.000	44.00	n/a
22.5	0	0.000	44.00	n/a	0	0.000	44.00	n/a	0	0.000	44.00	n/a
17.5	0	0.000	44.00	n/a	0	0.000	44.00	n/a	0	0.000	44.00	n/a
12.5	0	0.000	44.00	n/a	0	0.000	44.00	n/a	0	0.000	44.00	n/a
7.5	0	0.000	44.00	n/a	0	0.000	44.00	n/a	0	0.000	44.00	n/a

Minimum ECWT condition has been reached for chiller(s): CH-1, CH-2, CH-3
Tower cycling assumed to hold minimum ECWT.

4b. Chiller System Performance

	CH-4				System	
Bin Temp (F)	**Load (Tons)**	**(kW/ Ton)**	**Lchwt (F)**	**Cond Temp (F)**	**Total (kW)**	**Total (kW/Ton)**
97.5	646	0.401	44.00	66.28	2144	0.405
92.5	615	0.388	44.00	65.21	1982	0.393
87.5	585	0.374	44.00	64.13	1823	0.380
82.5	0	0.000	44.00	n/a	1739	0.383
77.5	0	0.000	44.00	n/a	1569	0.366
72.5	0	0.000	44.00	n/a	1419	0.351
67.5	0	0.000	44.00	n/a	1266	0.334
62.5	0	0.000	44.00	n/a	1121	0.317
57.5	0	0.000	44.00	n/a	1043	0.318
52.5	0	0.000	44.00	n/a	971	0.321
47.5	0	0.000	44.00	n/a	599	0.268
42.5	0	0.000	44.00	n/a	0	0.000
37.5	0	0.000	44.00	n/a	0	0.000
32.5	0	0.000	44.00	n/a	0	0.000
27.5	0	0.000	44.00	n/a	0	0.000
22.5	0	0.000	44.00	n/a	0	0.000
17.5	0	0.000	44.00	n/a	0	0.000
12.5	0	0.000	44.00	n/a	0	0.000
7.5	0	0.000	44.00	n/a	0	0.000

5. SPLV Worksheet

Bin Temp (F)	Building Load (%)	Building Load (Tons)	Cooling Hours	Cooling (Ton-hrs)	Bin Wgt Factor	System (kW/Ton)	Bin Ratio
97.5	100	5,300	82	434,600	0.0238	0.405	0.0588
92.5	95	5,048	245	1,236,760	0.0677	0.393	0.1725
87.5	90	4,795	263	1,261,085	0.0690	0.380	0.1817
82.5	86	4,542	313	1,421,646	0.0778	0.383	0.2033
77.5	81	4,290	392	1,681,680	0.0921	0.366	0.2518
72.5	76	4,039	517	2,088,163	0.1143	0.351	0.3253
67.5	71	3,786	525	1,987,650	0.1088	0.334	0.3255
62.5	67	3,534	575	2,032,050	0.1113	0.317	0.3509
57.5	62	3,281	721	2,365,601	0.1295	0.318	0.4073
52.5	57	3,029	685	2,074,865	0.1136	0.321	0.3542
47.5	42	2,235	752	1,680,720	0.0920	0.268	0.3432
42.5	37	1,984	776	0	0.0000	0.000	0.0000
37.5	33	1,731	857	0	0.0000	0.000	0.0000
32.5	28	1,479	828	0	0.0000	0.000	0.0000
27.5	23	1,227	671	0	0.0000	0.000	0.0000
22.5	17	916	221	0	0.0000	0.000	0.0000
17.5	14	750	135	0	0.0000	0.000	0.0000
12.5	9	501	70	0	0.0000	0.000	0.0000
7.5	4	216	132	0	0.0000	0.000	0.0000
Total:			5,070	18,264,820	1.0000		2.9745

Bin Wgt Factor = Bin Ton-hrs / Total Ton-hrs
Bin Ratio = [Bin Wgt Factor] / [System kW/Ton]
SPLV = 1 / [sum of Bin Ratios]
SPLV = 1 / [2.9745] = 0.336 kW/Ton

6. Procedure for Calculating IPLV for Chillers

Procedure for Calculating IPLV for Water-Cooled Electric Chillers

Chiller Load (%)	LCHWT (F)	Cond Temp (F)	Wgt Factor	Chiller (kW/Ton)	Bin Ratio
100	44.00	85.00	0.01	A	0.01/A
75	44.00	75.00	0.42	B	0.42/B
50	44.00	65.00	0.45	C	0.45/C
25	44.00	65.00	0.12	D	0.12/D
Total:			1.00		

IPLV = 1 / [sum of Bin Ratios]
IPLV = 1 / [0.10/A + 0.42/B + 0.45/C + 0.12/D]
per ARI Standard 550/590-1998

1. Summary of Custom Weighting Factors and ECWTs

	Custom Weighting Factors				Custom Entering Condenser Temperatures (F)			
Chiller	**25%**	**50%**	**75%**	**100%**	**25%**	**50%**	**75%**	**100%**
CH-1 - Carrier 1700 Ton VFD	0.000	0.000	0.699	0.301	n/a	n/a	55.7	63.0
CH-2 - Trane 1250	0.000	0.000	0.699	0.301	n/a	n/a	55.7	63.0
CH-3 - Carrier 1700 Ton Constant	0.000	0.000	0.650	0.350	n/a	n/a	55.9	63.0
CH-4 - Trane 650	0.000	0.000	0.000	1.000	n/a	n/a	n/a	64.9

2. Input Data Summary

Weather

City ..... Salt Lake City, Utah
Schedule ..... On All Day: Weekday
..... On All Day: Saturday
..... On All Day: Sunday

Loads

User-Defined Load Profile

Chiller System

Name ..... Combination F-1
Chillers in Plant 4
Plant Control ..... Sequenced
Full Load LCHWT ..... 44.0 F
Tower Configuration ..... One Tower for System
Cooling Tower ..... 6 Cell Tower (2)
..... Detailed Cooling Tower Model
Free Cooling ..... Plate-Frame Heat Exchanger

Sequence	Chiller Name	FL Capacity (Tons)	Full Load Power
CH-1	Carrier 1700 Ton VFD	1,700	0.490 kW/Ton
CH-2	Trane 1250	1,250	0.473 kW/Ton
CH-3	Carrier 1700 Ton Constant	1,732	0.470 kW/Ton
CH-4	Trane 650	650	0.473 kW/Ton

3. Chiller System Operating Conditions

Bin Temp (F)	Bin MCWB (F)	Building Load (%)	Building Load (Tons)	Chillers On	Chiller Load (%)
97.5	61.5	100	5,300	4	99
92.5	60.5	95	5,048	4	95
87.5	59.5	90	4,795	4	90
82.5	57.9	86	4,542	3	97
77.5	55.9	81	4,290	3	92
72.5	54.2	76	4,039	3	86
67.5	51.9	71	3,786	3	81
62.5	49.5	67	3,534	3	75
57.5	47.1	62	3,281	3	70
52.5	43.8	57	3,029	3	65
47.5	40.4	42	2,235	2	76
42.5	36.9	37	1,984	0	0
37.5	33.4	33	1,731	0	0
32.5	29.4	28	1,479	0	0
27.5	25.1	23	1,227	0	0
22.5	20.8	17	916	0	0
17.5	16.0	14	750	0	0
12.5	11.2	9	501	0	0
7.5	5.9	4	216	0	0

4a. Custom PLV Worksheet for CH-1 (Carrier 1700 Ton VFD)

Avg DB (F)	Cond Temp (F)	Total (Hrs)	CWH	Total (Ton-hrs)	Load (Tons)	Load (%)	25% Bin		50% Bin		75% Bin		100% Bin	
							(CWH)	(Ton-hrs)	(CWH)	(Ton-hrs)	(CWH)	(Ton-hrs)	(CWH)	(Ton-hrs)
97.5	66.3	82	5,435	138,563	1,690	99	0	0	0	0	0	0	5,435	138,563
92.5	65.2	245	15,977	394,316	1,609	95	0	0	0	0	0	0	15,977	394,316
87.5	64.1	263	16,865	402,071	1,529	90	0	0	0	0	0	0	16,865	402,071
82.5	62.5	313	19,569	516,189	1,649	97	0	0	0	0	0	0	19,569	516,189
77.5	60.5	392	23,728	610,606	1,558	92	0	0	0	0	0	0	23,728	610,606
72.5	58.8	517	30,392	758,197	1,467	86	0	0	0	0	30,392	758,197	0	0
67.5	56.5	525	29,652	721,701	1,375	81	0	0	0	0	29,652	721,701	0	0
62.5	55.0	575	31,625	737,823	1,283	75	0	0	0	0	31,625	737,823	0	0
57.5	55.0	721	39,655	858,932	1,191	70	0	0	0	0	39,655	858,932	0	0
52.5	55.0	685	37,675	753,368	1,100	65	0	0	0	0	37,675	753,368	0	0
47.5	55.0	752	41,360	968,551	1,288	76	0	0	0	0	41,360	968,551	0	0
42.5	n/a	0	0	0	0	0	0	0	0	0	0	0	0	0
37.5	n/a	0	0	0	0	0	0	0	0	0	0	0	0	0
32.5	n/a	0	0	0	0	0	0	0	0	0	0	0	0	0
27.5	n/a	0	0	0	0	0	0	0	0	0	0	0	0	0
22.5	n/a	0	0	0	0	0	0	0	0	0	0	0	0	0
17.5	n/a	0	0	0	0	0	0	0	0	0	0	0	0	0
12.5	n/a	0	0	0	0	0	0	0	0	0	0	0	0	0
7.5	n/a	0	0	0	0	0	0	0	0	0	0	0	0	0
Totals:		5,070	291,933	6,860,318			0	0	0	0	210,359	4,798,572	81,575	2,061,746
Cust Wgt Factors:								0.000		0.000		0.699		0.301
Custom Entering Condenser Temperatures (F):								n/a		n/a		55.7		63.0

4b. Custom PLV Worksheet for CH-2 (Trane 1250)

Avg DB (F)	Cond Temp (F)	Total (Hrs)	CWH	Total (Ton-hrs)	Load (Tons)	Load (%)	25% Bin		50% Bin		75% Bin		100% Bin	
							(CWH)	(Ton-hrs)	(CWH)	(Ton-hrs)	(CWH)	(Ton-hrs)	(CWH)	(Ton-hrs)
97.5	66.3	82	5,435	101,885	1,242	99	0	0	0	0	0	0	5,435	101,885
92.5	65.2	245	15,977	289,938	1,183	95	0	0	0	0	0	0	15,977	289,938
87.5	64.1	263	16,865	295,641	1,124	90	0	0	0	0	0	0	16,865	295,641
82.5	62.5	313	19,569	379,551	1,213	97	0	0	0	0	0	0	19,569	379,551
77.5	60.5	392	23,728	448,975	1,145	92	0	0	0	0	0	0	23,728	448,975
72.5	58.8	517	30,392	557,498	1,078	86	0	0	0	0	30,392	557,498	0	0
67.5	56.5	525	29,652	530,663	1,011	81	0	0	0	0	29,652	530,663	0	0
62.5	55.0	575	31,625	542,517	944	75	0	0	0	0	31,625	542,517	0	0
57.5	55.0	721	39,655	631,568	876	70	0	0	0	0	39,655	631,568	0	0
52.5	55.0	685	37,675	553,947	809	65	0	0	0	0	37,675	553,947	0	0
47.5	55.0	752	41,360	712,170	947	76	0	0	0	0	41,360	712,170	0	0
42.5	n/a	0	0	0	0	0	0	0	0	0	0	0	0	0
37.5	n/a	0	0	0	0	0	0	0	0	0	0	0	0	0
32.5	n/a	0	0	0	0	0	0	0	0	0	0	0	0	0
27.5	n/a	0	0	0	0	0	0	0	0	0	0	0	0	0
22.5	n/a	0	0	0	0	0	0	0	0	0	0	0	0	0
17.5	n/a	0	0	0	0	0	0	0	0	0	0	0	0	0
12.5	n/a	0	0	0	0	0	0	0	0	0	0	0	0	0
7.5	n/a	0	0	0	0	0	0	0	0	0	0	0	0	0
Totals:		5,070	291,933	5,044,351			0	0	0	0	210,359	3,528,362	81,575	1,515,989
Cust Wgt Factors:								0.000		0.000		0.699		0.301
Custom Entering Condenser Temperatures (F):								n/a		n/a		55.7		63.0

4c. Custom PLV Worksheet for CH-3 (Carrier 1700 Ton Constant)

Avg DB (F)	Cond Temp (F)	Total (Hrs)	CWH	Total (Ton-hrs)	Load (Tons)	Load (%)	25% Bin		50% Bin		75% Bin		100% Bin	
							(CWH)	(Ton-hrs)	(CWH)	(Ton-hrs)	(CWH)	(Ton-hrs)	(CWH)	(Ton-hrs)
97.5	66.3	82	5,435	141,172	1,722	99	0	0	0	0	0	0	5,435	141,172
92.5	65.2	245	15,977	401,738	1,640	95	0	0	0	0	0	0	15,977	401,738
87.5	64.1	263	16,865	409,640	1,558	90	0	0	0	0	0	0	16,865	409,640
82.5	62.5	313	19,569	525,906	1,680	97	0	0	0	0	0	0	19,569	525,906
77.5	60.5	392	23,728	622,100	1,587	92	0	0	0	0	0	0	23,728	622,100
72.5	58.8	517	30,392	772,469	1,494	86	0	0	0	0	30,392	772,469	0	0
67.5	56.5	525	29,652	735,286	1,401	81	0	0	0	0	29,652	735,286	0	0
62.5	55.0	575	31,625	751,711	1,307	75	0	0	0	0	31,625	751,711	0	0
57.5	55.0	721	39,655	875,101	1,214	70	0	0	0	0	39,655	875,101	0	0
52.5	55.0	685	37,675	767,549	1,121	65	0	0	0	0	37,675	767,549	0	0
47.5	n/a	0	0	0	0	0	0	0	0	0	0	0	0	0
42.5	n/a	0	0	0	0	0	0	0	0	0	0	0	0	0
37.5	n/a	0	0	0	0	0	0	0	0	0	0	0	0	0
32.5	n/a	0	0	0	0	0	0	0	0	0	0	0	0	0
27.5	n/a	0	0	0	0	0	0	0	0	0	0	0	0	0
22.5	n/a	0	0	0	0	0	0	0	0	0	0	0	0	0
17.5	n/a	0	0	0	0	0	0	0	0	0	0	0	0	0
12.5	n/a	0	0	0	0	0	0	0	0	0	0	0	0	0
7.5	n/a	0	0	0	0	0	0	0	0	0	0	0	0	0
Totals:		4,318	250,573	6,002,671			0	0	0	0	168,999	3,902,116	81,575	2,100,555
Cust Wgt Factors:								0.000		0.000		0.650		0.350
Custom Entering Condenser Temperatures (F):								n/a		n/a		55.9		63.0

4d. Custom PLV Worksheet for CH-4 (Trane 650)

Avg DB (F)	Cond Temp (F)	Total (Hrs)	CWH	Total (Ton-hrs)	Load (Tons)	Load (%)	25% Bin		50% Bin		75% Bin		100% Bin	
							(CWH)	(Ton-hrs)	(CWH)	(Ton-hrs)	(CWH)	(Ton-hrs)	(CWH)	(Ton-hrs)
97.5	66.3	82	5,435	52,980	646	99	0	0	0	0	0	0	5,435	52,980
92.5	65.2	245	15,977	150,768	615	95	0	0	0	0	0	0	15,977	150,768
87.5	64.1	263	16,865	153,733	585	90	0	0	0	0	0	0	16,865	153,733
82.5	n/a	0	0	0	0	0	0	0	0	0	0	0	0	0
77.5	n/a	0	0	0	0	0	0	0	0	0	0	0	0	0
72.5	n/a	0	0	0	0	0	0	0	0	0	0	0	0	0
67.5	n/a	0	0	0	0	0	0	0	0	0	0	0	0	0
62.5	n/a	0	0	0	0	0	0	0	0	0	0	0	0	0
57.5	n/a	0	0	0	0	0	0	0	0	0	0	0	0	0
52.5	n/a	0	0	0	0	0	0	0	0	0	0	0	0	0
47.5	n/a	0	0	0	0	0	0	0	0	0	0	0	0	0
42.5	n/a	0	0	0	0	0	0	0	0	0	0	0	0	0
37.5	n/a	0	0	0	0	0	0	0	0	0	0	0	0	0
32.5	n/a	0	0	0	0	0	0	0	0	0	0	0	0	0
27.5	n/a	0	0	0	0	0	0	0	0	0	0	0	0	0
22.5	n/a	0	0	0	0	0	0	0	0	0	0	0	0	0
17.5	n/a	0	0	0	0	0	0	0	0	0	0	0	0	0
12.5	n/a	0	0	0	0	0	0	0	0	0	0	0	0	0
7.5	n/a	0	0	0	0	0	0	0	0	0	0	0	0	0
Totals:		590	38,277	357,481			0	0	0	0	0	0	38,277	357,481
Cust Wgt Factors:								0.000		0.000		0.000		1.000
Custom Entering Condenser Temperatures (F):								n/a		n/a		n/a		64.9

KEY for Custom PLV Worksheet table(s):
[Avg DB] = Midpoint temperature for bin.
[Cond Temp] = Entering condenser temperature for bin. Entering water temperature for water-cooled chillers. Entering air temperature for air-cooled chillers.
[Tot Hrs] = Hours of operation in bin.
[CWH] = Condenser temperature hours. [Tot Hrs] times [Cond Temp]. Later used to derive the four average entering condenser temperature values for the PLV calculation.
[Load] = Chiller load for bin.
[Load (%)] = Chiller load as a percentage of full load capacity.
[Total (Ton-hrs)] = Chiller [Load] times [Tot Hrs]. Later used to derive the four weighting factors for the PLV calculation.
[Bin (CWH)] = [CWH] values separated into the four PLV bins: 25%, 50%, 75% and 100% load according to chiller load for each bin.
[Bin (Ton-hrs)] = Values separated into the four PLV bins: 25%, 50%, 75% and 100% load according to the chiller load for each bin.
[Cust Wgt Factor] = The four custom PLV weighting factors. [Total (Ton-hrs)] for PLV Bin divided by [Total (Ton-hrs)] for the chiller.
[Cust Ent Cond Temps] = The four custom condenser temperature values for the PLV calculation = [Total (CWH)] for PLV bin divided by [Tot Hrs] in the PLV bin.

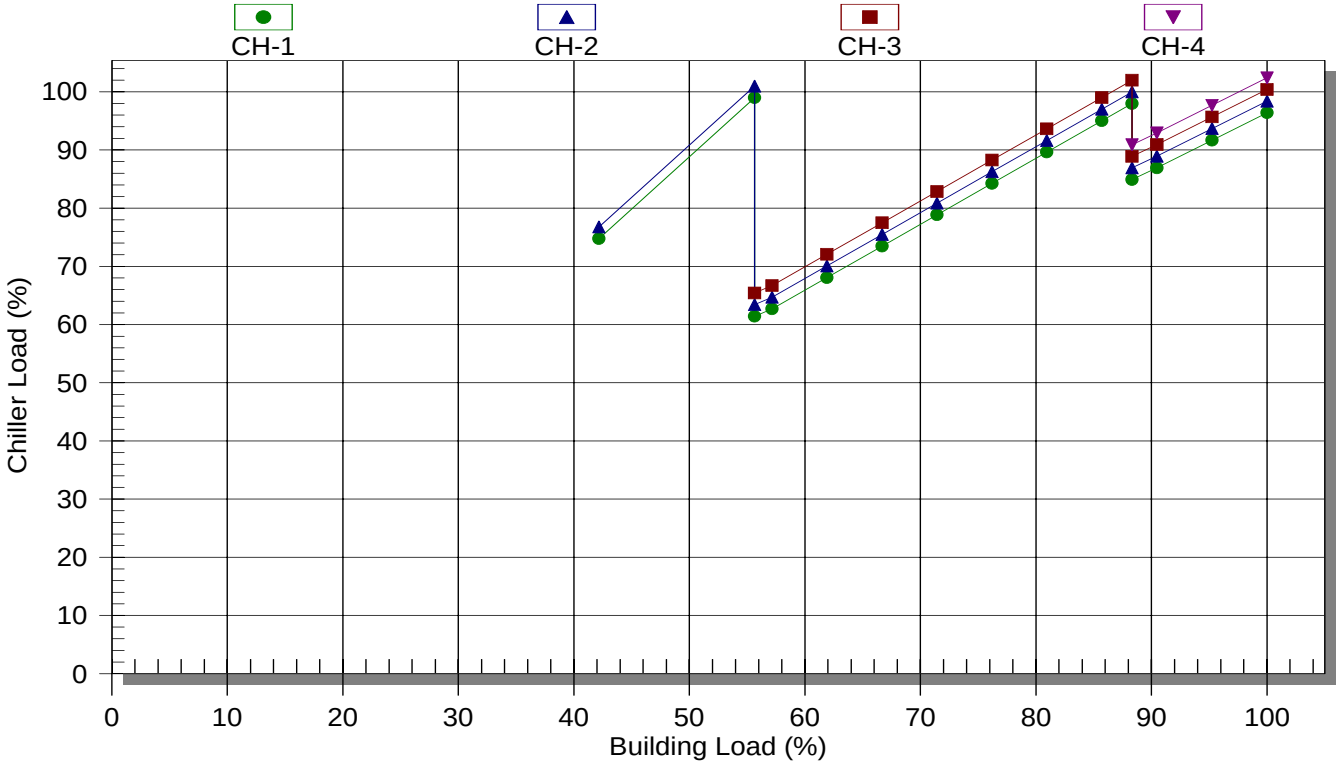

Note: Individual chiller curves in this graph have been adjusted up or down so the number of chillers operating at each point can be seen. If the curves had not been adjusted, all curves would lie on top of each other. Because of the adjustment each chiller load shown on the graph is only accurate to within a few percentage points plus or minus of the original calculated values.

2. Input Data Summary

Weather

City ..... Salt Lake City, Utah
Schedule ..... On All Day: Weekday
..... On All Day: Saturday
..... On All Day: Sunday

Loads

User-Defined Load Profile

Chiller System

Name ..... Combination F-1
Chillers in Plant 4
Plant Control ..... Sequenced
Full Load LCHWT ..... 44.0 F
Tower Configuration ..... One Tower for System
Cooling Tower ..... 6 Cell Tower (2)
..... Detailed Cooling Tower Model
Free Cooling ..... Plate-Frame Heat Exchanger

Sequence	Chiller Name	FL Capacity (Tons)	Full Load Power
CH-1	Carrier 1700 Ton VFD	1,700	0.490 kW/Ton
CH-2	Trane 1250	1,250	0.473 kW/Ton
CH-3	Carrier 1700 Ton Constant	1,732	0.470 kW/Ton
CH-4	Trane 650	650	0.473 kW/Ton

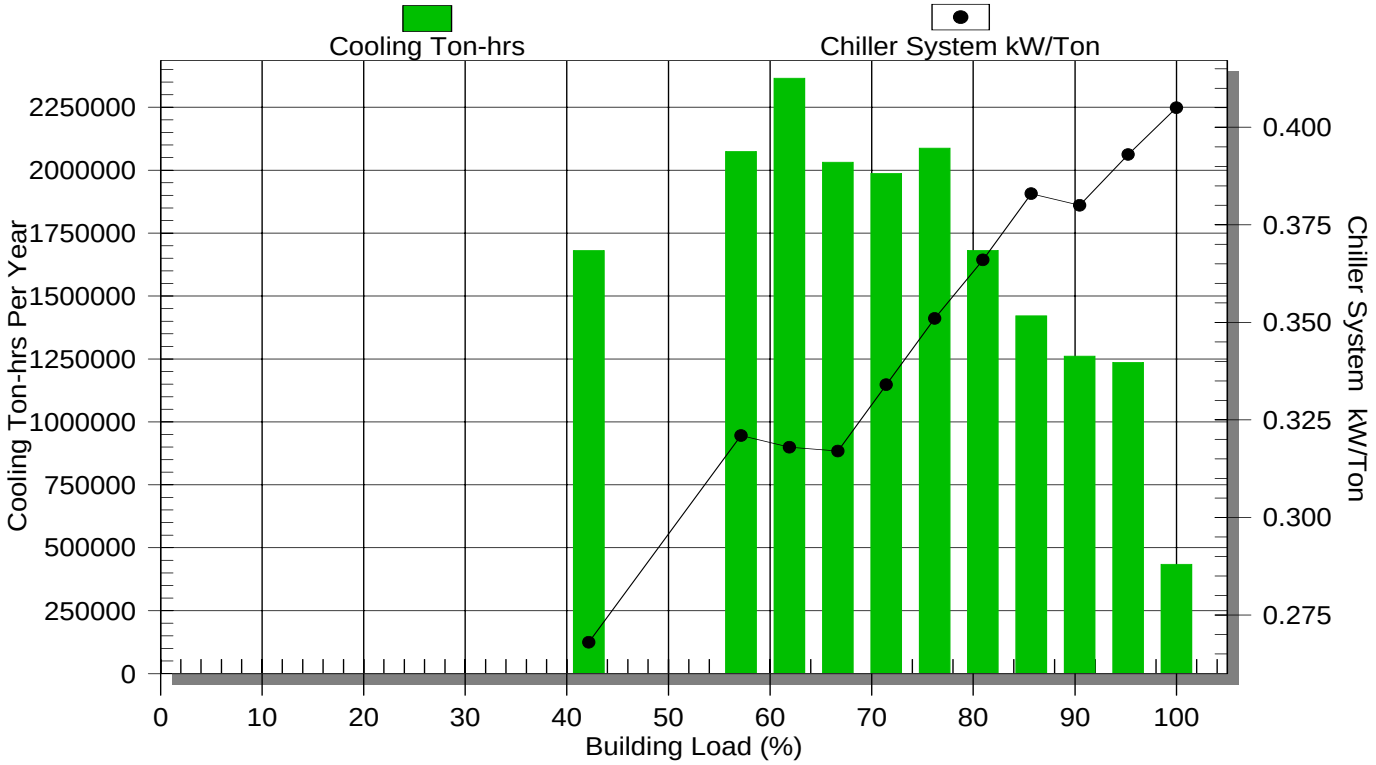

2. Input Data Summary

Weather

City ..... Salt Lake City, Utah
Schedule ..... On All Day: Weekday
..... On All Day: Saturday
..... On All Day: Sunday

Loads

User-Defined Load Profile

Chiller System

Name ..... Combination F-1
Chillers in Plant 4
Plant Control ..... Sequenced
Full Load LCHWT ..... 44.0 F
Tower Configuration ..... One Tower for System
Cooling Tower ..... 6 Cell Tower (2)
..... Detailed Cooling Tower Model
Free Cooling ..... Plate-Frame Heat Exchanger

Sequence	Chiller Name	FL Capacity (Tons)	Full Load Power
CH-1	Carrier 1700 Ton VFD	1,700	0.490 kW/Ton
CH-2	Trane 1250	1,250	0.473 kW/Ton
CH-3	Carrier 1700 Ton Constant	1,732	0.470 kW/Ton
CH-4	Trane 650	650	0.473 kW/Ton

Appendix A.7. Estimates of Service Lives of Various System Components

Equipment Item	Median Years	Equipment Item	Median Years	Equipment Item	Median Years
Air Conditioners		Air Terminals		Air-cooled condensers	20
Window unit	10	Diffusers, grilles, registers	27	Evaporative condensers	20
Residential single or split package	15	Induction and fan-coil units	20	Insulation	
Commercial through-the-wall	15	VAV and double-duct boxes	20	Molded	20
Water cooled package	15	Air Washers	17	Blanket	24
Heat pumps		Ductwork	30	Pumps	
Residential air-to-air	15*	Dampers	20	Base-mounted	20
Commercial air-to-air	15	Fans		Pipe-mounted	10
Commercial water-to-air	19	Centrifugal	25	Sump and well	10
Roof-top air conditioners		Axial	20	Condensate	15
Single-zone	15	Propeller	15	Reciprocating engines	20
Mulitzone	15	Ventilating roof-mounted	20	Steam turbines	30
Boilers steam		Coils		Electric motors	18
Steel water-tube	24 (30)	DX, water, or steam	20	Motor starters	17
Steel fire-tube	25 (25)	Electric	15	Electric transformers	30
Cast iron	35 (30)	Heat Exchangers		Controls	
Electric	15	Shell-and-tube	24	Pneumatic	20
Burners	21	Reciprocating compressors	20	Electric	16
Furnaces		Package chillers		Electronic	15
Gas- or oil-fired	18	Reciprocating	20	Valve actuators	
Unit heaters		Centrifugal	23	Hydraulic	15
Gas or electric	13	Absorption	23	Pneumatic	20
Hot water or steam	20	Cooling towers		Self-contained	10
Radiant heaters		Galvanized metal	20		
Electric	10	Wood	20		
Hot-water or steam	25	Ceramic	34		

Source: Data obtained from a national survey of the United States by ASHRAE Technical Committee TC 1.8 (Akalin 1978). Data updated by TC 1.8 in 1986.
*See Lovvorn and Hiller (1985) and Easton Consultants (1986) for further information.