State of Utah–Department of Administrative Services

DIVISION OF FACILITIES CONSTRUCTION
AND MANAGEMENT

4110 State Office Building/Salt Lake City, Utah 84114/538–3018

NEW DOWNTOWN SALT LAKE CITY WINE STORE
DEPARTMENT OF ALCOHOLIC BEVERAGE CONTROL
300 WEST HARRIS AVE. (1563 SOUTH)
DFCM PROJECT NO. 05051030
DFCM CONTRACT NO. 077431

DECEMBER 1, 2007

BID SET

OWNER	TENANT	ARCHITECT	CIVIL	STRUCTURAL	MECHANICAL	ELECTRICAL	PLUMBING	FIRE PROTECTION	LANDSCAPE
DFCM 4110 STATE OFFICE BUILDING SALT LAKE CITY, UTAH 84114 TEL: (801) 538-3431 FAX: (801) 538-3297 CONTACT: MATTHIAS MUELLER E-mail: mmueller@utah.gov	DABC 1625 SOUTH 900 WEST SALT LAKE CITY, UTAH 84130 TEL: (801) 977-6800 FAX: (801) 977-6889 CONTACT: GARY STEINBURG E-mail: gsteinburg@utah.gov	MJSA ARCHITECTS 357 WEST PIERPONT AVE. SALT LAKE CITY, UTAH 84101 TEL: (801) 364-5161 FAX: (801) 364-5167 CONTACT: MARK WILKINS E-mail: mwilkins@mjsaa.com	MCNEIL ENGINEERING 6895 SOUTH 900 EAST MIDVALE, UTAH 84047 TEL: (801) 255-7700 FAX: (801) 255-8071	REAVELEY ASSOCIATES 1515 SOUTH 1100 EAST, SUITE 200 SALT LAKE CITY, UTAH 84105 TEL: (801) 486-3883 FAX: (801) 486-0911	COLVIN ENGINEERING 244 WEST 300 NORTH, SUITE 200 SALT LAKE CITY, UTAH 84103 TEL: (801) 322-2400 FAX: (801) 322-2416	ELECTRICAL CONSULTING ENGINEERS 939 SOUTH WEST TEMPLE SALT LAKE CITY, UTAH 84101 TEL: (801) 521-8007 FAX: (801) 521-8057	COLVIN ENGINEERING 244 WEST 300 NORTH, SUITE 200 SALT LAKE CITY, UTAH 84103 TEL: (801) 322-2400 FAX: (801) 322-2416	COLVIN ENGINEERING 244 WEST 300 NORTH, SUITE 200 SALT LAKE CITY, UTAH 84103 TEL: (801) 322-2400 FAX: (801) 322-2416	MCNEIL ENGINEERING 6895 SOUTH 900 EAST MIDVALE, UTAH 84047 TEL: (801) 255-7700 FAX: (801) 255-8071

CODE ANALYSIS

APPLICABLE CODES	Year		Year
International Building Code	2006	National Electrical Code	2005
International Mechanical Code	2006	Uniform Code for	
International Plumbing Code	2006	Building Conservation	2006
International Fire Code	2006	ADA Accessibility	
International Energy		Guildelines	ANSI A117.1-2003
Conservation Code	2006		

A. Occupancy and Group: M S-2

Change in Use: Yes ____ No X Mixed Occupancy: Yes √ No ____
Special Use and Occupancy (e.g. High Rise, Covered Mall): NO

B. Seismic Design Category: ____ Design Wind Speed: 90 mph

C. Type of Construction (circle one):

I/A I/B II/A II/B III/A III/B IV/HT V/A (V/B)

D. Fire Resistance Rating Requirements for the Exterior Walls based on the fire separation distance (in hours):
North: 0/1 South: 0 East: 0 West: 0

E. Mixed Occupancies: √ Nonseparated Uses: √

F: Sprinklers:

Required: ____ Provided: √ Type of Sprinkler System: AUTO NFPA25

G: Number of Stories: 1 Building Height: 17'

H: Actual Area per Floor (square feet): 6432(M), 4140(S-2), 12619(TOTAL)
AREAS BASED ON THE ALTERNATE ADDS #1& #2 BEING INCLIDED.

I: Tabular Area: 9000(M),13500(S-2)

J: Area Modifications:

a) $A_a = A_t + [A_t I_f] + [A_t I_s]$ $\quad I_f = \left[\frac{F}{P} - 0.25\right]\frac{W}{30}$

P = 485, F = 397, W = 25.65, I_s =3

$A_a = 4.4861A_t$ $\quad I_f = 0.4861$

$A_a = 40,375$

b) Sum of the Ratio Calculations for Mixed Occupancies:
M, NONSEPARATED, A_t=9000

$\frac{\text{Actual Area}}{\text{Allowable Area}} \leq 1 \qquad \frac{12619}{40375} < 1$

c) Total Allowable Area for:
1) One Story: A_a(1) 40375
2) Two Story: A_a(2) X
3) Three Story: A_a(3) X

d) Unlimited Area Building: Yes ____ No X Code Section: ____

K. Fire Resistance Rating Requirements for Building Elements (hours).

Element	Hours	Assembly Listing	Element	Hours	Assembly Listing
Exterior Bearing Walls	0/1*		Floors - Ceiling Floors	NA	
Interior Bearing Walls	0		Roofs - Ceiling Roofs	0	
Exterior Non-Bearing Walls	0/1*		Exterior Doors and Windows	0	
Structural Frame	0		Shaft Enclosures	NA	
Partitions - Permanent	0		Fire Walls	0	
Fire Barriers	0		Fire Partitions	0	
			Smoke Partitions	0	

* FOR THE BASE BID -THE NORTH EXTERIOR WALL IS >10'-0" & < 30'-0" FROM PROPERTY LINE. THIS WALL DOES NOT REQUIRE A FIRE RATING. WALL TO BE 8"X8"X16" CMU WITH CELLS NOT GROUTED SOLID.
* FOR THE ALTERNATE ADD #1 -THE NORTH EXTERIOR WALL IS >10'-0" & < 10'-0" FROM PROPERTY LINE. THIS WALL REQUIRES A 1 HR. RATING. WALL TO BE 8"X8"X16" CMU NOT GROUTED SOLID. IBC 2006, TABLE 720.1(2) STATES REQUIRED MIN. EQUIVALENT THICKNESS TO BE 2.8". MANUFACTURES TEST REPORT INDICATES MIN. EQUIVALENT THICKNESS TO BE 3.93"

L. Design Occupant Load:215(M), 14(S-2), 229 (TOTAL)
Exit Width Required: 35" Exit Width Provided: 108"

M. Minimum Number of Required Plumbing Facilities:
a) Water Closets - Required (m) 1 (f) 1 Provided (m) 1 (f) 1
b) Lavatories - Required (m) 1 (f) 1 Provided (m) 1 (f) 1
c) Bath Tubs or Showers: 0
d) Drinking Fountains: 1 Service Sinks: 1

FOOTNOTES:

1) In case of conflict with the U.S. Department of Justice Federal Registers Parts I through Σ - ADA Guidelines and specific reference to the International Building Code Accessibility Chapters, the more restrictive requirement shall govern.

2) Additional Code Information shall be provided at the discretion of the Building Official for Complex Buildings. Including, but not limited to:
a) High Rise Requirements.
b) Atriums.
c) Performance Based Criteria.
d) Means or Egress Analysis.
e) Fire Assembly Locator Sheet.
f) Exterior and Interior Accessibility Route.
g) Fire Stopping, Including Tested Design Number.

BUILDING OCCUPANCY:
MIXED USE NON-SEPERATED
OPTION

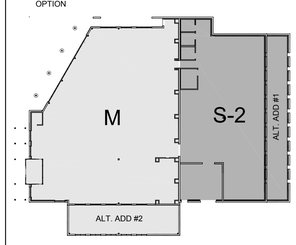

TABULATION: INCLUDING ALT. ADDS #1 & #2.

GROSS AREA = 12,619 S.F. .
SALES AREA = 6,432 S.F.NET
STORAGE AREA = 4,140 S.F NET

ALT. ADD #1 = 1,056 S.F. GROSS
ALT. ADD #2 = 927 S.F. GROSS
BASE BID AREA = 10,636 S.F. GROSS

INDEX OF DRAWINGS

GENERAL INFORMATION
AG1-01 COVER SHEET
AG1-02 INDEX OF DRAWINGS AND CODE ANALYSIS
AG1-03 ABBREVIATIONS, LEGEND, AND NOTES
AG1-04 ADA STANDARDS

SITE
V1.00 SURVEY
AS1-01 ARCHITECTURAL SITE PLAN

CIVIL
G1-00 CIVIL COVER SHEET
G1-01 GENERAL NOTES
C1-01 HORIZONTAL CONTROL PLAN
C2-01 GRADING AND DRAINAGE PLAN
C2-02 EROSION CONTROL PLAN
C4-01 UTILITY PLAN
C5-01 EROSION DETAILS AND GENERAL NOTES

LANDSCAPE
L1-01 PLANTING PLAN
L1-02 IRRIGATION PLAN
L5-01 PLANTING AND IRRIGATION DETAILS

STRUCTURAL
SE001 GENERAL STRUCTURAL NOTES
SE002 GENERAL STRUCTURAL NOTES
SB101 FOOTING AND FOUNDATION PLAN
SB101A FOOTING AND FOUNDATION PLAN ALTERNATE
SB501 FOOTING AND FOUNDATION DETAILS
SB502 FOOTING AND FOUNDATION DETAILS
SB601 STRUCTURAL SCHEDULES
SF101 ROOF FRAMING PLAN
SF101A ROOF FRAMING PLAN ALTERNATE
SF501 ROOF FRAMING DETAILS
SF502 ROOF FRAMING DETAILS
SF511 CANOPY / TRELLIS / AWNING FRAMING DETAILS
SF601 STRUCTURAL DETAILS

ARCHITECTURAL
AE1-01 FLOOR PLAN
AE1-02 REFLECTED CEILING PLAN
AE1-03 ROOF PLAN
AE1-04 ENLARGED FLOOR PLANS
AE1-05 SLAB PLAN
AE2-01 BUILDING ELEVATIONS
AE3-01 BUILDING SECTIONS
AE3-02 WALL SECTIONS
AE3-03 WALL SECTIONS
AE3-04 WALL SECTIONS
AE3-05 WALL SECTIONS
AE5-01 SKIN DETAILS
AE5-02 ROOF DETAILS
AE5-03 WALL TYPES, DOOR AND VESTIBULE DETAILS
AE6-01 FINISH, WINDOW AND DOOR SCHEDULES
AI1-01 INTERIOR ELEVATIONS
AI1-02 INTERIOR ELEVATIONS

MECHANICAL
MH0-01 LEGENDS, ABBREVIATIONS AND SCHEDULES
MH1-01 MECHANICAL FLOOR PLAN
MH1-02 MECHANICAL ROOF PLAN
MH5-01 MECHANICAL DETAILS

PLUMBING
PL0-01 PLUMBING SCHEDULE
PL1-01 PLUMBING FLOOR PLAN
PL4-01 ENLARGED PLUMBING PLANS

ELECTRICAL
E-001 GENERAL NOTES AND SCHEDULES
E-002 DETAILS
E-003 PANELS
E-100 SITE PLAN - POWER
E-101 FLOOR PLAN - POWER
E-102 ROOF PLAN - POWER
E-201 FLOOR PLAN - LIGHTING
E-301 FLOOR PLAN - SYSTEMS

DEFERRED SUBMITTALS

DOCUMENTS FOR DEFERRED SUBMITTAL ITEMS SHALL BE SUBMITTED BY THE GENERAL CONTRACTOR TO THE ARCHITECT WHO WILL FORWARD THEM TO THE BUILDING OFFICIAL FOR APPROVAL. THE DEFERRED SUBMITTAL ITEMS SHALL NOT BE ORDERED, FABRICATED OR INSTALLED UNTIL THE DESIGN AND SUBMITTAL DOCUMENTS HAVE BEEN APPROVED BY THE BUILDING OFFICIAL.

ITEM	DESCRIPTION
1	AUTOMATIC FIRE SPRINKLER SYSTEM - DESIGN BUILD.
2	SEISMIC RESTRAINT SYSTEM FOR PLUMBING PIPING.
3	SEISMIC RESTRAINT SYSTEM FOR MECHANICAL DUCTWORK.
4	SEISMIC RESTRAINT SYSTEM FOR ELECTRICAL RACEWAYS.
5	SEISMIC RESTRAINT SYSTEM FOR ROOFTOP EQUIPMENT.
6	ICC EVALUATION REPORT AND APPROVED FABRICATOR STATUS FOR STEEL JOIST.
7	ICC EVALUATION REPORT AND APPROVED FABRICATOR STATUS FOR METAL DECK.
8	UL CLASS C MINIMUM ROOF MEMBRANE/INSULATION ASSEMBLE LISTING DATA.
9	ICC EVALUATION REPORT OF EQUAL FOR METAL WALL PANEL SYSTEM.

REFERENCE NOTES

REVISIONS:

NEW DOWNTOWN SALT LAKE CITY WINE STORE
300 West Harris Ave. (1563 South)

MJSA
357 West Pierpont Avenue □ Salt Lake City, Utah 84101
Telephone 801 364 5161 □ Facsimile 801 364 5167
ARCHITECTURE INTERIOR DESIGN

State of Utah-Department of Administrative Services
DIVISION OF FACILITIES CONSTRUCTION AND MANAGEMENT
4110 State Office Building/Salt Lake City, Utah 84114/538-3018

DEPARTMENT OF ALCOHOLIC BEVERAGE CONTROL
1625 South 900 West, Salt Lake City, Utah 84130/977-6800

STAMP

STATE OF UTAH
KIM L. NG
No. 127363
LICENSED ARCHITECT
11/12/07

DFCM PROJECT NO.: 05051030
DFCM CONTRACT NO.: 077431
MJSA PROJECT NO.: 07005
DATE: 10/15/07
SHEET: AG1-02

INDEX OF DRAWINGS
CODE ANALYSIS
SCALE:

© 07/2005 Sate Wide Electrical/ADA/CL CD-ROM - 02-Aug - Wed, 14 Nov 2007 - 1:56pm

Abbreviations

&	AND
∠	ANGLE
@	AT
℄	CENTERLINE
Ø	DIAMETER OR ROUND
#	POUND OR NUMBER
d	PENNY
(E), Exist	EXISTING
(N)	NEW
A.B.	ANCHOR BOLT
ABV.	ABOVE
ACCS.	ACCESS OR ACCESSIBLE
ACOUS.	ACOUSTIC
ACT	ACOUSTICAL TILE
A.D.	AREA DRAIN
ADDN.	ADDITION
ADH.	ADHESIVE
ADJ.	ADJUST, ADJUSTABLE
A.F.F.	ABOVE FINISH FLOOR
AGGR.	AGGREGATE
ALUM.	ALUMINUM
ALT.	ALTERNATE
A.P.	ACCESS PANEL
APPO.	APPROVED
APPROX.	APPROXIMATE
ARCH.	ARCHITECTURAL
ASPH.	ASPHALT
BAL.	BALANCING
BARR.	BARRIER
BD.	BOARD
BITUM.	BITUMINOUS
BLDG.	BUILDING
BLK.	BLOCK, BLOCKING
B.O.	BOTTOM OF
BOT.	BOTTOM
BSMT.	BASEMENT
B.U.R.	BUILT UP ROOFING
CAB.	CABINET
CAP.	CAPACITY
C.B.	CATCH BASIN
CEM.	CEMENT
CER.	CERAMIC
C.G.	CORNER GUARD
CH.	CHANNEL
C.I.	CAST IRON
C.J.	CONTROL JOINT
C.L.	CHAIN LINK
CLG.	CEILING
CLKG.	CAULKING
CL.	CENTER LINE
CLR.	CLEAR
C.M.S.	COUNTERSUNK MACHINE SCREW
C.M.U.	CONCRETE MASONRY UNIT
C.O.	CASED OPENING
COL.	COLUMN
CONC.	CONCRETE
CONN.	CONNECTION
CONT.	CONTINUOUS
CONTR.	CONTRACTOR
CORR.	CORRIDOR
C.T.	CERAMIC TILE
CTR.	CENTER
CTSK.	COUNTERSINK, (SUNK)
DP.	DEEP
D.A.	DOUBLE ACTING
DBL.	DOUBLE
DEPT.	DEPARTMENT
DET.	DETAIL
D.F.	DRINKING FOUNTAIN
DIA.	DIAMETER
DIAG.	DIAGONAL
DIM.	DIMENSION
DISP.	DISPENSER
DIV.	DIVISION
DN.	DOWN
DO.	DOOR OPENING
DOM.	DOMESTIC
DP.	DAMPROOFING
DR.	DOOR
DS.	DOWNSPOUT
D.S.P.	DRY STANDPIPE
DWG.	DRAWING
DWR.	DRAWER
(E)	EXISTING
E.	EAST
EA.	EACH
E.B.	EXPANSION BOLT
E.J.	EXPANSION JOINT
EL.	ELEVATION
ELEC.	ELECTRICAL
ELEV.	ELEVATOR
EMER.	EMERGENCY
EN.	ENAMEL
ENCL.	ENCLOSURE
E.P.	ELECTRICAL PANELBOARD
EQ.	EQUAL
EQ.J.	EARTHQUAKE JOINT
EQUIP.	EQUIPMENT
E.W.	EACH WAY
E.W.C.	ELECTRIC WATER COOLER
EXC.	EXCAVATE (ED)
EXH.	EXHAUST
EXP.	EXPOSED
EXPAN.	EXPANSION
EXT.	EXTERIOR
EXTR.	EXTRUDED
F.A.	FIRE ALARM
FAB.	FABRICATE
F.B.	FLAT BAR
F.C.	FURRED CEILING
F.D.	FLOOR DRAIN
FDN.	FOUNDATION
F.E.	FIRE EXTINGUISHER
F.E.C.	FIRE EXTINGUISHER CABINET
F.F.	FACTORY FINISH
F.H.	FIRE HYDRANT
F.H.C.	FIRE HOSE CABINET
F.H.S.	FLAT HEAD SCREW
FIN.	FINISH (ED)
F.I.O.	FURNISHED AND INSTALLED BY OWNER
F.J.	FORMED JOINT
FLASH.	FLASHING
FLEX.	FLEXIBLE
FLR.	FLOOR
FLUOR.	FLUORESCENT
F.O.C.	FACE OF CONCRETE
F.O.F.	FACE OF FINISH
F.O.S.	FACE OF STUD
F.O.W.	FACE OF WALL
F.O.I.C.	FURNISHED BY OWNER INSTALLED BY CONTRACTOR
F.O.S.	FACE OF STUD
FP.	FIREPROOF
F.S.	FULL SIZE
FT.	FEET, FOOT
FTG.	FOOTING
FURR.	FURRING
GA.	GAUGE
GAL.	GALLON
GALV.	GALVANIZED
G.B.	GRAB BAR
GEN.	GENERAL
GL.	GLASS
GND.	GROUND
GR.	GRADE

G.S.M.	GALVANIZED SHEET METAL
G.S.U.	GLAZED STRUCTURAL UNIT
GYP.BD.	GYPSUM BOARD
GYP.	GYPSUM
H.	HIGH (DIM)
H.B.	HOSE BIB
H.C.	HOLLOW CORE
HDWD.	HARDWOOD
HDWE.	HARDWARE
HGT.	HEIGHT
H.M.	HOLLOW METAL
HOL.	HOLLOW
HOR.	HORIZONTAL
H.P.	HIGH POINT
HR.	HOUR
HT.	HEIGHT
H.W.H.	HOT WATER HEATER
I.D.	INSIDE DIAMETER (DIM)
IN.	INCH
INCR.	INCREASE
INFO.	INFORMATION
INSL.	INSULATION
INT.	INTERIOR
INV.	INVERT
JAN.	JANITOR
JST.	JOIST
JT.	JOINT
K.O.	KNOCK OUT
K.P.	KICK PLATE
L.	LONG (DIM)
LAM.	LAMINATE, LAMINATED
LAV.	LAVATORY
LIN.	LINEAR
LT.	LIGHT
LTG.	LIGHTING
MARB.	MARBLE
MAS.	MASONRY
MAT.	MATERIAL
MAX.	MAXIMUM
M.B.	MACHINE BOLT
M.C.	MEDICINE CHEST
MECH.	MECHANICAL
MEMB.	MEMBRANE
MFR.	MANUFACTURER
MH.	MANHOLE
MIN.	MINIMUM
MIR.	MIRROR
MISC.	MISCELLANEOUS
MLDG.	MOLDING
M.L.P.	METAL LATH AND PLASTER
M.O.	MASONRY OPENING
M.S.	MACHINE SCREW
MTD.	MOUNTED
MTL.	METAL
MUL.	MULLION
(N)	NEW
N.	NORTH
NEG.	NEGATIVE
N.I.C.	NOT IN CONTRACT
NO.	NUMBER
N.T.S.	NOT TO SCALE
O.A.	OVERALL
OBS.	OBSCURE
O.C.	ON CENTER
O.D.	OUTSIDE DIAMETER
O.F.C.I.	OWNER FURNISHED CONTRACTOR INSTALLED
O.R.D.	OVERFLOW ROOF DRAIN
OFF.	OFFICE
O.F.C.	OVERFLOW SCUPPER
O.H.S.	OVAL HEAD SCREW
OPNG.	OPENING
OPP.	OPPOSITE
O.H.	OVERHEAD
OZ.	OUNCE
PART.	PARTITION
PART.BD.	PARTICLE BOARD
P.B.	PANIC BAR
PC.	PIECE, POINT OF CURVATURE
PERF.	PERFORATED
PERP.	PERPENDICULAR
PL.	PLATE
P.L.	PROPERTY LINE
P.LAM.	PLASTIC LAMINATE
PLAS.	PLASTER
PLY.	PLYWOOD
PNL.	PANEL
POL.	POLISH; POLISHED
P.PL.	POLISHED PLATE
PR.	PAIR
PRCST.	PRECAST
PREFAB.	PREFABRICATE(D)
PRELIM.	PRELIMINARY
PROJ.	PROJECT; PROJECTION
PROP.	PROPERTY
P.S.I.	POUNDS PER SQUARE INCH
PT.	POINT
P.T.D.	PAPER TOWEL DISPENSER
P.T.D./R.	PAPER TOWEL DISPENSER & RECEPTACLE
P.T.D.F.	PRESSURE TREATED DOUGLAS FIR
P.T.R.	PAPER TOWEL RECEPTACLE
Q.T.	QUARRY TILE
QTR.	QUARTER
R.	RISER
RAD.	RADIUS
R.B.	RUBBER BASE
R.C.P.	REFLECTED CEILING PLAN
R.D.	ROOF DRAIN
REC.	RECEIVE
REF.	REFERENCE
REFR.	REFRIGERATION
REINF.	REINFORCED
REQD.	REQUIRED
RES.	RESILIENT
RET.	RETURN
REV.	REVISED; REVISION
RFG.	ROOFING
RGTR.	REGISTER
RHS.	ROUND HEAD SCREW
R.L.	RAIN LEADER (INTERIOR)
RM.	ROOM
RND.	ROUND
R.O.	ROUGH OPENING
RUB.	RUBBER
RWD.	REDWOOD
S.	SOUTH
S.C.	SOLID CORE
S.C.D.	SEAT COVER DISPENSER
S.E.D.	SEE ELECTRICAL DWGS.
SCHED.	SCHEDULE; SCHEDULED
S.D.	SOAP DISPENSER
SECT.	SECTION
SH.	SHOWER
SHT.	SHEET
SHTG.	SHEATHING
SIM.	SIMILAR
SL.	SLOPE
S.L.D.	SEE LANDSCAPE DWGS.
S.M.D.	SEE MECHANICAL DWGS.
S.N.D.	SANITARY NAPKIN DISPENSER
S.N.R.	SANITARY NAPKIN RECEPTACLE
S.O.G.	SLAB ON GRADE
S.P.D.	SEE PLUMBING DWGS.
SPEC.	SPECIFICATIONS
SQ.	SQUARE

S.S.D.	SEE STRUCTURAL DWGS.
S.SK.	SERVICE SINK
S.STL.	STAINLESS STEEL
STA.	STATION
STD.	STANDARD
STER.	STERILIZER
STL.	STEEL
STOR.	STORAGE
STRUCT.	STRUCTURAL
SUB.	SUBSTITUTE
SUPT.	SUPERINTENDENT
SUSP.	SUSPEND; SUSPENDED
SYM.	SYMMETRICAL
SYS.	SYSTEM
T.	TREAD
T&G	TONGUE AND GROOVE
THERM.	THERMOSTAT
TC.	TERRACOTTA
TEL.	TELEPHONE
TEMP.	TEMPORARY; TEMPERATURE
T.H.B.	TEMPER HARD BOARD
THK.	THICK
THRESH.	THRESHOLD
THRU.	THROUGH
TLT.	TOILET
T.O.	TOP OF
T.M.E.	TO MATCH EXISTING
T.P.	TOP OF PAVEMENT
T.P.D.	TOILET PAPER DISPENSER
T.V.	TELEVISION
T.O.W.	TOP OF WALL
TYP.	TYPICAL
UNFIN.	UNFINISHED
U.N.O.	UNLESS NOTED OTHERWISE
UR.	URINAL
VAR.	VARIES; VARIABLE
V.B.	VINYL BASE
V.C.T.	VINYL COMPOSITION TILE
VERT.	VERTICAL
VEST.	VESTIBULE
V.G.	VERTICAL GRAIN
V.I.F.	VERIFY IN FIELD
VOL.	VOLUME
V.S.	VINYL SHEET
W.	WIDE (DIMENSION)
W/	WITH
W/O	WITHOUT
WAIN	WAINSCOT
W.C.	WATER CLOSET
W.C.A.	WHEEL CHAIR ACCESSIBLE
WD.	WOOD
W.F.	WIDE FLANGE (STEEL)
W.GL.	WIRE GLASS
WH.B.	WHITE BOARD
WIND.	WINDOW
W.O.	WHERE OCCURS
W.P.	WATERPROOF
W.S.	WEATHERSTRIP
WT.	WEIGHT
W.W.M.	WELDED WIRE MESH
Y.D.	YARD DRAIN

FIRE PROTECTION NOTES

1. FOR LOCATIONS OF FIRE RATED PARTITIONS, SEE THE AE4 SHEETS.
2. WOOD USED FOR BLOCKING, NAILERS, OR FRAMING IN FIRE RATED ASSEMBLIES SHALL BE FIRE RETARDANT TREATED.
3. FOR EXIT LIGHTS AND EMERGENCY LIGHTING, SEE ELECTRICAL.
4. FOR FIRE DETECTION SYSTEM, SEE ELECTRICAL.
5. FOR FIRE ALARM SYSTEM, SEE ELECTRICAL.
6. FIRE RATINGS FOR PARTITIONS/WALLS:

RATING	SYMBOL	UL DESIGN
4 HOUR		
3 HOUR		
2 HOUR		
1 HOUR		

7. WHERE FIRE EXTINGUISHER CABINETS OR OTHER EQUIPMENT IS RECESSED IN FIRE RATED PARTITIONS, MODIFY THE PARTITION AS REQUIRED TO PROVIDE A CONTINUOUS ENCLOSURE TO ENSURE UNINTERRUPTED FIRE RATING.
8. AT FIRE RATED DOOR LOCATIONS FRAMES SHALL BE NEW AND DOORS SHALL BE LABELED FOR THE INTENDED USE OR EQUIVALENT.
9. PENETRATIONS OF PIPES, CONDUITS, ETC., IN WALLS REQUIRING PROTECTED OPENINGS SHALL BE FIRE STOPPED. FIRE STOP MATERIAL SHALL BE A TESTED ASSEMBLY APPROVED BY THE STATE FIRE MARSHAL.

Legend

- N — NORTH ARROW
- A / 1 — GRID LINE
- 1 / AE1-01 — SECTION: DETAIL NUMBER; SHEET WHERE SECTION IS SHOWN
- 1 / AE1-01 — EXTERIOR ELEVATION: DETAIL NUMBER; SHEET WHERE ELEVATION IS SHOWN
- 1, 2, 3, 4 / AE1-01 — INTERIOR ELEVATION(S): ELEVATION NUMBER; ELEVATION IDENTIFICATION; SHEET WHERE ELEVATION IS SHOWN
- 1 / AE1-01 — DETAIL REFERENCE: DETAIL NUMBER; SHEET WHERE ELEVATION IS SHOWN
- 1 / AE1-01 — DETAIL NUMBER; SHEET WHERE ELEVATION IS SHOWN
- 1 / AE1-01 — DETAIL NUMBER; SHEET WHERE ELEVATION IS SHOWN
- ROOM NAME / 1000 — ROOM IDENTIFICATION: ROOM NAME; ROOM NUMBER
- DOOR MARK (SEE DOOR SCHEDULE)
- 10 — WINDOW MARK (SEE WINDOW SCHEDULE)
- WALL TYPE INDICATOR (SEE WALL TYPE SCHEDULE)
- 3 — REVISION IDENTIFICATION
- LEVEL 5 FINISH FLOOR / ELEV. = 4742' — DATUM POINT
- MATCH LINE AD1-1A / AD1-1B — MATCH LINE; SHT. REFERENCE FOR CONTINUATION

Symbols

Materials

- PLYWOOD
- FINISHED WOOD
- ROUGH WOOD (BLOCKING)
- ROUGH WOOD (CONTINUOUS)
- BATT INSULATION
- RIGID INSULATION
- EARTH
- CONCRETE
- AGGREGATE BASE
- CMU

Walls / Partitions

- EXISTING TO REMAIN (NOT USED)
- REMOVE WALL (NOT USED)
- METAL STUDS
- STRUCURAL METAL STUDS (NOT USED)
- WOOD STUDS (NOT USED)
- CMU
- CONCRETE

General Notes

GENERAL NOTES FOR ALL DRAWINGS

1. ALL WORK SHALL MEET OR EXCEED THE REQUIREMENTS OF APPLICABLE EDITIONS OF ALL LOCAL, STATE, AND FEDERAL CODES AND ORDINANCES INCLUDING BUT NOT LIMITED TO BUILDING CODES, ELECTRICAL CODES, PLUMBING CODES, MECHANICAL CODES, ENERGY CODES, FIRE COEDS, SAFETY CODES, AND DISABLED ACCESS CODES.
2. THE CONTRACTOR SHALL COORDINATE LAYOUT DIMENSIONS INDICTED ON THE STRUCTURAL, ELECTRICAL, PLUMBING AND MECHANICAL DRAWINGS WITH THOSE INDICATED ON THE ARCHITECTURAL DRAWINGS. ALL DISCREPANCIES SHALL BE REPORTED TO THE ARCHITECT BEFORE PROCEEDING WITH THE WORK.
3. IN THE EVENT CERTAIN FEATURES OF THE CONSTRUCTION ARE NOT FULLY SHOWN IN THE CONSTRUCTION DOCUMENTS, THEIR CONSTRUCTION SHALL BE OF THE SAME CHARACTER AS SIMILAR CONDITIONS THAT ARE SHOWN.
4. DETAILS AND NOTES APPEARING ON ONE DRAWING SHALL APPLY TO ALL OTHER DRAWINGS WHERE SIMILAR CONDITIONS EXIST WHETHER OR NOT NOTED OR DETAILED.
5. PROVIDE DESIGN NUMBER FOR ALL FIRE-RATED CEILING/FLOOR, ROOF, WALL AND STRUCTURAL FRAME ASSEMBLIES. THE COMPONENTS AND INSTALLATION DETAILS SUCH AS NAILING SCHEDULES SHALL BE SHOWN ON PLANS AND MUST CONFORM IN EVERY PARTICULAR WITH THE DESIGN NUMBER SPECIFIED. CUSTOM DESIGNS WHICH COMBINE COMPONENTS FROM DIFFERENT APPROVED DESIGN BUT HAVE NOT BEEN TESTED AS A COMPLETE ASSEMBLY WILL NOT BE ACCEPTABLE.
6. ALL WALL, FLOOR AND CEILING PENETRATIONS ARE TO BE SEALED WHETHER OR NOT SPECIFICALLY SHOWN OR DETAILED.
7. THE DESIGN, ADEQUACY AND SAFETY OF ERECTION BRACING, SHORING, TEMPORARY SUPPORTS, ETC. IS THE SOLE RESPONSIBILITY OF THE CONTRACTOR, AND HAS NOT BEEN CONSIDERED BY THE ARCHITECT OR STRUCTURAL ENGINEER. THE CONTRACTOR IS RESPONSIBLE FOR STABILITY OF THE STRUCTURE DURING CONSTRUCTION.
8. DO NOT SCALE THE DRAWINGS. USE WRITTEN DIMENSIONS. WHERE NO DIMENSION IS PROVIDED, CONSULT THE ARCHITECT FOR CLARIFICATION BEFORE PROCEEDING WITH THE WORK. THE CONTRACTOR IS RESPONSIBLE FOR ALL DIMENSIONS. CEILING HEIGHT DIMENSIONS FROM FINISH FLOOR TO FINISH FACE OF CEILING.
9. DRAWINGS AND SPECIFICATIONS REPRESENT FINISHED CONSTRUCTION UNLESS NOTED OTHERWISE, CONTRACTOR SHALL BE RESPONSIBLE FOR ALL MEANS AND METHODS OF CONSTRUCTION.
10. WORK NOT PARTICULARLY DETAILED, MARKED, OR SPECIFIED, SHALL BE THE SAME AS SIMILAR WORK THAT IS DETAILED, MARKED, OR SPECIFIED.
11. NO DEVIATION FROM THE APPROVED DRAWINGS AND SPECIFICATIONS IS PERMITTED WITHOUT THE PRIOR CONSENT OF THE ARCHITECT. THE ARCHITECT'S INTERPRETATION OF THESE DOCUMENTS SHALL BE FINAL.
12. LARGER SCALE DRAWINGS GOVERN IN CASE OF CONFLICT WITH SMALLER SCALE DRAWINGS.
13. OMISSIONS OR CONFLICTS BETWEEN VARIOUS ELEMENTS OF THE DRAWINGS, NOTES, SPECIFICATIONS, AND DETAILS SHALL BE BROUGHT TO THE ATTENTION OF THE ARCHITECT AND RESOLVED BEFORE PROCEEDING WITH THE WORK.

GENERAL NOTES [ARCHITECTURAL]

A. PARTITION AND WALLS

1. DIMENSIONS ARE TO FACE OF STUD, FACE OF CMU, OR TO GRID UNLESS SHOWN OR NOTED OTHERWISE.
2. THICKNESS OF CONCRETE MASONRY UNITS (CMU) PARTITIONS IS NOMINAL UNLESS OTHERWISE NOTED.
3. ALL PARTITIONS SHALL EXTEND FROM FLOOR TO STRUCTURE ABOVE EXCEPT WHERE NOTED OR SHOWN OTHERWISE.
4. EXTEND ALL SOUND RATED PARTITIONS TO THE STRUCTURE ABOVE AS INDICATED ON THE DRAWINGS TO PREVENT SOUND TRANSMISSION. FURNISH 4-1/4 POUNDS DENSITY GLASS FIBER INSULATION SHAPED TO FIT THE VOID ABOVE THE PARTITION WHERE AIRBORNE SOUND CAN PENETRATE SPACES.
5. FOR LOCATIONS OF FIRE-RATED PARTITIONS SEE FIRE PROTECTION PLANS
6. CONTROL JOINTS SHALL BE PROVIDED ABOVE DOORS AT EACH SIDE IN STUD AND GYP. BD. PARTITIONS.
7. EXPANSION JOINTS IN FINISHED AREAS EXPOSED TO VIEW SHALL BE COVERED WITH EXPANSION JOINT COVERS APPROPRIATE FOR FINISHED SURFACES WHETHER FLOOR, CEILING, WALL OR JUNCTIONS THEREOF.
8. UNENGAGED COLUMNS WITHIN OPEN SPACES SHALL BE FINISHED WITH MATERIALS SCHEDULED FOR WALLS UNLESS OTHERWISE SHOWN OR DETAILED.
9. VERIFY OPENINGS FOR PIPES AND DUCTS WITH MECHANICAL DRAWINGS AND PROVIDE AS REQUIRED. ALL OPENINGS MORE THAN 16 INCHES WIDE IN CONCRETE MASONRY PARTITIONS SHALL HAVE LINTELS AS SCHEDULED ON THE STRUCTURAL DRAWINGS.
10. ALL WALL HUNG CASEWORK, GRAB BARS, DOOR HARDWARE AND EQUIPMENT ATTACHED TO WALLS SHALL BE ANCHORED TO 2 X 6 WOOD BLOCKING ANCHORED BETWEEN STUDS UNLESS OTHERWISE INDICATED. BLOCKING SHALL BE CONTINUOUS AND LOCATED BOTH AT BOTTOM AND TOP OF EQUIPMENT.

B. DOORS AND FRAMES

1. WHERE LABELED DOORS ARE SCHEDULED, PROVIDE LABELS ON DOORS AND FRAMES.
2. CAULK AROUND METAL FRAMES UNLESS NOTED OTHERWISE.
3. HOLLOW METAL FRAMES SHALL BE ANCHORED TO THE STRUCTURAL FLOOR WITH A MINIMUM OF TWO (2) ANCHOR BOLTS.
4. HOLLOW METALS FRAMES IN MASONRY WALLS SHALL BE FILLED WITH GROUT.
5. SPOT GROUT ALL HOLLOW METAL FRAMES IN ACCORDANCE WITH USG GYPSUM CONSTRUCTION HANDBOOK.
6. WHERE PLASTER ABUTS METAL FRAMES, PROVIDE CASING BEADS, AND CAULK BETWEEN CASING BEAD AND METAL FRAME.
7. DOOR TYPES AND SIZES ARE SHOWN ON SHEET AE6-01.

CONSTRUCTION DRAWINGS

THESE CONSTRUCTION DRAWINGS INDICATE THE GENERAL SCOPE OF THE PROJECT IN TERMS OF ARCHITECTURAL DESIGN CONCEPTS, THE DIMENSIONS OF THE BUILDING, THE MAJOR ARCHITECTURAL ELEMENTS AND THE TYPE OF STRUCTURAL MECHANICAL, AND ELECTRICAL SYSTEMS. THE DRAWINGS DO NOT NECESSARILY INDICATE OR DESCRIBE ALL WORK REQUIRED FOR FULL PERFORMANCE AND COMPLETION OF THE REQUIREMENTS OF THE CONTRACT DOCUMENTS. ON THE BASIS OF THE GENERAL SCOPE INDICATED OR DESCRIBED, THE CONTRACTOR SHALL FURNISH ALL ITEMS REQUIRED FOR PROPER EXECUTION AND COMPLETION OF THE WORK. DECISIONS OF THE ARCHITECT AS TO THE ITEMS OF WORK INCLUDED WITH IN THE SCOPE OF THIS DOCUMENT SHALL BE FINAL AND BINDING ON THE CONTRACTOR AND OWNER.

LIMITATION OF WARRANTY OF ARCHITECT'S WORK PRODUCT

THE ARCHITECT AND HIS CONSULTANTS DO NOT WARRANT OR GUARANTEE THE ACCURACY AND COMPLETENESS OF THE WORK PRODUCT HEREIN BEYOND A REASONABLE DILIGENCE. IF ANY MISTAKES, OMISSIONS, OR DISCREPANCIES ARE FOUND TO EXIST WITHIN THE WORK PRODUCT, THE ARCHITECT SHALL BE PROMPTLY NOTIFIED SO THAT HE MAY HAVE THE OPPORTUNITY TO TAKE WHATEVER STEPS NESSCESSARY TO RESOLVE THEM. FAILURE TO PROMPTLY NOTIFY THE ARCHITECT OF SUCH CONDITIONS SHALL ABSOLVE THE ARCHITECT FROM ANY RESPONSIBILITY FOR THE CONSEQUENCES OF SUCH FAILURE. ACTIONS TAKEN WITHOUT THE KNOWLEDGE AND CONSENT OF THE ARCHITECT, OR IN CONTRADICTION TO THE ARCHITECT'S WORK PRODUCT OR RECOMMENDATIONS, SHALL BECOME THE RESPONSIBILITY NOT OF THE ARCHITECT BUT OF THE PARTIES RESPONSIBLE FOR TAKING SUCH ACTION.

STAMP

STATE OF UTAH — KIN L. NG No. 127383 — LICENSED ARCHITECT

11/12/07

REVISIONS:

NEW DOWNTOWN SALT LAKE CITY WINE STORE
300 West Harris Ave. (1563 South)

MJSA
357 West Pierpont Avenue □ Salt Lake City, Utah 84101
Telephone 801 364 5161 □ Facsimile 801 364 5167
ARCHITECTURE INTERIOR DESIGN

State of Utah–Department of Administrative Services
DIVISION OF FACILITIES CONSTRUCTION AND MANAGEMENT
4110 State Office Building/Salt Lake City, Utah 84114/538-3018

DEPARTMENT OF ALCOHOLIC BEVERAGE CONTROL
1625 South 900 West, Salt Lake City, Utah 84130/977-6800

LEGEND AND NOTES ABBREVIATIONS
SCALE: AS NOTED

DFCM PROJECT NO.: 05051030
DFCM CONTRACT NO.: 077431
MJSA PROJECT NO.: 07005
DATE: 10/01/07
SHEET: AG1-03

S:\07005 State Wine Store\CAD\03_CD\AG1-03.dwg - Fri, 09 Nov 2007 - 3:31pm

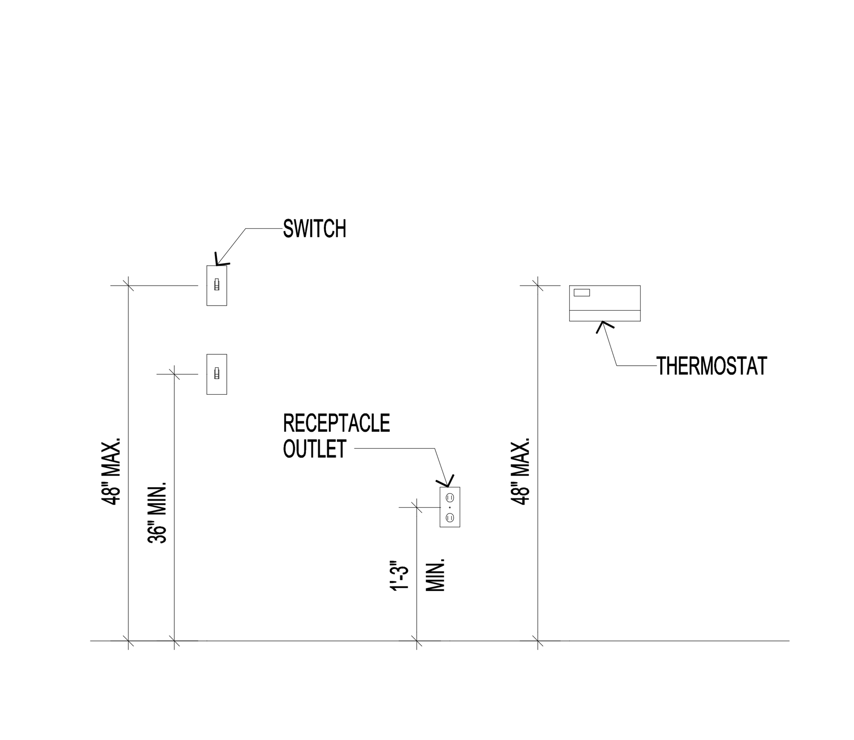

RECEPTACLES / SWITCHES	3/4"=1'-0"	9

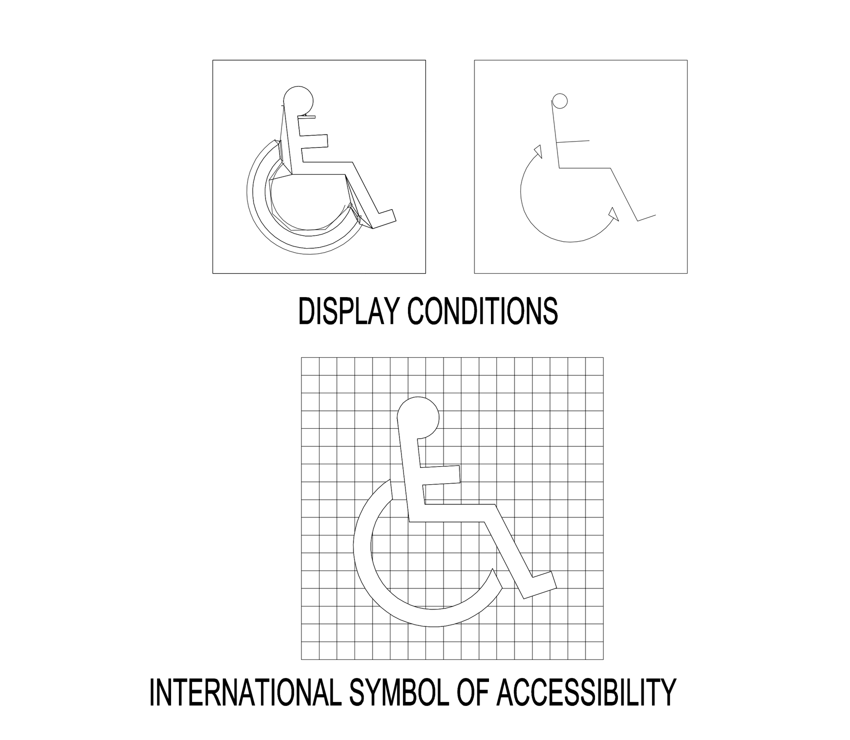

ACCESSIBILITY SYMBOL	NONE	8

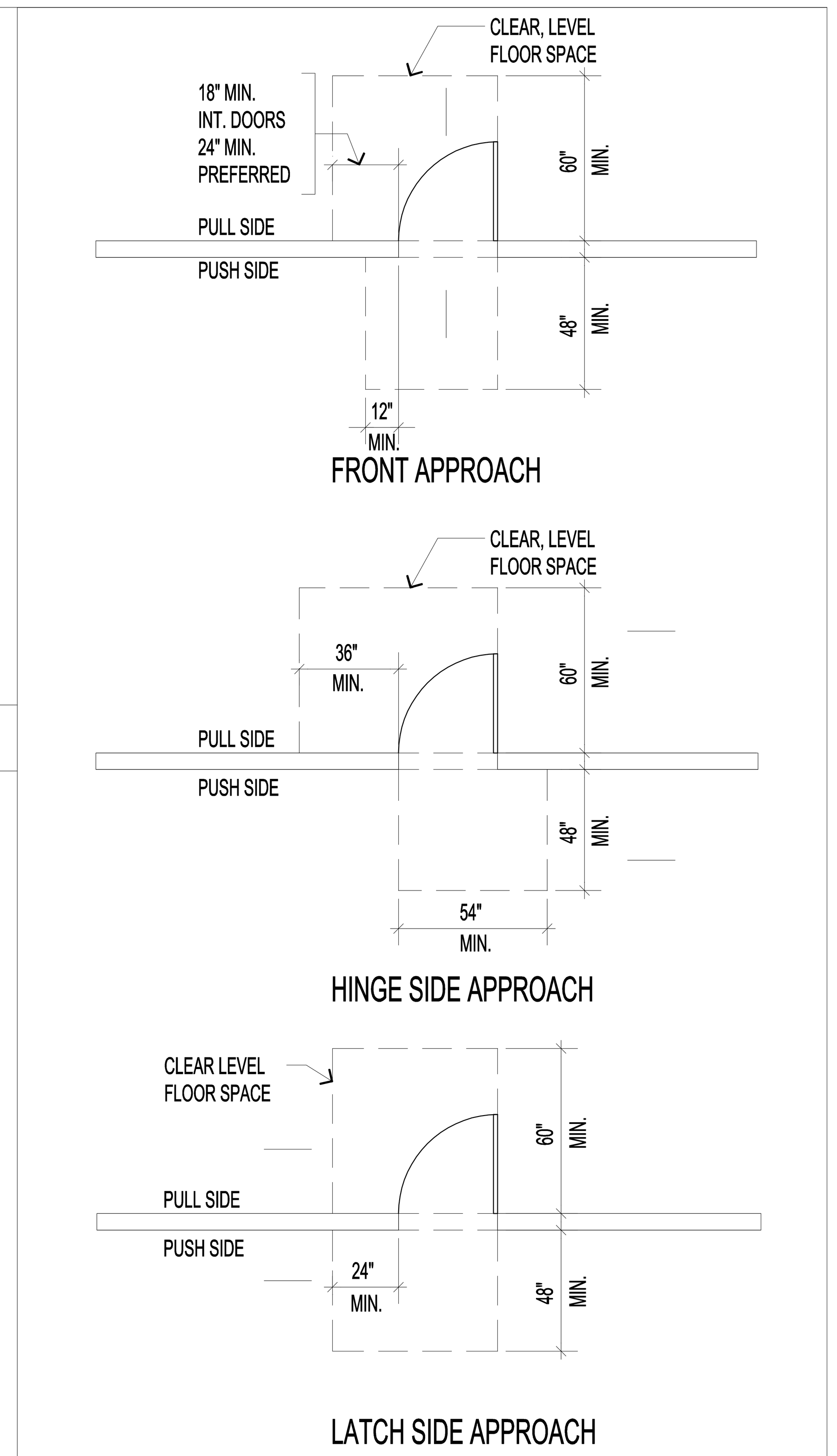

DOOR CLEARANCES	1/4"=1'-0"	5

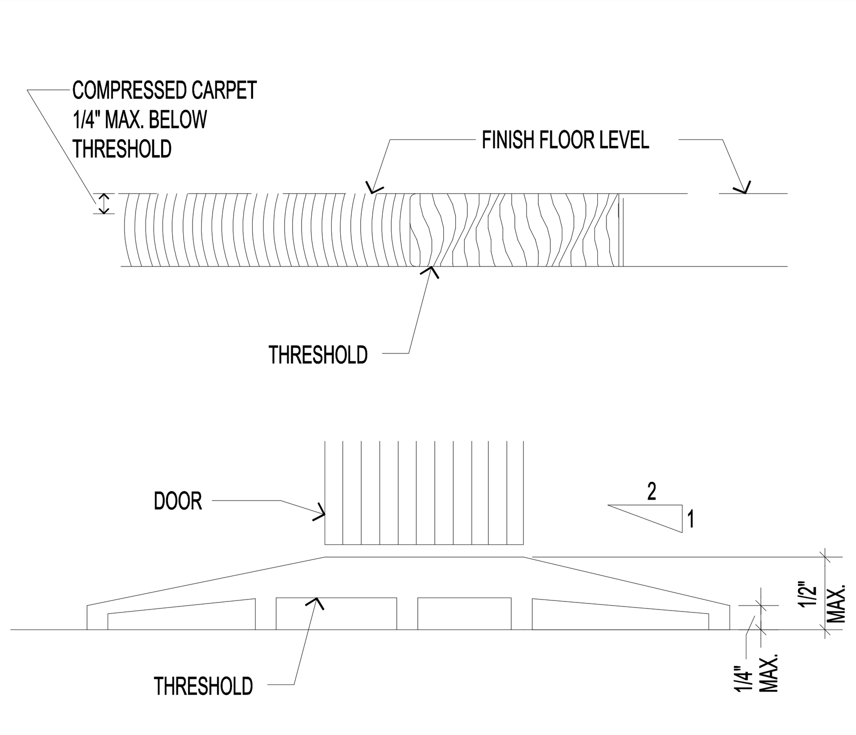

THRESHOLD / TRANSITIONS	NONE	7

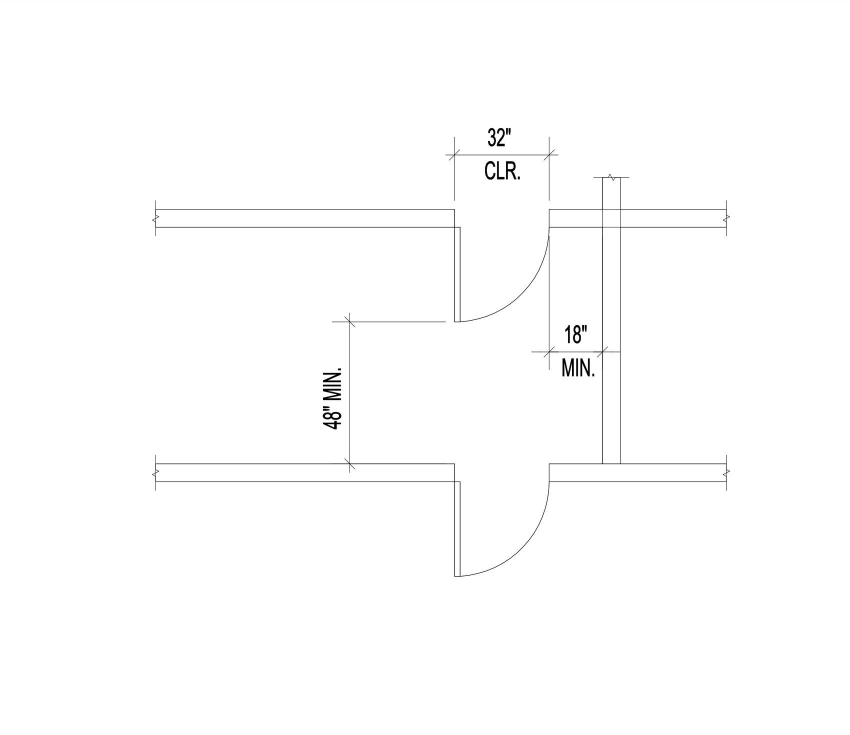

DOORS IN SERIES	1/4"=1'-0"	6

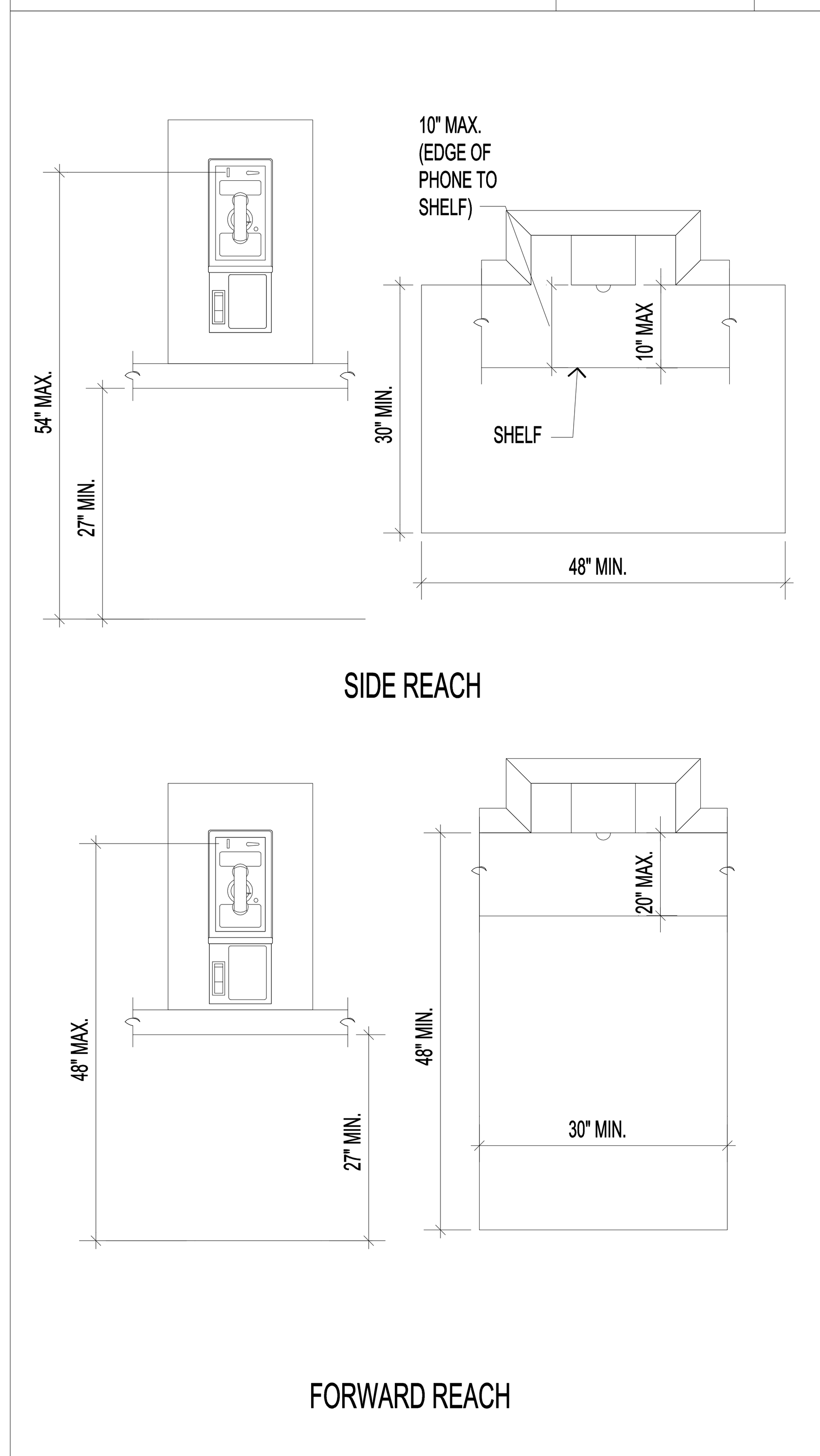

TELEPHONE CLEARANCES	NONE	4

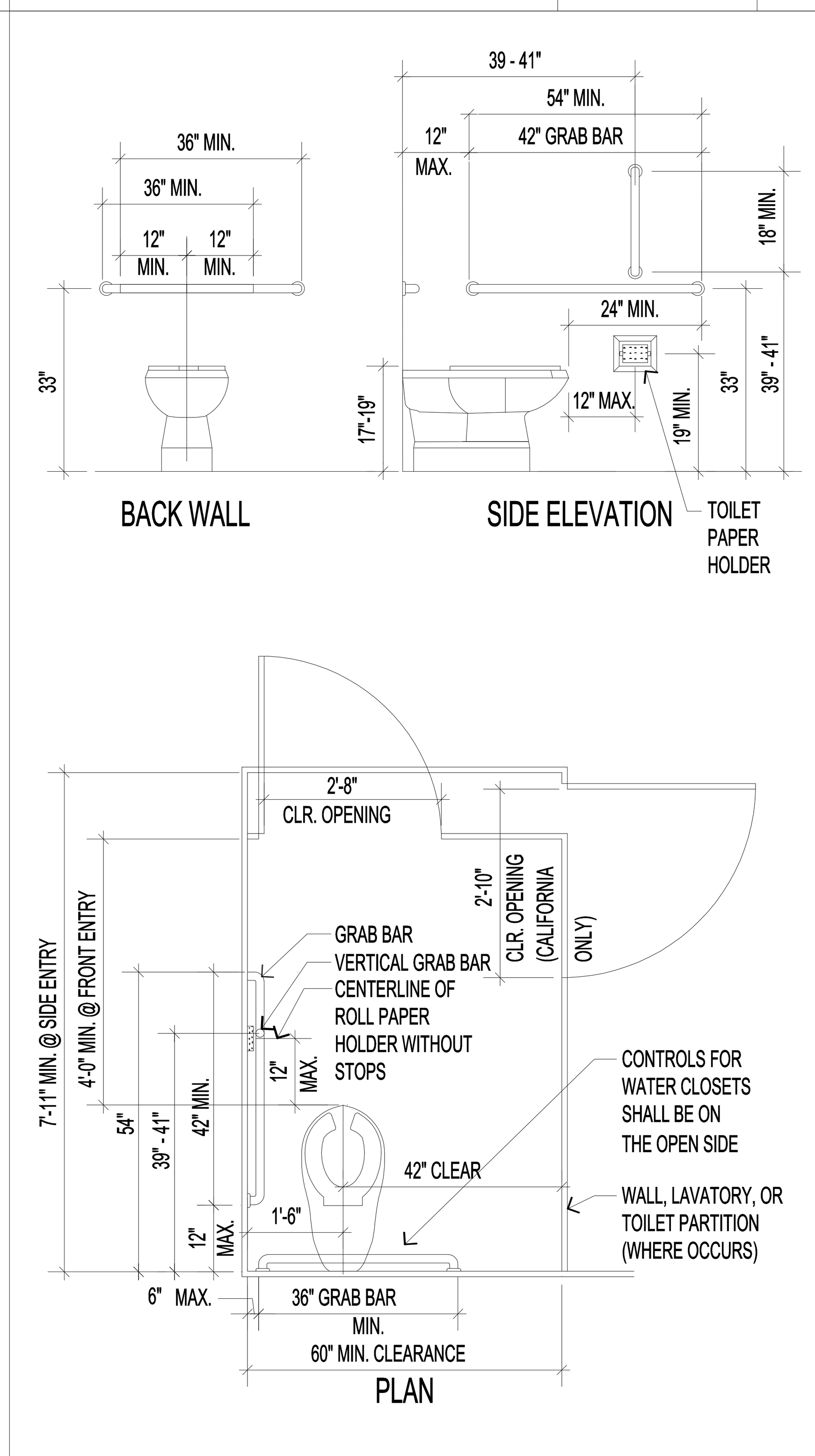

TOILET STALL CLEARANCES	1/2"=1'-0"	3

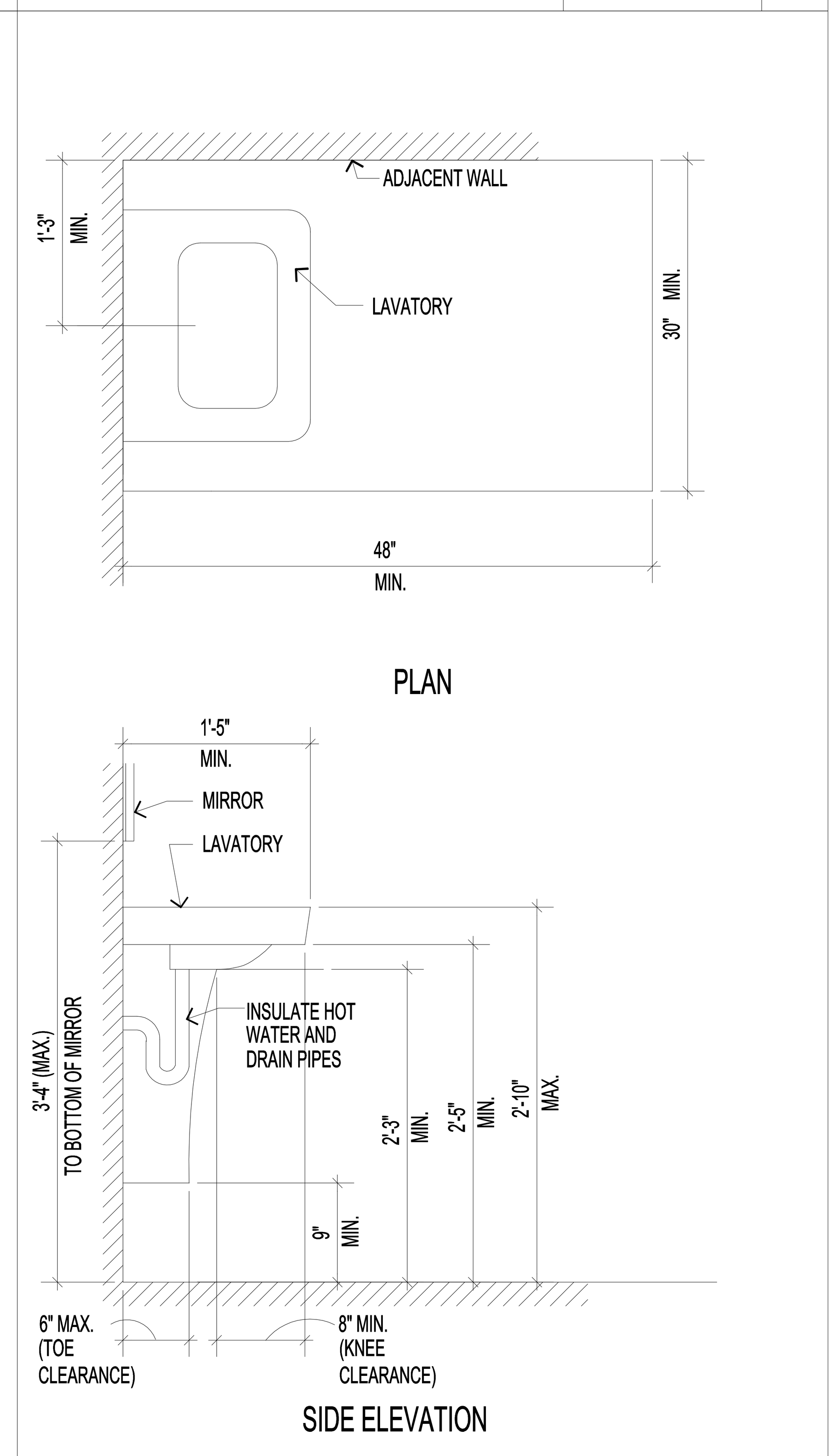

LAVATORY CLEARANCES	1"=1'-0"	2

CLEAR FLOOR SPACE FOR WHEELCHAIRS

1. MINIMUM CLEAR FLOOR OR GROUND SPACE REQUIRED TO ACCOMMODATE A SINGLE, STATIONARY WHEELCHAIR AND OCCUPANT IS 30 INCHES X 48 INCHES. MINIMUM CLEAR FLOOR OR GROUND SPACE FOR WHEELCHAIRS MAY BE POSITIONED FOR FORWARD OR PARALLEL APPROACH TO AN OBJECT. FLOOR OR GROUND SPACE FOR WHEELCHAIRS MAY BE PART OF THE KNEE SPACE REQUIRED UNDER SOME OBJECTS.
2. PROVIDE AN ADDITIONAL 12 INCHES WIDTH ON ONE SIDE FOR ALCOVES GREATER THAN 15 INCHES DEEP AND DESIGNED FOR SIDE APPROACH.
3. PROVIDE AN ADDITIONAL 6 INCHES WIDTH ON ONE SIDE FOR ALCOVES GREATER THAN 24 INCHES DEEP AND DESIGNED FOR FRONT APPROACH.

HAZARDS AND PROTRUDING OBJECTS

1. OBJECTS PROJECTING FROM WALLS WITH THEIR LEADING EDGES BETWEEN 27 INCHES AND 80 INCHES ABOVE THE FINISHED FLOOR SHALL PROTRUDE NO MORE THAN 4 INCHES INTO WALKS, HALLS, CORRIDORS, PASSAGEWAYS, OR AISLES.
2. OBJECTS MOUNTED WITH THEIR LEADING EDGES AT OR BELOW 27 INCHES ABOVE THE FINISHED FLOOR MAY PROTRUDE ANY AMOUNT.
3. FREE-STANDING OBJECTS MOUNTED ON POSTS / PYLONS MAY OVERHANG 12 INCHES MAXIMUM FROM 27 INCHES TO 80 INCHES ABOVE THE GROUND OR FINISHED FLOOR.
4. PROTRUDING OBJECTS SHALL NOT REDUCE THE REQUIRED CLEAR WIDTH OF AN ACCESSIBLE ROUTE OR MANEUVERING SPACE.
5. ANY OBSTRUCTION OVERHANGING A PEDESTRIAN WAY SHALL BE A MINIMUM OF 80 INCHES ABOVE THE WALKING SURFACE AS MEASURED TO THE BOTTOM OF THE OBSTRUCTION.

ENTRANCES / DOORS

1. AT LEAST 60% OF PRIMARY ENTRANCES AND EXTERIOR GROUND FLOOR EXIT DOORS TO BUILDINGS AND FACILITIES SHALL BE MADE ACCESSIBLE TO THE PHYSICALLY DISABLED. (100% OF GROUND FLOOR ENTRANCES AND EXITS IN CALIFORNIA)
2. ALL ACCESSIBLE ENTRANCES SHALL BE IDENTIFIED WITH AT LEAST ONE STANDARD SIGN AND WITH ADDITIONAL DIRECTIONAL SIGNS, AS REQUIRED, VISIBLE FROM APPROACHING PEDESTRIAN WAYS.
3. EVERY REQUIRED ENTRANCE OR PASSAGE DOORWAY SHALL BE OF A SIZE AS TO PERMIT THE INSTALLATION OF A DOOR NOT LESS THAN 36 INCHES IN WIDTH, AND NOT LESS THAN 80 INCHES IN HEIGHT. DOORS SHALL BE CAPABLE OF OPENING AT LEAST 90 DEGREES AND SHALL BE MOUNTED SO THAT THE CLEAR WIDTH OF THE DOORWAY IS NOT LESS THAN 32 INCHES.
4. LATCHING AND LOCKING DOORS THAT ARE HAND ACTIVATED AND WHICH ARE IN A PATH OF TRAVEL, SHALL BE OPERABLE WITH A SINGLE EFFORT BY LEVER TYPE HARDWARE, PANIC BARS, PUSH-PULL ACTIVATING BARS, OR OTHER HARDWARE DESIGNED TO PROVIDE PASSAGE WITHOUT REQUIRING THE ABILITY TO GRASP THE OPENING HARDWARE.
5. LEVER HAND ACTIVATED DOOR OPENING HARDWARE SHALL BE CENTERED BETWEEN 30 INCHES AND 44 INCHES MAXIMUM ABOVE THE FLOOR.
6. THE FLOOR OR LANDING LENGTH ON EACH SIDE OF AN ENTRANCE OR A PASSAGE DOOR SHALL BE LEVEL AND CLEAR AT LEAST 60 INCHES IN THE DIRECTION OF THE DOOR SWING AND AT LEAST 48 INCHES OPPOSITE THE DIRECTION OF THE DOOR SWING AS MEASURED AT RIGHT ANGLES TO THE FACE OF THE DOOR IN THE CLOSED POSITION. THE WIDTH OF THE LEVEL AND CLEAR AREA ON THE SIDE WHICH THE DOOR SWINGS SHALL EXTEND

   WITH LATCH SIDE APPROACH AND 36 INCHES FOR DOORS REQUIRING LATCH SIDE APPROACH. REFER TO DETAIL NO. 2 ON THIS DRAWING FOR ADDITIONAL CLEARANCE REQUIREMENTS.
7. THE FLOOR OR LANDING SHALL NOT BE MORE THAN 1/2 INCH LOWER THAN THE THRESHOLD OF THE DOORWAY. CHANGES IN LEVEL BETWEEN 1/4 INCH AND 1/2 INCH SHALL BE LEVELED WITH A SLOPE NO GREATER THAN 1:2.
8. THE BOTTOM 10 INCHES OF ALL DOORS (EXCEPT AUTOMATIC AND SLIDING) SHALL HAVE A SMOOTH UNINTERRUPTED SURFACE TO ALLOW THE DOOR TO BE OPENED BY A WHEELCHAIR FOOTREST WITHOUT CREATING A TRAP OR HAZARDOUS CONDITION WHERE NARROW FRAME DOORS ARE USED, A 10 INCH HIGH SMOOTH PANEL SHALL BE INSTALLED ON THE PUSH SIDE OF THE DOOR, WHICH WILL ALLOW THE DOOR TO BE OPENED BY A WHEELCHAIR FOOTREST.
9. THE MAXIMUM EFFORT TO OPERATE DOORS SHALL NOT EXCEED 8-1/2 LBS. FOR EXTERIOR DOORS AND 5 LBS. FOR INTERIOR DOORS. SUCH PULL OR PUSH EFFORT BEING APPLIED AT RIGHT ANGLES TO HINGED DOORS AND AT THE CENTER PLANE OF SLIDING OR FOLDING DOORS. COMPENSATING DEVICES OR AUTOMATIC DOOR OPERATORS MAY BE UTILIZED TO MEET THE ABOVE STANDARDS. WHEN FIRE DOORS ARE REQUIRED, THE MAXIMUM EFFORT TO OPERATE THE DOOR MAY NOT EXCEED 15 LBS.

SANITARY FACILITIES (GENERAL)

1. ALL DOORWAYS LEADING TO SANITARY FACILITIES SHALL HAVE 32 INCH CLEAR, UNOBSTRUCTED OPENINGS.
2. ALL SINKS, FAUCET CONTROLS, AND OPERATING MECHANISMS SHALL BE OPERABLE WITH ONE HAND AND SHALL NOT REQUIRE TIGHT GRASPING, PINCHING, OR TWISTING OF THE WRIST. THE FORCE REQUIRED TO ACTIVATE CONTROLS SHALL BE NO GREATER THAN 5 LBS. LEVER-OPERATED, PUSH TYPE, AND ELECTRONICALLY CONTROLLED MECHANISMS ARE EXAMPLES OF ACCEPTABLE DESIGNS. SELF-CLOSING VALVES ARE ALLOWED IF THE FAUCET REMAINS OPEN FOR AT LEAST 10 SECONDS.
3. LAVATORIES SHALL BE MOUNTED WITH A MINIMUM DISTANCE OF 15 INCHES (18 INCHES IN CALIFORNIA) FROM A WALL OR PARTITION TO THE CENTER OF THE FIXTURE. ACCESSIBLE LAVATORIES SHALL BE MOUNTED WITH THE RIM OR COUNTER SURFACE NO HIGHER THAN 34 INCHES ABOVE THE FLOOR.

TOILET ROOM FIXTURES AND ACCESSORIES

1. THE HEIGHT OF ACCESSIBLE WATER CLOSETS SHALL BE A MINIMUM OF 17 INCHES AND A MAXIMUM OF 19 INCHES MEASURED TO THE TOP OF THE TOILET SEAT.
2. PROVIDE 18 INCHES FROM THE CENTERLINE OF THE WATER CLOSET TO THE ADJACENT WALL.
3. TOILET AND URINAL FLUSH CONTROLS SHALL BE OPERABLE WITH ONE HAND AND SHALL NOT REQUIRE TIGHT GRASPING, PINCHING, OR TWISTING OF THE WRIST. CONTROLS FOR THE FLUSH VALVES SHALL BE MOUNTED ON THE OPEN (WIDE) SIDE OF THE TOILET STALL, NO MORE THAN 44 INCHES ABOVE THE FLOOR. THE FORCE REQUIRED TO ACTIVATE CONTROLS SHALL BE NO GREATER THAN 5 LBS.
4. WHERE URINALS ARE PROVIDED, AT LEAST ONE SHALL HAVE A CLEAR SPACE 30 INCHES WIDE BY 48 INCHES LONG IN FRONT OF THE URINAL. AT LEAST ONE URINAL WITH A RIM PROJECTING A MINIMUM OF 14 INCHES FROM THE WALL (CALIFORNIA ONLY) AND A MAXIMUM OF 17 INCHES ABOVE THE FLOOR SHALL BE INSTALLED.
5. A CLEAR FLOOR SPACE 30 INCHES WIDE BY 48 INCHES LONG SHALL BE PROVIDED IN FRONT OF A LAVATORY TO ALLOW FORWARD APPROACH. SUCH CLEAR SPACE SHALL ADJOIN OR OVERLAP AN ACCESSIBLE ROUTE AND SHALL EXTEND INTO KNEE AND TOE SPACE UNDERNEATH LAVATORY.
6. LAVATORIES SHALL BE MOUNTED WITH A CLEARANCE OF AT LEAST 29 INCHES FROM THE FLOOR TO THE BOTTOM OF THE APRON WITH KNEE CLEARANCE UNDER THE FRONT LIP EXTENDING A MINIMUM OF 30 INCHES IN WIDTH WITH 8 INCHES MINIMUM DEPTH AT THE TOP. TOE CLEARANCE SHALL BE SAME WIDTH AND A MINIMUM OF 9 INCHES HIGH FROM THE FLOOR AND A MINIMUM OF 17 INCHES DEEP FROM THE FRONT OF THE LAVATORY.
7. HOT WATER AND DRAIN PIPES UNDER LAVATORIES SHALL BE INSULATED OR OTHERWISE COVERED. THERE SHALL BE NO SHARP OR ABRASIVE SURFACES UNDER LAVATORIES.
8. MIRRORS SHALL BE MOUNTED WITH BOTTOM EDGE OF THE REFLECTIVE SURFACE NOT MORE THAN 38 INCHES FROM THE FLOOR.
9. LOCATE PAPER TOWEL DISPENSERS, SANITARY NAPKIN DISPENSERS, AND AND WASTE RECEPTACLES WITH ALL OPERABLE PARTS NOT MORE THAN 40 INCHES FROM THE FLOOR.
10. LOCATE TOILET TISSUE DISPENSERS ON THE WALL WITHIN 12 INCHES OF THE FRONT EDGE OF THE TOILET SEAT.

ADDITIONAL REQUIREMENTS

1. THE CENTER OF RECEPTACLE OUTLETS SHALL BE NOT LESS THAN 15 INCHES ABOVE THE FLOOR OR WORKING PLATFORM.
2. THE CENTER OF THE GRIP OF THE OPERATING HANDLE OF SWITCHES INTENDED TO BE USED BY OCCUPANTS OF A ROOM OR AREA TO CONTROL LIGHTING AND RECEPTACLE OUTLETS, APPLIANCES, OR COOLING, HEATING AND VENTILATING EQUIPMENT, SHALL BE NOT LESS THAN 36 INCHES NOR MORE THAN 48 INCHES ABOVE THE FLOOR OR WORKING PLATFORM.
3. THE CENTER OF FIRE ALARM INITIATING DEVICES (BOXES) SHALL BE LOCATED 48 INCHES ABOVE THE LEVEL OF THE ADJACENT FLOOR, WORKING PLATFORM, GROUND SURFACE, OR SIDEWALK.
4. INTERNATIONAL SYMBOL OF ACCESSIBILITY SHALL BE THE STANDARD USED TO IDENTIFY FACILITIES THAT ARE ACCESSIBLE TO AND USABLE BY PHYSICALLY DISABLED PERSONS. THE SYMBOL SPECIFIED ABOVE SHALL CONSIST OF A WHITE FIGURE ON BLUE BACKGROUND. THE BLUE SHALL BE EQUAL TO COLOR NO. 15090 IN FEDERAL STANDARD 595A.

MULTIPLE ACCOMMODATION TOILET FACILITIES

1. A CLEAR SPACE, MEASURED FROM THE FLOOR TO A HEIGHT OF 27 INCHES ABOVE THE FLOOR, WITHIN THE SANITARY FACILITY ROOM, OF SUFFICIENT SIZE TO INSCRIBE A CIRCLE OF A DIAMETER NOT LESS THAN 60 INCHES, OR A CLEAR SPACE NOT LESS THAN 56 INCHES X 63 INCHES IN SIZE SHALL BE PROVIDED. DOORS OTHER THAN THE DOOR TO THE

   INTO THIS SPACE BY NOT MORE THAN 12 INCHES.
2. AN ACCESSIBLE INDIVIDUAL TOILET STALL SHALL PROVIDE AT LEAST 28 INCHES CLEAR SPACE FROM A FIXTURE OR 32 INCHES CLEAR SPACE FROM A WALL AT ONE SIDE OF THE WATER CLOSET. A 48 INCH LONG CLEAR SPACE IN FRONT OF WATER CLOSET SHALL BE PROVIDED IF THE COMPARTMENT HAS AN END OPENING DOOR (FACING THE WATER CLOSET). A 60 INCH LONG CLEAR SPACE SHALL BE PROVIDED IN COMPARTMENT WHEN DOOR IS LOCATED AT THE SIDE. GRAB BARS SHALL NOT PROJECT MORE THAN 3 INCHES INTO CLEAR SPACE SPECIFIED ABOVE.
3. WATER CLOSET COMPARTMENT SHALL BE EQUIPPED WITH DOOR THAT HAS AN AUTOMATIC CLOSING DEVICE, AND A CLEAR UNOBSTRUCTED OPENING WIDTH OF 32 INCHES WHEN LOCATED AT THE END, AND 34 INCHES (CALIFORNIA ONLY) WHEN LOCATED AT THE SIDE, WHEN THE DOOR IS POSITIONED AT AN ANGLE OF 90 DEGREES FROM ITS CLOSED POSITION.
4. EXCEPT FOR DOOR OPENINGS, A CLEAR UNOBSTRUCTED ACCESS NOT LESS THAN 44 INCHES SHALL BE PROVIDED TO ALL WATER CLOSET COMPARTMENTS DESIGNED FOR USE BY THE DISABLED. THE SPACE Y IMMEDIATELY IN FRONT OF A WATER CLOSET COMPARTMENT SHALL BE NOT LESS THAN 48 INCHES AS MEASURED AT RIGHT ANGLES TO THE COMPARTMENT DOOR IN ITS CLOSED POSITION.

GRAB BARS

1. GRAB BARS SHALL BE LOCATED ON ONE SIDE AND THE BACK OF THE PHYSICALLY DISABLED TOILET STALL OR COMPARTMENT AND SHALL BE SECURELY ATTACHED 33 INCHES ABOVE AND PARALLEL TO THE FLOOR.
2. GRAB BARS AT THE SIDE SHALL BE AT LEAST 42 INCHES LONG WITH THE FRONT END POSITIONED 54 INCHES FROM THE BACK OF THE STALL. GRAB BARS AT THE BACK SHALL NOT BE LESS THAN 36 INCHES LONG.
3. THE DIAMETER OR WIDTH OF THE GRIPPING SURFACES OF A GRAB BAR SHALL BE 1-1/4 INCHES OR THE SHAPE SHALL PROVIDE AN EQUIVALENT GRIPPING SURFACE. IF THE GRAB BARS ARE MOUNTED ADJACENT TO A WALL, THE SPACE BETWEEN THE WALL AND THE GRAB BARS SHALL BE 1-1/2 INCHES.
4. GRAB BARS, AND ANY WALL OR OTHER SURFACE ADJACENT TO IT, SHALL BE FREE OF ANY SHARP OR ABRASIVE ELEMENTS. GRAB BAR EDGES SHALL HAVE A MINIMUM RADIUS OF 1/8 INCH.
5. GRAB BARS SHALL NOT ROTATE WITHIN THEIR FITTINGS.
6. GRAB BARS SHALL BE DESIGNED TO SUPPORT A 250 POUND FORCE.
7. FIXED SIDE WALL GRAB BARS. A VERTICAL GRAB BAR 18 INCHES MINIMUM IN LENGTH SHALL BE MOUNTED WITH THE BOTTOM BAR LOCATED BETWEEN 39 INCHES AND 41 INCHES ABOVE THE FLOOR, AND WITH THE CENTER LINE OF THE BAR LOCATED BETWEEN 39 INCHES AND 41 INCHES FROM THE REAR WALL.

TELEPHONES

1. PROVIDE A 30 INCH X 48 INCH CLEAR SPACE AT TELEPHONE. THE CLEAR SPACE MAY INCLUDE KNEE SPACE UNDER THE TELEPHONE.
2. THE HIGHEST OPERABLE PART OF THE TELEPHONE SHALL BE WITHIN 48 INCHES OF THE FLOOR IF FORWARD APPROACHED AND 54 INCHES IF SIDE APPROACHED.
3. TELEPHONES MOUNTED IN A CORNER THAT REQUIRE WHEELCHAIR USERS TO REACH DIAGONALLY SHALL HAVE THE HIGHEST OPERABLE PART NO HIGHER THAN 54 INCHES ABOVE THE FLOOR.
4. THE CORD FROM THE TELEPHONE TO THE HANDSET SHALL BE AT LEAST 29 INCHES LONG.
5. IF BANKS OF PUBLIC TELEPHONES ARE PROVIDED, THEN A REASONABLE NUMBER, BUT ALWAYS AT LEAST ONE, IN A BUILDING OR FACILITY SHALL BE EQUIPPED WITH A VOLUME CONTROL.
6. TELEPHONES SHALL HAVE PUSH-BUTTON CONTROLS WHERE SERVICE FOR SUCH EQUIPMENT IS AVAILABLE.

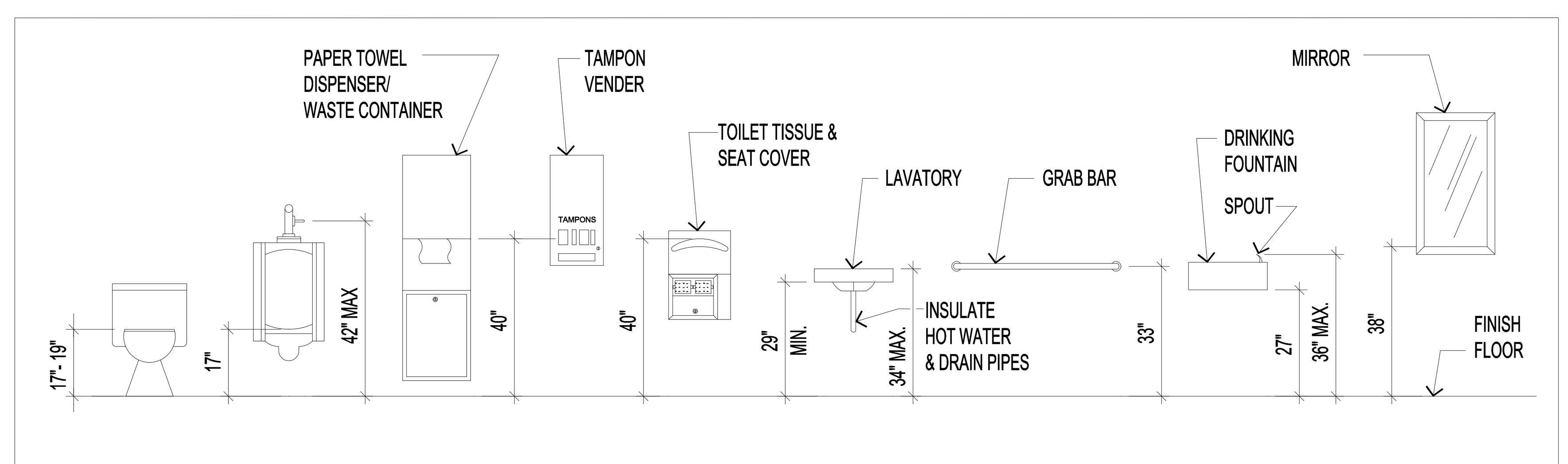

FIXTURE AND ACCESSORY MOUNTING HEIGHTS	3/8"=1'-0"	1

STAMP

STATE OF UTAH
KIN L. NG
No. 127383
LICENSED ARCHITECT
11/12/07

State of Utah–Department of Administrative Services

DIVISION OF FACILITIES CONSTRUCTION AND MANAGEMENT
4110 State Office Building/Salt Lake City, Utah 84114/538-3018

DEPARTMENT OF ALCOHOLIC BEVERAGE CONTROL
1625 South 900 West, Salt Lake City, Utah 84130/977-6800

ADA STANDARDS

SCALE: AS NOTED

REVISIONS:

NEW DOWNTOWN SALT LAKE CITY WINE STORE
300 West Harris Ave. (1563 South)

MJSA
357 West Pierpont Avenue □ Salt Lake City, Utah 84101
Telephone 801 364 5161 □ Facsimile 801 364 5167
ARCHITECTURE INTERIOR DESIGN

DFCM PROJECT NO.: 05051030

DFCM CONTRACT NO.: 077431

MJSA PROJECT NO.: 07005

DATE: 10/01/07

SHEET: AG1-04

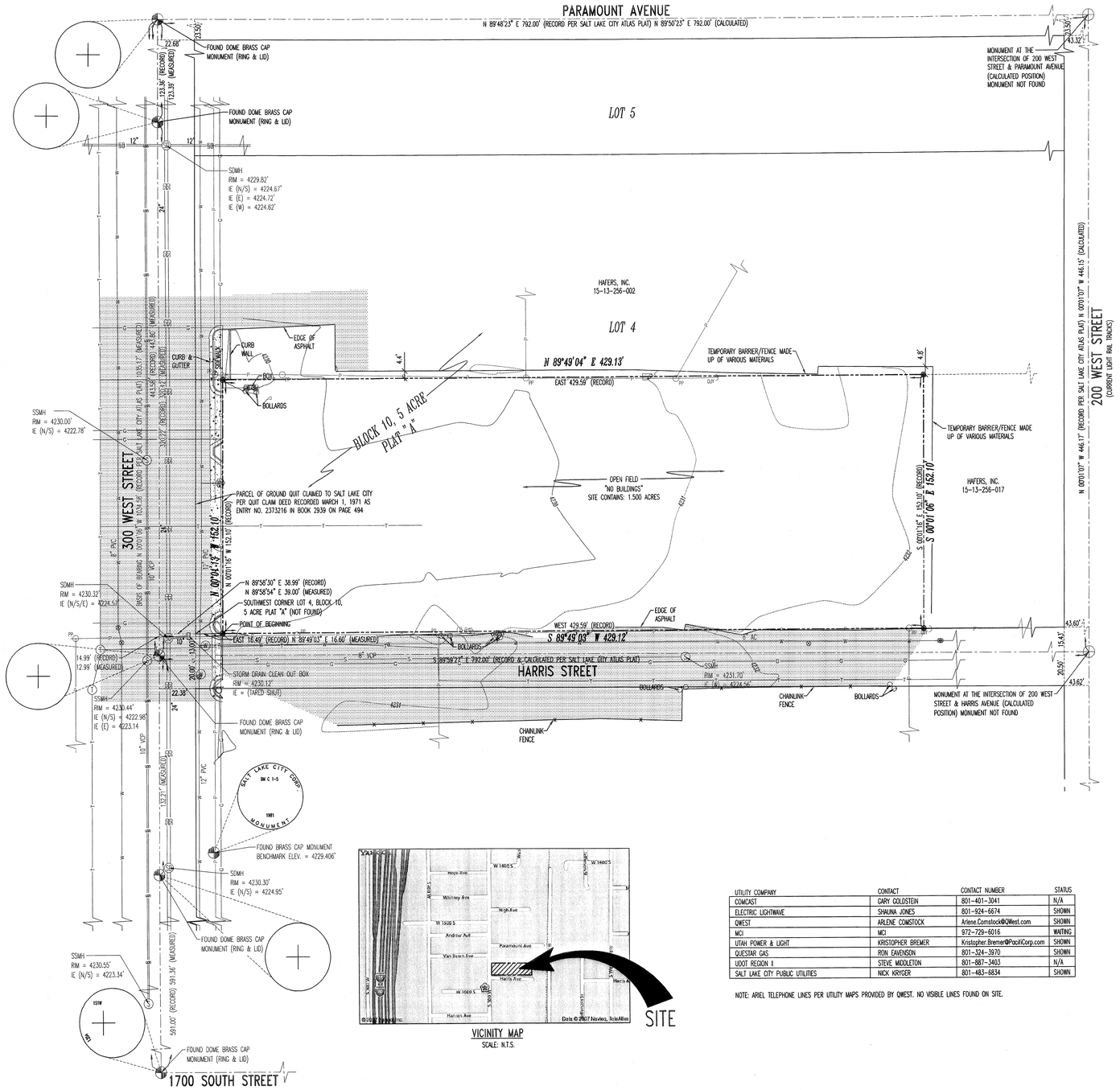

VICINITY MAP
SCALE: N.T.S.

UTILITY COMPANY	CONTACT	CONTACT NUMBER	STATUS
COMCAST	GARY GOLDSTEIN	801-401-3041	N/A
ELECTRIC LIGHTWAVE	SHAUNA JONES	801-924-6674	SHOWN
QWEST	ARLENE COMSTOCK	Arlene.Comstock@QWest.com	SHOWN
MCI	MCI	972-729-6016	WAITING
UTAH POWER & LIGHT	KRISTOPHER BREMER	Kristopher.Bremer@PacifiCorp.com	SHOWN
QUESTAR GAS	RON EVENSON	801-324-3970	SHOWN
UDOT REGION II	STEVE MIDDLETON	801-887-3403	N/A
SALT LAKE CITY PUBLIC UTILITIES	NICK KRYGER	801-483-6834	SHOWN

NOTE: ARIEL TELEPHONE LINES PER UTILITY MAPS PROVIDED BY QWEST. NO VISIBLE LINES FOUND ON SITE.

NORTH

SCALE: 1" = 30'

0 15 30 45 60 90 120 150

DEED DESCRIPTION

A PARCEL OF LAND LOCATED IN THE NORTHEAST QUARTER OF SECTION 13, TOWNSHIP 1 SOUTH, RANGE 1 WEST, SALT LAKE BASE AND MERIDIAN, AND PART OF LOT 4, BLOCK 10, FIVE ACRE PLAT "A", BIG FIELD SURVEY, MORE PARTICULARLY DESCRIBED AS FOLLOWS:

BEGINNING AT A POINT ON THE EASTERLY BOUNDARY LINE OF THAT CERTAIN PROPERTY DEEDED TO SALT LAKE CITY CORPORATION AS RECORDED IN BOOK 2939 AT PAGE 494, WHICH IS 16.49 FEET EAST FROM THE SOUTHWEST CORNER OF LOT 4, SAID POINT ALSO LOCATED 14.99 FEET NORTH 00°01'06" WEST ALONG THE MONUMENT LINE OF 300 WEST STREET (BASIS OF BEARINGS) AND 38.89 FEET NORTH 89°58'30" EAST FROM THE SALT LAKE CITY MONUMENT FOUND MARKING THE INTERSECTION OF 300 WEST STREET AND HARRIS AVENUE, AND RUNNING THENCE NORTH 00°01'16" WEST 152.10 FEET ALONG SAID PROPERTY; THENCE EAST 429.59 FEET; THENCE SOUTH 00°01'16" EAST 152.10; THENCE WEST 429.59 FEET TO THE POINT OF BEGINNING.

SURVEYOR'S CERTIFICATE

I, MICHAEL D. HOFFMAN, DEPOSE AND SAY THAT I AM A DULY REGISTERED LAND SURVEYOR ACCORDING TO THE RULES AND REGULATIONS OF THE STATE OF UTAH. I FURTHER STATE THAT THE ABOVE DESCRIBED PROPERTY WAS SURVEYED UNDER MY DIRECT SUPERVISION AND THE RESULTS OF THAT SURVEY ARE DEPICTED HEREON.

MICHAEL D. HOFFMAN
LICENSE NO. 316831

11/12/07

NARRATIVE

THIS SURVEY WAS PREPARED FOR MJSA ARCHITECTS FOR THE PURPOSE OF RE-ESTABLISHING THE BOUNDARY OF THE ABOVE DESCRIBED PARCEL OF LAND. THE BASIS OF BEARING IS NORTH 00°01'06" WEST ALONG THE MONUMENT LINE OF 300 WEST BETWEEN THE FOUND DOME BRASS CAP MONUMENTS LOCATED AT THE INTERSECTION OF 1700 SOUTH AND PARAMOUNT AVENUE AS SHOWN ON THIS PLAT. EACH CORNER NOT FOUND, WAS MARKED WITH A 5/8 INCH BAR, TWO FEET IN LENGTH, AND RED PLASTIC CAP OR NAIL AND WASHER STAMPED "McNEIL ENGR".

EVERY DOCUMENT OF RECORD REVIEWED AND CONSIDERED AS A PART OF THIS SURVEY IS NOTED HEREON. ONLY THE DOCUMENTS NOTED BELOW WERE SUPPLIED OR OBTAINED FOR OR BY THE SURVEYOR. NO ABSTRACT OF TITLE, NOR TITLE COMMITMENT, NOR RESULTS OF TITLE SEARCHES WERE FURNISHED THE SURVEYOR UNLESS NOTED OTHERWISE. THERE MAY EXIST OTHER DOCUMENTS OF RECORD THAT WOULD AFFECT THIS PARCEL.

DOCUMENTS REFERENCED FOR THIS SURVEY ARE AS FOLLOWS:

- SALT LAKE CITY 5 ACRE PLAT "A", AS ON FILE WITH THE OFFICE OF THE SALT LAKE CITY SURVEYOR.
- RECORD OF SURVEY PREPARED BY DOMINION ENGINEERING ON FILE WITH THE OFFICE OF THE SALT LAKE COUNTY SURVEYOR AS S2007-02-0160

THE LOCATIONS OF UNDERGROUND UTILITIES AS SHOWN HEREON ARE BASED ON VISIBLE EVIDENCE AND RECORD DRAWINGS PROVIDED THE SURVEYOR. LOCATIONS OF UNDERGROUND UTILITIES/STRUCTURES MAY VARY FROM LOCATIONS SHOWN. ADDITIONAL BURIED UTILITIES/STRUCTURES MAY BE ENCOUNTERED. NO EXCAVATIONS WERE MADE DURING THE PROGRESS OF THIS SURVEY TO LOCATE BURIED UTILITIES/STRUCTURES. ALL UTILITY COMPANIES AND BLUE STAKES SHOULD BE CONTACTED FOR ACTUAL LOCATIONS.

LEGEND

	ADJOINING PROPERTY LINE		WATER VALVE
	PROPERTY LINE		FIRE HYDRANT
	MONUMENT LINE		POWER POLE
	EASEMENT LINE		CATCH BASIN
	FENCE		STORM DRAIN MANHOLE
P	POWER LINE		SEWER MANHOLE
T	TELEPHONE LINE		GAS METER
W	WATER LINE		WATER METER
S	SEWER LINE		WATER MANHOLE
G	GAS LINE		SIGN
4325	CONTOUR LINE		TELEPHONE MANHOLE
	ASPHALT		GUY WIRE
	CONCRETE		TELEPHONE RISER
			ELECTRICAL METER

AVOID CUTTING UNDERGROUND UTILITIES. IT'S COSTLY.
Call BEFORE YOU Dig
1-800-662-4111

NOTICE!
THE CONTRACTOR SHALL BE RESPONSIBLE FOR THE LOCATION, PROTECTION, AND RESTORATION OF ALL BURIED OR ABOVE GROUND UTILITIES, SHOWN OR NOT SHOWN ON THE PLANS.

McNEIL ENGINEERING SURVEYING, L.C.
PROFESSIONAL LAND SURVEYING SERVICES
6895 SOUTH 900 EAST MIDVALE, UTAH 84047
TEL. (801) 255-7700 FAX (801) 255-8071
E-MAIL info@mcneileng.com WEB SITE AT www.mcneileng.com

SALT LAKE CITY WINE STORE
MJSA ARCHITECTS

1563 SOUTH 300 WEST
SALT LAKE CITY, UTAH
LOCATED IN THE WEST HALF OF THE NE 1/4 OF SECTION 13, TOWNSHIP 1 SOUTH, RANGE 1 WEST, S.L.B. & M.

REVISIONS

REV	DATE	DESCRIPTION

PROJECT NO:	270601.7
CAD DWG. FILE:	270601.7BND
DRAWN BY:	KSL/KES
CALC BY:	DBD
FIELD CREW:	FS/CC/CP
CHECKED BY:	MDH
DATE:	11-12-07

SHEET TITLE:
BOUNDARY & TOPOGRAPHIC SURVEY

1 OF 1

REFERENCE NOTES

REVISIONS:

NEW DOWNTOWN SALT LAKE CITY WINE STORE
300 West Harris Ave. (1563 South)

MJSA
307 West Pierpont Avenue □ Salt Lake City, Utah 84101
Telephone 801 364 5151 □ Facsimile 801 364 5167
ARCHITECTURE INTERIOR DESIGN

State of Utah-Department of Administrative Services
DIVISION OF FACILITIES CONSTRUCTION AND MANAGEMENT
4110 State Office Building/Salt Lake City, Utah 84114/538-3018

DEPARTMENT OF ALCOHOLIC BEVERAGE CONTROL
1625 South 900 West, Salt Lake City, Utah 84130/977-6800

STAMP

DFCM PROJECT NO.: 05051030
DFCM CONTRACT NO.: 077431
MJSA PROJECT NO.: 07005
DATE: 10/15/07
SHEET: V1.00

BOUNDARY & TOPOGRAPHIC SURVEY
SCALE:1" = 30'

MCNEIL ENGINEERING CONTACT: KENNETH A. PETTY, C.E.T., L.S.

McNEIL ENGINEERING CIVIL, L.C.
PROFESSIONAL CIVIL ENGINEERING SERVICES
6895 SOUTH 900 EAST MIDVALE, UTAH 84047
TEL. (801) 255-7700 FAX (801) 255-8071
E-MAIL info@mcneileng.com WEB SITE AT www.mcneileng.com

MCNEIL JOB NO: 270601

S:\2007Files\270601\DWG\270601BND.dwg Nov 12, 2007 - 2:19pm McNEIL ENGINEERING-ST. GEORGE, L.C.
S:\2007Files\270601\DWG\BR-01.dwg Fri, 12 Oct 2007 - 1:34pm

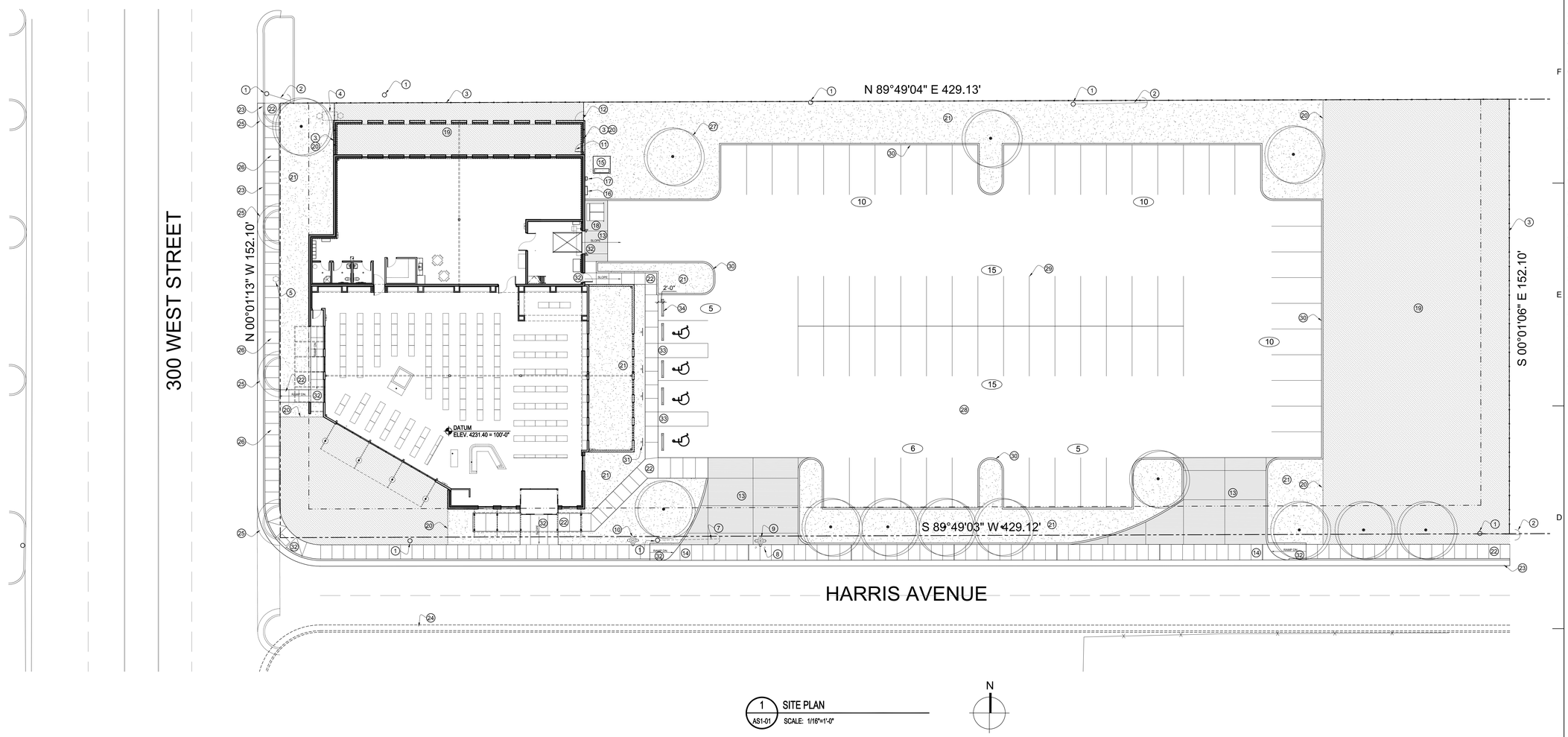

1 SITE PLAN
AS1-01 SCALE: 1/16"=1'-0"

REFERENCE NOTES

1. EXISTING POWER POLE TO REMAIN IF IT CAN BE RE-GUYED OUT OF DRIVEWAY. IF NOT INCLUDE PRICE TO RELOCATE POLE OUT OF DRIVE WAY IN BID.
2. EXISTING GUY CABLES TO REMAIN AS IS.
3. NEW CHAIN LINK FENCE SYSTEM W/ SLATS PER SPECS.
4. EXISTING UTILITY METERS, METAL BOX AND BOLLARDS TO BE REMOVED.
5. EXISTING WATER METER TO BE REUSED.
6. NOT USED.
7. EXISTING GUY CABLES TO BE REMOVED. INSTALL NEW GUY CABLES OUT OF DRIVEWAY IF POSSIBLE.
8. REMOVE (2) BOLLARDS.
9. RELOCATE EXISTING FIRE HYDRANT TO NEW LOCATION INDICATED.
10. NEW LOCATION FOR EXISTING FIRE HYDRANT.
11. CHAIN LINK GATE W/ SLATS.
12. GATE LOCATION IF ALTERNATE ADD #1 IS BUILT.
13. CONCRETE APRON WITH CONTROL JOINTS AS SHOWN.
14. SIDEWALK LOWERED TO 1" ABOVE GUTTER.
15. TRANSFORMER.
16. CT CAN
17. GAS METER.
18. DUMPSTER.
19. GRAVEL SET OVER WEED CONTROLL FABRIC PER LANDSCAPE DRAWINGS.
20. MOWSTRIP PER LANDSCAPE DRAWINGS.
21. SOFTSCAPE PER LANDSCAPE DRAWINGS.
22. NEW SIDEWALK PER CIVIL ENGINEERING DRAWINGS.
23. NEW CURB & GUTTER PER CIVIL ENGINEERING DRAWINGS.
24. FUTURE CURB & GUTTER N.I.C.
25. EXISTING CURB & GUTTER TO BE REMOVED.
26. EXISTING CONCRETE APRON TO BE REMOVED.
27. SEE LANDSCAPE DRAWINGS FOR NUMBER & LOCATION OF TREES TYPICAL.
28. ASPHALTIC PAVING PER CIVIL ENGINEERING DRAWINGS.
29. STRIPPING PER CIVIL ENGINEERING DRAWINGS.
30. CURBING PER CIVIL ENGINEERING DRAWINGS.
31. ADA PARKING SIGNAGE PER CIVIL ENGINEERING DRAWINGS.
32. SEE CIVIL DRAWINGS FOR GRADES ON RAMPS, CURB CUTS AND SIDEWALK APPROACHES TO ENTRY/EXIT DOORS - ALL TO BE ADA ACCESSIBLE.
33. ASPHALT AND CONCRETE AT SAME ELEVATION - SEE CIVIL DRAWINGS.
34. PRECAST CONCRETE PARKING CHOCK / WHEEL STOP - TYPICAL OF (5). ANCHOR IN PLACE. TO HAVE DRAINAGE SLOTS IN BOTTOM SIDE. LOCATE EAST FACE 2'-0" FROM EDGE OF CONCRETE SIDEWALK.

REVISIONS:

NEW DOWNTOWN SALT LAKE CITY WINE STORE
300 West Harris Ave. (1563 South)

MJSA
357 West Pierpont Avenue □ Salt Lake City, Utah 84101
Telephone 801 364 5161 □ Facsimile 801 364 5167
ARCHITECTURE INTERIOR DESIGN

State of Utah–Department of Administrative Services
DIVISION OF FACILITIES CONSTRUCTION AND MANAGEMENT
4110 State Office Building/Salt Lake City, Utah 84114/538-3018

DEPARTMENT OF ALCOHOLIC BEVERAGE CONTROL
1625 South 900 West, Salt Lake City, Utah 84130/977-6800

STAMP

STATE OF UTAH
KIN L. NG
No. 127383
LICENSED ARCHITECT
11/12/07

DFCM PROJECT NO.: 05051030
DFCM CONTRACT NO.: 077431
MJSA PROJECT NO.: 07005
DATE: 10/15/07
SHEET: AS1-01

SITE PLAN
SCALE: 1/16" = 1'-0"

NEW SALT LAKE CITY WINE STORE

CONSTRUCTION PLANS

300 WEST HARRIS AVENUE (1563) SOUTH
SALT LAKE CITY, UTAH
LOCATED IN THE WEST HALF OF THE NE QUARTER OF SECTION 13,
TOWNSHIP 1 SOUTH, RANGE 1 WEST, SALT LAKE BASE & MERIDIAN

NORTH

SCALE: 1" = 20'

0 10 20 30 40 60 80 100

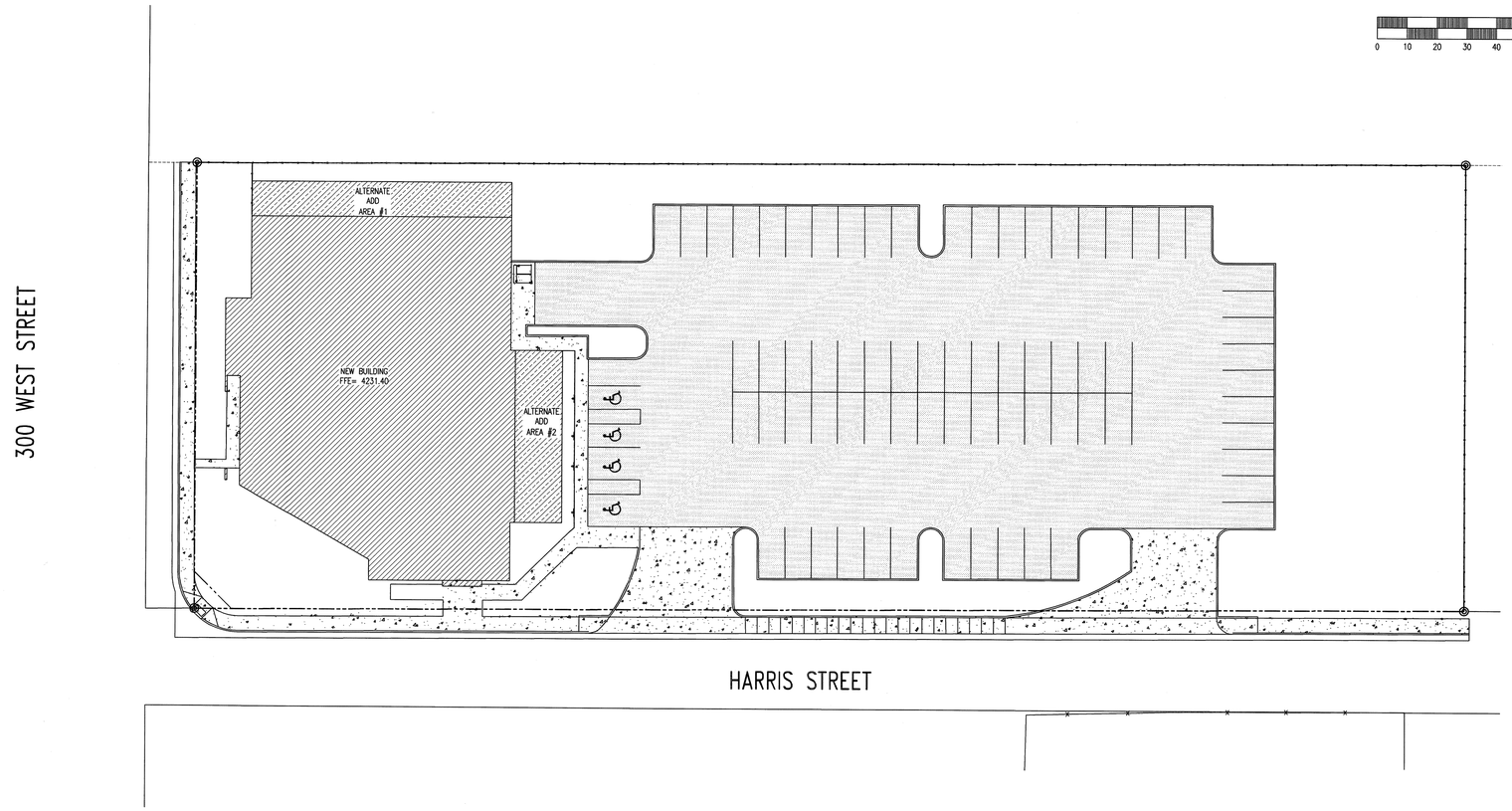

ALL WORK AND MATERIALS FOR SEWER AND WATER MUST CONFORM TO S.L. PUBLIC UTILITIES STANDARDS AND SPECIFICATIONS

ALL WORK AND MATERIALS FOR STREET IMPROVEMENTS MUST CONFORM TO CITY OF SALT LAKE STANDARDS AND SPECIFICATIONS

BENCHMARK C 1-5
BRASS CAP MONUMENT IN TOP OF CURB. LOCATED
119'± SOUTH AND 33'± EAST FROM
THE INTERSECTION AT 300 WEST
ST. AND HARRIS AVENUE.
EL = 4229.406' (NGVD 29)

OWNER
DEPARTMENT OF ALCOHOLIC BEVERAGE CONTROL
1625 SOUTH 900 WEST
SALT LAKE CITY, UTAH 84130
TELE. 801 977-6800

CIVIL DRAWING INDEX	
G1.00	CIVIL COVER SHEET
V1.00	BOUNDARY & TOPOGRAPHIC SURVEY
G1.01	GENERAL NOTES, LEGEND, AND ABBREVIATIONS
C1.01	HORIZONTAL CONTROL PLAN
C2.01	GRADING AND DRAINAGE PLAN
C2.02	EROSION CONTROL PLAN
C4.01	UTILITY PLAN
C5.01	EROSION DETAILS AND NOTES

MCNEIL ENGINEERING CONTACT: KENNETH A. PETTY, C.E.T., L.S.

McNEIL ENGINEERING CIVIL, L.C.
PROFESSIONAL CIVIL ENGINEERING SERVICES
6895 SOUTH 900 EAST MIDVALE, UTAH 84047
TEL. (801) 255-7700 FAX (801) 255-8071
E-MAIL info@mcneileng.com WEB SITE AT www.mcneileng.com

MCNEIL JOB NO: 270601

McNeil Proj. No. 270601.6

REFERENCE NOTES

REVISIONS:

NEW DOWNTOWN SALT LAKE CITY WINE STORE
300 West Harris Ave. (1563 South)

MJSA
357 West Pierpont Avenue □ Salt Lake City, Utah 84101
Telephone 801 364 5161 □ Facsimile 801 364 5197
ARCHITECTURE INTERIOR DESIGN

State of Utah-Department of Administrative Services
DIVISION OF FACILITIES CONSTRUCTION AND MANAGEMENT
4110 State Office Building/Salt Lake City, Utah 84114/538-3018

DEPARTMENT OF ALCOHOLIC BEVERAGE CONTROL
1625 South 900 West, Salt Lake City, Utah 84130/977-6800

STAMP

PROFESSIONAL ENGINEER & LAND SURVEYOR
SCOTT A. McNEIL
No. 150786
10/12/07
STATE OF UTAH

CIVIL COVER SHEET

SCALE:1" = 20'

DFCM PROJECT NO.: 05051030
DFCM CONTRACT NO.: 077431
MJSA PROJECT NO.: 07005
DATE: 10/15/07
SHEET: G1.00

S:\2070\Hall\DWG\DWGS\C-Civil.dwg Mon 12-Mar-2007 2:53pm

GENERAL NOTES

1.1 COMPLIANCE
1. ALL WORK TO CONFORM TO GOVERNING MUNICIPALITY'S STANDARDS, SPECIFICATIONS AND REQUIREMENTS.
2. ALL CONSTRUCTION AND MATERIALS SHALL BE IN ACCORDANCE WITH THESE CONTRACT DOCUMENTS AND THE MOST RECENT, ADOPTED EDITIONS OF THE FOLLOWING: INTERNATIONAL BUILDING CODE (IBC), THE INTERNATIONAL PLUMBING CODE, STATE DRINKING WATER REGULATIONS, APWA MANUAL OF STANDARD PLANS AND SPECIFICATIONS, ADA ACCESSIBILITY GUIDELINES.
3. ALL CONSTRUCTION SHALL BE AS SHOWN ON THESE PLANS. ANY REVISIONS MUST HAVE PRIOR WRITTEN APPROVAL.

1.2 PERMITTING AND INSPECTIONS
1. PRIOR TO STARTING CONSTRUCTION, THE CONTRACTOR SHALL BE RESPONSIBLE FOR MAKING SURE THAT ALL REQUIRED PERMITS AND APPROVALS HAVE BEEN OBTAINED. NO CONSTRUCTION OR FABRICATION SHALL BEGIN UNTIL THE CONTRACTOR HAS RECEIVED THOROUGHLY REVIEWED PLANS AND OTHER DOCUMENTS APPROVED BY ALL OF THE PERMITTING AUTHORITIES.
2. CONTRACTOR IS RESPONSIBLE FOR SCHEDULING AND NOTIFYING ARCHITECT/ENGINEER OR INSPECTING AUTHORITY 48 HOURS IN ADVANCE OF COVERING UP ANY PHASE OF CONSTRUCTION REQUIRING OBSERVATION.
3. ANY WORK IN THE PUBLIC RIGHT-OF-WAY WILL REQUIRE PERMITS FROM THE APPROPRIATE, CITY, COUNTY OR STATE AGENCY CONTROLLING THE ROAD AND WITH APPROPRIATE INSPECTIONS.

1.3 COORDINATION & VERIFICATION
1. ALL DIMENSIONS, GRADES & UTILITY DESIGNS SHOWN ON THE PLANS SHALL BE VERIFIED BY THE CONTRACTOR PRIOR TO CONSTRUCTION. CONTRACTOR SHALL NOTIFY ARCHITECT/ENGINEER OF ANY DISCREPANCIES PRIOR TO PROCEEDING WITH CONSTRUCTION FOR NECESSARY PLAN OR GRADE CHANGES. NO EXTRA COMPENSATION SHALL BE PAID TO THE CONTRACTOR FOR WORK HAVING TO BE REDONE DUE TO DIMENSIONS OR GRADES SHOWN INCORRECTLY ON THESE PLANS, IF NOT VERIFIED AND NOTIFICATION OF CONFLICTS HAVE NOT BEEN BROUGHT TO THE ATTENTION OF THE ARCHITECT/ENGINEER.
2. CONTRACTOR MUST VERIFY ALL EXISTING CONDITIONS BEFORE BIDDING AND BRING UP ANY QUESTIONS BEFOREHAND. NO ALLOWANCE WILL BE MADE FOR DISCREPANCIES OR OMISSIONS THAT CAN BE EASILY OBSERVED.
3. CONTRACTOR TO COORDINATE WITH ALL OTHER DISCIPLINES, INCLUDING BUT NOT LIMITED TO: LANDSCAPE PLANS, SITE ELECTRICAL SITE LIGHTING PLANS AND ELECTRICAL SERVICE TO THE BUILDING(S), MECHANICAL PLANS FOR LOCATION OF SERVICES TO THE BUILDING(S), INCLUDING FIRE PROTECTION, ARCHITECTURAL SITE PLAN FOR DIMENSIONS, ACCESSIBLE ROUTES, ETC., NOT SHOWN ON CIVIL PLANS.
4. CONTRACTOR IS TO COORDINATE LOCATION OF NEW TELEPHONE SERVICE, GAS SERVICE, CABLE, ETC. TO BUILDING WITH THE APPROPRIATE UTILITY COMPANY. FOR TELEPHONE, CONTRACTOR TO FURNISH CONDUIT, PLYWOOD BACKBOARD, AND GROUND WIRE, AS REQUIRED.

GENERAL NOTES

1.4 SAFETY AND PROTECTION
1. CONTRACTOR IS SOLELY RESPONSIBLE FOR THE MEANS AND METHODS OF CONSTRUCTION,
2. CONTRACTOR IS RESPONSIBLE FOR THE SAFETY OF THE PROJECT AND SHALL MEET ALL OSHA REQUIREMENTS.
3. CONTRACTOR IS RESPONSIBLE FOR CONFORMING TO LOCAL AND FEDERAL CODES GOVERNING SHORING AND BRACING OF EXCAVATIONS AND TRENCHES, AND FOR THE PROTECTION OR WORKERS AND PUBLIC.
4. CONTRACTOR SHALL TAKE ALL MEASURES NECESSARY TO PROTECT ALL EXISTING PUBLIC AND PRIVATE PROPERTY, ROADWAYS, AND UTILITY IMPROVEMENTS. DAMAGE TO EXISTING IMPROVEMENTS CAUSED BY THE CONTRACTOR MUST BE REPAIRED BY THE CONTRACTOR AT HIS/HER EXPENSE TO THE SATISFACTION OF THE OWNER OF SAID IMPROVEMENTS.
5. CONTRACTOR IS REQUIRED TO KEEP ALL CONSTRUCTION ACTIVITIES WITHIN THE APPROVED PROJECT LIMITS. THIS INCLUDES, BUT IS NOT LIMITED TO, VEHICLE AND EQUIPMENT STAGING, MATERIAL STORAGE AND LIMITS OF TRENCH EXCAVATION.
6. IT IS THE CONTRACTOR'S RESPONSIBILITY TO OBTAIN PERMISSION AND/OR EASEMENTS FROM THE APPROPRIATE GOVERNMENT AGENCY AND/OR INDIVIDUAL PROPERTY OWNER(S) FOR WORK OR STAGING OUTSIDE OF THE PROPERTY LINE.
7. CONTRACTOR SHALL PROVIDE BARRICADES, SIGNS, FLASHERS, OTHER EQUIPMENT AND FLAG PERSONS NECESSARY TO INSURE THE SAFETY OF WORKERS AND VISITORS. ALL CONSTRUCTION SIGNING, BARRICADING, AND TRAFFIC DELINEATION SHALL CONFORM TO THE "MANUAL ON UNIFORM TRAFFIC CONTROL DEVICES", LATEST EDITION.
8. CONTRACTOR SHALL COMPLY WITH LOCAL NOISE ORDINANCE STANDARDS.
9. CONTRACTOR IS RESPONSIBLE FOR DUST CONTROL ACCORDING TO GOVERNING AGENCY STANDARDS.
10. CONTRACTOR SHALL TAKE ALL NECESSARY AND PROPER PRECAUTIONS TO PROTECT ADJACENT PROPERTIES FROM ANY AND ALL DAMAGE THAT MAY OCCUR FROM STORM WATER RUNOFF AND/OR DEPOSITION OF DEBRIS RESULTING FROM ANY AND ALL WORK IN CONNECTION WITH CONSTRUCTION. SUBMIT A STORM WATER POLLUTION PREVENTION PLAN, IF REQUIRED.
11. WORK IN PUBLIC STREETS, ONCE BEGUN, SHALL BE PROSECUTED TO COMPLETION WITHOUT DELAY AS TO PROVIDE MINIMUM INCONVENIENCE TO ADJACENT PROPERTY OWNERS AND TO THE TRAVELING PUBLIC.
12. CONTRACTOR SHALL PROVIDE ALL NECESSARY HORIZONTAL AND VERTICAL TRANSITIONS BETWEEN NEW CONSTRUCTION AND EXISTING SURFACES TO PROVIDE FOR PROPER DRAINAGE AND FOR INGRESS AND EGRESS TO NEW CONSTRUCTION.
13. NATURAL VEGETATION AND SOIL COVER SHALL NOT BE DISTURBED PRIOR TO ACTUAL CONSTRUCTION OF A REQUIRED FACILITY OR IMPROVEMENT. MASS CLEARING OF THE SITE IN ANTICIPATION OF CONSTRUCTION SHALL BE AVOIDED. CONSTRUCTION TRAFFIC SHALL BE LIMITED TO ONE APPROACH TO THE SITE. THE APPROACH SHALL BE DESIGNATED BY THE OWNER OR GOVERNING AGENCY.
14. THE CONTRACTOR SHALL TAKE REASONABLE MEASURE TO PROTECT EXISTING IMPROVEMENTS FROM DAMAGE AND ALL SUCH IMPROVEMENTS DAMAGED BY THE CONTRACTOR'S OPERATION SHALL BE REPAIRED OR RECONSTRUCTED TO THE ENGINEER/OWNER'S SATISFACTION AT THE EXPENSE OF THE CONTRACTOR.

GENERAL NOTES CONTINUED

1.5 MATERIALS
1. SITE CONCRETE SHALL BE A MINIMUM 6.5 BAG MIX, 4000 P.S.I. @ 28 DAYS, 4" MAXIMUM SLUMP WITH 5 + OR - 1% AIR ENTRAINMENT, UNLESS SPECIFIED OTHERWISE. -SEE SPECIFICATION
   A. SLABS-ON-GRADE WILL BE TYPICALLY SCORED (1/4 THE DEPTH) AT INTERVALS NOT TO EXCEED THEIR WIDTH OR 12 TIMES THEIR DEPTH, WHICHEVER IS LESS. SCORING WILL BE PLACED TO PREVENT RANDOM CRACKING. FULL DEPTH EXPANSION JOINTS WILL BE PLACED AGAINST ANY OBJECT DEEMED TO BE FIXED, CHANGES IN DIRECTION AND AT EQUAL INTERVALS NOT TO EXCEED 50 FEET.
   B. CONCRETE WATERWAYS, CURBWALLS, MOWSTRIPS, CURB AND GUTTER, ETC. WILL TYPICALLY BE SCORED (1/4 THE DEPTH AT INTERVALS NOT TO EXCEED 10 FEET AND HAVE FULL DEPTH EXPANSION JOINTS AT EQUAL SPACING NOT TO EXCEED 50 FEET.
   C. UNLESS OTHERWISE NOTED, ALL SLABS-ON-GRADE WILL HAVE A MINIMUM 8" TURNED-DOWN EDGE TO HELP CONTROL FROST HEAVE.
   D. UNLESS OTHERWISE NOTED, ALL ON-GRADE CONCRETE WILL BE PLACED ON A MINIMUM 4" GRAVEL BASE OVER A WELL COMPACTED (90%) SUBGRADE.
   E. ALL EXPOSED SURFACES WILL HAVE BROOMED FINISH.
   F. ALL JOINTS (CONTROL, CONSTRUCTION OR EXPANSION JOINTS, ETC.) WILL BE SEALED WITH A ONE PART POLYURETHANE SEALANT (SEE SPECIFICATION).
2. ASPHALTIC CONCRETE PAVEMENT SHALL BE A MINIMUM 3" OVER 6" OF COMPACTED (95%) ROAD BASE OVER PROPERLY PREPARED AND COMPACTED (90%) SUBGRADE, UNLESS NOTED OTHERWISE. -SEE SPECIFICATIONS, AND DETAIL 'D1' SHEET C5.01
   A. ASPHALT COMPACTION SHALL BE A MINIMUM 96% (MARSHALL DESIGN).
   B. SURFACE COARSE SHALL BE ½ " MINUS. MIX DESIGN TO BE SUBMITTED FOR APPROVAL AT LEAST TWO WEEKS PRIOR TO ANTICIPATED PAVING SCHEDULE.
   C. AC PAVEMENT TO BE A ¼" ABOVE LIP OF ALL GUTTER AFTER COMPACTION.
   D. THICKNESSES OVER 3" WILL BE LAID IN TWO LIFTS WITH THE FIRST LIFT BEING AN APPROVED ¾" MINUS DESIGN.

1.6 GRADING / SOILS
1. SITE GRADING SHALL BE PERFORMED IN ACCORDANCE WITH THESE PLANS AND SPECIFICATIONS AND THE RECOMMENDATIONS SET FORTH IN THE SOILS REPORT, WHICH BY REFERENCE ARE A PART OF THE REQUIRED CONSTRUCTION DOCUMENTS AND IN CASE OF CONFLICT SHALL TAKE PRECEDENCE, UNLESS SPECIFICALLY NOTED OTHERWISE ON THE PLANS, OR IN THE SPECIFICATIONS. THE CONTRACTOR SHALL NOTIFY THE ENGINEER OF ANY DISCREPANCY BETWEEN THE SOILS REPORT AND THESE PLANS AND SPECIFICATIONS.
2. THE CONTRACTOR SHALL BE RESPONSIBLE FOR REMOVING AND REPLACING ALL SOFT, YIELDING OR UNSUITABLE MATERIALS AND REPLACING WITH SUITABLE MATERIALS AS SPECIFIED IN THE SOILS REPORT.
3. ALL EXCAVATED OR FILLED AREAS SHALL BE COMPACTED TO 95% OF MODIFIED PROCTOR MAXIMUM DENSITY PER ASTM TEST D-1557, EXCEPT UNDER BUILDING FOUNDATIONS WHERE IT SHALL BE 98% MIN. OF MAXIMUM DENSITY. MOISTURE CONTENT AT TIME OF PLACEMENT SHALL NOT EXCEED 2% ABOVE NOR 3% BELOW OPTIMUM.
4. CONTRACTOR SHALL SUBMIT A COMPACTION REPORT PREPARED BY A QUALIFIED REGISTERED GEOTECHNICAL ENGINEER, VERIFYING THAT ALL FILLED AREAS AND SUBGRADE AREAS WITH THE BUILDING PAD AREA AND AREAS TO BE PAVED, HAVE BEEN COMPACTED IN ACCORDANCE WITH THESE PLANS AND SPECIFICATIONS AND THE RECOMMENDATIONS SET FORTH IN THE GEOTECHNICAL REPORT.
5. SITE CLEARING SHALL INCLUDE THE LOCATING AND REMOVAL OF ALL UNDERGROUND TANKS, PIPES, VALVES, ETC.
6. ALL EXISTING VALVES, MANHOLES, ETC. SHALL BE RAISED OR LOWERED TO GRADE AS REQUIRED.

GENERAL NOTES CONTINUED

1.7 UTILITIES
1. THE LOCATIONS OF UNDERGROUND FACILITIES SHOWN ON THESE PLANS ARE BASED ON FIELD SURVEYS AND LOCAL UTILITY COMPANY RECORDS. IT SHALL BE THE CONTRACTOR'S FULL RESPONSIBILITY TO CONTACT THE VARIOUS UTILITY COMPANIES EITHER DIRECT OR THROUGH BLUE STAKE TO LOCATE THEIR FACILITIES PRIOR TO STARTING CONSTRUCTION.
2. CONTRACTOR TO VERIFY BY POTHOLING BOTH THE VERTICAL AND HORIZONTAL LOCATION OF ALL EXISTING UTILITIES PRIOR TO INSTALLING ANY NEW LINES. NO ADDITIONAL COMPENSATION SHALL BE PAID TO THE CONTRACTOR FOR DAMAGE AND REPAIR TO THESE FACILITIES CAUSED BY HIS WORK FORCE.
3. CONTRACTOR MUST START AT LOW END OF ALL NEW GRAVITY UTILITY LINES. MECHANICAL SUB-CONTRACTOR MUST BE PROVIDED CIVIL SITE DRAWINGS FOR COORDINATION AND TO CHECK THE FLOW FROM THE LOWEST POINT IN BUILDING TO THE FIELD VERIFIED CONNECTION AT THE EXISTING MAIN. NO EXTRA COMPENSATION IS TO BE PAID TO THE CONTRACTOR FOR WORK HAVING TO BE REDONE DUE TO FAILURE TO COMPLY WITH THESE REQUIREMENTS.
4. CONTRACTOR IS TO VERIFY LOCATION, DEPTH, SIZE, TYPE, AND OUTSIDE DIAMETERS OF UTILITIES IN THE FIELD BY POTHOLING A MINIMUM OF 300 FEET AHEAD, PIPELINE CONSTRUCTION TO AVOID CONFLICTS WITH DESIGNED PIPELINE GRADE AND ALIGNMENT. EXISTING UTILITY INFORMATION SHOWN ON PLANS OR OBTAINED FROM UTILITY COMPANIES OR BLUE STAKED MUST BE ASSUMED AS APPROXIMATE, REQUIRING FIELD VERIFICATION.
5. CULINARY WATER AND FIRE SERVICE LINES TO BE CONSTRUCTED IN ACCORDANCE WITH LOCAL GOVERNING MUNICIPALITY STANDARDS AND SPECIFICATIONS.
6. SANITARY SEWER MAINS AND LATERALS TO BE CONSTRUCTED IN ACCORDANCE WITH LOCAL GOVERNING MUNICIPALITY SEWER DISTRICT STANDARDS AND SPECIFICATIONS.
7. STORM SEWER TO BE CONSTRUCTED IN ACCORDANCE WITH THE GOVERNING MUNICIPALITY STANDARDS AND SPECIFICATIONS.
8. ALL STORM DRAIN AND IRRIGATION CONDUITS SHALL BE INSTALLED WITH WATER TIGHT JOINTS AND CONNECTIONS.
9. ALL STORM DRAIN PIPE PENETRATIONS INTO BOXES SHALL BE CONSTRUCTED WITH WATER TIGHT SEALS ON THE OUTSIDE AND GROUTED SMOOTH WITH A NON-SHRINK GROUT ON THE INSIDE. CONDUITS SHALL BE CUT OFF FLUSH WITH THE INSIDE OF THE BOX.
10. NO CHANGE IN THE DESIGN OF UTILITIES AS SHOWN WILL BE MADE BY THE CONTRACTOR WITHOUT THE WRITTEN APPROVAL OF THE GOVERNING MUNICIPALITY, OR OTHER AUTHORITY HAVING JURISDICTION OVER THAT UTILITY.
11. ALL STORM DRAIN CONDUITS AND BOXES SHALL BE CLEAN AND FREE OF ROCKS, DIRT, AND CONSTRUCTION DEBRIS PRIOR TO FINAL INSPECTION.

1.8 SURVEY CONTROL
1. CONTRACTOR MUST PROVIDE A REGISTERED LAND SURVEYOR OR PERSONS UNDER THE SUPERVISION OF A REGISTERED LAND SURVEYOR TO SET STAKES FOR THE ALIGNMENT AND GRADE OF EACH MAIN AND/OR FACILITY AS SHOWN ON THE PLANS. THE STAKES SHALL BE MARKED WITH THE HORIZONTAL LOCATION (STATION) AND VERTICAL LOCATION (GRADE) WITH CUTS AND/OR FILLS TO THE APPROVED GRADE OF THE MAIN AND OR FACILITY AS SHOWN ON THE PLANS.
2. THE CONTRACTOR SHALL PROTECT ALL STAKES AND MARKERS FOR VERIFICATION PURPOSES.
3. CONTRACTOR WILL BE RESPONSIBLE FOR FURNISHING, MAINTAINING, OR RESTORING ALL MONUMENTS AND REFERENCE MARKS WITHIN THE PROJECT SITE.

1.9 AMERICAN DISABILITIES ACT
1. PEDESTRIAN / ADA ROUTES SHALL MEET THE FOLLOWING SPECIFICATIONS:
   *ROUTES SHALL HAVE A 2.00% (1:50) MAXIMUM CROSS SLOPE.
   *ROUTES SHALL HAVE A 5.00% (1:20) MAXIMUM RUNNING SLOPE.
   *RAMPS SHALL HAVE A 8.33% (1:12) MAXIMUM RUNNING SLOPE.
2. ADA PARKING STALLS AND ADJACENT ROUTES SHALL HAVE A 2.00% MAXIMUM SURFACE SLOPE IN ANY DIRECTION.
3. THE CONTRACTOR SHALL ADHERE TO THE ABOVE SPECIFICATIONS. IN THE EVENT OF A DISCREPANCY IN THE CONSTRUCTION DOCUMENTS, THE CONTRACTOR SHALL NOTIFY THE ARCHITECT/ENGINEER PRIOR TO ANY CONSTRUCTION.

LEGEND

NEW	EXISTING	
		MONUMENT LINE
		CENTER LINE
		SUBJECT PROPERTY LINE
		ADJACENT PROPERTY LINE
		EASEMENT LINE
		FENCE LINE
P	P	POWER LINE
T	T	TELEPHONE LINE
ATMS	ATMS	ATMS CABLE
FO	FO	FIBER-OPTIC CABLE
G	G	NATURAL GAS LINE
W	W	WATER LINE
SW	SW	SECONDARY WATER LINE
S	S	SANITARY SEWER LINE
SD	SD	STORM DRAIN LINE
	IRR	IRRIGATION LINE
RD	RD	ROOF DRAIN LINE
		DITCH FLOWLINE
4572	4572	CONTOUR LINE
		CURB & GUTTER (STD)
		CURB & GUTTER (OUTFALL)
		CONCRETE PAVEMENT
		STD. DUTY ASPHALT
		HEAVY DUTY ASPHALT

NEW	EXISTING	
		SECTION CORNER (FOUND)
		SECTION CORNER (NOT FOUND)
		STREET MONUMENT
		BRASS CAP MONUMENT
PP	PP	POWER POLE
UP	UP	UTILITY POLE
GUY	GUY	GUY ANCHOR
TRANS	TRANS	POWER TRANSFORMER
		TRAFFIC SIGNAL CABINET
LP	LP	LIGHT POLE
TB	TB	TELEPHONE RISER
T	T	TELEPHONE MANHOLE
		TRAFFIC SIGNAL BOX
W	W	WATER MANHOLE
		WATER VALVE
WM	WM	WATER METER
		FIRE HYDRANT
S	S	SANITARY SEWER MANHOLE
SSCO	SSCO	SANITARY SEWER CLEANOUT
SD	SD	STORM DRAIN MANHOLE
		STORM DRAIN CURB INLET
		STORM DRAIN CATCH BASIN
SD	SD	STORM DRAIN CLEANOUT
		STORM DRAIN COMBO BOX
44.00 TOC	4521.38	SPOT ELEVATION
		FLOW DIRECTION
		CONIFEROUS TREE
		DECIDUOUS TREE
MB	MB	MAILBOX
		SIGN
EM	EM	ELECTRICAL METER

ABBREVIATIONS

AC	ACRE	IRR	IRRIGATION	SAD	SEE ARCHITECTURAL DRAWINGS
B&C	BAR & CAP	LF	LINEAR FEET	SS	SANITARY SEWER
BM	BENCHMARK	MAX	MAXIMUM	SD	STORM DRAIN
℄	CENTERLINE	MIN	MINIMUM	SEC	SECTION
CP	CONTROL POINT	MON	MONUMENT	SPEC	SPEC
CU FT	CUBIC FOOT	N	NORTH	SQ	SQUARE
CU YD	CUBIC YARD	NTS	NOT TO SCALE	SQ FT	SQUARE FEET
CONC	CONCRETE	OG	ORIGINAL GROUND	SQ YD	SQUARE YARD
CONST	CONSTRUCTION	PC	POINT OF CURVATURE	STA	STATION
CMP	CORRUGATED METAL PIPE	PCC	POINT OF COMPOUND CURVE	STD	STANDARD
DIA or ø	DIAMETER	PI	POINT OF INTERSECTION	STM	STORM
E	EAST	PRC	POINT OF REVERSE CURVE	T	TOWNSHIP
EOA	EDGE OF ASPHALT	PT	POINT OF TANGENCY	TBC	TOP BACK OF CURB
ELEV	ELEVATION	POC	POINT OF CONNECTION	TOA	TOP OF ASPHALT
EX	EXISTING	PWR	POWER	TOC	TOP OF CONCRETE
FFE	FINISHED FLOOR ELEVATION	P	PROPERTY LINE	TOS	TOP OF SIDEWALK
FG	FINISHED GRADE	PVC	POLYVINAL CLORIDE PIPE	TOW	TOP OF WALL
FT	FEET	R	RANGE	TRANS	TRANSFORMER
HDPE	HDPE	RCP	REINFORCED CONCRETE PIPE	TSB	TRAFFIC SIGNAL BOX
HW	HIGH WATER	REV	REVISION	U.N.O.	UNLESS NOTED OTHERWISE
HWY	HIGHWAY	ROW	RIGHT-OF-WAY	WTR	WATER
ICV	IRRIGATION CONTROL VALVE	SLB&M	SALT LAKE BASE & MERIDIAN	WV	WATER VALVE
IE	INVERT ELEVATION	S	SOUTH	W	WEST

REFERENCE NOTES

REVISIONS:

NEW DOWNTOWN SALT LAKE CITY WINE STORE
300 West Harris Ave. (1563 South)

MJSA
357 West Pierpont Avenue ◻ Salt Lake City, Utah 84101
Telephone 801 364 5161 ◻ Facsimile 801 364 5167
ARCHITECTURE INTERIOR DESIGN

THE GREAT SEAL OF THE STATE OF UTAH 1896
State of Utah—Department of Administrative Services
DIVISION OF FACILITIES CONSTRUCTION AND MANAGEMENT
4110 State Office Building/Salt Lake City, Utah 84114/538-3018

DEPARTMENT OF ALCOHOLIC BEVERAGE CONTROL
1625 South 900 West, Salt Lake City, Utah 84130/977-6800

STAMP

DFCM PROJECT NO.: 05051030
DFCM CONTRACT NO.: 077431
MJSA PROJECT NO.: 07005
DATE: 10/15/07

GENERAL NOTES

SHEET: G1.01

McNeil Proj. No. 270601.6

S:\2007Files\270601\DWG\601-PLN.dwg - Wed, 06 Feb 2008 - 3:14pm

S:\2007Files\270601\DWG\601-PLN.dwg, 2/6/2008 3:14:36 PM, Adobe PDF

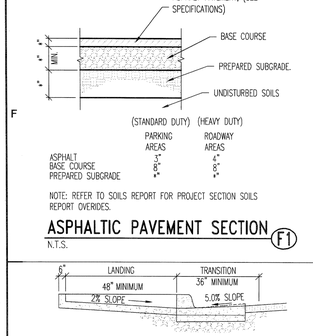

NOTE: REFER TO SOILS REPORT FOR PROJECT SECTION SOILS REPORT OVERIDES.

ASPHALTIC PAVEMENT SECTION (F1)

N.T.S.

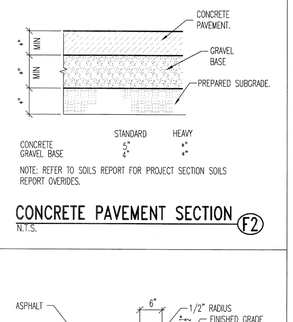

NOTE: REFER TO SOILS REPORT FOR PROJECT SECTION SOILS REPORT OVERIDES.

CONCRETE PAVEMENT SECTION (F2)

N.T.S.

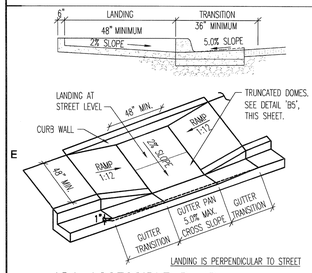

ADA ACCESSIBLE RAMP (E1)

SCALE: N.T.S.

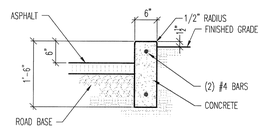

NOTE: CONST. JOINTS @ 10'-0" O.C. EXPANSION JOINTS @ 50'-0" O.C.

CURB DETAIL (E2)

N.T.S.

ISOLATION (EXPANSION) JOINTS

NOTE: USE ONLY AT FIXED OBJECTS WITHIN OR ABUTTING PAVED AREA

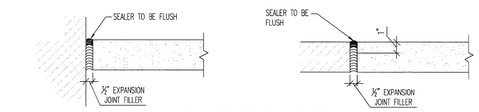

CONTROL JOINTS

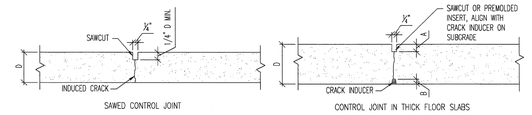

SAWED CONTROL JOINT

CONTROL JOINT IN THICK FLOOR SLABS

CONSTRUCTION JOINTS

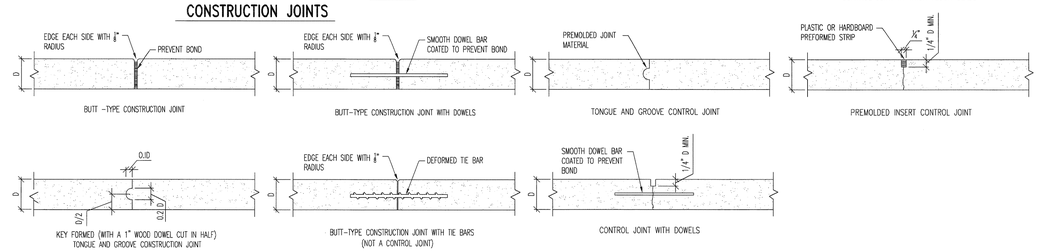

BUTT -TYPE CONSTRUCTION JOINT

BUTT-TYPE CONSTRUCTION JOINT WITH DOWELS

TONGUE AND GROOVE CONTROL JOINT

PREMOLDED INSERT CONTROL JOINT

KEY FORMED (WITH A 1" WOOD DOWEL CUT IN HALF) TONGUE AND GROOVE CONSTRUCTION JOINT

BUTT-TYPE CONSTRUCTION JOINT WITH TIE BARS (NOT A CONTROL JOINT)

CONTROL JOINT WITH DOWELS

JOINT CROSS SECTIONS (E3)

SCALE: 1" = 1'- 0"

CONCRETE JOINT NOTES:

1. SLABS-ON-GRADE WILL BE TYPICALLY SCORED (1/4 THE DEPTH) AT INTERVALS NOT TO EXCEED THEIR WIDTH OR 12 TIMES THEIR DEPTH, WHICHEVER IS LESS. SCORING WILL BE PLACED TO PREVENT RANDOM CRACKING. FULL DEPTH EXPANSION JOINTS WILL BE PLACED AGAINST ANY OBJECT DEEMED TO BE FIXED CHANGES IN DIRECTION, AT EQUAL INTERVALS NOT TO EXCEED 50 FEET.
2. CONCRETE WATERWAYS, CURBWALLS, MONWSTRIPS, CURB AND GUTTER, ETC., WILL TYPICALLY BE SCORED (1/4 THE DEPTH) AT INTERVALS NOT TO EXCEED 10 FEET AND HAVE FULL DEPTH EXPANSION JOINTS AT EQUAL SPACING NOT TO EXCEED 50 FEET.
3. UNLESS OTHERWISE NOTED ALL SLABS-ON-GRADE WILL HAVE A MINIMUM 8" TURNED-DOWN EDGE TO HELP CONTROL FROST HEAVE.
4. UNLESS OTHERWISE NOTED, ALL ON-GRADE CONCRETE WILL BE PLACED ON A MINIMUM 4" GRAVEL BASE OVER A WELL COMPACTED (95% DENSITY) SUBGRADE.
5. ALL EXPOSED SURFACES WILL HAVE A TEXTURED FINISH, RUBBED OR BROOMED ANY "PLASTERING" OF NEW CONCRETE, WILL BE DONE WHILE IT IS STILL "GREEN".
6. ALL JOINTS (CONTROL JOINTS, CONSTRUCTION JOINTS, EXPANSION JOINTS, ETC.), WILL BE SEALED WITH A ONE PART POLYURETHANE SEALANT (SEE SPECIFICATION)

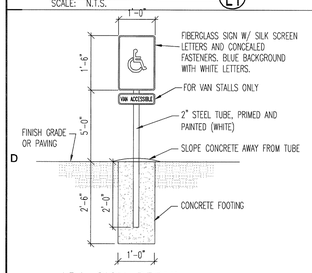

ADA SIGN DETAIL (D1)

SCALE: N.T.S.

PAINTED EMBLEM ON ASPHALT PAVING TYP. AT ALL ADA PARKING STALLS PER CITY REQUIREMENTS. (2 COATS)

NOTE: SEE SPECIFICATIONS FOR PAINT TYPE AND COLOR. (2 COATS)

STRIPING SYMBOL (C1)

N.T.S.

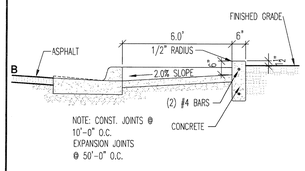

NOTE: CONST. JOINTS @ 10'-0" O.C. EXPANSION JOINTS @ 50'-0" O.C.

SIDEWALK SECTION (1)

SCALE: N.T.S.

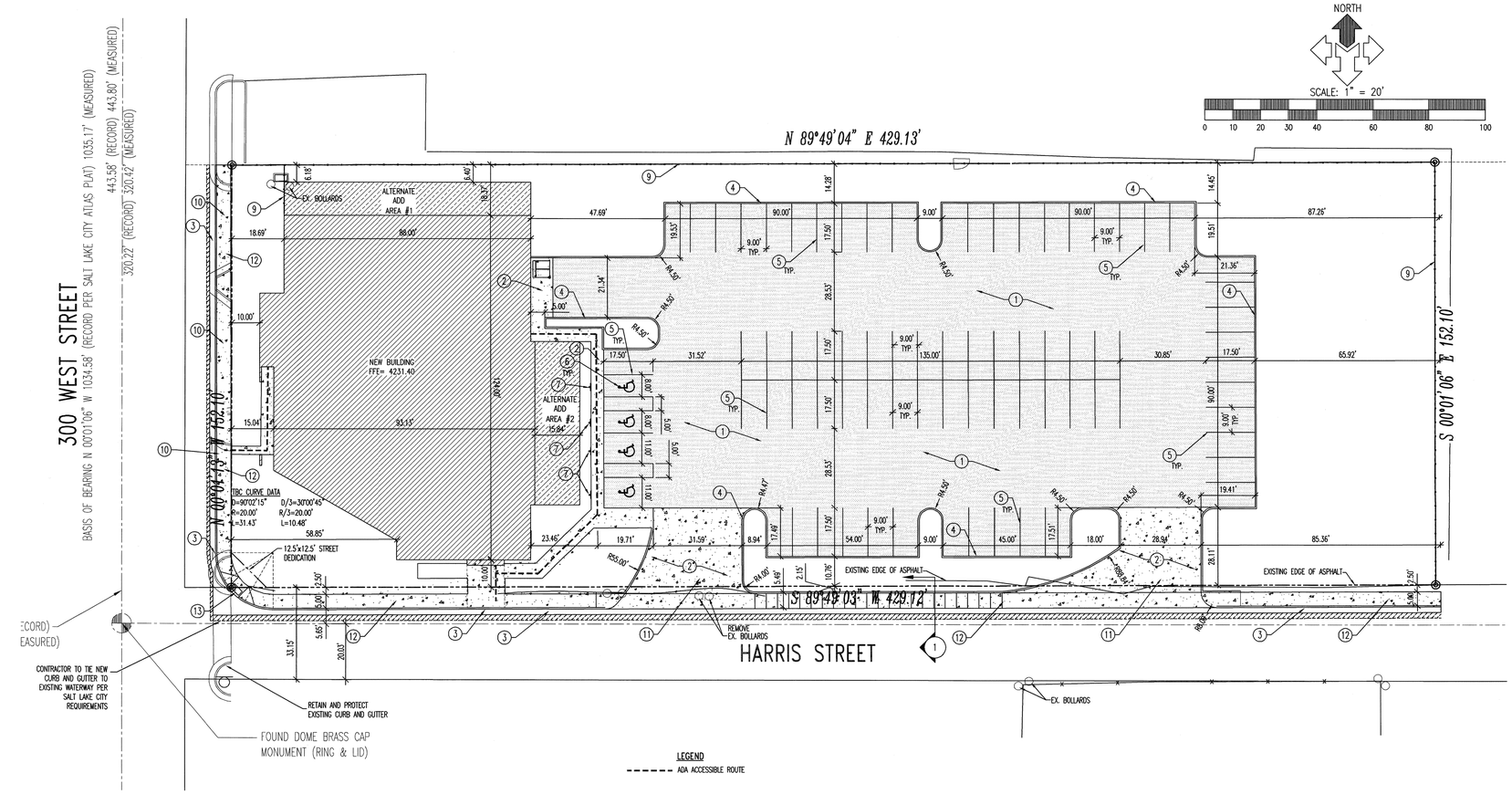

AVOID CUTTING UNDERGROUND UTILITIES. IT'S COSTLY.
Call BEFORE YOU Dig
1-800-662-4111

NOTICE!
THE CONTRACTOR SHALL BE RESPONSIBLE FOR THE LOCATION, PROTECTION, AND RESTORATION OF ALL BURIED OR ABOVE GROUND UTILITIES, SHOWN OR NOT SHOWN ON THE PLANS.

McNeil Proj. No. 270601.6

REFERENCE NOTES

	AREA	%
HARDSCAPE	32,565 SQ. FT.	50%
LANDSCAPE	21,281 SQ. FT.	32%
BUILDINGS	11,494 SQ. FT.	18%
TOTAL	65,340 SQ. FT	100.0%

GENERAL NOTES:

ALL DIMENSIONS ARE TO THE FACE OF CUR, UNLESS OTHERWISE NOTED

SEE ARCHITECT'S SITE PLAN FOR ADDITIONAL INFORMATION

SEE LANDSCAPE PLANS FOR IRRIGATION, PLANTING, AND OTHER CONCRETE CURB REQUIREMENTS

ALL WORK TO COMPLY WITH GOVERNING AGENCY'S STANDARDS AND SPECIFICATIONS

ALL IMPROVEMENTS MUST COMPLY WITH ADA STANDARDS AND RECOMMENDATIONS.

KEY NOTES:

PROVIDE, INSTALL AND/OR CONSTRUCT THE FOLLOWING PER THE SPECIFICATIONS GIVEN OR REFERENCED AND THE DETAILS NOTED AND AS SHOWN ON THE CONSTRUCTION DRAWINGS:

1. STANDARD DUTY ASPHALT PAVEMENT WITH GRANULAR BASE PER DETAIL 'F1', SHEET C1.01
2. CONCRETE PAVEMENT WITH GRANULAR BASE PER DETAIL 'F2', SHEET C1.01. SEE ARCHITECTS DRAWINGS FOR LOCATIONS OF CONTROL JOINTS.
3. TYPE 'A' CURB AND GUTTER. SEE APWA STANDARD PLAN 205.
4. CONCRETE CURB WALL. SEE DETAIL 'F3', SHEET C1.01.
5. 4" WIDE SOLID WHITE PARKING STALL STRIP LINES.
6. PAINTED ADA SYMBOL. SEE DETAIL 'C1', SHEET C1.01.
7. ADA PARKING SIGN. SEE DETAIL 'D1', SHEET C1.01.
8. NEW ADA RAMP. SEE DETAIL 'E1', SHEET C1.01.
9. FENCE. SEE ARCHITECTURAL PLANS FOR DETAIL.
10. REMOVE EXISTING RADIUS DRIVE APPROACH TO INCLUDE ALL CONCRETE CURB, DRIVE APPROACH, AND ROAD BASE.
11. DIP DRIVE APPROACH. SEE APWA STANDARD PLAN 215A.
12. CONCRETE SIDEWALK PER APWA STANDARD PLAN 231.
13. ADA PEDESTRIAN RAMP PER APWA STANDARD PLAN 235.

State of Utah-Department of Administrative Services
DIVISION OF FACILITIES CONSTRUCTION AND MANAGEMENT
4110 State Office Building/Salt Lake City, Utah 84114/538-3018

DEPARTMENT OF ALCOHOLIC BEVERAGE CONTROL
1625 South 900 West, Salt Lake City Utah 84130/977-6800

STAMP

HORIZONTAL CONTROL PLAN
SCALE:1" = 20'

REVISIONS:

NEW DOWNTOWN SALT LAKE CITY WINE STORE
300 West Harris Ave. (1563 South)

MJSA
357 West Pierpont Avenue □ Salt Lake City, Utah 84101
Telephone 801 364 5100 □ Facsimile 801 364 5107
ARCHITECTURE ENGINEERING DESIGN

DFCM PROJECT NO.: 05051030
DFCM CONTRACT NO.: 077431
MJSA PROJECT NO.: 07005
DATE: 10/15/07
SHEET: C1.01

E:\2007\Real\270601\DWG\007-PLN.dwg - Mon, 12 Nov 2007 - 3:54pm

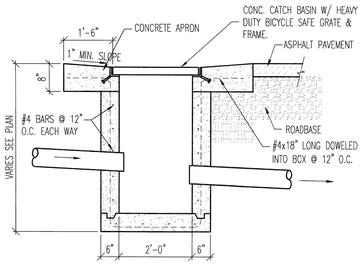

CURB INLET DETAIL (E1)

NTS

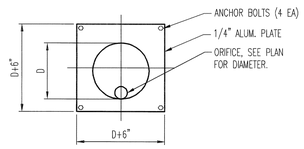

ORIFICE RESTRICTOR (E2)

NTS

```
SALT LAKE CITY SITE DEVELOPMENT DRAINAGE CALCULATIONS
=====================================================================

Drainage Calculations for : New Salt Lake City Wine Store
Location : 300 West Harris Ave.
Restriction Rate : 0.20 cfs/acre

                                        Runoff Coefficient
                                        ------------------
Roof Area          :   11494 Sq.Ft.     C_roof       : 0.85
Paved Area         :   32565 Sq.Ft.     C_paved      : 0.90
Landscaped Area    :   21281 Sq.Ft.     C_landscaped : 0.15
                       -------                       ----
     Total Area    :   65340 Sq.Ft.     Weighted C   : 0.65
                        1.50 Acres                CA :  42271 Sq.Ft.

LAPSED    ACCUM.     "CA"     ACCUM.    ALLOWABLE  REQUIRED
 TIME    RAINFALL   (SQ.FT.)   FLOW     DISCHARGE  STORAGE
(MIN.)    (IN.)               (CU.FT.)  (CU.FT.)   (CU.FT.)
-------------------------------------------------------------
   15      0.78      42271     2736       270       2466
   30      1.09      42271     3854       540       3314
   60      1.39      42271     4903      1080       3823A <-
  120      1.54      42271     5417      2160       3257
  180      1.68      42271     5908      3240       2668
  360      2.03      42271     7136      6480        656
  720      2.50      42271     8806     12960          0
 1440      3.23      42271    11362     25920          0

Summary
-------
     Required Detention Storage =  3823 Cubic Feet
     Unit Storage Per Acre      =  2549 Cubic Feet per Acre
     Allowable Release Rate     =  0.300 Cubic Feet per Second
     Detention Time             =   409 Minutes (  6.8 Hrs.)
     Orifice Head               =  3.30 Feet
     Orifice Coefficient        =  0.60
     Orifice Diameter           =  2.51 Inch


PREPARED BY : _____________________   DATE : 9/25/2007

LICENCE NO. : _____________

REVIEWED BY : _____________________   DATE : _________

APPROVED BY : _____________________   DATE : _________
```

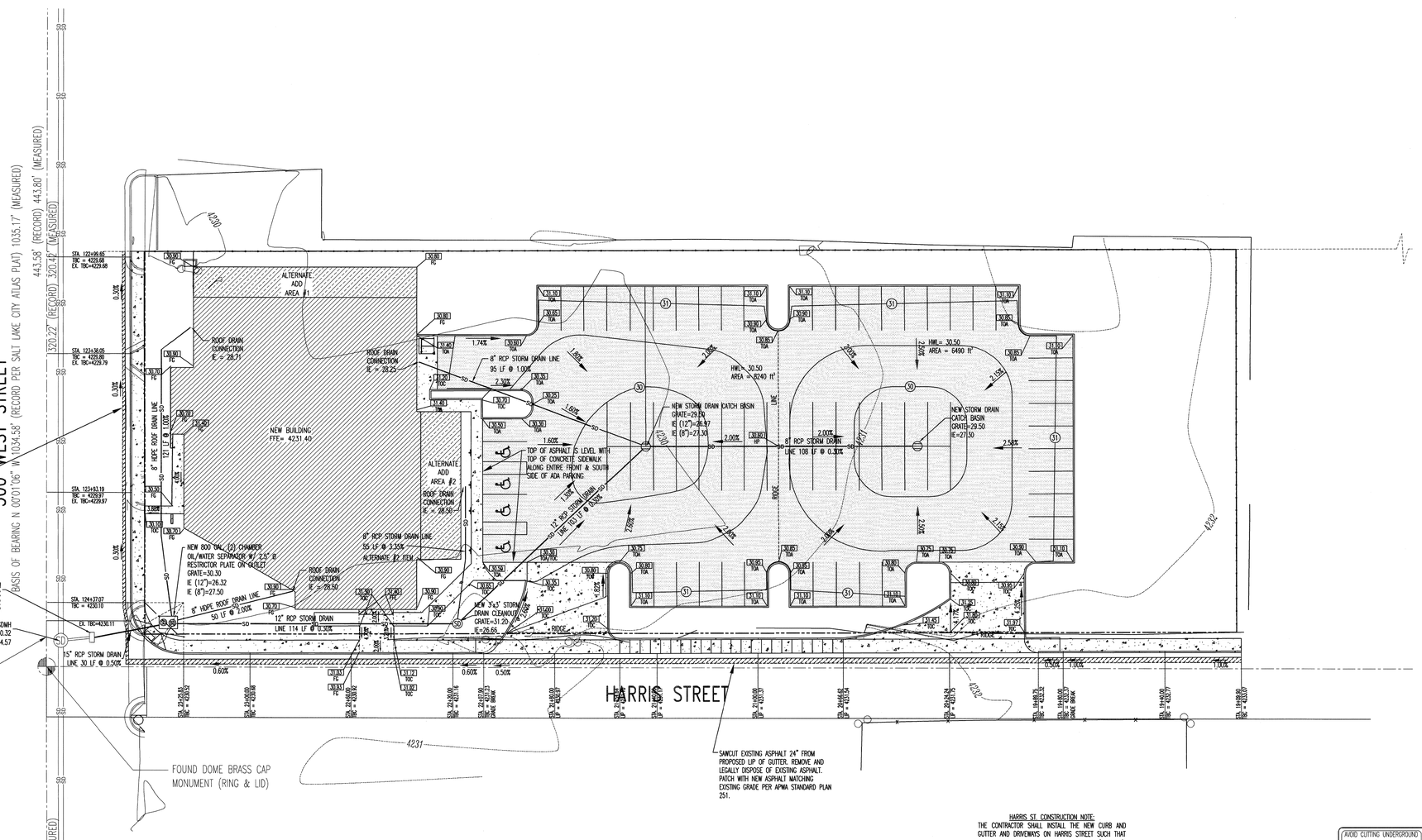

HARRIS ST. CONSTRUCTION NOTE:
THE CONTRACTOR SHALL INSTALL THE NEW CURB AND GUTTER AND DRIVEWAYS ON HARRIS STREET SUCH THAT THE LIP OF THE NEW GUTTER IS BETWEEN 2" AND 3" BELOW THE EXISTING ADJACENT ASPHALT GRADE. THE ELEVATION OF THE CURB IN FRONT OF THE SOUTH BUILDING ENTRANCE SHALL ALSO PROVIDE AN ACCESSABLE ROUTE FROM THE ADJACENT WALKWAY TO THE FRONT DOOR. A LICENSED LAND SURVEYOR CONTRACTED THROUGH THE GENERAL CONTRACTOR SHALL VERIFY PROPER PLACEMENT OF THE NEW CURB AND GUTTER PRIOR TO ANY CONCRETE POURS.

AVOID CUTTING UNDERGROUND UTILITIES. IT'S COSTLY!
Call BEFORE YOU Dig
1-800-662-4111

NOTICE!
THE CONTRACTOR SHALL BE RESPONSIBLE FOR THE LOCATION, PROTECTION, AND RESTORATION OF ALL BURIED OR ABOVE GROUND UTILITIES, SHOWN OR NOT SHOWN ON THE PLANS.

McNeil Proj. No. 270601.6

REFERENCE NOTES

REVISIONS:

GENERAL NOTES:
SITE GRADING SHALL BE PERFORMED IN ACCORDANCE WITH THESE PLANS AND SPECIFICATIONS AND THE RECOMMENDATIONS SET FORTH IN THE SOILS REPORT THE CONTRACTOR SHALL BE RESPONSIBLE FOR REMOVING AND REPLACING ALL SOFT, YIELDING OR UNSUITABLE MATERIALS AND REPLACING WITH SUITABLE MATERIALS AS SPECIFIED IN THE SOILS REPORT. ALL EXCAVATED OR FILLED AREAS SHALL BE COMPACTED TO 95% OF MODIFIED PROCTOR MAXIMUM DENSITY PER ASTM TEST D-1557 EXCEPT UNDER BUILDING FOUNDATION WHERE IT SHALL BE 98% MIN. OF MAXIMUM DENSITY. MOISTURE CONTENT AT TIME OF PLACEMENT SHALL NOT EXCEED 2% ABOVE NOR 3% BELOW OPTIMUM. CONTRACTOR SHALL SUBMIT A COMPACTION REPORT PREPARED BY A QUALIFIED REGISTERED SOILS ENGINEER, VERIFYING THAT ALL FILLED AREAS AND SUBGRADE AREAS WITHIN THE BUILDING PAD AREA AND AREAS TO BE PAVED, HAVE BEEN COMPACTED IN ACCORDANCE WITH THESE PLANS & SPECS AND THE RECOMMENDATIONS SET FORTH IN THE SOILS REPORT.

THE CONTRACTOR IS TO USE BEST MANAGEMENT PRACTICES FOR PROVIDING EROSION CONTROL FOR CONSTRUCTION OF THIS PROJECT. SPECIFIC DETAILS SHOWN ON SHEET C2.02 SHALL BE USED IN COMBINATION WITH OTHER ACCEPTED LOCAL PRACTICES.

EXISTING UNDERGROUND UTILITIES AND IMPROVEMENTS ARE SHOWN IN THEIR APPROXIMATE LOCATIONS BASED UPON RECORD INFORMATION AVAILABLE AT THE TIME OF PREPARATION OF PLANS. LOCATIONS MAY NOT HAVE BEEN VERIFIED IN THE FIELD AND NO GUARANTEE IS MADE AS TO ACCURACY OR COMPLETENESS OF THE INFORMATION SHOWN. IT SHALL BE RESPONSIBILITY OF THE CONTRACTOR TO DETERMINE THE EXISTENCE AND LOCATION OF THOSE UTILITIES SHOWN ON THESE PLANS OR INDICATED IN THE FIELD BY LOCATING SERVICES. ANY ADDITIONAL COSTS INCURRED AS A RESULT OF CONTRACTOR'S FAILURE TO VERIFY LOCATIONS OF EXISTING UTILITIES PRIOR TO BEGINNING OF CONSTRUCTION IN THEIR VICINITY SHALL BE BORNE BY THE CONTRACTOR AND ASSUMED INCLUDED IN THE CONTRACT.

KEY NOTES:
PROVIDE, INSTALL AND/OR CONSTRUCT THE FOLLOWING PER THE SPECIFICATIONS GIVEN OR REFERENCED AND THE DETAILS NOTED AND AS SHOWN ON THE CONSTRUCTION DRAWINGS:

1. GRADE SITE TO ELEVATIONS AND CONTOURS SHOWN ON PLAN.
2. STORM DRAIN CATCH BASIN WITH HEAVY DUTY BICYCLE SAFE GRATE. SEE DETAIL 'E6', SHEET C5.01.
3. STORM DRAIN CLEANOUT BOX WITH SOLID LID. SEE DETAIL 'E6', SHEET C5.01.
4. RCP STORM DRAIN LINE.
5. INSTALL SNOUT INSIDE CLEANOUT BOX, SEE DETAIL 'D1', SHEET C5.02.

NEW DOWNTOWN SALT LAKE CITY WINE STORE
300 West Harris Ave. (1563 South)

MJSA
357 West Pierpont Avenue □ Salt Lake City, Utah 84101
Telephone 801 364 5101 □ Facsimile 801 364 5107
ARCHITECT/CIVIL ENGINEER/LANDSCAPE ARCHITECT

State of Utah-Department of Administrative Services
DIVISION OF FACILITIES CONSTRUCTION AND MANAGEMENT
4110 State Office Building/Salt Lake City, Utah 84114/538-3018

DEPARTMENT OF ALCOHOLIC BEVERAGE CONTROL
1625 South 900 West, Salt Lake City, Utah 84130/977-6800

STAMP

PROFESSIONAL ENGINEER & LAND SURVEYOR
No. 150786
11/12/07
STATE OF UTAH

GRADING & DRAINAGE PLAN
SCALE: 1" = 20'

DFCM PROJECT NO.: 05051030
DFCM CONTRACT NO.: 077431
MJSA PROJECT NO.: 07005
DATE: 10/15/07
SHEET: C2.01

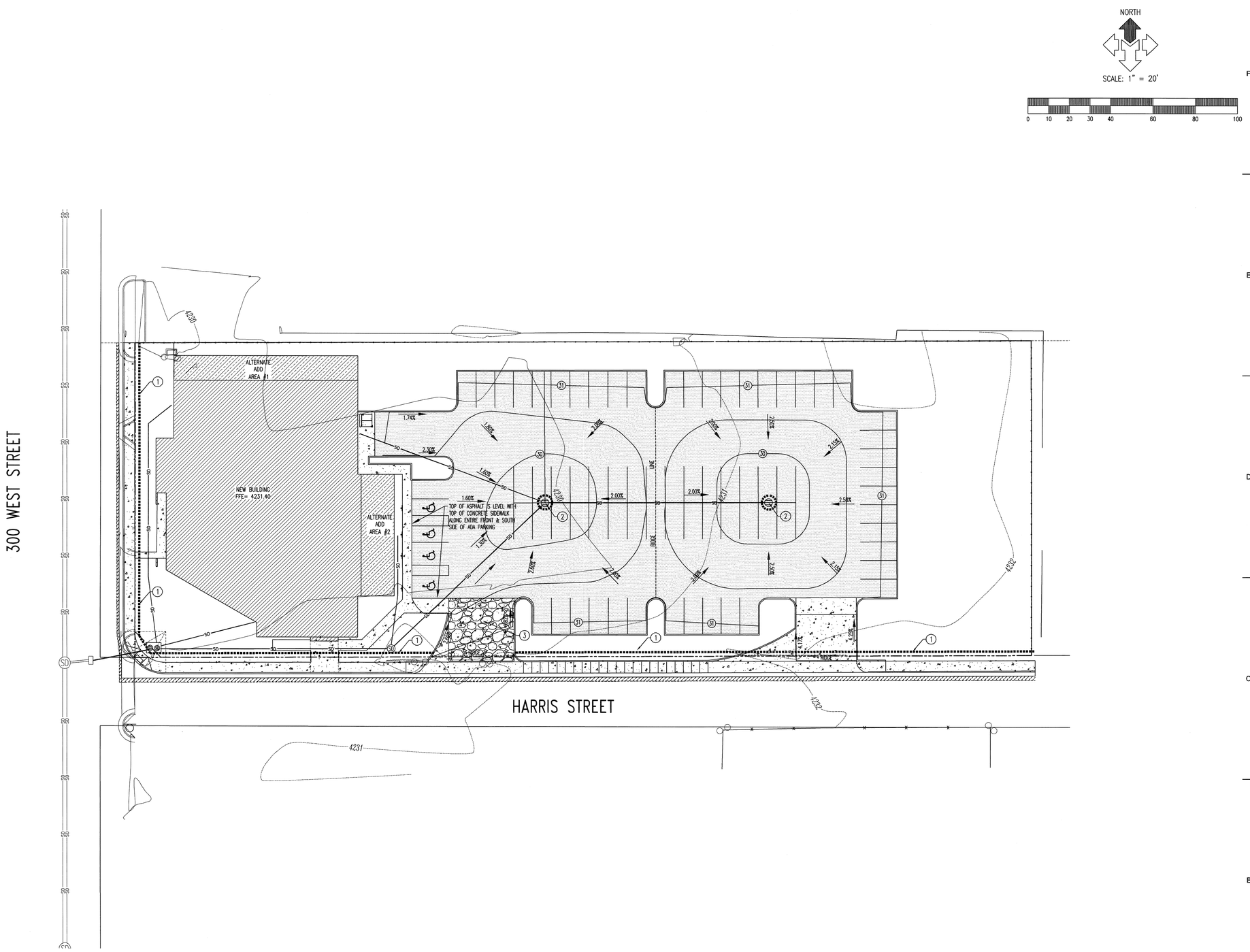

REFERENCE NOTES

GENERAL NOTES:

THE CONTRACTOR IS TO USE BEST MANAGEMENT PRACTICES FOR PROVIDING EROSION CONTROL FOR CONSTRUCTION OF THIS PROJECT. SPECIFIC DETAILS SHOWN ON SHEET C5.02 SHALL BE USED IN COMBINATION WITH OTHER ACCEPTED LOCAL PRACTICES.

ALL MATERIALS AND WORKMANSHIP SHALL CONFORM TO THE LOCAL GOVERNING AGENCY'S EROSION CONTROL STANDARDS AND SPECIFICATIONS AND ALL WORK SHALL BE SUBJECT TO INSPECTION BY THE AGENCY HAVING JURISDICTION. ALSO INSPECTORS WILL HAVE THE RIGHT TO CHANGE THE FACILITIES AS NEEDED.

THE CONTRACTOR SHALL BE RESPONSIBLE FOR FIELD VERIFYING THE LOCATIONS OF ALL EXISTING UTILITIES. IF CONFLICTS OCCUR, THE CONTRACTOR SHALL NOTIFY THE ENGINEER PRIOR TO CONSTRUCTION TO DETERMINE IF ANY FIELD ADJUSTMENTS SHOULD BE MADE.

THE CONTRACTOR SHALL PROVIDE ADEQUATE DUST CONTROL.

WHEN GRADING OPERATIONS HAVE BEEN COMPLETED AND THE DISTURBED GROUND SHALL BE LEFT "OPEN" FOR 30 DAYS OR MORE THE AREA SHALL BE FURROWED PARALLEL TO THE CONTOURS OF THE AREA.

THE CONTRACTOR SHALL MODIFY EROSION CONTROL MEASURES TO ACCOMODATE PROJECT PLANNING.

MAINTENANCE:

THE GENERAL CONTRACTOR SHALL MAKE ROUTINE CHECKS ON ALL EROSION CONTROL MEASURES TO DETERMINE IF REPAIRS OR SEDIMENT REMOVAL IS NECESSARY. DUE TO CONDITIONS THAT MAY ARISE IN THE FIELD, ADDITIONAL CONTROL MAY BE DETERMINED TO BE NECESSARY.

SILT FENCE BARRIERS SHALL BE INSPECTED BY THE GENERAL CONTRACTOR IMMEDIATELY AFTER EACH RAINFALL AND AT THE LEAST DAILY DURING PROLONGED RAINFALL.

CLOSE ATTENTION SHALL BE PAID TO THE REPAIR OF DAMAGED SILT FENCES, END RUNS, AND UNDERCUTTING BENEATH SILT FENCING.

NECESSARY REPAIRS TO BARRIERS OR REPLACEMENT OF SILT FENCING SHALL BE ACCOMPLISHED PROMPTLY.

SEDIMENT DEPOSITS SHOULD BE REMOVED AFTER EACH RAINFALL. THEY MUST BE REMOVED WHEN THE LEVEL OF DEPOSITION REACHES APPROXIMATELY ONE-HALF THE HEIGHT OF THE BARRIER.

KEY NOTES:

PROVIDE, INSTALL AND/OR CONSTRUCT THE FOLLOWING PER THE SPECIFICATIONS GIVEN OR REFERENCED AND THE DETAILS NOTED AND AS SHOWN ON THE CONSTRUCTION DRAWINGS:

1. SILT FENCE AS SHOWN ON PLAN. SEE DETAIL 'C5', SHEET C5.01
2. INLET PROTECTION AROUND EXISTING OR NEW STORM DRAIN CATCH BASINS OR CURB INLETS. SEE DETAIL 'C1', SHEET C501
3. VEHICLE ENTRANCE GRAVEL. SEE DETAIL 'A1', SHEET C5.01.

AVOID CUTTING UNDERGROUND UTILITIES. IT'S COSTLY.
Call BEFORE YOU Dig
1-800-662-4111

NOTICE!
THE CONTRACTOR SHALL BE RESPONSIBLE FOR THE LOCATION, PROTECTION, AND RESTORATION OF ALL BURIED OR ABOVE GROUND UTILITIES, SHOWN OR NOT SHOWN ON THE PLANS.

McNeil Proj. No. 270601.6

State of Utah-Department of Administrative Services

DIVISION OF FACILITIES CONSTRUCTION AND MANAGEMENT
4110 State Office Building/Salt Lake City, Utah 84114/538-3098

DEPARTMENT OF ALCOHOLIC BEVERAGE CONTROL
1625 South 900 West, Salt Lake City, Utah 84130/977-6800

STAMP

PROFESSIONAL ENGINEER & LAND SURVEYOR
SCOTT McNEIL
No. 150786
STATE OF UTAH
11/12/07

EROSION CONTROL PLAN
SCALE: 1" = 20'

REVISIONS:

NEW DOWNTOWN SALT LAKE CITY WINE STORE
300 West Harris Ave. (1563 South)

MJSA
357 West Pierpont Avenue □ Salt Lake City, Utah 84101
Telephone 801 364 5161 □ Facsimile 801 364 5167
ARCHITECTURE INTERIOR DESIGN

DFCM PROJECT NO.: 05051030
DFCM CONTRACT NO.: 077431
MJSA PROJECT NO.: 07005
DATE: 10/15/07
SHEET: C2.02

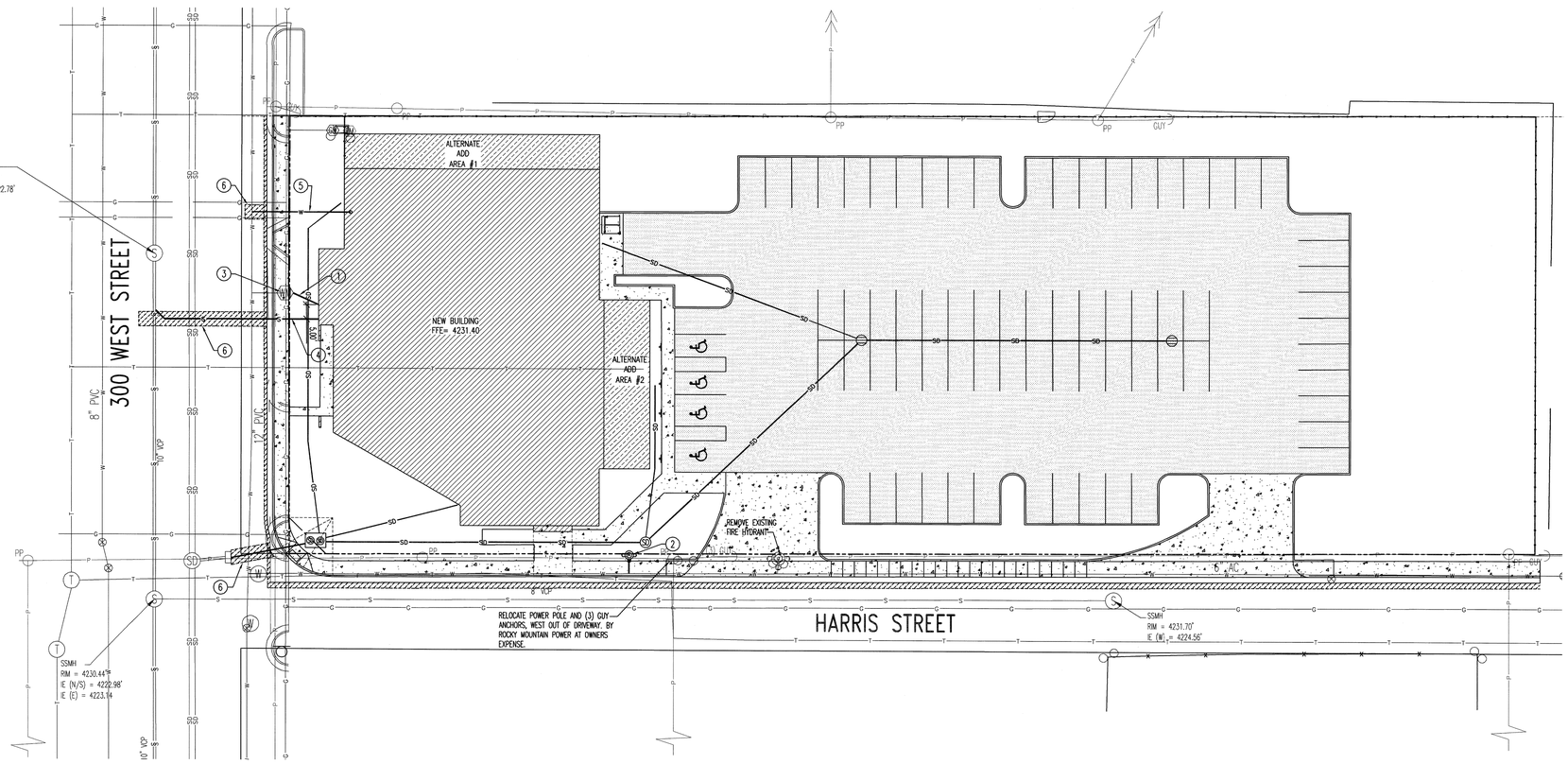

NORTH

SCALE: 1" = 20'

0 10 20 30 40 60 80 100

REFERENCE NOTES

GENERAL NOTES:

CONTRACTOR IS TO COORDINATE ALL UTILITIES WITH MECHANICAL, ELECTRICAL & PLUMBING DRAWINGS.

ALL NEW WATER CONSTRUCTION TO BE DONE IN ACCORDANCE WITH LOCAL GOVERNING MUNICIPALITY STANDARDS & SPECIFICATIONS.

ALL NEW SANITARY SEWER CONSTRUCTION TO BE DONE IN ACCORDANCE WITH LOCAL GOVERNING MUNICIPALITY STANDARDS & SPECIFICATIONS.

CONTRACTOR IS TO COORDINATE LOCATIONS OF NEW TELEPHONE SERVICE TO BUILDING WITH QWEST. A PVC CONDUIT, PLYWOOD BACKBOARD, AND GROUND WIRE IS REQUIRED FOR SERVICE THROUGH PROPERTY, COORDINATE SIZES AND LOCATION WITH QWEST.

CONTRACTOR IS TO SUBMIT SITE PLAN TO QUESTAR GAS FOR DESIGN OF GAS LINE SERVICE TO BUILDING. CONTRACTOR TO COORDINATE WITH QUESTAR GAS FOR CONTRACTOR LIMITS OF WORK VERSES QUESTAR GAS LIMITS.

LOCATION OF ALL UNDERGROUND UTILITIES SHOWN ARE APPROXIMATE LOCATIONS. CONTRACTOR IS TO VERIFY CONNECTION POINTS WITH EXISTING UTILITIES. CONTRACTOR IS RESPONSIBLE FOR ANY DAMAGE CAUSED TO EXISTING UTILITIES AND UTILITY STRUCTURE THAT ARE TO REMAIN.

SCOPE OF WORK:

PROVIDE, INSTALL AND/OR CONSTRUCT THE FOLLOWING PER THE SPECIFICATIONS GIVEN OR REFERENCED AND THE DETAILS NOTED AND AS SHOWN ON THE CONSTRUCTION DRAWINGS.

1. 1" BLACK POLYETHENE WATER SERVICE LINE. CONNECT TO EXISTING METER BOX. SEE SALT LAKE CITY STANDARD PLAN W-4.
2. FIRE HYDRANT ASSEMBLY COMPLETE. SEE SALT LAKE CITY STANDARD PLAN W-11. THRUST BLOCKING TO BE PER SALT LAKE CITY STANDARD PLAN W-9.
3. RETAIN AND PROTECT EXISTING WATER METER.
4. 4" DIA. PVC SDR-35 SANITARY SEWER LATERAL. INSTALL TO 5' AWAY FROM BUILDING EXTERIOR.
5. 6" DUCTILE IRON FIRE LINE. INSTALL LINE TO INSIDE OF BUILDING AND 6" ABOVE FINISHED FLOOR ELEVATION. COORDINATE WITH PLUMBING PLANS FOR EXACT LOCATIONS OF INSIDE BUILDING RISER. CONNECT TO CITY MAIN LINE PER SALT LAKE CITY REQUIREMENTS.
6. SAWCUT AND REPLACE ASPHALTIC PAVEMENT PER APWA STANDARD PLAN 255.

UTILITY COMPANY	CONTACT	CONTACT NUMBER	STATUS
COMCAST	GARY GOLDSTEIN	801-401-3041	N/A
ELECTRIC LIGHTWAVE	SHAUNA JONES	801-924-6674	SHOWN
QWEST	ARLENE COMSTOCK	Arlene.Comstock@QWest.com	SHOWN
MCI	MCI	972-729-6016	WAITING
UTAH POWER & LIGHT	KIRSTOPHER BREMER	Kristopher.Bremer@PacifiCorp.com	SHOWN
QUESTAR GAS	RON EAVENSON	801-324-3970	SHOWN
UDOT REGION II	STEVE MIDDLETON	801-887-3403	N/A
SALT LAKE CITY PUBLIC UTILITIES	NICK KRYGER	801-483-6834	SHOWN

NOTE: ARIEL TELEPHONE LINES PER UTILITY MAPS PROVIDED BY QWEST. NO VISIBLE LINES FOUND ON SITE.

AVOID CUTTING UNDERGROUND UTILITIES. IT'S COSTLY.
Call BEFORE YOU Dig
1-800-662-4111

NOTICE!
THE CONTRACTOR SHALL BE RESPONSIBLE FOR THE LOCATION, PROTECTION, AND RESTORATION OF ALL BURIED OR ABOVE GROUND UTILITES, SHOWN OR NOT SHOWN ON THE PLANS.

REVISIONS:

NEW DOWNTOWN SALT LAKE CITY WINE STORE
300 West Harris Ave. (1563 South)

MJSA
501 West Pierpont Avenue □ Salt Lake City, Utah 84101
Salt Lake City: (801) 364-5101 Sandy: (801) 364-5107
ARCHITECTURE INTERIORS DESIGN

State of Utah-Department of Administrative Services
DIVISION OF FACILITIES CONSTRUCTION AND MANAGEMENT
4110 State Office Building/Salt Lake City, Utah 84114/538-3018

DEPARTMENT OF ALCOHOLIC BEVERAGE CONTROL
1625 South 900 West, Salt Lake City, Utah 84130/977-6800

STAMP

PROFESSIONAL ENGINEER & LAND SURVEYOR
CONRAD A. MEYER
No. 150786
10/12/07
STATE OF UTAH

DFCM PROJECT NO.: 05051030
DFCM CONTRACT NO.: 077431
MJSA PROJECT NO.: 07005
DATE: 10/15/07
SHEET: C4.01

UTILITY PLAN
SCALE: 1" = 20'

McNeil Proj. No. 270601.6

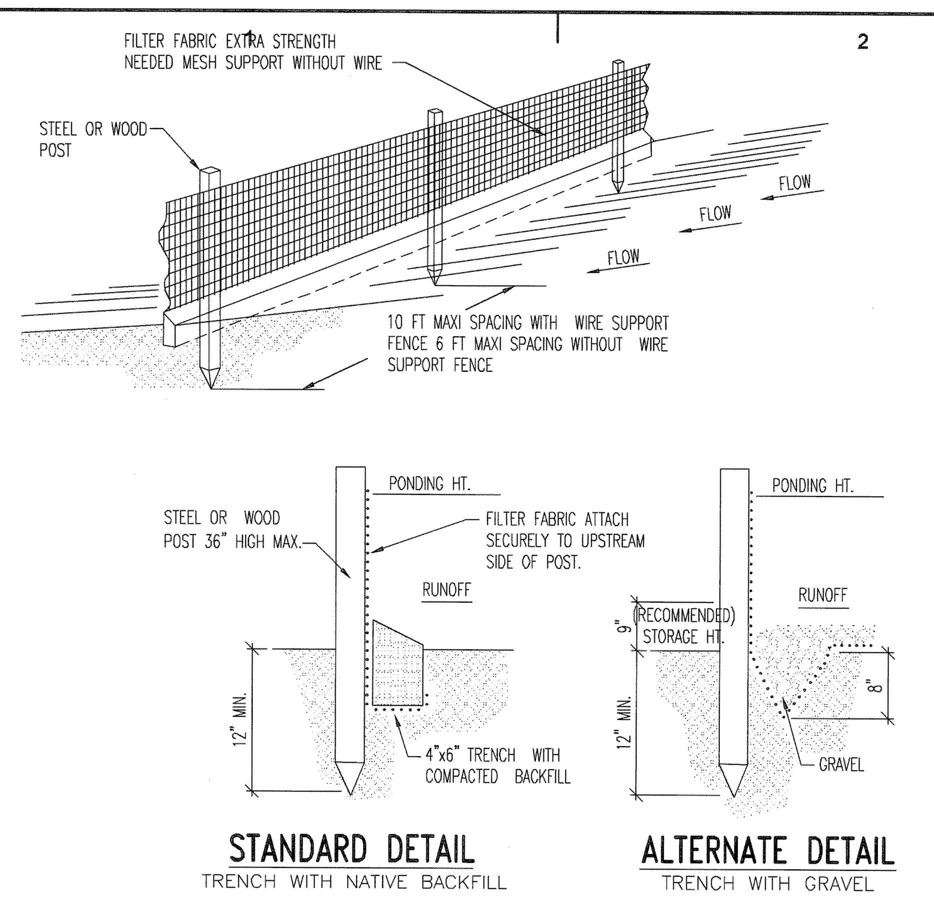

NOTE:
1. INSPECT AND REPAIR FENCE AFTER EACH STORM EVENT AND REMOVE SEDIMENT WHEN NECESSARY.
2. REMOVED SEDIMENT SHALL BE DEPOSITED TO AN AREA THAT WILL NOT CONTRIBUTE SEDIMENT OFF-SITE AND CAN BE PERMANENTLY STABILIZED.
3. SILT FENCE SHALL BE PLACED ON SLOPE CONTOURS TO MAXIMIZE PONDING EFFICIENCY.

SILT FENCE

SCALE: N.T.S. © 1994 JOHN McCULLAH (E1)

SILT FENCE

CONSTRUCTION SPECIFICATIONS:
THE HEIGHT OF A SILT FENCE SHALL NOT EXCEED 36 INCHES. STORAGE HEIGHT SHALL NEVER EXCEED 18". THE FENCE LINE SHALL FOLLOW THE CONTOUR AS CLOSELY AS POSSIBLE. IF POSSIBLE, THE FILTER FABRIC SHALL BE CUT FROM A CONTINUOUS ROLL TO AVOID THE USE OF JOINTS. WHEN JOINTS ARE NECESSARY, FILTER CLOTH SHALL BE SPLICED ONLY AT A SUPPORT POST, WITH A MINIMUM 6-INCH OVERLAP AND BOTH ENDS SECURELY FASTENED TO THE POST.

POSTS SHALL BE SPACED A MAXIMUM OF 10 FEET APART AND DRIVEN SECURELY INTO THE GROUND (MINIMUM OF 12 INCHES). WHEN EXTRA STRENGTH FABRIC IS USED WITHOUT THE WIRE SUPPORT FENCE, POST SPACING SHALL NOT EXCEED 6 FEET. TURN THE ENDS OF THE FENCE UPHILL.

A TRENCH SHALL BE EXCAVATED APPROXIMATELY 4 INCHES WIDE AND 6 INCHES DEEP ALONG THE LINE OF POSTS AND UPSLOPE FROM THE BARRIER.

WHEN STANDARD-STRENGTH FILTER FABRIC IS USED, A WIRE MESH SUPPORT FENCE SHALL BE FASTENED SECURELY TO THE UPSLOPE SIDE OF THE POSTS USING HEAVY DUTY WIRE STAPLES AT LEAST 1 INCH LONG, TIE WIRES OR HOG RINGS. THE WIRE SHALL EXTEND INTO THE TRENCH A MINIMUM OF 2 INCHES AND SHALL NOT EXTEND MORE THAN 36 INCHES ABOVE THE ORIGINAL GROUND SURFACE.

THE STANDARD-STRENGTH FILTER FABRIC SHALL BE STAPLED OR WIRED TO THE FENCE, AND 6 INCHES OF THE FABRIC SHALL EXTEND INTO THE TRENCH. THE FABRIC SHALL NOT EXTEND MORE THAN 36 INCHES ABOVE THE ORIGINAL GROUND SURFACE. FILTER FABRIC SHALL NOT BE STAPLED TO EXISTING TREES.

WHEN EXTRA-STRENGTH FILTER FABRIC AND CLOSER POST SPACING ARE USED, THE WIRE MESH SUPPORT FENCE MAY BE ELIMINATED. IN SUCH A CASE, THE FILTER FABRIC IS STAPLED OR WIRED DIRECTLY TO THE POSTS.

THE TRENCH SHALL BE BACKFILLED AND THE SOIL COMPACTED OVER THE TOE OF THE FILTER FABRIC.

SILT FENCES PLACED AT THE TOE OF A SLOPE SHALL BE SET AT LEAST 6 FEET FROM THE TOE IN ORDER TO INCREASE PONDING VOLUME.

SILT FENCES SHALL BE REMOVED WHEN THEY HAVE SERVED THEIR USEFUL PURPOSE, BUT NOT BEFORE THE UPSLOPE AREA HAS BEEN PERMANENTLY STABILIZED, AND ANY SEDIMENT STORED BEHIND THE SILT FENCE HAS BEEN REMOVED.

INSPECTION AND MAINTENANCE:
SILT FENCES AND FILTER BARRIERS SHALL BE INSPECTED WEEKLY AND AFTER EACH SIGNIFICANT STORM (1" IN 24 HR.). ANY REQUIRED REPAIRS SHALL BE MADE IMMEDIATELY. SEDIMENT SHALL BE REMOVED WHEN IT REACHES 1/3 HEIGHT OF THE FENCE OR 9 INCHES MAXIMUM.

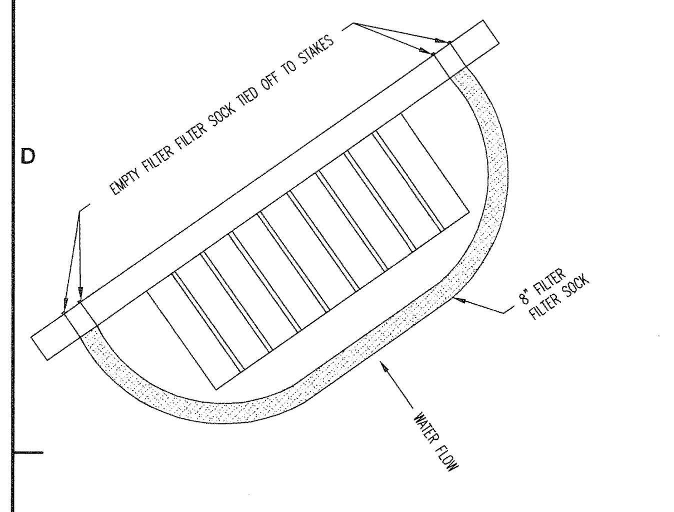

FILTERSOCK SPECIFICATION:

FILTREXX FILTERSOCK INSTALLATION AND MAINTENANCE

1.0 DESCRIPTION:
THIS WORK SHALL CONSIST OF FURNISHING, INSTALLING, MAINTAINING AND DISPERSING (IF NEEDED) A WATER PERMEABLE COMPOST FILTER SOCK (FILTREXX FILTERSOCK) TO CONTAIN SOIL EROSION AND SEDIMENT BY REMOVING SOIL PARTICLES FROM WATER MOVING OFF SITE INTO ADJACENT WATERWAYS OR STORM WATER DRAINAGE SYSTEMS. FILTERSOCKS WILL BE USED AS A FORM OF INLET PROTECTION FOR OPERATIONAL STORM DRAINAGE SYSTEMS.

2.0 COMPOST PRODUCTS USED TO FILL FILTREXX FILTERSOCKS

1. COMPOST: COMPOST USED FOR FILTREXX FILTERSOCKS SHALL BE WEED FREE AND DERIVED FROM A WELL-DECOMPOSED SOURCE OF ORGANIC MATTER. THE COMPOST SHALL BE PRODUCED USING AN AEROBIC COMPOSTING PROCESS MEETING CFR 503 REGULATIONS, INCLUDING TIME AND TEMPERATURE DATA INDICATING EFFECTIVE WEED SEED, PATHOGEN AND INSECT LARVAE KILL. THE COMPOST SHALL BE FREE OF ANY REFUSE, CONTAMINANTS OR OTHER MATERIALS TOXIC TO PLANT GROWTH. NON-COMPOSTED PRODUCTS WILL NOT BE ACCEPTED. TEST METHODS FOR THE ITEMS BELOW SHOULD FOLLOW USCC TMECC GUIDELINES FOR LABORATORY PROCEDURES:

A. PH – 5.0-8.0 IN ACCORDANCE WITH TMECC 04.11-A, "ELECTROMETRIC PH DETERMINATIONS FOR COMPOST"

B. PARTICLE SIZE – 99% PASSING A 1" SIEVE, 90% PASSING A _" SIEVE AND A MINIMUM OF 70% GREATER THAN THE 3/8" SIEVE. A TOTAL OF 98% SHALL NOT EXCEED 3 INCHES IN LENGTH, IN ACCORDANCE WITH TMECC 02.02-B, "SAMPLE SIEVING FOR AGGREGATE SIZE CLASSIFICATION"

C. MOISTURE CONTENT OF LESS THAN 60% IN ACCORDANCE WITH STANDARDIZED TEST METHODS FOR MOISTURE DETERMINATION.

D. MATERIAL SHALL BE RELATIVELY FREE (<1% BY DRY WEIGHT) OF INERT OR FOREIGN MAN MADE MATERIALS.

E. A SAMPLE SHALL BE SUBMITTED TO THE ENGINEER FOR APPROVAL PRIOR TO BEING USED AND MUST COMPLY WITH ALL LOCAL, STATE AND FEDERAL REGULATIONS.

3.0 CONSTRUCTION AND INSTALLATION OF FILTREXX FILTERSOCKS:

1. FILTREXX FILTERSOCKS WILL BE USED AS A FORM OF INLET PROTECTION ON CONSTRUCTION SITES WHICH REQUIRE PROTECTION AGAINST SEDIMENT LADEN WATER AFTER STORM DRAINS BECOME OPERATIONAL.
2. FILTREXX FILTERSOCKS WILL BE PLACED AT LOCATIONS INDICATED ON PLANS AS DIRECTED BY THE ENGINEER. FILTERSOCKS SHOULD BE INSTALLED IN A PATTERN THAT ALLOWS COMPLETE PROTECTION OF THE INLET AREA
3. INSTALLATION OF FILTREXX FILTERSOCKS WILL ENSURE A MINIMAL OVERLAP OF AT LEAST ONE FOOT ON EITHER SIDE OF THE OPENING BEING PROTECTED. THE FILTERSOCKS WILL BE ANCHORED TO THE SOIL BEHIND THE CURB USING STABLES, STAKES OR OTHER DEVICES CAPABLE OF HOLDING THE FILTERSOCK IN PLACE.
4. STANDARD SIZES OF FILTERSOCKS FOR INLET PROTECTION WILL BE 8" DIAMETER PRODUCTS. IN SEVERE FLOW SITUATIONS, LARGER FILTERSOCKS MAY BE RECOMMENDED BY THE ENGINEER.
5. FILTERSOCKS SHALL BE CONSTRUCTED OF A WOVEN MATERIAL AND FILLED WITH A COMPOST PRODUCT THAT PASSES THE CRITERIA LISTED IN SECTION 2.
6. IF THE FILTERSOCKS BECOME CLOGGED WITH DEBRIS AND SEDIMENT, THEY SHALL BE MAINTAINED SO AS TO ASSURE A PROPER DRAINAGE AND WATER FLOW INTO THE STORM DRAIN. IN SEVERE STORM EVENTS, OVERFLOW OF THE FILTERSOCK MAY BE ACCEPTABLE IN ORDER TO KEEP THE AREA FROM FLOODING.
7. THE FILTERSOCKS SHALL BE POSITIONED SO AS TO PROVIDE COMPLETE PHYSICAL BARRIER TO THE DRAIN ITSELF, ALLOWING SEDIMENT TO COLLECT ON THE OUTSIDE OF THE FILTERSOCKS. SEE ATTACHED SCHEMATIC FOR FILTREXX FILTERSOCK INSTALLATION.
8. FOR AREAS WHERE FILTERSOCKS ARE TO BE LEFT AS A PERMANENT PART OF THE LANDSCAPE, FILTERSOCKS MAY BE SEEDED DURING TIME OF MANUFACTURE TO CREATE A LIVING SOCK. FOR SEEDING OPTIONS, THE ENGINEER MAY SIMPLY REPLACE ALL LANGUAGE ABOVE WITH "LIVING FILTREXX FILTERSOCKS"

4.0 MAINTENANCE:

1. THE CONTRACTOR SHALL MAINTAIN FILTREXX FILTERSOCKS IN A FUNCTIONAL CONDITION AT ALL TIMES AND IT SHALL BE ROUTINELY INSPECTED.
2. WHERE THE FILTERSOCK REQUIRES REPAIR, IT WILL BE ROUTINELY REPAIRED.
3. THE CONTRACTOR SHALL REMOVE SEDIMENTS COLLECTED AT THE BASE OF THE FILTERSOCK WHEN THEY REACH 1/3 OF THE EXPOSED HEIGHT OF THE FILTERSOCK, OR AS DIRECTED BY THE ENGINEER.
4. THE FILTREXX FILTERSOCK WILL BE DISPERSED ON SITE WHEN NO LONGER REQUIRED, AS DETERMINED BY THE ENGINEER. THE NETTING MATERIAL WILL BE DISPOSED OF IN NORMAL TRASH CONTAINERS OR REMOVED BY THE CONTRACTOR.
5. REGULAR MAINTENANCE INCLUDES LIFTING THE FILTREXX FILTERSOCKS AND CLEANING UNDER THEM AS SEDIMENT COLLECTS.

5.0 METHOD OF MEASUREMENT:

BID ITEMS SHALL SHOW MEASUREMENT AS 'FILTREXX FILTERSOCK' PER LINEAR FOOT, INSTALLED OR PER INLET, AS SPECIFIED BY THE ENGINEER.

6.0 PERFORMANCE:

1. CONTRACTOR IS RESPONSIBLE FOR ESTABLISHING A WORKING EROSION CONTROL SYSTEM AND MAY, WITH APPROVAL OF THE ENGINEER, WORK OUTSIDE THE MINIMUM CONSTRUCTION REQUIREMENTS AS NEEDED.
2. WHERE THE FILTERSOCK DETERIORATES OR FAILS, IT WILL BE REPAIRED OR REPLACED WITH A MORE EFFECTIVE ALTERNATIVE.
3. CONTRACTOR IS REQUIRED TO BE A CERTIFIED FILTREXX INSTALLER AS DETERMINED BY FILTREXX INTERNATIONAL, LLC (440-926-8041 OR VISIT WEBSITE AT FILTREXX.COM). CERTIFICATION SHALL BE CONSIDERED CURRENT IF APPROPRIATE IDENTIFICATION IS SHOWN DURING TIME OF BID OR AT TIME OF APPLICATION.

7.0 APPLICATION GUIDELINES:

1. FILTREXX FILTERSOCKS SHALL EITHER BE MADE ON SITE OR DELIVERED TO THE JOBSITE USING A 3 MIL TUBULAR HDPE KNITTED MESH NETTING MATERIAL, FILLED WITH COMPOST PASSING THE ABOVE SPECIFICATIONS FOR COMPOST PRODUCTS AS OUTLINED IN 2.0.
2. FILTREXX FILTERSOCKS NETTING MATERIALS ARE AVAILABLE ONLY FROM FILTREXX INTERNATIONAL, LLC AND ARE THE ONLY CERTIFIED MESH MATERIALS ACCEPTED IN CREATING FILTREXX PRODUCTS ON SITE OR AS DELIVERED TO THE JOB SITE. STANDARD FILTREXX COLOR CODING SYSTEMS INCLUDE YELLOW AND BLACK STRIPED MESH NETTING WITH 3/8" MESH OPENINGS FOR INLET PROTECTION. OTHER COLORS ARE ONLY ACCEPTABLE AS APPROVED BY BOTH THE ENGINEER AND FILTREXX INTERNATIONAL, LLC.
3. CONTRACTOR IS REQUIRED TO BE A CERTIFIED FILTREXX INSTALLER AS DETERMINED BY FILTREXX INTERNATIONAL, LLC (440-926-8041 OR VISIT WEBSITE AT FILTREXX.COM). CERTIFICATION SHALL BE CONSIDERED CURRENT IF APPROPRIATE IDENTIFICATION IS SHOWN DURING TIME OF BID OR AT TIME OF APPLICATION.

8.0 AVAILABLE VENDORS

FILTREXX FILTERSOCKS MAY BE PURCHASED FROM THE FOLLOWING CERTIFIED FILTREXX INSTALLERS:

WINDSWEPT ORGANIX INC.
WORK: 480-963-4638
FAX: 408-940-4261
850 SOUTH BOGLE AVE, SUITE 2
CHANDLER, AZ 85225

FILTER SOCK PROTECTION

SCALE: N.T.S. © REPLENISH (C1)

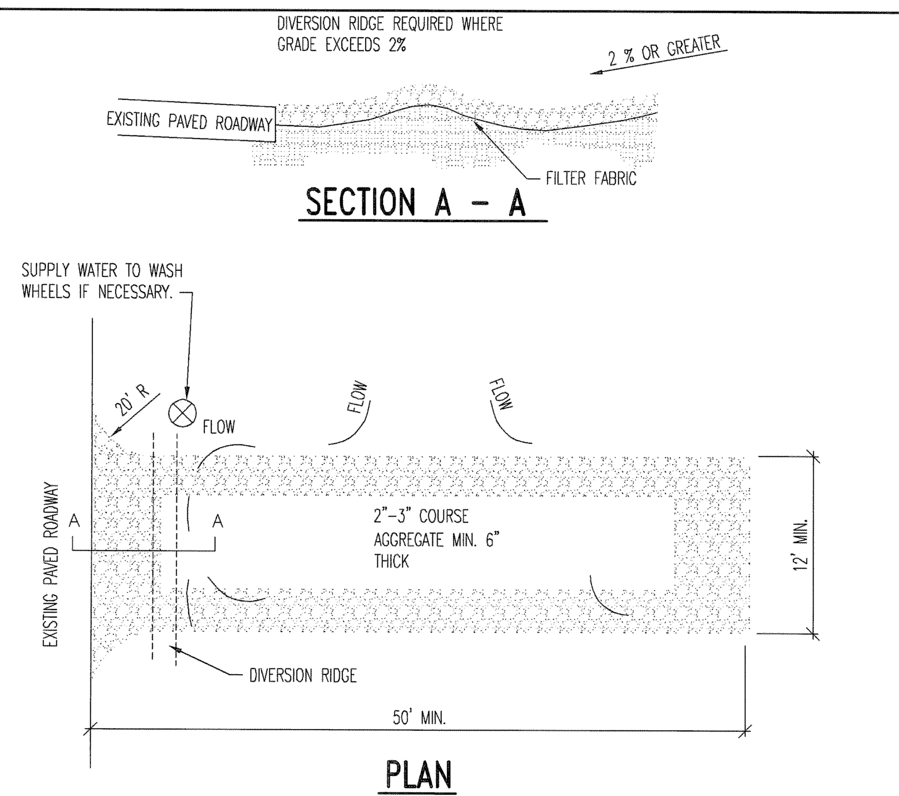

NOTES:
1. THE ENTRANCE SHALL BE MAINTAINED IN A CONDITION THAT WILL PREVENT TRACKING OR FLOWING OF SEDIMENT ONTO PUBLIC RIGHTS- OF-WAY. THIS MAY REQUIRE TOP DRESSING, REPAIR AND/OR CLEANOUT OF ANY MEASURES USED TO TRAP SEDIMENT.
2. WHEN NECESSARY, WHEELS SHALL BE CLEANED PRIOR TO ENTRANCE ONTO PUBLIC RIGHT-OF-WAY.
3. WASHING IS REQUIRED, IT SHALL BE DONE ON AN AREA STABILIZED WITH CRUSHED STONE THAT DRAINS INTO AN APPROVED SEDIMENT TRAP OR SEDIMENT BASIN.

TEMPORARY GRAVEL CONSTRUCTION ENTRANCE/EXIT

CONSTRUCTION SPECIFICATIONS:
THE AGGREGATE SIZE FOR CONSTRUCTION OF THE PAD SHALL BE 2-TO 3-INCH STONE. PLACE THE GRAVEL TO THE SPECIFIC GRADE AND DIMENSIONS SHOWN ON THE PLANS, AND SMOOTH IT. THE THICKNESS OF THE PAD SHALL NOT BE LESS THAN 6 INCHES. USE GEOTEXTILE FABRICS, IF NECESSARY, TO IMPROVE STABILITY OF THE FOUNDATION IN LOCATIONS SUBJECT TO SEEPAGE OR HIGH WATER TABLE. THE WIDTH OF THE PAD SHALL NOT BE LESS THAN THE FULL WIDTH OF ALL POINTS OF INGRESS OR EGRESS AND IN ANY CASE SHALL NOT BE LESS THAN 12 FEET WIDE. THE LENGTH OF THE PAD SHALL BE AS REQUIRED, BUT NOT LESS THAN 50.

LOCATE CONSTRUCTION ENTRANCES AND EXITS TO LIMIT SEDIMENT LEAVING THE SITE AND TO PROVIDE FOR MAXIMUM UTILITY BY ALL CONSTRUCTION VEHICLES. AVOID ENTRANCES WHICH HAVE STEEP GRADES AND ENTRANCES AT CURVES IN PUBLIC ROADS. THE ENTRANCE SHALL BE MAINTAINED IN A CONDITION THAT WILL PREVENT TRACKING OR FLOWING OF SEDIMENT ONTO PUBLIC RIGHTS OF WAY. THIS MAY REQUIRE PERIODIC TOP DRESSING WITH ADDITIONAL STONE AS CONDITIONS DEMAND, AND REPAIR AND/OR CLEANOUT OF ANY MEASURES USED TO TRAP SEDIMENT. ALL SEDIMENT SPILLED, DROPPED, WASHED OR TRACKED ONTO PUBLIC RIGHTS-OF-WAY SHALL BE REMOVED IMMEDIATELY. PROVIDE DRAINAGE TO CARRY WATER TO A SEDIMENT TRAP OR OTHER SUITABLE OUTLET. WHEN NECESSARY, WHEELS SHALL BE CLEANED TO REMOVE SEDIMENT PRIOR TO ENTRANCE ONTO PUBLIC RIGHTS-OF-WAY. WHEN WASHING IS REQUIRED, IT SHALL BE DONE ON AN AREA STABILIZED WITH CRUSHED STONE THAT DRAINS INTO AN APPROVED SEDIMENT TRAP OR SEDIMENT BASIN. ALL SEDIMENT SHALL BE PREVENTED FROM ENTERING ANY STORM DRAIN, DITCH OR WATERCOURSE THROUGH USE OF SAND BAGS, GRAVEL, STRAW BALES, OR OTHER APPROVED METHODS.

MAINTENANCE:
MAINTAIN THE GRAVEL PAD IN A CONDITION TO PREVENT MUD OR SEDIMENT FROM LEAVING THE CONSTRUCTION SITE. REPLACE GRAVEL MATERIAL WHEN SURFACE VOIDS ARE VISIBLE. AFTER EACH RAINFALL, INSPECT ANY STRUCTURE USED TO TRAP SEDIMENT AND CLEAN IT OUT AS NECESSARY. IMMEDIATELY REMOVE ALL OBJECTIONABLE MATERIALS SPILLED, WASHED, OR TRACKED ONTO PUBLIC ROADWAYS. REMOVE ALL SEDIMENT DEPOSITED ON PAVED ROADWAYS WITHIN 24 HOURS.

TEMPORARY GRAVEL CONSTRUCTION ENTRANCE / EXIT

SCALE: N.T.S. © 1994 JOHN McCULLAH (A1)

GENERAL NOTES:

1. **INTENT OF EROSION CONTROL PLAN:**
BY CONTRACT WITH THE CONTRACTOR THE PROPERTY OWNER HAS DELEGATED HIS OBLIGATION TO INSURE COMPLIANCE WITH ALL APPLICABLE STORM WATER REGULATIONS TO EFFECTIVELY PREVENT THE POTENTIALLY NEGATIVE IMPACTS OF THIS PROJECT'S CONSTRUCTION ACTIVITIES ON STORM WATER QUALITY. THE INTENT OF THIS EROSION CONTROL IS TO HELP THE CONTRACTOR IN SECURING THE NECESSARY PERMITS. CONTRACTOR WILL MODIFY THIS PLAN AS REQUIRED TO MEET LOCAL REQUIREMENTS.

2. **BEST MANAGEMENT PRACTICES (BMP's):**
THE CONTRACTOR IS TO USE BEST MANAGEMENT PRACTICES FOR PROVIDING EROSION CONTROL FOR CONSTRUCTION OF THIS PROJECT. SPECIFIC DETAILS SHOWN SHALL BE USED IN COMBINATION WITH OTHER ACCEPTED LOCAL PRACTICES. THE MAINTENANCE OF THE BMP'S IS THE RESPONSIBILITY OF THE PERMITTEE, AND FAILURE TO PROPERLY INSTALL OR MAINTAIN THE BMP'S MAY RESULT IN ENFORCEMENT ACTION BY THE GOVERNING AGENCIES. IF INSTALLED BMP'S FAIL, THEY MUST BE REPAIRED OR REPLACED WITH AN ACCEPTABLE ALTERNATE WITHIN 24 HOURS, OR AS SOON AS SAFE TO DO SO.

3. **PERMITS AND APPROVALS:**
CONTRACTOR SHALL SECURE ALL NECESSARY PERMITS PER THE STATE AND ENVIRONMENTAL PROTECTION AGENCY'S (EPA) NATIONAL POLLUTANT DISCHARGE ELIMINATION SYSTEM (NPDES) REQUIREMENTS BEFORE STARTING CONSTRUCTION. ALL MATERIALS AND WORKMANSHIP SHALL CONFORM TO THE LOCAL AGENCY'S EROSION CONTROL STANDARDS AND SPECIFICATIONS AND ALL WORK SHALL BE SUBJECT TO INSPECTION BY THE AGENCY HAVING JURISDICTION. ALSO, INSPECTORS WILL HAVE THE RIGHT TO CHANGE THE FACILITIES AS NEEDED.

4. **EXISTING UTILITIES:**
THE CONTRACTOR SHALL BE RESPONSIBLE FOR FIELD VERIFYING THE LOCATIONS OF ALL EXISTING UTILITIES. IF CONFLICTS OCCUR, THE CONTRACTOR SHALL NOTIFY THE ARCHITECT/ENGINEER PRIOR TO CONSTRUCTION TO DETERMINE IF ANY FIELD ADJUSTMENTS SHOULD BE MADE.

5. **DUST CONTROL:**
THE CONTRACTOR SHALL PROVIDE ADEQUATE DUST CONTROL. BLOWING DUST MUST BE CONTROLLED AT ALL TIMES. INSTALLATION OF A SILT FENCE AND SITE WATERING SHALL BE USED TO CONTROL DUST. THE USE OF MOTOR OILS AND OTHER PETROLEUM BASED OR TOXIC LIQUIDS FOR DUST SUPPRESSION IS ABSOLUTELY PROHIBITED.

6. **FIELD MODIFICATIONS:**
THE CONTRACTOR SHALL MODIFY EROSION CONTROL MEASURES TO ACCOMMODATE PROJECT PLANNING. ADDITIONAL EROSION CONTROL MEASURES MAY BE REQUIRED DUE TO UNFORESEEN PROBLEMS OR IF THE PLAN DOES NOT FUNCTION AS INTENDED. A REPRESENTATIVE OF THE GOVERNING AGENCIES MAY REQUIRE ADDITIONAL CONTROL DEVISES UPON INSPECTION OF PROPOSED FACILITIES.

7. **SCHEDULING:**
CONTRACTOR SHOULD FOLLOW A SPECIFIED WORK SCHEDULE THAT COORDINATES THE TIMING OF LAND-DISTURBING ACTIVITIES. THE REMOVAL OF SURFACE GROUND COVER LEAVES A SITE VULNERABLE TO ACCELERATED EROSION. THEREFORE:

A. LIMIT LAND CLEARING AND RESTORE PROTECTIVE COVER QUICKLY.

B. SCHEDULE PROJECTS TO DISTURB ONLY SMALL PORTIONS OF THE SITE AT ANY ONE TIME.

C. COMPLETE GRADING AS SOON AS POSSIBLE AND IMMEDIATELY STABILIZE THE DISTURBED PORTION BEFORE GRADING THE NEXT AREA.

D. PRACTICE STAGED SEEDING IN ORDER TO RE-VEGETATE CUT AND FILL SLOPES AS THE WORK PROGRESSES.

E. STABILIZE OPEN TRENCHES AS SOON AS POSSIBLE.

F. SEQUENCE TRENCHING PROJECTS SO THAT MOST OPEN PORTIONS OF THE TRENCH ARE CLOSED BEFORE NEW TRENCHING IS BEGUN.

G. DURING THE RAINY SEASON THE AMOUNT OF EXPOSED SOIL ALLOWED AT ONE TIME SHALL NOT EXCEED THAT WHICH CAN BE ADEQUATELY PROTECTED BY THE PROPERTY OWNER IN THE EVENT OFA RAINSTORM.

H. 100% OF ALL SUPPLIES NEEDED FOR BMP MEASURES SHALL BE RETAINED ON THE JOB SITE IN A MANNER THAT ALLOWS FULL DEPLOYMENT AND COMPLETE INSTALLATION IN 48 HOURS OR LESS OF A FORECAST RAIN.

I. WHEN GRADING OPERATIONS HAVE BEEN COMPLETED AND THE DISTURBED GROUND SHALL BE LEFT "OPEN" FOR 30 DAYS OR MORE THE AREA SHALL BE FURROWED PARALLEL TO THE CONTOURS OFTHE AREA.

8. **MAINTENANCE:**
A. ALL EROSION CONTROL MEASURES SHALL BE MAINTAINED IN FULLY FUNCTIONAL CONDITION UNTIL FINAL STABILIZATION OF THE SITE.

B. ALL EROSION AND SEDIMENTATION CONTROL MEASURES SHALL BE CHECKED BY A QUALIFIED PERSON AT LEAST ONCE EVERY SEVEN CALENDAR DAYS AND WITHIN 24 HOURS OF THE END OF A RAINFALL EVENT. ANY NEEDED CLEANING AND REPAIRS SHALL BE DONE IMMEDIATELY UPON DISCOVERY.

C THE CONTRACTOR SHALL BE RESPONSIBLE FOR ADJUSTING THE EROSION CONTROL MEASURES (SILT FENCES, STRAW BALES, ETC.) DUE TO GRADE CHANGES DURING THE DEVELOPMENT OF THE PROJECT.

D. THE OWNER'S REPRESENTATIVE SHALL MAKE ROUTINE CHECKS ON ALL EROSION CONTROL MEASURES TO DETERMINE IF REPAIRS OR SEDIMENT REMOVAL IS NECESSARY. DUE TO CONDITIONS THAT MAY ARISE IN THE FIELD, ADDITIONAL CONTROL MAY BE DETERMINED TO BE NECESSARY.

E. SILT FENCE BARRIERS SHALL BE INSPECTED IMMEDIATELY AFTER EACH RAINFALL AND AT THE LEAST DAILY DURING PROLONGED RAINFALL. CLOSE ATTENTION SHALL BE PAID TO THE REPAIR OF DAMAGED SILT FENCES, END RUNS, AND UNDERCUTTING BENEATH SILT FENCING. NECESSARY REPAIRS TO BARRIERS OR REPLACEMENT OF SILT FENCING SHALL BE ACCOMPLISHED PROMPTLY.

F. SEDIMENT DEPOSITS SHOULD BE REMOVED AFTER EACH RAINFALL. THEY MUST BE REMOVED WHEN THE LEVEL OF DEPOSITION REACHES APPROXIMATELY ONE-HALF THE HEIGHT OF THE BARRIER.

G. ALL OFF-SITE CONSTRUCTION SHALL BE STABILIZED AT THE END OF EACH WORKING DAY. THIS INCLUDES BACKFILLING OF TRENCHES FOR UTILITY CONSTRUCTION AND PLACEMENT OF BITUMINOUS PAVING FOR ROAD CONSTRUCTION.

GENERAL NOTES (CONTINUED):

9. **STREETS:**
THE CONTRACTOR IS RESPONSIBLE FOR KEEPING THE STREETS CLEAN AND FREE FROM DEBRIS DEPOSITED BY TRAFFIC FROM THE SITE. CONTRACTOR SHALL USE VEHICLE TRACKING CONTROL AT ALL LOCATIONS WHERE VEHICLES WILL ENTER OR EXIT THE SITE. CONTROL FACILITIES SHALL BE MAINTAINED WHILE CONSTRUCTION IS IN PROGRESS, MOVED WHEN NECESSARY, AND REMOVED WHEN THE SITE IS PAVED.

10. **WASH WATER:**
ALL WASH WATER (CONCRETE TRUCKS, VEHICLE CLEANING, ETC.) SHALL BE DISPOSED OF IN A MANNER THAT PREVENTS CONTACT WITH STORM WATER DISCHARGES FROM THE SITE. ALL UTILITY LINES SHALL BE CLEANED OF DIRT AND DEBRIS PRIOR TO BEING PUT INTO SERVICE. DOWNGRADE LINES MUST BE PROTECTED FROM WASH-WATER DURING THE CLEANING TO AVOID CONTAMINATION AND COMPROMISING OUTFALL CLEANLINESS.

11. **LIMITS OF DISTURBANCE:**
THE LIMITS OF DISTURBANCE ARE TO BE STAKED BEFORE STARTING ANY CONSTRUCTION.

12. **EROSION CONTROL MEASURES:**
A. ALL BUILDING PADS TO BE DIKED AND THE DIKES MAINTAINED TO PREVENT WATER FROM FLOWING FROM THE PAD UNTIL THE STREETS AND DRIVEWAYS ARE PAVED AND WATER CAN FLOW FROM THE PADS WITHOUT CAUSING EROSION, OR CONSTRUCT DRAINAGE FACILITIES TO THE SATISFACTION OF THE GOVERNING AGENCY THAT WILL ALLOW WATER TO DRAIN FROM THE PAD WITHOUT CAUSING EROSION.

B. TOPS OF ALL SLOPES TO BE DIKED OR TRENCHED TO PREVENT WATER FROM FLOWING OVER THE CREST OF SLOPES.

C. MANUFACTURED SLOPES AND PADS SHALL BE ROUNDED VERTICALLY AND HORIZONTALLY AS APPROPRIATE TO BLEND WITH THE SURROUNDING TOPOGRAPHY.

D. APPROVED SLOPE PROTECTION MEASURES SHALL PROCEED IMMEDIATELY BEHIND THE EXPOSURE OF CUT SLOPES AND/OR THE CREATION OF EMBANKMENT SLOPES.

E. CATCH BASINS, DE-SILTING BASINS AND STORM DRAIN SYSTEM SHALL BE INSTALLED TO THE SATISFACTION OF THE GOVERNING AGENCIES.

F. SAND BAG CHECK DAMS TO BE PLACED IN A MANNER APPROVED BY THE GOVERNING AGENCIES IN UNPAVED STREETS WITH GRADIENTS IN EXCESS OF 2% AND ON OR IN OTHER GRADED OR EXCAVATED AREAS AS REQUIRED BY THE GOVERNING AGENCIES.

13. **SILTATION AND SEDIMENT CONTROL MEASURES:**
A. SEDIMENT BASINS SHALL BE PROVIDED AT THE LOWER END OF EVERY DRAINAGE AREA PRODUCING SEDIMENT RUNOFF. THE BASINS SHALL BE MAINTAINED AND CLEANED AFTER EVERY RUNOFF PRODUCING STORM. THE BASINS SHOULD BE SEMI-PERMANENT STRUCTURES THAT WOULD REMAIN UNTIL SOIL STABILIZING VEGETATION HAS BECOME WELL ESTABLISHED ON ALL ERODIBLE SLOPES.

B. SEWER OR STORM DRAIN TRENCHES THAT ARE CUT THROUGH BASIN DIKES OR BASIN INLET DIKES SHALL BE PLUGGED WITH SANDBAGS FROM TOP OF PIPE TO TOP OF DIKE.

C. AFTER SEWER UTILITY TRENCHES ARE BACK-FILLED AND COMPACTED, THE SURFACES OVER SUCH TRENCHES SHALL BE MOUNDED SLIGHTLY TO PREVENT CHANNELING OF WATER IN THE TRENCH AREA. CARE SHOULD BE EXERCISED TO PROVIDE FOR CROSS FLOW AT FREQUENT INTERVALS WHERE TRENCHES ARE NOT ON THE CENTERLINE OF A CROWNED STREET.

D. PROVIDE A SANDBAG SILT BASIN OR TRAP BY EVERY STORM DRAIN INLET TO PREVENT SEDIMENT FROM ENTERING DRAINAGE SYSTEM.

E. ANY PROPOSED ALTERNATIVE CONTROL MEASURES MUST BE APPROVED IN ADVANCE BY ALL RESPONSIBLE AGENCIES, I.E., CITY ENGINEER, DEPARTMENT OF FLOOD CONTROL, ETC.

14. **LONG-TERM MAINTENANCE (POST CONSTRUCTION):**
A. EROSION CONTROL STRUCTURES BELOW SODDED AREAS MAY BE REMOVED ONCE SOD AND FINAL LANDSCAPING ARE IN PLACE. EROSION CONTROL STRUCTURES BELOW SEEDED AREAS MUST REMAIN IN PLACE UNTIL THE ENTIRE AREA HAS ESTABLISHED A MATURE COVERING OF HEALTHY VEGETATION. EROSION CONTROL IN PROPOSED PAVEMENT AREAS SHALL REMAIN IN PLACE UNTIL PAVEMENT IS COMPLETE.

B. EMPLOYEES OF THE FACILITY MUST BE TRAINED TO MAINTAIN THE PROPERTY SO THE STORM WATER DOES NOT COME IN CONTACT WITH ANY POLLUTANTS. THE FOLLOWING PRECAUTIONS SHALL BE PERFORMED BY THE EMPLOYEE'S:

1) PERIODIC INSPECTIONS OF THE CATCH BASIN SEDIMENT TRAPS INCLUDING CLEANING WHEN THE TRAP IS MORE THAN HALF FULL. INSPECTIONS MUST BE DONE AFTER EVERY MAJOR RAINFALL, OR ONCE EVERY 6 MONTHS AS A MINIMUM. DISPOSAL OF ANY REMOVED GREASE OR OIL MUST BE DONE IN ACCORDANCE WITH CURRENT ENVIRONMENTAL REGULATIONS.

2) LITTER, DEBRIS, AND CHEMICALS MUST BE PICKED UP OR MOVED INDOORS PRIOR TO ANTICIPATED STORM EVENTS (FORECASTED BY LOCAL WEATHER REPORTS), OR OTHERWISE PREVENTED FROM BECOMING A POLLUTANT SOURCE FOR STORM WATER DISCHARGES.

3) PARKING AREAS MUST BE KEPT FREE FROM AUTOMOBILE FLUIDS (OIL, ANTIFREEZE, ETC.) SO THEY DO NOT WASH INTO STORM DRAIN SYSTEM. SPILLS MAY BE SOAKED UP WITH SAWDUST OR LIKE MATERIAL AND PROPERLY DISPOSED OF.

AVOID CUTTING UNDERGROUND UTILITIES. IT'S COSTLY.
Call BEFORE YOU Dig
1-800-662-4111

NOTICE!
THE CONTRACTOR SHALL BE RESPONSIBLE FOR THE LOCATION, PROTECTION, AND RESTORATION OF ALL BURIED OR ABOVE GROUND UTILITIES, SHOWN OR NOT SHOWN ON THE PLANS.

McNeil Proj. No. 270601.6

REFERENCE NOTES

REVISIONS:

NEW DOWNTOWN SALT LAKE CITY WINE STORE
300 West Harris Ave. (1563 South)

MJSA
357 West Pierpont Avenue □ Salt Lake City, Utah 84101
Telephone 801 364 5161 □ Facsimile 801 364 5167
ARCHITECTURE INTERIOR DESIGN

State of Utah-Department of Administrative Services
DIVISION OF FACILITIES CONSTRUCTION AND MANAGEMENT
4110 State Office Building/Salt Lake City, Utah 84114/538-3018

DEPARTMENT OF ALCOHOLIC BEVERAGE CONTROL
1625 South 900 West, Salt Lake City, Utah 84130/977-6800

STAMP

PROFESSIONAL ENGINEER & LAND SURVEYOR
SCOTT F. McNEIL
No. 50786
DATE 11/7/07
STATE OF UTAH

DFCM PROJECT NO.: 05051030
DFCM CONTRACT NO.: 077431
MJSA PROJECT NO.: 07005
DATE: 10/15/07
SCALE:
SHEET: C5.01

S:\2007Files\270601\DWG\601-DET.dwg - Tue, 06 Nov 2007 - 8:52am

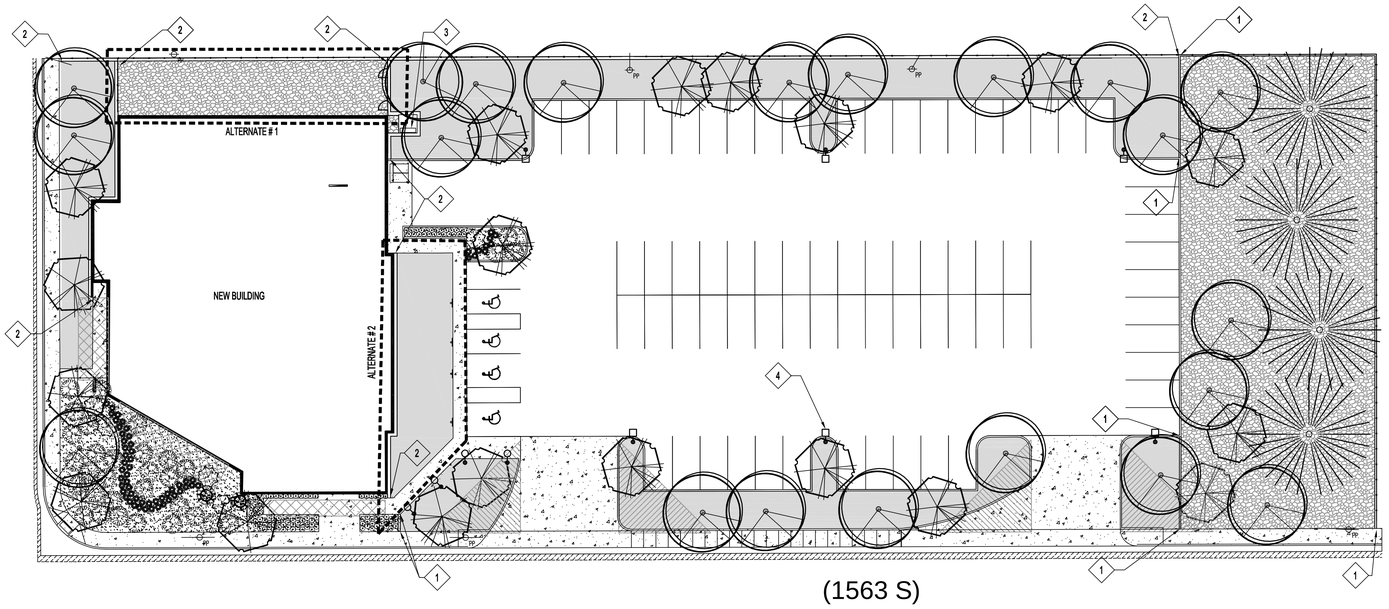

LANDSCAPE PLAN

Scale: 1" =20' North Scale in Feet (0, 20, 40, 80)

REFERENCE NOTES

1. 6" CONCRETE MOWSTRIP - SEE DETAIL E/L5.01 FOR INSTALLATION
2. 12" CONCRETE MOWSTRIP - SEE DETAIL F/L5.01 FOR INSTALLATION
3. UTILITY BOX
4. LIGHT POLE - BY OTHERS

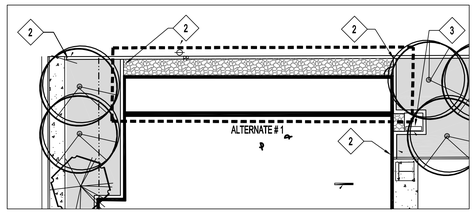

ALTERNATE #1 PLAN

Scale: 1" =20' North Scale in Feet (0, 20, 40, 80)

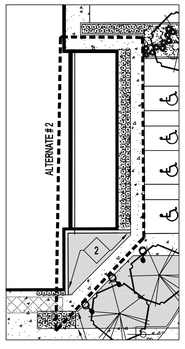

ALTERNATE #2 PLAN

Scale: 1" =20' North Scale in Feet (0, 20, 40, 80)

CITY DATA

CODE: ANSI A117.1 SECTIONS 904 - 904.4.3	REQUIRED	PROVIDED: BASE BID PLUS ALT #1 & ALT. #2
TOTAL AREA AND PERCENTAGE OF SITE TO BE LANDSCAPED	15% MIN OF TOTAL SITE TO BE LANDSCAPED	24,017 / 65,340= 36%
TOTAL PARKING AREA AND PERCENTAGE TO BE LANDSCAPED	5% MIN OF TOTAL PARKING AREA TO BE LANDSCAPED	1,896/ 30,616 = 6%
TOTAL PERCENTAGE OF PARKING LANDSCAPE GROUND COVERAGE	50% MIN OF TOTAL PARKING LANDSCAPE TO BE COVERED AT 2 YRS	1,507/1,507 = 100%
TOTAL AREA AND PERCENTAGE OF THE LANDSCAPE IN DROUGHT TOLERANT PLANTS	TREES & SHRUBS: 80% MINIMUM	271/333= 81%
TOTAL AREA AND PERCENTAGE OF THE SITE IN TURF GRASS	LIST	9,558/24,017 =40%
TOTAL NUMBER OF FRONTAGE TREES:	1 PER 25' OF PERIMETER LENGTH: 564' = 23 TREES	30 TREES
TOTAL NUMBER OF PARKING LOT TREES:	1 PER 120 SQ.FT. OF LANDSCAPED AREA: 1,711/120 = 15	15 TREES

LANDSCAPE DATA

PLANTING	SQUARE FOOTAGE BASE BID PLUS ALT. #1 & ALT. #2
TOTAL LAWN AREA	9,558 SQ. FT.
TOTAL SHRUB AREA	2,889 SQ. FT.
TOTAL COBBLE AREA	11,570 SQ. FT.
TOTAL NUMBER OF TREES	45

PLANTING LEGEND SEE DETAILS A/L5.01 AND B/L5.01FOR INSTALLATION

SYMBOL	QUANTITY	COMMON NAME	BOTANICAL NAME	SIZE	NOTES	SLC WATERWISE RATING
	20	AMUR MAPLE	Acer ginnala 'Flame'	MIN 2" CAL.	B & B	1
	4	AUSTRIAN BLACK PINE	Pinus nigra Austrian	MIN 5'-0" HEIGHT	B & B	1
	21	MANCHURIAN ASH	Fraxinus mandshurica 'Mancana'	2" CAL.	B & B	1
	171	ELIJAH BLUE FESCUE GRASS	Festuca ovima glauca 'Boulder Blue'	1 Gallon		1
	2	SCOTCH BROOM	Cytisus scoparius 'Moonlight'	1 Gallon		-
	60	HAMELN FOUNTAIN GRASS	Pennisetum alopecuroides 'Hameln'	1 Gallon		-
	32	BLUE CHIP JUNIPER	Juniperus horizontalis 'Blue Chip'	5 Gallon		1
	5	PURPLE SANDCHERRY	Prunus cistena 'purple sand cherry'	5 Gallon		2

4" MIN DEPTH BARK MULCH OVER WEED BARRIER

4" MIN COBBLE MULCH OVER WEED BARRIER: 3/4" - 1 1/2" 'SOUTHTOWN' COBBLE BY NEPHI SANDSTONE (435)-623-2332 SEE DETAIL C/L5.01 FOR INSTALLATION

LAWN SOD: SPECIES FOUND TO THRIVE IN THE REGION. SEE DETAIL D/L5.01 FOR INSTALLATION

PLANTING NOTES

1. ALL QUANTITIES ARE SHOWN AS AN AID ONLY. IT SHALL BE THE SOLE RESPONSIBILITY OF THE CONTRACTOR FOR ALL ACTUAL QUANTITY CALCULATIONS.

2. PLANT MATERIALS ARE TO BE ORDERED BY BOTANICAL NAME ONLY. ANY SUBSTITUTIONS MUST BE APPROVED IN ADVANCE BY THE LANDSCAPE ARCHITECT.

3. REPAIR DAMAGED LAWN AS REQUIRED.

4. COORDINATE GRADING WITH GENERAL CONTRACTOR. ALLOW FOR TOPSOIL AND SOIL CONDITIONER.

REFERENCE NOTES

REVISIONS:

NEW DOWNTOWN SALT LAKE CITY WINE STORE
300 West Harris Ave. (1563 South)

MJSA
357 West Pierpont Avenue ■ Salt Lake City, Utah 84101
Telephone 801 364 5181 ■ Facsimile 801 364 5187
ARCHITECTURE INTERIORS DESIGN

State of Utah-Department of Administrative Services
DIVISION OF FACILITIES CONSTRUCTION AND MANAGEMENT
4110 State Office Building/Salt Lake City, Utah 84114/538-3018

DEPARTMENT OF ALCOHOLIC BEVERAGE CONTROL
1625 South 900 West, Salt Lake City, Utah 84130/977-6800

STAMP

STATE OF UTAH
DAVID WRIGHT
328119-5301
LICENSED LANDSCAPE ARCHITECT

DFCM PROJECT NO.: 05051030
DFCM CONTRACT NO.: 077431
MJSA PROJECT NO.: 07005
DATE: 11/15/07
SHEET: L 1.01

PLANTING PLAN
SCALE:1" = 20'

McNeil Proj. No. 270601.3L

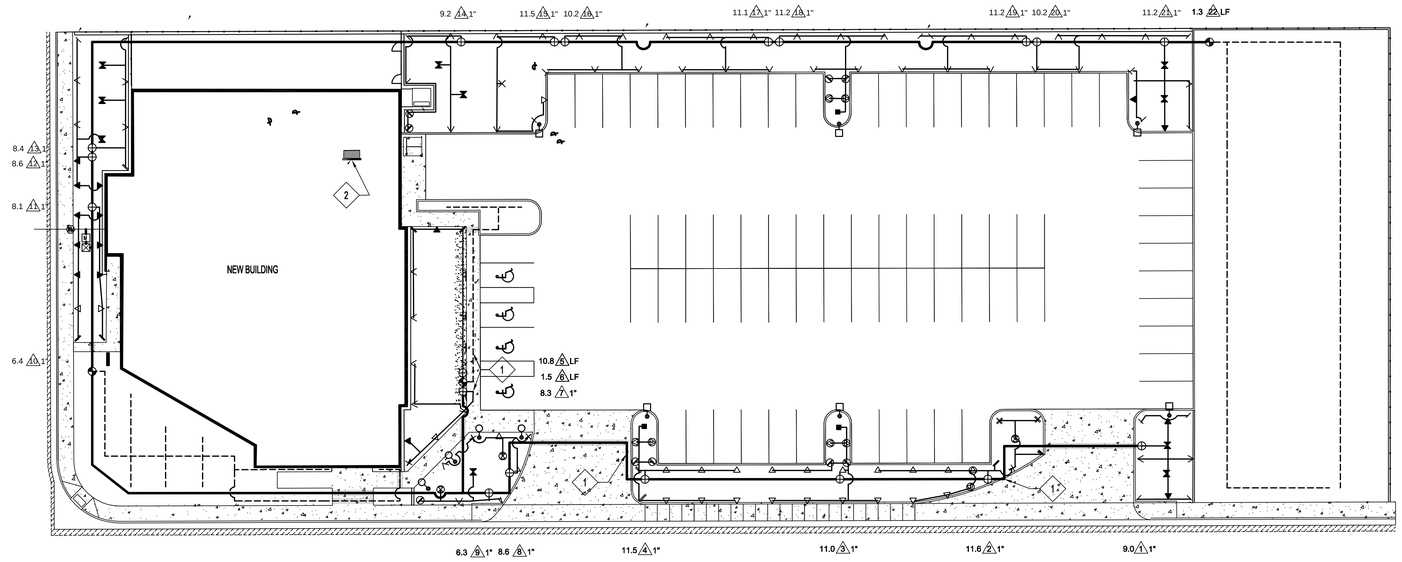

IRRIGATION PLAN

Scale: 1" =20' North Scale in Feet (0, 20, 40, 80)

REFERENCE NOTES

1. LINES ADJUSTED FOR GRAPHIC CLARITY ONLY.
2. COORDINATE CONTROLLER LOCATION WITH OWNER AND ELECTRICAL CONTRACTOR. EXTEND CONDUIT AS REQUIRED TO THIS POINT.

CITY DATA

VALVE	VALVE SIZE	HEAD TYPE	TYPE LANDSCAPE	PREC. RATE	GPM	P.S.I.
1	1"	POP-UPS	LAWN / FULL SUN	1.4	9.0	30
2	1"	POP-UPS	LAWN / FULL SUN	1.6	11.6	30
3	1"	POP-UPS	LAWN / FULL SUN	1.6	11.0	30
4	1"	POP-UPS	LAWN / FULL SUN	1.6	11.5	30
5	1"	POP-UPS	LAWN / FULL SUN	1.3	10.8	30
6	1"	DRIP	SHRUBS / TREES / GC	0	1.5	30
7	1"	POP-UPS	LAWN / FULL SUN	1.13	8.3	30
8	1"	POP-UPS	LAWN / FULL SUN	2.4	8.6	30
9	1"	POP-UPS	LAWN / FULL SUN	2.5	6.3	30
10	1"	DRIP	SHRUBS / TREES / GC	0	6.4	30
11	1"	POP-UPS	LAWN / FULL SUN	1.8	8.1	30
12	1"	POP-UPS	LAWN / FULL SUN	1.5	8.6	30
13	1"	POP-UPS	LAWN / FULL SUN	1.2	8.4	30
14	1"	POP-UPS	LAWN / FULL SUN	1.4	11.8	30
15	1"	POP-UPS	LAWN / FULL SUN	1.2	11.5	30
16	1"	POP-UPS	LAWN / FULL SUN	2.5	10.2	30
17	1"	POP-UPS	LAWN / FULL SUN	1.9	11.1	30
18	1"	POP-UPS	LAWN / FULL SUN	1.6	11.2	30
19	1"	POP-UPS	LAWN / FULL SUN	1.5	11.2	30
20	1"	POP-UPS	LAWN / FULL SUN	1.4	10.2	30
21	1"	POP-UPS	LAWN / FULL SUN	1.8	11.2	30
22	1"	DRIP	SHRUBS / TREES / GC	0	1.3	30
23	1"	DRIP	SHRUBS / TREES / GC	0	2.7	30

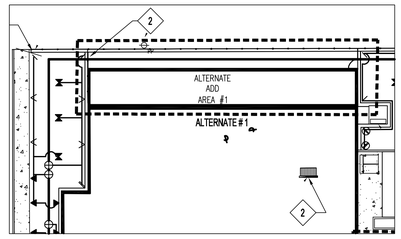

ALTERNATE #1 PLAN

Scale: 1" =20' North Scale in Feet (0, 20, 40, 80)

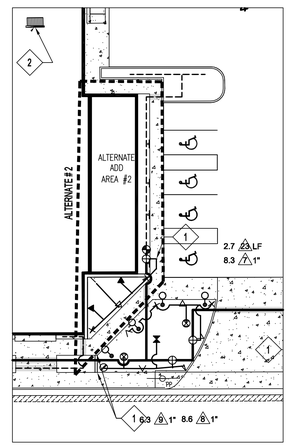

ALTERNATE #2 PLAN

Scale: 1" =20' North Scale in Feet (0, 20, 40, 80)

IRRIGATION LEGEND

RAINBIRD 1804-SAM-PRS POP-UP WITH 15 SERIES PLASTIC NOZZLE @ 30 PSI - SEE DETAIL L/L5.01

- FULL CIRCLE
- THREE QUARTER CIRCLE
- HALF CIRCLE
- THIRD CIRCLE
- QUARTER CIRCLE
- VAN CIRCLE

RAINBIRD 1804-SAM-PRS POP-UP WITH 12 SERIES PLASTIC NOZZLE @ 30 PSI - SEE DETAIL L/L5.01.

- FULL CIRCLE
- HALF CIRCLE
- THIRD CIRCLE
- QUARTER CIRCLE
- VAN CIRCLE

RAINBIRD 1804-SAM-PRS POP-UP 10 SERIES PLASTIC NOZZLE @ 30 PSI - SEE DETAIL L/L5.01.

- FULL CIRCLE
- HALF CIRCLE
- THIRD CIRCLE
- QUARTER CIRCLE

RAINBIRD 1804-SAM PRS POP-UP WITH 8 SERIES PLASTIC NOZZLE @ 30 PSI - SEE DETAIL L/L5.01.

- FULL CIRCLE
- HALF CIRCLE
- QUARTER CIRCLE

RAINBIRD 1804-SAM PRS POP-UP WITH 5 SERIES PLASTIC NOZZLE @ 30 PSI - SEE DETAIL L/L5.01.

- FULL CIRCLE

NEW RAINBIRD ESP-24MC IRRIGATION CONTROLLER - SEE DETAIL G/L5.01. PROVIDE WITH RAINBIRD RAIN SENSOR RSD-BEX MOUNTED AND INSTALLED AS PER MANUFACTURER'S RECOMMENDATIONS WITHIN 25' OF CONTROLLER.

- 24 STATION

CITY APPROVED WATER METER. INSTALL AS PER CITY GUIDELINES.

- 1"

RAINBIRD XCZ-100COM DRIP SYSTEM CONTROL VALVE ASSEMBLY - SEE DETAIL K/L5.01. (USE XCZ-LF-100-PRF AS INDICATED = 1" L.F.)

- 1"

RAINBIRD PEB SERIES PLASTIC REMOTE CONTROL VALVE - SEE DETAIL J/L5.01.

- 1"

SCHEDULE 40 PVC MAINLINE - SEE DETAIL H/L5.01.

- 1 1/4"

SCHEDULE 40 PVC LATERAL LINE - SEE DETAIL H/L5.01.

- 1"

SCHEDULE 40 PVC SALCO SUPPLY LINE - SEE DETAIL H/L5.01.

- 1"

PVC PIPE/WIRE SLEEVE - SEE DETAIL H/L5.01.

- SIZE AS REQUIRED

CONTROL VALVE DESIGNATION

10 1"
- VALVE NUMBER
- VALVE SIZE
- GPM

MAINLINE CONNECTION - BRASS STOP & WASTE VALVE AND WILKINS 975XL REDUCED PRESSURE BACKFLOW PREVENTION ASSEMBLY - IF PRESSURE IS ABOVE 70 PSI INSTALL NEW WILKINS 950 SINGLE UNION PRESSURE REGULATING DEVICE - SEE DETAIL M/L5.01.

- 1"

REFERENCE NOTES

REVISIONS:

NEW DOWNTOWN SALT LAKE CITY WINE STORE
300 West Harris Ave. (1563 South)

MJSA ARCHITECTURE INTERIOR DESIGN
357 West Pierpont Avenue ■ Salt Lake City, Utah 84101
Telephone 801 364 5191 ■ Facsimile 801 364 5187

State of Utah-Department of Administrative Services
DIVISION OF FACILITIES CONSTRUCTION AND MANAGEMENT
4110 State Office Building/Salt Lake City, Utah 84114/538-3018

DEPARTMENT OF ALCOHOLIC BEVERAGE CONTROL
1625 South 900 West, Salt Lake City, Utah 84130/977-6800

STAMP

STATE OF UTAH
DAVID WRIGHT
328119-5301
LICENSED LANDSCAPE ARCHITECT

DFCM PROJECT NO.: 05051030
DFCM CONTRACT NO: 077431
MJSA PROJECT NO.: 07005
DATE: 11/15/07
SHEET: L 2.01

IRRIGATION PLAN
SCALE:1" = 20'

McNeil Proj. No. 270601.3L

E:\2007\Proj\270601\270601.3L\270601.3L.dwg - Fri, 16 Nov 2007 - 3:34pm

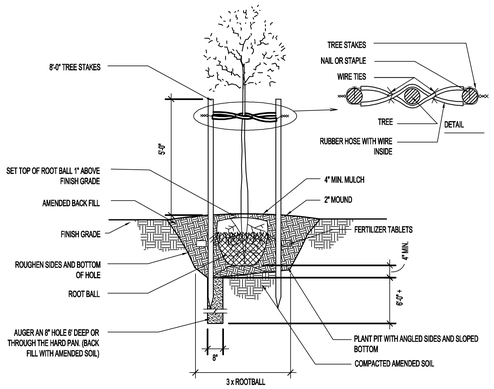

DECIDUOUS TREE PLANTING - SINGLE TRUNK
NOT TO SCALE
A L-5.01

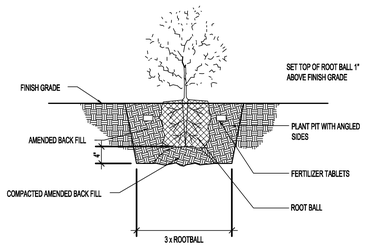

SHRUB / ORNAMENTAL GRASS PLANTING
NOT TO SCALE
B L-5.01

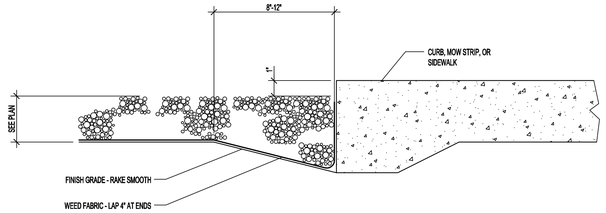

STONE MULCH - EDGE TREATMENT
NOT TO SCALE
C L-5.01

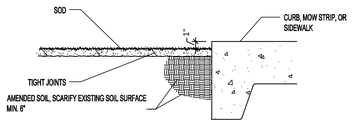

SOD INSTALLATION
NOT TO SCALE
D L-5.01

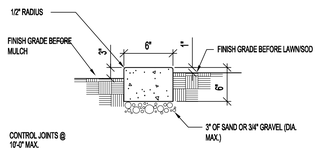

6" CONCRETE MOWSTRIP
NOT TO SCALE
E L-5.01

NOTES:

1. PROVIDE AN 1/8" RADIUS AT ALL EDGES TYPICAL.
2. INSTALL 1/2" EXPANSION JOINT MATERIAL AT 30' O.C. MAXIMUM AND AT INTERSECTIONS WITH WALKS, CURBS, WALLS, AND RADIUS TANGENT POINTS. INSTALL CONTROL JOINTS @ 5'-0" O.C. MAX AND IN EQUAL SECTIONS BETWEEN EXPANSION JOINTS. SEE CONCRETE PAVING JOINTS DETAIL.
3. THIS CONTRACTOR SHALL FIELD STAKE THE LAYOUT OF THE CONCRETE MOWSTRIPS FOR APPROVAL BY THE LANDSCAPE ARCHITECT PRIOR TO INSTALLATION.

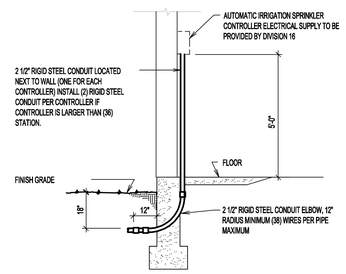

IRRIGATION CONTROLLER
NOT TO SCALE
G L-5.01

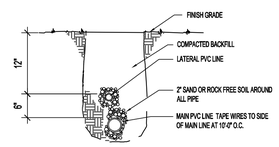

PIPE TRENCH
NOT TO SCALE
H L-5.01

SIZE	NO.	GPH
1 GAL.	1	1
5 GAL.	1	2
TREES	4	2

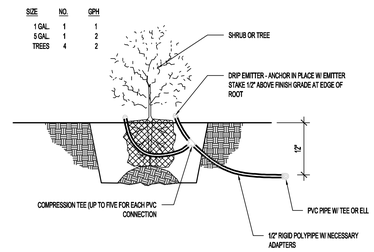

DRIP SYSTEM TUBING
NOT TO SCALE
I L-5.01

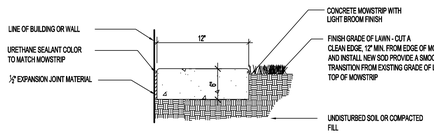

12" CONCRETE MOWSTRIP
NOT TO SCALE
F L-5.01

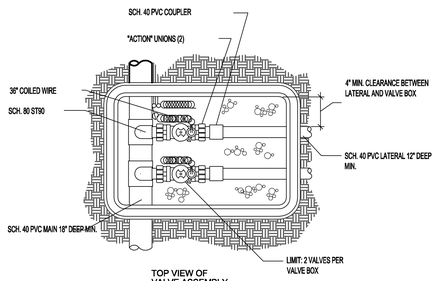

TOP VIEW OF VALVE ASSEMBLY

NOTE: INSTALL TAN COLORED VALVE BOXES IN PLANTING BEDS AND GREEN COLORED VALVE BOXES IN LAWN AREAS.

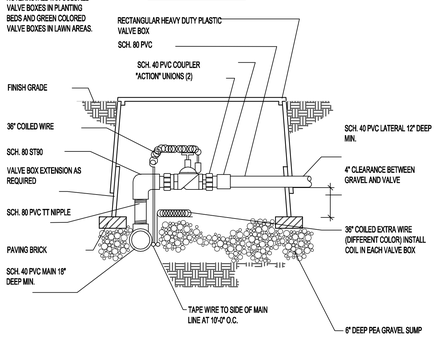

AUTOMATIC VALVE- LAWN AREAS
NOT TO SCALE
J L-5.01

NOTE: INSTALL TAN COLORED VALVE BOXES IN PLANTING BEDS AND GREEN COLORED VALVE BOXES IN LAWN AREAS.

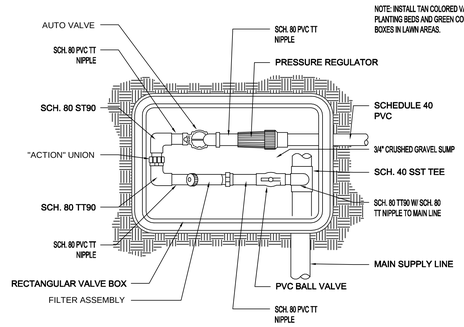

AUTOMATIC DRIP VALVE
NOT TO SCALE
K L-5.01

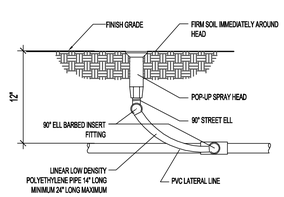

SPRAY HEAD
NOT TO SCALE
L L-5.02

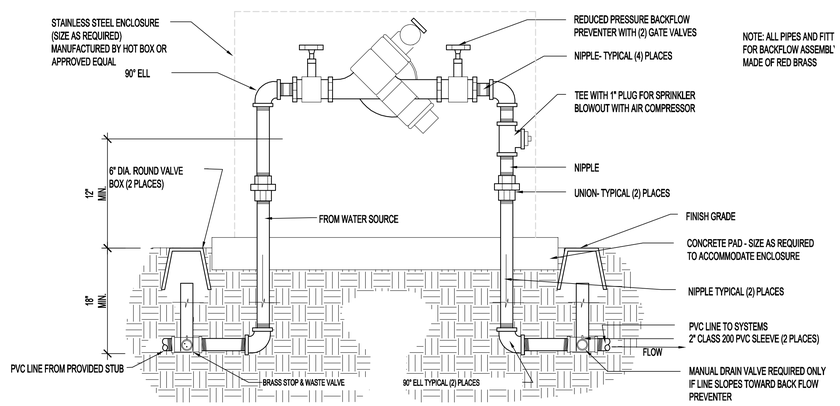

NOTE: ALL PIPES AND FITT FOR BACKFLOW ASSEMBL MADE OF RED BRASS

BACKFLOW PREVENTION ASSEMBLY
NOT TO SCALE
M L-5.01

REFERENCE NOTES

REVISIONS:

NEW DOWNTOWN SALT LAKE CITY WINE STORE
300 West Harris Ave. (1563 South)

MJSA
357 West Pierpont Avenue ☐ Salt Lake City, Utah 84101
Telephone 801 364 5101 ☐ Facsimile 801 364 5107
ARCHITECTURE PLANNING INTERIORS

State of Utah—Department of Administrative Services
DIVISION OF FACILITIES CONSTRUCTION AND MANAGEMENT
4110 State Office Building/Salt Lake City, Utah 84114/538-3018

DEPARTMENT OF ALCOHOLIC BEVERAGE CONTROL
1625 South 900 West, Salt Lake City, Utah 84130/977-6800

STAMP

STATE OF UTAH
DAVID WRIGHT
328119-5301
LICENSED LANDSCAPE ARCHITECT

PLANTING & IRRIGATION DETAILS

SCALE:1" = 20'

DFCM PROJECT NO.: 05051030
DFCM CONTRACT NO.: 077431
MJSA PROJECT NO.: 07005
DATE: 11/15/07
SHEET: L 5.01

McNeil Proj. No. 270601.3L

C:\2007\Projects\270601\270601.3L.dwg - Fri, 16 Nov 2007 - 12:01pm

GENERAL STRUCTURAL NOTES

I. Design Criteria

A. Governing Building Code: 2006 International Building Code (IBC)

B. Roof Live Loading:
1. Roof Live Load: 20 psf
2. Roof Snow Load: 30 psf + Drift per IBC
   a. Ground Snow Load, Pg: 43 psf
   b. Snow Exposure Factor, Ce: 1.0
   c. Importance Factor, IS: 1.0
   d. Thermal Factor, Ct: 1.0

C. Earthquake:
1. Occupancy Category: II
2. Seismic Design Category D
3. Spectral Response Accelerations:
   SS = 1.71 g   SDS = 1.14 g
   S1 = 0.69 g   SD1 = 0.69 g
4. Soil Site Class: D
   Fa = 1.0   Fv = 1.5
5. Basic Seismic-Force-Resisting System: A-Special Reinforced Masonry Shear Walls
   R = 5.0   Cd = 3.5 Ω0 = 2.5
6. Importance Factor, IE: 1.0
7. Design Base Shear: 97 kips
8. Analysis Procedure: Equivalent Lateral Force (Static)

D. Wind:
1. Basic Wind Speed (3-second gust): 90 mph
2. Importance Factor, IW: 1.0
3. Exposure: B
4. Topographic Factor, Kht: 1.0

E. Foundation:
1. Subsurface Conditions:
   Soils report and log of borings was obtained by the Owner for the Engineer's use in the design of the foundation, and is not a part of the Contract Documents. This report and log of borings is available for the Contractor's information, but is not a warranty of the subsurface conditions. The Contractor may use the report at his own risk.
2. Soils Report by Gordon Spilker Huber, dated September 11, 2007.
3. Soil Bearing Pressure: 2000 psf, on Native Soils,
4. Lateral Soil Pressure Fluid Equivalent Density.
   a. Passive: 300 pcf
5. Coefficient of Friction: 0.40

II. Earthwork

A. Proof rolling: The natural undisturbed soil below all footings shall be proof rolled prior to placing concrete. Remove all soft spots and replace with compacted structural fill.

B. Compacted structural fill: All fill material shall be a well-graded granular material with a maximum size less than 4 inches and with not more than 10 percent passing a No. 200 sieve. It shall be compacted to 95 percent of the maximum laboratory density as determined by ASTM D1557. All fill shall be tested (See Specifications and the Quality Assurance section of the GSN).

III. Concrete

A. Materials shall comply with the Standards specified in American Concrete Institute (ACI) 318-05, "Building Code Requirements for Structural Concrete."
1. Compressive strengths of concrete at 28 days shall be as follows:
   a. Footings: 4000 psi
   b. Slabs on Grade: 3000 psi
   c. Walls: 4000 psi
   d. Columns: 4000 psi
   e. All other Site Cast Concrete: 4000 psi
2. Concrete Density (Maximum Air Dry Weight):
   a. Normal weight concrete shall be approximately 145 to 155 pounds per cubic foot.
3. Reinforcement steel:
   a. ASTM A615 Grade 60, fy = 60,000 psi min. unless noted otherwise.
4. Admixtures:
   a. Air-entraining admixtures, comply with ASTM C 260 (when used).
      (1) When air content of a trowel finished floor slab exceeds 3%, there is an increased risk for delaminations and blistering to occur. When this situation is present, the contractor shall pay special attention to the finishing procedures to help minimize such risks. Refer to ACI 302.1R-96 "Guide for Concrete Floor and Slab Construction" for proper finishing guidelines.
   b. Calcium chloride shall not be added to the concrete mix.
5. Only one grade or type of concrete shall be poured on the site at any given time.
6. Plastic coated tie wires and chairs shall be used to support reinforcing bars, tie bars and tendons.

B. Formwork shall comply with ACI Standards Publication 347 and the project specifications. The contractor shall be responsible for the design, detailing, care, placement and removal of the formwork and shores.

C. Concrete cover requirements for deformed bar reinforcing steel shall comply with ACI 318, "Building Code Requirements for Structural Concrete".
1. Cast-in-place Concrete: Clear Cover
   a. Cast against and permanently exposed to earth: 3"
   b. Formed concrete exposed to earth or weather:
      #6 thru #18 bars 2"
      #5 and smaller bars 1.1/2"

D. Construction Joints and Control Joints:
1. Provide a continuous 2 X 4 keyway or a surface intentionally roughened to a full amplitude of approximately ¼" in all wall footings. Adjust the keyway as necessary to provide for proper bar placement. A continuous keyway shall not be used for concrete shear wall to footing connections, unless specifically indicated. Refer to project plans, schedules and details for the shear wall to footing connection requirements.
2. All horizontal and vertical construction joints shall have a continuous 2 X 4 keyway along the joint or joints shall be intentionally roughened to a full amplitude of approximately ¼", unless noted otherwise.
3. Provide reinforcement dowels to match the member reinforcement across the joint except for shear walls, unless noted otherwise. For dowels across construction joints and wall to footing connections of concrete shear walls, refer to specific project plans, schedules, and details.
4. Slabs on grade shall have construction or control joints spaced not to exceed 30 times the slab thickness in any direction. All discontinuous control or construction joints shall be reinforced with 2 - #4 x 48". See structural details. Construction joints shall not exceed a distance of 125'-0" o.c. in any direction.
5. Control joints shall be installed in slabs on grade so the length to width ratio of the slab is no more than 1.25:1. Control joints shall be completed within 12 hours of concrete placement. Control joints may be installed by:
   a. Saw cut a depth of 1/4 the thickness of the slab
   b. Tooled joints a depth of 1/4 the thickness of the slab
6. Control joints in visually exposed walls, unless noted otherwise: (Joints shall line up with masonry and architectural joints, see drawings.)
   a. Vertical control joints at 10'-0" on center.
   b. Reinforcing shall be continuous through control and construction joints, unless noted otherwise.
   c. Control joints in concrete foundation walls shall line up with masonry control joints.

E. Detailing: All reinforcing, including WWF, shall be detailed, bolstered & supported to comply with ACI 315, "Details and Detailing of Concrete Reinforcement" and the Concrete Reinforcing Steel Institute (CRSI) recommendations. Reinforcing bars shall not be welded unless specifically shown on drawings.
1. Lap splice lengths shall be detailed to comply with the "Reinforcing Bar Lap Splice Schedule" contained within the contract drawings. Splices may be made with mechanical splices capable of 125% tension capacity of the bar being spliced.
2. All embedments and dowels shall be securely tied to formwork or to adjacent reinforcing prior to the placement of concrete.
3. Provide corner bars at intersecting wall corners using the same bar size and spacing as the horizontal wall reinforcing. Unless noted otherwise, corner bar lap lengths shall conform with reinforcing bar lap splice lengths as noted above.
4. All vertical reinforcing shall be doweled to footings, or to the structure below. Dowels shall be the same size and at the same spacing as the vertical reinforcing scheduled (or detailed) for the element above. Lap splice lengths shall comply as noted above or as shown in the drawings. Dowels extending into footings shall terminate with a 90 degree standard ACI hook and shall extend to within 4" of the bottom of the footing. Footing dowels (#8 bars and smaller) with hooks need not extend more than 20" into footings.
5. Horizontal wall reinforcing shall terminate at ends of walls and openings into the far end of the jamb column with a 90-degree standard ACI hook, unless shown otherwise. Lap horizontal bar splices as noted above or as shown in the drawings. Horizontal wall reinforcing shall be continuous through construction and control joints. Splices in horizontal reinforcement shall be staggered, so the splice laps will not overlap. Splices in two curtains where used shall not occur in the same location, splice laps shall not overlap.
6. Contractor shall coordinate placement of all openings, curbs, dowels, sleeves, conduits, bolts, inserts and other embedded items prior to concrete placement.
7. All reinforcement shall be bent cold, and shall be bent only once at the same location. All reinforcement shall be shop bent, unless otherwise permitted by the engineer.

F. Minimum Reinforcing: Wall reinforcing shall be as follows, unless noted otherwise:

Wall Thickness	Horizontal Reinf.	Vertical Reinf.
6"	#4 @ 13" o.c.	#4 @ 18" o.c.
8"	#5 @ 15" o.c.	#4 @ 16" o.c.
10"	#5 @ 12" o.c.	#4 @ 13" o.c.
12"	#4 @ 13" o.c. Each Face	#4 @ 18" o.c. Each Face
Others	0.25% of Wall Area	0.15% of Wall Area

Place steel in the center of the wall (except in walls thicker than 10" and where shown otherwise). Walls thicker than 10" shall have two curtains of reinforcing (placed near each face of the wall), unless otherwise shown on the structural drawings. Spacing shall not exceed three times the wall thickness nor 18". In addition to the above reinforcing, 2 - #5 (or 1 - #7 in 10" walls and thinner) x continuous horizontal bars shall be placed at the bottom of the wall (near the footing) and at each floor level, at the roof level and at the top of wall.

G. No aluminum conduit or product containing aluminum or any other material injurious to concrete shall be embedded in concrete.

H. Unless otherwise noted, all slabs on grade shall be 4" thick.

IV. Masonry

A. Materials, unless noted otherwise:
1. Concrete Masonry Units: Lightweight Grade N, Type 1 (minimum unit strength of 1900 psi) or better. (f'm = 1500 psi)
2. Hollow Clay Units: Hollow Brick, Grade I (minimum unit strength of 6400 psi average or better. (f'm = 2000 psi)
3. Solid Clay Units: Grade SW (minimum unit strength of 4400 psi average or better. (f'm = 1500 psi)
4. Mortar: Use Type "S" according to IBC Section 2103.7, and tested according to ASTM C270. Admixtures shall not be added to the mortar mix. (1500 psi minimum compressive strength).
5. Grout: Conform to IBC Table 2103.10 or ASTM C476. Proportioned according to IBC Section 2103.10 and tested according to ASTM C1019. Grout shall attain a minimum compressive strength of 2000 psi at 28 days.
6. Reinforcing: Grade 60 reinforcing steel shall comply with ASTM A615. Wire joint reinforcing shall comply with ASTM A951.
7. Deformed Bar Anchors (DBA): All DBAs shall comply with ASTM A496.
8. Anchor Bolts (AB): ASTM A307 with ASTM A563 heavy hex nuts and hardened washers, Grade A, unless noted otherwise.
9. Headed Stud Anchors (HSA): Manufacture all HSAs in conformance with ASTM A108 with dimensions complying with AISC specifications.

B. Construction Requirements:
1. Mortar Joints: Joints shall be "concave", "V-joint" or "weathered raked" for structural members unless noted otherwise on architectural drawings.
2. Masonry walls, beams and columns shall be constructed with running bond, unless noted otherwise.
3. Grouting Requirements: Comply with IBC Section 2104 and ACI 530.1/ASCE 6/TMS 602. Grout shall be mechanically consolidated and mechanically reconsolidated according to ACI 530.1/ASCE 6/TMS 602 Section 3.5 E.
4. Reinforcing Bars shall not be welded unless specifically shown on drawings. In such cases, use only AWS standards. Do not substitute reinforcing bars for DBAs or HSAs.
5. Control Joints: Spacing shall not exceed 40'-0". See architectural drawings for locations.
6. Grout all beam and joist pockets solid after installation of beams and joists.

C. Detailing Requirements:
1. Standards: Reinforcing detailing shall comply with American Concrete Institute (ACI) Standard 315, "Details and Detailing of Concrete Reinforcement."
2. Reinforcement Protection (cover):
   a. Joint reinforcement shall have not less than 5/8" mortar coverage from the exposed face.
   b. Other reinforcement shall have a minimum coverage of one bar diameter over all the bars, but not less than 3/4". When masonry is exposed to soil, minimum coverage shall be 1.5".
3. Vertical steel reinforcement shall be placed and secured against displacement prior to grouting by wire positioners or other suitable devices: at intervals not exceeding 112 bar diameters, at the grout lift heights, or at bar splice locations, whichever is less. Vertical reinforcing shall be located at the center of the wall, unless noted otherwise.
4. Lap Splice Lengths: Lap all masonry reinforcing bars per the "Masonry Reinforcing Bar Lap Splice Schedule." Joint reinforcement shall lap a minimum of 6".
5. Corner Bars: Horizontal reinforcement shall be continuous at all corners and at intersecting walls. Provide corner bars with the required lap splice length.
6. Dowels: All vertical reinforcing shall be doweled to the foundation wall, footing (structure below) and to the structure above with the same size dowel, spacing (and in the same core) as the vertical wall reinforcing unless noted otherwise.
7. Wall Openings 24" wide and wider: Provide reinforced masonry lintels per Masonry Lintel Schedule over the top of, and 2 - #5 bars, in grouted spaces, on all sides and adjacent to every unscheduled opening, unless noted otherwise. Bars for all openings shall extend a minimum of 48 bar diameters beyond the corners of the opening. Vertical bars shall extend from floor level below to the floor, or roof, level above. Where a 48 bar diameter extension is not possible, extend bars as far beyond the opening as possible and terminate them with a 90 degree standard ACI hook.
8. Horizontal wall reinforcing shall be continuous through joining concrete walls, masonry walls, columns, and pilasters. Provide a key between the wall and the column or pilaster. Horizontal wall reinforcing shall be placed inside the column vertical reinforcing.
9. Anchor bolts and headed stud anchors shall be set in a grouted cell. Anchor bolts and headed stud anchors shall have 1" grout surrounding the shank at its penetration. Grout shall be flush with the face or top of the masonry.
10. All masonry column ties shall terminate with 135 degree hooks plus a 6 bar diameter extension (4" minimum).
11. The exposed face of all embed plates shall be set flush with the face of masonry wall or column.

D. Minimum Reinforcing:
All masonry walls shall be reinforced as follows, unless shown otherwise on the drawings. Reinforcing shall be placed in grouted cells.

Wall Thickness	Horizontal Reinf.	Vertical Reinf.
6"	#4 @ 48" o.c.	#5 @ 32" o.c.
8"	#5 @ 48" o.c.	#5 @ 32" o.c.
10"	#6 @ 48" o.c.	#6 @ 32" o.c.
12"	2 - #5 @ 48" o.c.	#6 @ 32" o.c.

V. Structural Steel

A. Material:
1. W-Shapes: ASTM A992, (Fy = 50 ksi), except as noted otherwise.
2. All Other Shapes and Plates: ASTM A36 (Fy = 36 ksi), except as noted otherwise.
3. Rectangular and Square Hollow Structural Sections (HSS): ASTM A500, Grade B (Fy = 46 ksi).
4. Deformed Bar Anchors (DBA): ASTM A496.
5. Headed Stud Anchors (HSA): ASTM A108, with dimensions complying with AISC specifications.
6. Anchor Rods: ASTM F1554, Grade 36 with ASTM A563 heavy hex nuts and ASTM F436 hardened washers, unless noted otherwise.

B. Fabrication and construction shall comply with the following Codes and Standards:
1. American Institute of Steel Construction (AISC) 360-05, "Specification for Structural Steel Buildings," dated March 9, 2005.
2. AISC 341-05, "Seismic Provisions for Structural Steel Buildings" dated March 9, 2005, including Supplement No. 1, dated November 16, 2005.
3. AISC 303-05, "Code of Standard Practice for Steel Buildings and Bridges" excluding the following: Section 3.3 (last sentence of first paragraph), Section 4.4, Section 4.4.1, Section 4.4.2, Section 4.5, and Section 7.13.3.
   a. The architectural drawings are the prime contract drawings. Consultants' drawings by other disciplines are supplementary to the architectural drawings. The structural drawings shall be used in conjunction with the architectural drawings. Detailing and shop drawing production for structural elements will require information (including dimensions) contained in architectural, structural, and/or other consultants' drawings. Refer to VII. Special Instructions, notes VII.B and VII.C on this sheet.
4. AISC 358-05, "Prequalified Connections for Special and Intermediate Steel Moment Frames for Seismic Applications," dated December 13, 2005.
5. AISC/RCSC 2004, "Specification for Structural Joints Using ASTM A325 or A490 Bolts"
6. American Welding Society (AWS) D1.1-04, "Structural Welding Code - Steel" (specific items do not apply when they conflict with the AISC requirements).
7. Steel Joist Institute (SJI) 1994, "Standard Specification, Load Tables and Weight Tables for Steel Joists and Joist Girders," and "Recommended Code of Standard Practice."
8. American Iron and Steel Institute (AISI) 2001, "North American Specification for the Design of Cold-Formed Steel Structural Members."

C. Structural shapes and plates shall be fabricated from newly rolled (milled) one-piece sections without splices, unless specifically noted otherwise on the structural drawings. Connections for structural steel shall comply with the structural drawings, unless written approval is given by the structural engineer.

D. Welding:
1. Certification of Welders: All shop and field welding shall be executed by AWS certified welders who have been specifically certified for the type of work to be performed. Certification shall be considered current if dated within the past 12 months. Welders will be considered certified if they have been certified under AWS and their work records are current within every six-month period thereafter as required by AWS. Certification and records must comply with AWS Standards. Certification and appropriate records must be provided to the architect prior to beginning work.
2. Electrodes: E-70 XX or as noted otherwise. E60 XX may be used for welding steel floor and roof decks.
3. Minimum Welds: All intersecting steel shapes that are not bolted shall be connected by a fillet weld all around, unless noted otherwise. Fillet weld sizes that are not shown shall be 1/16" less than the thinnest of the connected parts for thicknesses 1/4" and larger. Fillet welds on plates less than 1/4" shall be of the same size as the thinnest of the connected parts.
4. Reinforcing Bars: Do not weld rebar except as specifically detailed in the drawings. In such cases, use only AWS standards. Do not substitute reinforcing bars for deformed bar anchors (DBAs), machine bolts, or headed stud anchors (HSAs).
5. Bolts: Do not apply any welds, including "tack" welds to bolts, including anchor bolts, except as specifically detailed in the drawings.
6. It is recommended the steel erection contractor and steel fabricator contact the Quality Assurance Agency prior to beginning any of the above welds. A program of joint preparation and welding procedures should be worked out between the two parties before the welding is started so that correct welds will be made from the beginning.
7. Headed Stud Anchor (HSA) welding and Deformed Bar Anchor (DBA) welding shall conform to the manufacturer's specifications. Welding shall comply with AWS D1.1 Section 7.6 through 7.8 and Annex IX.

E. Bolted Connections:
1. Use ASTM A325N bolts for steel to steel connections, as noted herein or as noted on the drawings. A325N bolts shall be used in connections for simple span framing and beam (or girder) to bearing plate connections. Tighten bolts to a snug tight condition. A snug tight condition is usually attained by a few impacts of an impact wrench or the full effort of a man using an ordinary spud wrench. Bolts shall be tightened until all plies of the joint are in firm contact.
2. Provide hardened washers beneath the turned element of all bolts or nuts. Provide hardened beveled washers, to compensate for the lack of parallelism, where the outer face of the bolted parts has a slope greater than one in twenty with respect to the plane normal to the bolt axis. Hardened washers or plates installed over oversized holes or slotted holes shall be at least 5/16" thick and shall conform to ASTM F436. Plates or bars installed at slotted holes shall have a size sufficient to completely cover the slot after installation.
3. Where a steel to steel beam connection is not detailed in the drawings, provide a standard AISC framed connection with the capacity to support one half of the total uniform load capacity of the given shape for the span and for the steel specified.
4. Bolts, nuts and washers shall not be reused.

F. Beam Web Stiffener Plates:
Provide full-height web stiffener plates to each side of all beams above all bearing points. Stiffener plates shall be the thickness noted below unless noted otherwise and shall be welded on both sides of the stiffener plate with fillet welds (noted below) all around.

Beam Web stiffener thickness	For beams with flange widths between	Weld Size
1/4 inch thick	Greater than 0" and less than 8 1/4"	3/16"
3/8 inch thick	Greater than 8 1/4" and less than 12 1/4"	1/4"
1/2 inch thick	Greater than 12 1/4" and less than 16 1/2"	5/16"
5/8 inch thick	Greater than 16 1/2" and less than 20 3/4"	3/8"

G. Open Web Steel Joists and Girders:
1. The steel joist supplier shall be responsible for the design of all open web steel joists and girders. Joists or girders with slopes greater than 1/2 inch per foot shall be designed to meet or exceed the load capacities, listed in the SJI load tables, of the joist or girder sizes indicated on the framing plan, as if the joists or girders were installed level.
2. Open web joists and girders shall be designed with deflection limits of L/240 for total load and L/360 for live load, where L is the joist span.
3. Where uplift loads due to wind are indicated, rows of bottom chord bridging shall be provided at the first bottom chord panel points per SJI Specifications. This is in addition to the bridging shown on the framing plans.
4. Provide special bearing ends to accommodate slopes from sloped joists, sloped girders or sloped bearing conditions.
5. Camber: All joists shall be cambered as specified in the SJI specifications, unless noted otherwise.
6. Field Modifications: Do not modify any joist or girder, including holes through the top and bottom chords, without the written consent and direction from the manufacturer.
7. Shop Drawings and Design Calculations: Shop drawings for all joists and girders used in the project shall be submitted for review. Prior to the fabrication of joists and girders, the open web steel joist and girder manufacturer shall prepare complete joist and girder calculations under the direct supervision of a professional engineer licensed in the State of Utah. Calculations shall be submitted for review for joists and girders designated as SPECIAL or SP and for all joists or girders with axial loads or additional concentrated loads (as noted on the drawings). Submitted calculations shall bear the seal of a professional engineer licensed in the State of Utah.
8. Stabilizer Plates: Provide steel joist and joist girder stabilizer plates as indicated. Stabilizer plates shall be 6" x 6" with a 13/16" diameter hole with 1.1/2" minimum edge distance, and shall extend 3" minimum below the bottom chord of the joist or girder. Plate thickness shall be equal to the chord gap minus 1/4", or 3/4", whichever is less.
9. Verify size, weight, location and configuration of all roof top equipment with architect and mechanical engineer. Provide steel frames for support of roof top equipment as indicated on structural details in the structural drawings. Coordinate openings with the mechanical and general contractor.
10. All concentrated loads greater than 100 pounds supported by open web steel joists and girders shall be located within 6 inches of joist or girder panel points or the joist or girder shall be reinforced with an additional web member. Refer to the "TYPICAL DETAIL AT ADDITIONAL CONCENTRATED POINT LOAD" in the structural drawings.
11. Concentrated point loads, single or multiple, totaling 100 pounds or less can be located at any point along the top or bottom chord of an open web steel joist or girder between adjacent panel points without meeting the requirements above. A limit of four concentrated 100# maximum point loads per joist or girder will be permitted on spans of 12' or greater, one concentrated 100# max. load on spans less than 12', unless specifically noted otherwise on the structural drawings.
12. Joist bridging shall never be used to support hanging loads.
13. Bracing of miscellaneous items (mechanical, electrical, plumbing, etc.) to the bottom chord of joists or girders will not be allowed in any instance. All lateral braces must connect to the top flange/top chord of the framing member above unless noted otherwise on the structural drawings.

H. Steel Roof Deck:
1. Steel roof deck shall comply with the latest requirements of the Steel Deck Institute (SDI). Submit ICC Code Evaluation Report with load and lateral shear capacities with shop drawings.
2. Steel roof deck shall be 1 1/2" deep X 20 Gauge minimum galvanized (G60), type "B" wide rib deck with interlocking side seams with the following properties:

	20 Gauge	18 Gauge
Minimum S (in3/ft)=	0.234	0.322
Minimum I (in4/ft)=	0.213	0.296

   Painted roof deck shall be coated with special paint to receive sprayed-on fire proofing, where required.
3. Minimum allowable deck diaphragm shear values shall be 890 lb/ft. for a 6 ft deck span.
4. Weld steel roof deck to supporting framing members with 3/4" diameter puddle welds at the following spacings (Closer spacings may be used to develop minimum shear requirements.):
   a. 6" o.c. to all supports perpendicular to deck corrugations (7 welds per 36" sheet).
   b. 6" o.c. to the following supports parallel to deck corrugations: All perimeter supports, all concrete or masonry walls, all joists or joist girders with a "T/C" designation, and all steel beams which are on a grid line with braced frames or moment frames.
   c. 12" o.c. to all other supports parallel to deck corrugations.
   d. All welded surfaces shall be dry before welding deck to supports.
5. Attach interlocking seams with 1 1/2" long top seam welds at 12" o.c. minimum between adjacent pieces of decking. Crimp side seams before welding. Closer spacings may be used to develop minimum shear requirements.
6. Alternate means of deck attachment and fastening using screws, pins or other mechanical fastening methods are permitted with approval of the engineer. The contractor shall submit the proposed attachment system and the code evaluation report demonstrating the system has the strength to meet the required deck shears specified above (in item 3) and on the plans. The flexibility factor of the proposed deck attachment system shall be equal to or less than the flexibility factor for the specified welded deck attachment system. If the alternate attachment method is approved, it is the responsibility of the contractor to ensure that the deck type and profile is compatible with the fastening system being used.
7. Provide a 2" minimum bearing and a 4-inch lap at the splice points of all pieces of deck.
8. All deck shall be 3-span continuous minimum where possible. The contractor shall provide heavier gauge deck as required for one or two span conditions to meet equivalent loading of the above deck under a three span condition.
9. Steel roof deck shall not be used to support loads from plumbing, HVAC ducts, light fixtures, architectural elements or equipment of any kind, unless specifically noted otherwise. Lightweight suspended acoustical ceilings with a total weight per wire not exceeding 50# may be hung from the steel roof deck. The hangers should be staggered to distribute the load over multiple deck flutes.

I. Cold-Formed Steel
1. Light Gauge Steel Framing:
   a. Where steel framing size designators are used in the drawings, they follow the convention established by the Steel Stud Manufacturers' Association (SSMA) and the North American Steel Framing Alliance (NASFA). Framing members provided shall comply with the designations according to this convention.
   b. All load bearing stud (and/or) joist framing members along with all runner, bridging, and end track shall be of the designation shown on the plans. All studs with base metal thickness of 54 mil and 68 mil, and joists with base metal thickness of 54 mil, 68 mil and 97 mil, shall be formed from steel meeting the requirements of ASTM A570 except that the steel shall have a 50,000 psi yield stress. All track and end closures with base metal thickness of 54 mil and 68 mil, bridging with base metal thickness of 54 mil, and studs and track with base metal thickness of 43 mil and 33 mil, shall be formed from steel with a minimum yield of 33,000 psi. All components shall be galvanized.
   c. Follow all manufacturers' recommendations for the use of these products.
   d. Unless noted otherwise, all welded connections shall be done using 1/8" AWS type 6013 or 7014 rod with a welding heat of 60-110 amperes depending on the gauge of material and the fit of the parts. Wire tying of framing components shall not be permitted.
   e. All interior non-bearing steel stud walls that extend above the ceiling but do not attach to the floor or roof diaphragm (above) shall have diagonal braces at 45 degrees (+/-). The KL/r ratio of the brace shall not exceed 200 and shall not be spaced further apart than 10'-0". Connect diagonal braces to the top of the steel stud walls and to the underside of the top flange of the steel beams, open web joists or girders, etc. with 1/8" fillet welds all around. Diagonal angle braces may be connected to 8" x 8" x 1/4" steel plates which shall be anchored to the floor or roof decks which have concrete fill above with 2- 3/8" dia. expansion anchors for each plate. Connect angle to plate with a 1/4" fillet weld all around. Connect diagonal braces to roof decking which does not have concrete fill above per the non-bearing wall brace connection details shown on the structural drawings. Diagonal braces may be constructed from cold-formed light gauge steel studs but must conform to the kl/r ratio of less than 200 requirement. When diagonal brace lengths exceed 10'-0" (+/-), cold-formed box sections made from two 600S137-54 steel studs will likely be required.
2. Prefabricated Systems: Submit complete shop drawings and calculations of all elements for review. Submittals shall bear the stamp of a Professional Engineer registered in the State of Utah.

REFERENCE NOTES

REVISIONS:

NEW DOWNTOWN SALT LAKE CITY WINE STORE
300 West Harris Ave. (1563 South)

REAVELEY
ENGINEERS + ASSOCIATES
Consulting Structural Engineers
1515 South 1100 East
Salt Lake City, Utah 84115
P:801.486.3883
F:801.485.0911
www.reaveley.com

State of Utah–Department of Administrative Services
DIVISION OF FACILITIES CONSTRUCTION AND MANAGEMENT
4110 State Office Building/Salt Lake City, Utah 84114/538-3018

DEPARTMENT OF ALCOHOLIC BEVERAGE CONTROL
1625 South 900 West, Salt Lake City, Utah 84130/977-6800

MJSA
357 West Pierpont Avenue □ Salt Lake City, Utah 84101
Telephone 801 364 5161 □ Facsimile 801 364 5167
ARCHITECTURE INTERIOR DESIGN

STAMP

LICENSED CERTIFIED STRUCTURAL ENGINEER
NO. 154201
ARTHUR PARRY BROWN
UTAH
11/12/07

DFCM PROJECT NO.:	05051030
DFCM CONTRACT NO.:	077431
MJSA PROJECT NO.:	07005
DATE:	11/12/07
SHEET:	SE001

GENERAL STRUCTURAL NOTES
SCALE: NO SCALE

G:\data\Projects\2007\2007-138-Utah-State-Liquor-Store-3rd-West\Drawings\2007-138-SE001.dwg - Fri, 09 Nov 2007 - 2:57pm

GENERAL STRUCTURAL NOTES

VI. Special Instructions

A. The project specifications are not superseded by the General Structural Notes but are intended to be complementary to them. Consult the specifications for additional requirements in each section. Notes and specific details on the drawings shall take precedence over General Structural Notes and typical details.

B. The architectural drawings are the prime contract drawings. Consultant drawings by other disciplines are supplementary to the architectural drawings. All omissions or conflicts, including dimensions, between the various elements of the consultants' drawings and/or specifications shall be brought to the attention of the Architect before proceeding with any work involved. In case of conflict, follow the most stringent requirement as directed by the Architect without additional cost to the owner. Any work done by the contractor after discovery of such discrepancy shall be done at the contractor's risk.

C. The structural drawings shall be used in conjunction with the architectural drawings. Primary structural elements and overall structural layout are indicated within the structural plans and details. Some secondary elements, architectural layouts, alcoves, elevations, slopes, depressions, curbs, mechanical equipment and electrical equipment, are not indicated within the structural drawings. Detailing and shop drawing production for structural elements will require information (including dimensions) contained in the architectural, structural and/or other consultants' drawings.

D. Shoring and Bracing Requirements:
1. Floor and Roof Structures -- The General Contractor is responsible for the method and sequence of all structural erection. He shall provide temporary shoring and bracing as his method of erection requires to provide adequate vertical and lateral support. Shoring and bracing shall remain in place as the chosen method requires until all permanent members are in place and all final connections are completed, including all roof and floor attachments. The building shall not be considered stable until all connections are complete.
2. Foundation walls must be braced until the complete floor or roof systems is completed. Do not backfill until floor or roof systems are in place.
3. Walls above grade shall be braced until the structural system is complete. Walls shall not be considered to be self supporting.

E. Submittals: A copy of all shop drawings that have been submitted for review must be kept at the construction site for reference. These drawings must bear the appropriate review stamps. The shop drawing review shall not relieve the contractor of the responsibility of completing the project according to the contract documents. The general contractor shall review and mark all shop drawings prior to submitting them to the Architect for his review. Shop Drawings made from reproductions of (these) contract drawings will be rejected.

F. Project Coordination: It shall be the responsibility of the general contractor to coordinate with all trades any and all items that are to be integrated into the structural system. Openings or penetrations through, or attachments to the structural system that are not indicated on these drawings shall be the responsibility of the general contractor and shall be coordinated with the Architect/Engineers. The order of construction is the responsibility of the general contractor. It is the contractor's obligation to provide all items necessary for his chosen procedure.

G. Contractor shall field verify all dimensions, and conditions. If the contract drawings do not represent actual conditions, contractor shall notify architect/engineer prior to fabrication or construction within that area.

H. Notice of Copyright: The structural drawings, plans, schedules, notes and details are hereby copyrighted by Reaveley Engineers and Associates, Inc., All Rights reserved. Submission or distribution of documents to meet official regulatory requirements or for similar purposes in connection with the project is not to be construed as publication in derogation of Reaveley Engineers & Associates, Inc.'s reserved rights. The documents defining the structure are instruments of service prepared by Reaveley Engineers and Associates, Inc. for one use only. Furthermore, these documents shall not be reproduced, or copied, in whole or in part by the contractor or his subcontractors for preparation of shop drawings or other submittals.

VII. Quality Assurance

A. Quality Assurance Agency Requirements:
1. The owner shall engage a qualified Quality Assurance Agency (QAA) to provide all special inspection and quality assurance testing for the project. All quality assurance personnel assigned to the project shall demonstrate competence, to the satisfaction of the building official, for inspection of the particular type of construction or operation requiring special inspection.
2. Prior to construction, the QAA shall prepare a written Quality Assurance Implementation Plan (QAIP) for the project. The QAIP shall include a list of personnel assigned to the project including management personnel, inspection procedures and frequency, proposed testing methods and frequency of testing, and reporting procedures. The QAIP shall also outline methods of documenting deficiencies and reporting corrections. A copy of the QAIP shall be given to the contractor for review and coordination with subcontractors.
3. Prior to construction, the QAA shall submit the following information to the Architect and Engineer of Record for approval:
   a. A copy of the Quality Assurance Implementation Plan for the project.
   b. A copy of the appropriate certification and training records for each individual performing inspections or testing.
   c. A list of the testing equipment designated for the project and recent calibration records for the equipment.
   d. Sample inspection and testing reports and the distribution list for the reports.
4. The special inspector shall inspect the work per Chapter 17 of the IBC for conformance with the contract documents. The special inspector shall send reports to the owner, building official, architect, engineer, and contractor. All discrepancies shall be brought to the immediate attention of the contractor for correction. The QAA shall submit a final signed report stating that the special inspection work was, to the best of their knowledge, in conformance with the plans, specifications and applicable workmanship provisions of the IBC.

B. Seismic Force Resisting Systems
1. Elements that are a part of the Main Seismic Force Resisting System for the structure may require increased quality assurance inspection and testing. The Main Seismic Force Resisting system for the structure includes the following elements:
   a. Masonry walls.
   b. Footings and foundation systems that directly support walls, columns and braces referenced above.
   c. Roof decking.
   d. All elements labeled as “drag struts”, “chords”, or “collectors.”
   e. Connections between the elements referenced above.

C. Special Inspection: Special Inspection shall be provided for the following elements per IBC sections 1704 and 1707:
1. Concrete and elements embedded in concrete shall be special inspected prior to and during placement of concrete. Special inspection of concrete shall include the following:
   a. Reinforcing steel size and placement.
   b. Surface preparation at cold joints including placement of keyways.
   c. Bolt and embed size, configuration and placement.
   d. Concrete shall receive continuous special inspection during placement, and periodic inspection after placement to ensure proper curing and weather protection procedures.
2. Structural steel fabrication and erection shall be special inspected, including the following:
   a. Fillet welds smaller than 5/16” per AWS D1.1.
   b. Fillet welds larger than 5/16”, multiple pass welds, and all groove welds shall receive continuous special inspection during weld placement per AWS D1.1.
   c. Welding of Headed Stud Anchors (HSA) and Deformed Bar Anchors (DBA) shall be inspected to comply with AWS D1.1 Section 7.6 through 7.8 and Annex IX.
   d. Welding or fastening of floor or roof deck per AWS D1.3. or per the code evaluation report for the fastening method.
3. Structural Masonry: Special inspection shall be provided, as follows:
   a. As masonry construction begins, and periodically during construction, verify the following are in compliance:
      (1) Proportions of site-mixed mortar and grout.
      (2) Placement of masonry units and construction of mortar joints.
      (3) Locations of reinforcement, connectors and embeds.
      (4) Protection of masonry during cold or hot weather.
   b. Prior to grouting, verify the following are in compliance:
      (1) Grout space.
      (2) Size and location of structural elements.
      (3) Grade, size and placement of reinforcement, connectors and embeds.
      (4) Construction of all mortar joints.
   c. Continuous inspection is required during placement of grout and during preparation of grout specimens, mortar specimens, and/or prisms for testing.
4. Post-installed anchors, including but not limited to expansion anchors, adhesive anchors and rebar dowels, and low velocity fasteners, shall receive special inspection per the code evaluation reports for the anchors.
   a. Continuous special inspection is required during the installation of all adhesive anchors and rebar dowels. Special inspector shall verify the following:
      (1) Anchor size and steel grade.
      (2) Hole diameter, location, and type of drill bit.
      (3) Cleanliness of hole and anchor.
      (4) Adhesive application.
      (5) Anchor embedment.

D. Structural Testing: The following materials shall be tested per IBC sections 1704 and 1708. The owner reserves the right to test any and all materials using any appropriate non-destructive procedure. Any items found to be deficient shall be corrected and retested at no additional cost to the owner.
1. Earthwork: All compacted structural fill shall be tested to verify soil gradation, lift thickness, and compaction requirements. See the specifications and earthwork section of the GSN for testing frequency and acceptability criteria.
2. Concrete Strength Verification and Testing. All concrete shall be tested to verify strength, slump, unit weight, air content, and temperature. See the specifications for testing criteria, testing frequency and acceptability criteria.
3. Masonry Strength Verification:
   a. Masonry strength, f'm shall be verified using the "Unit Strength Method" per IBC Section 2105.2.2.1 and as follows: Prior to construction, the masonry units and grout shall be tested for compressive strength. Certificates of compliance with strength requirements of the masonry units and grout shall be submitted by the masonry and grout suppliers. During construction, the masonry units and grout shall be tested for every 5,000 square feet of masonry constructed per GSN IV.A, above. Proportions of materials in mortar and grout delivered to the site shall be verified.
   b. The contractor has the option of using the "Masonry Prism Test Method" per IBC Section 2105.2.2.2, in lieu of the "Unit Strength Method."
4. Welded connections shall be tested for compliance according to IBC Table 1704.3, AWS D1.1 and the contract specifications and plans. As a minimum, the testing shall include the following:
   a. Any material discontinuities shall be accepted or rejected on the basis of the defect rating in accordance with the testing in AWS D1.1 Chapter 6, excluding Sections 6.1 through and including 6.6. All deficient welds shall be corrected and retested at no additional cost to the owner.
5. Post-installed anchors, including but not limited to expansion anchors, adhesive anchors, and low velocity fasteners, shall be tested per the code evaluation reports for the anchors.

E. Structural Observations by the Engineer of Record.
1. The Engineer of Record may perform structural observations at critical phases of the project. Copies of the engineer's report will be distributed to the architect, contractor, owner, and QAA.
2. Observation visits to the site by the Engineer's field representatives shall not be construed as inspection or approval of construction.
3. Notification of Engineer: The contractor shall notify the engineer twenty-four hours prior to:
   a. Placing concrete in any footing.
   b. Closing any wall forms.
   c. Grouting any masonry.
   d. Completing the welding of major sections of steel decking.

F. Contractor Responsibility: The contractor shall prepare and submit a written statement of responsibility to the building official and the owner prior to commencement of work on the project. As a minimum the statement shall contain the following information:
1. Acknowledgement of the quality assurance requirements for the structure.
2. Acknowledgement of receipt of the Quality Assurance Implementation Plan (QAIP) from the testing agency.
3. Acknowledgement that control will be exercised to obtain conformance to the Contract Documents and the QAIP.
4. Quality control procedures within the contractors organization, methods and frequency of reporting, and distribution of the reports.
5. Identification and qualifications of the person(s) responsible for quality control and their position(s) in the organization.

ABBREVIATIONS

AB	ANCHOR BOLT (S)	F.D	FLOOR DRAIN	NIC	NOT IN CONTRACT
ABV	ABOVE	FDTN	FOUNDATION	NTS	NOT TO SCALE
@	AT	F.F.	FINISH FLOOR		
ALT	ALTERNATE	FIN	FINISH	OPNG	OPENING
APPROX	APPROXIMATE	FL	FLOOR	OPP	OPPOSITE
ARCH	ARCHITECT(URAL)	FT	FOOT	O.C.	ON CENTER
		FTG	FOOTING	O.F.	OUTSIDE FACE
BM	BEAM	FV	FIELD VERIFY	OWSJ	OPEN WEB STEEL JOIST
BLW	BELOW				
		GA	GAUGE	PCF	POUNDS/CUBIC FOOT
BRG	BEARING	GALV	GALVANIZED	PL	PLATE
BTWN	BETWEEN	GLB	GLU-LAMINATED BEAM	PLF	POUNDS/LINEAL FOOT
BLDG	BUILDING	GR	GRADE	PNL	PANEL
BOT	BOTTOM	GSN	GENERAL STRUCTURAL NOTES	PSF	POUNDS/SQ FOOT
				PSI	POUNDS/SQ INCH
C.J.	CONSTRUCTION JOINT OR CONTROL JOINT			PT	POINT
		HB	HORIZONTAL BRIDGING		
CJP	COMPLETE JOINT PENETRATION	HT	HEIGHT	REINF	REINFORCING
		HORIZ	HORIZONTAL	R.D.	ROOF DRAIN
CMU	CONC MASONRY UNIT	HSA	HEADED STUD ANCHORS	REQ'D	REQUIRED
COL	COLUMN				
CONC	CONCRETE	IBC	INTERNATIONAL BUILDING CODE	SHT	SHEET
CONST	CONSTRUCTION			SI	SPECIAL INSPECTION
CONT	CONTINUOUS	ICBO	INTERNATIONAL CONFERENCE OF BUILDING OFFICIALS	SOG	SLAB ON GRADE
CONTR	CONTRACTOR			STD	STANDARD
CTR	CENTER	ICC	INTERNATIONAL CODE COUNCIL	STIFF	STIFFENER
				STL	STEEL
DB	DECK BEARING	IN.	INCH	SQ	SQUARE
DBA	DEFORMED BAR ANCHORS	INSUL	INSULATION	SIM	SIMILAR
		INT	INTERIOR	STR	STRUCTURAL
DBL	DOUBLE	I.F.	INSIDE FACE	STAG	STAGGERED
DET	DETAIL				
DIA	DIAMETER	JT	JOINT	T&B	TOP AND BOTTOM
DIM	DIMENSION	JST	JOIST	TEMP	TEMPERATURE
DN	DOWN	KLF	KIPS PER LINEAL FOOT	THDS	THREADS
DWG	DRAWING	KSF	KIPS PER SQUARE FOOT	T.O.	TOP OF
DWL	DOWEL	KSI	KIPS PER SQUARE INCH	TOC	TOP OF CONCRETE
		K	KIPS - 1,000 POUNDS	TOF	TOP OF FOOTING
EA	EACH			TOS	TOP OF SLAB
E.J.	EXPANSION JOINT (SEISMIC SEPARATION JOINT)	LF	LINEAL FOOT	TOW	TOP OF WALL
		LBS	POUNDS	TYP	TYPICAL
ELEV	ELEVATION	LLH	LONG LEG HORIZONTAL		
ELEC	ELECTRICAL	LLV	LONG LEG VERTICAL	UNO	UNLESS NOTED OTHERWISE
EQUIP	EQUIPMENT				
EQ	EQUAL	MAS	MASONRY	VERT	VERTICAL
EXIST	EXISTING	MAX	MAXIMUM	W/	WITH
EXP	EXPANSION / EXPOSED	MCJ	MASONRY C.J.	WWF	WELDED WIRE FABRIC
EXT	EXTERIOR	MECH	MECHANICAL		
E.F.	EACH FACE	MFR	MANUFACTURER		
E.W.	EACH WAY	MIN	MINIMUM		
		MISC	MISCELLANEOUS		

PLAN MARKS

BF-#	BRACED FRAME	CSS-#	CONC SUSPENDED SLAB	ML-#	MASONRY LINTEL
		CSW-#	CONC SHEAR WALL	MP-#	MASONRY PIER
CB-#	CONCRETE BEAM	CW-#	CONCRETE WALL	MW-#	MASONRY WALL
CC-#	CONCRETE COLUMN				
CDP-#	CONC DRILLED PIER	FC#	CONTINUOUS FOOTING	PD-#	PLYWOOD DIAPHRAGM
CFW-#	CONC FDTN. WALL	FM#	MAT FOOTING	PSW-#	PLYWOOD SHEAR WALL
CGB-#	CONC GRADE BEAM	FR#	RECTANGULAR FOOTING		
CJ-#	CONCRETE JOIST	FS#	SQUARE FOOTING	SBP-#	STEEL BASE PLATE
CL-#	CONCRETE LINTEL	FTS#	THICKEND SLAB FOOTING	SC-#	STEEL COLUMN
CP-#	CONCRETE PIER			SCP-#	STEEL CAP PLATE
CRW-#	CONC RETAINING WALL	MC-#	MASONRY COLUMN	SD-#	STEEL DECK
CSG-#	CONC SLAB ON GRADE	MF-#	MOMENT FRAME		

REFERENCE NOTES

REAVELEY ENGINEERS + ASSOCIATES
Consulting Structural Engineers
1515 South 1100 East
Salt Lake City, Utah 84115
P:801.486.3883
F:801.485.0911
www.reaveley.com

State of Utah-Department of Administrative Services
DIVISION OF FACILITIES CONSTRUCTION AND MANAGEMENT
4110 State Office Building/Salt Lake City, Utah 84114/538-3018

DEPARTMENT OF ALCOHOLIC BEVERAGE CONTROL
1625 South 900 West, Salt Lake City, Utah 84130/977-6800

STAMP

LICENSED CERTIFIED STRUCTURAL ENGINEER
NO. 154201
ARTHUR PARRY BROWN
UTAH
11/12/07

GENERAL STRUCTURAL NOTES
SCALE: NO SCALE

REVISIONS:

NEW DOWNTOWN SALT LAKE CITY WINE STORE
300 West Harris Ave. (1563 South)

MJSA
357 West Pierpont Avenue □ Salt Lake City, Utah 84101
Telephone 801 364 5161 □ Facsimile 801 364 5167
ARCHITECTURE INTERIOR DESIGN

DFCM PROJECT NO.: 05051030
DFCM CONTRACT NO.: 077431
MJSA PROJECT NO.: 07005
DATE: 11/12/07
SHEET: SE002

G:\data\Projects\2007\2007-138-Utah-State-Liquor-Store-3rd-West\Drawings\2007-138-SE002.dwg - Fri, 09 Nov 2007 - 2:58pm

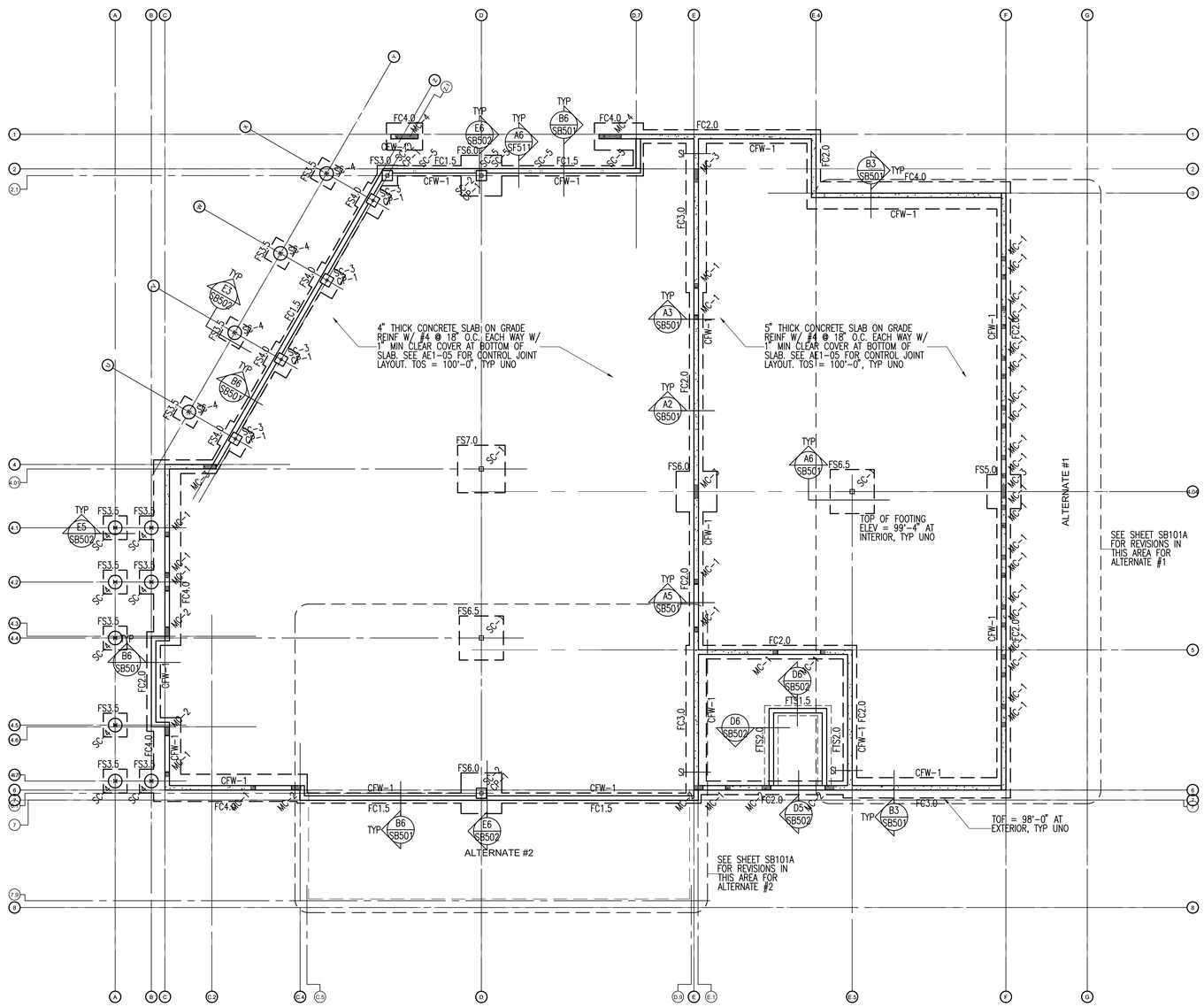

FOOTING & FOUNDATION PLAN LEGEND

LEG-FOOTING

- FOOTING STEP
- FOOTING – CONTINUOUS
- FOOTING – THICKENED SLAB
- FOOTING – SQUARE FOOTING – RECTANGULAR FOOTING – MAT FOOTING
- CONCRETE WALL, CONCRETE FOUNDATION WALL, OR CONCRETE RETAINING WALL
- CONCRETE FOUNDATION WALL – RECESSED
- CONCRETE PIER IN CONCRETE WALL. TOP OF PIER RECESSED 8" BELOW SLAB. TYP U.N.O.
- CONCRETE COLUMN
- CONCRETE JAMB COLUMN POURED MONOLITHIC WITH CONCRETE WALL
- MASONRY WALL
- MASONRY WALL – RECESSED
- MASONRY COLUMN IN MASONRY WALL
- STEEL COLUMN – TUBE
- CHANGE IN ELEVATION
- SLAB BLOCK-OUT AT COLUMN
- SLAB CONTROL/CONSTRUCTION JOINT
- SPECIAL SLAB AREA
- RECESSED/DEPRESSED SLAB
- OPENING

FOOTING & FOUNDATION PLAN NOTES

NOTE-FOOTING

1. SEE ARCHITECTURAL, CIVIL AND LANDSCAPE DRAWINGS FOR EXTERIOR CONCRETE WORK AT DOORS, SIDEWALKS ETC.
2. SEE ARCHITECTURAL DRAWINGS AND FINISH SCHEDULE FOR SLAB AREAS TO RECEIVE FLOOR TILE.
3. SEE ARCHITECTURAL DRAWINGS FOR SLAB DEPRESSIONS AND SLOPES TO DRAINS, ETC.
4. SEE ARCHITECTURAL, CIVIL AND LANDSCAPE DRAWINGS FOR ADDITIONAL EXTERIOR CONCRETE RETAINING AND / OR SITE WALLS NOT SHOWN ON THE STRUCTURAL DRAWINGS.
5. SEE E2/SB501 FOR TYPICAL EXTERIOR CONCRETE FOOTING STEP DETAIL. SEE B2/SB501 FOR TYPICAL EXTERIOR TO INTERIOR FOOTING STEP DETAIL.
6. SEE E3/SB501 FOR TYPICAL REINFORCEMENT AT WALL CORNERS AND INTERSECTIONS.
7. SEE E5/SB501 FOR TYPICAL DETAIL AT SLAB JOINTS IN CONCRETE SLABS ON GRADE.
8. SEE E6/SB501 FOR TYPICAL DETAIL AT DEPRESSED CONCRETE SLABS ON GRADE.
9. SEE D6/SB501 FOR REINFORCEMENT AT DISCONTINUOUS CONSTRUCTION / CONTROL JOINTS IN CONCRETE SLAB ON GRADE.
10. REFER TO GENERAL STRUCTURAL NOTES FOR COMPACTED STRUCTURAL FILL REQUIREMENTS BELOW FOOTINGS.

REFERENCE NOTES

REVISIONS:

NEW DOWNTOWN SALT LAKE CITY WINE STORE
300 West Harris Ave. (1563 South)

REAVELEY ENGINEERS + ASSOCIATES
Consulting Structural Engineers
1518 South 1100 East
Salt Lake City, Utah 84115
P.801.486.0993
F.801.486.0911
www.reaveley.com

State of Utah–Department of Administrative Services
DIVISION OF FACILITIES CONSTRUCTION AND MANAGEMENT
4110 State Office Building/Salt Lake City, Utah 84114/538-3018
DEPARTMENT OF ALCOHOLIC BEVERAGE CONTROL
1625 South 900 West, Salt Lake City, Utah 84130/977-6800

MJSA
357 West Pierpont Avenue □ Salt Lake City, Utah 84101
Telephone 801 364 5161 □ Facsimile 801 364 5167
ARCHITECTURE INTERIOR DESIGN

STAMP

LICENSED CERTIFIED STRUCTURAL ENGINEER
NO. 154201
ARTHUR PARRY BROWN
UTAH
11/12/07

DFCM PROJECT NO.: 05051030
DFCM CONTRACT NO.: 077431
MJSA PROJECT NO.: 07005
DATE: 11/12/07
SHEET: SB101

FOOTING & FOUNDATION PLAN
SCALE: 1/8"=1'-0"

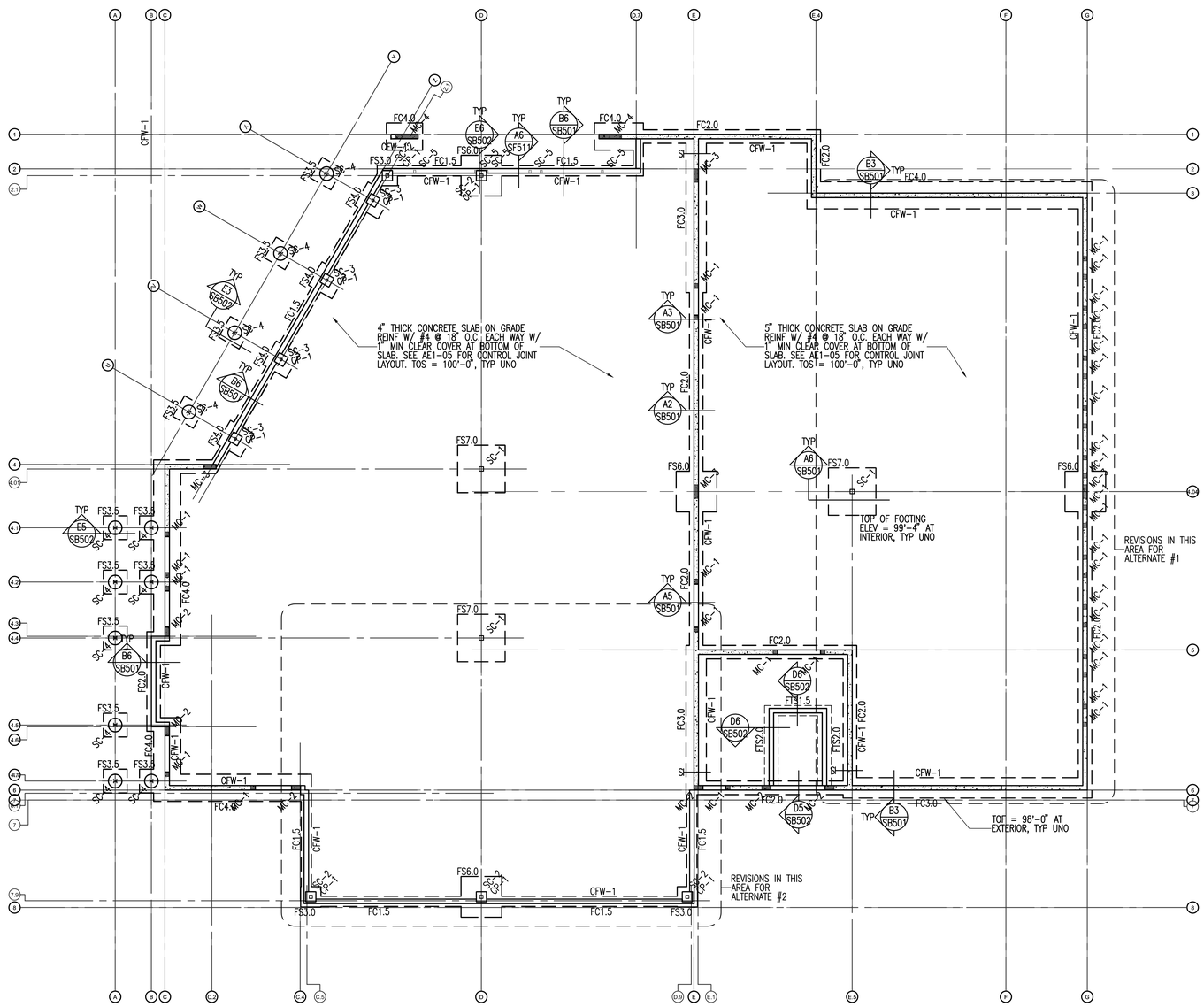

FOOTING & FOUNDATION PLAN LEGEND

LEG-FOOTING

- FS FOOTING STEP
- FOOTING – CONTINUOUS
- FOOTING – THICKENED SLAB
- FOOTING – SQUARE FOOTING – RECTANGULAR FOOTING – MAT FOOTING
- CONCRETE WALL, CONCRETE FOUNDATION WALL, OR CONCRETE RETAINING WALL
- CONCRETE FOUNDATION WALL – RECESSED
- CONCRETE PIER IN CONCRETE WALL. TOP OF PIER RECESSED 8" BELOW SLAB. TYP U.N.O.
- CONCRETE COLUMN
- CONCRETE JAMB COLUMN POURED MONOLITHIC WITH CONCRETE WALL
- MASONRY WALL
- MASONRY WALL – RECESSED
- MASONRY COLUMN IN MASONRY WALL
- STEEL COLUMN – TUBE
- 6" CHANGE IN ELEVATION
- SLAB BLOCK-OUT AT COLUMN
- CJ SLAB CONTROL/CONSTRUCTION JOINT
- SPECIAL SLAB AREA
- RECESSED/DEPRESSED SLAB
- OPENING

FOOTING & FOUNDATION PLAN NOTES

NOTE-FOOTING

1. SEE ARCHITECTURAL, CIVIL AND LANDSCAPE DRAWINGS FOR EXTERIOR CONCRETE WORK AT DOORS, SIDEWALKS ETC.
2. SEE ARCHITECTURAL DRAWINGS AND FINISH SCHEDULE FOR SLAB AREAS TO RECEIVE FLOOR TILE.
3. SEE ARCHITECTURAL DRAWINGS FOR SLAB DEPRESSIONS AND SLOPES TO DRAINS, ETC.
4. SEE ARCHITECTURAL, CIVIL AND LANDSCAPE DRAWINGS FOR ADDITIONAL EXTERIOR CONCRETE RETAINING AND / OR SITE WALLS NOT SHOWN ON THE STRUCTURAL DRAWINGS.
5. SEE E2/SB501 FOR TYPICAL EXTERIOR CONCRETE FOOTING STEP DETAIL. SEE B2/SB501 FOR TYPICAL EXTERIOR TO INTERIOR FOOTING STEP DETAIL.
6. SEE E3/SB501 FOR TYPICAL REINFORCEMENT AT WALL CORNERS AND INTERSECTIONS.
7. SEE E5/SB501 FOR TYPICAL DETAIL AT SLAB JOINTS IN CONCRETE SLABS ON GRADE.
8. SEE E6/SB501 FOR TYPICAL DETAIL AT DEPRESSED CONCRETE SLABS ON GRADE.
9. SEE D6/SB501 FOR REINFORCEMENT AT DISCONTINUOUS CONSTRUCTION / CONTROL JOINTS IN CONCRETE SLAB ON GRADE.
10. REFER TO GENERAL STRUCTURAL NOTES FOR COMPACTED STRUCTURAL FILL REQUIREMENTS BELOW FOOTINGS.

REFERENCE NOTES

REVISIONS:

NEW DOWNTOWN SALT LAKE CITY WINE STORE
300 West Harris Ave. (1563 South)

REAVELEY ENGINEERS + ASSOCIATES
Consulting Structural Engineers
1818 South 1100 East
Salt Lake City, Utah 84115
P.801.486.0993
F.801.486.0917
www.reaveley.com

MJSA
357 West Pierpont Avenue □ Salt Lake City, Utah 84101
Tel: 801.521.8677 Fax: 801.521.8677
ARCHITECTURE INTERIOR DESIGN

State of Utah–Department of Administrative Services

DIVISION OF FACILITIES CONSTRUCTION AND MANAGEMENT
4110 State Office Building/Salt Lake City, Utah 84114/538-3018

DEPARTMENT OF ALCOHOLIC BEVERAGE CONTROL
1625 South 900 West, Salt Lake City, Utah 84130/977-6800

STAMP

LICENSED CERTIFIED STRUCTURAL ENGINEER
NO. 154201
ARTHUR PARRY BROWN
UTAH
11/12/07

DFCM PROJECT NO.:	05051030
DFCM CONTRACT NO.:	077431
MJSA PROJECT NO.:	07005
DATE:	11/12/07
SHEET:	SB101A

FOOTING & FOUNDATION PLAN

SCALE: 1/8"=1'-0"

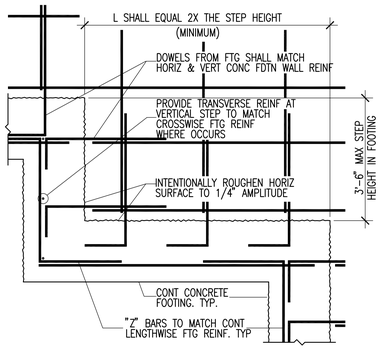

E2 SB501 TYPICAL FOOTING STEP
NO SCALE
CF-TYP01

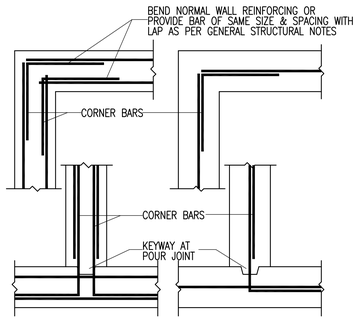

E3 SB501 TYPICAL REINFORCEMENT AT TYPICAL WALL CORNERS & INTERSECTIONS - PLAN VIEW
NO SCALE
CF-TYP02

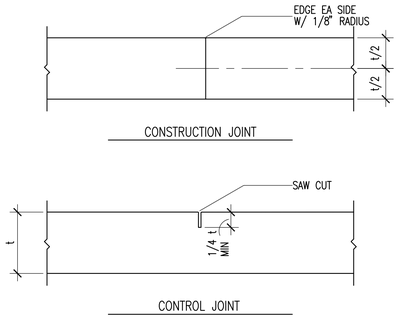

E5 SB501 TYPICAL SLAB JOINTS
NO SCALE
2007-138-SB501/E5

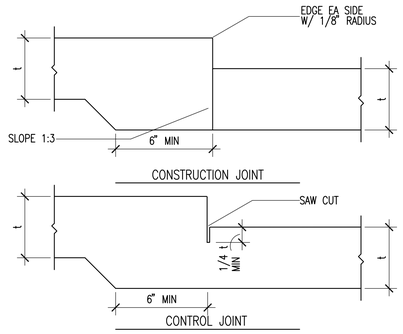

E6 SB501 TYPICAL SLAB JOINTS AT DEPRESSED SLAB
NO SCALE
2007-138-SF501/E6

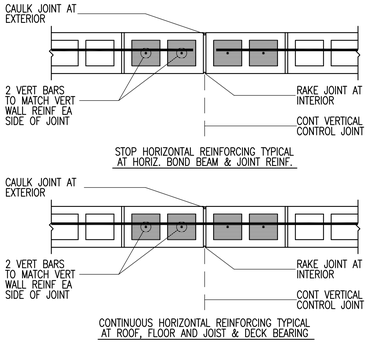

D2 SB501 TYP CONTROL JOINTS IN 8" MASONRY WALLS
NO SCALE
CF-TYP06

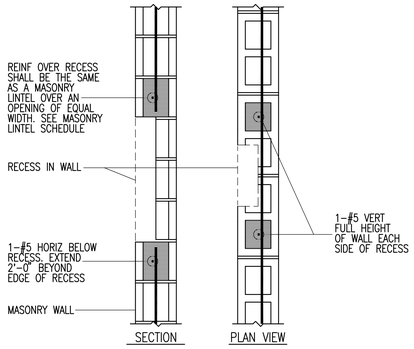

D3 SB501 TYPICAL RECESS IN 8" MASONRY WALL
NO SCALE
CF-TYP07

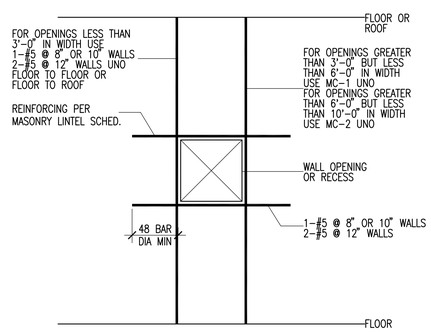

D5 SB501 TYPICAL REINFORCING AROUND MISCELLANEOUS OR RECESSED MASONRY OPENINGS
NO SCALE
CF-TYP13

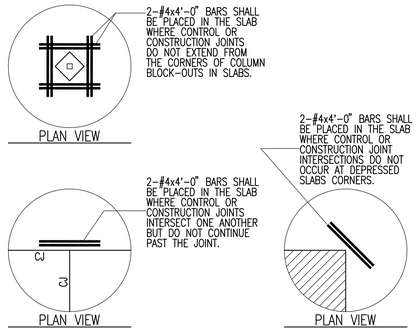

D6 SB501 TYPICAL SLAB REINFORCING AT DISCONTINUOUS SLAB JOINTS
NO SCALE
CF-TYP10

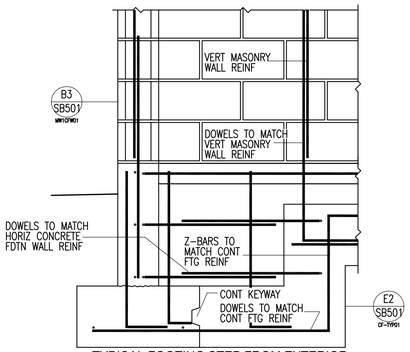

B2 SB501 TYPICAL FOOTING STEP FROM EXTERIOR FDTN WALL TO INTERIOR WALL
NO SCALE
MH1CFW12

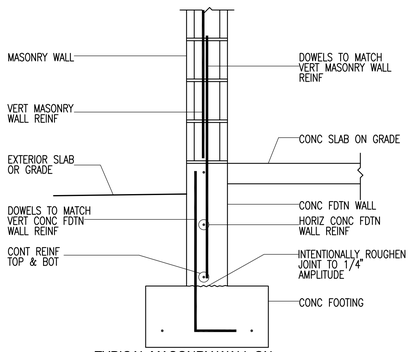

B3 SB501 TYPICAL MASONRY WALL ON FOUNDATION WALL
NO SCALE
MH1CFW01

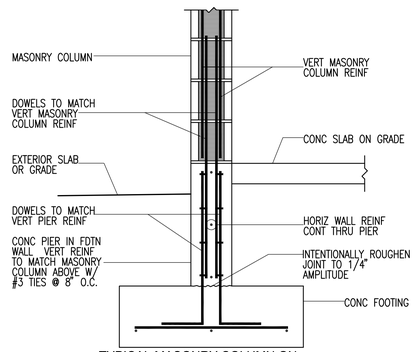

B5 SB501 TYPICAL MASONRY COLUMN ON CONCRETE PIER IN FOUNDATION WALL
NO SCALE
MH1CFW02

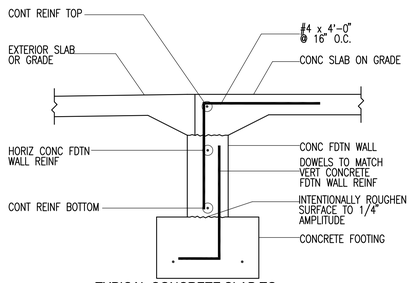

B6 SB501 TYPICAL CONCRETE SLAB TO FOUNDATION WALL AT DOOR OPENING
NO SCALE
CWT-CF16

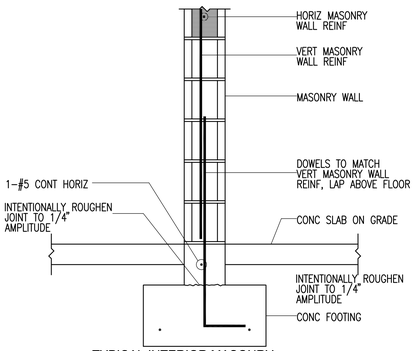

A2 SB501 TYPICAL INTERIOR MASONRY WALL ON CONCRETE CURB WALL
NO SCALE
MH4CFW06

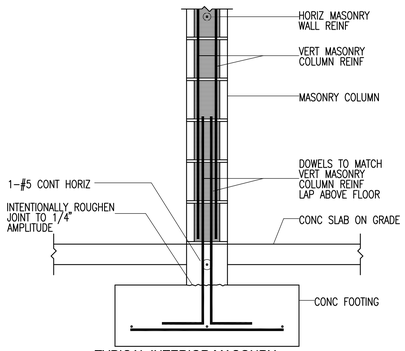

A3 SB501 TYPICAL INTERIOR MASONRY COLUMN ON CONCRETE CURB
NO SCALE
MH4CFW07

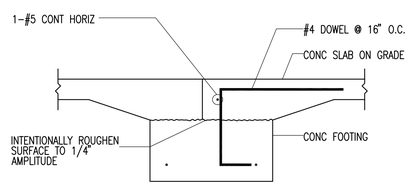

A5 SB501 TYPICAL DOOR OPENING AT INTERIOR
NO SCALE
MH4CFW08

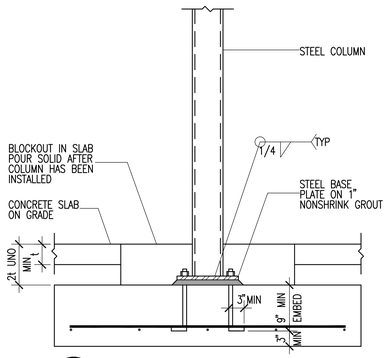

A6 SB501 TYPICAL STEEL COLUMN BASE
NO SCALE
SC1-CF-01

REFERENCE NOTES

REVISIONS:

NEW DOWNTOWN SALT LAKE CITY WINE STORE
300 West Harris Ave. (1563 South)

REAVELEY ENGINEERS + ASSOCIATES
Consulting Structural Engineers
1515 South 1100 East
Salt Lake City, Utah 84115
P:801.486.8888
F:801.485.0611
www.reaveley.com

State of Utah-Department of Administrative Services
DIVISION OF FACILITIES CONSTRUCTION AND MANAGEMENT
4110 State Office Building/Salt Lake City, Utah 84114/538-3018
DEPARTMENT OF ALCOHOLIC BEVERAGE CONTROL
1625 South 900 West, Salt Lake City, Utah 84130/977-6800

MJSA
307 West Pierpont Avenue
Salt Lake City, Utah 84101
801.521.8677 801.521.8697 fax
ARCHITECTURE INTERIOR DESIGN

STAMP

LICENSED CERTIFIED STRUCTURAL ENGINEER
NO. 154201
ARTHUR PARRY BROWN
UTAH
11/12/07

DFCM PROJECT NO.: 05051030
DFCM CONTRACT NO.: 077431
MJSA PROJECT NO.: 07005
DATE: 11/12/07

FOOTING & FOUNDATION DETAILS
SCALE: NO SCALE
SHEET: SB501

© Salt Lake City Corporation

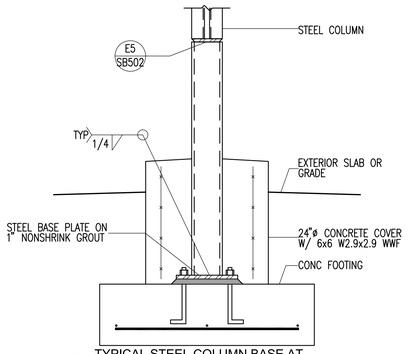

E3 SB502 TYPICAL STEEL COLUMN BASE AT CONCRETE FOOTING
NO SCALE
2007-138-SF502/E3

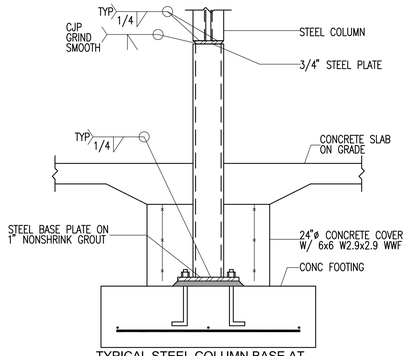

E5 SB502 TYPICAL STEEL COLUMN BASE AT CONCRETE FOOTING
NO SCALE
2007-138-SF502/E5

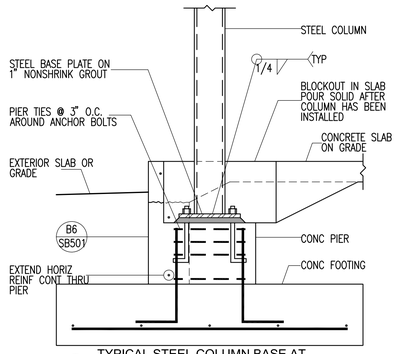

E6 SB502 TYPICAL STEEL COLUMN BASE AT CONCRETE PIER IN FOUNDATION WALL
NO SCALE
2007-138-SF502/E6

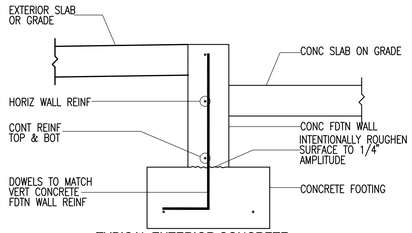

D5 SB502 TYPICAL EXTERIOR CONCRETE FOUNDATION WALL AT DOCK LIFT
NO SCALE
2007-138-SB502/D5

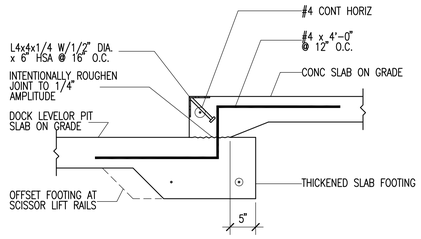

D6 SB502 TYPICAL DOCK LEVELER PIT DETAIL
NO SCALE
2007-138-SB502/D6

REFERENCE NOTES

REVISIONS:

NEW DOWNTOWN SALT LAKE CITY WINE STORE
300 West Harris Ave. (1563 South)

REAVELEY ENGINEERS + ASSOCIATES
Consulting Structural Engineers
1515 South 1100 East
Salt Lake City, Utah 84115
P.801.486.0993
F.801.486.0911
www.reaveley.com

State of Utah–Department of Administrative Services
DIVISION OF FACILITIES CONSTRUCTION AND MANAGEMENT
4110 State Office Building/Salt Lake City, Utah 84114/538-3018

DEPARTMENT OF ALCOHOLIC BEVERAGE CONTROL
1625 South 900 West, Salt Lake City, Utah 84130/977-6800

MJSA
357 West Pierpont Avenue □ Salt Lake City, Utah 84101
Telephone 801 364 5161 □ Facsimile 801 364 5167
ARCHITECTURE INTERIOR DESIGN

STAMP

DFCM PROJECT NO.: 05051030
DFCM CONTRACT NO.: 077431
MJSA PROJECT NO.: 07005
DATE: 11/12/07
SHEET: SB502

FOOTING & FOUNDATION DETAILS
SCALE: NO SCALE

CONCRETE REINFORCING BAR LAP SPLICE SCHEDULE

RBLS-1

BAR SIZE Fy = 60 KSI	TENSION BARS																COMP. BARS
	f'c = 3000 PSI				f'c = 4000 PSI				f'c = 5000 PSI				f'c = 6000 PSI				f'c = ALL
	REGULAR CLASS		TOP CLASS		REGULAR CLASS		TOP CLASS		REGULAR CLASS		TOP CLASS		REGULAR CLASS		TOP CLASS		
	A	B	A	B	A	B	A	B	A	B	A	B	A	B	A	B	
#3	17"	22"	22"	28"	15"	19"	19"	25"	13"	17"	17"	22"	12"	16"	16"	20"	12"
#4	22"	29"	29"	38"	19"	25"	25"	33"	17"	23"	23"	29"	16"	21"	21"	27"	15"
#5	28"	36"	36"	47"	24"	31"	31"	41"	22"	28"	28"	36"	20"	26"	26"	33"	19"
#6	33"	43"	43"	56"	29"	37"	37"	49"	26"	34"	34"	44"	24"	31"	31"	40"	23"
#7	48"	63"	63"	81"	42"	54"	54"	71"	38"	49"	49"	63"	34"	45"	45"	58"	27"
#8	55"	72"	72"	93"	48"	62"	62"	81"	43"	56"	56"	72"	39"	51"	51"	66"	30"
#9	62"	81"	81"	105"	54"	70"	70"	91"	48"	63"	63"	81"	44"	57"	57"	74"	34"
#10	70"	91"	91"	118"	61"	79"	79"	102"	54"	71"	71"	92"	50"	64"	64"	84"	39"
#11	78"	101"	101"	131"	67"	87"	87"	114"	60"	78"	78"	102"	55"	71"	71"	93"	43"

NOTES: THESE NOTES SHALL BE USED FOR ALL SPLICES, UNLESS NOTED OTHERWISE ON DRAWINGS.

1. TOP BARS ARE HORIZONTAL BARS, SPLICED SO THAT 12" OR MORE OF FRESH CONCRETE IS CAST IN THE MEMBER BELOW THE REINFORCING BAR.
2. CLASS A SPLICES MAY BE USED ONLY WHEN 50% OR LESS OF THE BARS ARE SPLICED WITHIN THE LAP SPLICE LENGTH.
3. CLASS B SPLICES SHALL BE USED FOR ALL SPLICES IN SLABS, BEAMS, JOISTS, WALLS, MOMENT RESISTING COLUMNS, AND JAMB COLUMNS, UNLESS THEY MEET THE REQUIREMENTS OF NOTE #2 ABOVE.
4. TIES AND STIRRUPS SHALL NOT BE SPLICED.
5. A. FOR BUNDLED BARS OF THREE OR LESS, LAP SPLICE LENGTHS SHALL BE MULTIPLIED BY 1.2.
   B. FOR BUNDLED BARS OF FOUR OR MORE, LAP LENGTHS SHALL BE MULTIPLIED BY 1.33.
   C. INDIVIDUAL BAR SPLICES WITHIN A BUNDLE SHALL NOT OVERLAP. ENTIRE BUNDLES SHALL NOT BE LAP SPLICED.
6. FOR ALL LIGHTWEIGHT CONCRETE, LAP LENGTHS SHALL BE MULTIPLIED BY 1.3.
7. FOR ALL EPOXY COATED BARS WITH COVER LESS THAN 3 BAR DIAMETERS OF CLEAR SPACING LESS THAN 6 BAR DIAMETERS THE LAP SPLICE LENGTHS SHALL BE MULTIPLIED BY 1.5. FOR ALL OTHER EPOXY BARS THE SPLICE LENGTHS SHALL BE MULTIPLIED BY 1.2
8. THE BAR LAP SPLICE LENGTHS SHALL BE MULTIPLIED BY 1.5 WHEN EITHER OF THE FOLLOWING IS TRUE:
   A. CLEAR SPACING OF BARS BEING DEVELOPED IS LESS THAN ONE BAR DIAMETER, CLEAR COVER IS LESS THAN ONE BAR DIAMETER AND STIRRUPS OR TIES ALONG THE LENGTH OF THE SPLICE ARE LESS THAN THE CODE MINIMUM.
   B. CLEAR SPACING OF BARS BEING DEVELOPED IS LESS THAN 2 BAR DIAMETERS AND CLEAR COVER IS LESS THAN ONE BAR DIAMETER.

AS PER ACI 318-02

MASONRY REINFORCING BAR LAP SPLICE SCHEDULE

MRBLS-1500

BAR SIZE	f'm = 1500 psi							f'm = 2500 psi		
	6" CMU CLASS	8" CMU CLASS		10" CMU CLASS		12" CMU CLASS		6" ATLAS CLASS	8" ATLAS CLASS	
	A	A	B	A	B	A	B	A	A	B
#3	19"	19"	19"	19"	19"	19"	19"	15"	15"	15"
#4	25"	25"	30"	25"	28"	25"	28"	20"	20"	24"
#5	39"	31"	49"	31"	45"	31"	45"	31"	24"	40"
#6	81"	57"	**	53"	92"	53"	92"	64"	45"	87"
#7	–	79"	**	61"	**	61"	**	–	63"	**
#8	–	**	**	87"	**	75"	**	–	89"	**
#9	–	–	–	**	**	90"	**	–	–	–

NOTES:

1. CLASS A SPLICES MAY BE USED WHEN ONLY ONE BAR IS CONTINUOUS IN THE MASONRY CELL OR COURSE.
2. CLASS B SPLICES SHALL BE USED WHEN TWO BARS ARE CONTINUOUS IN THE MASONRY CELL OR COURSE.
3. ** INDICATES THAT A LAP SPLICE IS NOT ALLOWED AND MECHANICAL BAR COUPLERS ARE REQUIRED FOR THE BAR SPLICES.
4. WHERE VERTICAL BARS HAVE A REQUIRED LAP SPLICE GREATER THAN THE HEIGHT OF THE GROUT POUR, THE BAR SPLICE SHALL BE MADE WITH A MECHANICAL BAR COUPLER. WHERE THE HEIGHT OF THE GROUT POUR EXCEEDS 60 INCHES, HIGH LIFT GROUTING PROCEDURES SHALL BE FOLLOWED.
5. WHERE MECHANICAL BAR COUPLERS ARE USED, THE CONNECTOR SHALL DEVELOP 125% OF THE SPECIFIED YIELD STRENGTH OF THE BAR IN TENSION AND COMPRESSION.

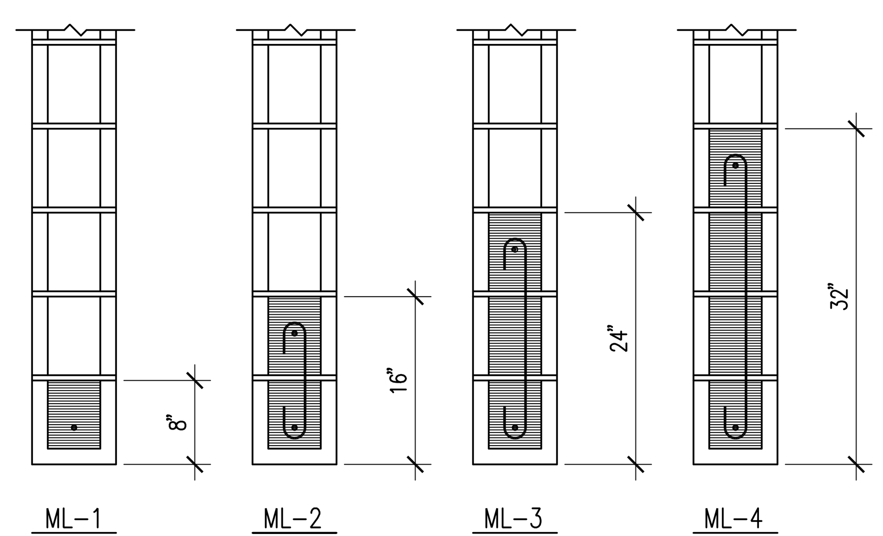

A2 / SB601 — TYPICAL MASONRY LINTEL DETAILS

NO SCALE

ML-DET

MASONRY WALL SCHEDULE

MW-1

MARK	THICK	MATERIALS	REINFORCING			NOTES
			VERTICAL	HORIZONTAL	JOINTS	
MW-1	8"	CMU	#5 @ 32" O.C.	#5 @ 40" O.C.	NONE REQ'D	
MW-2	8"	CMU	#5 @ 24" O.C.	#5 @ 32" O.C.	NONE REQ'D	

NOTES:

1. PROVIDE SCHEDULED VERTICAL REINFORCING BARS AT ALL CORNERS, ENDS OF WALLS, AND SPACED AS SCHEDULED, UNLESS NOTED OTHERWISE.
2. HORIZONTAL REINFORCING BARS SHALL BE CONTINUOUS AT ALL CORNERS AND AT INTERSECTING WALLS. PROVIDE CORNER BARS WITH THE REQUIRED LAP SPLICE LENGTH.
3. TERMINATE ALL HORIZONTAL REINFORCING BARS AT ENDS OF WALLS AND EDGES OF OPENINGS WITH A STANDARD HOOK AROUND VERTICAL REINFORCING BARS.
4. SEE PLANS, DETAILS AND GENERAL STRUCTURAL NOTES FOR ADDITIONAL REINFORCING REQUIREMENTS.
5. GROUT SOLID ALL CELLS BELOW GRADE, CELLS CONTAINING EMBEDS (HSA'S, DBA'S, ANCHOR BOLTS, ETC.), AND CELLS CONTAINING REINFORCING. CONSOLIDATE GROUT AS PER THE GENERAL STRUCTURAL NOTES.
6. HORIZONTAL WALL REINFORCING SHALL BE PLACED INSIDE THE VERTICALS OF MASONRY COLUMNS.
7. HORIZONTAL WALL REINFORCING SHALL CONTINUE THROUGH MASONRY LINTELS. WHERE BOTH HORIZONTAL WALL REINFORCING AND LINTEL REINFORCING OCCUR IN THE SAME COURSE, THE LARGER BARS ARE TO REPLACE THE SMALLER BARS.

MASONRY COLUMN SCHEDULE

MC-1

MARK	SIZE	REINFORCING		REMARKS
		VERTICAL	TIES	
MC-1	8"x8"	1-#5	NONE REQ'D	
MC-2	8"x16"	2-#5	NONE REQ'D	
MC-3	8"x24"	3-#5	NONE REQ'D	
MC-4	8"x40"	5-#5	NONE REQ'D	

NOTES:

1. THE CENTERLINE OF VERTICAL BARS SHALL BE LOCATED 2.1/2" FROM THE FACE OF THE MASONRY. HORIZONTAL BARS SHALL BE LOCATED TO THE INSIDE OF THE VERTICAL BARS.
2. UNLESS NOTED OTHERWISE, VERTICAL REINFORCING AND TIES SHALL EXTEND FULL HEIGHT OF THE WALL.
3. MASONRY COLUMN VERTICAL BARS OR DOWELS IN CONCRETE FOUNDATION WALLS SHALL BE TIED WITH #3 TIES @ 8" O.C.

MASONRY LINTEL SCHEDULE

ML-1

MARK	LINTEL DEPTH	LINTEL WIDTH	MASONRY TYPE	LINTEL		MAXIMUM SPAN	REMARKS
				HORIZONTAL	STIRRUPS		
ML-1	8"	6",8",10" OR 12"	BRICK OR CMU	1- #7 CONT.	-----	3'-4"	
ML-2	16"	6",8",10" OR 12"	BRICK OR CMU	1- #7 CONT. TOP & BOT.	#3 @ 8" O.C.	5'-4"	
ML-3	24"	6",8",10" OR 12"	BRICK OR CMU	1- #7 CONT. TOP & BOT.	#3 @ 8" O.C.	8'-0"	
ML-4	32"	6",8",10" OR 12"	BRICK OR CMU	1- #7 CONT. TOP & BOT.	#3 @ 8" O.C.	10'-0"	
ML-5	48"	8"	CMU	1- #7 CONT. TOP & BOT.	#3 @ 8" O.C.	-----	

NOTES:

1. MASONRY LINTELS ML-1 THROUGH ML-4 SHALL BE USED OVER OPENINGS IN MASONRY WALLS WHEN A SPECIFIC MASONRY LINTEL IS NOT OTHERWISE SPECIFIED. THE MASONRY LINTEL TO BE USED SHALL BE DETERMINED BY THE MAXIMUM SPAN AS SPECIFIED IN THIS SCHEDULE. WHEN A SPECIFIC MASONRY LINTEL IS CALLED OUT ON THE PLAN, THE MAXIMUM SPAN AS NOTED IN THIS SCHEDULE SHALL NOT APPLY
2. MASONRY LINTELS ML-1 THROUGH ML-4 SHALL NOT BE LOCATED BELOW ANY FLOOR, OR ROOF BEAM, OR GIRDER, OR ANY OTHER CONCENTRATED LOAD UNLESS SHOWN SPECIFICALLY ON THE PLAN SHEET. JOISTS SHALL NOT BEAR ON ANY LINTEL LESS THAN 16" DEEP.
3. FOR MASONRY LINTELS NOT SHOWN ON THE DRAWINGS THAT CARRY ANY FLOOR, OR ROOF BEAM, OR GIRDER, OR ANY OTHER CONCENTRATED LOAD, OR THAT SPAN GREATER THAN 10'-0" CONSULT THE STRUCTURAL ENGINEER.
4. EXTEND ALL HORIZONTAL REINFORCING 48 BAR DIAMETERS BEYOND THE EDGE OF THE OPENING. IF HORIZONTAL REINFORCING CANNOT BE EXTENDED 48 BAR DIAMETERS BEYOND THE EDGE OF THE OPENING, PROVIDE 90 DEGREE STANDARD HOOK.
5. GROUT MASONRY LINTELS MONOLITHICALLY WITH THE SUPPORT WALL OR COLUMN AT EACH END.
6. SPLICE TOP BARS AT MIDSPAN OF LINTEL ONLY.
7. SPLICE BOTTOM BARS OVER SUPPORTS ONLY.
8. FOR WALL ABOVE LINTEL, DOWEL VERTICAL REINFORCING INTO FULL DEPTH OF THE LINTEL OR 48 BAR DIAMETERS, WHICHEVER IS LESS.
9. HORIZONTAL WALL REINFORCING SHALL CONTINUE THROUGH MASONRY LINTELS. WHERE BOTH HORIZONTAL WALL REINFORCING AND LINTEL REINFORCING WOULD OCCUR IN THE SAME COURSE, THE LARGER BARS ARE TO REPLACE THE SMALLER BARS.

CONCRETE FOOTING SCHEDULE

CF-2000

MARK	WIDTH	LENGTH	THICK	CROSSWISE REINFORCING				LENGTHWISE REINFORCING				REMARKS
				NO.	SIZE	LENGTH	SPACE	NO.	SIZE	LENGTH	SPACE	
FTS1.5	1'-6"	CONT.	12"	--	NONE	REQ'D	--	3	#4	CONT.	6"	
FTS2.0	2'-0"	CONT.	12"	--	NONE	REQ'D	--	3	#4	CONT.	9"	
FC1.5	1'-6"	CONT.	12"	--	NONE	REQ'D	--	3	#4	CONT.	6"	
FC2.0	2'-0"	CONT.	12"	--	NONE	REQ'D	--	3	#4	CONT.	9"	
FC2.5	2'-6"	CONT.	12"	--	#5	2'-0"	14"	3	#5	CONT.	12"	
FC3.0	3'-0"	CONT.	12"	--	#5	2'-6"	14"	3	#5	CONT.	15"	
FC3.5	3'-6"	CONT.	12"	--	#5	3'-0"	14"	3	#5	CONT.	18"	
FC4.0	4'-0"	CONT.	12"	--	#5	3'-6"	14"	4	#5	CONT.	14"	
FC4.5	4'-6"	CONT.	12"	--	#5	4'-0"	14"	4	#5	CONT.	16"	
FC5.0	5'-0"	CONT.	12"	--	#5	4'-6"	14"	5	#5	CONT.	13.5"	
FC5.5	5'-6"	CONT.	12"	--	#5	5'-0"	12"	5	#5	CONT.	15"	
FS3.0	3'-0"	3'-0"	12"	3	#5	2'-6"	15"	3	#5	2'-6"	15"	
FS3.5	3'-6"	3'-6"	12"	3	#5	3'-0"	18"	3	#5	3'-0"	18"	
FS4.0	4'-0"	4'-0"	12"	4	#5	3'-6"	14"	4	#5	3'-6"	14"	
FS4.5	4'-6"	4'-6"	12"	4	#5	4'-0"	16"	4	#5	4'-0"	16"	
FS5.0	5'-0"	5'-0"	12"	5	#5	4'-6"	13.5"	5	#5	4'-6"	13.5"	
FS5.5	5'-6"	5'-6"	14"	9	#4	5'-0"	7.5"	9	#4	5'-0"	7.5"	
FS6.0	6'-0"	6'-0"	14"	6	#5	5'-6"	13.2"	6	#5	5'-6"	13.2"	
FS6.5	6'-6"	6'-6"	16"	8	#5	6'-0"	10.3"	8	#5	6'-0"	10.3"	
FS7.0	7'-0"	7'-0"	15"	9	#5	6'-6"	9.8"	9	#5	6'-6"	9.8"	
FS7.5	7'-6"	7'-6"	16"	6	#6	7'-0"	16.8"	6	#6	7'-0"	16.8"	
FS8.0	8'-0"	8'-0"	18"	7	#6	7'-6"	15"	7	#6	7'-6"	15"	
FS8.5	8'-6"	8'-6"	18"	8	#6	8'-0"	13.7"	8	#6	8'-0"	13.7"	
FS9.0	9'-0"	9'-0"	19"	9	#6	8'-6"	12.75"	9	#6	8'-6"	12.75"	

NOTES:

1. PLACE ALL FOOTING REINFORCING IN BOTTOM OF FOOTING WITH 3" CLEAR CONCRETE COVER UNLESS NOTED OTHERWISE.
2. TOP REINFORCING, WHERE SPECIFIED, SHALL BE PLACED IN THE TOP OF THE FOOTING WITH 2" CLEAR CONCRETE COVER.
3. SPOT FOOTINGS SHALL BE CENTERED UNDER COLUMNS AND CONTINUOUS FOOTINGS SHALL BE CENTERED UNDER WALLS, UNLESS NOTED OTHERWISE.
4. ALL FOOTINGS SHALL BE FORMED. FOOTINGS SHALL NOT BE EARTH FORMED OR OVERSIZED WITHOUT WRITTEN PERMISSION FROM THE STRUCTURAL ENGINEER.

CONCRETE FOUNDATION WALL SCHEDULE

CFW-1

MARK	THICK	HORIZONTAL REINFORCING	VERTICAL REINFORCING	TOP & BOTTOM HORIZONTAL BARS	PLACEMENT
CFW-1	8"	#5 @ 15" O.C.	#4 @ 16" O.C.	2-#5	TYPE A

PLACEMENT TYPE

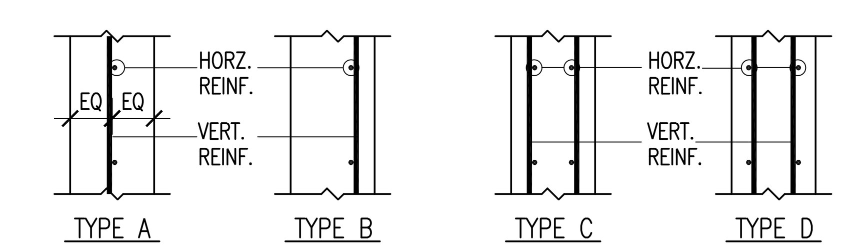

E.F. = EACH FACE
O.F. = OUTSIDE FACE (AGAINST SOIL)
I.F. = INSIDE FACE
3L = THREE LAYERS

CONCRETE PIER SCHEDULE

CP-1

MARK	SIZE	REINFORCING		REMARKS
		VERTICAL	TIES	
CP-1	14"x14"	4-#5	#4 @ 6" O.C.	
CP-2	16"x16"	8-#5	#4 @ 6" O.C.	

REFERENCE NOTES

REVISIONS:

NEW DOWNTOWN SALT LAKE CITY WINE STORE
300 West Harris Ave. (1563 South)

REAVELEY ENGINEERS + ASSOCIATES
Consulting Structural Engineers
1515 South 1100 East
Salt Lake City, Utah 84115
P:801.486.3883
F:801.485.0911
www.reaveley.com

State of Utah-Department of Administrative Services

DIVISION OF FACILITIES CONSTRUCTION AND MANAGEMENT
4110 State Office Building/Salt Lake City, Utah 84114/538-3018

DEPARTMENT OF ALCOHOLIC BEVERAGE CONTROL
1625 South 900 West, Salt Lake City, Utah 84130/977-6800

MJSA
ARCHITECTURE INTERIOR DESIGN
357 West Pierpont Avenue ☐ Salt Lake City, Utah 84101
Telephone 801 364 5161 ☐ Facsimile 801 364 5167

STAMP

LICENSED CERTIFIED STRUCTURAL ENGINEER NO. 154201 ARTHUR PARRY BROWN UTAH
11/12/07

DFCM PROJECT NO.: 05051030

DFCM CONTRACT NO.: 077431

MJSA PROJECT NO.: 07005

DATE: 11/12/07

STRUCTURAL SCHEDULES

SCALE: NO SCALE

SHEET: SB601

G:\data\Projects\2007\2007-138-Utah-State-Liquor-Store-3rd-West\Drawings\2007-138-SB601.dwg - Fri, 09 Nov 2007 - 2:55pm

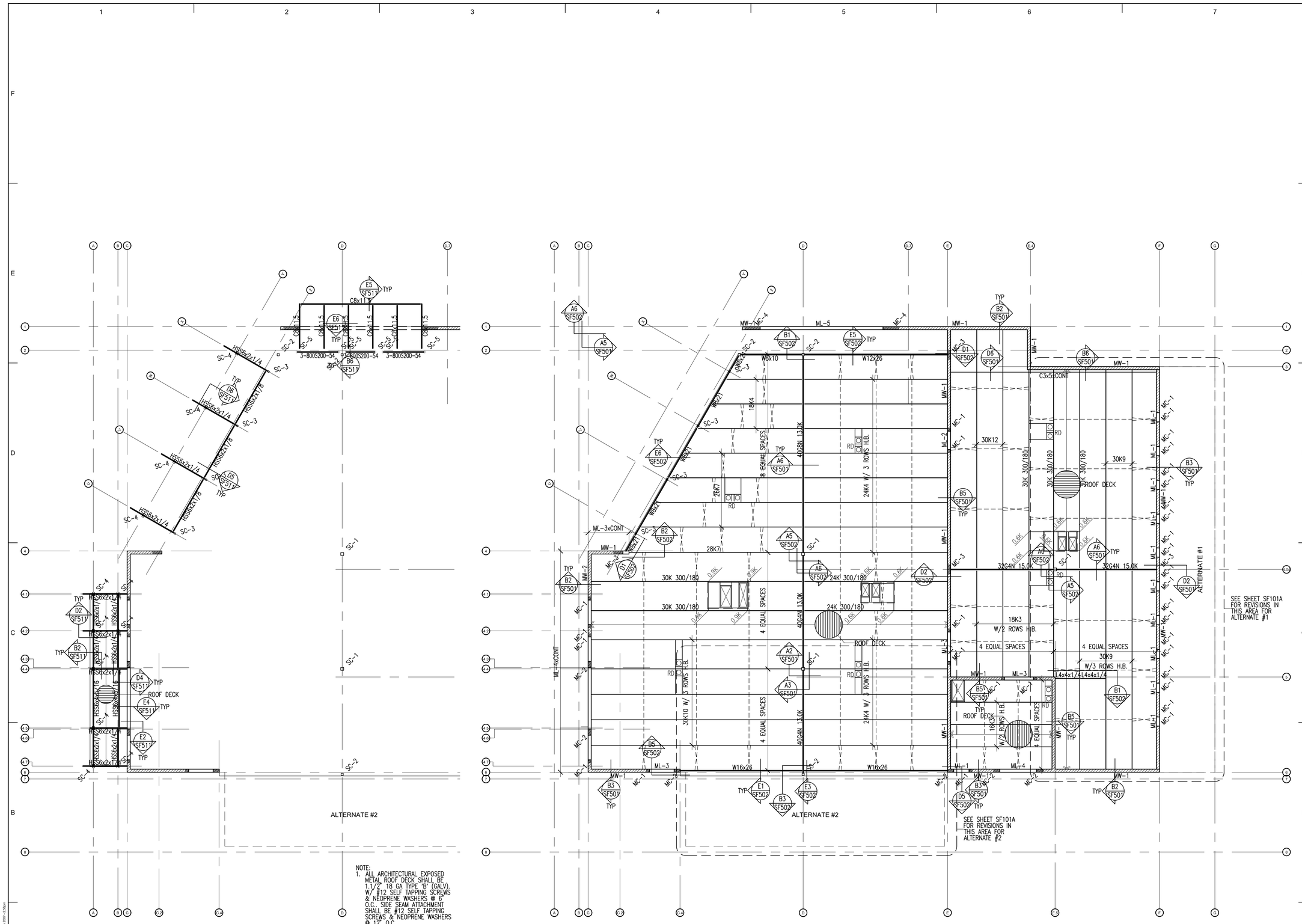

NOTE:
1. ALL ARCHITECTURAL EXPOSED METAL ROOF DECK SHALL BE 1.1/2" 18 GA TYPE 'B' (GALV). W/ #12 SELF TAPPING SCREWS & NEOPRENE WASHERS @ 6" O.C.. SIDE SEAM ATTACHMENT SHALL BE #12 SELF TAPPING SCREWS & NEOPRENE WASHERS @ 12" O.C..

A1 SF101 CANOPY/TRELLIS/AWNING FRAMING PLAN
SCALE: 1/8"=1'-0"

A5 SF101 ROOF FRAMING PLAN
SCALE: 1/8"=1'-0"

REFERENCE NOTES

ROOF FRAMING PLAN LEGEND

LEG-ROOF

- MASONRY WALL
- MASONRY LINTEL IN MASONRY WALL
- MASONRY COLUMN IN MASONRY WALL
- STEEL COLUMN – TUBE
- MOMENT CONNECTION
- STEEL BEAM OR GIRDER
- STEEL JOIST OR PURLIN
- CROSS BRIDGING
- HORIZONTAL BRIDGING
- CHANGE IN ELEVATION
- ROOF DECK
- SPECIAL DECK AREA
- OPENING

ROOF FRAMING PLAN NOTES

NOTE-ROOF

1. VERIFY SIZE, WEIGHT, LOCATION AND CONFIGURATION OF ALL ROOF TOP EQUIPMENT WITH ARCHITECT AND MECHANICAL ENGINEER. PROVIDE STEEL FRAMES FOR SUPPORT OF ROOF TOP EQUIPMENT AS INDICATED IN DETAIL E3/SF501 COORDINATE OPENINGS WITH MECHANICAL AND ELECTRICAL AND GENERAL CONTRACTORS.
2. ALL ROOF OPENINGS SHALL BE FRAMED AS INDICATED IN DETAIL E5 & E6/SF501. FOR ROUND OPENINGS WHICH ARE LESS THAN 12"ø SEE DETAIL D5/SF501.
3. SEE ARCHITECTURAL FOR ROOF SLOPES AND DRAINS. SEE D3/SF501 FOR ROOF DRAIN OPENING FRAME.
4. OPEN WEB STEEL JOISTS AND JOIST GIRDERS SHALL BE DESIGNED BY THE MANUFACTURER TO SUPPORT THE MECHANICAL AND LATERAL LOADS SHOWN ON THE ROOF FRAMING PLANS IN ADDITION TO THE UNIFORM AND POINT LOADS SHOWN.
5. ±#.#K ADD – INDICATES ADDITIONAL UPLIFT / DOWNWARD FORCE ON STEEL JOIST IN ADDITION TO REGULAR LOADS.
6. ALL LOADS SUPPORTED BY OPEN WEB STEEL JOISTS AND GIRDERS SHALL BE LOCATED WITHIN 6" OF JOIST OR GIRDER PANEL POINT OR THE JOIST OR GIRDER SHALL BE REINFORCED PER DETAIL E2/SF501.
7. SEE DETAIL D2/SF501 FOR SUPPORT OF HANGING MECHANICAL UNITS.
8. HORIZONTAL AND CROSS BRIDGING SHALL BE SIZED AND SUPPLIED BY THE JOIST MANUFACTURER. CONNECT TO WALLS AS INDICATED IN DETAILS.
9. WHERE SKYLIGHTS OR MECHANICAL UNITS INTERRUPT HORIZONTAL BRIDGING PROVIDE CROSS BRIDGING AT JOIST SPACES ON EACH SIDE. TYPICAL.

REVISIONS:

NEW DOWNTOWN SALT LAKE CITY WINE STORE
300 West Harris Ave. (1563 South)

REAVELEY ENGINEERS + ASSOCIATES
Consulting Structural Engineers
1515 South 1100 East
Salt Lake City, Utah 84115
P.801.486.8888
F.801.485.0911
www.reaveley.com

State of Utah–Department of Administrative Services
DIVISION OF FACILITIES CONSTRUCTION AND MANAGEMENT
4110 State Office Building/Salt Lake City, Utah 84114/538-3018
DEPARTMENT OF ALCOHOLIC BEVERAGE CONTROL
1625 South 900 West, Salt Lake City, Utah 84130/977-6800

MJSA
357 West Pierpont Avenue □ Salt Lake City, Utah 84101
Telephone 801 364 5161 □ Facsimile 801 364 5167
ARCHITECTURE INTERIOR DESIGN

STAMP

LICENSED CERTIFIED STRUCTURAL ENGINEER
NO. 154201
ARTHUR PARRY BROWN
UTAH
11/12/07

DFCM PROJECT NO.: 05051030
DFCM CONTRACT NO.: 077431
MJSA PROJECT NO.: 07005
DATE: 11/12/07
SHEET: SF101

ROOF FRAMING PLAN
SCALE: 1/8"=1'-0"

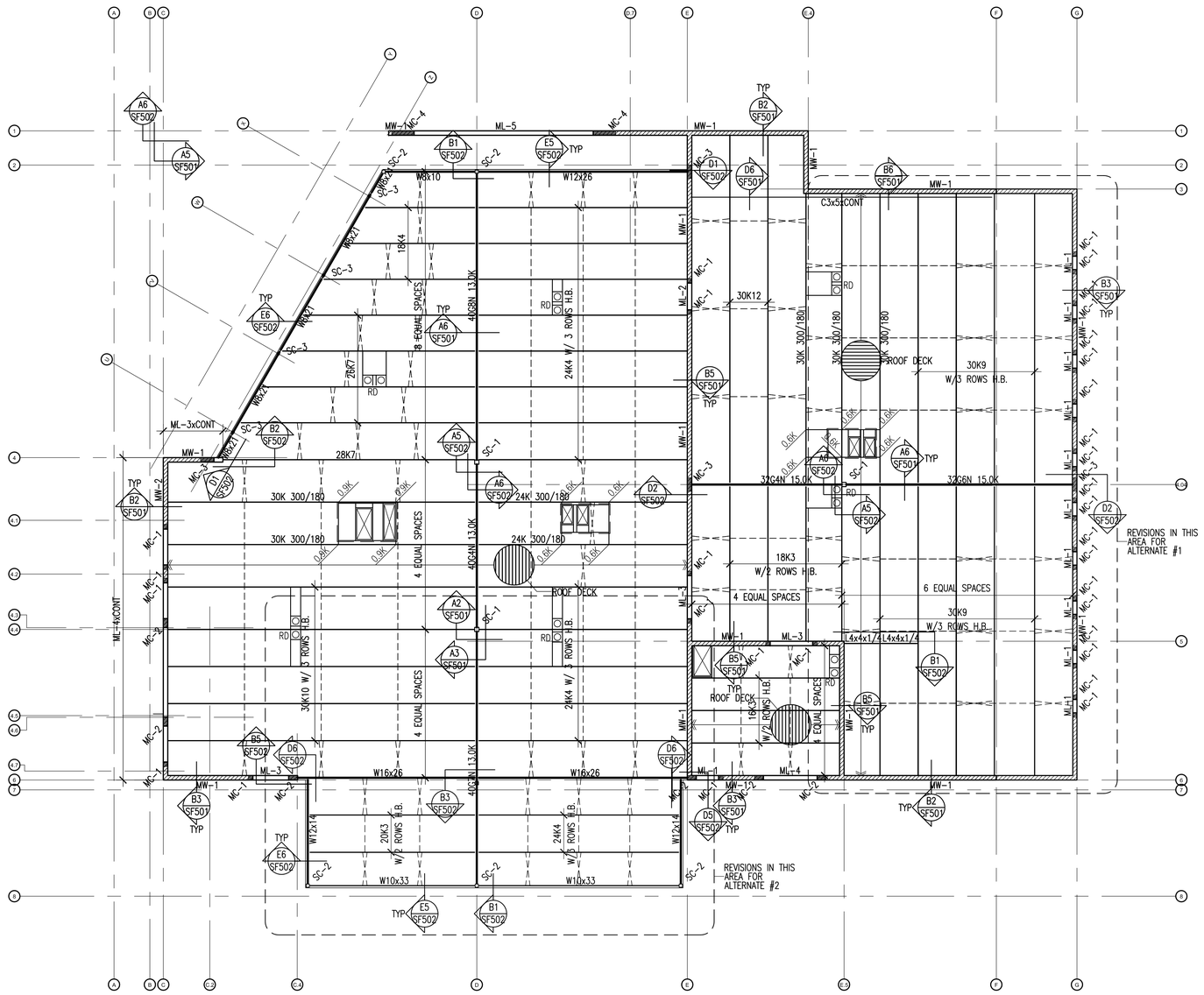

ROOF FRAMING PLAN LEGEND

LEG-ROOF

- MASONRY WALL
- MASONRY LINTEL IN MASONRY WALL
- MASONRY COLUMN IN MASONRY WALL
- STEEL COLUMN – TUBE
- MOMENT CONNECTION
- STEEL BEAM OR GIRDER
- STEEL JOIST OR PURLIN
- CROSS BRIDGING
- HORIZONTAL BRIDGING
- 0" CHANGE IN ELEVATION
- ROOF DECK
- SPECIAL DECK AREA
- OPENING

ROOF FRAMING PLAN NOTES

NOTE-ROOF

1. VERIFY SIZE, WEIGHT, LOCATION AND CONFIGURATION OF ALL ROOF TOP EQUIPMENT WITH ARCHITECT AND MECHANICAL ENGINEER. PROVIDE STEEL FRAMES FOR SUPPORT OF ROOF TOP EQUIPMENT AS INDICATED IN DETAIL E3/SF501 COORDINATE OPENINGS WITH MECHANICAL AND ELECTRICAL AND GENERAL CONTRACTORS.
2. ALL ROOF OPENINGS SHALL BE FRAMED AS INDICATED IN DETAIL E5 & E6/SF501. FOR ROUND OPENINGS WHICH ARE LESS THAN 12"ø SEE DETAIL D5/SF501.
3. SEE ARCHITECTURAL FOR ROOF SLOPES AND DRAINS. SEE D3/SF501 FOR ROOF DRAIN OPENING FRAME.
4. OPEN WEB STEEL JOISTS AND JOIST GIRDERS SHALL BE DESIGNED BY THE MANUFACTURER TO SUPPORT THE MECHANICAL AND LATERAL LOADS SHOWN ON THE ROOF FRAMING PLANS IN ADDITION TO THE UNIFORM AND POINT LOADS SHOWN.
5. ±#.#K ADD – INDICATES ADDITIONAL UPLIFT / DOWNWARD FORCE ON STEEL JOIST IN ADDITION TO REGULAR LOADS.
6. ALL LOADS SUPPORTED BY OPEN WEB STEEL JOISTS AND GIRDERS SHALL BE LOCATED WITHIN 6" OF JOIST OR GIRDER PANEL POINT OR THE JOIST OR GIRDER SHALL BE REINFORCED PER DETAIL E2/SF501.
7. SEE DETAIL D2/SF501 FOR SUPPORT OF HANGING MECHANICAL UNITS.
8. HORIZONTAL AND CROSS BRIDGING SHALL BE SIZED AND SUPPLIED BY THE JOIST MANUFACTURER. CONNECT TO WALLS AS INDICATED IN DETAILS.
9. WHERE SKYLIGHTS OR MECHANICAL UNITS INTERRUPT HORIZONTAL BRIDGING PROVIDE CROSS BRIDGING AT JOIST SPACES ON EACH SIDE. TYPICAL.

REFERENCE NOTES

REVISIONS:

NEW DOWNTOWN SALT LAKE CITY WINE STORE
300 West Harris Ave. (1563 South)

REAVELEY ENGINEERS + ASSOCIATES
Consulting Structural Engineers
1515 South 1100 East
Salt Lake City, Utah 84115
P.801.486.3883
F.801.485.0911
www.reaveley.com

State of Utah–Department of Administrative Services
DIVISION OF FACILITIES CONSTRUCTION AND MANAGEMENT
4110 State Office Building/Salt Lake City, Utah 84114/538-3018

DEPARTMENT OF ALCOHOLIC BEVERAGE CONTROL
1625 South 900 West, Salt Lake City, Utah 84130/977-6800

MJSA
307 West Pierpont Avenue □ Salt Lake City, Utah 84101
Telephone 801.364.5161 □ Facsimile 801.364.5167
ARCHITECTURE INTERIOR DESIGN

STAMP

LICENSED CERTIFIED STRUCTURAL ENGINEER
NO. 154201
ARTHUR PARRY BROWN
UTAH
11/12/07

DFCM PROJECT NO.: 05051030
DFCM CONTRACT NO.: 077431
MJSA PROJECT NO.: 07005
DATE: 11/12/07
SHEET: SF101A

ROOF FRAMING PLAN (ALTERNATE)
SCALE: 1/8"=1'-0"

NOTE:
WHEN CONCENTRATED LOADS (GREATER THAN 100#) ON OPEN WEB JOISTS OR GIRDERS ARE LOCATED MORE THAN 6 INCHES FROM THE PANEL WORKPOINTS AT EITHER THE TOP OR BOTTOM CHORD ADDITIONAL DIAGONAL WEB MEMBERS SHALL BE FURNISHED AND INSTALLED AT THE LOCATION OF THE CONCENTRATED LOAD BY THE CONTRACTOR. CONCENTRATED POINT LOADS, SINGLE OR MULTIPLE, TOTALING 100# OR LESS CAN BE LOCATED AT ANY POINT ALONG THE TOP OR BOTTOM CHORD OF AN OPEN WEB JOIST OR GIRDER BETWEEN ADJACENT PANEL POINTS WITHOUT MEETING THESE REQUIREMENTS. A LIMIT OF FOUR CONCENTRATED 100# MAX. POINT LOADS PER JOIST OR GIRDER WILL BE PERMITTED ON SPANS OF 12' & GREATER, ONE CONCENTRATED 100# MAX. LOAD ON SPANS LESS THAN 12', UNLESS SPECIFICALLY NOTED OTHERWISE ON THE DRAWINGS. JOIST BRIDGING SHALL NEVER BE USED TO SUPPORT HANGING LOADS.

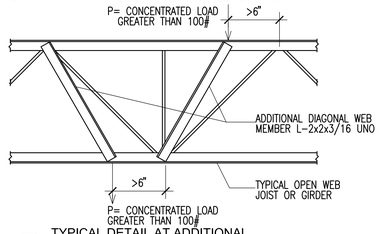

E2 SF501 TYPICAL DETAIL AT ADDITIONAL CONCENTRATED POINT LOAD
NO SCALE
JK1RTS12

WHERE THE MECHANICAL UNIT WEIGHS LESS THAN 600#, THE L6x4x5/16 SUPPORT ANGLES MAY CHANGED TO L5x3x1/4 (LLV).
SOLID BLOCK THE FLUTES OF THE STEEL DECK BENEATH THE CURB OF THE MECHANICAL UNIT. THIS MAY BE DONE WITH A HSS1.1/2x1.1/2x1/4 x6" LONG TACK WELDED TO THE STEEL DECK OR WITH SOLID BLOCKING CONNECTED TO THE STEEL DECK.

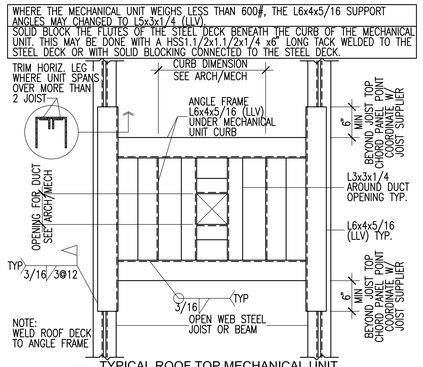

E3 SF501 TYPICAL ROOF TOP MECHANICAL UNIT SUPPORT DETAIL (PLAN VIEW)
NO SCALE
JK2RTS08

SEE TYPICAL ROOF TOP MECHANICAL UNIT SUPPORT DETAIL FOR FRAMES BENEATH MECHANICAL UNITS.

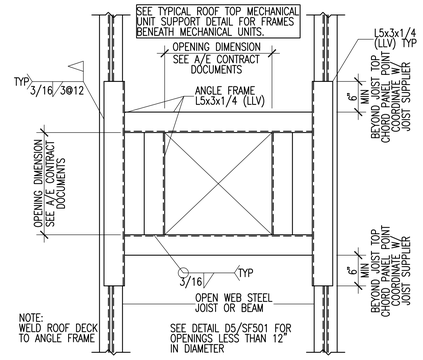

E5 SF501 TYPICAL ROOF OPENING DETAIL (PLAN VIEW)
NO SCALE
JK2RTS07

SEE TYPICAL ROOF TOP MECHANICAL UNIT SUPPORT DETAIL FOR FRAMES BENEATH MECHANICAL UNITS.

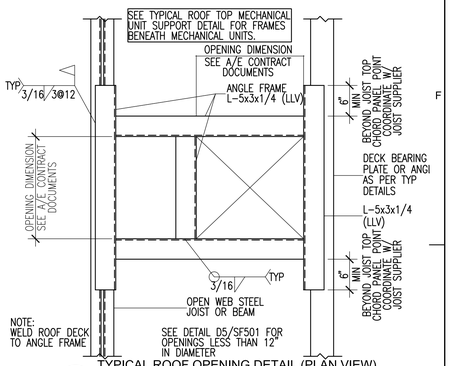

E6 SF501 TYPICAL ROOF OPENING DETAIL (PLAN VIEW) ADJACENT TO MASONRY WALL
NO SCALE
JK2RTS10

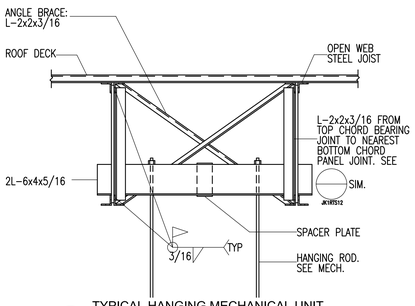

D2 SF501 TYPICAL HANGING MECHANICAL UNIT SUPPORT DETAIL
NO SCALE
JK1RTS15

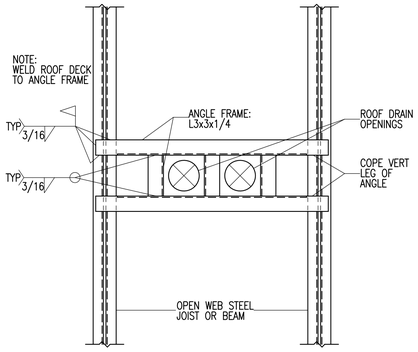

D3 SF501 TYPICAL ROOF DRAIN OPENING (PLAN VIEW)
NO SCALE
JK2RTS15

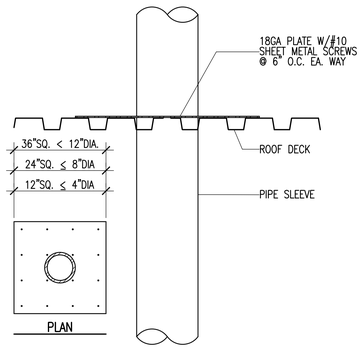

D5 SF501 TYPICAL PIPE SLEEVE HOLE THRU ROOF DECK
NO SCALE
JK2RTS09

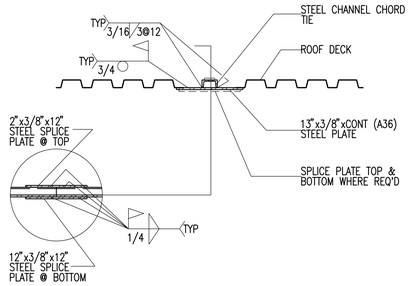

D6 SF501 TYPICAL CHORD TIE
NO SCALE
2007-138-SF501/D6

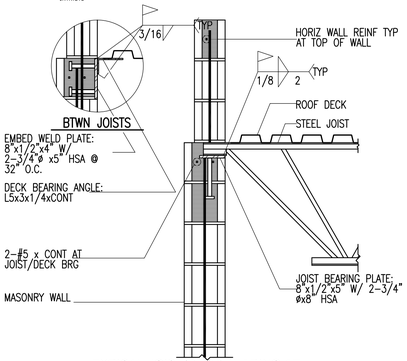

B2 SF501 TYPICAL JOIST/DECK BEARING AT MASONRY WALL
NO SCALE
JK2RMW11

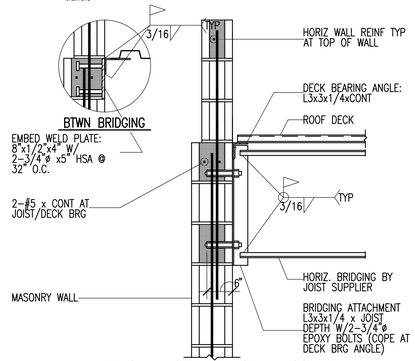

B3 SF501 TYPICAL DECK BEARING AT MASONRY WALL WITH BRIDGING ATTACHMENT
NO SCALE
JK2RMW12

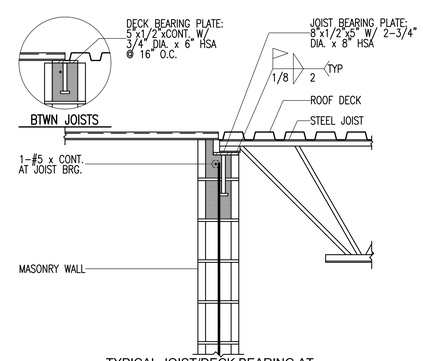

B5 SF501 TYPICAL JOIST/DECK BEARING AT MASONRY WALL
NO SCALE
JK2RMW08

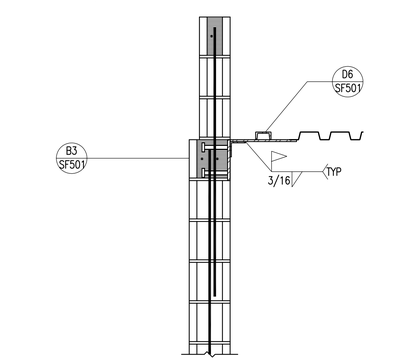

B6 SF501 TYPICAL CHORD TIE AT MASONRY WALL
NO SCALE
2007-138-SF501/B6

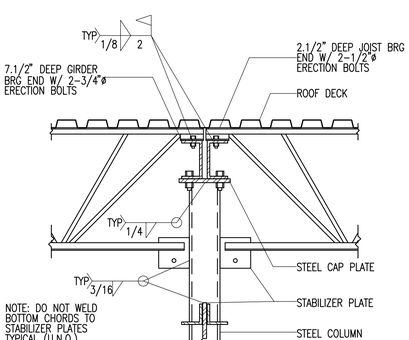

A2 SF501 TYPICAL JOIST & GIRDER BEARING ON STEEL COLUMN
NO SCALE
JK1RTS01

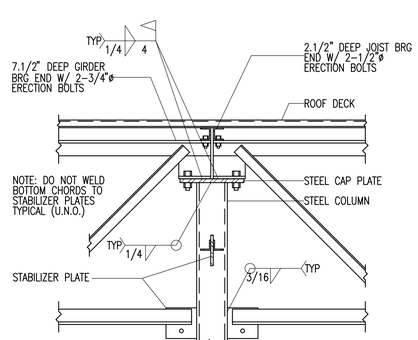

A3 SF501 TYPICAL JOIST & GIRDER BEARING ON STEEL COLUMN
NO SCALE
JK1RTS02

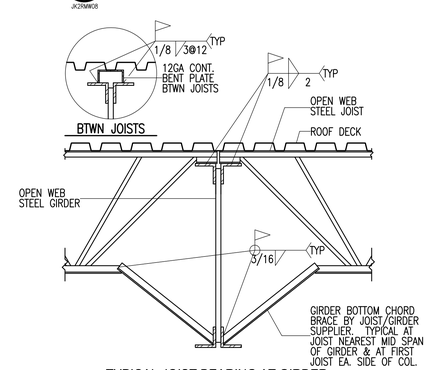

A5 SF501 TYPICAL JOIST BEARING AT GIRDER W/ DRAG STRUT/CHORD TIE
NO SCALE
JK1RTS06

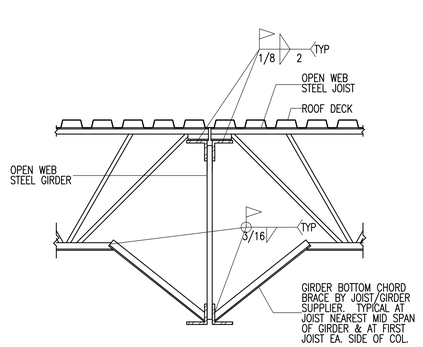

A6 SF501 TYPICAL JOIST BEARING AT GIRDER
NO SCALE
JK1RTS07

REFERENCE NOTES

REVISIONS:

NEW DOWNTOWN SALT LAKE CITY WINE STORE
300 West Harris Ave. (1563 South)

REAVELEY ENGINEERS + ASSOCIATES
Consulting Structural Engineers
1515 South 1100 East
Salt Lake City, Utah 84115
P:801.486.8888
F:801.485.0611
www.reaveley.com

State of Utah-Department of Administrative Services
DIVISION OF FACILITIES CONSTRUCTION AND MANAGEMENT
4110 State Office Building/Salt Lake City, Utah 84114/538-3018

DEPARTMENT OF ALCOHOLIC BEVERAGE CONTROL
1625 South 900 West, Salt Lake City, Utah 84130/977-6800

MJSA
307 West Pierpont Avenue □ Salt Lake City, Utah 84101
Phone: (801) 521-8677 □ Fax: (801) 521-8677
ARCHITECTURE INTERIOR DESIGN

STAMP

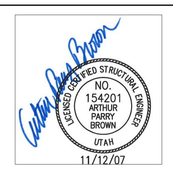

DFCM PROJECT NO.: 05051030
DFCM CONTRACT NO.: 077431
MJSA PROJECT NO.: 07005
DATE: 11/12/07

ROOF FRAMING DETAILS
SCALE: NO SCALE
SHEET: SF501

© Dated/Projects/2007/2007-138-Salt-Lake-Liquor-Store-Architect/Drawings/2007-138-SF501.dwg - Fri, 09 Nov 2007 - 2:06pm

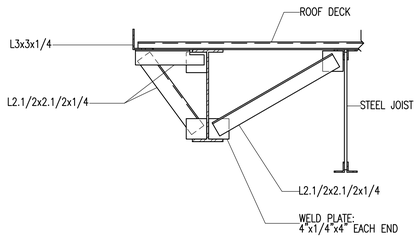

E1 SF502 TYPICAL STEEL BEAM W/ KICKER AT DECK EDGE
NO SCALE
2007-183-SF502/E1

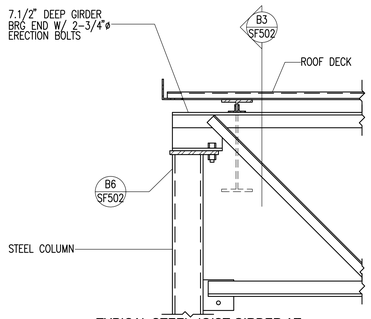

E3 SF502 TYPICAL STEEL JOIST GIRDER AT STEEL COLUMN
NO SCALE
2007-183-SF502/E3

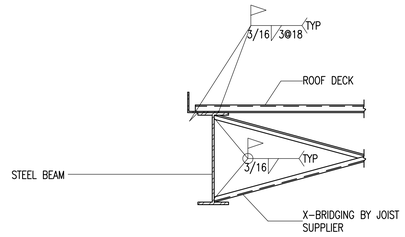

E5 SF502 TYPICAL EDGE BEAM W/ BRIDGING
NO SCALE
2007-138-SF502/E5

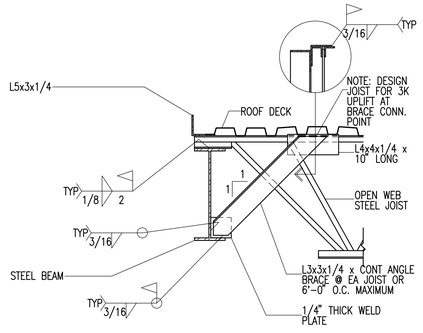

E6 SF502 TYPICAL STEEL BEAM BOTTOM FLANGE BRACE CONNECTION
NO SCALE
2007-138-SF502/E6

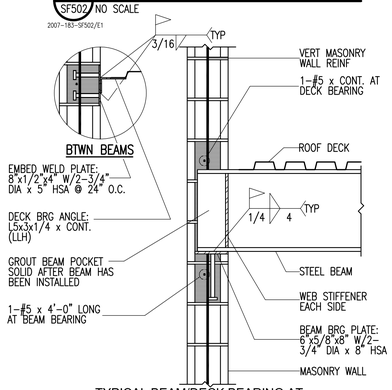

D1 SF502 TYPICAL BEAM/DECK BEARING AT MASONRY WALL
NO SCALE
2007-138-SF502/D1

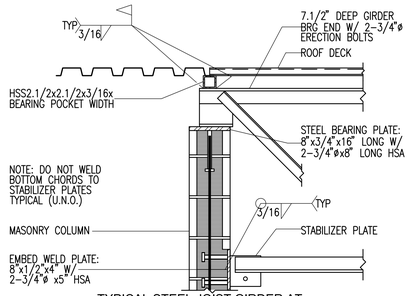

D2 SF502 TYPICAL STEEL JOIST GIRDER AT MASONRY COLUMN
NO SCALE
2007-183-SF502/D2

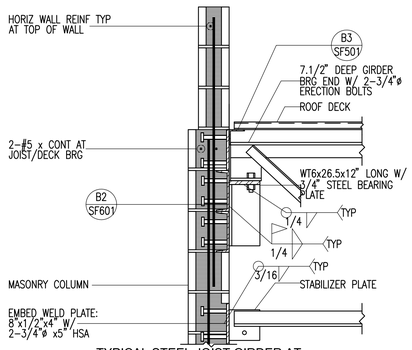

D3 SF501 TYPICAL STEEL JOIST GIRDER AT MASONRY COLUMN
NO SCALE
2007-183-SF502/D3

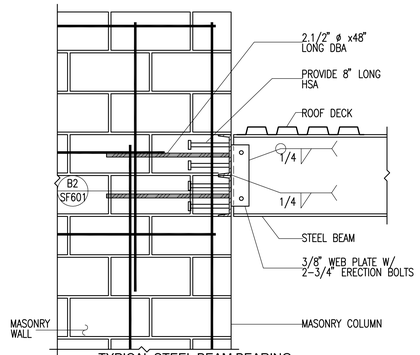

D5 SF502 TYPICAL STEEL BEAM BEARING AT MASONRY WALL
NO SCALE
2007-138-SF502/D5

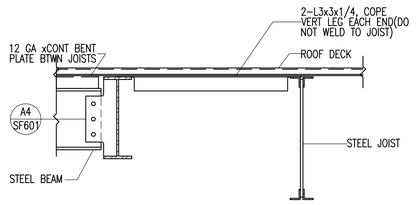

D6 SF502 TYPICAL DRAG STRUCT CONNECTION AT STEEL BEAM (ALTERNATE #2)
NO SCALE
2007-138-SF502/D6

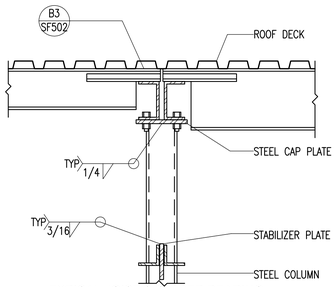

B1 SF502 TYPICAL JOIST & GIRDER BEARING ON STEEL COLUMN
NO SCALE
2007-138-SF502/B1

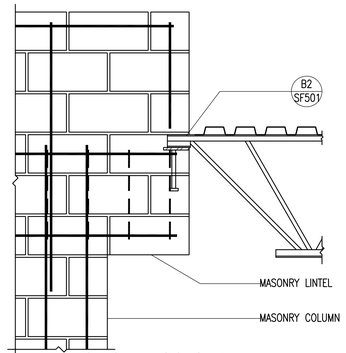

B2 SF502 TYPICAL STEEL JOIST GIRDER AT MASONRY COLUMN
NO SCALE
2007-183-SF502/B2

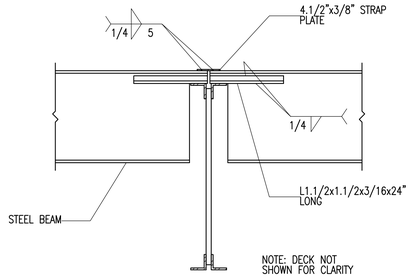

B3 SF502 TYPICAL STEEL BEAMS AT STEEL JOIST GIRDER
NO SCALE
2007-183-SF502/B3

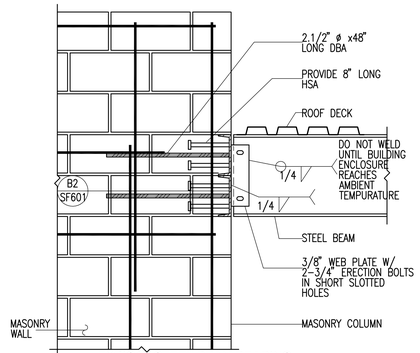

B5 SF502 TYPICAL STEEL BEAM BEARING AT MASONRY WALL
NO SCALE
2007-138-SF502/B5

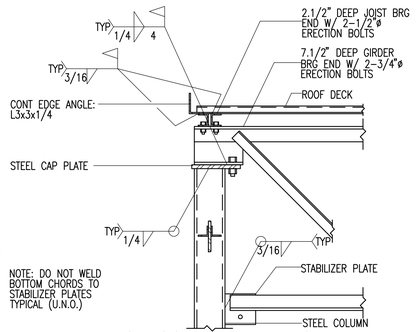

B6 SF502 TYPICAL JOIST & GIRDER BEARING ON STEEL COLUMN
NO SCALE
JK1RTS17

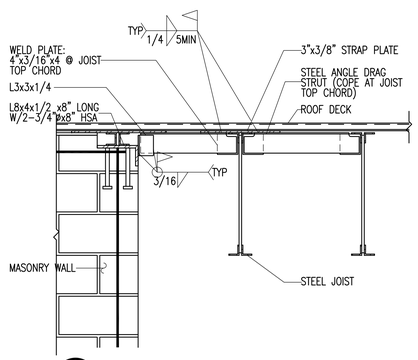

B1 SF502 DRAG STRUT AT MASONRY WALL
NO SCALE
2007-183-SF502/B1

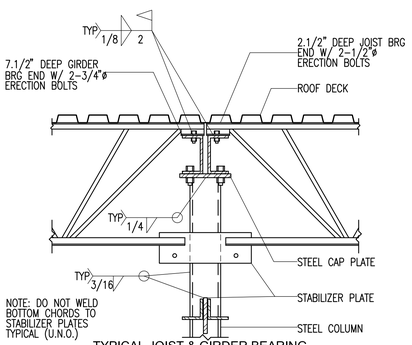

A5 SF502 TYPICAL JOIST & GIRDER BEARING ON STEEL COLUMN
NO SCALE
2007-138-SF502/A5

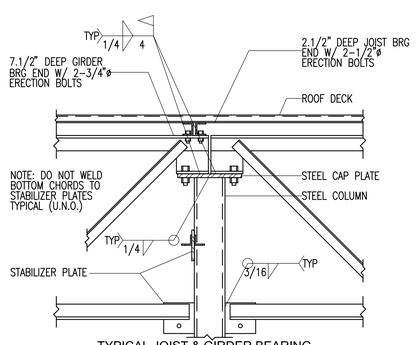

A6 SF502 TYPICAL JOIST & GIRDER BEARING ON STEEL COLUMN
NO SCALE
2007-138-SF502/A6

REFERENCE NOTES

REVISIONS:

NEW DOWNTOWN SALT LAKE CITY WINE STORE
300 West Harris Ave. (1563 South)

REAVELEY
ENGINEERS + ASSOCIATES
Consulting Structural Engineers
1515 South 1100 East
Salt Lake City, Utah 84115
P:801.486.8888
F:801.485.0611
www.reaveley.com

State of Utah-Department of Administrative Services
DIVISION OF FACILITIES CONSTRUCTION AND MANAGEMENT
4110 State Office Building/Salt Lake City, Utah 84114/538-3018
DEPARTMENT OF ALCOHOLIC BEVERAGE CONTROL
1625 South 900 West, Salt Lake City, Utah 84130/977-6800

MJSA
307 West Pierpont Avenue □ Salt Lake City, Utah 84101
Suite 100 801.521.8677 Fax 801.521.8677
ARCHITECTURE INTERIOR DESIGN

STAMP

DFCM PROJECT NO.: 05051030
DFCM CONTRACT NO.: 077431
MJSA PROJECT NO.: 07005
DATE: 11/12/07

ROOF FRAMING DETAILS
SCALE: NO SCALE

SHEET: SF502

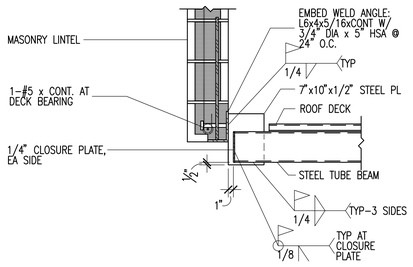

E2 SF511 TYPICAL STEEL BEAM TO MASONRY LINTEL
NO SCALE
2007-138-SF511/E2

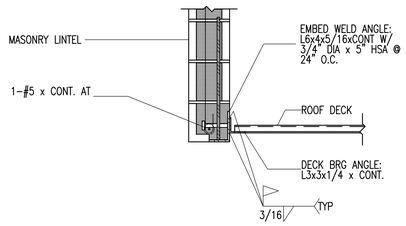

E4 SF511 TYPICAL DECK BEARING AT MASONRY WALL
NO SCALE
2007-138-SF511/E4

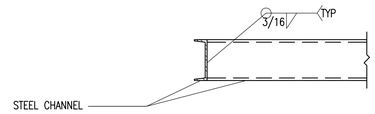

E5 SF511 TYPICAL AWNING CHANNEL TO CHANNEL CONNECTION
NO SCALE
2007-138-SF511/E5

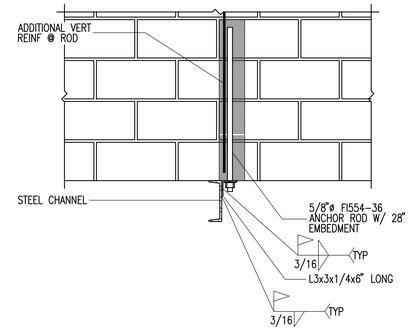

E6 SF511 TYPICAL AWNING CHANNEL AT MASONRY LINTEL
NO SCALE
2007-138-SF511/E6

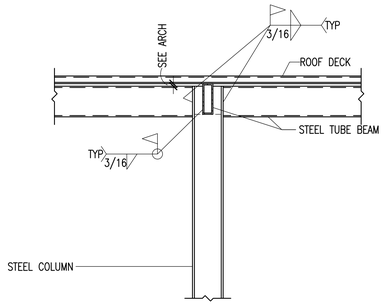

D2 SF511 STEEL TUBE BEAM TO STEEL COLUMN
NO SCALE
2007-138-SF511/D2

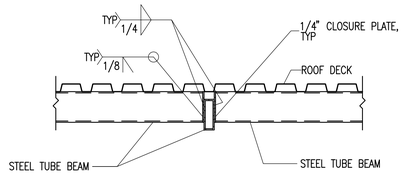

D4 SF511 STEEL TUBE BEAM TO STEEL TUBE BEAM
NO SCALE
2007-138-SF511/D4

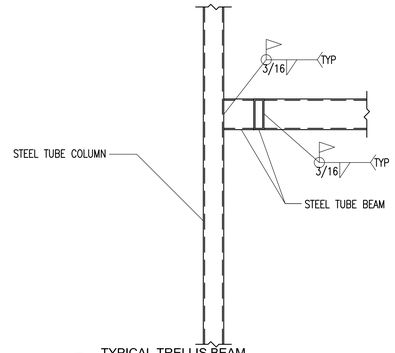

D5 SF511 TYPICAL TRELLIS BEAM TO STEEL COLUMN CONNECTION
NO SCALE
2007-138-SF511/D5

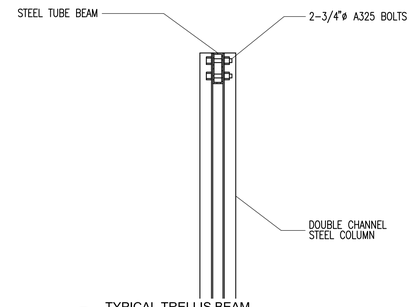

D6 SF511 TYPICAL TRELLIS BEAM TO STEEL COLUMN CONNECTION
NO SCALE
2007-138-SF511/D6

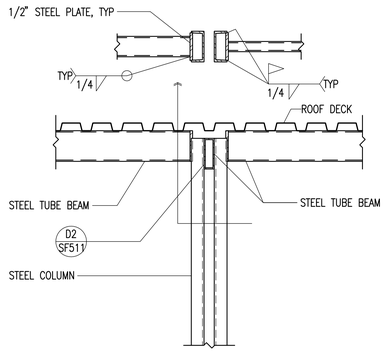

B2 SF511 STEEL TUBE BEAM TO STEEL COLUMN
NO SCALE
2007-138-SF511/B2

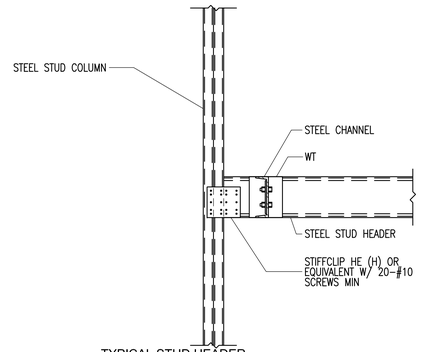

B5 SF511 TYPICAL STUD HEADER TO STUD COLUMN CONNECTION
NO SCALE
2007-138-SF511/B5

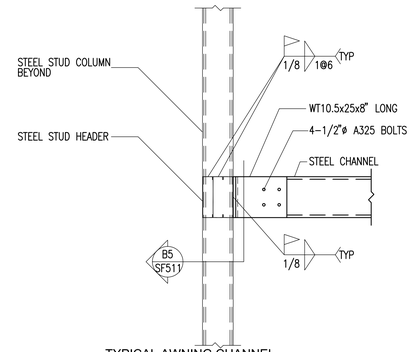

B6 SF511 TYPICAL AWNING CHANNEL TO STUD HEADER CONNECTION
NO SCALE
2007-138-SF511/B6

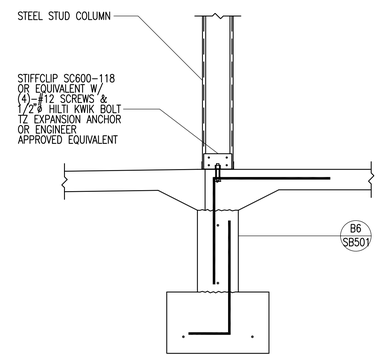

A6 SF511 TYPICAL STUD COLUMN CONNECTION
NO SCALE
2007-138-SF511/A6

REFERENCE NOTES

REVISIONS:

NEW DOWNTOWN SALT LAKE CITY WINE STORE
300 West Harris Ave. (1563 South)

REAVELEY
ENGINEERS + ASSOCIATES
Consulting Structural Engineers
1318 South 1100 East
Salt Lake City, Utah 84115
P:801.486.8888
F:801.485.0611
www.reaveley.com

State of Utah-Department of Administrative Services

DIVISION OF FACILITIES CONSTRUCTION AND MANAGEMENT
4110 State Office Building/Salt Lake City, Utah 84114/538-3018

DEPARTMENT OF ALCOHOLIC BEVERAGE CONTROL
1625 South 900 West, Salt Lake City, Utah 84130/977-6800

MJSA
307 West Pierpont Avenue
Salt Lake City, Utah 84101
Phone: 801.521.8677
Fax: 801.521.8697
ARCHITECTURE INTERIOR DESIGN

STAMP

LICENSED CERTIFIED STRUCTURAL ENGINEER
NO. 154201
ARTHUR PARRY BROWN
UTAH
11/12/07

DFCM PROJECT NO.: 05051030
DFCM CONTRACT NO.: 077431
MJSA PROJECT NO.: 07005
DATE: 11/12/07
SHEET: SF511

CANOPY/TRELLIS/AWNING FRAMING DETAILS
SCALE: NO SCALE

© Salt Lake City Corporation

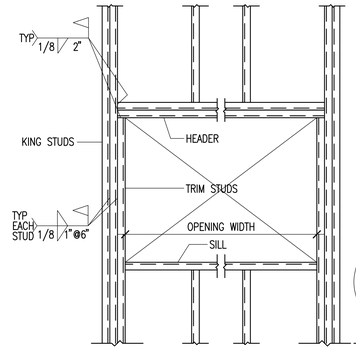

WIDTH OF OPENING	JAMB			SILL	HEADER	
	SIZE	NO. OF TRIM STUDS	NO. OF KING STUDS	SIZE	SIZE	TYPE
UP TO 3'-4"	600S200-54	1	2	(1)600S200-54	(2)600S200-54	2
3'-4+" TO 6'-0"	600S200-54	1	2	(1)600S200-54	(2)600S200-54	1
6'-0+" TO 8'-0"	600S200-54	1	3	(1)600S200-54	(2)600S200-54	1
8'-0"+ TO 10'-0"	600S200-54	2	4	(2)600S200-54	(2)600S200-54	1

NOTES:
1. SEE ARCHITECTURAL DRAWINGS FOR LOCATIONS OF ALL OPENINGS IN STUD WALLS.

2. ALL STUD SIZE DESIGNATIONS ARE PER THE STANDARD ESTABLISHED BY THE STEEL STUD MANUFACTURER'S ASSOCIATION (SSMA) AND THE NORTH AMERICAN STEEL FRAMING ALLIANCE (NASFA).

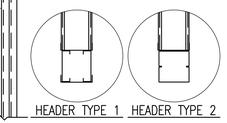

TYPICAL STUD WALL CONSTRUCTION	
6" EXTERIOR STUD WALLS	600S200-54 @ 16" O.C.
6" EXTERIOR STUD WALLS WITHIN 10'-0" OF ANY CORNER	600S200-54 @ 12" O.C.

E3 / SF601 TYPICAL EXTERIOR STUD WALL FRAMING SCHEDULE WITH FRAMED OPENING DETAIL
NO SCALE
S1L3T001

STEEL COLUMN SCHEDULE

SC-1

MARK	SIZE	STEEL BASE PLATE	STEEL CAP PLATE	REMARKS
SC-1	HSS8x8x3/8	1.1/2", SBP-1	3/4", SEE DETAILS	
SC-2	HSS6x6x1/4	1.1/2", SBP-2	3/4", SEE DETAILS	
SC-3	HSS5x5x3/16	3/4", SBP-2	3/4", SEE DETAILS	
SC-4	2-C6x10.5 W/ HSS6x6x1/4 BLW	3/4", SBP-1	SEE E5/SB502	
SC-5	2-600S162-68	SEE DETAIL	---	

NOTES:
1. UNLESS NOTED OTHERWISE, ALL COLUMNS SHALL BE INSTALLED W/4-3/4" DIAMETER A.B. W/ 3" (MIN) HOOKS. PROJECT ANCHOR BOLTS 3" (MIN) ABOVE THE TOP OF THE BASE PLATE. EMBEDMENT SHALL BE 9" (MIN). ALL BOLTS SHALL BE INSTALLED W/ HARDENED WASHERS BENEATH THE NUT. ANY BOLT HOLES LARGER THAN THE BOLT DIAMETER PLUS 5/16" SHALL HAVE 5/16" PLATE WASHERS INSTALLED BENEATH THE HARDENED WASHERS.

2. ALL BOLTS IN CAP PLATES SHALL BE 3/4" DIA, A325N BOLTS TYPICAL U.N.O.

3. COLUMN SPLICES SHALL BE LOCATED PER SPLICE DETAILS, TYPICAL, U.N.O.

4. WELDS SHALL NOT BE MADE TO ANCHOR BOLTS.

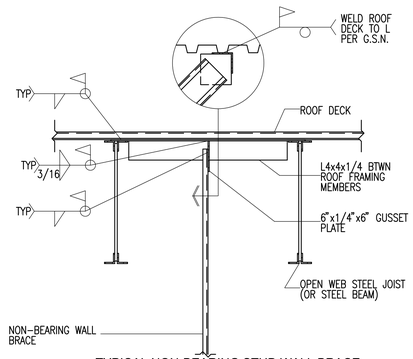

D3 / SF601 TYPICAL NON-BEARING STUD WALL BRACE CONNECTION TO ROOF STRUCTURE
NO SCALE
NSDET15

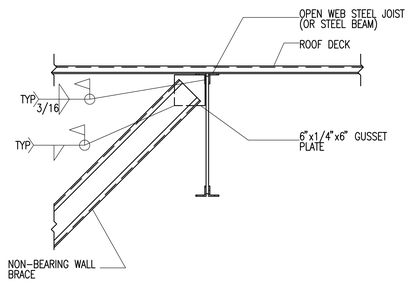

D4 / SF601 TYPICAL NON-BEARING STUD WALL BRACE CONNECTION TO ROOF STRUCTURE
NO SCALE
NSDET14

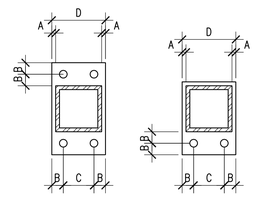

A = 1/2" MIN.
B = 1 1/2" MIN.
C = GAGE OF CONNECTED MEMBER
D = COLUMN WIDTH + 1", BEAM OR GIRDER WIDTH + 1", OR BOLT GAGE + 3", WHICHEVER IS GREATER.

C6 / SF601 TYPICAL STEEL CAP PLATES - REFLECTED PLAN VIEW
NO SCALE
SCP-1

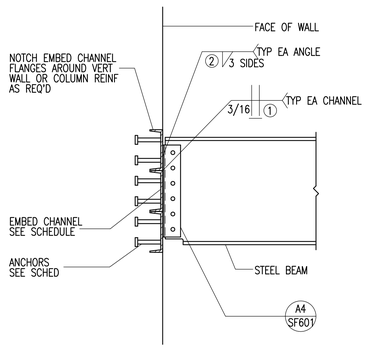

CONNECTION SCHEDULE

BEAM DEPTH	EMBED CHANNEL	ANCHORS
TO 10"	1-C8x18.75x12"	4-3/4"ø x 5" STUDS
TO 16"	2-C8x18.75x12"	8-3/4"ø x 5" STUDS
TO 24"	3-C8x18.75x12"	12-3/4"ø x 5" STUDS

1. WELD MULTIPLE EMBEDS TOGETHER WITH BUTT WELD EACH SIDE, FULL LENGTH.
2. FILLET WELDS SHALL BE ANGLE THICKNESS MINUS 1/16" (1/4" MIN.)

B2 / SF601 TYPICAL EMBED CHANNEL CONNECTION SCHEDULE
NO SCALE
SBCH013

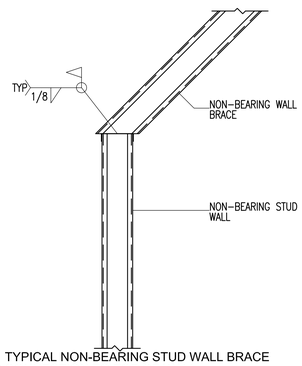

B4 / SF601 TYPICAL NON-BEARING STUD WALL BRACE CONNECTION TO TOP OF WALL
NO SCALE
NSDET16

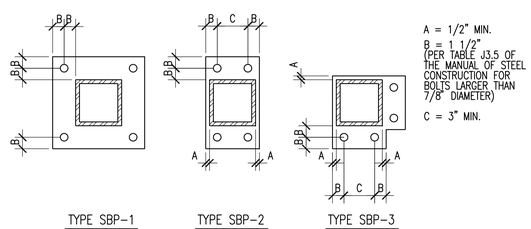

A = 1/2" MIN.
B = 1 1/2" (PER TABLE J3.5 OF THE MANUAL OF STEEL CONSTRUCTION FOR BOLTS LARGER THAN 7/8" DIAMETER)
C = 3" MIN.

B6 / SF601 TYPICAL STEEL BASE PLATES - PLAN VIEW
NO SCALE
SBP-1

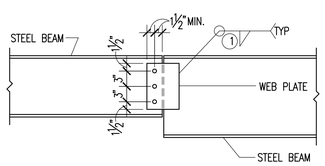

BEAM TO BEAM WEB PLATE CONNECTION

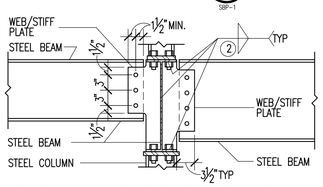

BEAM TO COLUMN WEB/STIFFENER PLATE CONNECTION

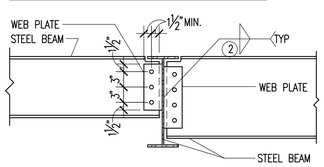

BEAM TO BEAM WEB PLATE CONNECTION

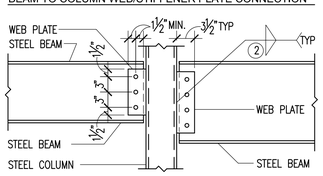

BEAM TO COLUMN WEB PLATE CONNECTION

A325 BOLT SCHEDULE

MAXIMUM BEAM SIZE IN EACH BEAM DEPTH GROUP	WEB PLATE THICKNESS	A325N BOLTS	
		NUMBER	SIZE
W8	5/16"	2	3/4"ø
W10	5/16"	2	3/4"ø
W12	5/16"	3	3/4"ø
W16	5/16	4	3/4"ø

NOTES:
1. FILLET WELDS ONE SIDE SHALL EQUAL THE PLATE THICKNESS MINUS 1/16" (1/4" MIN.)

2. FILLET WELDS TWO SIDES SHALL BE 3/4 THE PLATE THICKNESS (1/4" MIN.) EACH SIDE

3. BOLT EDGE DISTANCE SHALL BE 1.1/2" MIN. AT ALL EDGES. BOLT SPACING SHALL BE 3" MIN.

4. THICKNESS EQUALS BEAM FLANGE THICKNESS OF BEAM FRAMING INTO COLUMN WEB. (3/8" MIN.)

A4 / SF601 TYPICAL BOLTED WEB PLATE CONNECTIONS W/ BOLT SCHEDULE (SINGLE SHEAR)
NO SCALE

REFERENCE NOTES

REVISIONS:

NEW DOWNTOWN SALT LAKE CITY WINE STORE
300 West Harris Ave. (1563 South)

REAVELEY ENGINEERS + ASSOCIATES
Consulting Structural Engineers
1818 South 1100 East
Salt Lake City, Utah 84115
P:801.486.8888
F:801.485.0011
www.reaveley.com

State of Utah-Department of Administrative Services
DIVISION OF FACILITIES CONSTRUCTION AND MANAGEMENT
4110 State Office Building/Salt Lake City, Utah 84114/538-3018
DEPARTMENT OF ALCOHOLIC BEVERAGE CONTROL
1625 South 900 West, Salt Lake City, Utah 84130/977-6800

MJSA
357 West Pierpont Avenue □ Salt Lake City, Utah 84101
Salt Lake City, Utah 84107 □ 801.355.7427
ARCHITECTURE INTERIOR DESIGN

STAMP

LICENSED STATE OF UTAH REGISTERED STRUCTURAL ENGINEER NO. 154201 ARTHUR PARRY BROWN
11/12/07

STRUCTURAL SCHEDULES
SCALE: NO SCALE

DFCM PROJECT NO.: 05051030
DFCM CONTRACT NO.: 077431
MJSA PROJECT NO.: 07005
DATE: 11/12/07
SHEET: SF601

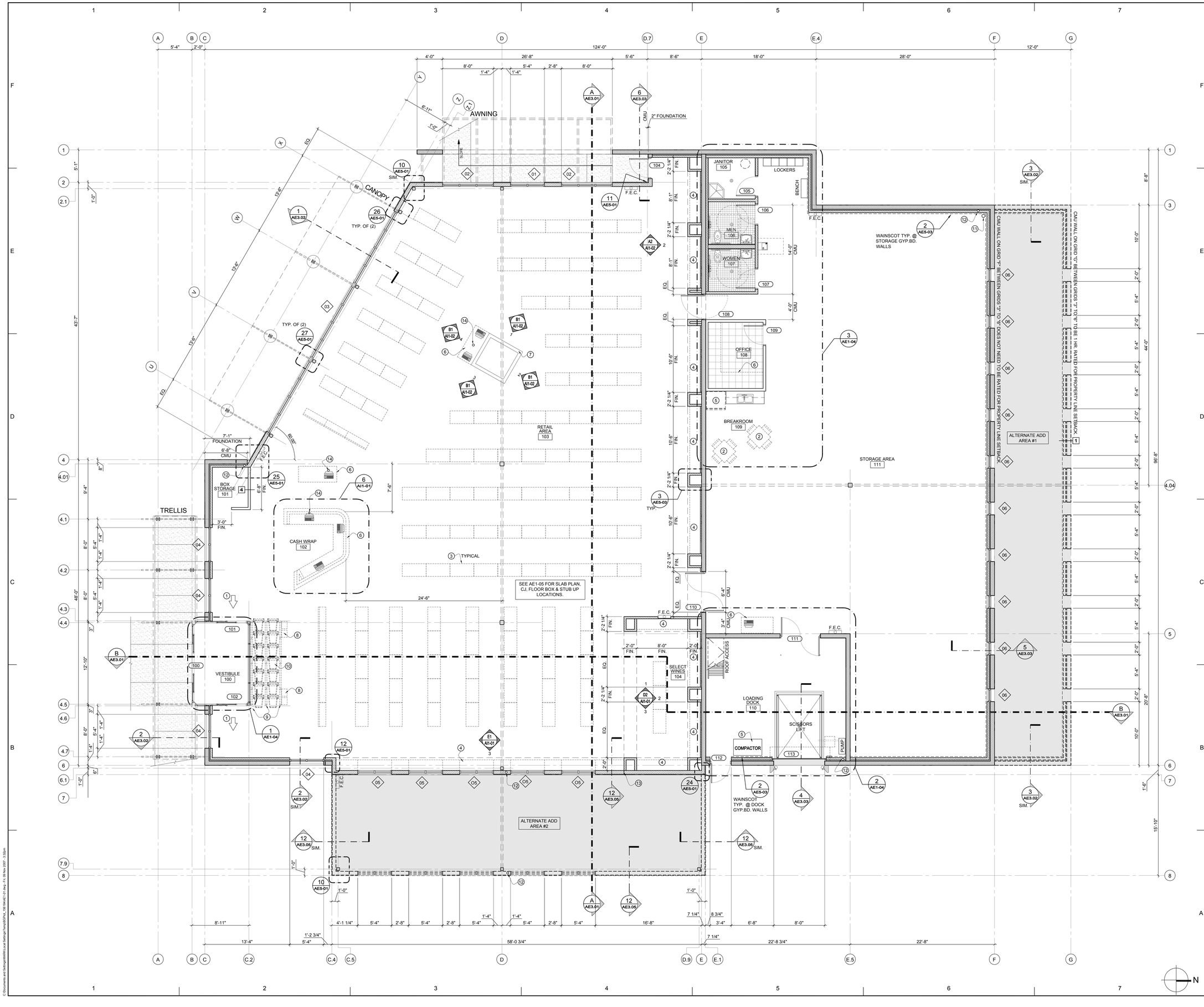

REFERENCE NOTES

1. DIRECTIONAL ARROW SHOWN FOR INFORMATION ONLY.
2. FURNITURE BY OWNER N.I.C.
3. WINE RACKS PROVIDED AND INSTALLED BY OWNER N.I.C.
4. BUILT-IN CASE WORK FOR WINE DESPLAY PROVIDED AND INSTALLED BY OWNER N.I.C. G.C. TO COORDINATE.
5. EQUIPMENT PROVIDED AND INSTALLED BY OWNER N.I.C.
6. CABINET WORK PROVIDED AND INSTALLED BY OWNER N.I.C.
7. PLANTER AND TREE PROVIDED AND INSTALLED BY OWNER N.I.C. TREE TO BE HAND WATERED.
8. HAND BASKET STACK PROVIDED BY OWNER N.I.C.
9. SHOPPING CART STACKING RAILS PROVIDED AND INSTALLED BY OWNER N.I.C.
10. SHOPPING CARTS PROVIDED BY OWNER N.I.C.
11. FIRE RISER PER PLUMBING PLANS. LOCATE PER THIS PLAN AS TIGHT INTO CORNER AS POSSIBLE.
12. ROOF DRAIN LEADER PER PLUMBING PLANS. LOCATE IN STUD WALL AS SHOWN ON THIS PLAN. RUN INSULATION TO COLD SIDE. DO NOT INSULATE TO WARM SIDE.
13. LNE INDICATES END OF EAST "SELECTED WINE " WALL IF ALTERNATE ADD# 2 IS BUILT.
14. SEE SHEET AE1-05 FOR LOCATION OF FLOOR BOXES AND STUB OUTS IN THE CONCRETE SLAB.

REVISIONS:

NEW DOWNTOWN SALT LAKE CITY WINE STORE

300 West Harris Ave. (1563 South)

MJSA
357 West Pierpont Avenue □ Salt Lake City, Utah 84101
Telephone 801 364 5181 □ Facsimile 801 364 5187
ARCHITECTURE INTERIOR DESIGN

State of Utah–Department of Administrative Services

DIVISION OF FACILITIES CONSTRUCTION AND MANAGEMENT
4110 State Office Building/Salt Lake City, Utah 84114/538-3018

DEPARTMENT OF ALCOHOLIC BEVERAGE CONTROL
1625 South 900 West, Salt Lake City, Utah 84130/977-6800

STAMP

STATE OF UTAH
KIM L. NG
No. 127383
LICENSED ARCHITECT
11/12/07

FLOOR PLAN

SCALE: 3/16" = 1'-0"

DFCM PROJECT NO.: 05051030

DFCM CONTRACT NO. 077431

MJSA PROJECT NO.: 07005

DATE: 10/15/07

SHEET: AE1-01

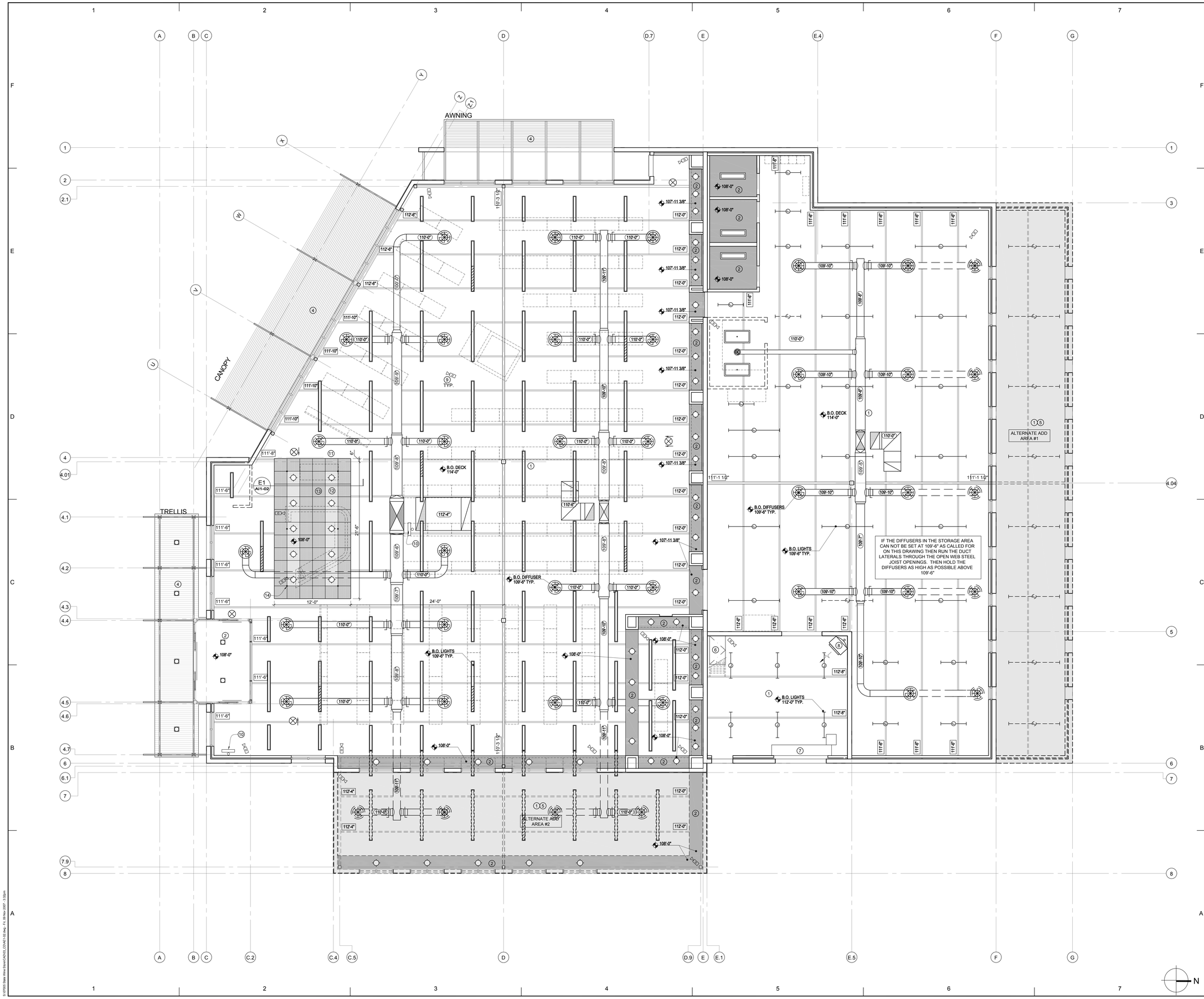

REFERENCE NOTES

1. NO CEILING TYPICAL. OPEN TO ROOF DECK ABOVE, UNLESS NOTED OTHERWISE.
2. SUSPENDED 5/8" GYP. BD. CEILING OR SOFFIT. SEE DETAILS ELSEWHERE.
3. WOOD CEILING - SEE DETAIL ELSEWHERE.
4. TRELLIS, CANOPY, AWNING - SEE DETAILS ELSEWHERE.
5. THIS HATCH DOES NOT REPRESENT A CEILING CONDITION BUT RATHER AN ALTERNATE BID.
6. ROOF HATCH.
7. OVERHEAD DOOR AND MOTOR.
8. HEATER PER MECHANICAL DRAWINGS.
9. CCTV - APPROXIMATE LOCATION. FINAL LOCATIONS TO BE FIELD ADJUSTED WITH OWNER.
10. CCTV MONITOR - APPROXIMATE LOCATION. FINAL LOCATIONS TO BE FIELD ADJUSTED WITH OWNER.
11. CASH WRAP CEILING CLOUD - SEE DETAIL.
12. HATCH INDICATES A 2'-0" X 2'-0" GRID OF 3/4" THICK BALTIC BIRCH PLYWOOD W/ A VENEER OF MAPLE. VENEER TO GET A SEMI GLOSS CLEAR SEALER. MATCH ARCHITECT'S SAMPLE.
13. HATCH INDICATES A 2'-0" X 2'-0" COPPER SCREEN GRID. SEE INTERIOR ELEVATION SHEET FOR SPEC ON THIS MATERIAL.
14. UNISTRUT / ALLTHREAD SUSPENTION SYSTEM. TYPICAL OF (6). CROSS BRACE EACH ALLTHREAD ROD IN BOTH DIRECTIONS TO ITS NEAREST NEIGHBOR W/ CEILING TIE WIRE. SEE DETAIL.

CEILING COORDINATION NOTE

ALL SUB-CONTRACTOS ARE TO COORDINATE THE DRAWINGS OF THIER RESPECTIVE TRADES WITH THIS SHEET.THIS SHEET IS TO GOVERN AS TO LOCATION OF ALL TRADE ITEMS. NOTIFY THE ARCHITECT IF A DISCREPANCY IS FOUND BEFORE INSTALLATION.

FIRE SPRINKLER DESIGN BUILD CONTRACTOR - SHOW LOCATION OF SPRINKLER HEADS ON A COPY OF THIS ARCHITECTURAL REFLECTED CEILING PLAN. CALL THE ARCHITECT FOR AN ELECTRONIC COPY OF THIS FILE".

PAINT NOTE

AREAS WITH NO CEILINGS SOUTH OF GRID "E" ARE TO BE PAINTED OUT.

AREAS WITH NO CEILINGS NORTH OF GRID "E" ARE NOT TO BE PAINTED OUT.

THOSE "NO CEILING AREAS" TO BE PAINTED OUT SHALL BE PAINTED **KWAL CLV 1136N CRAVE**. ITEMS TO RECEIVE THIS PAINT INCLUDE: DECK, JOISTS, TRUSSES, BEAMS, DUCTS, DIFUSERS, CONDUIT, ALSO GYP.BD. AND STUDS ABOVE ELEVATION 111'-0" SHALL BE PAINTED THIS COLOR. REFER TO THE SECTIONS AND INTERIOR ELEVATIONS FOR FURTHER CLARIFICATION. LIGHTS AND THEIR SUSPENSION SYSTEMS ARE NOT TO BE PAINTED.

CONSULT WITH THE ARCHITECT PRIOR TO PAINTING ANY OF THESE "NO CEILING AREAS".

LEGEND

108'-0"	B.O. CEILING OR SOFFIT ELEVATION UNLESS NOTED OTHERWISE.
111'-6"	B.O. JOIST OR TRUSS ELEVATION.
109'-6"	B.O. DUCT ELEVATION.

State of Utah–Department of Administrative Services

DIVISION OF FACILITIES CONSTRUCTION AND MANAGEMENT
4110 State Office Building/Salt Lake City, Utah 84114/538-3018

DEPARTMENT OF ALCOHOLIC BEVERAGE CONTROL
1625 South 900 West, Salt Lake City, Utah 84150/977-6800

STAMP

STATE OF UTAH
KWL NG
No. 122563
LICENSED ARCHITECT
11/12/07

REFLECTED CEILING PLAN

SCALE: 3/16" = 1'-0"

REVISIONS:

NEW DOWNTOWN SALT LAKE CITY WINE STORE
300 West Harris Ave. (1563 South)

MJSA
357 West Pierpont Avenue □ Salt Lake City, Utah 84101
Telephone 801 364 5161 □ Facsimile 801 364 5187
ARCHITECTURE INTERIOR DESIGN

DFCM PROJECT NO.: 05051030
DFCM CONTRACT NO.: 077431
MJSA PROJECT NO.: 07005
DATE: 10/15/07
SHEET: AE1-02

S:\2005 State Wide Services\CADD_CD\AE1-02.dwg - Fri, 09 Nov 2007 - 3:32pm

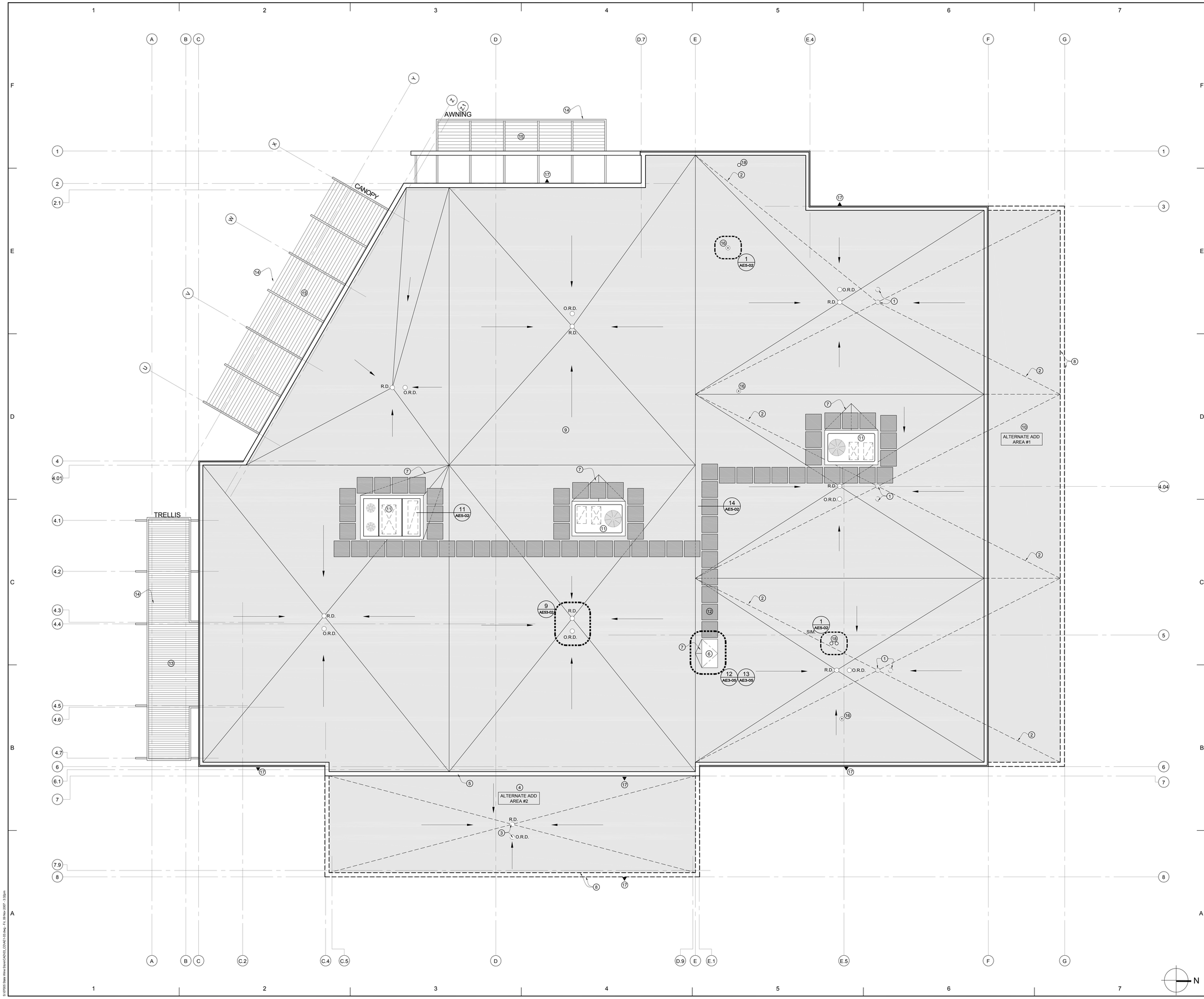

REFERENCE NOTES

1. DRAIN LOCATION IF ALTERNATE ADD #1 IS USED.
2. ROOF SLOPE IF ALTERNATE ADD AREA #1 IS USED.
3. DRAIN LOCATION IF ALTERNATE ADD AREA #2 IS USED.
4. ROOF IF ALTERNATE ADD AREA #2 IS USED.
5. PARAPET CONDITION TO BE A RIDGE CONDITION IF ALTERNATE ADD AREA IS USED.
6. ROOF HATCH.
7. CRICKET AS REQUIRED.
8. DASH LINES INDICATE PARAPET CONDITION IF ALTERNATE ADD AREA IS USED.
9. HATCH INDICATES AREA TO RECEIVE ROOF MEMBRANE. SEE SPEC. FOR TYPE.
10. ROOF IF ALTERNATE ADD AREA #1 IS USED.
11. CURB MOUNTED ROOF TOP MECHANICAL UNIT PER MECHANICAL DRAWINGS.
12. WALKWAY PADS BY ROOF MEMBRANE MANUFACTURER. HEAT WELD MEMBRANE TYPE MATERIAL.
13. METAL ROOF DECK PER DETAIL ELSEWHERE.
14. METAL FRAMING PER STRUCTURAL DRAWINGS.
15. METAL LOUVERS PER DETAIL ELSEWHERE.
16. ROOF VENT LOCATION PER PLUMBING PLANS.
17. OVERFLOW ROOF DRAIN OUTLET NOZZLE SEE BUILDING ELEVATIONS FOR LOCATION.
18. FLU OR COMBUSTION AIR PENETRATION. SEE MECHANICAL DRAWINGS FOR LOCATION AND AND DETAILS.

ROOF NOTES

SEE SHEET AE5-02 FOR TYPICAL ROOF DETAILS.

ROOF R-VALUE TO BE R38. SEE SPECS.

TAPPER INSULATION TO DRAIN. SEE SPECS.

SEE BUILDING ELEVATIONS FOR LOCATION OF OVERFLOW ROOF DRAIN OUTLET NOZZLES.

State of Utah–Department of Administrative Services

DIVISION OF FACILITIES CONSTRUCTION AND MANAGEMENT
4110 State Office Building/Salt Lake City, Utah 84114/538-3018

DEPARTMENT OF ALCOHOLIC BEVERAGE CONTROL
1625 South 900 West, Salt Lake City, Utah 84130/977-6800

STAMP

STATE OF UTAH
KIN L. WG
No. 127383
LICENSED ARCHITECT
11/12/07

ROOF PLAN

SCALE: 3/16" = 1'-0"

REVISIONS:

NEW DOWNTOWN SALT LAKE CITY WINE STORE
300 West Harris Ave. (1563 South)

MJSA
357 West Pierpont Avenue □ Salt Lake City, Utah 84101
Telephone 801 364 5161 □ Facsimile 801 364 5167
ARCHITECTURE INTERIOR DESIGN

DFCM PROJECT NO.: 05051030

DFCM CONTRACT NO.: 077431

MJSA PROJECT NO.: 07005

DATE: 10/15/07

SHEET: AE1-03

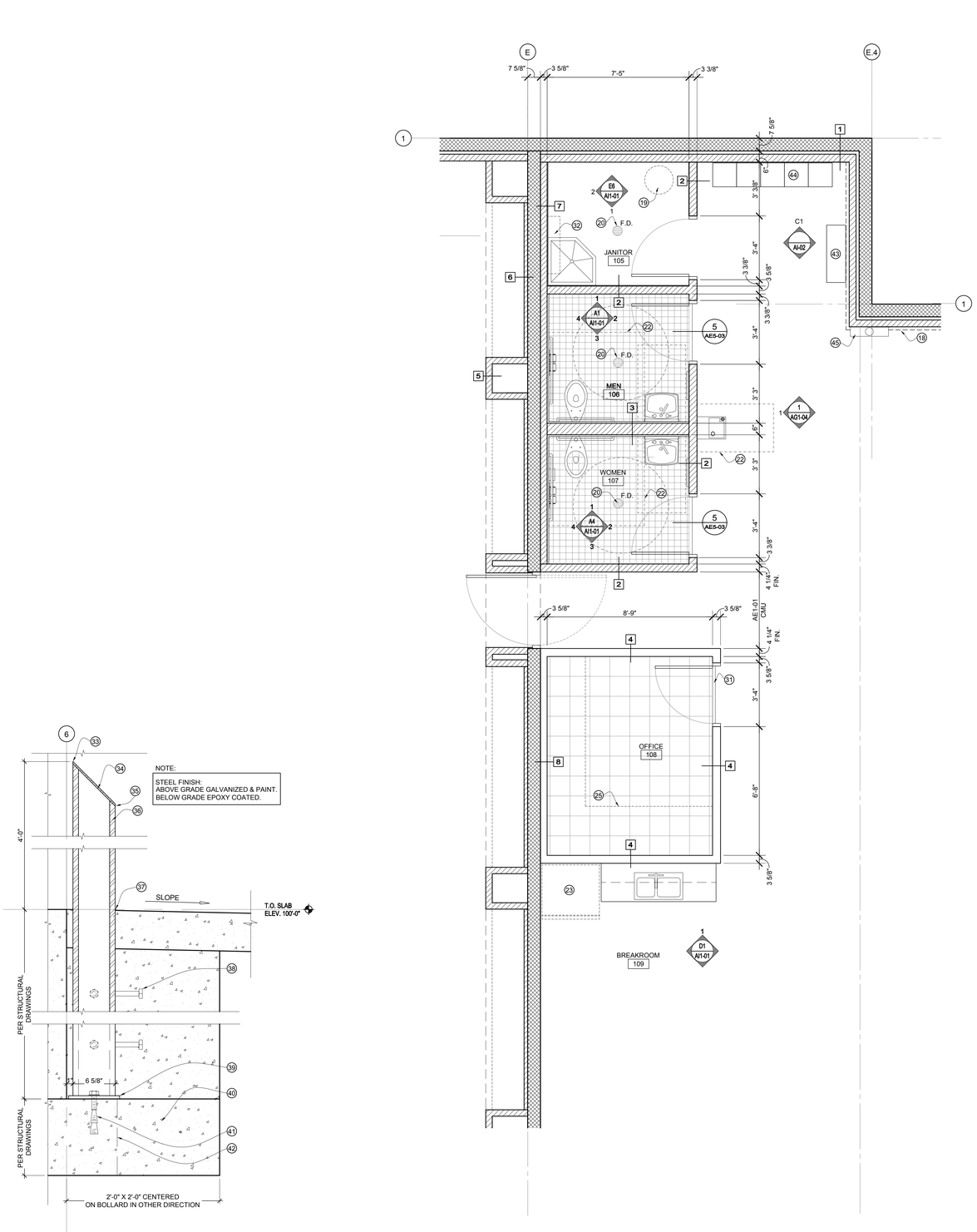

4 AE1.04 BOLLARD DETAIL
SCALE: 1 1/2"=1'-0"

3 AE1.04 ENLARGED PLAN
SCALE: 3/8"=1'-0"

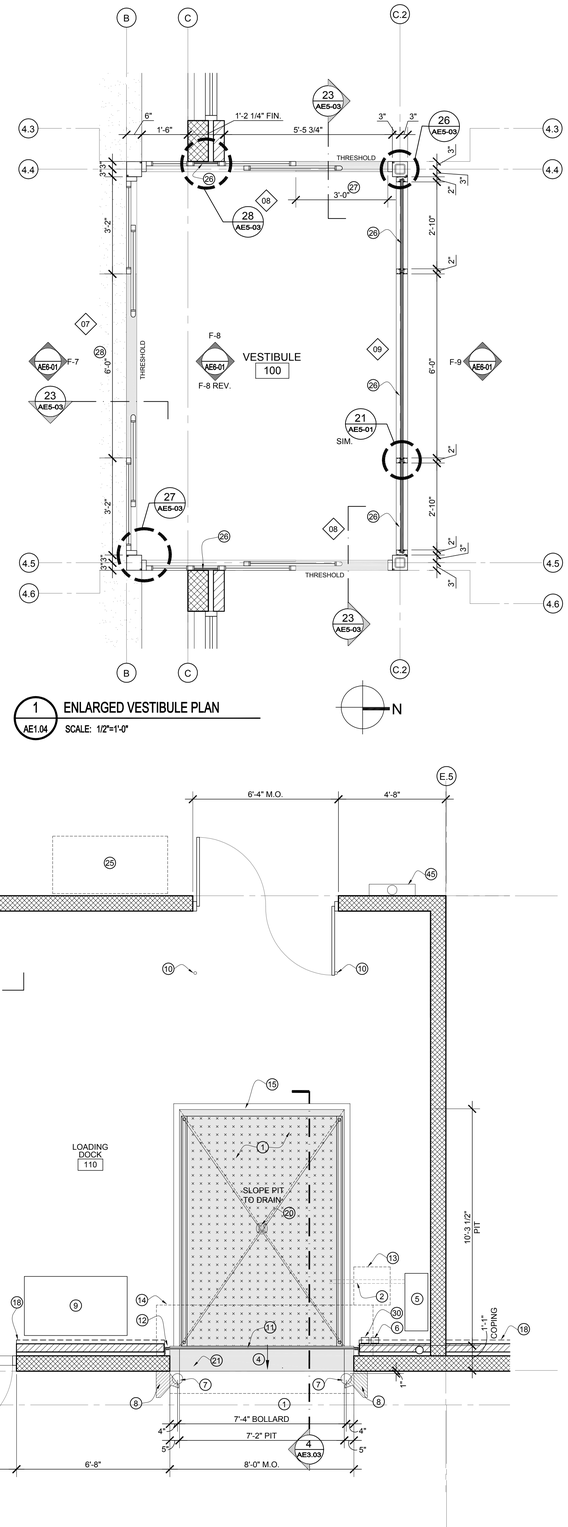

1 AE1.04 ENLARGED VESTIBULE PLAN
SCALE: 1/2"=1'-0"

2 AE1.04 ENLARGED LOADING DOCK PLAN
SCALE: 3/8"=1'-0"

REFERENCE NOTES

1. SEE SPEC. FOR BASIS OF DESIGN FOR SCISSOR LIFT. G.C. TO ADJUST PIT DIMENSIONS IF ALTERNATE LIFT IS USED.
2. PROVIDE SLEEVE UNDER SLAB FOR HYDRAULIC LINES BETWEEN SCISSOR LIFT AND PUMP UNIT. G.C. TO COORDINATE SIZING AND LOCATION WITH LIFT MANUFACTURE.
3. COPING WIDTH TO BE JUST INSIDE OF ROLL UP DOOR. SEE SPEC. FOR BASIS OF DESIGN FOR ROLL UP DOOR. G.C. TO ADJUST COPING WIDTH IF ALTERNATE DOOR IS USED.
4. SLOPE COPING TO DRAIN AWAY FROM BUILDING AND PIT SEE WALL SECTION.
5. SCISSOR LIFT PUMP UNIT FLOOR MOUNTED.
6. SCISSOR LIFT ELCTRICAL CONTROLL UNIT WALL MOUNTED.
7. BOLLARD LOCATE AS INDICATED. SEE DETAIL ELSEWHERE.
8. DOCK SEALER - SEE SPEC. FOR BASIS OF DESIGN.
9. BOX COMPACTOR/BAILER PROVIDED AND INSTALED BY OWNER.
10. DRILL SLAB TO RECIEVE SLEAVE FOR DOOR HOLD OPEN PINS.
11. ROLL UP DOOR PER SCHEDULE AND SPEC.
12. SEE DOOR SCHEDULE FOR ROLL UP DOOR JAMB DETAIL.
13. LOCATION OF ROLL UP DOOR MOTOR ABOVE.
14. ROLL UP DOOR CAN ABOVE.
15. STEEL ANGLE PIT NOSEING SEE SPEC.
16. NOT USED.
17. ROOF HATCH LOCATION ABOVE.
18. WAINSCOT AT LOADINGS DOCK - SEE DETAIL ELSEWHERE.
19. HOT WATER HEATER PER PLUMBING PLAN. LOCATE ABOVE CEILING AND OUT OF VIEW.
20. FLOOR DRAIN WITH TRAP PRIMER.
21. 30" ALUMINUM PLATE BRIDGE EXTENSION - PART OF SCISSOR LIFT.
22. DASHED LINE INDICATES REQUIRED MINIMUM ADA CLEAR FLOOR SPACE AT PLUMBING FIXTURE.
23. EQUIPMENT SUPPLIED & INSTALLED BY OWNER.
24. FURNITURE BY OWNER N.I.C.
25. CABINET WORK PROVIDED & INSTALLED BY OWNER.
26. METAL PANEL - SEE FRAME SHEDULE FOR EXTENT. CLEAR ANODIZED ALUMINUM. FINISHED ON ALL VISIBLE SIDES. BY STOREFRONT SUPPLIER.
27. CLEAR DOOR OPENING WHEN DOOR IS FULLY SLID OPEN.
28. JAMB TO JAMB OPENING.
29. MOP RACK PER SPEC.
30. ROLL-UP DOOR ELECTRIC MOTOR CONTROLL UNIT.
31. BLACK ADA RUBBER REDUCER STRIP.
32. MOP RACK W/ SELF.
33. MAINTAIN SHARP EDGES ALL AROUND.
34. 1/4" STEEL PLATE.
35. WELD ALL AROUND, GRIND SMOTH. JOINT TO BE NON VISIBLE AFTER PAINTING.
36. 6" D.E.S. STEEL PIPE, (6.625" O.D., 0.864" WALL THICKNESS).
37. SEAL AROUND.
38. 3/4" X 8" STUD BOLTS ON (3) SIDES @ 8" O.C. VERT.
39. 8" X 12 X 1/2" STEEL BASE PLATE.
40. EXTEND BUILDING FOOTING OUT AT BOLLARD.
41. (2) 3/4" Ø X 6" EXPANSION ANCHORS .
42. BUILDING FOOTING BEYOND.
43. BENCH PER SPEC.
44. LOCKER PER SPEC.
45. FIRE EXTINGUISHER PER SPEC.

REVISIONS:

NEW DOWNTOWN SALT LAKE CITY WINE STORE
300 West Harris Ave. (1563 South)

MJSA
357 West Pierpont Avenue □ Salt Lake City, Utah 84101
Telephone 801 364 5161 □ Facsimile 801 364 5167
ARCHITECTURE INTERIOR DESIGN

State of Utah–Department of Administrative Services
DIVISION OF FACILITIES CONSTRUCTION AND MANAGEMENT
4110 State Office Building/Salt Lake City, Utah 84114/538-3018

DEPARTMENT OF ALCOHOLIC BEVERAGE CONTROL
1625 South 900 West, Salt Lake City, Utah 84130/977-6800

STAMP

STATE OF UTAH
KIHLING
No. 127363
LICENSED ARCHITECT
11/12/07

ENLARGED FLOOR PLANS
SCALE: VARIES

DFCM PROJECT NO.: 05051030
DFCM CONTRACT NO.: 077431
MJSA PROJECT NO.: 07005
DATE: 10/15/07
SHEET: AE1-04

© 07/2005 Sate Hine Edwin(CADD), CD-NEC-04-Aug , Fri, 09 Nov 2007 - 3:32pm

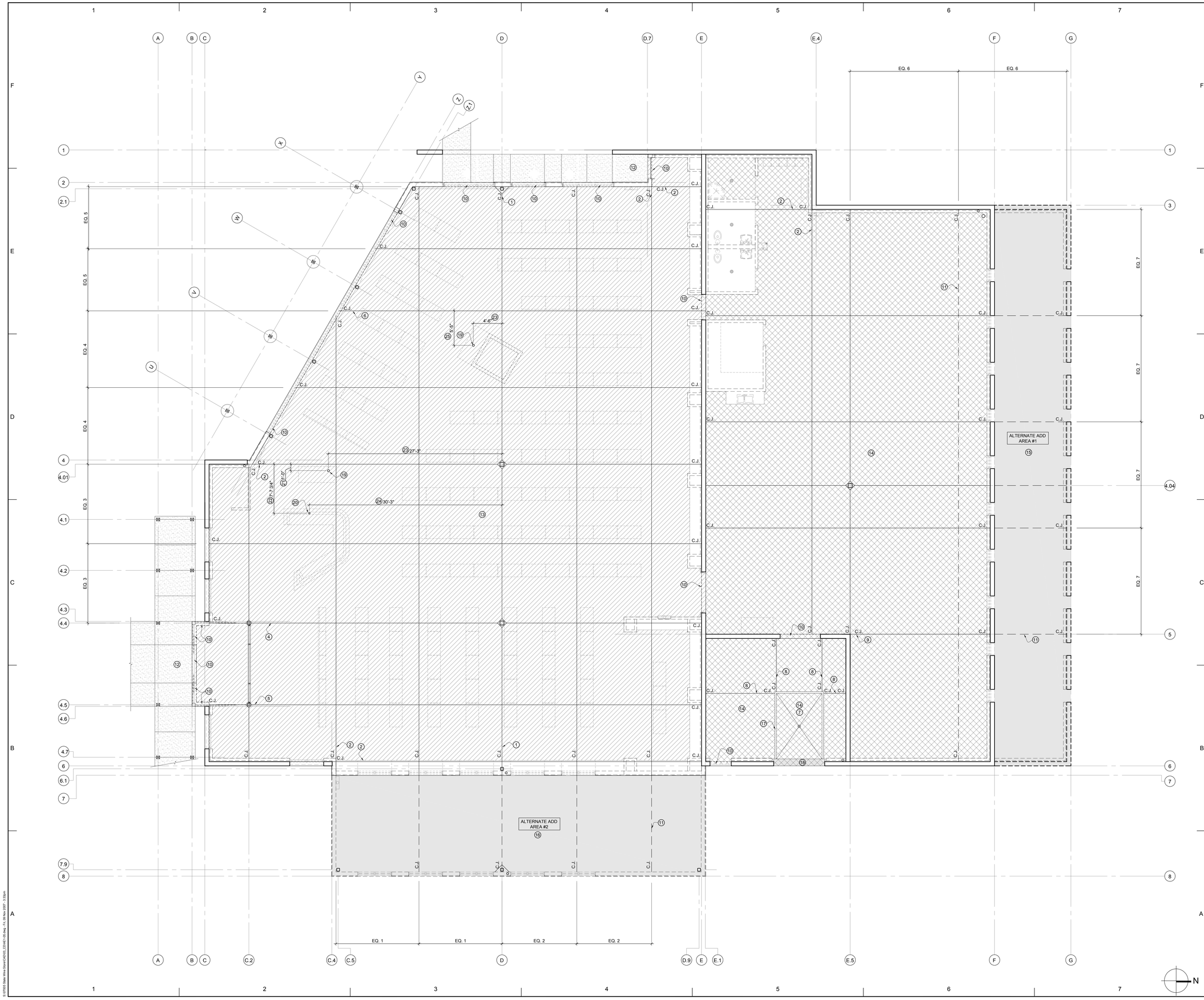

REFERENCE NOTES

1. SET THIS CONTROL JOINT ON GRID "D".
2. SET THIS CONTROL JOINT ON INSIDE FACE OF FOUNDATION.
3. SET THIS CONTROL JOINT ON GRID "C.2".
4. SET THIS CONTROL JOINT ON GRID "4.4".
5. SET THIS CONTROL JOINT ON GRID "4.5".
6. SET THIS CONTROL JOINT AT INTERSECTION OF CONTROL JOINT WITH NOTE #2 AND EXTERIOR FACE OF FOUNDATION.
7. SCISSOR LIFT PIT SEE AE1-04 FOR SIZE AND DIMENSIONS.
8. SET CONTROL JOINTS OFF CONCRETE CORNER OF PIT.
9. SET CONTROL JOINT ON GRID "5".
10. BLOCK OUT FOUNDATION TO ALLOW SLAB TO PASS OVER.
11. DASHED CONTROL JOINTS ARE TO BE USED ONLY IF ALTERNATE ADD AREAS ARE CONSTRUCTED.
12. EXTERIOR SIDEWALK.
13. DIAGONAL HATCH INDICATES SLAB TO RECIEVE A CONCRETE STAIN AND SEALER PER SPECS.
14. CROSS HATCH INDICATES SLAB TO RECIEVE JUST A CLEAR SEALER PER SPECS.
15. IF ALTERNATE ADD AREA #1 IS BUILT THEN ITS SLAB IS TO RECIEVE A FINISH PER ITEM #14 ABOVE.
16. IF ALTERNATE ADD AREA #2 IS BUILT THEN ITS SLAB IS TO RECIEVE A FINISH PER ITEM #13 ABOVE.
17. PIT WALL EDGE ANGLE AS DETAILED ELSEWHERE.
18. COPEING AS DETAILED ELSEWHERE.
19. FLOOR BOX LOCATION. SEE ELECTRICAL DRAWINGS FOR DEVICE.
20. STUB UP LOCATION THROUGH SLAB. SEE ELECTRICAL DRAWINGS FOR SIZE.
21. GRID "4.01" TO CENTER OF FLOOR BOX.
22. GRID "4.01" TO CENTER OF STUB UP.
23. GRID "D" TO CENTER OF FLOOR BOX.
24. GRID "D" TO CENTER OF STUB UP.
25. CJ W/ NOTE #6 TO CENTER OF FLOOR BOX.

REVISIONS:

NEW DOWNTOWN SALT LAKE CITY WINE STORE

300 West Harris Ave. (1563 South)

MJSA
357 West Pierpont Avenue □ Salt Lake City, Utah 84101
Telephone 801 364 5161 □ Facsimile 801 364 5167
ARCHITECTURE INTERIOR DESIGN

State of Utah–Department of Administrative Services

DIVISION OF FACILITIES CONSTRUCTION AND MANAGEMENT
4110 State Office Building/Salt Lake City, Utah 84114/538-3018

DEPARTMENT OF ALCOHOLIC BEVERAGE CONTROL
1625 South 900 West, Salt Lake City, Utah 84130/977-6800

STAMP

STATE OF UTAH
KIN L. WG
No. 127383
LICENSED ARCHITECT
11/12/07

SLAB PLAN

SCALE: 3/16" = 1'-0"

DFCM PROJECT NO.: 05051030

DFCM CONTRACT NO.: 077431

MJSA PROJECT NO.: 07005

DATE: 10/15/07

SHEET: AE1-05

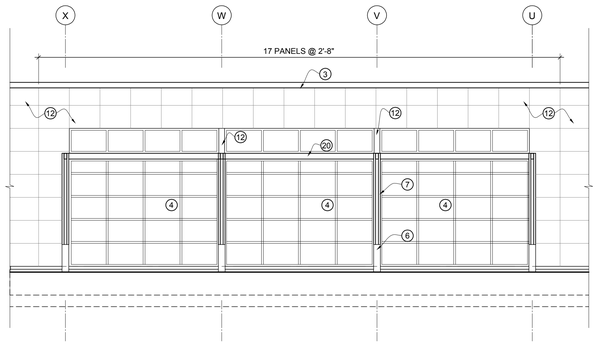

5 AE2.01 SOUTHWEST ELEVATION
SCALE: 3/16"=1'-0"

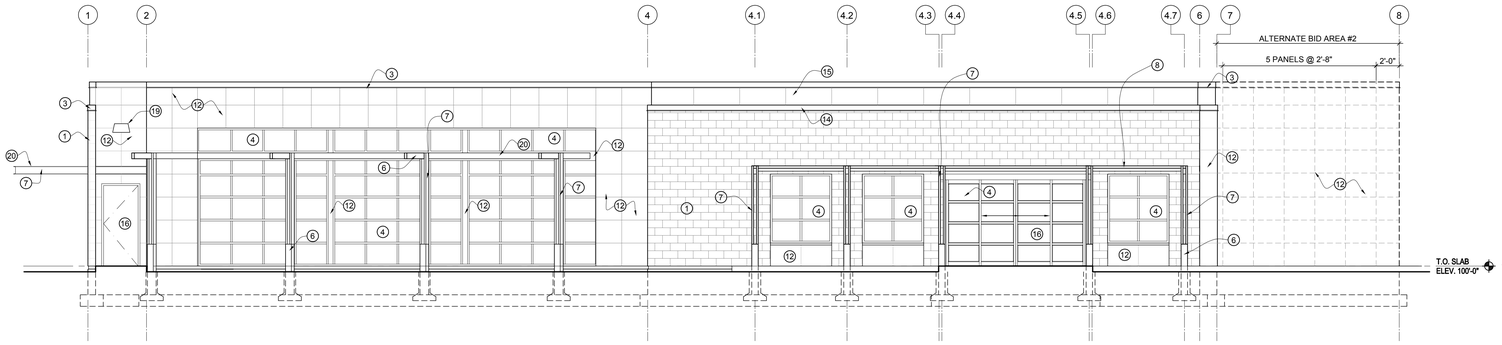

1 AE2.01 SOUTH ELEVATION
SCALE: 3/16"=1'-0"

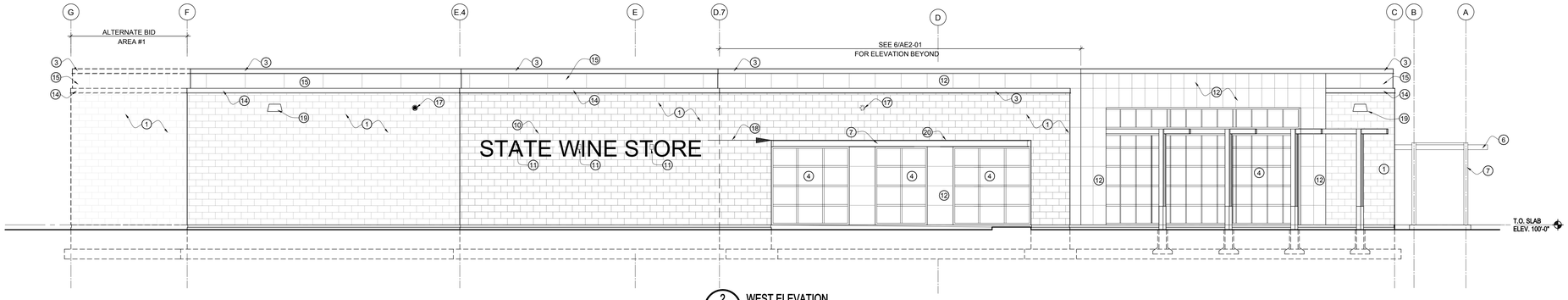

2 AE2.01 WEST ELEVATION
SCALE: 3/16"=1'-0"

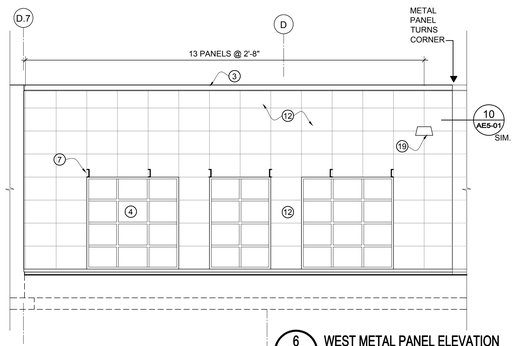

6 AE2.01 WEST METAL PANEL ELEVATION
SCALE: 3/16"=1'-0"

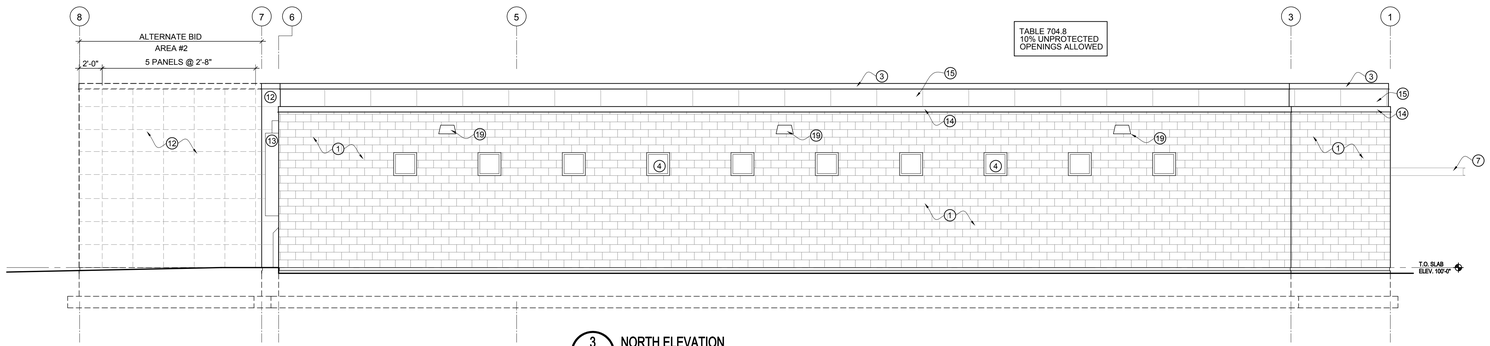

3 AE2.01 NORTH ELEVATION
SCALE: 3/16"=1'-0"

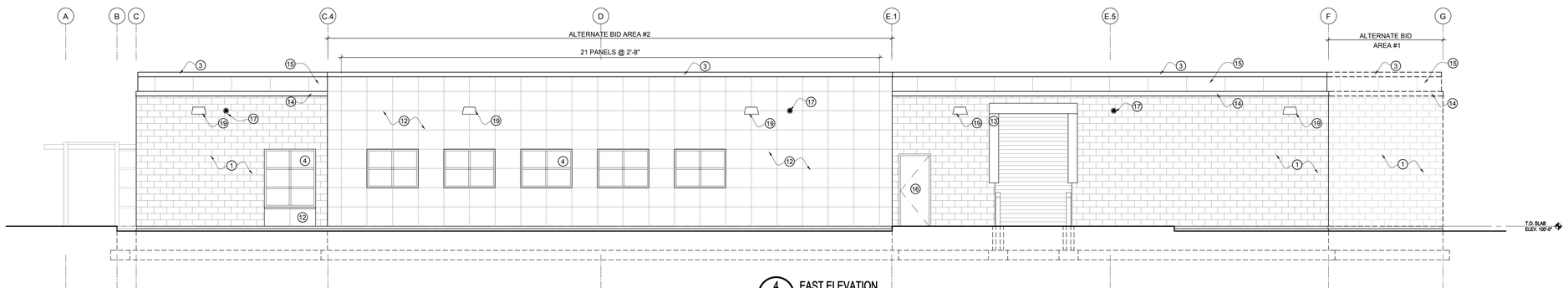

4 AE2.01 EAST ELEVATION
SCALE: 3/16"=1'-0"

REFERENCE NOTES

1. 8" CMU REINFORCED AS PER STRUCTURAL DRAWINGS --- 1
2. NOT USED
3. ALUMINUM CAP FLASHING --- 3
4. ALUMINUM STOREFRONT --- 4
5. NOT USED
6. STEEL TUBE. SIZE PER STRUCTURAL DRAWINGS. PAINT W/ HIGH PERFORMANCE COATING FINISH SEE SPEC --- 2
7. STEEL C-CHANNEL. SIZE PER STRUCTURAL DRAWINGS. PAINT W/ HIGH PERFORMANCE COATING FINISH SEE SPEC --- 2
8. CORRUGATED METAL "B" ROOF DECKING W/ EDGE ANGLE .PAINT W.HIGH PERFORMANCE COATING FINISH SEE SPEC. --- 2
9. BREAK SHAPE ALUMINUM COLUMN WRAP TO MATCH STOREFRONT
10. ELECTRIC SIGN PROVIDED & INSTALLED BY OWNER
11. THRU WALL BOX POWER FOR SIGN.
12. ALUMINUM PLATE PANEL SYSTEM PER SPEC. --- 2
13. DOCK SEALER
14. ALUMINUM COPING --- 3
15. ALUMINUM FLASHING --- 3
16. DOOR PER SCHEDULE - PAINT --- 2
17. OVERFLOW DRAIN NOZZLE PER PLUMBING DRAWINGS. CENTER IN METAL PANEL OR LOCATE IN CMU AS THIS DRAWING.
18. ALIGN TOP OF SIGN LETTERS WITH B.O. MASONRY OPENING.
19. WALL PACK LIGHT FIXTURE PER ELECTRICAL. LOCATE AS SHOWN ON THIS SHEET.
20. ALUMINUM BLADE SYSTEM. BY INDUSTRIAL LOUVERS INC. STANDARD 6" BLADE OR EQUAL BY OTHERS. CLEAR ANODIZED EXTRUDED ALUMINUM.

EXTERIOR FINISH SCHEDULE

1. SPLIT FACE BLOCK, JAMB, HEAD & SILL RETURNS TO BE REGULAR SMOOTH FINISH. BUEHNER BLOCK COLOR "EBONY" OR EQUAL BY OTHERS. SEAL W/ ANTI GRAFFITI COATING PER SPECS.
2. PAINT COLOR TO MATCH UNA- CLAD COLOR "SILVER METALLIC SR"
3. UNA - CLAD COLOR " SILVER METALLIC SR".
4. CLEAR ANODIZED.

REVISIONS:

NEW DOWNTOWN SALT LAKE CITY WINE STORE
300 West Harris Ave. (1563 South)

MJSA
357 West Pierpont Avenue □ Salt Lake City, Utah 84101
Telephone 801 364 5161 □ Facsimile 801 364 5167
ARCHITECTURE INTERIOR DESIGN

State of Utah–Department of Administrative Services
DIVISION OF FACILITIES CONSTRUCTION AND MANAGEMENT
4110 State Office Building/Salt Lake City, Utah 84114/538-3018

DEPARTMENT OF ALCOHOLIC BEVERAGE CONTROL
1625 South 900 West, Salt Lake City, Utah 84130/977-6800

STAMP

STATE OF UTAH
KIM L. NG
No. 127363
LICENSED ARCHITECT
11/12/07

DFCM PROJECT NO.: 05051030
DFCM CONTRACT NO.: 077431
MJSA PROJECT NO.: 07005
DATE: 10/15/07
SHEET: AE2-01

BUILDING ELEVATIONS
SCALE: 3/16" = 1'-0"

S:\07005 State Wine Store\CAD\03_CD\AE2-01.dwg - Wed, 14 Nov 2007 - 8:49am

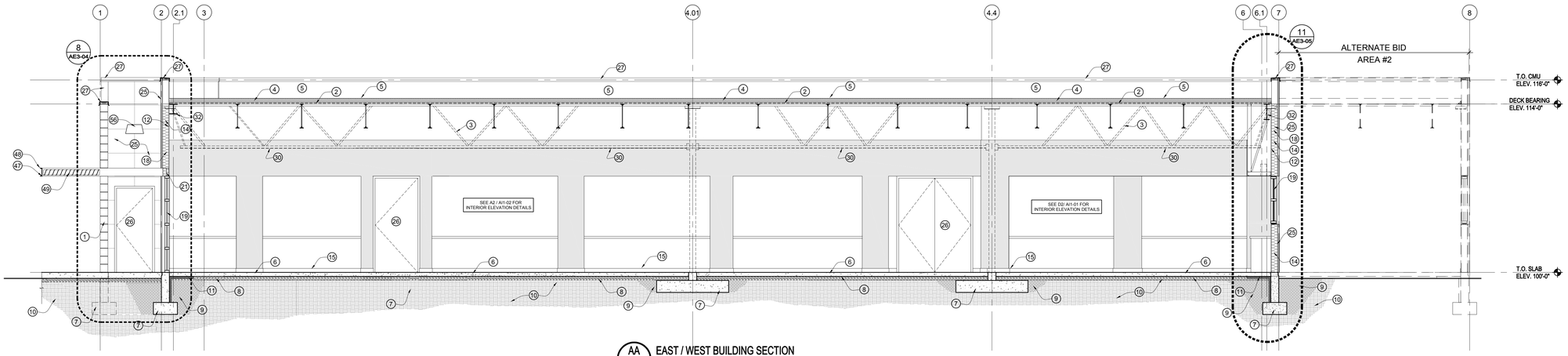

AA / AE3.01 EAST / WEST BUILDING SECTION
SCALE: 1/4"=1'-0"

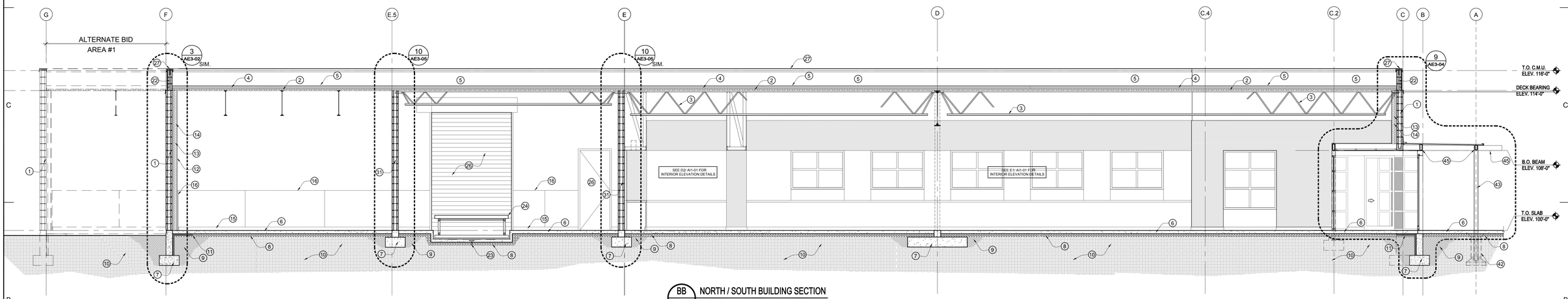

BB / AE3.01 NORTH / SOUTH BUILDING SECTION
SCALE: 1/4"=1'-0"

REFERENCE NOTES

1. 8" CMU ? SEE EXTERIOR ELEVATIONS FOR TYPE OF FINISH - SEE STRUCTURAL DRAWINGS AND REINFORCING REQUIRMENTS.
2. METAL DECK ? SEE STRUCTURAL DRAWINGS.
3. STEEL JOISTS ? SEE STRUCTURAL DRAWINGS.
4. R-38 (MIN.) RIGID INSULATION. INSULATION TAPERED TO DRAIN.
5. GRAY TPO ROOF MEMBRANE ? PER SPEC.
6. 4" CONCRETE SLAB ? REINFORCED PER STRUCTURA DRAWINGS.
7. CONCRETE FOOTINGS AND FOUNDATION REINFORCED PER STRUCTURAL DRAWINGS.
8. 4" FREE DRAINING GRAVEL.
9. COMPACTED ENGINEERED FILL PER SOIL REPORT AND STRUCTURAL DRAWINGS.
10. UNDISTURBED SOIL AS SPECIFIED.
11. 2" RIGID INSULATION OVER VAPOR BARRIER.
12. 5/8" GYP. BOARD.
13. 3 5/8" 20 GA. METAL STUDS @ 24" O.C. SET IN 6" STUD TRACKS.BRACE TO CMU WALL @ 8'-0" MAX. HORIZONTALLY. SEE STRUCTURAL DWGS FOR SPACING.
14. R-19 BATT. INSULATION AND VAPOR BARRIER.
15. BASE PER FINISH SCHEDULE.
16. PROTECTIVE WAINSCOT PER DETAIL.
17. DOWEL SLAB TO FOUNDATION.
18. 6", 18 GA. METAL STUDS @ 24" O.C. - SEE STRUCTURAL FOR SPACING.
19. WINDOW / STOREFRONT PER WINDOW SHEDULE.
20. 6", 16 GA METAL STUD INDIVIDUALY WELDED AND WELDED TO STRUCTURAL BEAM. SEE STRUCTURAL FOR SPACING.
21. STEEL BEAM PER STRUCTURAL DRAWINGS.
22. 6" CMU FINISH AS PER DETAIL.
23. FLOOR DRAIN WITH TRAP PRIMER.
24. SCISSOR LIFT SYSTEM - SEE SPECS.
25. ALUMINUM PLATE METAL PANEL SYSTEM PER SPECS.
26. DOOR PER SCHEDULE.
27. FLASHING FINISHED TO MATCH ALUMINUM METAL PLATE PANEL SYSTEM. ROLL SLIP LOCK JOINTS AND LAY FLAT. NO LAP JOINTS.
28. DOCK SEALER - SEE SPEC. FOR BASSIS OF DESIGN.
29. PIPE BOLLARD PER DETAIL.
30. STEEL TRUSS BEYOND - SEE STRUCTURAL DRAWINGS.
31. 8" CMU BLOCKS.
32. STEEL BEAM - SEE STRUCTURAL DRAWINGS
33. STEEL COLUMN - SEE STRUCTURAL DRAWINGS.
34. 1 1/2" X 3" SERRATED STEEL RUNG - GALVANIZED.
35. C X 7.25 STEEL CHANNEL STRINGERS - PAINTED.
36. 1 1/2" O.D. STEEL PIPE RAILING - PAINTED.
37. 4 X 4 X 1/4" STEEL ANGLE - SEE STRUCTURAL DRAWINGS. PAINT TO MATCH JOISTS.
38. ROOF HATCH PER SPEC.
39. LADDER SAFETY POST.
40. INSULATED HATCH CURB W/ INTERGRAL FLASHING TO ACCEPT & COVER ROOF MEMBRANE.
41. CRICKET PER ROOF PLAN.
42. INDUSTRIAL LOUVERS INC. PREMANUFACTURED CLEAR ANODIZED FINISH ALUMINUM FLANGE AND STANDARD 6" BLADES. SECURE TO TAKE STEEL WITH 3/4" Ø THRU BOLTS @ 12 " O/C. PROVIDE ISOLATION TAPE PREDRILL T.S. W/ 7/8" Ø HOLES TO RECEIVE 3/4" Ø BOLTS.
43. (2) C6 X 10.5 X LENGTH AS REQ. STEEL CHANNEL. - PAINT.
44. T.S. 1/4" X 2" X 6" - PAINT.
45. HSS 2 X 6 X 1/4 FIELD WELDED TO CHANNELS. GRIND ALL JOINTS SMOOTH - PAINT. SEE ALSO D2 / SF511.
46. PLYWOOD SHEATHING.
47. MC 8 X 11.5 - PAINT.
48. GRIND ALL EDGES SMOOTH PRIOR TO PAINTING.
49. INDUSTRIAL LOUVERS INC. PREMANUFACTURED CLEAR ANODIZED FINISH ALUMINUM SOLAR SHADING DEVICES WITH 6" TALL FLANGE AND 6" STANDARD BLADES.
50. ANGLE 1/4" X 3 X 6" SHOP WELDED TO MC 8 X 11.5 - PAINT. PROVIDE 7/8Ø HOLE TO RECEIVE 5/8"Ø THREADED ROD.
51. EXPANSION ANCHOR.
52. CONCRETE FOUNDATION. SEE STRUCTURAL DRAWINGS FOR WIDTH, REINFORCING, KEY WAYS ETC.
53. SET 5/8" Ø F1 554-36 ANCHOR ROD INTO HEADER (TYP. AT ALL CHANNEL). EXTEND ROD BEYOND BOTTOM OF CMU BY 1 1/2". SEE ALSO E6/ SF511.
54. 24"Ø SONO TUBE. SEE ALSO E3 / SB 502.
55. THICKENED SLAB BEYOND.
56. WALL PACK LIGHT FIXTURE PER ELECTRICAL. LOCATE AS SHOWN ON THIS SHEET.
57. HSS 6 X 2 X 1/4 X LENGTH AS REQ. CAP END W/ 1/4" STEELPLATE - PAINT.
58. T.S. 1/4" X 6" X 6"
59. 3/4" X 6" X 6" STEEL PLATE. SHOP WELDED GRIND ALL EDGES SMOOTH - PAINT.
60. FOOTING SEE STRUCTURAL DRAWINGS.
61. (4) #4'S @ 6" O.C. EACH WAY.
62. (2) 3/4" Ø X A325 LONG BOLTS. PREDRILL 5/8" Ø HOLES AS REQ. IN T.S. AND CHANNELS.
63. ISOLATION TAPE.
64. CONTROL POINT FOR SLOPE, SEE DETAIL.
65. HSS 6 X 4 X 5/16 - PAINT.
66. HSS 8 X 3 X 1/4 - PAINT.
67. HSS 8 X 3 X 1/8 - PAINT.
68. MASONRY TIES SEE STRUCTURAL DRAWINGS.
69. PROVIDE 1/4" CLOSER PLATE @ ALL OPEN ENDS - PAINT.
70. FIELD WELD PLATE 1/2" X 7" X 10" TO EMBEDED ANGLE IN WALL - PAINT.
71. 2" ± - SEE DETAIL 19/ AE5-03.
72. (3) 800 SZ00 -54.
73. FIT BASE TO MILL WORK.

State of Utah-Department of Administrative Services

DIVISION OF FACILITIES CONSTRUCTION AND MANAGEMENT
4110 State Office Building/Salt Lake City, Utah 84114/538-3018

DEPARTMENT OF ALCOHOLIC BEVERAGE CONTROL
1625 South 900 West, Salt Lake City, Utah 84130/977-6800

STAMP

STATE OF UTAH
KIM L. NG
No. 172563
LICENSED ARCHITECT
11/12/07

BUILDING SECTIONS

SCALE: 1/4" = 1'-0"

REVISIONS:

NEW DOWNTOWN SALT LAKE CITY WINE STORE
300 West Harris Ave. (1563 South)

MJSA
357 West Pierpont Avenue □ Salt Lake City, Utah 84101
Telephone 801 364 5161 □ Facsimile 801 364 5187
ARCHITECTURE INTERIOR DESIGN

DFCM PROJECT NO.: 05051030
DFCM CONTRACT NO.: 077431
MJSA PROJECT NO.: 07005
DATE: 10/15/07
SHEET: AE3-01

S:\07005 Sam Weir-Elevat\CADD_CD\AE3-01.dwg Fri, 09 Nov 2007 - 3:33pm

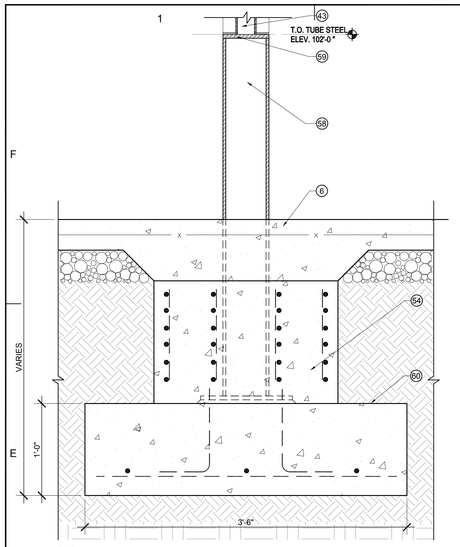

8 AE3-02 CANOPY DETAIL
SCALE: 1 1/2" = 1'-0" SEE ALSO E3 /SB 502

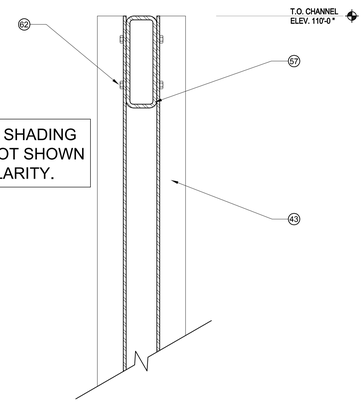

SOLAR SHADING FINS NOT SHOWN FOR CLARITY.

7 AE3-02 CANOPY DETAIL 7
SCALE: 3" = 1'-0" SEE ALSO D6 / SF 511

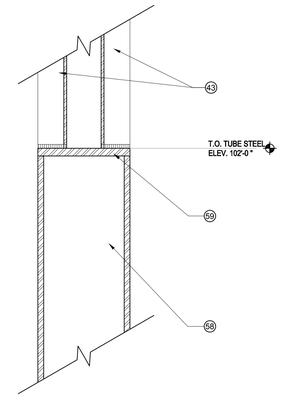

6 AE3-02 CANOPY DETAIL
SCALE: 3" = 1'-0"

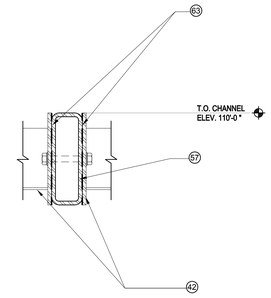

5 AE3-02 CANOPY DETAIL
SCALE: 3" = 1'-0"

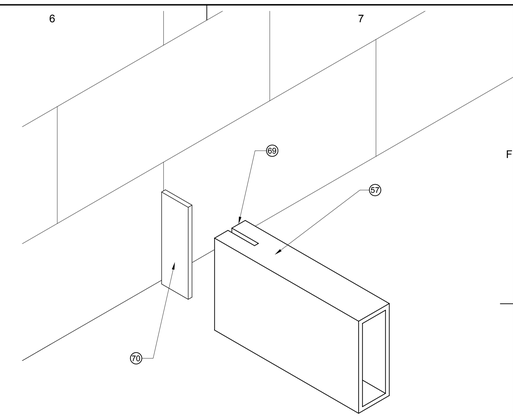

4 AE3-02 CANOPY DETAIL
SCALE: 3" = 1'-0" SEE ALSO E2, E4 / SF 511

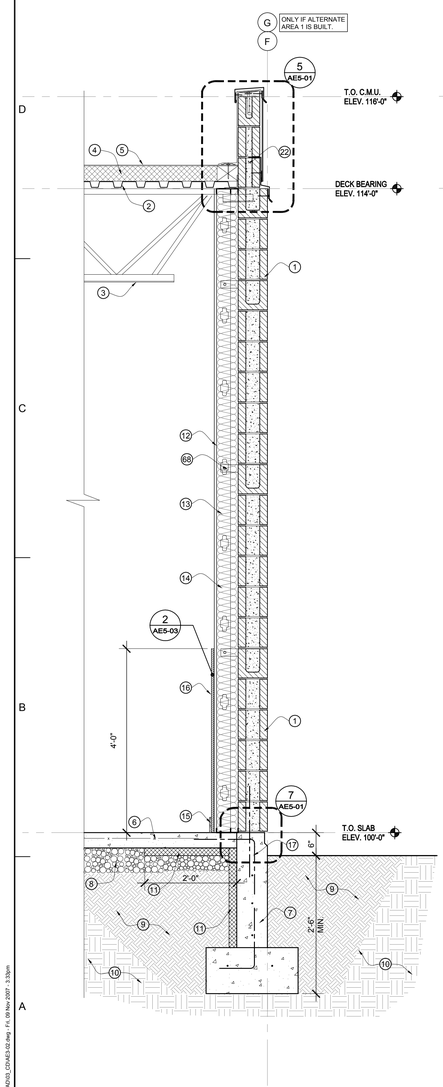

3 AE3-02 WALL SECTION
SCALE: 3/4"=1'-0"

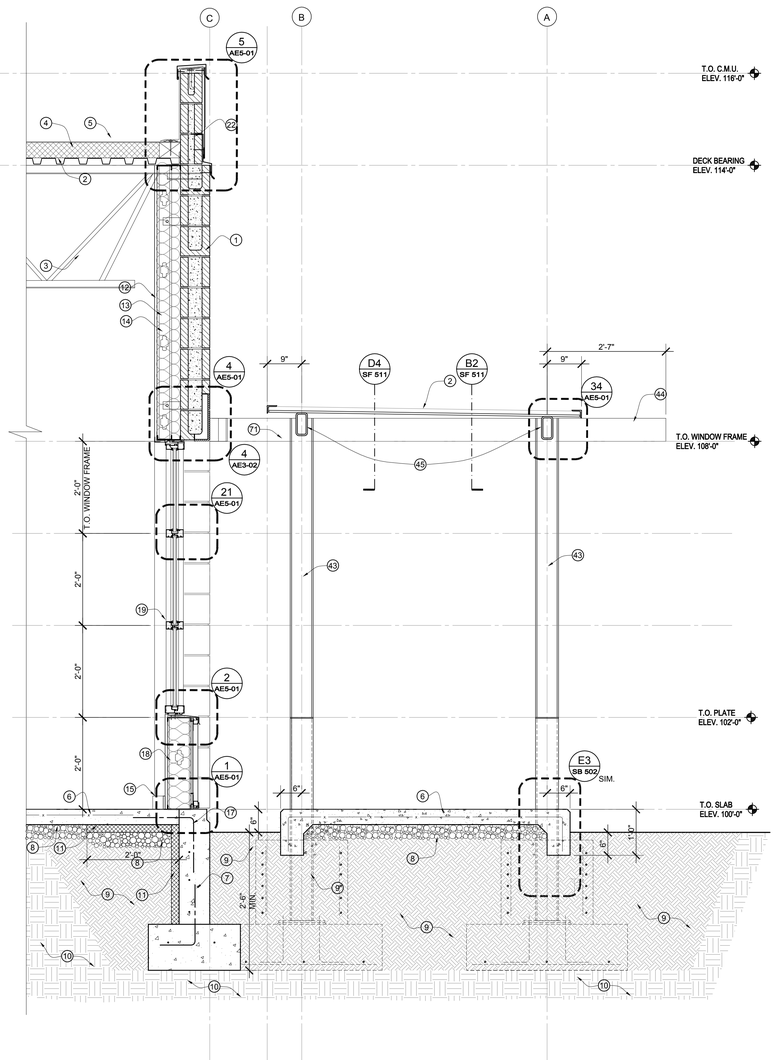

2 AE3-02 WALL SECTION
SCALE: 3/4"=1'-0"

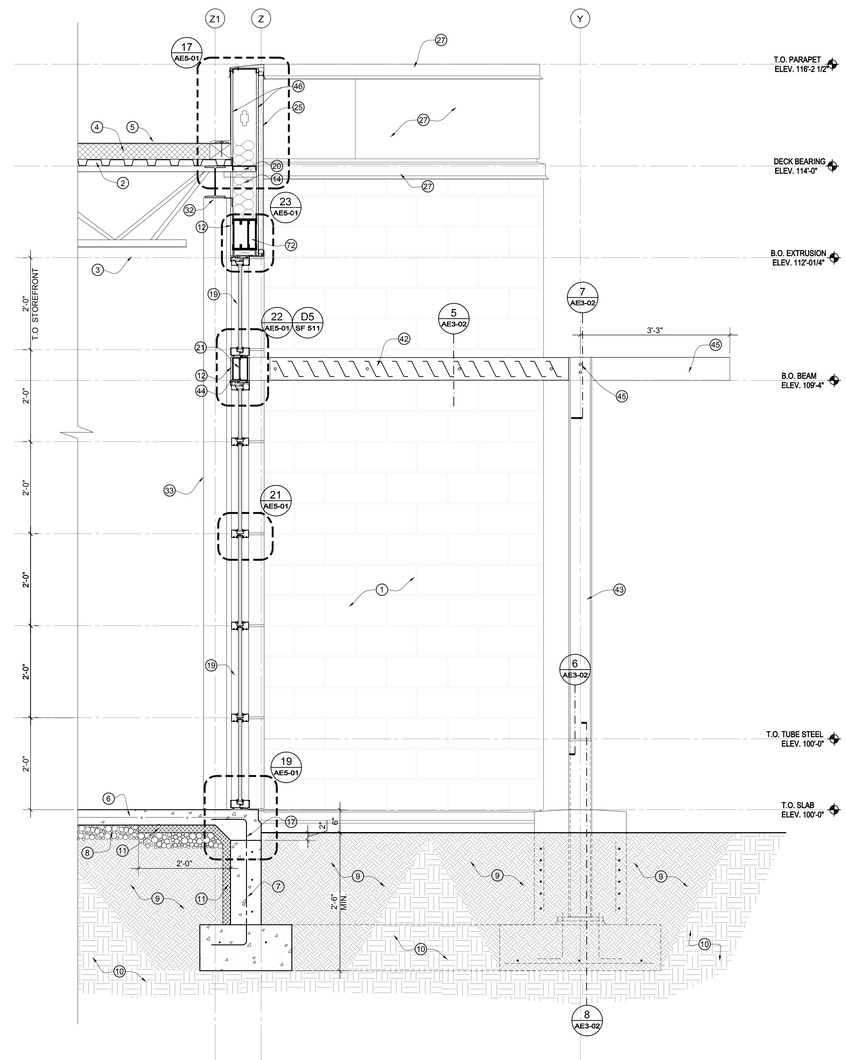

1 AE3-02 WALL SECTION
SCALE: 3/4"=1'-0"

REFERENCE NOTES

1. 8" CMU ? SEE EXTERIOR ELEVATIONS FOR TYPE OF FINISH - SEE STRUCTURAL DRAWINGS AND REINFORCING REQUIRMENTS.
2. METAL DECK ? SEE STRUCTURAL DRAWINGS.
3. STEEL JOISTS ? SEE STRUCTURAL DRAWINGS.
4. R-38 (MIN.) RIGID INSULATION. INSULATION TAPERED TO DRAIN.
5. GRAY TPO ROOF MEMBRANE ? PER SPEC.
6. 4" CONCRETE SLAB ? REINFORCED PER STRUCTURA DRAWINGS.
7. CONCRETE FOOTINGS AND FOUNDATION REINFORCED PER STRUCTURAL DRAWINGS.
8. 4" FREE DRAINING GRAVEL.
9. COMPACTED ENGINEERED FILL PER SOIL REPORT AND STRUCTURAL DRAWINGS.
10. UNDISTURBED SOIL AS SPECIFIED.
11. 2" RIGID INSULATION OVER VAPOR BARRIER.
12. 5/8" GYP. BOARD.
13. 3 5/8" 20 GA. METAL STUDS @ 24" O.C. SET IN 6" STUD TRACKS.BRACE TO CMU WALL @ 8'-0" MAX. HORIZONTALLY. SEE STRUCTURAL DWGS FOR SPACING.
14. R-19 BATT. INSULATION AND VAPOR BARRIER.
15. BASE PER FINISH SCHEDULE.
16. PROTECTIVE WAINSCOT PER DETAIL.
17. DOWEL SLAB TO FOUNDATION.
18. 6", 18 GA. METAL STUDS @ 24" O.C. - SEE STRUCTURAL FOR SPACING.
19. WINDOW / STOREFRONT PER WINDOW SHEDULE.
20. 6", 16 GA METAL STUD INDIVIDUALY WELDED AND WELDED TO STRUCTURAL BEAM. SEE STRUCTURAL FOR SPACING.
21. STEEL BEAM PER STRUCTURAL DRAWINGS.
22. 6" CMU FINISH AS PER DETAIL.
23. FLOOR DRAIN WITH TRAP.PRIMER.
24. SCISSOR LIFT SYSTEM - SEE SPECS.
25. ALUMINUM PLATE METAL PANEL SYSTEM PER SPECS.
26. DOOR PER SCHEDULE.
27. FLASHING FINISHED TO MATCH ALUMINUM METAL PLATE PANEL SYSTEM. ROLL SLIP LOCK JOINTS AND LAY FLAT. NO LAP JOINTS.
28. DOCK SEALER - SEE SPEC. FOR BASSIS OF DESIGN.
29. PIPE BOLLARD PER DETAIL.
30. STEEL TRUSS BEYOND - SEE STRUCTURAL DRAWINGS.
31. 8" CMU BLOCKS.
32. STEEL BEAM - SEE STRUCTURAL DRAWINGS
33. STEEL COLUMN - SEE STRUCTURAL DRAWINGS.
34. 1 1/2" X 3" SERRATED STEEL RUNG - GALVANIZED.
35. C4 X 7.25 STEEL CHANNEL STRINGERS - PAINTED.
36. 1 1/2" O.D. STEEL PIPE RAILING - PAINTED.
37. 4 X 4 X 1/4" STEEL ANGLE - SEE STRUCTURAL DRAWINGS. PAINT TO MATCH JOISTS.
38. ROOF HATCH PER SPEC.
39. LADDER SAFETY POST.
40. INSULATED HATCH CURB W/ INTERGRAL FLASHING TO ACCEPT & COVER ROOF MEMBRANE.
41. CRICKET PER ROOF PLAN.
42. INDUSTRIAL LOUVERS INC. PREMANUFACTURED CLEAR ANODIZED FINISH ALUMINUM FLANGE AND STANDARD 6" BLADES . SECURE TO TAKE STEEL WITH 3/4" Ø THRU BOLTS @ 12" O/C. PROVIDE ISOLATION TAPE PREDRILL T.S. W/ 7/8" Ø HOLES TO RECEIVE 3/4" Ø BOLTS.
43. (2) C6 X 10.5 X LENGTH AS REQ. STEEL CHANNEL. - PAINT.
44. T.S. 1/4" X 2" X 6" - PAINT.
45. HSS 2 X 6 X 1/4 FIELD WELDED TO CHANNELS. GRIND ALL JOINTS SMOOTH - PAINT. SEE ALSO D2 / SF511.
46. PLYWOOD SHEATHING.
47. MC 8 X 11.5 - PAINT.
48. GRIND ALL EDGES SMOOTH PRIOR TO PAINTING.
49. INDUSTRIAL LOUVERS INC. PREMANUFACTURED CLEAR ANODIZED FINISH ALUMINUM SOLAR SHADING DEVICES WITH 6" TALL FLANGE AND 6" STANDARD BLADES.
50. ANGLE 1/4" X 3 X 6" SHOP WELDED TO MC 8 X 11.5 - PAINT. PROVIDE 7/8Ø HOLE TO RECEIVE 5/8"Ø THREADED ROD.
51. EXPANSION ANCHOR.
52. CONCRETE FOUNDATION. SEE STRUCTURAL DRAWINGS FOR WIDTH, REINFORCING, KEY WAYS ETC.
53. SET 5/8" Ø F1 554-36 ANCHOR ROD INTO HEADER (TYP. AT ALL CHANNEL). EXTEND ROD BEYOND BOTTOM OF CMU BY 1 1/2" SEE ALSO E6/ SF511.
54. 24"Ø SONO TUBE. SEE ALSO E3 / SB 502.
55. THICKENED SLAB BEYOND.
56. WALL PACK LIGHT FIXTURE PER ELECTRICAL. LOCATE AS SHOWN ON THIS SHEET.
57. HSS 6 X 2 X 1/4 X LENGTH AS REQ. CAP END W/ 1/4" STEELPLATE - PAINT.
58. T.S. 1/4" X 6" X 6"
59. 3/4" X 6" X 6" STEEL PLATE. SHOP WELDED GRIND ALL EDGES SMOOTH - PAINT.
60. FOOTING SEE STRUCTURAL DRAWINGS.
61. (4) #4'S @ 6" O.C. EACH WAY.
62. (2) 3/4" Ø X A325 LONG BOLTS. PREDRILL 5/8" Ø HOLES AS REQ. IN T.S. AND CHANNELS.
63. ISOLATION TAPE.
64. CONTROL POINT FOR SLOPE, SEE DETAIL.
65. HSS 6 X 4 X 5/16 - PAINT.
66. HSS 8 X 3 X 1/4 - PAINT.
67. HSS 8 X 3 X 1/8 - PAINT.
68. MASONRY TIES SEE STRUCTURAL DRAWINGS.
69. PROVIDE 1/4" CLOSER PLATE @ ALL OPEN ENDS - PAINT.
70. FIELD WELD PLATE 1/2" X 7" X 10" TO EMBEDED ANGLE IN WALL - PAINT.
71. 2" ± - SEE DETAIL 19/ AE5-03.
72. (3) 800 S200 -54.
73. FIT BASE TO MILL WORK.

REVISIONS:

NEW DOWNTOWN SALT LAKE CITY WINE STORE
300 West Harris Ave. (1563 South)

357 West Pierpont Avenue □ Salt Lake City, Utah 84101
Telephone 801 364 5161 □ Facsimile 801 364 5187
ARCHITECTURE INTERIOR DESIGN
MJSA

State of Utah–Department of Administrative Services
DIVISION OF FACILITIES CONSTRUCTION AND MANAGEMENT
4110 State Office Building/Salt Lake City, Utah 84114/538-3018

DEPARTMENT OF ALCOHOLIC BEVERAGE CONTROL
1625 South 900 West, Salt Lake City, Utah 84158/977-6800

STAMP

STATE OF UTAH
KIM L. NG
No. 172563
LICENSED ARCHITECT
11/12/07

WALL SECTIONS
SCALE: 3/4" = 1'-0"

DFCM PROJECT NO.: 05051030
DFCM CONTRACT NO.: 077431
MJSA PROJECT NO.: 07005
DATE: 10/15/07
SHEET: AE3-02

S:\07005 Bain Wine Store\CADD_CD\AE3-02.dwg - Fri, 09 Nov 2007 - 3:33pm

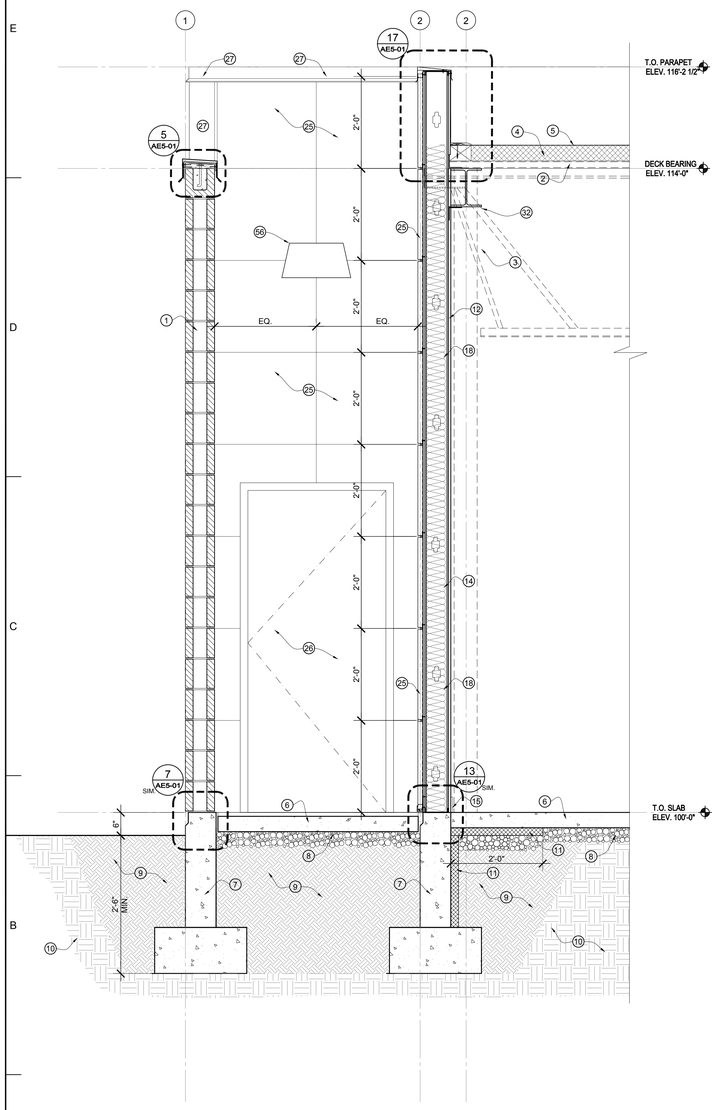

6 AE3-03 WALL SECTION
SCALE: 3/4"=1'-0"

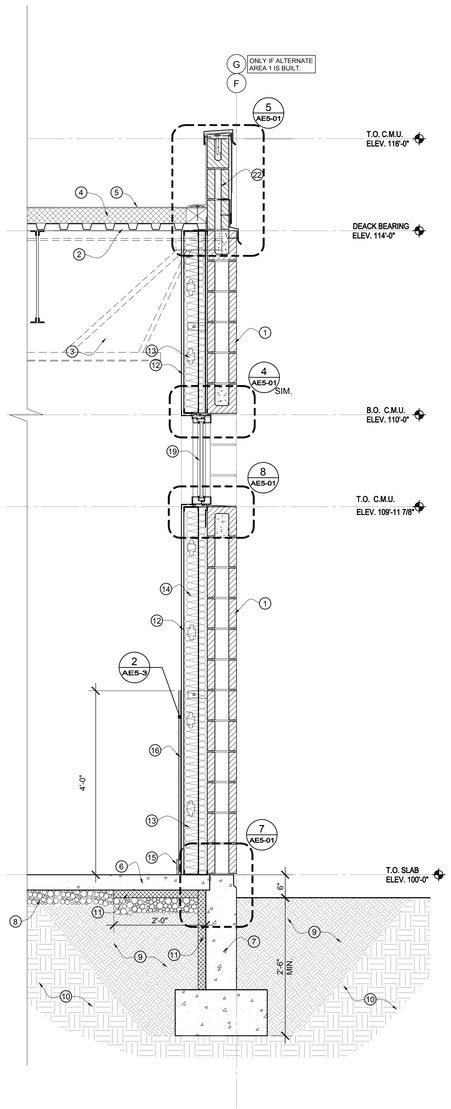

5 AE3-03 WALL SECTION
SCALE: 3/4"=1'-0"

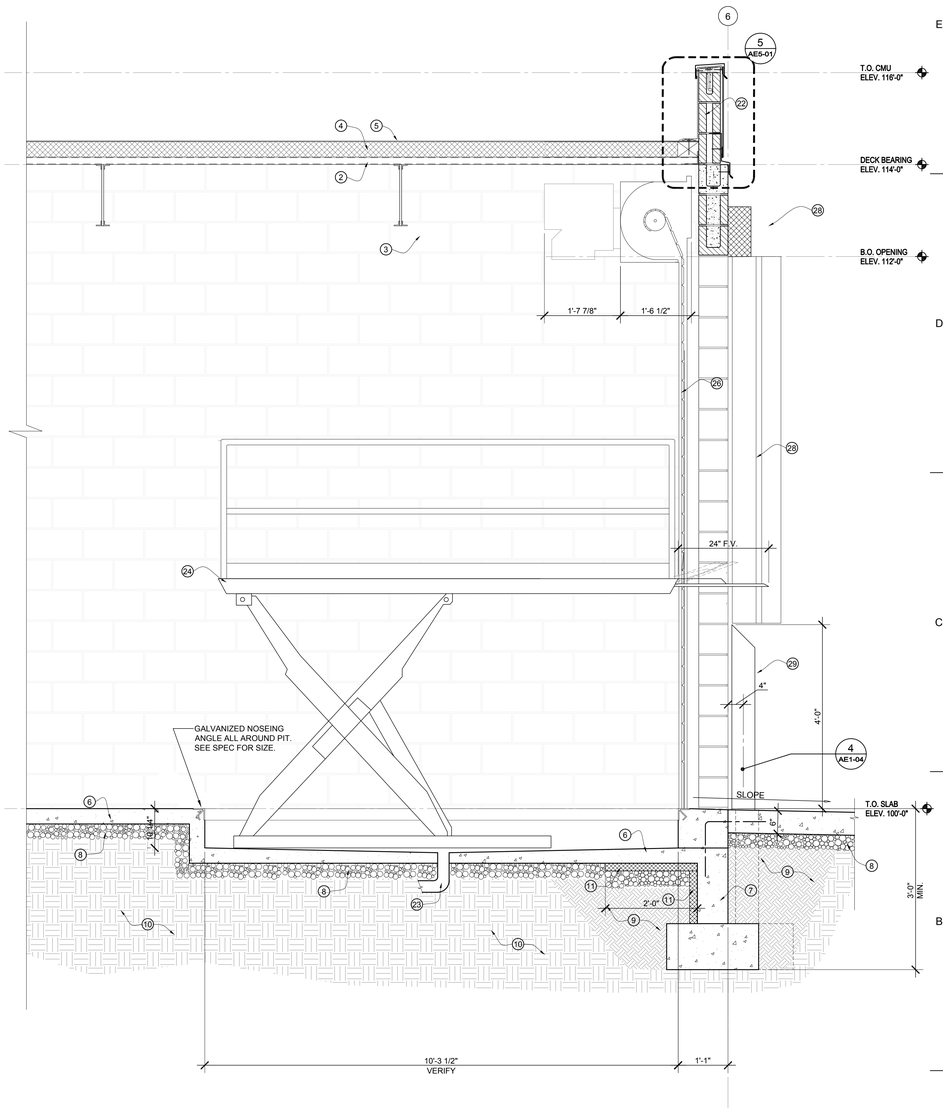

4 AE3-03 WALL SECTION
SCALE: 3/4"=1'-0"

REFERENCE NOTES

1. 8" CMU ? SEE EXTERIOR ELEVATIONS FOR TYPE OF FINISH - SEE STRUCTURAL DRAWINGS AND REINFORCING REQUIRMENTS.
2. METAL DECK ? SEE STRUCTURAL DRAWINGS.
3. STEEL JOISTS ? SEE STRUCTURAL DRAWINGS.
4. R-38 (MIN.) RIGID INSULATION. INSULATION TAPERED TO DRAIN.
5. GRAY TPO ROOF MEMBRANE ? PER SPEC.
6. 4" CONCRETE SLAB ? REINFORCED PER STRUCTURA DRAWINGS.
7. CONCRETE FOOTINGS AND FOUNDATION REINFORCED PER STRUCTURAL DRAWINGS.
8. 4" FREE DRAINING GRAVEL.
9. COMPACTED ENGINEERED FILL PER SOIL REPORT AND STRUCTURAL DRAWINGS.
10. UNDISTURBED SOIL AS SPECIFIED.
11. 2" RIGID INSULATION OVER VAPOR BARRIER.
12. 5/8" GYP. BOARD.
13. 3 5/8" 20 GA. METAL STUDS @ 24" O.C. SET IN 6" STUD TRACKS.BRACE TO CMU WALL @ 8'-0" MAX. HORIZONTALLY. SEE STRUCTURAL DWGS FOR SPACING.
14. R-19 BATT. INSULATION AND VAPOR BARRIER.
15. BASE PER FINISH SCHEDULE.
16. PROTECTIVE WAINSCOT PER DETAIL.
17. DOWEL SLAB TO FOUNDATION.
18. 6" 18 GA. METAL STUDS @ 24" O.C. - SEE STRUCTURAL FOR SPACING.
19. WINDOW / STOREFRONT PER WINDOW SHEDULE.
20. 6" 16 GA METAL STUD INDIVIDUALLY WELDED AND WELDED TO STRUCTURAL BEAM. SEE STRUCTURAL FOR SPACING.
21. STEEL BEAM PER STRUCTURAL DRAWINGS.
22. 6" CMU FINISH AS PER DETAIL.
23. FLOOR DRAIN WITH TRAP PRIMER.
24. SCISSOR LIFT SYSTEM - SEE SPECS.
25. ALUMINUM PLATE METAL PANEL SYSTEM PER SPECS.
26. DOOR PER SCHEDULE.
27. FLASHING FINISHED TO MATCH ALUMINUM METAL PLATE PANEL SYSTEM. ROLL SLIP LOCK JOINTS AND LAY FLAT. NO LAP JOINTS.
28. DOCK SEALER - SEE SPEC. FOR BASSIS OF DESIGN.
29. PIPE BOLLARD PER DETAIL.
30. STEEL TRUSS BEYOND - SEE STRUCTURAL DRAWINGS.
31. 8" CMU BLOCKS.
32. STEEL BEAM - SEE STRUCTURAL DRAWINGS
33. STEEL COLUMN - SEE STRUCTURAL DRAWINGS.
34. 1 1/2" X 3" SERRATED STEEL RUNG - GALVANIZED.
35. C4 X 7.25 STEEL CHANNEL STRINGERS - PAINTED.
36. 1 1/2" O.D. STEEL PIPE RAILING - PAINTED.
37. 4 X 4 X 1/4" STEEL ANGLE - SEE STRUCTURAL DRAWINGS. PAINT TO MATCH JOISTS.
38. ROOF HATCH PER SPEC.
39. LADDER SAFETY POST.
40. INSULATED HATCH CURB W/ INTERGRAL FLASHING TO ACCEPT & COVER ROOF MEMBRANE.
41. CRICKET PER ROOF PLAN.
42. INDUSTRIAL LOUVERS INC. PREMANUFACTURED CLEAR ANODIZED FINISH ALUMINUM FLANGE AND STANDARD 6" BLADES. SECURE TO TAKE STEEL WITH 3/4" Ø THRU BOLTS @ 12" O/C. PROVIDE ISOLATION TAPE PREDRILL T.S. W/ 7/8" Ø HOLES TO RECEIVE 3/4" Ø BOLTS.
43. (2) C6 X 10.5 X LENGTH AS REQ. STEEL CHANNEL. - PAINT.
44. T.S. 1/4" X 2" X 6" - PAINT.
45. HSS 2 X 6 X 1/4 FIELD WELDED TO CHANNELS. GRIND ALL JOINTS SMOOTH - PAINT. SEE ALSO D2 / SF511.
46. PLYWOOD SHEATHING.
47. MC 8 X 11.5 - PAINT.
48. GRIND ALL EDGES SMOOTH PRIOR TO PAINTING.
49. INDUSTRIAL LOUVERS INC. PREMANUFACTURED CLEAR ANODIZED FINISH ALUMINUM SOLAR SHADING DEVICES WITH 6" TALL FLANGE AND 6" STANDARD BLADES.
50. ANGLE 1/4" X 3 X 6" SHOP WELDED TO MC 8 X 11.5 - PAINT. PROVIDE 7/8Ø HOLE TO RECEIVE 5/8"Ø THREADED ROD.
51. EXPANSION ANCHOR.
52. CONCRETE FOUNDATION, SEE STRUCTURAL DRAWINGS FOR WIDTH, REINFORCING, KEY WAYS ETC.
53. SET 5/8" Ø F1 554-36 ANCHOR ROD INTO HEADER (TYP. AT ALL CHANNEL), EXTEND ROD BEYOND BOTTOM OF CMU BY 1 1/2". SEE ALSO E6/ SF511.
54. 24"Ø SONO TUBE. SEE ALSO E3 / SB 502.
55. THICKENED SLAB BEYOND.
56. WALL PACK LIGHT FIXTURE PER ELECTRICAL. LOCATE AS SHOWN ON THIS SHEET.
57. HSS 6 X 2 X 1/4 X LENGTH AS REQ. CAP END W/ 1/4" STEELPLATE - PAINT.
58. T.S. 1/4" X 6" X 6".
59. 3/4" X 6" X 6" STEEL PLATE. SHOP WELDED GRIND ALL EDGES SMOOTH - PAINT.
60. FOOTING SEE STRUCTURAL DRAWINGS.
61. (4) #4"S @ 6" O.C. EACH WAY.
62. (2) 3/4" Ø X A325 LONG BOLTS. PREDRILL 5/8" Ø HOLES AS REQ. IN T.S. AND CHANNELS.
63. ISOLATION TAPE.
64. CONTROL POINT FOR SLOPE, SEE DETAIL.
65. HSS 6 X 4 X 5/16 - PAINT.
66. HSS 8 X 3 X 1/4 - PAINT.
67. HSS 8 X 3 X 1/8 - PAINT.
68. MASONRY TIES SEE STRUCTURAL DRAWINGS.
69. PROVIDE 1/4" CLOSER PLATE @ ALL OPEN ENDS - PAINT.
70. FIELD WELD PLATE 1/2" X 7" X 10" TO EMBEDED ANGLE IN WALL - PAINT.
71. 2" ± - SEE DETAIL 19/ AE5-03.
72. (3) 800 S200 -54.
73. FIT BASE TO MILL WORK.

REVISIONS:

NEW DOWNTOWN SALT LAKE CITY WINE STORE
300 West Harris Ave. (1563 South)

MJSA
357 West Pierpont Avenue □ Salt Lake City, Utah 84101
Telephone 801 364 5161 □ Facsimile 801 364 5167
ARCHITECTURE INTERIOR DESIGN

State of Utah–Department of Administrative Services
DIVISION OF FACILITIES CONSTRUCTION AND MANAGEMENT
4110 State Office Building/Salt Lake City, Utah 84114/538-3018

DEPARTMENT OF ALCOHOLIC BEVERAGE CONTROL
1625 South 900 West, Salt Lake City, Utah 84130/977-6800

STAMP

STATE OF UTAH
KIM L. NG
NO. 127363
LICENSED ARCHITECT
11/12/07

WALL SECTIONS
SCALE: 3/4" = 1'-0"

DFCM PROJECT NO.: 05051030
DFCM CONTRACT NO.: 077431
MJSA PROJECT NO.: 07005
DATE: 10/15/07
SHEET: AE3-03

S:\07005 Store Wine Bistro\CADD_CD\AE3-03.dwg Fri, 09 Nov 2007 3:33pm

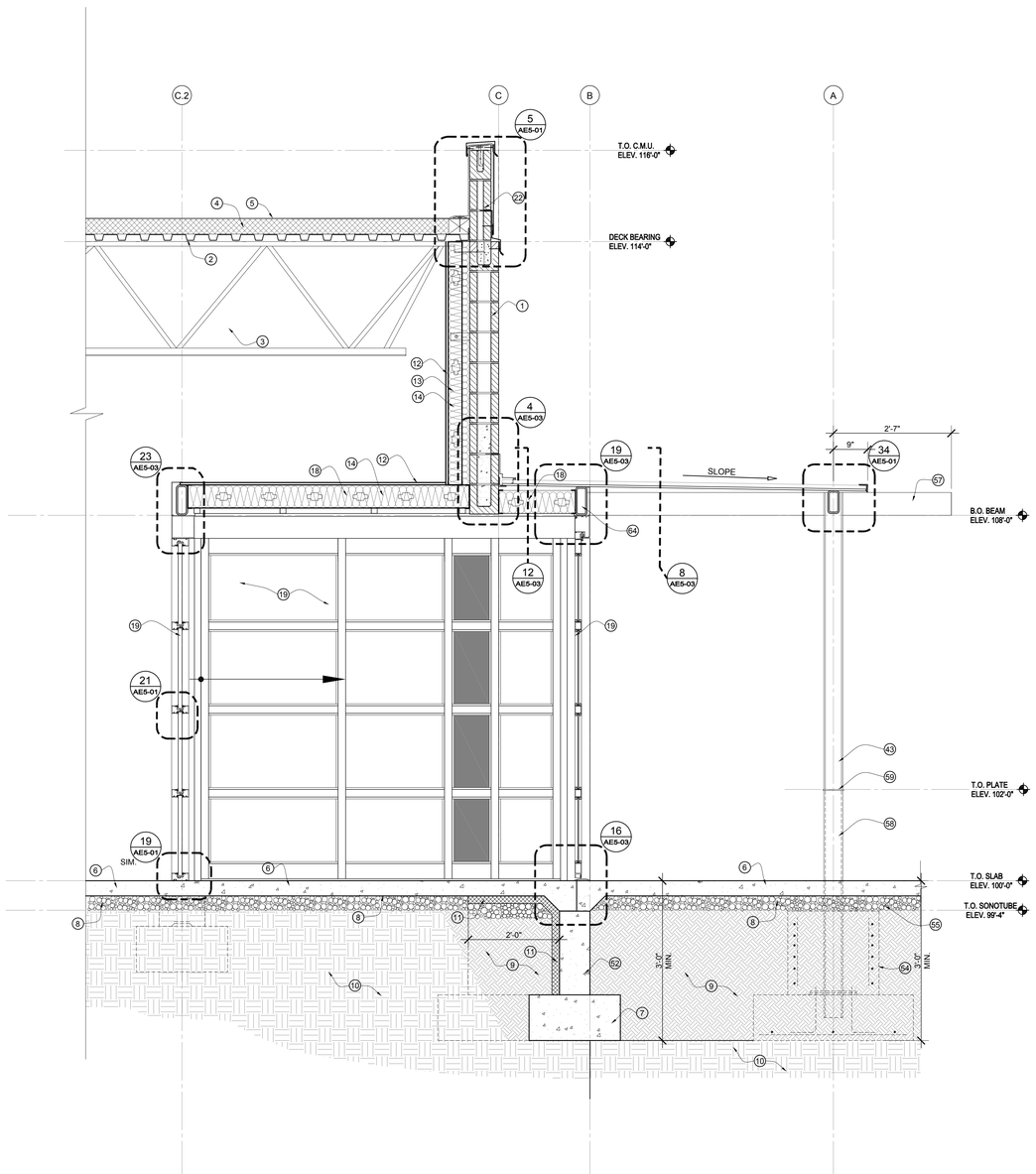

9 AE3-04 WALL SECTION

SCALE: 3/4"=1'-0"

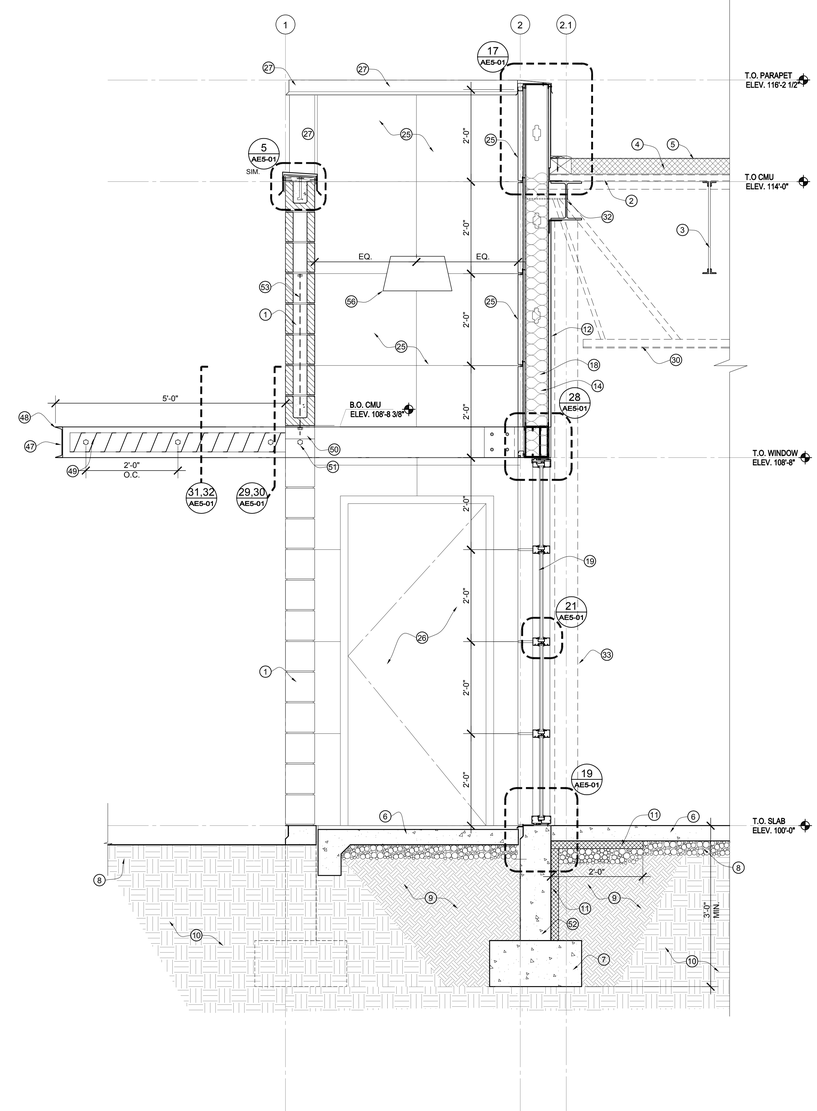

8 AE3-04 WALL SECTION

SCALE: 3/4"=1'-0"

REFERENCE NOTES

1. 8" CMU ? SEE EXTERIOR ELEVATIONS FOR TYPE OF FINISH - SEE STRUCTURAL DRAWINGS AND REINFORCING REQUIRMENTS.
2. METAL DECK ? SEE STRUCTURAL DRAWINGS.
3. STEEL JOISTS ? SEE STRUCTURAL DRAWINGS.
4. R-38 (MIN.) RIGID INSULATION. INSULATION TAPERED TO DRAIN.
5. GRAY TPO ROOF MEMBRANE ? PER SPEC.
6. 4" CONCRETE SLAB ? REINFORCED PER STRUCTURA DRAWINGS.
7. CONCRETE FOOTINGS AND FOUNDATION REINFORCED PER STRUCTURAL DRAWINGS.
8. 4" FREE DRAINING GRAVEL.
9. COMPACTED ENGINEERED FILL PER SOIL REPORT AND STRUCTURAL DRAWINGS.
10. UNDISTURBED SOIL AS SPECIFIED.
11. 2" RIGID INSULATION OVER VAPOR BARRIER.
12. 5/8" GYP. BOARD.
13. 3 5/8" 20 GA. METAL STUDS @ 24" O.C. SET IN 6" STUD TRACKS.BRACE TO CMU WALL @ 8'-0" MAX. HORIZONTALLY. SEE STRUCTURAL DWGS FOR SPACING.
14. R-19 BATT. INSULATION AND VAPOR BARRIER.
15. BASE PER FINISH SCHEDULE.
16. PROTECTIVE WAINSCOT PER DETAIL.
17. DOWEL SLAB TO FOUNDATION.
18. 6" 18 GA. METAL STUDS @ 24" O.C. - SEE STRUCTURAL FOR SPACING.
19. WINDOW / STOREFRONT PER WINDOW SHEDULE.
20. 6" 18 GA METAL STUD INDIVIDUALLY WELDED AND WELDED TO STRUCTURAL BEAM. SEE STRUCTURAL FOR SPACING.
21. STEEL BEAM PER STRUCTURAL DRAWINGS.
22. 6" CMU FINISH AS PER DETAIL.
23. FLOOR DRAIN WITH TRAP PRIMER.
24. SCISSOR LIFT SYSTEM - SEE SPECS.
25. ALUMINUM PLATE METAL PANEL SYSTEM PER SPECS.
26. DOOR PER SCHEDULE.
27. FLASHING FINISHED TO MATCH ALUMINUM METAL PLATE PANEL SYSTEM. ROLL SLIP LOCK JOINTS AND LAY FLAT. NO LAP JOINTS.
28. DOCK SEALER - SEE SPEC. FOR BASSIS OF DESIGN.
29. PIPE BOLLARD PER DETAIL.
30. STEEL TRUSS BEYOND - SEE STRUCTURAL DRAWINGS.
31. 8" CMU BLOCKS.
32. STEEL BEAM - SEE STRUCTURAL DRAWINGS
33. STEEL COLUMN - SEE STRUCTURAL DRAWINGS.
34. 1 1/2" X 3" SERRATED STEEL RUNG - GALVANIZED.
35. C4 X 7.25 STEEL CHANNEL STRINGERS - PAINTED.
36. 1 1/2" O.D. STEEL PIPE RAILING - PAINTED.
37. 4 X 4 X 1/4" STEEL ANGLE - SEE STRUCTURAL DRAWINGS. PAINT TO MATCH JOISTS.
38. ROOF HATCH PER SPEC.
39. LADDER SAFETY POST
40. INSULATED HATCH CURB W/ INTERGRAL FLASHING TO ACCEPT & COVER ROOF MEMBRANE.
41. CRICKET PER ROOF PLAN.
42. INDUSTRIAL LOUVERS INC. PREMANUFACTURED CLEAR ANODIZED FINISH ALUMINUM FLANGE AND STANDARD 6" BLADES. SECURE TO TAKE STEEL WITH 3/4" Ø THRU BOLTS @ 12" O/C. PROVIDE ISOLATION TAPE PREDRILL T.S. W/ 7/8" Ø HOLES TO RECEIVE 3/4" Ø BOLTS.
43. (2) C6 X 10.5 X LENGTH AS REQ. STEEL CHANNEL. PAINT.
44. T.S. 1/4" X 2" X 6" - PAINT.
45. HSS 2 X 6 X 1/4 FIELD WELDED TO CHANNELS. GRIND ALL JOINTS SMOOTH - PAINT. SEE ALSO D2 / SF511.
46. PLYWOOD SHEATHING.
47. MC 8 X 11.5 - PAINT.
48. GRIND ALL EDGES SMOOTH PRIOR TO PAINTING.
49. INDUSTRIAL LOUVERS INC. PREMANUFACTURED CLEAR ANODIZED FINISH ALUMINUM SOLAR SHADING DEVICES WITH 6" TALL FLANGE AND 6" STANDARD BLADES.
50. ANGLE 1/4" X 3 X 6" SHOP WELDED TO MC 8 X 11.5 - PAINT. PROVIDE 7/8Ø HOLE TO RECEIVE 5/8"Ø THREADED ROD.
51. EXPANSION ANCHOR.
52. CONCRETE FOUNDATION. SEE STRUCTURAL DRAWINGS FOR WIDTH, REINFORCING, KEY WAYS ETC.
53. SET 5/8" Ø F1 554-36 ANCHOR ROD INTO HEADER (TYP. AT ALL CHANNEL), EXTEND ROD BEYOND BOTTOM OF CMU BY 1 1/2". SEE ALSO E6/ SF511.
54. 24"Ø SONO TUBE. SEE ALSO E3 / SB 502.
55. THICKENED SLAB BEYOND.
56. WALL PACK LIGHT FIXTURE PER ELECTRICAL. LOCATE AS SHOWN ON THIS SHEET.
57. HSS 6 X 2 X 1/4 X LENGTH AS REQ. CAP END W/ 1/4" STEELPLATE - PAINT.
58. T.S. 1/4" X 6" X 6"
59. 3/4" X 6" X 6" STEEL PLATE. SHOP WELDED GRIND ALL EDGES SMOOTH - PAINT.
60. FOOTING SEE STRUCTURAL DRAWINGS.
61. (4) #4'S @ 6" O.C. EACH WAY
62. (2) 3/4" Ø X A325 LONG BOLTS. PREDRILL 5/8" Ø HOLES AS REQ. IN T.S. AND CHANNELS.
63. ISOLATION TAPE.
64. CONTROL POINT FOR SLOPE, SEE DETAIL.
65. HSS 6 X 4 X 5/16 - PAINT.
66. HSS 8 X 3 X 1/4 - PAINT.
67. HSS 8 X 3 X 1/8 - PAINT.
68. MASONRY TIES SEE STRUCTURAL DRAWINGS.
69. PROVIDE 1/4" CLOSER PLATE @ ALL OPEN ENDS - PAINT.
70. FIELD WELD PLATE 1/2" X 7" X 10" TO EMBEDED ANGLE IN WALL - PAINT.
71. 2" ± - SEE DETAIL 19/ AE5-03.
72. (3) 860 S200 54.
73. FIT BASE TO MILL WORK.

REVISIONS:

NEW DOWNTOWN SALT LAKE CITY WINE STORE

300 West Harris Ave. (1563 South)

MJSA
357 West Pierpont Avenue □ Salt Lake City, Utah 84101
Telephone 801 364 5161 □ Facsimile 801 364 5167
ARCHITECTURE INTERIOR DESIGN

State of Utah–Department of Administrative Services

DIVISION OF FACILITIES CONSTRUCTION AND MANAGEMENT
4110 State Office Building/Salt Lake City, Utah 84114/538-3018

DEPARTMENT OF ALCOHOLIC BEVERAGE CONTROL
1625 South 900 West, Salt Lake City, Utah 84130/977-6800

STAMP

STATE OF UTAH
KH L.NG
No. 122383
LICENSED ARCHITECT
11/12/07

DFCM PROJECT NO.: 05051030

DFCM CONTRACT NO.: 077431

MJSA PROJECT NO.: 07005

DATE: 10/15/07

SHEET: AE3-04

WALL SECTIONS

SCALE: 3/4" = 1'-0"

S:\07005 Salt Lake Wine Store\CAD\03_CD\AE3-04.dwg, F4, 03 Nov 2007 - 3:30pm

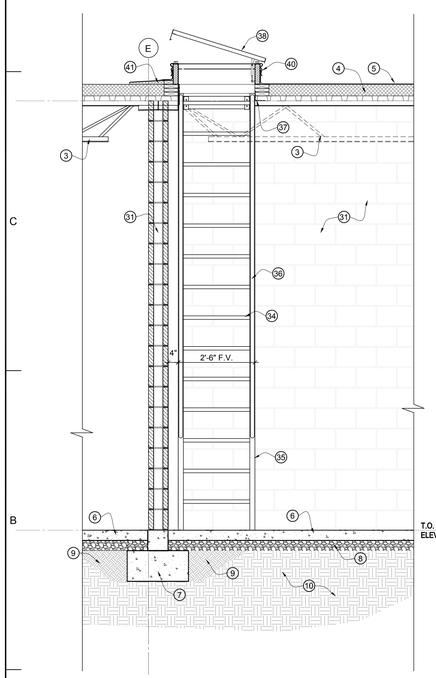

14 AE3-05 SHIPS LADDER DETAIL
SCALE: 1/2" = 1'-0"

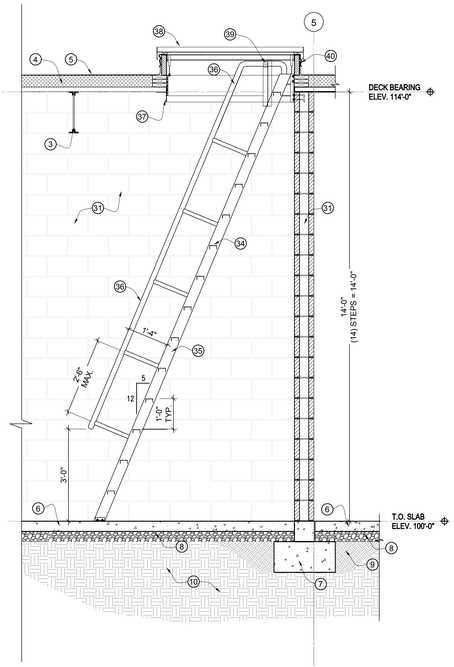

13 AE3-05 SHIPS LADDER DETAIL
SCALE: 1/2" = 1'-0"

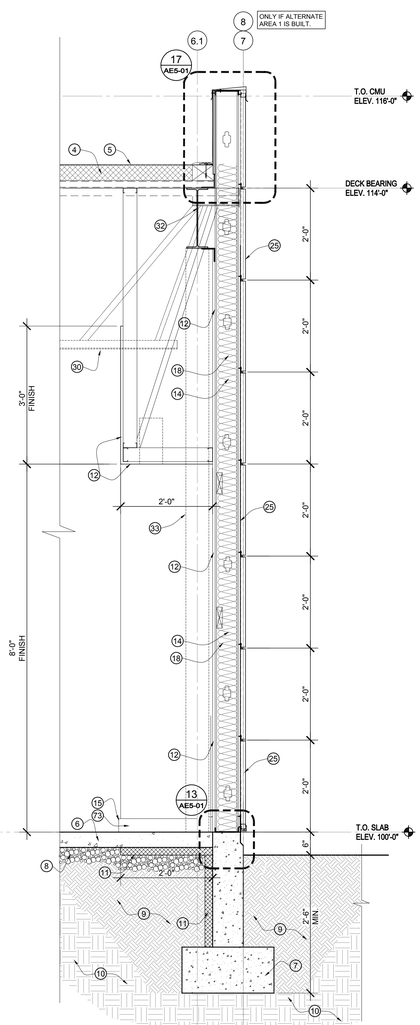

12 AE3-05 WALL SECTION
SCALE: 3/4"=1'-0"

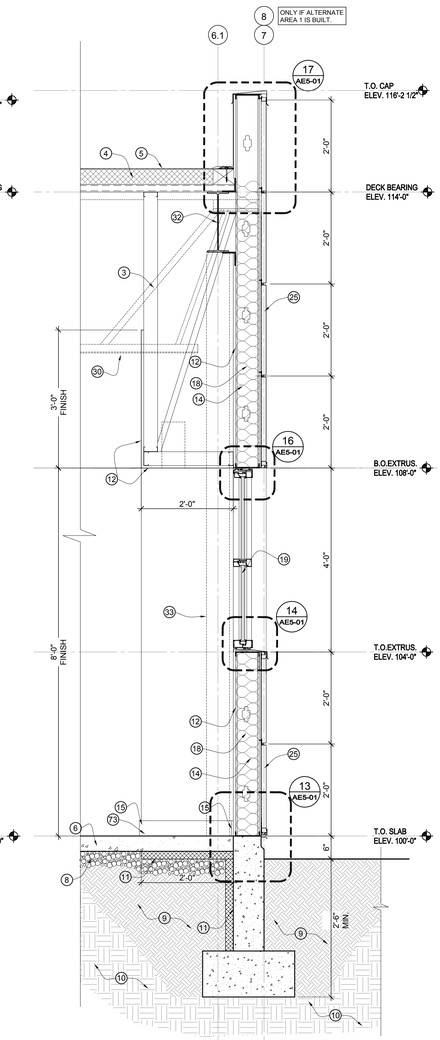

11 AE3-05 WALL SECTION
SCALE: 3/4"=1'-0"

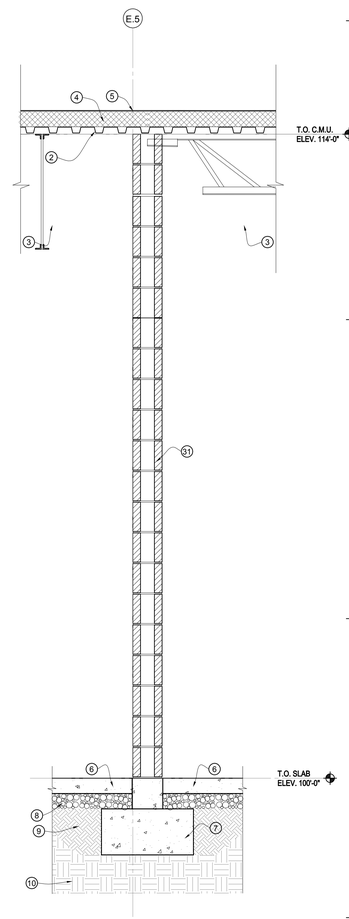

10 AE3-05 WALL SECTION
SCALE: 3/4"=1'-0"

REFERENCE NOTES

1. 8" CMU ? SEE EXTERIOR ELEVATIONS FOR TYPE OF FINISH - SEE STRUCTURAL DRAWINGS AND REINFORCING REQUIRMENTS.
2. METAL DECK ? SEE STRUCTURAL DRAWINGS.
3. STEEL JOISTS ? SEE STRUCTURAL DRAWINGS.
4. R-38 (MIN.) RIGID INSULATION. INSULATION TAPERED TO DRAIN.
5. GRAY TPO ROOF MEMBRANE ? PER SPEC.
6. 4" CONCRETE SLAB ? REINFORCED PER STRUCTURA DRAWINGS.
7. CONCRETE FOOTINGS AND FOUNDATION REINFORCED PER STRUCTURAL DRAWINGS.
8. 4" FREE DRAINING GRAVEL.
9. COMPACTED ENGINEERED FILL PER SOIL REPORT AND STRUCTURAL DRAWINGS.
10. UNDISTURBED SOIL AS SPECIFIED.
11. 2" RIGID INSULATION OVER VAPOR BARRIER.
12. 5/8" GYP. BOARD.
13. 3 5/8" 20 GA. METAL STUDS @ 24" O.C. SET IN 6" STUD TRACKS.BRACE TO CMU WALL @ 6'-0" MAX. HORIZONTALLY. SEE STRUCTURAL DWGS FOR SPACING.
14. R-19 BATT. INSULATION AND VAPOR BARRIER.
15. BASE PER FINISH SCHEDULE.
16. PROTECTIVE WAINSCOT PER DETAIL.
17. DOWEL SLAB TO FOUNDATION.
18. 6", 18 GA. METAL STUDS @ 24" O.C. - SEE STRUCTURAL FOR SPACING.
19. WINDOW / STOREFRONT PER WINDOW SHEDULE.
20. 6", 16 GA METAL STUD INDIVIDUALY WELDED AND WELDED TO STRUCTURAL BEAM. SEE STRUCTURAL FOR SPACING.
21. STEEL BEAM PER STRUCTURAL DRAWINGS.
22. 6" CMU FINISH AS PER DETAIL.
23. FLOOR DRAIN WITH TRAP PRIMER.
24. SCISSOR LIFT SYSTEM. - SEE SPECS.
25. ALUMINUM PLATE METAL PANEL SYSTEM PER SPECS.
26. DOOR PER SCHEDULE.
27. FLASHING FINISHED TO MATCH ALUMINUM METAL PLATE PANEL SYSTEM. ROLL SLIP LOCK JOINTS AND LAY FLAT. NO LAP JOINTS.
28. DOCK SEALER - SEE SPEC. FOR BASSIS OF DESIGN.
29. PIPE BOLLARD PER DETAIL.
30. STEEL TRUSS BEYOND - SEE STRUCTURAL DRAWINGS.
31. 8" CMU BLOCKS.
32. STEEL BEAM - SEE STRUCTURAL DRAWINGS.
33. STEEL COLUMN - SEE STRUCTURAL DRAWINGS.
34. 1 1/2" X 3" SERRATED STEEL RUNG - GALVANIZED.
35. C4 X 7.25 STEEL CHANNEL STRINGERS - PAINTED.
36. 1 1/2" O.D. STEEL PIPE RAILING - PAINTED.
37. 4 X 4 X 1/4" STEEL ANGLE - SEE STRUCTURAL DRAWINGS. PAINT TO MATCH JOISTS.
38. ROOF HATCH PER SPEC.
39. LADDER SAFETY POST.
40. INSULATED HATCH CURB W/ INTERGRAL FLASHING TO ACCEPT & COVER ROOF MEMBRANE.
41. CRICKET PER ROOF PLAN.
42. INDUSTRIAL LOUVERS INC. PREMANUFACTURED CLEAR ANODIZED FINISH ALUMINUM FLANGE AND STANDARD 6" BLADES. SECURE TO TAKE STEEL WITH 3/4" Ø THRU BOLTS @ 12 " O/C. PROVIDE ISOLATION TAPE PREDRILL T.S. W/ 7/8" Ø HOLES TO RECEIVE 3/4" Ø BOLTS.
43. (2) C6 X 10.5 X LENGTH AS REQ. STEEL CHANNEL. - PAINT.
44. T.S. 1/4" X 2" X 6" - PAINT.
45. HSS 2 X 6 X 1/4 FIELD WELDED TO CHANNELS. GRIND ALL JOINTS SMOOTH - PAINT. SEE ALSO D2 / SF511.
46. PLYWOOD SHEATHING.
47. MC 8 X 11.5 - PAINT.
48. GRIND ALL EDGES SMOOTH PRIOR TO PAINTING.
49. INDUSTRIAL LOUVERS INC. PREMANUFACTURED CLEAR ANODIZED FINISH ALUMINUM SOLAR SHADING DEVICES WITH 6" TALL FLANGE AND 6" STANDARD BLADES.
50. ANGLE 1/4" X 3 X 6" SHOP WELDED TO MC 8 X 11.5 - PAINT. PROVIDE 7/8Ø HOLE TO RECEIVE 5/8"Ø THREADED ROD.
51. EXPANSION ANCHOR.
52. CONCRETE FOUNDATION. SEE STRUCTURAL DRAWINGS FOR WIDTH, REINFORCING, KEY WAYS ETC.
53. SET 5/8" Ø F1 554-36 ANCHOR ROD INTO HEADER (TYP. AT ALL CHANNEL), EXTEND ROD BEYOND BOTTOM OF CMU BY 1 1/2". SEE ALSO E6/ SF511.
54. 24"Ø SONO TUBE. SEE ALSO E3 / SB 502.
55. THICKENED SLAB BEYOND.
56. WALL PACK LIGHT FIXTURE PER ELECTRICAL. LOCATE AS SHOWN ON THIS SHEET.
57. HSS 6.0 X 2 X 1/4 X LENGTH AS REQ. CAP END W/ 1/4" STEELPLATE - PAINT.
58. T.S. 1/4" X 6" X 6"
59. 3/4" X 6" X 6" STEEL PLATE. SHOP WELDED GRIND ALL EDGES SMOOTH - PAINT.
60. FOOTING SEE STRUCTURAL DRAWINGS.
61. (4) #4"S @ 6" O.C. EACH WAY.
62. (2) 3/4" Ø X A325 LONG BOLTS. PREDRILL 5/8" Ø HOLES AS REQ. IN T.S. AND CHANNELS.
63. ISOLATION TAPE.
64. CONTROL POINT FOR SLOPE, SEE DETAIL.
65. HSS 6 X 4 X 5/16 - PAINT.
66. HSS 8 X 3 X 1/4 - PAINT.
67. HSS 8 X 3 X 1/8 - PAINT.
68. MASONRY TIES SEE STRUCTURAL DRAWINGS.
69. PROVIDE 1/4" CLOSER PLATE @ ALL OPEN ENDS - PAINT.
70. FIELD WELD PLATE 1/2" X 7" X 10" TO EMBEDED ANGLE IN WALL - PAINT.
71. 2" s - SEE DETAIL 19/ AE5-03.
72. (3) 800 S200 -54.
73. FIT BASE TO MILL WORK.

REVISIONS:

NEW DOWNTOWN SALT LAKE CITY WINE STORE
300 West Harris Ave. (1563 South)

MJSA
357 West Pierpont Avenue □ Salt Lake City, Utah 84101
Telephone 801 364 5151 □ Facsimile 801 364 5167
ARCHITECTURE INTERIOR DESIGN

State of Utah–Department of Administrative Services
DIVISION OF FACILITIES CONSTRUCTION AND MANAGEMENT
4110 State Office Building/Salt Lake City, Utah 84114/538-3018

DEPARTMENT OF ALCOHOLIC BEVERAGE CONTROL
1625 South 900 West, Salt Lake City, Utah 84130/977-6800

STAMP

STATE OF UTAH
KIM L. NG
No. 127383
LICENSED ARCHITECT
11/12/07

WALL SECTIONS
SCALE: 3/4" = 1'-0"

DFCM PROJECT NO.: 05051030
DFCM CONTRACT NO.: 077431
MJSA PROJECT NO.: 07005
DATE: 10/15/07
SHEET: AE3-05

© 07/2005 State Hwy Stand/CADD_CD/AE3-05.dwg, Fri, 09 Nov 2007 - 2:34pm

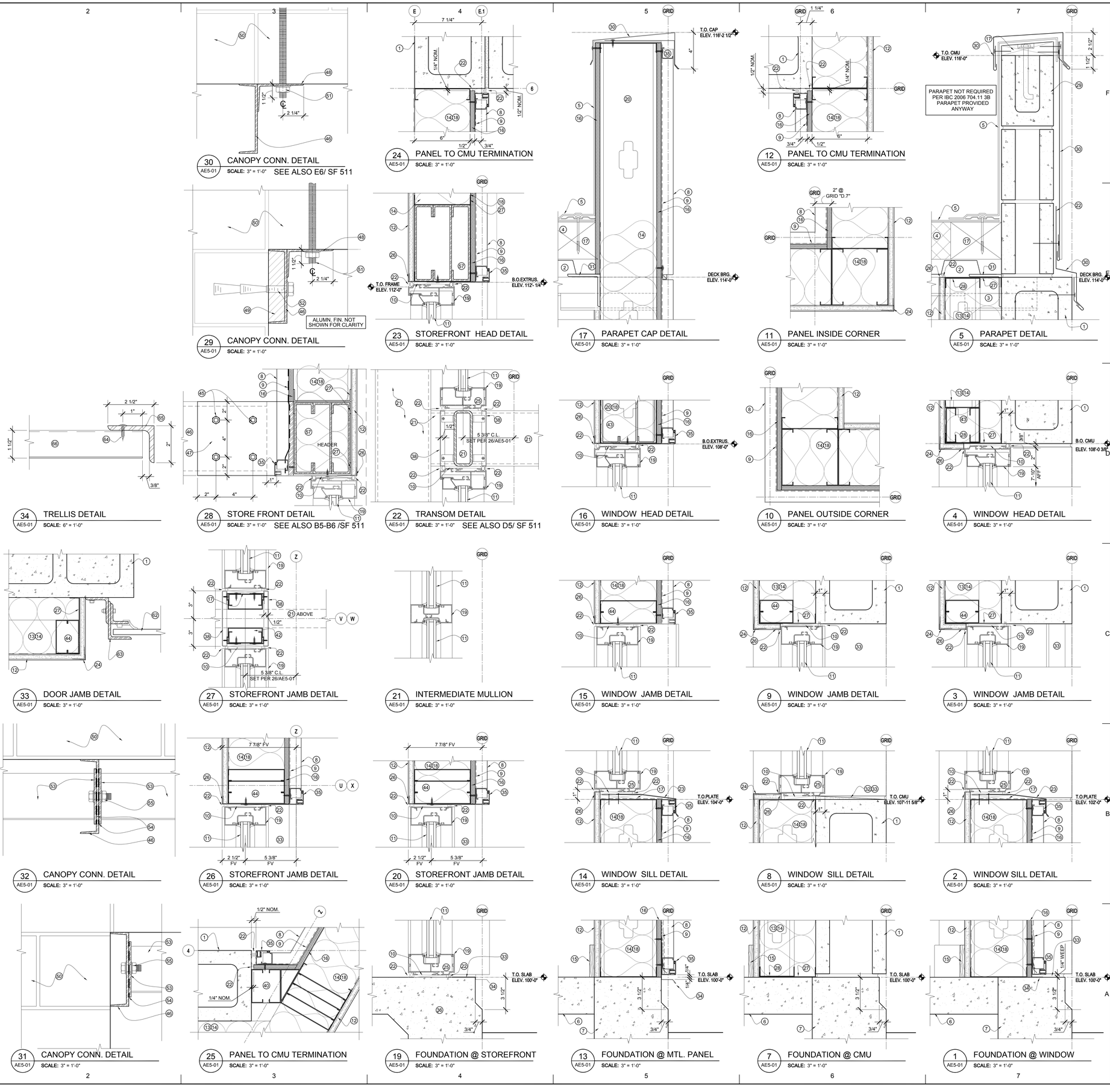

REFERENCE NOTES

1. 8" CMU ? SEE EXTERIOR ELEVATIONS FOR TYPE OF FINISH.
2. METAL DECK ? SEE STRUCTURAL DRAWINGS.
3. STEEL JOISTS ? SEE STRUCTURAL DRAWINGS.
4. R-38 (MIN.) RIGID INSULATION. INSULATION TAPERED TO DRAIN.
5. WHITE TPO ROOF MEMBRANE ? PER SPEC.
6. 4" CONCRETE SLAB ? REINFORCED PER STRUCTURAL DRAWINGS.
7. CONCRETE FOOTINGS AND FOUNDATION REINFORCED PER STRUCTURAL DRAWINGS.
8. ALUMINUM PLATE METAL PANEL SYSTEM PER SPECS.
9. WEATHER RESISTANT BARRIER PER SPECS.
10. SHIM
11. GLAZING PER SCHEDULE.
12. 5/8" GYP. BOARD OVER VAPOR BARRIER PER SPECS.
13. 3 5/8" 20 GA. METAL STUDS @ 24" O.C. BRACE TO CMU WALL @ 8'-0" MAX. HORIZONTALLY.
14. UNFACED BATT. INSULATION AND VAPOR BARRIER.
15. BASE PER FINISH SCHEDULE.
16. PLYWOOD SIDEWALL SHEATHING PER STRUCTURAL DRAWINGS.
17. PRESSURE TREATED NAILER.
18. 6" 18 GA. METAL STUDS SEE STRUCTURAL DRAWINGS FOR SPACING.
19. WINDOW / STOREFRONT PER WINDOW SHEDULE.
20. 600S-162, 16 GA METAL STUD @ 24" O.C. INDIVIDUALY WELDED TO STRUCTURAL BEAM.
21. STEAL BEAM (OR COL.)PER STRUCTURAL DRAWINGS.
22. SEALENT & BACKER ROD WHERE REQUIRED.
23. FLASHING FINISH TO MATCH STOREFRONT.
24. METAL CORNER BEAD.
25. WEEP - DO NOT CAULK WEEP HOLES.
26. METAL "L" MOULD MUDED IN.
27. 6" STUD TRACK.
28. 3 5/8" STUD TRACK.
29. 6" CMU -CAN BE REGULAR RUN, FORM FINISH, NON TINTED, BLOCK PROVIDED FLASHING IS NOT ELIMINATED THRU VE.
30. FLASHING FINISHED TO MATCH ALUMINUM METAL PLATE PANEL SYSTEM. ROLL SLIP LOCK JOINTS AND LAY FLAT. NO LAP JOINTS. ALSO SEE SHEET AE5-02.
31. STEEL ANGLE PER STRUCTURAL DRAWINGS.
32. CEMENT WASH - SEAL WITH CLEAR PENETRATING SEALER.
33. SEAL EXPOSE CONCRETE SILL WITH A CLEAR PENETRATING SEALER.
34. ALUMINUM WEEP FLASHING FINISHED TO MATCH ALUMINUM METAL PLATE PANEL SYSTEM.
35. EXTRUDED ALUMINUM FRAME - FINISHED TO MATCH & PROVIDED BY ALUMINUM METAL PLATE PANEL SYSTEM MANUFACTURER.
36. TURN DOWN SLAB AT STOREFRONT.
37. T.S 1/4" X 2" X 6".
38. ALUMINUM METAL PLATE PANEL SYSTEM. SHOP FABRICATED W/ TABS AND CLIP ANGLES FOR FIELD ATTACHMENT TO BEAM OR STUDS PRIOR TO STOREFRONT INSTALATION.
39. 2 1/2", 18 Ga. MTL. STUDS @ 24" O.C. WELDED TO BEAM FLANGES.
40. 3 5/8", 18 Ga. METAL STUDS.
41. 1/2" GYP. BD.
42. 3 5/8", 18 Ga. METAL STUD & TRACK WELDED TO BEAM ABOVE.
43. STUD WALL HEADER FRAMING PER STRUCTURAL DRAWINGS.
44. STUDWALL JAMB FRAMING PER STRUCTURAL DRAWINGS.
45. (4) 1/2" Ø A325 BOLTS & NUTS W/ WASHER.
46. MC 8X11.5.
47. MOUNTING BRACKET SHALL BE FEILD WELDED TO HEADER - FLANGE PLATE W/ 10.5 X 25 X 10" LONG W/ (4) X 5/8"Ø HOLES SPACED AS SHOWN.
48. ANGLE PLATE 6" X 3" X 1/4" X 6" LONG SHOP WELDED TO MC 8X 8.5 W/ 7/8" Ø HOLE TO RECIEVE 3/4" THREADED ROD.
49. (2) X 1/4" THICK FILLER PLATE @ EA. FACE OF CMU.
50. MASONRY WALL (BEYOND).
51. 5/8" Ø F1554 - 36 ANCHOR ROD MIN. 28" EMBEDMENT.
52. 3/4" Ø X 8" LONG EXPANSION ANCHOR IN 7/8" Ø HOLE.
53. PRE MANUFACTURED CLEAR ANODIZED ALUMINUM FLANGE SOLAR SHADING DEVICE W/ 6" FINS & 6" FLANGE.
54. ISOLATION TAPE FOR DIS SIMILAR MATERIAL SEPARATION.
55. 3/4" Ø X 1 1/2" LONG THRU BOLT W/ WASHER @ 24" O.C. FOR SECURING THE FLANGE OF THE SOLAR SHADING DEVICE ONTO THE MC 8X8.5.
56. 600 S 200-16 GA.
57. (3) 800 S 200 -54.
58. HSS 6 X 2X 1/8".
59. HSS 6X 4X 5/16".
60. HSS 8 X 3 X 5/16".
61. EDGE OF C8 X 11.5.
62. DOOR PER SCHEDULE.
63. STEEL ANGLE TRACKS, JAMB ANCHORS, SEALS AND FASTNERS BY DOOR MANUFACTURER.
64. S.S. SCREW WITH S.S. WASHER AND WATERTIGHT NEOPRENE GASKET - AT EACH FLUTE.
65. 2 1/2" x 2" X 1/4" GALVANIZED STEEL ANGLE. PRE-PAINT ALL SURFACES PRIOR TO INSTALLATION. HIGH PERFORMANCE PAINT PER SPEC.
66. 1 1/2" X 18Ga GALVANIZED STEEL "B" DECK. FIELD PAINT BOTH SIDES OF DECK. HIGH PERFORMANCE PAINT PER SPEC.

REVISIONS:

NEW DOWNTOWN SALT LAKE CITY WINE STORE

300 West Harris Ave. (1563 South)

357 West Pierpont Avenue □ Salt Lake City, Utah 84101
Telephone 801 364 5191 □ Facsimile 801 364 5187
ARCHITECTURE INTERIOR DESIGN
MJSA

State of Utah—Department of Administrative Services

DIVISION OF FACILITIES CONSTRUCTION AND MANAGEMENT
4110 State Office Building/Salt Lake City, Utah 84114/538-3018

DEPARTMENT OF ALCOHOLIC BEVERAGE CONTROL
1625 South 900 West, Salt Lake City, Utah 84130/977-6800

STAMP

STATE OF UTAH
KIM L. WO
No. 127383
LICENSED ARCHITECT
11/12/07

DETAILS

SCALE: AS NOTED

DFCM PROJECT NO.: 05051030
DFCM CONTRACT NO.: 077431
MJSA PROJECT NO.: 07005
DATE: 10/15/07
SHEET: AE5-01

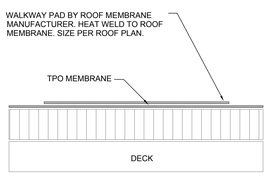

14 AE5-02 PAVER WALKWAY PROTECTION
SCALE: N.T.S

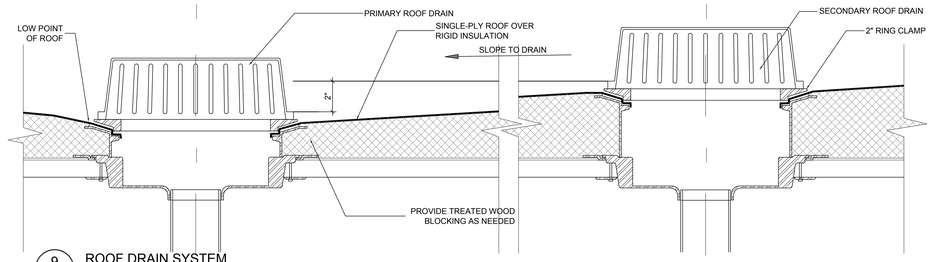

9 AE5-02 ROOF DRAIN SYSTEM
SCALE: N.T.S

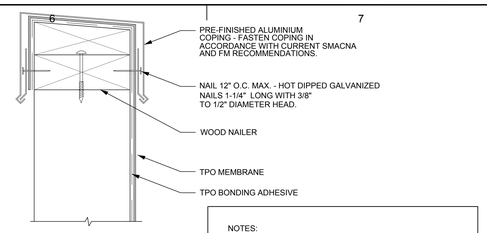

NOTES:
1. IF ANCHORS MUST PENETRATE COPING, EPDM WASHERS MUST BE USED.
2. WATERTIGHT INTEGRITY OF THE WALL AND METAL COPING SHALL BE ENSURED AND MAINTAINED BY OTHERS.

5 AE5-02 METAL CAPING FLASHING TERMINATION
SCALE: N.T.S

SEE SHEET AE5-01 FOR ACTUAL JOB PARAPET GEOMETRY & MATERIALS

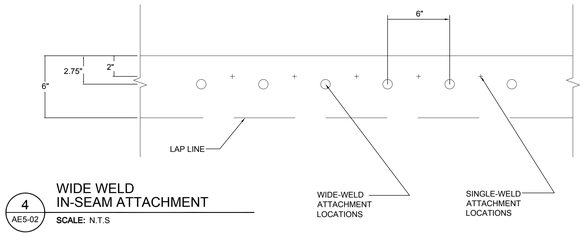

4 AE5-02 WIDE WELD IN-SEAM ATTACHMENT
SCALE: N.T.S

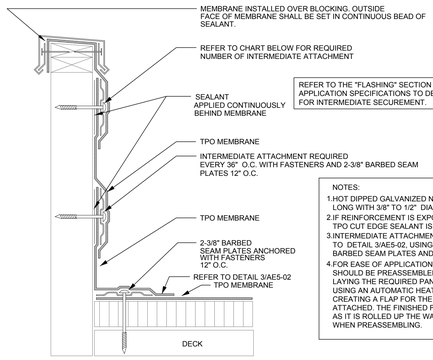

REFER TO THE "FLASHING" SECTION OF APPLICATION SPECIFICATIONS TO DETERMINE REQUIREMENTS FOR INTERMEDIATE SECUREMENT.

NOTES:
1. HOT DIPPED GALVANIZED NAILS 1 1/4" LONG WITH 3/8" TO 1/2" DIA. HEAD
2. IF REINFORCEMENT IS EXPOSED, APPLICATION OF TPO CUT EDGE SEALANT IS REQUIRED
3. INTERMEDIATE ATTACHMENT LAPS SHALL BE COMPLETED SIMILAR TO DETAIL 3/AE5-02, USING 2 3/8" BARBED SEAM PLATES AND FASTENERS, FASTENED AT 12" O.C.
4. FOR EASE OF APPLICATION, THE FLASHING SHOULD BE PREASSEMBLED. THIS CAN BE ACCOMPLISHED BY LAYING THE REQUIRED PANELS IN THE FIELD OF THE ROOF AND USING AN AUTOMATIC HEAT WELDER, WELD THE LAPS THUS CREATING A FLAP FOR THE BARBED SEAM PLATES TO BE ATTACHED. THE FINISHED FLASHING SHEET IS THEN FASTENED AS IT IS ROLLED UP THE WALL THROUGH THE FLAPS CREATED WHEN PREASSEMBLING.

PARAPET HEIGHT	INTERMEDIATE ATTACHMENTS
UP TO 2'	AT COPING ONLY
GREATER THAN 2' AND LESS THAN 3'	AT COPING, 8" MAX FROM ROOF SURFACE, AND AT 1/2 THE PARAPET HEIGHT
GREATER THAN 5' AND LESS THAN	AT COPING, 8" MAX FROM ROOF SURFACE,
GREATER THAN 6'	AND AT 24" AND AT 48" FROM ROOF SURFACE

13 AE5-02 MECHANICALLY ATTACHED WALL FLASHING
SCALE: N.T.S

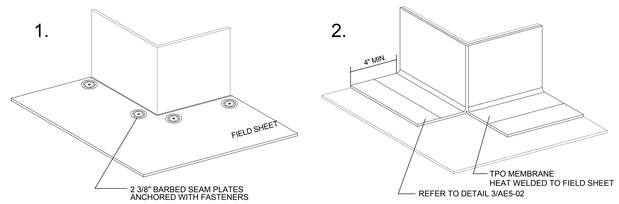

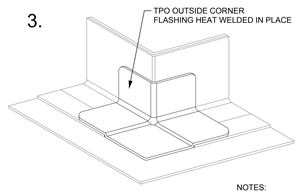

NOTES:
1. REFER TO OTHER APPLICABLE DETAILS REGARDING CURB AND PARAPET FLASHING.
2. REFER TO APPLICABLE TERMINATION DETAILS.
3. FLASHING SEAMS MUST NOT OCCUR WITHIN 12" OF CORNER.

8 AE5-02 OUTSIDE CORNER USING ULTRAPLY MEMBRANE
SCALE: N.T.S

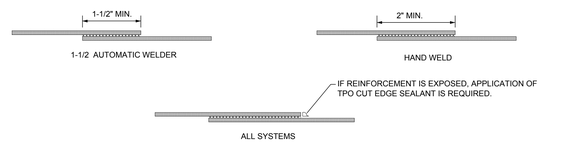

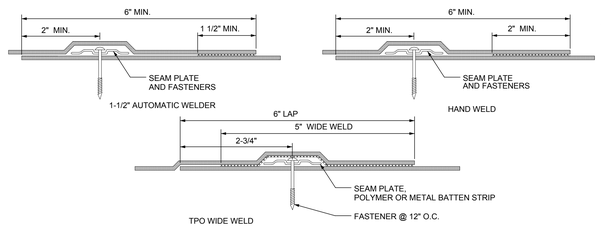

3 AE5-02 LAP SPLICES
SCALE: N.T.S

NOTES:
1. METAL BATTEN STRIP MAY BE USED WITH FASTENERS 12" O.C. MAX. APPLY SEALANT OVER FASTENER HEADS. POLYMER BATTEN CAN ONLY BE USED INTO WOOD SUBSTRATES.
2. MAXIMUM 6" LONG FASTENERS. (NOTE: WOOD BLOCKING MAY BE SUBSTITUTED FOR INSULATION TO REDUCE FASTENER LENGTH REQUIREMENT.)

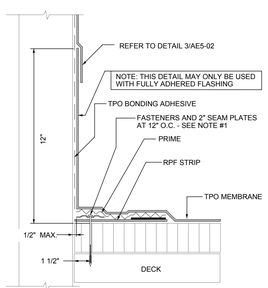

12 AE5-02 HORIZ. QUICKSEAM RPF PERIMETER BASE TIE-IN
SCALE: N.T.S

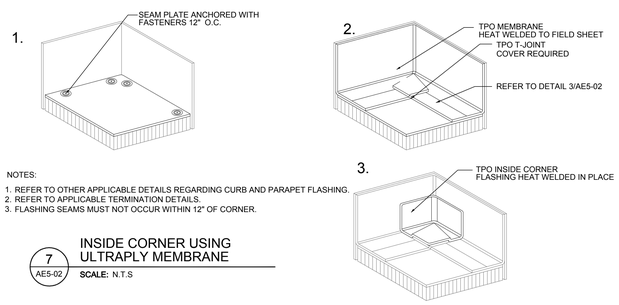

NOTES:
1. REFER TO OTHER APPLICABLE DETAILS REGARDING CURB AND PARAPET FLASHING.
2. REFER TO APPLICABLE TERMINATION DETAILS.
3. FLASHING SEAMS MUST NOT OCCUR WITHIN 12" OF CORNER.

7 AE5-02 INSIDE CORNER USING ULTRAPLY MEMBRANE
SCALE: N.T.S

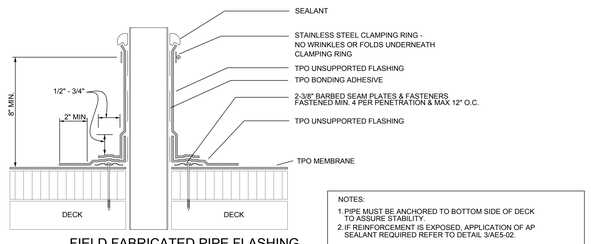

NOTES:
1. PIPE MUST BE ANCHORED TO BOTTOM SIDE OF DECK TO ASSURE STABILITY.
2. IF REINFORCEMENT IS EXPOSED, APPLICATION OF AP SEALANT REQUIRED REFER TO DETAIL 3/AE5-02.

2 AE5-02 FIELD FABRICATED PIPE FLASHING USING UNSUPPORTED MEMBRANE
SCALE: N.T.S

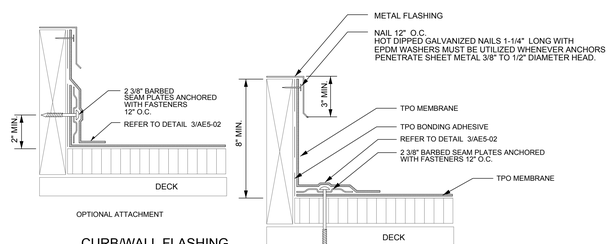

11 AE5-02 CURB/WALL FLASHING W/ ULTRAPLY MEMBRAINE
SCALE: N.T.S

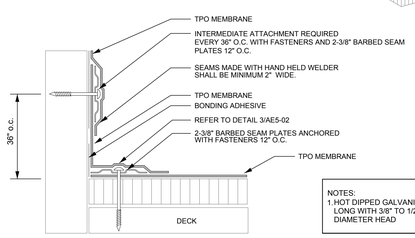

NOTES:
1. HOT DIPPED GALVANIZED NAILS 1-1/4" LONG WITH 3/8" TO 1/2" DIAMETER HEAD

6 AE5-02 PARAPET WALL FLASHING W/ ULTRAPLY MEMBRANE
SCALE: N.T.S

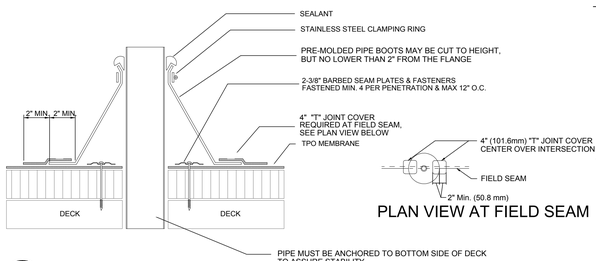

1 AE5-02 PRE- MOLDED PIPE BOOT
SCALE: N.T.S

REFERENCE NOTES

REVISIONS:

NEW DOWNTOWN SALT LAKE CITY WINE STORE
300 West Harris Ave. (1563 South)

MJSA
357 West Pierpont Avenue □ Salt Lake City, Utah 84101
Telephone 801 364 5161 □ Facsimile 801 364 5167
ARCHITECTURE INTERIOR DESIGN

State of Utah—Department of Administrative Services
DIVISION OF FACILITIES CONSTRUCTION AND MANAGEMENT
4110 State Office Building/Salt Lake City, Utah 84114/538-3018
DEPARTMENT OF ALCOHOLIC BEVERAGE CONTROL
1625 South 900 West, Salt Lake City, Utah 84130/977-6800

STAMP

STATE OF UTAH KIM L. NG NO. 127363 LICENSED ARCHITECT
11/12/07

DFCM PROJECT NO. 05051030
DFCM CONTRACT NO. 077431
MJSA PROJECT NO. 07005
DATE: 10/15/07

ROOF DETAIL
SCALE: AS NOTED

SHEET: AE5-02

© 1/10/05 Sidar Wire Board CADD, CD-ASD-03 Reg. Fri, 08 Nov 2007 3:34pm

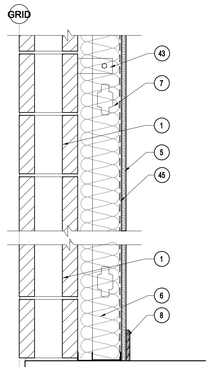

1 WALL TYPE
SCALE: 1 1/2" = 1'-0"

1: 8" CMU WALL. SPLIT FACE BLOCK. COLOR PER ARCHITECT. SUBMIT FOR COLOR SELECTION.

AT GRID "G" A 1 HR. ASSEMBLE IS REQUIRED. THIS ASSEMBLY EXCEEDS UL#U905 2HR.

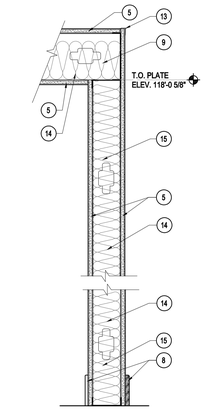

2 WALL TYPE
SCALE: 1 1/2" = 1'-0"

2: 3 5/8" METAL STUDS AT 24" O.C. WITH (1) LAYER 5/8" GYPSUM BOARD ON EACH SIDE.

2A: SAME AS 2 BUT WITH CEMENT BACKER BOARD ON ONE SIDE AT TILE LOCATIONS - SEE FINISH SCHEDULE.

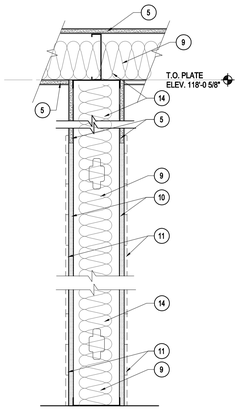

3 WALL TYPE
SCALE: 1 1/2" = 1'-0"

3: 6" METAL STUDS AT 24" O.C. WITH (1) LAYER 5/8" GYP. BD. EACH SIDE. USE CEMENT BOARD AT TILE LOCATION PER FINISH SCHEDULE.

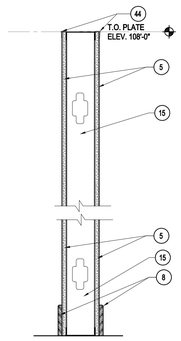

4 WALL TYPE
SCALE: 1 1/2" = 1'-0"

4: 3 5/8" METAL STUDS AT 24" O.C. WITH (1) LAYER 5/8" GYPSUM BOARD ON EACH SIDE.

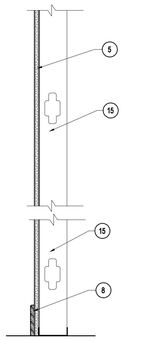

5 WALL TYPE
SCALE: 1 1/2" = 1'-0"

5: 3 5/8" METAL STUDS AT 24" O.C. WITH (1) LAYER 5/8" GYPSUM BOARD ON ONE SIDE.

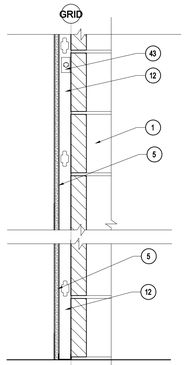

6 WALL TYPE
SCALE: 1 1/2" = 1'-0"

6: 8" CMU WALL. WITH 1 5/8" 25 GA. MTL STUD @ 24" O.C. AND (1) 5/8" GYP. BD.ON ONE SIDE.

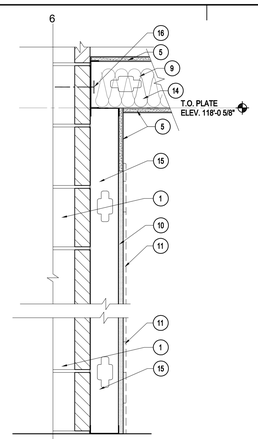

7 WALL TYPE
SCALE: 1 1/2" = 1'-0"

7: 3 5/8" METAL STUDS AT 24" O.C. WITH (1) LAYER 5/8" GYPSUM BOARD.

7A: SAME AS 1 BUT WITH CEMENT BACKER BOARD ON ONE SIDE AT TILE LOCATIONS - SEE FINISH SCHEDULE.

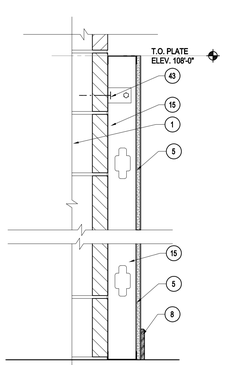

8 WALL TYPE
SCALE: 1 1/2" = 1'-0"

8: 8" CMU WALL. WITH 3 5/8" MTL STUD @ 24" O.C. AND (1) 5/8" GYP. BD.

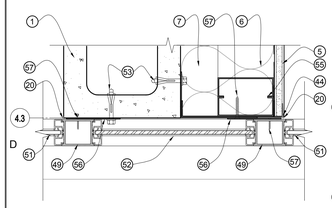

28 (AE5-03) VESTIBULE METAL PANEL
SCALE: 3" = 1'-0"

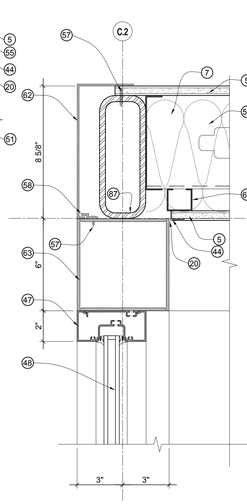

23 (AE5-03) VESTIBULE HEADER
SCALE: 3" = 1'-0"

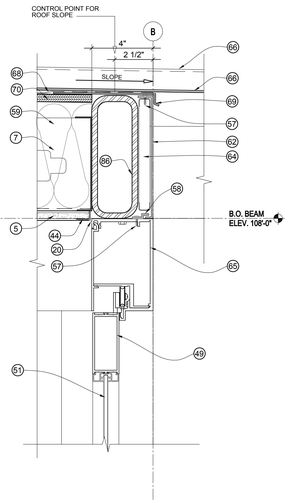

19 (AE5-03) VESTIBULE HEADER
SCALE: 3" = 1'-0"

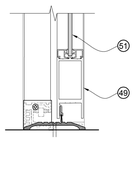

16 (AE5-03) VESTIBULE THRESHOLD
SCALE: 3" = 1'-0"

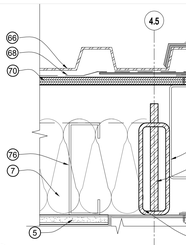

12 (AE5-03) VESTIBULE DETAIL
SCALE: 3" = 1'-0"

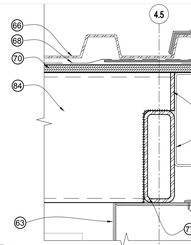

8 (AE5-03) VESTIBULE DETAIL
SCALE: 3" = 1'-0"

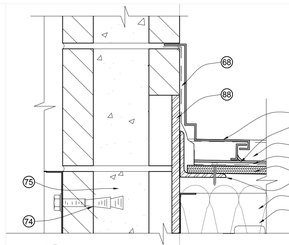

4 (AE5-03) FLASHING DETAIL
SCALE: 3" = 1'-0"

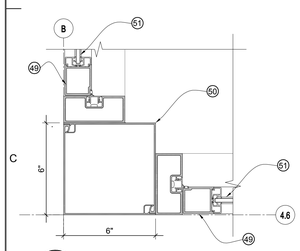

27 (AE5-03) VESTIBULE EXTERIOR CORNER
SCALE: 3" = 1'-0"

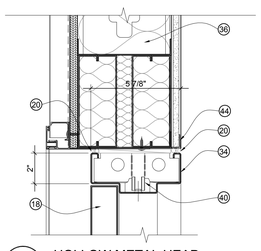

15 (AE5-03) HOLLOW METAL HEAD
SCALE: 3" = 1'-0"

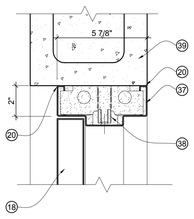

11 (AE5-03) HOLLOW METAL HEAD @ CMU
SCALE: 3" = 1'-0"

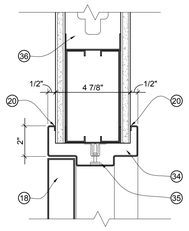

7 (AE5-03) HOLLOW METAL HEAD
SCALE: 3" = 1'-0"

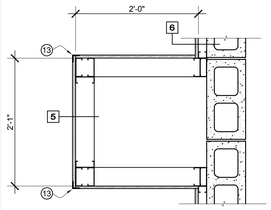

3 (AE5-03) PLAN DETAIL
SCALE: 1" = 1'-0"

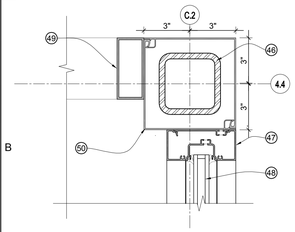

26 (AE5-03) VESTIBULE INTERIOR CORNER
SCALE: 3" = 1'-0"

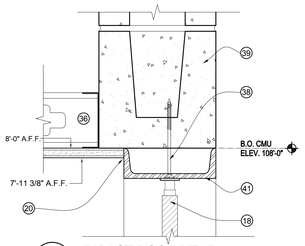

22 (AE5-03) IMPACT DOOR HEAD
SCALE: 3" = 1'-0"

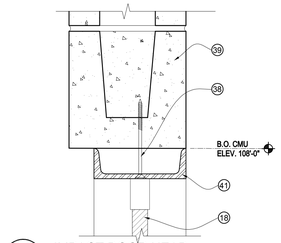

18 (AE5-03) IMPACT DOOR HEAD
SCALE: 3" = 1'-0"

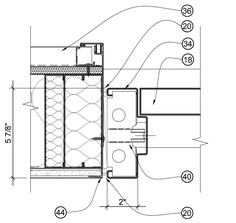

14 (AE5-03) HOLLOW METAL JAMB
SCALE: 3" = 1'-0"

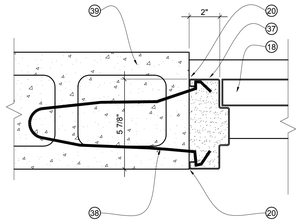

10 (AE5-03) HOLLOW METAL JAMB @ CMU
SCALE: 3" = 1'-0"

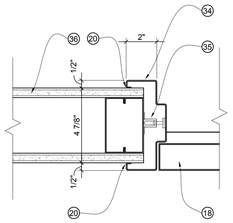

6 (AE5-03) HOLLOW METAL JAMB
SCALE: 3" = 1'-0"

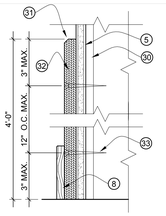

2 (AE5-03) WAINSCOT DETAIL
SCALE: 3" = 1'-0"

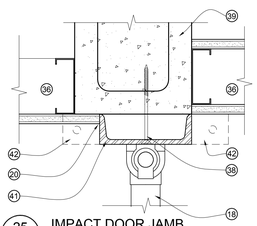

25 (AE5-03) IMPACT DOOR JAMB
SCALE: 3" = 1'-0"

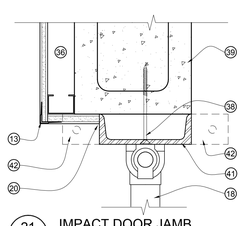

21 (AE5-03) IMPACT DOOR JAMB
SCALE: 3" = 1'-0"

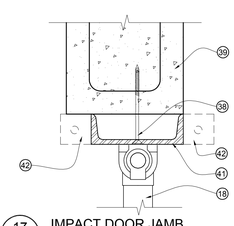

17 (AE5-03) IMPACT DOOR JAMB
SCALE: 3" = 1'-0"

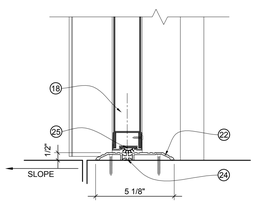

13 (AE5-03) THRESHOLD DETAIL
SCALE: 3" = 1'-0"

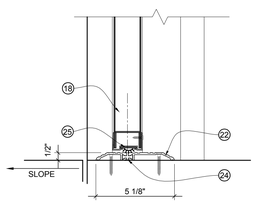

9 (AE5-03) THRESHOLD DETAIL
SCALE: 3" = 1'-0"

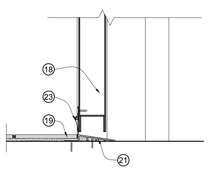

5 (AE5-03) THRESHOLD DETAIL
SCALE: 3" = 1'-0"

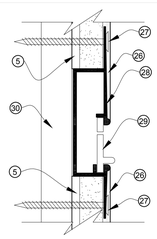

1 (AE5-03) REVEAL/ PICTURE HANGER
SCALE: FULL

REFERENCE NOTES

1. 8" CMU ? SEE EXTERIOR ELEVATIONS FOR TYPE OF FINISH.
2. METAL DECK ? SEE STRUCTURAL DRAWINGS..
3. R-38 (MIN.) RIGID INSULATION. INSULATION TAPERED TO DRAIN.4.
5. 5/8" GYP. BOARD.
6. 3 5/8" 20 GA. METAL STUDS @ 24" O.C. SET IN 6" , 20 GA. STUD TRACKS.BRACE TO CMU WALL @ 8'-0" MAX. HORIZONTALLY.
7. UNFACED BATT. INSULATION AND VAPOR BARRIER.
8. BASE PER FINISH SCHEDULE.
9. 6". 25 GA. METAL STUDS @ 24" O.C.
10. 5/8" CEMENT BACKER BOARD WHERE TILE OCCURS.
11. CERAMIC TILES WHERE OCCURS - SEE FINISH SCHEDULE AND INTERIOR ELEVATIONS.
12. 1 5/8" 25 GA. MTL STUDS @ 24" O.C. CLIP TO CMU @ 48" O.C. VERT.
13. METAL CORNER BEAD.
14. SOUND ATTENUATION BATT PER SPEC.
15. 3 5/8" 25 GA. METAL STUDS @ 24" O.C.
16. SHOOT ANCHOR TO WALL.
17. 5/8" GYP. BOARD OVER METAL STUDS.
18. DOOR PER SCHEDULE.
19. FLOOR FINISH PER SCHEDULE.
20. SEALANT AS REQUIRED.
21. SCHLUTER - RENO 100 B65 ALUMINUM TILE TRANSITION RAMP - GROUT IN AND MEHANICALLY ANCHOR IN PLACE.
22. PEMKO 2520AFG THRESHOLD. SET IN FULL BED OF MASTIC.
23. PEMKO 307AV DOOR SWEEP.
24. CENTER THRESHOLD'S THERMAL BREAK ON CENTER OF DOOR.
25. PEMKO 222AKPK DOOR SHOE.
26. TAPE AND MUD-IN.
27. SCREW.
28. REVEAL/PICTURE HANGER-FRY REGLET #DRMH-50 CLEAR ANODIZED FINISH.
29. PICTURE HANGER CLIP SUPPLY (1) CLIP PER FOOT OF HANGER.
30. FRAMING.
31. 1/4" CHAMFER @ ALL EXPOSED EDGES.
32. 3/4" THICK PARTICLE BOARD. STAINED AND SEALED WITH TWO APPLICATIONS OF CLEAR SEALER.
33. FLATHEAD SCREW, TYPICAL. @ 48" O.C. HORIZONTAL. COUNTERSINK FLUSH WITH FACE OF PARTICLE BOARD.
34. HOLLOW METAL DOOR FRAME PER SPEC.
35. GYP. BOARD ANCHOR.
36. WALL TYPE PER PLAN.
37. HOLLOW METAL DOOR FRAME PER SPEC. GROUT SOLID.
38. MASONRY ANCHOR - FLATHEAD, COUNTER SUNK. PAINT TO MATCH FRAME.
39. CMU PER SPECS.
40. ANCHOR.
41. STEEL CHANNEL (C6 X 10.5). WELDED FRAME. POWDER COAT FINISH AT GRID "E". GALVANIZED FINISH AT GRID "5".
42. NO BOTTOM ANCHOR PLATE.
43. CLIP ANCHOR AT 48" O.C. VERTICAL MAX.
44. METAL J-MOULD.
45. VAPOR BARRIER PER SPECS.
46. STEEL COLUMN PER STRUCTURAL DRAWINGS.
47. STOREFRONT FRAMING SYSTEM PER SPECS.
48. GLAZING PER SCHEDULE & FRAME ELEVATION.
49. SLIDING DOOR SYSTEM - SEE FRAME ELEVATIONS
50. 6" X 6" EXTRUDED ALUMINUM CORNER BY STOREFRONT SYSTEM, TO MATCH STOREFRONT FINISH.
51. SLIDING DOOR GLAZING PER SCHEDULE & FRAME ELEVATION. (1/4" DRAWN - SCHEDULE GOVERNS AND MAY BE DIFFERENT.
52. CLEAR ANODIZED ALUMINUM METAL PANEL SUPPLIED BY STOREFRONT SYSTEM PROVIDER.
53. EXPANSION ANCHOR.
54. 3" X 5" X 16 GA. SHEET METAL ANCHOR.
55. BUILT UP JAMB STUDS PER STRUCTURAL DRAWINGS.
56. 3 1/2" X CONT. X 16 GA. SHEET METAL ANCHOR PLATE PRE - ATTACHED TO SLIDING DOOR FRAMINGS SYSTEM.
57. FASTENER.
58. ALUMINUM Z-CLIP.
59. 6". 18 GA. METAL STUDS@ 24" O.C.
60. 1 5/8". 25 GA. METAL STUDS @ 24" O.C.
61. STEEL BEAM PER STRUCTURAL.
62. 12 GA. ALUMINUM FASCIA PANEL. CLEAR ANODIZED FINISH.
63. 6" X 6" TUBE SECTION EXTRUDED ALUMINUM - CLEAR. ANODIZED FINISHPROVIDED BY STOREFRONT SUPPLIER.
64. 3/4" COLD ROLLED STEEL CHANNEL FRAMES.
65. SLIDING DOOR SYSTEM - HEADER TRACK.
66. METAL 1 1/2" ROOF DECK GALVANIZED.
67. ALTERNATE WOOD (1X4 T&G) CLG W/ 1" X 1" ALUMN - ANGLE.
68. TPO ROOF MEMBRANE AS PER MAIN ROOF.
69. PRE FINISHED ALUMINUM EDGE COUNTER FLASHING
70. 1/2" PLYWOOD ROOF SHEATHING.
71. COUNTER FLASHING BY ROOFING MANUFACTURER.
72. ANGLE. 1/4" 3"X 3"
73. 1/2" Ø X 5" LONG EXPANSION ANCHOR.
74. 1/2" Ø X 4" LONG EXPANSION ANCHOR.
75. CMU HEADER BEAM.
76. 600 S 200 - 54 @ 24" O.C
77. HSS 6 X 2 X 1/4"
78. 600 S 200 - 57 @ 24" O.C. SLOPE MTD. TO ACCOMMODATE 1/4"/FT. SLOPE.
79. NOT USED
80. ROOF MEMBRANE, ROOF DECK, COUNTER FLASHING NOT SHOWN FOR CLARITY.
81. (4) 3/4"Ø X 5" EXPANSION ANCHOR.
82. SET IN FULL BED OF SEALENT.
83. NEOPREN GASKET.
84. HSS 8 X 3 X 1/4 KNOTCH AS REQUIRED, FIELD WELDED TO HSS 6 X 2 X 1/4".
85. PLATE 1/4" END CAP @ HSS 8 X 3 X 1/4". SHOP WELD GROUND SMOOTH ALL EDGES, SHOP PRIMED AND FIELD WELDED.
86. HSS 8 X 3 X 1/4".
87. HSS 8 X 8 X 1/8".
88. WELD PLATE OR ANGLE SEE STRUCTURAL DRAWINGS E4/SF511.
89. PLATE 1/2" X 7 X 10 FIELD WELDED TO WELD PLATE OR ANGLE BEYOND ANE FIELD WELD 78 TO THIS PLATE.

REVISIONS:

NEW DOWNTOWN SALT LAKE CITY WINE STORE
300 West Harris Ave. (1563 South)

357 West Pierpont Avenue □ Salt Lake City, Utah 84101
Telephone 801 364 5191 □ Facsimile 801 364 5187
ARCHITECTURE INTERIOR DESIGN
MJSA

State of Utah–Department of Administrative Services
DIVISION OF FACILITIES CONSTRUCTION AND MANAGEMENT
4110 State Office Building/Salt Lake City, Utah 84114/538-3018

DEPARTMENT OF ALCOHOLIC BEVERAGE CONTROL
1625 South 900 West, Salt Lake City, Utah 84130/977-6800

STAMP

STATE OF UTAH
KIM L. WO
No. 127383
LICENSED ARCHITECT
11/12/07

WALL TYPES, DOOR & VESTIBULE DETAILS
SCALE: AS NOTED

DFCM PROJECT NO.: 05051030
DFCM CONTRACT NO.: 077431
MJSA PROJECT NO.: 07005
DATE: 10/15/07
SHEET: AE5-03

S:\07005 State Wine Store\CADD_CD\AE5-03.dwg - Fri, 09 Nov 2007 - 3:34pm

WINDOW SCHEDULE ②

WINDOW NO.	SIZE: WIDTH	SIZE: HEIGHT	FRAME: TYPE	FRAME: MATERIAL	FRAME: FINISH	DETAIL: HEAD	DETAIL: L. JAMB	DETAIL: R. JAMB	DETAIL: SILL	GLASS TYPE	WINDOW BLINDS	FIRE RATING	REMARKS
1	5'-4"	8'-0"	F-1	ALUM.	CLR. ANO.	23 / AE5-01	20 / AE5-01	20 / AE5-01	19 / AE5-01	S	---	–	-
2	8'-0"	8'-0"	F-2	ALUM.	CLR. ANO.	23 / AE5-01	20 / AE5-01	20 / AE5-01	19 / AE5-01	S	---	–	-
3	40'-0"	12'-0"	F-3	ALUM.	CLR. ANO.	23 / AE5-01	26 / AE5-01	26 / AE5-01	19 / AE5-01	S	---	–	-
4	5'-4"	5'-11"	F-4	ALUM.	CLR. ANO.	4 / AE5-01 SIM.	3 / AE5-01	3 / AE5-01	–	S	---	–	
5	5'-4"	3'-11"	F-5	ALUM.	CLR. ANO.	16 / AE5-01	15 / AE5-01	15 / AE5-01	–	S	---	–	-
6	2'-0"	2'-0"	F-6	ALUM.	CLR. ANO.	4 / AE5-01	3 / AE5-01	3 / AE5-01	-	S	---	–	-
7	13'-4"	8'-0"	F-7	ALUM.	CLR. ANO.	–	–	–	–	ST	---	–	
8	9'-2"	8'-0"	F-8	ALUM.	CLR. ANO.	–	–	–	–	ST	---	–	METAL PANEL INSERTED WHERE NOTED
9	13'-4"	8'-0"	F-9	ALUM.	CLR. ANO.	–	–	–	–	S	---	–	METAL PANEL INSERTED WHERE NOTED

GLASS TYPES

- (S) SECURITY GLASS "LOW E": 1" THICK INSULATING GLASS: 1/4" CLEAN FLOAT GLASS EXTERIOR, AND 5/16" SECURITY-LAMINATED SHEETS OF GLASS WITH INNER LAYER OF .075" VINYL OR POLYCARBONATE @ INTERIOR WITH 7/16" AIRSPACE BETWEEN INTERIOR AND EXTERIOR GLASS. W_{min} = 0.57, $SHGC_{min}$ = 0.39
- (ST) SECURITY GLASS "LOW E": 1" THICK INSULATING GLASS: 1/4" CLEAN FLOAT TEMPERED GLASS EXTERIOR, AND 5/16" SECURITY-LAMINATED SHEETS OF GLASS WITH INNER LAYER OF .075" VINYL OR POLYCARBONATE @ INTERIOR WITH 7/16" AIRSPACE BETWEEN INTERIOR AND EXTERIOR GLASS. W_{min} = 0.57, $SHGC_{min}$ = 0.39
- (P) 1/8" POLYCARBONATE AT IMPACT DOORS (PROVIDED AND INSTALLED BY DOOR MANUFACTURER).
- (M) METAL PANEL - FINISH TO MATCH FRAME
- (SP) TEMPERED WITH SECURITY GLASS

FRAME TYPES ②

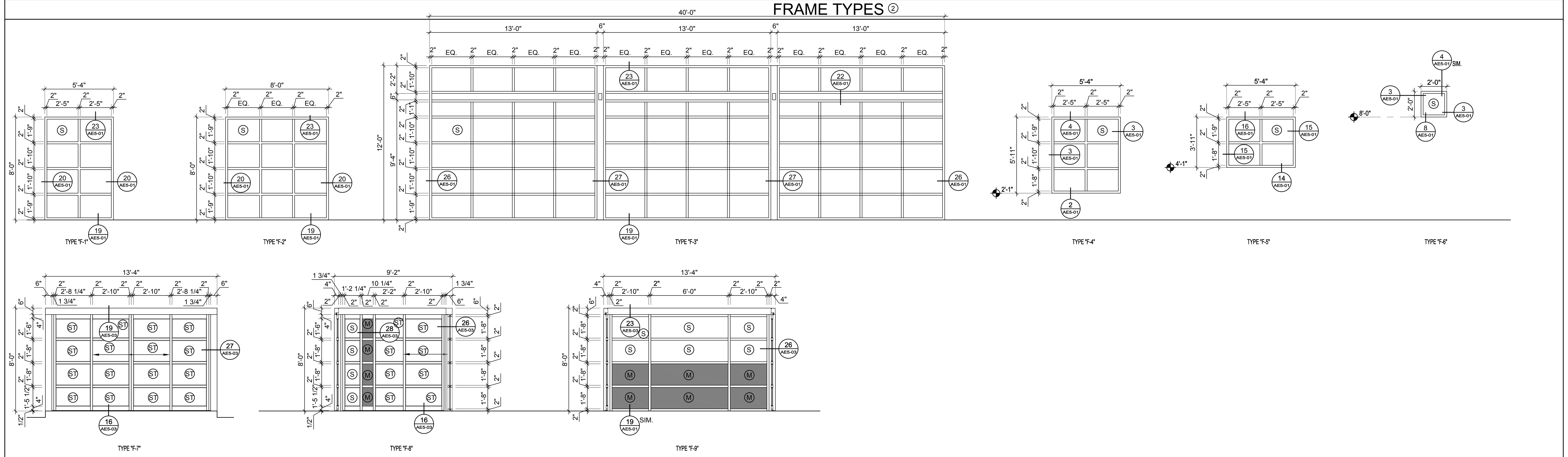

DOOR SCHEDULE ②

DOOR NO.	① DOOR SIZE	TYPES: DOOR	TYPES: FRAME	HDWR. GROUP	DETAIL: HEAD	DETAIL: L. JAMB	DETAIL: R. JAMB	DETAIL: THRESH.	DOOR: MATERIAL	DOOR: FINISH	FRAME: MATERIAL	FRAME: FINISH	FIRE RATING	REMARKS
100	(2)3'-0" X 7'-6"	D-1	-	AL-01	19/ AE5-03	27/ AE5-03	27 / AE5-03	16 / AE5-03	ALUM.	CLR. ANODIZED	ALUM.	CLR. ANODIZED	-	AUTOMATIC SLIDERS W/ SENSOR ACTIVATION
101	3'-0" X 7'-6"	D-2	-	AL-02	19/ AE5-03	28/ AE5-03	26 / AE5-03	16 / AE5-03	ALUM.	CLR. ANODIZED	ALUM.	CLR. ANODIZED	-	AUTOMATIC SLIDER W/ SENSOR ACTIVATION
102	3'-0" X 7'-6"	D-2	-	AL-02	19/ AE5-03	26/ AE5-03	28 / AE5-03	16 / AE5-03	ALUM.	CLR. ANODIZED	ALUM.	CLR. ANODIZED	-	-
103	NOT USED	–	–	–	–	–	–	–	–	–	–	–	-	-
104	3'-0" X 7'-0"	D-4	–	01	15/ AE5-03	14/ AE5-03	14/ AE5-03	13/ AE5-03	STEEL	PAINT	STEEL	PAINT	-	-
105	3'-0" X 7'-0"	D-5	–	03	7/ AE5-03	6/ AE5-03	6/ AE5-03	–	STEEL	PAINT	STEEL	PAINT	-	-
106	3'-0" X 7'-0"	D-5	–	04	7/ AE5-03	6/ AE5-03	6/ AE5-03	5/ AE5-03	STEEL	PAINT	STEEL	PAINT	-	-
107	3'-0" X 7'-0"	D-5	–	04	7/ AE5-03	6/ AE5-03	6/ AE5-03	5/ AE5-03	STEEL	PAINT	STEEL	PAINT	-	-
108	3'-8" X 7'-10" NOMINAL	D-6	–	–	22/ AE5-03	25/ AE5-03	25/ AE5-03	–	S.S.	S.S.	STEEL	PAINT	-	IMPACT DOOR
109	3'-0" X 7'-0"	D-5	–	03	7/ AE5-03	6/ AE5-03	6/ AE5-03	–	STEEL	PAINT	STEEL	PAINT	-	BLACK RUBBER VCT TILE REDUCED STRIP
110	(2)3'-0" X 7'-10" NOMINAL	D-7	–	–	22 / AE5-03	21/ AE5-03	21/ AE5-03	–	S.S.	S.S.	STEEL	PAINT	-	DOUBLE IMPACT DOORS
111	(2)3'-0" X 7'-10" NOMINAL	D-8	–	–	18/ AE5-03	17/ AE5-03	17/ AE5-03	–	GALV.STEEL	GALV.STEEL	STEEL	PAINT	-	DOUBLE IMPACT DOORS INSULATED
112	3'-0" X 7'-2"	D-4	–	02	11/ AE5-03	10/ AE5-03	10/ AE5-03	9/ AE5-03	STEEL	PAINT	STEEL	PAINT	-	-
113	8'-4" X 12'-0"	D-9	–	–	–	33/AE5-03	33/AE5-03	–	STEEL	PAINT	STEEL	PAINT	-	INSULATED OVERHEAD COILING DOOR

DOOR TYPES ①

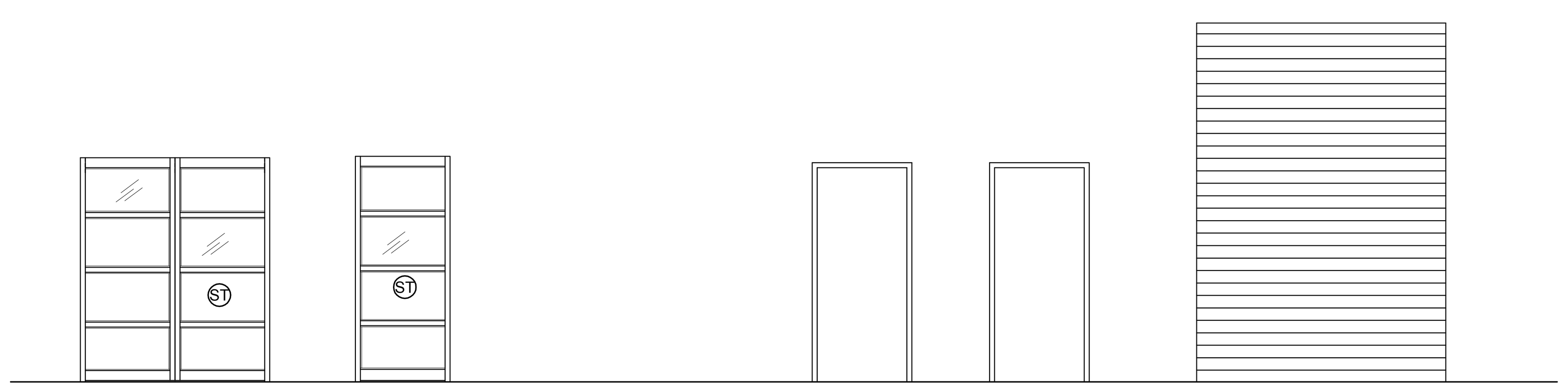

TYPE "D-1"
AUTOMATIC SLIDING DOORS
FINISH TO MATCH FRAME
TEMPERED GLASS

TYPE "D-2"
AUTOMATIC SLIDING DOOR
FINISH TO MATCH FRAME
TEMPERED GLASS

TYPE "D-3"
NOT USED

TYPE "D-4"
HOLLOW METAL DOOR
INSULATED
GAUGE PER SPECS
HOLLOW METAL FRAME
GAUGE PER SPECS

TYPE "D-5"
HOLLOW METAL DOOR
HONEY COMB CONE
GAUGE PER SPECS
HOLLOW METAL FRAME
GAUGE PER SPECS

TYPE "D-9"
OVERHEAD COILING DOOR
GALVENIZED STEEL. FRAME
BY DOOR MANUFACTURER

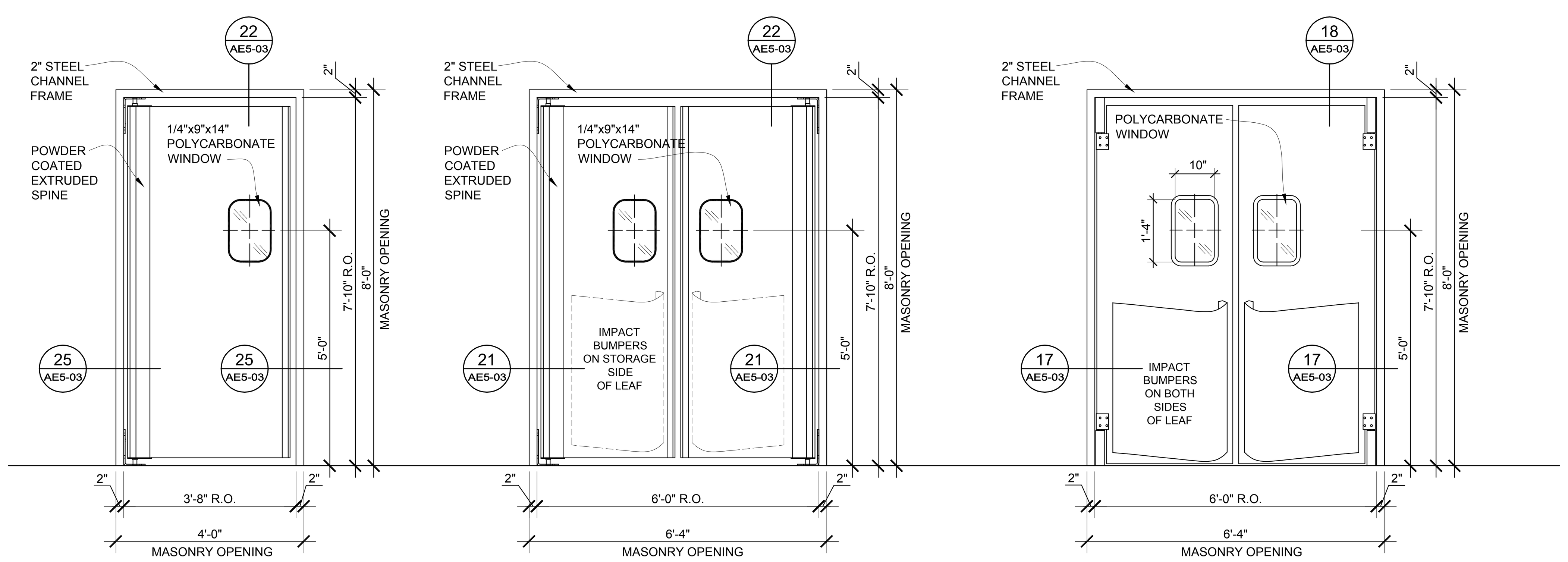

TYPE "D-6"
IMPACT DOOR
S.S.SKIN

TYPE "D-7"
DOUBLE IMPACT DOORS
S.S.SKIN

TYPE "D-8"
INSULATED DOUBLE IMPACT DOORS
GALVANIZED SKIN

FINISH SCHEDULE

No.	ROOM	FLOOR: TILE	FLOOR: CONCRETE	BASE ⑥: WOOD	BASE ⑥: TILE	BASE ⑥: VINYL	NORTH: GYPSUM BOARD	NORTH: WAINSCOT	NORTH: TILE	EAST: GYPSUM BOARD	EAST: WAINSCOT	EAST: TILE	SOUTH: GYPSUM BOARD	SOUTH: WAINSCOT	SOUTH: TILE	WEST: GYPSUM BOARD	WEST: WAINSCOT	WEST: TILE	CEILING ③: EXPOSED STRUCTURE ABOVE	CEILING ③: GYPSUM BOARD	CEILING HEIGHT	NOTES
100	VESTIBULE		S1																	P1	8'-0"	
101	BOX STORAGE		S1	B2			P2			P2			P2			P2			E1			
102	CASH WRAP		S1	-															E1			
103	RETAIL AREA		S1	⑧			P3			P4,P3			P3			P3			E1			
104	SELECT WINES		S1	B4			P4			P4			P4			P4			E1			⑧
105	JANITOR		S2		T2		P2			P2		T3	P2		T3	P2				P2	8'-0"	-
106	MEN	T1			T2		P3			P3		T3	P3		T3	P3				P2	8'-0"	④
107	WOMEN	T1			T2		P3			P3			P3		T3	P3		T3		P2	8'-0"	④
108	OFFICE		V1	B2			P2			P2			P2			P2			E1			
109	BREAK ROOM		S2	B2												P2			E1			⑤
110	LOADING DOCK		S2	B2				-					P2						E1			
111	STORAGE AREA		S2	B2			P2	W1		P2	W1		P2	W1		P2	W1		E1			⑦

FINISH SCHEDULE KEY

KEY	ITEM	MANUFACTURER	SIZE	COLOR #	COLOR NAME	COMMENT
B2	"D" PINE BASE - PAINTED	-	7/16" X 3 1/2"	SEE P2	SEE P2	-
B3	"D" PINE BASE - PAINTED	-	7/16" X 3 1/2"	SEE P3	SEE P3	-
B4	"D" PINE BASE - PAINTED	-	7/16" X 3 1/2"	SEE P4	SEE P4	-
E1	PAINT	KWAL	-	LVR10	CRAVE	USE ANTI FOG PAINT ON CLG. ⑨③
W1	WAINSCOT	-	-	-	-	SEE DETAIL
S1	STAIN CONCRETE	SEE SPEC	-	-	STAIN	SEE SPEC.
S2	SEALED CONCRETE	SEE SPEC	-	-	-	SEE SPEC.
P1	PAINT	SHERWIN WILLIAMS	-	SW 2808	ROOKWOOD DARK BROWN	⑨
P2	PAINT	SHERWIN WILLIAMS	-	SW 0035	INDIAN WHITE	⑨
P3	PAINT	SHERWIN WILLIAMS	-	SW 7055	ENDURING BRONZE	⑨ ALTERNATE - SW 7054 SUITABLE BROWN
P4	PAINT	SHERWIN WILLIAMS	-	SW 6356	COPPER MOUNTAIN	⑨
T1	CERAMIC TILE - FLOOR	SEE SPEC	4" X 4"	-	⑩	-
T2	COVED CERAMIC TILE - BASE	SEE SPEC	4" X 6"	-	⑩	COVED BASE, ROUND TOP, OVERLAP WALL TILE
T3	CERAMIC TILE WALL	SEE SPEC	4" X 4"	-	⑩	SEE INTERIOR ELEVATIONS FOR TRIM TILES
V1	VCT	CONGOLEUM	12"X 12"	SOFT SHELL	AL-56	GAUGE 1/8"

REFERENCE NOTES

1. DOOR SIZE IS NOMINAL. ADJUST LEAF SIZE TO ACCOMODATE HARDWARE AND THRESHOLDS WHERE NESSCESARY.
2. FIELD VERIFY ALL SIZES PRIOR TO ORDERING.
3. SEE PAINT NOTE ON SHEET AE1-02 FOR AREAS OF EXPOSED STRUCTURE AND DECK (NO CEILING) TO BE PAINTED.
4. NOT USED.
5. BASE NOT REQUIRED ON CMU WALLS.
6. PROVIDE WOOD BASE AT THE BASE OF ALL STUD WALLS HAVING GYPSUM WALL BOARDS.
7. AREAS TO RECEIVE WAINSCOT ARE INDICATED ON THE FLOOR PLANS IN STORAGE AREA RM111 SHEET AE1-01.
8. THE COLOR OF THE WOOD BASE WITHIN RETAIL AREA SHALL MATCH THE COLOR OF PAINTED WALLS.
9. ARCHITECT SHALL HAVE THE RIGHT TO CHANGE COLORS DURING CONSTRUCTION. SET UP SITE MEETING W/ ARCHITECT AFTER GYP.BD. IS TAPED AND MUDDED TO CONFIRM FINAL COLORS
10. SUBMIT MANUFACTURE'S FULL RANGE OF COLORS FOR SELECTION BY ARCHITECT.

REVISIONS:

NEW DOWNTOWN SALT LAKE CITY WINE STORE
300 West Harris Ave. (1563 South)

MJSA
357 West Pierpont Avenue □ Salt Lake City, Utah 84101
Telephone 801 364 5161 □ Facsimile 801 364 5167
ARCHITECTURE INTERIOR DESIGN

State of Utah—Department of Administrative Services
DIVISION OF FACILITIES CONSTRUCTION AND MANAGEMENT
4110 State Office Building/Salt Lake City, Utah 84114/538-3018

DEPARTMENT OF ALCOHOLIC BEVERAGE CONTROL
1625 South 900 West, Salt Lake City, Utah 84130/977-6800

STAMP

STATE OF UTAH
KIN L. NG
No. 127383
LICENSED ARCHITECT
11/12/07

DFCM PROJECT NO.: 05051030
DFCM CONTRACT NO.: 077431
MJSA PROJECT NO.: 07005
DATE: 10/15/07

FINISH SCHEDULES
SCALE: NTS
SHEET: AE6-01

S:\07005 State Wine Store\CAD\03_CD\AE6-01.dwg - Fri, 09 Nov 2007 - 3:34pm

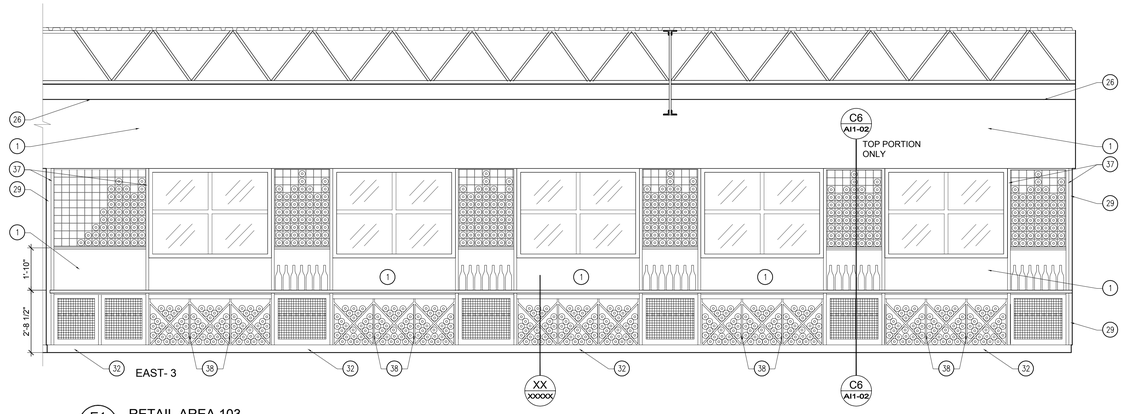

E1 AI1-01 RETAIL AREA 103
SCALE: 3/8" = 1'-0"

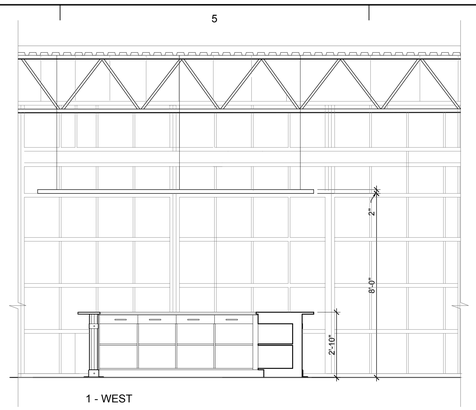

E4 AI1-01 RETAIL AREA 103
SCALE: 3/8" = 1'-0"

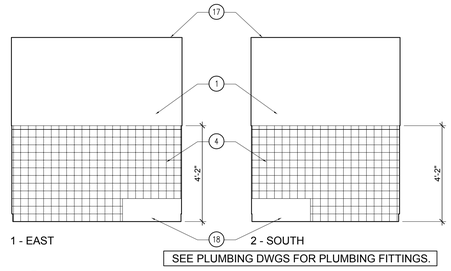

SEE PLUMBING DWGS FOR PLUMBING FITTINGS.

E6 AI1-01 JANITOR 105
SCALE: 3/8" = 1'-0"

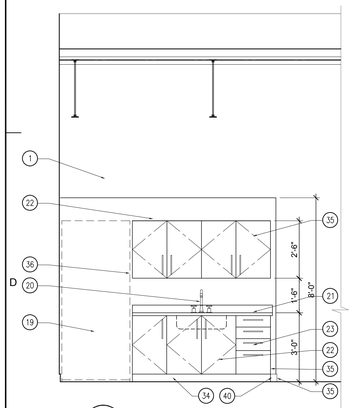

D1 AI1-01 BREAK ROOM 109
SCALE: 3/8" = 1'-0"

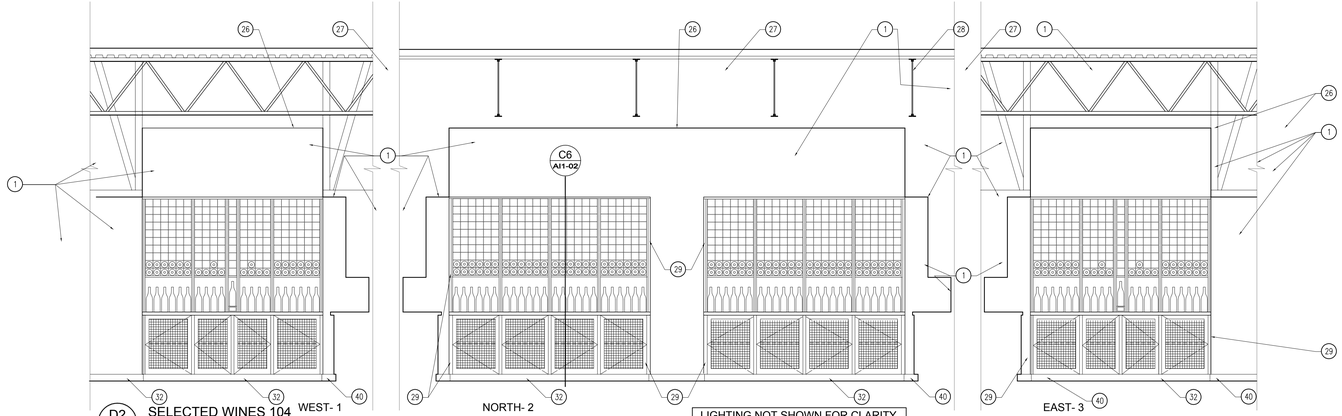

LIGHTING NOT SHOWN FOR CLARITY

D2 AI1-01 SELECTED WINES 104
SCALE: 3/8" = 1'-0"

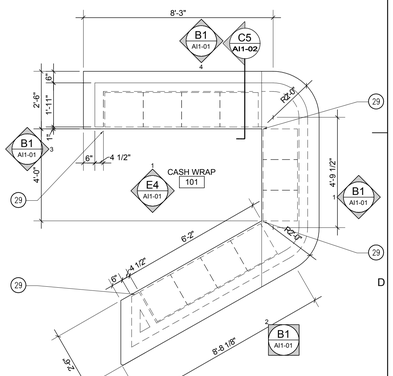

D6 AI1-01 ENLARGED PLAN
SCALE: 3/8" = 1'-0"

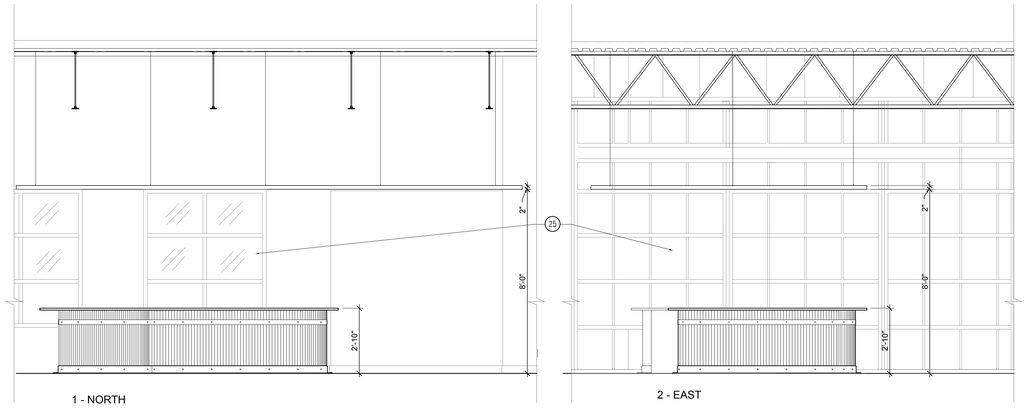

B1 AI1-01 CASH WRAP 101
SCALE: 3/8" = 1'-0"

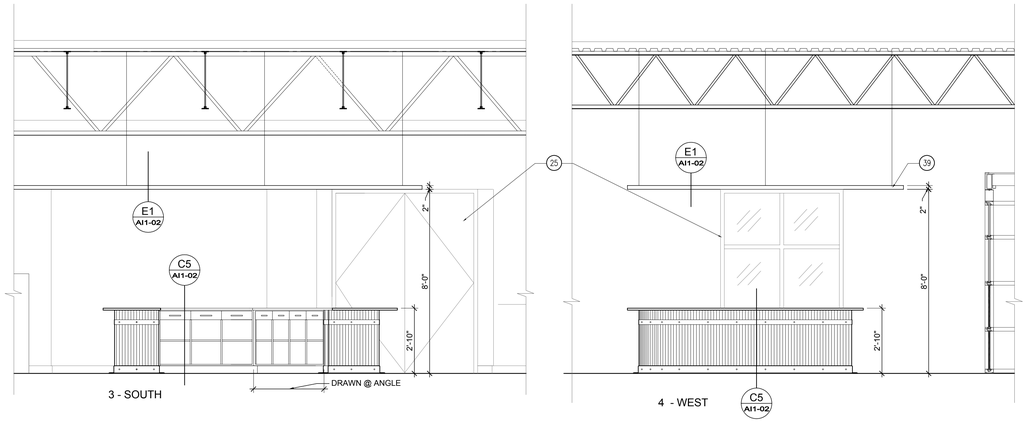

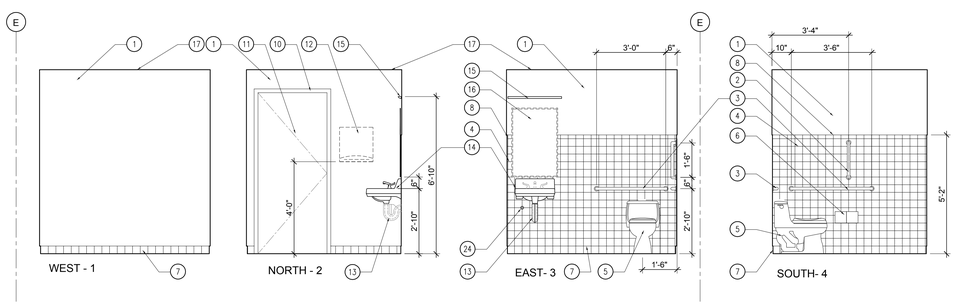

A1 AI1-01 MEN'S RESTROOM 106
SCALE: 3/8" = 1'-0"

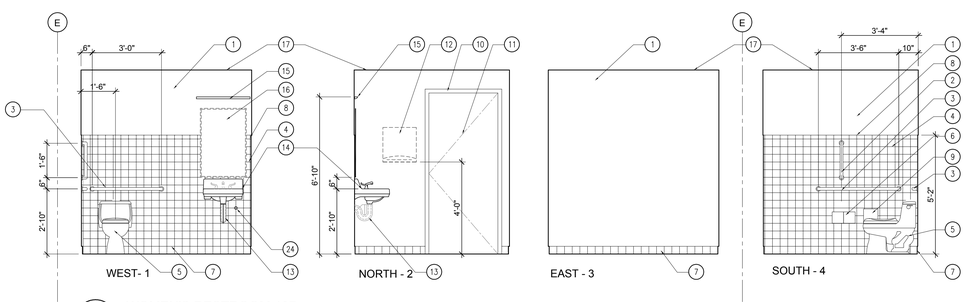

A4 AI1-01 WOMEN'S RESTROOM 107
SCALE: 3/8" = 1'-0"

REFERENCE NOTES

1. GYPSUM BOARD PAINTED.
2. 1 1/2"DIA X18" STAINLESS STEEL GRAB BAR.
3. 1 1/2"DIA X 42" STAINLESS STEEL GRAB BAR.
4. 4" X 4" CERAMIC TILE -THIN SET.
5. TOILET - SEE PLUMBING DRAWINGS.
6. T.P. HOLDER - N.I.C. TO BE PROVIDED AND INSTALLED BY OWNER.
7. COVED CERAMIC TILE BASE; SET ON TOP OF WALL TILE.
8. 2" X 4" CERAMIC TILE CAP.
9. SANITARY NAPKIN DISPOSAL - N.I.C. TO BE PROVIDED AND INSTALLED BY OWNER.
10. HOLLOW METAL DOOR CASING - PAINTED.
11. HOLLOW METAL DOOR - PAINTED.
12. PAPER DISPENSER - N.I.C. TO BE PROVIDED AND INSTALLED BY OWNER.
13. INSULATED WRAP AT DRAIN LINES.
14. LAVATORY AND FITTING - SEE PLUMBING DRAWINGS.
15. LIGHTING FIXTURE - SEE ELECTRICAL DRAWINGS.
16. 24" X 36" MIRROR - N.I.C., TO BE PROVIDED AND INSTALLED BY OWNER.
17. DRYWALL CEILING ON METAL CEILING AS DETAILED ELSEWHERE.
18. JANITOR CLOSET - SEE PLUMBING DRAWINGS.
19. REFRIGERATOR - N.I.C.
20. KITCHEN SINK AND FITTING - SEE PLUMBING DRAWINGS.
21. POST FORMED PLASTIC LAMINATE COUNTERTOP.
22. PLASTIC LAMINATE DOOR FRONTS.
23. PLASTIC LAMINATE DRAWER FRONTS.
24. HOSE BIBB.
25. ARCHITECTURAL ELEMENTS BEYOND.
26. TOP OF DRYWALL @ THE FURRED OUT WALL PLANE.
27. FACE CMU WALL.
28. SEE STRUCTURAL DWG FOR LOCATION OF ROOF TRUSSES.
29. FILLER TO EXPRESS ENDGRAIN OF BALTIC BIRCH PLYWOOD.
30. CLG. CLOUD.
31. BASE AS SCHEDULED.
32. 1 X 4 MAPLE VENEERED BALTIC BIRCH TOE KICK.
33. PLASTIC LAMINATE FILLER PANEL. FIELD VERIFY SIZE AFTER REFIGERATOR INSTALLATION.
34. PLASTIC LAMINATE TOE KICK (1 X 4).
35. PLASTIC LAMINATE END PANEL.
36. 3/4" X 24" DEEP END PANEL--PLASTIC LAMINATE TO MATCH CABNET DOORS.
37. MAPLE VENEERED BALTIC BIRCH PLYWOOD VERTICAL PANEL.
38. BALTIC BIRCH CABINET DIVIDERS AND PANELS.
39. CEILING CLOUD. SEE DETAIL E1/AI1-02.
40. BASE PER SCHEDULE.

GENERAL NOTES

1. PROVIDE BACKING AS REQUIRED.

State of Utah–Department of Administrative Services
DIVISION OF FACILITIES CONSTRUCTION AND MANAGEMENT
4110 State Office Building/Salt Lake City, Utah 84114/538-3018

DEPARTMENT OF ALCOHOLIC BEVERAGE CONTROL
1625 South 900 West, Salt Lake City, Utah 84130/977-6800

STAMP

STATE OF UTAH
KIM L. NG
No. 127363
LICENSED ARCHITECT
11/12/07

INTERIOR ELEVATIONS
SCALE: 3/8" = 1'-0"

REVISIONS:

NEW DOWNTOWN SALT LAKE CITY WINE STORE
300 West Harris Ave. (1563 South)

MJSA
357 West Pierpont Avenue □ Salt Lake City, Utah 84101
Telephone 801 364 5161 □ Facsimile 801 364 5167
ARCHITECTURE INTERIOR DESIGN

DFCM PROJECT NO.: 05051030
DFCM CONTRACT NO.: 077431
MJSA PROJECT NO.: 07005
DATE: 10/15/07
SHEET: AI1-01

S:\07005 Site Wine Store\CADD_CD\AI1-01.dwg, Wed, 14 Nov 2007 - 3:02pm

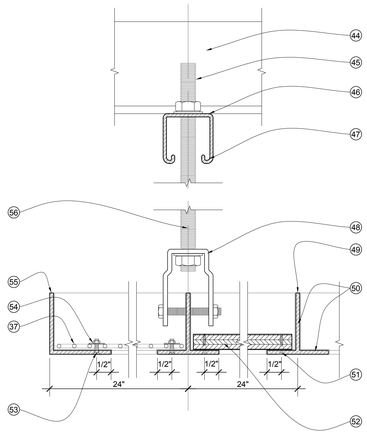

E1 AI1-02 CEILING DETAIL
SCALE: 6" = 1'-0"

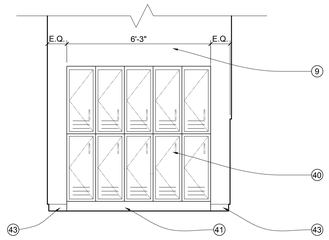

C1 AI1-02 LOCKERS
SCALE: 3/8" = 1'-0"

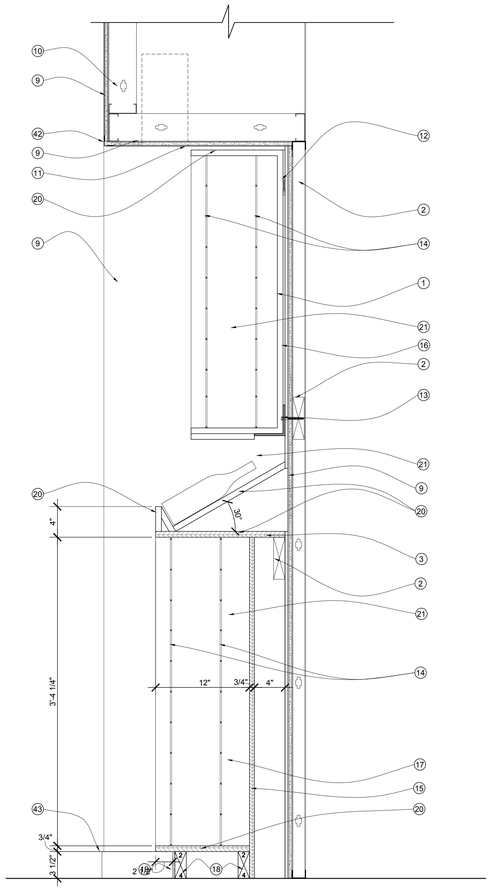

C2 AI1-02 RETAIL AREA CABINET SECTION
SCALE: 1 1/2" = 1'-0"

CABINET WORK NIC

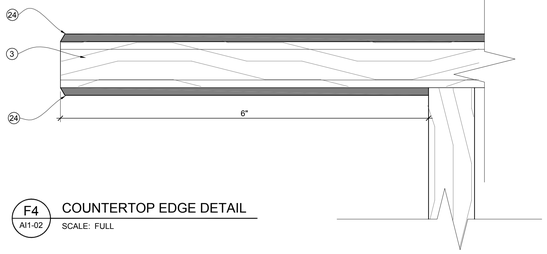

F4 AI1-02 COUNTERTOP EDGE DETAIL
SCALE: FULL

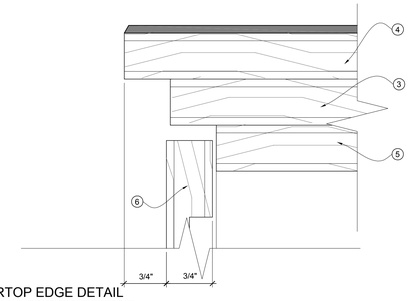

E4 AI1-02 COUNTERTOP EDGE DETAIL
SCALE: FULL

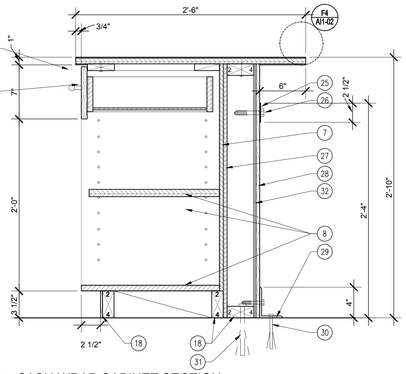

C4 AI1-02 CASH WRAP CABINET SECTION
SCALE: 1 1/2" = 1'-0"

CABINET WORK NIC

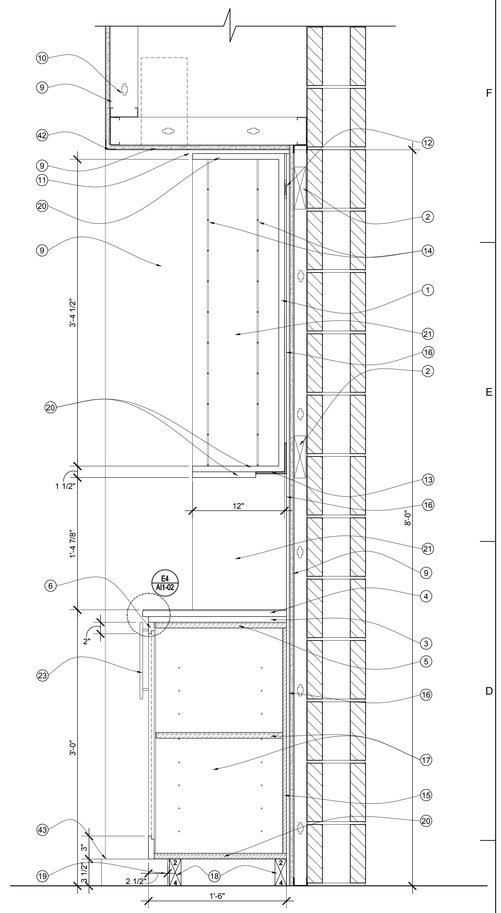

C6 AI1-02 SELECT WINE CABINET SECTION
SCALE: 1 1/2" = 1'-0"

CABINET WORK NIC

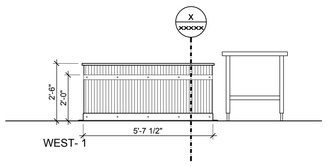

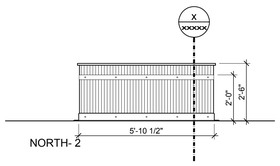

B1 AI1-02 RETAIL AREA 103 (PLANTER)
SCALE: 3/8" = 1'-0"

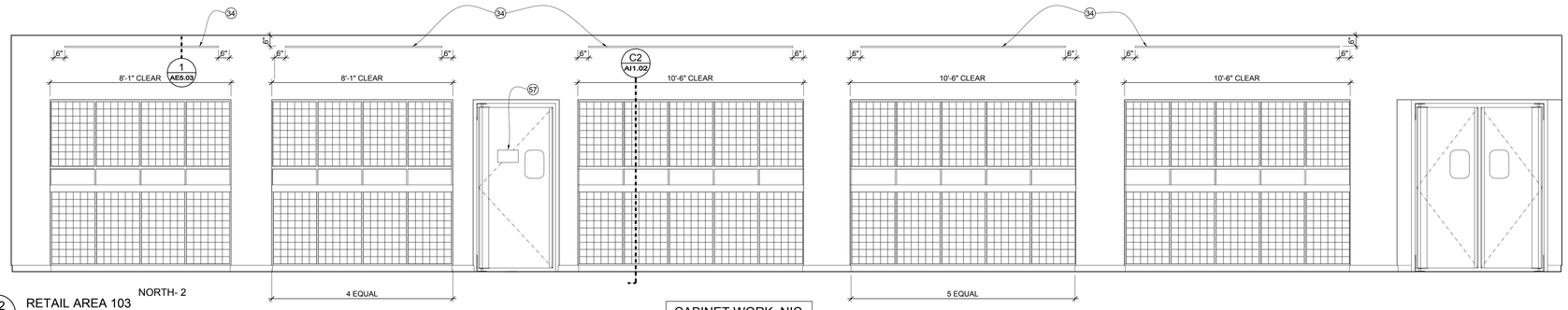

A2 AI1-02 RETAIL AREA 103
NORTH- 2
SCALE: 3/8" = 1'-0"

CABINET WORK NIC

REFERENCE NOTES

1. 3/4" THICK BALTIC BIRCH PLYWOOD CABINET BACK.
2. 2 X 6 SOLID BLOCKING
3. 3/4" THICK BALTIC BIRCH PLYWOOD SUB COUNTERTOP.
4. COUNTERTOP - 1/8" THICK COLD ROLLED STEEL OVER 3/4" BALTIC BIRCH PLYWOOD. SCREW TO BALTIC BIRCH PLYWOOD W/(2) ROLLS OF 1/4" DIA COUNTER SUNK SCREWS 2@ 10" O.C.. GROUND SMOOTH ALL EDGES.
5. 3/4" BALTIC BIRCH PLYWOOD CABINET
6. CABINET DOOR: BALTIC BIRCH STYLE AND RAIL W/ 1" X 1" STEEL MESH - 2" WIDE STYLES.
7. 1/2" THICK FUSED MELAMINE (CREAM) CABINET BACK.
8. 3/4" THICK BALTIC BIRCH PLYWOOD - SIDES, PANELS, SHELVES AND DIVIDERS.
9. GYPSUM BOARD PAINTED.
10. LIGHT FIXTURE.
11. SHADOW TRIM 3/4".
12. SHIM AS REQUIRED.
13. ANGLE 1/4" X 4" X 4" SECURE TO BLOCKING WITH COUNTER SUNK SCREWS @ 12" O.C.
14. 4" X 4" STEEL MESH WITH 3/16" DIA STEEL RODS.
15. BALTIC BIRCH WOOD PLYWOOD.
16. SHIM SPACE.
17. CABINET SIDES AND SHELF - 3/4" THICK BALTIC BIRCH PLYWOOD.
18. PRESSURE TREATED LUMBER.
19. 1" X 4" MAPLE TOE KICK.
20. CONSTRUCT CABINET BOX WITH 3/4" BALTIC BIRCH PLYWOOD.
21. MAPLE VENEERED BALTIC BIRCH PLYWOOD PANELS.
22. MAPLE VENEERED BALTIC BIRCH PLYWOOD DRAWERS.
23. 10" LONG STAINLESS STEEL PULLS.
24. 1/8" THICK COLLED ROLL STEEL PLATE, SECURE TO BALTIC BIRCH PLYWOOD W/(2) ROLLS OF 1/4" DIA COUNTER SUNK SCREWS @ 10" O.C. - GROUND SMOOTH ALL EDGES.
25. PLATE 2 1/2" X 1/8" THICK CONT.
26. 1/2" DIA. HEX HEAD BOLTS @12" TO 18" O.C. F.V.
27. 1/2" THICK MELAMINE.
28. 1/2" X 1 1/2" POPLAR, SOLID STAIN, COLOR BY ARCHITECT.
29. ANGLE 4" X 3" X 1/4" BASE.
30. 3/8" DIA X 4" EXPANSION ANCHOR @ 16" O.C.(±)
31. 1/2" DIA X 6" LONG EXPANSION ANCHORS @ 12" TO 18" O.C. (±).
32. 1/4" THICK MELAMINE PANEL.
33. F.V. DRAWER DEPTH TO MEET DABC STANDARDS.
34. RECESSED ART SUPPORT RAIL.
35. 3/4" DIA THREADED ROD, SECURE TO ROOF DECK W/XXXXXX" DIA SCREWS.
36. COPPER NUT.
37. COPPER MESH 002X002C063 SOLDER INTO BRASS FRAME.(WWW.TWPINC.COM).
38. 1" X 1" BRONZE TEE (JULIUSBLUM).
39. 1 1/2" X 1" BRONZE ANGLE (JULIUSBLUM).
40. METAL LOCKERS PER SPEC.
41. METAL LOCKERS BASE PER SPECS.
42. METAL CORNER BEAD.
43. BASE PER FINISH SCHEDULE.
44. BOTTOM CHORD OF ROOF JOIST.
45. 1/2" Ø ALTHREADED.
46. ATTACH UNISTRUT CHANEL TO B. O. JOIST.
47. UNISTRUT CHANNEL SIZED AS REQUIRED.
48. UNISTRUT CONNECTOR.
49. 2" X 2" X 1/8" ALUMINUM TEE SHARP CORNERS MILL FINISH.
50. CUT & WELD IN CROSS MEMBERS AT BACK, NON VISIBLE SIDE. 1/16" GAP FACE OF CROSS MEMBERS DO NOT WELD VISIBLE WELD.
51. (4) SCREWS PER PANNEL CENTERED ON THIER SIDES. 1/8" X 3/4" PHILIPS HEAD ALUMINUM WOOD SCREWS, COUNTER SUNK FLUSH.
52. 1/2" PLYWOOD W/ VENNER TO MATCH CABINET WORK.
53. (4) MACHINE SCREWS PER PANEL CENTERED ON THIER SIDES. 1/4" X 3/4" PHILIPS HEAD ALUMINUM. COUNTER SUNK FLUSH.
54. NUT & 1/2" Ø WASHER.
55. 2" X 2" X 1/8" ALUMINUM ANGLE, SHARP CORNERS, MILL FINISH.
56. CROSS BRACE EACH ALTHREADED SUPPORT IN BOTH DIRECTION W/ HANGER WIRE.
57. RESTROOM DIRECTIONAL SIGN PROVIDED AND INSTALLED BY OWNER N.I.C.

REVISIONS:

NEW DOWNTOWN SALT LAKE CITY WINE STORE
300 West Harris Ave. (1563 South)

MJSA
357 West Pierpont Avenue □ Salt Lake City, Utah 84101
Telephone 801 364 5181 □ Facsimile 801 364 5187
ARCHITECTURE INTERIOR DESIGN

State of Utah–Department of Administrative Services
DIVISION OF FACILITIES CONSTRUCTION AND MANAGEMENT
4110 State Office Building/Salt Lake City, Utah 84114/538-3018

DEPARTMENT OF ALCOHOLIC BEVERAGE CONTROL
1625 South 900 West, Salt Lake City, Utah 84130/977-6800

STAMP

STATE OF UTAH
KIHL, NG
No. 127363
LICENSED ARCHITECT
11/12/07

DFCM PROJECT NO.: 05051030
DFCM CONTRACT NO.: 077431
MJSA PROJECT NO.: 07005
DATE: 10/15/07
SHEET: AI1-02

INTERIOR ELEVATIONS & SECTIONS
SCALE: VARIES

S:\07005 Salt Lake Wine Store\CADD_CD\AI-02.dwg Wed, 14 Nov 2007 - 2:08pm

ABBREVIATIONS

ø	ROUND OR DIAMETER	LWT	LEAVING WATER TEMPERATURE
AD	ACCESS DOOR	MAX	MAXIMUM
AF	AIRFOIL	MBH	THOUSAND BRITISH THERMAL UNITS/HOUR
AFF	ABOVE FINISHED FLOOR	MECH	MECHANICAL
ALT	ALTERNATE	MIN	MINIMUM
BI	BACKWARD INCLINED	NC	NOISE CRITERIA OR NORMALLY CLOSED
BOD	BOTTOM OF DUCT	NIC	NOT IN CONTRACT
BOP	BOTTOM OF PIPE	NO	NUMBER
BTU/H	BRITISH THERMAL UNITS PER HOUR	NOM	NOMINAL
CAP	CAPACITY	NTS	NOT TO SCALE
CFM	CUBIC FEET PER MINUTE	OA	OUTSIDE AIR
CV	CONSTANT VOLUME	OBD	OPPOSED BLADE DAMPER
DB	DRY BULB	OD	OVERFLOW DRAIN
DIA	DIAMETER	OFCI	OWNER FURNISHED, CONTRACTOR INSTALLED
DN	DOWN	OFOI	OWNER FURNISHED, OWNER INSTALLED
DSN	DOWN SPOUT NOZZLE	PD	PRESSURE DROP
DW	DISHWASHER	POC	POINT OF CONNECTION
(E)	EXISTING	PRV	PRESSURE REDUCING VALVE
EA	EXHAUST AIR	PSI	POUNDS PER SQUARE INCH
EAT	ENTERING AIR TEMPERATURE	PSIG	POUNDS PER SQUARE INCH GAUGE
EFF	EFFICIENCY	RA	RETURN AIR
ELEV	ELEVATION	RAD	RADIUS
ENCL	ENCLOSURE	RD	ROOF DRAIN
ESP	EXTERNAL STATIC PRESSURE	RPBP	REDUCED PRESSURE BACKFLOW PREVENTER
ET	EXPANSION TANK	SA	SUPPLY AIR
EWC	ELECTRIC WATER COOLER	SEN	SENSIBLE
EWT	ENTERING WATER TEMPERATURE	SIM	SIMILAR
FCO	FLOOR CLEANOUT	SL	SEA LEVEL
FD	FLOOR DRAIN	SP	STATIC PRESSURE
FO	FLAT OVAL	SQ FT	SQUARE FEET
FPM	FEET PER MINUTE	SS	SERVICE SINK OR STAINLESS STEEL
FS	FLOOR SINK	TOD	TOP OF DUCT
FT	FEET	TSP	TOTAL STATIC PRESSURE
FV	FACE VELOCITY	U	URINAL
GA	GAUGE	VAV	VARIABLE AIR VOLUME
GAL	GALLON	VD	VOLUME DAMPER
GD	GARAGE DRAIN	VFD	VARIABLE FREQUENCY DRIVE
GPM	GALLONS PER MINUTE	VOL	VOLUME
HP	HORSEPOWER	VTR	VENT THROUGH ROOF
HR	HOUR	W/	WITH
HT	HEIGHT	W/O	WITHOUT
IN	INCH	WB	WET BULB
INWC	INCHES OF WATER COLUMN	WC	WATER CLOSET
INWG	INCHES OF WATER GAUGE	MVD	MANUAL VOLUME DAMPER
IPG	INHIBITED PROPYLENE GLYCOL	WCO	WALL CLEANOUT
L	LAVATORY OR LOUVER	WPD	WATER PRESSURE DROP
LAT	LEAVING AIR TEMPERATURE	WT	WEIGHT
LBS	POUNDS		

MECHANICAL LEGEND

NOTE: ALL ITEMS MAY NOT APPEAR ON DRAWINGS

GATE VALVE
OS & Y PATTERN GATE VALVE
BALL VALVE
BUTTERFLY VALVE
MOTORIZED VALVE OPERATOR
GAS COCK
PLUG VALVE
CHECK VALVE (SWING OR LIFT AS REQ'D)
SOLENOID VALVE
AUTOMATIC CONTROL VALVE (2-WAY)
AUTOMATIC CONTROL VALVE (3-WAY)
PRESSURE REDUCING VALVE
P & T RELIEF VALVE
AIR VENT (AUTOMATIC)
CURB COCK
THERMAL EXPANSION VALVE
STRAINER
CALIBRATED BALANCE VALVE
VENTURI FLOW METER
REDUCER
PET COCK OR GAUGE COCK
PRESSURE GAUGE W/GAUGE COCK
THERMOMETER
TEMPERATURE & PRESSURE TEST PLUG
IN-LINE PUMP
FLOW SWITCH
AQUASTAT
TEMPERATURE SENSING WELL
HOSE BIBB OR SILLCOCK
YARD HYDRANT
FLOOR DRAIN
FLOOR SINK
MANHOLE
WALL CLEANOUT
FLOOR OR GRADE CLEANOUT
GRADE CLEANOUT W/ CONCRETE PAD
VENT THROUGH ROOF
POST TYPE FDC CONNECTION
WALL TYPE FDC CONNECTION
FIRE HOSE CABINET
FIRE DEPT. HORN & LIGHT
EXPANSION JOINT
FLEXIBLE PIPE CONNECTION
REDUCED PRESSURE BACKFLOW PREVENTER — RPBP
DIRECTION OF FLOW
ELBOW DOWN
ELBOW UP
PIPE CAP
TEE DOWN
UNION
DOMESTIC COLD WATER
DOMESTIC HOT WATER
HOT WATER CIRC.
TEMPERED WATER — T
SANITARY (PLBG) VENT
SANITARY SEWER ABOVE GRADE
SANITARY SEWER BELOW GRADE
GREASE WASTE ABOVE GRADE — GW
GREASE WASTE BELOW GRADE — GW
DRAIN — D
ROOF DRAIN — RD
OVERFLOW DRAIN — OD
STORM DRAIN ABOVE GRADE — SD
STORM DRAIN BELOW GRADE — SD
FIRE SERVICE — F
NATURAL GAS — G
PROPANE — P
COMPRESSED AIR — CA
INDUSTRIAL WATER (NON-POTABLE) — IW

DEIONIZED WATER — DI
DEIONIZED WATER RETURN — DIR
HEAT TRACING
CHILLED WATER SUPPLY — CHS
CHILLED WATER RETURN — CHR
CONDENSER WATER SUPPLY — CS
CONDENSER WATER RETURN — CR
HEATING WATER SUPPLY — HWS
HEATING WATER RETURN — HWR
RADIANT FLOOR SUPPLY — RFS
RADIANT FLOOR RETURN — RFR
STEAM — S
STEAM CONDENSATE RETURN — SCR
WATER TREATMENT — WT
FUEL OIL SUPPLY — FOS
FUEL OIL RETURN — FOR
REFRIGERANT LIQUID — RL
REFRIGERANT SUCTION — RS
HOT GAS — HG
HOT GAS BYPASS — HGBP
VACUUM — V
MEDICAL AIR — MA
OXYGEN — O2
NITROUS OXIDE — N2O
NITROGEN — N
HYDROGEN — H
HELIUM — HE
CARBON DIOXIDE — CO2
ARGON — AR
DUCT SIZE (IN), FIRST FIGURE IS SIDE SHOWN — 18/12
BURIED OR UNDERFLOOR DUCT
DUCT W/ ACOUSTICAL LINING
FLEXIBLE DUCT (HELICAL)
SPIN-IN FITTING W/ MVD
FLEXIBLE DUCT CONNECTION
SUPPLY SLOT DIFFUSER
SUPPLY DIFFUSER
RETURN GRILLE
RADIAL SUPPLY DIFFUSERS
RETURN AIR DUCT SECTION
RETURN AIR DUCT UP
RETURN AIR DUCT DOWN
SUPPLY AIR DUCT SECTION
SUPPLY AIR DUCT UP
SUPPLY AIR DUCT DOWN
EXHAUST AIR DUCT SECTION
EXHAUST AIR DUCT UP
EXHAUST AIR DUCT DOWN
ACCESS PANEL
MANUAL VOLUME DAMPER
GRAVITY BACKDRAFT DAMPER
MOTORIZED DAMPER
AIR FLOW STATION
FIRE DAMPER
SMOKE DAMPER
COMBINATION FIRE/SMOKE DAMPER
DUCT TRANSITION
ELBOW W/ TURNING VANES
TEE W/ 45° ENTRY
WYE W/ 45° ENTRY
THERMOSTAT OR TEMP SENSOR
HUMIDISTAT OR HUMIDITY SENSOR
POINT OF REMOVAL FROM EXISTING
POINT OF CONNECTION TO EXISTING
DETAIL TAG — DETAIL NO. / DRAWING NO.
KEYED NOTE — NOTE NO.
SECTION CUT LINE — SECTION NO. / DRAWING NO.

EXHAUST FAN SCHEDULE (EF)

PLAN CODE	AREA SERVED	TYPE	CFM @ ELEV.	ESP (@ ELEV.)	FAN RPM	MOTOR WATTS	MOTOR VOLTAGE & PHASE	SONES	DAMPER (GRAVITY OR MOTOR)	METHOD OF CONTROL	OPENING SIZE	MAX. OPERATING WT. (LBS.)	MANUFACTURER / MODEL	REMARKS
EF-1	JANITORS ROOM	CEILING	100	.75	1050	84	120/1	3.7	GRAVITY	WALL SWITCH	6" X 8"	45	PENN ZEPHYR Z81S(TDA)	PROVIDE CEILING GRILL
EF-2	WOMEN'S RESTROOM	CEILING	100	.75	1050	84	120/1	3.7	GRAVITY	WALL SWITCH	6" X 8"	45	PENN ZEPHYR Z81S(TDA)	PROVIDE CEILING GRILL
EF-3	MEN'S RESTROOM	CEILING	100	.75	1050	84	120/1	3.7	GRAVITY	WALL SWITCH	6" X 8"	45	PENN ZEPHYR Z81S(TDA)	PROVIDE CEILING GRILL
EF-4	BREAK ROOM	CEILING	100	.75	1050	84	120/1	3.7	GRAVITY	WALL SWITCH	6" X 8"	45	PENN ZEPHYR Z81S(TDA)	PROVIDE CEILING GRILL

AIR DOME (AD)

PLAN CODE	AREA SERVED	DAMPER TYPE	MAX CFM	MAX T.P. (IN WC)	OPENING SIZE	DIMENSION DIA. (IN)	MANUFACTURER & MODEL NO	REMARKS
AD-1	RESTROOMS	GRAVITY	480	0.1	12"ø	29"ø X 11" H	COOK 12 PR	PROVIDE WITH 14" HIGH CURB

GAS FIRED UNIT HEATER SCHEDULE (UH)

PLAN CODE	MANUFACTURER & MODEL NO.	SPECIFIED UNIT CAP. (MBH) INPUT (S.L.)	OUTPUT (S.L.)	OUTPUT 4,200 FT.	CFM (STD.)	THROW AT 8' MOUNTING (FT.)	ELECTRICAL VOLT/ PHASE	FAN H.P.	MAX. DIMENSIONS LENGTH (IN)	WIDTH (IN)	HEIGHT (IN)	WEIGHT (LBS)	REMARKS
UH-1	TRANE GFND003ADF1000B	30	24.3	20.4	700	33	115/1	1/30	14	20	28	60	PROVIDE ORIFICES FOR OPERATION AT 4,200 FT. ELEVATION.

AIR DEVICE SCHEDULE

PLAN CODE — CFM — GRILLE

PLAN CODE	TYPE & DUTY	FACE SIZE	NECK SIZE	CEILING TYPE (2)	MAX. CFM	MAX. T.P. (IN. W.C.)	N.C. LEVEL MAX	MIN. THROW (FT) (T50)	4-WAY MIN. THROW (T50)	2-WAY MIN. THROW (T50)	MANUFACTURER & MODEL NO.	REMARKS
21	RADIAL BLADE DIFFUSER	12"ø	8"ø	SURFACE	210	0.14	29	8 (1)	–	–	AIR DIFFUSION PRODUCTS, INC. DNR	–
23	RADIAL BLADE DIFFUSER	18"ø	12"ø	SURFACE	470	0.14	30	12 (1)	–	–	AIR DIFFUSION PRODUCTS, INC. DNR	–

(1) RECOMMENDED MIN. DISTANCE BETWEEN DIFFUSERS IN 9' CEILING.
(2) VERIFY FRAME TYPE OF ALL AIR DEVICES WITH ARCHITECTURAL REFLECTED CEILING PLAN BEFORE ORDERING.

ROOF TOP UNIT SCHEDULE (RTU)

PLAN CODE	MANUFACTURER & MODEL NO.	NOMINAL TONS	IPLV	CFM (1) @ ELEV	ESP (IN WC)	S.F. H.P.	COOLING TOTAL MBH	COOLING SENS. MBH	COOLING EAT db/wb	COOLING AMB	HEATING CAPACITY INPUT MBH	HEATING CAPACITY OUTPUT MBH	HEATING CAPACITY EAT	HEATING CAPACITY LAT	COMPRESSORS NO.	POWER SUPPLY VOLTAGE/ PHASE	POWER SUPPLY MCA AMPS	MAX. WEIGHT (LBS)	MAX. SIZE L (IN)	MAX. SIZE W (IN)	MAX. SIZE H (IN)	REMARKS
RTU-1	TRANE YSC092	7.5	11.0	3500	0.30	2	74.88	68.53	75.60/54.70	100	166.40	164.78	60.80	96.70	2	208/3	42.00	1300	89	54	47	PROVIDE WITH 12" INSULATED CURB ECONOMIZER
RTU-2	TRANE YFD180	15	10.0	6300	0.40	3.5	136.55	122.76	74.80/54.50	100	287.00	232.88	62.40	104.40	2	208/3	78.00	2300	107	71	51	PROVIDE WITH 12" INSULATED CURB ECONOMIZER
RTU-3	TRANE YSC102	8.5	11.8	3650	0.30	2	83.77	79.20	75.80/54.80	97	99.84	80.87	60	80.90	2	208/3	45.10	1350	89	54	47	PROVIDE WITH 12" INSULATED CURB ECONOMIZER

(1) ELEVATION = 4200 FT.

Colvin Engineering Associates, Inc.
244 West 300 North Suite 200
Salt Lake City, Utah 84103
Phone: (801) 322-2400 / Fax: (801) 322-2418

REFERENCE NOTES

REVISIONS:

NEW DOWNTOWN SALT LAKE CITY WINE STORE
300 West Harris Ave. (1563 South)

MJSA
357 West Pierpont Avenue ■ Salt Lake City, Utah 84101
Telephone 801 364 5161 ■ Facsimile 801 364 5167
ARCHITECTURE INTERIOR DESIGN

State of Utah-Department of Administrative Services
DIVISION OF FACILITIES CONSTRUCTION AND MANAGEMENT
4110 State Office Building/Salt Lake City, Utah 84114/(801)538-3018

DEPARTMENT OF ALCOHOLIC BEVERAGE CONTROL
1625 South 900 West, Salt Lake City, Utah 84130/(801)977-6800

STAMP

Stephen G. Colvin, Registered Professional Engineer, State of Utah, 187524, 11.12.07

LEGENDS AND ABBREVIATIONS

SCALE: NONE

DFCM PROJECT NO.: 05051030
DFCM CONTRACT NO.: 077431
MJSA PROJECT NO.: 07005
DATE: 10/15/07
SHEET: MH0-01

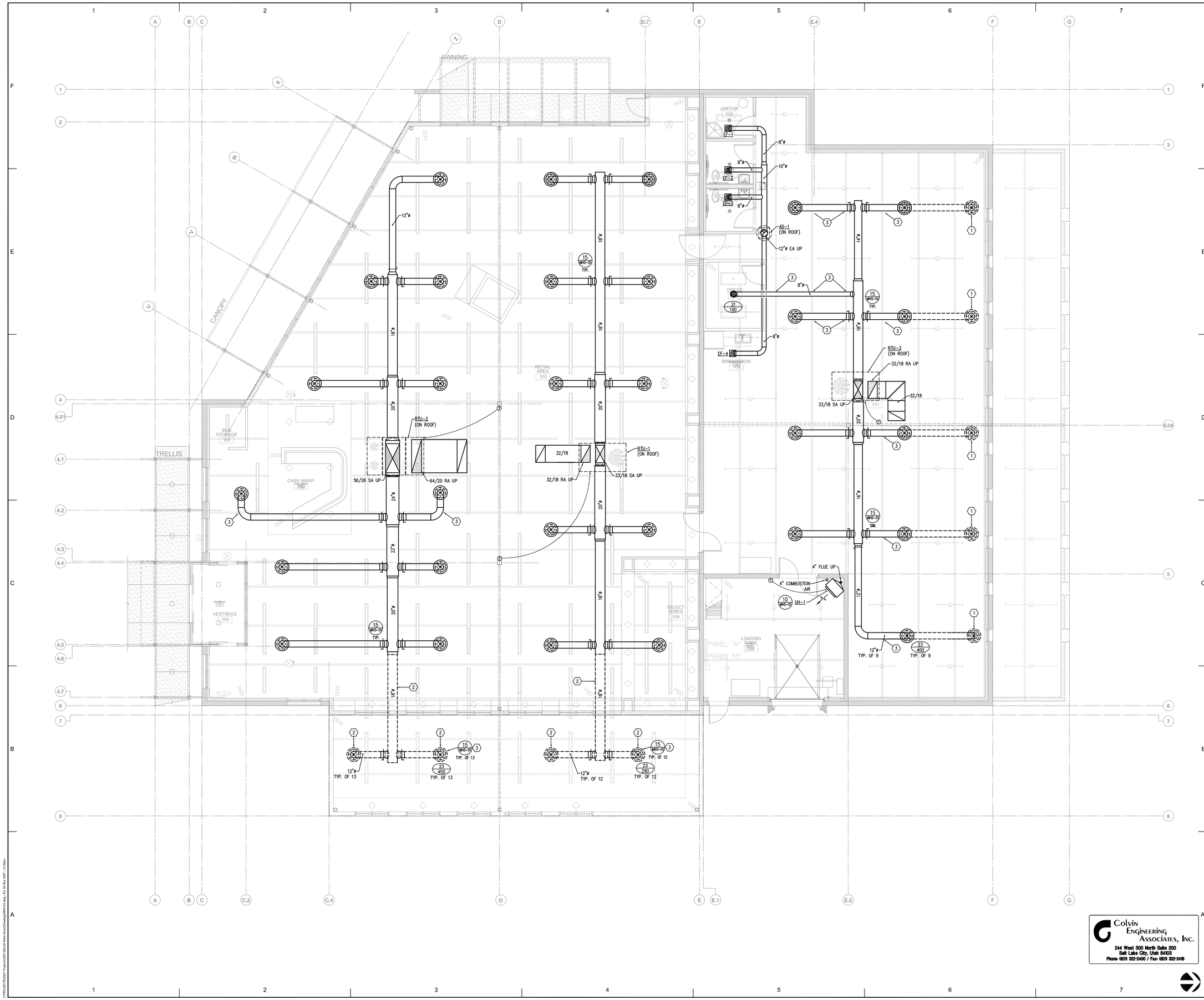

REFERENCE NOTES

KEYED NOTES

1. BID ALTERNATE# 1: EXTEND DUCT WORK AND DIFFUSER TO 9'-0" AS SHOWN ON DRAWING.
2. BID ALTERNATE# 2: PROVIDE DUCTWORK AND DIFFUSERS AS SHOWN.
3. FIELD VERIFY LOCATION FOR PASSING THROUGH JOIST.

GENERAL NOTES

A. REFER TO ARCHITECTURAL REFLECTED CEILING PLAN AE1-02 FOR EXACT LOCATION OF FIXTURES/EQUIPMENT. NOTIFY ARCHITECT IF A DISCREPANCY IS FOUND BEFORE INSTALLATI

B. LOCATE DIFFUSERS IN RETAIL AND STORAGE AREAS 9'-6"

REVISIONS:

NEW DOWNTOWN SALT LAKE CITY WINE STORE
300 West Harris Ave. (1563 South)

MJSA
357 West Pierpont Avenue ☐ Salt Lake City, Utah 84101
Telephone 801 364 5161 ☐ Facsimile 801 364 5167
ARCHITECTURE INTERIOR DESIGN

State of Utah-Department of Administrative Services

DIVISION OF FACILITIES CONSTRUCTION AND MANAGEMENT
4110 State Office Building/Salt Lake City, Utah 84114/538-3018

DEPARTMENT OF ALCOHOLIC BEVERAGE CONTROL
1625 South 900 West, Salt Lake City, Utah 84130/977-6800

STAMP

Stephen G. Connor
REGISTERED PROFESSIONAL ENGINEER
187524
11.12.07
State of Utah

Colvin Engineering Associates, Inc.
244 West 300 North Suite 200
Salt Lake City, Utah 84103
Phone: (809) 322-2400 / Fax: (809) 322-2416

DFCM PROJECT NO.: 05051030

DFCM CONTRACT NO.: 077431

MJSA PROJECT NO.: 07005

DATE: 10/15/07

MECHANICAL FLOOR PLAN

SCALE: 3/16" = 1'-0"

SHEET: MH1-01

I:\PROJECTS\2007 Projects\2007-063.00 Wine Store\Drawings\MH1-01.dwg, 11/9/2007 11:30:00 AM, Aga, 1:1

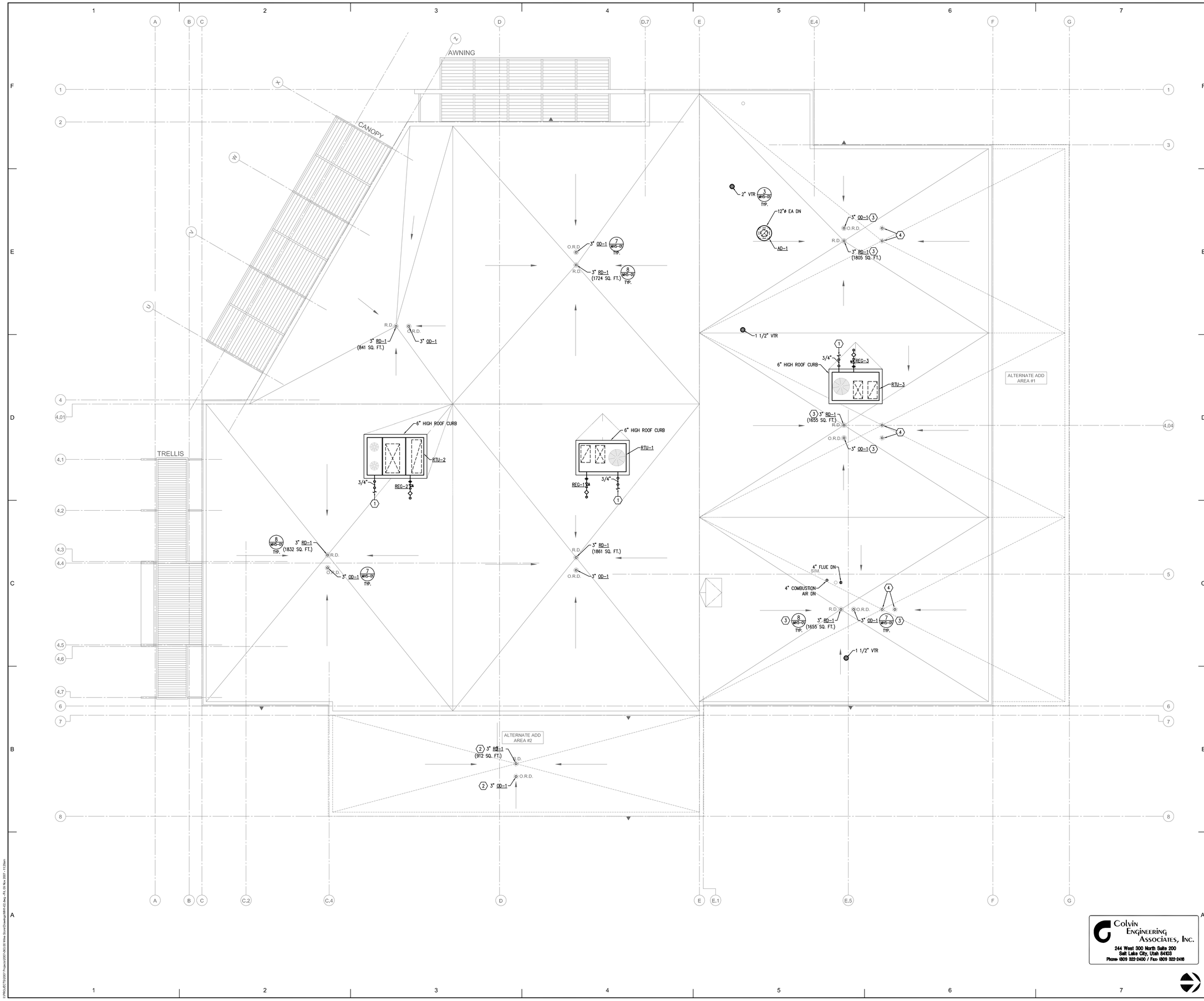

REFERENCE NOTES

KEYED NOTES

1. 3/4" CONDENSATE DRAIN TO NEAREST ROOF DRAIN.
2. PROVIDE ROOF DRAINS IF ALTERNATE ADD AREA #2 IS BUILT.
3. MOVE ROOF DRAINS TO LOCATION NOTED BY KEYED NOTE #4 IF ALTERNATE ADD AREA #1 IS BUILT.
4. LOCATION OF ROOF DRAINS AND OVERFLOW DRAINS IF ALTERNATE ADD AREA #1 IS BUILT. SEE KEYED NOTE #3.

REVISIONS:

NEW DOWNTOWN SALT LAKE CITY WINE STORE
300 West Harris Ave. (1563 South)

MJSA
357 West Pierpont Avenue ◻ Salt Lake City, Utah 84101
Telephone 801 364 5161 ◻ Facsimile 801 364 5167
ARCHITECTURE INTERIOR DESIGN

State of Utah–Department of Administrative Services
DIVISION OF FACILITIES CONSTRUCTION AND MANAGEMENT
4110 State Office Building/Salt Lake City, Utah 84114/538–3018

DEPARTMENT OF ALCOHOLIC BEVERAGE CONTROL
1625 South 900 West, Salt Lake City, Utah 84120/977–6800

STAMP

Stephen G. Connor
REGISTERED PROFESSIONAL ENGINEER
187524
11.12.07
State of Utah

Colvin Engineering Associates, Inc.
244 West 300 North Suite 200
Salt Lake City, Utah 84103
Phone (809) 322-2400 / Fax (809) 322-2416

MECHANICAL ROOF PLAN

SCALE: 3/16" = 1'-0"

DFCM PROJECT NO.: 05051030
DFCM CONTRACT NO.: 077431
MJSA PROJECT NO.: 07005
DATE: 10/15/07
SHEET: MH1-02

I:\PROJECTS\2007 Projects\2007-063.00 Wine Store\Drawings\MH1-02.dwg, 11/9/2007 11:29:11 AM, Aga, 1:1

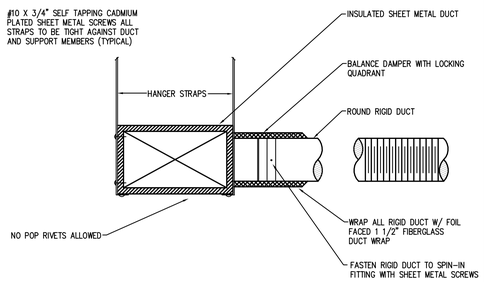

1 FLEX DUCT/SPIN-IN FITTING DETAIL

NO SCALE

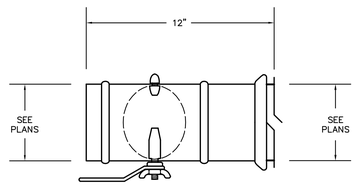

2 TYPICAL MANUAL VOLUME DAMPER DETAIL

NO SCALE

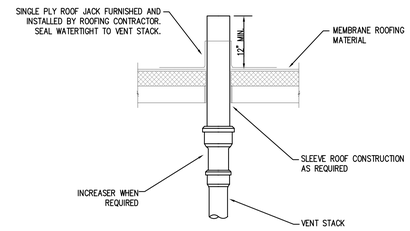

3 VENT THROUGH ROOF DETAIL

NO SCALE

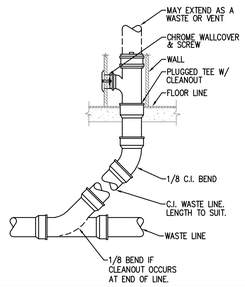

4 WALL CLEANOUT DETAIL

NO SCALE

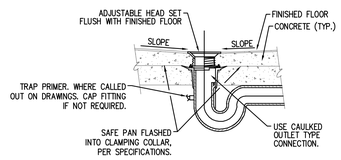

5 TYPICAL FLOOR DRAIN IN SUSPENDED SLAB DETAIL

NO SCALE

PRV SCHEDULE

PLAN CODE	SIZE	MAX GPM @ 10 PSI ΔP	PRESSURE SETTING (PSIG)	MANUFACTURER & MODEL NO.
PRV-1	1 1/2"	80	30	WATTS REGULATOR SERIES 223S

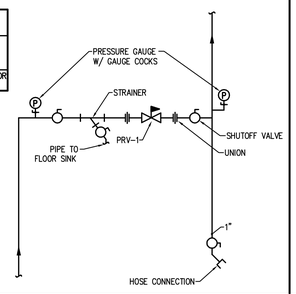

6 PRV STATION DETAIL

NO SCALE

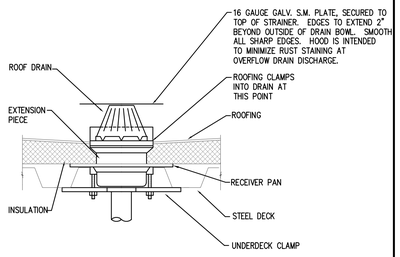

7 OVERFLOW ROOF DRAIN WITH HOOD DETAIL

NO SCALE

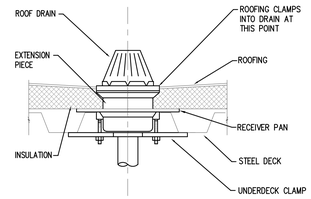

8 ROOF DRAIN DETAIL

NO SCALE

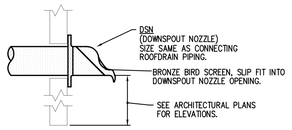

9 DOWNSPOUT NOZZLE DETAIL

NO SCALE

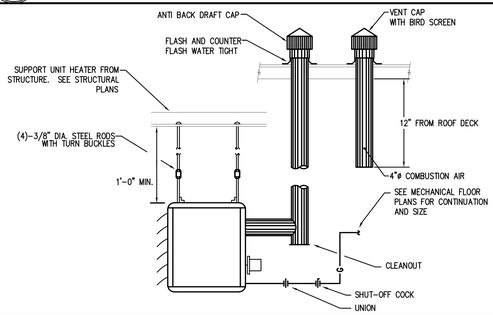

10 GAS FIRED UNIT HEATER DETAIL

NO SCALE

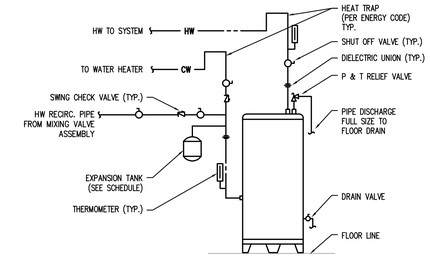

11 ELECTRIC WATER HEATER PIPING DETAIL

NO SCALE

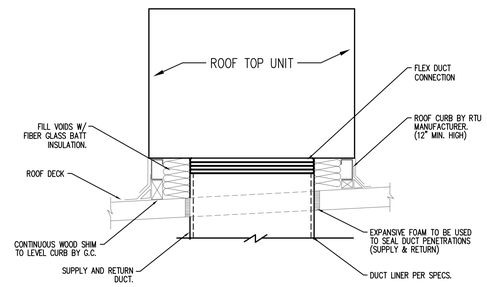

12 ROOF TOP UNIT CURB DETAIL

NO SCALE

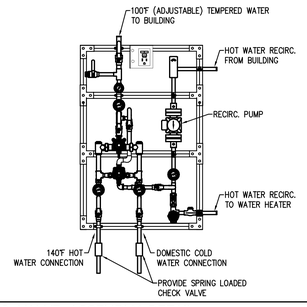

13 MIXING VALVE ASSEMBLY DETAIL

NO SCALE

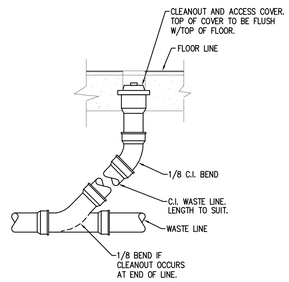

14 FLOOR CLEANOUT DETAIL

NO SCALE

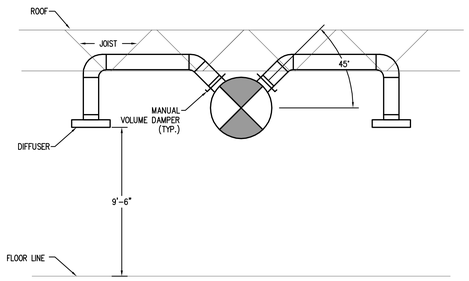

15 RUN-OUT CONNECTION DETAIL

NO SCALE

16

NO SCALE

Colvin Engineering Associates, Inc.
244 West 300 North Suite 200
Salt Lake City, Utah 84103
Phone (801) 322-2400 / Fax (801) 322-2416

REFERENCE NOTES

REVISIONS:

NEW DOWNTOWN SALT LAKE CITY WINE STORE
300 West Harris Ave. (1563 South)

MJSA
357 West Pierpont Avenue ■ Salt Lake City, Utah 84101
Telephone 801 364 5161 ■ Facsimile 801 364 5167
ARCHITECTURE INTERIOR DESIGN

State of Utah-Department of Administrative Services
DIVISION OF FACILITIES CONSTRUCTION AND MANAGEMENT
4110 State Office Building/Salt Lake City, Utah 84114/538-3018

DEPARTMENT OF ALCOHOLIC BEVERAGE CONTROL
1625 South 900 West, Salt Lake City, Utah 84135/977-6800

STAMP

Stephen G. Conlin, Registered Professional Engineer, 187524, 11.13.07, State of Utah

DFCM PROJECT NO.: 05051030
DFCM CONTRACT NO.: 077431
MJSA PROJECT NO.: 07005
DATE: 10/15/07
SHEET: MH5-01

DETAILS

SCALE: NONE

I:\PROJECTS\2007 Projects\2007-063.00 Wine Store\Drawings\MH5-01.dwg, 11/9/2007 11:28:35 AM, Aga, 1:1

NATURAL GAS PRESSURE REGULATOR SCHEDULE (REG)

PLAN CODE	TYPE	INLET PRESURE (PSIG)	OUTLET PRESURE (OZ./SQ. IN.)	LOAD (BTU/H)	GAS DELIVERY (CU.FT./H)	REMARKS
REG-1	SELF-OPERATING SPRING LOADED DIAPHRAM	2	4	166	187	PROVIDE WITH VENT PROTECTOR.
REG-2	SELF-OPERATING SPRING LOADED DIAPHRAM	2	4	287	322	PROVIDE WITH VENT PROTECTOR.
REG-3	SELF-OPERATING SPRING LOADED DIAPHRAM	2	4	99	112	PROVIDE WITH VENT PROTECTOR.
REG-4	SELF-OPERATING SPRING LOADED DIAPHRAM	2	4	30	33	PROVIDE WITH VENT LIMITER.

MIXING VALVE ASSEMBLY SCHEDULE (MVA)

PLAN CODE	MINIMUM GPM	MAXIMUM GPM	INLET SIZE	OUTLET SIZE	DIMENSION HxWxD (IN)	RECIRC PUMP			MANUFACTURER & MODEL NO
						FLOW GPM	PRESSURE (FT)	VOLTAGE/ PHASE	
MVA-1	1	5 @ 5 PSI DROP	3/4"	3/4"	40 x 48 x 6	.5	10	120V/ 1PH	LEONARD MEGATRON MODEL 1

ELECTRIC WATER HEATER SCHEDULE (WH)

PLAN CODE	CAP. (GAL)	RECOVERY (GAL/HR) @ ELEV.	INPUT (KW)	TEMP. RISE (°F)	MAX. DIMENSIONS				MAX. OPERATING WEIGHT	MANUFACTURER & MODEL NO.	REMARKS
					DIA. (IN)	HEIGHT (IN)	VOLT & PHASE	AMPS			
EWH-1	15	13	2.500	80	18	26	208/1	12.0	184	A.O. SMITH DEL-15	PROVIDE WITH AMTROL ST-5 EXPANSION TANK

PLUMBING FIXTURE SCHEDULE

PLAN CODE	DESCRIPTION	ROUGH-IN SIZE						MANUFACTURE
		C.W.	H.W.	TEMPERED	WASTE	VENT	STORM	
WC-1	WATER CLOSET, ADA COMPLIANT FLOOR MOUNT, MANUAL FLUSH VALVE, SIPHON JET, VITREOUS CHINA 1.6 GPF	1"	–	–	4"	2"	–	KOHLER "HIGHCREST" K-4302 SEAT: OLSONITE #95C FLUSH VALVE: SLOAN 113-1.6 COLOR: WHITE. FLOOR TO RIM: 16.5"
L-1	WALL MOUNT (ADA), RECTANGULAR LAVATORY, VITREOUS CHINA, BATTERY POWERED PHOTO EYE FAUCET, GRID DRAIN, 0.5 GPM FLOW	–	–	1/2"	1 1/2"	1 1/2"	–	KOHLER "GREENWICH" K-2031-N WITH K-8998 TRAP FAUCET: SYMMONS ULTRA SENSE S-6080-G WITH GRID DRAIN POWER HYDROGUARD SERIES 480 TEMPERING VALVE COLOR: WHITE.
S-1	DOUBLE COMPARTMENT, RECTANGULAR STAINLESS STEEL, COUNTER MOUNT SINK, GOOSENECK SWING SPOUT WITH WING HANDLES, 18 GA.	1/2"	1/2"	–	1 1/2"	1 1/4"	–	BOWL: JUST MANUFACTURING COMPANY DLX-1829-A-GR WITH J35 STRAINER FAUCET: CHICAGO FAUCET 786-SWE29CP STRAINER: J35. OR EQUAL PROVIDE WITH GARBAGE DISPOSAL UNIT GDU-1: ISE MODEL PRO 77, 1PH, 115V/ 1 PHASE, 9.0 AMPS.
SS-1	SERVICE SINK, ENAMELED CAST IRON, 2" GRID DRAIN AND WALL MOUNTED FAUCET WITH VACUUM BREAKER SPOUT AND WALL BRACE, LEVER HANDLES, HEX SOCKET SUPPLY STOPS, POLISHED CHROME FINISH.	3/4"	3/4"	–	3"	2"	–	SINK: KOHLER K-6710 WITH K-9142 STRAINER FAUCET: CHICAGO FAUCET 897-RCF WITH 369 LEVER HANDLES
EWC-1	BI-LEVEL, ADA, WALL MOUNT ELECTRIC WATER COOLER	3/8"	–	–	1 1/2"	1 1/4"	–	SUNROC NWCABBLN (ADA), STAINLESS STEEL, 8.0 GPH, F.L.A. = 4.5, 115 V/1 PH/ 60 HZ.
FD-1	FLOOR DRAIN (INDOOR FINISHED AREA USE)	–	–	–	SEE PLANS	SEE PLANS	–	J.R. SMITH MANUFACTURING COMPANY FIG. 2005Y-A-P050-NB DUCO CAST IRON FLOOR DRAIN. DRAIN TO BE PROVIDED WITH 2" OUTLET, ROUND NICKEL BRONZE STRAINER HEAD, TRAP PRIMER CONNECTION AND VANDAL PROOF SCREWS. STRAINER HEAD MUST BE HEEL PROOF, DEEP SEAL TRAP. OR EQUAL.
FS-1	FLOOR SINK	–	–	–	SEE PLANS	SEE PLANS	–	J.R. SMITH MANUFACTURING COMPANY FIG. 3140Y-12 SQUARE FLOOR SINK WITH NICKLE BRONZE TOP 1/2" GRATE AND TRAP PRIMER CONNECTION. FLOOR SINK TO BE PROVIDED WITH 2" OUTLET, FLOOR SINK SHALL BE OF CAST IRON CONSTRUCTION WITH SEEPAGE HOLES, ACID RESISTANTCOATED INTERIOR, NICKEL BRONZE RIM AND SECURED GRATE. ALUMINUM DOME BOTTOM DRAINER
FCO	FLOOR CLEAN OUT	–	–	–	–	SEE PLANS	–	J.R. SMITH MANUFACTURING COMPANY SERIES 4023 CAST IRON BODY, ABS PLUG, VANDAL PROOF SECURITY SCREWS
WCO	WALL CLEANOUT	–	–	–	–	SEE PLANS	–	J.R. SMITH MANUFACTURING COMPANY SERIES 4530, CAST IRON CLEANOUT TEE, ABS PLUG, STAINLESS STEEL COVER WITH VANDAL PROOF SECURITY SCREWS.
SC-1	SILLCOCK (OUTDOOR FREEZE PROOF USE)	3/4"	–	–	–	–	–	J.R. SMITH MANUFACTURING COMPANY FIG. 5519 BRONZE QUARTER TURN NON-FREEZE AUTOMATIC DRAINING HYDRANT WITH STAINLESS STEEL FACE, HOSE CONNECTION, INTEGRAL VACUUM BREAKER AND DUAL CHECK VALVE, "T" HANDLE KEY, WITH FULL 180° COVER OPENING.
HB-1	HOSE BIBB - WALL MOUNTED (INDOOR FINISHED AREA USE)	3/4"	–	–	–	–	–	WOODFORD MODEL 74-P WITH 3/4" FEMALE PIPE THREAD, CHROME PLATED FINISH, VACUUM BREAKER, 3/4" HOSE THREAD, LOOSE KEY OPERATOR.
HB-2	HOSE BIBB - WALL MOUNTED (INDOOR UNFINISHED AREA USE)	3/4"	–	–	–	–	–	WOODFORD MODEL 40HT, BRASS CONSTRUCTION HOSE BIBB, MODEL 34HF ANTI-SIPHON VACUUM BREAKER, BRASS LEVER HANDLE ADJUSTABLE WALL FLANGE, ADJUSTABLE BRASS PACKING NUT WITH DEEP STEAM GUARD. OR EQUAL
SA-1	SHOCK ARRESTOR	1"	–	–	–	–	–	J.R. SMITH SERIES 5020.
RD-1	ROOF DRAIN - PRIMARY	–	–	–	–	–	SEE PLANS	J.R. SMITH MODEL 1010-Y LARGE GENERAL PURPOSE ROOF DRAIN. ROOF DRAIN SHALL BE PROVIDED WITH DUCO CAST IRON BODY, REVERSIBLE COLLAR, COMBINED FLASHING CLAMP AND GRAVEL STOP WITH NEOPRENE GASKET, CAST IRON DOME, SUMP RECEIVER, UNDERDECK CLAMP AND VANDAL PROOF SECURITY SCREWS.
OD-1	ROOF DRAIN - SECONDARY	–	–	–	–	–	SEE PLANS	J.R. SMITH MODEL 1080-Y GENERAL PURPOSE OVERFLOW DRAIN. OVERFLOW DRAIN SHALL BE PROVIDED WITH DUCO CAST IRON BODY, FLASHING CLAMP AND GRAVEL STOP WITH NEOPRENE GASKET, CAST IRON DOME, SUMP RECEIVER, UNDERDECK CLAMP, VANDAL PROOF SECURITY SCREWS.
DSN-1	DOWN SPOUT NOZZLE	–	–	–	–	–	SEE PLANS	J.R. SMITH SERIES 1770 WITH WALL FLANGE. PROVIDE BIRD SCREEN.

Colvin Engineering Associates, Inc.
244 West 300 North Suite 200
Salt Lake City, Utah 84103
Phone (801) 322-2400 / Fax (801) 322-2416

REFERENCE NOTES

REVISIONS:

NEW DOWNTOWN SALT LAKE CITY WINE STORE
300 West Harris Ave. (1563 South)

357 West Pierpont Avenue ◘ Salt Lake City, Utah 84101
Telephone 801 364 5161 ◘ Facsimile 801 364 5167
MJSA ARCHITECTURE INTERIOR DESIGN

State of Utah-Department of Administrative Services
DIVISION OF FACILITIES CONSTRUCTION AND MANAGEMENT
4110 State Office Building/Salt Lake City, Utah 84114/538-3018

DEPARTMENT OF ALCOHOLIC BEVERAGE CONTROL
1625 South 900 West, Salt Lake City, Utah 84120/977-6800

STAMP

Stephen C. Conlin, Registered Professional Engineer, 187524, 11-12-07, State of Utah

DFCM PROJECT NO.:	05051030
DFCM CONTRACT NO.:	077431
MJSA PROJECT NO.:	07005
DATE:	10/15/07
SHEET:	PL0-01

PLUMBING SCHEDULE

SCALE: NONE

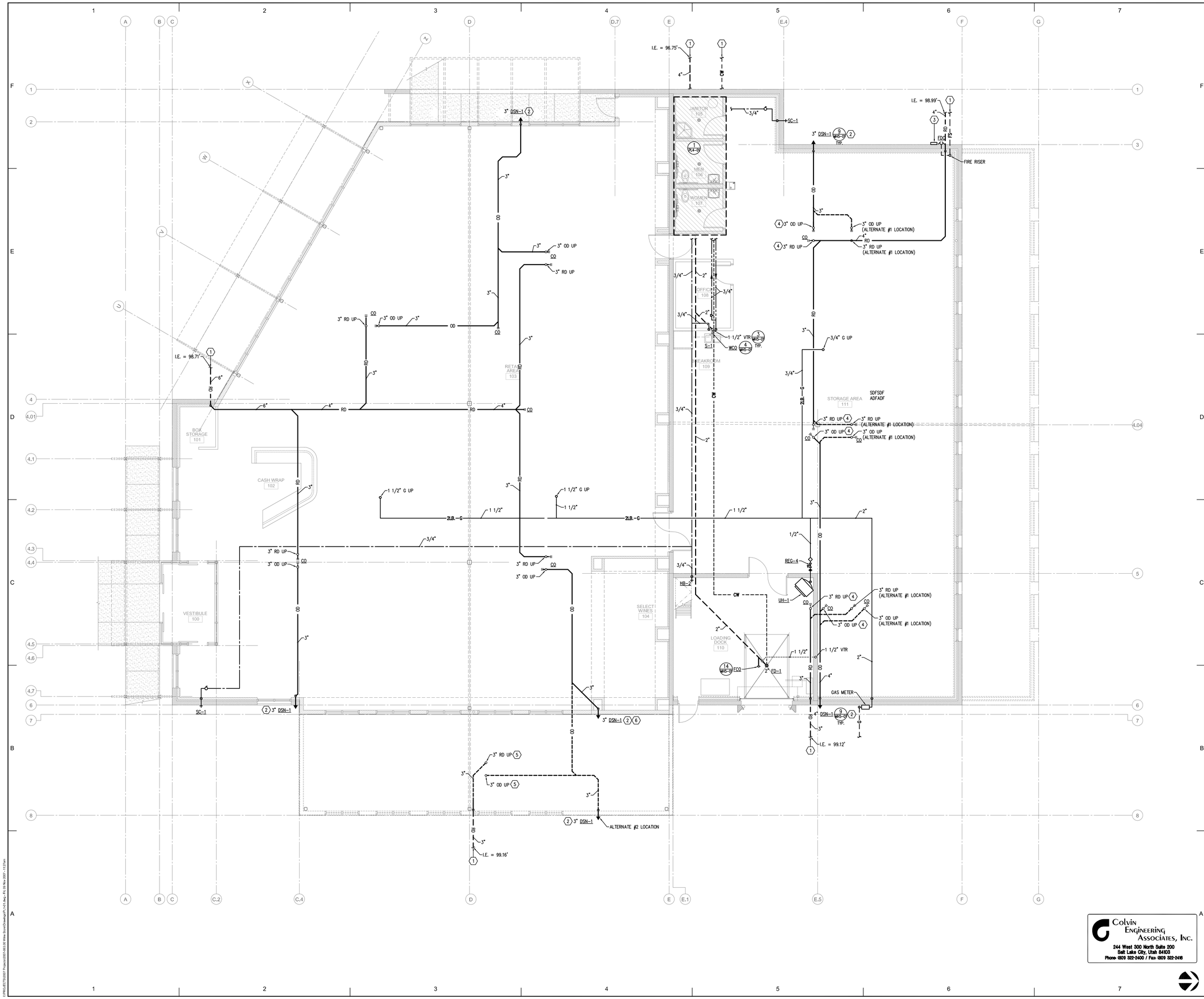

REFERENCE NOTES

KEYED NOTES

1. PLUMBING CONTRACTOR TO CONNECT TO SITE UTILITIES PIPING 5' OUTSIDE THE BUILDING.
2. SEE ARCHITECTURAL ELEVATION DRAWINGS FOR EXACT LOCATION OF OVER FLOW ROOF DRAIN NOZZLES.
3. WATER MOTOR GONG FINISH TO MATCH WALL COLOR.
4. BID ALTERNATE #1: MOVE ROOF DRAIN AND OVERFLOW DRAINS LOCATION 6 FEET TO THE NORTH AND EXTEND PIPING AS SHOWN.
5. BID ALTERNATE #2: PROVIDE ROOF DRAIN AND OVERFLOW DRAIN. EXTEND PIPING AS SHOWN.
6. LOCATION OF DOWNSPOUT NOZZLE WILL MOVE TO EAST IF ALTERNATE #2 IS BUILT.

GENERAL NOTES

- (A) FOR PLUMBING ROOF PLAN SEE MH1-02.
- (B) ROUTE ALL PIPING AS HIGH AS POSSIBLE.
- (C) ROUTE ROOF DRAIN AND OVERFLOW DRAIN PIPING IN JOIST SPACE.

REVISIONS:

NEW DOWNTOWN SALT LAKE CITY WINE STORE

300 West Harris Ave. (1563 South)

MJSA
357 West Passport Avenue ■ Salt Lake City, Utah 84101
Telephone 801 364 5161 ■ Facsimile 801 364 5167
ARCHITECTURE INTERIOR DESIGN

State of Utah–Department of Administrative Services

DIVISION OF FACILITIES CONSTRUCTION AND MANAGEMENT
4110 State Office Building/Salt Lake City, Utah 84114/538-3018

DEPARTMENT OF ALCOHOLIC BEVERAGE CONTROL
1625 South 900 West, Salt Lake City, Utah 84130/977-6800

STAMP

Stephen G. Connor
Registered Professional Engineer
187524
11.12.07
State of Utah

Colvin Engineering Associates, Inc.
244 West 300 North Suite 200
Salt Lake City, Utah 84103
Phone: (801) 322-2400 / Fax: (801) 322-2418

DFCM PROJECT NO.:	05051030
DFCM CONTRACT NO.:	077431
MJSA PROJECT NO.:	07005
DATE:	10/15/07
SHEET:	PL1-01

PLUMBING FLOOR PLAN

SCALE: 3/16" = 1'-0"

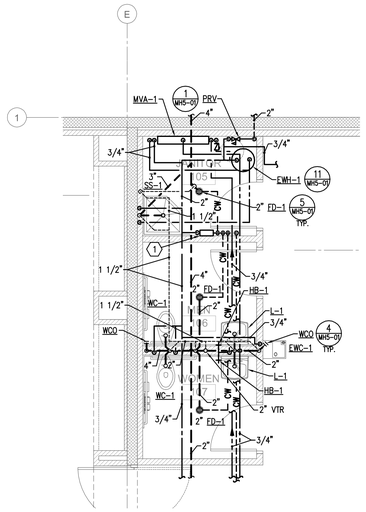

1 ENLARGED RESTROOM PLUMBING PLAN

SCALE: 1/4" = 1'-0"

3' 0 2' 4' 6' 8'

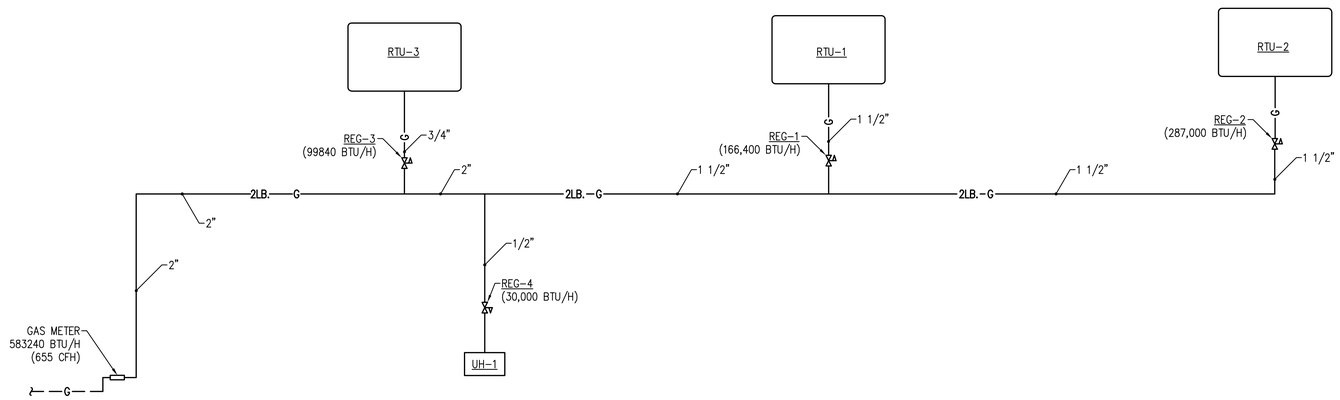

2 GAS SCHEMATIC

SCALE: NONE

Colvin Engineering Associates, Inc.
244 West 300 North Suite 200
Salt Lake City, Utah 84103
Phone: (801) 322-2400 / Fax: (801) 322-2418

REFERENCE NOTES

KEYED NOTES

1. PROVIDE ELECTRIC TRAP PRIMER. ROUTE ½" TRAP PRIMER LINES TO FLOOR DRAINS.

REVISIONS:

NEW DOWNTOWN SALT LAKE CITY WINE STORE
300 West Harris Ave. (1563 South)

MJSA
ARCHITECTURE INTERIOR DESIGN
357 West Pierpont Avenue ■ Salt Lake City, Utah 84101
Telephone 801 364 5161 ■ Facsimile 801 364 5167

State of Utah—Department of Administrative Services

DIVISION OF FACILITIES CONSTRUCTION AND MANAGEMENT
4110 State Office Building/Salt Lake City, Utah 84114/538-3018

DEPARTMENT OF ALCOHOLIC BEVERAGE CONTROL
1625 South 900 West, Salt Lake City, Utah 84130/977-6800

STAMP

Stephen G. Colvin
Registered Professional Engineer
187524
11.12.07
State of Utah

DFCM PROJECT NO.:	05051030
DFCM CONTRACT NO.:	077431
MJSA PROJECT NO.:	07005
DATE:	10/15/07
SHEET:	PL4-01

ENLARGED PLUMBING PLANS

SCALE: 3/16" = 1'-0"

1	2	3	4	5	6	7

LIGHTING SYSTEM SYMBOL LIST

SYMBOL	DESCRIPTION
J	SURFACE MOUNTED FLUORESCENT FIXTURE
J	SURFACE MOUNTED FLUORESCENT FIXTURE
E	EMERGENCY LIGHTING
E,NL	EMERGENCY NIGHT LIGHT
J	FLUORESCENT STRIP LIGHT FIXTURE
	RECESSED FIXTURE
	RECESSED WALL WASHER FIXTURE
	WALL MOUNTED FIXTURE
	8 FOOT PENDANT MOUNTED LIGHT FIXTURE
	4 FOOT PENDANT MOUNTED LIGHT FIXTURE
	SURFACE MOUNTED WALL WASHER FIXTURE
	SURFACE MOUNTED FIXTURE
	WALL SCONCE FIXTURE
	EXIT LIGHT. ARROWS SHOW EXIT DIRECTION
	PENDANT MOUNTED FIXTURE
	WALL MOUNTED LIGHT FIXTURE
	WALL MOUNTED CAN LIGHT FIXTURE
	EMERGENCY BATTERY OPERATED LIGHT-SINGLE OR TWIN BEAM
	TRACK LIGHTING FIXTURE
	POST MOUNTED PARKING OR WALKWAY LIGHTING
$	SINGLE POLE TOGGLE SWITCH - 20 AMP
$a,b	SINGLE POLE TOGGLE SWITCH - 20 AMP, LETTERS INDICATE SWITCH ASSIGNMENT
$3	THREE WAY TOGGLE SWITCH - 20 AMP
$4	FOUR WAY TOGGLE SWITCH - 20 AMP
$P	PILOT LIGHT TOGGLE SWITCH
$K	KEYED LIGHT SWITCH
M U,I,DT	CEILING MOUNTED OCCUPANCY SENSOR - U = ULTRASONIC, I = INFRARED, DT = DUAL TECH.
M U,I,DT	WALL MOUNTED OCCUPANCY SENSOR - U = ULTRASONIC, I = INFRARED, DT = DUAL TECH.
D	SLIDE CONTROL DIMMER
PC	PHOTO CELL SENSOR - LIGHTING CONTROL SYSTEM
T-X X	LIGHTING FIXTURE CALLOUT. NUMBER INDICATES A SUGGESTED QUANTITY- TO BE VERIFIED

POWER SYSTEMS SYMBOL LIST

SYMBOL	DESCRIPTION
	DUPLEX CONVENIENCE OUTLET - 20 AMP
	DUPLEX CONVENIENCE OUTLET - 20 AMP GROUND FAULT INTERRUPTER
	ISOLATED GROUND DUPLEX CONVENIENCE OUTLET - 20 AMP
	TWIST-LOCK RECEPTACLE
	4-PLEX CONVENIENCE OUTLET - 20 AMP
	4-PLEX CONVENIENCE OUTLET - 20 AMP GROUND FAULT INTERRUPTER
	SINGLE OUTLET
EWC	DUPLEX CONVENIENCE OUTLET - 20 AMP ELECTRIC WATER COOLER
	PROP CORD OUTLET
	SPECIAL PURPOSE SINGLE PHASE OUTLET
	SPECIAL PURPOSE THREE PHASE OUTLET
	REMOTE GENERATOR RECEPTACLE
	FLUSH FLOOR OUTLET BOX FOR POWER AND VOICE/DATA
J	JUNCTION BOX - SIZE AND FUNCTION AS REQUIRED
	PUSH BUTTON SWITCH
	CONDUITS CONCEALED IN FLOOR OR BELOW GRADE
	CONDUITS CONCEALED IN CEILING AND WALLS
	ARROWS INDICATE HOME RUNS
	DUAL CHANNEL SURFACE MOUNTED RACEWAY - POWER AND DATA
X X X	SURFACE MOUNTED RACEWAY WITH 20 AMP DUPLEX OUTLET AT SPACING SHOWN
	NON FUSED DISCONNECT SWITCH - SIZE AS REQUIRED
	FUSED DISCONNECT SWITCH - SIZE AS REQUIRED
S	COMBINATION STARTER/FUSED DISCONNECT SWITCH - SIZE AS REQUIRED
	MOTOR LOCATION
$T	MANUAL DISCONNECT WITH THERMAL OVERLOAD PROTECTION
	ELECTRICAL PANEL LOCATION
M	ELECTRICAL METER LOCATION
XX-X	MECHANICAL EQUIPMENT CALLOUT
X X	REFERENCE NOTE CALLOUT
DC	DOOR CONTACT

FIRE ALARM SYSTEM SYMBOL LIST

SYMBOL	DESCRIPTION
SD	FIRE ALARM SYSTEM PHOTOELECTRIC SMOKE DETECTOR
DD	FIRE ALARM PHOTOELECTRIC DUCT DETECTOR
H	FIRE ALARM HEAT DETECTOR
F	FIRE ALARM MANUAL PULL STATION, +48" A.F.F.
H	FIRE ALARM HORN WITH STROBE HIGH DECIBEL, 96" A.F.F.
H	FIRE ALARM HORN HIGH DECIBEL, SEE ARCH. ELEVATIONS FOR HEIGHT
h	FIRE ALARM HORN WITH STROBE LOW DECIBEL
h	FIRE ALARM HORN LOW DECIBEL
L	A.D.A. STROBE FOR FIRE ALARM, 96" A.F.F.
RM FAR	ADDRESSABLE RELAY CONTROL MODULE
FS	FIRE SPRINKLER FLOW SWITCH
TS	FIRE SPRINKLER TEMPER SWITCH
PIV	FIRE ALARM POST INDICATING VALVE
FSD	FIRE/SMOKE DAMPER
FAR	FIRE ALARM RELAY
AMM	ADDRESSABLE MONITOR MODULE
DC	SECURITY CONCEALED DOOR CONTACT
M	SECURITY MOTION SENSOR
GB	GLASS BREAK SECURITY SENSOR

COMMUNICATION SYSTEMS SYMBOL LIST

SYMBOL	DESCRIPTION
	TELEPHONE TERMINAL BOARD
	FLUSH FLOOR OUTLET WITH TELE/DATA

ABBREVIATIONS SYMBOL LIST

SYMBOL	DESCRIPTION
W.P.	INDICATES WEATHER PROOF EQUIPMENT
A	INDICATES DEVICE IS ABOVE COUNTER TOP
E	INDICATES DEVICE IS ON EMERGENCY CIRCUIT.
S	INDICATES DEVICE IS SURFACE MOUNTED
CLG	INDICATES CEILING MOUNTED DEVICE
UPS	UNINTERRUPTIBLE POWER SUPPLY
A.T.C.	AUTOMATIC TEMPERATURE CONTROL PANEL
M.M.C.	MULTI MEDIA CABINET
T.V.SS.	TRANSIENT VOLTAGE SURGE SUPPRESSER
F.A.C.P.	FIRE ALARM CONTROL PANEL
F.A.R.A.P.	FIRE ALARM REMOTE ANNUNCIATOR PANEL
F.A.N.E.P.	FIRE ALARM NETWORK EXPANDER PANEL

LIGHTING FIXTURE SCHEDULE

SYMBOL	DESCRIPTION	LAMPS	APPROVED MANUFACTURERS	CATALOG NUMBER
T-1	PENDENT MOUNTED FLUORESCENT INDUSTRIAL LIGHT FIXTURE WITH 10 % UP-LIGHT. LENGTH AS SHOWN.	2F32 T8 2 LAMP PER 4'	COLUMBIA	CSR4-232-EPU
			LIGHTOLIER	KW4A232-UNV-HI
			METALUX	IA232-UNV-ER8I
			LITHONIA	LA 2 32 MVOLT GEBIORS
T-2	1'X4' SURFACE MOUNTED FLUORESCENT LIGHT FIXTURE. WITH WRAP AROUND LENS.	2F32 T8	COLUMBIA	WC4-232-EPU
			LIGHTOLIER	JS4A232-UNV-HI
			METALUX	WS-232A-UNV-ER8I
			LITHONIA	SB2 32 MVOLT GEBIORS
T-3	SEMI RECESSED FLUORESCENT DOWN LIGHT FIXTURE. WITH OPAL GLASS REFLECTOR.	32 W PLT	LIGHTOLIER	D7A04/8022CL/S6132BU
			DELRAY	I-32 4740.0.I
			LOUIS POULSON	BAL-1/32W/CF
T-4	RECESSED FLUORESCENT DOWN LIGHT FIXTURE. WITH SELF TRIM PEWTER REFLECTOR.	32 W PLT	PRESCOLITE	CFT632EB-STF602-PW
			LIGHTOLIER	8021CCLW / S6132BU
			KURT VERSEN	P926-Y
			GOTHAM	AFVW 32TRT 6PR MVOLT GEBIO
T-5	PENDANT MOUNTED DIRECT/INDIRECT LIGHT FIXTURE WITH 95% DOWNLIGHT AND 5% UPLIGHT. PROVIDE UV PROTECTED SLEEVE FOR ALL THE LAMPS.	1F32T8 PER 4'	ALERA	QST-IT5-PERF-CM48-WCB-EPU-AL-8
			LIGHTOLIER	CCMT8138-120
			FOCAL POINT	FEVS-PL-IT8-IC-120-E-XXX
			PRUDENTIAL	M-OLY-IT8 04' SPL XX D9 SC UNV CA48 CHXX SCBA
T-6	4" RECESSED INCANDESCENT LIGHT FIXTURE WITH SELF TRIM PEWTER REFLECTOR.	50 W PAR	PRESCOLITE	D4MED-4DI-PW
			LIGHTOLIER	C4MRDCCDW / C4LVMU
			KURT VERSEN	C7300-Y
			GOTHAM	A 4PR
T-7	WALL MOUNTED EXTERIOR LIGHT FIXTURE.	(2)42 W PLT	KIM	WD14D3-242PLT-SCBA
			LITHONIA	WST242TRTXXMVOLT
			VISIONAIRE	SIL-2-T3-2X42CFL-UNV-SCBA
T-8	POLE MOUNTED METAL HALIDE LIGHT FIXTURE. WITH 20 FOOT POLE.	400 W MH	KIM	IA/WP9LE34/400 PMH 120 SCBA/PRA 204188 SCBA
			HADCO	AR03-R-SCBA-3-400P-Q/2000-454 5654
			INVUE	ICM-400-MP-3S-/VA1012-XX/20-ARX5 M20NBZ
			LITHONIA	AS2-400-XX-TB/SPASS5204C
T-9	UNDER CANOPY EXTERIOR LIGHT FIXTURE WITH GLASS REFLECTOR. STAINLESS STEEL.	32 W PLT	BEGA	3431P
			BETA	31 0101-SS-VOLTAGE
			WE-EF	621-3431/DL0359
			LUMUX	WS700-PL32XX
T-10	BOLLARD LIGHHT FIXTURE WITH FLUORESCENT LAMPS.	70 W MH	BEGA	314070M-42-TB-SYM*
			ERCO	VRB2/70MH120/***
			HADCO	CL8-2-SCBA-A0-70MH
EX-1	EDGE LITE EXIT SIGN WITH BATTERY PACK UNIT AND RECESSED BOX.	INCLUDED	DUAL-LITE	SCSGWE-WGLX
			ISOLITE	ELT-EM-G-IC-BA-RC-XX
			LITHONIA	EDG 1 G 120/277 EL N
			LIGHTOLIER	LGNIGWA

NOTES:

1. ALL FLUORESCENT LIGHTS SHALL HAVE ELECTRONIC PROGRAMMABLE START BALLASTS, 20%, TOTAL HARMONIC DISTORTION. UNIVERSAL, ADVANCE AND SYLVANIA ARE APPROVED MANUFACTURERS. BALLASTS TO HAVE 5 YEAR WARRANTY.
2. ALL FLUORESCENT LAMPS SHALL HAVE 4100° COLOR TEMPERATURE.
3. FIELD VERIFY ALL LIGHTING VOLTAGES PRIOR TO PLACING ANY ORDER.
4. THE WRITTEN CRITERIA OF THE FIXTURE DESCRIPTION TAKES PRECEDENCE OVER THE CATALOG NUMBER.

GENERAL NOTES:

1. REFER TO THE ARCHITECTURAL REFLECTED CEILING PLANS FOR THE EXACT LOCATION OF ALL LIGHTING FIXTURES.
2. THE COLOR OF THE LIGHT FIXTURES SHALL BE SELECTED BY THE ARCHITECT.
3. MINIMUM SIZE OF CONDUIT TO BE 3/4". ALUMINUM CONDUITS SHALL NOT BE USED.
4. USE RIGID STEEL SET SCREW TYPE FITTINGS ONLY. DIE CAST FITTINGS SHALL NOT BE USED.
5. SUPPORT THE LAY-IN TYPE FIXTURES FROM THE CEILING DECK INDEPENDENT OF THE CEILING GRID, AS SHOWN ON THE TYPICAL RECESSED FIXTURE MOUNTING DETAIL.
6. REFER TO THE MECHANICAL SHEETS FOR THE EXACT LOCATION OF THE MECHANICAL EQUIPMENT.
7. ALL NEW WORK MUST MEET THE CURRENT ADOPTED NATIONAL ELECTRICAL CODE.
8. NOT MORE THAN THREE (3) CIRCUITS, SHALL BE INSTALLED IN A CONDUIT. EACH CIRCUIT SHALL CONSIST OF 1 CONDUCTOR FOR EACH PHASE, 1 NEUTRAL, AND 1 GROUND, FOR A TOTAL OF FIVE CONDUCTORS.
9. FOR SPECIFICATION OF PULL WIRES IN EMPTY CONDUITS, REFER TO THE ELECTRICAL SPECIFICATION FOR RACEWAYS SECTION 16110.
10. THE MINIMUM SIZE OF THE CONDUCTORS ARE TO BE #12 AWG THHN COPPER, UNLESS INDICATED OTHERWISE ON THE DRAWINGS.
11. ALL PANELBOARDS SHALL HAVE FULL SIZE ISOLATED NEUTRAL AND GROUND COPPER BUSSBARS.
12. ALL J-BOXES SHALL HAVE MINIMUM DEPTH OF 2-1/8" UNLESS OTHERWISE SPECIFIED. SECURE ALL J-BOXES AS SHOWN IN THE DETAILS. FURNISH AND INSTALL PROPER MUD RINGS.
13. ALL METALLIC CONDUITS, JOINTS, FITTINGS, ETC., IN CONTACT WITH THE GROUND SHALL BE SPIRALLY WRAPPED WITH 3M SCOTCHRAP-51, 20 MIL TAPE (OR APPROVED EQUAL). 1/2" OVERLAP IS REQUIRED.
14. ALL CONDUITS EXPOSED TO THE WEATHER AND IN THE BOILER ROOM SHALL BE GALVANIZED RIGID STEEL, UNLESS OTHERWISE NOTED.
15. ALL NEW EXPOSED CONDUIT MUST RUN AGAINST THE WALLS OR CEILING DECK. DO NOT PENDANT MOUNT ANY CONDUIT FROM THE CEILINGS.
16. PAINT ALL THE J-BOXES FOR FIRE ALARM SYSTEM WITH RED PAINT. MARK ALL THE CONDUIT FOR FIRE ALARM SYSTEM SHALL BE RED.
17. THE FIRST 10' LENGTH OF ALL BURIED CONDUIT OVER 1" SHALL BE RIGID GALVANIZED STEEL WHERE THEY ARE LEAVING OR ENTERING THE BUILDING, ETC.
18. ALL UNDERGROUND CONDUIT SHALL BE BURIED 24" MINIMUM UNDER THE GROUND.
19. COORDINATE WITH THE OWNER AND ARCHITECT FOR THE EXACT LOCATION OF THE OUTLETS.
20. LIGHT SWITCHES INSTALLED ADJACENT TO EACH OTHER, SHALL BE GANGED TOGETHER WITH ONE PIECE COVERPLATE.
21. USE EPOXY ANCHORS TO SUPPORT THE ELECTRICAL EQUIPMENT. EXPANSION ANCHOR BOLTS ARE NOT ACCEPTED.
22. AT THE END OF THE JOB, PROVIDE BLANK COVER PLATES TO MATCH THE OTHER COVER PLATES FOR ALL J-BOXES WHERE DEVICES HAVE NOT YET BEEN INSTALLED.
23. SEAL AROUND ALL CONDUIT PENETRATIONS THROUGH FIRE RATED WALLS AND CEILINGS WITH FIRE RATED MATERIAL. 3M IS AN APPROVED MANUFACTURER.
24. ALL DISCONNECTS, J-BOXES AND CONDUITS EXPOSED TO THE OUTSIDE WEATHER SHALL BE NON-CORROSIVE, WEATHER PROOF TYPE.
25. ALL DISCONNECTS SHALL BE HEAVY DUTY TYPE.
26. ALL MATERIALS USED IN THIS INSTALLATION SHALL BE U.L. APPROVED AND NEW.
27. ALL PANELS SHALL HAVE COPPER BUSSES AND SHALL BE BRACED FOR A MINIMUM OF 10,000 AIC OR AS SPECIFIED.
28. ALL ELECTRICAL WIRING MUST BE IN CONDUIT (ROMEX AND MC CABLE NOT PERMITTED).
29. FLEXIBLE CONDUITS CAN ONLY BE USED FOR SHORT RUNS (6' MAXIMUM).
30. NO CONDUITS SHALL RUN IN DUCT WORK.
31. TEMPORARY ELECTRICAL SERVICE IS TO BE PROVIDED BY THE ELECTRICAL CONTRACTOR AND REMOVED BY THE ELECTRICAL CONTRACTOR.
32. FOR ALL INCANDESCENT LIGHT FIXTURES 150 C RATED CONDUCTORS ARE REQUIRED.
33. PRIOR TO SUBMITTING A BID THE ELECTRICAL CONTRACTOR SHALL INSPECT THE SITE AND INCLUDE IN HIS BID PACKAGE ALL CHARGES DUE TO EXISTING CONDITIONS. SHOP DRAWINGS ARE REQUIRED.
34. THE ELECTRICAL CONTRACTOR SHALL TERMINATE THE ELECTRICAL CONNECTIONS TO ALL THE EQUIPMENT BY PROVIDING THE NECESSARY MALE/FEMALE CONNECTOR, RECEPTACLE, PLUG, ETC.
35. ALL DUPLEX OUTLETS AND SWITCHES SHALL BE 20 AMP., 120 VOLT SPEC GRADE. HUBBELL AND PASS & SEYMOUR AND LEVITON ARE APPROVED MANUFACTURERS.
36. THE ELECTRICAL CONTRACTOR SHALL NOTIFY AND COORDINATE WITH THE MECHANICAL CONTRACTOR SO THAT NO PIPING, DUCTS, OR OTHER EQUIPMENT SHALL BE INSTALLED IN ENTRY OR PASS THROUGH ELECTRICAL ROOM OR SPACES ABOVE OR BELOW ELECTRICAL PANELS.
37. ELECTRICAL CONTRACTOR SHALL VERIFY ALL ELECTRICAL LOADS (VOLTAGE, PHASE, CONNECTION REQUIREMENT, ETC.) OF EQUIPMENT FURNISHED UNDER OTHER DIVISIONS WITH APPROVED SHOP DRAWINGS PRIOR TO BEGINNING ROUGH-IN.
38. THE CONTRACTOR SHALL INFORM THE ARCHITECT/ENGINEER IN WRITING OF ANY DISCREPANCIES FOUND BETWEEN THE INTENDED FUNCTION OF EQUIPMENT AND EQUIPMENT SPECIFIED IN THE CONTRACT DOCUMENTS A MINIMUM OF FIVE (5) WORKING DAYS PRIOR TO ISSUANCE OF THE FINAL BID. FAILURE TO REPORT ANY DISCREPANCY (CATALOG NUMBERS, DISCONTINUED ITEMS, ETC.) DOES NOT RELIEVE THE CONTRACTOR FROM PROVIDING EQUIPMENT WHICH SHALL CONFORM TO AND FULFILL THE INTENT OF THE CONTRACT DOCUMENTS. NOR SHALL IT BE USED AS A CONDITION TO OBTAIN ADDITIONAL FUNDS FROM THE OWNER AFTER THE CONTRACT IS AWARDED. THE CONTRACTOR SHALL REQUEST ALL CLARIFICATIONS OF CONTRACT DOCUMENT REQUIREMENTS IN WRITING TO THE ARCHITECT/ENGINEER A MINIMUM OF FIVE (5) WORKING DAYS PRIOR TO ISSUANCE OF THE FINAL ADDENDUM.
39. PROVIDE TYPED LABEL FOR ALL DUPLEX OUTLETS AND LIGHT SWITCHES TO INDICATE WHICH CIRCUIT THEY ARE TIED TO.
40. INSTALL EXIT SIGNS ON THE WALL IF POSSIBLE.
41. CONTRACT DOCUMENTS SHALL TAKE PRECEDENCE OVER SHOP DRAWINGS UNLESS SPECIFICALLY NOTED OTHERWISE.
42. SWITCHBOARDS, PANELBOARDS, SHALL BE FIELD MARKED TO WARN QUALIFIED PERSONS OF POTENTIAL ELECTRIC ARC FLASH HAZARDS. THE MARKING SHALL BE LOCATED SO AS TO BE CLEARLY VISIBLE TO QUALIFIED PERSONS BEFORE EXAMINATION, ADJUSTMENT, SERVICING, OR MAINTENANCE OF THE EQUIPMENT. (NEC 110-16)
43. USE NO. 10 THHN CONDUCTORS FOR CONDUCTOR LENGTH OVER 100 FEET, NO. 8 THHN OVER 200 FEET, NO. 6 THHN OVER 300 FEET AND NO. 4 THHN OVER 400 FEET LENGTH.
44. ANY CIRCUIT BREAKER FEEDING FIRE ALARM SYSTEMS SHALL CONTAIN RED MARKING AND SHALL BE LABELED "FOR FIRE ALARM SYSTEM".

E.C.E. INC.
Electrical Consulting Engineers
939 So. West Temple
Salt Lake City, Utah 84101
Telephone (801) 521-8007
Telefax (801) 521-8057

REFERENCE NOTES

REVISIONS:

CONSTRUCTION DOCUMENT PROGRESS SHEET

State of Utah–Department of Administrative Services

DIVISION OF FACILITIES CONSTRUCTION AND MANAGEMENT
4110 State Office Building/Salt Lake City, Utah 84114/538-3018

DEPARTMENT OF ALCOHOLIC BEVERAGE CONTROL
1625 South 900 West, Salt Lake City, Utah 84130/977-6800

MJSA
357 West Pierpont Avenue □ Salt Lake City, Utah 84101
Telephone 801 364 5161 □ Facsimile 801 364 5167
ARCHITECTURE INTERIOR DESIGN

STAMP

LICENSED PROFESSIONAL ENGINEER
AKBAR MATINKHAH
#172577
STATE OF UTAH

DFCM PROJECT NO.: 05051030

DFCM CONTRACT NO.: 077431

MJSA PROJECT NO.: 07005

ECE PROJECT NO.: 3452

DATE: 10/15/07

GENERAL NOTES & SCHEDULES

SCALE: N.T.S.

SHEET: E-001

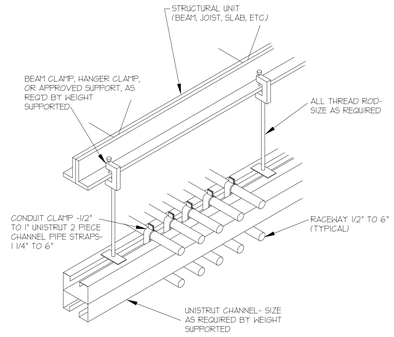

SCALE: N.T.S.

TYPICAL CONDUIT RACK DETAIL

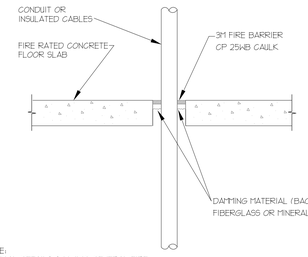

NOTE:
TYPICAL DETAILS SHOWING GENERAL FIRE STOPPING PROCEDURE. ACTUAL PROCEDURE DEPENDS UPON ANNULAR SPACE BETWEEN PIPE AND/OR INSULATION AND OPENING. FOLLOW MANUFACTURER'S INSTRUCTIONS.

UL SYSTEM #49

SCALE: N.T.S.

TYPICAL FIRESTOP FOR CABLES/CONDUIT THROUGH CONCRETE FLOORING

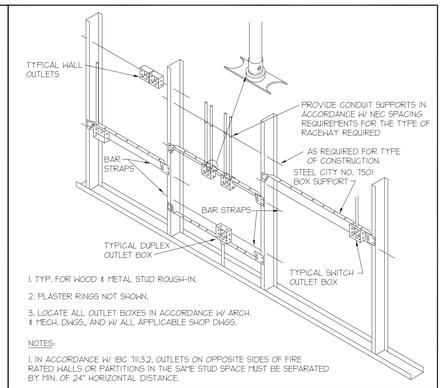

1. TYP. FOR WOOD & METAL STUD ROUGH-IN.
2. PLASTER RINGS NOT SHOWN.
3. LOCATE ALL OUTLET BOXES IN ACCORDANCE W/ ARCH. & MECH. DWGS., AND W/ ALL APPLICABLE SHOP DWGS.

NOTES:
1. IN ACCORDANCE W/ IBC 1113.2, OUTLETS ON OPPOSITE SIDES OF FIRE RATED WALLS OR PARTITIONS IN THE SAME STUD SPACE MUST BE SEPARATED BY MIN. OF 24" HORIZONTAL DISTANCE.

SCALE: N.T.S.

TYPICAL ROUGH-IN REQUIREMENTS DETAIL

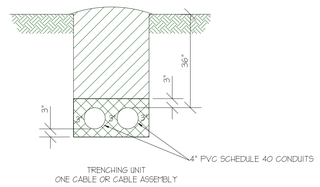

NOTES:
1. DEPTHS SPECIFIED ARE TO FINISHED GRADE.
2. OVER-EXCAVATE TRENCHES AS NECESSARY TO ALLOW FOR (a) SAND BEDDING OR (b) LOOSE AND SANDY SOIL OR (c) WHERE MORE THAN ONE CABLE WILL BE INSTALLED IN TRENCH AND LAYING OF FIRST CABLE MAY CAUSE TRENCH DAMAGE AND REDUCTION IN DEPTH.
3. SAND BEDDING IS NOT PART OF THESE UNITS AND WILL BE SPECIFIED AS NEEDED.
4. BACKFILL IS PART OF ALL TRENCHING UNITS INCLUDING JOINT-USE TRENCHES.

SCALE: N.T.S.

TRENCH DETAIL

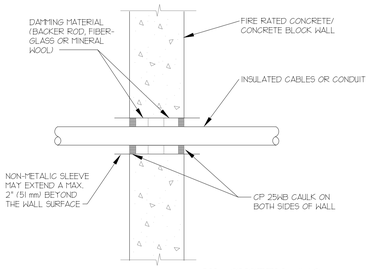

NOTE:
TYPICAL DETAILS SHOWING GENERAL FIRE STOPPING PROCEDURE. ACTUAL PROCEDURE DEPENDS UPON ANNULAR SPACE BETWEEN PIPE AND/OR INSULATION AND OPENING. FOLLOW MANUFACTURER'S INSTRUCTIONS.

UL SYSTEM #49

SCALE: N.T.S.

TYPICAL FIRESTOP FOR CABLES/CONDUIT THROUGH CONCRETE WALLS

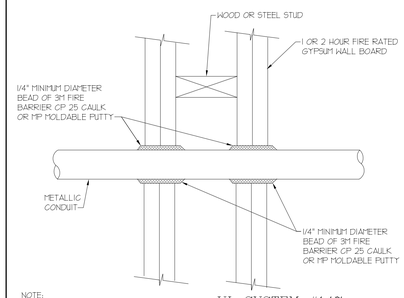

NOTE:
TYPICAL DETAILS SHOWING GENERAL FIRE STOPPING PROCEDURE. ACTUAL PROCEDURE DEPENDS UPON ANNULAR SPACE BETWEEN PIPE AND/OR INSULATION AND OPENING. FOLLOW MANUFACTURER'S INSTRUCTIONS.

UL SYSTEM #147

SCALE: N.T.S.

FIRESTOP FOR METAL CONDUIT THROUGH GYPSUM WALL BOARD

NOTE:
1. IN AND OUT CABLES TO THE DEVICES MUST RUN IN A SEPERATE CONDUIT. 3/4" CONDUIT SHALL BE THE MINIMUM SIZE.

SCALE: N.T.S.

TYPICAL FIRE ALARM RISER DIAGRAM

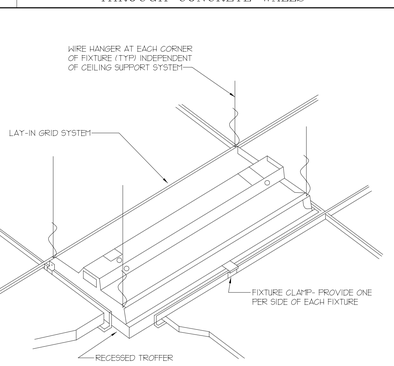

SCALE: N.T.S.

TYPICAL RECESSED FIXTURE MOUNTING DETAIL

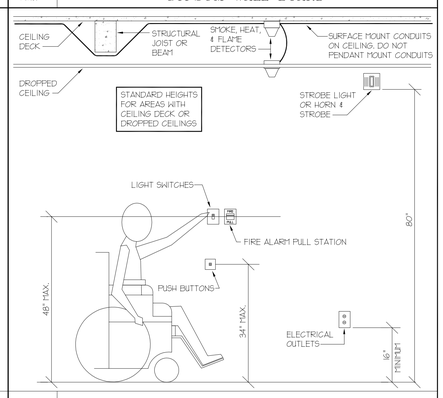

SCALE: N.T.S.

STANDARD HEIGHTS FOR HANDICAPPED ACCESS

SYSTEM VOLTAGE	A
480	42"
208	36"

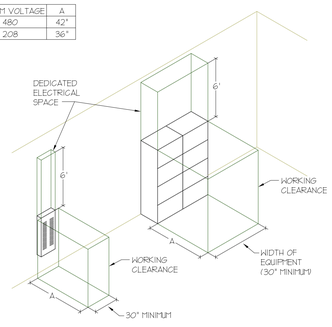

NOTE:
1. IF THE CEILING DECK IS LESS THAN 6'-0" ABOVE ELECTRICAL EQUIPMENT THEN AREA FROM EQUIPMENT TO CEILING DECK SHALL BE DEDICATED ELECTRICAL SPACE (LAY-IN DROP CEILING ARE NOT CONSIDERED AS CEILING DECK)

SCALE: N.T.S.

TYPICAL PANELBOARD CLEARANCE REQUIREMENTS

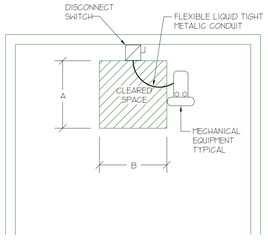

NOTE:
1. THE CONTRACTOR MUST COORDINATE EXACT LOCATION OF THE DISCONNECT WITH THE MECHANICAL CONTRACTOR TO ELIMINATE ANY OBSTACLE (PIPE, CONCRETE PAD, ETC.) IN FRONT OF THE DISCONNECT. IF THERE ARE ANY OBSTACLES, PROVIDE UNISTRUT AND INSTALL THE DISCONNECT NEXT TO MECHANICAL EQUIPMENT IN ORDER TO PROVIDE THE REQUIRED CLEARANCE.

2. PROVIDE MINIMUM CLEARANCE AS FOLLOWS:

SYSTEM VOLTAGE	A	B
480	42"	30"
208	36"	30"

SCALE: N.T.S.

TYPICAL DISCONNECT CLEARANCE REQUIREMENTS

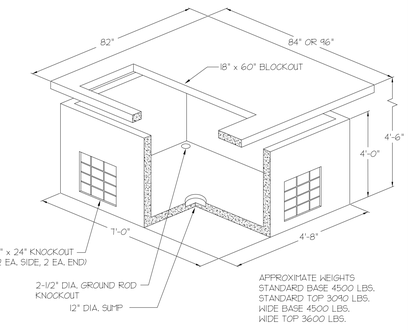

SCALE: N.T.S.

POWER COMPANY PADVAULT WITHOUT ACCESS

E.C.E. INC.
Electrical Consulting Engineers
939 So. West Temple
Salt Lake City, Utah 84101
Telephone (801) 521-8007
Telefax (801) 521-8057

REFERENCE NOTES

REVISIONS:

CONSTRUCTION DOCUMENT PROGRESS SHEET

State of Utah-Department of Administrative Services

DIVISION OF FACILITIES CONSTRUCTION AND MANAGEMENT
4110 State Office Building/Salt Lake City, Utah 84114/538-3018

DEPARTMENT OF ALCOHOLIC BEVERAGE CONTROL
1625 South 900 West, Salt Lake City, Utah 84130/977-6800

STAMP

DETAILS

SCALE: N.T.S.

MJSA
307 West Pierpont Avenue □ Salt Lake City, Utah 84101
Phone: (801) 521-8677 □ Fax: (801) 521-8697
ARCHITECTURE INTERIOR DESIGN

DFCM PROJECT NO.:	05051030
DFCM CONTRACT NO.:	077431
MJSA PROJECT NO.:	07005
ECE PROJECT NO.:	3452
DATE:	10/15/07
SHEET:	E-002

MECHANICAL EQUIPMENT SCHEDULE

	NAME OF MECHANICAL EQUIPMENT	LIFT	COMPACTOR	EXHAUST FAN	EXHAUST FAN	EXHAUST FAN	EXHAUST FAN	ELECTRIC HEATER COOLES	ELECTRIC HEATER HEATER	MIXING VALVE ASSEMBLY	ROOF TOP UNIT	ROOF TOP UNIT	ROOF TOP UNIT	TRAP PRIMER	UNIT HEATER
	EQUIPMENT NO.	--	--	EF-1	EF-2	EF-3	EF-4	EWC-1	EWH-1	MVA-1	RTU-1	RTU-2	RTU-3	--	UH-1
	RATING/WATTS	5HP	2HP	84 W	84 W	84 W	84 W	--	--	--	--	--	--	--	1/30 HP
	VOLTAGE	208	208	120	120	120	120	120	208	120	208	208	208	120	120
MOTOR DATA	PHASE	3	1	1	1	1	1	1	1	1	3	3	3	1	1
MOTOR DATA	AMPS	--	15	--	--	--	--	4.5	12	--	42	78	45.1	--	--
MOTOR DATA	WIRE SIZE	3#10	2#12	2#12	2#12	2#12	2#12	2#12	2#12	2#12	3#8	3#3	3#6	2#12	2#12
MOTOR DATA	GROUND WIRE	1#10	1#12	1#12	1#12	1#12	1#12	1#12	1#12	1#12	1#10	1#8	1#10	1#12	1#12
MOTOR DATA	CONDUIT SIZE	3/4	3/4	3/4"	3/4"	3/4"	3/4"	3/4"	3/4"	3/4"	3/4"	1 1/4"	3/4"	3/4"	3/4"
MOTOR DATA	FUSE DISC. SW.	30	--	--	--	--	--	--	--	--	60	100	60	--	--
MOTOR DATA	TYPE RK1 FUSES	25	--	--	--	--	--	--	--	--	50	90	55	--	--
MOTOR DATA	NON-FUSE SW.	--	--	--	--	--	--	--	30	--	--	--	--	--	--
MOTOR DATA	CAPACITOR (KVAR)	--	--	--	--	--	--	--	--	--	--	--	--	--	--
	NOTES	1	5	2	2	2	2	6	1	2	1	1	1	2	2

NOTES:
1. STARTER IS FURNISHED WITH THE UNIT. PROVIDE SITE DISCONNECT.
2. PROVIDE THERMAL OVERLOAD SWITCH.
3. PROVIDE COMBINATION STARTER & DISCONNECT (HOA) W/ (2) N.O. & N.C. CONTACTS.
4. UNIT FURNISHED WITH VFD. PROVIDE SITE FUSED DISCONNECT WITH ELECTRICAL INTERLOCK (FACTORY INSTALLED).
5. PROVIDE SPECIAL OUTLET AND MATCHING CORD & PLUG.
6. PROVIDE DUPLEX OUTLET.

PANEL "M" | AIC RATING 22K AMPS
PHASE / WIRE 3 / 4 | RATING 120 / 208 VOLTS
MAIN BUS BAR 400 AMPS | SUBFEED LUGS YES
MAIN BREAKER 400 AMPS | COMMENT

CKT	LOCATION	RECEPT	LTG	OTHER	POLE	SIZE	PHASE	SIZE	POLE	OTHER	LTG	RECEPT	LOCATION	CKT
1	LTG RETAIL		1200		1	20	A	20	1		1140		LTG STORAGE	2
3	LTG RETAIL		1320		1	20	B	20	1		1080		LTG STORAGE DOCK	4
5	LTG RETAIL		1320		1	20	C	20	1		960		LTG STORAGE	6
7	LTG RETAIL		1680		1	20	A	20	1		960		LTG (ALTERNATE)	8
9	LTG RETAIL		720		1	20	B	20	1		1200		LTG (ALTERNATE)	10
11	LTG RETAIL		800		1	20	C	20	1		600		BUILDING SIGN	12
13	LTG RETAIL		720		1	20	A	20	1		560		LTG EXTERIOR WALL	14
15	SIGN ON/OFF		200		1	20	B	20	1		294		LTG EXTERIOR WALL	16
17	EXTERIOR POLE LIGHT		1200		1	20	C	20	1				SPARE	18
19	EXTERIOR POLE LIGHT		1400		1	20	A	20	1				SPARE	20
21	LTG RETAIL		500		1	20	B	20	1	400			EXHAUST FANS	22
23	SPARE				1	20	C	20	1				SPARE	24
25	SPARE				1	20	A			2000				26
27				1250			B			2000				28
29	WATER HEATER (EWH-1)			1250	2	20	C	40	3	2000			LIFT	30
31				5000			A			10960				32
33				5000			B			5800				34
35	RTU-1			5000	3	60	C	100	3	6900			PANEL "A"	36
37				9400			A			5400				38
39				9400			B			5400				40
41	RTU-2			9400	3	100	C	60	3	5400			RTU-3	42

VA	VA	VA		AMPS		KVA		VA	VA	VA
0	5000	14400	A	336.8	A	40.42	A	18360	2660	0
0	2740	15650	B	288	B	34.56	B	13600	2574	0
0	3320	15650	C	290.3	C	34.83	C	14300	1560	0
0	11060	45700		304.8	TOTAL	109.8		46260	6794	0

PANEL "A" | AIC RATING 22K AMPS
PHASE / WIRE 3 / 4 | RATING 120 / 208 VOLTS
MAIN LUG 100 AMPS | SUBFEED LUGS YES
MAIN BREAKER AMPS | COMMENT

CKT	LOCATION	RECEPT	LTG	OTHER	POLE	SIZE	PHASE	SIZE	POLE	OTHER	LTG	RECEPT	LOCATION	CKT
1	C.O. LOADING STOR.	900			1	20	A	20	1			360	C.O. RETAIL	2
3	C.O. STOR.	900			1	20	B	20	1				SPARE	4
5	C.O. EWC	700			1	20	C	20	1			360	C.O. SELECT RETAIL	6
7	C.O. WOMEN STOR.	720			1	20	A	20	1			360	C.O. RETAIL	8
9	C.O. TIME CLOCK	200			1	20	B	20	1			360	C.O. RETAIL	10
11	C.O. OFFICE	900			1	20	C	20	1			360	C.O. RETAIL	12
13	C.O. BREAK ROOM	180			1	20	A	20	1			540	C.O. RETAIL	14
15	C.O. BREAK ROOM	1200			1	20	B	20	1	400			SPRINKLER PANEL	16
17	C.O. BREAK ROOM REF.	1200			1	20	C	20	1			400	OUTLETS ON ROOF	18
19	C.O. STOR.	5400			1	20	A	20	1			400	FLOOR OUTLET	20
21	C.O. T.T.B.	360			1	20	B	20	1			400	FLOOR OUTLET	22
23	F.A.C.P./SEC. PANEL	600			1	20	C	20	1			600	AUTOMATIC DOOR	24
25	SPARE				1	20	A	20	1			600	AUTOMATIC DOOR	26
27	SECURITY LCD MONITORS	600			1	20	B	20	1				SPARE	28
29	OFFICE DVR	400			1	20	C	20	1				SPARE	30
31	SPARE				1	20	A	20	1				SPARE	32
33	SPARE				1	20	B	20	1				SPARE	34
35	SPARE				1	20	C	20	1				SPARE	36
37	OVERHEAD DOOR			1500	1	20	A	20	1				SPARE	38
39				1380			B	20	1				SPARE	40
41	COMPACTOR			1380	2	20	C	20	1				SPARE	42

VA	VA	VA		AMPS		KVA		VA	VA	VA
7200	0	1500	A	91.33	A	10.96	A	0	0	2260
3260	0	1380	B	48.33	B	5.8	B	400	0	760
3800	0	1380	C	57.5	C	6.9	C	0	0	1720
14260	0	4260		65.68	TOTAL	23.66		400	0	4740

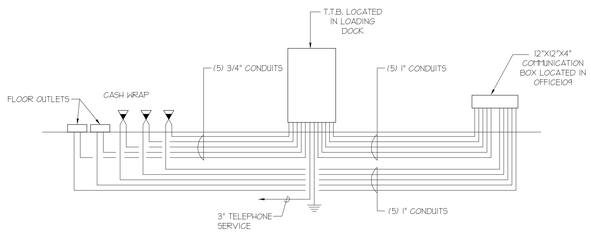

VOICE DATA WIRING DIAGRAM
SCALE: N.T.S.

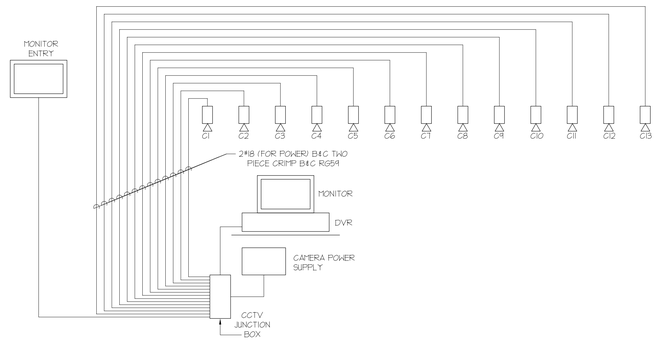

CCTV SYSTEM WIRING DIAGRAM
SCALE: N.T.S.

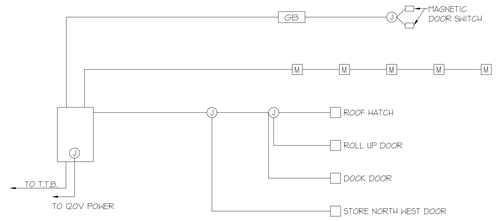

SECURITY SYSTEM WIRING DIAGRAM
SCALE: N.T.S.

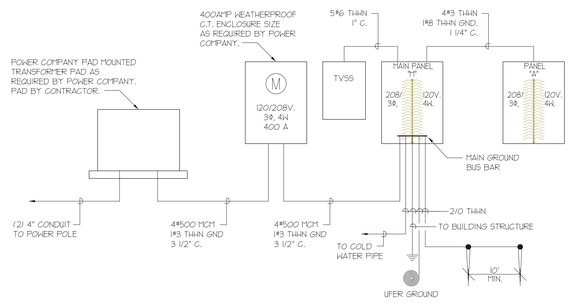

POWER SINGLE LINE DIAGRAM
SCALE: N.T.S.

E.C.E. INC.
Electrical Consulting Engineers
939 So. West Temple
Salt Lake City, Utah 84101
Telephone (801) 521-8007
Telefax (801) 521-8057

REFERENCE NOTES

REVISIONS:

CONSTRUCTION DOCUMENT PROGRESS SHEET

State of Utah-Department of Administrative Services
DIVISION OF FACILITIES CONSTRUCTION AND MANAGEMENT
4110 State Office Building/Salt Lake City, Utah 84114/538-3018

DEPARTMENT OF ALCOHOLIC BEVERAGE CONTROL
1625 South 900 West, Salt Lake City, Utah 84130/977-6800

STAMP

PANELS

SCALE: N.T.S.

MJSA
307 West Pierpont Avenue ☐ Salt Lake City, Utah 84101
Phone: (801) 521-8677 ☐ Facsimile: (801) 521-8677
ARCHITECTURE INTERIOR DESIGN

DFCM PROJECT NO.: 05051030
DFCM CONTRACT NO.: 077431
MJSA PROJECT NO.: 07005
ECE PROJECT NO.: 3452
DATE: 10/15/07
SHEET: E-003

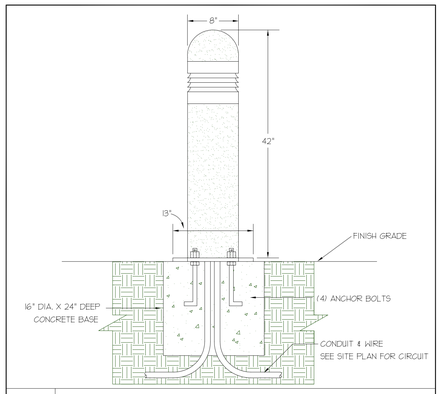

SCALE: N.T.S.

BOLLARD MOUNTING DETAIL

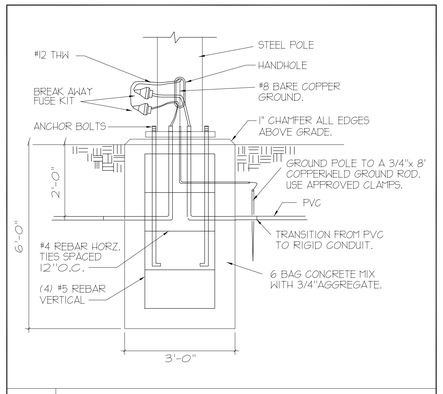

SCALE: N.T.S.

POLE BASE DETAIL

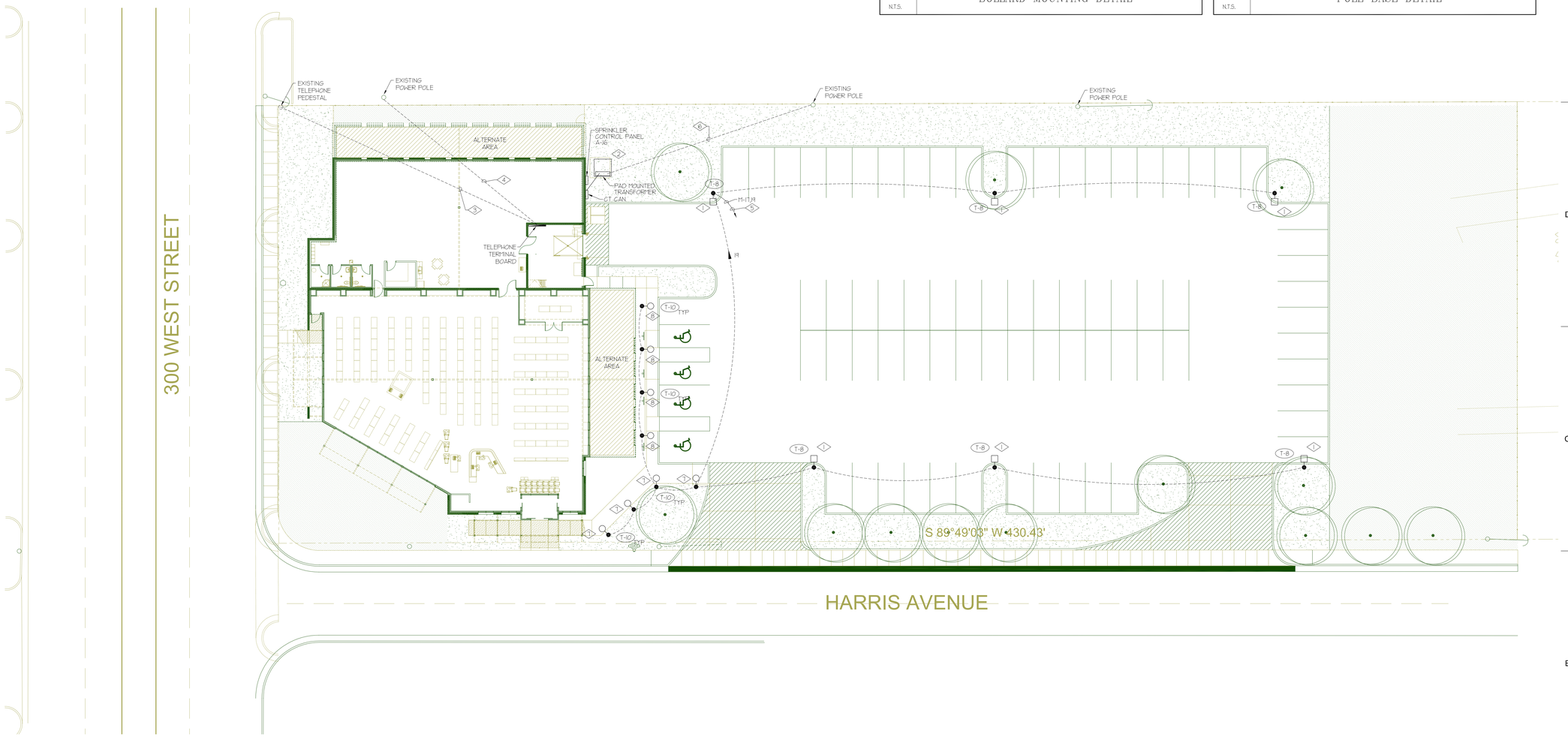

SITE PLAN – ELECTRICAL
SCALE: 1/16" = 1'-0"

REFERENCE NOTES

1. PROVIDE CONCRETE POLE BASE FOR THE NEW LIGHT POLES IN APPROXIMATE LOCATION SHOWN. COORDINATE WITH ARCHITECT FOR EXACT LOCATION. REFER TO POLE BASE DETAIL FOR MORE INFORMATION.
2. PROVIDE CONCRETE PAD FOR POWER COMPANY PAD MOUNTED TRANSFORMER AND CT CAN. NEW PAD MUST COMPLY WITH POWER COMPANY REQUIREMENTS. COORDINATE WITH GENERAL CONTRACTOR FOR EXACT LOCATION OF PAD. REFER TO TRANSFORMER PAD DETAIL FOR MORE INFORMATION.
3. RUN ONE (1) 3" CONDUIT FROM TELEPHONE PEDESTAL TO T.T.B. BURY THE CONDUIT 24" BELOW GRADE. COORDINATE ROUTING WITH GENERAL CONTRACTOR.
4. RUN ONE (1) 2" CONDUIT FROM UTILITY POLE TO T.T.B. FOR CABLE TV. BURY THE CONDUIT 24" BELOW GRADE. COORDINATE ROUTING WITH GENERAL CONTRACTOR.
5. TIE THE EXTERIOR LIGHT FIXTURES TO THEIR DESIGNATED CIRCUIT THROUGH TIME CLOCK AND LIGHTING CONTACTOR BY ELECTRICAL PANELBOARD.
6. RUN TWO (2) 4" CONDUIT FROM THE PAD MOUNTED TRANSFORMER TO THE POWER POLE. RUN THE CONDUIT UP THE POLE APPROXIMATELY 20 FEET. COORDINATE THIS WORK WITH POWER COMPANY. CONDUIT ON THE POLE MUST BE RIGID GALVANIZED STEEL.
7. PROVIDE CONCRETE BASE FOR NEW BOLLARD LIGHT FIXTURE. REFER TO THE DETAIL FOR MORE INFORMATION. COORDINATE WITH ARCHITECT AND GENSERAL CONTRACTOR FOR EXACT LOCATION.
8. IF ALTERNATE IS ACCEPTED, DELETE THESE 4 BOLLARDS ALONG THE SIDEWALK AND ADD 1 MORE WALL MOUNTED LIGHT FIXTURE TYPE "T-7" ON THE WALL.

REVISIONS:

CONSTRUCTION DOCUMENT PROGRESS SHEET

State of Utah–Department of Administrative Services
DIVISION OF FACILITIES CONSTRUCTION AND MANAGEMENT
4110 State Office Building/Salt Lake City, Utah 84114/538-3018
DEPARTMENT OF ALCOHOLIC BEVERAGE CONTROL
1625 South 900 West, Salt Lake City, Utah 84130/977-6800

STAMP

MJSA
357 West Pierpont Avenue □ Salt Lake City, Utah 84101
Telephone 801 364 5161 □ Facsimile 801 364 5167
ARCHITECTURE INTERIOR DESIGN

E.C.E. INC.
Electrical Consulting Engineers
939 So. West Temple
Salt Lake City, Utah 84101
Telephone (801) 521-8007
Telefax (801) 521-8057

DFCM PROJECT NO.: 05051030
DFCM CONTRACT NO.: 077431
MJSA PROJECT NO.: 07005
ECE PROJECT NO.: 3452
DATE: 10/15/07
SHEET: E-100

SITE PLAN - POWER
SCALE: 1/16" = 1'-0"

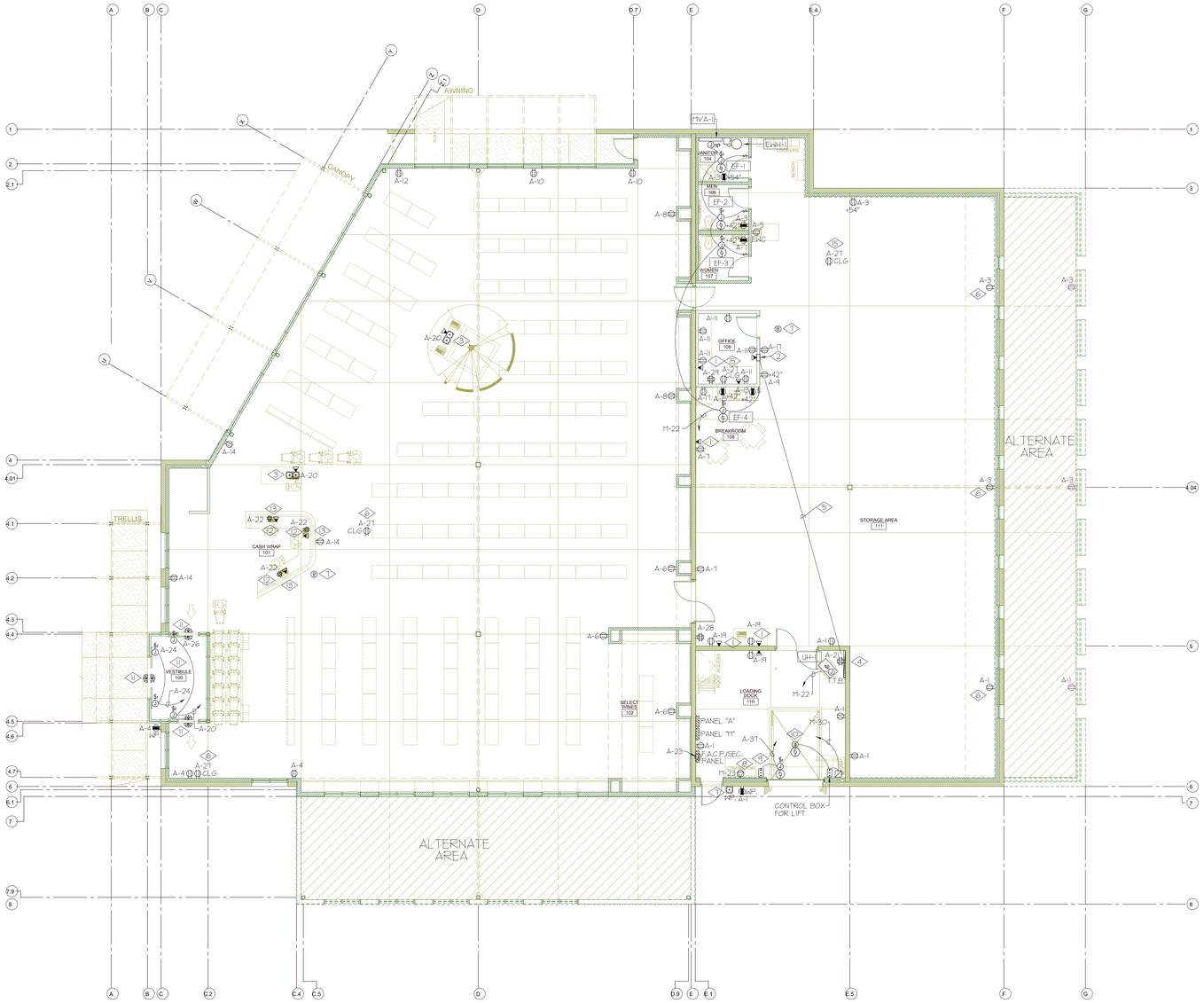

N FLOOR PLAN – POWER
SCALE: 1/8" = 1'-0"

REFERENCE NOTES

1. FURNISH AND INSTALL 4"X4"X2 1/8" D. JUNCTION BOX WITH SINGLE GANG MUD RING IN THE APPROXIMATE LOCATION SHOWN FOR VOICE/DATA OUTLETS. RUN ONE(1) 3/4" CONDUITS FROM EACH J-BOX TO TELEPHONE TERMINAL BOARD. PROVIDE PULL STRING AND LABEL.
2. FURNISH AND INSTALL A 12"X12"X4" FLUSH MOUNTED BOX WITH HINGED COVERPLATE IN APPROXIMATE LOCATION SHOWN FOR COMMUNICATION SYSTEM. COORDINATE EXACT LOCATION WITH ARCHITECT. RUN A 2" CONDUIT FROM THE J-BOX TO CEILING DECK WITH 90° ELBOW. PROVIDE PVC BUSHING.
3. FURNISH AND INSTALL FLOOR MOUNTED 4 GANG FLOOR BOX WITH TWO (2) DUPLEX OUTLETS AND 2 SINGLE GANG MUD RING FOR VOICE/DATA IN THE APPROXIMATE LOCATION SHOWN. COORDINATE WITH GENERAL CONTRACTOR AND ARCHITECT FOR EXACT LOCATION. HUBBELL CATALOG#BOXHBL7GGNIT OR APPROVED EQUAL. COVER PLATE FINISH TO BE SELECTED BY ARCHITECT. RUN ONE(1) 1" CONDUIT TO COMMUNICATION JUNCTION BOX LOCATED IN OFFICE 109 AND ONE(1) 3/4" CONDUIT TO TELEPHONE TERMINAL BOARD. PROVIDE PULL STRING IN EACH CONDUIT AND LABELED.
4. FURNISH AND INSTALL A 4'X8'X3/4" PLYWOOD TELEPHONE TERMINAL BOARD WITH TWO(2) COATS OF WHITE FIRE RETARDANT PAINT. FURNISH AND INSTALL #8 GREEN GROUND FROM T.T.B. TO MAIN GROUND BUS BAR IN MAIN DISTRIBUTION PANEL. LEAVE 3' LONG SLACK FOR FINAL CONNECTION.
5. RUN FOUR(4) 1"CONDUIT FROM TELEPHONE TERMINAL BOARD TO COMMUNICATION JUNCTION BOX LOCATED IN OFFICE 109.
6. INSTALL DUPLEX OUTLET ON CEILING FOR SECURITY LCD MONITOR.
7. FURNISH AND INSTALL A FLUSH MOUNTED WEATHER-PROOF PUSH BUTTON BUZZER WITH STAINLESS STEEL COVERPLATES. EDWARDS SIGNALING 852 BY DOOR AS SHOWN. TIE THE BUZZER TO A BELL IN THE STORAGE AREA AND RETAIL AREA. BELL TO BE SERIES 340. COORDINATE WITH ARCHITECT FOR EXACT LOCATION OF DEVICES. PROVIDE 120 VOLT POWER, CONDUIT, CONDUCTORS, ETC. FOR A COMPLETE INSTALLATION.
8. PROVIDE SPECIAL 208 VOLT, 1-PHASE OUTLET WITH CORD AND PLUG FOR COMPACTOR. VERIFY WITH OWNER FOR EXACT LOCATION AND HEIGHT.

A. PROVIDE 208 VOLT, 3 PHASE POWER TO OVERHEAD DOOR OPENER. REFER TO MANUFACTURER WIRING DIAGRAM FOR MORE INFORMATION. COORDINATE WITH OVERHEAD DOOR INSTALLER FOR EXACT LOCATION.

B. PROVIDE 208 VOLT, 3 PHASE POWER TO DOCK SCISSOR LIFT. REFER MANUFACTURER WIRING DIAGRAM FOR MORE INFORMATION. COORDINATE WITH DOCK SCISSOR LIFT INSTALLER FOR EXACT LOCATION.

D. PROVIDE 120 VOLT POWER TO AUTOMATIC DOOR OPENERS. TIE THE MOTION SENSORS TO DOOR CONTROLLER. PROVIDE CONDUIT AND CONDUCTORS FOR A COMPLETE INSTALLATION. REFER TO MANUFACTURER WIRING DIAGRAM FOR MORE INFORMATION. COORDINATE THIS WORK WITH GENERAL CONTRACTOR AND DOOR INSTALLER.

2. INSTALL 4-PLEX OUTLETS IN THE MILLWORK. COORDINATE WITH ARCHITECT AND OWNER FOR EXACT LOCATION AND HEIGHT OF OUTLETS.

3. FURNISH AND INSTALL FLUSH 4"X4"X1/8" DEEP J-BOX WITH SINGLE GANG MUD RING FOR VOICE/DATA OUTLETS IN THE MILLWORK IN THE APPROXIMATE LOCATION SHOWN. COORDINATE WITH GENERAL CONTRACTOR AND ARCHITECT PRIOR TO ROUGH-IN. RUN ONE(1) 3/ 4" CONDUIT FROM EACH J-BOX TO TELEPHONE TERMINAL BOARD AND ONE(1) 1" CONDUIT TO COMMUNICATION J-BOX LOCATED IN THE OFFICE 109. PROVIDE PULL STRING IN EACH CONDUIT AND LABELED. SEE VOICE/DATA WIRING DIAGRAM ON SHEET E003.

REVISIONS:

CONSTRUCTION DOCUMENT PROGRESS SHEET

State of Utah–Department of Administrative Services

DIVISION OF FACILITIES CONSTRUCTION AND MANAGEMENT
4110 State Office Building/Salt Lake City, Utah 84114/538-3018

DEPARTMENT OF ALCOHOLIC BEVERAGE CONTROL
1625 South 900 West, Salt Lake City, Utah 84130/977-6800

STAMP

AKBAR MATINKHAH #172577 STATE OF UTAH

FLOOR PLAN - POWER

SCALE: 1/8" = 1'-0"

E.C.E. INC.
Electrical Consulting Engineers
939 So. West Temple
Salt Lake City, Utah 84101
Telephone (801) 521-8007
Telefax (801) 521-8057

MJSA
357 West Pierpont Avenue □ Salt Lake City, Utah 84101
Phone: (801) 521-8677 Fax: (801) 521-8677
ARCHITECTURE INTERIOR DESIGN

DFCM PROJECT NO.:	05051030
DFCM CONTRACT NO.:	077431
MJSA PROJECT NO.:	07005
ECE PROJECT NO.:	3452
DATE:	10/15/07
SHEET:	E-101

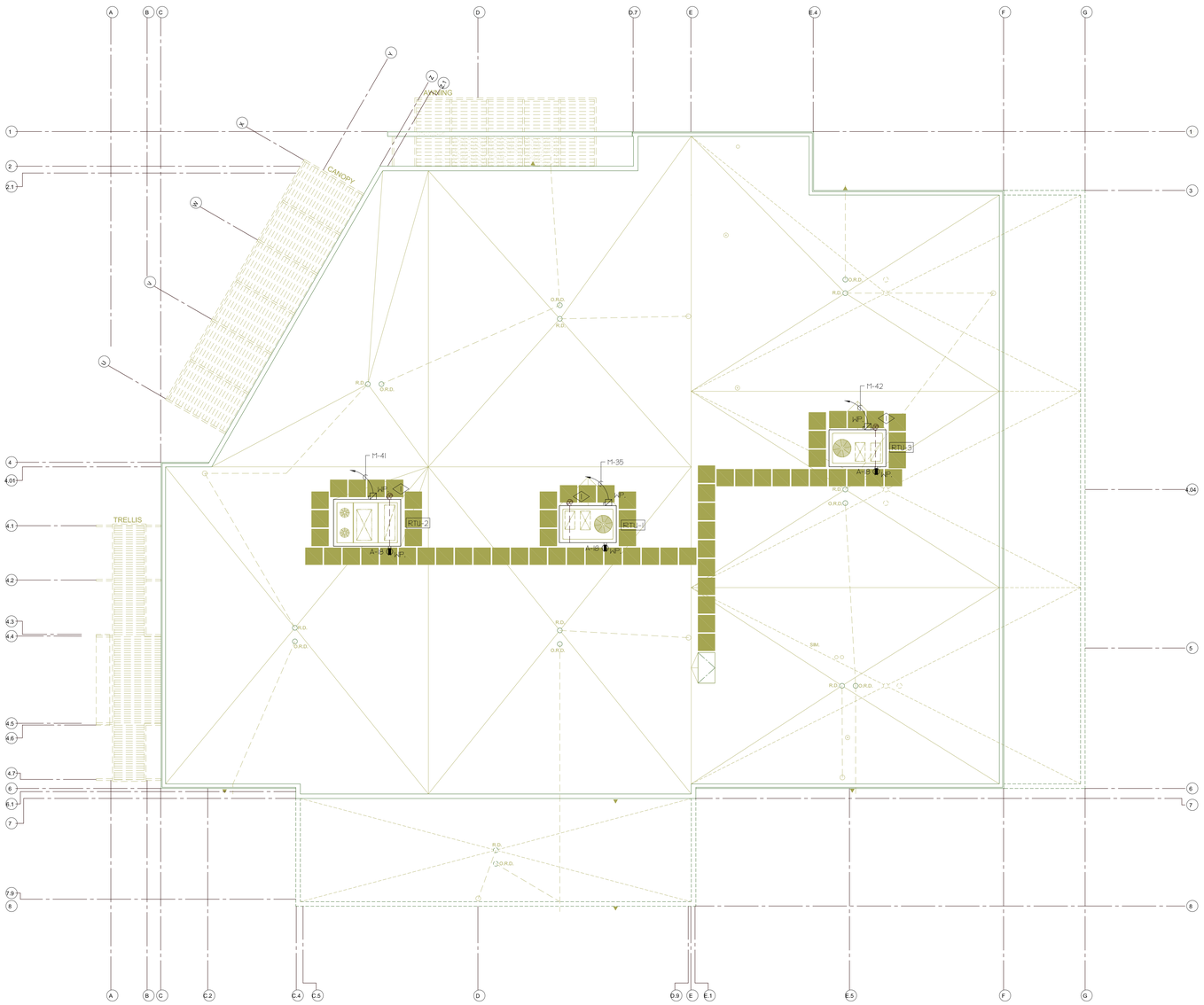

ROOF PLAN – POWER
SCALE: 1/8" = 1'-0"

REFERENCE NOTES

1. FURNISH AND INSTALL DUCT DETECTORS WITH SAMPLER TUBE IN THE RETURN AIR DUCT. TIE THE DUCT DETECTOR TO THE FIRE ALARM CONTROL PANEL IN CLASS "A" LOOP IN AND OUT SEPARATE CONDUIT. TIE THE FANS TO THE FIRE ALARM CONTROL PANEL FOR AUTOMATIC FAN SHUT DOWN. COORDINATE WITH MECHANICAL CONTRACTOR FOR EXACT LOCATION.

REVISIONS:

CONSTRUCTION DOCUMENT PROGRESS SHEET

State of Utah–Department of Administrative Services
DIVISION OF FACILITIES CONSTRUCTION AND MANAGEMENT
4110 State Office Building/Salt Lake City, Utah 84114/538-3018

DEPARTMENT OF ALCOHOLIC BEVERAGE CONTROL
1625 South 900 West, Salt Lake City, Utah 84130/977-6800

MJSA
357 West Pierpont Avenue □ Salt Lake City, Utah 84101
Telephone 801 364 5161 □ Facsimile 801 364 5167
ARCHITECTURE INTERIOR DESIGN

STAMP

E.C.E. INC.
Electrical Consulting Engineers
939 So. West Temple
Salt Lake City, Utah 84101
Telephone (801) 521-8007
Telefax (801) 521-8057

ROOF PLAN - POWER

SCALE: 1/8" = 1'-0"

DFCM PROJECT NO.: 05051030
DFCM CONTRACT NO.: 077431
MJSA PROJECT NO.: 07005
ECE PROJECT NO.: 3452
DATE: 10/15/07
SHEET: E-102

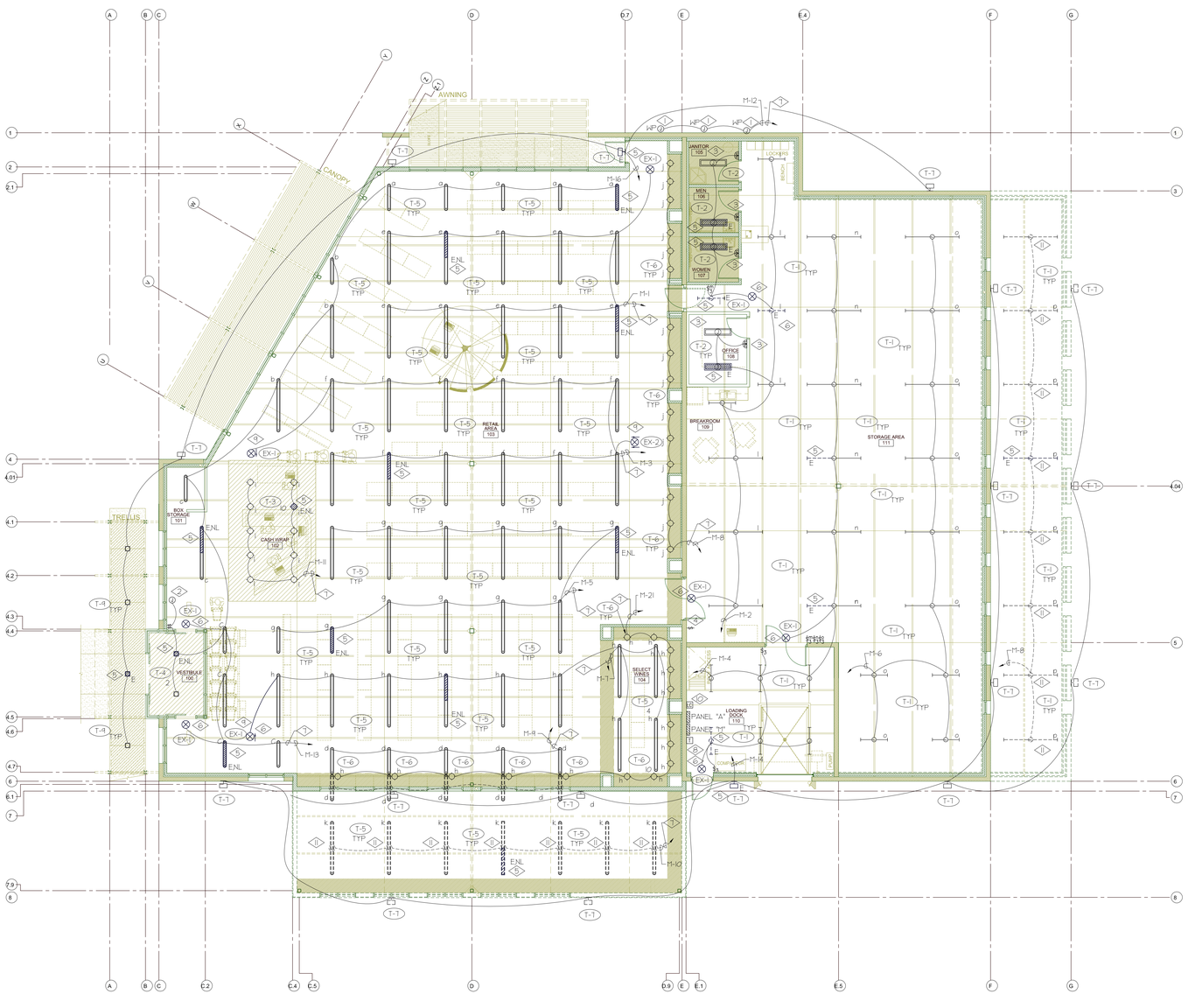

FLOOR PLAN – LIGHTING
SCALE: 1/8" = 1'-0"

REFERENCE NOTES

1. COORDINATE EXACT LOCATION AND HEIGHT OF JUNCTION BOX WITH ARCHITECT FOR BUILDING SIGN PRIOR TO ROUGH-IN.
2. FURNISH AND INSTALL J-BOX FOR "OPEN/CLOSED" SIGN. COORDINATE WITH ARCHITECT FOR EXACT LOCATION OF J-BOX AND SWITCH PRIOR TO ROUGH-IN.
3. FURNISH AND INSTALL A HUBBLE #LH-MT-1 TECHNOLOGY WALL MOUNTED MOTION SENSOR WITH INTEGRAL OVERRIDE SWITCH. MOTION SENSOR TO MOUNT IN STANDARD SWITCH BOX. MOTION SENSOR TO HAVE A 15 MINUTE TIME DELAY SET AT 10 MINUTES. EQUALS OF WATT-STOPPER, SENSOR SWITCH AND NOVITAS.
4. FURNISH AND INSTALL LOW VOLTAGE MASTER SWITCH TO CONTROL ALL THE LIGHT FIXTURES IN RETAIL AREA. TIE THE SWITCH TO LIGHTING CONTACTOR FOR RETAIL LIGHT BY THE ELECTRICAL PANEL.
5. PROVIDE AN EMERGENCY BATTERY PACK UNIT FOR LIGHT FIXTURES DESIGNATED WITH LETTER "E" AND "ENL". RUN UNSWITCHED POWER TO BATTERY PACK UNIT. THESE LIGHTS ARE TO COME ON AUTOMATICALLY WHEN COMMERCIAL POWER FAILS. NIGHT LIGHT MUST STAY ON AT ALL TIMES. INSTALL THE BATTERY PACK UNITS FOR THE EXTERIOR LIGHTS INSIDE THE BUILDING CLOSE TO THE LOCATION OF THE FIXTURES.
6. TIE EXIT SIGNS TO UNSWITCHED LIGHTING CIRCUIT.
7. TIE LIGHT FIXTURES IN RETAIL AREA TO THEIR DESIGNATED CIRCUIT THROUGH THE LIGHTING CONTACTOR BY THE ELECTRICAL PANEL.
8. FURNISH AND INSTALL AN ASTRONOMIC TIME CLOCK WITH PHOTOCELL AND 6-POLE LIGHTING CONTACTOR IN THE APPROXIMATE LOCATION SHOWN TO CONTROL EXTERIOR LIGHT FIXTURES. INTERMATIC CAT. # T62 22BC OR APPROVED EQUAL. INSTALL THE PHOTOCELL ON THE NORTH WALL. PROVIDE 120 VOLT POWER TO TIME CLOCK AND TIE PHOTOCELL TO THE TIME CLOCK FOR A COMPLETE INSTALLATION.
9. DROP THE EXIT SIGNS AT THE SAME HEIGHT AS THE LIGHT FIXTURES. COORDINATE WITH ENGINEER FOR EXACT LOCATION AND HEIGHT.
10. FURNISH AND INSTALL 12-POLE, 20 AMP, 120 VOLT LIGHTING CONTACTOR TO CONTROL ALL THE LIGHT FIXTURES IN THE RETAIL AREA. INSTALL THE LIGHTING CONTACTOR BY THE ELECTRICAL PANEL. TIE THE LIGHTING CONTACTOR TO THE LIGHT SWITCH BY THE DOUBLE DOORS BETWEEN STORAGE AND RETAIL SPACES. COORDINATE WITH OWNER FOR EXACT LOCATION OF THE SWITCH.
11. INSTALL THE FIXTURES UNDER ALTERNATE. COORDINATE WITH GENERAL CONTRACTOR.

REVISIONS:

CONSTRUCTION DOCUMENT PROGRESS SHEET

State of Utah–Department of Administrative Services
DIVISION OF FACILITIES CONSTRUCTION AND MANAGEMENT
4110 State Office Building/Salt Lake City, Utah 84114/538-3018

DEPARTMENT OF ALCOHOLIC BEVERAGE CONTROL
1625 South 900 West, Salt Lake City, Utah 84130/977-6800

STAMP

LICENSED PROFESSIONAL ENGINEER
AKBAR MATINKHAH
#172577
STATE OF UTAH

E.C.E. INC.
Electrical Consulting Engineers
939 So. West Temple
Salt Lake City, Utah 84101
Telephone (801) 521-8007
Telefax (801) 521-8057

FLOOR PLAN - LIGHTING

SCALE: 1/8" = 1'-0"

MJSA
357 West Pierpont Avenue □ Salt Lake City, Utah 84101
Telephone 801 364 5161 □ Facsimile 801 364 5167
ARCHITECTURE INTERIOR DESIGN

DFCM PROJECT NO.: 05051030
DFCM CONTRACT NO.: 077431
MJSA PROJECT NO.: 07005
ECE PROJECT NO.: 3452
DATE: 10/15/07
SHEET: E-201

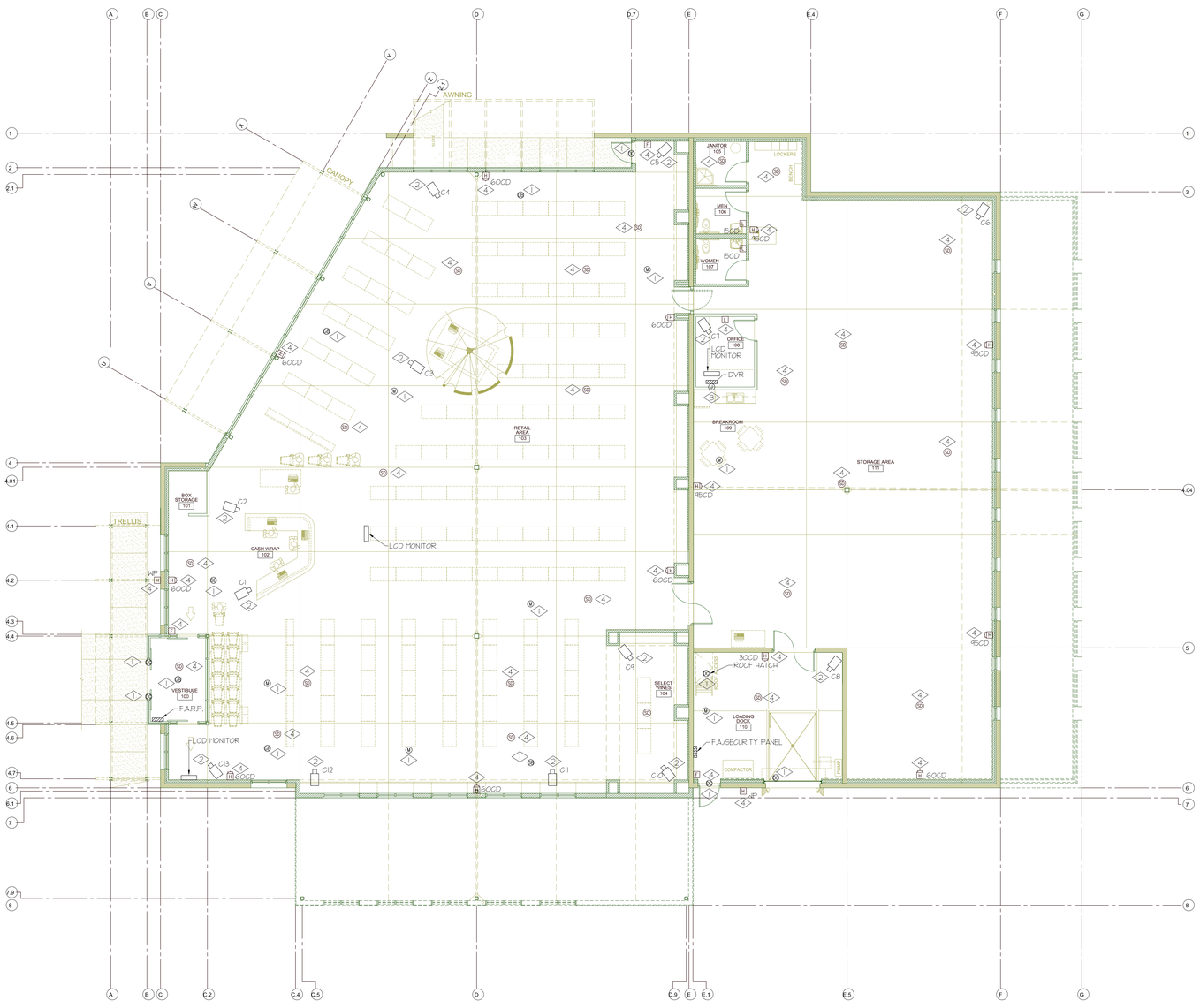

FLOOR PLAN – SYSTEMS
SCALE: 1/8" = 1'-0"

REFERENCE NOTES

1. FURNISH AND INSTALL NEW SECURITY DOOR CONTACT (FLUSH IN DOOR JAMS), GLASS BREAKS, MOTION SENSORS, ETC. IN APPROXIMATE LOCATION SHOWN. COORDINATE WITH ARCHITECT FOR EXACT LOCATION AND HEIGHT. TIE THE NEW DEVICES TO THE SECURITY/FIRE ALARM CONTROL PANEL. PROVIDE CONDUIT AND CONDUCTORS FOR A COMPLETE INSTALLATION. REFER TO SECURITY SYSTEM SINGLE LINE DIAGRAM AND SPECIFICATION FOR MORE INFORMATION. INSTALL SURFACE MOUNTED DOOR CONTACT FOR LOADING DOCK DOOR. COORDINATE WITH DOOR INSTALLER FOR INSTALLATION OF DOOR CONTACTS IN SLIDING DOORS.
2. FURNISH AND INSTALL NEW CAMERAS IN THE APPROXIMATE LOCATION SHOWN. COORDINATE WITH ARCHITECT AND OWNER FOR EXACT LOCATION AND HEIGHT. DROP THE CAMERA TO THE BOTTOM OF LIGHT FIXTURE. UTILIZE RIGID STEEL CONDUIT FROM J-BOX ON CEILING DECK TO THE CAMERA BACK BOX. RUN THE CABLE AGAINST THE DECK PARALLEL AND PERPENDICULAR TO THE WALL TO DVR IN THE OFFICE. REFER TO SPECIFICATION AND CCTV SINGLE LINE DIAGRAM FOR MORE INFORMATION.
3. FURNISH AND INSTALL A MULTI-CONNECT 2-GANG RECESSED WALL BOX IN APPROXIMATE LOCATION SHOWN. HUBBELL CAT.# HBLWSCS3MMO OR APPROVED EQUAL. COORDINATE WITH ARCHITECT AND OWNER FOR EXACT LOCATION. RUN A 2" CONDUIT FROM THE J-BOX TO CEILING DECK. PROVIDE PVC BUSHING AND PULL STRING.
4. FURNISH AND INSTALL NEW FIRE ALARM DEVICES IN THE APPROXIMATE LOCATION SHOWN. TIE THE NEW DEVICES TO THE FIRE ALARM CONTROL PANEL. UTILIZE CLASS "A" LOOPS. IN AND OUT CONDUCTORS TO DEVICES MUST BE IN SEPARATE CONDUITS.

REVISIONS:

CONSTRUCTION DOCUMENT PROGRESS SHEET

State of Utah–Department of Administrative Services

DIVISION OF FACILITIES CONSTRUCTION AND MANAGEMENT
4110 State Office Building/Salt Lake City, Utah 84114/538-3018

DEPARTMENT OF ALCOHOLIC BEVERAGE CONTROL
1625 South 900 West, Salt Lake City, Utah 84130/977-6800

MJSA
357 West Pierpont Avenue □ Salt Lake City, Utah 84101
Telephone 801 364 5161 □ Facsimile 801 364 5167
ARCHITECTURE INTERIOR DESIGN

STAMP

LICENSED PROFESSIONAL ENGINEER
AKBAR MATINKHAH
#172577
STATE OF UTAH

E.C.E. INC.
Electrical Consulting Engineers
939 So. West Temple
Salt Lake City, Utah 84101
Telephone (801) 521-8007
Telefax (801) 521-8057

FLOOR PLAN - SYSTEMS

SCALE: 1/8" = 1'-0"

DFCM PROJECT NO.: 05051030
DFCM CONTRACT NO.: 077431
MJSA PROJECT NO.: 07005
ECE PROJECT NO.: 3452
DATE: 10/15/07
SHEET: E-301