State of Utah–Department of Administrative Services

DIVISION OF FACILITIES CONSTRUCTION
AND MANAGEMENT

4110 State Office Building/Salt Lake City, Utah 84114/538-3018

NEW RIVERTON LIQUOR STORE
DEPARTMENT OF ALCOHOLIC BEVERAGE CONTROL
APPROX. 3900 WEST 13400 SOUTH, RIVERTON, UTAH
DFCM PROJECT NO. 05053030

MAY 2007

CONSTRUCTION DRAWINGS

SYMBOLS AND MATERIAL LEGEND

PLAN AND SECTION INDICATIONS

EARTH
ASPHALT
BATT INSULATION
GRAVEL FILL
METAL STUD
RIGID INSULATION
CONCRETE SECTION
ALUMINUM
PLASTIC LAMINATE
C.M.U.
GYPSUM BOARD
CERAMIC TILE
BRICK
FINISH LUMBER
ACOUSTIC TILE
CONCRETE PLAN
WOOD FRAMING
CARPET & PAD
MARBLE
PLYWOOD
GLASS
PARTICLE BOARD
PLYWOOD LARGE SCALE
GLASS SMALL SCALE
FENCE
4812.0' EXISTING CONTOUR
4812.0' FINISH CONTOUR

SHEET TAGS

ROOM NAME 000
WINDOW NUMBER
DOOR NUMBER
ELEVATION MARKER
FINISH SPOT ELEV.
WALL TYPE
KEYED NOTE
GLASS TYPE

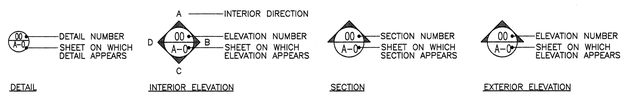

ABBREVIATIONS

@	AT	INFO.	INFORMATION
ADJ.	ADJUSTABLE	INSUL.	INSULATION
ADJ.	ADJACENT	INT.	INTERIOR
A.B.	ANCHOR BOLT	INV.	INVERT
A.F.F.	ABOVE FINISHED FLOOR	JAN	JANITOR
		JT.	JOINT
ALT.	ALTERNATE	LAM	LAMINATE
ALUM./AL.	ALUMINUM	MAS.	MASONRY
BRD./BD.	BOARD	MAX.	MAXIMUM
BLDG.	BUILDING	MECH.	MECHANICAL
BLK.	BLOCK (BLOCKING)	MFR.	MANUFACTURER
B.M.	BENCH MARK	MANUF.	MANUFACTURER
BOT./BTTM.	BOTTOM	MIN.	MINIMUM
CAB.	CABINET	M.O.	MASONRY OPENING
C.O.	CLEAN OUT	MTL.	METAL
C.J.	CONTROL JOINT	N.I.C.	NOT IN CONTRACT
CL	CENTER LINE	NO.	NUMBER
CLG.	CEILING	O.C.	ON CENTER
C.M.U.	CONCRETE MASONRY UNIT	O.D.	OUTSIDE DIAMETER
		O.H.	OVER HEAD
COL.	COLUMN	OPNG.	OPENING
CONC.	CONCRETE	OPP.	OPPOSITE
CONTD.	CONTINUED	OV.	OVER
CONST.	CONSTRUCTION	P.LAM	PLASTIC LAMINATE
CONT.	CONTINUOUS	P.L.	PROPERTY LINE
CONTR.	CONTRACTOR	PL.	PLATE
COTG	CLEAN OUT TO GRADE	PLYWD.	PLYWOOD
		PLY.	PLYWOOD
Ø/DIA.	DIAMETER	PNTD.	PAINTED
DET.	DETAIL	PTD.	PAINTED
D.F.	DRINKING FOUNTAIN	PVMT.	PAVEMENT
DN.	DOWN	Q.T.	QUARRY TILE
DWGS.	DRAWINGS	R./R	RADIUS
DRAWGS	DRAWINGS	RCP	REINFORCED CONCRETE PIPE
EA.	EACH		
E.J.	EXPANSION JOINT	R.D.	ROOF DRAIN
ELEV./EL.	ELEVATION	REINF.	REINFORCEMENT
ELEV.	ELEVATOR	REQ.	REQUIRED
E.J.	EXPANSION JOINT	RM.	ROOM
ENL.	ENLARGED	R.O.	ROUGH OPENING
EQ.	EQUAL	SECT.	SECTION
EQUIP.	EQUIPMENT	SEC.	SECTION
EWC.	ELECTRIC WATER COOLER	SHT.	SHEET
		SIM.	SIMILAR
EXIST.	EXISTING	SQ./SQ	SQUARE
EXTG.	EXISTING	SPEC.	SPECIFICATION
EXP.	EXPANSION	S.S.	STAINLESS STEEL
EXT.	EXTERIOR	S.T.D.	STANDARD
F.D.	FLOOR DRAIN	STL.	STEEL
F.E.C.	FIRE EXTINGUISHER CABINET	STOR.	STORAGE
		STRUCT.	STRUCTURAL
F.E.	FIRE EXTINGUISHER	STRUC.	STRUCTURAL
FIN.	FINISH	SUSP.	SUSPENDED
F.F.	FINISH FLOOR	T.B.	TACK BOARD
F.H.	FIRE HYDRANT	T.O.	TOP OF
FL.	FLOOR	T.O.A.	TOP OF ASPHALT
FT.	FOOT	T.O.B.	TOP OF BEAM
F.V.	FIELD VERIFY	T.O.C.	TOP OF CONCRETE
GA.	GAUGE	T.O.C.	TOP OF CURB
GALV.	GALVANIZED	T.O.M.	TOP OF MASONRY
G.I./GALV.	GALVANIZED IRON	T.O.S.	TOP OF SLAB
G.B.	GYPSUM BOARD	T.O.W.	TOP OF WALL
GYP. BRD.	GYPSUM BOARD	TYP.	TYPICAL
H.B.	HOSE BIBB	U.N.O.	UNLESS NOTED OTHERWISE
H.C.	HANDICAPPED		
HD.	HEAD	V.T.	VINYL TILE
H.M.	HOLLOW METAL	W/	WITH
HOL.MTL.	HOLLOW METAL	W.W.M.	WELDED WIRE MESH
HR.	HOUR	W.W.F.	WELDED WIRE FABRIC
HT.	HEIGHT	WD.	WOOD
I.D.	INSIDE DIAMETER	WIN.	WINDOW
IN.	INCH	VEST.	VESTIBULE
INCMG	INCOMING	VDT.	VIDEO DISPLAY TERMINAL

CODE CRITERIA

CODE ANALYSIS

APPLICABLE CODES

	Year		Year
International Building Code	2006	National Electrical Code	2005
International Mechanical Code	2006	Uniform Code for	
International Plumbing Code	2006	Building Conservation	2006
International Fire Code	2006	ADA Accessibility	
International Energy Conservation Code	2006	Guidelines	CURRENT

A. Occupancy and Group: M S-1

Change in Use: Yes ___ No ___ Mixed Occupancy: Yes X No ___
Special Use and Occupancy (e.g. High Rise, Covered Mall): ___

B. Seismic Design Category: D Design Wind Speed: 90 mph

C. Type of Construction (circle one):

I A I B II A II B III A III B IV HT V A V B

D. Fire Resistance Rating Requirements for the Exterior Walls based on the fire separation distance (in hours):

North: NA South: NA East: NA West: NA

E. Mixed Occupancies: ___ Nonseparated Uses: X

F: Sprinklers:

Required: ___ Provided: X Type of Sprinkler System: AUTOMATIC

G: Number of Stories: 1 Building Height: 1

H: Actual Area per Floor (square feet): 10,000

I: Tabular Area: 9000 X 300% INCREASE FOR AUTOMATIC SPRINKLER SYSTEM = 27000

J: Area Modifications: NOT REQUIRED

a) $A_a = A_t + \left[\frac{A_t I_f}{100}\right] + \left[\frac{A_t I_s}{100}\right]$ $\qquad I_f = 100\left[\frac{F}{P} - 0.25\right]\frac{W}{30}$

a) $42750 = 9000 + \left[\frac{9000 \times .75}{100}\right] + \left[\frac{9000 \times 3}{100}\right]$ $\qquad .75 = 100\left[\frac{.415}{.415} - 0.25\right]\frac{30}{30}$

b) Sum of the Ratio Calculations for Mixed Occupancies:

$\frac{\text{Actual Area}}{\text{Allowable Area}} \le 1 \quad \frac{9281\ (\text{GROUP M})}{13500} \le 1 \quad \frac{2800\ (\text{GROUP S-1})}{9000} \le 1$

c) Total Allowable Area for:
1) One Story: >42750
2) Two Story: $A_a(2)$ ___
3) Three Story: $A_a(3)$ ___

d) Unlimited Area Building: Yes ___ No ___ Code Section: ___

K. Fire Resistance Rating Requirements for Building Elements (hours).

Element	Hours	Assembly Listing	Element	Hours	Assembly Listing
Exterior Bearing Walls	0*		Floors - Ceiling Floors		
Interior Bearing Walls	0		Roofs - Ceiling Roofs	0	
Exterior Non-Bearing Walls	0		Exterior Doors and Windows	0	
Structural Frame	0		Shaft Enclosures	0	
Partitions - Permanent	0		Fire Walls	0	
Fire Barriers	0		Fire Partitions	0	
			Smoke Partitions		

L. Design Occupant Load: 94
Exit Width Required: 2 exits @ 36" = 72" Exit Width Provided: 104

M. Minimum Number of Required Plumbing Facilities:
a) Water Closets - Required (m) 1 (f) 1 Provided (m) 1 (f) 1
b) Lavatories - Required (m) 1 (f) 1 Provided (m) 1 (f) 1
c) Bath Tubs or Showers: 0
d) Drinking Fountains: 2 Service Sinks: 1

FOOTNOTES:

1) In case of conflict with the U.S. Department of Justice Federal Registers Parts I through X - ADA Guidelines and specific reference to the International Building Code Accessibility Chapters, the more restrictive requirement shall govern.

2) Additional Code Information shall be provided at the discretion of the Building Official for Complex Buildings, including, but not limited to:
a) High Rise Requirements.
b) Atriums.
c) Performance Based Criteria.
d) Means or Egress Analysis.
e) Fire Assembly Locator Sheet.
f) Exterior and Interior Accessibility Route.
g) Fire Stopping, Including Tested Design Number.

SCHEDULE OF DRAWINGS

COVER SHEETS
G001 COVER SHEET
G002 SCHEDULE OF DRAWINGS, MOUNTING STANDARDS

SITE DEVELOPMENT
C101 SURVEY
AS101 SITE PLAN
AS102 SITE GRADING PLAN
AS103 SITE UTILITY PLAN
AS501 SITE DETAILS

LANDSCAPE
LS101 LANDSCAPE PLAN AND PLANT SCHEDULE

ARCHITECTURAL
A101 FLOOR PLAN, ENLARGED FLOOR PLANS, INTERIOR ELEVATIONS AND SECTIONS
A102 REFLECTED CEILING PLAN
A103 ROOF PLAN AND DETAILS
A104 INTERIOR ELEVATIONS AND DETAILS
A201 EXTERIOR ELEVATIONS
A301 WALL SECTIONS
A302 WALL SECTIONS
A303 WALL SECTIONS
A304 WALL SECTIONS
A305 WALL SECTIONS
A306 WALL SECTIONS
A307 WALL SECTIONS
A308 WALL SECTIONS
A309 WALL SECTIONS
A501 MISCELLANEOUS DETAILS
A502 MISCELLANEOUS DETAILS
A503 MISCELLANEOUS DETAILS
A601 DOOR, WINDOW, FINISH SCHEDULES

STRUCTURAL
S001 STRUCTURAL NOTES
S002 STRUCTURAL SCHEDULE
S101 FOOTING & FOUNDATION PLAN
S102 ROOF FRAMING PLAN
S103 ROOF FRAMING PLAN
S201 STRUCTURAL DETAILS
S202 STRUCTURAL DETAILS
S203 STRUCTURAL DETAILS

MECHANICAL
M0.1 MECHANICAL SCHEDULES
M2.1 MECHANICAL FLOOR PLANS
M6.1 MECHANICAL DETAILS

PLUMBING
P2.1 PIPING PLANS

ELECTRICAL
E100 ELECTRICAL SYMBOLS, NOTES & SCHEDULES
E101 SITE PLAN – ELECTRICAL
E201 FLOOR PLAN – POWER & SYSTEMS
E301 FLOOR PLAN – LIGHTING
E401 ELECTRICAL RISER DIAGRAMS
E501 ELECTRICAL DETAILS
E502 ELECTRICAL DETAILS

TYPICAL HANDICAP TOILET ROOM MOUNTING STANDARDS

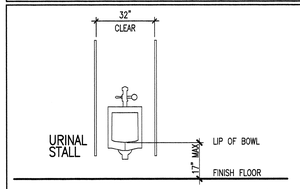

TYPICAL HANDICAP URINAL CLEARANCES

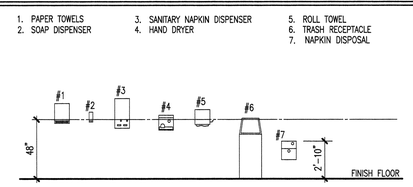

MISCELLANEOUS MOUNTING HEIGHTS

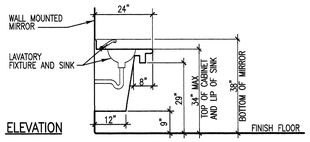

ELEVATION

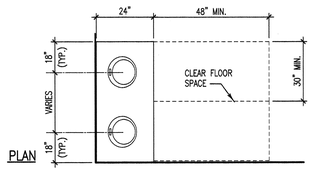

PLAN

TYPICAL HANDICAP LAVATORY CLEARANCES

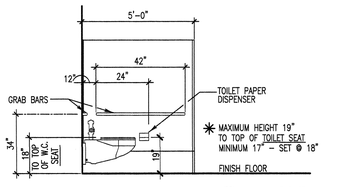

ELEVATION

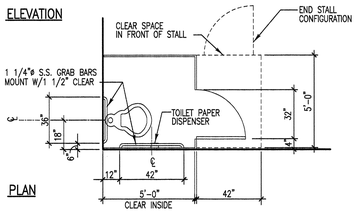

PLAN

TYPICAL HANDICAP TOILET ROOM CLEARANCES

TYPICAL (NON-HANDICAPPED) TOILET ROOM MOUNTING STANDARDS

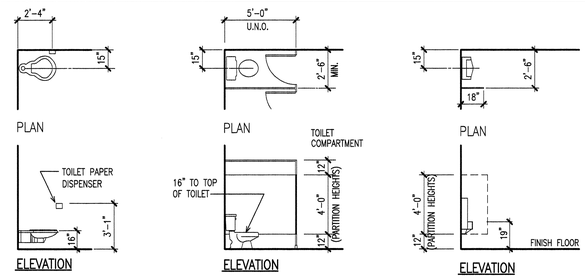

WALL MOUNTED W.C. — FLOOR MOUNTED WITH COMPARTMENT — URINAL STALL

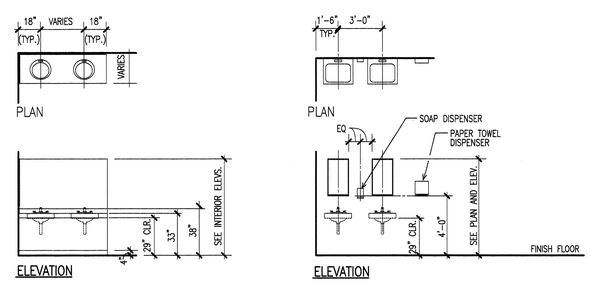

COUNTERTOP LAV — WALL MTD LAV

TYPICAL MISCELLANEOUS MOUNTING STANDARDS

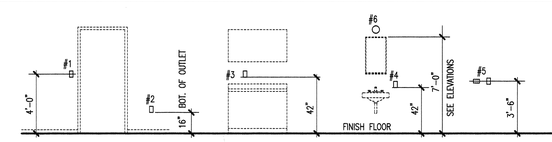

ELECTRICAL OUTLETS AND SWITCHES

ITEM DESIGNATION
1. TYPICAL SWITCH HEIGHT
2. TYPICAL OUTLET HEIGHT
3. TYPICAL OUTLET HEIGHT AT COUNTERTOP
4. TYPICAL G.F.I. OUTLET HEIGHT AT LAVATORY
5. TYPICAL OUTLET HEIGHT FOR LAUNDRY ROOM AND UTILITY ROOM
6. TYPICAL BATH LIGHT FIXTURE HEIGHT

ITEM DESIGNATION
1. PAPER CUP DISPENSER
2. ELECTRIC SWITCH/THERMOSTAT/FIRE ALARM
3. TELEPHONE
4. COUNTER TOP/DESK
5. ELEVATOR CONTROLS
6. FIRE EXTINGUISHER

ITEM DESIGNATION
1. DEADLOCK AND STRIKE
2. PUSH AND PULL LATCHES, ARM PULL, (LOWER BASE), PULL PLATE CENTER LINE
3. BAR AND PULL CENTER LINE
4. CENTER LINE STRIKE, KNOB, LOCKS, HANDLE SETS, ROLLER LATCHES, EXIT BOLTS LOCKS

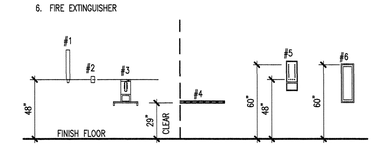

MISCELLANEOUS MOUNTING HEIGHTS

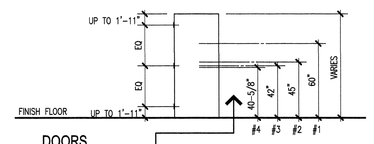

DOORS

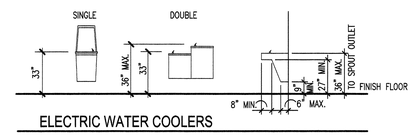

ELECTRIC WATER COOLERS

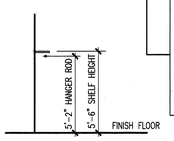

CLOSETS

24" CLEARANCE
PROVIDE 24" MINIMUM CLEARANCE FROM EDGE OF DOOR (@ LATCH SIDE) TO ADJACENT WALL WHEN DOOR PULLS TOWARDS YOU.

18" CLEARANCE
PROVIDE 18" MINIMUM CLEARANCE FROM EDGE OF DOOR (@ LATCH SIDE) TO ADJACENT WALL WHEN DOOR PUSHES AWAY FROM YOU.

NEW RIVERTON LIQUOR STORE

DEPARTMENT OF ALCOHOLIC BEVERAGE CONTROL
APPROX. 3900 WEST 13400 SOUTH, RIVERTON, UTAH

FRANK N MURDOCK JR ■ Architect & Associates
975 East 100 South Suite 100, Salt Lake City, Utah 84102 TEL: (801) 532-4441 FAX (801) 532-4220

SCHEDULE OF DRAWINGS, MOUNTING STANDARDS, CODE REVIEW

STATE OF UTAH FRANK N. MURDOCK 124998 LICENSED ARCHITECT

REVISION #	DATE:

DFCM PROJECT NO.: 05053030
CONSTR DOC
FILE NAME: ABCRV-G002
PLOT SCALE: 1:1
DRAWN BY: STAFF
CHECKED BY: FNM
DATE: JUNE 2007

G 002

SITE INFORMATION

PARKING:

PARKING STALLS	27 STALLS
ACCESSIBLE STALLS	2 STALLS
PARKING TOTALS	29 STALLS

SITE DRAWINGS

SEE SHEET AS101 FOR GENERAL SITE INFORMATION AND DIMENSIONS
SEE SHEET AS102 FOR SITE GRADING AND STORM SEWER INFORMATION
SEE SHEET AS103 FOR SITE UTILITY INFORMATION
SEE SHEET AS501 FOR SITE DETAIL INFORMATION

SITE PLAN LEGEND

- CATCH BASIN
- STORM DRAIN MAN HOLE
- POWER POLE
- WATER VALVE
- ELECTRIC BOX
- FIRE HYDRANT
- SANITARY SEWER MAN HOLE
- LIGHT POST
- STREET LIGHT BOX
- GAS METER
- TELEPHONE BOX
- PL — PROPERTY LINE
- L — LANDSCAPE AREA
- SW — SIDEWALK
- OVERHEAD TRANSMISSION LINE
- UNDERGROUND POWER
- SS — SANITARY SEWER
- W — WATER LINE
- T — TELEPHONE LINE
- G — GAS LINE
- C — CABLE T.V.
- PARKING STALLS
- X — FENCE
- 4434 — EXISTING GRADE CONTOUR
- 31 — NEW GRADE CONTOUR
- CENTER LINE OF ROAD
- X — X — NEW SECURITY FENCE
- A B — SIGN TYPES – SEE 2/SD-4
- NEW CONCRETE PAVING AND SIDEWALKS
- ROADWAY, SERVICE AND DOCK AREA (ASPHALT)
- 2 – 4" PVC PIPE SLEEVE

T.O.G	TOP OF GRATE
I.E.	INVERT ELEVATION
T.O.SW	TOP OS SIDEWALK
T.O.PV	TOP OF PAVEMENT
T.O.C.	TOP OF CONCRETE

GENERAL NOTES

1. REFER TO SITE DEVELOPEMENT, LANDSCAPE, MECHANICAL AND ELECTRICAL DRAWINGS FOR DIMENSIONS AND ADDITIONAL SITE INFORMATION.
2. CONTRACTOR TO VERIFY ALL EXISTING SITE CONDITIONS. NOTIFY ARCHITECT OF ANY DISCREPENCIES TO THE CONTRACT DOCUMENTS.
3. PROVIDE POSITIVE DRAINAGE AWAY FROM BUILDINGS AT ALL POINTS.
4. CONTRACTOR SHALL NOT PARK, STORE EQUIPMENT, OR USE THE EXISTING ROAD FOR ANY PURPOSE OTHER THAN ACCESS TO THE PROJECT SITE. CONTRACTOR SHALL NOT DISTURB OR USE ANY AREA OUTSIDE CONTRACT LIMIT LINE TO PARK OR STORE EQUIPMENT.
5. CONTRACTOR WILL MAINTAIN AND PROTECT ALL EXISTING UTILITIES DURING CONSTRUCTION.
6. ALL CUTTING, PATCHING, EXCAVATION AND BACKFILL DONE IN STREET SHALL BE DONE IN ACCORDANCE WITH UTAH DEPARTMENT OF TRANSPORTATION SPECIFICATIONS.
7. PROVIDE PIPE SLEEVES WHERE SPRINKLER LINES PASS UNDER ASPHALT PAVEMENT OR RETAINING WALLS.
8. PROTECT ANY EXISTING STORM DRAINS FROM MUD AND DEBRIS DURING CONSTRUCTION.

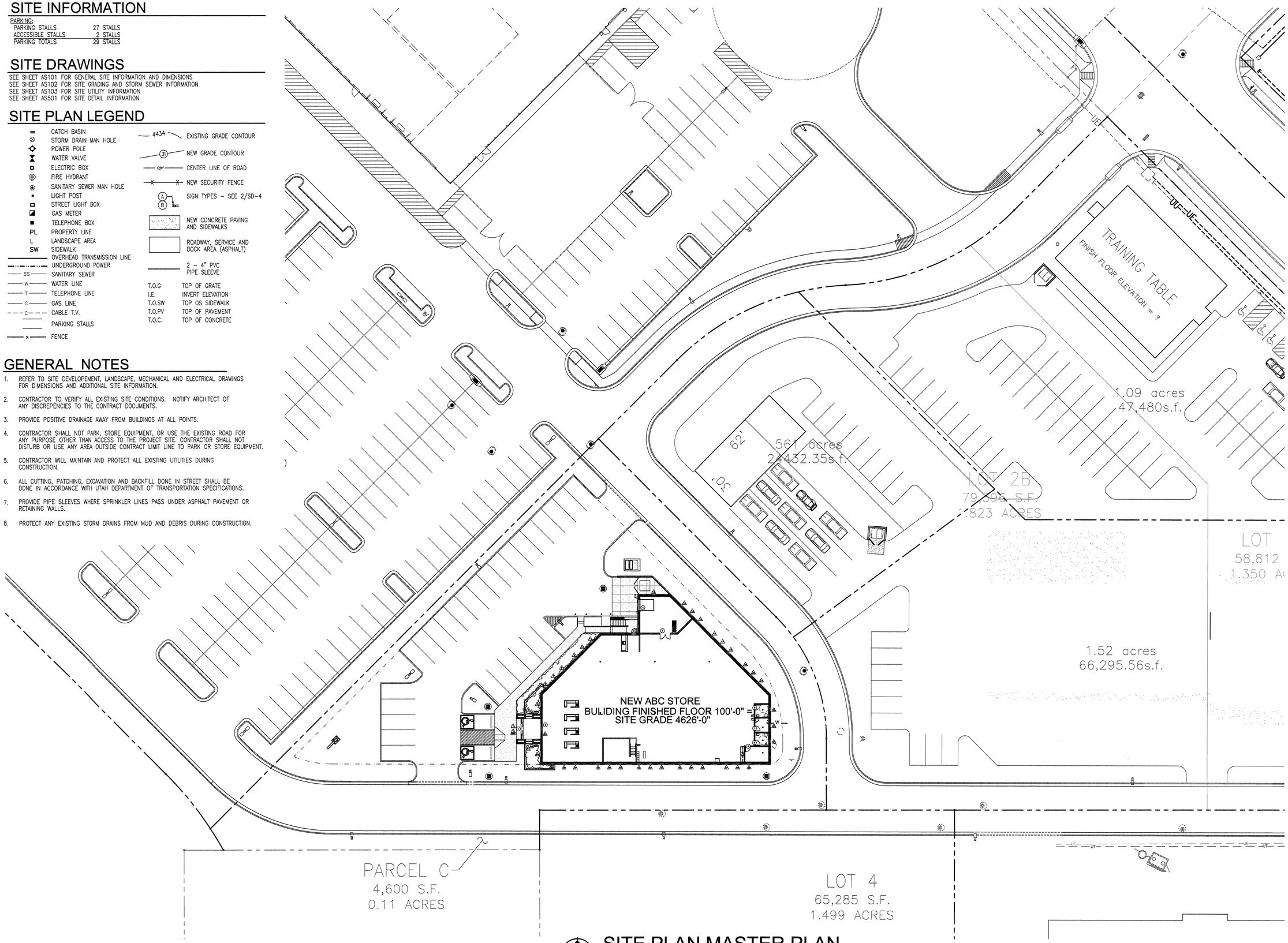

SITE PLAN MASTER PLAN

SCALE: 1" = 20'
0 10' 25' 50'

29 PARKING STALLS

NEW RIVERTON LIQUOR STORE

DEPT OF ALCOHOLIC BEVERAGE CONTROL
RIVERTON, UTAH

FRANK N MURDOCK JR ■ Architect & Associates
975 East 100 South Suite 100, Salt Lake City, Utah 84102 TEL: (801) 532-4441 FAX (801) 532-4220

SITE MASTER PLAN

STATE OF UTAH
FRANK N. MURDOCK JR.
234498
LICENSED ARCHITECT

REVISION # DATE:

DFCM PROJECT NO.:
05053030
CONST DOC
FILE NAME: ABCRV-ASMP
PLOT SCALE: 1:240
DRAWN BY: STAFF
CHECKED BY: FNM
DATE: MAY 3, 2007

AS
101M

SITE INFORMATION

PARKING:

PARKING STALLS	27 STALLS
ACCESSIBLE STALLS	2 STALLS
PARKING TOTALS	29 STALLS

SITE DRAWINGS

SEE SHEET AS101 FOR GENERAL SITE INFORMATION AND DIMENSIONS
SEE SHEET AS102 FOR SITE GRADING AND STORM SEWER INFORMATION
SEE SHEET AS103 FOR SITE UTILITY INFORMATION
SEE SHEET AS501 FOR SITE DETAIL INFORMATION

SITE PLAN LEGEND

- CATCH BASIN
- STORM DRAIN MAN HOLE
- POWER POLE
- WATER VALVE
- ELECTRIC BOX
- FIRE HYDRANT
- SANITARY SEWER MAN HOLE
- LIGHT POST
- STREET LIGHT BOX
- GAS METER
- TELEPHONE BOX
- PL — PROPERTY LINE
- L — LANDSCAPE AREA
- SW — SIDEWALK
- OVERHEAD TRANSMISSION LINE
- UNDERGROUND POWER
- SS — SANITARY SEWER
- W — WATER LINE
- T — TELEPHONE LINE
- G — GAS LINE
- C — CABLE T.V.
- PARKING STALLS
- x — FENCE
- 4434 — EXISTING GRADE CONTOUR
- 31 — NEW GRADE CONTOUR
- CENTER LINE OF ROAD
- X — X — NEW SECURITY FENCE – SEE 22/SD-4
- A/B — SIGN TYPES – SEE 2/SD-4
- NEW CONCRETE PAVING AND SIDEWALKS
- ROADWAY, SERVICE AND DOCK AREA (ASPHALT)
- 2 – 4" PVC PIPE SLEEVE

T.O.G	TOP OF GRATE
I.E.	INVERT ELEVATION
T.O.SW	TOP OS SIDEWALK
T.O.PV	TOP OF PAVEMENT
T.O.C.	TOP OF CONCRETE

KEY NOTES

- A — MAINTAIN AND PROTECT EXISTING SITE ELEMENTS TO REMAIN INCLUDING EXISTING RETAINING WALLS, FENCES, STORM DRAIN BASIN AND CURBS AND GUTTERS.
- B — NEW CONCRETE CURB & GUTTER. SEE DETAIL 6/AS501
- C — NEW 4" THICK CONCRETE SIDEWALK. SEE DETAILS 11, 12 & 13 SHEET AS501 ALIGN WITH EDGES, WIDTH AND ELEVATIONS OF EXISTING SIDEWALKS WHERE NEW AND EXISTING SIDEWALKS MEET.
  JOINTS AS NOTED BELOW TYPICAL UNLESS NOTED OTHERWISE
  CONTROL JOINT IN CONCRETE SIDEWALK @ 5'-0" O.C. – SEE DETAIL 12/AS501.
  EXPANSION JOINT IN CONCRETE SIDEWALK @ 20'-0" O.C. – SEE DETAIL 13/AS501.
- D — NEW ASPHALT CONCRETE PAVING. SEE DETAIL 10/AS501 FOR PAVEMENT SECTION. SEE SOILS REPORT FOR DEPTH OF FILL AND COMPACTION REQUIREMENTS IN THIS AREA.
- E — NEW CONCRETE PAVING. SEE DETAIL 10/AS501 FOR PAVEMENT SECTION. SEE SOILS REPORT FOR DEPTH OF FILL AND COMPACTION REQUIREMENTS IN THIS AREA.
- F — NEW CONCRETE TRANSFORMER VAULT
- G — NEW PARKING STRIPING SEE DETAIL 3/AS501
- H — NEW TINTED CMU WALL.
- J — NEW CONCRETE WHEEL STOP.
- K — NEW LANDSCAPE AREA – SEE SHEET LS-101
- L — PROPERTY LINE
- M — MONUMENT SIGN
- N — EXISTING ASPHALT ROADWAY. MAINTAIN AND PROTECT. KEEP CLEAR OF MUD AND DEBRIS FROM WORK UNDER THIS CONTRACT

REFERENCE NOTES

1. MAINTAIN AND PROTECT EXISTING SITE ELEMENTS TO REMAIN INCLUDING EXISTING LANDSCAPING, SIDEWALKS, STORM DRAIN BASIN, ASPHALT AND CURBS & GUTTERS. MAINTAIN AND PROTECT EXISTING LANDSCAPING TO REMAIN DURING CONSTRUCTION.
2. MAINTAIN AND PROTECT EXISTING SITE ELEMENTS ON ADJACENT PROPERITES IMMEDIATELY REPAIR OR REPLACE ANY DAMAGE TO ADJACENT PROPERTY, CAUSED BY WORK ASSOCIATED WITH THIS CONTRACT.
3. REMOVE AND PROPERLY DISPOSE OF EXISTING LANDSCAPING INCLUDING ALL TREES AND SHRUBS ON SITE. SEE SOILS REPORT FOR THE DEPTH OF GRUBBING IN THIS AREA.
4. SAW CUT, REMOVE AND PROPERLY DISPOSE OF EXISTING CONCRETE CURB AND PREPARE FOR NEW CONCRETE DRIVE APPROACH.
5. REMOVE AND PROPERLY DISPOSE OF ANY ASPHALT CONCRETE PAVING REQUIRED FOR THE INSTALLATION OF NEW CONSTRUCTION. SAW CUT ALL EDGES.
6. RELOCATE EXISTING LIGHT POLE

GENERAL NOTES

1. REFER TO SITE DEVELOPEMENT, LANDSCAPE, MECHANICAL AND ELECTRICAL DRAWINGS FOR DIMENSIONS AND ADDITIONAL SITE INFORMATION.
2. CONTRACTOR TO VERIFY ALL EXISTING SITE CONDITIONS. NOTIFY ARCHITECT OF ANY DISCREPENCIES TO THE CONTRACT DOCUMENTS.
3. PROVIDE POSITIVE DRAINAGE AWAY FROM BUILDINGS AT ALL POINTS.
4. CONTRACTOR SHALL NOT PARK, STORE EQUIPMENT, OR USE THE EXISTING ROAD FOR ANY PURPOSE OTHER THAN ACCESS TO THE PROJECT SITE. CONTRACTOR SHALL NOT DISTURB OR USE ANY AREA OUTSIDE CONTRACT LIMIT LINE TO PARK OR STORE EQUIPMENT.
5. CONTRACTOR WILL MAINTAIN AND PROTECT ALL EXISTING UTILITIES DURING CONSTRUCTION.
6. ALL CUTTING, PATCHING, EXCAVATION AND BACKFILL DONE IN STREET SHALL BE DONE IN ACCORDANCE WITH UTAH DEPARTMENT OF TRANSPORTATION SPECIFICATIONS.
7. PROVIDE PIPE SLEEVES WHERE SPRINKLER LINES PASS UNDER ASPHALT PAVEMENT OR RETAINING WALLS.
8. PROTECT ANY EXISTING STORM DRAINS FROM MUD AND DEBRIS DURING CONSTRUCTION.

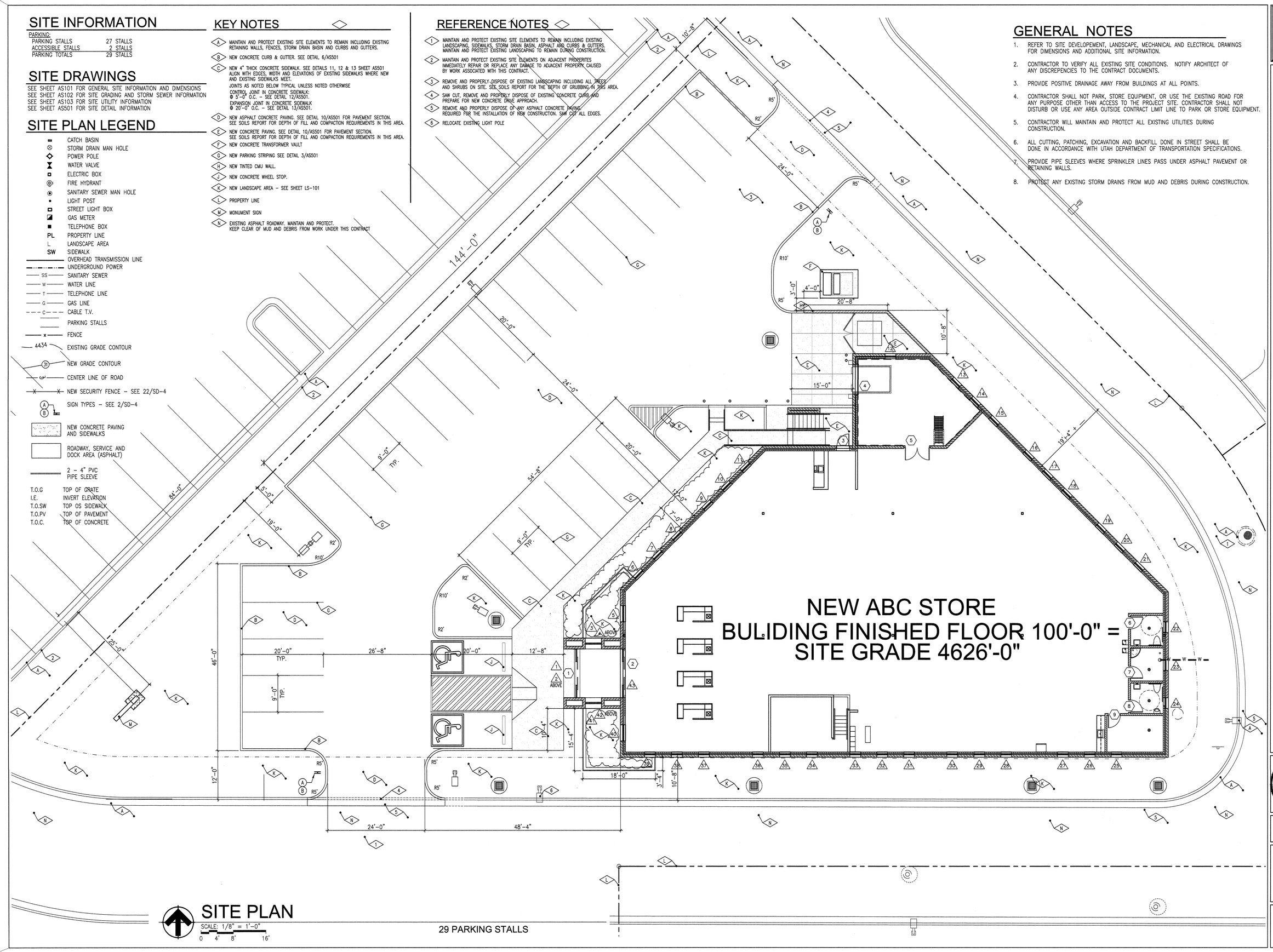

SITE PLAN

SCALE: 1/8" = 1'-0"
0 4' 8' 16'

29 PARKING STALLS

NEW RIVERTON LIQUOR STORE

DEPT OF ALCOHOLIC BEVERAGE CONTROL
RIVERTON, UTAH

FRANK N MURDOCK JR ■ Architect & Associates
975 East 100 South Suite 100, Salt Lake City, Utah 84102 TEL: (801) 532-4441 FAX (801) 532-4220

SITE PLAN

STATE OF UTAH
FRANK N. MURDOCK
324498
LICENSED ARCHITECT

REVISION # DATE:

DFCM PROJECT NO.:
05053030
CONST DOC
FILE NAME: ABCRV-AS101
PLOT SCALE: 1:96
DRAWN BY: STAFF
CHECKED BY: FNM
DATE: JUNE 2007

AS 101

SITE INFORMATION

PARKING:

PARKING STALLS	27 STALLS
ACCESSIBLE STALLS	2 STALLS
PARKING TOTALS	29 STALLS

SITE DRAWINGS

SEE SHEET AS101 FOR GENERAL SITE INFORMATION AND DIMENSIONS
SEE SHEET AS102 FOR SITE GRADING AND STORM SEWER INFORMATION
SEE SHEET AS103 FOR SITE UTILITY INFORMATION
SEE SHEET AS501 FOR SITE DETAIL INFORMATION

SITE PLAN LEGEND

- CATCH BASIN
- STORM DRAIN MAN HOLE
- POWER POLE
- WATER VALVE
- ELECTRIC BOX
- FIRE HYDRANT
- SANITARY SEWER MAN HOLE
- LIGHT POST
- STREET LIGHT BOX
- GAS METER
- TELEPHONE BOX
- PL — PROPERTY LINE
- L — LANDSCAPE AREA
- SW — SIDEWALK
- OVERHEAD TRANSMISSION LINE
- UNDERGROUND POWER
- SS — SANITARY SEWER
- W — WATER LINE
- T — TELEPHONE LINE
- G — GAS LINE
- C — CABLE T.V.
- PARKING STALLS
- X — FENCE
- 4434 — EXISTING GRADE CONTOUR
- 31 — NEW GRADE CONTOUR
- CENTER LINE OF ROAD
- X — X — NEW SECURITY FENCE – SEE 22/SD-4
- A/B — SIGN TYPES – SEE 2/SD-4
- NEW CONCRETE PAVING AND SIDEWALKS
- ROADWAY, SERVICE AND DOCK AREA (ASPHALT)
- 2 – 4" PVC PIPE SLEEVE

T.O.G	TOP OF GRATE
I.E.	INVERT ELEVATION
T.O.SW	TOP OS SIDEWALK
T.O.PV	TOP OF PAVEMENT
T.O.C.	TOP OF CONCRETE

GENERAL NOTES

1. REFER TO SITE DEVELOPEMENT, LANDSCAPE, MECHANICAL AND ELECTRICAL DRAWINGS FOR DIMENSIONS AND ADDITIONAL SITE INFORMATION.
2. CONTRACTOR TO VERIFY ALL EXISTING SITE CONDITIONS. NOTIFY ARCHITECT OF ANY DISCREPENCIES TO THE CONTRACT DOCUMENTS.
3. PROVIDE POSITIVE DRAINAGE AWAY FROM BUILDINGS AT ALL POINTS.
4. CONTRACTOR SHALL NOT PARK, STORE EQUIPMENT, OR USE THE EXISTING ROAD FOR ANY PURPOSE OTHER THAN ACCESS TO THE PROJECT SITE. CONTRACTOR SHALL NOT DISTURB OR USE ANY AREA OUTSIDE CONTRACT LIMIT LINE TO PARK OR STORE EQUIPMENT.
5. CONTRACTOR WILL MAINTAIN AND PROTECT ALL EXISTING UTILITIES DURING CONSTRUCTION.
6. ALL CUTTING, PATCHING, EXCAVATION AND BACKFILL DONE IN STREET SHALL BE DONE IN ACCORDANCE WITH UTAH DEPARTMENT OF TRANSPORTATION SPECIFICATIONS.
7. PROVIDE PIPE SLEEVES WHERE SPRINKLER LINES PASS UNDER ASPHALT PAVEMENT OR RETAINING WALLS.
8. PROTECT ANY EXISTING STORM DRAINS FROM MUD AND DEBRIS DURING CONSTRUCTION.

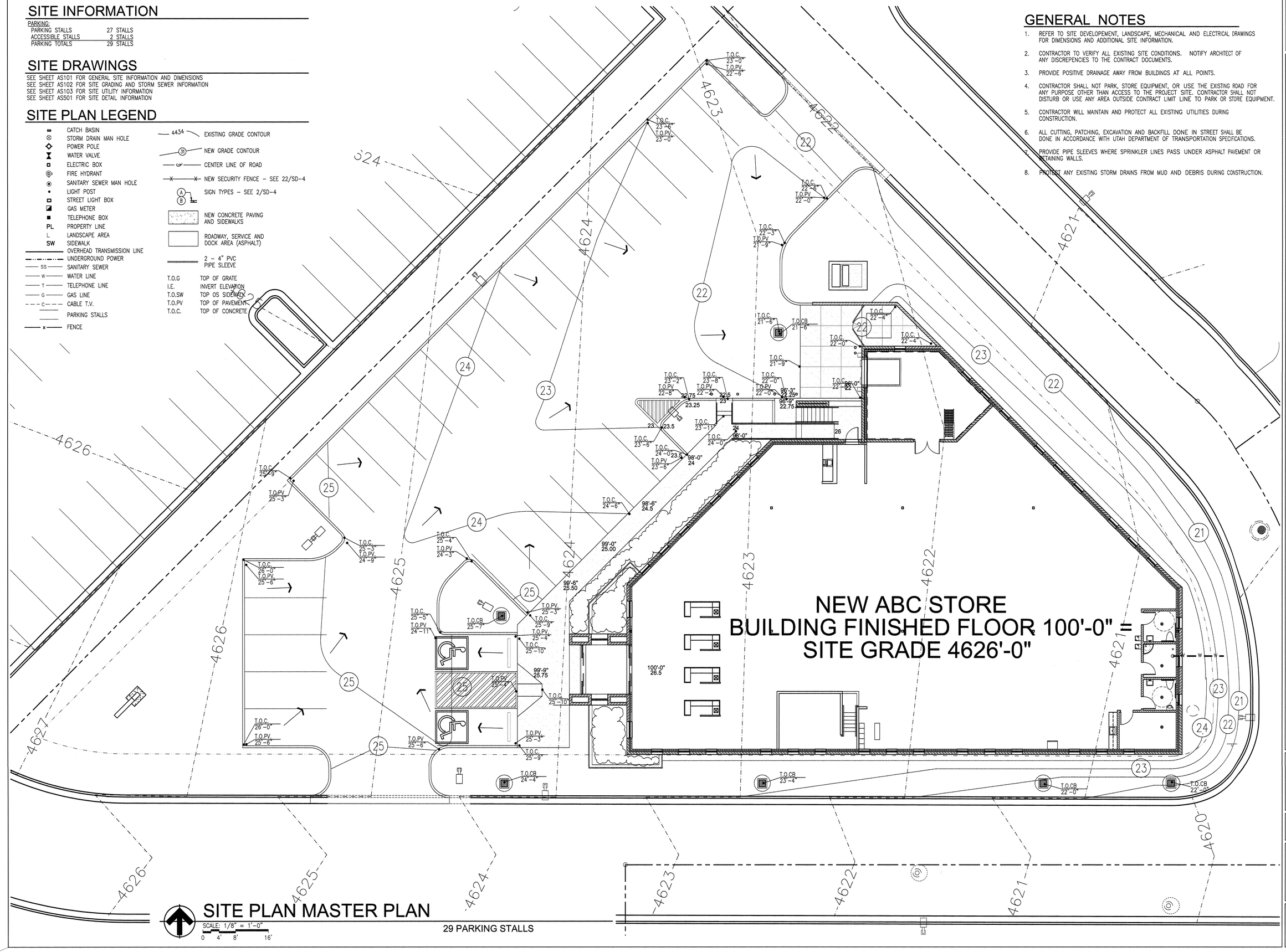

SITE PLAN MASTER PLAN

SCALE: 1/8" = 1'-0"
0 4' 8' 16'

29 PARKING STALLS

NEW RIVERTON LIQUOR STORE

DEPT OF ALCOHOLIC BEVERAGE CONTROL
RIVERTON, UTAH

FRANK N MURDOCK JR ■ Architect & Associates
975 East 100 South Suite 100, Salt Lake City, Utah 84102 TEL: (801) 532-4441 FAX (801) 532-4220

SITE GRADING PLAN

STATE OF UTAH
FRANK N. MURDOCK
424498
LICENSED ARCHITECT

REVISION # DATE:

DFCM PROJECT NO.:
05053030
CONST DOC
FILE NAME: ABCRV-AS102
PLOT SCALE: 1:96
DRAWN BY: STAFF
CHECKED BY: FNM
DATE: JUNE 2007

AS 102

SITE INFORMATION

PARKING:

PARKING STALLS	27 STALLS
ACCESSIBLE STALLS	2 STALLS
PARKING TOTALS	29 STALLS

SITE DRAWINGS

SEE SHEET AS101 FOR GENERAL SITE INFORMATION AND DIMENSIONS
SEE SHEET AS102 FOR SITE GRADING AND STORM SEWER INFORMATION
SEE SHEET AS103 FOR SITE UTILITY INFORMATION
SEE SHEET AS501 FOR SITE DETAIL INFORMATION

SITE PLAN LEGEND

- CATCH BASIN
- STORM DRAIN MAN HOLE
- POWER POLE
- WATER VALVE
- ELECTRIC BOX
- FIRE HYDRANT
- SANITARY SEWER MAN HOLE
- LIGHT POST
- STREET LIGHT BOX
- GAS METER
- TELEPHONE BOX
- PL — PROPERTY LINE
- L — LANDSCAPE AREA
- SW — SIDEWALK
- OVERHEAD TRANSMISSION LINE
- UNDERGROUND POWER
- SS — SANITARY SEWER
- W — WATER LINE
- T — TELEPHONE LINE
- G — GAS LINE
- C — CABLE T.V.
- PARKING STALLS
- x — FENCE
- 4434 — EXISTING GRADE CONTOUR
- 31 — NEW GRADE CONTOUR
- CENTER LINE OF ROAD
- A/B — SIGN TYPES – SEE 2/SD-4
- NEW CONCRETE PAVING AND SIDEWALKS
- ROADWAY, SERVICE AND DOCK AREA (ASPHALT)
- 2 – 4" PVC PIPE SLEEVE

T.O.G	TOP OF GRATE
I.E.	INVERT ELEVATION
T.O.SW	TOP OS SIDEWALK
T.O.PV	TOP OF PAVEMENT
T.O.C.	TOP OF CONCRETE

SANITARY SEWER NOTES

1. ALL SANITARY SEWER CONSTRUCTION SHALL COMPLY WITH LOCAL SEWER DISTRICT'S DESIGN STANDARDS AND CONSTRUCTION SPECIFICATIONS.
2. CONTRACTOR SHALL FIELD VERIFY LOCATIONS AND INVERT ELEVATIONS OF EXISTING MANHOLES AND OTHER UTILITIES BEFORE STAKING OR CONSTRUCTION OF ANY SEWER LINES.

STORM SEWER NOTES

1. ALL SANITARY STORM CONSTRUCTION SHALL COMPLY WITH LOCAL STORM WATER DISTRICT'S DESIGN STANDARDS AND CONSTRUCTION SPECIFICATIONS.
2. CONTRACTOR SHALL FIELD VERIFY LOCATIONS AND INVERT ELEVATIONS OF EXISTING MANHOLES AND OTHER UTILITIES BEFORE STAKING OR CONSTRUCTION OF ANY STORM SEWER LINES.

GENERAL NOTES

1. REFER TO SITE DEVELOPEMENT, LANDSCAPE, MECHANICAL AND ELECTRICAL DRAWINGS FOR DIMENSIONS AND ADDITIONAL SITE INFORMATION.
2. CONTRACTOR TO VERIFY ALL EXISTING SITE CONDITIONS. NOTIFY ARCHITECT OF ANY DISCREPENCIES TO THE CONTRACT DOCUMENTS.
3. PROVIDE POSITIVE DRAINAGE AWAY FROM BUILDINGS AT ALL POINTS.
4. CONTRACTOR SHALL NOT PARK, STORE EQUIPMENT, OR USE THE EXISTING ROAD FOR ANY PURPOSE OTHER THAN ACCESS TO THE PROJECT SITE. CONTRACTOR SHALL NOT DISTURB OR USE ANY AREA OUTSIDE CONTRACT LIMIT LINE TO PARK OR STORE EQUIPMENT.
5. CONTRACTOR WILL MAINTAIN AND PROTECT ALL EXISTING UTILITIES DURING CONSTRUCTION.
6. ALL CUTTING, PATCHING, EXCAVATION AND BACKFILL DONE IN STREET SHALL BE DONE IN ACCORDANCE WITH UTAH DEPARTMENT OF TRANSPORTATION SPECIFICATIONS.
7. PROVIDE PIPE SLEEVES WHERE SPRINKLER LINES PASS UNDER ASPHALT PAVEMENT OR RETAINING WALLS.
8. PROTECT ANY EXISTING STORM DRAINS FROM MUD AND DEBRIS DURING CONSTRUCTION.

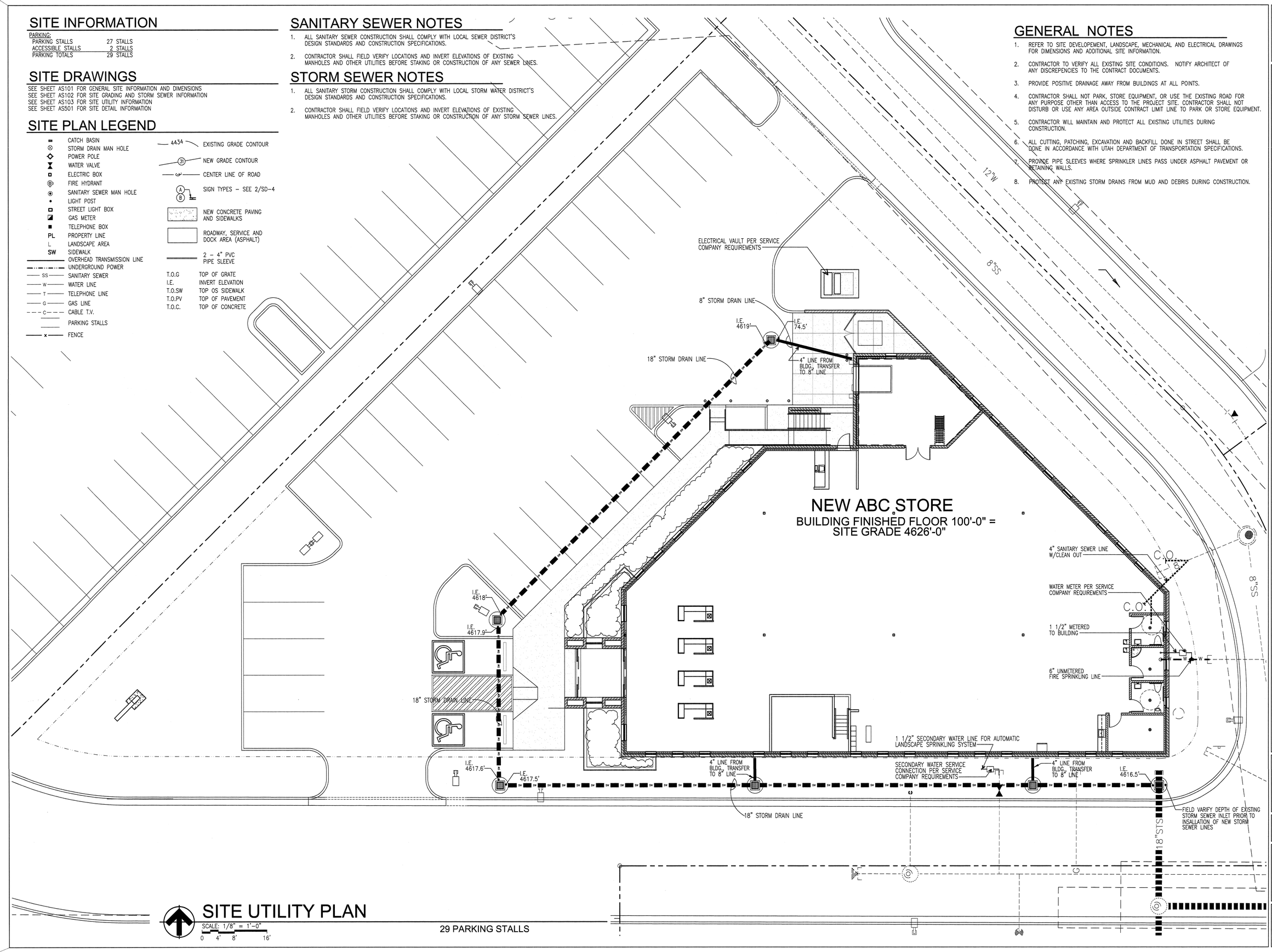

SITE UTILITY PLAN

SCALE: 1/8" = 1'-0"
0 4' 8' 16'

29 PARKING STALLS

NEW RIVERTON LIQUOR STORE

DEPT OF ALCOHOLIC BEVERAGE CONTROL
APPROX. 3900 WEST 13400 SOUTH, RIVERTON, UTAH

FRANK N MURDOCK JR ■ Architect & Associates
975 East 100 South Suite 100, Salt Lake City, Utah 84102 TEL: (801) 532-4441 FAX (801) 532-4220

SITE UTILITY PLAN

STATE OF UTAH — FRANK N. MURDOCK JR. — 124493 — LICENSED ARCHITECT

REVISION # DATE:

DFCM PROJECT NO.: 05053030
CONST DOC
FILE NAME: ABCRV-AS103
PLOT SCALE: 1:96
DRAWN BY: STAFF
CHECKED BY: FNM
DATE: JUNE 2007

AS 103

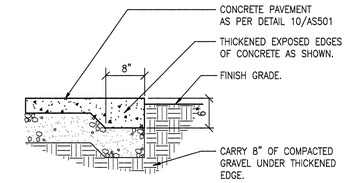

25 AS501 CONCRETE EDGE DETAIL
SCALE: 1" = 1'-0"

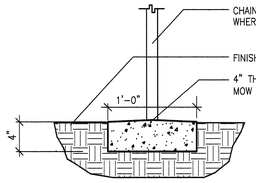

24 AS501 CONCRETE MOW STRIP DETAIL
SCALE: NOT TO SCALE

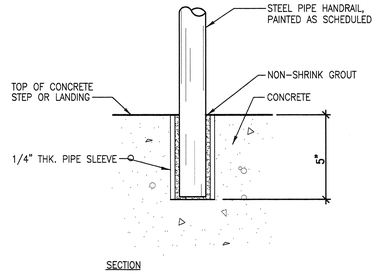

23 AS501 PIPE RAIL ANCHORING DETAIL
SCALE: NOT TO SCALE

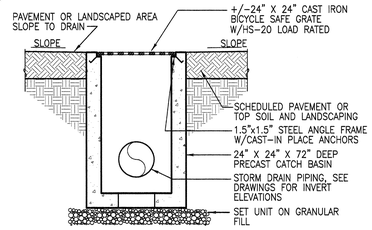

22 AS501 DRY SUMP CATCH BASIN
SCALE: NOT TO SCALE

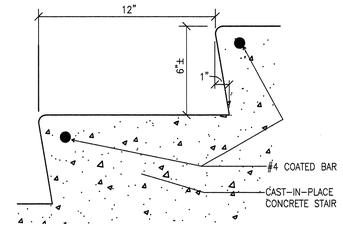

21 AS501 STAIR NOSING SECTION
SCALE: NOT TO SCALE

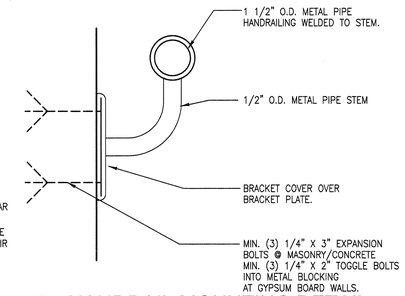

20 AS501 HANDRAIL MOUNTING DETAIL
SCALE: NOT TO SCALE

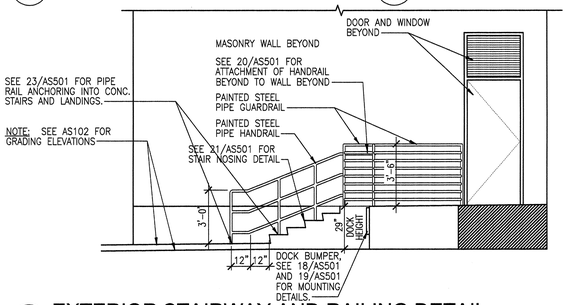

16 AS501 EXTERIOR STAIRWAY AND RAILING DETAIL
SCALE: NOT TO SCALE

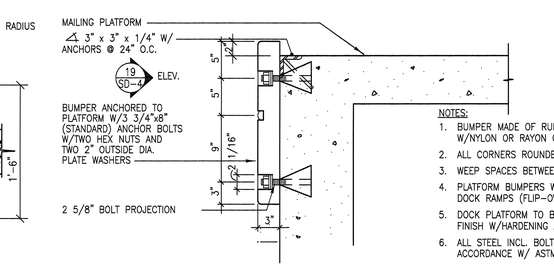

17 AS501 CONCRETE CURB DETAIL
SCALE: NOT TO SCALE

18 AS501 DOCK BUMPER SECTION
SCALE: NOT TO SCALE

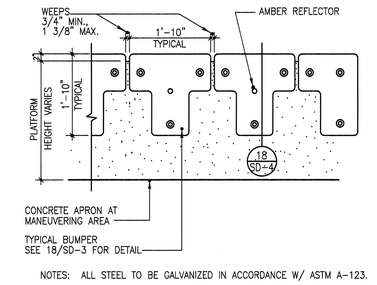

NOTES: ALL STEEL TO BE GALVANIZED IN ACCORDANCE W/ ASTM A-123.

19 AS501 DOCK BUMPER ELEVATION
SCALE: NOT TO SCALE

NOTE: ALL STRIPING TO BE APPLIED IN TWO COATS PER SPECIFICATIONS.

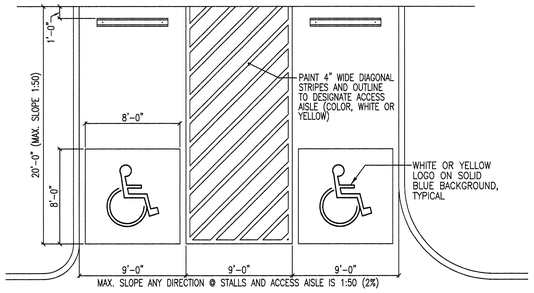

15 AS501 HANDICAP PARKING STALL AND ACCESS AISLE DETAIL
SCALE: NOT TO SCALE

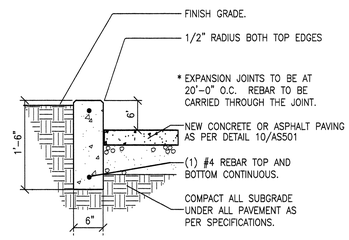

14 AS501 BOLLARD DETAIL
SCALE: 3/4" = 1'-0"

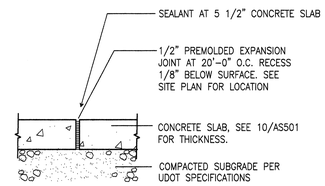

13 AS501 EXPANSION JOINT DETAIL (EJ)
SCALE: 1-1/2" = 1'-0"

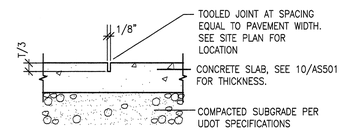

12 AS501 CONTROL JOINT DETAIL (CJ)
SCALE: 1-1/2" = 1'-0"

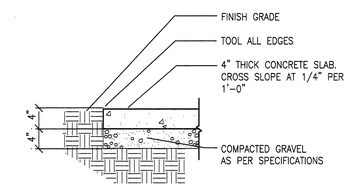

11 AS501 CONCRETE SIDEWALK DETAIL
SCALE: 1" = 1'-0"

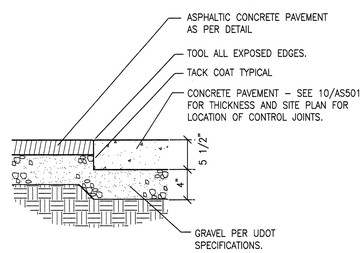

5 AS501 CONCRETE/ASPHALT EDGE
SCALE: NOT TO SCALE

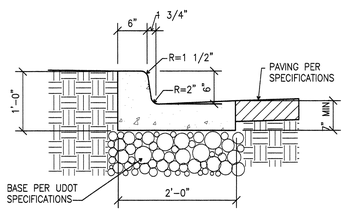

6 AS501 CURB AND GUTTER DETAIL
SCALE: NOT TO SCALE

7 AS501 CONCRETE CURB DETAIL
SCALE: 1" = 1'-0"

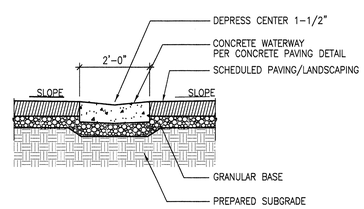

8 AS501 CONCRETE WATERWAY DETAIL
SCALE: NOT TO SCALE

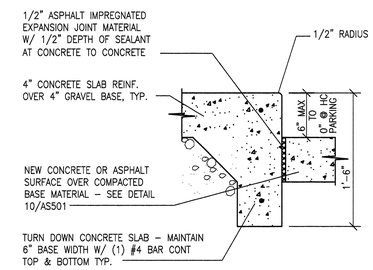

9 AS501 CURB TO SIDEWALK DETAIL
SCALE: 1-1/2" = 1'-0"

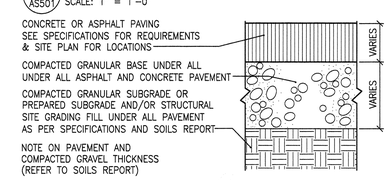

10 AS501 PAVEMENT SECTIONS
SCALE: 3" = 1'-0"

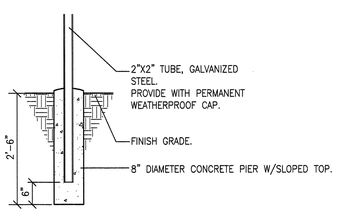

4 AS501 EXTERIOR SIGNAGE SUPPORT
SCALE: 3/4" = 1'-0"

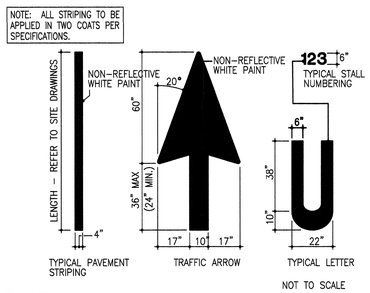

3 AS501 PAVEMENT MARKINGS
SCALE: NOT TO SCALE

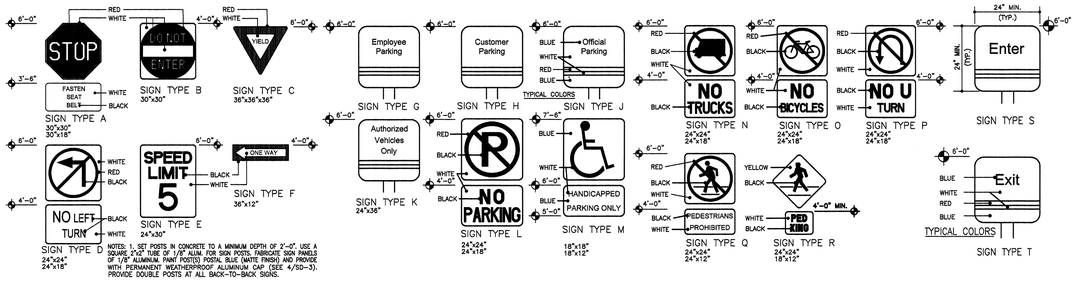

NOTES: 1. SET POSTS IN CONCRETE TO A MINIMUM DEPTH OF 3'-0", USE A SQUARE 2"x2" TUBE OF 1/8" ALUM. FOR SIGN POSTS. FABRICATE SIGN PANELS OF 1/8" ALUMINUM. PAINT POST(S) POSTAL BLUE (MATTE FINISH) AND PROVIDE WITH PERMANENT WEATHERPROOF ALUMINUM CAP (SEE 4/SD-3). PROVIDE DOUBLE POSTS AT ALL BACK-TO-BACK SIGNS.

2 AS501 EXTERIOR TRAFFIC SIGNAGE
SCALE: NOT TO SCALE

1 AS501 NOT USED
SCALE: NONE

NEW RIVERTON LIQUOR STORE

DEPT OF ALCOHOLIC BEVERAGE CONTROL
APPROX. 3900 WEST 13400 SOUTH, RIVERTON, UTAH

FRANK N MURDOCK JR ■ Architect & Associates
975 East 100 South Suite 100, Salt Lake City, Utah 84102 TEL: (801) 532-4441 FAX: (801) 532-4220

SITE DETAILS

STATE OF UTAH FRANK N. MURDOCK 124498 5 LICENSED ARCHITECT

REVISION # DATE:

DFCM PROJECT NO.: 05053030
CONST. DOC.
FILE NAME: ABCRV-AS501
PLOT SCALE: 1:240
DRAWN BY: STAFF
CHECKED BY: FNM
DATE: MAY 2007

AS 501

SITE INFORMATION

PARKING:

PARKING STALLS	27 STALLS
ACCESSIBLE STALLS	2 STALLS
PARKING TOTALS	29 STALLS

SITE DRAWINGS

SEE SHEET AS101 FOR GENERAL SITE INFORMATION AND DIMENSIONS
SEE SHEET AS102 FOR SITE GRADING AND STORM SEWER INFORMATION
SEE SHEET AS103 FOR SITE UTILITY INFORMATION
SEE SHEET AS501 FOR SITE DETAIL INFORMATION

LANDSCAPING PLAN GENERAL NOTES

1. ALL AREAS NOTED AS "SOD" (GRASS) OR "LANDSCAPED AREA", SHALL BE PROVIDED WITH A LANDSCAPE IRRIGATION SYSTEM. SLEEVES SHALL BE PROVIDED UNDER PAVED AREAS TO FACILITATE THE IRRIGATION SYSTEM. SEE SPECIFICATIONS FOR REQUIREMENTS.
2. LANDSCAPE CONTRACTOR IS RESPONSIBLE FOR SLEEVES UNDER PAVED AREAS. WORK SHALL BE COORDINATED WITH PAVING CONTRACTOR.
3. INSTALL A MINIMUM OF 4" OF TOP SOIL AT ALL LANDSCAPED AREAS.
4. MINIMUM EXCAVATION FOR TREES SHALL BE A DIAMETER OF 2'-0" GREATER THAN THE ROOT BALL, AND 6" DEEPER THAN THE ROOT BALL. BACKFILL HOLE WITH TOPSOIL. COVER AREA INSIDE EDGING WITH BARK CHIPS (3" DEEP).
5. COMPLETELY COVER AREA AROUND SHRUB, TREE, AND GROUNDCOVER PLANTINGS WITH A 4" THICK LAYER OF BARK CHIPS OVER LANDSCAPE FABRIC.
6. NOT USED.
7. STAKE AND GUY SUPPORT ALL TREES. PROVIDE TREE TRUNK PROTECTION PLASTIC SLEEVES AT ALL TREES NOT PLANTED WITH SHRUBS AROUND THEIR BASE.
8. PROVIDE FLEXIBLE EDGING AND BARK CHIPS AT ALL TREES IN LAWN AREAS. PROVIDE 4' DIAMETER EDGING CIRCLE, AT TREES IN LAWN AREAS, WHERE NO EDGING IS OTHERWISE NOTED.
9. CONSTRUCT A 4" HIGH EARTHEN BERM AROUND ALL TREES AND SHRUBS. BERM TO BE SAME DIAMETER AS EXCAVATION FOR ROOT BALL PLANTING PIT.
10. MINIMUM EXCAVATION FOR SHRUBS SHALL BE A DIAMETER OF 12" GREATER THAN THE DIAMETER OF THE CONTAINER. EXCAVATION SHALL BE 18" DEEP MINIMUM. BACKFILL HOLE WITH TOP SOIL.
11. PROVIDE AND INSTALL COMPLETE AUTOMATIC LANDSCAPE SPRINKLING SYSTEM TO ALL LAWN AND LANDSCAPED AREAS. SEE SPECIFICATIONS FOR DETAILED SYSTEM REQUIREMENTS.
12. PROVIDE AND INSTALL A MINUMUM OF 3" OF BARK CHIPS IN ALL AREAS OF GROUND COVER.
13. LANDSCAPING SHALL NOT BE CONSIDERED TO BE COMPLETE UNTIL AFTER 90 DAYS OF HEALTHY GROWTH. CONTRACTOR SHALL BE RESPONSIBLE TO REPLACE ALL UNHEALTHY OR DEAD LANDSCAPING. CONTRACTOR SHALL REMAIN RESPONSIBLE FOR ALL REPLACED LANDSCAPING WITH THE 90 DAY HEALTHY GROWTH REQUIREMENT BEING APPLICABLE TO ALL REPLACED LANDSCAPING.

LANDSCAPING PLAN LEGEND

NOTE:
"CALIPER" INDICATES THE DIAMETER OF THE TREE TRUNK TAKEN AT 6" ABOVE THE GROUND LEVEL.

TREES

AP — AUSTRIAN PINE
PINUS NIGRA
4" CALIPER (9' HIGH MINIMUM)

QA — "QUAKING ASPEN"
POPULUS TREMULOIDES
3" CALIPER

GRASS

SOD = BLUEGRASS VARIETIES
SEED = BLUE GAMA GRASS
BOUTELOUA GRACILIS

GROUND COVER

MIX — GROUNDCOVERS
PLANT IN RANDOM PATTERN @ 12" o.c.
25% GREATER PERIWINKLE
VINA MAJOR
25% ATLAS DAISY
ANACYCLUS DEPRESSUS
25% SNOW IN SUMMER
CERASTIUM TOMENTOSUM
25% BEARDED IRIS
IRIDACEAE

GENERAL NOTES

1. REFER TO SITE DEVELOPEMENT, LANDSCAPE, MECHANICAL AND ELECTRICAL DRAWINGS FOR DIMENSIONS AND ADDITIONAL SITE INFORMATION.
2. CONTRACTOR TO VERIFY ALL EXISTING SITE CONDITIONS. NOTIFY ARCHITECT OF ANY DISCREPENCIES TO THE CONTRACT DOCUMENTS.
3. PROVIDE POSITIVE DRAINAGE AWAY FROM BUILDINGS AT ALL POINTS.
4. CONTRACTOR SHALL NOT PARK, STORE EQUIPMENT, OR USE THE EXISTING ROAD FOR ANY PURPOSE OTHER THAN ACCESS TO THE PROJECT SITE. CONTRACTOR SHALL NOT DISTURB OR USE ANY AREA OUTSIDE CONTRACT LIMIT LINE TO PARK OR STORE EQUIPMENT.
5. CONTRACTOR WILL MAINTAIN AND PROTECT ALL EXISTING UTILITIES DURING CONSTRUCTION.
6. ALL CUTTING, PATCHING, EXCAVATION AND BACKFILL DONE IN STREET SHALL BE DONE IN ACCORDANCE WITH UTAH DEPARTMENT OF TRANSPORTATION SPECIFICATIONS.
7. PROVIDE PIPE SLEEVES WHERE SPRINKLER LINES PASS UNDER ASPHALT PAVEMENT OR RETAINING WALLS.
8. PROTECT ANY EXISTING STORM DRAINS FROM MUD AND DEBRIS DURING CONSTRUCTION.

LANDSCAPE SITE PLAN

SCALE: 1/8" = 1'-0"
0 4' 8' 16'

29 PARKING STALLS

NEW RIVERTON LIQUOR STORE
DEPT OF ALCOHOLIC BEVERAGE CONTROL
RIVERTON, UTAH

FRANK N MURDOCK JR ■ Architect & Associates
975 East 100 South Suite 100, Salt Lake City, Utah 84102 TEL: (801) 532-4441 FAX (801) 532-4220

LANDSCAPE PLAN

STATE OF UTAH
FRANK N. MURDOCK JR.
124488
LICENSED ARCHITECT

REVISION # DATE:

DFCM PROJECT NO.:
05053030
CONST DOC
FILE NAME: ABCRV-LS101
PLOT SCALE: 1:96
DRAWN BY: STAFF
CHECKED BY: FNM
DATE: JUNE 2007

LS
101

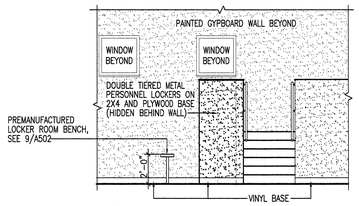

9/A101 ELEV. AT LOCKERS/BENCH
SCALE: 1/4" = 1'-0"

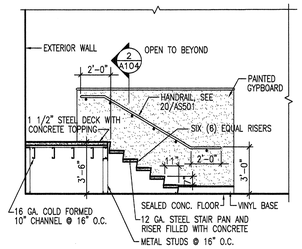

10/A101 SECTION AT OFFICE
SCALE: 1/4" = 1'-0"

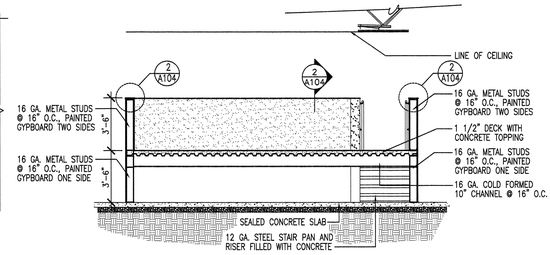

11/A101 SECTION AT OFFICE PLATFORM
SCALE: 1/4" = 1'-0"

WALL TYPE

1

BRACE TO ROOF DECK @ 4' O.C.

3 5/8" STUD PARTITION WALL:
PAINTED 5/8" GYP. BD. BOTH SIDES OF 3 5/8" METAL STUDS @ 16" ON CENTER, FROM FLOOR TO ROOF DECK OR TO 6" ABOVE CEILING WHERE CEILING OCCURS. PROVIDE DIAGONAL BRACING TO ROOF DECK @ 4' O.C. WHERE CEILING OCCURS. GYP BD @ WALL TO STOP @ GYP BD CEILING WHERE OCCURS.
PROVIDE TILE WAINSCOT AS SHOWN ON PLANS.
INSTALL WATER-RESISTANT GYP BD @ ALL TOILET ROOMS.
PROVIDE PROTECTIVE PARTICLE BOARD WAINSCOT AS SHOWN ON FLOOR PLANS, DETAIL 3/A101.

NOTES

1. PROVIDE SIGNAGE ABOVE ENTRY DOORS STATING "THESE DOORS TO REMAIN UNLOCKED DURING BUSINESS HOURS".
2. PROVIDE SIGNAGE DESIGNATING "PUBLIC RESTROOMS" AT LOCATION TO BE DETERMINED BY ARCHITECT.
3. CONTRACTOR TO PROVIDE AND INSTALL 25 L.F. OF CHAIR RAIL (INPRO CORP., NORTHERN HARDWOODS CR2 OR EQUAL) IN LOCATIONS AND AT HEIGHTS TO BE DETERMINED BY THE ARCHITECT.
4. TWO ALTERNATES ARE INCLUDED IN THIS PROJECT:
   A. INDIRECT FLUORESCENT LIGHTING IN LIEU OF 2'X4' LAY-IN FLUORESCENT LIGHTING.
   B. EIFS FASCIA.

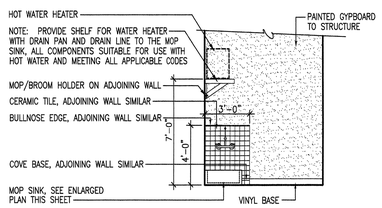

6/A101 ELEV. AT UTILITY ROOM
SCALE: 1/4" = 1'-0"

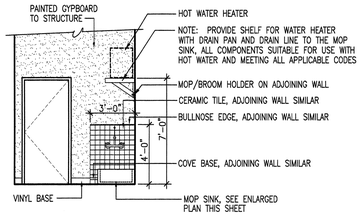

7/A101 ELEV. AT UTILITY ROOM
SCALE: 1/4" = 1'-0"

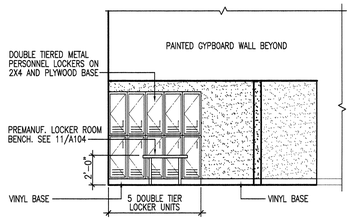

8/A101 ELEV. AT LOCKERS/BENCH
SCALE: 1/4" = 1'-0"

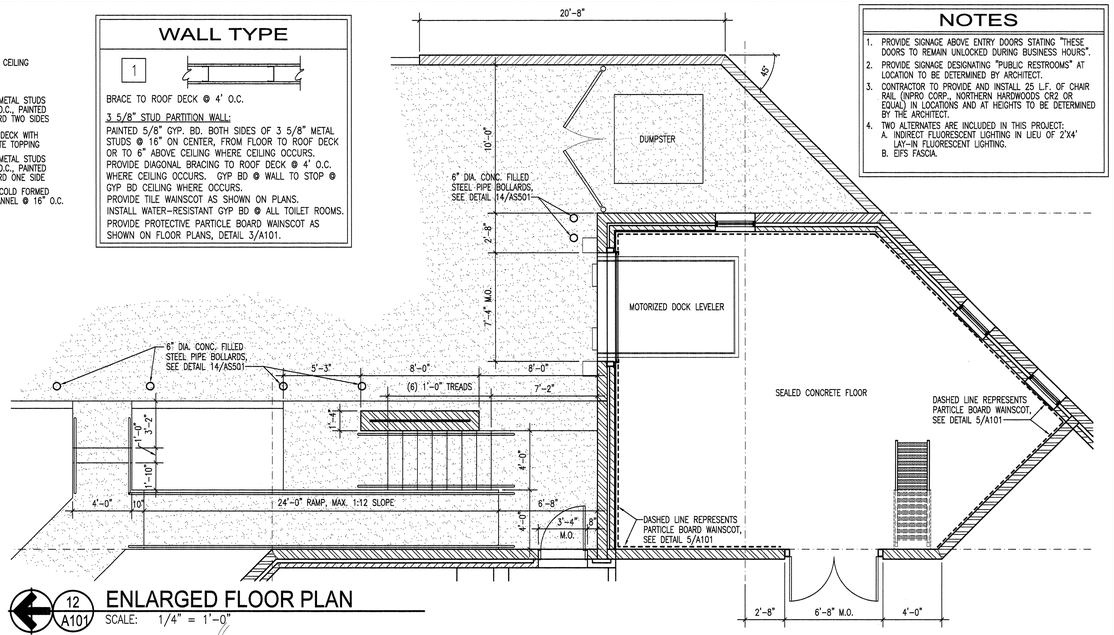

12/A101 ENLARGED FLOOR PLAN
SCALE: 1/4" = 1'-0"

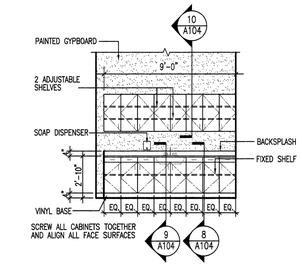

4/A101 ELEV. AT LUNCH COUNTER
SCALE: 1/4" = 1'-0"

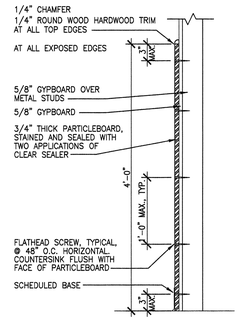

5/A101 SECTION AT WAINSCOT
SCALE: NOT TO SCALE

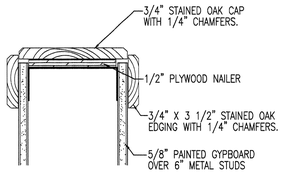

3/A101 WALL CAP
SCALE: NOT TO SCALE

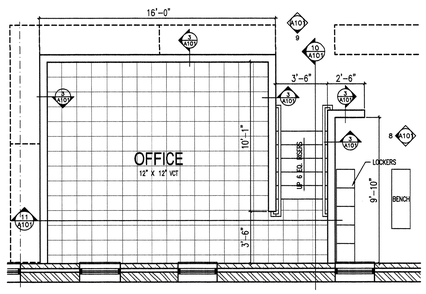

2/A101 ENLARGED FLOOR PLAN
SCALE: 1/4" = 1'-0"

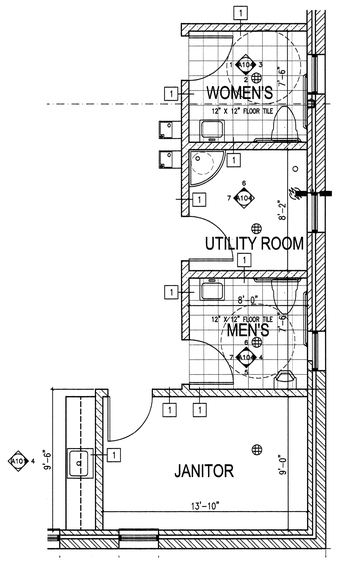

1/A101 ENLARGED FLOOR PLAN
SCALE: 1/4" = 1'-0"

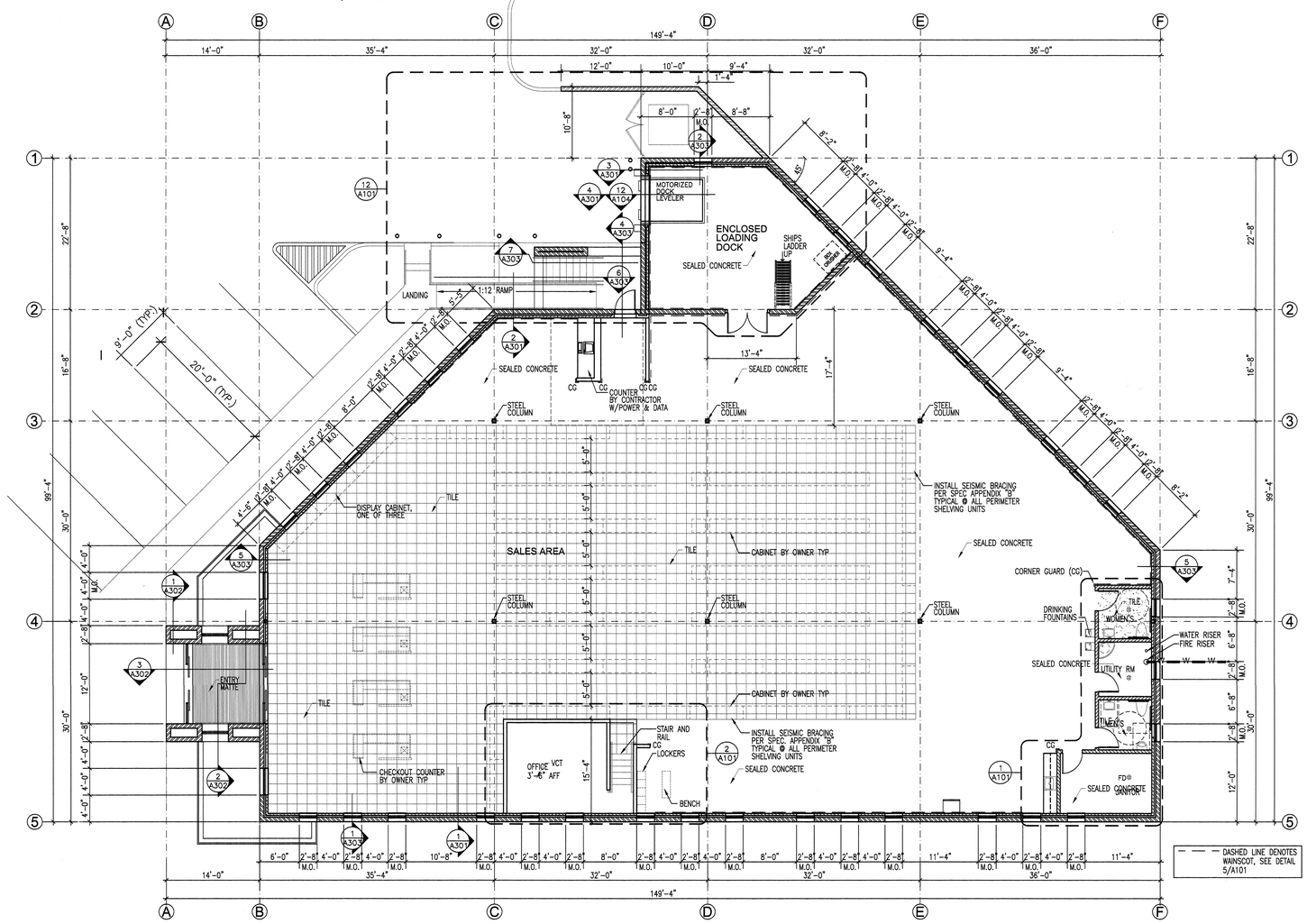

FLOOR PLAN
SCALE: 1/8" = 1'-0"

NEW RIVERTON LIQUOR STORE
DEPT OF ALCOHOLIC BEVERAGE CONTROL
APPROX. 3900 WEST 13400 SOUTH, RIVERTON, UTAH

FRANK N MURDOCK JR ■ Architect & Associates
975 East 100 South Suite 100, Salt Lake City, Utah 84102 TEL: (801) 532-4441 FAX: (801) 532-4220

STATE OF UTAH — FRANK N. MURDOCK JR. — 124498 — LICENSED ARCHITECT

REVISION # DATE:

DFCM PROJECT NO.: 05053030
CONST. DOC.
FILE NAME: ABCRV-A101
PLOT SCALE: 1:96
DRAWN BY: STAFF
CHECKED BY: FNM
DATE: JUNE 2007

FLOOR PLAN, INTERIOR ELEVATIONS AND SECTIONS

A 101

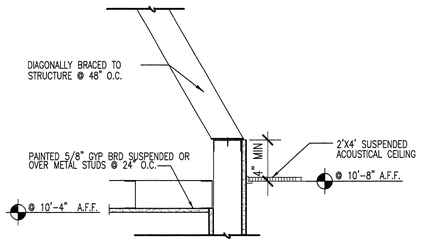

4 / A102 INTERIOR WALL BRACING

SCALE: NOT TO SCALE

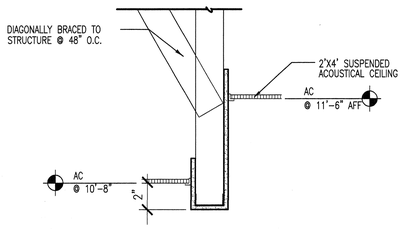

3 / A102 CEILING DROP DETAIL

SCALE: NOT TO SCALE

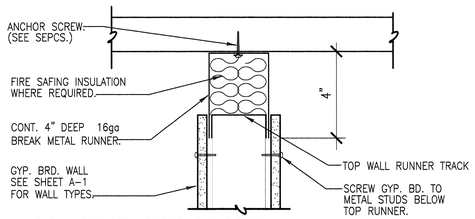

2 / A102 SLIP JOINT DETAIL

SCALE: NOT TO SCALE

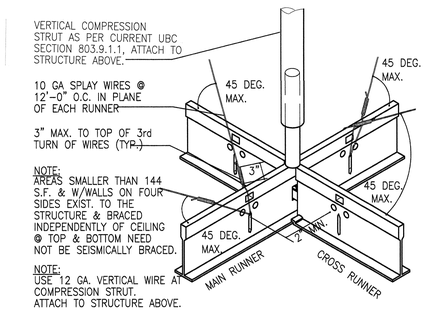

1 / A102 SEISMIC BRACING DETAIL

SCALE: NOT TO SCALE

REFLECTED CEILING PLAN LEGEND

4' WALL MOUNTED LIGHTING FIXTURE	8' SUSPENDED LIGHTING FIXTURE	2'X4' SUSPENDED ACOUSTICAL CEILING PROVIDE SEISMIC BRACING – SEE 1/A102	E.S. — PAINTED EXPOSED STRUCTURE HEIGHT MAY VARY
2' SURFACE MOUNTED LIGHTING FIXTURE	UNIT HEATER	METAL SOFFIT PANEL	MSP — METAL SOFFIT PANEL
SECURITY LIGHT	TRACK LIGHT	RETURN REGISTER	AC — 2'X4' SUSPENDED ACOUSTICAL CEILING
2' X 4' FLUORESCENT LIGHTING FIXTURE	8' SUSPENDED INDIRECT LIGHTING FIXTURE	SUPPLY DIFFUSER	GB — GYPSUM BOARD CEILING
RECESSED LIGHTING FIXTURE	WALL MOUNTED LIGHTING FIXTURE	EXHAUST FAN	SSXGB — SYNTHETIC STUCCO OVER EXTERIOR GYPSUM SOFFET BOARD
	EXTERIOR WALL MOUNTED LIGHTING FIXTURE	GYPSUM BOARD SOFFIT	0'-0" — CEILING OR SOFFIT HEIGHT (HEIGHT MEASURED FROM FINISHED FLOOR ELEV.: 0'-0")

NOTE: CEILING TO INSTALLED PER 2006 IBC OR BRACED PER 1997 UBC STANDARDS, SECTION 25-2..
THE PREFERRED METHOD OF INSTALLATION IS THE 1997 UBC STANDARDS, SECTION 25-2..
THE CEILING EXPANSION JOINT IS NOT REQUIRED IF INSTALLED PER THE 1997 UBC STANDARDS

REFLECTED CEILING PLAN

SCALE: 1/8" = 1'-0"

0 2' 4' 8' 16'

NEW RIVERTON LIQUOR STORE

DEPT OF ALCOHOLIC BEVERAGE CONTROL
APPROX. 3900 WEST 13400 SOUTH, RIVERTON, UTAH

FRANK N MURDOCK JR ■ Architect & Associates
975 East 100 South Suite 100, Salt Lake City, Utah 84102 TEL: (801) 532-4441 FAX (801) 532-4220

REFLECTED CEILING PLAN

STATE OF UTAH — FRANK N. MURDOCK — 124498 — LICENSED ARCHITECT

REVISION #	DATE:

DFCM PROJECT NO.: 05053030
CONST. DOC.
FILE NAME: ABCRV-A102
PLOT SCALE: 1:96
DRAWN BY: STAFF
CHECKED BY: FNM
DATE: MAY 2007

A 102

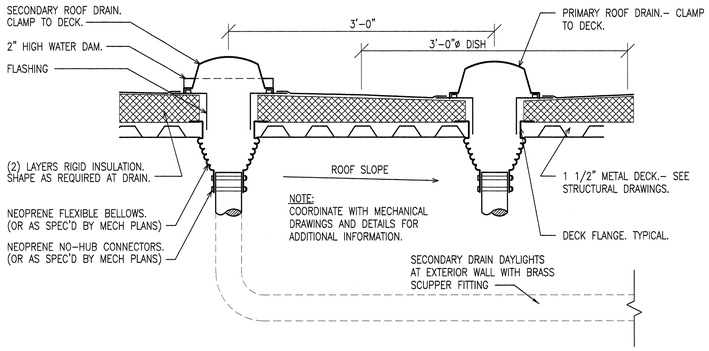

2 A103 ROOF DRAIN DETAIL
SCALE: NOT TO SCALE

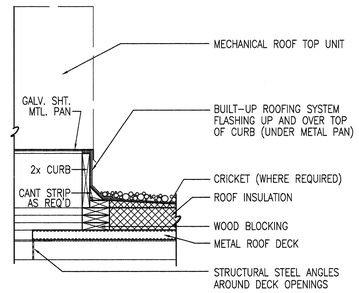

3 A103 ROOF CURB DETAIL
SCALE 1" = 1' - 0"

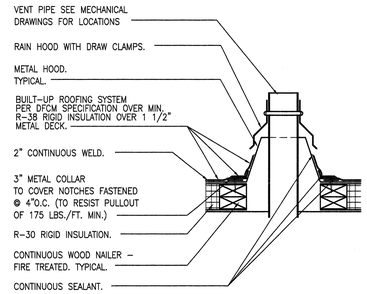

4 A103 VENT PIPE DETAIL
SCALE 3" = 1' - 0"

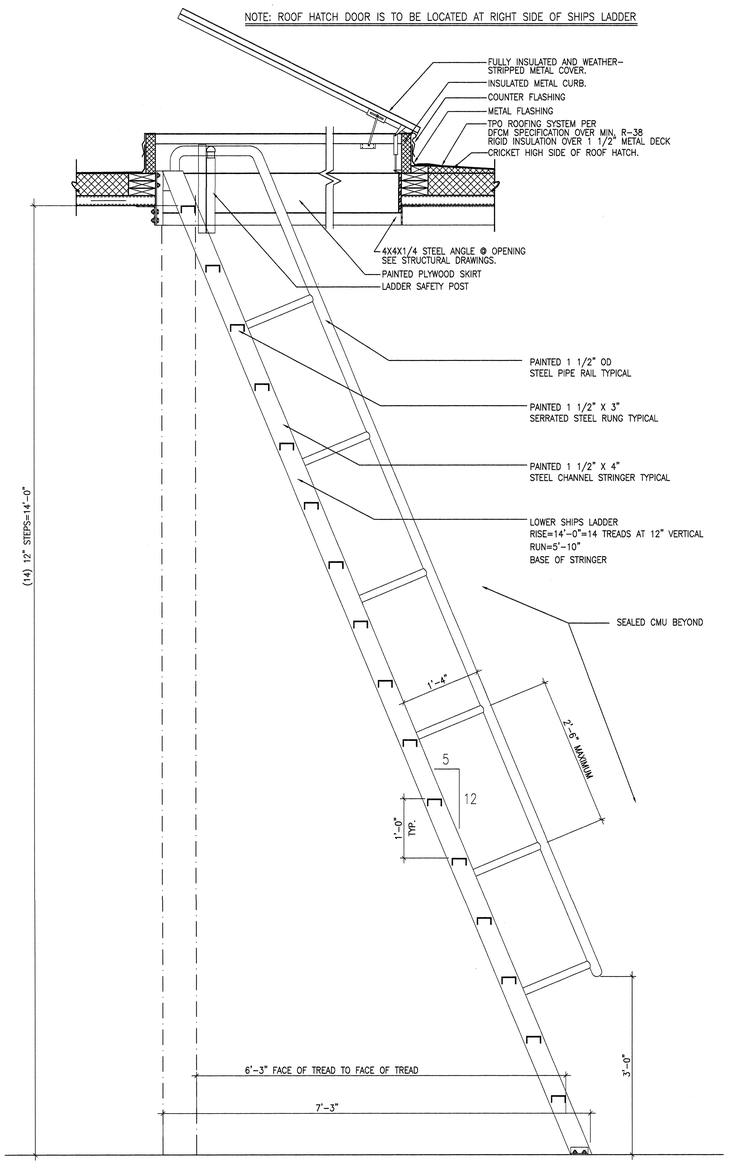

1 A103 ROOF HATCH DETAIL / SHIPS LADDER
SCALE: 3/4" = 1'-0"
0 3" 6" 12" 24"

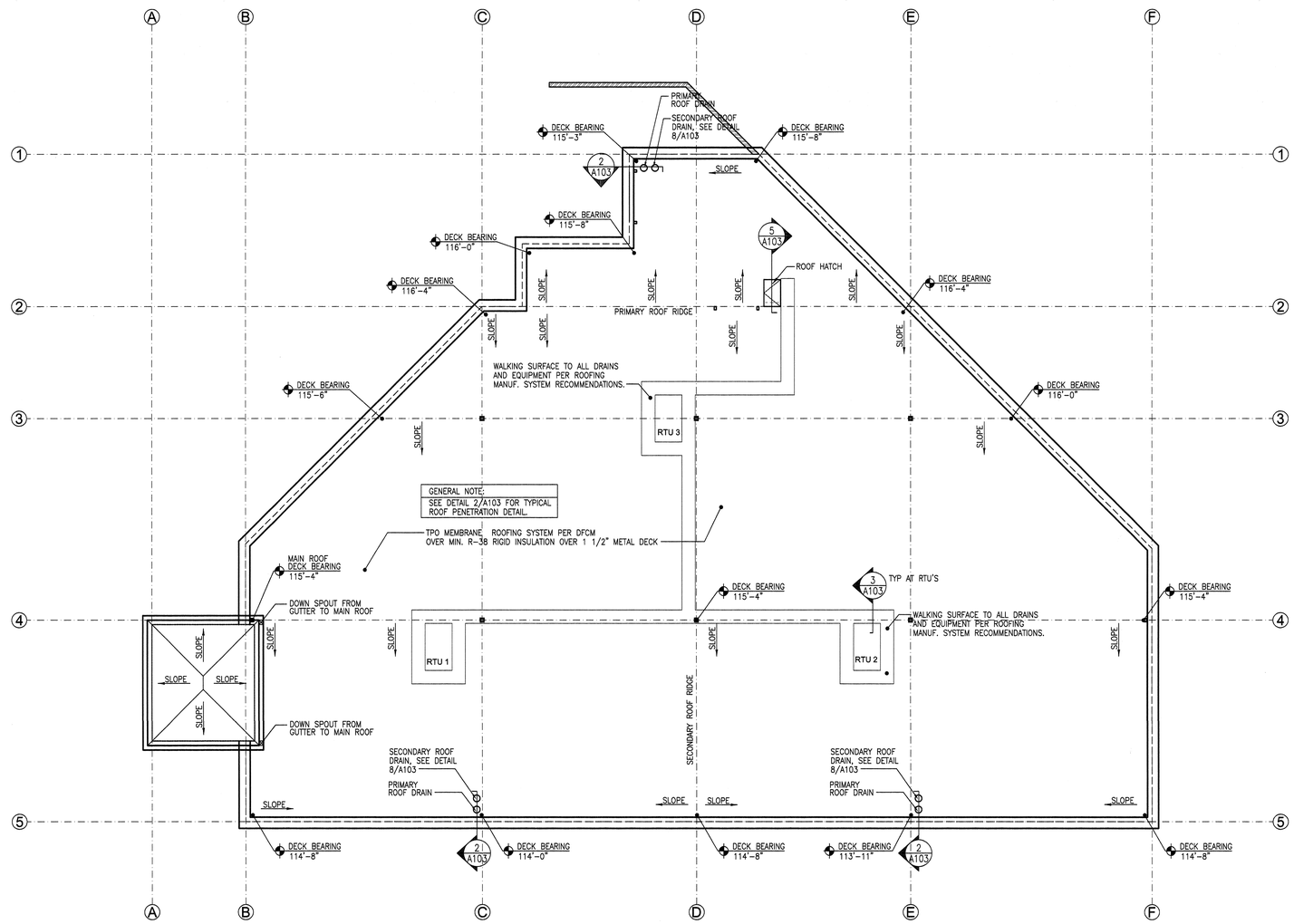

ROOF PLAN
SCALE: 1/8" = 1'-0"
0 2' 4' 8' 16'

NEW RIVERTON LIQUOR STORE

DEPT OF ALCOHOLIC BEVERAGE CONTROL
APPROX. 3900 WEST 13400 SOUTH, RIVERTON, UTAH

FRANK N MURDOCK JR ■ Architect & Associates
975 East 100 South Suite 100, Salt Lake City, Utah 84102 TEL: (801) 532-4441 FAX (801) 532-4220

ROOF PLAN

STATE OF UTAH FRANK N. MURDOCK 124498 LICENSED ARCHITECT

REVISION #	DATE:

DFCM PROJECT NO.:
05053030
CONST. DOC.
FILE NAME: ABCRV-A103
PLOT SCALE: 1:96
DRAWN BY: STAFF
CHECKED BY: FNM
DATE: JUNE 2007

A
103

DASHED LINE REPRESENTS PARTICLE BOARD WAINSCOT, SEE DETAIL 3/A104.

NOTE: OWNER TO PROVIDE AND INSTALL ALL SOAP DISPENSERS, SANITARY NAPKIN DISPOSAL UNIT, PAPER TOWEL DISPENSER AND WASTE UNITS AND TOILET PAPER DISPENSERS.

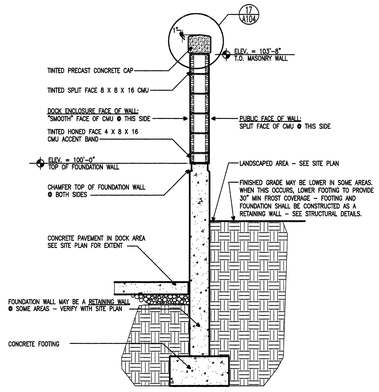

18 A104 MASONRY SCREENWALL
SCALE: NOT TO SCALE

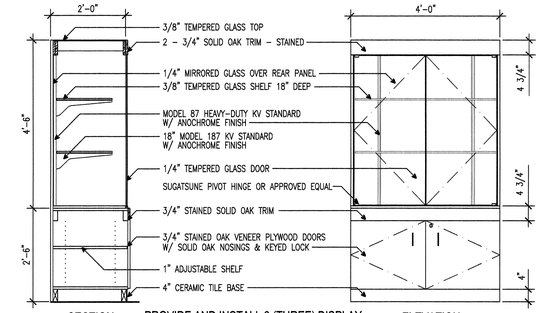

PROVIDE AND INSTALL 3 (THREE) DISPLAY CASES IN THE NEW RIVERTON LIQUOR STORE

19 A104 DISPLAY CASE ELEVATION AND SECTION
SCALE: NOT TO SCALE

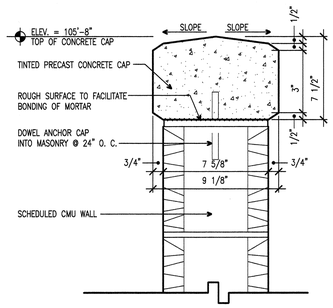

17 A104 SCREENWALL CAP
SCALE: NONE

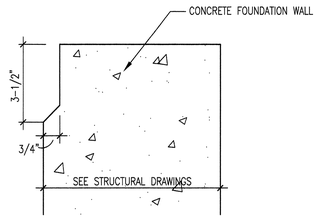

16 A104 CONCRETE REVEAL
SCALE: NONE

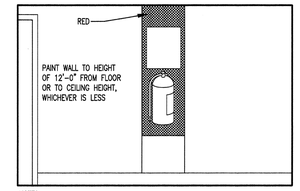

NOTES:
1. FOR FIRE EXTINGUISHERS IN THE WORKROOM, A RED BACKGROUND MUST BE PROVIDED WHICH EXTENDS SIX INCHES ON THE SIDES AND BELOW THE FIRE EXTINGUISHERS OR CABINETS. THE RED BACKGROUND MUST BE EXTENDED ABOVE THE FIRE EXTINGUISHER TO A HEIGHT OF 12 FEET ABOVE THE FINISHED FLOOR OR TO THE CEILING IF THE ROOM IS LESS THAN 12 FEET IN HEIGHT.
2. LOCATE SAFETY EQUIPMENT AT THE HEIGHT RECOMMENDED BY OSHA AND ON THE MOST ACCESSIBLE FACE.

15 A104 FIRE EXTINGUISHER IDENTIFICATION
SCALE: NONE

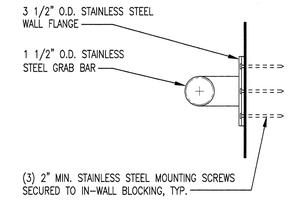

NOTE:
1. INSTALLATION MUST WITHSTAND 250 LB. FORCE IN ANY DIRECTION.

14 A104 GRAB BAR DETAIL
SCALE: 3" = 1'-0"

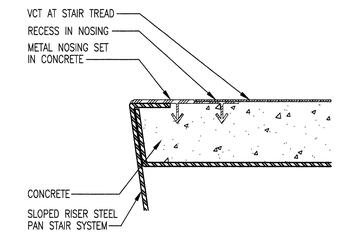

13 A104 STAIR NOSING DETAIL
SCALE: 3" = 1'-0"

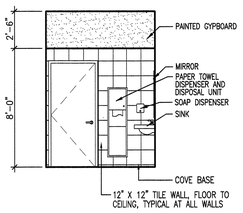

7 A104 ELEV. AT MEN'S RESTROOM
SCALE: 1/4" = 1'-0"

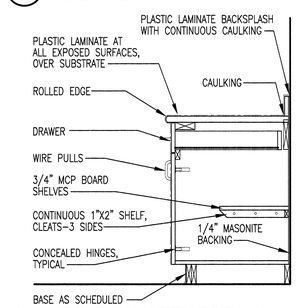

8 A104 BASE CABINET SECTION
SCALE: 1-1/2" = 1'-0"

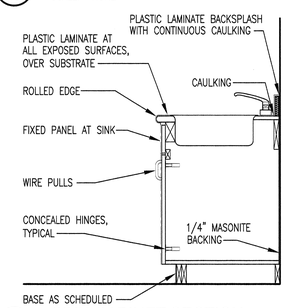

9 A104 SINK CABINET SECTION
SCALE: 1-1/2" = 1'-0"

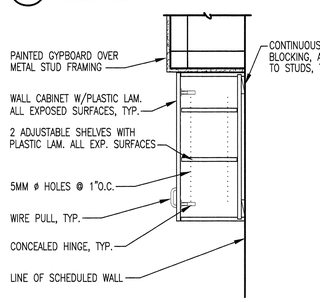

10 A104 UPPER CABINET SECTION
SCALE: 1-1/2" = 1'-0"

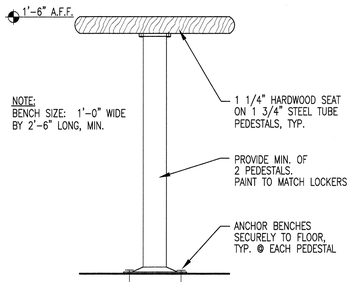

NOTE:
BENCH SIZE: 1'-0" WIDE BY 2'-6" LONG, MIN.

11 A104 LOCKER ROOM BENCH
SCALE: NOT TO SCALE

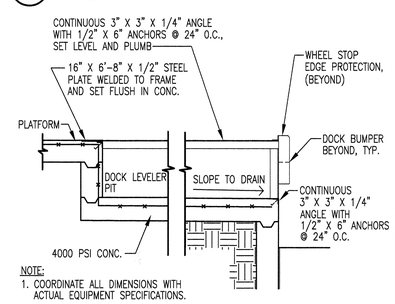

NOTE:
1. COORDINATE ALL DIMENSIONS WITH ACTUAL EQUIPMENT SPECIFICATIONS.

12 A104 DOCK LEVELER
SCALE: 1/2" = 1'-0"

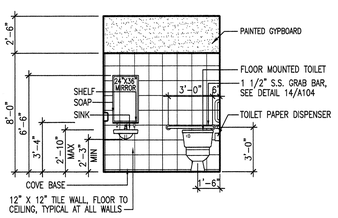

6 A104 ELEV. AT MEN'S RESTROOM
SCALE: 1/4" = 1'-0"

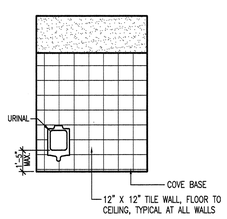

5 A104 ELEV. AT MEN'S RESTROOM
SCALE: 1/4" = 1'-0"

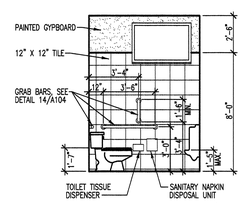

4 A104 ELEV. AT MEN'S RESTROOM
SCALE: 1/4" = 1'-0"

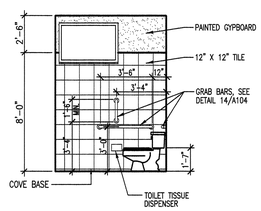

3 A104 ELEV. AT WOMEN'S RESTROOM
SCALE: 1/4" = 1'-0"

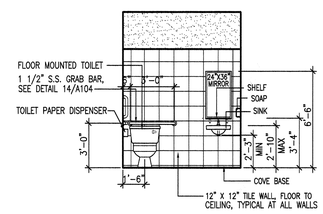

2 A104 ELEV. ATWOMEN'S RESTROOM
SCALE: 1/4" = 1'-0"

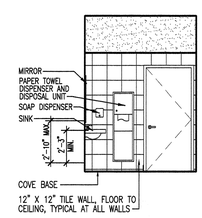

1 A104 ELEV. AT WOMEN'S RESTROOM
SCALE: 1/4" = 1'-0"

NEW RIVERTON LIQUOR STORE

DEPARTMENT OF ALCOHOLIC BEVERAGE CONTROL
APPROX. 3900 WEST 13400 SOUTH, RIVERTON, UTAH

INTERIOR ELEVATIONS AND MISCELLANEOUS DETAILS

FRANK N MURDOCK JR ■ Architect & Associates
975 East 100 South Suite 100, Salt Lake City, Utah 84102 TEL: (801) 532-4441 FAX (801) 532-4220

STATE OF UTAH
FRANK N. MURDOCK
124498
LICENSED ARCHITECT

REVISION # DATE:

DFCM PROJECT NO.:
05053030
CONSTR. DOC.
FILE NAME: ABCRV-A104
PLOT SCALE: 1:24
DRAWN BY: STAFF
CHECKED BY: FNM
DATE: MAY 2007

A
104

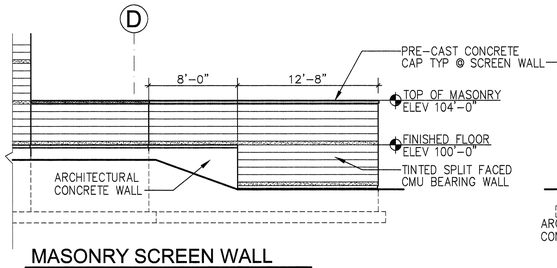

MASONRY SCREEN WALL

SCALE: 3/16" = 1'-0" 0 2' 4' 8' 16'

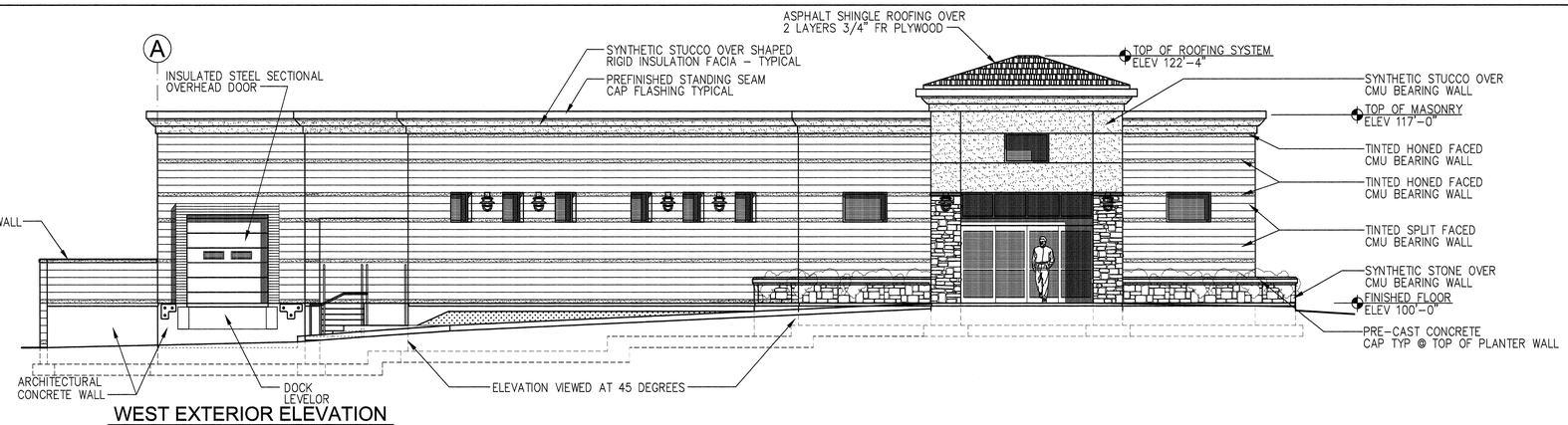

WEST EXTERIOR ELEVATION

SCALE: 3/16" = 1'-0" 0 2' 4' 8' 16'

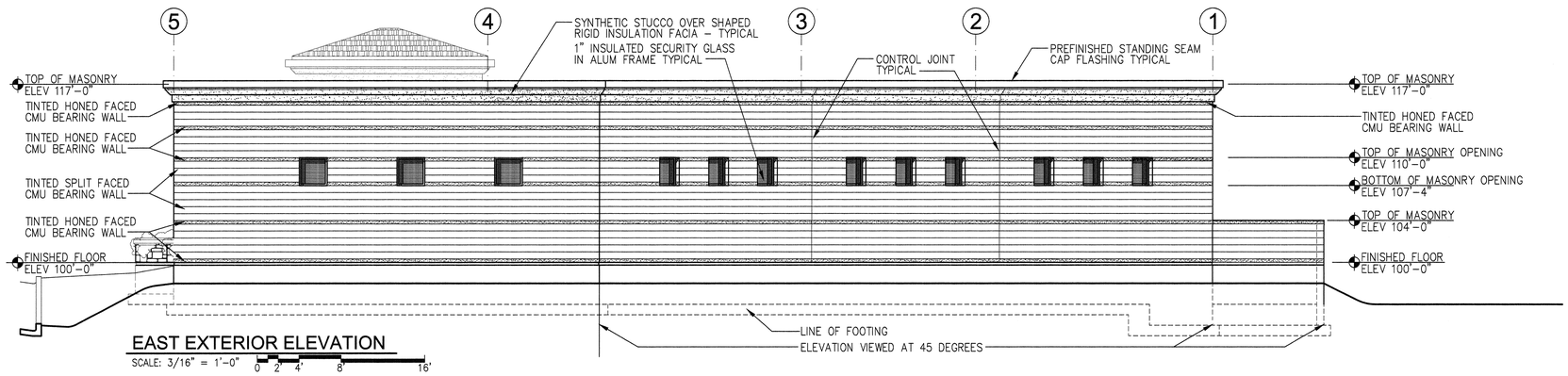

EAST EXTERIOR ELEVATION

SCALE: 3/16" = 1'-0" 0 2' 4' 8' 16'

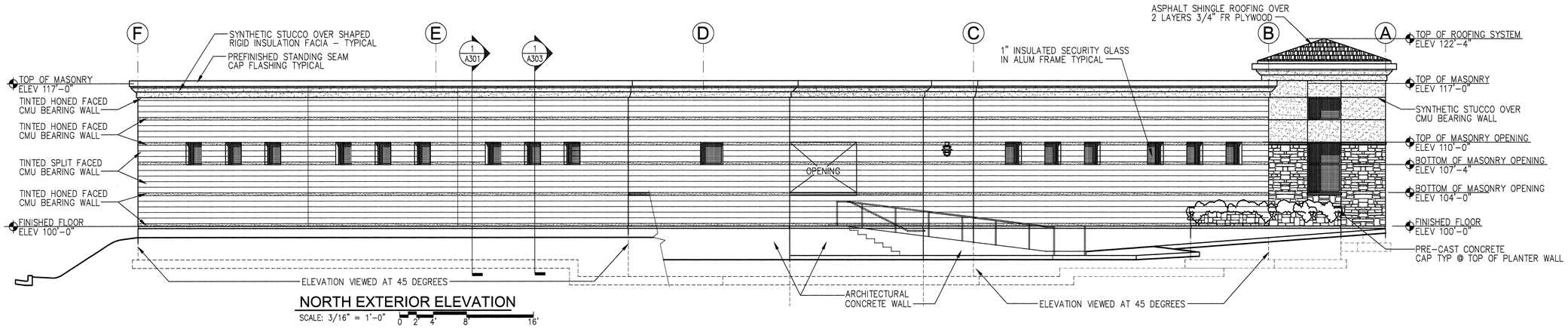

NORTH EXTERIOR ELEVATION

SCALE: 3/16" = 1'-0" 0 2' 4' 8' 16'

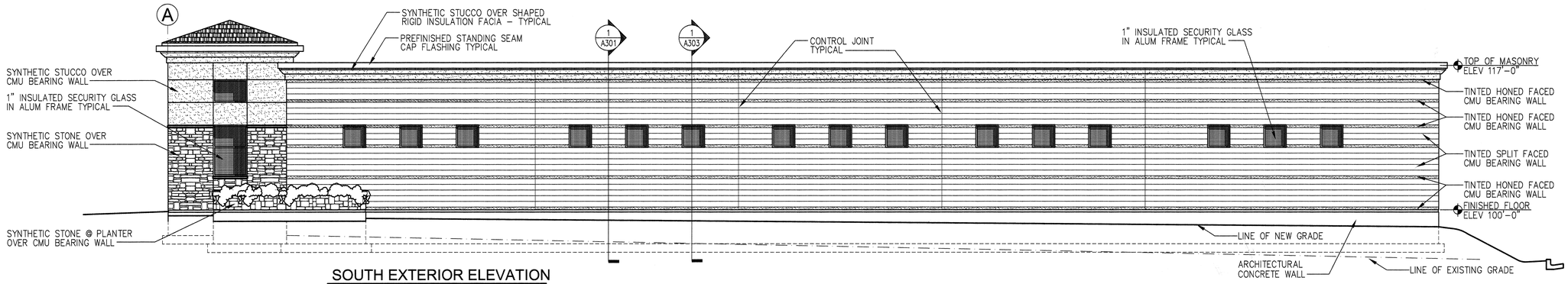

SOUTH EXTERIOR ELEVATION

SCALE: 3/16" = 1'-0" 0 2' 4' 8' 16'

NEW RIVERTON LIQUOR STORE

DEPT OF ALCOHOLIC BEVERAGE CONTROL
RIVERTON, UTAH

FRANK N MURDOCK JR ■ Architect & Associates
975 East 100 South Suite 100, Salt Lake City, Utah 84102 TEL: (801) 532-4441 FAX (801) 532-4220

EXTERIOR ELEVATIONS

STATE OF UTAH
FRANK N. MURDOCK
12498
LICENSED ARCHITECT

REVISION # DATE:

DFCM PROJECT NO.:
05053030
CONSTR. DOC.
FILE NAME: ABCR-A201
PLOT SCALE: 3/16"
DRAWN BY: STAFF
CHECKED BY: FNM
DATE: MAY 2007

A
201

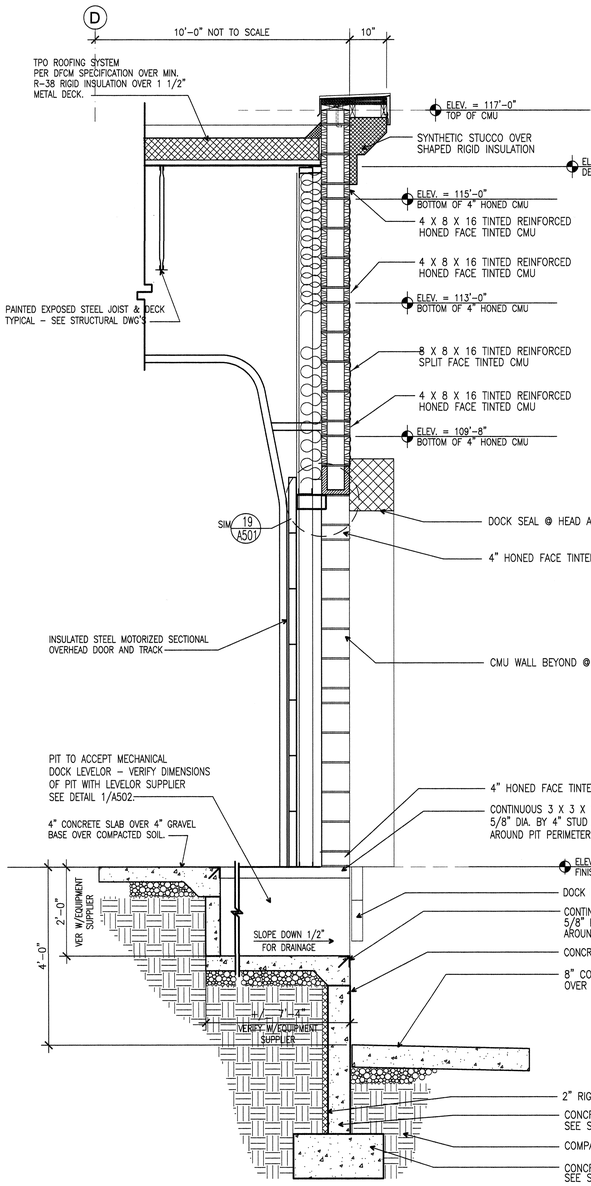

4 A301 EXTERIOR WALL SECTION
SCALE: 3/4" = 1'-0"

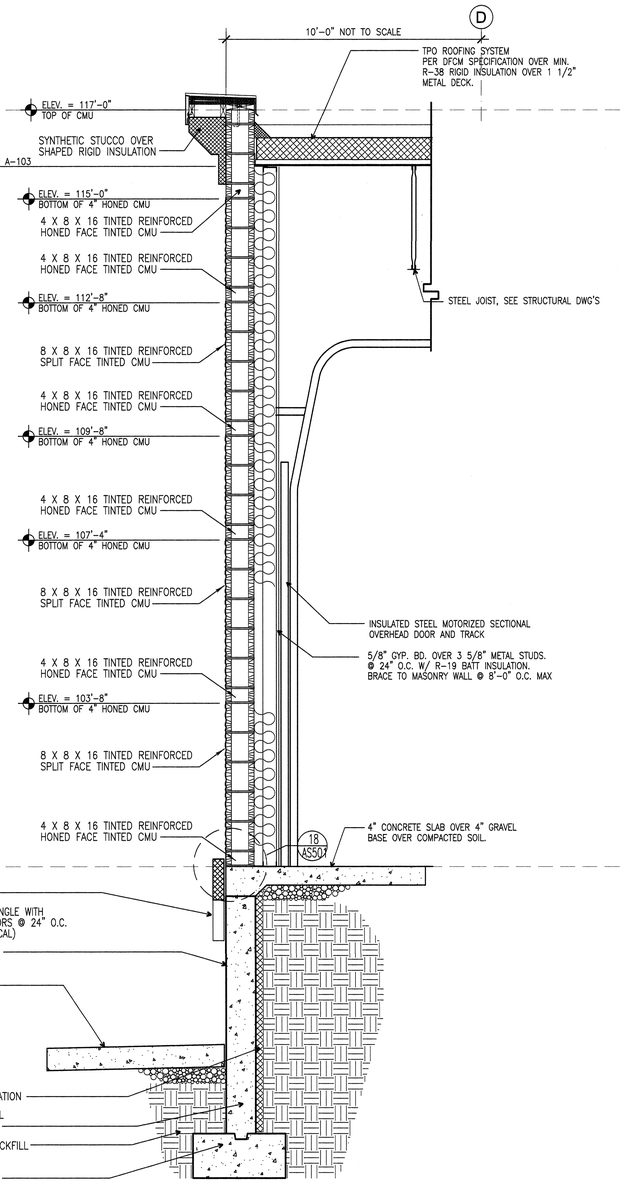

3 A301 EXTERIOR WALL SECTION
SCALE: 3/4" = 1'-0"

WALL CONDITION @
DIAGONAL WALLS

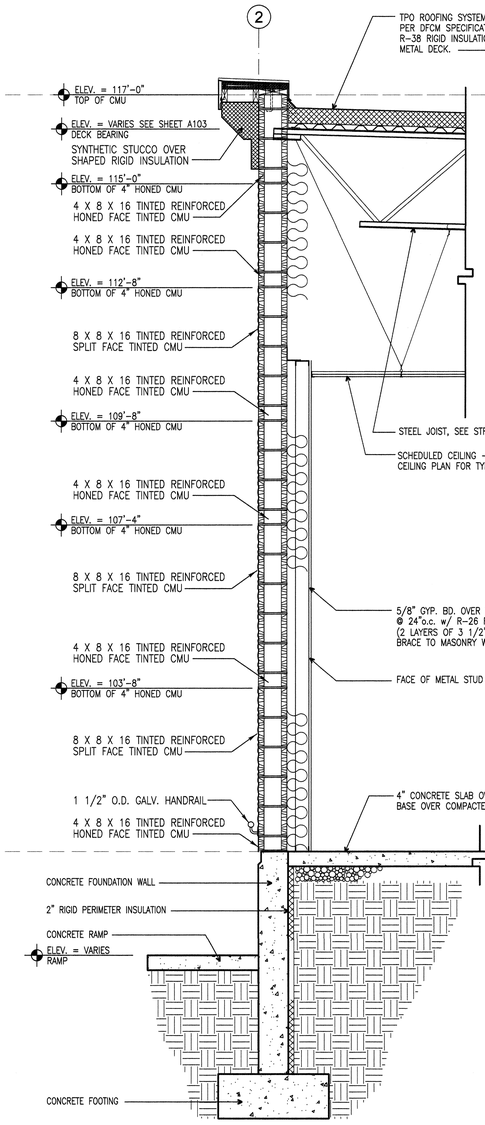

2 A301 WALL SECTION @ GRID "2"
SCALE: 3/4" = 1'-0"

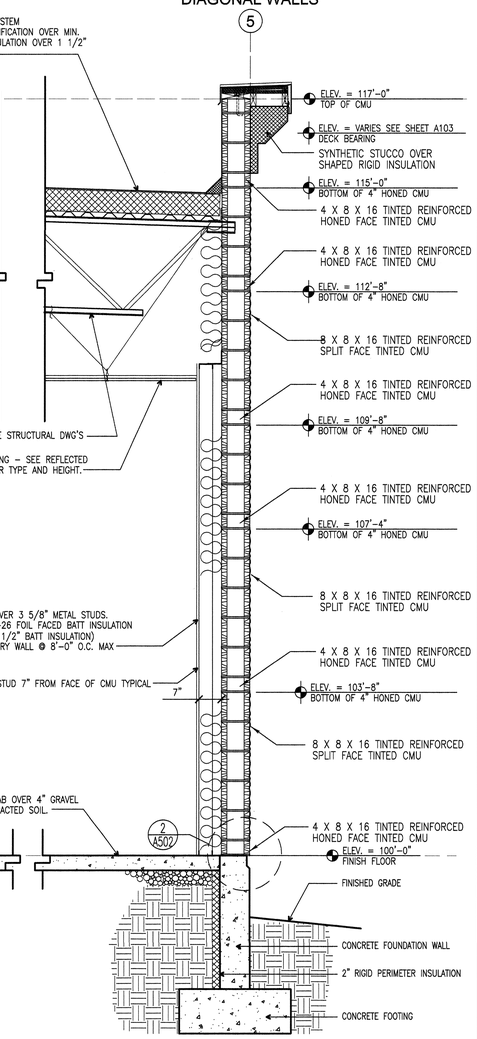

1 A301 WALL SECTION @ GRID "3"
SCALE: 3/4" = 1'-0"

NEW RIVERTON LIQUOR STORE

DEPT OF ALCOHOLIC BEVERAGE CONTROL
RIVERTON, UTAH

FRANK N MURDOCK JR ■ Architect & Associates
975 East 100 South Suite 100, Salt Lake City, Utah 84102 TEL: (801) 532-4441 FAX (801) 532-4220

WALL SECTIONS

STATE OF UTAH
FRANK N. MURDOCK JR.
124498
LICENSED ARCHITECT

REVISION # DATE:

DFCM PROJECT NO.:
05053030
CONSTR. DOC.
FILE NAME: ABCRV-A301
PLOT SCALE: 3/4"
DRAWN BY: STAFF
CHECKED BY: FNM
DATE: MAY 2007

A
301

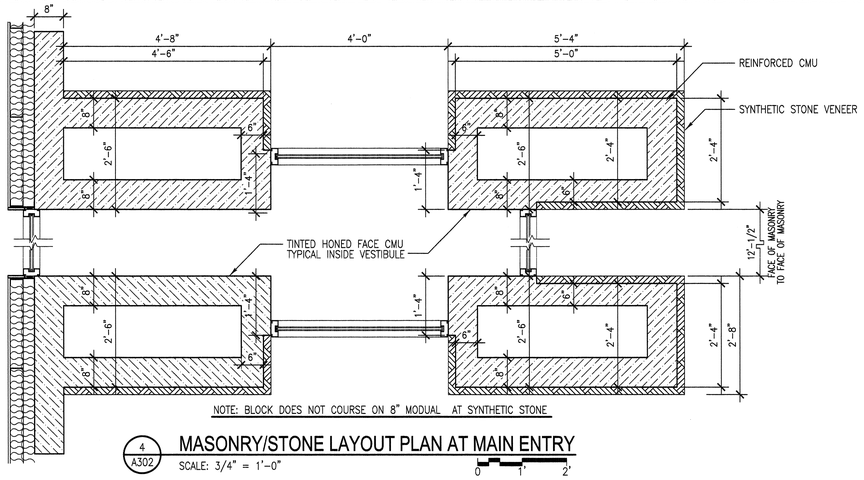

4 A302 MASONRY/STONE LAYOUT PLAN AT MAIN ENTRY
SCALE: 3/4" = 1'-0"

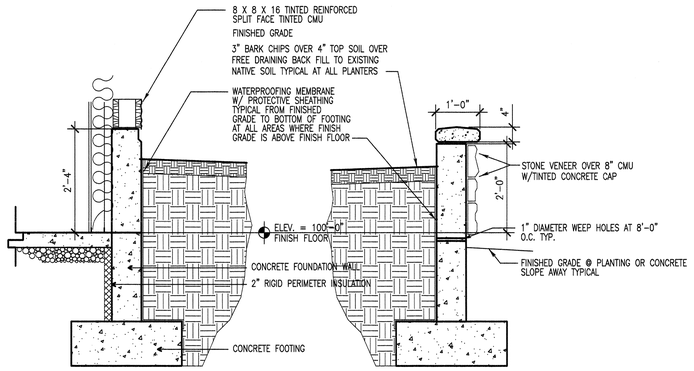

5 A302 TYPICAL PLANTER WALL CONDITIONS
SCALE: 3/4" = 1'-0"

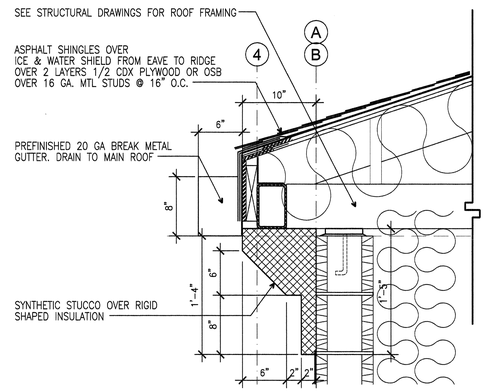

6 A302 ENTRY ROOF EAVE DETAIL
SCALE: 1 1/2" = 1'-0"

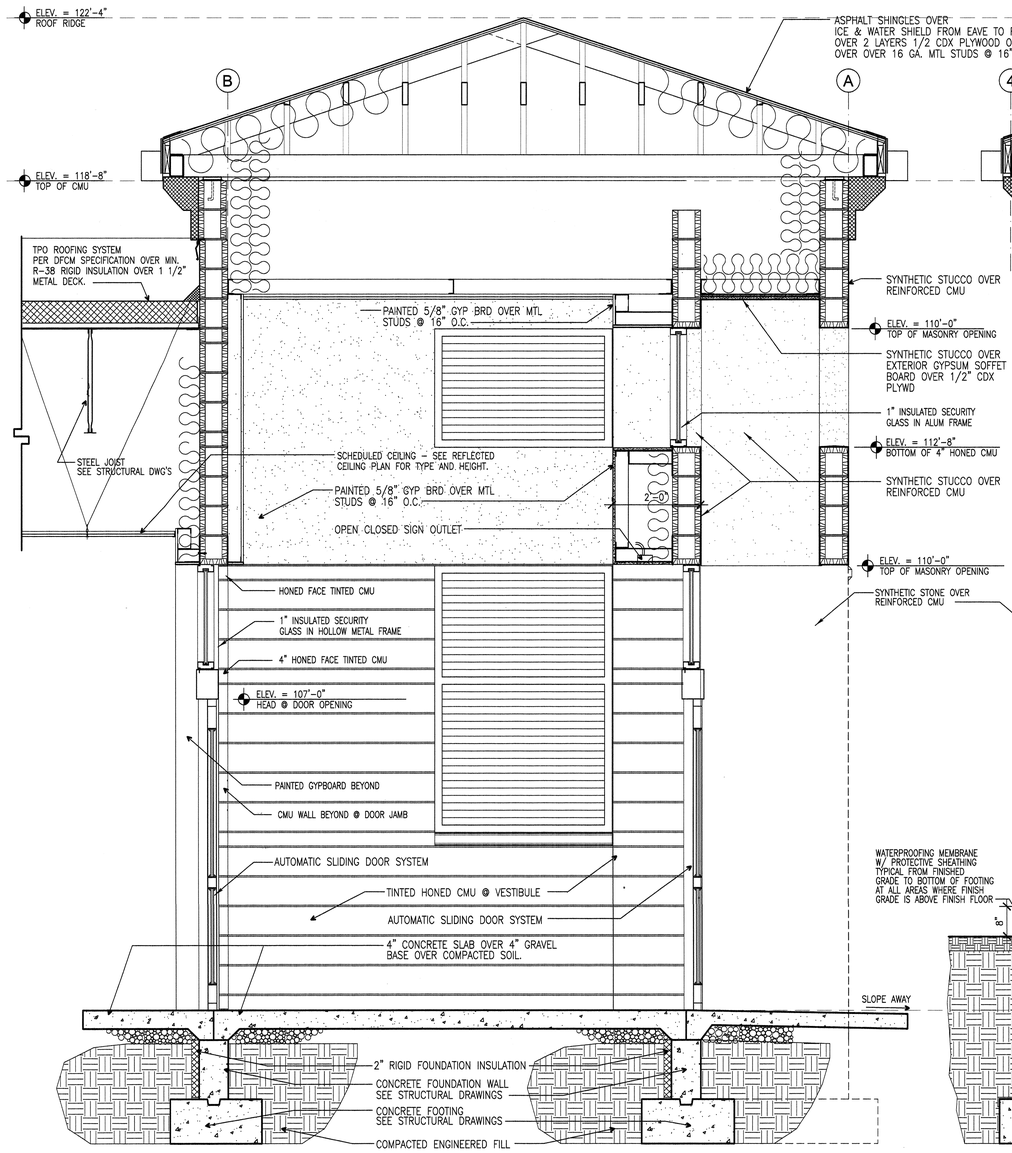

3 A302 EAST WEST EXTERIOR WALL SECTION @ MAIN ENTRY
SCALE: 3/4" = 1'-0"

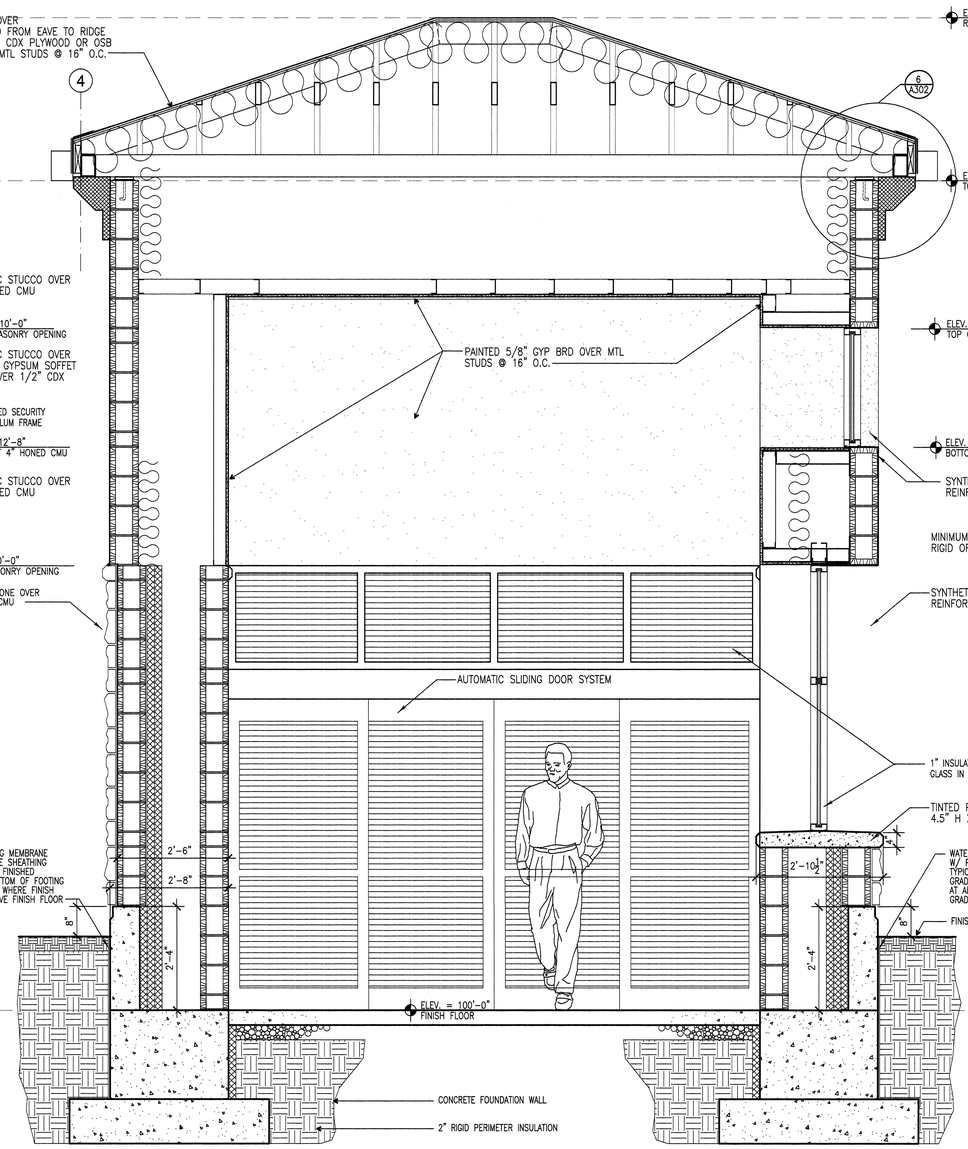

2 A302 NORTH SOUTH EXTERIOR WALL SECTION @ MAIN ENTRY
SCALE: 3/4" = 1'-0"

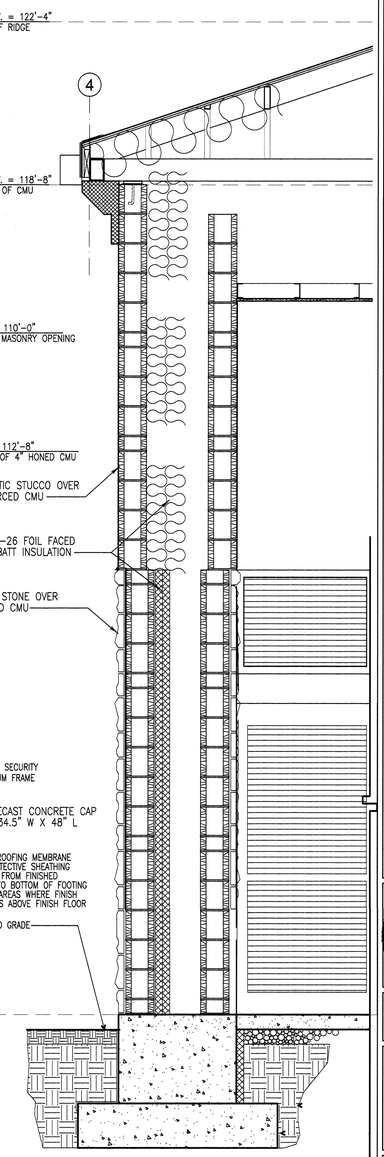

1 A302 SECTION @ MAIN ENTRY
SCALE: 3/4" = 1'-0"

NEW RIVERTON LIQUOR STORE

DEPT OF ALCOHOLIC BEVERAGE CONTROL
RIVERTON, UTAH

FRANK N MURDOCK JR ■ Architect & Associates
975 East 100 South Suite 100, Salt Lake City, Utah 84102 TEL: (801) 532-4441 FAX (801) 532-4220

WALL SECTIONS

STATE OF UTAH
FRANK N. MURDOCK
194499
6/4/07
LICENSED ARCHITECT

REVISION #	DATE:

DFCM PROJECT NO.:
05053030
CONSTR. DOC.
FILE NAME: ABCRV-A302
PLOT SCALE: 3/4"
DRAWN BY: STAFF
CHECKED BY: FNM
DATE: JUNE 2007

A
302

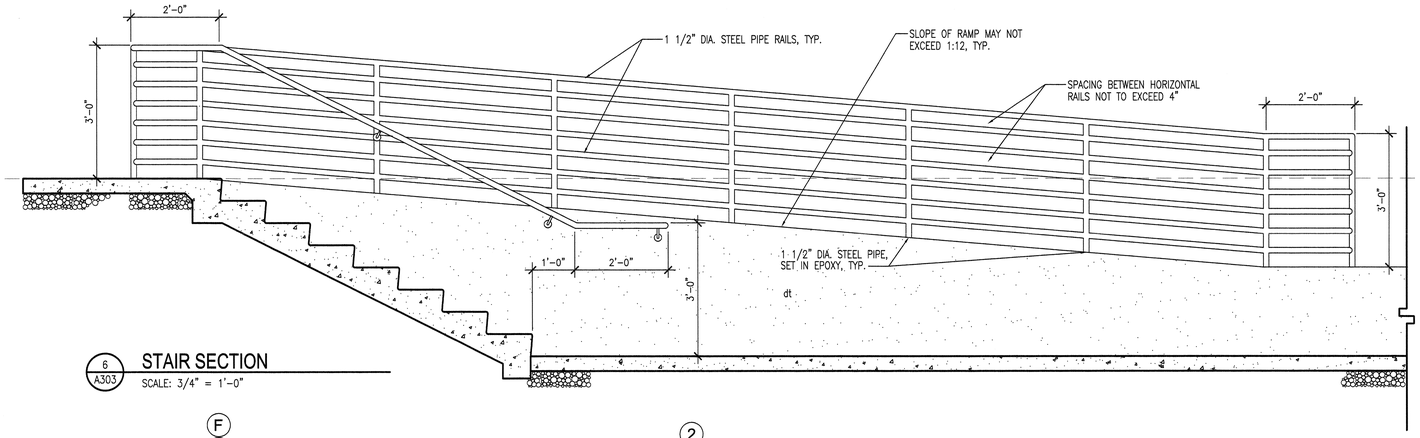

6 A303 STAIR SECTION
SCALE: 3/4" = 1'-0"

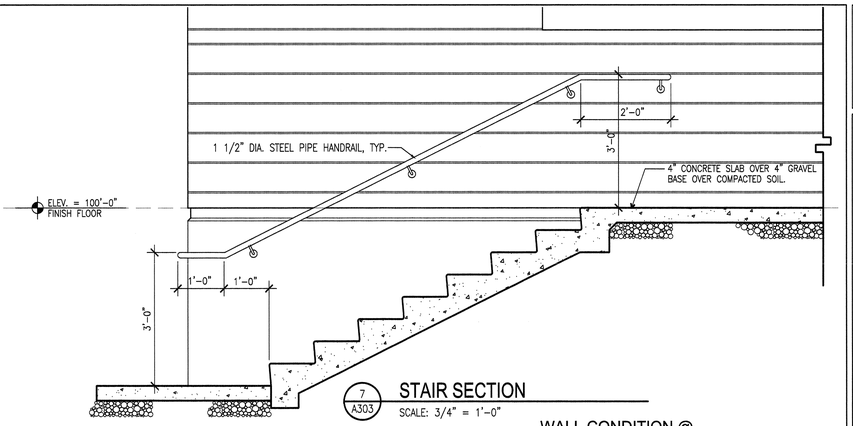

7 A303 STAIR SECTION
SCALE: 3/4" = 1'-0"

WALL CONDITION @ DIAGONAL WALLS

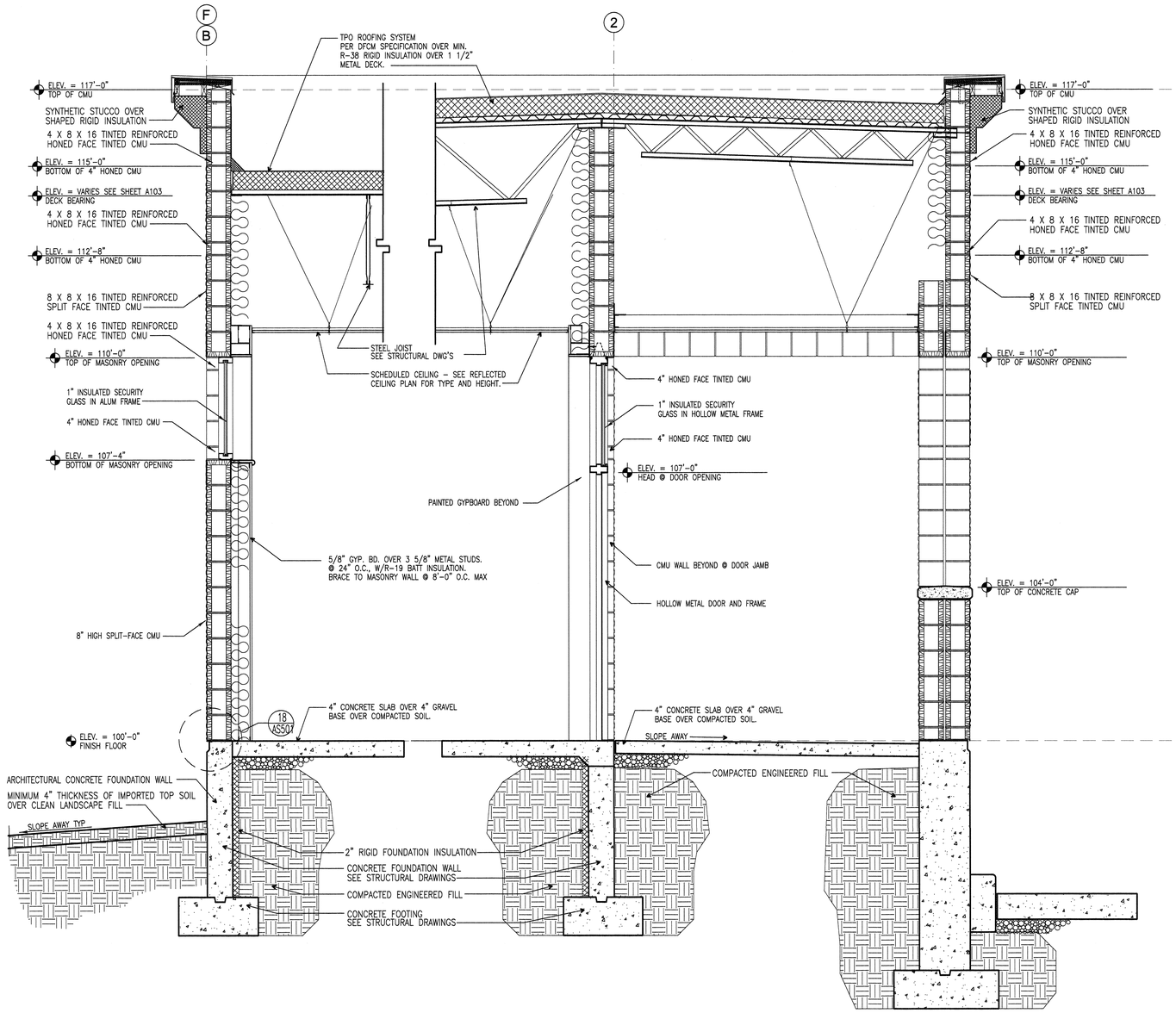

5 A303 WALL SECTION @ GRIDS "B" AND "F"
SCALE: 3/4" = 1'-0"

4 A303 EXTERIOR WALL SECTION
SCALE: 3/4" = 1'-0"

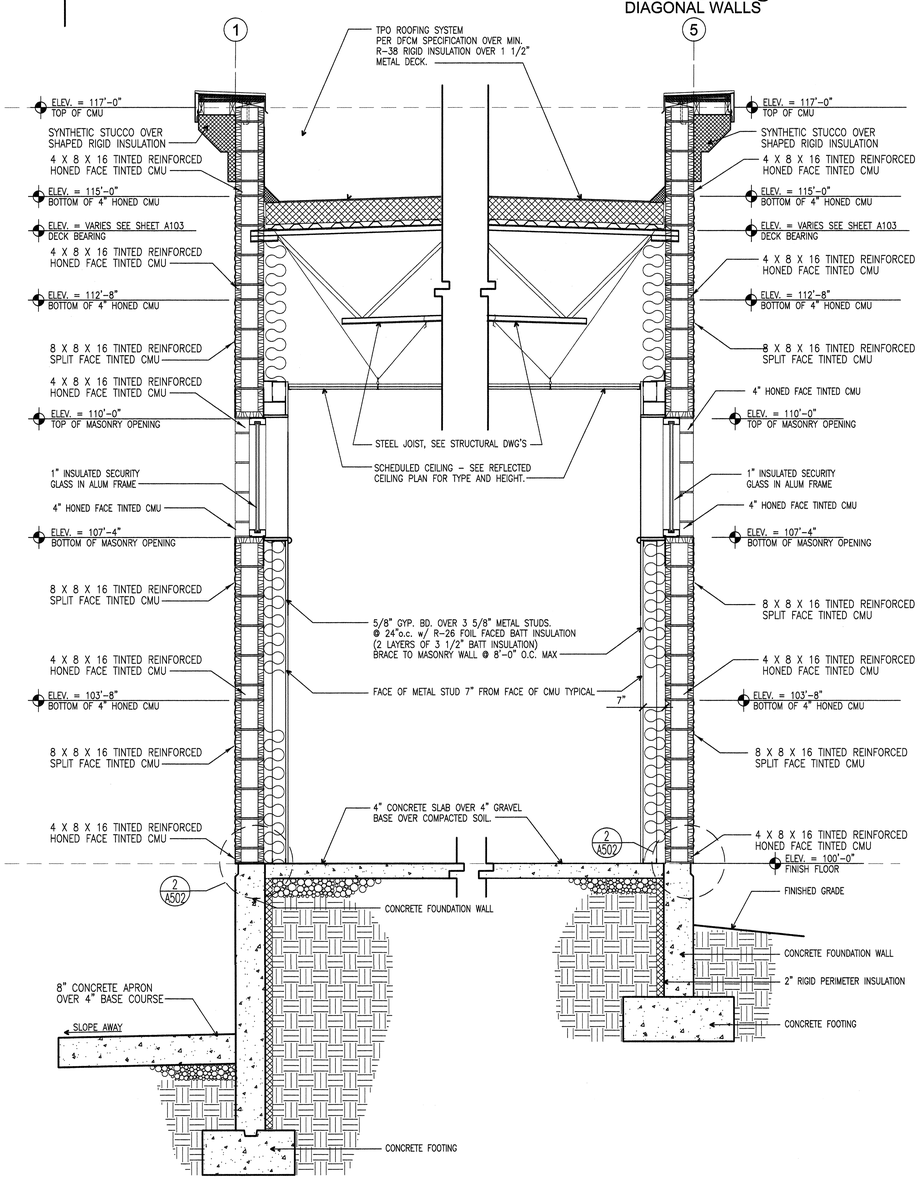

2 A303 WALL SECTION @ GRID "1"
SCALE: 3/4" = 1'-0"

1 A303 WALL SECTION @ GRID "5"
SCALE: 3/4" = 1'-0"

NEW RIVERTON LIQUOR STORE

DEPT OF ALCOHOLIC BEVERAGE CONTROL
RIVERTON, UTAH

FRANK N MURDOCK JR ■ Architect & Associates
975 East 100 South Suite 100, Salt Lake City, Utah 84102 TEL: (801) 532-4441 FAX (801) 532-4220

STATE OF UTAH FRANK N MURDOCK 124498 LICENSED ARCHITECT

REVISION # DATE:

DFCM PROJECT NO.:
05053030
CONSTR. DOC.
FILE NAME: ABCRV-A303
PLOT SCALE: 3/4"
DRAWN BY: STAFF
CHECKED BY: FNM
DATE: JUNE 2007

WALL SECTIONS

A
303

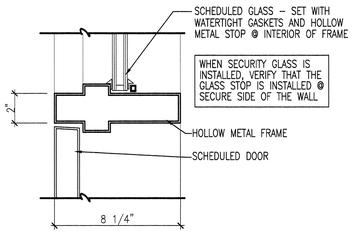

26 A501 HM DOOR HEAD/TRANSOM SILL
SCALE: 3" = 1'-0"

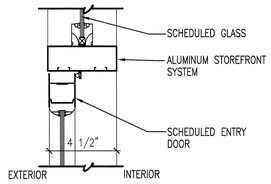

25 A501 STOREFRONT DOOR HEAD/TRANSOM SILL
SCALE: 3" = 1'-0"

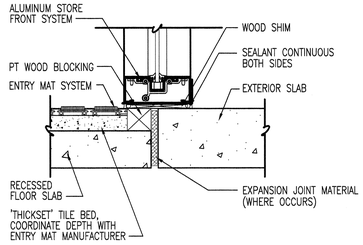

24 A501 STOREFRONT WINDOW SILL
SCALE: 3" = 1'-0"

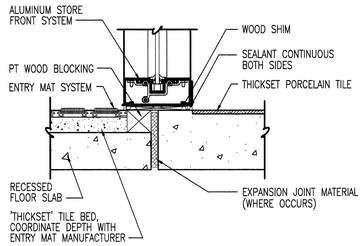

23 A501 STOREFRONT WINDOW SILL
SCALE: 3" = 1'-0"

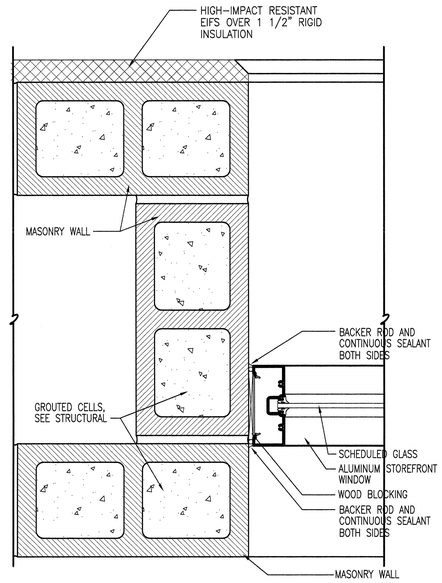

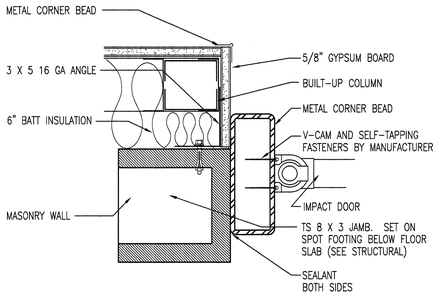

18 A501 IMPACT DOOR JAMB/head sim
SCALE: 3" = 1'-0"

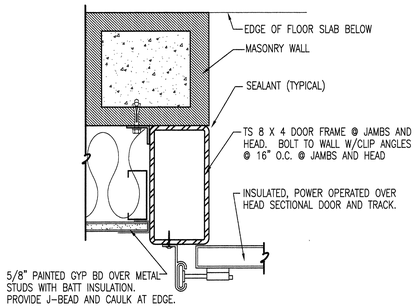

19 A501 OVERHEAD DOOR JAMB
SCALE: 3" = 1'-0"

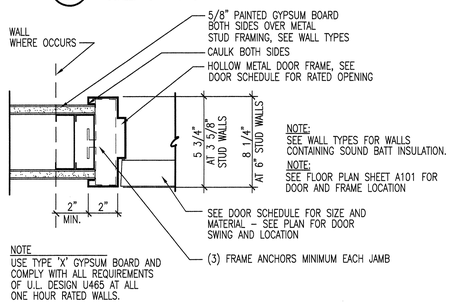

20 A501 HOLLOW METAL DOOR (INTERIOR)
SCALE: 3" = 1'-0"

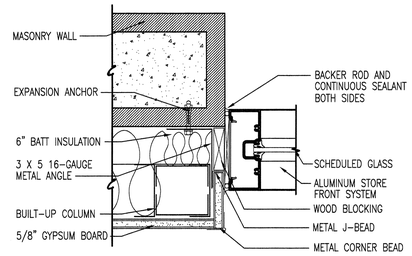

21 A501 STOREFRONT WINDOW JAMB
SCALE: 3" = 1'-0"

22 A501 STOREFRONT WINDOW JAMB
SCALE: 3" = 1'-0"

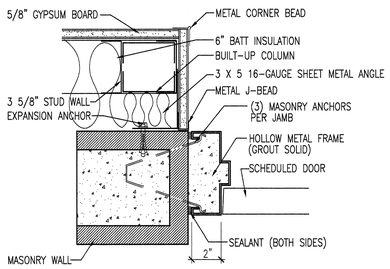

17 A501 HOLLOW METAL DOOR JAMB
SCALE: 3" = 1'-0"

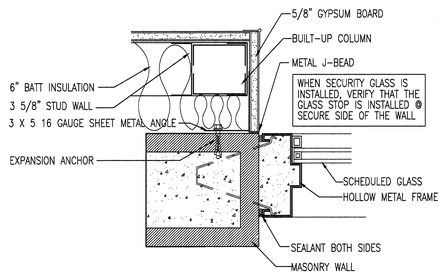

16 A501 HOLLOW METAL WINDOW JAMB
SCALE: 3" = 1'-0"

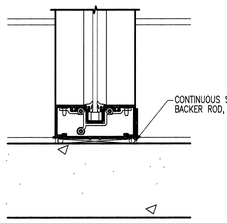

15 A501 STOREFRONT WINDOW SILL
SCALE: 3" = 1'-0"

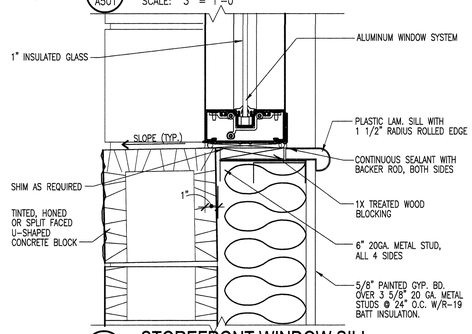

14 A501 STOREFRONT WINDOW SILL
SCALE: 3" = 1'-0"

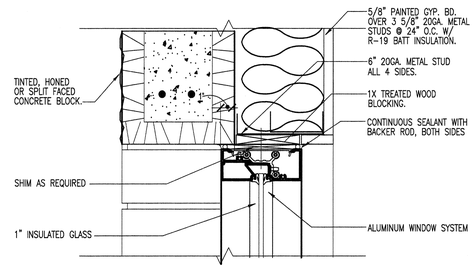

13 A501 STOREFRONT WINDOW HEAD
SCALE: 3" = 1'-0"

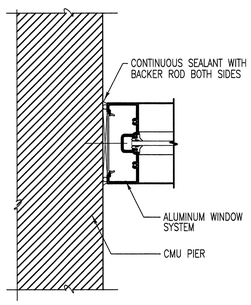

7 A501 STOREFRONT WINDOW JAMB
SCALE: 3" = 1'-0"

NOT USED

NOT USED

NOT USED

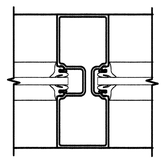

11 A501 STOREFRONT MULLION/MUNTON
SCALE: 1-1/2" = 1'-0"

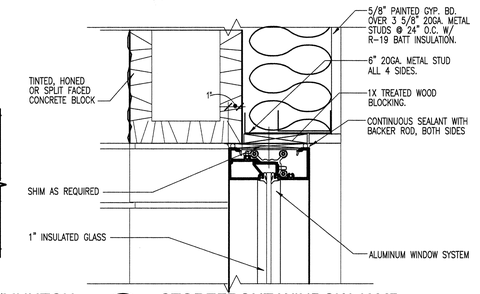

12 A501 STOREFRONT WINDOW JAMB
SCALE: 1-1/2" = 1'-0"

8 A501 STOREFRONT WINDOW HEAD
SCALE: 3" = 1'-0"

9 A501 STOREFRONT WINDOW HEAD/SILL
SCALE: 3" = 1'-0"

10 A501 STOREFRONT WINDOW HEAD/SILL
SCALE: NOT TO SCALE

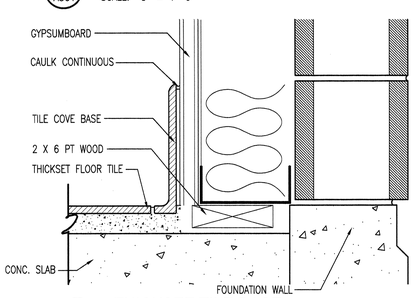

6 A501 THICKSET TILE BASE
SCALE: 3" = 1'-0"

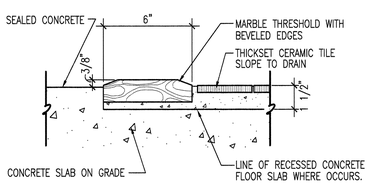

5 A501 MARBLE THRESHOLD
SCALE: 3" = 1'-0"

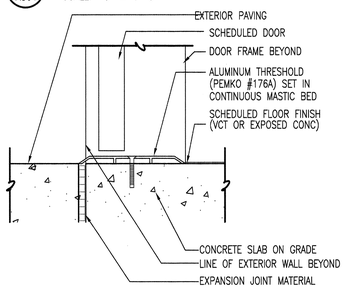

4 A501 DOOR THRESHOLD
SCALE: 3"=1'-0"

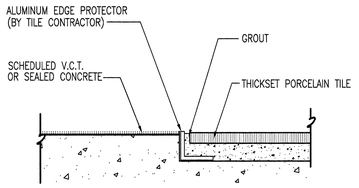

3 A501 CONCRETE TO TILE TRANSITION
SCALE: NONE

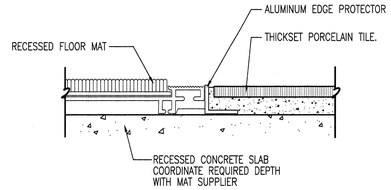

2 A501 TILE TO FLOOR MAT DETAIL
SCALE: NONE

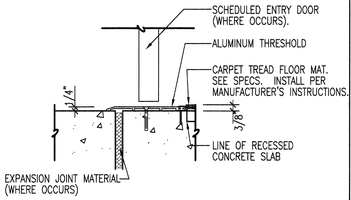

1 A501 DOOR THRESHOLD (entry mat)
SCALE: 3" = 1'-0"

NEW RIVERTON LIQUOR STORE

DEPARTMENT OF ALCOHOLIC BEVERAGE CONTROL
APPROX. 3900 WEST 13400 SOUTH, RIVERTON, UTAH

MISCELLANEOUS DETAILS

FRANK N MURDOCK JR ■ Architect & Associates
975 East 100 South Suite 100, Salt Lake City, Utah 84102 TEL: (801) 532-4441 FAX (801) 532-4220

STATE OF UTAH FRANK N. MURDOCK 124408-2 LICENSED ARCHITECT

REVISION # DATE:

DFCM PROJECT NO.: 05053030
CONSTR. DOC.
FILE NAME: ABCRV-A501
PLOT SCALE: 3:12
DRAWN BY: STAFF
CHECKED BY: FNM
DATE: MAY 2007

A 501

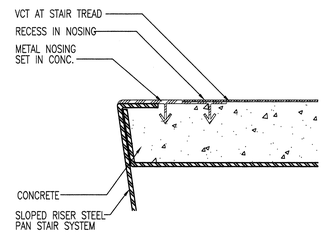

13 A502 STAIR NOSING DETAIL
SCALE: 3" = 1'-0"

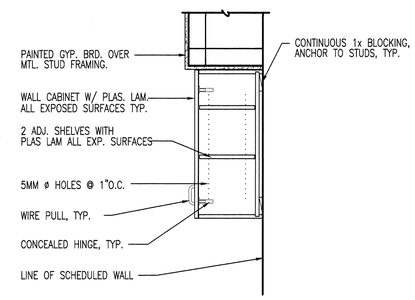

12 A502 UPPER CABINET SECTION
SCALE: 1-1/2" = 1'-0"

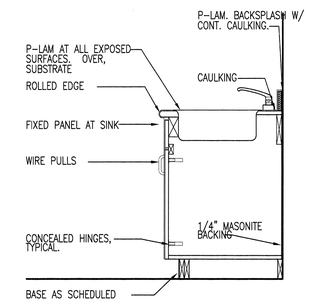

11 A502 SINK CABINET SECTION
SCALE: 1-1/2" = 1'-0"

NOT USED

6 A502 NOT USED
SCALE: NONE

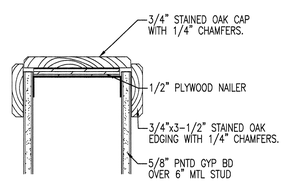

7 A502 WALL CAP
SCALE: NONE

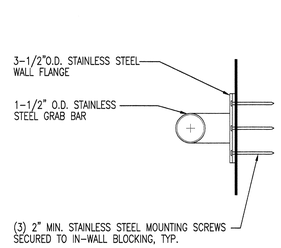

NOTE:
1. INSTALLATION MUST WITHSTAND 250 LB. FORCE IN ANY DIRECTION.

8 A502 GRAB BAR DETAIL
SCALE: 3" = 1'-0"

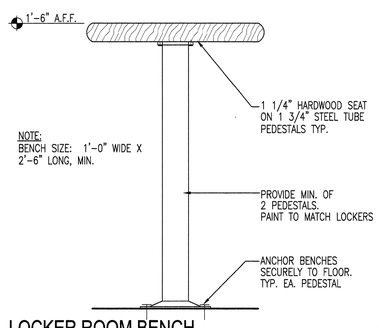

NOTE:
BENCH SIZE: 1'-0" WIDE X 2'-6" LONG, MIN.

9 A502 LOCKER ROOM BENCH
SCALE: 3" = 1'-0"

10 A502 BASE CABINET SECTION
SCALE: 1-1/2" = 1'-0"

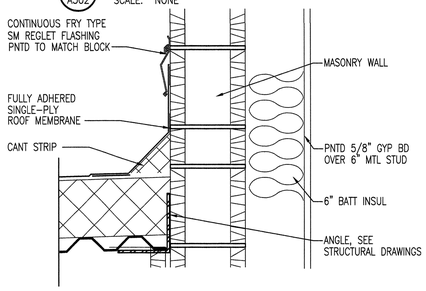

5 A502 ROOF FLASHING
SCALE: NONE

NOT USED

4 A502 NOT USED
SCALE: NONE

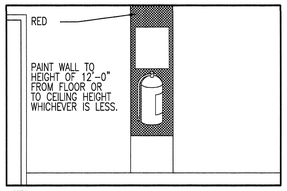

NOTES:
1. FOR FIRE EXTINGUISHERS IN THE WORKROOM, A RED BACKGROUND MUST BE PROVIDED WHICH EXTENDS SIX INCHES ON THE SIDES AND BELOW THE FIRE EXTINGUISHERS OR CABINETS. THE RED BACKGROUND MUST BE EXTENDED ABOVE THE FIRE EXTINGUISHER TO A HEIGHT OF 12 FEET ABOVE THE FINISHED FLOOR OR TO THE CEILING IF THE ROOM IS LESS THAN 12 FEET IN HEIGHT.
2. LOCATE SAFETY EQUIPMENT AT THE HEIGHT RECOMMENDED BY OSHA AND ON THE MOST ACCESSIBLE FACE.

3 A502 FIRE EXTINGUISHER IDENTIFICATION
SCALE: NONE

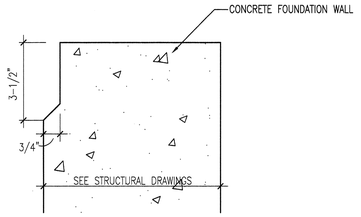

2 A502 CONCRETE REVEAL
SCALE: NONE

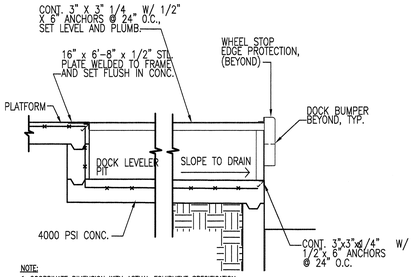

NOTE:
1. COORDINATE DIMENSION WITH ACTUAL EQUIPMENT SPECIFICATION.

1 A502 DOCK LEVELER
SCALE: 1/2" = 1'-0"

NEW RIVERTON LIQUOR STORE
DEPARTMENT OF ALCOHOLIC BEVERAGE CONTROL
RIVERTON, UTAH

FRANK N MURDOCK JR ■ Architect & Associates
975 East 100 South Suite 100, Salt Lake City, Utah 84102 TEL: (801) 532-4441 FAX (801) 532-4220

MISCELLANEOUS DETAILS

STATE OF UTAH
FRANK N. MURDOCK
124498
LICENSED ARCHITECT

REVISION # DATE:

DFCM PROJECT NO.:
05053030
CONST. DOC.
FILE NAME: ABCRV-A502
PLOT SCALE: 3:12
DRAWN BY: STAFF
CHECKED BY: FNM
DATE: MAY 2007

A
502

FINISH SCHEDULE

ROOM	FLOOR	WALL	BASE	CEILING	HEIGHT	REMARKS
ENTRY VESTIBULES	THICKSET TILE/ENTRY MAT	PNTD GYP BD	CERAMIC TILE	PNTD GYP BD	14'-0"	
SALES AREA	THICKSET TILE	PNTD GYP BD	CERAMIC TILE	2 X 4 ACOUSTICAL	10'-4"	
STOREROOM	SEALED CONCRETE	PNTD GYP BD	VINYL	2 X 4 ACOUSTICAL	10'-4"	
OFFICE	VCT	PNTD GYP BD	VINYL	2 X 4 ACOUSTICAL	11'-6"	RAISED PLATFORM
STORAGE	SEALED CONCRETE	PNTD GYP BD	VINYL	2 X 4 ACOUSTICAL	11'-6"	
JANITOR'S ROOM	SEALED CONCRETE	PNTD GYP BD	VINYL	2 X 4 ACOUSTICAL	11'-6"	TILE TWO WALLS AT FLOOR SINK, SEE ELEV.
WOMEN'S TOILET	THICKSET TILE	TILE	TILE	PNTD GYP BD	8'-0"	WALL TILE FLOOR TO CEILING
MEN'S TOILET	THICKSET TILE	TILE	TILE	PNTD GYP BD	8'-0"	WALL TILE FLOOR TO CEILING
LUNCH COUNTER	SEALED CONCRETE	PNTD GYP BD	VINYL	2X4 ACOUSTICAL	10'-4"	SEE INTERIOR ELEVATIONS FOR CABINETRY
ENCLOSED DOCK	SEALED CONCRETE	PNTD GYP BD	VINYL	EXPOSED STRUCTURE	VARIES	

GLASS TYPES

A — 1" THICK "LOW E" INSULATING GLASS: 1/4" TINTED FLOAT GLASS EXTERIOR AND 1/4" CLEAR FLOAT GLASS INTERIOR WITH 1/2" AIR SPACE.

ACT — 1" THICK "LOW E" INSULATING GLASS: 1/4" CLEAR FLOAT TEMPERED GLASS EXTERIOR AND 1/4" CLEAR FLOAT TEMPERED GLASS INTERIOR WITH 1/2" AIR SPACE.

P — 1/8" POLYCARBONATE AT IMPACT DOORS AND OVERHEAD DOORS (PROVIDED AND INSTALLED BY DOOR MANUFACTURER).

S — SECURITY GLASS "LOW E": 1" THICK INSULATING GLASS: 1/4 TINTED FLOAT GLASS EXTERIOR, AND 5/16" SECURITY-LAMINATED SHEETS OF GLASS WITH INNER LAYER OF .075" VINYL OR POLYCARBONATE @ INTERIOR WITH 7/16" AIRSPACE BETWEEN INTERIOR AND EXTERIOR GLASS.

ST — SECURITY GLASS "LOW E": 1" THICK INSULATING GLASS: 1/4 TINTED FLOAT TEMPERED GLASS EXTERIOR, AND 5/16" SECURITY-LAMINATED SHEETS OF GLASS WITH INNER LAYER OF .075" VINYL OR POLYCARBONATE @ INTERIOR WITH 7/16" AIRSPACE BETWEEN INTERIOR AND EXTERIOR GLASS.

SCT — SECURITY GLASS "LOW E": 1" THICK INSULATING GLASS: 1/4 CLEAR FLOAT TEMPERED GLASS EXTERIOR, AND 5/16" SECURITY-LAMINATED SHEETS OF GLASS WITH INNER LAYER OF .075" VINYL OR POLYCARBONATE @ INTERIOR WITH 7/16" AIRSPACE BETWEEN INTERIOR AND EXTERIOR GLASS.

FRAME TYPES

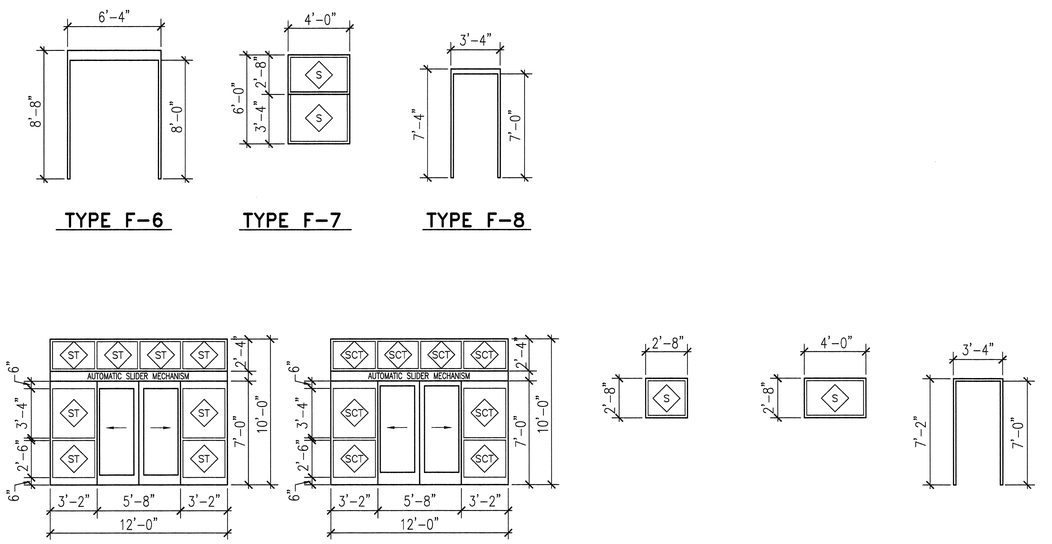

WINDOW SCHEDULE

NO.	SIZE		FRAME			GLASS	WDW	DETAIL REFERENCE				NO.	REMARKS
	WIDTH	HEIGHT	MATERIAL	TYPE	FINISH	TYPE	BLINDS	HEAD	LEFT JAMB	RIGHT JAMB	SILL		CONTRACTOR TO COORDINATE ALL WINDOW DIMENSIONS WITH THE MANUFACTURER
1	12'-0"	10'-0"	ALUM	F-1	FF	ST	---	13/A501sim	7/A501	7/A501	24/A501	1	ENTRY DOOR INTEGRAL TO WDW FRAME
2	4'-0"	2'-8"	ALUM	F-4	FF	S	---	13/A501sim	13/A501	13/A501	2/A501	2	ENTRY DOOR INTEGRAL TO WDW FRAME
3	4'-0"	6'-0"	ALUM	F-7	FF	S	---	22/A501sim	22/A501	22/A501	22/A501	3	
4	4'-0"	2'-8"	ALUM	F-4	FF	S	---	22/A501sim	22/A501	22/A501	22/A501	4	
5	4'-0"	2'-8"	ALUM	F-4	FF	S	---	13/A501	12/A501	12/A501	14/A501	5	
6	2'-8"	2'-8"	ALUM	F-3	FF	S	---	13/A501	12/A501	12/A501	14/A501	6	
7	2'-8"	2'-8"	ALUM	F-3	FF	S	---	13/A501	12/A501	12/A501	14/A501	7	
8	2'-8"	2'-8"	ALUM	F-3	FF	S	---	13/A501	12/A501	12/A501	14/A501	8	
9	2'-8"	2'-8"	ALUM	F-3	FF	S	---	13/A501	12/A501	12/A501	14/A501	9	
10	2'-8"	2'-8"	ALUM	F-3	FF	S	---	13/A501	12/A501	12/A501	14/A501	10	
11	2'-8"	2'-8"	ALUM	F-3	FF	S	---	13/A501	12/A501	12/A501	14/A501	11	
12	2'-8"	2'-8"	ALUM	F-3	FF	S	---	13/A501	12/A501	12/A501	14/A501	12	
13	2'-8"	2'-8"	ALUM	F-3	FF	S	---	13/A501	12/A501	12/A501	14/A501	13	
14	2'-8"	2'-8"	ALUM	F-3	FF	S	---	13/A501	12/A501	12/A501	14/A501	14	
15	2'-8"	2'-8"	ALUM	F-3	FF	S	---	13/A501	12/A501	12/A501	14/A501	15	
16	2'-8"	2'-8"	ALUM	F-3	FF	S	---	13/A501	12/A501	12/A501	14/A501	16	
17	2'-8"	2'-8"	ALUM	F-3	FF	S	---	13/A501	12/A501	12/A501	14/A501	17	
18	2'-8"	2'-8"	ALUM	F-3	FF	S	---	13/A501	12/A501	12/A501	14/A501	18	
19	2'-8"	2'-8"	ALUM	F-3	FF	S	---	13/A501	12/A501	12/A501	14/A501	19	
20	2'-8"	2'-8"	ALUM	F-3	FF	S	---	13/A501	12/A501	12/A501	14/A501	20	
21	2'-8"	2'-8"	ALUM	F-3	FF	S	---	13/A501	12/A501	12/A501	14/A501	21	
22	2'-8"	2'-8"	ALUM	F-3	FF	S	---	13/A501	12/A501	12/A501	14/A501	22	
23	2'-8"	2'-8"	ALUM	F-3	FF	S	---	13/A501	12/A501	12/A501	14/A501	23	
24	2'-8"	2'-8"	ALUM	F-3	FF	S	---	13/A501	12/A501	12/A501	14/A501	24	
25	2'-8"	2'-8"	ALUM	F-3	FF	S	---	13/A501	12/A501	12/A501	14/A501	25	
26	2'-8"	2'-8"	ALUM	F-3	FF	S	---	13/A501	12/A501	12/A501	14/A501	26	
27	2'-8"	2'-8"	ALUM	F-3	FF	S	---	13/A501	12/A501	12/A501	14/A501	27	
28	2'-8"	2'-8"	ALUM	F-3	FF	S	---	13/A501	12/A501	12/A501	14/A501	28	
29	2'-8"	2'-8"	ALUM	F-3	FF	S	---	13/A501	12/A501	12/A501	14/A501	29	
30	2'-8"	2'-8"	ALUM	F-3	FF	S	---	13/A501	12/A501	12/A501	14/A501	30	
31	2'-8"	2'-8"	ALUM	F-3	FF	S	---	13/A501	12/A501	12/A501	14/A501	31	
32	2'-8"	2'-8"	ALUM	F-3	FF	S	---	13/A501	12/A501	12/A501	14/A501	32	
33	2'-8"	2'-8"	ALUM	F-3	FF	S	---	13/A501	12/A501	12/A501	14/A501	33	
34	2'-8"	2'-8"	ALUM	F-3	FF	S	---	13/A501	12/A501	12/A501	14/A501	34	
35	2'-8"	2'-8"	ALUM	F-3	FF	S	---	13/A501	12/A501	12/A501	14/A501	35	
36	2'-8"	2'-8"	ALUM	F-3	FF	S	---	13/A501	12/A501	12/A501	14/A501	36	
37	2'-8"	2'-8"	ALUM	F-3	FF	S	---	13/A501	12/A501	12/A501	14/A501	37	
38	2'-8"	2'-8"	ALUM	F-3	FF	S	---	13/A501	12/A501	12/A501	14/A501	38	
39	2'-8"	2'-8"	ALUM	F-3	FF	S	---	13/A501	12/A501	12/A501	14/A501	39	
40	4'-0"	2'-8"	ALUM	F-4	FF	S	---	13/A501	12/A501	12/A501	14/A501	40	
41	4'-0"	6'-0"	ALUM	F-7	FF	S	---	22/A501sim	22/A501	22/A501	22/A501	41	
42	4'-0"	2'-8"	ALUM	F-4	FF	S	---	22/A501sim	22/A501	22/A501	22/A501	42	
43	12'-0"	10'-0"	ALUM	F-2	FF	ST	---	13/A501sim	7/A501	7/A501	23/A501	43	
44												44	
45												45	

DOOR TYPES

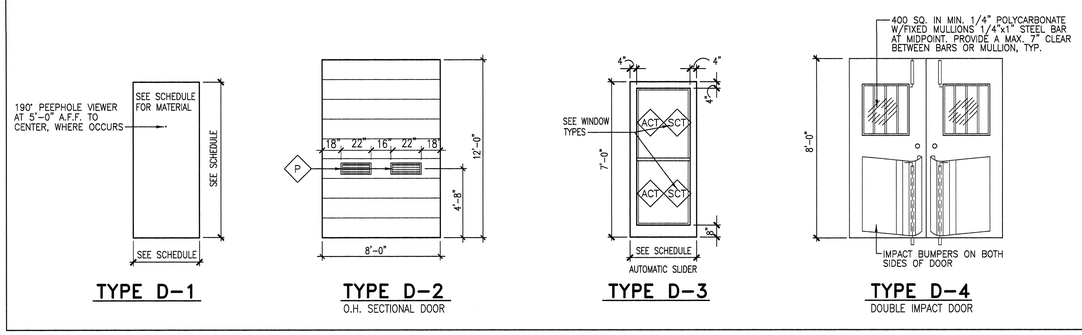

DOOR SCHEDULE

NO.	SIZE			DOOR			FRAME			DETAIL REFERENCE			HDW.	REMARKS
	WIDTH	HEIGHT	THICK.	TYPE	MATERIAL	FINISH	TYPE	MATERIAL	FINISH	HEAD	JAMB	THRESH.		
1	PR. 3'-0"	7'-0"	---	D-3	ALUMINUM	FF	F-1	ALUMINUM	FF	24/A501	---	1/A501	1	AUTOMATIC SLIDER W/SENSOR ACTIVATION
2	PR. 3'-0"	7'-0"	---	D-3	ALUMINUM	FF	F-2	ALUMINUM	FF	24/A501	---	2/A501	2	AUTOMATIC SLIDER W/SENSOR ACTIVATION
3	3'-0"	7'-0"	---	D-1	HOLLOW METAL	FF	F-8	HOL. MTL.	PAINTED	17/A501	17/A501 SIM	1/A501	7	
4	7'-0"	12'-0"	---	D-2	SEE SPECS	FF	---	STEEL	PAINTED	19/A501sim.	19/A501	---	8	INSULATED OVERHEAD SECTIONAL DOOR
5	PR. 3'-0"	8'-0"	---	D-4	IMPACT	FF	F-6	HOL. MTL.	PAINTED	18/A501sim.	18/A501	---	6	LIGHTWEIGHT IMPACT DOORS
6	3'-0"	7'-0"	1 3/4"	D-1	WOOD	STAINED	F-5	HOL. MTL.	PAINTED	20/A501sim.	20/A501	5/A501	5	
7	3'-0"	7'-0"	1 3/4"	D-1	WOOD	STAINED	F-5	HOL. MTL.	PAINTED	20/A501sim.	20/A501	---	4	
8	3'-0"	7'-0"	1 3/4"	D-1	WOOD	STAINED	F-5	HOL. MTL.	PAINTED	20/A501sim.	20/A501	5/A501	5	
9	3'-0"	7'-0"	1 3/4"	D-1	WOOD	STAINED	F-5	HOL. MTL.	PAINTED	20/A501sim.	20/A501	5/A501	4	

NEW RIVERTON LIQUOR STORE

DEPARTMENT OF ALCOHOLIC BEVERAGE CONTROL
APPROX. 3900 WEST 13400 SOUTH, RIVERTON, UTAH

DOOR, WINDOW AND FINISH SCHEDULES

FRANK N MURDOCK JR ■ Architect & Associates
975 East 100 South Suite 100, Salt Lake City, Utah 84102 TEL: (801) 532-4441 FAX (801) 532-4220

STATE OF UTAH — FRANK N. MURDOCK — 12-0458 — LICENSED ARCHITECT

REVISION # DATE:

DFCM PROJECT NO.:
05053030
CONST. DOC.
FILE NAME: ABCRV-A601
PLOT SCALE: 1:48
DRAWN BY: STAFF
CHECKED BY: FNM
DATE: MAY 2007

A
601

STRUCTURAL NOTES

GENERAL

1 ALL DESIGN, CONSTRUCTION, AND INSPECTION SHALL BE IN CONFORMANCE WITH THE LATEST EDITION OF THE 2006 INTERNATIONAL BUILDING CODE.

2 THE CONTRACTOR SHALL VERIFY ALL DIMENSIONS AND CONDITIONS AT THE SITE.

3 ALL OMISSIONS OR CONFLICTS BETWEEN THE VARIOUS ELEMENTS OF THE WORKING DRAWINGS AND/OR SPECIFICATIONS SHALL BE BROUGHT TO THE ATTENTION OF THE ARCHITECT AND/OR STRUCTURAL ENGINEER BEFORE PROCEEDING WITH ANY WORK INVOLVED.

4 CONTRACTOR SHALL BE RESPONSIBLE FOR SAFETY AND PROTECTION WITHIN AND ADJACENT TO THE JOB SITE.

5 TEMPORARY SHORING AND BRACING SHALL BE PROVIDED WHEREVER NECESSARY TO TAKE CARE OF ALL LOADS TO WHICH THE STRUCTURE MAY BE SUBJECTED INCLUDING WIND. SUCH BRACING SHALL BE LEFT IN PLACE AS LONG AS MAY BE REQUIRED FOR SAFETY OR UNTIL ALL THE STRUCTURAL ELEMENTS ARE COMPLETE.

6 DURING AND AFTER CONSTRUCTION THE CONTRACTOR AND/OR OWNER SHALL KEEP LOADS ON THE STRUCTURE WITHIN THE LIMITS OF THE DESIGN LOADS.

7 THE GENERAL CONTRACTOR SHALL HAVE SHOP DRAWINGS REVIEWED BY THE ARCHITECT PRIOR TO THE FABRICATION OR ERECTION FOR THE FOLLOWING ITEMS: REINFORCING STEEL, STRUCTURAL STEEL, MISCELLANEOUS METALS, PREFABRICATED STEEL JOISTS, METAL ROOF DECK.

8 ALL DETAILS, SECTIONS, AND NOTES ARE INTENDED TO BE TYPICAL AND SHALL APPLY TO SIMILAR SITUATIONS UNLESS NOTED OR SHOWN OTHERWISE.

9 REFER TO THE SPECIFICATIONS FOR ADDITIONAL INFORMATION NOT COVERED ON THE DRAWINGS.

10 OBSERVATION VISITS TO THE JOB SITE BY FIELD REPRESENTATIVES OF CALDER-RICHARDS CONSULTING SHALL NEITHER BE CONSTRUED AS INSPECTION NOR APPROVAL OF CONSTRUCTION.

11 SIZES, LOCATIONS, AND ANCHORAGES OF EQUIPMENT SHALL BE VERIFIED IN THE FIELD WITH EQUIPMENT MANUFACTURERS (SUPPLIERS) PRIOR TO PLACING CONCRETE OR FABRICATING STEEL.

FOOTINGS

1 ALL FOOTINGS SHALL BEAR 12" MINIMUM INTO ORIGINAL UNDISTURBED EARTH OR ON ENGINEERED FILL COMPACTED TO 95% OF MAXIMUM RELATIVE DENSITY BASED ON ASTM D1557-91. SUCH FILL SHALL BE PLACED IN LAYERS NOT TO EXCEED 6" IN DEPTH AFTER COMPACTION AND SHALL EXTEND DOWN TO IN-SITU GRANULAR SOILS.

2 FOOTING ELEVATIONS SHOWN ON PLAN ARE TOP OF FOOTINGS AND ARE MINIMUM DEPTH. DIFFERENT OR UNUSUAL CONDITIONS SHALL BE REPORTED TO THE ARCHITECT AND/OR ENGINEER.

3 EXTERIOR WALL FOOTINGS SHALL BEAR AT A MINIMUM DEPTH OF 2'-6" BELOW FINISHED EXTERIOR GRADE.

4 NO FOOTINGS SHALL BE PLACED IN WATER OR ON FROZEN GROUND.

5 ANY SOIL CONDITION ENCOUNTERED DURING EXCAVATION THAT IS CONTRARY TO THE CONDITIONS USED FOR DESIGN OF FOOTINGS AS OUTLINED IN THE SOILS REPORT FOR THE PROJECT, OR ON THE DRAWINGS SHALL BE BROUGHT TO THE ATTENTION OF THE ARCHITECT BEFORE PROCEEDING.

6 DO NOT BACK FILL BEHIND FOUNDATION WALLS UNTIL TOP AND BOTTOM SLABS HAVE BEEN POURED AND ATTAINED THEIR DESIGN STRENGTHS.

7 BACK FILL BOTH SIDES OF FOUNDATION WALLS AT SAME TIME TO PREVENT OVERTURNING.

8 WALL FOOTINGS, WHERE NOT SHOWN OTHERWISE, SHALL BE 12" THICK WITH A 8" SPREAD EACH SIDE OF WALL AND PROVIDE 1 #5 CONTINUOUS AT BOTTOM FOR EACH 8" OF FOOTING WIDTH.

9 WHERE 6" DIAMETER OR LARGER PIPE PASSES THROUGH AN INTERIOR OR EXTERIOR FOUNDATION WALL, STEP THE FOOTING DOWN TO PASS BELOW PIPE AND THEN STEP BACK UP TO INDICATED ELEVATION. PROVIDE PIPE SLEEVE THROUGH FOUNDATION WALL.

10 ALL FOOTING EXCAVATIONS SHALL BE EXAMINED BY A GEOTECHNICAL ENGINEER FOR VERIFICATION OF ADEQUATE BEARING CONDITIONS BEFORE PLACING CONCRETE.

CONCRETE

1 CONCRETE SHALL ATTAIN THE FOLLOWING MINIMUM COMPRESSIVE STRENGTHS AT 28 DAYS:
FOOTINGS & FOUNDATION WALLS......................3000 PSI
INTERIOR SLABS ON GRADE..............................4000 PSI
EXTERIOR FLAT WORK......................................4000 PSI

2 A STATEMENT OF MIX DESIGN FOR ALL CONCRETE SHALL BE SUBMITTED TO AND REVIEWED BY THE STRUCTURAL ENGINEER PRIOR TO COMMENCING WORK.

3 ALL CONCRETE WORK SHALL BE PLACED, CURED, STRIPPED, AND PROTECTED AS DIRECTED BY THE SPECIFICATIONS AND ACI STANDARDS AND PRACTICES.

4 UNLESS NOTED OTHERWISE ON THE DRAWINGS, REINFORCE CONCRETE WALLS AS FOLLOWS:
6" WALL #4 @ 12" HOR., #4 @ 16" VERT..IN CENTER OF WALL
8" WALL #5 @ 12" HOR., #4 @ 16" VERT..IN CENTER OF WALL
10" WALL #5 @ 12" HOR., #5 @ 16" VERT..IN CENTER OF WALL
12" WALL #4 @ 12" HOR., EACH FACE, #4 @12" VERTICAL EACH FACE.

5 DOWEL VERTICAL BARS 36 DIAMETERS INTO STRUCTURE ABOVE AND FOOTINGS BELOW. PROVIDE 90° HOOK WHERE 36 DIAMETER IS NOT POSSIBLE. IN ADDITION, PROVIDE 2-#5 CONTINUOUS BARS TOP AND BOTTOM OF 6" AND 8" WALLS AND 2-#6 BARS TOP AND BOTTOM OF WALLS 10" OR THICKER.

6 BEFORE CONCRETE IS POURED CHECK WITH ALL TRADES TO ENSURE PROPER PLACEMENT OF ALL OPENINGS, SLEEVES, CURBS, CONDUITS, BOLTS, INSERTS, ETC. RELATIVE TO WORK.

7 ADD 2-#5 BARS MINIMUM AROUND ALL OPENINGS (UNLESS OTHERWISE NOTED) AND EXTEND 24" BEYOND CORNER OF OPENING.

8 WHERE OPENINGS LARGER THAN 16" IN ANY DIRECTION OCCUR IN WALLS OR SLABS, PROVIDE SAME SIZE ADDITIONAL, FULL LENGTH REINFORCING AT EACH SIDE OF OPENING EQUAL TO 1/2 THE NUMBER OF BARS INTERRUPTED BY THE OPENING. SPACE ADDITIONAL BARS AT 4 X BAR DIAMETERS.

9 ALL SLABS ON GRADE SHALL BE PLACED IN ALTERNATE PANELS WITH A MAXIMUM WIDTH OF 20' BETWEEN CONTROL OR CONSTRUCTION JOINTS; REFER TO TYPICAL DETAILS ON DRAWINGS. UNLESS OTHERWISE NOTED, SLABS ON GRADE SHALL BE 4" THICK AND SHALL BE REINFORCED WITH 6 x 6 - W1.4 x W1.4 WELDED WIRE FABRIC.

10 PROVIDE A #3 NOSING BAR IN ALL STAIR TREADS.

11 REFER TO DRAWINGS FOR TYPICAL CONSTRUCTION JOINT DETAILS. UNLESS NOTED IN DRAWINGS, ALL REINFORCEMENT SHALL BE CONTINUOUS THRU JOINTS AND EACH CONSTRUCTION JOINT SHALL BE KEYED.

12 FORMS, SCREEDS, AND BEAMS SUPPORTING SUSPENDED CONCRETE SHALL BE CAMBERED 1/4 INCHES PER 10 FEET OF SPAN TO COMPENSATE FOR DEAD LOAD DEFLECTIONS.

13 WHERE EXTERIOR SLABS ON GRADE ABUT WALLS OR COLUMNS PROVIDE 3/8" PREFORMED EXPANSION JOINT WITH SEALANT.

14 WHERE INTERIOR MASONRY WALLS DO NOT BEAR ON A FOOTING PROVIDE A TYPICAL THICKENED SLAB (12" THICK X 16" WIDE) UNDER WALL. REINFORCE WITH 2- #4 CONTINUOUS. DOWEL WALL REINFORCING TO SLAB.

MASONRY (CMU)

1 ALL MASONRY SHALL BE REINFORCED WITH BOTH HORIZONTAL AND VERTICAL REINFORCEMENT. ALL BLOCK CELLS OR BRICK CAVITIES WITH REINFORCEMENT SHALL BE GROUTED FULL USING CONCRETE 2000 PSI GROUT. CELLS SHALL BE ALIGNED TO PRESERVE UNOBSTRUCTED VERTICAL CAVITIES OF 2" x 3" MINIMUM.

2 CONCRETE FOR BLOCK FILL SHALL HAVE 3/8 INCH MAXIMUM SIZE COURSE AGGREGATE AND SUFFICIENT WATER SO THE CONCRETE WILL FLOW INTO THE BLOCK CELLS WITHOUT LEAVING VOIDS. WHERE BEAMS BEAR ON CONCRETE BLOCK WALLS. BLOCK CELLS SHALL BE FILLED WITH CONCRETE 1' -4" WIDE TO FOUNDATION AND REINFORCE WITH A #5 EACH CELL, UNLESS OTHERWISE SHOWN.

3 AN ADDITIONAL VERTICAL BAR (MATCHING WALL REINFORCEMENT) SHALL BE PLACED AT EACH CORNER, END OF WALL, AND JAMB OF ALL OPENINGS.

4 ALL STEEL JOIST, JOIST GIRDER, AND STEEL BEAM POCKETS IN MASONRY SHALL BE GROUTED SOLID UNLESS OTHERWISE INDICATED ON THE DRAWINGS.

5 HORIZONTAL BARS SHALL BE PLACED IN BOND BEAMS FILLED WITH GROUT AT THE TOP OF ALL WALLS AND AT 48" O.C. MAXIMUM BETWEEN TOP OF WALL AND FOUNDATION. BOND BEAM UNITS AND REINFORCING SHALL CONTINUE UNINTERRUPTED AROUND ALL CORNERS AND WALL INTERSECTIONS. WHERE STRUCTURAL STEEL COLUMNS OR BEAMS INTERRUPT THE CONTINUITY OF A BOND BEAM, DOWELS MATCHING BOND BEAM REINFORCEMENT SHALL BE WELDED TO THE STRUCTURAL STEEL TO PROVIDE CONTINUITY.

6 ALL VERTICAL REINFORCING BARS SHALL BE DOWELED TO STRUCTURE BELOW WITH BARS OF SAME SIZE AND SPACING. LAP ALL SPLICES IN MASONRY PER REBAR SHEDULE. PLACE ALL BARS SECURELY PRIOR TO GROUTING.

7 MASONRY REINFORCEMENT: UNLESS NOTED OTHERWISE ON THE PLANS OR SCHEDULE THE MINIMUM REINFORCEMENT FOR ALL MASONRY WALLS SHALL BE AS FOLLOWS:

8 IN. WALLS: #5 @ 32 IN. O.C. IN VERTICAL GROUTED CELLS
& 2-#4 @ 48 IN. O.C. IN BLOCK UNIT
HORIZONTALLY GROUTED.

8 ALL HORIZONTAL REINFORCING SHALL TERMINATE WITH A HOOK AROUND VERTICAL REINFORCING.

9 CONCRETE MASONRY UNITS SHALL BE GRADE N UNITS CONFORMING TO A.S.T.M. DESIGNATION C90 AND SHALL HAVE A MINIMUM ULTIMATE COMPRESSIVE STRENGTH OF 1900 PSI ON THE NET SECTION.

10 MORTAR SHALL BE TYPE "S" AND SHALL HAVE THE FOLLOWING PROPORTIONS BY VOLUMES:

PORTLAND CEMENT . . . . . . 1 PART
HYDRATED LIME . . . . 1/4 - 1/2 PART
DAMP. LOOSE AGGREGATE. . . NOT LESS THAN 2-1/4 & NOT MORE THAN (3) TIMES THE SUM OF CEMENT AND LIME USED.

11 STOP GROUT POURS 1/2" BELOW TOP OF BLOCK UNITS.

12 ALL ANCHOR BOLTS MUST BE PLACED IN GROUTED CELLS.

13 NO MASONRY SHALL BE LAID WHEN THE TEMPERATURE OF THE OUTSIDE AIR IS BELOW 40 DEG. F., UNLESS APPROVED METHODS ARE USED DURING CONSTRUCTION TO PREVENT DAMAGE TO THE MASONRY. SUCH METHODS SHALL INCLUDE PROTECTION OF THE MASONRY FOR A PERIOD OF AT LEAST 48 HOURS.

14 ALL REINFORCING SHALL BE IN PLACE PRIOR TO GROUTING. VERTICAL REINFORCING BARS SHALL BE HELD IN POSITION AT THE TOP, BOTTOM AND AT INTERVALS NOT FARTHER APART THAN 200 BAR DIAMETERS. PROVIDE WIRE TIES AT ALL LAP SPLICES.

15 ALL MASONRY WALLS SHALL HAVE VERTICAL CONTROL JOINTS AT: MAJOR CHANGES IN WALL HEIGHT, AT CHANGES IN WALL THICKNESS, AT BUILDING CONSTRUCTION JOINTS, AND NOT FARTHER APART THAN 25 FEET ELSEWHERE.
CONSULT ARCHITECTURAL DRAWINGS FOR LOCATIONS. VERTICAL CELLS EACH SIDE OF CONTROL JOINTS SHALL BE GROUTED AND REINFORCED WITH REBARS TO MATCH VERTICAL REINFORCEMENT USED THROUGHOUT THAT WALL. ONLY HORIZONTAL REBARS IN BOND BEAMS AT FLOORS AND AT ROOF LEVEL SHALL CONTINUE THROUGH CONTROL JOINTS. PROVIDE FULL HEIGHT HARD RUBBER KEY AT JOINT. WHERE JOINT LOCATIONS ARE NOT SHOWN ON THE DRAWINGS THE CONTRACTOR SHALL SUBMIT PROPOSED LOCATIONS TO ARCHITECT/ENGINEER FOR REVIEW.

REINFORCING STEEL

1 ALL REINFORCEMENT SHALL BE DETAILED AND PLACED IN ACCORDANCE WITH ACI DETAILING MANUAL 315-92 AND ACI STANDARD 318-99.

2 REINFORCING STEEL SHALL BE ASTM A615 GRADE 60.

3 WELDED WIRE FABRIC SHALL CONFORM TO ASTM A185. LAP ONE MESH TIE.

4 ALL REINFORCEMENT SHALL BE SECURELY TIED AND HELD IN PLACE.

5 REINFORCING BARS THAT ARE TO BE WELDED, INCLUDING DEFORMED BAR ANCHORS (D.B.A.) SHALL COMPLY WITH ASTM A706 OR ANOTHER WELDABLE GRADE AND SHALL BE WELDED IN ACCORDANCE WITH THE A.W.S. RECOMMENDATIONS.

6 ALL CONTINUOUS REINFORCEMENT SHALL TERMINATE WITH A 90 DEG. TURN OR A SEPARATE CORNER BAR. ALL SPLICE SHALL HAVE A MINIMUM LAP OR EMBEDMENT PER REINFORCING SCHEDULE.

7 WHERE THE LENGTH OF A BAR IS GIVEN AND IT IS TO BE HOOKED, THE HOOK SHALL BE IN ADDITION TO THE LENGTH GIVEN, UNLESS SHOWN OTHERWISE.

8 COVER TO MAIN REINFORCEMENT FROM ADJACENT SURFACES SHALL BE AS FOLLOWS UNLESS SHOWN OTHERWISE:
A. UNFORMED SURFACES IN CONTACT WITH GROUND OR EXPOSED TO THE WEATHER (BOTTOM OF FOOTINGS). . . . . . 3 INCHES
B. SLABS ON GRADE . . . . 2 INCHES
C. FORMED SURFACES IN CONTACT WITH THE GROUND OR EXPOSED TO THE WEATHER (GRADE BMS, WALLS, ETC.), BEAMS AND COLUMNS. . . . . 2 INCHES
D. STRUCTURAL SLABS AND JOISTS NOT EXPOSED TO WEATHER OR EARTH....................................... . . 1 INCH
E. INTERIOR WALL SURFACES. . . . . 1 INCH
F. INTERIOR BEAMS AND COLUMNS . . . . 1-1/2 IN.
G. IN ALL CASES MINIMUM COVER SHALL NOT BE LESS THAN THE DIAMETER OF ADJACENT BARS.

9 PRIOR TO FABRICATION AND PLACEMENT, SHOP DRAWINGS FOR ALL REINFORCING STEEL SHALL BE REVIEWED BY THE STRUCTURAL ENGINEER.

STRUCTURAL STEEL

1 ALL STRUCTURAL STEEL AND STRUCTURAL STEEL WORK SHALL COMPLY WITH BOTH THE AISC "MANUAL OF STEEL CONSTRUCTION" CONTAINING THE SPECIFICATIONS FOR THE DESIGN, FABRICATION AND ERECTION OF STRUCTURAL STEEL BUILDINGS, INCLUDING THE "CODE OF STANDARD PRACTICES" (LATEST EDITION), AND WITH THE IBC 2000 EDITION.

2 ALL WIDE FLANGE STRUCTURAL STEEL SHALL BE ASTM A992 AND ALL MISCELLANEOUS SHAPES SHALL BE ASTM A36, UNO.

3 STRUCTURAL STEEL TUBING SHALL CONFORM TO ASTM A500 GRADE B; YIELD STRESS = 46KSI

4 STRUCTURAL STEEL PIPE COLUMNS SHALL CONFORM TO ASTM A501, GRADE B; YIELD STRESS = 35 KSI.

5 USE A325 BOLTS FOR STEEL TO STEEL CONNECTIONS AND A307 BOLTS FOR ALL OTHER CONNECTIONS. USE 3/4" DIAMETER MINIMUM.

STRUCTURAL STEEL, CONT

6 PRIOR TO FABRICATION AND ERECTION, SHOP DRAWINGS FOR ALL STEEL ITEMS SHALL BE REVIEWED BY THE STRUCTURAL ENGINEER. THE CONTRACTOR SHALL VERIFY ALL SHOP DRAWING DIMENSIONS WITH STRUCTURAL AND ARCHITECTURAL PLANS AND DETAILS.

7 ALL WELDS SHALL BE MADE WITH E70XX ELECTRODES AND BY WELDERS CERTIFIED BY AWS STANDARDS WITHIN THE PAST 12 MONTHS; PROVIDE WRITTEN CERTIFICATION IF REQUESTED.

8 ALL HIGH-STRENGTH BOLTS SHALL BE TIGHTENED TO THE APPROPRIATE MINIMUM BOLT TENSION IN ACCORDANCE WITH "AISC SPECIFICATIONS FOR STRUCTURAL JOINTS USING ASTM A325 OR A490 BOLTS." THE PREFERRED METHOD OF TIGHTENING IS BY USE OF A "DIRECT TENSION INDICATOR." THE TURN-OF-NUT METHOD MAY ALSO BE USED. PROVIDE CARBONIZED WASHERS UNDER THE TURNED ELEMENT.

9 ALL STEEL JOISTS, JOIST GIRDERS, AND ASSOCIATED WORK SHALL COMPLY WITH THE LATEST EDITION OF THE "STANDARD SPECIFICATIONS OF THE STEEL JOIST INSTITUTE." UNLESS SHOWN OTHERWISE, PROVIDE BRIDGING IN ACCORDANCE WITH THIS SPECIFICATION AS A MINIMUM. JOIST FABRICATOR SHALL BE A MEMBER OF THE STEEL JOIST INSTITUTE (SJI). JOISTS SHALL BE DESIGNED BY A PROFESSIONAL ENGINEER, REGISTERED IN THE STATE OF THE PROJECT AND HE SHALL SEAL AND SIGN ALL DESIGN CALCULATIONS AND JOISTS SHOP DRAWINGS. DESIGN SHALL COMPLY WITH ALL LOADING REQUIREMENTS INDICATED ON THE DRAWINGS AND NOTES. DESIGN CALCULATIONS AND SHOP DRAWINGS SHALL CLEARLY INDICATE ALL LOADINGS, DIMENSIONS, MEMBER FORCES, REACTIONS, MEMBER SIZES, WELD REQUIREMENTS AND JOINT DETAILS. JOISTS SHALL BE DESIGNED ASSUMING HORIZONTAL MOVEMENT IS ALLOWED AT ONE END, UNLESS NOTED OTHERWISE.

10 ALL BRIDGING SHALL BE SECURELY ANCHORED AT END OF EACH RUN. WELD TO STEEL BEAM OR ANCHOR TO MASONRY WALL WITH 3/8" ANCHOR BOLTS.

11 WHERE JOISTS CANNOT BEAR 2-1/2 INCHES ON STEEL BEAMS, STAGGER LOCATION OF JOISTS TO PROVIDE 2-1/2 INCHES MINIMUM BEARING ON BEAM.

12 MINIMUM THICKNESS OF JOIST TOP CHORD ANGLE IS 5/32".

13 CONCENTRATED LOADS SHALL NOT BE PLACED ON NOR HUNG FROM JOISTS UNLESS THEY ARE PLACED AT PANEL POINTS OR A BRACE (L1-1/2x1-1/2X1/8) IS INSTALLED BETWEEN THE LOAD AND PANEL POINT. CONCENTRATED LOADS NOT SHOWN ON THE DRAWINGS SHALL BE BROUGHT TO THE ATTENTION OF THE ARCHITECT/ENGINEER FOR REVIEW.

14 MECHANICAL ROOF TOP UNITS SHALL BE PLACED OVER ADDITIONAL OR SPECIAL JOISTS AS SHOWN ON DRAWINGS. THE WEIGHT, SIZE AND LOCATION OF ALL PROPOSED UNITS AND CURBS SHALL BE SUBMITTED TO THE ARCHITECT/ENGINEER FOR VERIFICATION BEFORE FABRICATION OF STEEL.

15 FRAMES FOR ROOF OPENINGS AND SUPPORTS FOR ROOF MOUNTED MECHANICAL EQUIPMENT ARE INDICATED ON DRAWINGS FOR BID PURPOSES ONLY. UPON RECEIPT OF MECHANICAL SUBMITTALS, THE CONTRACTOR SHALL FURNISH STEEL SUPPLIER SUPPLEMENTARY DRAWINGS OR OTHER INFORMATION NECESSARY TO LAYOUT AND DETAIL THIS PORTION OF THE WORK. OTHER STEEL WORK SHALL NOT BE DELAYED BY THIS PORTION OF THE WORK. SHOP DRAWINGS SHALL BE SUBMITTED TO ENGINEER FOR REVIEW.

METAL ROOF DECK

1 STEEL ROOF DECK SHALL COMPLY WITH THE LATEST REQUIREMENTS OF THE STEEL DECK INSTITUTE, SDI. SUBMIT ICBO REPORT WITH SHOP DRAWINGS.

2 STEEL ROOF DECK SHALL BE 1.5" DEEP X 20 GAUGE GALVANIZED (CT60) TYPE "B" WIDE RIB DECK WITH INTERLOCKING SIDE SEAMS. THE FOLLOWING MINIMUM PROPERTIES MUST BE SATISFIED:
Fy = 38 KSI
I = .216 IN 4/FT.
Sp = .235 IN 3/FT.
Sn = .248 IN 3/FT.

3 WELD STEEL ROOF DECK TO SUPPORTING FRAMING MEMBERS WITH 3/4" DIAMETER PUDDLE WELDS AT THE FOLLOWING SPACINGS:
(7) WELDS PER 36-INCH SHEET TO ALL SUPPORTS PERPENDICULAR TO DECK CORRUGATIONS.
12" O.C. TO ALL SUPPORTS PARALLEL TO DECK CORRUGATIONS.
12" O.C. OVER ALL DRAG STRUTS, SHEAR WALLS, BRACED FRAMES AND ROOF PERIMETER.

4 ATTACH INTERLOCKING SEAMS WITH 1.5" LONG TOP SEAM WELDS AT 24" O.C. MAXIMUM BETWEEN ADJACENT PIECES OF DECKING. CRIMP SIDE SEAMS BEFORE WELDING.

5 PROVIDE A 2" MINIMUM BEARING AND A 2-INCH LAP AT THE SPLICE POINTS OF ALL PIECES OF DECK.

6 WHERE POSSIBLE, ALL DECK SHALL BE 3-SPAN CONTINUOUS MINIMUM. IN AREAS WHERE 3-SPAN CONDITIONS ARE NOT POSSIBLE, THE DECK SHALL MEET THE LOADING CRITERIA FOR THE SPAN CONDITION. THE CONTRACTOR SHALL PROVIDE HEAVIER GAUGE DECK AS REQUIRED FOR ONE OR TWO SPAN CONDITIONS.

QUALITY ASSURANCE PLAN

1 SPECIAL INSPECTION SHALL BE PROVIDED BY THE OWNER ACCORDING TO IBC CHAPTER 17 FOR THE ITEMS IDENTIFIED IN THIS SECTION AND ON THE CONTRACT DOCUMENTS.

2 THE NAMES AND CREDENTIALS OF SPECIAL INSPECTORS TO BE USED SHALL BE SUBMITTED TO THE BUILDING DEPARTMENT WHEN APPLYING FOR A BUILDING PERMIT.

3 SPECIAL INSPECTION REPORTS SHALL BE DELIVERED TO THE ENGINEER OF RECORD, ARCHITECT, AND OWNER (AS REQUESTED) BI-WEEKLY OR MORE FREQUENTLY AS REQUIRED BY THE INSPECTOR OR BUILDING OFFICIAL.

4 OFF-SITE FABRICATION: WHERE FABRICATION OF STRUCTURAL LOAD-BEARING MEMBERS AND ASSEMBLIES IS BEING PERFORMED ON THE PREMISES OF A FABRICATORS SHOP, SPECIAL INSPECTION OF THE FABRICATED ITEMS SHALL BE IN ACCORDANCE WITH IBC SECTION 1704.2 UNLESS THE FABRICATOR IS APPROVED ACCORDING TO IBC SECTION 1704.2.2.

5 STEEL CONSTRUCTION: SPECIAL INSPECTIONS FOR STEEL ELEMENTS SHALL BE PROVIDED IN ACCORDANCE WITH SECTIONS 1704.3 AND TABLE 1704.2.

6 WELDING: WELDING INSPECTION SHALL BE PROVIDED IN ACCORDANCE WITH TABLE 1704.3. ELEMENTS THAT ARE PART OF THE SEISMIC-FORCE-RESISTING SYSTEM SHALL ALSO BE INSPECTED ACCORDING TO SECTION 1707.2 AND 1708.4.

7 HIGH-STRENGTH BOLTS: PERIODIC SPECIAL INSPECTION SHALL BE PROVIDED FOR INSTALLATION OF HIGH-STRENGTH BOLTS IN ACCORDANCE WITH AISC SPECIFICATIONS. SEE IBC SECTION 1704.3.3.

8 CONCRETE CONSTRUCTION: SPECIAL INSPECTIONS AND VERIFICATIONS SHALL BE PROVIDED IN ACCORDANCE WITH TABLE 1704.4.

9 MASONRY CONSTRUCTION: LEVEL 1 SPECIAL INSPECTION SHALL BE PROVIDED FOR MASONRY CONSTRUCTION IN ACCORDANCE WITH SECTION 1704.5.2 AND TABLE 1704.5.1. TESTING SHALL COMPLY WITH SECTION 1708.1.3

10 COLD-FORMED STEEL FRAMING: CONNECTIONS OF ELEMENTS IN THE SEISMIC-FORCE-RESISTING SYSTEM IN ACCORDANCE WITH SECTION 1707.4.

11 SOILS: SPECIAL INSPECTION SHALL BE PROVIDED FOR PLACEMENT OF FILL 12 INCHES OR MORE DEEP IN ACCORDANCE WITH SECTION 1704.7.

12 EPOXY ANCHORS: PRIOR TO AND DURING EPOXY INJECTION TO ENSURE PROPER INSTALLATION AS PER MANUFACTURERS REQUIREMENTS. CONTRACTOR SHALL SUBMIT PROPOSED EPOXY MANUFACTURERS I.C.B.O. REPORT TO STRUCTURAL ENGINEER PRIOR TO INSTALLATION.

13 NO INSPECTION OF BOLTS INSTALLED IN CONCRETE IS REQUIRED SINCE THE STRESS INCREASES PERMITTED BY SECTION 1912.5 ARE NOT UTILIZED.

QUALITY ASSURANCE - CONTRACTOR RESPONSIBILITY

EACH CONTRACTOR RESPONSIBLE FOR THE CONSTRUCTION OF A SEISMIC-FORCE-RESISTING SYSTEM, DESIGNATED SEISMIC SYSTEM, OR COMPONENT LISTED IN THE QUALITY ASSURANCE PLAN SHALL SUBMIT A WRITTEN CONTRACTOR'S STATEMENT OF RESPONSIBILITY TO THE BUILDING OFFICIAL AND TO THE OWNER PRIOR TO THE COMMENCEMENT OF WORK ON THE SYSTEM OR COMPONENT. THE CONTRACTOR'S STATEMENT OF RESPONSIBILITY SHALL CONTAIN THE FOLLOWING:

A. ACKNOWLEDGMENT OF AWARENESS OF THE SPECIAL REQUIREMENTS CONTAINED IN THE QUALITY ASSURANCE PLAN.

B. ACKNOWLEDGMENT THAT CONTROL WILL BE EXERCISED TO OBTAIN CONFORMANCE WITH THE CONSTRUCTION DOCUMENTS APPROVED BY THE BUILDING OFFICIAL.

C. PROCEDURES FOR EXERCISING CONTROL WITHIN THE CONTRACTOR'S ORGANIZATION, THE METHOD AND FREQUENCY OF REPORTING, AND THE DISTRIBUTION OF REPORTS.

D. IDENTIFICATION AND QUALIFICATIONS OF THE PERSON(S) EXERCISING SUCH CONTROL AND THE POSITION(S) IN THE ORGANIZATION.

STRUCTURAL DESIGN LOADS

FLOOR(S):
DEAD LOAD: DL = 60 PSF
LIVE LOADS:
OFFICES LL = 50 PSF

ROOF:
DEAD LOAD: DL = 20 PSF
GROUND SNOW LOAD: Pg = 43 PSF
FLAT ROOF SNOW LOAD: Pf = 30 PSF
SNOW EXPOSURE FACTOR: Ce = 1.0
SNOW IMPORTANCE FACTOR: I = 1.0
THERMAL FACTOR: Ct = 1.0

WIND LOAD:
BASIC WIND SPEED: V = 90 MPH (3 SEC GUST)
IMPORTANCE FACTOR: I = 1.0
WIND EXPORSURE: "C"
COMPONENT AND CLADDING PRESSURE: P = 20 PSF

SEISMIC:
IMPORTANCE FACTOR: 1.0
SPECTRAL RESPONSE COEF: SDS = 0.78, SD1 = 0.46
SITE CLASS: D
BASIC SEISMIC-FORCE-RESISTING SYSTEM:
SPECIAL REINFORCED MASONRY SHEARWALLS
R=5, OMEGA=2.5, Cd=3.5, Cs=0.155
SEISMIC BASE SHEAR = 36 KIPS

SOILS:
NET ALLOWABLE SOIL PRESSURE = 1500PSF, PER REPORT.

REINFORCING LAP LENGTH SPLICE SCHEDULES

TENSION BARS "Ld"

BAR SIZE	f'c=3000psi				f'c=4000psi			
	REGULAR		TOP		REGULAR		TOP	
	CLASS		CLASS		CLASS		CLASS	
	A	B	A	B	A	B	A	B
#3	17"	22"	22"	28"	15"	19"	19"	24"
#4	22"	29"	29"	38"	18"	25"	26"	33"
#5	28"	36"	37"	48"	24"	31"	32"	42"
#6	33"	43"	45"	58"	29"	37"	39"	50"
#7	48"	63"	63"	82"	42"	55"	55"	71"
#8	55"	72"	72"	93"	48"	63"	63"	81"
#9	62"	81"	81"	105"	54"	71"	71"	92"
#10	70"	91"	91"	118"	61"	79"	79"	103"
#11	78"	101"	101"	131"	68"	88"	88"	114"

NOTES:
1. THE SCHEDULE SHOWN APPLIES TO REG. WT. CONCRETE WITH 60ksi GRADE REINFORCING BARS.
2. TOP BARS ARE HORIZONTAL BARS WITH 12" (OR MORE), OF FRESH CONCRETE CAST BELOW THE BARS.
3. CLASS "A" SPLICES SHALL BE USED WHEN 50% (OR LESS) OF BARS SPLICED WITHIN LAP.
4. CLASS "B" SPLICES SHALL BE USED FOR ALL ELSE, TYPICALLY w/ SHEARWALLS, COLUMNS, BEAMS & SLABS.
5. FOR EPOXY COATED BARS, INCREASE LAP LENGTHS AS FOLLOWS:
TOP BARS - Ld x 1.7
REGULAR BARS - Ld x 1.5
6. FOR BUNDLED BARS, INCREASE LAP LENGTHS AS FOLLOWS:
BUNDLED BARS THREE OR LESS - Ld x 1.2
BUNDLED BARS FOUR OR MORE - Ld x 1.33
INDIVIDUAL BAR SPLICES WITHIN A BUNDLE SHALL NOT OVERLAP.
7. LAP SPLICES ARE NOT ALLOWED FOR TIES AND STIRRUPS.

MASONRY BOND BEAM SPACING

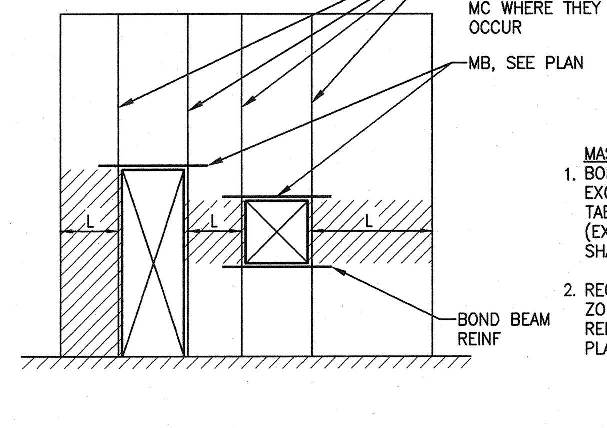

L	MAX BOND BEAM SPACING
0'-8" TO 3'-4"	8"
4'-0" TO 5'-4"	16"
6'-0" TO 7'-4"	24"
8'-0" TO 9'-4"	32"
10'-0" TO 11'-4"	40"
12'-0" OR LARGER	48"

MASONRY BOND BEAM NOTES:
1. BOND BEAM SPACING SHALL NOT EXCEED DISTANCE INDICATED BY TABLE INSIDE HATCHED AREAS. (EX: IF L=4'-8", BOND BEAMS SHALL NOT EXCEED 16" O.C.).
2. REGIONS OUTSIDE THE HATCHED ZONES MAY BE REINFORCED WITH REINFORCING INDICATED ON PLANS.
3. WHERE BOND BEAM REINFORCING SPACING IS ½ OR LESS THAN THAT REQD BY THE WALL SCHEDULE. BOND BEAM REINFORCING MAY BE REDUCED BY ½.
4. ALL HORIZONTAL REINFORCING SHALL TERMINATE WITH A STANDARD HOOK AROUND VERTICAL REINFORCING.

MASONRY REBAR SPLICE SCHEDULE

BAR SIZE	#3	#4	#5	#6	#7	#8	#9	#10	#11
MAS SINGLE MAT	1'-7"	2'-1"	2'-7"	4'-4"	5'-1"	6'-2"	7'-10"	MECH	MECH
MAS DOUBLE MAT	1'-7"	2'-4"	3'-6"	6'-10"	9'-1"	12'-5"	15'-4"	MECH	MECH

MASONRY REBAR SPLICE NOTES:
1. MECH = MECHANICAL SPLICE REQUIRED.
2. USE #6 BAR IN 10" OR LARGER WALLS ONLY.
3. f'm = 1500 PSI, fy = 60,000 PSI
4. DOUBLE MAT REINFORCEMENT SHALL HAVE 2" CLEARANCE BETWEEN FACE OF WALL AND EDGE OF VERTICAL BAR.

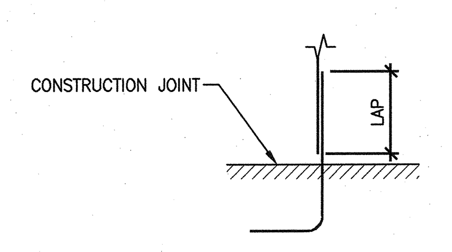

REBAR DEVELOPMENT DETAIL

MASONRY STANDARD HOOKS

BAR SIZE (D)	L				MIN BEND DIAMETER
	STANDARD		ALTERNATIVE		
	90°	180°	90°	135°	
#3	4½"	2½"	2¼"	2"	2½"
#4	6"	2½"	3"	3"	2½"
#5	7½"	2½"	3¾"	3¾"	2½"
#6	9"	3"	4½"	4½"	3"
#7	10½"	3½"	5¼"	5¼"	3½"
#8	12"	4"	6"	6"	4"

MASONRY STANDARD HOOK NOTES:
1. STANDARD HOOKS SHALL BE AROUND A PERPENDICULAR BAR, UNLESS NOTED OTHERWISE ON DRAWINGS.
2. ALTERNATIVE HOOKS ARE ONLY ALLOWED FOR MASONRY COLUMN TIES AND BEAM STIRRUPS.
3. COLUMN TIES SHALL BE 180° STANDARD OR 135° ALTERNATE HOOK. BEND DIAMETER IS MEASURED FROM INSIDE FACE OF REINFORCING.

STANDARD HOOKS

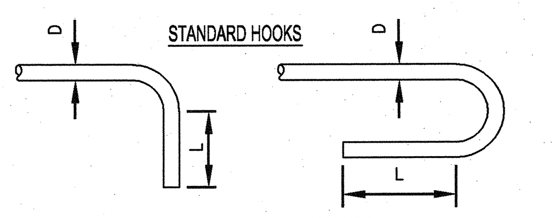

90° HOOK   180° HOOK

ALTERNATE HOOKS

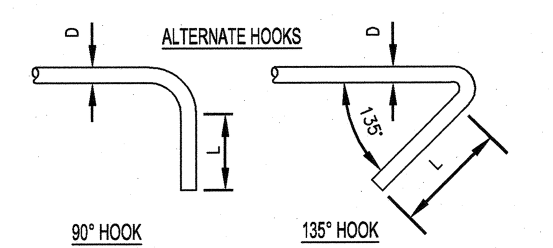

90° HOOK   135° HOOK

STRUCTURAL GENERAL NOTES

NEW RIVERTON LIQUOR STORE
DEPARTMENT OF ALCHOLIC BEVERAGE CONTROL
APPROX. 3900 WEST 13400 SOUTH, RIVERTON, UT

FRANK N MURDOCK JR ■ Architect & Associates
975 East 100 South Suite 100, Salt Lake City, Utah 84102 TEL: (801) 532-4441 FAX (801) 532-4220

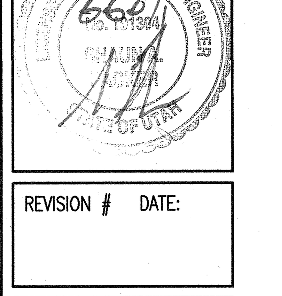

REVISION # DATE:

DFCM PROJECT NO.:
05053030
CONSTRUCTION DOCS
FILE NAME: S-001.dwg
PLOT SCALE: AS NOTED
DRAWN BY: DJK
CHECKED BY: KC
DATE: MAY, 2007

S
001

X:\Project Files\2007\07xxx Riverton Liquor Store\Drawings\S-001.dwg, 30x42, 6/6/2007 8:17:28 AM

FOOTING SCHEDULE

MARK	WIDTH	LENGTH	THICK	CROSSWISE REINF. NO.	SIZE	LENGTH	SPA.	LENGTHWISE REINF. NO.	SIZE	LENGTH	SPA.	NOTES
FC2.0	2'-0"	CONT.	12"	--	--	--	--	(2)	#5	CONT.	EQ.	--
FC2.0*	2'-0"	CONT.	12"	--	--	--	--	(2)	#5	CONT.	EQ.	* THICKENED SLAB
FS3.0	3'-0"	3'-0"	12"	(4)	#4	2'-6"	EQ	(4)	#4	2'-6"	EQ.	--
FC4.0	4'-0"	CONT.	SEE DETAIL 13/S301									
FC4.0*	4'-0"	CONT.	12"	--	#4	3'-6"	16"	(4)	#5	CONT.	EQ.	SEE DETAIL 10/S301
FS5.0	5'-0"	5'-0"	12"	(5)	#5	4'-6"	EQ.	(5)	#5	4'-6"	EQ.	--
FS6.0	6'-0"	6'-0"	12"	(6)	#5	5'-6"	EQ.	(6)	#5	5'-6"	EQ.	--

BASE PLATE SCHEDULE

MARK	DETAIL	PLATE DIMENSIONS t	a	b	c	ANCHOR BOLTS DIA.	e	TYPE
BP-1	1	3/4"	12"	12"	--	3/4"	9"	--
BP-2	2	3/4"	8"	12"	1/2"	3/4"	9"	--

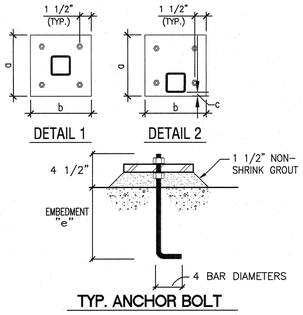

TYP. ANCHOR BOLT

NOTES:

1. ALL PLATES ARE A36 STEEL. ALL BOLTS ARE A307.
2. NON-SHRINK GROUT SHALL HAVE A MINIMUM ULTIMATE COMPRESSIVE STRENGTH OF 4,000 PSI.
3. ALL BOLTS SHALL BE THREADED FOR FULL HEIGHT ABOVE TOP OF CONCRETE AND HAVE DOUBLE NUTS WITH WASHERS.
4. CENTER ALL COLUMNS ON PLATES, UNO.
5. ALL COLUMNS SHALL BE WELDED TO BASE PLATES WITH FILLET WELDS, UNO. ALL FILLET WELDS SHALL BE AS PER AISC TABLE J2.4, 3/16" MINIMUM.
6. ALL ANCHOR BOLTS ARE 3/4" DIA., TYPICAL, UNO.
7. COLUMN SHAPES SHOWN ON DETAILS MAY NOT CORRESPOND WITH ACTUAL COLUMN SHAPE. REFER TO STRUCTURAL PLANS FOR COLUMN TYPE.

PLAN NOTES (FTG & FDTN):

(○) CIRCLED NOTES ARE KEYED TO PLAN

1. SEE SHEET S001 FOR STRUCTURAL NOTES.
2. SEE ARCH DWGS FOR ADDITIONAL DIMENSIONS NOT SHOWN.
3. FOR CAST IN PLACE FLOOR DRAINS AND PIPING, ELECTRICAL CONDUIT, GROUNDING, PIPE SLEEVES, BLOCKOUTS THROUGH WALLS, CURBS OR FOUNDATIONS, SEE APPROPRIATE DISCIPLINE DRAWINGS.
4. TYPICAL SLABS ON GRADE, UNO: ALL SLABS ON GRADE SHALL BE 4", UNO, PLACED OVER 4" MINIMUM DEPTH FREE-DRAINING GRAVEL FILL. REINFORCE CONCRETE SLAB WITH 6x6-W1.4xW1.4 WWF (USE FLAT SHEETS), SEE DETAILS 1 & 2/S301. FSE = 100'-0", UNO.
5. CENTER ALL FOOTINGS ON WALLS OR COLUMNS ABOVE, TYPICAL, UNO.
6. RECESSED SLAB, COORD W/ ARCH DWGS. MAINTAIN 4" MIN SLAB THICKNESS. SEE DTL 05/S301
7. DROP THICKENED SLAB TO TOP OF FOOTING BELOW.
8. SCHEDULE MARK ABREVIATIONS:
   - BP-# DENOTES BASE PLATE, SEE BASE PLATE SCHEDULE, THIS SHEET.
   - FC# DENOTES CONTINUOUS FOOTING,
   - FS# DENOTES SQUARE SPREAD FOOTING, SEE FOOTING SCHEDULE THIS SHEET.
   - MW-# DENOTES MASONRY WALL, SEE MASONRY WALL SCHEDULE ON SHEET S201.
9. SEE DETAIL 03/S301 FOR REINFORCING REQUIREMENTS AT INTERSECTIONS AND CORNERS

LEGEND:

- S - - - - S — FOOTING STEP, SEE DETAIL 04/S301
- SLAB BLOCK-OUT AT COLUMN
- xx'-xx" — TOP OF FOOTING ELEVATION
- xxx'-xx" — TOP OF SLAB ELEVATION
- CHANGE IN ELEVATION RECESSED/DEPRESSED SLAB
- STEEL COLUMN - HSS
- CONCRETE SLAB
- CONCRETE FOUNDATION WALL
- RECESS IN CONCRETE FOUNDATION WALL

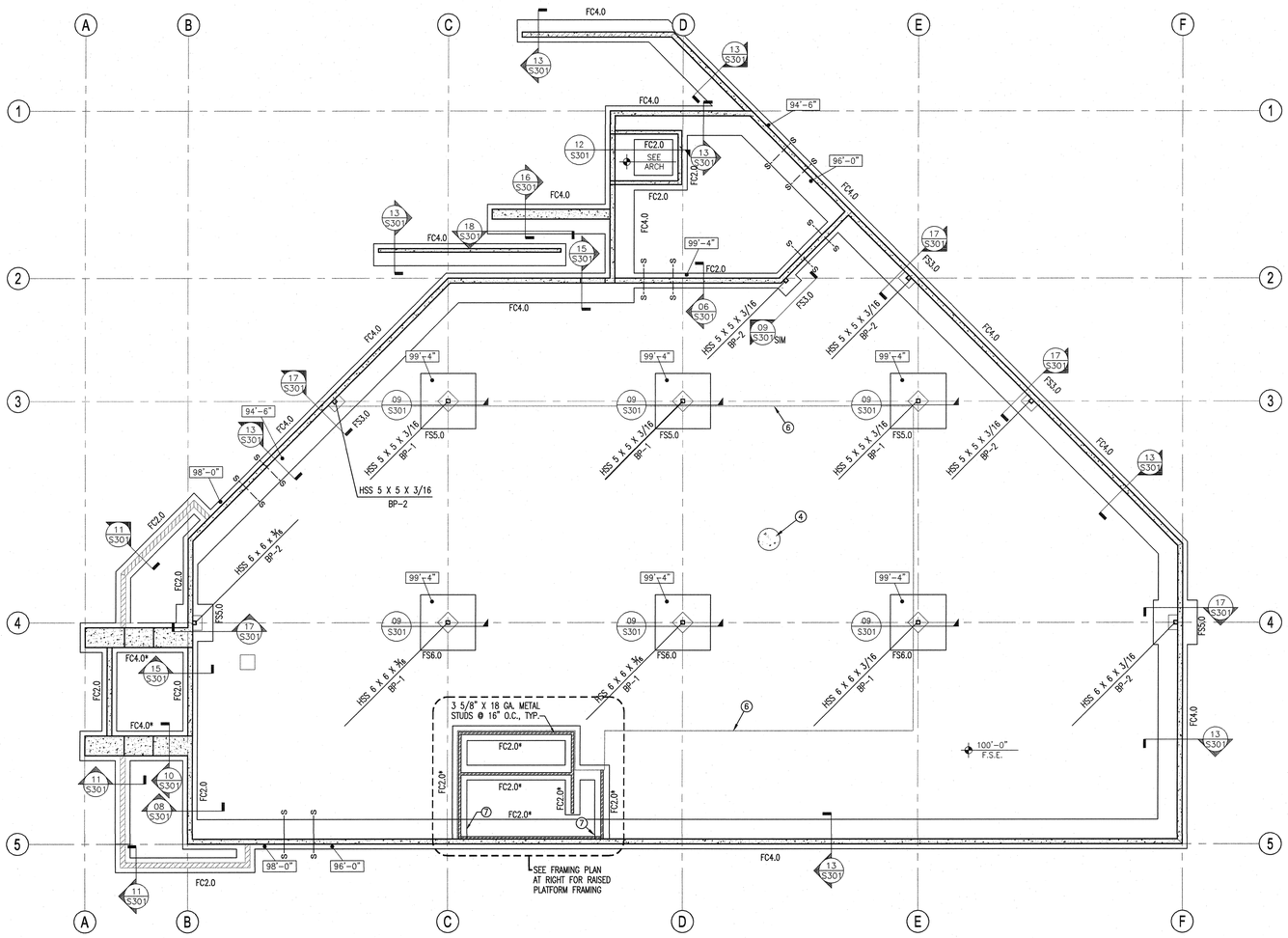

FOOTING & FOUNDATION PLAN

SCALE: 1/8" = 1'-0"

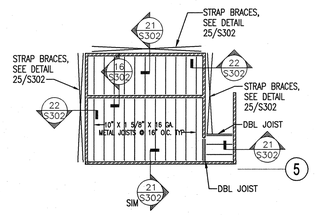

RAISED PLATFORM FRAMING PLAN

SCALE: 1/8" = 1'-0"

NEW RIVERTON LIQUOR STORE

DEPARTMENT OF ALCHOLIC BEVERAGE CONTROL
APPROX. 3900 WEST 13400 SOUTH, RIVERTON, UT

FOOTING & FOUNDATION PLAN

FRANK N MURDOCK JR Architect & Associates
975 East 100 South Suite 100, Salt Lake City, Utah 84102 TEL: (801) 532-4441 FAX (801) 532-4220

LICENSED PROFESSIONAL ENGINEER NO. 171304 SHAUN K. CARTER STATE OF UTAH

REVISION # DATE:

DFCM PROJECT NO.: 05053030
CONSTRUCTION DOCS
FILE NAME: S-101.dwg
PLOT SCALE: AS NOTED
DRAWN BY: DJK
CHECKED BY: KC
DATE: MAY, 2007

S 101

X:\Project Files\3007\07xxx Riverton Liquor Store\Drawings\S-101.dwg, 30x42, 6/6/2007 8:17:53 AM

MASONRY WALL SCHEDULE

MARK	THICK	VERTICAL REINF. NO.	VERTICAL REINF. SIZE	VERTICAL REINF. SPA.	HORIZONTAL REINF. NO.	HORIZONTAL REINF. SIZE	HORIZONTAL REINF. SPA.	GROUT	NOTES
MW-1	8"	(1)	#5	32"	(2)	#4	48	ALL REINF. CELLS	--
MW-2	16"	(1)	#5	16"	(2)	#4	48	SOLID	EACH WYTHE SEE NOTE 1

NOTES:
1. IN MW-2 PROVIDE 16' 9 GAGE DURAWALL JOINT REINF AT 16" OC.

MASONRY BEAM SCHEDULE

MARK	WIDTH	DEPTH	REINFORCEMENT HORIZONTAL	REINFORCEMENT VERTICAL	NOTES
MB-1	8"	16"	(2) #5 @ BOTTOM	SEE WALL REINF	--
MB-2	8"	24"	(2) #5 @ BOTTOM	SEE WALL REINF	--

NOTES:

1. VERTICAL WALL REINFORCEMENT (SIZE & SPACING) SHALL BE USED, UNO. VERTICAL REINFORCEMENT ENDS WITH STD ACI 180° HOOK AND 48 BAR DIAMETERS LAP ABOVE BEAM
2. GROUT BEAMS SOLID FOR DEPTH SHOWN ABOVE, PLUS AS PER WALL SCHEDULE.
3. TOP BARS SHALL EXTEND THE GREATER OF 24" OR 48 BAR DIAMETERS BEYOND FACE OF SUPPORTS AND BE SPLICED WHEN NECESSARY AT MID SPAN. BOTTOM BARS SHALL EXTEND 24" INTO SUPPORTS AND BE SPLICED OVER SUPPORTS WHEN NECESSARY, WHERE THE EXTENSIONS NOTED CANNOT BE PROVIDED HOOK BARS INTO SUPPORTS.
4. GROUT SIDES OF OPENING SOLID 1" PER FT OF OPENING WIDTH, MIN. ONE 8" CELL FOR UP TO 8'-0" SPAN, (2) CELLS FOR UP TO 16'-0" SPAN, ETC, UNO. PROVIDE (2) #5 VERTICAL BARS IN EACH CELL NEXT TO ALL DOORS, WINDOWS, OPENINGS, CONTROL JOINTS, AND AT THE ENDS OF EACH WALL.
5. SEE PLAN & SCHEDULE FOR SPECIAL MASONRY COLS. PROVIDE ONE VERTICAL BAR IN EACH GROUTED CELL. AT MECHANICAL OPENINGS IN WALLS USE MASONRY BEAMS OF SIMILAR SIZE AND REINFORCING AS SHOWN IN THOSE WALLS FOR EQUIVALENT WIDTH OPENINGS. NO MECH OPENINGS SHALL BE PLACED BELOW BEAM BEARING
6. AT WALL NOT SHOWN ON STRUCTURAL DRAWINGS, FOR OPENINGS TO 5'-0" CLEAR, USE 24" DEEP SOLID GROUTED MASONRY BEAM WITH (2) #5 BOTTOM; FOR OPENINGS TO 8'-0" CLEAR, USE 32" DEEP SOLID GROUTED MASONRY BEAM WITH (2) #6 BOTTOM.
7. NO DUCTS, OPENINGS, OR PENETRATIONS SHALL OCCUR THROUGH BEAMS, UNO, ON STRUCTURAL DRAWINGS.

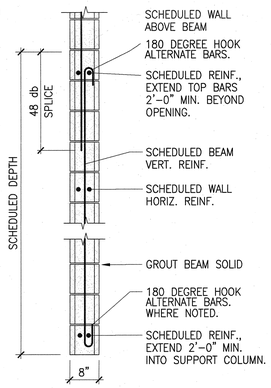

LINTEL DETAIL
NO SCALE

PLAN NOTES (ROOF FRAMING):

◯ CIRCLED NOTES ARE KEYED TO PLAN

1. ALL MASONRY WALLS SHALL BE MW-1, UNO, SEE MASONRY WALL SCHEDULE THIS SHEET.
2. ALL MASONRY LINTELS SHALL BE MB-1, UNO. SEE MASONRY BEAM SCHEDULE THIS SHEET.
3. SEE DETAIL 07/S301 FOR TYPICAL MASONRY CONTROL JOINT CRITERIA. COORDINATE LOCATIONS OF MASONRY CONTROL JOINTS W/ ARCH DWGS.

④ SEE DETAIL 11/S302 FOR ROOF JOIST SUPPORTED PIPING.

⑤ SEE DETAILS 12/S302 & 14/S302 FOR ROOFTOP MECHANICAL UNIT SUPPORTS AND ROOF OPENINGS, TYP. COORDINATE LOCATIONS OF OPENINGS AND WEIGHTS OF MECHANICAL EQUIPMENT WITH ARCHITECTURAL, MECHANICAL DRAWINGS, AND MECHANICAL CONTRACTOR.

6. IN ADDITION TO DESIGNING JOIST FOR FULL CAPACITY SHOWN IN SJI MANUAL, JOIST MANUFACTURER SHALL DESIGN JOIST FOR ADDED CONCENTRATED LOADS INDICATED ON PLAN (#K)
7. SEE ARCH DWGS FOR DECK BEARING ELEVATIONS.
8. SCHEDULE MARK ABREVIATIONS:

MB-# DENOTES MASONRY BEAM, SEE MASONRY BEAM SCHEDULE THIS SHEET.

MW-# DENOTES MASONRY WALL, SEE MASONRY WALL SCHEDULE THIS SHEET.

⑨ JOIST TOP CHORD ANGLE THICKNESS MUST BE 3/8", MINIMUM.

LEGEND:

- CHANGE IN ELEVATION
- STEEL COLUMN - HSS
- STEEL BEAM, GIRDER
- STEEL JOIST
- METAL ROOF DECK, W/ DECK SPAN DIRECTION INDICATED
- OPENING IN DECK
- MASONRY WALL EXTENDING ABOVE ROOF DECK
- MASONRY BEAM, SEE SCHEDULE THIS SHEET

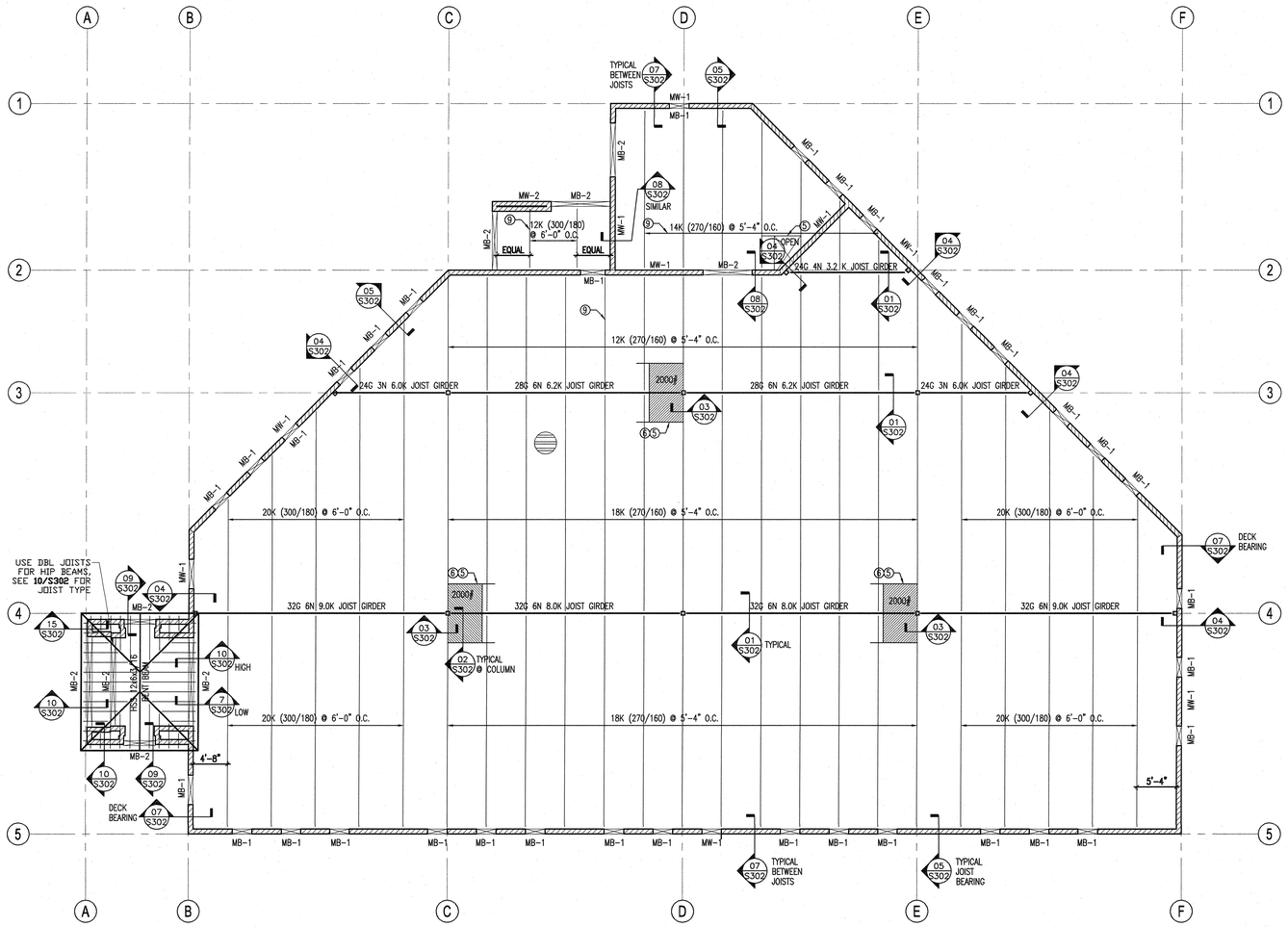

ROOF FRAMING PLAN
SCALE: 1/8" = 1'-0"

NEW RIVERTON LIQUOR STORE

DEPARTMENT OF ALCHOLIC BEVERAGE CONTROL
APPROX. 3900 WEST 13400 SOUTH, RIVERTON, UT

FRANK N MURDOCK JR
Architect & Associates
975 East 100 South Suite 100, Salt Lake City, Utah 84102 TEL: (801) 532-4441 FAX (801) 532-4220

ROOF FRAMING PLAN

LICENSED PROFESSIONAL ENGINEER 6601 No. 101304 SHAUN K. PACKER STATE OF UTAH

REVISION #	DATE:

DFCM PROJECT NO.:
05053030
CONSTRUCTION DOCS
FILE NAME: S-102.dwg
PLOT SCALE: AS NOTED
DRAWN BY: DJK
CHECKED BY: KC
DATE: MAY, 2007

S
102

X:\Project Files\2007\07xxx Riverton Liquor Store\Drawings\S-102.dwg, 30x42, 8/6/2007 8:18:14 AM

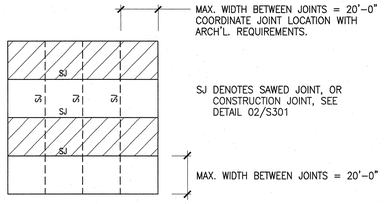

SLAB CONTROL JOINT CRITERIA

DETAIL 01

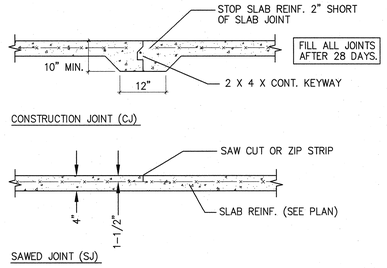

TYPICAL SLAB JOINT DETAILS

DETAIL 02

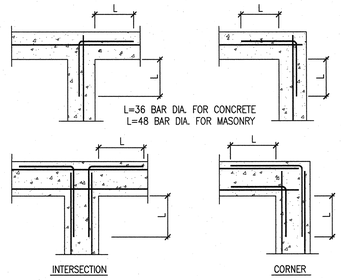

WALL INTERSECTION DOWELS

DETAIL 03

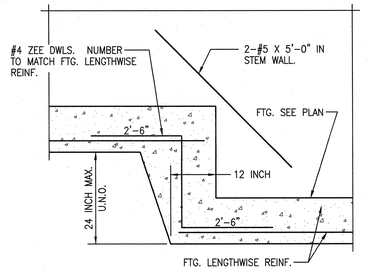

TYPICAL FOOTING STEP

DETAIL 04

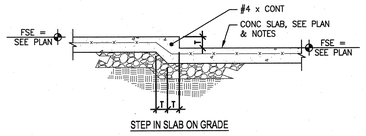

STEP IN SLAB ON GRADE

DETAIL 05

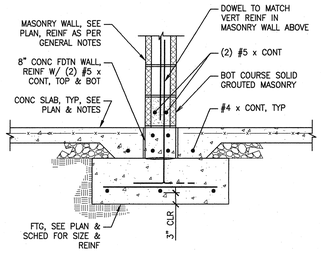

DETAIL 06

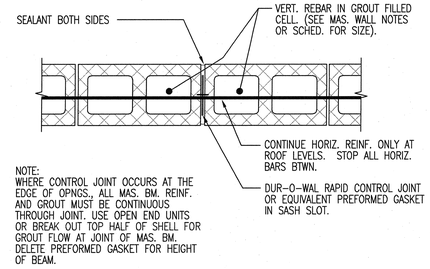

TYPICAL MASONRY CONTROL JOINT

DETAIL 07

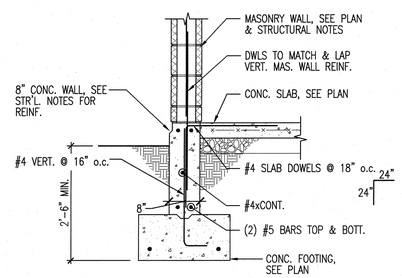

DETAIL 08

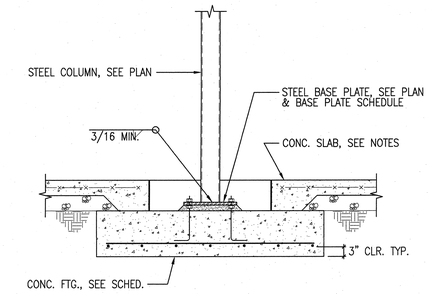

DETAIL 09

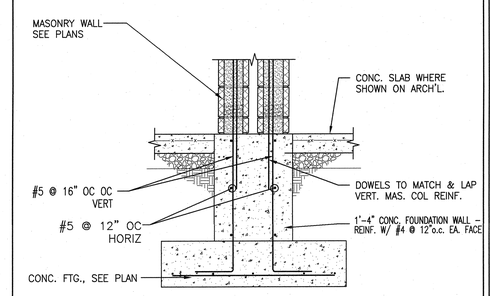

DETAIL 10

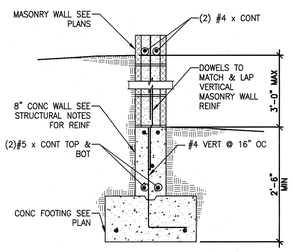

DETAIL 11

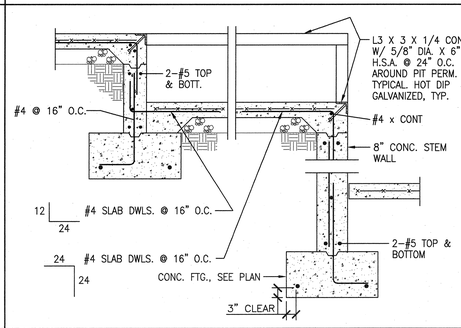

DETAIL 12

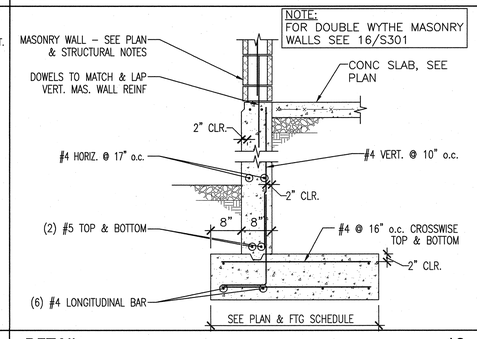

DETAIL 13

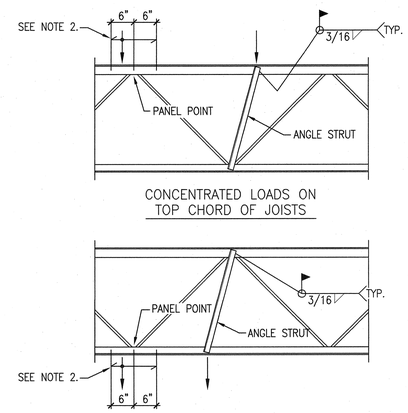

NOTES:

1) PROVIDE ANGLE STRUTS BETWEEN CONCENTRATED LOAD AND PANEL POINT ON OPPOSITE CHORD WHERE CONCENTRATED LOADS EXCEED 150#. ANGLE STRUT SHALL BE AS FOLLOWS:

DEPTH OF JOIST	ANGLE SIZE
UP TO 30"	L1 1/2 X 1 1/2 X 1/4
30" TO 48"	L2 X 2 X 1/4
48" TO 60"	L2 1/2 X 2 1/2 X 1/4

2) WHERE CONCENTRATED LOADS OCCUR WITHIN 6" OF PANEL POINT, NO STRUT IS REQUIRED.

DETAIL 19

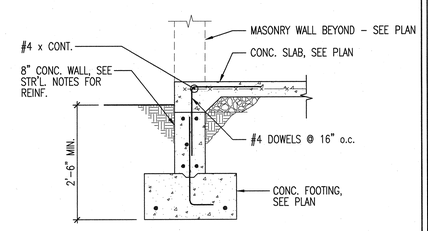

DETAIL 15

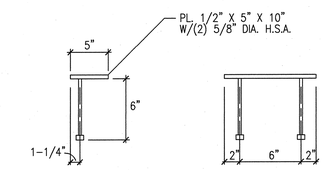

TYPICAL PERIMETER JOIST BEARING PLATE

DETAIL 20

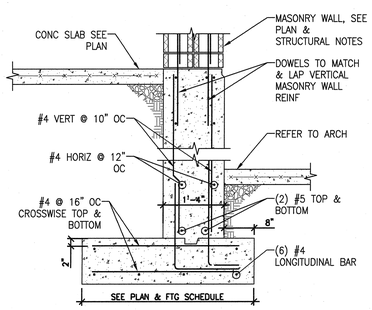

DETAIL 16

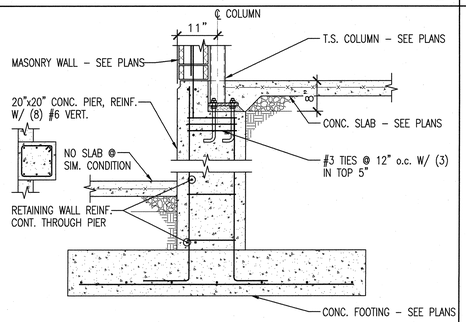

DETAIL 17

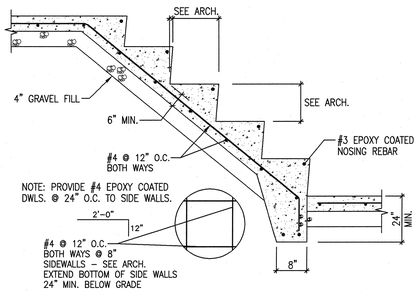

DETAIL 18

DETAIL 21

DETAIL 22

DETAIL 23

DETAIL 24

NEW RIVERTON LIQUOR STORE

DEPARTMENT OF ALCOHOLIC BEVERAGE CONTROL
APPROX. 3900 WEST 13400 SOUTH, RIVERTON, UT

STRUCTURAL DETAILS

FRANK N MURDOCK JR ■ Architect & Associates
975 East 100 South Suite 100, Salt Lake City, Utah 84102 TEL: (801) 532-4441 FAX (801) 532-4220

LICENSED PROFESSIONAL ENGINEER No. 171304 SHANNON KACER STATE OF UTAH

REVISION # DATE:

DFCM PROJECT NO.:
05053030
CONSTRUCTION DOCS
FILE NAME: S-301.dwg
PLOT SCALE: AS NOTED
DRAWN BY: DJK
CHECKED BY: KC
DATE: MAY, 2007

S
301

X:\Project Files\2005\70\xxx Riverton Liquor Store\Drawings\S-301.dwg, 30x42, 6/6/2007 8:18:39 AM

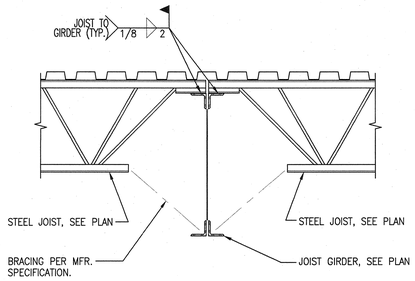

DETAIL 01

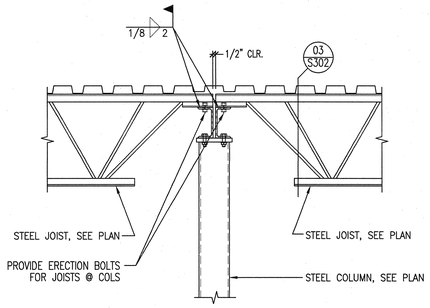

DETAIL 02

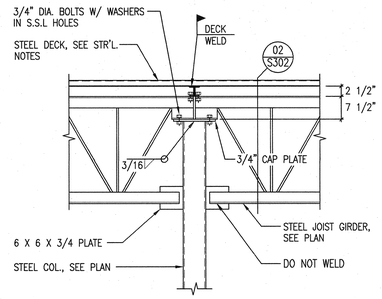

DETAIL 03

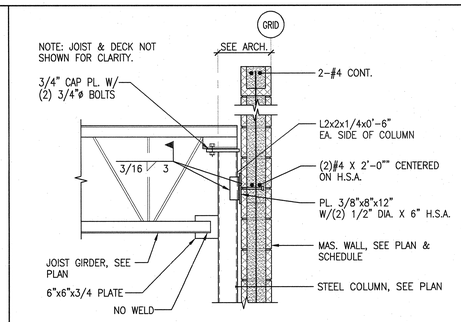

DETAIL 04

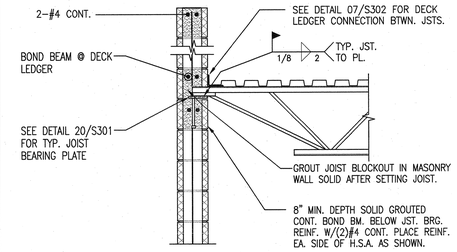

TYPICAL ROOF JOIST BEARING

DETAIL 05

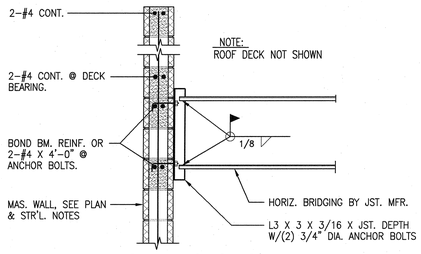

TYP. JST. BRIDGING TO WALL

DETAIL 06

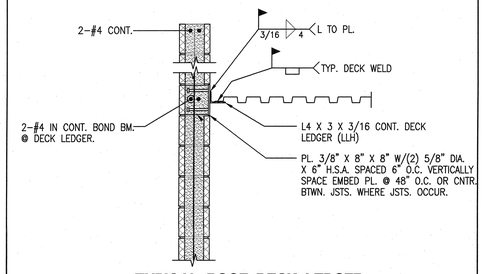

TYPICAL ROOF DECK LEDGER

DETAIL 07

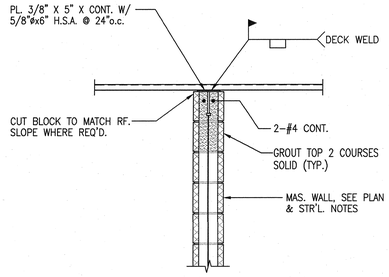

DETAIL 08

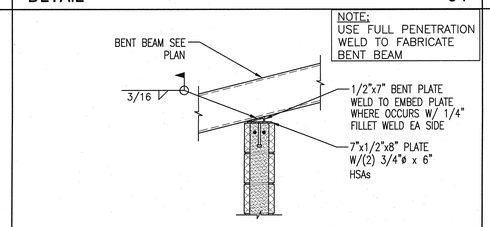

DETAIL 09

DETAIL 10

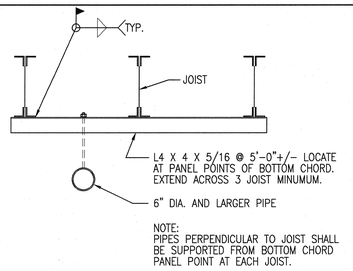

TYPICAL PIPE SUPPORT DETAIL

DETAIL 11

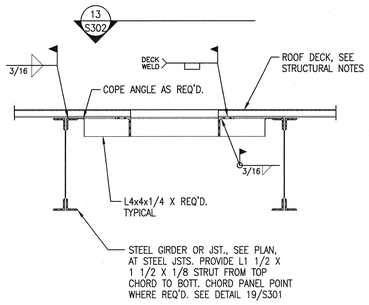

DETAIL 12

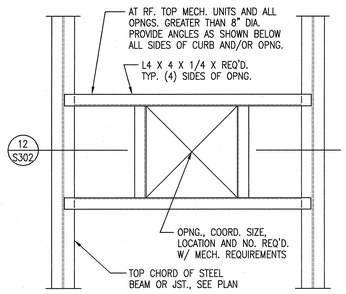

DETAIL 13

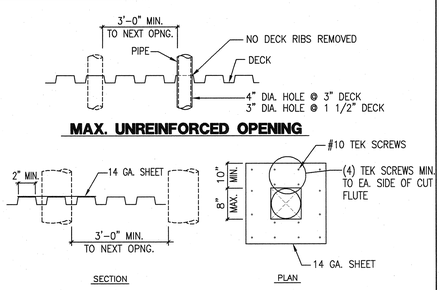

DETAIL 14

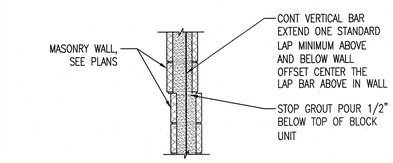

DETAIL 15

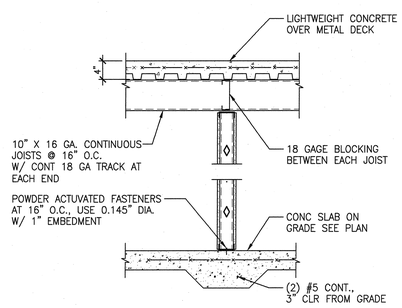

DETAIL 16

DETAIL 17

DETAIL 18

NOT USED 19

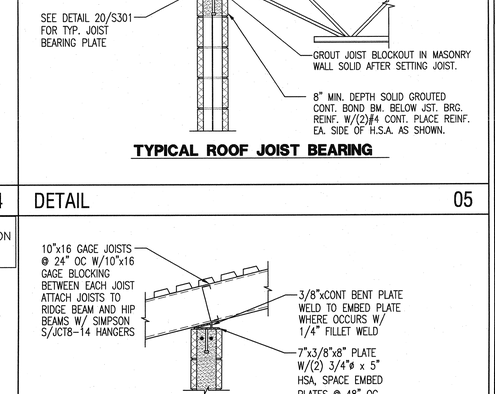

STRAP BRACE SCHEDULE

STRAP	FASTENERS (SEE DETAIL)			
	5/8" S-12 LOW PROFILE HD.			5/32" X 1 1/2" PAF.
	(A) STRAP TO GUSSET PL.	(B) GUSSET TO EA. END STUD	(C) GUSSET TO BASE RUNNER	(D) BASE RUNNER TO FOUNDATION
4"x12 GA.	16	12	12	16" o.c.

NOTE: 1/16" FILLET WELDS MAY BE SUBSTITUTED FOR SCREWS. PROVIDE 1" X 1/16" FILLET WELD FOR EACH SCREW.

DETAIL 25

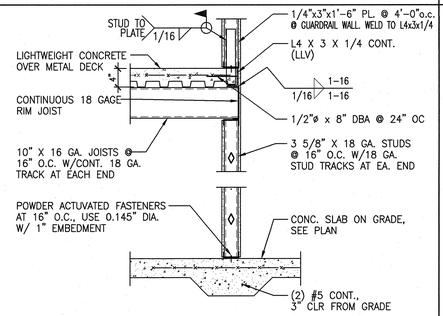

DETAIL 21

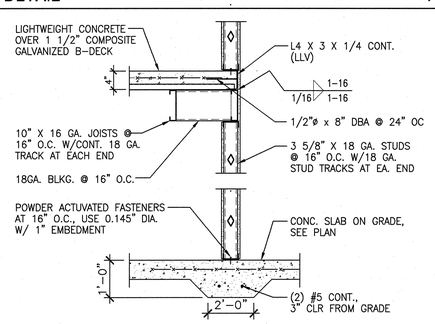

DETAIL 22

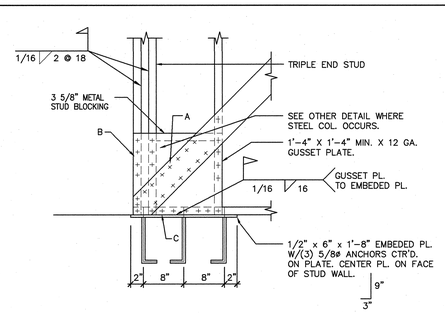

DETAIL 23

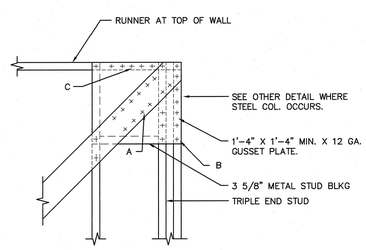

DETAIL 24

NEW RIVERTON LIQUOR STORE

DEPARTMENT OF ALCHOLIC BEVERAGE CONTROL
APPROX. 3900 WEST 13400 SOUTH, RIVERTON, UT

FRANK N MURDOCK JR ■ Architect & Associates
975 East 100 South Suite 100, Salt Lake City, Utah 84102 TEL: (801) 532-4441 FAX (801) 532-4220

STRUCTURAL DETAILS

LICENSED PROFESSIONAL ENGINEER
No. 1241354
SHAUN K. KOCICA
STATE OF UTAH

REVISION # DATE:

DFCM PROJECT NO.: 05053030
CONSTRUCTION DOCS
FILE NAME: S-301.dwg
PLOT SCALE: AS NOTED
DRAWN BY: DJK
CHECKED BY: KC
DATE: MAY, 2007

S
302

X:\Project Files\2007\07xxx Riverton Liquor Store\Drawings\S-302.dwg, 30x42, 6/8/2007 8:18:58 AM

PIPING LEGEND

Item	Symbol	Item	Symbol
GATE VALVE		CHILLED WATER SUPPLY	—CHS—
OS & Y PATTERN GATE VALVE		CHILLED WATER RETURN	—CHR—
BALL VALVE		CONDENSER WATER SUPPLY	—CWS—
BUTTERFLY VALVE		CONDENSER WATER RETURN	—CWR—
MOTORIZED BUTTERFLY VALVE	M	HEATING WATER SUPPLY	—HWS—
HEAT TRACING		HEATING WATER RETURN	—HWR—
DEIONIZED WATER	—DI—	WATER TREATMENT	—WT—
CHECK VALVE		FIRE DEPT. HORN & LIGHT	
SOLENOID VALVE		HOT GAS	—HG—
AUTOMATIC CONTROL VALVE (2-WAY)		FLEXIBLE PIPE CONNECTION	
AUTOMATIC CONTROL VALVE (3-WAY)		REDUCED PRESSURE BACKFLOW PREVENTER	RPBP
PRESSURE REDUCING VALVE		DIRECTION OF FLOW	
P & T RELIEF VALVE		ELBOW DOWN (DN)	
AIR VENT (AUTOMATIC)		ELBOW UP	
REFRIGERANT LIQUID	—RL—	PIPE CAP	
REFRIGERANT SUCTION	—RS—	TEE DOWN	
THERMAL EXPANSION VALVE		UNION	
STRAINER		DOMESTIC COLD WATER	
CIRCUIT SETTER		DOMESTIC HOT WATER	
FLOW METER		HOT WATER CIRC.	
PET COCK OR GAUGE COCK		TEMPERED WATER	—T—
PRESSURE GAUGE W/GAUGE COCK		SANITARY (PLBG) VENT	
THERMOMETER		SANITARY SEWER ABOVE GRADE	
TEMPERATURE & PRESSURE TEST PLUG		SANITARY SEWER BELOW GRADE	
IN-LINE PUMP		DRAIN	—D—
FLOW SWITCH	F	ROOF DRAIN PIPING	—RD—
AQUASTAT	A	OVERFLOW DRAIN PIPING	—OD—
HOSE BIBB OR SILLCOCK		STORM DRAIN PIPING ABOVE GRADE	—SD—
VACUUM	—V—	STORM DRAIN PIPING BELOW GRADE	— —SD— —
FLOOR DRAIN		FIRE SERVICE	—F—
FLOOR SINK		NATURAL GAS	—G—
HOT GAS BYPASS	—HGBP—	COMPRESSED AIR	—CA—
WALL CLEANOUT OR CLEANOUT		VENT THROUGH ROOF	
FLOOR OR GRADE CLEANOUT		STEAM	—S—
GRADE CLEANOUT W/ CONCRETE PAD		CONDENSATE	—C—

MECHANICAL LEGEND

- RETURN OR EXHAUST DUCT DOWN
- RETURN OR EXHAUST DUCT UP
- SUPPLY AIR DUCT DOWN
- SUPPLY AIR DUCT UP
- SPIN-IN FITTING W/MVD
- FLEXIBLE DUCT
- CEILING SLOT DIFFUSER
- CEILING DIFFUSER
- CEILING EXHAUST GRILLE
- CEILING GRILLE
- ACCESS PANEL
- MANUAL VOLUME DAMPER
- MOTORIZED DAMPER (M)
- FIRE DAMPER (F)
- COMBINATION FIRE/SMOKE DAMPER (FS)
- THERMOSTAT OR TEMP SENSOR (T)
- POINT OF CONNECTION TO EXISTING
- DETAIL TAG — DETAIL NO. / DRAWING NO.
- KEYED NOTE — NOTE NO.
- SECTION CUT LINE — SECTION NO. / DRAWING NO.
- CONTROL TRANSFORMER (TRX)
- LOW PRESSURE DUCT W/ TURNING VANES
- BALANCER TO TURN ALL SLOTS IN DIFFUSER FACING DIRECTION NOTED

GENERAL NOTES

1. INDICATES POINT OF CONNECTION OF NEW TO EXISTING MECHANICAL.
2. (E) INDICATES EXISTING. (N) INDICATES NEW MATERIAL.
3. COORDINATE ALL FIRE SPRINKLER, DIFFUSER AND GRILLE LOCATIONS WITH REFLECTED CEILING PLAN AND ELECTRICAL DRAWINGS.
4. THIS CONTRACTOR SHALL NOT SHUT-OFF/ PUT OUT OF SERVICE ANY SYSTEMS/SERVICES WITHOUT FIRST COORDINATING ALL DOWNTIME WITH THE OWNER'S PERSONAL.
5. ALL RIGID ROUND DUCTWORK SHALL RECEIVE 1-1/2" - 2.0 LBS/CU.FT. FIBERGLASS DUCT WRAP. ALL RECTANGULAR DUCT SHALL RECEIVE 1" - 1.5 LBS/CU.FT. DUCT LINER, TRIM AND SEAL JOINTS W/ MYLAR LINING. LOW PRESSURE ROUND FLEXIBLE DUCT TO BE 1-1/2" THICK INSULATED AND A MAXIMUM OF 10 FT. LONG. ALL INSULATION TO MEET NFPA 90 PER UL 181-CLASS 1. MEDIUM PRESSURE FLEXIBLE DUCT TO BE INSULATED, RATED FOR 6" W.C. AND SHALL BE STRECHED OUT TO PREVENT ANY KINKS OR OFFSETS (3 FT. MAX. LENGTH).
6. DUCTWORK AND PIPE ROUTING IS APPROXIMATE, DIAGRAMATIC AND IS NOT TO BE SCALED. WHERE ALTERNATE ROUTING, OFFSETS AND TRANSITIONS ARE REQUIRED FOR COORDINATION OF ALL WORK, THIS CONTRACTOR SHALL MAKE CHANGES WITHOUT ADDITIONAL COSTS.
7. THIS CONTRACTOR SHALL CLOSELY COORDINATE NEW MECHANICAL WITH ALL NEW AND EXISTING MECHANICAL, ELECTRICAL, ARCHITECTURAL AND STRUCTURAL MEMBERS.
8. THIS CONTRACTOR SHALL FIELD VERIFY ALL MECHANICAL ITEMS PRIOR TO COMMENCING NEW WORK. NO ADDITIONAL COST WILL BE ALLOWED FOR CONTRACTOR'S FAILURE TO BECOME FAMILIAR WITH EXISTING MECHANICAL CONDITIONS.
9. THIS CONTRACTOR SHALL USE SMACNA STANDARDS FOR HIGH PRESSURE DUCT CONSTRUCTION OF SUPPLY DUCTWORK UPSTREAM OF VAV BOX - SEAL CLASS "A". ALL OTHER DUCTWORK SHALL BE CONSTRUCTED ACCORDING TO SMACNA STANDARDS FOR LOW PRESSURE DUCT CONSTRUCTION - SEAL CLASS "B".
10. ALL MECHANICAL SYSTEMS SHALL BE INSTALLED IN ACCORDANCE WITH ALL CURRENT LOCAL CODES.
11. THIS CONTRACTOR SHALL PROVIDE SUBMITTALS ON ITEMS LISTED IN MECHANICAL EQUIPMENT LIST TO THE ENGINEER FOR REVIEW PRIOR TO THE ORDER, PURCHASE OR INSTALLATION OF THESE SAME ITEMS.
12. ALL VAV BOXES AND DIFFUSERS MUST BE BALANCED PER PLAN. PROVIDE BALANCE REPORT TO ENGINEER.
13. DUCT DIMENSIONS SHOWN ARE INSIDE CLEAR DIMENSIONS.
14. M.C. IS TO REAL ALL KEYED NOTOES ON ALL SHEETS BEFORE SUBMITTING BID.

PLUMBING FIXTURE CONNECTION SCHEDULE

	DESCRIPTION	CONNECTION SIZE: COLD WATER	HOT WATER	WASTE	VENT	SPECIFICATIONS
WC-1	WATER CLOSET (HANDICAP)	1½"	NA	4"	3"	K-4302, SEAT: 1655/C, FLUSH VALVE: ZURN ZR-6000XL-WS1
WC-2	WATER CLOSET (HANDICAP)	1½"	NA	4"	3"	K-4302, SEAT: 1655/C, FLUSH VALVE: ZURN ZR-6000XL-WS1 (INSTALL RIGHT SIDE FLUSH)
L-1	LAVATORY	½"	½"	1½"	1¼"	KOHLER: GREENWICH WALL MOUNT K-2031-N W/ ACCESSORY MODEL #102G FOR HANDICAP INSTALLATION & K-8998 TRAP FAUCET: SYMMONS ULTRA SENSE S-6080-G W/ GRID DRAIN POWER HYDROGUARD SERIES 480 TEMPERING VALVE.
HB-1	HOSE BIBB	¾"	N/A	N/A	N/A	WOODFORD: MODEL 74P-¾
FD-1	FLOOR DRAIN	N/A	N/A	SEE PLANS	N/A	J. R. SMITH 2005 w/ A05NB NICKEL/BRONZE STRAINER AND TRAP PRIMER
FS-1	FLOOR SINK	N/A	N/A	SEE PLANS	N/A	J. R. SMITH 3140-12-Y W/ NICKEL/BRONZE TOP/ ½ GRATE AND TRAP PRIMER
SC-1	SILLCOCK	¾	N/A	N/A	N/A	J. R. SMITH 5509QT (w/ INTEGRAL VACUUM BREAKER AND STAINLESS STEEL BOX)
WCO-1	WALL CLEAN OUT	N/A	N/A	SEE PLANS	N/A	J. R. SMITH 4530
FCO-1	FLOOR CLEAN OUT	N/A	N/A	SEE PLANS	N/A	J. R. SMITH 4023
RD-1	ROOF DRAIN	N/A	N/A	N/A	N/A	J.R. SMITH 1010Y - C - R - CI DOME PROVIDE CAST IRON DOME.
OD-1	OVERFLOW DRAIN	N/A	N/A	N/A	N/A	J.R. SMITH 1080Y - C - R - CI DOME PROVIDE CAST IRON DOME.
DSN-1	DOWNSPOUT NOZZLE	N/A	N/A	N/A	N/A	J.R. SMITH 1770
WHA	WATER HAMMER ARRESTORS	AS REQUIRED	AS REQUIRED	N/A	N/A	J. R. SMITH 5020
SS-1	SERVICE SINK	¾"	¾"	3"	1½"	KOHLER: K-6710 w/ K-9142 STRAINER FAUCET: CHICAGO FAUCET MODEL # 897-RCF
S-1	SINK (SS 2 COMPARTMENT)	½"	½"	2"	1¼"	JUST: DLX-1829-A-GR WITH J35 STRAINER FAUCET: CHICAGO FAUCET MODEL # 786-SWE29CP PROVIDE W/ GARBAGE DISPOSAL UNIT GDU-1: ISE MODEL PRO 77, 1 hp, 115 V, 1Φ, 9.0 amps
EWC-1	ELECTRIC WATER COOLER	½"	N/A	1½"	1¼"	SUNROC: NWCA-8-BL (BI LEVEL FOUNTAIN) 7.8 gph, 4.5 FLA, 415 Watts, 120v - 1Φ, R-134A

ROOF TOP UNIT SCHEDULE RTU-

PLAN CODE	UNIT TONAGE	TOTAL CFM	EXTERNAL STATIC PRESSURE	DESIGN CRITERIA: OUTSIDE AIR TEMP.	RETURN AIR DB	RETURN AIR WB	LEAVING AIR TEMP	EER	SENSIBLE COOLING CAPACITY (MBH)	HEATING CAPACITY: INPUT (MBH)	OUPUT (MBH)	ELECTRICAL: VOLTS PHASE	MCA	MOP	DIMENSIONS (in.): Length	Width	Height	OPER. WEIGHT (lbs)	MANUFACTURER & MODEL NO	REMARKS
RTU-1 RTU-2 RTU-3	12.5	4800	0.6	95	80	62	54.3/53.2	9.6	102.99	208.0	168.90	208 / 3	63.0	80	107	71	65	1,950	TRANE YCD150D3HO	SEE GENERAL NOTES

GENERAL NOTES:

1. VALUES ARE RATED AT 4,500 Ft. ELEVATION.
2. PROVIDE MINIMUM OUTSIDE AIR SET POINTS.
3. PROVIDE 14" FACTORY CURB.
4. PROVIDE ECONOMIZER. AND POWER EXHAUST.
5. PROVIDE FACTORY 2LB. GAS TRAIN.
6. PROVIDE COMPRESSOR CRANKCASE HEATER.
7. ALL ROOFTOP UNITS MUST MEED OR EXCEED CURRENT ASHRAE ENERGY CODE 90.1 STANDARDS.
8. PROVIDE FACTORY HACR CIRCUIT BREAKER.
9. PROVIDE 7 DAY PROGRAMMABLE T-STAT WITH 100 Ft. OF PLEMUN RATED T-STAT WIRE.
10. PROVIDE FACTORY MOUNTED CONV. OUTLET TO BE FIELD WIRED.
11. PROVIDE SMOKE DETECTOR IN SUPPLY & RETURN AIR DUCTWORK.
12. PROVIDE COIL GUARDS.

EXHAUST FAN SCHEDULE EF-

PLAN CODE	AREA SERVED	TYPE	CFM @ ELEV.	ESP	FAN RPM	MOTOR: WATTS	H.P.	VOLTAGE & PHASE	SONES	DAMPER TYPE	METHOD OF CONTROL	OPENING SIZE	OPERATING WT. (LBS.)	MANUFACTURER / MODEL	ACCESSORIES
EF-1	SEE PLANS	ROOF CENTRUGAL	540	.25"	970	NA	1/6	120 / 1	5.2	BACK DRAFT	TIME CLOCK	12" x 12"	65	PENN BARRY DOMEX DX08B	PROVIDE FACTORY 14" CURB

GAS FIRED UNIT HEATER SCHEDULE UH-

PLAN CODE	HEATING MBH OUTPUT REQ'D. ELEVATION	MANUFACTURER & MODEL NO.	SPECIFIED UNIT CAP.: INPUT (S.L.) (MBH)	OUTPUT (S.L.) (MBH)	CFM (STD.)	THROW AT 12' MOUNTING (FT.)	ELECTRICAL: VOLT/ PHASE	FAN H.P.	FLUE SIZE / TYPE	SIZE: LENGTH	WIDTH	HEIGHT	WEIGHT	REMARKS
UH-1	80	MODINE PD 100	100	80	1,460	41	120 / 1	1/12	6"Φ / "B"	30"	18"	29"	110 lbs.	W/T-STAT, PIPE HANGER KIT AND FACTORY 2LB. GAS TRAIN.

AIR DEVICE SCHEDULE

GRILLE NUMBER — GRILLE CFM

PLAN CODE	TYPE & DUTY	NECK SIZE	CEILING TYPE	N.C. LEVEL MAX	MAX. CFM	MANUFACTURER & MODEL NO.	REMARKS
1	SUPPLY	10"Φ	See Plans	20	420	PRICE 10"Φ / 24" x 24" / SCDA / 3 / B12	
2	EXHAUST	6"Φ	See Plans	16	180	PRICE 6"Φ / 12" x 12" / PDDR / 2 / B12	PROVIDE OBD
3	RETURN	22" x 22"	See Plans	10	1340	PRICE 22" x 22" / 24" x 24" / PDDR / 3 / B12	PROVIDE W/SOUND BOOT
4	SUPPLY	8"Φ	See Plans	20	280	PRICE 8"Φ / 24" x 24" / SCDA / 3 / B12	

PUMP SCHEDULE P-

PLAN CODE	DUTY	GPM	FEET OF HEAD	PUMP RPM	MOTOR: H.P.	VOLTAGE & PHASE	MANUFACTURER & MODEL NO.	COMMENTS
P-1	CIRCULATOR	8	26	3250	1/8	120 / 1	TACO 0013	BRONZE FITTED

ELECTRIC WATER HEATER SCHEDULE EWH-

PLAN CODE	INPUT (KW)	RECOVERY RATE (GAL/HR)	TEMP RISE (°F)	DIMENSIONS	ELECTRICAL: VOLT & PHASE	AMPS	MANUFACTURER & MODEL NO.	REMARKS
EWH-1	2500	13	80	26" x 18" x 21"	208 / 1	10.4	A.O. SMITH DEL-15	WITH AMTROL ST-5 EXPANSION TANK

PVE Inc. Consulting Mechanical Electrical Engineers
1040 North 2200 West, Suite 100
Salt Lake City, UT 84116
Phone: (801) 359-3158
Fax: (801) 521-4114

NEW RIVERTON LIQUOR STORE

DEPT OF ALCOHOLIC BEVERAGE CONTROL
RIVERTON, UTAH

FRANK N MURDOCK JR ■ Architect & Associates
975 East 100 South Suite 100, Salt Lake City, Utah 84102 TEL: (801) 532-4441 FAX (801) 532-4220

MECHANICAL SCHEDULES

Patrick T. Cantrell, Registered Professional Engineer, 323760, State of Utah, 5.17.07

REVISION # DATE:

DFCM PROJECT NO.: 05053030
CONCEPT
FILE NAME: 7068.00
PLOT SCALE: N/A
DRAWN BY: J. GIBBS
CHECKED BY: K. GIBBS
DATE: MAY 18, 2007

M0.1

Copyright (C) 2007 by PVE, Inc. Salt Lake City, Utah. All rights reserved. Unauthorized copying and/or use is illegal and subject to prosecution.

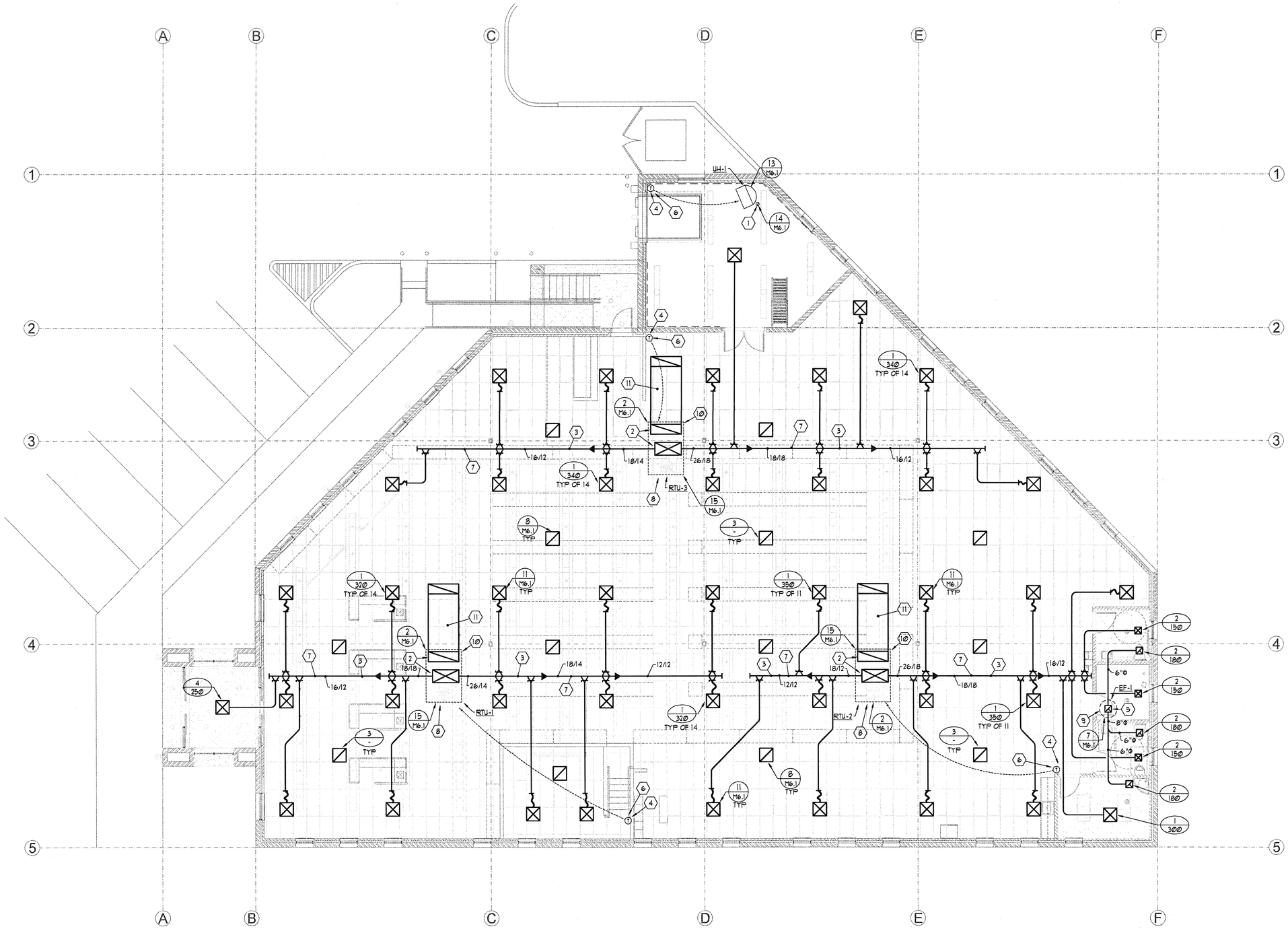

KEYED NOTES:

1. 6" TYPE "B" FLUE UP THROUGH ROOF SEE DETAIL 6/M6.2
2. PROVIDE AND INSTALL DUCTWORK DROPS DOWN FROM UNIT SIZED FULL SIZE OF UNITS OPENINGS. (TYPICAL)
3. COORDINATE WITH ROOF STRUCTURE AND INSTALL DUCTWORK TIGHT TO BOTTOM OF STRUCTURE. IF POSSIBLE ROUTE MAINS UP IN BETWEEN JOIST. (TYPICAL) OFFSET AND TRANSITION AS REQUIRED.
4. COORDINATE WITH ARCH'S PLANS FOR FINAL ELEVATIONS AND LOCATIONS OF 7-DAY PROGRAMMABLE T-STAT'S. (TYPICAL)
5. 12"X12" RISER TO AIR DOME EF-1 ON ROOF.
6. PROVIDE LOCKING COVER FOR T-STAT.
7. HOLD DUCTWORK TIGHT TO BOTTOM OF STRUCTURE. (TYPICAL)
8. OUTLINE OF RTU ON ROOF ABOVE.
9. OUTLINE OF EF-1 ON ROOF ABOVE.
10. COORDINATE WITH ARCH/STRUCTURAL PLANS AS TO FINAL LOCATION/OREIENTATION OF RTU'S. (TYPICAL)
11. PROVIDE 18" OF LINED RETURN AIR DUCTWORK WITH OPENING TURNED UPWARDS ON END.

GENERAL NOTES:

1. ALL EXPOSED DUCTWORK OR DUCTWORK ABOVE GYP. CEILINGS SHALL BE HARD DUCTED.
2. USE YOUNG GEAR TYPE BALANCING REGULATORS ABOVE ALL GYP. BOARD CEILINGS.
3. ALL MEDIUM PRESSURE DUCTWORK SHALL BE HELD TIGHT TO BOTTOM OF STRUCTURE. OFFSET AND TRANSITION AS REQUIRED.
4. OFFSET AND TRANSITION ALL DUCTWORK AND PIPING AS REQUIRED.
5. ALL VALVES SHALL BE LOCATED ABOVE ACCESSIBLE CEILINGS.
6. PROVIDE ACCESS PANELS AS REQUIRED.
7. CONTRACTOR TO COORDINATE ALL INSTALLATIONS WITH OTHER TRADES.
8. CONTRACTOR TO COORDINATE ALL FINAL LOCATION OF T-STAT'S WITH OWNER AND ARCHITECT.
9. CONTRACTOR TO PROVIDE AND INSTALL SOUND BOOTS ON ALL RETURN AIR GRILLES. BOOTS TO BE PAINTED FLAT BLACK.
10. CONTRACTOR TO COORDINATE GRILLES WITH REFLECTED CEILING GRID.
11. CONTRACTOR TO COORDINATE WITH ELECTRICAL AND DO NOT ROUTE PIPING OVER ELECTRICAL EQUIPMENT.
12. ALL PIPING SHALL BE HELD TIGHT TO BOTTOM OF STRUCTURE.
13. PROVIDE 4" DEEP SEAL TRAPS WITH TRAP PRIMERS ON ALL FLOOR DRAINS & FLOOR SINKS.
14. ALL WASTE PIPING TO BE SLOPED AS REQUIRED BY CODE.

MECHANICAL FLOOR PLAN

SCALE: 1/8" = 1' - 0" 6' 0 4' 8' 12' 16'

PVE, Inc.
Consulting Mechanical / Electrical Engineers
1040 North 2200 West, Suite 100
Salt Lake City, UT 84116
Phone: (801) 359-3158
Fax: (801) 521-4114

NEW RIVERTON LIQUOR STORE

DEPT OF ALCOHOLIC BEVERAGE CONTROL
RIVERTON, UTAH

MECHANICAL FLOOR PLANS

FRANK N MURDOCK JR ■ Architect & Associates
975 East 100 South Suite 100, Salt Lake City, Utah 84102 TEL: (801) 532-4441 FAX: (801) 532-4220

PATRICK T. CARDWELL
5-17-07
323760
REGISTERED PROFESSIONAL ENGINEER
STATE OF UTAH

REVISION # DATE:

DFCM PROJECT NO.:
05053030
CONCEPT
FILE NAME: 7068.00
PLOT SCALE: N/A
DRAWN BY: J. GIBBS
CHECKED BY: K. GIBBS
DATE: MAY 18, 2007

M2.1

Copyright (C) 2007 by PVE, Inc. Salt Lake City, Utah. All rights reserved. Unauthorized copying and/or use is illegal and subject to prosecution.

Copyright (C) 2007 by PVE, Inc. Salt Lake City, Utah. All rights reserved. Unauthorized copying and/or use is illegal and subject to prosecution.

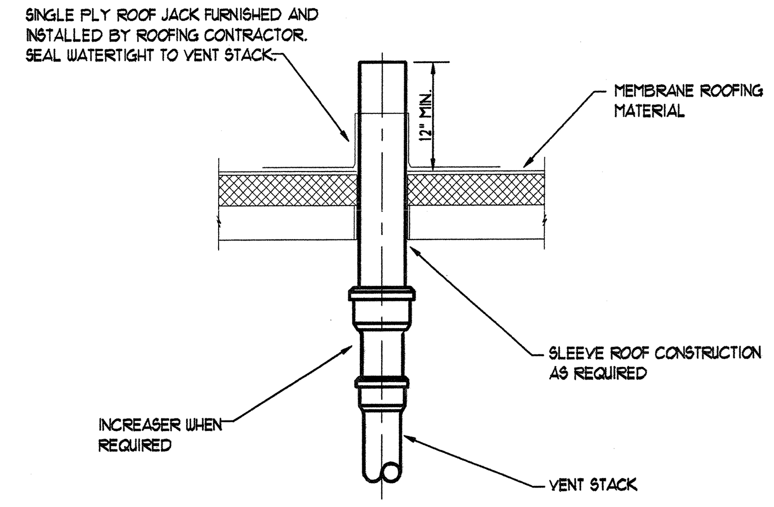

1 / M6.1 **VENT THROUGH ROOF DETAIL**

NOT TO SCALE

Note: ROOF TOP UNIT AND CURB SHOULD BE INSTALLED TO MEET LOCAL SEISMIC ZONE REQUIREMENTS. M.C. TO FOLLOW SEISMIC ENGINEER ON RECORD DETAILING AND REQUIREMENTS TO MEET LOCAL SEISMIC ZONE REQUIREMENTS.

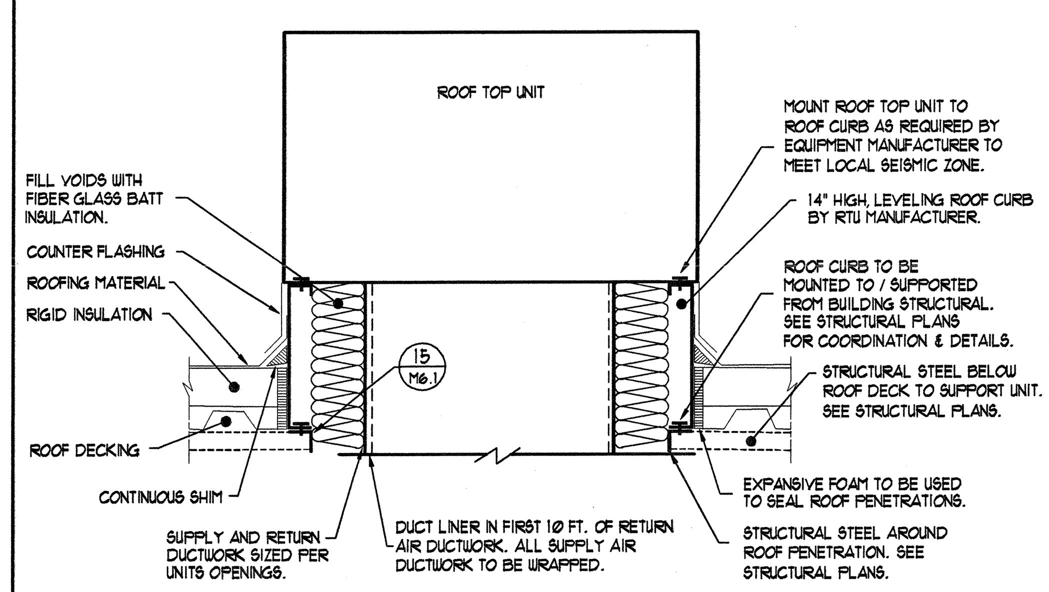

2 / M6.1 **ROOF TOP UNIT CURB DETAIL**

NOT TO SCALE

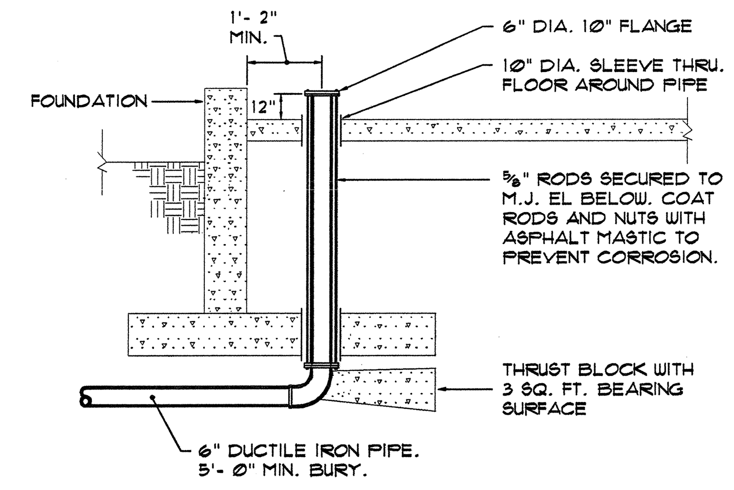

3 / M6.1 **WATER ENTRY DETAIL**

NOT TO SCALE

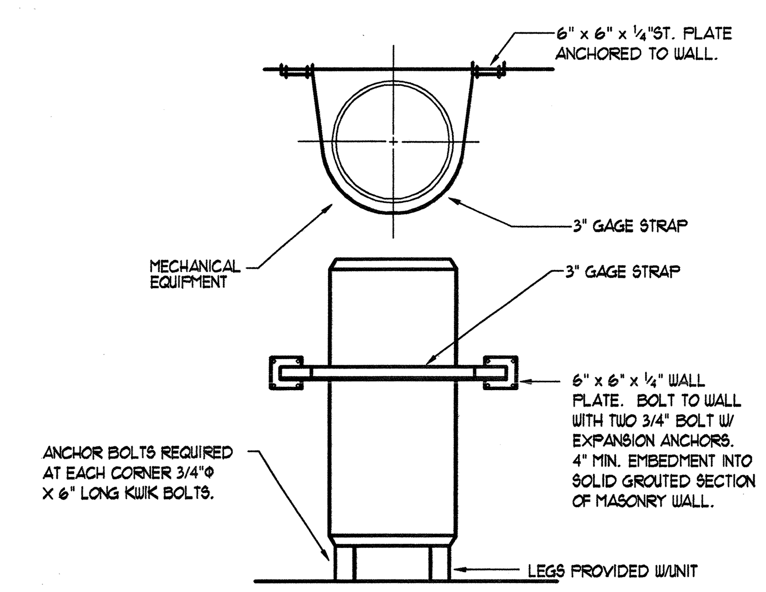

4 / M6.1 **FLOOR MOUNTED EQUIPMENT ANCHOR & STRAP DETAIL**

NOT TO SCALE

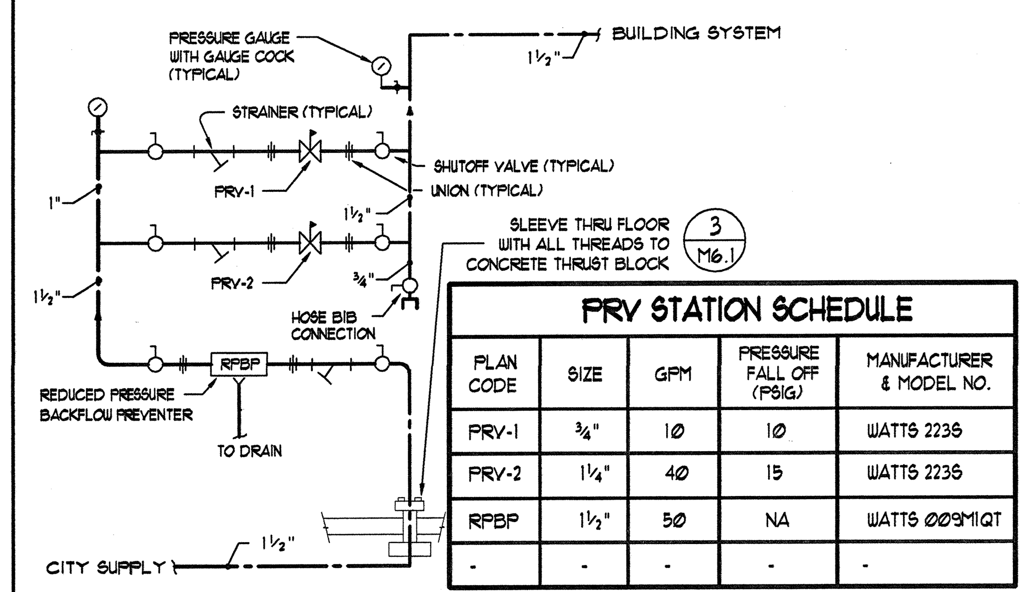

PRV STATION SCHEDULE				
PLAN CODE	SIZE	GPM	PRESSURE FALL OFF (PSIG)	MANUFACTURER & MODEL NO.
PRV-1	¾"	10	10	WATTS 223S
PRV-2	1¼"	40	15	WATTS 223S
RPBP	1½"	50	NA	WATTS 009M1QT
-	-	-	-	-

5 / M6.1 **PRV STATION DETAIL**

NOT TO SCALE

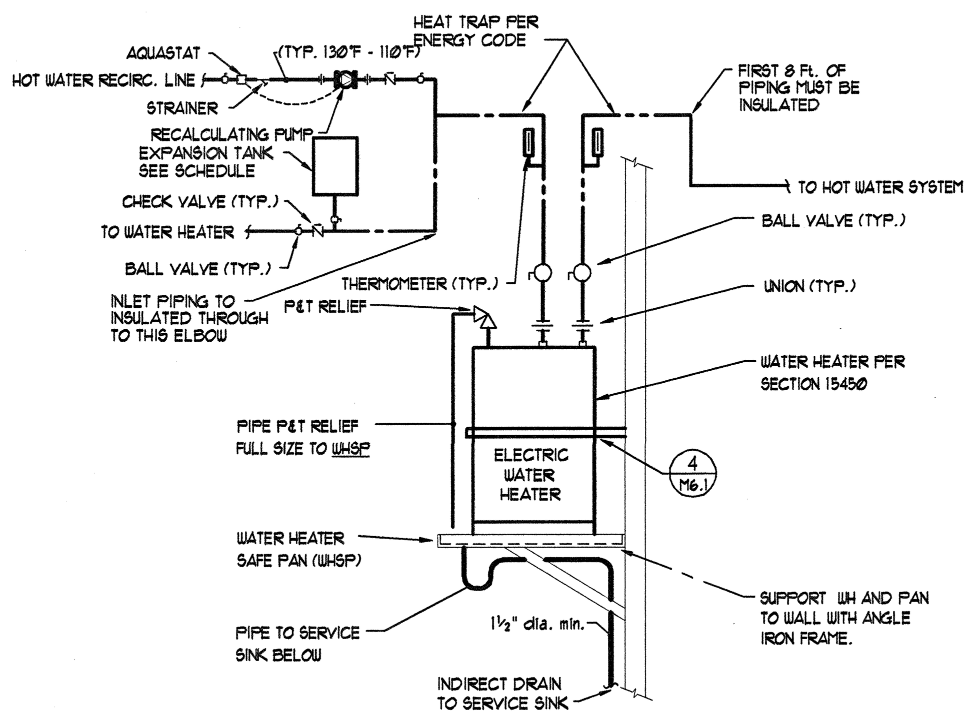

6 / M6.1 **ELECTRIC WATER HEATER PIPING DETAIL (WALL HUNG)**

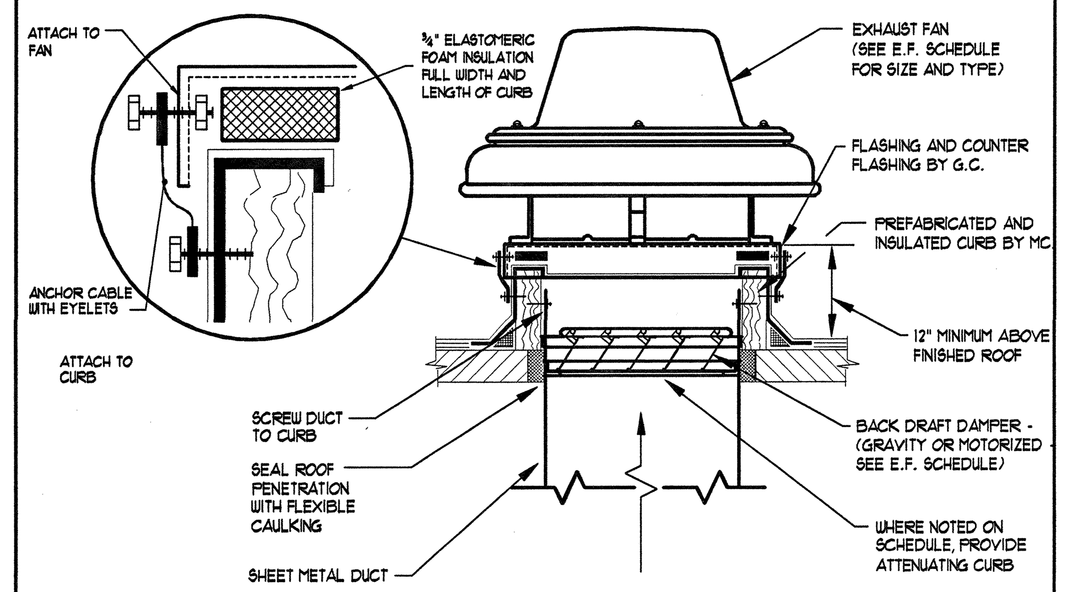

7 / M6.1 **EXHAUST FAN AND CURB DETAIL**

NOT TO SCALE

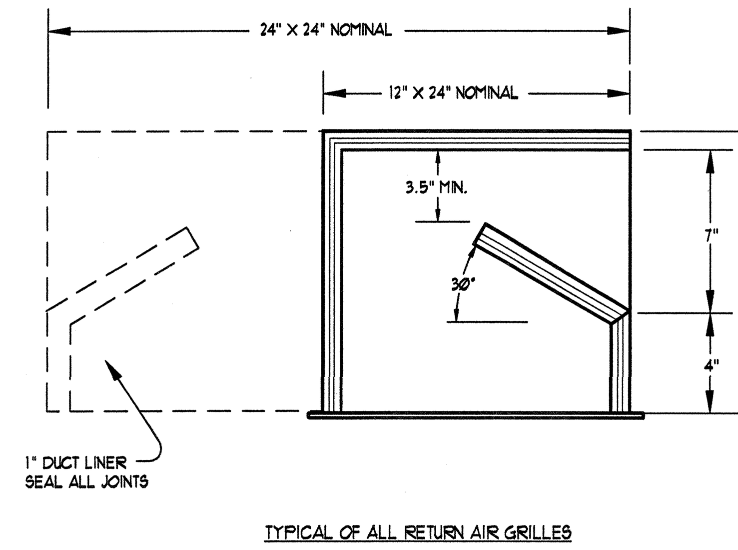

TYPICAL OF ALL RETURN AIR GRILLES

8 / M6.1 **RETURN AIR GRILLE SOUND BOOT DETAIL**

NOT TO SCALE

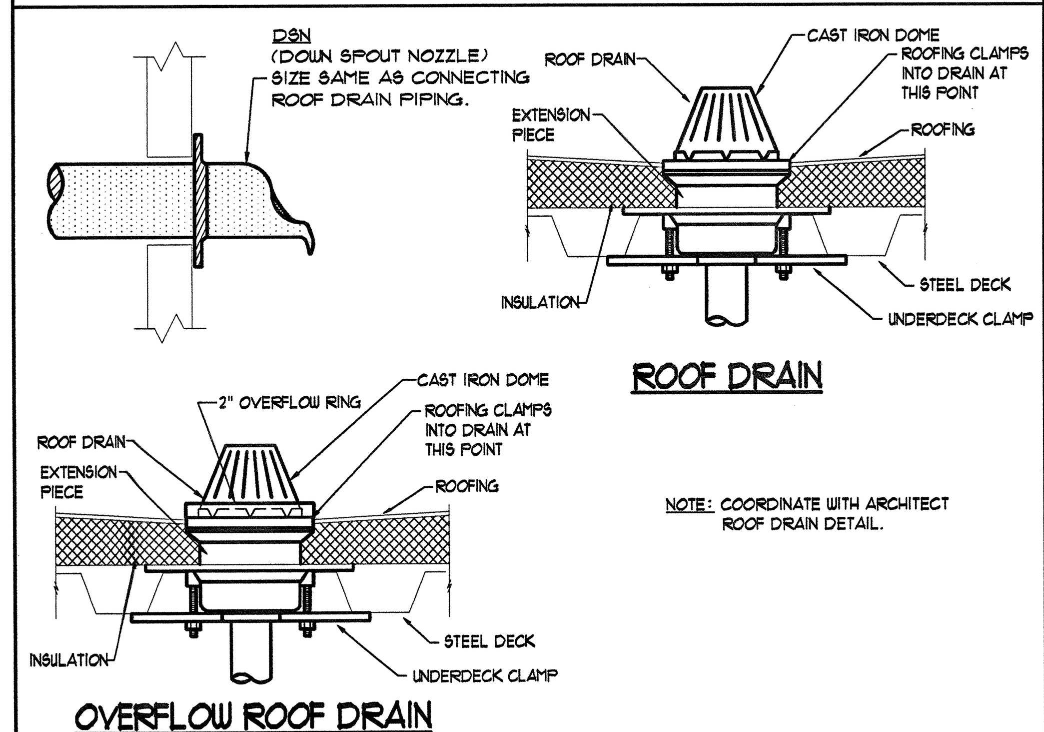

NOTE: COORDINATE WITH ARCHITECT ROOF DRAIN DETAIL.

9 / M6.1 **ROOF DRAIN & OVERFLOW ROOF DRAIN DETAIL**

NOT TO SCALE

CONTRACTOR IS TO COORDINATE WITH OWNER AND OWNER'S INSURANCE COMPANY ON INSTALLATION OF IAMPO APPROVED SEISMIC SHUT-OFF VALVE IS REQUIRED. NOTE: VALVE IS NOT REQUIRED BY QUESTAR GAS.

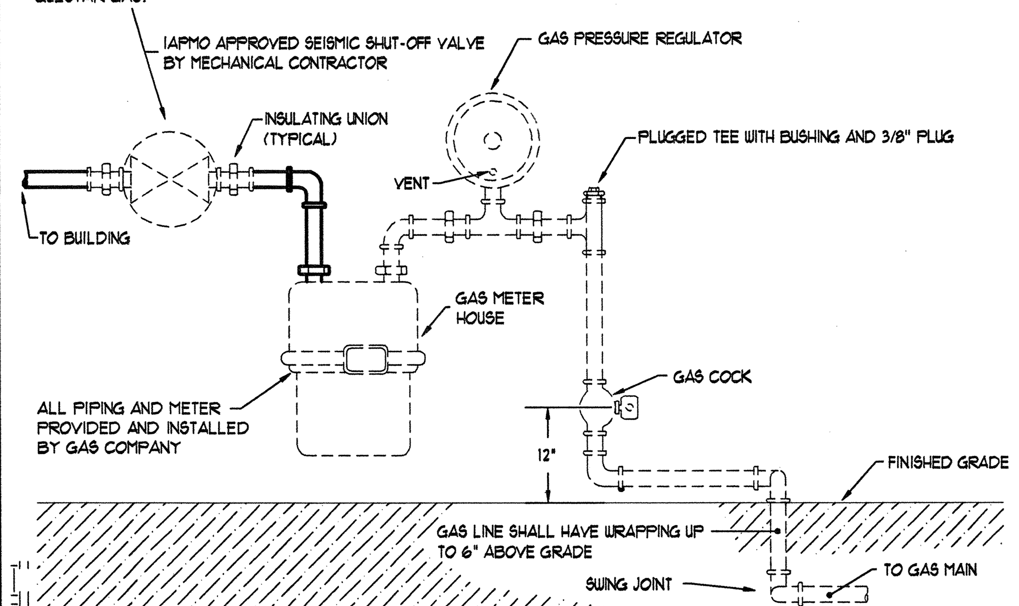

10 / M6.1 **GAS METER SERVICE CONNECTION DETAIL**

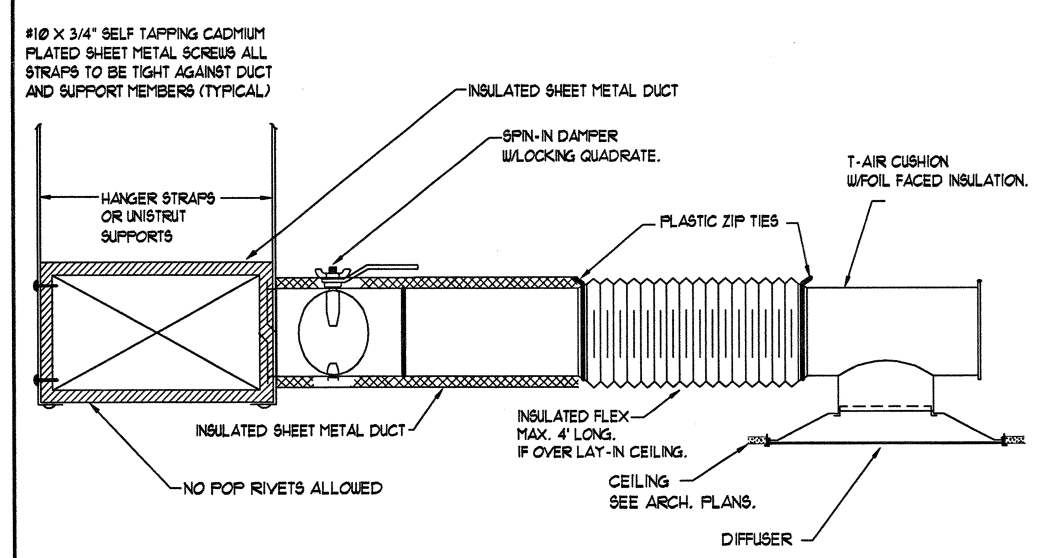

11 / M6.1 **DIFFUSER MOUNTING DETAIL**

NOT TO SCALE

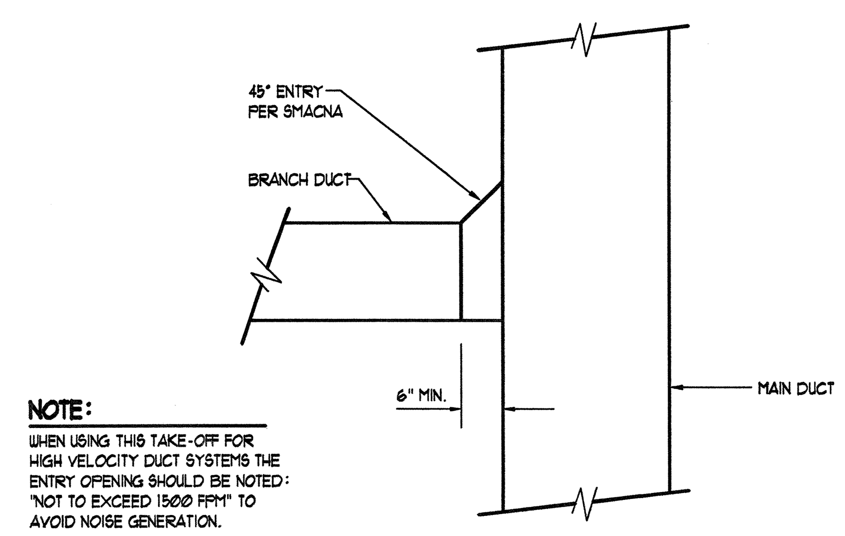

NOTE:
WHEN USING THIS TAKE-OFF FOR HIGH VELOCITY DUCT SYSTEMS THE ENTRY OPENING SHOULD BE NOTED: "NOT TO EXCEED 1500 FPM" TO AVOID NOISE GENERATION.

12 / M6.1 **TYPICAL DUCT TAKEOFF DETAIL**

NOT TO SCALE

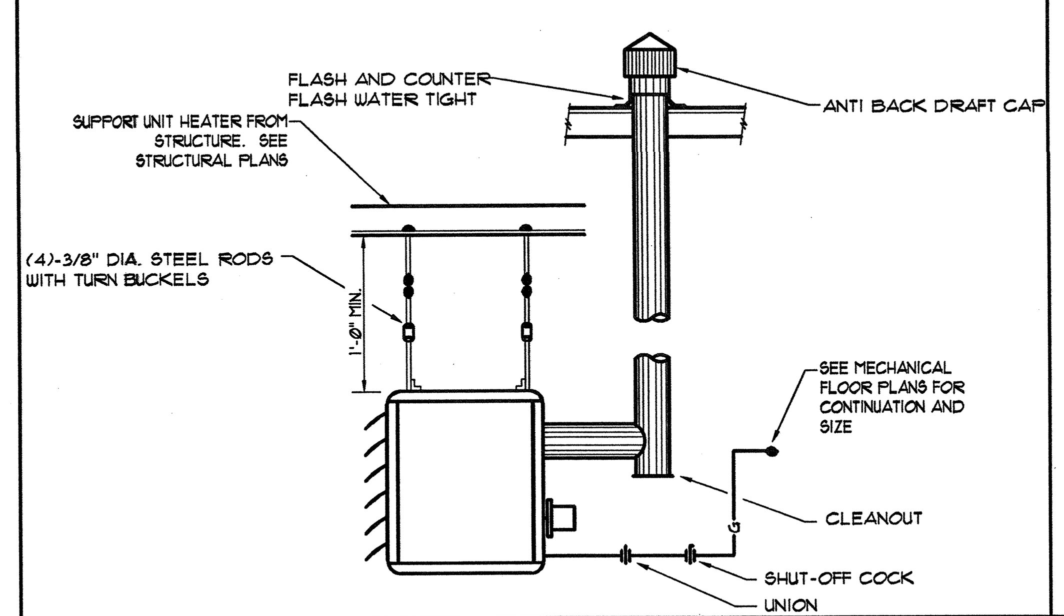

13 / M6.1 **GAS FIRED UNIT HEATER DETAIL**

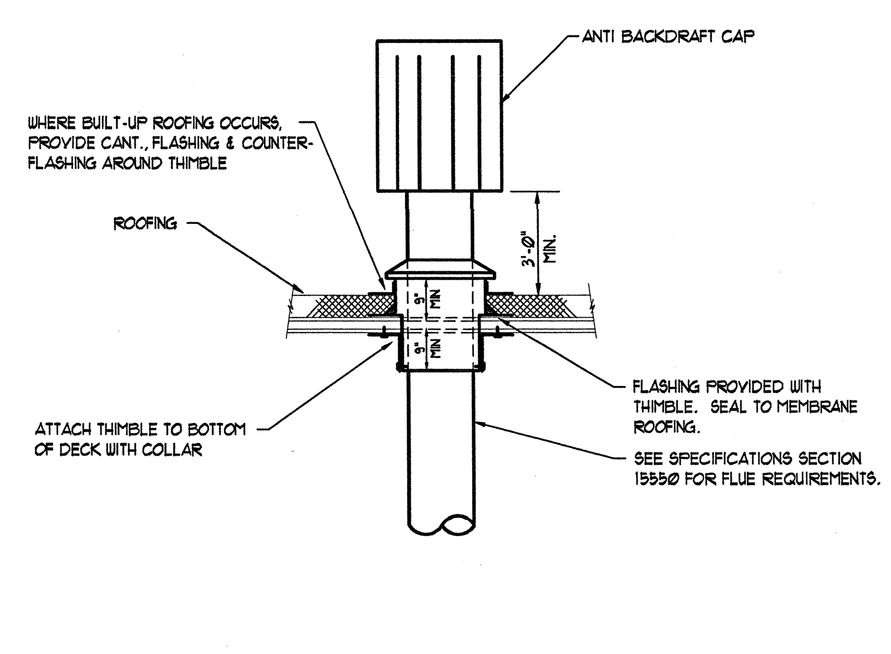

14 / M6.1 **FLUE ROOF PENETRATION DETAIL**

NOT TO SCALE

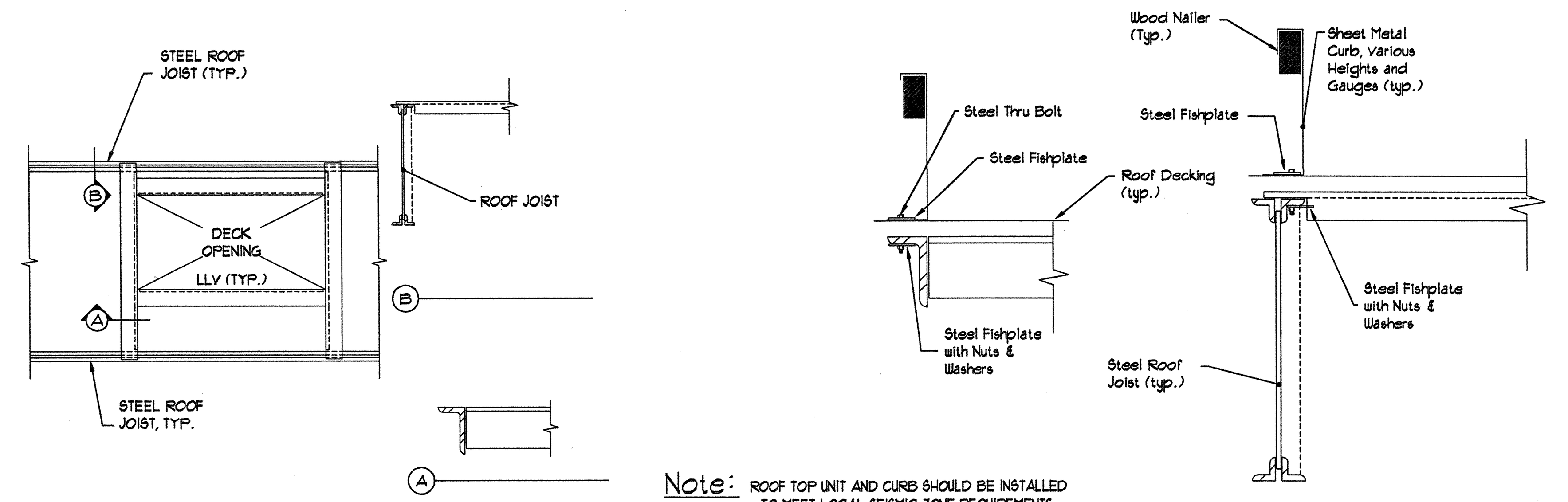

Note: ROOF TOP UNIT AND CURB SHOULD BE INSTALLED TO MEET LOCAL SEISMIC ZONE REQUIREMENTS. M.C. TO FOLLOW SEISMIC ENGINEER ON RECORD DETAILING AND REQUIREMENTS TO MEET LOCAL SEISMIC ZONE REQUIREMENTS.

15 / M6.1 **ROOF CURB SEISMIC DETAIL** (See Structural Plan for final detailing)

NOT TO SCALE

PVE Inc. Consulting Mechanical Electrical Engineers
1040 North 2200 West, Suite 100
Salt Lake City, UT 84116
Phone: (801) 359-3158
Fax: (801) 521-4114

NEW RIVERTON LIQUOR STORE
DEPT OF ALCOHOLIC BEVERAGE CONTROL
RIVERTON, UTAH

FRANK N MURDOCK JR ■ Architect & Associates
975 East 100 South Suite 100, Salt Lake City, Utah 84102 TEL: (801) 532-4441 FAX (801) 532-4220

MECHANICAL DETAILS

Patrick T. Cantrell Registered Professional Engineer 323760 State of Utah 5-17-07

REVISION # DATE:

DFCM PROJECT NO.:
05053030
CONCEPT
FILE NAME: 7068.00
PLOT SCALE: N/A
DRAWN BY: J. GIBBS
CHECKED BY: K. GIBBS
DATE: MAY 18, 2007

M6.1

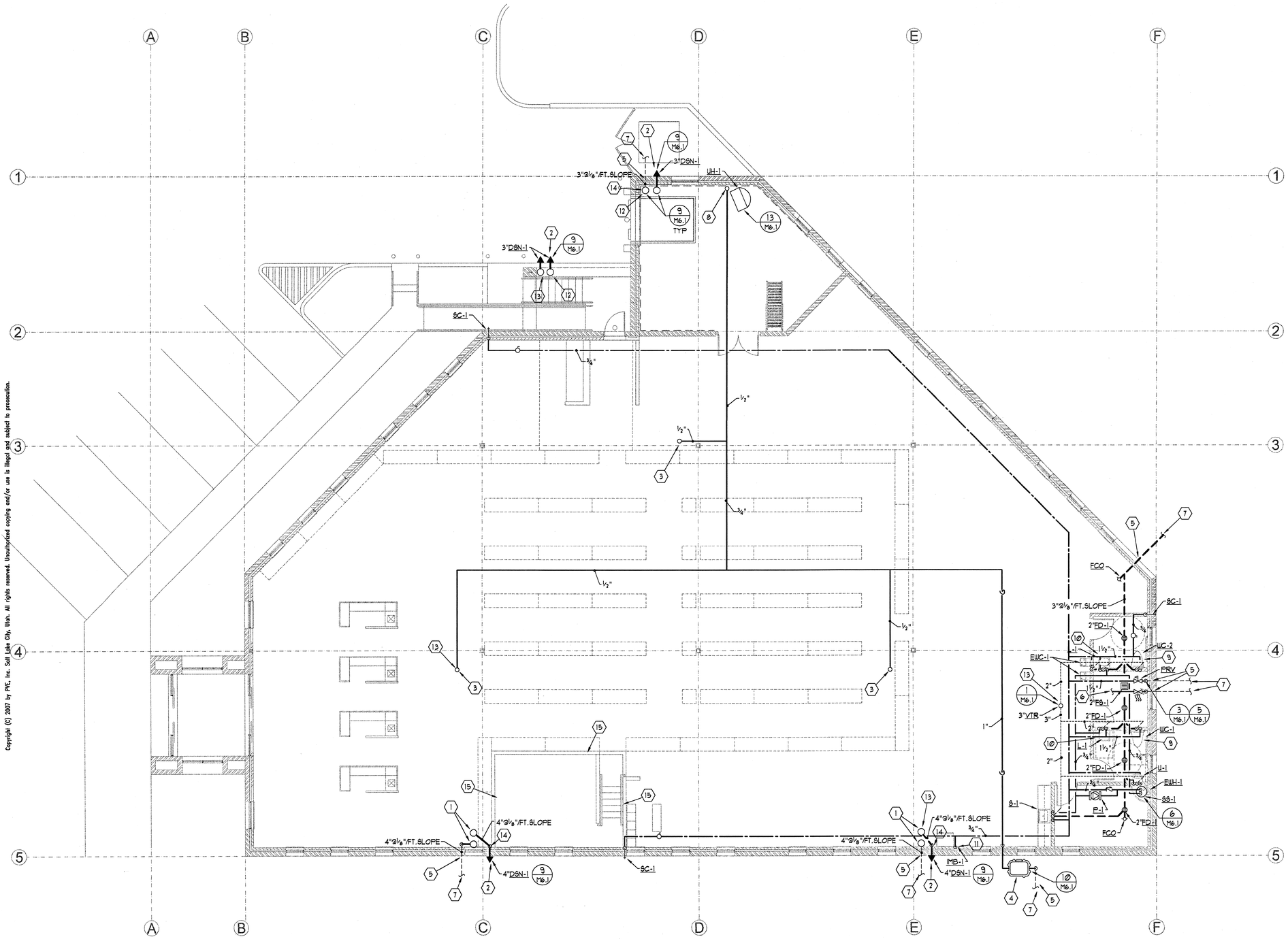

KEYED NOTES:

1. 4" RISERS TO ROOF DRAINS ON ROOF.
2. EXTEND SECONDARY DOWN SPOUT OUT OF BUILDING. COORDINATE FINAL ELEVATIONS WITH ARCHS/OWNER.
3. 1/2" GAS RISER TO ROOF TOP UNIT. M.C. TO PROVIDE FINAL CONNECTIONS REQUIRED.
4. GAS LOAD FOR NEW BUILDING IS 725 CFH @ 2LB. PRESSURE. GAS METER BY QUESTAR. LENGTH OF RUN IS 160'
5. M.C. TO FIELD VERIFY AND COORDINATE WITH ARCH'S AND CIVIL'S PLANS IN PROVIDING CODE REQUIRED COVERAGE OVER ALL PLUMBING LINES ENTERING & EXISTING THE BUILDING.
6. ALL FIRE PROTECTION PIPING TO BE PROVIDED AND ISNTALL BY F.P.C. (TYPICAL)
7. M.C. TO EXTEND ALL UTILTIES 5' OUTSIDE OF BUILDING. COORDINATE WITH SITE ELEVATIONS AND PROVIDE CODE REQUIRED COVERAGE (TYPICAL)
8. PROVIDE FINAL CONNECTION TO UNIT HEATER.
9. M.C. TO PROVIDE WATER HAMMER ARRESTORS ON ALL PIPING WITH QUICK CLOSE VALVES. (TYPICAL)
10. PROVIDE HOSE BIBB UNDER LAVATORY. (TYPICAL)
11. PROVIDE ICE MAKER CONNECTION BOX AT REFRIGERATOR. COORDINATE WITH ARCH/OWNER AS TO FINAL LOCATION.
12. 3" RISERS TO DRAINS ON ROOF.
13. M.C. TO SEAL ALL ROOF PENETRATIONS WATER TIGHT. (TYPICAL)
14. DROP PIPING DOWN TIGHT ALONG INSIDE WALL TO ROUTE BELOW SLAB.
15. F.P.C. TO PROVIDE FIRE PROTECTION SYSTEM UNDER OFFICE FLOOR IN STORAGE SPACE.

GENERAL NOTES:

1. ALL EXPOSED DUCTWORK OR DUCTWORK ABOVE GYP. CEILINGS SHALL BE HARD DUCTED.
2. USE YOUNG GEAR TYPE BALANCING REGULATORS ABOVE ALL GYP. BOARD CEILINGS.
3. ALL MEDIUM PRESSURE DUCTWORK SHALL BE HELD TIGHT TO BOTTOM OF STRUCTURE. OFFSET AND TRANSITION AS REQUIRED.
4. OFFSET AND TRANSITION ALL DUCTWORK AND PIPING AS REQUIRED.
5. ALL VALVES SHALL BE LOCATED ABOVE ACCESSIBLE CEILINGS.
6. PROVIDE ACCESS PANELS AS REQUIRED.
7. CONTRACTOR TO COORDINATE ALL INSTALLATIONS WITH OTHER TRADES.
8. CONTRACTOR TO COORDINATE ALL FINAL LOCATION OF T-STAT'S WITH OWNER AND ARCHITECT.
9. CONTRACTOR TO PROVIDE AND INSTALL SOND BOOTS ON ALL RETURN AIR GRILLES. BOOTS TO BE PAINTED FLAT BLACK.
10. CONTRACTOR TO COORDINATE GRILLES WITH REFLECTED CEILING GRID.
11. CONTRACTOR TO COORDINATE WITH ELECTRICAL AND DO NOT ROUTE PIPING OVER ELECTRICAL EQUIPMENT.
12. ALL PIPING SHALL BE HELD TIGHT TO BOTTOM OF STRUCTURE.
13. PROVIDE 4" DEEP SEAL TRAPS WITH TRAP PRIMERS ON ALL FLOOR DRAINS & FLOOR SINKS.
14. ALL WASTE PIPING TO BE SLOPED AS REQUIRED BY CODE.

PIPING FLOOR PLAN

SCALE: 1/8" = 1' - 0" 6' 0 4' 8' 12' 16'

PVE Inc.
Consulting Mechanical Electrical Engineers
1040 North 2200 West, Suite 100
Salt Lake City, UT 84116
Phone: (801) 359-3158
Fax: (801) 521-4114

NEW RIVERTON LIQUOR STORE

DEPT OF ALCOHOLIC BEVERAGE CONTROL
RIVERTON, UTAH

FRANK N MURDOCK JR ■ Architect & Associates
975 East 100 South Suite 100, Salt Lake City, Utah 84102 TEL: (801) 532-4441 FAX: (801) 532-4220

PIPING PLANS

FRANK T. CARROLL
REGISTERED
323760
PROFESSIONAL ENGINEER
State of Utah

REVISION # DATE:

DFCM PROJECT NO.:
05053030
CONCEPT
FILE NAME: 7068.00
PLOT SCALE: N/A
DRAWN BY: J. GIBBS
CHECKED BY: K. GIBBS
DATE: MAY 18, 2007

P2.1

Copyright (C) 2007 by PVE, Inc. Salt Lake City, Utah. All rights reserved. Unauthorized copying and/or use is illegal and subject to prosecution.

ELECTRICAL SYMBOL SCHEDULE

STANDARD MOUNTING HEIGHT UNLESS OTHERWISE NOTED ON PLANS

SYMBOL	DESCRIPTION	MOUNTING HEIGHT	NOTES
	ONE CIRCUIT, TWO WIRE HOME RUN TO PANEL		
	2 CIRCUIT, 3 WIRE, COMMON NEUTRAL HOME RUN		
	3 CIRCUIT, 4 WIRE, COMMON NEUTRAL HOME RUN		
	CONDUIT RUN CONCEALED IN WALL OR CEILING		
	CONDUIT UP		
	CONDUIT DOWN		
	CONDUIT STUB LOCATION	CAP CONDUIT	
	CEILING LIGHT FIXTURE	CEILING	
	WALL LIGHT FIXTURE	AS NOTED	
	RECESSED DOWNLIGHT FIXTURE	CEILING	
	FLUORESCENT LIGHT FIXTURE	AS NOTED	
	FLUORESCENT EMERGENCY EGRESS LIGHT FIXTURE	AS NOTED	AS NOTED (SEE DETAIL)
	CEILING MOUNTED EXIT LIGHT	CEILING	
	WALL MOUNTED EXIT LIGHT	AS NOTED	
$	SINGLE POLE SWITCH	+4'-0"	
$3	THREE-WAY SWITCH	+4'-0"	
$4	FOUR-WAY SWITCH	+4'-0"	
	DIMMER SWITCH	+4'-0"	
	DUPLEX RECEPTACLE	+16"	
	DUPLEX RECEPTACLE - FLOOR MOUNTED		
EWC	ELECTRIC WATER COOLER RECEPTACLE (GFCI)		SEE DETAIL
WP	GROUND FAULT INTERRUPTER WEATHERPROOF RECEPTACLE	+24"	
IG	ISOLATED GROUND RECEPTACLE	+16"	
	GROUND FAULT INTERRUPTER DUPLEX RECEPTACLE	+16"	
	FOURPLEX RECEPTACLE	+16"	
	FOURPLEX RECEPTACLE - FLOOR MOUNTED		
	TELEPHONE/DATA OUTLET - FLOOR MOUNTED		
	TELEPHONE OUTLET	+16"	
	TELEPHONE/DATA OUTLET	+16"	
J	JUNCTION BOX ('F' IN FLOOR)	AS NOTED	
	MOTOR OUTLET	TO SUIT EQUIP.	
$T	MANUAL STARTER THERMAL OVERLOAD SWITCH W/PILOT LIGHT	+4'-0"	
	120/208 VOLT PANEL BOARD	TOP AT +6'-0"	
	TELEPHONE TERMINAL BOARD		
F	FIRE ALARM MANUAL STATION	+4'-0"	
H	FIRE ALARM SIGNAL HORN/STROBE	+6'-8"	
S	SMOKE DETECTOR	CEILING	
D	DUCT SMOKE DETECTOR		MTD. IN DUCT
H	HEAT DETECTOR	CEILING	
FACP	FIRE ALARM CONTROL PANEL	AS NOTED	
FS	FIRE ALARM FLOW SWITCH		
TS	FIRE ALARM TAMPER SWITCH		
KP	SECURITY SYSTEM KEYPAD	+4'-0"	
GB	SECURITY SYSTEM GLASS BREAK SENSOR	CEILING	
MS	SECURITY SYSTEM MOTION SENSOR	CEILING	
DC	SECURITY SYSTEM DOOR CONTACT	CEILING	
SERT	SECURITY SYSTEM PANEL	AS NOTED	
	SECURITY SYSTEM CCTV CAMERA	PEDESTAL	
MON	SECURITY SYSTEM CCTV LCD MONITOR	PEDESTAL	
842	ARCHITECTURAL ROOM NUMBER		
FXX	LIGHT FIXTURE (LETTER DESIGNATES TYPE)		
EQ 34	EQUIPMENT NUMBER		
•••	OVER HEAD DOOR CONTROLLER		

ABBREVIATIONS

BG	BELOW GRADE
C	CONDUIT
CKT	CIRCUIT
CU	COPPER
(E)	EXISTING
GRD	GROUND
TYP	TYPICAL
(X)	DEMOLISH/DELETE
MH	MANHOLE
POS	POINT OF SALE

A — ELECTRICAL LEGEND & SYMBOLS

NONE

LIGHT FIXTURE SCHEDULE

FIXTURE NUMBER	FIXTURE MANUFACTURER	FIXTURE CATALOG #	LAMPS TYPE	LAMPS QTY.	FIXTURE VOLTS	FIXTURE WATTS	FIXTURE MOUNTING	REMARKS
F1	AXIS	FLPLS-8-T5-2-SCBA-E-1CA-36-C	F28T5/SP35	4	120	120	PENDANT	PROVIDE WITH ELECTRONIC BALLAST
F2	AXIS	FLPLS-8-T5-2-SCBA-E-1CA-36-C	F28T5/SP35	2	120	60	PENDANT	PROVIDE WITH ELECTRONIC BALLAST
F3	METALUX	2GR8-232-EB81	F32T8/SP35 ECO	2	120	66	LAY-IN GRID	PROVIDE WITH ELECTRONIC BALLAST
F4	METALUX	2RDI-332RP-EB81	F32T8/SP35 ECO	3	120	99	LAY-IN GRID	PROVIDE WITH ELECTRONIC BALLAST
F5	METALUX	BE-232-EB81	F32T8/SP35 ECO	2	120	66	SURFACE WALL	PROVIDE WITH ELECTRONIC BALLAST
F6	PORTFOLIO	C7032-E-7051-LI	32 TRT	1	120	34	RECESSED	PROVIDE WITH ELECTRONIC BALLAST
F7	METALUX	8TSS-232-EB81	F32T8/SP35 ECO	4	120	132	SURFACE/CHAIN	PROVIDE WITH ELECTRONIC BALLAST
F8	METALUX	SS-232-EB81	F32T8/SP35 ECO	2	120	66	SURFACE/CHAIN	PROVIDE WITH ELECTRONIC BALLAST
F9	INVUE	ENV100MH-MT-MB-FT-GM-LGL	100W MH	1	120	118	SURFACE WALL	
F10	HALO	H2561	75W A19	1	120	75	TRACK	PROVIDE AND INSTALL ALL TRACK EQUIPMENT AS REQUIRED (LIVE ENDS, TRACK, ETC)
EM	BODINE IOTA	B50 I-80	----	----	120	----	----	EMERGENCY BALLAST (1)-4 FOOT T8 LAMP, 1100 LUMENS MIN. VERIFY COMPATIBILITY BEFORE ORDERING
EMC	BODINE IOTA	B4CF1 ICE-420-EM-1	----	----	120	----	----	EMERGENCY BALLAST COMPACT FLUOR., COLD WEATHER VERIFY COMPATIBILITY BEFORE ORDERING
EX1	SURE-LITES	CX7170GW	INCLUDED	2	120	11.2	UNIVERSAL	NICKEL/CADMIUM BATTERY SINGLE FACE EXIT
EX2	SURE-LITES	CX7270GW	INCLUDED	2	120	11.2	SURFACE	NICKEL/CADMIUM BATTERY DOUBLE FACE EXIT

EQUIPMENT SCHEDULE

UNIT #	DESCRIPTION	LOAD HP	LOAD VA	LOAD AMPS	LOAD NOTE	SERVICE VOLT	SERVICE PHASE	REF. DISCONNECT	REF. SIZE (AMPS)	REF. FUSE (AMPS)	REF. STARTER	REF. STARTER SIZE	REF. OTHER	OCPD TYPE	OCPD AMPS	OCPD POLE	FEEDER CONDUIT	FEEDER WIRE	REMARKS
RTU-1	ROOFTOP UNIT	—	22,697	63.0	14	208	3	1A	100	--	—	--	--	CB	16	17	18	19	
RTU-2	ROOFTOP UNIT	—	13,104	63.0	14	208	3	1A	100	--	—	--	--	CB	16	17	18	19	
RTU-3	ROOFTOP UNIT	—	13,104	63.0	14	208	3	1A	100	--	—	--	--	CB	16	17	18	19	
EF-1	EXHAUST FAN	1/6	528	4.4	—	120	1	4A	—	--	—	--	--	CB	16	17	18	19	
P-1	RECIRC PUMP	1/8	720	6.0	—	120	1	4A	—	--	—	--	--	CB	16	17	18	19	
EWH-1	ELECTRIC WATER HEATER	—	2,163	10.4	—	208	1	1A	30	--	—	--	--	CB	16	17	18	19	

NOTES:
1. NON-FUSED DISCONNECT SWITCH
2. FUSED DISCONNECT SWITCH
3. BREAKER IN ENCLOSURE
4. MANUAL STARTER WITH THERMAL OVERLOAD
5. MAGNETIC STARTER
6. MAGNETIC STARTER/NON-FUSED DISCONNECT COMBINATION
7. MAGNETIC STARTER/FUSED DISCONNECT COMBINATION
8. MAGNETIC STARTER/BREAKER COMBINATION
9. VARIABLE SPEED DRIVE
10. REDUCED VOLTAGE STARTER
11. DIRECT CONNECTION
12. RECEPTACLE/SPECIAL PURPOSE OUTLET ETC.
13. TWO-SPEED STARTER, COORDINATE WITH MOTOR TYPE
14. MAXIMUM CIRCUIT AMPS (MCA)
15. FULL LOAD CURRENT
16. SEE PANEL SCHEDULE FOR BREAKER SIZE
17. SEE PANEL SCHEDULE FOR BREAKER POLE
18. SEE PANEL SCEDULE FOR CONDUIT SIZE
19. SEE PANEL SCHEDULE FOR WIRE SIZE

A. FURNISHED, INSTALLED AND FINAL CONNECTION BY THE ELECTRICAL CONTRACTOR.
B. FURNISHED AND INSTALLED UNDER ANOTHER DIVISION, FINAL CONNECTION BY THE ELECTRICAL CONTRACTOR.
C. FURNISHED UNDER ANOTHER DIVISION, INSTALLED AND FINAL CONNECTION BY THE ELECTRICAL CONTRACTOR.
D. FURNISHED, INSTALLED AND FINAL CONNECTION UNDER ANOTHER DIVISION.

OVERCURRENT PROTECTION DEVICES:
CB = THERMAL MAGNETIC CIRCUIT BREAKER
FN = FUSE, NON-INDUCTIVE LOAD
FI = FUSE, INDUCTIVE LOAD
MO = MAGNETIC ONLY CIRCUIT BREAKER
NA = NOT APPLICABLE

GENERAL NOTES:
1. VERIFY ALL EQUIPMENT LOCATIONS AND CONNECTION REQUIREMENTS (i.e. VOLTAGE, PHASE, FLA, ETC.) WITH MECHANICAL DRAWINGS/SUBMITTALS PRIOR TO STARTING ROUGH IN.
2. ALL FUSES SHALL BE DUAL ELEMENT, TIME DELAY. FINAL BREAKER/FUSE & DISCONNECT SIZE SHALL BE DETERMINED BY MANUFACTURER'S RECOMMENDATION FOR ACTUAL EQUIPMENT INSTALLED.
3. ALL INSULATION ON CONDUCTORS TO BE THHN UNLESS NOTED OTHERWISE. INSULATION ON ALL UNDERGROUND EXTERIOR CONDUCTORS SHALL BE THHW.

PANEL SCHEDULE

PANEL: A
VOLTAGE: 208Y/ 120 PHASE: 3
MOUNTING: SURFACE WIRE: 4
ENCLOSURE: NEMA 1
REMARKS: PROVIDE WITH SUB FEED LUGS

BUS AMPS: 400
MAIN OVERCURRENT DEVICE: LUGS
MAIN OVERCURRANT AMPS: N/A
MINIMUM EQUIPMENT RATING: 10,000 AMPS (RMS-SYM)

USE
E = Equipment Load M = Motor Load
L = Lighting Load K = Kitchen Equipment
R = Receptacle Load

No.	AMPS	POLE	CIRCUIT NAME	C	WIRE	GRD	USE	WATTS	ΦA	ΦB	ΦC	WATTS	USE	GRD	WIRE	C	CIRCUIT NAME	POLE	AMPS	No.
1	20	1	RETAIL LIGHTING	3/4"	#12	#12	L	1,200	2,454			1,254	L	#12	#12	3/4"	EMPLOYEE AREA LTG	1	20	2
3	20	1	RETAIL LIGHTING	3/4"	#12	#12	L	1,200		2,883		1,683	L	#12	#12	3/4"	EMPLOYEE AREA LTG	1	20	4
5	20	1	RETAIL LIGHTING	3/4"	#12	#12	L	1,200			2,259	1,059	L	#12	#12	3/4"	EMPLOYEE AREA LTG	1	20	6
7	20	1	RETAIL LIGHTING	3/4"	#12	#12	L	1,200	1,860			660	L	#12	#12	3/4"	DOCK AREA LTG	1	20	8
9	20	1	RETAIL LIGHTING	3/4"	#12	#12	L	1,576		3,142		1,566	L	#10	#10	3/4"	EXTERIOR LIGHTING	1	20	10
11	20	1	RETAIL LIGHTING	3/4"	#12	#12	L	1,080			1,260	180	R	#12	#12	3/4"	RETAIL POS RCPTS	1	20	12
13	20	1	RETAIL RCPTS	3/4"	#12	#12	R	1,080	1,260			180	R	#12	#12	3/4"	RETAIL POS RCPTS	1	20	14
15	20	1	OFFICE RCPTS	3/4"	#12	#12	R	1,260		1,440		180	R	#12	#12	3/4"	RETAIL POS RCPTS	1	20	16
17	20	1	DATA RACK	3/4"	#12	#12	E	800			980	180	R	#12	#12	3/4"	RETAIL POS RCPTS	1	20	18
19	20	1	EMPLOYEE AREA RCPTS	3/4"	#12	#12	R	1,080	2,280			1,200	R	#12	#12	3/4"	BREAK RCPT	1	20	20
21	20	1	REFRIGERATOR	3/4"	#12	#12	E	1,200		2,400		1,200	R	#12	#12	3/4"	MICROWAVE	1	20	22
23	20	1	RETAIL/EMPLOYEE RCPTS	3/4"	#12	#12	R	1,080			2,280	1,200	E	#12	#12	3/4"	DISPOSAL	1	20	24
25	20	1	RETAIL/EMPLOYEE RCPTS	3/4"	#12	#12	R	720	1,220			500	R	#12	#12	3/4"	TELCO BOARD	1	20	26
27	20	1	RECEIVING POS	3/4"	#12	#12	R	300		1,380		1,080	R	#12	#12	3/4"	EMPLOYEE AREA RCTPS	1	20	28
29	20	1	DOCK LEVELER	3/4"	#12	#12	E	1,200			1,800	600	E	#12	#12	3/4"	EWC	1	20	30
31	20	1	DOCK DOOR OPENER	3/4"	#12	#12	E	1,200	1,800			600	E	#12	#12	3/4"	EWC	1	20	32
33	20	1	SPRINKLER CONTROLLER	3/4"	#12	#12	E	500		1,580		1,080	R	#12	#12	3/4"	DOCK AREA RCPT	1	20	34
35	20	1	FACP	3/4"	#12	#12	E	500			1,580	1,080	R	#12	#12	3/4"	EMPLOYEE AREA RCTPS	1	20	36
37	20	1	SPARE														SPARE	1	20	38
39	20	1	SPARE														SPARE	1	20	40
41	20	1	SPARE														SPARE	1	20	42

	ΦA	ΦB	ΦC	DEMAND
LIGHTING LOAD (VA)	4,314	6,025	3,339	13,678
LIGHTING CONTINOUS LOAD PER NEC 210.20(A) (VA)				3,420
RECEPTACLE LOAD PER NEC 220.44 (VA)	4,760	5,100	2,520	11,190
EQUIPMENT LOAD (VA)	1,800	1,700	4,300	7,800
25% LARGEST MOTOR (VA)				0
KITCHEN EQUIPMENT LOAD (VA) 0 UNITS & 100% (PER NEC TABLE 220.56)	0	0	0	0
TOTAL LOAD (VA)	10,874	12,825	10,159	36,088
TOTAL LOAD (AMPS):	91	107	85	100

NOTES:
1. ALL INSULATION ON CONDUCTORS TO BE THHN UNLESS NOTED OTHERWISE. INSULATION ON ALL UNDERGROUND EXTERIOR CONDUCTORS SHALL BE THHW. INSULATION ON ALL UNDERGROUND EXTERIOR CONDUCTORS SHALL BE THHW.
2. RECEPTACLE LOAD CALCULATED AS PER SECTION 220 OF THE NATIONAL ELECTRICAL CODE.
3. PANEL COVER SHALL BE FIELD MARKED FOR FLASH PROTECTION WITH A PERMANENT LABEL AS REQUIRED BY THE NATIONAL ELECTRICAL CODE SECTION 110. LABEL SHALL READ AS FOLLOWS: "DANGER: POTENTIAL ARC FLASH HAZARD"

PANEL SCHEDULE

PANEL: M
VOLTAGE: 208Y/ 120 PHASE: 3
MOUNTING: SURFACE WIRE: 4
ENCLOSURE: NEMA 1
REMARKS:

BUS AMPS: 400
MAIN OVERCURRENT DEVICE: LUGS
MAIN OVERCURRANT AMPS: N/A
MINIMUM EQUIPMENT RATING: 10,000 AMPS (RMS-SYM)

USE
E = Equipment Load M = Motor Load
L = Lighting Load K = Kitchen Equipment
R = Receptacle Load

No.	AMPS	POLE	CIRCUIT NAME	C	WIRE	GRD	USE	WATTS	ΦA	ΦB	ΦC	WATTS	USE	GRD	WIRE	C	CIRCUIT NAME	POLE	AMPS	No.
1	80	3	ROOFTOP UNIT RTU-1	1"	#4	#8	E	7,566	15,132			7,566	E	#8	#4	1"	ROOFTOP UNIT RTU-2	3	80	2
3	---	—	-------------------	---	#4	—	E	7,566		15,132		7,566	E	—	#4	—	-------------------	---	80	4
5	---	—	-------------------	---	#4	—	E	7,566			15,132	7,566	E	—	#4	—	-------------------	---	80	6
7	80	3	ROOFTOP UNIT RTU-3	1"	#4	#8	E	7,566	8,286			720	R	#10	#10	3/4"	ROOTOP RCPT	1	20	8
9	---	—	-------------------	---	#4	—	E	7,566		8,066		500	E	#10	#10	3/4"	EXHUAST FAN EF-1	1	20	10
11	---	—	-------------------	---	#4	—	E	7,566			8,286	720	E	#12	#12	3/4"	RECIRC PUMP P-1	1	20	12
13	20	1	HANDICAP FDOOR OPENER	3/4"	#12	#12	E	500	1,582			1,082	E	#12	#12	3/4"	WATER HEATER EWH-1	2	20	14
15	20	1	CCTV SYSTEM PWR SUPPLY	3/4"	#12	#12	E	500		1,582		1,082	E	—	#12	—	-------------------	—	—	16
17	20	1	TRACK LIGHTING	3/4"	#12	#12	E	600			1,248	648	L	#10	#10	1"	PARKING LIGHTING	2	20	18
19	20	1	SPARE						648			648	L	—	#10	—	-------------------	—	—	20
21	20	1	SPARE														SPARE	1	20	22
23	20	1	SPARE														SPARE	1	20	24
25	20	1	SPARE														SPARE	1	20	26
27	20	1	SPARE														SPARE	1	20	28
29	20	1	SPARE														SPARE	1	20	30
31			SPACE														SPACE			32
33			SPACE														SPACE			34
35			SPACE														SPACE			36
37			SPACE														SPACE			38
39			SPACE														SPACE			40
41			SPACE														SPACE			42

	ΦA	ΦB	ΦC	DEMAND
LIGHTING LOAD (VA)	648	0	648	1,345
LIGHTING CONTINOUS LOAD PER NEC 210.20(A) (VA)				349
RECEPTACLE LOAD PER NEC 220.44 (VA)	720	0	0	720
EQUIPMENT LOAD (VA)	24,280	24,780	24,018	73,078
25% LARGEST MOTOR (VA)				0
KITCHEN EQUIPMENT LOAD (VA) 0 UNITS & 100% (PER NEC TABLE 220.56)	0	0	0	0
TOTAL LOAD (VA)	25,648	24,780	24,116	75,542
TOTAL LOAD (AMPS):	214	207	206	210

NOTES:
1. ALL INSULATION ON CONDUCTORS TO BE THHN UNLESS NOTED OTHERWISE. INSULATION ON ALL UNDERGROUND EXTERIOR CONDUCTORS SHALL BE THHW. INSULATION ON ALL UNDERGROUND EXTERIOR CONDUCTORS SHALL BE THHW.
2. RECEPTACLE LOAD CALCULATED AS PER SECTION 220 OF THE NATIONAL ELECTRICAL CODE.
3. PANEL COVER SHALL BE FIELD MARKED FOR FLASH PROTECTION WITH A PERMANENT LABEL AS REQUIRED BY THE NATIONAL ELECTRICAL CODE SECTION 110. LABEL SHALL READ AS FOLLOWS: "DANGER: POTENTIAL ARC FLASH HAZARD"

B — ELECTRICAL SCHEDULES

NONE

SITE LIGHTING FIXTURE SCHEDULE

FIXT #	FIXTURE MANUFACTURER	FIXTURE CATALOG #	VOLTS	#/POLE	WATTS	MOUNTING	LAMPS TYPE	LAMPS QTY/FIXT.	POLE MANUFACTURER	POLE HEIGHT	POLE CATALOG #	REMARKS
SF1	INVUE	GM-400-MH-MT-35-XX / VA1012XX	208	1	465	POLE	400W MH	1	INVUE	22'-0"	SRX4A225XXG1	

LIGHTING CONTROL PANEL

NAME LCP
VOLTS: 120/208V, 3Φ, 4-WIRE
LOCATION: ENCLOSED DOCK AREA
MOUNTING: SURFACE

RELAY NO.	AMP	POLE	SUPPLY	AREA SERVED	LV SWITCH*	A	B	C	D	E
1	20	1	A-1	RETAIL LIGHTING	F*		X			
2	20	1	A-3	RETAIL LIGHTING	F*		X			
3	20	1	A-5	RETAIL LIGHTING	F*		X			
4	20	1	A-7	RETAIL LIGHTING	F*		X			
5	20	1	A-9	RETAIL LIGHTING	F*		X			
6	20	1	A-11	RETAIL LIGHTING	F*		X			
7	20	1	M-17	RETAIL TRACK LIGHTING	F*		X			
8	20	1	A-10	EXTERIOR LIGHTING	-------				X	
9	20	2	M-18,20	PARKING LIGHTING	-------				X	
10	--	--	--------	----------------------	-------				X	
11				SPACE						
12				SPACE						
13				SPACE						
14				SPACE						
15				SPACE						
16				SPACE	----					

Automation Schedules: (A) Auto ON / Auto OFF
(B) Manual ON / Auto OFF
(C) Dusk - Dawn
(D) Dusk - Auto OFF
(E) Daylight Sensor
(F) Momentary Contact Switch

* SEE PLAN FOR LOCATION OF LOW VOLTAGE SWITCH

NOTE: ELECTRICAL CONTRACTOR TO PROVIDE SPACE IN THIS PANEL FOR FUTURE EXPANSION

GENERAL NOTES:

1. DO NOT SCALE DRAWINGS VERIFY DIMENSIONS IN FIELD PRIOR TO MAKING ANY ROUGH-INS.
2. FINAL CONNECTIONS TO EQUIPMENT SHALL BE MADE AS PER MANUFACTURERS WRITTEN INSTRUCTIONS AND APPROVED WIRING DIAGRAMS AND DETAILS. IT SHALL BE THE CONTRACTORS RESPONSIBILITY TO PROVIDE ALL MATERIALS AND EQUIPMENT COMPATIBLE WITH EQUIPMENT ACTUALLY SUPPLIED.
3. CONSULT ARCHITECTS REFLECTED CEILING PLANS FOR EXACT LOCATIONS OF LIGHTING FIXTURES, SPEAKERS, SMOKE DETECTORS ETC.
4. ELECTRICAL CONTRACTOR SHALL MEET WITH THE CEILING AND MECHANICAL CONTRACTORS TO COORDINATE LOCATIONS, CLEARANCES, CEILING TYPES AND ROUGH-IN REQUIREMENTS OF ALL LIGHTING FIXTURES PRIOR TO DUCT, PIPING AND CEILING INSTALLATIONS.
5. ALL EMPTY RACEWAY SYSTEMS SHALL HAVE A 200LB RATED PULL CORD INSTALLED AND SHALL BE IDENTIFIED AT EACH JUNCTION, PULL AND TERMINATION POINT, USING PERMANANT MARKER IN THE BOX. ID SHALL INDICATE INTENDED USE OF CONDUIT, ORIGINATION AND TERMINATION POINTS OF EACH INDIVIDUAL CONDUIT.
6. ALL PENETRATIONS OF FIRE RATED FLOORS, CEILING AND WALLS SHALL BE SEALED WITH APPROVED AND RATED FIRE STOP MATERIAL TO MAINTAIN FIRE RATING OF ASSEMBLY.
7. ELECTRICAL BOXES SHALL NOT BE LOCATED IN MASONRY OR CONCRETE COLUMNS, BOND BEAMS OR GROUTED CELLS OF MASONRY WALLS ADJACENT TO OPENINGS WITHOUT COORDINATION WITH THE MASONRY CONTRACTOR.
8. IT IS THE INTENT OF THESE DRAWINGS AND SPECIFICATIONS TO ESTABLISH A A STANDARD OF QUALITY. THE ENGINEER RESERVES THE RIGHT TO VERBALLY APPROVE METHODS AND MATERIALS NOT REFLECTED HEREIN.
9. CONTRACTOR SHALL REVIEW ARCHITECTURAL, STRUCTURAL, MECHANICAL, PLUMBING AND OTHER DRAWINGS PRIOR TO BID.
10. WORK SHALL BE PERFORMED IN A PROFESSIONAL WORKMANLIKE MANNER TO THE SATISFACTION OF THE ARCHITECT AND ENGINEER.
11. WORK, MATERIALS AND EQUIPMENT SHALL CONFORM TO THE LATEST EDITIONS OF LOCAL, STATE AND NATIONAL CODES, STANDARDS AND ORDINANCES.
12. CONTRACTOR SHALL SECURE AND PAY FOR ALL NECESSARY BUILDING PERMITS AND INSPECTION FEES.
13. THE CONTRACTOR SHALL GUARANTEE THE INSTALLATION AGAINST DEFECTS IN MATERIALS AND WORKMANSHIP, WHICH MAY OCCUR UNDER NORMAL USAGE FOR A PERIOD OF ONE YEAR AFTER SUBSTANTIAL COMPLETION. DEFECTS SHALL BE PROMPTLY CORRECTED.
14. PROVIDE RECORD DRAWINGS IN ACCORDANCE WITH THE PROJECT SPECIFICATIONS.
15. VERIFY EXACT LOCATION OF EQUIPMENT TO BE FURNISHED BY OTHERS PRIOR TO ROUGH-IN.
16. ELECTRICAL CONTRACTOR SHALL VERIFY ALL EQUIPMENT DIMENSIONS AND LOCATIONS BEFORE BEGINNING ROUGH-INS. CONSULT CONTRACT DOCUMENT DRAWINGS AND SHOP DRAWINGS TO VERIFY ALL CODE AND MAINTENANCE REQUIRED CLEARANCES ARE MAINTAINED.
17. CONTRACTOR SHALL VERIFY ACTUAL ELECTRICAL LOADS OF EACH PIECE OF EQUIPMENT REQUIRING POWER. BRING ANY DESCREPANCIES TO THE ATTENTION OF THE PROJECT ENGINEER.
18. SYSTEMS SHALL BE TESTED FOR PROPER OPERATION. IF TESTS RESULT IN DEFECT OR IMPROPER OPERATION THE CONTRACTOR SHALL MAKE ANY CORRECTIONS NECESSARY AT NO ADDITIONAL COSTS TO THE OWNER.
19. WIRE SHALL BE COPPER 75° C RATED FOR GENERAL USE. FOR HID FIXTURES AND WIRING WITHIN 3" OF FLUORESCENT BALLAST SHALL BE COPPER, MINIMUM 90° C RATED. CONDUCTOR SIZES INDICATED ARE FOR INSTALLATION IN A MAXIMUM 30° C AMBIENT TEMPERATURE ENVIROMENT. CONDUCTOR AMPACITY SHALL BE DERATED FOR HIGHER AMBIENT INSTALLATIONS.
20. SPLICES IN EXTERIOR PULLBOXES AND MANHOLES SHALL BE MADE WATERPROOF USING "SCOTCAST" SPLICE KIT OR APPROVED EQUAL. SEAL ENDS OF CONDUITS AND DUCTS ENTERING BOXES WITH "DUCTSEAL" OR EQUAL.
21. SUBMIT SHOP DRAWINGS IN ACCORDANCE WITH SPECIFICATIONS BOUND IN A THREE RING BINDER, INDEXED IN A NEAT AND ORDERLY MANNER WITH TYPE AND MODEL NUMBERS INDICATED. SUBMITTALS SHALL INCLUDE BUT NOT LIMITED TO: LIGHTING FIXTURES, LAMPS, WIRING DEVICES, OCCUPANCY SENSORS, CONTACTORS, TIME CLOCKS, PHOTOCELLS, RELAYS, SWITCHBOARDS, PANELBOARDS, MOTOR CONTROL CENTERS, SAFETY SWITCHES, MOTOR STARTERS, OVERCURRENT PROTECTION DEVICES, TRANSFORMERS, CONDUCTORS OVER 600 VOLTS AND ALL SPECIAL SYSTEMS SUCH AS FIRE ALARM, LIGHTING CONTROLS, SECURITY SYSTEMS, SOUND SYSTEMS ETC.
22. VERIFY EXACT LOCATIONS OF ALL NEW AND EXISTING UNDERGROUND SITE UTILITIES, PIPING AND RACEWAY SYSTEMS PRIOR TO TRENCHING. PROVIDE NECESSARY TRENCHING, BACKFILL EXCAVATION, SUPPORTS, SERVICE FEEDERS, (CONDUIT AND/OR WIRE), PULL BOXES, TRANSFORMER PADS, SAW CUTTING AND PATCHING, CONCRETE PAVING ETC, REQUIRED. BACKFILL TRENCHES TO 90% COMPACTION AND PATCHING TO MATCH EXISTING. CONTRACTOR SHALL OBTAIN AND VERIFY EXACT UTILITY COMPANY DRAWINGS AND REQUIREMENTS FOR ALL SITE UTILITIES. ELECTRICAL CONTRACTOR SHALL ALSO COORDINATE ELECTRICAL RELATED UTILITIES WITH THE CIVIL AND MECHANICAL ENGINEERS AND CONTRACTORS.
23. PULLBOXES, CABINETS, ETC. MOUNTED ON THE EXTERIOR OF THE BUILDING AT GRADE LEVEL, SHALL BE WEATHERPROOF TYPE WITH HINGED GASKETED LOCKABLE COVERS SECURED WITH TAMPERPROOF SCREWS.

PVE Inc. Consulting Mechanical Electrical Engineers
1040 South 2200 West, Suite 100
Salt Lake City, UT 84116
Phone: (801) 359-3158
Fax: (801) 521-4114

ELECTRICAL SYMBOLS, NOTES, & SCHEDULES

NEW RIVERTON LIQUOR STORE

DEPT OF ALCOHOLIC BEVERAGE CONTROL
RIVERTON, UTAH

FRANK N MURDOCK JR ■ Architect & Associates
975 East 100 South Suite 100, Salt Lake City, Utah 84102 TEL: (801) 532-4441 FAX (801) 532-4220

REGISTERED PROFESSIONAL ENGINEER No. 154867 DEAN P. LEVORSEN STATE OF UTAH
5-18-07

REVISION # DATE:

DFCM PROJECT NO.:
05053030
CONCEPT
FILE NAME:
PLOT SCALE: AS SHOWN
DRAWN BY: KJH
CHECKED BY: RKR
DATE: MAY 30, 2007

E
100

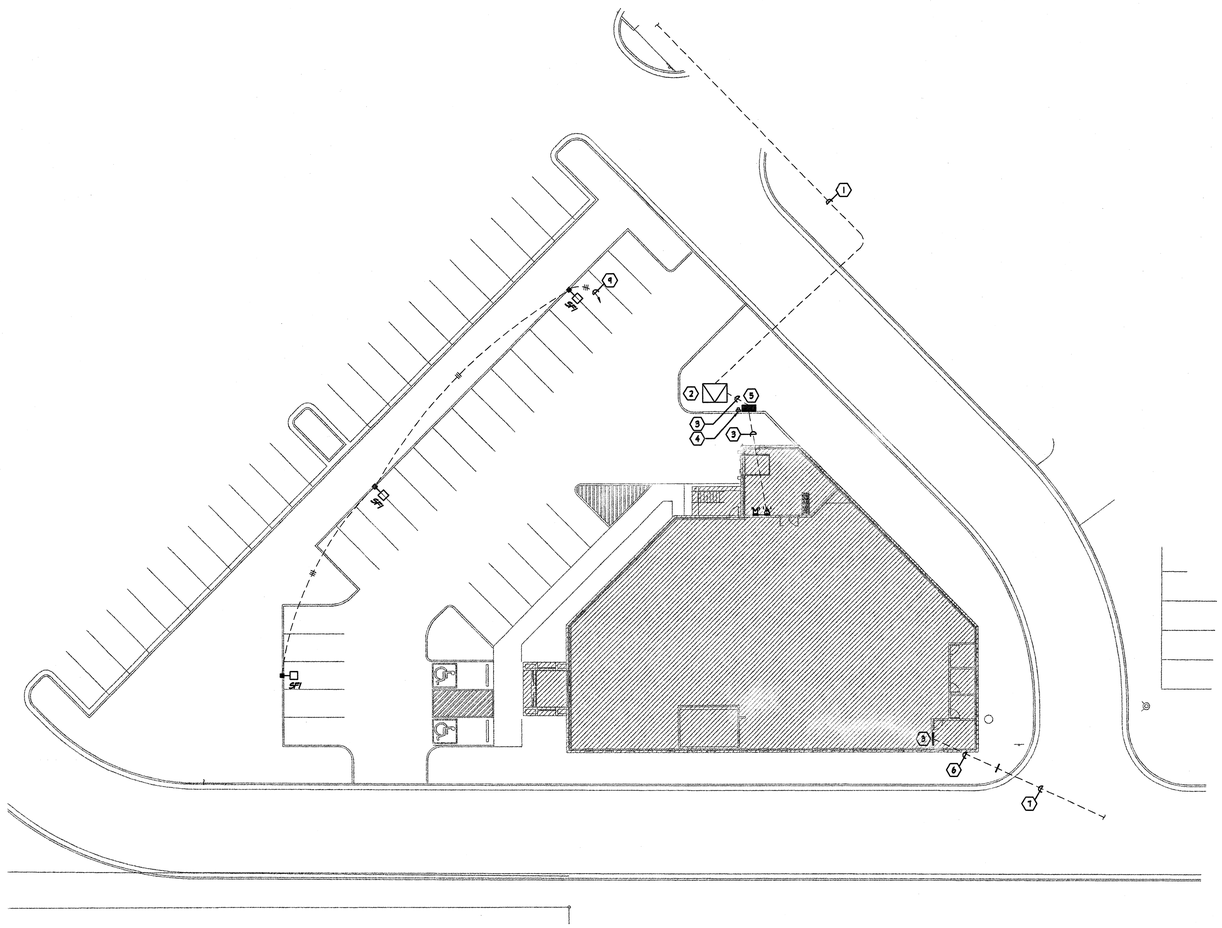

GENERAL NOTES:

1. ELECTRICAL CONTRACTOR TO REFER TO THE CIVIL ENGINEER'S DRAWING AND COORDINATE ELECTRICAL INSTALLATION WITH ALL UTILITIES.
2. ELECTRICAL CONTRACTOR TO INCLUDE A MINIMUM AMOUNT OF $20,000 IN HIS BID FOR POWER COMPANY UTILITY WORK IN EXCESS OF WORK SHOWN ON THIS DRAWING. IF ACTUAL FEES ARE LESS THAN THIS AMOUNT, CONTRACTOR SHALL REIMBURSE THE DIFFERENCE TO THE OWNER BY CHANGE ORDER.
3. ELECTRICAL CONTRACTOR TO VERIFY ALL THE UTILITY COMPANY SERVICE (POWER, TELEPHONE, ETC.) TERMINATION POINTS DURING THE BIDDING PROCESS. PROVIDE CONDUIT AS REQUIRED TO THE BUILDING TO ACCOMMODATE ALL UTILITY COMPANY SERVICES. REPORT ANY CONFLICTING CONDITIONS TO THE ARCHITECT.

KEYED NOTES (#):

1. POWER COMPANY PRIMARY FEEDER TO GROUND SLEEVE. VERIFY GROUND SLEEVE LOCATION WITH THE POWER COMPANY DURING THE BIDDING PROCESS. ELECTRICAL CONTRACTOR TO PROVIDE & INSTALL (1)-4" CONDUIT AND ALL TRENCHING TO THE GROUND SLEEVE.
2. NEW TRANSFORMER VAULT. PROVIDED AND INSTALLED BY THE ELECTRICAL CONTRACTOR AS PER THE POWER COMPANY SPECIFICATIONS.
3. MAIN SERVICE FEEDER (SEE ONE LINE DIAGRAM).
4. METER BASE (SEE ONE LINE DIAGRAM).
5. EUSERC RATED CT/MAIN BREAKER ENCLOSURE. PROVIDE AND INSTALL AS PER POWER COMPANY SPECIFICATIONS (SEE ONE LINE DIAGRAM).
6. NEW MAIN TELEPHONE SERVICE CONDUIT. VERIFY EXACT SERVICE TERMINATION POINT WITH TELEPHONE COMPANY DURING THE BIDDING PROCESS. PROVIDE ALL CONDUIT AND TRENCHING. (SEE TELEPHONE/DATA RISER DIAGRAM).
7. EXISTING TELEPHONE SERVICE CONDUIT, EXTEND CONDUIT TO BUILDING AS SHOWN.
8. MAIN TELEPHONE BOARD (SEE RISER).
9. CIRCUIT TO M-1B,2D. CIRCUIT VIA THE LIGHTING CONTROL PANEL 'LCP'. SEE PANEL SCHEDULE FOR CONDUIT AND WIRE SIZE.

A SITE PLAN - ELECTRICAL

1" = 40'-0" 0 10' 20' 40'

NORTH

PVE Inc. Consulting Mechanical Electrical Engineers
1040 South 2200 West, Suite 100
Salt Lake City, UT 84116
Phone: (801) 355-3138
Fax: (801) 521-4114

NEW RIVERTON LIQUOR STORE

DEPT OF ALCOHOLIC BEVERAGE CONTROL
RIVERTON, UTAH

FRANK N MURDOCK JR ■ Architect & Associates
975 East 100 South Suite 100, Salt Lake City, Utah 84102 TEL: (801) 532-4441 FAX: (801) 532-4220

SITE PLAN - ELECTRICAL

REGISTERED PROFESSIONAL ENGINEER No. 154867 DEAN P. LEVORSEN STATE OF UTAH

5-30-07

REVISION # DATE:

DFCM PROJECT NO.:
05053030
CONCEPT
FILE NAME:
PLOT SCALE: AS SHOWN
DRAWN BY: KJH
CHECKED BY: RKR
DATE: MAY 30, 2007

E
101

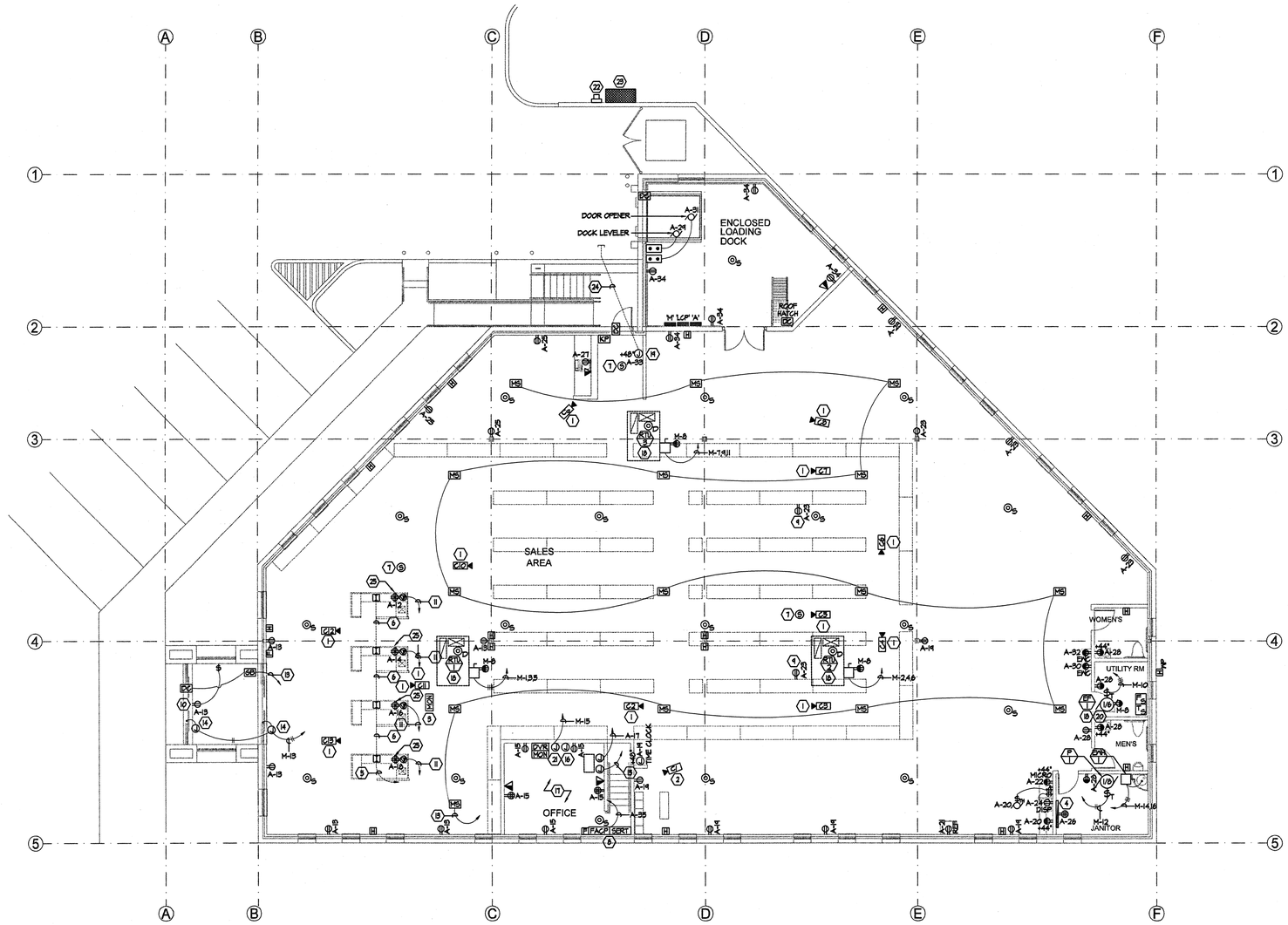

GENERAL NOTES:

1. PROVIDE AND INSTALL A ¾" CONDUIT WITH SECURITY SYSTEM WIRE FROM EACH SECURITY DEVICE TO THE SECURITY PANEL LOCATED IN THE OFFICE.

KEYED NOTES (◉):

1. SECURITY CCTV CAMERA TO BE STEM MOUNTED ON A PEDISTAL (18" TO 24" AS REQUIRED) TO CLEAR LIGHTING FIXTURES. PROVIDE AND INSTALL A ¾" CONDUIT TO CCTV/SECURITY PANEL LOCATED IN THE OFFICE.
2. SECURITY CCTV CAMERA TO BE STEM MOUNTED ON A PEDISTAL (18" TO 24" AS REQUIRED) TO CLEAR LIGHTING FIXTURES. CAMERA TO BE POINTED AT OFFICE SAFE. PROVIDE AND INSTALL A ¾" CONDUIT WITH COAXIAL CABLE (AS SPECIFIED BY THE SECURITY SYSTEM EQUIPMENT SUPPLIER/CONTRACTOR) TO CCTV/SECURITY PANEL LOCATED IN THE OFFICE, SEE CCTV RISER DIAGRAM.
3. PUBLIC VIEWING SECURITY CCTV LCD MONITOR.
4. TELEPHONE/DATA/INTERCOM BOARD (SEE TELEPHONE/DATA RISER DIAGRAM).
5. PROVIDE AND INSTALL A ¾" CONDUIT WITH NYLON PULL STRING TO TELEPHONE/DATA/INTERCOM BOARD.
6. PROVIDE AND INSTALL A ¾" CONDUIT WITH NYLON PULL STRING BETWEEN INTERCOM STATION BACKBOXES.
7. INTERCOM SPEAKER. PROVIDE AND INSTALL A ¾" CONDUIT WITH NYLON PULL STRING TO TELEPHONE/DATA BOARD.
8. FIRE ALARM/SECURITY SYSTEM COMBINATION PANEL (SEE FIRE ALARM/SECURITY SYSTEM RISER DIAGRAM).
9. DUPLEX CONVENIENCE OUTLET MOUNTED HORIZONTALLY IN BASE OF SHELVING.
10. OUTLET MOUNT AT +84" FOR "OPEN" SIGN.
11. (1)-¾" CONDUIT WITH NYLON PULL STRING TO THE DATA RACK AND (1)-¾"CONDUIT WITH NYLON PULL STRING TO THE TELEPHONE BOARD. SEE SHEET TELEPHONE/DATA RISER DIAGRAM.
12. SECURITY CCTV CAMERA TO BE STEM MOUNTED ON A PEDISTAL (18" TO 24" AS REQUIRED) TO CLEAR LIGHTING FIXTURES. PROVIDE AND INSTALL A ¾" CONDUIT TO CCTV/SECURITY PANEL LOCATED IN THE OFFICE.
13. ¾" CONDUIT WITH SECURITY SYSTEM WIRE TO SECURITY PANEL.
14. POWER DOOR OPERATOR FURNISH WITH DOOR INSTALLED AND FINAL CONNECTION SHALL BE BY THE ELECTRICAL CONTRACTOR.
15. DATA RACK. 1½" CONDUIT WITH NYLON PULL STRING TO MAIN TELEPHONE BOARD.
16. CCTV SYSTEM JUNCTION BOX, SIZE AS REQUIRED.. CCTV EQUIPMENT IN RACK UNDER COUNTER MONITOR ON DESK.
17. SEE ARCHITECTURAL INTERIOR AND CABINET ELEVATIONS FOR EXACT LOCATIONS OF ALL EQUIPMENT IN OFFICE AREA. ARCHITECTURAL ELEVATIONS TAKE PRECEDENCE OVER THESE DRAWINGS FOR ALL OUTLET AND EQUIPMENT LOCATIONS.
18. UNIT LOCATED ON ROOF.
19. JUNCTION BOX FOR SPRINKLER CONTROLLER, PROVIDED BY OTHERS, INSTALLED BY THE ELECTRICAL CONTRACTOR.
20. EXHAUST FAN CONTROL TO BE BY THE MECHANICAL CONTRACTOR.
21. JUNCTION BOX FOR CCTV SYSTEM POWER SUPPLY.
22. METER BASE (SEE ONE LINE DIAGRAM).
23. EUSERC RATED CT/MAIN CABINET (SEE ONE LINE DIAGRAM).
24. 2" CONDUIT WITH NYLON PULL STRING, STUB CAP AND MARK FOR SPRINKLER CONTROLS.
25. SEE POINT OF SALE UNDER COUNTER DETAIL.

A FLOOR PLAN - POWER & SYSTEMS

1/8" = 1'-0" 0' 4' 8' 16'

NORTH

PVE Inc. Consulting Mechanical / Electrical Engineers
1040 South 2200 West, Suite 100
Salt Lake City, UT 84116
Phone: (801) 359-3158
Fax: (801) 521-4114

NEW RIVERTON LIQUOR STORE

DEPT OF ALCOHOLIC BEVERAGE CONTROL
RIVERTON, UTAH

FLOOR PLAN - POWER & SYSTEMS

FRANK N MURDOCK JR ■ Architect & Associates
975 East 100 South Suite 100, Salt Lake City, Utah 84102 TEL: (801) 532-4441 FAX (801) 532-4220

REGISTERED PROFESSIONAL ENGINEER
No. 154887
DEAN P. LEVORSEN
STATE OF UTAH
18-07

REVISION # DATE:

DFCM PROJECT NO.:
05053030
CONCEPT
FILE NAME:
PLOT SCALE: AS SHOWN
DRAWN BY: KJH
CHECKED BY: RKR
DATE: MAY 30, 2007

E
201

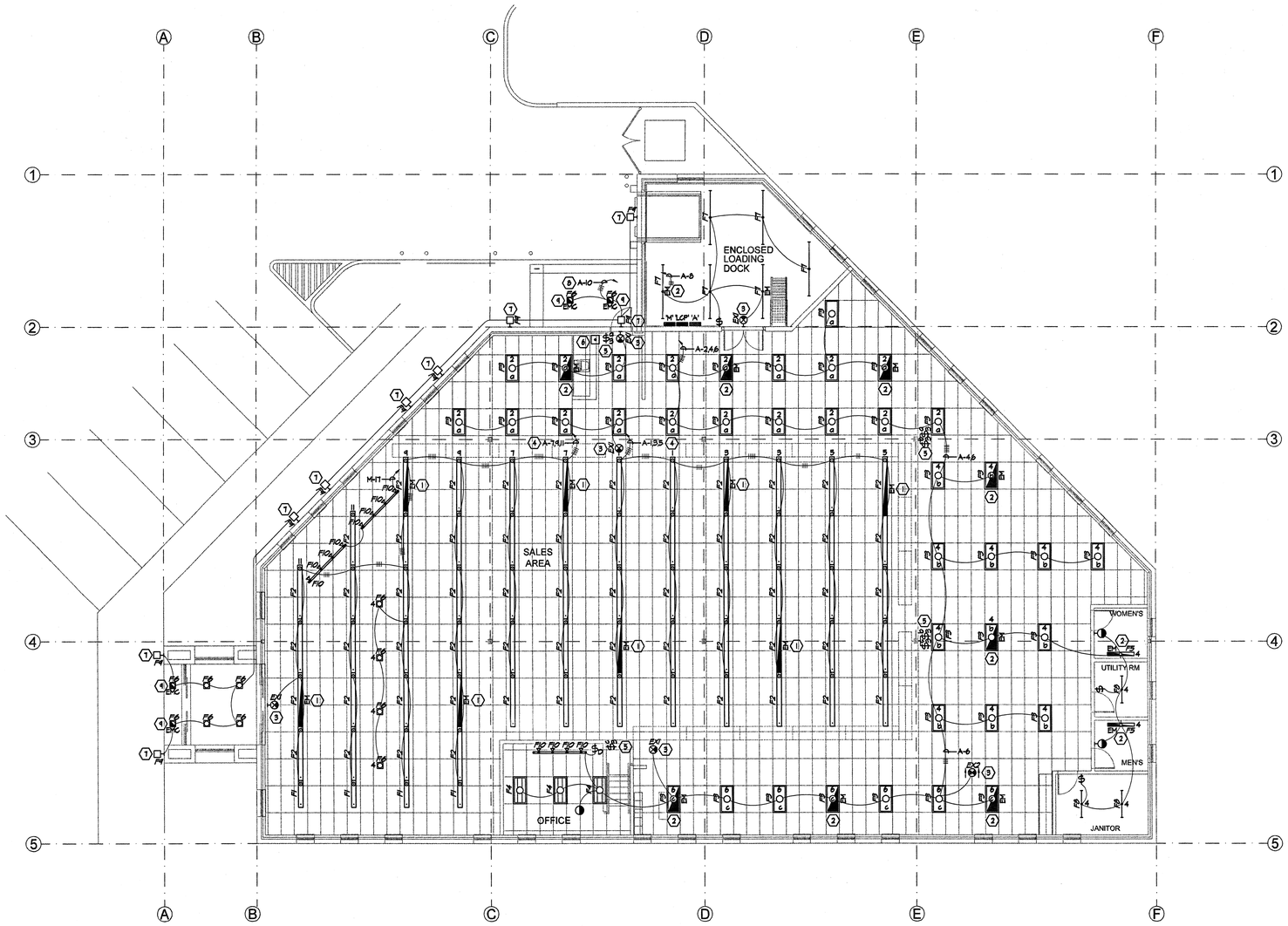

KEYED NOTES (◉):

1. LIGHTING FIXTURE WITH EMERGENCY BALLAST ON UNSWITCHED, CONTINUOUS CIRCUIT (SEE EMERGENCY BALLAST OPERATION DETAIL).
2. LIGHTING FIXTURE WITH EMERGENCY BALLAST TO BE ON SWITCHED (SEE EMERGENCY BALLAST OPERATION DETAIL).
3. EXIT SIGN/LIGHT TO BE ON UNSWITCHED, CONTINUOUS CIRCUIT.
4. CIRCUIT RETAIL AREA LIGHTING VIA THE LIGHTING CONTROL PANEL 'LCP'. LIGHTING TO BE CONTROLLED BY MOMENTARY CONTACT SWITCH AT THE EMPLOYEES ENTRANCE (SEE LIGHTING CONTROL PANEL SCHEDULE & DETAIL).
4. LOWER CASE LETTERS ON OR NEAR FIXTURES INDICATE CONTROLLING SWITCHES. SWITCH LEG NOT SHOWN.
5. RETAIL LIGHTING MOMENTARY CONTACT SWITCH (SEE LIGHTING CONTROL PANEL SCHEDULE & DETAIL).
6. SEE ARCHITECTURAL ELEVATIONS FOR FIXTURE MOUNTING HEIGHT.
7. CIRCUIT EXTERIOR LIGHTING VIA THE LIGHTING CONTROL PANEL 'LCP' (SEE LIGHTING CONTROL PANEL SCHEDULE & DETAIL).
8. EMERGENCY EGRESS LIGHTING FIXTURE WITH EMERGENCY BALLAST TO BE ON SWITCHED (SEE EMERGENCY BALLAST OPERATION DETAIL & LIGHTING CONTROL PANEL DETAIL).

A FLOOR PLAN - LIGHTING

1/8" = 1'-0" 0 4' 8' 16'

NORTH

PVE, Inc. Consulting Mechanical / Electrical Engineers
10140 South 2200 West, Suite 100
Salt Lake City, UT 84116
Phone: (801) 359-3158
Fax: (801) 521-4114

NEW RIVERTON LIQUOR STORE

DEPT OF ALCOHOLIC BEVERAGE CONTROL
RIVERTON, UTAH

FRANK N MURDOCK JR ■ Architect & Associates
975 East 100 South Suite 100, Salt Lake City, Utah 84102 TEL: (801) 532-4441 FAX (801) 532-4220

FLOOR PLAN - LIGHTING

REGISTERED PROFESSIONAL ENGINEER No. 154867 DEAN P. LEVORSEN STATE OF UTAH 12-07

REVISION # DATE:

DFCM PROJECT NO.: 05053030
CONCEPT
FILE NAME:
PLOT SCALE: AS SHOWN
DRAWN BY: KJH
CHECKED BY: RKR
DATE: MAY 30, 2007

E 301

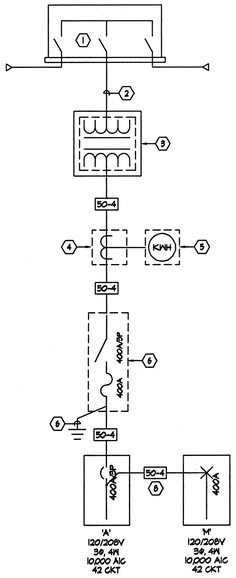

WIRE & CONDUIT SCHEDULE

SYMBOL SIZE	SYMBOL QTY	GND.	CONDUIT	WIRE SIZE & TYPE	AMPS	NOTES
1Ø-	2 3 4	1Ø	3/4"	#1Ø THHN/THWN	3Ø	
8-	2 3 4	1Ø	3/4"	#8 THHN/THWN	4Ø	
6-	2 3 4	8	3/4"	#6 THHN/THWN	55	
4-	2 3 4	8	3/4" 1" 1-1/4"	#4 THHN/THWN	7Ø	
3-	2 3 4	8	1" 1" 1-1/4"	#3 THHN/THWN	85	
2-	2 3 4	6	1-1/4"	#2 THHN/THWN	95	
1-	3 4	6	1-1/2"	#1 THHN/THWN	11Ø	
1A-	3 4	6	1-1/2"	#1/0 THHN/THWN	15Ø	
2A-	3 4	6	1-1/2" 2"	#2/0 THHN/THWN	175	
3A-	3 4	6	2"	#3/0 THHN/THWN	2ØØ	
4A-	3 4	4	2" 2-1/2"	#4/0 THHN/THWN	23Ø	
25-	3 4	4	2" 2-1/2"	#25ØKCM THWN	255	
3Ø-	3 4	3	3"	#3ØØKCM XHHN	285	
35-	3 4	3	3"	#35ØKCM XHHN	31Ø	
4Ø-	3 4	3	3"	#4ØØKCM XHHN	335	
5Ø-	3 4	3	4"	#5ØØKCM XHHN	38Ø	
6Ø-	3 4	3	4"	#6ØØKCM XHHN	4ØØ	

EXAMPLE:
3A-4 = 4 #3/0 THHN/THWN 2" CONDUIT W/ #6 GND.

NOTE: PARALLEL RUNS REQUIRE A LARGER GROUND WIRE PER CONDUIT-SEE NATIONAL ELECTRICAL CODE

A	ONE LINE DIAGRAM & FEEDER SCHEDULE
NONE	

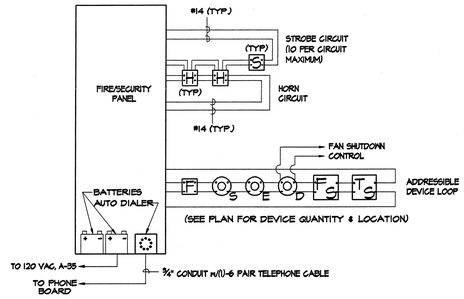

C	FIRE ALARM RISER DIAGRAM
NONE	

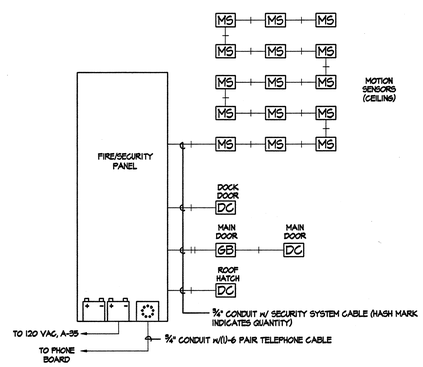

D	FIRE ALARM RISER DIAGRAM
NONE	

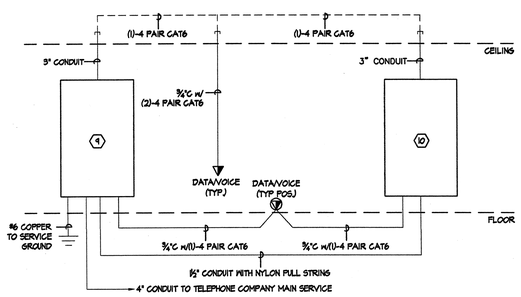

B	TELEPHONE/DATA RISER DIAGRAM
NONE	

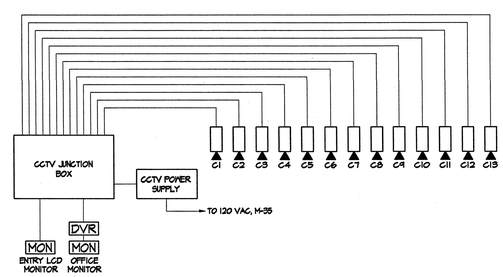

E	CCTV SYSTEM RISER DIAGRAM
NONE	

GENERAL NOTES:

1. CONTRACTOR TO PROVIDE ALL TRENCHING AND BACKFILL. POWER COMPANY TO PROVIDE AND INSTALL PRIMARY CABLE. CONTRACTOR TO FIELD VERIFY ALL EXISTING CONDITIONS. ALL SERVICE WORK SHALL CONFORM TO POWER COMPANY INSTALLATION STANDARDS.

FIRE ALARM GENERAL NOTES:

1. COORDINATE FIRE ALARM DEVICES WITH LIGHTING FIXTURES, SPEAKERS, GRILLS, ETC.
2. DO NOT INSTALL SMOKE DETECTORS WITHIN 3'-0" OF ANY MECHANICAL GRILL.
3. FIRE ALARM CONTROL PANEL ENCLOSURE SHALL CONTAIN A FLANGE AROUND PERIMETER TO FACILITATE AND IMPROVE THE AESTHETIC TRANSITION FROM ENCLOSURE TO SHEETROCK.
4. VERIFY ANY POTENTIAL ADDITIONAL REQUIREMENTS WITH THE AUTHORITY HAVING JURISTICTION.
5. DUCT SMOKE DETECTORS SHOWN FOR REFERENCE.COORDINATE DUCT SMOKE DETECTOR LOCATIONS WITH MECHANICAL PLANS.

KEYED NOTES (#):

1. GROUND SLEEVE PROVIDED AND INSTALLED BY POWER COMPANY. FIELD VERIFY THE EXACT LOCATION DURING THE BIDDING PROCESS.
2. (1)-4" PRIMARY CONDUIT PROVIDED AND INSTALLED BY ELECTRICAL CONTRACTOR. MINIMUM DEPTH 48". PRIMARY CONDUCTORS PROVIDED AND INSTALLED BY POWER COMPANY.
3. TRANSFORMER AND CONCRETE VAULT PAD. TRANSFORMER PROVIDED AND INSTALLED BY POWER COMPANY. CONCRETE VAULT PROVIDED BY THE ELECTRICAL CONTRACTOR AS PER POWER COMPANY REQUIREMENTS AND SPECIFICATIONS.
4. PROVIDE AND INSTALL EUSERG RATED C.T. ENCLOSURE AS PER POWER COMPANY SPECIFICATIONS.
5. PROVIDE AND INSTALL METER BASE AS PER POWER COMPANY SPECIFICATIONS.
6. MAIN FUSED DISCONNECT. MOUNTED ON BUILDING AT A LOCATION DESIGNATED BY THE ARCHITECT.
7. #2/0 COPPER TO GROUND (SEE SERVICE GROUNDING DETAIL).
8. GROUND REQUIRED REGARDLESS OF CONDUIT TYPE.
9. TELEPHONE TERMINAL BOARD. PROVIDE 48"x96"x3/4" CDX PLYWOOD PAINTED WITH THREE COATS OF FIRE RETARDANT PAINT.
10. DATA TERMINAL CABINET. PROVIDE AND INSTALL CABINET AS REQUIRED. PROVIDE A CABINET TO MEET THE STATE OF UTAH LIQUOR CONTROL COMMISSION SPECIFICATIONS.

PVE, Inc.
Consulting Mechanical Electrical Engineers
10140 South 2200 West, Suite 100
Salt Lake City, UT 84116
Phone: (801) 359-3158
Fax: (801) 521-4114

NEW RIVERTON LIQUOR STORE

DEPT OF ALCOHOLIC BEVERAGE CONTROL
RIVERTON, UTAH

FRANK N MURDOCK JR ■ Architect & Associates
975 East 100 South Suite 100, Salt Lake City, Utah 84102 TEL: (801) 532-4441 FAX (801) 532-4220

ELECTRICAL RISER DIAGRAMS

REGISTERED PROFESSIONAL ENGINEER
No. 154867
DEAN P. LEVORSEN
STATE OF UTAH
11-07

REVISION # DATE:

DFCM PROJECT NO.:
05053030
CONCEPT
FILE NAME:
PLOT SCALE: AS SHOWN
DRAWN BY: KJH
CHECKED BY: RKR
DATE: MAY 30, 2007

E
401

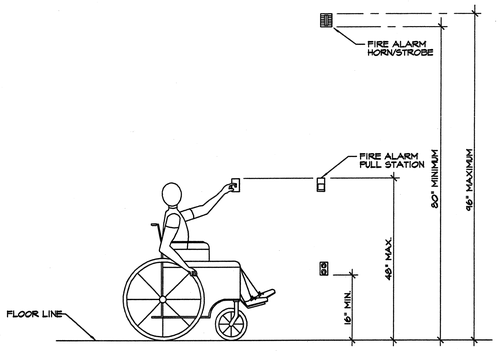

A | MOUNTING HEIGHTS DETAIL

NONE

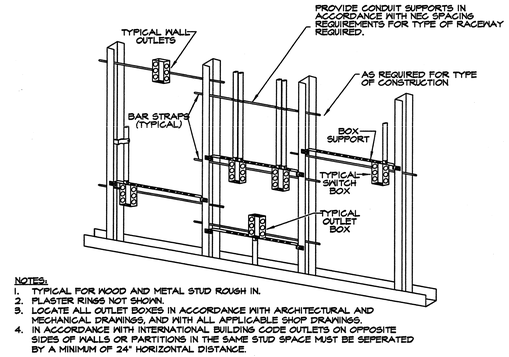

NOTES:
1. TYPICAL FOR WOOD AND METAL STUD ROUGH IN.
2. PLASTER RINGS NOT SHOWN.
3. LOCATE ALL OUTLET BOXES IN ACCORDANCE WITH ARCHITECTURAL AND MECHANICAL DRAWINGS, AND WITH ALL APPLICABLE SHOP DRAWINGS.
4. IN ACCORDANCE WITH INTERNATIONAL BUILDING CODE OUTLETS ON OPPOSITE SIDES OF WALLS OR PARTITIONS IN THE SAME STUD SPACE MUST BE SEPERATED BY A MINIMUM OF 24" HORIZONTAL DISTANCE.

B | TYPICAL ROUGH-IN REQUIREMENTS DETAIL

NONE

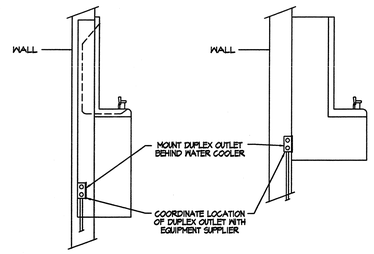

C | ELECTRIC WATER COOLER DETAIL

NONE

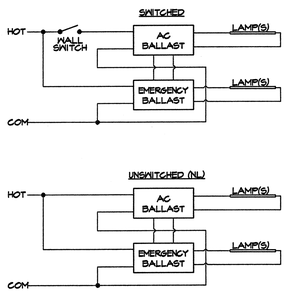

D | EMERGENCY BALLAST OPERATION DETAIL

NONE

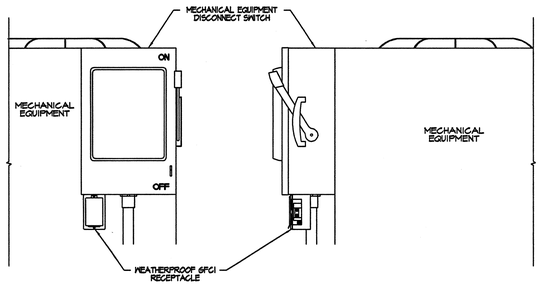

E | WEATHER PROOF RECEPTACLE MOUNTING DETAIL

NONE

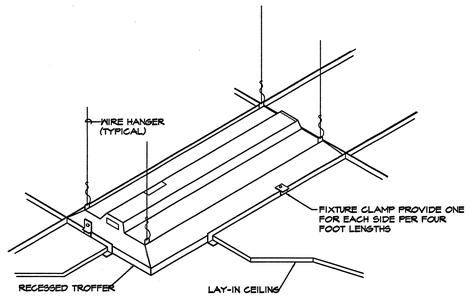

F | TYPICAL RECESSED FIXTURE MOUNTING DETAIL

NONE

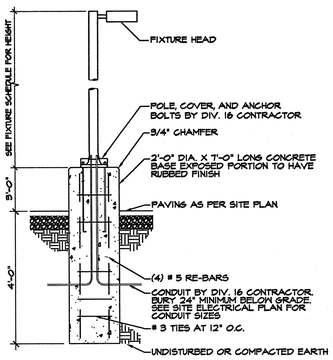

G | POLE BASE DETAIL

NONE

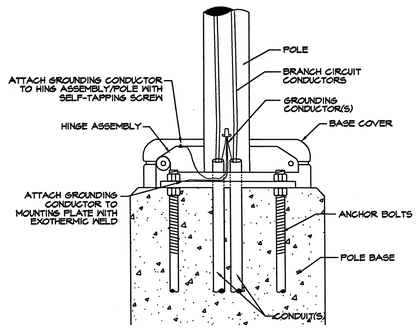

H | ENLARGED POLE BASE DETAIL

NONE

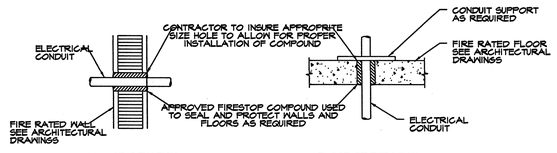

NOTE:
ALL FIRE STOPPING COMPOUND TO BE INSTALLED UNDER STRICT ACCORDANCE WITH MANUFACTURERS RECOMMENDATIONS.

J | FIRE RATED PENETRATION DETAIL

NONE

PVE Inc. Consulting Mechanical / Electrical Engineers
10840 South 2200 West, Suite 100
Salt Lake City, UTAH 84116
Phone: (801) 359-3338
Fax: (801) 521-4114

NEW RIVERTON LIQUOR STORE

DEPT OF ALCOHOLIC BEVERAGE CONTROL
RIVERTON, UTAH

FRANK N MURDOCK JR ■ Architect & Associates
975 East 100 South Suite 100, Salt Lake City, Utah 84102 TEL: (801) 532-4441 FAX: (801) 532-4220

ELECTRICAL DETAILS

REGISTERED PROFESSIONAL ENGINEER No. 154867 DEAN P. LEVORSEN STATE OF UTAH

REVISION # DATE:

DFCM PROJECT NO.:
05053030
CONCEPT
FILE NAME:
PLOT SCALE: AS SHOWN
DRAWN BY: KJH
CHECKED BY: RKR
DATE: MAY 30, 2007

E
501

NOTES:

1. WHEN AVAILABLE CONTRACTOR SHALL PROVIDE ALL GROUNDING MEANS INDICATED. CONTRACTOR SHALL REFER TO ELECTRICAL ONE LINE DIAGRAM FOR GROUNDING ELECTRODE CONDUCTOR SIZE. GROUNDING CONDUCTOR SIZE SHOWN ON THE ONE LINE DIAGRAM SHALL BE THE SAME FOR ALL METHODS OF GROUNDING SHOWN IN THIS DETAIL. CONTRACTOR SHALL REFER TO ELECTRICAL SPECIFICATIONS FOR SPECIFICS OF GROUNDING SYSTEM INSTALLTION AND MATERIALS

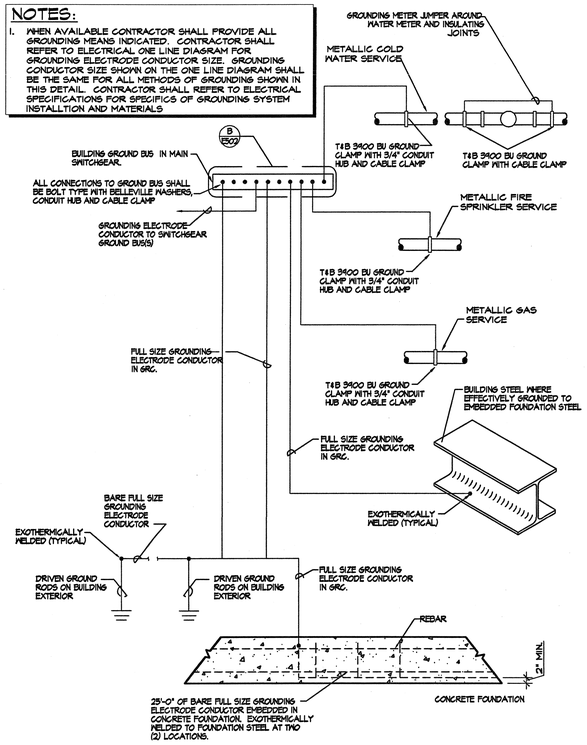

A	SERVICE GROUNDING DETAIL
NONE	

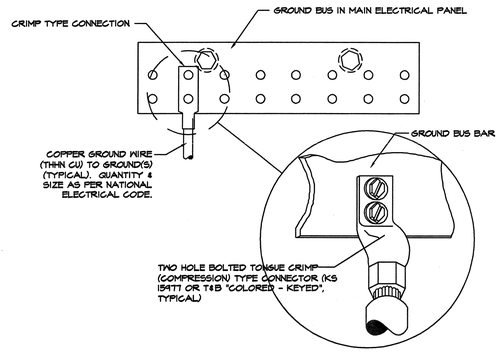

B	SERVICE BUS GROUNDING DETAIL
NONE	

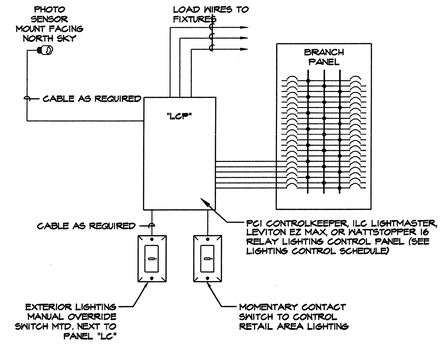

C	LIGHTING CONTROL PANEL DETAIL
NONE	

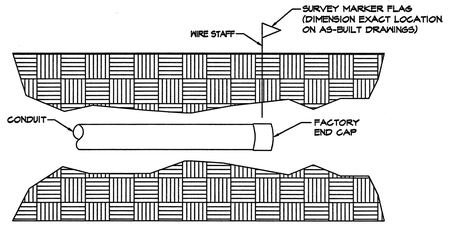

D	UNDERGROUND CONDUIT STUB & MARKING DETAIL
NONE	

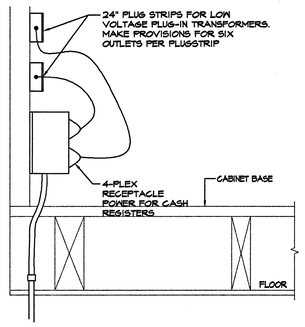

E	POINT OF SALE UNDER COUNTER DETAIL
NONE	

PVE Inc. Consulting Mechanical Electrical Engineers
10140 South 2200 West, Suite 100
South Jordan, UT 84095-7416
Phone: (801) 359-3158
Fax: (801) 521-4114

NEW RIVERTON LIQUOR STORE

DEPT OF ALCOHOLIC BEVERAGE CONTROL
RIVERTON, UTAH

ELECTRICAL DETAILS

FRANK N MURDOCK JR ■ Architect & Associates
975 East 100 South Suite 100, Salt Lake City, Utah 84102 TEL: (801) 532-4441 FAX (801) 532-4220

REGISTERED PROFESSIONAL ENGINEER No. 154867 DEAN P. LEVORSEN STATE OF UTAH 15-07

REVISION # DATE:

DFCM PROJECT NO.: 05053030
CONCEPT
FILE NAME:
PLOT SCALE: AS SHOWN
DRAWN BY: KJH
CHECKED BY: RKR
DATE: MAY 30, 2007

E 502