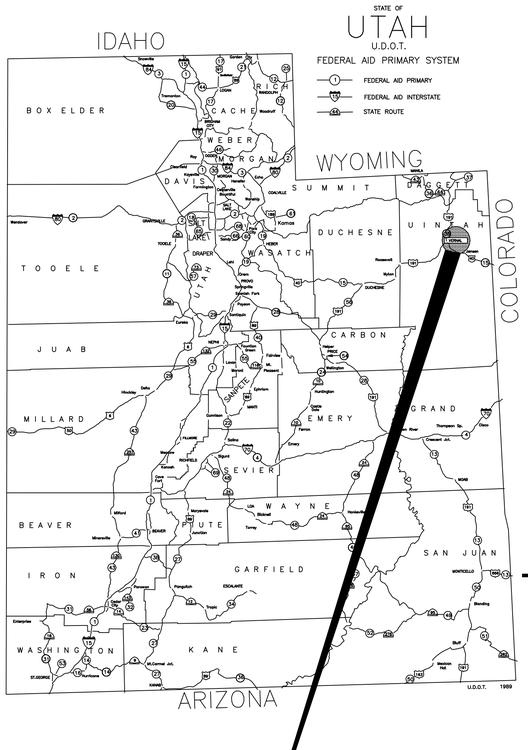

UDOT MAINTENANCE STATION #3437

VERNAL, UTAH

DFCM PROJECT #05056900

RE-BID SET

JUNE 27, 2006

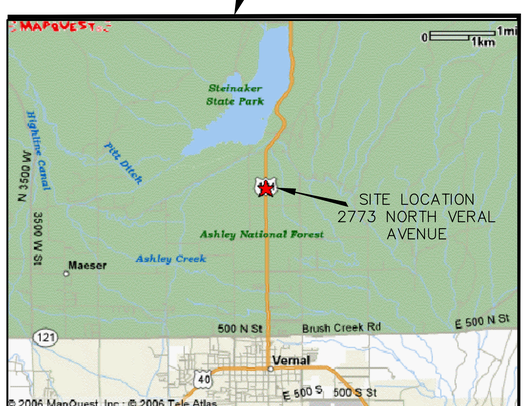

N

LOCATION MAP N.T.S.

PREPARED BY

ARCHIPLEX GROUP

architecture • planning • design services

1135 South West Temple, Ste. A
Salt Lake City, UT 84101
P:(801) 961-7070
F:(801) 961-7373
Ralph Stanislaw

CONSULTANTS

STRUCTURAL

BHB Consulting Engineers
244 West 300 North
Suite 202
Salt Lake City, Utah 84103
Telephone: (801) 355-5656
Fax: (801) 355-5950
Chris L. Hofheins

MECHANICAL

PVE Inc.
90 South 400 West
Suite 340
Salt Lake City, UT 84101
Telephone: (801) 359-3158
Fax: (801) 521-4114
Alan Spendlove

ELECTRICAL

PVE Inc.
90 South 400 West
Suite 340
Salt Lake City, UT 84101
Telephone: (801) 359-3158
Fax: (801) 521-4114
Roger Riddle

CIVIL

Great Basin Engineering
5745 South 1475 East
Suite 200
Ogden, UT 84415
Telephone: (801) 394-4515
Fax: (801) 392-7544
David Waldron

CODE ANALYSIS

APPLICABLE CODES

	Year		Year
International Building Code	2003	National Electrical Code	2002
International Mechanical Code	2003	Uniform Code for Building Conservation	N.A.
International Plumbing Code	2003	ADA Accessibility Guildelines	2002
International Fire Code	2003		
International Energy Conservation Code	2003		

A. Occupancy and Group: S1 (MAINT. FAC.) B (OFFICE ACCESSORY) S2 (STORAGE INCIDENTAL) S2 (MEZZANINE)

Change in Use: Yes ____ No X Mixed Occupancy: Yes ____ No X

Special Use and Occupancy (e.g. High Rise, Covered Mall): N.A.

B. Seismic Design Category: D Design Wind Speed: 90 mph

C. Type of Construction (circle one):

I/A I/B II/A II/B III/A III/B IV/HT V/A (V/B)

D. Fire Resistance Rating Requirements for the Exterior Walls based on the fire separation distance (in hours):

North: 0 South: 0 East: 0 West: 0

E. Mixed Occupancies: NO Nonseparated Uses: NO

F: Sprinklers:

Required: NO Provided: NO Type of Sprinkler System: N.A.

G: Number of Stories: 1 Building Height: 26'-8"

H: Actual Area per Floor (square feet): 9856 SF

I: Tabular Area: 9000 SF

J: Area Modifications:

a) $A_a = A_t + \left[\frac{A_t\, I_f}{100}\right] + \left[\frac{A_t\, I_s}{100}\right]$ $\quad I_f = 100\left[\frac{F}{P} - 0.25\right]\frac{W}{30}$

$$15750\text{ SF} = 9000 + \left[\frac{9000\ (75)}{100}\right] + \left[\frac{9000\ (0)}{100}\right]$$

b) Sum of the Ratio Calculations for Mixed Occupancies:

$$\frac{\text{Actual Area}}{\text{Allowable Area}} \leq 1 \quad \frac{9856\text{ SF}}{15750\text{ SF}} = .625$$

c) Total Allowable Area for:

1) One Story: 15750 SF
2) Two Story: $A_a(2)$ N.A.
3) Three Story: $A_a(3)$ N.A.

d) Unlimited Area Building: Yes ____ No X Code Section: ____

K. Fire Resistance Rating Requirements for Building Elements (hours).

Element	Hours	Assembly Listing	Element	Hours	Assembly Listing
Exterior Bearing Walls	0	N.A.	Floors - Ceiling Floors	1	U.L. D902
Interior Bearing Walls	0	N.A.	Roofs - Ceiling Roofs	0	N.A.
Exterior Non-Bearing Walls	0	N.A.	Exterior Doors and Windows	0	N.A.
Structural Frame	0	N.A.	Shaft Enclosures	0	N.A.
Partitions - Permanent	0	N.A.	Fire Walls	0	N.A.
Fire Barriers	0	N.A.	Fire Partitions	1	I.B.C. 13-1.2
			Smoke Partitions	0	N.A.

L. Design Occupant Load: 15* *MAX. OCCUPANTS BASED ON UDOT STAFFING FOR 8 BAY FACILITY

Exit Width Required: 3" Exit Width Provided: 4'-0"

M. Minimum Number of Required Plumbing Facilities: *UNISEX

a) Water Closets - Required (m) 1* (f) 1* Provided (m) 1* (f) 1*
b) Lavatories - Required (m) 1* (f) 1* Provided (m) 1* (f) 1*
c) Bath Tubs or Showers: 1 (EMERGENCY EYEWASH)
d) Drinking Fountains: 1 Service Sinks: 1

FOOTNOTES:

1) In case of conflict with the U.S. Department of Justice Federal Registers Parts I through V - ADA Guidelines and specific reference to the International Building Code Accessibility Chapters, the more restrictive requirement shall govern.

2) Additional Code Information shall be provided at the discretion of the Building Official for Complex Buildings. Including, but not limited to:
   a) High Rise Requirements.
   b) Atriums.
   c) Performance Based Criteria.
   d) Means or Egress Analysis.
   e) Fire Assembly Locator Sheet.
   f) Exterior and Interior Accessibility Route.
   g) Fire Stopping, Including Tested Design Number.

CLIENT

VERNAL
MAINTENANCE FACILITY
STATION #3437
2773 NORTH VERNAL AVENUE
VERNAL, UTAH 84078

DESIGNER

ARCHIPLEX GROUP
architecture • planning • design services
1135 South West Temple, Ste. A
Salt Lake City, UT 84101
P:(801) 961-7070
F:(801) 961-7373

CONSULTANTS

PROFESSIONAL SEAL

STATE OF UTAH
RALPH M. STANISLAW
95-310818-0301
LICENSED ARCHITECT

ISSUE

MARK	DATE	DESCRIPTION
	6-27-06	RE-BID SET
	3-31-06	CONSTRUCTION DOCUMENTS
	1-20-06	FINAL REVIEW SET
	8-22-05	PRELIMINARY SUBMITTAL

DFCM PROJECT NO:	05056900
ARCHIPLEX PROJECT NO:	050011.01
DRAWN BY:	K. PHILLIPS
CHECKED BY:	R. STANISLAW
SCALE:	NONE
DATE:	JUNE 27, 2006

KEY PLAN

SHEET TITLE

COVER SHEET

G000

GENERAL NOTES

1. CONTRACTOR IS RESPONSIBLE FOR VERIFYING ALL DIMENSIONS AND CONDITIONS AT THE SITE BEFORE SUBMITTING A BID OR PROCEEDING WITH ANY PORTION OF THE WORK.
2. WHENEVER QUESTIONS ARISE OR CONDITIONS ARE ENCOUNTERED WHICH ARE NOT COVERED BY OR ARE IN CONFLICT WITH THE CONTRACT DOCUMENTS, CONSULT WITH THE ARCHITECT PRIOR TO TAKING ANY FURTHER ACTION.
3. ALL DIMENSIONS ARE TO FACE OF MASONRY OR FACE OF STUD, U.N.O.
4. DO NOT SCALE DRAWINGS FOR DIMENSIONS.
5. DIMENSIONS NOTED AS N.T.S. ARE TO BE FIELD VERIFIED.
6. ALL WOOD IN CONTACT WITH OR WITHIN 8" OF SOILS IS TO BE FIELD TREATED FOR MOISTURE, RODENT AND INSECT PROTECTION.
7. THE CONTRACTOR SHALL COORDINATE THE SEQUENCING OF WORK WITH THE OWNER AND ARCHITECT TO MEET THE OWNERS SCHEDULE.
8. CONTRACTOR SHALL LEAVE WORK AREAS BROOM CLEAN AND FREE OF TOOLS, EQUIPMENT, ETC., AT THE END OF EACH SHIFT. ALL CONSTRUCTION ACTIVITY SHALL BE CONTAINED WITHIN CONSTRUCTION BARRICADES OR FENCES. CONTRACTOR SHALL PROTECT OWNERS EXISTING CONSTRUCTION AND EQUIPMENT ADJACENT TO NEW CONSTRUCTION. CONTRACTOR SHALL CLEAN ALL SURFACES TO "LIKE NEW" CONDITION AT THE COMPLETION OF
9. PROVIDE WATER SUPPLY ROUGH-IN AND ELECTRICAL SUPPLY TO IRRIGATION CONTROLS. PROVIDE PVC SLEEVE UNDER PAVEMENTS AND WALKS
10. THE DESIGN OF THE PRE MANUFACTURED STRUCTURAL ROOF SYSTEM INCLUDING THE STEEL DECK, JOISTS, GIRDERS, COLUMNS AND THE LATERAL FORCE RESISTING SYSTEM (INCLUDING RIGID FRAMES) IS THE RESPONSIBILITY OF THE PRE MANUFACTURED METAL BUILDING SUPPLIER. FOOTINGS, STEEL COLUMNS, CONCRETE PIER SIZES & LOCATIONS SHOWN ARE AN ESTIMATE OF ACTUAL SIZES. ACTUAL SIZES WILL BE PROVIDE AFTER PREFABRICATED METAL BUILDER IS SELECTED. ALL BIDDERS SHALL PROVIDE UNIT PRICES FOR ADDING OR SUBTRACTING VOLUME OF CONCRETE, WEIGHT OF REINFORCING STEEL AND VOLUME OF EARTHWORK.

GRAPHIC SYMBOLS

EARTH	GRAVEL
SAND	CONCRETE
CONC. W/ FINISH	CAST STONE
TILE W/ BED	MARBLE
BRICK	GRANITE
CMU	STONE
LIMESTONE	PLYWOOD
WOOD (BLOCKING)	WOOD FINISH
WOOD FRAMING	ALUMINUM
STEEL	BATT INSULATION
RIGID INSULATION	ACOUSTICAL TILE
PLASTER	BACKER ROD AND FILLER
COMP. FILLER	GYPSUM BOARD
METAL LATH	FENCE

ARCHITECTURAL LEGEND

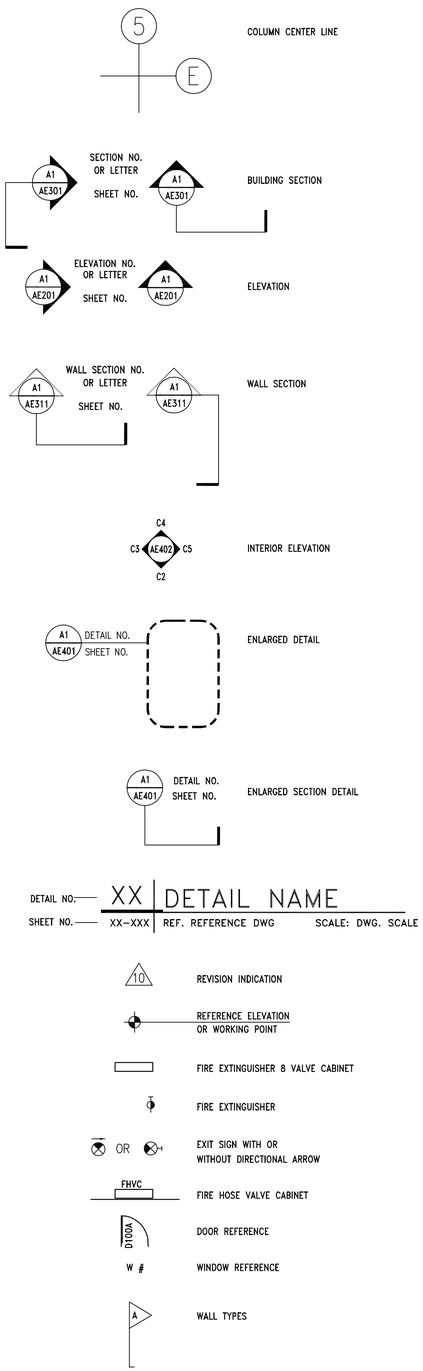

ABBREVIATIONS

ALT.	ALTERNATE
ALUM.	ALUMINUM
A.B.	ANCHOR BOLT
&	AND
ARCH.	ARCHITECTURAL
@	AT OR AT THE
BM.	BEAM
BLK.	BLOCK
BLKG.	BLOCKING
BD.	BOARD
BOT.	BOTTOM
BLDG.	BUILDING
CLKG.	CAULKING
C.I.	CAST IRON
CLG.	CEILING
CEM.	CEMENT
CTR.	CENTER
	CENTER LINE
CER.	CERAMIC
C.T.	CERAMIC TILE
CFCI	CONTRACTOR FURNISH, CONTRACTOR INSTALL
CFOI	CONTRACTOR FURNISH, OWNER INSTALLED
CLR.	CLEAR (...ANCE)
CLO.	CLOSET
COL.	COLUMN
CONC.	CONCRETE
CMU	CONCRETE MASONRY UNIT
CONN.	CONNECTION
CONSTR.	CONSTRUCTION
CONT.	CONTINUE/CONTINUOUS
CONTR.	CONTRACTOR
C.J.	CONTROL JOINT
CORR.	CORRIDOR
CNTR.	COUNTER
CTSK.	COUNTERSUNK
DET.	DETAIL
DIA.	DIAMETER
DIM.	DIMENSION
DN.	DOWN
D.S.	DOWNSPOUT
DWG.	DRAWING
D.F.	DRINKING FOUNTAIN
EA.	EACH
ELEC.	ELECTRIC (AL)
ELEV./EL.	ELEVATION
EQ.	EQUAL
EQUIP.	EQUIPMENT
EXP.	EXPANSION
EXT.	EXTERIOR
EW	EACH WAY
FIN.	FINISH
F.A.	FIRE ALARM
F.E.	FIRE EXTINGUISHER
F.E.C.	F.E. CABINET
FLR./FL.	FLOOR
F.D.	FLOOR DRAIN
FTG.	FOOTING
FDN.	FOUNDATION
GALV.	GALVANIZED
G.I.	GALVANIZED IRON
GA.	GAUGE
GL.	GLASS
GR.	GRADE
GND.	GROUND
GYP.	GYPSUM
GYP. BD.	GYPSUM BOARD
HDWR.	HARDWARE
HDWD.	HARDWOOD
HT.	HEIGHT
H.P.	HIGH POINT
HORIZ.	HORIZONTAL
H.B.	HOSE BIBB
HM	HOLLOW METAL
HR.	HOURS (FIRE RATING)
IN.	INCH
I.D.	INSIDE DIAMETER
INUSL.	INSULATION
INT.	INTERIOR
JAN.	JANITOR
JT.	JOINT
J-BOX	JUNCTION BOX
KIT.	KITCHEN
LAM.	LAMINATE
LAV.	LAVATORY
LT.	LIGHT
L.P.	LOW POINT
MAINT.	MAINTENANCE
MFR.	MANUFACTURER
M.O.	MASONRY OPENING
MAX.	MAXIMUM
MECH.	MECHANICAL
MEMB.	MEMBRANE
MEN	MEN'S TOILET
MTL./MET.	METAL
MIN.	MINIMUM
MIR.	MIRROR
MISC.	MISCELLANEOUS
MTD.	MOUNTED
MUL.	MULLION
NOM.	NOMINAL
N.	NORTH
N.I.C.	NOT IN CONTRACT
N.T.S.	NOT TO SCALE
NO. OR #	NUMBER
OFOI	OWNER FURNISH, OWNER INSTALL
OFCI	OWNER FURNISH, CONTRACTOR INSTALL
OFF.	OFFICE
O.C.	ON CENTER
OPNG.	OPENING
OPP.	OPPOSITE
OPP. H.	OPPOSITE HAND
O.D.	OUTSIDE DIAMETER
PTD.	PAINTED
PR.	PAIR
PART.	PARTITION
PED.	PEDESTRIAN
PLAS.	PLASTER
P. LAM.	PLASTIC LAMINATE
PL	PLATE
PM	PRESSED METAL
PLYWD.	PLYWOOD
PT.	POINT
Q.T.	QUARRY TILE
RAD.	RADIUS
R.W.L.	RAIN WATER LEADER
RE:	REFER TO
REFL.	REFLECTED
REINF.	REINFORCING
REQ.	REQUIRED
REV.	REVISED
R.	RISER
R.D.	ROOF DRAIN
RM.	ROOM
R.O.	ROUGH OPENING
SCHED.	SCHEDULE
SEAL.	SEALANT
SECT.	SECTION
S.SK.	SERVICE SINK
SHT.	SHEET
SIM.	SIMILAR
SL./SLP.	SLOPE
S.C.	SOLID CORE
SPEC.	SPECIFICATIONS
SQ.	SQUARE
STD.	STANDARD
STL.	STEEL
STOR.	STORAGE
STRUCT.	STRUCTURAL/STRUCTURE
SYM.	SYMMETRICAL
S.STL	STAINLESS STEEL
TEL.	TELEPHONE
TEMP.	TEMPORARY/TEMPERED
THK.	THICK (NESS)
T & G	TONGUE AND GROOVE
T/CONC.	TOP OF CONCRETE
T/CURB	TOP OF CURB
T.O.P.	TOP OF PLATE
T/WALL	TOP OF WALL
T.	TREAD
TYP.	TYPICAL
UNF.	UNFINISHED
U.N.O.	UNLESS NOTED OTHERWISE
VAR.	VARY OR VARIES
VERT.	VERTICAL
V.T.R.	VENT THROUGH ROOF
W/	WITH
WD.	WOOD
WP.	WATERPROOF
WSCT.	WAINSCOT
W/O	WITHOUT
W.P.	WORKING POINT
W.R.	WATER RESISTANT

INDEX OF DRAWINGS

G000	COVER SHEET
G001	GENERAL NOTES, ABBREVIATIONS, SYMBOLS, LEGEND & SHEET INDEX
G002	MASTER KEYNOTE LIST

CIVIL

C001	DEMOLITION PLAN – BASE BID
C100	SITE PLAN – BASE BID
C200	GRADING PLAN – BASE BID
C300	UTILITY PLAN – BASE BID
C101	SITE PLAN – ADD ALTERNATE 1
C102	SITE PLAN – ADD ALTERNATE 2
C103	SITE PLAN – ADD ALTERNATE 3
C104	SITE PLAN – ADD ALTERNATE 4
C204	GRADING PLAN – ADD ALTERNATE 4
C400	CONSTRUCTION DETAILS
C401	CONSTRUCTION DETAILS
C402	RETENTION POND CONSTRUCTION DETAILS
C500	SWPP PLAN
C501	SWPP PLAN NOTES
C600	HORIZONTAL CONTROL PLAN

ARCHITECTURAL

AE101	FIRST FLOOR AND MEZZANINE PLANS
AE121	FIRST FLOOR AND MEZZANINE REFLECTED CEILING PLANS
AE141	ROOF PLAN
AE201	EXTERIOR ELEVATIONS
AE301	BUILDING SECTIONS AND DETAILS
AE311	WALL SECTIONS
AE401	ENLARGED RESTROOM FLOOR PLAN, INT. ELEVTATIONS AND DETAILS
AE402	ENLARGED MAINTENANCE BAY AND INTERIOR ELEVATIONS
AE501	WALL TYPES AND MISC. DETAILS
AE502	SIGNAGE AND MISC. DETAILS
AE601	DOOR SCHEDULE AND DETAILS
AE602	WINDOW FRAME TYPES, GLAZING & FINISH SCHEDULES AND DETAILS
AE701	SANDER RACK PLAN, SECTION & ELEVATION
AE702	WASH RACK PLAN, SECTION & ELEVATIONS
AE703	SALT STORAGE PLAN, SECTION & ELEVATIONS – ADD ALT. #1
AE704	OPEN STORAGE PLAN, SECTIONS & ELEVATIONS – ADD ALT. #2
AE705	MOTORIZED GATE PLANS, ELEV. & FENCE DTLS. – ADD ALT. #3 & #4

STRUCTURAL

S001	GENERAL STRUCTURAL NOTES
S101	FOOTING AND FOUNDATION PLAN
S102	OUT BUILDINGS PLANS
S201	SANDER & WASH RACK DETAILS
S501	FOOTING AND FOUNDATION DETAILS
S502	FOOTING AND FOUNDATION DETAILS
S503	FOOTING AND FOUNDATION DETAILS – ADD ALTERNATE #1
S601	STRUCTURAL SCHEDULES

MECHANICAL

M001	MECHANICAL SCHEDULE SHEET
M201	MECHANICAL FLOOR PLAN
M601	MECHANICAL DETAIL SHEET
M602	MECHANICAL DETAIL SHEET
M603	MECHANICAL DETAIL SHEET
P001	PLUMBING SCHEDULE SHEET
P201	PLUMBING FLOOR PLAN
P301	PLUMBING ENLARGEMENTS
P601	PLUMBING DETAIL SHEET
P602	PLUMBING DETAIL SHEET
P603	PLUMBING DETAIL SHEET

ELECTRICAL

E001	ELECTRICAL SCHEDULES, NOTES & DIAGRAM
E100	ELECTRICAL SITE PLAN
E201	LIGHTING FLOOR PLAN
E202	OUT-BUILDINGS ELECTRICAL PLANS
E301	POWER FLOOR PLAN

CLIENT

VERNAL
MAINTENANCE FACILITY
STATION #3437
2773 NORTH VERNAL AVENUE
VERNAL, UTAH 84078

DESIGNER

ARCHIPLEX GROUP
architecture · planning · design services
1135 South West Temple, Ste. A
Salt Lake City, UT 84101
P:(801) 961-7070
F:(801) 961-7373

CONSULTANTS

PROFESSIONAL SEAL

STATE OF UTAH
RALPH M. STANISLAW
95-310818-0301
LICENSED ARCHITECT

ISSUE

MARK	DATE	DESCRIPTION
	6-27-06	RE-BID SET
	3-31-06	CONSTRUCTION DOCUMENTS
	1-20-06	FINAL REVIEW SET
	8-22-05	PRELIMINARY SUBMITTAL

DFCM PROJECT NO:	05056900
ARCHIPLEX PROJECT NO:	050011.01
DRAWN BY:	K. PHILLIPS
CHECKED BY:	R. STANISLAW
SCALE:	NONE
DATE:	JUNE 27, 2006

KEY PLAN

SHEET TITLE

GENERAL NOTES, ABBREVIATIONS, SYMBOLS, LEGEND & SHEET INDEX

G001

MASTER KEYNOTE LIST – (APPLIES TO ARCHITECTURAL DRAWINGS ONLY)

DIVISION 1 GENERAL REQUIREMENTS

DIVISION 2 SITEWORK

02000 EARTHWORK

02200.A0 COMPACTED FILL
02200.B0 GRAVEL BASE
02200.C0 SAND

02512 ZERO VOIDS ASPHALT PAVING

02512.A0 ZERO VOIDS ASPHALT PAVING (THICKNESS)

02513 ASPHALT CONCRETE PAVING

02513.A0 ASPHALT CONCRETE PAVING

DIVISION 3 CONCRETE

03053 CONCRETE WATER PROOFING ADMIXTURE

03053.A0 CONCRETE WATER PROOFING ADMIXTURE

03054 OLIOPHOBIC CONCRETE SEALER

03054.A0 OLIOPHOBIC SEALER, OVER CONCRETE WATER PROOFING SYSTEM AT FLOOR

03300 CAST-IN-PLACE CONCRETE

03300.A0 CONCRETE – SLAB ON GRADE
03300.A1 CONCRETE SLAB-ON-GRADE – RE: STRUCTURAL
03300.A2 CONCRETE SLAB-ON-GRADE (THICKNESS)
03300.B1 CONCRETE SLAB – RE:STRUCTURAL
03300.B2 CONCRETE SLAB (THICKNESS)
03300.C0 FOOTING
03300.C1 FOOTING – RE: STRUCTURAL
03300.D0 CONCRETE PAD
03300.E0 RETAINING WALL
03300.F0 CAST-IN-PLACE REINFORCED CONCRETE
03300.F2 CAST-IN-PLACE REINFORCED CONCRETE, W/INTEGRAL CONCRETE WATERPROOFING SYSTEM
03300.G0 CONCRETE OVER METAL DECK – RE:STRUCTURAL
03300.H0 FOUNDATION WALL, RE: STRUCTURAL
03300.H1 CONCRETE PIER, RE: STRUCTURAL
03300.J0 REINFORCING
03300.J1 REINFORCING – RE: STRUCTURAL
03300.J2 #4 BARS CONTINUOUS (QUANTITY)
03300.J3 #5 BARS CONTINUOUS (QUANTITY)
03300.K1 CONCRETE PIPE BASE
03300.L1 30# FELT
03300.M1 MOISTURE BARRIER
03300.N0 CONCRETE CURB
03300.P3 CONTROL JOINT RE: STRUCTURAL
03300.P4 CONSTRUCTION JOINT
03300.P6 CHAMFER JOINT
03300.P7 SAWCUT CONSTRUCTION JOINT, TYP.
03300.S1 SPLASH BLOCK
03300.S2 CONCRETE SWALE

DIVISION 5 METALS

05120 STRUCTURAL STEEL

05120.A1 STEEL BEAM – RE: STRUCTURAL – GALVANIZED
05120.B1 COLUMN – RE: STRUCTURAL – GALVANIZED

05310 STEEL DECK

05310.A1 METAL DECK – RE: STRUCTURAL

05400 COLD-FORMED METAL FRAMING

05400.X1 STEEL STUD
05400.X2 STEEL TRACK
05400.X3 STEEL JOIST – RE:STRUCTURAL

05500 METAL FABRICATIONS

05500.A1 ANGLE – RE: STRUCTURAL
05500.A2 STEEL ANGLE (SIZE) – GALVANIZED
05500.B0 CLIP ANGLE
05500.B2 CLIP ANGLE (SIZE)
05500.C1 SHEET METAL ANGLE – 22 GA. – GALVANIZED (SIZE)
05500.D0 CHANNEL (SIZE)
05500.D1 CHANNEL – RE: STRUCTURAL
05500.D2 HAT CHANNEL (SIZE)
05500.E0 PLATE (SIZE)
05500.E1 PLATE – RE: STRUCTURAL
05500.E2 PLATE (SIZE) – GALVANIZED
05500.E3 BENT PLATE – SEE STRUCTURAL
05500.J1 PIPE BOLLARD (DIAMETER) – GALV. & PAINTED
05500.M1 CHECKERED PLATE (SIZE) GALVANIZED
05500.P0 ANCHOR BOLT(S)
05500.P1 ANCHOR BOLTS (DIAMETER, SPACING)

05500 METAL FABRICATIONS (CONT.)

05500.V0 FLOOR PLATE
05500.X1 STEEL STUD (RE:STRUCTURAL)
05500.X2 STEEL RUNNER (RE:STRUCTURAL)
05500.Y0 ROUGH HARDWARE – GALVANIZED
05500.Z0 CHAIN – GALVANIZED
05500.Z1 STEEL CLIP RING – GALVANIZED
05500.Z2 RING FOR CHAIN ATTACHMENT – GALVANIZED

05510 METAL STAIRS

05510.A1 LADDER RUNGS
05510.B0 LADDER RAILS
05510.C0 LADDER MOUNTING BRACKET
05510.D1 RUBBER SHOE AT BOTTOM OF EACH RAIL
05510.E1 1 1/2" O.D. HANDRAILING
05510.F0 STEEL STRINGER – (SIZE)
05510.F1 STEEL STRINGER – (SIZE) – GALVANIZED

05521 PIPE & TUBE RAILINGS

05521.A1 1 1/2" O.D. STEEL GUARDRAIL
05521.A2 PIPE GUARDRAIL (DIAMETER) – GALVANIZED & PAINTED
05521.B1 1 1/2" O.D. HANDRAIL
05521.B2 PIPE HANDRAIL (DIAMETER) – GALVANIZED & PAINTED

05530 GRATINGS

05530.A0 TRENCH FRAME – GALVANIZED
05530.A1 STEEL GRATE 22-W-4 (SIZE) GALVANIZED
05530.B0 ALUMINUM BAR PANELS
05530.C1 METAL GRATE PANEL – GALV.
05530.C2 METAL GRATE TREAD – GALV.

DIVISION 6 WOOD AND PLASTICS

06105 MISCELLANEOUS CARPENTRY

06105.L2 BLOCKING AS REQUIRED
06105.P1 2X4
06105.P2 2X6
06105.P6 4X4
06105.P9 2 x FRAMING, FIRE TREATED
06105.P10 PRESSURE TREATED WOOD TIMBER (SIZE)
06105.Q2 SHIM AS REQUIRED
06105.R2 SHEATHING – PLYWOOD (THICKNESS) GRADE (SIZE)
06105.R3 G1S A/C PLYWOOD (THICKNESS)
06105.V1 EXTERIOR GRADE PLYWOOD (THICKNESS)
06105.V6 PEGBOARD (THICKNESS)
06105.Z0 ANCHOR AS REQUIRED

06402 INTERIOR ARCHITECTURAL WOODWORK

06402.A0 SILL
06402.A1 3/4" PAINTED WOOD SILL
06402.B1 PLASTIC LAMINATE BACKSPLASH (HEIGHT)
06402.C1 PAINT GRADE WOOD CAP (THICK)
06402.H0 SHELF(VES)
06402.H1 ADJUSTABALE SHELVES
06402.H2 SHELVING (DEPTH)
06402.K0 BASE UNIT (FINISH)
06402.K2 BASE UNIT W/ADJ. SHELF(VES) (FINISH)
06402.K3 BASE UNIT W/DRAWERS (FINISH)
06402.K4 BASE UNIT W/DRAWER & ADJ. SHELF(VES) (FINISH)
06402.L2 WALL UNIT W/ADJ. SHELF(VES) (FINISH)
06402.P0 COUNTERTOP
06402.P2 COUNTERTOP – P. LAM. ON 3/4" PLYWOOD
06402.X0 WORKBENCH

DIVISION 7 THERMAL AND MOISTURE PROTECTION

07901 JOINT SEALANTS

07901.A0 SEALANT
07901.B0 ASPHALT SATURATED FIBERBOARD
07901.C0 CAULK
07901.D0 JOINT FILLER
07901.G0 BACKER ROD
07901.H1 5/8" BEAD OF DE NEFF SWELLSEAL WA MASTIC
07901.H2 CONCENTRATED DRY PAC
07901.H3 CONCENTRATED SLURRY COAT

DIVISION 8 DOORS AND WINDOWS

08111 STANDARD STEEL DOORS AND FRAMES

08111.A0 PRESSED METAL FRAME
08111.A1 GROUT-FILLED PRESSED METAL FRAME
08111.B0 HOLLOW METAL DOOR
08111.C0 JAMB ANCHOR

08360 SECTIONAL OVERHEAD DOORS

08360.A0 OVERHEAD SECTIONAL DOOR
08360.B0 DOOR TRACK
08360.C0 WEATHERSTRIPPING
08360.D0 DOOR GUIDE

08520 ALUMINUM WINDOWS

08520.A0 WINDOW UNIT
08520.B0 FIXED WINDOW
08520.C0 ALUM. WINDOW W/SLIDING GLASS PANEL
08520.M0 SILL STARTER, SET IN SEALANT
08520.P0 BREAKMETAL
08520.Q0 WEATHERSTRIPPING
08520.R0 ALUMINUM FLASHING, FINISH TO MATCH WINDOW FRAME

08521 HORIZONTAL SLIDING VINYL (PVC) WINDOWS

08521.B0 FIXED VINYL WINDOW
08521.C0 VINYL WINDOW W/SLIDING GLASS PANEL

08710 DOOR HARDWARE

08710.A0 THRESHOLD
08710.B0 DOOR SWEEP
08710.C0 WEATHERSTRIPPING

08800 GLAZING

08800.C0 WIRE GLASS
08800.G1 CLEAR INSULATING GLASS (SIZE)
08800.G3 OPAGUE INSULATING GLASS

DIVISION 9 FINISHES

09255 GYPSUM BOARD ASSEMBLIES

09255.A1 GYPSUM BOARD (THICKNESS)
09255.A2 WATER RESISTANT GYPSUM BOARD (THICKNESS)
09255.B2 TYPE 'X' GYPSUM BOARD (THICKNESS)
09255.C3 CEMENT BOARD (THICKNESS)
09255.H0 METAL STUD
09255.H1 METAL STUDS (SIZE, SPACING)
09255.J0 METAL RUNNER
09255.K0 DOUBLE STUDS
09255.K1 DOUBLE STUDS (GAGE)
09255.L1 7/8" X 1-3/8" METAL ANGLE
09255.L2 2-1/2" X 2-1/2" METAL ANGLE
09255.M2 METAL CORNER BEAD (TYP)
09255.P0 Z-FURRING CHANNEL
09255.Q0 7/8" METAL FURRING CHANNEL
09255.R2 CHANNEL (SIZE, SPACING)
09255.S1 8 GA. WIRE HANGERS (SPACING)
09255.S2 18 GA. WIRE TIES
09255.S3 18 GA. METAL MOUNTING STRIPS
09255.S4 14 GA. STAINLESS STEEL COUNTER TOP (FINISH)
09255.U1 SUSPENDED CEILING SYSTEM
09255.V0 EDGE TRIM (TYP)
09255.V2 LC-BEAD (PREFERRED USG 200-A TRIM)
09255.V4 VINYL TRIM

09300 TILE

09300.A1 TILE UNGLAZED CERAMIC MOSAIC-TILE TYPE#1
09300.A2 TILE GLAZED WALL-TILE TYPE#2
09300.C0 TILE BASE
09300.D1 BULLNOSE TRIM UNIT
09300.G1 MORTAR BED
09300.G4 WATERPROOF MEMBRANE

09660 RESILIENT TILE FLOORING

09660.A1 VINYL COMPOSITION TILE TYPE #1

09678 RESILIENT WALL BASE AND ACCESSORIES

09678.E1 RUBBER BASE (SIZE)

09900 PAINTING

09900.A1 PAINT – TYPE #1
09900.A2 PAINT – TYPE #2
09900.A3 PAINT – TYPE #3

DIVISION 10 SPECIALTIES

10100 VISUAL DISPLAY BOARDS

10100.C0 MARKER BOARD
10100.D0 TACK BOARD

10290 BIRD CONTROL NETTING

10290.A0 BIRD CONTROL NETTING

10425 SIGNS

10425.A0 SIGNAGE
10425.A1 OIL SIGNAGE
10425.B1 WELDING SIGNAGE
10425.C1 ACCESSIBLE SIGNAGE
10425.D1 ACCESSIBLE/UNISEX RESTROOM SIGNAGE

10500 METAL LOCKERS AND STORAGE CABINETS

10500.A0 METAL LOCKERS
10500.B0 METAL STORAGE CABINETS

10522 FIRE EXTINGUISHERS, CABINETS, AND ACCESSORIES

10522.A0 FIRE EXTINGUISHER

10800 TOILET AND BATH ACCESSORIES

10800.B0 PAPER TOWEL DISPENSER & WASTE RECEPTACLE
10800.B1 SEMI-RECESSED PAPER TOWEL DISPENSER & WASTE RECEPTACLE
10800.C0 TOILET TISSUE DISPENSER
10800.C1 RECESSED TOILET TISSUE DISPENSER/SAN. NAP. DISPOSAL
10800.D0 MOP RACK
10800.E0 GRAB BAR
10800.E1 GRAB BAR (SHOWER)
10800.F0 ROBE HOOK
10800.F1 DOUBLE PRONG ROBE HOOK
10800.H0 SOAP DISPENSER
10800.H1 SOAP DISH
10800.P1 SHOWER CURTAIN ROD
10800.P2 SHOWER CURTAIN
10800.R1 FRAMED MIRROR (SIZE)
10800.T1 FOLDING SHOWER SEAT
10800.T0 METAL SHELF (SIZE)

DIVISION 11 EQUIPMENT

11151 MOBILE LIFT

11151.A0 MOBILE LIFT

DIVISION 12 FURNISHINGS

12511 HORIZONTAL LOUVER BLINDS

12511.A0 HORIZONTAL LOUVER BLINDS

DIVISION 13 SPECIAL CONSTRUCTION

13125 METAL ARCH BUILDING SYSTEM

13125.A0 METAL ARCH BUILDING SYSTEM
13125.B0 STANDING SEAM METAL ROOF
13125.B1 STANDING SEAM METAL ROOF RIDGE
13125.B2 STANDING SEAM METAL CANOPY
13125.C0 METAL RAIN GUTTER W/DOWNSPOUTS
13125.C1 METAL RAIN GUTTER
13125.C2 DOWNSPOUT
13125.C3 GUTTER STRAP, INSTALL AT EVERY OTHER PANEL RIB
13125.D0 METAL FLASHING
13125.D1 METAL DRIP FLASHING
13125.D2 METAL HEAD FLASHING
13125.D3 METAL SILL FLASHING
13125.D4 METAL FLASHING, FINISH TO MATCH ROOF PANELS
13125.D5 RIDGE FLASHING, TO MATCH ROOF PANELS
13125.D6 DOOR HEAD FLASHING
13125.D7 JAMB FLASHING
13125.D8 CONTINUOUS PRE-FINISHED SHEET METAL CLOSURE
13125.E0 METAL TRIM
13125.E1 JAMB TRIM
13125.E2 PANEL TRIM
13125.E3 RAKE TRIM
13125.E4 RAKE SLIDE
13125.E5 METAL EAVE CLOSURE
13125.E6 WALL CLOSURE
13125.E7 METAL OUTSIDE CLOSURE
13125.E8 CORNER TRIM
13125.E9 FRAMED OPENING HEADER
13125.F0 METAL WALL PANEL
13125.F1 METAL WALL FASTENER
13125.F2 BLIND RIVET
13125.F3 POP RIVET
13125.G0 STANDING SEAM METAL FACIA
13125.H0 BREAK METAL
13125.H1 METAL ANGLE
13125.H2 HIGH RAKE SUPPORT ANGLE
13125.H3 RAKE ANGLE
13125.H4 4" x 4" CONT. ANGLE
13125.H5 BACKUP PLATE ANGLE
13125.H6 EAVE SUPPORT ANGLE
13125.H7 EAVE STRUT

13125 METAL ARCH BUILDING SYSTEM (CONT.)

13125.J0 STRUCTURAL MEMBER
13125.J1 STRUCTURAL GIRT
13125.J2 PURLIN
13125.K0 CLIP
13125.K1 LOW PANEL CLIP
13125.L1 STEEL COLUMN – PAINTED
13125.L2 STEEL COLUMN – GALV. – PAINTED
13125.L3 STEEL COLUMN – GALVANIZED
13125.L4 STEEL COLUMN – PRIMED AND PAINTED
13125.M1 STEEL BEAM – PAINTED
13125.M2 STEEL BEAM – GALV. – PAINTED
13125.M3 STEEL BEAM – GALVANIZED
13125.M4 STEEL BEAM – PRIMED AND PAINTED
13125.N1 ANCHOR
13125.N2 FASTENER (SPACING)
13125.P1 DOUBLE BEAD TAPE SEALER
13125.P2 SEALANT
13125.P3 THERMAL BREAK
13125.Q0 METAL VENT
13125.Q1 VENT MATERIAL
13125.R0 INSULATION & VAPOR BARRIER (R-VALUE)

DIVISION 14 CONVEYING SYSTEMS

14620 TROLLEY HOIST

14620.A0 TROLLEY HOIST (SIZE) – RE: STRUCTURAL

DIVISION 15 EQUIPMENT

15000 MECHANICAL

15050.A1 MECH. PENETRATIONS
15251.A1 PIPE INSULATION AT ALL EXPOSED PIPE
15410.A0 URINAL
15410.A1 URINAL, ACCESSIBLE
15410.B0 SINK FAUCET
15410.B1 SINK FAUCET W/ADA LEVER HANDLES
15410.C0 UTILITY SINK
15410.D1 FLOOR SINK
15410.E0 TRENCH DRAIN
15410.E1 DRAIN W/ SEDIMENT BUCKET
15410.E2 FLOOR DRAIN
15410.F0 TOILET
15412.A0 EMERGENCY SHWR & EYE WASH
15452.A1 DRINKING FOUNTAIN
15460.A1 GAS FIRED WATER HEATER
15490.A0 WASTE OIL PUMP
15490.B0 WASTE OIL CARTS
15490.C0 WASTE OIL PIT
15490.D0 600 GAL WASTE OIL TANK – O.F.C.I.
15491.A0 AIR COMPRESSOR
15491.B0 OVERHEAD LUBE REEL
15491.C0 OVERHEAD HOSE REEL
15600.A0 NATURAL GAS RADIANT HEATING SYSTEM
15611.A1 PROPANE FIRED FURNACE
15838.A0 EXHAUST FAN
15838.A1 ROOF TOP EXHAUST FAN
15887.A1 LOUVER W/ BIRD SCREEN

DIVISION 16 ELECTRICAL

16000 GENERAL ELECTRICAL

16000.A0 INTERIOR LIGHTS
16000.B0 INTERIOR WALL LIGHTS
16000.C0 EXTERIOR LIGHTS
16000.C1 EXTERIOR LIGHTS IN CANOPY
16000.C2 EXTERIOR WALL MOUNTED LIGHTS
16000.C3 EXTERIOR WALL MOUNTED FLOOD LIGHTS
16000.D1 ELECTRICAL PANEL
16000.E1 TELEPHONE BOARD

CLIENT

VERNAL
MAINTENANCE FACILITY
STATION #3437
2773 NORTH VERNAL AVENUE
VERNAL, UTAH 84078

DESIGNER

ARCHIPLEX GROUP
architecture · planning · design services
1135 South West Temple, Ste. A
Salt Lake City, UT 84101
P:(801) 961-7070
F:(801) 961-7373

CONSULTANTS

PROFESSIONAL SEAL

STATE OF UTAH
RALPH M. STANISLAW
95-310818-0301
LICENSED ARCHITECT

ISSUE

MARK	DATE	DESCRIPTION
	6-27-06	RE-BID SET
	3-31-06	CONSTRUCTION DOCUMENTS
	1-20-06	FINAL REVIEW SET
	8-22-05	PRELIMINARY SUBMITTAL

DFCM PROJECT NO:	05056900
ARCHIPLEX PROJECT NO:	050011.01
DRAWN BY:	K. PHILLIPS
CHECKED BY:	R. STANISLAW
SCALE:	NONE
DATE:	JUNE 27, 2006

KEY PLAN

SHEET TITLE

MASTER
KEYNOTE LIST

G002

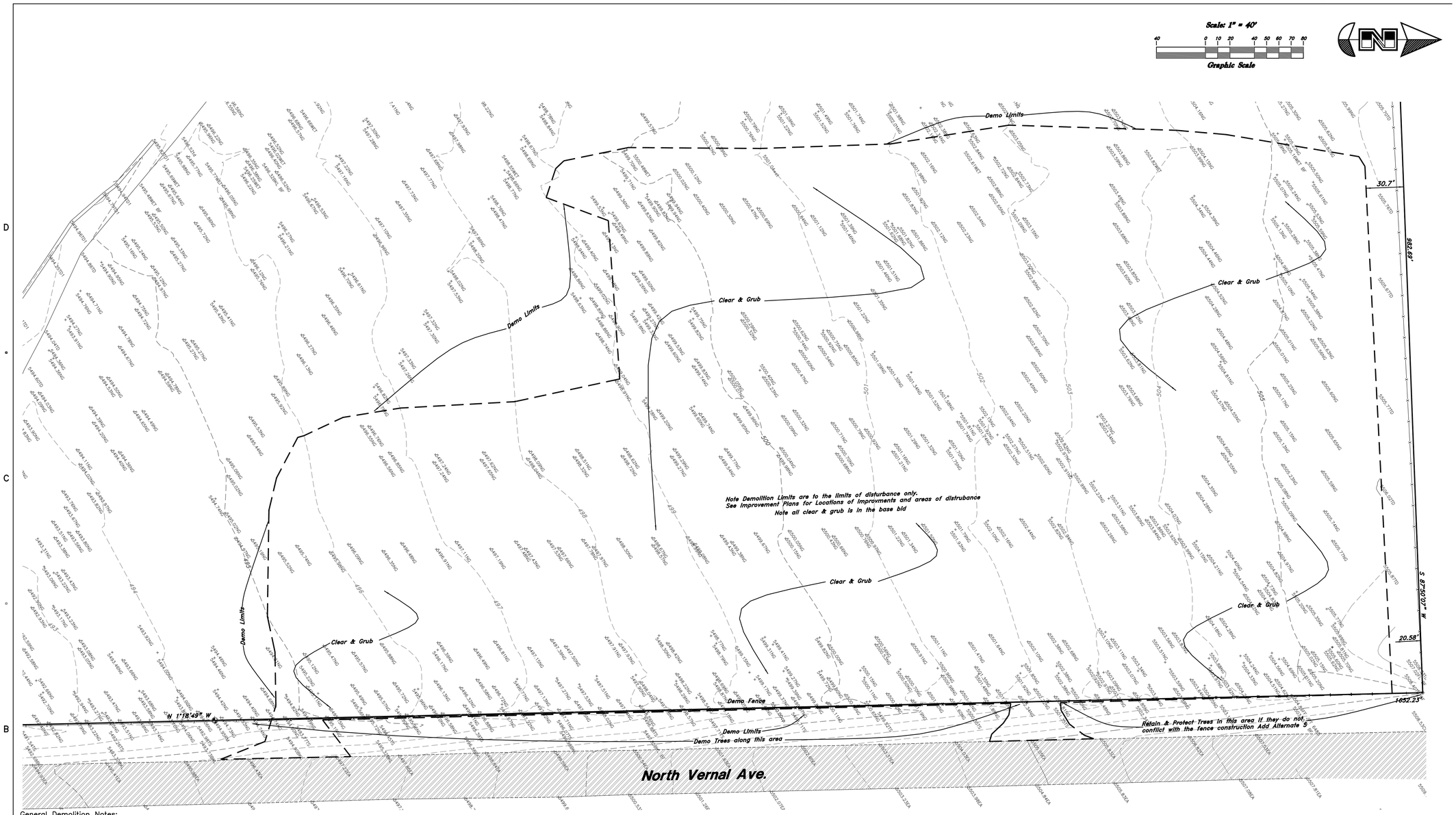

General Demolition Notes:

1. Demolition and site clearing for this contract are to include all areas shown within demolition limits or by note.
2. Refer to site improvement plans for more details on limits of removal.
3. Use clear and grub soil to form berms and other landscaping features. After berms and landsaping needs are filled, remove and dispose of clear and grub soils.
4. The location and/or elevation of existing utilities as shown on these plans is based on records of the various utility companies and, where possible, measurements taken in the field. The information is not to be relied upon as being exact or complete. Contractor shall contact authorities having jurisdiction for field locations. Contractor shall be responsible for protection of in place and relocated utilities during construction.
5. Stockpiles shall be graded to maintain slopes not greater than 3 horizontal to 1 vertical. Provide erosion control as needed to prevent sediment transport to adjacent drainage ways.
6. Contractor shall be responsible for disposal of all waste material. Disposal shall be at an approved site for such material. Burning onsite is not permitted.
7. Install traffic warning devices as needed in accordance with local standards.
8. Contractor shall obtain all permits necessary for demolition from City, County, State or Federal Agencies as required.

Project Benchmark ROW Monument Elev = 494.95

PRIVATE ENGINEER'S NOTICE TO CONTRACTORS

The Contractor agrees that he shall assume sole and complete responsibility for job site conditions during the course of construction of this project, including safety of all persons and property; that this requirement shall apply continuously and not be limited to normal working hours; and that the contractor shall defend, indemnify, and hold the owner and the engineer harmless from any and all liability, real or alleged, in connection with the performance of work on this project, excepting for liability arising from the sole negligence of the owner or the engineer.

CAUTION NOTICE TO CONTRACTOR

The contractor is specifically cautioned that the location and/or elevation of existing utilities as shown on these plans are based on records of the various utility companies and, where possible, measurements taken in the field. The information is not to be relied on as being exact or complete. The contractor must call the appropriate utility company at least 48 hours before any excavation to request exact field location of utilities. It shall be the responsibility of the contractor to relocate all existing utilities which conflict with the propose improvements shown on the plans.

NOTE: UDOT provided the Topographical Survey Information used in preparing this drawing. Great Basin Engineering makes no claims regarding the accuracy of the information provided by UDOT.

ALL CONSTRUCTION TO CONFORM TO STATE STANDARDS AND SPECIFICATIONS IN RIGHT OF WAY

Legend

(Note: All items may not appear on drawing)

San. Sewer Manhole	S	Top of Asphalt	TA
Water Manhole	W	Edge of Asphalt	EA
Storm Drain Manhole	D	Centerline	CL
		Flowline	FL
		Finish Floor	FF
Electrical Manhole	E	Top of Curb	TC
Catch Basins		Top of Wall	TWL
Exist. Fire Hydrant		Top of Walk	TW
Fire Hydrant		Top of Concrete	TCN
Exist. Water Valve		Natural Ground	NG
Water Valve		Finish Contour	90
Sanitary Sewer	S	Exist. Contour	90
Culinary Water	W	Finish Grade	95.33TA
Gas Line	G	Exist. Grade	95.72TA
Irrigation Line	IW	Ridge Line	R
Storm Drain	SD	Direction of Flow	
Telephone Line	T	Existing Asphalt	
Secondary Waterline	SD		
Power Line	P		
Fire Line	F	New Asphalt	
Land Drain	LD		
Power pole			
Power pole w/guy		Zero Voids Asphalt	
Light Pole			
Fence		Concrete	
Flowline of ditch			
Overhead Power line	OHP	Open Face	
Corrugated Metal Pipe	CMP	Curb & Gutter	
Concrete Pipe	CP		
Reinforced Concrete Pipe	RCP		
Ductile Iron	DI		
Polyvinyl Chloride	PVC		

CLIENT

VERNAL
MAINTENANCE FACILITY
STATION #3437
2773 North Vernal Ave.
VERNAL, UTAH 84050

DESIGNER

ARCHIPLEX GROUP
architecture · planning · design services
1135 South West Temple, Ste. A
Salt Lake City, UT 84101
P:(801) 961-7070
F:(801) 961-7373

CONSULTANTS

PROFESSIONAL SEAL

ISSUE

MARK	DATE	DESCRIPTION
	6/27/06	RE-BID-SET
	3/31/06	CONSTRUCTION DOCUMENTS
	1-20-06	FINAL REVIEW SET
	8-22-05	PRELIMINARY SUBMITTAL

DFCM PROJECT NO:	05056900/067023
ARCHIPLEX PROJECT NO:	050011.01
DRAWN BY:	JRA
CHECKED BY:	DRW
SCALE:	1:40
DATE:	*MARCH 31, 2006*

KEY PLAN

SHEET TITLE

DEMOLITION PLAN
BASE BID

C001

© 2004 ARCHIPLEX GROUP

W:\05N526-Vernal UDOT\dwg\05N526S.dwg, 6/26/2006 8:36:28 AM, 1:40, T_D

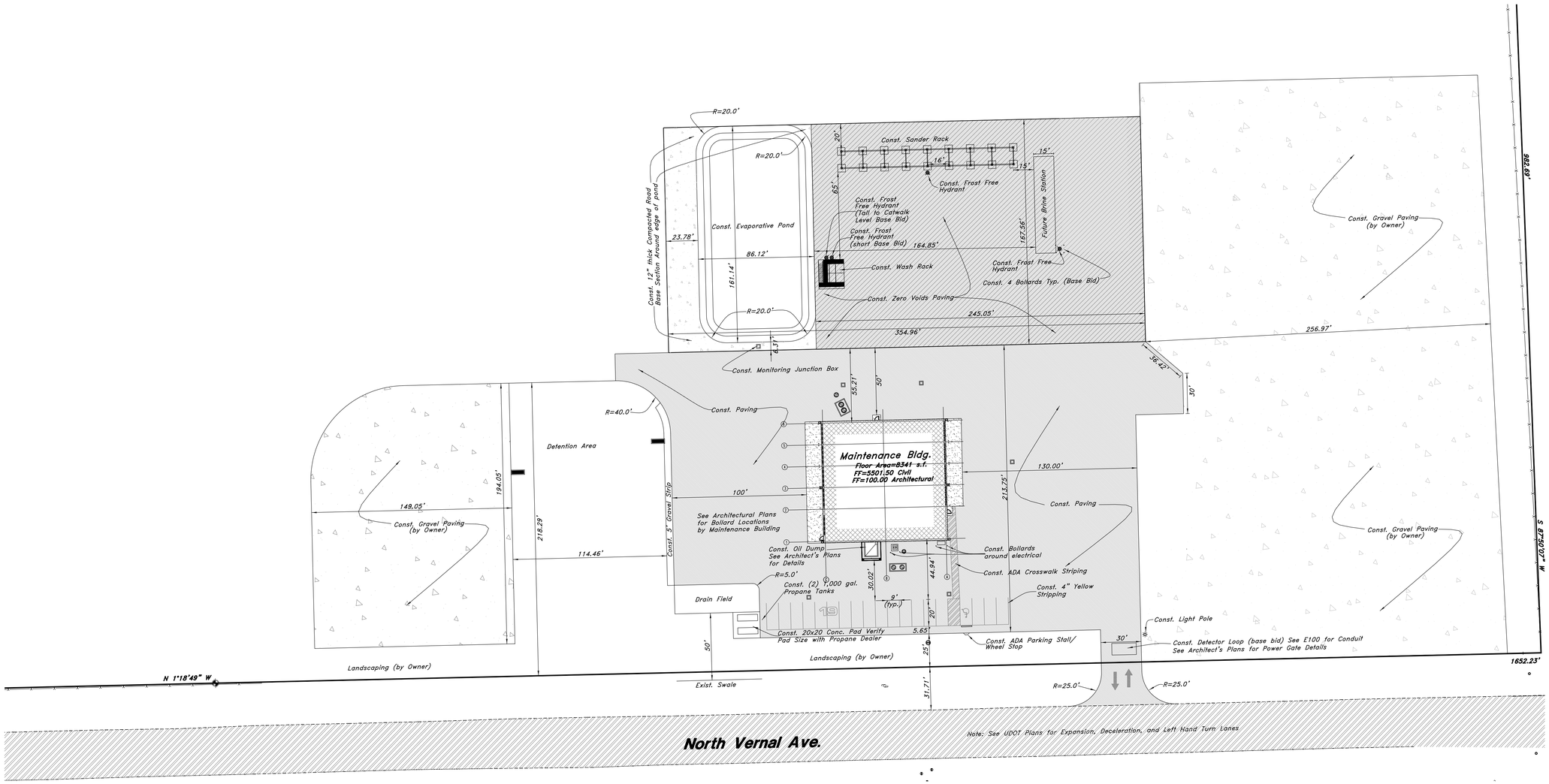

General Site Notes:

1. Stalls designated as handicap will require a painted handicap symbol. (See Details)
2. Fire lane markings and signs to be installed as directed by the Fire Marshal.
3. Aisle markings, directional arrows and stop bars will be painted at each driveway as shown on the plans.
4. See Horizontal Control plan for coordinates, radiuses and detailed dimensions of site improvements.
5. Building sidewalks, ramps, and bollards are building contractor responsible items. See architectural plans.
6. All dimensions are to edge of asphalt unless otherwise noted.

NOTE: UDOT provided the Topographical Survey Information used in preparing this drawing. Great Basin Engineering makes no claims regarding the accuracy of the information provided by UDOT.

PRIVATE ENGINEER'S NOTICE TO CONTRACTORS

The Contractor agrees that he shall assume sole and complete responsibility for job site conditions during the course of construction of this project, including safety of all persons and property; that this requirement shall apply continuously and not be limited to normal working hours; and that the contractor shall defend, indemnify, and hold the owner and the engineer harmless from any and all liability, real or alleged, in connection with the performance of work on this project, excepting for liability arising from the sole negligence of the owner or the engineer.

CAUTION NOTICE TO CONTRACTOR

The contractor is specifically cautioned that the location and/or elevation of existing utilities as shown on these plans are based on records of the various utility companies and, where possible, measurements taken in the field. The information is not to be relied on as being exact or complete. The contractor must call the appropriate utility company at least 48 hours before any excavation to request exact field location of utilities. It shall be the responsibility of the contractor to relocate all existing utilities which conflict with the propose improvements shown on the plans.

ALL CONSTRUCTION TO CONFORM TO STATE STANDARDS AND SPECIFICATIONS IN RIGHT OF WAY

SITE DATA TABLE:
TOTAL AREA =360,793 s.f.
LANDSCAPING AREA = 9,746 s.f.
GRAVEL PAVING = 133,218 s.f.
TOTAL LANDSCAPING AREA = 142,964 s.f.(40%)
BUILDING AREA = 16,931 s.f. (5%)
TOTAL PARKING STALLS = 18
ADA STALLS = 1

Legend

(Note: All Items may not appear on drawing)

San. Sewer Manhole	S	Top of Asphalt	TA
Water Manhole	W	Edge of Asphalt	EA
Storm Drain Manhole	SD	Centerline	CL
		Flowline	FL
Electrical Manhole	E	Finish Floor	FF
Catch Basins		Top of Curb	TC
Exist. Fire hydrant		Top of Wall	TWL
Fire Hydrant		Top of Walk	TW
Exist. Water Valve	—⋈—	Top of Concrete	TCN
Water Valve		Natural Ground	NG
Sanitary Sewer	—S—	Finish Contour	—90—
Culinary Water	—W—	Exist. Contour	—90—
Gas Line	—G—	Finish Grade	95.33TA
Irrigation Line	—IW—	Exist. Grade	95.72TA
Storm Drain	—SD—	Ridge Line	—R—
Telephone Line	—T—	Direction of Flow	
Secondary Waterline	—SD—	Existing Asphalt	
Power Line	—P—		
Fire Line	—F—	New Asphalt	
Land Drain	—LD—		
Power pole			
Power pole w/guy	→	Zero Voids Asphalt	
Light Pole			
Fence	—x—x—x—	Concrete	
Flowline of ditch			
Overhead Power line	OHP		
Corrugated Metal Pipe	CMP	Open Face	
Concrete Pipe	CP	Curb & Gutter	
Reinforced Concrete Pipe	RCP		
Ductile Iron	DI		
Polyvinyl Chloride	PVC		

CLIENT

VERNAL
MAINTENANCE FACILITY
STATION #3437
2773 North Vernal Ave.
VERNAL, UTAH 84050

DESIGNER

ARCHIPLEX GROUP
architecture · planning · design services
1135 South West Temple, Ste. A
Salt Lake City, UT 84101
P:(801) 961-7070
F:(801) 961-7373

CONSULTANTS

PROFESSIONAL SEAL

ISSUE

MARK	DATE	DESCRIPTION
	6/27/06	RE-BID-SET
	3/31/06	CONSTRUCTION DOCUMENTS
	1-20-06	FINAL REVIEW SET
	8-22-05	PRELIMINARY SUBMITTAL

DFCM PROJECT NO:	05056900/067023
ARCHIPLEX PROJECT NO:	050011.01
DRAWN BY:	JRA
CHECKED BY:	DRW
SCALE:	1:40
DATE:	*MARCH 31, 2006*

KEY PLAN

SHEET TITLE

SITE PLAN
BASE BID

C100

© 2004 ARCHIPLEX GROUP

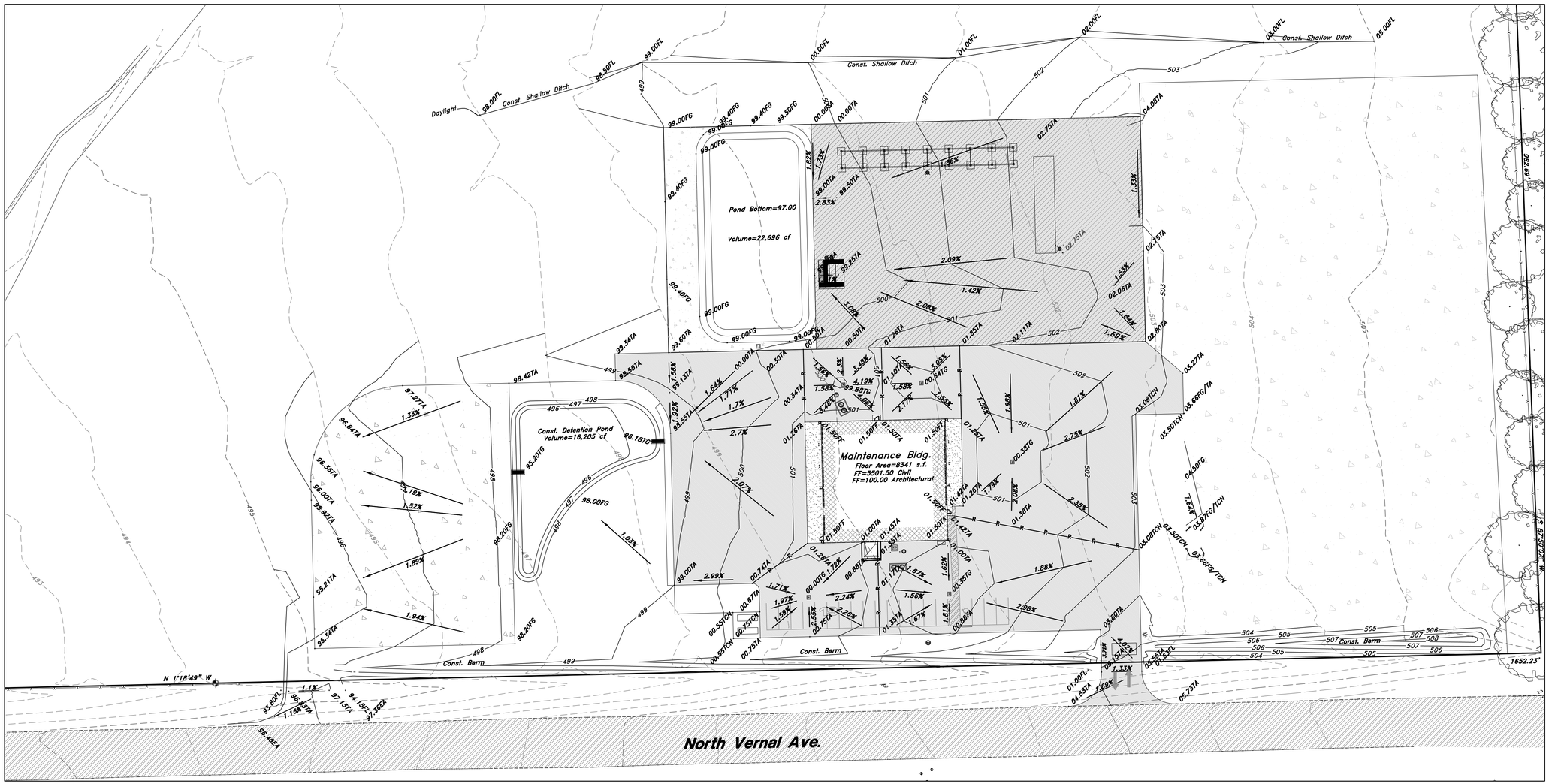

General Grading Notes:

1. All work shall be in accordance with the County Public Works Standard.
2. Cut slopes shall be no steeper than 2 horizontal to 1 vertical.
3. Fill slopes shall be no steeper than 2 horizontal to 1 vertical.
4. Fills shall be compacted per the recommendations of the geotechnical report prepared for the project and shall be certified by the geotechnical engineer.
5. Areas to receive fill shall be properly prepared and approved by the County inspector and geotechnical Engineer prior to placing fill.
6. Fills shall be benched into competent material as per specifications and geotechnical report.
7. All trench backfill shall be tested and certified by the site geotechnical engineer per the grading code.
8. A geotechnical engineer shall perform periodic inspections and submit a complete report and map upon completion of the rough grading.
9. The final compaction report and certification from the geotechnical engineer shall contain the type of field testing performed. Each test shall be identified with the method of obtaining the in-place density, whether sand cone or drive ring and shall be so noted for each test. Sufficient maximum density determinations shall be performed to verify the accuracy of the maximum density curves used by the field technician.
10. Dust shall be controlled by watering.
11. The location and protection of all utilities is the responsibility of the permitee.
12. Approved protective measures and temporary drainage provisions must be used to protect adjoining properties during the grading project.
13. All public roadways must be cleared daily of all dirt, mud and debris deposited on them as a result of the grading operation. Cleaning is to be done to the satisfaction of the city engineer.
14. The site shall be cleared and grubbed of all vegetation and deleterious matter prior to grading. Top Soil from the clear & grubbing can be used for landscaping and berms.
15. The contractor shall provide shoring in accordance with OSHA requirements for trench walls.
16. Aggregate base shall be compacted per the geotechnical report prepared for the project.
17. Elevations shown on this plan are finish grades. Rough grades are the subgrades of the improvements shown hereon.
18. The recommendations in the following Geotechnical Engineering Report by Earthtec Testing & Engineering, P.C. are included in the requirements of grading and site preparation. The report is titled "GEOTECHNICAL STUDY, UDOT MAINTENANCE FACILITY, 2600 NORTH HIGHWAY 191, VERNAL, UTAH" Job No.: 052889 Dated: December 23, 2005
19 As part of the construction documents, owner has provided contractor with a topographic survey performed by manual or aerial means. Such survey was prepared for project design purposes and is provided to the contractor as a courtesy. It is expressly understood that such survey may not accurately reflect existing topographic conditions.
20. Erosion Control: Protect all inlet boxes, catch basins, etc. with straw bales or other approved method to strain the strom water during construction. Protect surrounding properties and streets from site runoff with sandbags and earth berms.

Project Benchmark ROW Monumant Elev = 494.95

NOTE: UDOT provided the Topographical Survey Information used in preparing this drawing. Great Basin Engineering makes no claims regarding the accuracy of the information provided by UDOT.

PRIVATE ENGINEER'S NOTICE TO CONTRACTORS

The Contractor agrees that he shall assume sole and complete responsibility for job site conditions during the course of construction of this project, including safety of all persons and property; that this requirement shall apply continuously and not be limited to normal working hours; and that the contractor shall defend, indemnify, and hold the owner and the engineer harmless from any and all liability, real or alleged, in connection with the performance of work on this project, excepting for liability arising from the sole negligence of the owner or the engineer.

ALL CONSTRUCTION TO CONFORM TO STATE STANDARDS AND SPECIFICATIONS IN RIGHT OF WAY

Legend

(Note: All items may not appear on drawing)

San. Sewer Manhole	S	Reinforced Concrete Pipe	RCP
Water Manhole	W	Ductile Iron	DI
Storm Drain Manhole	SD	Polyvinyl Chloride	PVC
		Top of Asphalt	TA
		Edge of Asphalt	EA
Electrical Manhole	E	Centerline	CL
Catch Basins		Flowline	FL
Exist. Fire Hydrant		Finish Floor	FF
Fire Hydrant	FH	Top of Curb	TC
Exist. Water Valve	WV	Top of Wall	TWL
Water Valve	WV	Top of Walk	TW
Sanitary Sewer	S	Top of Concrete	TCN
Culinary Water	W	Natural Ground	NG
Gas Line	G	Finish Contour	90
Irrigation Line	IW	Exist. Contour	90
Storm Drain	SD	Finish Grade	95.33TA
Telephone Line	T	Exist. Grade	95.72TA
Secondary Waterline	P	Ridge Line	R
Power Line	P	Direction of Flow	
Fire Line	F		
Land Drain	LD	Existing Asphalt	
Power pole			
Power pole w/guy		New Asphalt	
Light Pole			
Fence	x x x		
Flowline of ditch		Zero Voids Asphalt	
Overhead Power line	OHP		
Corrugated Metal Pipe	CMP	Concrete	
Concrete Pipe	CP		
		Open Face	
		Curb & Gutter	

CLIENT

VERNAL
MAINTENANCE FACILITY
STATION #3437
2773 North Vernal Ave.
VERNAL, UTAH 84050

DESIGNER

ARCHIPLEX GROUP
architecture · planning · design services
1135 South West Temple, Ste. A
Salt Lake City, UT 84101
P:(801) 961-7070
F:(801) 961-7373

CONSULTANTS

PROFESSIONAL SEAL

ISSUE

MARK	DATE	DESCRIPTION
	6/27/06	RE-BID-SET
	3/31/06	CONSTRUCTION DOCUMENTS
	1-20-06	FINAL REVIEW SET
	8-22-05	PRELIMINARY SUBMITTAL

DFCM PROJECT NO:	05056900/067023
ARCHIPLEX PROJECT NO:	050011.01
DRAWN BY:	JRA
CHECKED BY:	DRW
SCALE:	1:40
DATE:	*MARCH 31, 2006*

KEY PLAN

SHEET TITLE

GRADING PLAN
BASE BID

C200

© 2004 ARCHIPLEX GROUP

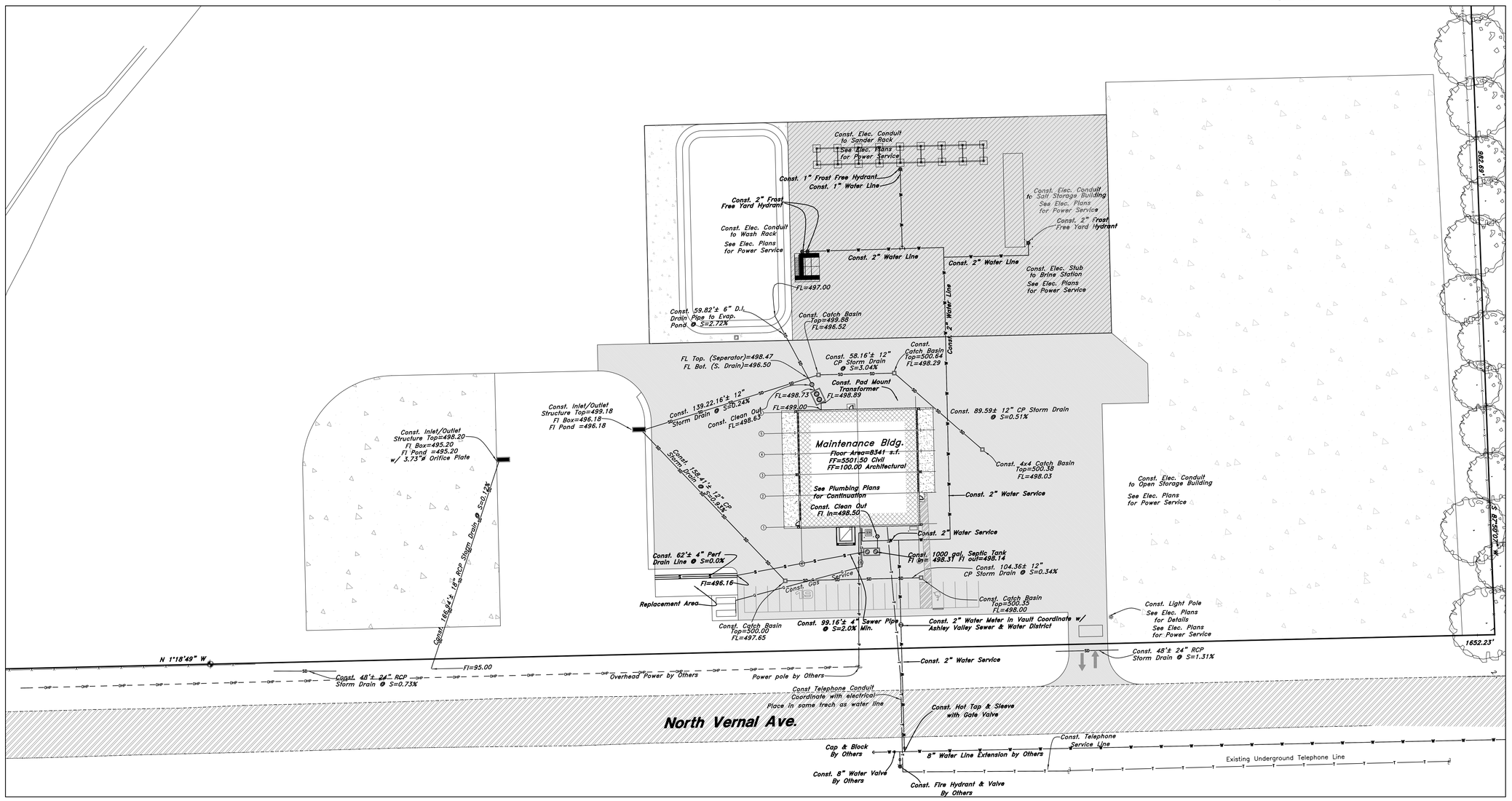

General Utility Notes:

1. Coordinate all utility connections to building with plumbing plans and building contractor.
2. Verify depth and location of all existing utilities prior to constructing any new utility lines. Notify Civil Engineer of any discrepancies or conflicts prior to any connections being made.
3. All catch basin and inlet box grates are to be bicycle proof.
4. All inlet boxes located in curb and gutter are to be placed parallel to the curb and gutter and set under the frame and grate. Improperly placed boxes will be removed and replaced at no additional cost to the owner. Precast or cast in place boxes are acceptable.
5. Refer to the site electrical plan for details and locations of electrical lines, transformers and light poles.
6. Cable TV lines are not a part of these plans. Coordinate with electrial plans the locations of telephone, power, and conduit locations.
7. Water meters are to be installed per city standards and specifications. It will be the contractor's responsibility to install all items required.
8. Water lines, valves, fire hydrants, fittings etc. are to be constructed as shown. Contractor is responsible to construct any vertical adjustments necessary to clear sewer, storm drain or other utilities as necessary including valve boxes and hydrant spools to proper grade.
9. Field verify all existing and/or proposed Roof Drain/Roof Drain down spout connections to Storm Water System with Civil, Plumbing & Architectural plans. Notify Engineer of any discrepancies.

Utility Piping Materials:
All piping to be installed per manufacturers recommendations. Refer to project specifications for more detailed information regarding materials, installation, etc.

Culinary Service Laterals
1. 3/4" to 2" diameter pipe – copper tube ASTM B, Type K, Soft Temper
2. Over 2" diameter pipe – AWWA C-900 Class 150 pipe

Water Main Lines and Fire Lines
1. Pipe material as shown on utility plan view or to meet city standards.

Sanitary Sewer Lines
1. All sewer piping to be Polyvinyl Chloride (PVC) sewer pipe, ASTM D 3034, Type PSM, SDR 35

Storm Drain Lines
1. 10" pipes or smaller – Polyvinyl Chloride (PVC) sewer pipe, ASTM D3034, Type PSM, SDR 35
2. 12" to 21" pipes – Concrete Pipe, ASTM C76, Class II
3. 24" pipes or larger – Reinforced Concrete Pipe, ASTM C76, Class II

CAUTION NOTICE TO CONTRACTOR
The contractor is specifically cautioned that the location and/or elevation of existing utilities as shown on these plans are based on records of the various utility companies and, where possible, measurements taken in the field. The information is not to be relied on as being exact or complete. The contractor must call the appropriate utility company at least 48 hours before any excavation to request exact field location of utilities. It shall be the responsibility of the contractor to relocate all existing utilities which conflict with the propose improvements shown on the plans.

PRIVATE ENGINEER'S NOTICE TO CONTRACTORS
The Contractor agrees that he shall assume sole and complete responsibility for job site conditions during the course of construction of this project, including safety of all persons and property; that this requirement shall apply continuously and not be limited to normal working hours; and that the contractor shall defend, indemnify, and hold the owner and the engineer harmless from any and all liability, real or alleged, in connection with the performance of work on this project, excepting for liability arising from the sole negligence of the owner or the engineer.

NOTE: UDOT provided the Topographical Survey Information used in preparing this drawing. Great Basin Engineering makes no claims regarding the accuracy of the information provided by UDOT.

ALL CONSTRUCTION TO CONFORM TO STATE STANDARDS AND SPECIFICATIONS IN RIGHT OF WAY

ELECTRICAL COORDINATION
See Sheet E100 for base bid and add alternate electrical conduits.

Legend

(Note: All items may not appear on drawing)

San. Sewer Manhole	S	Polyvinyl Chloride	PVC
Water Manhole	W	Top of Asphalt	TA
Storm Drain Manhole	SD	Edge of Asphalt	EA
		Centerline	CL
Electrical Manhole	E	Flowline	FL
Catch Basins		Finish Floor	FF
Exist. Fire Hydrant		Top of Curb	TC
Fire Hydrant		Top of Wall	TWL
Exist. Water Valve	—⋈—	Top of Walk	TW
Water Valve	—⋈—	Top of Concrete	TCN
Sanitary Sewer	—S—	Natural Ground	NG
Culinary Water	—W—	Finish Contour	—90—
Gas Line	—G—	Exist. Contour	– –90– –
Irrigation Line	—IW—	Finish Grade	**95.33TA**
Storm Drain	—SD—	Exist. Grade	95.72TA
Telephone Line	—T—	Ridge Line	—R—
Secondary Waterline	—SD—	Direction of Flow	→
Power Line	—P—	Existing Asphalt	
Fire Line	—F—		
Land Drain	—LD—		
Power pole		New Asphalt	
Power pole w/guy			
Light Pole			
Fence	—x—x—x—	Zero Voids Asphalt	
Flowline of ditch			
Overhead Power line	—OHP—	Concrete	
Corrugated Metal Pipe	CMP		
Concrete Pipe	CP		
Reinforced Concrete Pipe	RCP	Open Face	
Ductile Iron	DI	Curb & Gutter	

CLIENT

VERNAL
MAINTENANCE FACILITY
STATION #3437
2773 North Vernal Ave.
VERNAL, UT 84050

DESIGNER

ARCHIPLEX GROUP
architecture · planning · design services
1135 South West Temple, Ste. A
Salt Lake City, UT 84101
P:(801) 961-7070
F:(801) 961-7373

CONSULTANTS

PROFESSIONAL SEAL

ISSUE

MARK	DATE	DESCRIPTION
	6/27/06	RE-BID-SET
	3/31/06	CONSTRUCTION DOCUMENTS
	1-20-06	FINAL REVIEW SET
	8-22-05	PRELIMINARY SUBMITTAL

DFCM PROJECT NO:	05056900/067023
ARCHIPLEX PROJECT NO:	050011.01
DRAWN BY:	JRA
CHECKED BY:	DRW
SCALE:	1:40
DATE:	*MARCH 31, 2006*

KEY PLAN

SHEET TITLE

UTILITY PLAN
BASE BID

C300

© 2004 ARCHIPLEX GROUP

W:\05N526-Vernal UDOT\dwg\05N526S.dwg, 6/26/2006 8:40:47 AM, 1:40, T_D

Add Alternate 2 Notes:
1. This add alternate adds the Salt Storage Building.
2. The zero voids paving inside the building is part of Add Alternate 1

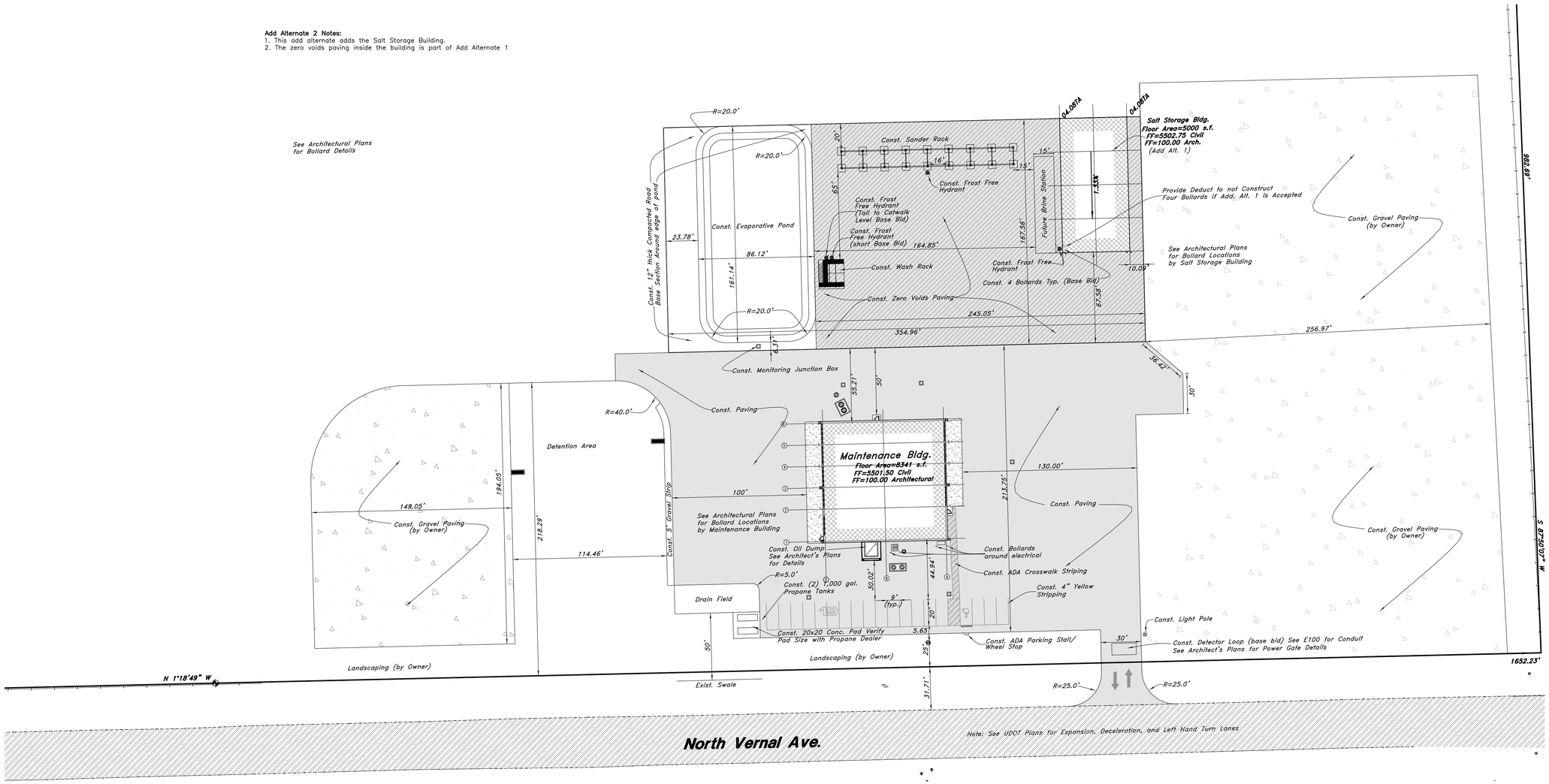

General Site Notes:
1. Stalls designated as handicap will require a painted handicap symbol. (See Details)
2. Fire lane markings and signs to be installed as directed by the Fire Marshall.
3. Aisle markings, directional arrows and stop bars will be painted at each driveway as shown on the plans.
4. See Horizontal Control plan for coordinates, radiuses and detailed dimensions of site improvements.
5. Building sidewalks, ramps, and bollards are building contractor responsible items. See architectural plans.
6. All dimensions are to edge of asphalt unless otherwise noted.

NOTE: UDOT provided the Topographical Survey Information used in preparing this drawing. Great Basin Engineering makes no claims regarding the accuracy of the information provided by UDOT.

PRIVATE ENGINEER'S NOTICE TO CONTRACTORS

The Contractor agrees that he shall assume sole and complete responsibility for job site conditions during the course of construction of this project, including safety of all persons and property; that this requirement shall apply continuously and not be limited to normal working hours; and that the contractor shall defend, indemnify, and hold the owner and the engineer harmless from any and all liability, real or alleged, in connection with the performance of work on this project, excepting for liability arising from the sole negligence of the owner or the engineer.

CAUTION NOTICE TO CONTRACTOR

The contractor is specifically cautioned that the location and/or elevation of existing utilities as shown on these plans are based on records of the various utility companies and, where possible, measurements taken in the field. The information is not to be relied on as being exact or complete. The contractor must call the appropriate utility company at least 48 hours before any excavation to request exact field location of utilities. It shall be the responsibility of the contractor to relocate all existing utilities which conflict with the propose improvements shown on the plans.

ALL CONSTRUCTION TO CONFORM TO STATE STANDARDS AND SPECIFICATIONS IN RIGHT OF WAY

SITE DATA TABLE:
TOTAL AREA =360,793 s.f.
LANDSCAPING AREA = 9,746 s.f.
GRAVEL PAVING = 133,218 s.f.
TOTAL LANDSCAPING AREA = 142,964 s.f.(40%)
BUILDING AREA = 16,931 s.f. (5%)
TOTAL PARKING STALLS = 18
ADA STALLS = 1

Legend

(Note: All Items may not appear on drawing)

San. Sewer Manhole	S	Top of Asphalt	TA
Water Manhole	W	Edge of Asphalt	EA
Storm Drain Manhole	SD	Centerline	CL
		Flowline	FL
Electrical Manhole	E	Finish Floor	FF
Catch Basins		Top of Curb	TC
Exist. Fire hydrant		Top of Wall	TWL
Fire Hydrant		Top of Walk	TW
Exist. Water Valve		Top of Concrete	TCN
Water Valve		Natural Ground	NG
Sanitary Sewer	—W—	Finish Contour	—90—
Culinary Water	—G—	Exist. Contour	—90—
Gas Line	—IW—	Finish Grade	95.33TA
Irrigation Line	—SD—	Exist. Grade	95.72TA
Storm Drain	—T—	Ridge Line	—R—
Telephone Line	—SD—	Direction of Flow	
Secondary Waterline	—P—	Existing Asphalt	
Power Line	—F—	New Asphalt	
Fire Line	—LD—		
Land Drain			
Power pole			
Power pole w/guy		Zero Voids Asphalt	
Light Pole			
Fence	—x—x—x—	Concrete	
Flowline of ditch			
Overhead Power line	OHP		
Corrugated Metal Pipe	CMP	Open Face	
Concrete Pipe	CP	Curb & Gutter	
Reinforced Concrete Pipe	RCP		
Ductile Iron	DI		
Polyvinyl Chloride	PVC		

CLIENT

VERNAL
MAINTENANCE FACILITY
STATION #3437
2773 North Vernal Ave.
VERNAL, UTAH 84050

DESIGNER

ARCHIPLEX GROUP
architecture · planning · design services
1135 South West Temple, Ste. A
Salt Lake City, UT 84101
P:(801) 961-7070
F:(801) 961-7373

CONSULTANTS

PROFESSIONAL SEAL

ISSUE

MARK	DATE	DESCRIPTION
	6/27/06	RE-BID-SET
	3/31/06	CONSTRUCTION DOCUMENTS
	1-20-06	FINAL REVIEW SET
	8-22-05	PRELIMINARY SUBMITTAL

DFCM PROJECT NO:	05056900/067023
ARCHIPLEX PROJECT NO:	050011.01
DRAWN BY:	JRA
CHECKED BY:	DRW
SCALE:	1:40
DATE:	MARCH 31, 2006

KEY PLAN

SHEET TITLE

SITE PLAN
ADD ALTERNATE 1

C101

© 2004 ARCHIPLEX GROUP

Add Alternate 4 Notes:
1. This alternate adds the open storage building with propane gas service.
2. The asphalt paving inside the building is part of the add alternate. See architect's plans for building details.

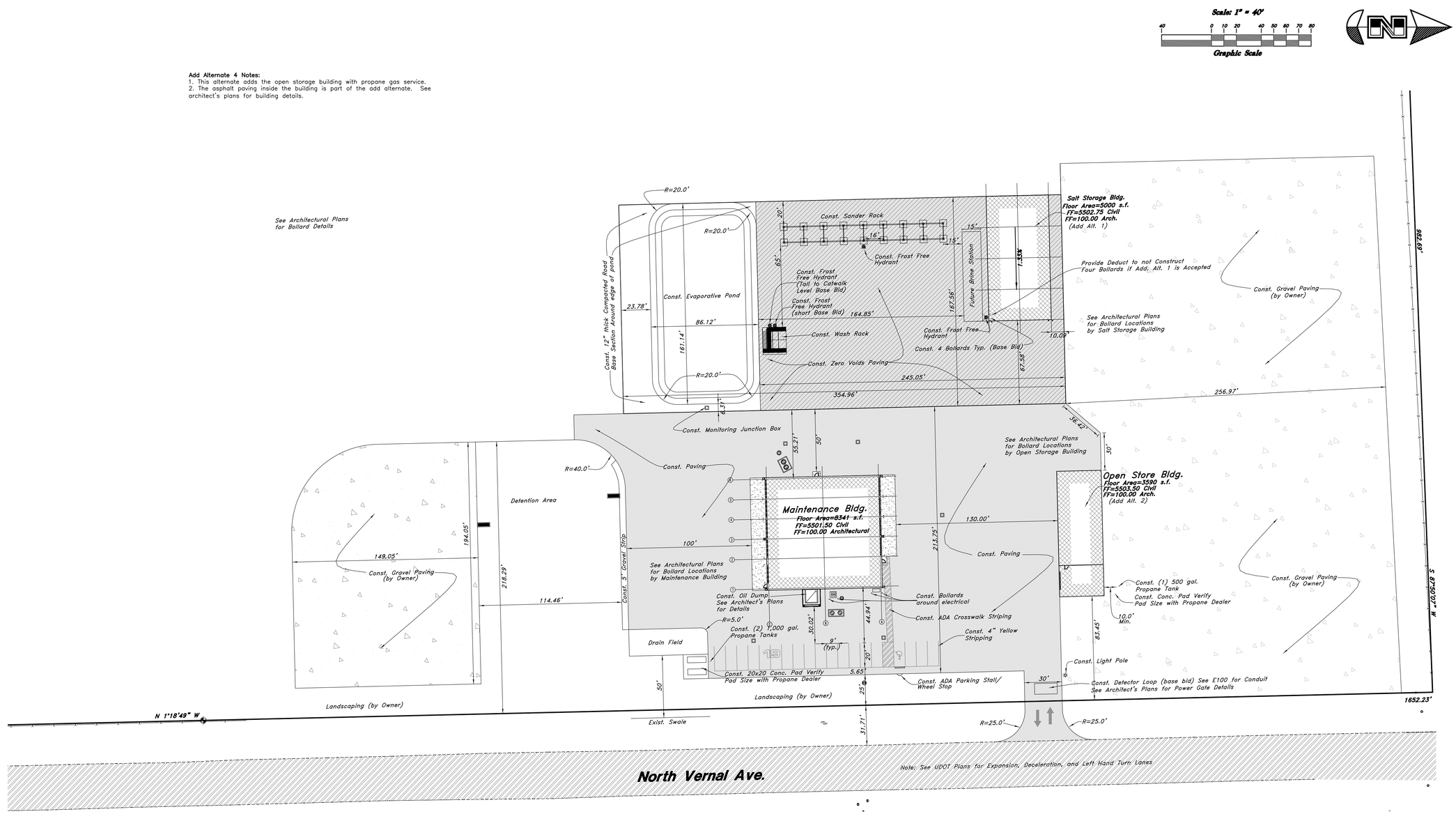

General Site Notes:
1. Stalls designated as handicap will require a painted handicap symbol. (See Details)
2. Fire lane markings and signs to be installed as directed by the Fire Marshall.
3. Aisle markings, directional arrows and stop bars will be painted at each driveway as shown on the plans.
4. See Horizontal Control plan for coordinates, radiuses and detailed dimensions of site improvements.
5. Building sidewalks, ramps, and bollards are building contractor responsible items. See architectural plans.
6. All dimensions are to edge of asphalt unless otherwise noted.

NOTE: UDOT provided the Topographical Survey Information used in preparing this drawing. Great Basin Engineering makes no claims regarding the accuracy of the information provided by UDOT.

PRIVATE ENGINEER'S NOTICE TO CONTRACTORS

The Contractor agrees that he shall assume sole and complete responsibility for job site conditions during the course of construction of this project, including safety of all persons and property; that this requirement shall apply continuously and not be limited to normal working hours; and that the contractor shall defend, indemnify, and hold the owner and the engineer harmless from any and all liability, real or alleged, in connection with the performance of work on this project, excepting for liability arising from the sole negligence of the owner or the engineer.

CAUTION NOTICE TO CONTRACTOR

The contractor is specifically cautioned that the location and/or elevation of existing utilities as shown on these plans are based on records of the various utility companies and, where possible, measurements taken in the field. The information is not to be relied on as being exact or complete. The contractor must call the appropriate utility company at least 48 hours before any excavation to request exact field location of utilities. It shall be the responsibility of the contractor to relocate all existing utilities which conflict with the propose improvements shown on the plans.

ALL CONSTRUCTION TO CONFORM TO STATE STANDARDS AND SPECIFICATIONS IN RIGHT OF WAY

SITE DATA TABLE:
TOTAL AREA =360,793 s.f.
LANDSCAPING AREA = 9,746 s.f.
GRAVEL PAVING = 133,218 s.f.
TOTAL LANDSCAPING AREA = 142,964 s.f.(40%)
BUILDING AREA = 16,931 s.f. (5%)
TOTAL PARKING STALLS = 18
ADA STALLS = 1

Legend

(Note: All items may not appear on drawing)

San. Sewer Manhole	S	Top of Asphalt	TA
Water Manhole	W	Edge of Asphalt	EA
Storm Drain Manhole	S	Centerline	CL
		Flowline	FL
Electrical Manhole	E	Finish Floor	FF
Catch Basins		Top of Curb	TC
Exist. Fire Hydrant		Top of Wall	TWL
Fire Hydrant		Top of Walk	TW
Exist. Water Valve		Top of Concrete	TCN
Water Valve		Natural Ground	NG
Sanitary Sewer	—S—	Finish Contour	—90—
Culinary Water	—W—	Exist. Contour	--90--
Gas Line	—G—	Finish Grade	95.33TA
Irrigation Line	—IW—	Exist. Grade	95.72TA
Storm Drain	—SD—	Ridge Line	—R—
Telephone Line	—T—	Direction of Flow	
Secondary Waterline	—SD—	Existing Asphalt	
Power Line	—P—		
Fire Line	—F—	New Asphalt	
Land Drain	—LD—		
Power pole			
Power pole w/guy	→	Zero Voids Asphalt	
Light Pole			
Fence	—x—x—x—	Concrete	
Flowline of ditch			
Overhead Power line	OHP	Open Face	
Corrugated Metal Pipe	CMP	Curb & Gutter	
Concrete Pipe	CP		
Reinforced Concrete Pipe	RCP		
Ductile Iron	DI		
Polyvinyl Chloride	PVC		

CLIENT

VERNAL
MAINTENANCE FACILITY
STATION #3437
2773 North Vernal Ave.
VERNAL, UTAH 84050

DESIGNER

ARCHIPLEX GROUP
architecture · planning · design services
1135 South West Temple, Ste. A
Salt Lake City, UT 84101
P:(801) 961-7070
F:(801) 961-7373

CONSULTANTS

PROFESSIONAL SEAL

ISSUE

MARK	DATE	DESCRIPTION
	6/27/06	RE-BID-SET
	3/31/06	CONSTRUCTION DOCUMENTS
	1-20-06	FINAL REVIEW SET
	8-22-05	PRELIMINARY SUBMITTAL

DFCM PROJECT NO:	05056900/067023
ARCHIPLEX PROJECT NO:	050011.01
DRAWN BY:	JRA
CHECKED BY:	DRW
SCALE:	1:40
DATE:	MARCH 31, 2006

KEY PLAN

SHEET TITLE

SITE PLAN
ADD ALTERNATE 2

C102

© 2004 ARCHIPLEX GROUP

Add Alternate 5 Notes:
1. This add alternate adds the 6 foot chain link fence around around the project site.
2. Also included with this alternate are two double 10-foot manual gates, the main powered gate with reader, and the south powered gate with detector loop.
3. Refer to the electrical plans for locations of conduit in the base bid and the Architect's details for the powered gates.
4. Refer to the archiect's plans for fencing details.
5. The total length of fencing including gates is 2,454 linear feet.

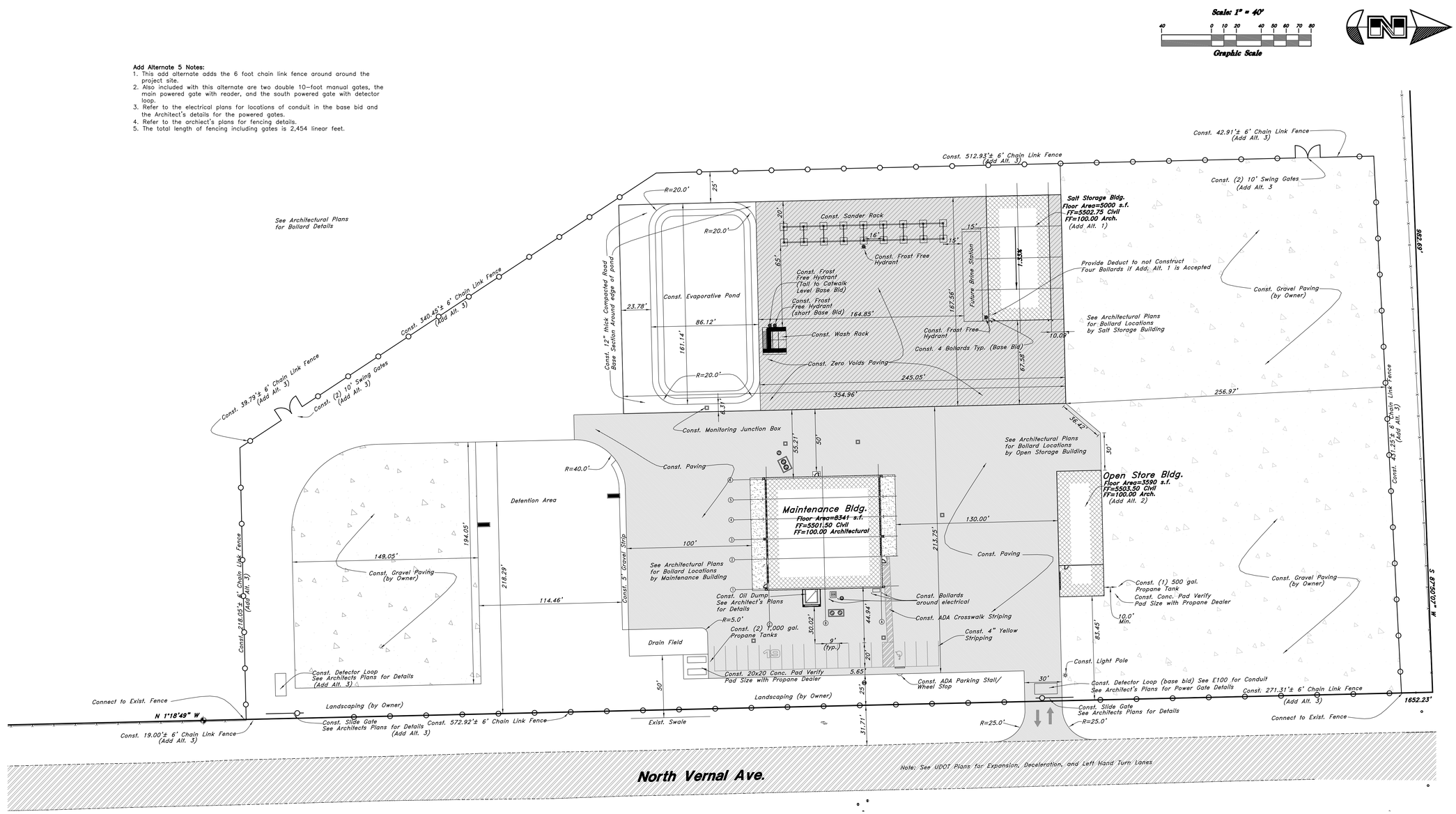

General Site Notes:
1. Stalls designated as handicap will require a painted handicap symbol. (See Details)
2. Fire lane markings and signs to be installed as directed by the Fire Marshall.
3. Aisle markings, directional arrows and stop bars will be painted at each driveway as shown on the plans.
4. See Horizontal Control plan for coordinates, radiuses and detailed dimensions of site improvements.
5. Building sidewalks, ramps, and bollards are building contractor responsible items. See architectural plans.
6. All dimensions are to edge of asphalt unless otherwise noted.

NOTE: UDOT provided the Topographical Survey Information used in preparing this drawing. Great Basin Engineering makes no claims regarding the accuracy of the information provided by UDOT.

PRIVATE ENGINEER'S NOTICE TO CONTRACTORS

The Contractor agrees that he shall assume sole and complete responsibility for job site conditions during the course of construction of this project, including safety of all persons and property; that this requirement shall apply continuously and not be limited to normal working hours; and that the contractor shall defend, indemnify, and hold the owner and the engineer harmless from any and all liability, real or alleged, in connection with the performance of work on this project, excepting for liability arising from the sole negligence of the owner or the engineer.

CAUTION NOTICE TO CONTRACTOR

The contractor is specifically cautioned that the location and/or elevation of existing utilities as shown on these plans are based on records of the various utility companies and, where possible, measurements taken in the field. The information is not to be relied on as being exact or complete. The contractor must call the appropriate utility company at least 48 hours before any excavation to request exact field location of utilities. It shall be the responsibility of the contractor to relocate all existing utilities which conflict with the propose improvements shown on the plans.

SITE DATA TABLE:
TOTAL AREA =360,793 s.f.
LANDSCAPING AREA = 9,746 s.f.
GRAVEL PAVING = 133,218 s.f.
TOTAL LANDSCAPING AREA = 142,964 s.f.(40%)
BUILDING AREA = 16,931 s.f. (5%)
TOTAL PARKING STALLS = 18
ADA STALLS = 1

ALL CONSTRUCTION TO CONFORM TO STATE STANDARDS AND SPECIFICATIONS IN RIGHT OF WAY

Legend

(Note: All items may not appear on drawing)

San. Sewer Manhole	S	Top of Asphalt	TA
Water Manhole	W	Edge of Asphalt	EA
Storm Drain Manhole	S	Centerline	CL
		Flowline	FL
Electrical Manhole	E	Finish Floor	FF
Catch Basins		Top of Curb	TC
Exist. Fire Hydrant		Top of Wall	TWL
Fire Hydrant		Top of Walk	TW
Exist. Water Valve		Top of Concrete	TCN
Water Valve		Natural Ground	NG
Sanitary Sewer	—S—	Finish Contour	—90—
Culinary Water	—W—	Exist. Contour	--90--
Gas Line	—G—	Finish Grade	95.33TA
Irrigation Line	—IW—	Exist. Grade	95.72TA
Storm Drain	—SD—	Ridge Line	—R—
Telephone Line	—T—	Direction of Flow	
Secondary Waterline	—SD—	Existing Asphalt	
Power Line	—P—		
Fire Line	—F—	New Asphalt	
Land Drain	—LD—		
Power pole			
Power pole w/guy	→	Zero Voids Asphalt	
Light Pole			
Fence	—x—x—x—	Concrete	
Flowline of ditch			
Overhead Power line	OHP		
Corrugated Metal Pipe	CMP	Open Face	
Concrete Pipe	CP	Curb & Gutter	
Reinforced Concrete Pipe	RCP		
Ductile Iron	DI		
Polyvinyl Chloride	PVC		

CLIENT

VERNAL
MAINTENANCE FACILITY
STATION #3437
2773 North Vernal Ave.
VERNAL, UTAH 84050

DESIGNER

ARCHIPLEX GROUP
architecture · planning · design services
1135 South West Temple, Ste. A
Salt Lake City, UT 84101
P:(801) 961-7070
F:(801) 961-7373

CONSULTANTS

PROFESSIONAL SEAL

ISSUE

MARK	DATE	DESCRIPTION
	6/27/06	RE-BID-SET
	3/31/06	CONSTRUCTION DOCUMENTS
	1-20-06	FINAL REVIEW SET
	8-22-05	PRELIMINARY SUBMITTAL

DFCM PROJECT NO:	05056900/067023
ARCHIPLEX PROJECT NO:	050011.01
DRAWN BY:	JRA
CHECKED BY:	DRW
SCALE:	1:40
DATE:	*MARCH 31, 2006*

KEY PLAN

SHEET TITLE

SITE PLAN
ADD ALTERNATE 3

C103

© 2004 ARCHIPLEX GROUP

W:\05N526-Vernal UDOT\dwg\05N526S.dwg, 6/26/2006 8:42:34 AM, 1:40, T_D

Add Alternate 6 Notes:
1. This alternate adds the south exit road.
2. The alternate includes the roadbase and asphalt paving.
3. The area of the roadway is 10,654 square feet.

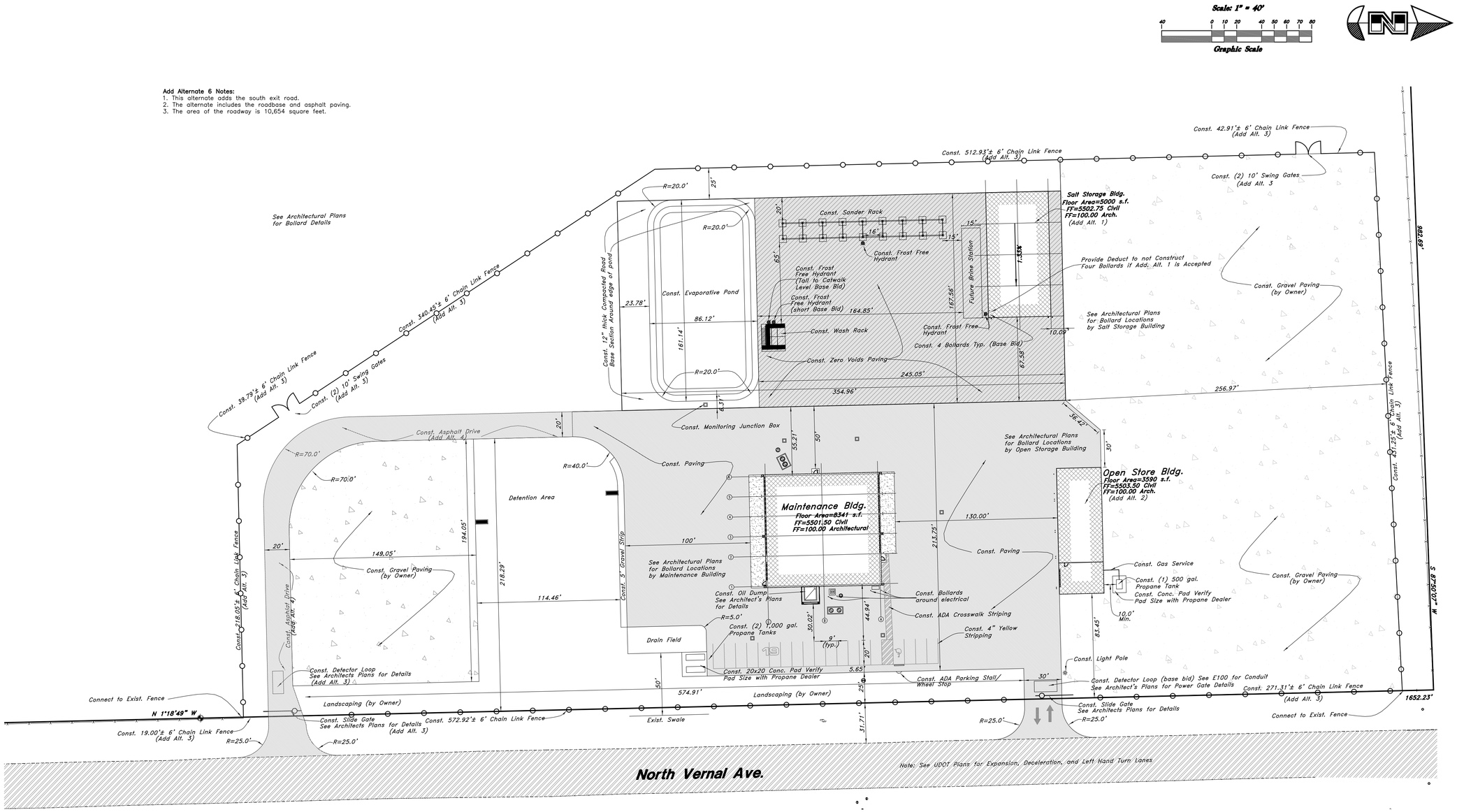

General Site Notes:
1. Stalls designated as handicap will require a painted handicap symbol. (See Details)
2. Fire lane markings and signs to be installed as directed by the Fire Marshall.
3. Aisle markings, directional arrows and stop bars will be painted at each driveway as shown on the plans.
4. See Horizontal Control plan for coordinates, radiuses and detailed dimensions of site improvements.
5. Building sidewalks, ramps, and bollards are building contractor responsible items. See architectural plans.
6. All dimensions are to edge of asphalt unless otherwise noted.

NOTE: UDOT provided the Topographical Survey Information used in preparing this drawing. Great Basin Engineering makes no claims regarding the accuracy of the information provided by UDOT.

PRIVATE ENGINEER'S NOTICE TO CONTRACTORS

The Contractor agrees that he shall assume sole and complete responsibility for job site conditions during the course of construction of this project, including safety of all persons and property; that this requirement shall apply continuously and not be limited to normal working hours; and that the contractor shall defend, indemnify, and hold the owner and the engineer harmless from any and all liability, real or alleged, in connection with the performance of work on this project, excepting for liability arising from the sole negligence of the owner or the engineer.

CAUTION NOTICE TO CONTRACTOR

The contractor is specifically cautioned that the location and/or elevation of existing utilities as shown on these plans are based on records of the various utility companies and, where possible, measurements taken in the field. The information is not to be relied on as being exact or complete. The contractor must call the appropriate utility company at least 48 hours before any excavation to request exact field location of utilities. It shall be the responsibility of the contractor to relocate all existing utilities which conflict with the propose improvements shown on the plans.

ALL CONSTRUCTION TO CONFORM TO STATE STANDARDS AND SPECIFICATIONS IN RIGHT OF WAY

SITE DATA TABLE:
TOTAL AREA =360,793 s.f.
LANDSCAPING AREA = 9,746 s.f.
GRAVEL PAVING = 133,218 s.f.
TOTAL LANDSCAPING AREA = 142,964 s.f.(40%)
BUILDING AREA = 16,931 s.f. (5%)
TOTAL PARKING STALLS = 18
ADA STALLS = 1

Legend

(Note: All Items may not appear on drawing)

San. Sewer Manhole	S	Top of Asphalt	TA
Water Manhole	W	Edge of Asphalt	EA
Storm Drain Manhole	SD	Centerline	CL
		Flowline	FL
Electrical Manhole	E	Finish Floor	FF
Catch Basins		Top of Curb	TC
Exist. Fire hydrant		Top of Wall	TWL
Fire Hydrant		Top of Walk	TW
Exist. Water Valve	—⋈—	Top of Concrete	TCN
Water Valve		Natural Ground	NG
Sanitary Sewer	—S—	Finish Contour	—90—
Culinary Water	—W—	Exist. Contour	—90—
Gas Line	—G—	Finish Grade	95.33TA
Irrigation Line	—IW—	Exist. Grade	95.72TA
Storm Drain	—SD—	Ridge Line	—R—
Telephone Line	—T—	Direction of Flow	
Secondary Waterline	—SD—	Existing Asphalt	
Power Line	—P—		
Fire Line	—F—	New Asphalt	
Land Drain	—LD—		
Power pole			
Power pole w/guy	→	Zero Voids Asphalt	
Light Pole			
Fence	—x—x—x—	Concrete	
Flowline of ditch			
Overhead Power line	OHP		
Corrugated Metal Pipe	CMP	Open Face	
Concrete Pipe	CP	Curb & Gutter	
Reinforced Concrete Pipe	RCP		
Ductile Iron	DI		
Polyvinyl Chloride	PVC		

CLIENT

VERNAL
MAINTENANCE FACILITY
STATION #3437
2773 North Vernal Ave.
VERNAL, UTAH 84050

DESIGNER

ARCHIPLEX GROUP
architecture · planning · design services
1135 South West Temple, Ste. A
Salt Lake City, UT 84101
P:(801) 961-7070
F:(801) 961-7373

CONSULTANTS

PROFESSIONAL SEAL

ISSUE

MARK	DATE	DESCRIPTION
	6/27/06	RE-BID-SET
	3/31/06	CONSTRUCTION DOCUMENTS
	1-20-06	FINAL REVIEW SET
	8-22-05	PRELIMINARY SUBMITTAL

DFCM PROJECT NO:	05056900/067023
ARCHIPLEX PROJECT NO:	050011.01
DRAWN BY:	JRA
CHECKED BY:	DRW
SCALE:	1:40
DATE:	*MARCH 31, 2006*

KEY PLAN

SHEET TITLE

SITE PLAN
ADD ALTERNATE 4

C104

© 2004 ARCHIPLEX GROUP

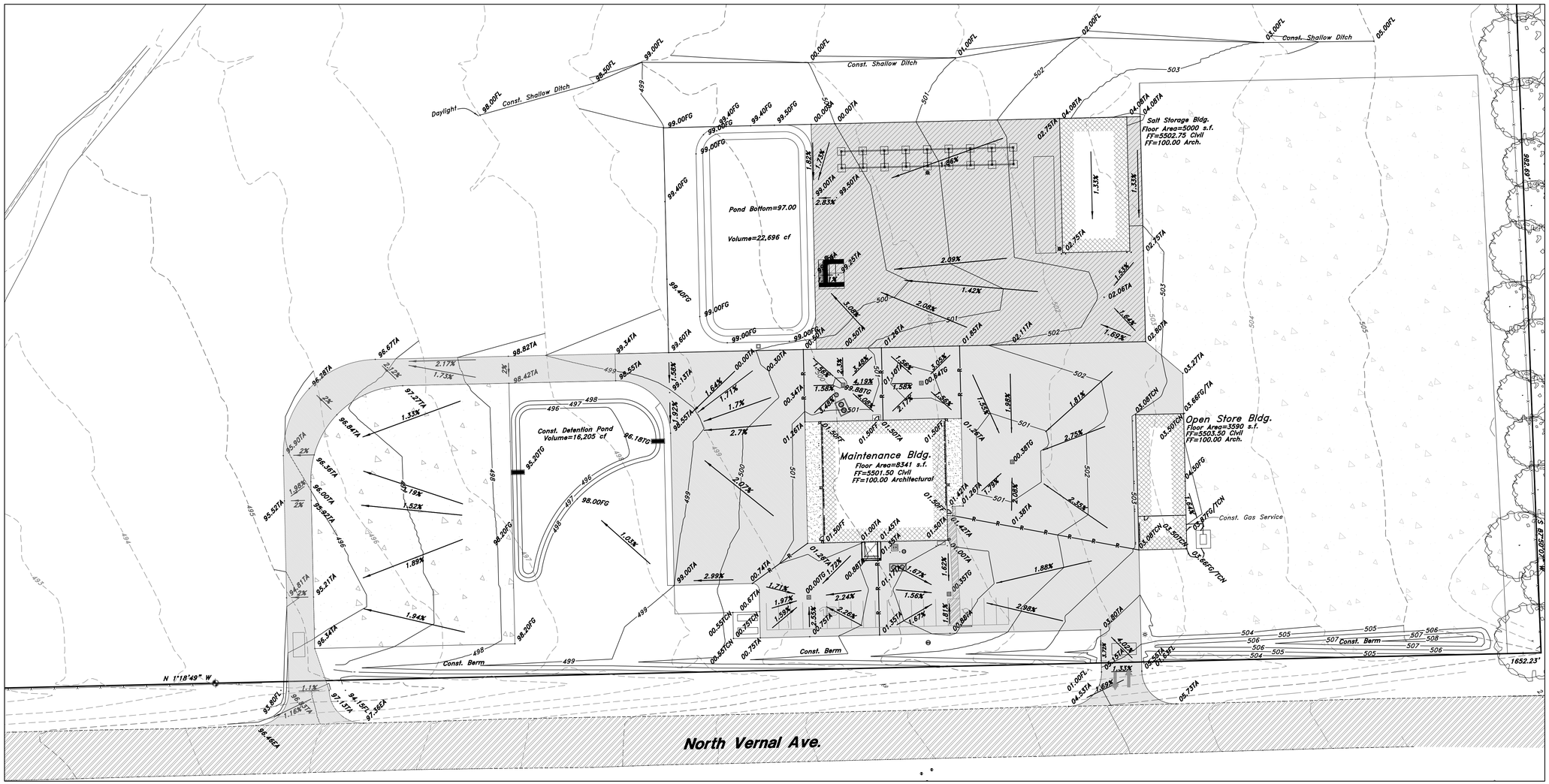

General Grading Notes:

1. All work shall be in accordance with the County Public Works Standard.
2. Cut slopes shall be no steeper than 2 horizontal to 1 vertical.
3. Fill slopes shall be no steeper than 2 horizontal to 1 vertical.
4. Fills shall be compacted per the recommendations of the geotechnical report prepared for the project and shall be certified by the geotechnical engineer.
5. Areas to receive fill shall be properly prepared and approved by the County inspector and geotechnical Engineer prior to placing fill.
6. Fills shall be benched into competent material as per specifications and geotechnical report.
7. All trench backfill shall be tested and certified by the site geotechnical engineer per the grading code.
8. A geotechnical engineer shall perform periodic inspections and submit a complete report and map upon completion of the rough grading.
9. The final compaction report and certification from the geotechnical engineer shall contain the type of field testing performed. Each test shall be identified with the method of obtaining the in-place density, whether sand cone or drive ring and shall be so noted for each test. Sufficient maximum density determinations shall be performed to verify the accuracy of the maximum density curves used by the field technician.
10. Dust shall be controlled by watering.
11. The location and protection of all utilities is the responsibility of the permitee.
12. Approved protective measures and temporary drainage provisions must be used to protect adjoining properties during the grading project.
13. All public roadways must be cleared daily of all dirt, mud and debris deposited on them as a result of the grading operation. Cleaning is to be done to the satisfaction of the city engineer.
14. The site shall be cleared and grubbed of all vegetation and deleterious matter prior to grading. Top Soil from the clear & grubbing can be used for landscaping and berms.
15. The contractor shall provide shoring in accordance with OSHA requirements for trench walls.
16. Aggregate base shall be compacted per the geotechnical report prepared for the project.
17. Elevations shown on this plan are finish grades. Rough grades are the subgrades of the improvements shown hereon.
18. The recommendations in the following Geotechnical Engineering Report by Earthtec Testing & Engineering, P.C. are included in the requirements of grading and site preparation. The report is titled "GEOTECHNICAL STUDY, UDOT MAINTENANCE FACILITY, 2600 NORTH HIGHWAY 191, VERNAL, UTAH" Job No.: 052889 Dated: December 23, 2005
19 As part of the construction documents, owner has provided contractor with a topographic survey performed by manual or aerial means. Such survey was prepared for project design purposes and is provided to the contractor as a courtesy. It is expressly understood that such survey may not accurately reflect existing topographic conditions.
20. Erosion Control: Protect all inlet boxes, catch basins, etc. with straw bales or other approved method to strain the strom water during construction. Protect surrounding properties and streets from site runoff with sandbags and earth berms.

Project Benchmark ROW Monumant Elev = 494.95

NOTE: UDOT provided the Topographical Survey Information used in preparing this drawing. Great Basin Engineering makes no claims regarding the accuracy of the information provided by UDOT.

PRIVATE ENGINEER'S NOTICE TO CONTRACTORS

The Contractor agrees that he shall assume sole and complete responsibility for job site conditions during the course of construction of this project, including safety of all persons and property; that this requirement shall apply continuously and not be limited to normal working hours; and that the contractor shall defend, indemnify, and hold the owner and the engineer harmless from any and all liability, real or alleged, in connection with the performance of work on this project, excepting for liability arising from the sole negligence of the owner or the engineer.

ALL CONSTRUCTION TO CONFORM TO STATE STANDARDS AND SPECIFICATIONS IN RIGHT OF WAY

Legend

(Note: All items may not appear on drawing)

San. Sewer Manhole	S	Reinforced Concrete Pipe	RCP
Water Manhole	W	Ductile Iron	DI
Storm Drain Manhole	SD	Polyvinyl Chloride	PVC
		Top of Asphalt	TA
		Edge of Asphalt	EA
Electrical Manhole	E	Centerline	CL
Catch Basins		Flowline	FL
Exist. Fire Hydrant		Finish Floor	FF
Fire Hydrant	FH	Top of Curb	TC
Exist. Water Valve	WV	Top of Wall	TWL
Water Valve	WV	Top of Walk	TW
Sanitary Sewer	S	Top of Concrete	TCN
Culinary Water	C	Natural Ground	NG
Gas Line	G	Finish Contour	90
Irrigation Line	IW	Exist. Contour	90
Storm Drain	SD	Finish Grade	95.33TA
Telephone Line	T	Exist. Grade	95.72TA
Secondary Waterline	P	Ridge Line	R
Power Line	P	Direction of Flow	
Fire Line	F		
Land Drain	LD	Existing Asphalt	
Power pole			
Power pole w/guy		New Asphalt	
Light Pole			
Fence			
Flowline of ditch		Zero Voids Asphalt	
Overhead Power line	OHP		
Corrugated Metal Pipe	CMP	Concrete	
Concrete Pipe	CP		
		Open Face	
		Curb & Gutter	

CLIENT

VERNAL
MAINTENANCE FACILITY
STATION #3437
2773 North Vernal Ave.
VERNAL, UTAH 84050

DESIGNER

ARCHIPLEX GROUP
architecture · planning · design services
1135 South West Temple, Ste. A
Salt Lake City, UT 84101
P:(801) 961-7070
F:(801) 961-7373

CONSULTANTS

PROFESSIONAL SEAL

ISSUE

MARK	DATE	DESCRIPTION
	6/27/06	RE-BID-SET
	3/31/06	CONSTRUCTION DOCUMENTS
	1-20-06	FINAL REVIEW SET
	8-22-05	PRELIMINARY SUBMITTAL

DFCM PROJECT NO:	05056900/067023
ARCHIPLEX PROJECT NO:	050011.01
DRAWN BY:	JRA
CHECKED BY:	DRW
SCALE:	1:40
DATE:	MARCH 31, 2006

KEY PLAN

SHEET TITLE

GRADING PLAN
ADD ALTERNATE 4

C204

© 2004 ARCHIPLEX GROUP

Note: Pre-cast or Cast in Place boxes may be used at contractor's discretion

Note: Larger sized boxes will be required for larger diameter pipes

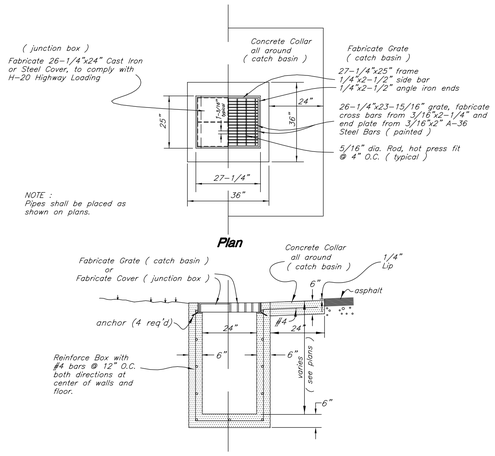

Typical Catch Basin
Typical Junction Box

NOT TO SCALE

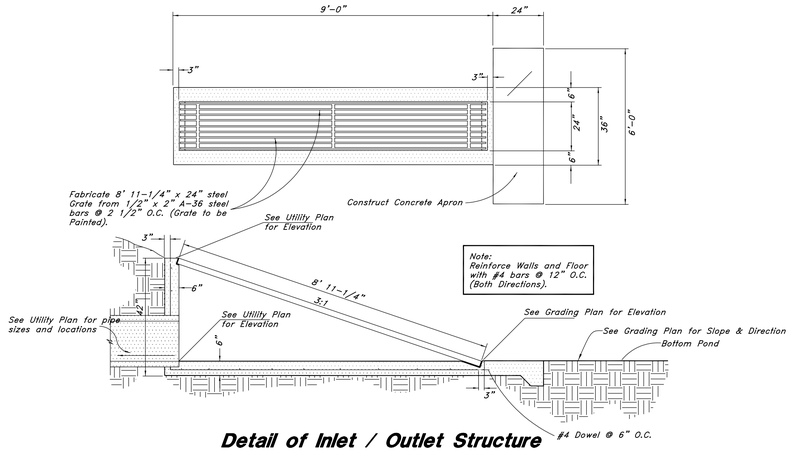

Detail of Inlet / Outlet Structure

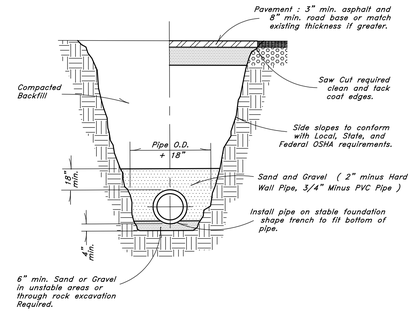

Typical Trench Detail

NOT TO SCALE

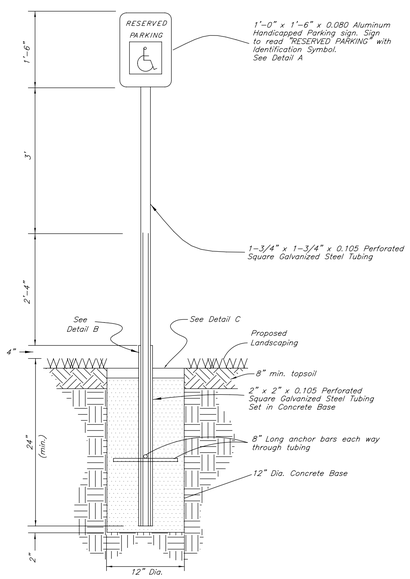

Handicapped Parking Sign

NOT TO SCALE

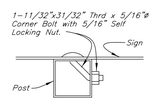

"Detail A" Sign Mounting

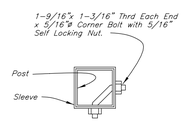

"Detail B" Anchor Assembly

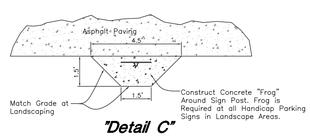

"Detail C" Concrete "Frog"

NOT TO SCALE

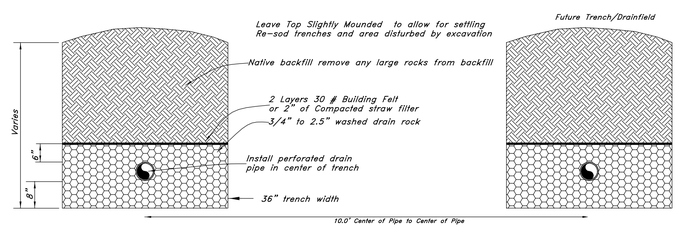

Drain Pipe Detail

NOT TO SCALE

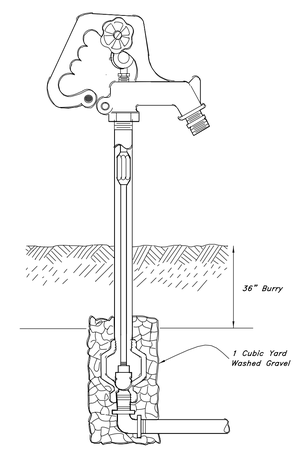

Frost Free Hydrant Detail

NOT TO SCALE

CLIENT

VERNAL
MAINTENANCE FACILITY
STATION #3437
2773 North Vernal Ave.
VERNAL, UTAH 84050

DESIGNER

ARCHIPLEX GROUP
architecture · planning · design services
1135 South West Temple, Ste. A
Salt Lake City, UT 84101
P:(801) 961-7070
F:(801) 961-7373

CONSULTANTS

PROFESSIONAL SEAL

ISSUE

MARK	DATE	DESCRIPTION
	6/27/06	RE-BID-SET
	3/31/06	CONSTRUCTION DOCUMENTS
	1-20-06	FINAL REVIEW SET
	8-22-05	PRELIMINARY SUBMITTAL

DFCM PROJECT NO:	05056900/067023
ARCHIPLEX PROJECT NO:	050011.01
DRAWN BY:	JRA
CHECKED BY:	DRW
SCALE:	1:40
DATE:	MARCH 31, 2006

KEY PLAN

SHEET TITLE

CONSTRUCTION DETAILS

C400

© 2004 ARCHIPLEX GROUP

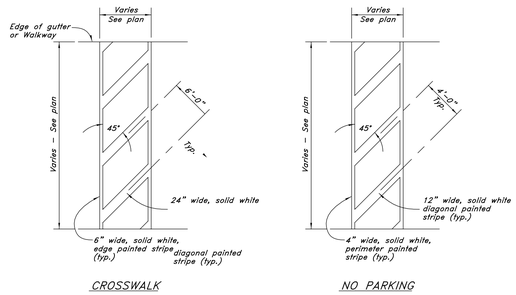

Striping

NOT TO SCALE

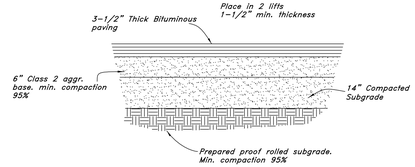

Typical Bituminous Pavement Section Parking Areas

NOT TO SCALE

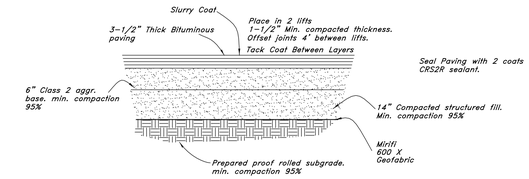

Typical Bituminous Pavement Section Zero Voids Paving

NOT TO SCALE

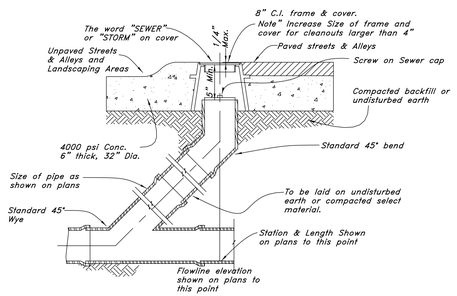

Sewer, Storm, and Roof Drain Cleanout Detail

NOT TO SCALE

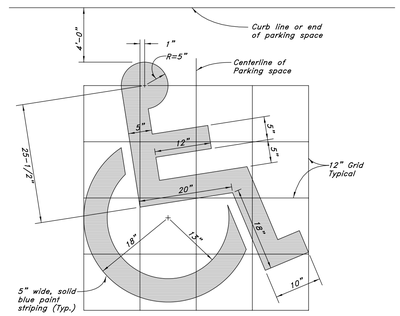

Handicap Symbol

NOT TO SCALE

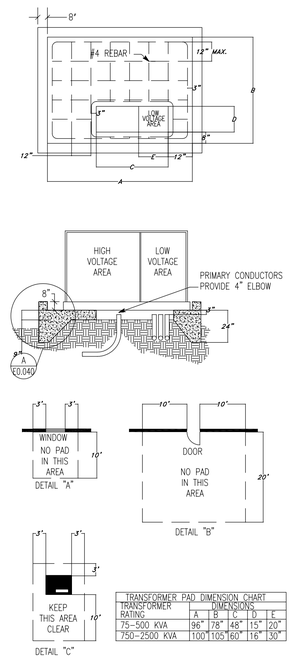

TRANSFORMER PAD DIMENSION CHART					
TRANSFORMER RATING	DIMENSIONS				
	A	B	C	D	E
75-500 KVA	96"	78"	48"	15"	20"
750-2500 KVA	100"	105"	60"	16"	30"

TRANSFORMER PAD DETAIL

NOT TO SCALE

CONTRACTOR NOTES

1. SITE PREPARATION. ALL SOIL BENEATH THE PAD SITE MUST BE COMPACTED AND LEVEL PRIOR TO SETTING OR POURING THE PAD TO PREVENT SETTLING.

2. CONCRETE. STEEL REINFORCEMENT SHALL BE #4 BARS, PLACED ACCORDING TO THE DRAWING. THE PAD MUST BE POURED AT LEAST SEVEN FULL DAYS PRIOR TO SETTING THE TRANSFORMER. THE FINISHED SURFACE MUST BE COMPLETELY FLAT AND LEVEL.

3. PREFABRICATION. THE PAD MAY EITHER BE CONSTRUCTED ON THE SITE OR PREFABRICATED ACCORDING TO SPECIFICATIONS.

4. CONDUIT WINDOW LAYOUT. LOW VOLTAGE CONDUITS SHALL BE FORMED AS TIGHTILY AS POSSIBLE AGAINST THE RIGHT SIDE OF THE OPENING AND SHALL IN NO CASE EXTEND FURTHER THAN 20" FROM THE RIGHT SIDE OF THE CONDUIT WINDOW ON THE SMALL PAD OR 30" ON THE LARGE PAD. NO MORE THAN 8 CONDUITS WILL BE USED ON THE LOW VOLTAGE SIDE (NOT INCLUDING THE METERING CONDUIT). DO NOT PUT ANY CONCRETE IN OR UNDER THE CONDUIT WINDOW. USE SOIL TO SEPARATE CONDUITS. BELL ENDS ARE REQUIRED FOR ALL METAL CONDUIT, BUT NOT FOR PLASTIC CONDUIT.

5. CLEARANCES. THE FRONT OF THE PAD SHOULD ALWAYS FACE AWAY FROM ADJACENT STRUCTURES AND BE FREE OF OBSTRUCTIONS. AT LEAST 3 FEET MUST SEPARATE THE EDGES OF THE PAD FROM ANY ADJACENT STRUCTURE. THE EDGES OF THE PAD MUST BE AT LEAST 10 FEET FROM ANY COMBUSTIBLE STRUCTURE. IF AN ADJACENT STRUCTURE HAS ANY OVERHANG OR EAVE WITHIN 27 VERTICAL FEET OF THE TOP OF THE PAD, CLEARANCES MUST BE MEASURED FROM THE OUTSIDE OF THE OVERHANG. THE PAD MUST NOT BE PLACED IN AN AREA 10 FEET IN LINE WITH OR 3 FEET TO EITHER SIDE OF ANY WINDOW IN AN ADJACENT STRUCTURE (SEE DETAIL "A"). CLEARANCE FOR A DOOR MUST BE 20 FEET IN LINE WITH IT AND 10 FEET ON THE SIDES (SEE DETAIL "B"). PADS MUST NOT BE PLACED WITHIN 15 FEET OF ANY VALVE OR WITHIN 20 FEET OF ANY PLUMBING OR STORAGE FACILITY CONTAINING FLAMMABLE MATERIAL. NO WALLS, FENCES, OR ANY OTHER OBSTRUCTIONS WILL BE PLACED WITHIN 3 FEET OF THE SIDES OR BACK OF THE PAD, OR WITHIN 10 FEET OF THE FRONT OF THE PAD (SEE DETAIL "C"). THE AREA IN FRONT OF THE PAD MUST HAVE 10 FEET OF CLEAR, LEVEL WORKING AREA FOR MAINTENANCE OF THE TRANSFORMER. THE PAD MAY NOT BE PLACED IN LINE WITH AN AIR INTAKE WITHIN 32 VERTICAL FEET OF THE SURFACE PAD. ALSO VERTICALLY, IT MUST NOT BE PLACED WITHIN 12 FEET OF A DOOR OR WINDOW.

6. BARRIERS. IF THE TRANSFORMER PAD IS TO BE LOCATED IN AREAS SUBJECT TO VEHICULAR TRAFFIC, (PARKING LOTS, DRIVEWAYS, ETC.) CONTACT UTAH POWER & LIGHT CO. FOR PROTECTIVE BARRIER REQUIREMENTS.

7. IF THE TRANSFORMER WILL NOT COVER THE CABLE OPENINGS ON THESE STANDARD PADS, SEAL THE SIDES OF THE CABLE OPENING TO FIT THE TRANSFORMER USING SAKRETE OR COMPARABLE.

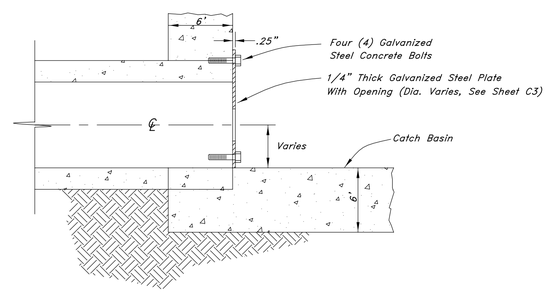

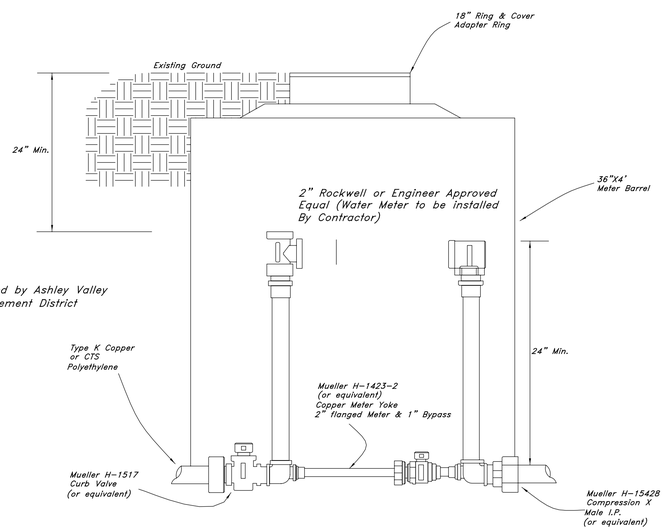

2" Water Meter Connection Detail

NOT TO SCALE

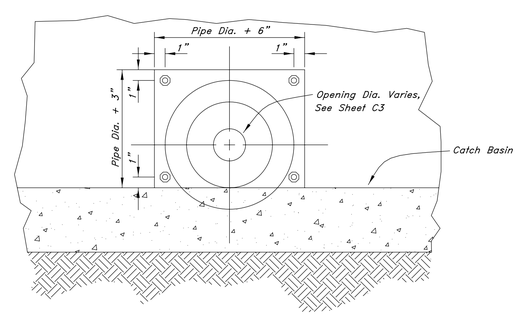

Orifice Plate Detail

CLIENT

VERNAL
MAINTENANCE FACILITY
STATION #3437
2773 North Vernal Ave.
VERNAL, UTAH 84050

DESIGNER

ARCHIPLEX GROUP
architecture · planning · design services
1135 South West Temple, Ste. A
Salt Lake City, UT 84101
P:(801) 961-7070
F:(801) 961-7373

CONSULTANTS

PROFESSIONAL SEAL

ISSUE

MARK	DATE	DESCRIPTION
	6/27/06	RE-BID-SET
	3/31/06	CONSTRUCTION DOCUMENTS
	1-20-06	FINAL REVIEW SET
	8-22-05	PRELIMINARY SUBMITTAL

DFCM PROJECT NO:	05056900/067023
ARCHIPLEX PROJECT NO:	050011.01
DRAWN BY:	JRA
CHECKED BY:	DRW
SCALE:	1:40
DATE:	MARCH 31, 2006

KEY PLAN

SHEET TITLE

CONSTRUCTION DETAILS

C401

© 2004 ARCHIPLEX GROUP

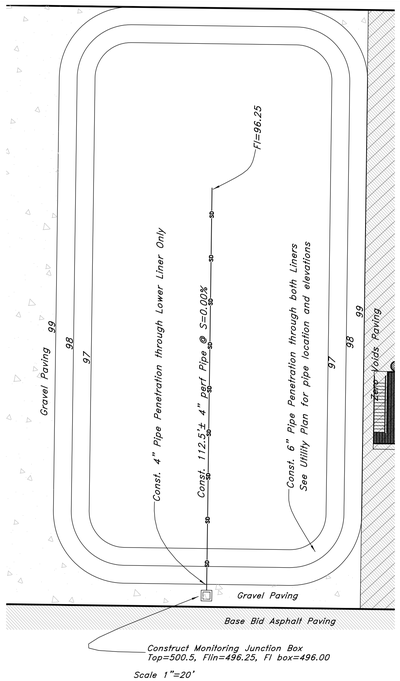

Scale 1"=20'

Drain Field Plan View Detail

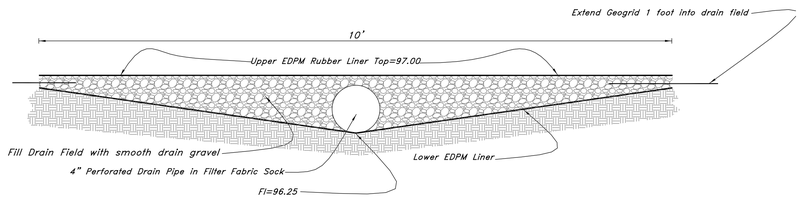

Liner Perf Pipe Drain Field Detail

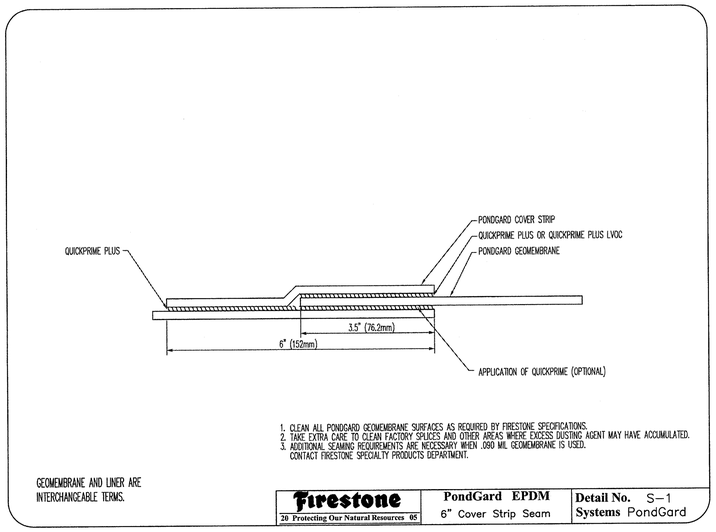

1. CLEAN ALL PONDGARD GEOMEMBRANE SURFACES AS REQUIRED BY FIRESTONE SPECIFICATIONS.
2. TAKE EXTRA CARE TO CLEAN FACTORY SPLICES AND OTHER AREAS WHERE EXCESS DUSTING AGENT MAY HAVE ACCUMULATED.
3. ADDITIONAL SEAMING REQUIREMENTS ARE NECESSARY WHEN .060 MIL GEOMEMBRANE IS USED. CONTACT FIRESTONE SPECIALTY PRODUCTS DEPARTMENT.

GEOMEMBRANE AND LINER ARE INTERCHANGEABLE TERMS.

Firestone 20 Protecting Our Natural Resources 05	PondGard EPDM 6" Cover Strip Seam	Detail No. S-1 Systems PondGard

Seaming Detail

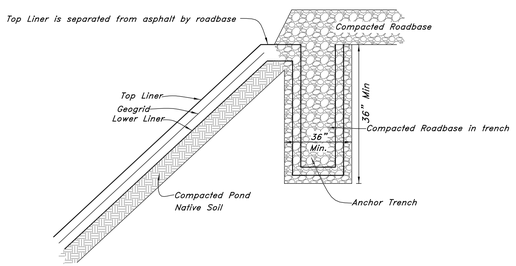

Pond Anchor / Gravel Detail

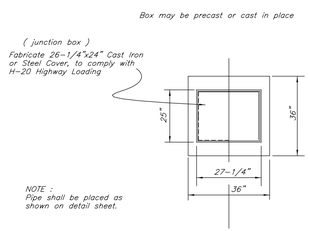

Plan

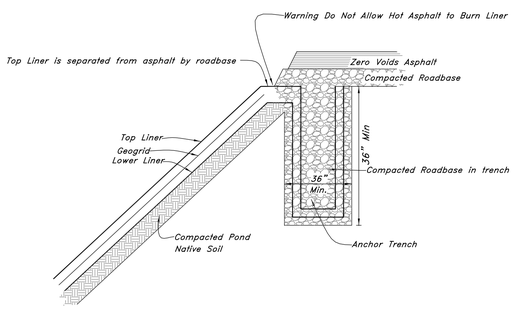

Pond Anchor / Paving Detail

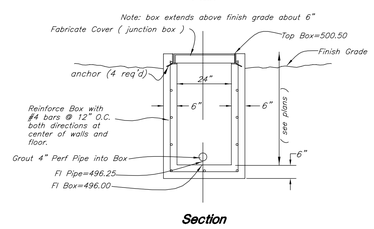

Section

Monitoring Junction Box

NOT TO SCALE

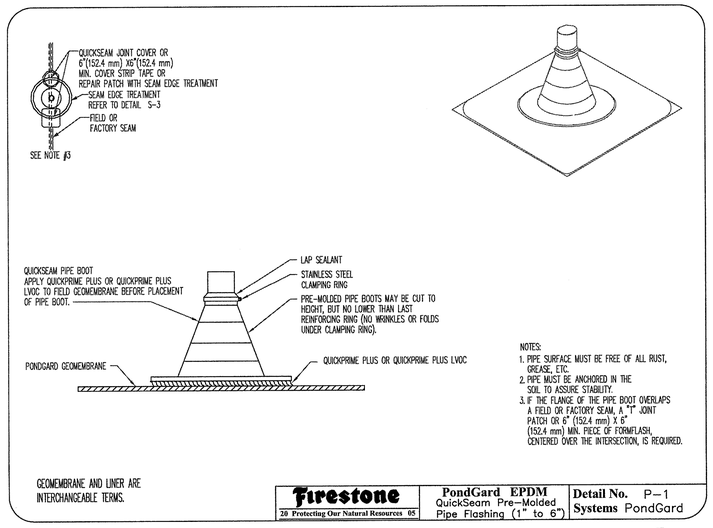

NOTES:
1. PIPE SURFACE MUST BE FREE OF ALL RUST, GREASE, ETC.
2. PIPE MUST BE ANCHORED IN THE SOIL TO ASSURE STABILITY.
3. IF THE FLANGE OF THE PIPE BOOT OVERLAPS A FIELD OR FACTORY SEAM, A "T" JOINT PATCH OR 6" (152.4 mm) X 6" (152.4 mm) MIN. PIECE OF FORMFLASH, CENTERED OVER THE INTERSECTION, IS REQUIRED.

GEOMEMBRANE AND LINER ARE INTERCHANGEABLE TERMS.

Firestone 20 Protecting Our Natural Resources 05	PondGard EPDM QuickSeam Pre-Molded Pipe Flashing (1" to 6")	Detail No. P-1 Systems PondGard

Pipe Boot Detail

CLIENT

VERNAL
MAINTENANCE FACILITY
STATION #3437
2773 North Vernal Ave.
VERNAL, UTAH 84050

DESIGNER

ARCHIPLEX GROUP
architecture · planning · design services
1135 South West Temple, Ste. A
Salt Lake City, UT 84101
P:(801) 961-7070
F:(801) 961-7373

CONSULTANTS

PROFESSIONAL SEAL

ISSUE

MARK	DATE	DESCRIPTION
	6/27/06	RE-BID-SET
	3/31/06	CONSTRUCTION DOCUMENTS
	1-20-06	FINAL REVIEW SET
	8-22-05	PRELIMINARY SUBMITTAL

DFCM PROJECT NO:	05056900/067023
ARCHIPLEX PROJECT NO:	050011.01
DRAWN BY:	JRA
CHECKED BY:	DRW
SCALE:	1:40
DATE:	MARCH 31, 2006

KEY PLAN

SHEET TITLE

RETENTION POND CONSTRUCTION DETAILS

C402

© 2004 ARCHIPLEX GROUP

Scale: 1" = 40'

Graphic Scale

Note:
Hydroseed with Pasture Mix. Provide certified seed mix for approval. Provide not less than 100 pure live seeds per square foot. Cover with Seed Establishment Mulch with Tackifier. Hydroseed and Mulch all disturbed areas not covered with paving or gravel or designated to be covered by owner.

Contractor shall maintain all silt devices (silt fences, check dams, inlet protection) until the area draining to said device is not less than 70% stabilized and substantial completion is reached. If site is not at least 70% stabilized at time of substantial completion, owner will maintain silt devices until site is not less than 70% stabilized.

Stabilization will occur as follows: Asphalt paving is done and substantial completion is reached. Gravel paving is placed and compacted and substantial completion is reached, hydroseeded and landscape areas have not less than 70% coverage of pre-construction pasture grasses.

Do not permanently remove sit devices until stabilization has taken place.

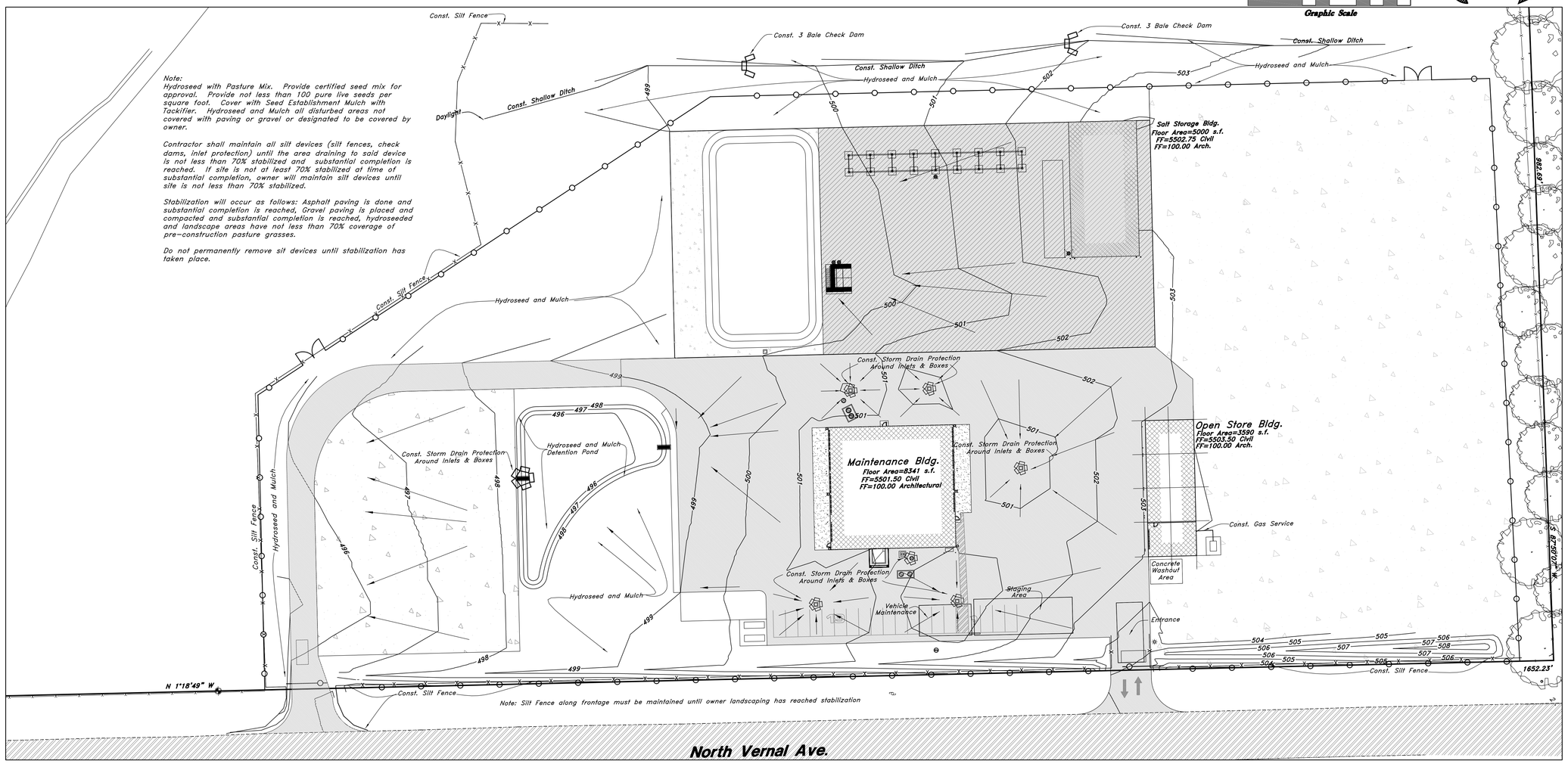

As an alternate at contractors option, rock and rumble strip may be replaced with cobble stone 4-8 inches in diameter. Additional rock shall be available near the entrance to replace any rocks that are lost.
All trucks and other construction traffic must drive out of the site through the stabilized construction entrance.

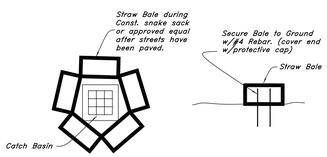

Straw Bale Detail
NOT TO SCALE

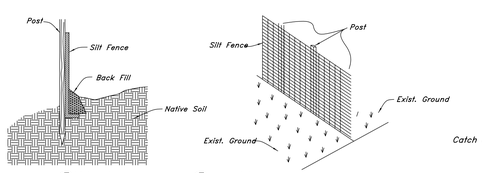

Silt Fence Section
NOT TO SCALE

Note:
Inspect the silt snakes on a weekly basis. If silt snake is showing signs of failure remove and replace those sections of the silt snake. Remove Straw Bales just prior to paving and replace with silt snake with gravel or straw wattle immediately after paving.

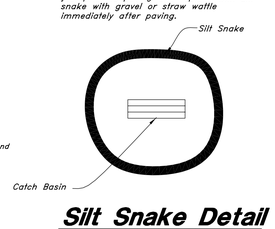

Silt Snake Detail
Not to Scale

CONCRETE WASHOUT NOTES:
1. Excess and waste concrete shall not be washed into the street or into a drainage system.
2. For washout of concrete and mortar products, a designated containment facility of sufficient capacity to retain liquid and solid waste shall be provided on site.
3. Slurry from concrete and asphalt saw cutting shall be vacuumed or contained, dried, picked up and disposed of properly.

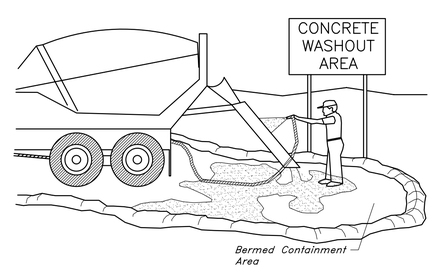

Concrete Waste Management
NOT TO SCALE

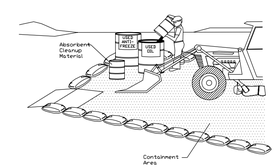

Notes:
1. Leaking vehicles and equipment shall not be allowed on-site. Equipment and vehicles shall be inspected frequently for leaks and shall be repaired immediately. Clean up spills and leaks promptly with absorbent materials; do not flush with water.
2. Vehicles and equipment shall be maintained, and repaired on-site only in designated areas.
3. Prevent run-on and run-off from designated areas. Containment devices shall be provided and areas shall be covered if necessary.
4. Designate on-site vehicle and equipment maintenance areas, away from storm drain inlets and watercourses.
5. Always use secondary containment, such as a drain pan or drop cloth, to catch spills and leaks when removing or changing fluids.
6. Legally dispose of used oils, fluids, and lubricants.
7. Provide spill containment dikes or secondary containment around stored oil, fuel, and chemical drums.
Maintain an adequate supply of absorbent spill cleanup materials in designated area.

Equipment Repair/Maintenance
NOT TO SCALE

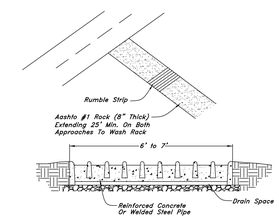

Maintenance: Rock construction entrance thickness shall be constantly maintained to the specified dimensions by adding rock. A stockpile of rock material shall be maintained on site for this purpose. Drain space under rumble strip shall be kept open at all times. Damage to the rumble strip shall be repaired prior to further use of the enterance. At the end of each construction day, all sediment deposited on paved roadways shall be removed and returned to the construction site.

Rock Construction Entrance
NOT TO SCALE

CLIENT

VERNAL
MAINTENANCE FACILITY
STATION #3437
2773 North Vernal Ave.
VERNAL, UTAH 84050

DESIGNER

ARCHIPLEX GROUP
architecture · planning · design services
1135 South West Temple, Ste. A
Salt Lake City, UT 84101
P:(801) 961-7070
F:(801) 961-7373

CONSULTANTS

PROFESSIONAL SEAL

ISSUE

MARK	DATE	DESCRIPTION
	6/27/06	RE-BID-SET
	3/31/06	CONSTRUCTION DOCUMENTS
	1-20-06	FINAL REVIEW SET
	8-22-05	PRELIMINARY SUBMITTAL

DFCM PROJECT NO:	05056900/067023
ARCHIPLEX PROJECT NO:	050011.01
DRAWN BY:	JRA
CHECKED BY:	DRW
SCALE:	1:40
DATE:	MARCH 31, 2006

SHEET TITLE

SWPP PLAN

C500

© 2004 ARCHIPLEX GROUP

STORMWATER POLLUTION PREVENTION PLAN
UDOT MAINTENANCE STATION #3437
VERNAL, UTAH

STORM WATER POLLUTION PREVENTION PLAN SPECIFIC NOTES

1. THIS STORM WATER POLLUTION PREVENTION PLAN (SWPPP) WAS DEVELOPED AT THE REQUEST OF THE OWNER, DFCM, FOR THE CONSTRUCTION OF A MAINTENANCE FACILITY IN THE CITY OF VERNAL, COUNTY OF UINTAH1, STATE OF UTAH. THIS PLAN IDENTIFIES POTENTIAL SOURCES OF POLLUTANTS OF STORM WATER, PRESENTS POLLUTION CONTROL MEASURES, AND ASSISTS IN INSURING IMPLEMENTATION AND MAINTENANCE OF THE BEST MANAGEMENT PRACTICES (BMP'S) INDICATED HEREIN.

2. A NOTICE OF INTENT HAS BEEN FILED WITH THE STATE OF UTAH DEQ WATER QUALITY DIVISION BY THE OWNER SO THAT THIS CONSTRUCTION PROJECT MAY BE COVERED UNDER THE STATE GENERAL PERMIT. THE PERMIT IS NATIONAL POLLUTION DISCHARGE ELIMINATION SYSTEM (NPDES) GENERAL PERMIT (NO. UTR 100000) FOR STORM WATER DISCHARGES ASSOCIATED WITH CONSTRUCTION ACTIVITY.

3. IN THE EVENT OF A CHANGE IN OWNERSHIP, A NEW NOTICE OF INTENT SHALL BE FILED WITH THE UTAH DEQ WATER QUALITY DIVISION.

4. IN THE EVENT OF A RELEASE OF A REPORTABLE QUANTITY OF A POLLUTANT, THE CONTRACTOR SHALL ADVISE THE OWNER TO NOTIFY THE NATIONAL RESPONSE CENTER. VERNAL CITY AND GREAT BASIN ENGINEERING, INC. IF NECESSARY, THIS POLLUTION PREVENTION PLAN SHOULD BE REVISED TO REFLECT THE CHANGE IN CONDITIONS OF THE CONSTRUCTION ACTIVITY. A REPORTABLE QUANTITY IS ESTABLISHED BY 40 CODE OF FEDERAL REGULATIONS (CFR) 117.3 OR 40 CFR 302.4.

5. ALL CONTRACTORS AND THEIR PERSONNEL WHOSE WORK CAN CONTRIBUTE TO OR CAUSE POLLUTION OF STORM WATER SHOULD BE MADE FAMILIAR WITH THIS POLLUTION PREVENTION PLAN. ADEQUATE TRAINING PROVIDED BY THE PERMITEE FOR IMPLEMENTATION OF THE MEASURES PRESENTED HEREIN SHALL BE PROVIDED TO THE CONTRACTORS AND THEIR PERSONNEL.

6. CHANGES IN CONSTRUCTION OR IN CONDITIONS WHICH ARE NOT COVERED BY THIS PLAN SHOULD BE BROUGHT TO THE ATTENTION OF THE OWNER AND GREAT BASIN ENGINEERING, INC. IF NECESSARY, THIS POLLUTION PREVENTION PLAN WILL BE REVISED TO REFLECT THE CHANGE IN CONSTRUCTION OR IN CONDITIONS.

7. ALL PREVENTION AND CLEAN UP MEASURES SHOULD BE CONDUCTED IN ACCORDANCE WITH VERNAL CITY ORDINANCES, AS WELL AS STATE AND FEDERAL REGULATIONS. WASTE MATERIALS SHOULD BE DISPOSED OF IN A LEGAL MANNER. ALL DISCHARGERS OF STORM WATER MUST COMPLY WITH THE LAWFUL REQUIREMENTS OF VERNAL CITY, UINTAH COUNTY AND OTHER LOCAL AGENCIES REGARDING THE DISCHARGES OF STORM WATER TO STORM DRAINS.

8. THIS PLAN DOES NOT COVER THE REMOVAL OF HAZARDOUS OR TOXIC WASTE. IN THE EVENT OF A DISCHARGE OR RELEASE OF A REPORTABLE QUANTITY OF TOXIC WASTE, WORK SHOULD BE STOPPED UNTIL THE SPILL CAN BE ASSESSED AND A MITIGATION REPORT PREPARED BY A QUALIFIED ENVIRONMENTAL CONSULTANT, AND IF NECESSARY, REVIEWED BY UINTAH COUNTY, VERNAL CITY AND ANY OTHER AGENCY HAVING JURISDICTION.

9. THIS SWPPP SHALL BE MADE AVAILABLE TO THE PUBLIC UNDER SECTION 308(B) OF THE CLEAN WATER ACT. UPON REQUEST BY MEMBERS OF THE PUBLIC, THE DISCHARGER SHALL MAKE AVAILABLE FOR REVIEW A COPY OF THIS SWPPP EITHER TO DEQ OR DIRECTLY TO THE REQUESTER. THIS SWPPP MUST BE KEPT ON SITE DURING CONSTRUCTION ACTIVITY AND MADE AVAILABLE UPON REQUEST OF A REPRESENTATIVE OF THE UTAH DEQ WATER QUALITY DIVISION/OR THE LOCAL AGENCY.

10. CONTACTS

OWNER	
STATE OF UTAH DFCM	BILL BOWEN
4110 STATE OFFICE BUILDING	PROGRAM DIRECTOR
SALT LAKE CITY	(801) 538-3271
CIVIL ENGINEER	
GREAT BASIN ENGINEERING, INC.	DAVID R. WALDRON
5746 SOUTH 1475 EAST, SUITE 200	PROJECT MANAGER
OGDEN, UTAH 84403	(801) 394-4515
VERNAL CITY	
PLANING & ZONNING DEPARTMENT	BRIAN TUCKER
152 EAST 100 NORTH	DIRECTOR
VERNAL, UTAH 84078	(435) 781-5336
STATE OF UTAH	
DEPARTMENT OF ENVIRONMENTAL QUALITY	TOM RUSHING
DIVISION OF WATER QUALITY	ENVIRONMENTAL SCIENTIST
288 NORTH 1460 WEST	(801) 538-6951
P.O. BOX 144870	
SALT LAKE CITY, UTAH 84114-4870	
U.S. EPA	
ENVIRONMENTAL PROTECTION AGENCY	
DENVER, COLORADO	REGION VIII
	800-759-4372
ENVIRONMENTAL PROTECTION AGENCY	202-475-9518
WASHINGTON, D.C. 20460	

11. REFERENCES
    A. IMPROVEMENT PLANS PER GREAT BASIN ENGINEERING, INC., DATED MARCH 31, 2006.
    B. STORMWATER POLLUTION PREVENTION PLAN PREPARED BY GREAT BASIN ENGINEERING, INC., DATED MARCH 31, 2006.

12. THE PROPOSED CONSTRUCTION ACTIVITY IS CONSTRUCTION OF A NEW MAINTENANCE FACILITY.

13. LOCATION OF THE SITE: THE PROJECT IS LOCATED AT APPROXIMATELY 2773 NORTH VERNAL AVEINUE IN VERNAL CITY, UINTAH COUNTY, UTAH. PART OF SW 1/4 OF SECTION 2, TOWNSHIP 4 SOUTH, RANGE 21 EAST, SALT LAKE BASE & MERIDIAN GPS COORDINATES: LATITUDE-40°29'53.4" N, LONGITUDE-109°31'45.5" W.

14. A MINIMAL AMOUNT OF WATER FLOWS ONTO THE SITE INTO AN IRRIGATION DITCH/STORM DRAIN SYSTEM THAT CONTINUES SOUTHERLY.

15.
    A. THE EXISTING SITE CONSISTS OF PATURE GRASSES. THE EXISTING DRAINAGE IS TO THE SOUTH INTO AN IRRIGATION/DRAINAGE DITCH. PRE-CONSTRUCTION RUNOFF COEFFICIENT =0.15
    B. THE PROPOSED SITE WILL CONSIST OF ASPHALT PAVED AREAS, GRAVEL PAVED AREAS, BUILDINGS, AND LANDSCAPE AREAS. DRAINAGE WILL BE COLLECTED IN STORM DRAIN PIPES, WHICH FLOWS TO THE SOUTH THROUGH A DETENTION POND AND THEN WEST INTO A DRAINAG BORROW ALONG NORTH VERNAL AVENUE. POST-CONSTRUCTION RUNOFF COEFFICIENT =0.70

16. SEE IMPROVEMENT PLANS FOR SITE DRAINAGE

START DATE _____

FINISH DATE _____

STORM WATER POLLUTION PREVENTION PLAN GENERAL NOTES

A. PROHIBITION ON MOST NON-STORM WATER DISCHARGES

ONLY STORM WATER FROM THE PROJECT SITE SHALL BE ALLOWED TO FLOW INTO THE ON-SITE STORM DRAIN SYSTEM. CLEAN, NON-CHLORINATED WATER FROM THE FLUSHING OF FIRE HYDRANTS, WATER MAINS, AND STORM DRAINS MAY BE DISCHARGED TO THE STORM DRAIN IF IT IS NOT ALLOWED TO COLLECT DIRT, DEBRIS, AND TRASH WHILE FLOWING TO A STORM DRAIN INLET.

B. SOURCES OF STORM WATER POLLUTANTS

STORM WATER POLLUTANTS INCLUDE SOIL SEDIMENT AND NUTRIENTS, OIL, GREASE, TOXIC POLLUTANTS, AND HEAVY METALS. SOURCES OF STORM WATER POLLUTANTS INCLUDE BUT ARE NOT LIMITED TO SOIL EROSION BY WATER AND/OR WIND; CLEARING OF VEGETATION; GRADING; VEHICLE AND EQUIPMENT REFUELING AND MAINTENANCE; WASHING OF CONCRETE TRUCKS, MIXERS AND HANDLING EQUIPMENT; PAINTS, SOLVENTS AND ADHESIVES; AND LANDSCAPING WORK.

C. EROSION AND SEDIMENT CONTROLS

1. COVER EXPOSED STOCKPILES OF SOILS, CONSTRUCTION AND LANDSCAPING MATERIALS WITH HEAVY PLASTIC SHEETING.

2. IN LANDSCAPING AREAS WHERE THE VEGETATION HAS NOT ESTABLISHED GROWTH AND TAKEN HOLD, CONSTRUCT SANDBAG OR DIRT BERMS AROUND THEIR PERIMETER TO INSURE THAT WATER WILL BE CONTAINED INSIDE THE LANDSCAPING AREA AND THAT IT WILL NOT BE CONVEYED TO A STORM DRAIN INLET.

3. RE-VEGETATE AREAS WHERE LANDSCAPING HAS DIED OR NOT TAKEN HOLD.

4. DIVERT STORM WATER RUNOFF AROUND DISTURBED SOILS WITH BERMS OR DIRT SWALES.

D. OTHER CONTROLS

1. WASTE DISPOSAL

A. KEEP WASTE DISPOSAL CONTAINERS COVERED.

B. PROVIDE FOR THE WEEKLY (OR MORE FREQUENT, IF NECESSARY) DISPOSAL OF WASTE CONTAINERS.

C. PROVIDE CONTAINERS AT CONVENIENT LOCATIONS AROUND THE SITE.

2. SWEEPING OF SITE

A. PROVIDE DAILY SWEEPING BY HAND OR MECHANICAL MEANS (IF NEEDED) TO KEEP THE PAVED AREAS OF THE SITE FREE OF DUST, DIRT, AND DEBRIS.

B. DISPOSE OF ACCUMULATED DIRT IN WASTE CONTAINERS, OR HAUL IT OFF THE SITE TO A LANDFILL.

3. SANITARY/SEPTIC DISPOSAL

PORTABLE TOILETS AND OTHER SANITARY FACILITIES SHALL BE SERVICED WEEKLY AND PUMPED CLEAN BY A WASTE DISPOSAL COMPANY. NO TOXIC OR HAZARDOUS WASTE SHALL BE DISPOSED IN A PORTABLE TOILET OR IN THE ON-SITE SANITARY SEWER.

4. SPILLS

A. STORE ADEQUATE ABSORBENT MATERIALS, RAGS, BROOMS, SHOVELS, AND WASTE CONTAINERS ON THE SITE TO CLEAN-UP SPILLS OF MATERIALS SUCH AS FUEL, PAINT, SOLVENTS, OR CLEANERS. CLEAN UP MINOR SPILLS IMMEDIATELY.

B. FOR REPORTABLE QUANTITY OF HAZARDOUS OR TOXIC SUBSTANCE, SECURE THE SERVICES OF QUALIFIED PERSONNEL OR CLEAN-UP AND DISPOSAL.

5. VEHICLES AND EQUIPMENT

A. FIX LEAKS OF FUEL, OIL AND OTHER SUBSTANCES IMMEDIATELY.

B. PERFORM REFUELING AND SERVICE OF VEHICLES OR EQUIPMENT OFF-SITE WHEN POSSIBLE. IF REFUELING OR SERVICE OF EQUIPMENT IS PERFORMED ON-SITE, THEN PROVIDE AN IMPERVIOUS, CONTAINED AREA WHERE ANY SPILLS CAN BE CONTAINED WITHOUT FLOWING TO A STORM WATER INLET OR INTO THE GROUND.

C. USE DRIP PANS TO CATCH LEAKS AND SMALL SPILLS.

6. CONCRETE TRUCKS, MIXERS AND HANDLING EQUIPMENT

A. DO NOT DISPOSE OF WASHOUT FROM THE WASHING OF CONCRETE TRUCKS, MIXERS, AND HANDLING EQUIPMENT WHERE IT WILL FLOW INTO A STORM WATER INLET OR INTO A PUBLIC STREET.

B. PROVIDE A HOLDING TANK TO RECEIVE ANY WASHOUT FROM CONCRETE EQUIPMENT. DISPOSAL OF TANK CONTENTS SHOULD BE CONDUCTED BY A WASTE HANDLING FIRM.

C. PROVIDE A DESIGNATED AREA FOR WASHING ANY VEHICLES OR EQUIPMENT. DRAINAGE FROM THIS AREA SHOULD FLOW TO THE HOLDING TANK.

7. LANDSCAPING OPERATIONS

A. USE ONLY THE MINIMUM AMOUNT OF LANDSCAPING FERTILIZES, NUTRIENTS, AND OTHER CHEMICALS THAT ARE NEEDED.

B. DO NOT OVER WATER FERTILIZED OR TREATED LANDSCAPE AREAS. MINIMIZE RUNOFF OF IRRIGATION WATER FROM LANDSCAPING.

8. STORM WATER INLETS

KEEP ALL ON-SITE STORM WATER INLETS CLEAN AND FREE OF DIRT AND DEBRIS. IN THE EVENT THAT SEDIMENT AND DEBRIS MAY FLOW TO AN INLET, PROVIDE AN STRAIN BARRIER AROUND THE INLET TO TRAP THE DIRT AND DEBRIS AND ALLOW ONLY CLEAN STORM WATER TO ENTER THE INLET.

E. INSPECTION

1. REGULAR INTERVAL INSPECTION AND INSPECTION BEFORE AND AFTER STORMS

A. VISUALLY INSPECT THE SITE WEEKLY TO INSURE THAT STORM WATER INLETS ARE FREE OF DIRT AND DEBRIS.

B. BEFORE A STORM, INSPECT THE SITE TO INSURE THAT STORM WATER POLLUTION CONTROL MEASURES ARE IN PLACE.

C. AFTER A STORM, INSPECT ALL STORM WATER INLETS TO INSURE THAT THEY ARE CLEAR OF DIRT AND DEBRIS. CLEAN THOSE STORM WATER INLETS THAT ARE NOT CLEAR AND FREE OF DEBRIS.

D. THE UTAD DEQ WATER QUALITY DIVISION MAY REQUIRE THE DISCHARGER TO CONDUCT ADDITIONAL SITE INSPECTIONS, SUBMIT REPORTS AND CERTIFICATIONS, OR TO PERFORM SAMPLING AND ANALYSIS.

2. ALL DISCHARGERS ARE REQUIRED TO CONDUCT INSPECTIONS OF THE CONSTRUCTION SITE PRIOR TO ANTICIPATED STORM EVENTS AND AFTER ACTUAL STORM EVENTS, TO IDENTIFY AREAS CONTRIBUTING TO A STORM WATER DISCHARGE, TO EVALUATE WHETHER MEASURES TO REDUCE POLLUTANT LOADINGS IDENTIFIED IN THIS SWPPP ARE ADEQUATE, TO PROPERLY IMPLEMENT IN ACCORDANCE WITH THE TERMS OF THE GENERAL PERMIT, AND TO DETERMINE WHETHER ADDITIONAL CONTROL PRACTICES ARE NEEDED.

3. PREPARATION OF REPORTS AND RETENTION OF RECORDS

A. EACH DISCHARGER MUST CERTIFY ANNUALLY THAT ITS CONSTRUCTION ACTIVITY IS IN COMPLIANCE WITH THE REQUIREMENTS OF THE GENERAL PERMIT AND THIS SWPPP. THIS CERTIFICATION MUST BE BASED ON THE SITE INSPECTIONS. THE FIRST CERTIFICATION MUST BE COMPLETED BY JULY 1, 2002, AND EACH JULY 1 THEREAFTER.

B. THE DISCHARGER IS REQUIRED TO RETAIN RECORDS OF ALL MONITORING INFORMATION, COPIES OF ALL REPORTS REQUIRED BY THIS GENERAL PERMIT, AND RECORDS OF ALL DATA USED TO COMPLETE THE NOTICE OF INTENT FOR CONSTRUCTION ACTIVITY FOR A PERIOD OF AT LEAST THREE YEARS. THIS PERIOD MAY BE EXTENDED BY REQUEST OF THE STATE. WITH THE EXCEPTION OF NONCOMPLIANCE REPORTING, DISCHARGERS ARE NOT REQUIRED TO SUBMIT THE RECORDS EXCEPT UPON SPECIFIC REQUEST BY THE STATE DEQ DIVISION OF WATER QUALITY.

C. DISCHARGERS WHO CANNOT CERTIFY COMPLIANCE MUST NOTIFY THE STATE DEQ DIVISION OF WATER QUALITY. THIS NOTIFICATION SHALL IDENTIFY THE TYPE OR TYPES OF NONCOMPLIANCE, DESCRIBE THE ACTIONS NECESSARY TO ACHIEVE COMPLIANCE, AND INCLUDE A TIME SCHEDULE, SUBJECT TO THE MODIFICATIONS BY THE STATE DEQ DIVISION OF WATER QUALITY, INDICATING WHEN COMPLIANCE WILL BE ACHIEVED. NONCOMPLIANCE REPORTS MUST BE SUBMITTED WITHIN 30 DAYS OF THE IDENTIFICATION OF THE NONCOMPLIANCE.

F. MAINTENANCE OF CONTROLS

1. MAINTENANCE AND REPAIR

ALL CONTROLS AND MEASURES INDICATED ON THIS PLAN SHOULD BE MAINTAINED IN GOOD AND EFFECTIVE CONDITION. IF ANY CONTROLS OR MEASURES ARE DAMAGED OR REMOVED, THEY SHOULD BE PROMPTLY REPAIRED OR RESTORED.

2. PLAN REVISIONS

IF CONSTRUCTION ACTIVITY OR CONDITIONS CHANGE FROM THOSE SHOWN IN THIS PLAN, THEN THIS PLAN SHALL BE REVISED TO REFLECT THE CURRENT CONDITIONS.

G. STABILIZATION PRACTICES

1. STABILIZATION PRACTICES MAY INCLUDE: TEMPORARY SEEDING, PERMANEBT SEEDING, MULCHING, GEOTEXTILES, SOD STABILIZATION, VEGETATIVE BUFFER STRIPS, PROTECTION OF TREES, PRESERVATION OF MATURE VEGETATION AND OTHER APPROPRIATE MEASURES. STABILIZATION MEASURES SHALL BE INITIATED AS SOON AS PRACTICABLE IN PORTIONS OF THE SITE WHERE CONSTRUCTION ACTIVITIES HAVE TEMPORARILY OR PERMANENTLY CEASED, BUT IN NO CASE MORE THAN 14 DAYS AFTER THE CONSTRUCTION ACTIVITY IN THAT PORTION OF THE SITR HAS TEMPORARILY OR PERMANENTLY CEASED EXCEPT AS NOTED BELOW.

- WHERE THE INITIATION OF STABILIZED MEASURES BY THE 14TH DAY AFTER CONSTRUCTION ACTIVITY TEMPORARILY OR PERMANENTLY CEASED IS PRECLUDED BY SNOW COVER OR FROZEN GROUND CONDITIONS, STABILIZATION MEASURES SHALL BE INITIATED AS SOON AS PRACTICALBE
- WHERE CONSTRUCTION ACTIVITY ON A PORTION OF THE SITE IS TEMPORARILY CEASED, AND EARTH DISTURBING ACTIVITIES WILL BE RESUMED WITHIN 21 DAYS, TEMPORARY STABILIZATION MEASURES DO NOT HAVE TO BE INITIATED ON THAT PORTION OF THE SITE.

H. FINAL STABILIZATION AND POST-CONSTRUCTION CONTROLS

1. AFTER CONSTRUCTION HAS BEEN COMPLETED, THE SITE SHALL BE SWEPT CLEAN, STORM WATER INLETS (GRATES AND BASINS) SHALL BE CLEANED, AND ALL WASTE AND LEFTOVER MATERIALS SHALL BE REMOVED FROM THE SITE.

2. ALL LANDSCAPING AND PLANTING AREAS SHOULD BE WELL MAINTAINED TO PREVENT EROSION. AVOID OVER WATERING OF LANDSCAPING.

3. ALL PAVED AREAS SHOULD BE SWEPT WEEKLY EITHER BY HAND OR BY MECHANICAL MEANS TO KEEP THE SITE CLEAR OF DIRT, DUST, AND DEBRIS.

4. WASTE MATERIALS ON-SITE SHOULD BE STORED IN COVERED CONTAINERS WHICH ARE CLEANED OUT REGULARLY.

5. TESTING OF FIRE HYDRANTS ON-SITE SHALL NOT BE CONDUCTED UNTIL THE AREA WHERE THE WATER DISCHARGES HAS BEEN SWEPT CLEAN OF DIRT AND DEBRIS.

6. STORM DRAIN LINES SHOULD BE CHECKED AND CLEANED ANNUALLY TO KEEP THEM CLEAN AND CLEAR OF DEBRIS.

7. ALL ON-SITE STORM WATER INLETS SHOULD BE CLEARLY MARKED "STORM WATER ONLY".

I. COMPLETION OF CONSTRUCTION ACTIVITIES AND NOTICE OF TERMINATION

WHEN CONSTRUCTION ACTIVITIES HAVE BEEN COMPLETED ON THIS SITE, THE OWNER SHALL FILE A LETTER WITH THE STATE DEQ DIVISION OF WATER QUALITY. THIS LETTER SHALL CERTIFY THAT THE CONSTRUCTION ACTIVITY HAS BEEN COMPLETED, THAT ALL ELEMENTS OF THE SWPPP HAVE BEEN IMPLEMENTED, THAT CONSTRUCTION AND EQUIPMENT MAINTENANCE WASTES HAVE BEEN DISPOSED OF PROPERLY, THAT THE SITE IS IN COMPLIANCE WITH ALL LOCAL STORM WATER REQUIREMENTS INCLUDING EROSION/SEDIMENT CONTROL REQUIREMENTS, POLICIES, AND GUIDELINES.

DEFINITIONS

1. "BEST MANAGEMENT PRACTICES" ("BMP'S") MEANS SCHEDULES OF ACTIVITIES, PROHIBITIONS OF PRACTICES, MAINTENANCE PROCEDURES, AND OTHER MANAGEMENT PRACTICES TO PREVENT OR REDUCE THE POLLUTION OF WATERS OF THE UNITED STATES. BMP'S ALSO INCLUDE TREATMENT REQUIREMENTS, OPERATING PROCEDURES, AND PRACTICES TO CONTROL SITE RUNOFF, SPILLAGE OR LEAKS, WASTE DISPOSAL, OR DRAINAGE FROM RAW MATERIAL STORAGE.

2. "CLEAN WATER ACT" ("CWA") MEANS THE FEDERAL WATER POLLUTION CONTROL ACT ENACTED BY PUBLIC LAW 92-500 AS AMENDED BY PUBLIC LAWS 95-217, 95-576, 96-483, AND 97-111; 33 USC 1251 ET SEQ.

3. "CONSTRUCTION SITE" IS THE LOCATION OF THE CONSTRUCTION ACTIVITY.

4. "NON-STORM WATER DISCHARGE" MEANS ANY DISCHARGE TO STORM DRAIN SYSTEMS THAT IS NOT COMPOSED ENTIRELY OF STORM WATER EXCEPT DISCHARGE PURSUANT TO AN NPDES PERMIT AND DISCHARGES RESULTING FROM FIRE FIGHTING ACTIVITIES.

5. "SIGNIFICANT MATERIALS" INCLUDES, BUT IS NOT LIMITED TO RAW MATERIALS; FUELS; MATERIALS SUCH AS SOLVENTS, DETERGENTS, AND PLASTIC PELLETS; FINISHED MATERIALS SUCH AS METALLIC PRODUCTS; RAW MATERIALS USED IN FOOD PROCESSING OR PRODUCTION HAZARDOUS SUBSTANCES DESIGNATED UNDER SECTION 101(14) OF THE COMPREHENSIVE ENVIRONMENTAL RESPONSE, COMPENSATION, AND LIABILITY ACT (CERLCA); ANY CHEMICAL THE FACILITY IS REQUIRED TO REPORT PURSUANT TO SECTION 313 OF TITLE III OF SUPERFUND AMENDMENTS AND REAUTHORIZATION ACT (SARA); FERTILIZERS; PESTICIDES; AND WASTE PRODUCTS SUCH AS ASHES, SLAG, AND SLUDGE THAT HAVE THE POTENTIAL TO BE RELEASED WITH STORM WATER DISCHARGES.

6. "SIGNIFICANT QUANTITIES" IS THE VOLUME, CONCENTRATIONS, OR MASS OF A POLLUTANT IN STORM WATER DISCHARGE THAT CAN CAUSE OR THREATEN TO CAUSE POLLUTION, CONTAMINATION, OR NUISANCE; ADVERSELY IMPACT HUMAN HEALTH OR THE ENVIRONMENT; AND CAUSE OR CONTRIBUTE TO A VIOLATION OF ANY APPLICABLE WATER QUALITY STANDARDS FOR THE RECEIVING WATER.

7. "STORM WATER" MEANS STORM WATER RUNOFF, SNOW MELT RUNOFF, SURFACE RUNOFF AND DRAINAGE. IT EXCLUDES INFILTRATION AND RUNOFF FROM AGRICULTURAL LAND.

8. "POLLUTION" MEANS THE "MAN-MADE OR MAN-INDUCED ALTERATION OF THE CHEMICAL, PHYSICAL, BIOLOGICAL, AND RADIOLOGICAL INTEGRITY OF WATER" [CLEAN WATER ACT SECTION 502(19)]. POLLUTION ALSO MEANS "AN ALTERATION OF THE QUALITY OF THE WATERS OF THE STATE BY WASTE TO A DEGREE WHICH UNREASONABLY AFFECTS EITHER... THE WATERS FOR BENEFICIAL USES... OR FACILITIES WHICH SERVE THESE BENEFICIAL USES." [CALIFORNIA WATER CODE SECTION 13050(I)].

9. "CONTAMINATION" MEANS "AN IMPAIRMENT OF THE QUALITY OF THE WATERS OF THE STATE BY WASTE TO A DEGREE WHICH CREATES A HAZARD TO THE PUBLIC HEALTH THROUGH POISONING OR THROUGH THE SPREAD OF DISEASE...INCLUDING ANY EQUIVALENT EFFECT RESULTING FROM THE DISPOSAL OF WASTE, WHETHER OR NOT WATERS OF THE STATE ARE AFFECTED."

10. "NUISANCE" MEANS "ANYTHING WHICH MEETS ALL OF THE FOLLOWING REQUIREMENTS: (1) IS INJURIOUS TO HEALTH , OR IS INDECENT OR OFFENSIVE TO THE SENSES, OR AN OBSTRUCTION TO THE FREE USE OF PROPERTY, SO AS TO INTERFERE WITH THE COMFORTABLE ENJOYMENT OF LIFE AND PROPERTY; (2) AFFECTS AT THE SAME TIME AN ENTIRE COMMUNITY OR NEIGHBORHOOD, OR ANY CONSIDERABLE NUMBER OF PERSONS, ALTHOUGH THE EXTENT OF THE ANNOYANCE OR DAMAGE INFLICTED UPON INDIVIDUALS MAY BE UNEQUAL; (3) OCCURS DURING OR AS A RESULT OF THE TREATMENT OR DISPOSAL OF WASTES."

11. "LOCAL AGENCY" MEANS ANY AGENCY THAT IS INVOLVED WITH REVIEW, APPROVAL, OR OVERSIGHT OF THE CONSTRUCTION SITES' (a) CONSTRUCTION ACTIVITY, (b) EROSION AND SEDIMENT CONTROLS, (c) STORM WATER DISCHARGE.

CERTIFICATION

I CERTIFY UNDER PENALTY OF PERJURY THAT THIS DOCUMENT AND ALL ATTACHMENTS WERE PREPARED UNDER MY DIRECTION OR SUPERVISION IN ACCORDANCE WITH A SYSTEM DESIGNED TO ASSURE THAT QUALIFIED PERSONNEL PROPERLY GATHER AND EVALUATE THE INFORMATION SUBMITTED. BASED ON MY INQUIRY OF THE PERSON OR PERSONS WHO MANAGE THE SYSTEM OR THOSE PERSONS DIRECTLY RESPONSIBLE FOR GATHERING THE INFORMATION, THE INFORMATION SUBMITTED IS TO THE BEST OF MY KNOWLEDGE AND BELIEF, TRUE, ACCURATE, AND COMPLETE. I AM AWARE THAT THERE ARE SIGNIFICANT PENALTIES FOR SUBMITTING FALSE INFORMATION, INCLUDING THE POSSIBILITY OF FINE AND IMPRISONMENT FOR KNOWING VIOLATIONS.

_____ _____
DAVID R. WALDRON — Developer Signiture & Date
REGISTERED CIVIL ENGINEER NO. 187515
GREAT BASIN ENGINEERING, INC.

CONTRACTORS

NAME	SIGNATURE	ROLE-COMPANY	DEFINITION OF OPERATION

NPDES I.D. NUMBER _____

CLIENT

VERNAL
MAINTENANCE FACILITY
STATION #3437
2773 North Vernal Ave.
VERNAL, UTAH 84050

DESIGNER

ARCHIPLEX GROUP
architecture · planning · design services
1135 South West Temple, Ste. A
Salt Lake City, UT 84101
P:(801) 961-7070
F:(801) 961-7373

CONSULTANTS

PROFESSIONAL SEAL

ISSUE

MARK	DATE	DESCRIPTION
	6/27/06	RE-BID-SET
	3/31/06	CONSTRUCTION DOCUMENTS
	1-20-06	FINAL REVIEW SET
	8-22-05	PRELIMINARY SUBMITTAL

DFCM PROJECT NO:	05056900/067023
ARCHIPLEX PROJECT NO:	050011.01
DRAWN BY:	JRA
CHECKED BY:	DRW
SCALE:	1:40
DATE:	MARCH 31, 2006

SHEET TITLE

SWPP PLAN NOTES

C501

© 2004 ARCHIPLEX GROUP

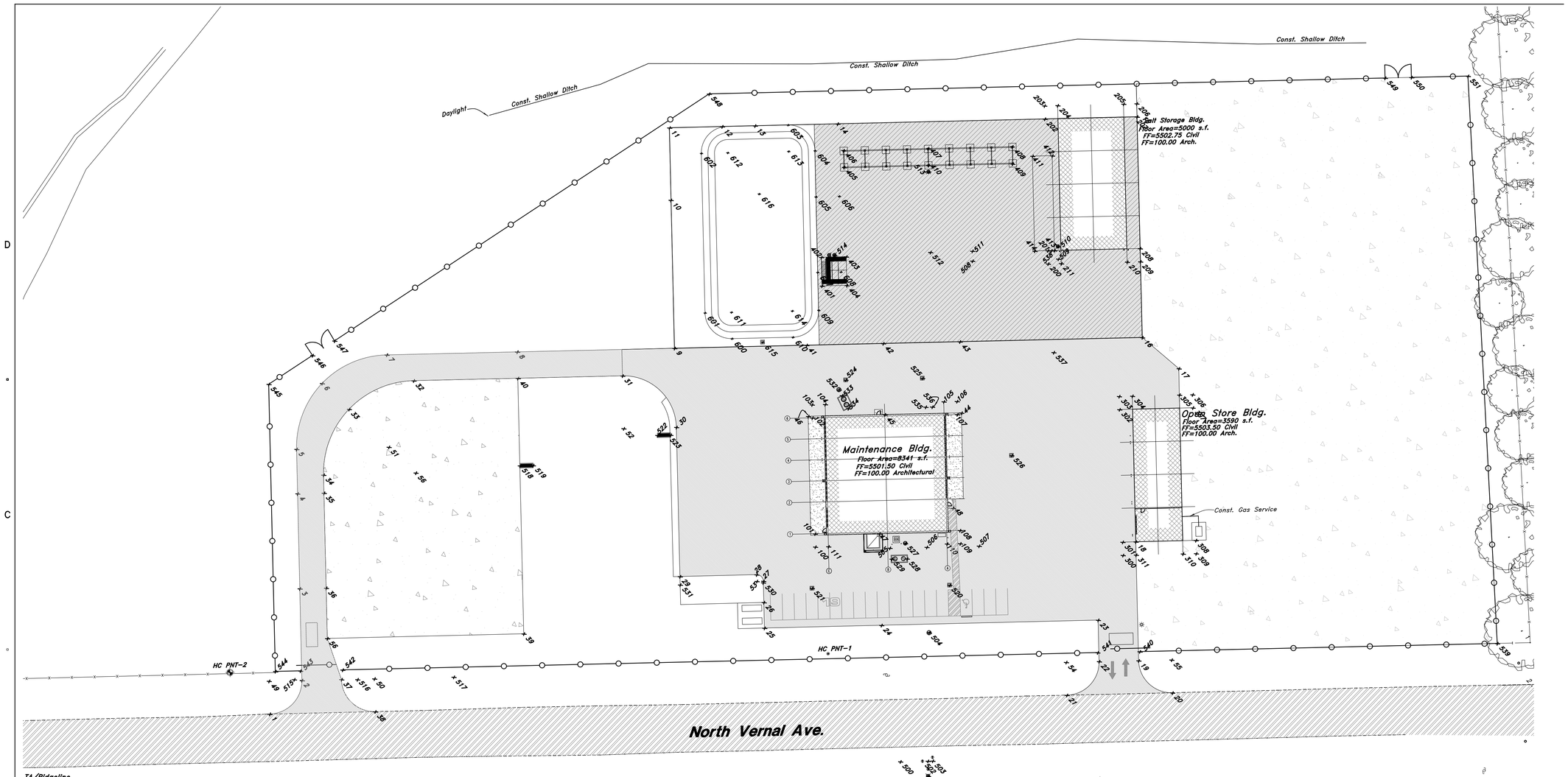

TA/Ridgeline

Point	North	East	Elev.	Desc
1	99576.4196	200058.1078	5496.46	PC
2	99600.8585	200032.5685	5496.83	PT
3	99599.2510	199962.9361	5494.81	TA
4	99597.5860	199890.8096	5495.52	TA
5	99596.8075	199857.0835	5495.90	PC
6	99616.1622	199807.1261	5496.28	PT
7	99665.1733	199785.4867	5496.67	TA
8	99764.2012	199783.2007	5498.82	TA
9	99883.5070	199780.4465	5499.60	TA
10	99880.7245	199668.0088	5499.40	FG
11	99879.6431	199613.0663	5499.00	FG
12	99919.6159	199612.1273	5490.40	FG
13	99944.5580	199611.5414	5490.40	FG
14	100007.1913	199610.0702	5489.50	TA
15	100234.3784	199604.7335	5504.08	TA
16	100238.3828	199772.2543	5502.80	TA
17	100266.1237	199795.8576	5503.27	TA
18	100233.4517	199927.3419	5503.08	RIDGELINE
19	100235.6105	200017.5607	5505.55	PC
20	100261.2124	200041.9541	5505.73	PT
21	100181.1459	200043.7943	5504.53	PC
22	100205.6172	200018.2005	5505.15	PT
23	100204.8639	199986.7801	5503.80	TA
24	100040.4707	199990.7097	5501.35	RIDGELINE
25	99951.7425	199992.8307	5000.75	TA
26	99951.2934	199973.3765	5000.75	TCN
27	99950.9196	199957.1861	5000.67	PC
28	99945.8016	199952.3030	5000.74	PT
29	99887.6436	199953.6916	5499.00	TA
30	99884.8385	199840.3979	5498.55	PC
31	99844.0268	199801.3632	5498.55	PT
32	99685.6296	199805.0198	5497.27	PC
33	99636.6185	199826.6592	5496.84	TA
34	99617.2637	199876.6166	5496.00	PT
35	99617.5807	199890.3481	5495.92	TA
36	99619.2457	199962.4746	5495.21	TA
37	99630.8505	200031.8761	5497.13	PT
38	99656.4145	200056.2927	5497.36	PC
39	99769.1412	199997.1972	5498.20	FG
40	99764.6627	199803.1853	5498.42	TA
41	99983.6663	199778.1344	5500.50	RIDGELINE
42	100041.8175	199776.7920	5501.26	RIDGELINE
43	100099.9686	199775.4496	5501.85	RIDGELINE
44	100101.2160	199829.4838	5501.26	RIDGELINE
45	100043.0638	199830.7801	5501.50	RIDGELINE
46	99984.9115	199833.0765	5501.26	RIDGELINE
47	100038.8668	199921.2294	5501.45	RIDGELINE
48	100094.8263	199901.8108	5501.42	RIDGELINE
49	99575.8494	200033.0996		RADIUS
50	99655.8438	200031.2992		RADIUS
51	99666.7888	199855.4680		RADIUS
52	99844.9499	199841.3526		RADIUS
53	99945.9210	199957.3015		RADIUS
54	100180.6244	200018.7997		RADIUS
55	100260.6033	200016.9615		RADIUS
56	99687.2451	199875.0011		RADIUS
57	99620.1288	200000.7282	5496.34	TA

Maintenance Bldg.

Point	North	East	Elev	Desc
100	99990.2963	199931.2279	5501.5	GRID COR
101	99990.0656	199921.2305	5501.5	10' OS 1C
102	99988.0346	199833.2540	5501.5	10' OS 6C
103	99987.8039	199823.2566	5501.5	CORNER
104	99997.8012	199823.0258	5501.5	10' OS C6
105	100087.7772	199820.9488	5501.5	10' OS A6
106	100097.7746	199820.7180	5501.5	GRID COR
107	100098.0053	199830.7153	5501.5	10' OS 6A
108	100100.0363	199918.6919	5501.5	10' OS 1A
109	100100.2670	199928.6892	5501.5	GRID COR
110	100090.2897	199928.9200	5501.5	10' OS A1
111	100000.2937	199930.9971	5501.5	10' OS C1

Salt Storage Bldg.

Point	North	East	Elev	Desc
200	100186.9359	199716.3192	5502.75	GRID COR
201	100186.7051	199706.3219	5502.75	10' OS SE COR
202	100164.3979	199608.3773	5502.75	10' OS SW COR
203	100164.1665	199598.3516	5502.75	GRID COR
204	100174.1638	199596.1209	5502.75	10' OS SW COR
205	100224.1503	199594.9669	5502.75	10' OS NW COR
206	100234.1436	199594.7362	5502.75	GRID COR
207	100234.3787	199604.7453	5502.75	10' OS NW COR
208	100236.6863	199704.7064	5502.75	10' OS NE COR
209	100236.9171	199714.7037	5502.75	GRID COR
210	100226.9197	199714.9345	5502.75	10' OS NE COR
211	100176.9332	199716.0885	5502.75	10' OS SE COR

Open Storage Bldg.

Point	North	East	Elev	Desc
300	100223.6935	199937.5780	5503.5	GRID COR
301	100223.4546	199927.5809	5503.5	10' OS SE COR
302	100221.0489	199826.9433	5503.5	10' OS SW COR
303	100220.8100	199816.9461	5503.5	GRID COR
304	100230.8071	199816.7071	5503.5	10' OS SW COR
305	100266.5095	199815.8537	5503.5	10' OS NW COR
306	100276.4713	199815.6156	5503.5	GRID COR
307	100276.6995	199825.6130	5503.5	10' OS NW COR
308	100278.9967	199926.2532	5503.5	10' OS NE COR
309	100279.2249	199936.2506	5503.5	GRID COR
310	100269.2277	199936.4896	5503.5	10' OS NE COR
311	100233.6907	199937.3390	5503.5	10' OS SE COR

Wash Rack Sander Rack Brine Station

Point	North	East	Desc
401	99895.3652	199733.1230	SE COR
402	99994.8632	199711.3788	SW COR
403	100013.7749	199710.9422	NW COR
404	100014.2768	199732.6864	NE COR
405	100012.1402	199643.0628	SE COR
406	100011.8517	199630.5661	SWCOR
407	100075.8340	199629.0632	MIDDLE
408	100139.8164	199627.5602	NW COR
409	100140.1049	199640.0569	NE COR
410	100076.1725	199641.6099	MIDDLE
411	100155.0461	199634.5719	SW COR
412	100170.0421	199634.2257	NW COR
413	100171.7038	199706.2065	NE COR
414	100156.7078	199706.5527	NW COR

Waterline/Water Meter/ Hydrant

Point	North	East	Desc
500	100054.8349	200094.2337	
501	100075.9542	200105.1577	HYDRANT
502	100075.6923	200093.8136	TEE CONNECTION
503	100079.3332	200093.6682	TEE CONNECTION
504	100076.6532	199996.3723	WATER METER
505	100046.8308	199932.0694	TEE CONNECTION
506	100074.8642	199931.4223	TEE CONNECTION
507	100114.5235	199930.5068	TEE CONNECTION
508	100109.5288	199714.1391	TEE CONNECTION
509	100174.6933	199712.6348	TEE CONNECTION
510	100174.4739	199703.1314	HYDRANT
511	100077.6291	199707.5612	90° ELBOW
512	100109.3555	199706.6341	TEE CONNECTION
513	100076.1575	199646.4310	HYDRANT
514	100004.8360	199709.6665	HYDRANT

Electrical

Point	North	East	Desc
535	100074.0316	199825.0305	ELEC.PAD
536	100079.0303	199824.9151	ELEC. PAD
537	100171.1522	199783.5835	ELEC. LINE
538	100169.3670	199706.2605	ELEC. LINE

Fence Line

Point	North	East	Desc
539	100507.6898	200004.5003	NE COR
540	100236.4468	200010.7199	FENCE OPENING
541	100204.4552	200011.4535	FENCE OPENING
542	99631.6825	200024.5872	FENCE OPENING
543	99599.6909	200025.3207	FENCE OPENING
544	99580.6959	200025.7563	SE COR
545	99575.6636	199807.7636	SOUTH COR
546	99608.8811	199785.8498	FENCE OPENING
547	99625.5945	199774.8239	FENCE OPENING
548	99909.7746	199587.3481	SW COR
549	100422.5638	199575.3026	FENCE OPENING
550	100442.5583	199574.8329	FENCE OPENING
551	100485.4558	199573.8252	NW COR

Storm Drain/Clean Out/Septic Tank/Inlet Boxes

Point	North	East	Desc
515	99594.9718	200031.8920	LINE SD
516	99642.9718	200031.8861	LINE SD
517	99715.9943	200030.0287	LINE SD
518	99766.2518	199869.6185	INLET BOX
519	99776.2491	199869.3877	INLET BOX
520	100092.1582	199825.1764	CATCH BASIN
521	99987.8076	199962.5853	CATCH BASIN
522	99870.5803	199846.5110	INLET BOX
523	99880.5777	199846.2802	INLET BOX
524	100013.3650	199804.4572	CATCH BASIN
525	100071.5162	199803.1148	CATCH BASIN
526	100139.1955	199861.7651	CATCH BASIN
527	100058.5876	199926.4707	CLEAN OUT
528	100059.9011	199940.1602	SEPTIC TANK
529	100048.7197	199940.4162	SEPTIC TANK
530	99930.7997	199958.3846	LINE SD
531	99887.8063	199960.0118	LINE SD
532	100008.2540	199811.8824	CLEAN OUT
533	100010.5431	199816.2769	LINE SD
534	100015.3410	199826.1785	LINE SD

Pond

Point	North	East	Elev	DESC
600	99927.1289	199773.1273	5699.00	TOP
601	99906.6727	199753.5942	5699.00	TOP
602	99903.8768	199632.4804	5699.00	TOP
603	99969.6086	199610.9577	5699.60	TOP
604	99990.0648	199630.4908	5699.64	TA
605	99990.7823	199665.4819	5699.00	TA
606	100008.4810	199665.0738	5699.50	TA
607	99992.1084	199722.9248	5699.00	TA
608	100009.7871	199722.5167	5699.25	TA
609	99992.8607	199751.6046	5699.78	TA
610	99973.3276	199772.0608	5699.00	TOP
611	99926.6673	199753.1326	5697.00	RAD
612	99923.8715	199632.0188	5697.00	RAD
613	99970.0702	199630.9523	5697.00	RAD
614	99972.8860	199752.0662	5697.00	RAD
615	99950.3011	199775.7485	5700.50	TOP JBOX
616	99947.7047	199663.2785	5696.25	FL PIPE

Horizontal Control Points:

HC Pnt-1	100000.0512	200012.2945
HC Pnt-2	99546.2904	200026.5231
HC Pnt-3	99030.6228	200072.6456

Note: HC Pnt-3 is approx. 517' south of HC Pnt-2

Scale: 1" = 40'

40 0 10 20 40 50 60 70 80

Graphic Scale

Legend

(Note: All items may not appear on drawing)

San. Sewer Manhole	S	Reinforced Concrete Pipe	RCP
Water Manhole	W	Ductile Iron	DI
Storm Drain Manhole	SD	Polyvinyl Chloride	PVC
Electrical Manhole	E	Top of Asphalt	TA
Catch Basins		Edge of Asphalt	EA
Exist. Fire Hydrant		Centerline	CL
Fire Hydrant		Flowline	FL
Exist. Water Valve		Finish Floor	FF
Water Valve		Top of Curb	TC
Sanitary Sewer	—S—	Top of Wall	TWL
Culinary Water	—W—	Top of Walk	TW
Gas Line	—G—	Top of Concrete	TCN
Irrigation Line	—IW—	Natural Ground	NG
Storm Drain	—SD—	Finish Contour	—90—
Telephone Line	—T—	Exist. Contour	--90--
Secondary Waterline	—S—	Finish Grade	95.12TA
Power Line	—P—	Exist. Grade	95.72TA
Fire Line	—F—	Ridge Line	—R—
Land Drain	—LD—	Direction of Flow	
Power pole		Existing Asphalt	
Power pole w/guy		New Asphalt	
Light Pole		Zero Voids Asphalt	
Fence		Concrete	
Flowline of ditch		Open Face Curb & Gutter	
Overhead Power line	—OHP—		
Corrugated Metal Pipe	CMP		
Concrete Pipe	CP		

General Horizontal Control Notes:

1. It is the responsibility of the surveyor and contractor to verify all building dimensions with architectural plans when staking and constructing buildings. The building must be staked and built according to the dimensions on the architectural plans. Notify the Civil Engineer and Architect of any discrepancies prior to commencing construction.
2. Dimensions of improvements staked from coordinates must be checked against site plan dimensions. Notify the Civil Engineer of any discrepancies prior to commencing construction.

CLIENT

VERNAL
MAINTENANCE FACILITY
STATION #3437
2773 North Vernal Ave.
VERNAL, UTAH 84050

DESIGNER

ARCHIPLEX GROUP
architecture · planning · design services
1135 South West Temple, Ste. A
Salt Lake City, UT 84101
P:(801) 961-7070
F:(801) 961-7373

CONSULTANTS

PROFESSIONAL SEAL

ISSUE

MARK	DATE	DESCRIPTION
	6/27/06	RE-BID-SET
	3/31/06	CONSTRUCTION DOCUMENTS

DFCM PROJECT NO:	05056900/067023
ARCHIPLEX PROJECT NO:	050011.01
DRAWN BY:	JRA
CHECKED BY:	DRW
SCALE:	1:40
DATE:	MARCH 31, 2006

KEY PLAN

SHEET TITLE

HORIZONTAL CONTROL PLAN

C600

© 2004 ARCHIPLEX GROUP

W:\05N526-Vernal UDOT\dwg\05N526S.dwg, 6/26/2006 8:48:55 AM, 1:40, T_D

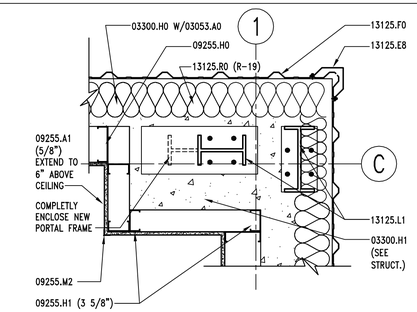

D1 COLUMN DETAIL

AE101 REF. AE101 SCALE: 1" = 1'-0"

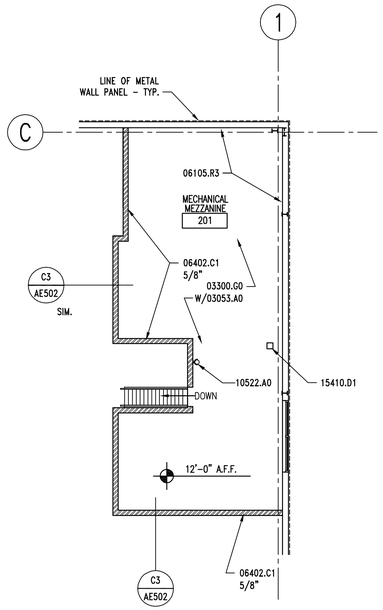

B1 MECH. MEZZANINE PLAN

AE101 REF. SCALE: 1/8" = 1'-0"

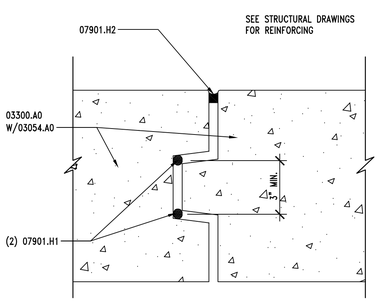

A1 CONSTRUCTION JOINT

AE101 REF. AE101 SCALE: NONE

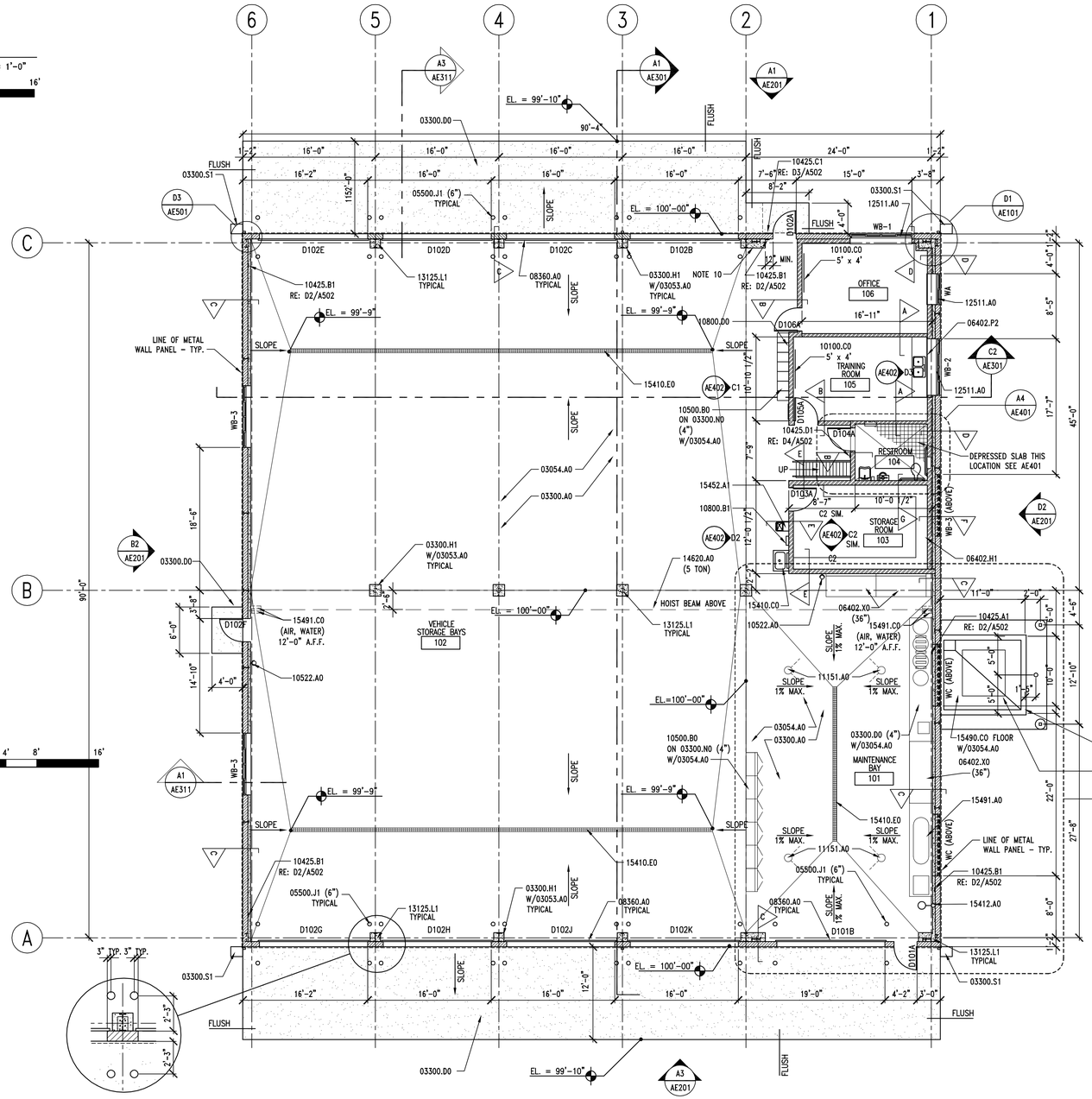

A2 FLOOR PLAN

AE101 REF. SCALE: 1/8" = 1'-0"

KEYNOTES

03053.A0	CONCRETE WATER PROOFING ADMIXTURE
03054.A0	OLIOPHOBIC SEALER, OVER CONCRETE WATER PROOFING SYSTEM
03300.A0	CONCRETE SLAB ON GRADE
03300.D0	CONCRETE PAD
03300.H0	FOUNDATION WALL, RE: STRUCTURAL
03300.H1	CONCRETE PIER, RE: STRUCTURAL
03300.G0	CONCRETE OVER METAL DECK - RE:STRUCTURAL
03300.N0	CONCRETE CURB
03300.S1	SPLASH BLOCK
05500.J1	PIPE BOLLARD (DIAMETER) GALVANIZED & PAINTED
06105.R3	G1S A/C PLYWOOD (THICKNESS)
06402.C1	PAINT GRADE WOOD CAP (THICK)
06402.H1	ADJUSTABLE SHELVES
06402.P2	COUNTERTOP - P. LAM. ON 3/4" PLYWOOD
06402.X0	WORK BENCH (DEPTH)
07901.H1	5/8" BEAD OF DE NEFF SWELLSEAL WA MASTIC
07901.H2	CONCENTRATED DRY PAC
08360.A0	OVERHEAD SECTIONAL DOOR
09255.A1	GYPSUM BOARD (THICKNESS)
09255.H0	METAL STUD
09255.H1	METAL STUDS (SIZE, SPACING)
09255.M2	METAL CORNER BEAD (TYP)
10100.C0	MARKER BOARD (L X H)
10425.A1	OIL SIGNAGE
10425.B1	WELDING SIGNAGE
10425.C1	ACCESSIBLE SIGNAGE
10425.D1	ACCESSIBLE/UNISEX RESTROOM SIGNAGE
10500.B0	METAL STORAGE CABINETS
10522.A0	FIRE EXTINGUISHER
10800.B1	SEMI-RECESSED PAPER TOWEL DISPENSER & WASTE RECEPTACLE
10800.D0	MOP RACK
11151.A0	MOBILE LIFT
12511.A0	HORIZONTAL LOUVER BLINDS
13125.E8	CORNER TRIM
13125.F0	METAL WALL PANEL
13125.L1	STEEL COLUMN - PAINTED
13125.R0	INSULATION & VAPOR BARRIER (R-VALUE)
14620.A0	TROLLEY HOIST (SIZE) RE: STRUCTURAL
15410.C0	UTILITY SINK
15410.D1	FLOOR SINK
15410.E0	TRENCH DRAIN
15412.A0	EMERGENCY SHOWER & EYE WASH
15452.A1	DRINKING FOUNTAIN
15490.C0	WASTE OIL PIT
15490.D0	600 GAL WASTE OIL TANK - O.F.C.I.
15491.A0	AIR COMPRESSOR
15491.C0	OVERHEAD HOSE REEL

GENERAL NOTES

1. FIELD VERIFY ALL EXISTING CONDITIONS AND THEIR COMPATIBILITY WITH NEW CONSTRUCTION PRIOR TO THE COMMENCEMENT OF WORK. COORDINATE DISCREPANCIES WITH ARCHITECT.

2. DO NOT SCALE DRAWINGS.

3. SEE CIVIL, STRUCTURAL, MECHANICAL AND ELECTRICAL DRAWINGS FOR MORE INFORMATION.

4. PROVIDE BACKING BEHIND ALL SURFACE MOUNTED EQUIPMENT AND/OR FIXTURES PER DETAIL C3/AE401

5. SEE SHEET A1/AE501 FOR WALL TYPES.

6. TWO BOLLARDS REQUIRED PER SECTIONAL DOOR JAMB. ALIGN WITH DOOR JAMB, SEE DETAILS A5 & B5/AE301.

7. SEE SHEET AE602 FOR WINDOW FRAME TYPES & GLAZING SCHED.

8. SEE DETAIL A1/AE101 FOR WATER PROOFING CONSTRUCTION JOINT DETAIL. SEE STRUCT. DRAWINGS FOR CONSTRUCTION/CONTROL JOINT LOCATIONS IN CONC. SLAB.

9. ALL DIMENSIONS ARE TO FACE OF WALL, UNLESS NOTED OTHERWISE.

10. COORDINATE LOCATION & SIZE OF CONCRETE PIER WITH THE STRUCTURAL ENGINEER AND THE METAL BUILDING MANUFACTURER TO MEET ALL ADA REQUIREMENTS.

11. SEE STRUCTURAL DRAWINGS FOR CONTROL JOINT LOCATIONS IN CONCRETE SLAB.

12. COLUMNS SHOWN ON PLAN ARE SCHEMATIC ONLY. CONTRACTOR TO GET EXACT SIZES AND LOCATIONS FROM APPROVED METAL BUILDING SHOP DRAWINGS.

CLIENT

VERNAL
MAINTENANCE FACILITY
STATION #3437
2773 NORTH VERNAL AVENUE
VERNAL, UTAH 84078

DESIGNER

ARCHIPLEX GROUP
architecture · planning · design services
1135 South West Temple, Ste. A
Salt Lake City, UT 84101
P:(801) 961-7070
F:(801) 961-7373

CONSULTANTS

PROFESSIONAL SEAL

STATE OF UTAH
RALPH M. STANISLAW
95-310818-0301
LICENSED ARCHITECT

ISSUE

MARK	DATE	DESCRIPTION
	6-27-06	RE-BID SET
	3-31-06	CONSTRUCTION DOCUMENTS
	1-20-06	FINAL REVIEW SET
	8-22-05	PRELIMINARY SUBMITTAL

DFCM PROJECT NO:	05056900
ARCHIPLEX PROJECT NO:	050011.01
DRAWN BY:	K. PHILLIPS
CHECKED BY:	R. STANISLAW
SCALE:	1/8"=1'-0"
DATE:	JUNE 27, 2006

KEY PLAN

SHEET TITLE

FIRST FLOOR AND MEZZANINE PLANS

AE101

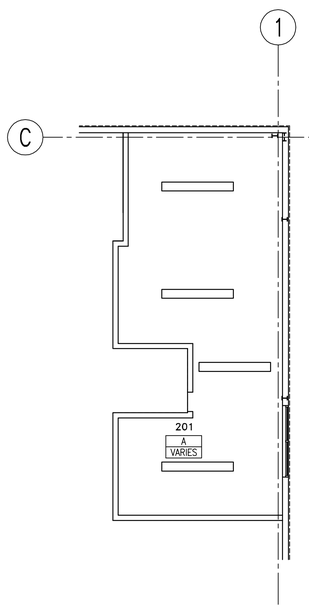

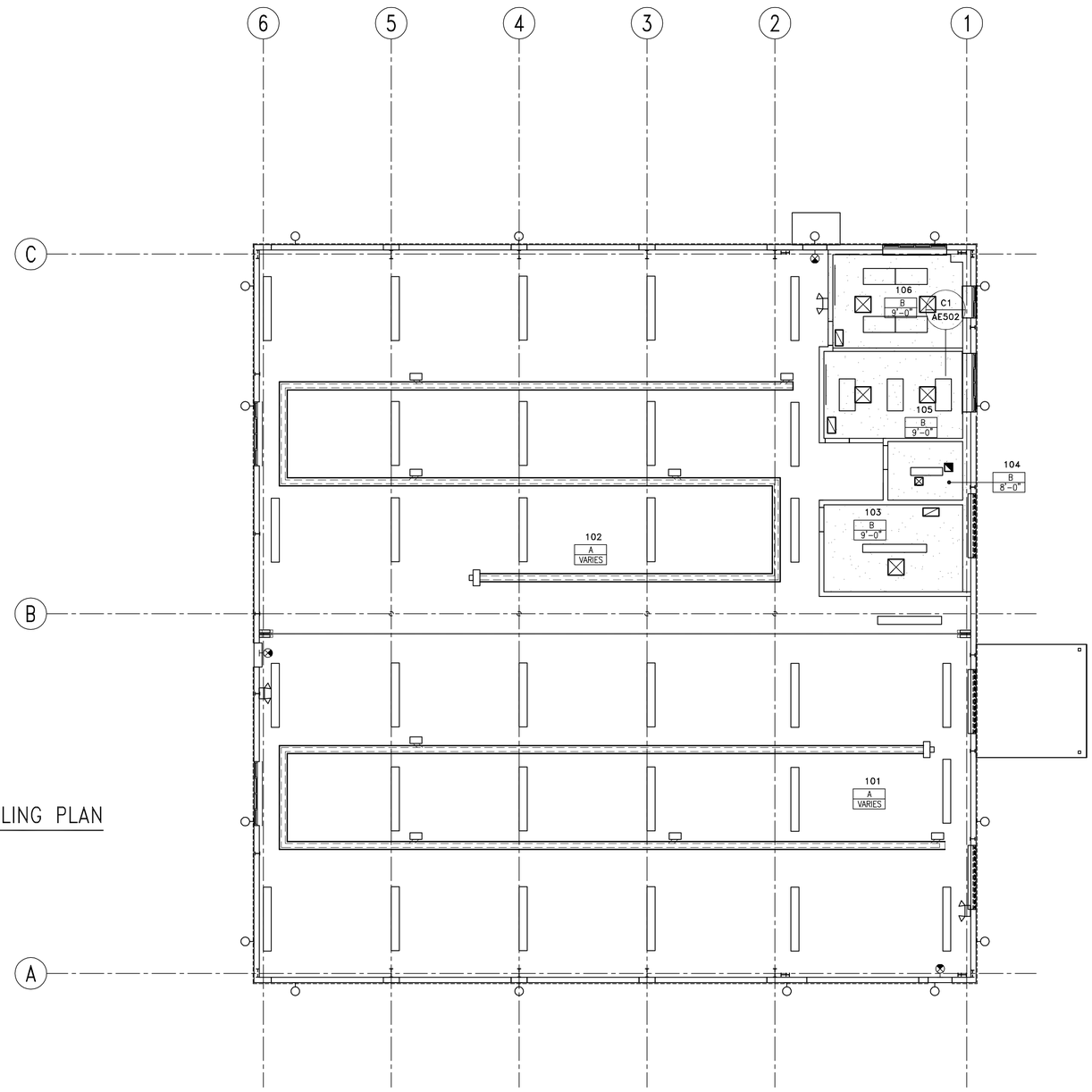

8' 6' 4' 2' 0' 4' 8' 16'

B1 MECH. MEZZANINE REFLECTED CEILING PLAN

AE121 REF. SCALE: 1/8" = 1'-0"

A2 FIRST FLOOR REFLECTED CEILING PLAN

AE121 REF. SCALE: 1/8" = 1'-0"

8' 6' 4' 2' 0' 4' 8' 16'

PLAN NORTH

REFLECTED CEILING PLAN LEGEND

ROOM # — 131
TYPE — E
ELEVATION A.F.F. — VARIES

TYPE A	EXPOSED STRUCTURE
TYPE B	5/8" GYPSUM BOARD ON METAL SUSPENSION SYSTEM – COLOR TO MATCH WALL

GENERAL NOTES

1. SEE MECHANICAL AND ELECTRICAL DRAWINGS FOR ADDITIONAL LIGHTING AND DIFFUSER INFORMATION.

2. CEILING HEIGHT SHOWN IN ROOM TAG INDICATES HEIGHT OF DOMINANT CEILING FINISH. SEE NOTES FOR ADDITIONAL CEILING FINISH INFORMATION.

3. SEE DETAIL B1/A502 FOR SEISMIC BRACING DETAIL.

CEILING SYMBOLS

- PAINTED GYP. BD. CEILING
- 2' x 4' FLUORESCENT LIGHT FIXTURE, SEE ELECT. DRAWINGS FOR TYPE.
- 1' x 4' FLUORESCENT LIGHT FIXTURE
- 1' x 4' FLUORESCENT LIGHT FIXTURE EMERGENCY LIGHT FIXTURE RE: ELECT.
- 1' x 8' FLUORESCENT LIGHT FIXTURE
- 1' x 8' FLUORESCENT LIGHT FIXTURE EMERGENCY LIGHT FIXTURE RE: ELECT.
- RETURN AIR GRILLE – HORIZONTAL (SEE MECH. DRAWINGS)
- SUPPLY AIR GRILLE – HORIZONTAL (SEE MECH. DRAWINGS)
- RADIANT HEAT SYSTEM (SEE MECH. DRAWINGS)
- EXHAUST FAN (SEE MECH. DRAWINGS)
- EXIT SIGN
- UNIT HEATER (SEE MECH. DRAWINGS)
- EMERGENCY FLOOD LIGHTS
- EXTERIOR WALL MOUNTED LIGHTS

CLIENT

VERNAL
MAINTENANCE FACILITY
STATION #3437
2773 NORTH VERNAL AVENUE
VERNAL, UTAH 84078

DESIGNER

ARCHIPLEX GROUP
architecture · planning · design services
1135 South West Temple, Ste. A
Salt Lake City, UT 84101
P:(801) 961-7070
F:(801) 961-7373

CONSULTANTS

PROFESSIONAL SEAL

STATE OF UTAH
RALPH M. STANISLAW
95-310818-0301
LICENSED ARCHITECT

ISSUE

MARK	DATE	DESCRIPTION
	6-27-06	RE-BID SET
	3-31-06	CONSTRUCTION DOCUMENTS
	1-20-06	FINAL REVIEW SET
	8-22-05	PRELIMINARY SUBMITTAL

DFCM PROJECT NO:	05056900
ARCHIPLEX PROJECT NO:	050011.01
DRAWN BY:	K. PHILLIPS
CHECKED BY:	R. STANISLAW
SCALE:	1/8"=1'-0"
DATE:	JUNE 27, 2006

KEY PLAN

SHEET TITLE

FIRST FLOOR AND MEZZANINE REFLECTED CEILING PLANS

AE121

KEYNOTES

13125.B0	STANDING SEAM METAL ROOF (SLOPE 1:12)
13125.C0	METAL RAIN GUTTER W/DOWNSPOUTS
13125.B1	STANDING SEAM METAL ROOF RIDGE
13125.B2	STANDING SEAM METAL CANOPY

GENERAL NOTES

1. FIELD VERIFY ALL EXISTING CONDITIONS AND THEIR COMPATIBILITY WITH NEW CONSTRUCTION PRIOR TO THE COMMENCEMENT OF WORK. COORDINATE DISCREPANCIES WITH ARCHITECT.

2. DO NOT SCALE DRAWINGS.

3. SEE CIVIL, STRUCTURAL, MECHANICAL AND ELECTRICAL DRAWINGS FOR MORE INFORMATION.

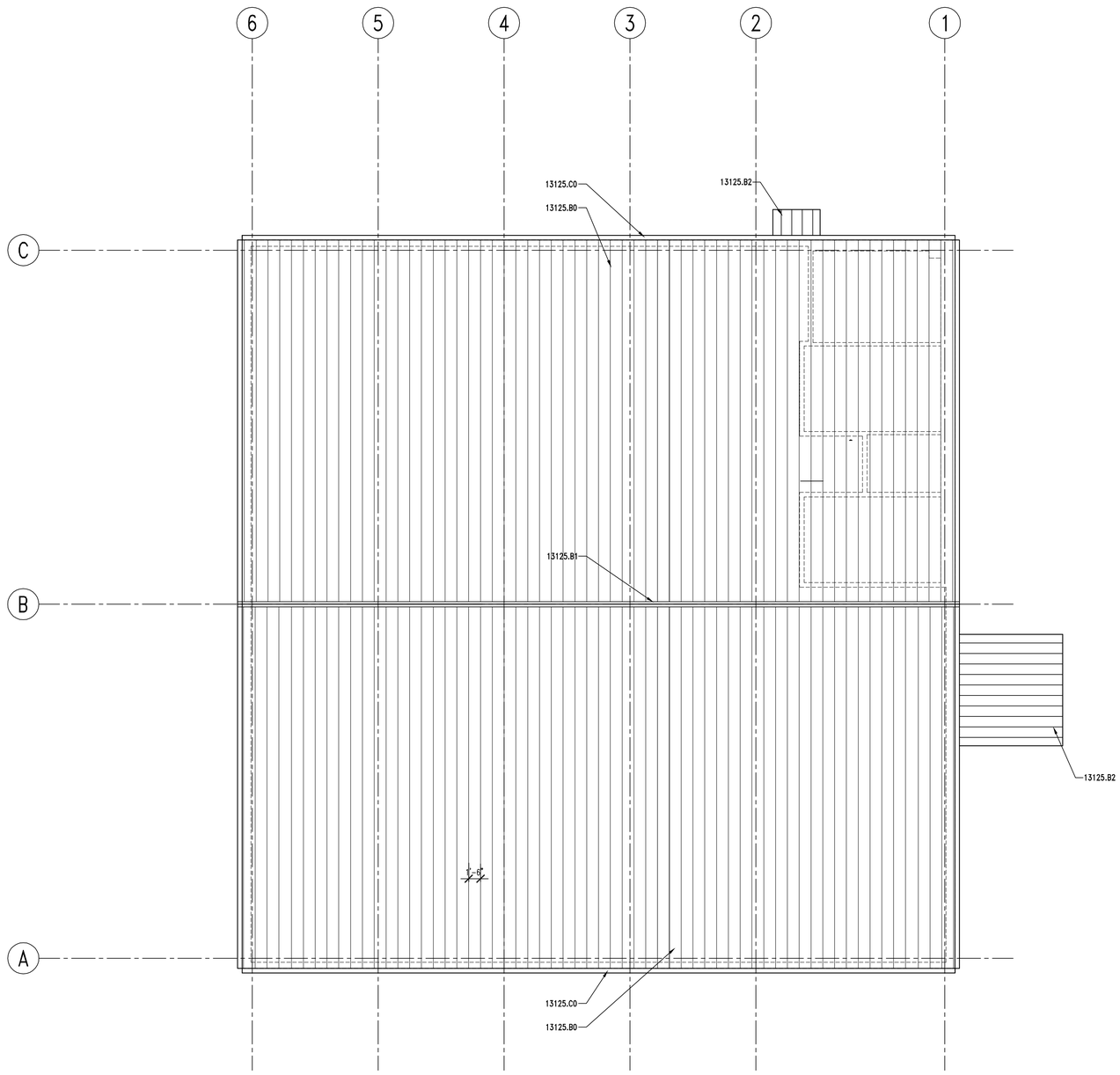

A2 | ROOF PLAN

AE141 | REF.

SCALE: 1/8" = 1'-0"

8' 6' 4' 2' 0' 4' 8' 16'

PLAN NORTH

CLIENT

VERNAL
MAINTENANCE FACILITY
STATION #3437
2773 NORTH VERNAL AVENUE
VERNAL, UTAH 84078

DESIGNER

ARCHIPLEX GROUP
architecture · planning · design services
1135 South West Temple, Ste. A
Salt Lake City, UT 84101
P:(801) 961-7070
F:(801) 961-7373

CONSULTANTS

PROFESSIONAL SEAL

STATE OF UTAH
RALPH M. STANISLAW
95-310818-0301
LICENSED ARCHITECT

ISSUE

MARK	DATE	DESCRIPTION
	6-27-06	RE-BID SET
	3-31-06	CONSTRUCTION DOCUMENTS
	1-20-06	FINAL REVIEW SET
	8-22-05	PRELIMINARY SUBMITTAL

DFCM PROJECT NO:	05056900
ARCHIPLEX PROJECT NO:	050011.01
DRAWN BY:	K. PHILLIPS
CHECKED BY:	R. STANISLAW
SCALE:	1/8"=1'-0"
DATE:	JUNE 27, 2006

KEY PLAN

SHEET TITLE

ROOF PLAN

AE141

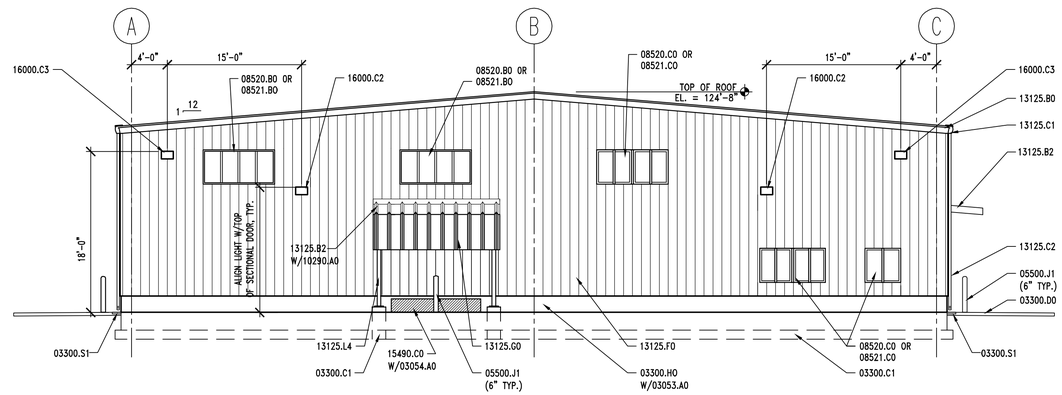

B2 | EXTERIOR ELEVATION – WEST

AE201 | REF. AE101 SCALE: 1/8" = 1'-0"

8' 6' 4' 2' 0' 4' 8' 16'

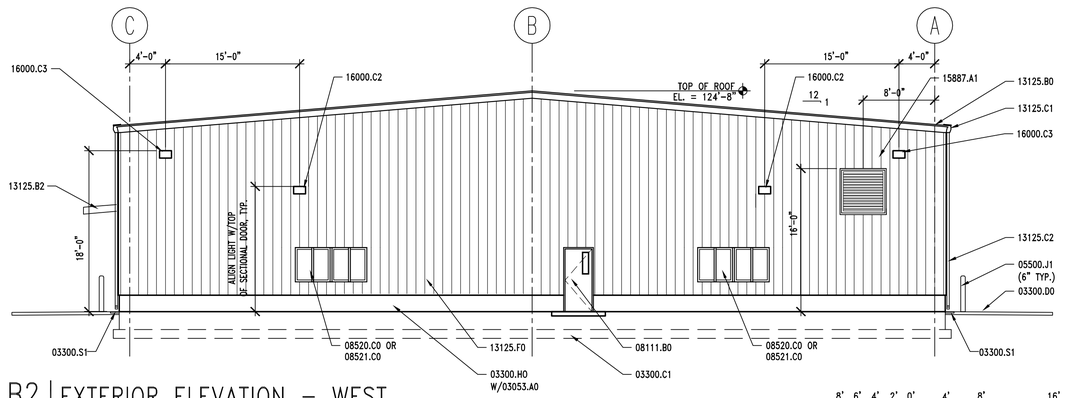

B2 | EXTERIOR ELEVATION – WEST

AE201 | REF. AE101 SCALE: 1/8" = 1'-0"

8' 6' 4' 2' 0' 4' 8' 16'

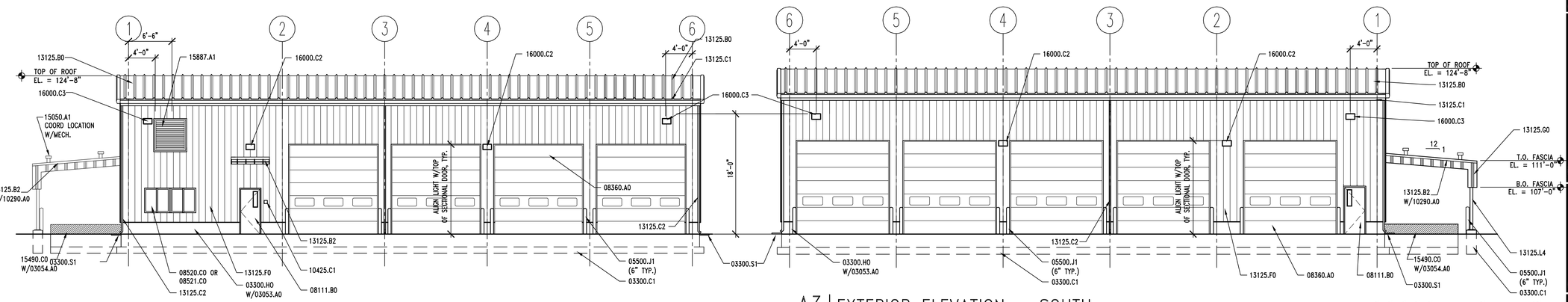

A3 | EXTERIOR ELEVATION – SOUTH

AE201 | REF. AE101 SCALE: 1/8" = 1'-0"

8' 6' 4' 2' 0' 4' 8' 16'

KEYNOTES

03053.A0	CONCRETE WATER PROOFING ADMIXTURE
03054.A0	OLIOPHOBIC SEALER, OVER CONCRETE WATER PROOFING SYSTEM
03300.C1	FOOTING–RE: STRUCTURAL
03300.D0	CONCRETE PAD
03300.H0	FOUNDATION WALL, RE: STRUCTURAL
03300.S1	SPLASH BLOCK
05500.J1	PIPE BOLLARD (DIAMETER) GALV. AND PAINTED
08111.B0	HOLLOW METAL DOOR
08360.A0	OVERHEAD SECTIONAL DOOR
08520.B0	FIXED WINDOW
08520.C0	ALUM. WINDOW W/SLIDING GLASS PANEL
08521.B0	FIXED VINYL WINDOW
08521.C0	VINYL WINDOW W/SLIDING GLASS PANEL
10290.A0	BIRD CONTROL NETTING
10425.C1	ACCESSIBLE SIGNAGE – SEE DETAIL D3/AE502
13125.B0	STANDING SEAM METAL ROOF
13125.B2	STANDING SEAM METAL CANOPY
13125.C1	METAL RAIN GUTTER
13125.C2	DOWNSPOUT
13125.F0	METAL WALL PANEL
13125.G0	METAL FACIA
13125.L4	STEEL COLUMN – PRIMED AND PAINTED
15050.A1	MECH. PENETRATIONS
15490.C0	WASTE OIL PIT
15887.A1	LOUVER W/ BIRD SCREEN
16000.C2	EXTERIOR WALL MOUNTED LIGHTS
16000.C3	EXTERIOR WALL MOUNTED FLOOD LIGHTS

EXTERIOR COLOR SCHEDULE

(13125.B0, G0, C1 & E3) METAL ROOF, FASCIA, GUTTERS & RAKE TRIM: KYNAR 500 "SIERRA TAN" OR EQUAL
(13125.F0) METAL WALL PANEL: KYNAR 500 "ALMOND" OR EQUAL
(13125.C2) DOWN SPOUTS: PREFINISHED TO MATCH METAL WALL PANEL @ GRID 3.
(13125.C2) DOWN SPOUTS: PREFINISHED TO MATCH CORNER TRIM @ GRIDS 1 & 6.
(08111.A0, B0 & 08360.A0) DOORS & FRAMES: KYNAR 500 "BONE WHITE" OR EQUAL
(05500.J1) BOLLARDS: OSHA SAFETY YELLOW
(08520.B0) WINDOW FRAMES: KYNAR 500 "BONE WHITE" OR EQUAL
(15490.C0) WASTE OIL PIT: OSHA SAFETY RED
(13125.L4 & M4) COLUMNS & BEAMS @ CANOPY: KYNAR 500 "ALMOND" OR EQUAL

GENERAL NOTES

1. FIELD VERIFY ALL EXISTING CONDITIONS AND THEIR COMPATIBILITY WITH NEW CONSTRUCTION PRIOR TO THE COMMENCEMENT OF WORK. COORDINATE DISCREPANCIES WITH ARCHITECT.

2. DO NOT SCALE DRAWINGS.

3. SEE SHEET AE602 FOR WINDOW TYPES AND DETAILS.

4. SEE CIVIL, STRUCTURAL, MECHANICAL AND ELECTRICAL DRAWINGS FOR MORE INFORMATION.

CLIENT

VERNAL
MAINTENANCE FACILITY
STATION #3437
2773 NORTH VERNAL AVENUE
VERNAL, UTAH 84078

DESIGNER

ARCHIPLEX GROUP
architecture · planning · design services
1135 South West Temple, Ste. A
Salt Lake City, UT 84101
P:(801) 961–7070
F:(801) 961–7373

CONSULTANTS

PROFESSIONAL SEAL

STATE OF UTAH
RALPH M. STANISLAW
95–310818–0301
LICENSED ARCHITECT

ISSUE

MARK	DATE	DESCRIPTION
	6–27–06	RE–BID SET
	3–31–06	CONSTRUCTION DOCUMENTS
	1–20–06	FINAL REVIEW SET
	8–22–05	PRELIMINARY SUBMITTAL

DFCM PROJECT NO:	05056900
ARCHIPLEX PROJECT NO:	050011.01
DRAWN BY:	K. PHILLIPS
CHECKED BY:	R. STANISLAW
SCALE:	1/8"=1'–0"
DATE:	JUNE 27, 2006

KEY PLAN

SHEET TITLE

EXTERIOR ELEVATIONS

AE201

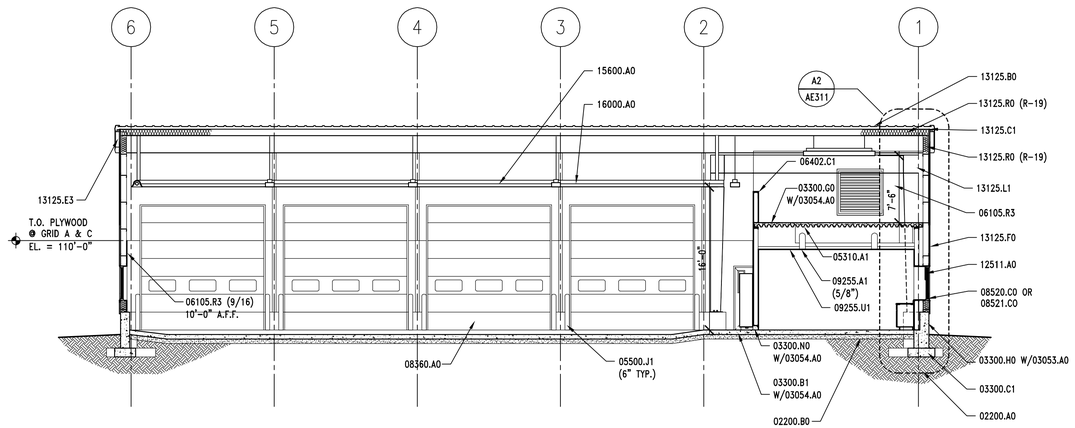

C2 | BUILDING SECTION

AE301 | REF. AE101 | SCALE: 1/8" = 1'-0"

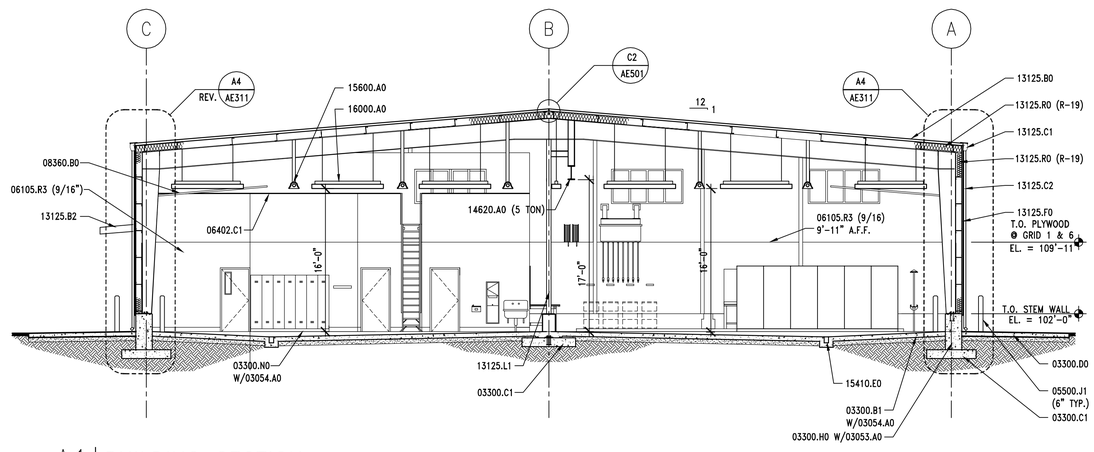

A1 | BUILDING SECTION

AE301 | REF. AE101 | SCALE: 1/8" = 1'-0"

KEYNOTES

02200.A0	COMPACTED FILL
02200.B0	GRAVEL BASE
02512.A0	ZERO VOIDS ASPHALT PAVING
02513.A0	ASPHALT CONCRETE PAVING
03053.A0	CONCRETE WATER PROOFING ADMIXTURE
03054.A0	OLIOPHOBIC SEALER, OVER CONCRETE WATER PROOFING SYSTEM
03300.A1	CONCRETE SLAB-ON-GRADE – RE: STRUCTURAL
03300.B1	CONCRETE SLAB – RE:STRUCTURAL
03300.C1	FOOTING-RE: STRUCTURAL
03300.D0	CONCRETE PAD
03300.G0	CONCRETE OVER METAL DECK – RE:STRUCTURAL
03300.H0	FOUNDATION WALL, RE: STRUCTURAL
03300.K1	CONCRETE PIPE BASE
03300.L1	30# FELT
03300.N0	CONCRETE CURB
05310.A1	METAL DECK – RE: STRUCTURAL
05500.J1	PIPE BOLLARD (DIAMETER) GALV. AND PAINTED
06105.R3	G1S A/C PLYWOOD (THICKNESS)
06402.C1	PAINT GRADE WOOD CAP (THICK.)
08360.A0	OVERHEAD SECTIONAL DOOR
08360.B0	DOOR TRACK
08520.C0	ALUM. WINDOW W/SLIDING GLASS PANEL
08521.C0	VINYL WINDOW W/SLIDING GLASS PANEL
09255.A1	GYPSUM BOARD (THICKNESS)
09255.U1	SUSPENDED CEILING SYSTEM
12511.A0	HORIZONTAL LOUVER BLINDS
13125.B0	STANDING SEAM METAL ROOF
13125.B2	STANDING SEAM METAL CANOPY
13125.C1	METAL RAIN GUTTER
13125.C2	DOWNSPOUT
13125.E3	RAKE TRIM
13125.F0	METAL WALL PANEL
13125.L1	STEEL COLUMN – PAINTED
13125.R0	INSULATION & VAPOR BARRIER (R-VALUE)
14620.A0	TROLLEY HOIST (SIZE) – RE: STRUCTURAL
15410.E0	TRENCH DRAIN
15600.A0	NATURAL GAS RADIANT HEATING SYSTEM
16000.A0	INTERIOR LIGHTS

GENERAL NOTES

1. FIELD VERIFY ALL EXISTING CONDITIONS AND THEIR COMPATIBILITY WITH NEW CONSTRUCTION PRIOR TO THE COMMENCEMENT OF WORK. COORDINATE DISCREPANCIES WITH ARCHITECT.

2. DO NOT SCALE DRAWINGS.

3. SEE SHEET AE602 FOR WINDOW TYPES AND DETAILS.

4. SEE CIVIL, STRUCTURAL, MECHANICAL AND ELECTRICAL DRAWINGS FOR MORE INFORMATION.

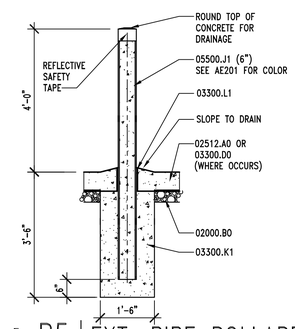

B5 | EXT. PIPE BOLLARD DTL.

AE301 | REF. AE101 | SCALE: 1/2" = 1'-0"

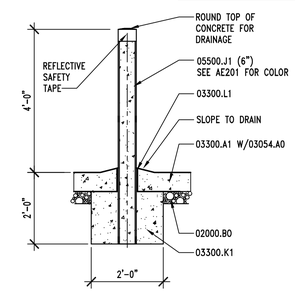

A5 | INT. PIPE BOLLARD DTL.

AE301 | REF. AE101 | SCALE: 1/2" = 1'-0"

CLIENT

VERNAL
MAINTENANCE FACILITY
STATION #3437
2773 NORTH VERNAL AVENUE
VERNAL, UTAH 84078

DESIGNER

ARCHIPLEX GROUP
architecture · planning · design services
1135 South West Temple, Ste. A
Salt Lake City, UT 84101
P:(801) 961-7070
F:(801) 961-7373

CONSULTANTS

PROFESSIONAL SEAL

STATE OF UTAH
RALPH M. STANISLAW
95-310818-0301
LICENSED ARCHITECT

ISSUE

MARK	DATE	DESCRIPTION
	6-27-06	RE-BID SET
	3-31-06	CONSTRUCTION DOCUMENTS
	1-20-06	FINAL REVIEW SET
	8-22-05	PRELIMINARY SUBMITTAL

DFCM PROJECT NO:	05056900
ARCHIPLEX PROJECT NO:	050011.01
DRAWN BY:	K. PHILLIPS
CHECKED BY:	R. STANISLAW
SCALE:	1/8"=1'-0"
DATE:	JUNE 27, 2006

KEY PLAN

SHEET TITLE

BUILDING SECTIONS
AND DETAILS

AE301

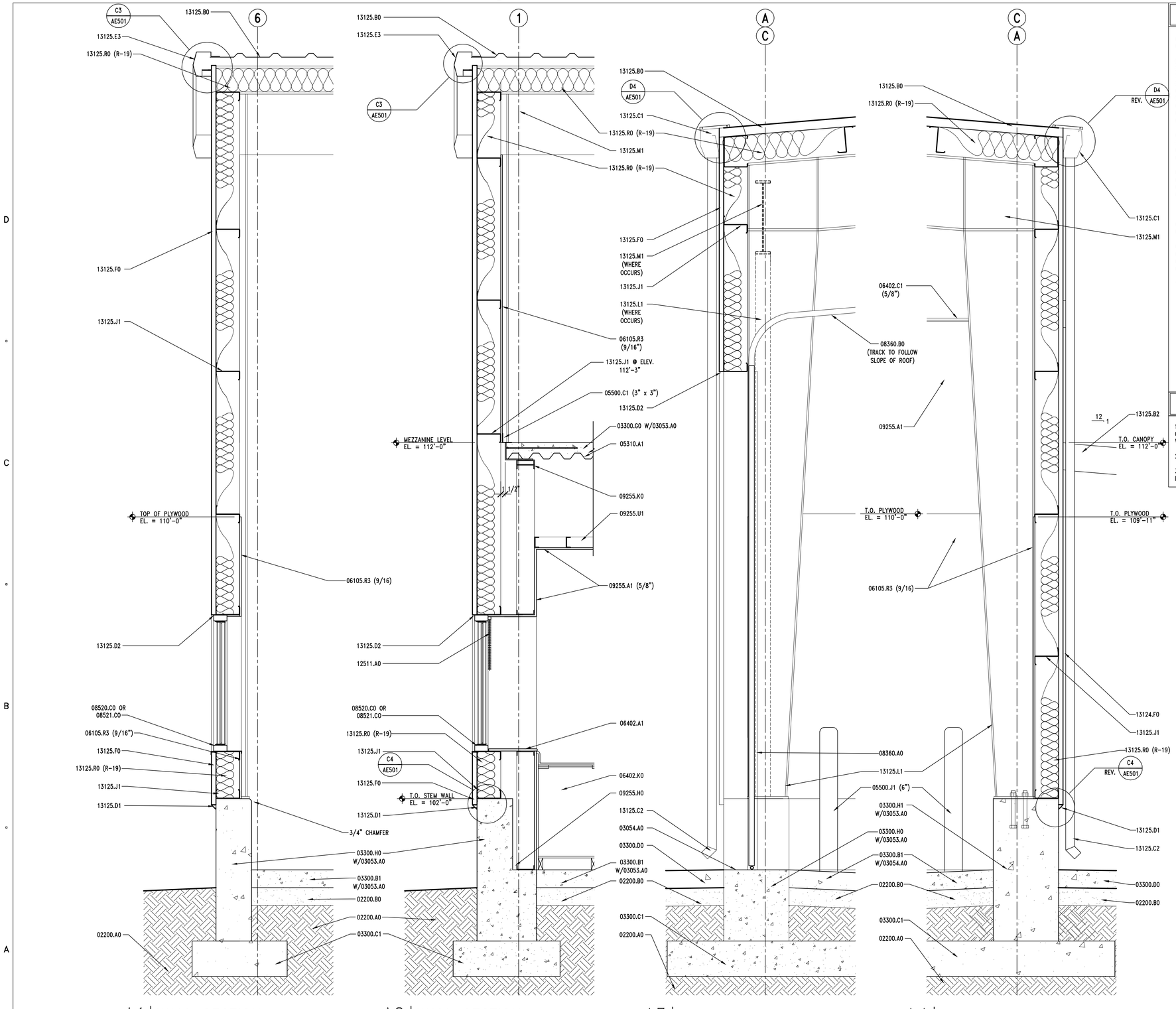

A1 | WALL SECTION

AE311 | REF. AE101, AE301 | SCALE: 3/4" = 1'-0"

A2 | WALL SECTION

AE311 | REF. AE101, AE301 | SCALE: 3/4" = 1'-0"

A3 | WALL SECTION

AE311 | REF. AE101, AE301 | SCALE: 3/4" = 1'-0"

A4 | WALL SECTION

AE311 | REF. AE101, AE301 | SCALE: 3/4" = 1'-0"

KEYNOTES

02200.A0	COMPACTED FILL
02200.B0	GRAVEL BASE
03053.A0	CONCRETE WATER PROOFING ADMIXTURE
03054.A0	OLIOPHOBIC SEALER, OVER CONCRETE WATER PROOFING SYSTEM
03300.A1	CONCRETE SLAB-ON-GRADE – RE: STRUCTURAL
03300.B1	CONCRETE SLAB – RE:STRUCTURAL
03300.C1	FOOTING-RE: STRUCTURAL
03300.D0	CONCRETE PAD
03300.H0	FOUNDATION WALL, RE: STRUCTURAL
03300.H1	CONCRETE PIER, RE: STRUCTURAL
03300.G0	CONCRETE OVER METAL DECK – RE:STRUCTURAL
05310.A1	METAL DECK – RE: STRUCTURAL
05500.C1	SHEET METAL ANGLE – 22 GA. – GALVANIZED (SIZE)
05500.E3	BENT PLATE – SEE STRUCTURAL
05500.J1	PIPE BOLLARD (DIAMETER) GALV. AND PAINTED
06105.R3	G1S A/C PLYWOOD (THICKNESS)
06402.A1	3/4" PAINTED WOOD SILL
06402.C1	PAINT GRADE WOOD CAP (THICK.)
06402.K0	BASE UNIT (FINISH)
08360.A0	OVERHEAD SECTIONAL DOOR
08360.B0	DOOR TRACK
08520.C0	ALUM. WINDOW W/SLIDING GLASS PANEL
08521.C0	VINYL WINDOW W/SLIDING GLASS PANEL
09255.A1	GYPSUM BOARD (THICKNESS)
09255.H0	METAL STUD
09255.K0	DOUBLE STUDS
09255.U1	SUSPENDED CEILING SYSTEM
12511.A0	HORIZONTAL LOUVER BLINDS
13125.B0	STANDING SEAM METAL ROOF
13125.B2	STANDING SEAM METAL CANOPY
13125.C1	METAL RAIN GUTTER
13125.C2	DOWNSPOUT
13125.D1	METAL DRIP FLASHING
13125.D2	METAL HEAD FLASHING
13125.E3	RAKE TRIM
13125.F0	METAL WALL PANEL
13125.L1	STEEL COLUMN – PAINTED
13125.M1	STEEL BEAM – PAINTED
13125.J1	STRUCTURAL GIRT
13125.R0	INSULATION & VAPOR BARRIER (R-VALUE)

GENERAL NOTES

1. FIELD VERIFY ALL EXISTING CONDITIONS AND THEIR COMPATIBILITY WITH NEW CONSTRUCTION PRIOR TO THE COMMENCEMENT OF WORK. COORDINATE DISCREPANCIES WITH ARCHITECT.

2. DO NOT SCALE DRAWINGS.

3. SEE CIVIL, STRUCTURAL, MECHANICAL AND ELECTRICAL DRAWINGS FOR MORE INFORMATION.

CLIENT

VERNAL
MAINTENANCE FACILITY
STATION #3437
2773 NORTH VERNAL AVENUE
VERNAL, UTAH 84078

DESIGNER

ARCHIPLEX GROUP
architecture · planning · design services
1135 South West Temple, Ste. A
Salt Lake City, UT 84101
P:(801) 961-7070
F:(801) 961-7373

CONSULTANTS

PROFESSIONAL SEAL

STATE OF UTAH
RALPH M. STANISLAW
95-310818-0301
LICENSED ARCHITECT

ISSUE

MARK	DATE	DESCRIPTION
	6-27-06	RE-BID SET
	3-31-06	CONSTRUCTION DOCUMENTS
	1-20-06	FINAL REVIEW SET
	8-22-05	PRELIMINARY SUBMITTAL

DFCM PROJECT NO:	05056900
ARCHIPLEX PROJECT NO:	050011.01
DRAWN BY:	K. PHILLIPS
CHECKED BY:	R. STANISLAW
SCALE:	1/8"=1'-0"
DATE:	JUNE 27, 2006

KEY PLAN

SHEET TITLE

WALL SECTIONS

AE311

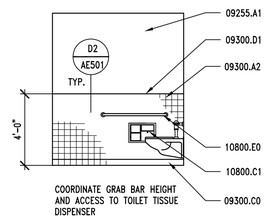

D1 | RESTROOM ELEVATION

AE401 | REF. AE401 | SCALE: 1/4" = 1'-0"

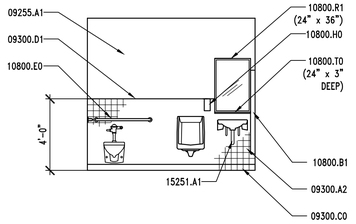

D2 | RESTROOM ELEVATION

AE401 | REF. AE401 | SCALE: 1/4" = 1'-0"

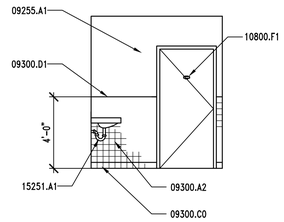

D3 | RESTROOM ELEVATION

AE401 | REF. AE401 | SCALE: 1/4" = 1'-0"

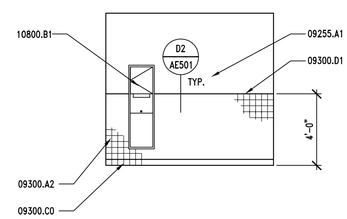

D4 | RESTROOM ELEVATION

AE401 | REF. AE401 | SCALE: 1/4" = 1'-0"

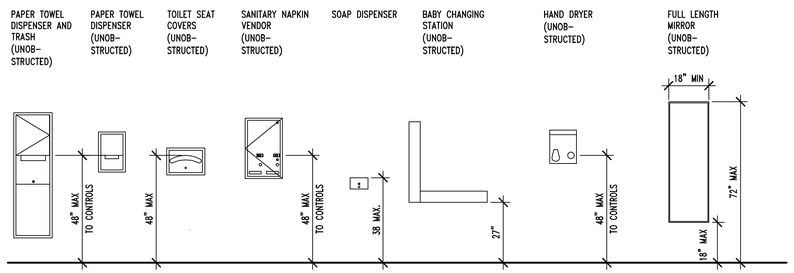

C1 | RESTROOM MOUNTING HEIGHTS DETAIL

AE401 | REF. AE401 | SCALE: 3/8" = 1'-0"

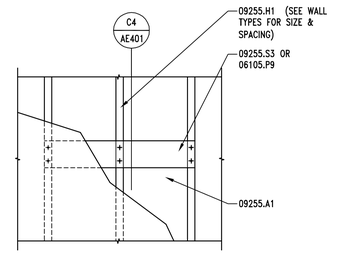

C3 | MOUNTING PLATE ELEV.

AE401 | REF. AE401 | SCALE: 3/4" = 1'-0"

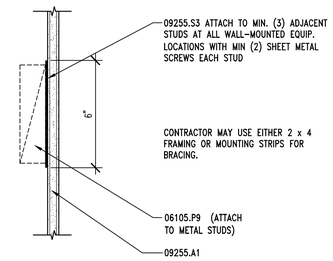

C4 | MOUNTING PLATE SECTION

AE401 | REF. AE401 | SCALE: 3" = 1'-0"

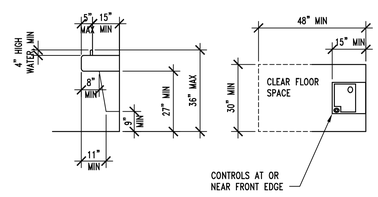

B1 | DRINKING FOUNTAIN DETAIL

AE401 | REF. AE401 | SCALE: 3/8" = 1'-0"

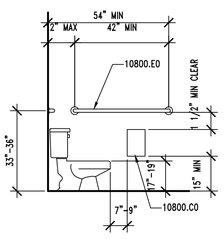

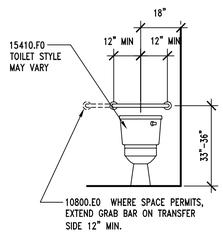

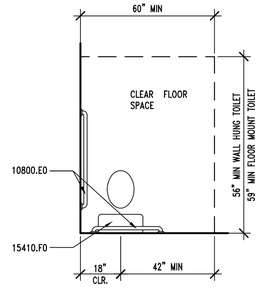

B2 | ACCESSIBLE TOILET DETAIL

AE401 | REF. AE401 | SCALE: 3/8" = 1'-0"

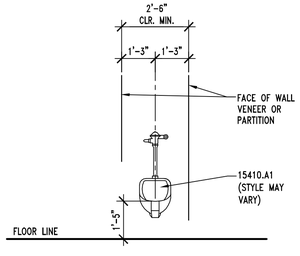

A1 | ACCESSIBLE URINAL DETAIL

AE401 | REF. AE401 | SCALE: 3/8" = 1'-0"

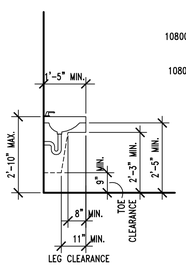

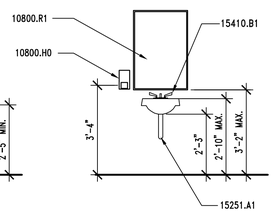

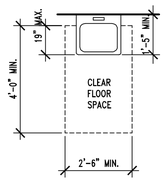

A2 | ACCESSIBLE SINK DETAIL

AE401 | REF. AE401 | SCALE: 3/8" = 1'-0"

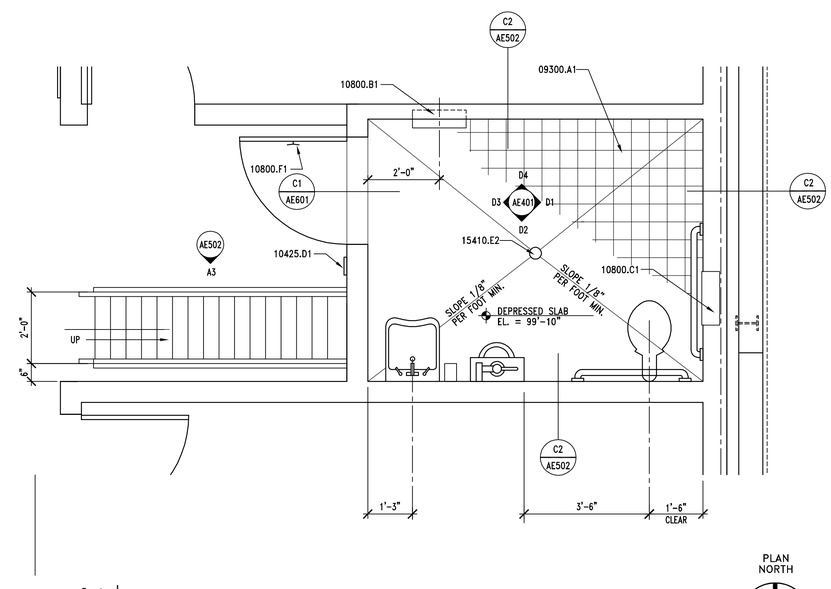

A4 | ENLARGED RESTROOM PLAN

AE401 | REF. AE101 | SCALE: 1/2" = 1'-0"

KEYNOTES

06105.P9 2 x FRAMING, FIRE TREATED

09255.A1 GYPSUM BOARD
09255.H1 METAL STUDS (SIZE, SPACING)
09255.S3 18 GA. METAL MOUNTING STRIPS
09300.A1 UNGLAZED MOSAIC FLOOR TILE TYPE #1
09300.A2 UNGLAZED WALL TILE TYPE #2
09300.C0 TILE BASE
09300.DI BULLNOSE TILE

10425.D1 ACCESSIBLE/UNISEX RESTROOM SIGNAGE
10800.B1 SEMI-RECESSED PAPER TOWEL DISPENSER & WASTE RECEPTACLE
10800.C1 RECESSED TOILET TISSUE DISPENSER/SAN. NAP. DISPOSAL
10800.E0 GRAB BAR
10800.F1 DOUBLE PRONG ROBE HOOK
10800.H0 SOAP DISPENSER
10800.R1 FRAMED MIRROR (SIZE)
10800.T0 METAL SHELF (SIZE)

15251.A1 PIPE INSULATION AT ALL EXPOSED PIPE
15410.A1 URINAL, ACCESSIBLE
15410.B1 SINK FAUCET W/ADA LEVER HANDLES
15410.E2 FLOOR DRAIN

GENERAL NOTES

1. FIELD VERIFY ALL EXISTING CONDITIONS AND THEIR COMPATIBILITY WITH NEW CONSTRUCTION PRIOR TO THE COMMENCEMENT OF WORK. COORDINATE DISCREPANCIES WITH ARCHITECT.

2. DO NOT SCALE DRAWINGS.

3. SEE CIVIL, STRUCTURAL, MECHANICAL AND ELECTRICAL DRAWINGS FOR MORE INFORMATION.

4. PROVIDE BACKING BEHIND ALL SURFACE MOUNTED EQUIPMENT AND/OR FIXTURES PER DETAIL C3/AE401

5. SEE C1/AE401 FOR TYPICAL FIXTURE MOUNTING HEIGHTS.

6. SEE DETAILS A1, A2, B1 & B2/AE401 FOR ADA TYPICAL DETAILS

CLIENT

VERNAL
MAINTENANCE FACILITY
STATION #3437
2773 NORTH VERNAL AVENUE
VERNAL, UTAH 84078

DESIGNER

ARCHIPLEX GROUP
architecture · planning · design services
1135 South West Temple, Ste. A
Salt Lake City, UT 84101
P:(801) 961-7070
F:(801) 961-7373

CONSULTANTS

PROFESSIONAL SEAL

STATE OF UTAH
RALPH M. STANISLAW
95-310818-0301
LICENSED ARCHITECT

ISSUE

MARK	DATE	DESCRIPTION
	6-27-06	RE-BID SET
	3-31-06	CONSTRUCTION DOCUMENTS
	1-20-06	FINAL REVIEW SET
	8-22-05	PRELIMINARY SUBMITTAL

DFCM PROJECT NO:	05056900
ARCHIPLEX PROJECT NO:	050011.01
DRAWN BY:	K. PHILLIPS
CHECKED BY:	R. STANISLAW
SCALE:	AS SHOWN
DATE:	JUNE 27, 2006

KEY PLAN

SHEET TITLE

ENLARGED RESTROOM FLOOR PLAN, INTERIOR ELEVATIONS AND DETAILS

AE401

GENERAL NOTES

1. FIELD VERIFY ALL EXISTING CONDITIONS AND THEIR COMPATIBILITY WITH NEW CONSTRUCTION PRIOR TO THE COMMENCEMENT OF WORK. COORDINATE DISCREPANCIES WITH ARCHITECT.

2. DO NOT SCALE DRAWINGS.

3. SEE CIVIL, STRUCTURAL, MECHANICAL AND ELECTRICAL DRAWINGS FOR MORE INFORMATION.

4. PROVIDE QUANTITY OF ADJUSTABLE SHELVING AS SHOWN IN ELEVATION.

5. SEE SHEET AE602 FOR PLASTIC LAMINATE COLORS.

6. UDOT WILL RELOCATE EXISTING OIL TANK TO NEW LOCATION SHOWN ON DRAWINGS. CONTRACTOR SHALL PROVIDE ALL RELATED HOOK-UPS, CANOPY & CONTAINMENT BASIN AS PART OF THIS BID.

KEYNOTES

03053.A0	CONCRETE WATER PROOFING ADMIXTURE
03054.A0	OLIOPHOBIC SEALER, OVER CONCRETE WATER PROOFING SYSTEM
03300.A1	CONCRETE SLAB-ON-GRADE – RE: STRUCTURAL
03300.D0	CONCRETE PAD (SIZE)
03300.H1	CONCRETE PIER, RE: STRUCTURAL
03300.N0	CONCRETE CURB (HEIGHT)
05500.J1	PIPE BOLLARD (DIAMETER) – GALV. & PAINTED
06105.R3	G1S A/C PLYWOOD (THICKNESS)
06105.V6	PEGBOARD (THICKNESS)
06402.H1	ADJUSTABLE SHELVES
06402.K0	BASE UNIT (FINISH)
06402.K3	BASE UNIT WITH DRAWERS (FINISH)
06402.X0	WORKBENCH
08111.B0	HOLLOW METAL DOOR
08360.A0	OVERHEAD SECTIONAL DOOR
10425.A1	OIL SIGNAGE
10500.A0	METAL LOCKERS
10500.B0	METAL STORAGE CABINETS
10522.A0	FIRE EXTINGUISHER
10800.B1	SEMI-RECESSED PAPER TOWEL DISPENSER & WASTE RECEPTACLE
10800.D0	MOP RACK
11151.A0	MOBILE LIFT
12511.A0	HORIZONTAL LOUVER BLINDS
13125.L1	STEEL COLUMN – PAINTED
15410.C0	UTILITY SINK
15410.E0	TRENCH DRAIN
15412.A0	EMERGENCY SHOWER & EYE WASH
15452.A1	DRINKING FOUNTAIN
15490.A0	WASTE OIL PUMP
15490.C0	WASTE OIL PIT
15490.D0	600 GAL WASTE OIL TANK – O.F.C.I.
15491.A0	AIR COMPRESSOR
15491.B0	OVERHEAD LUBE REEL
15491.C0	OVERHEAD HOSE REEL
15600.A0	NATURAL GAS RADIANT HEATING SYSTEM
16000.A0	INTERIOR LIGHTS

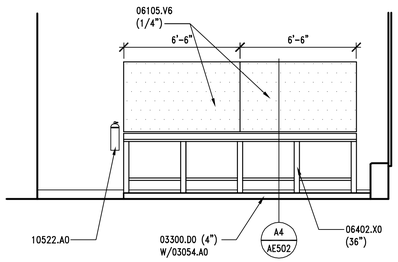

D1 INTERIOR ELEVATION

AE402 REF. AE402 SCALE: 1/4" = 1'-0"

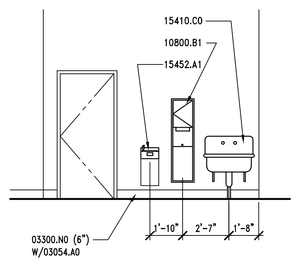

D2 INTERIOR ELEVATION

AE402 REF. AE101 SCALE: 1/4" = 1'-0"

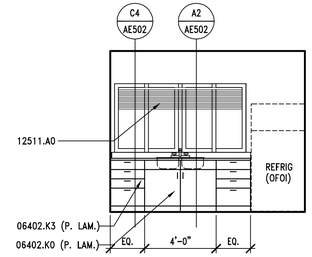

D3 INTERIOR ELEVATION

AE402 REF. AE101 SCALE: 1/4" = 1'-0"

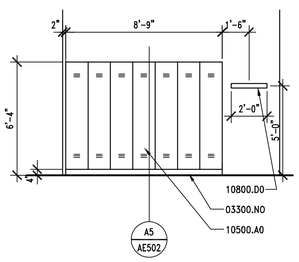

C1 LOCKER ELEVATION

AE402 REF. AE101 SCALE: 1/4" = 1'-0"

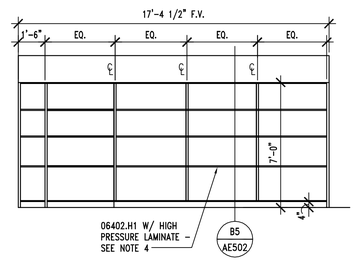

C2 TYP. SHELVING ELEVATION

AE402 REF. AE101 SCALE: 1/4" = 1'-0"

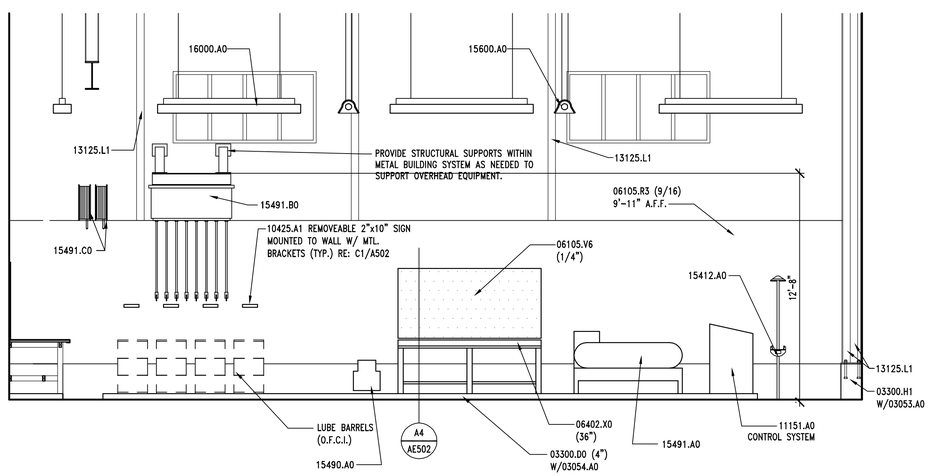

A1 INTERIOR ELEVATION

AE402 REF. AE402 SCALE: 1/4" = 1'-0"

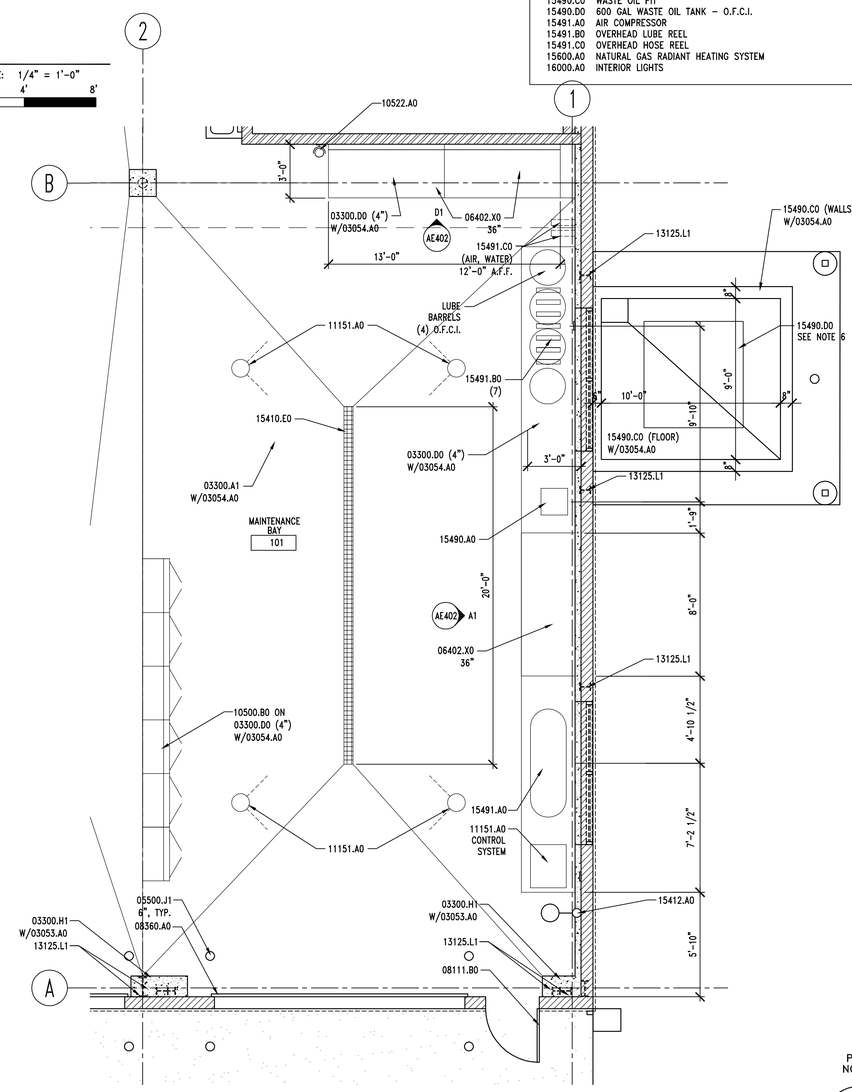

A4 ENLARGED MAINTENANCE BAY

AE402 REF. AE101 SCALE: 1/4" = 1'-0"

PLAN NORTH

CLIENT

VERNAL
MAINTENANCE FACILITY
STATION #3437
2773 NORTH VERNAL AVENUE
VERNAL, UTAH 84078

DESIGNER

ARCHIPLEX GROUP
architecture · planning · design services
1135 South West Temple, Ste. A
Salt Lake City, UT 84101
P:(801) 961-7070
F:(801) 961-7373

CONSULTANTS

PROFESSIONAL SEAL

STATE OF UTAH
RALPH M. STANISLAW
95-310818-0301
LICENSED ARCHITECT

ISSUE

MARK	DATE	DESCRIPTION
	6-27-06	RE-BID SET
	3-31-06	CONSTRUCTION DOCUMENTS
	1-20-06	FINAL REVIEW SET
	8-22-05	PRELIMINARY SUBMITTAL

DFCM PROJECT NO:	05056900
ARCHIPLEX PROJECT NO:	050011.01
DRAWN BY:	K. PHILLIPS
CHECKED BY:	R. STANISLAW
SCALE:	AS SHOWN
DATE:	JUNE 27, 2006

KEY PLAN

SHEET TITLE

ENLARGED MAINTENANCE BAY AND INTERIOR ELEVATIONS

AE402

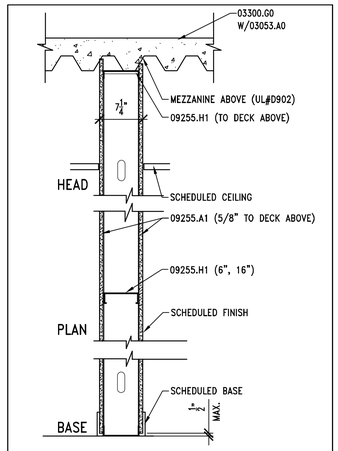

TYPE	OVERALL THICKNESS	STUD/ BLOCK SIZE	FIRE RATING	U.L. LISTING	S.T.C. RATING
G	AS NOTED	6"	N.R.	---	---

COMMENT

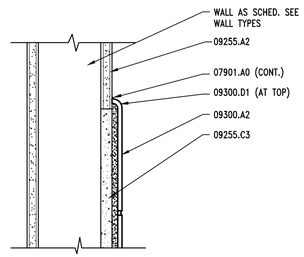

D2 | BULLNOSE TILE DETAIL

XVL-AEDTD2A501 AE501 REF. AE401 SCALE: 3" = 1'-0"

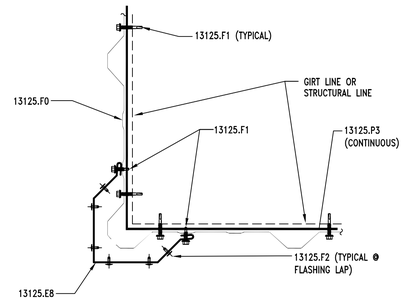

D3 | CORNER FLASHING DETAIL

XVL-AEDTD3A501 AE501 REF. AE101 SCALE: 3" = 1'-0"

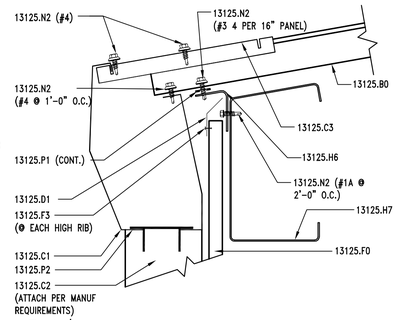

D4 | GUTTER DETAIL

XVL-AEDTD4A501 AE501 REF. AE311 SCALE: 3" = 1'-0"

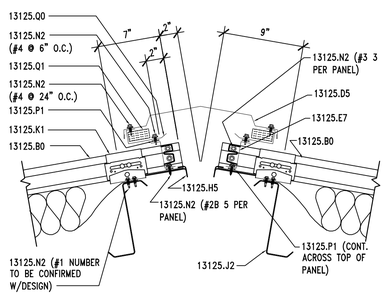

C2 | RIDGE VENT DETAIL

XVL-AEDTC2A501 AE501 REF. AE301 SCALE: 1 1/2" = 1'-0"

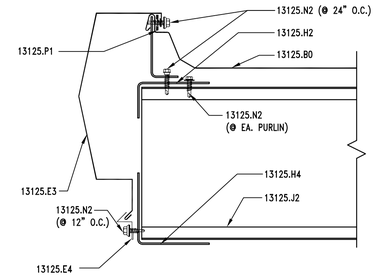

C3 | STARTING RAKE DETAIL

XVL-AEDTC3A501 AE501 REF. AE311 SCALE: 3" = 1'-0"

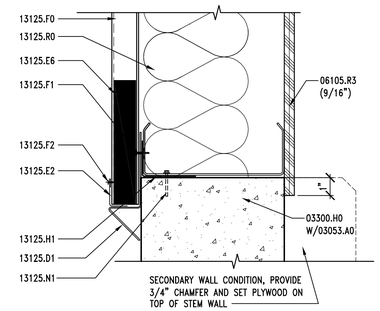

C4 | WALL PANEL @ STEM WALL

XVL-AEDTC4A501 AE501 REF. AE301 & AE311 SCALE: 3" = 1'-0"

KEYNOTES

03053.A0	CONCRETE WATER PROOFING ADMIXTURE
03054.A0	OLIOPHOBIC SEALER, OVER CONCRETE WATER PROOFING SYSTEM
03300.A1	CONCRETE SLAB ON GRADE – RE: STRUCTURAL
03300.G0	CONCRETE OVER METAL DECK – RE:STRUCTURAL
03300.H0	FOUNDATION WALL, RE: STRUCTURAL
03300.L1	30# FELT
03300.N0	CONCRETE CURB
06105.R3	G1S A/C PLYWOOD (THICKNESS)
07901.A0	SEALANT
09255.A1	GYPSUM BOARD (THICKNESS)
09255.A2	WATER RESISTANT GYPSUM BOARD (THICKNESS)
09255.B2	TYPE 'X' GYPSUM BOARD (THICKNESS)
09255.C3	CEMENT BOARD
09255.H1	METAL STUDS (SIZE, SPACING)
09300.A2	TILE GLAZED WALL–TILE TYPE #2
09300.D1	BULLNOSE TRIM UNIT
13125.B0	STANDING SEAM METAL ROOF
13125.C1	METAL RAIN GUTTER
13125.C2	DOWNSPOUT
13125.C3	GUTTER STRAP, INSTALL AT EVERY OTHER PANEL RIB
13125.D1	METAL DRIP FLASHING
13125.D5	RIDGE FLASHING, TO MATCH ROOF PANELS
13125.E2	PANEL TRIM
13125.E3	RAKE TRIM
13125.E4	RAKE SLIDE
13125.E6	WALL CLOSURE
13125.E7	METAL OUTSIDE CLOSURE
13125.E8	CORNER TRIM
13125.F0	METAL WALL PANEL
13125.F1	METAL WALL FASTENER
13125.F2	BLIND RIVET
13125.F3	POP RIVET
13125.H1	METAL ANGLE
13125.H2	HIGH RAKE SUPPORT ANGLE
13125.H4	4" x 4" CONT. ANGLE
13125.H5	BACKUP PLATE ANGLE
13125.H6	EAVE SUPPORT ANGLE
13125.H7	EAVE STRUT
13125.J1	STRUCTURAL GIRT
13125.J2	PURLIN
13125.K1	LOW PANEL CLIP
13125.N1	ANCHOR
13125.N2	FASTENER (SPACING)
13125.P1	DOUBLE BEAD TAPE SEALER
13125.P2	SEALANT
13125.P3	THERMAL BREAK
13125.Q0	METAL VENT
13125.Q1	VENT MATERIAL
13125.R0	INSULATION & VAPOR BARRIER (R–VALUE)

GENERAL NOTES

1. FIELD VERIFY ALL EXISTING CONDITIONS AND THEIR COMPATIBILITY WITH NEW CONSTRUCTION PRIOR TO THE COMMENCEMENT OF WORK. COORDINATE DISCREPANCIES WITH ARCHITECT.

2. DO NOT SCALE DRAWINGS.

3. SEE CIVIL, STRUCTURAL, MECHANICAL AND ELECTRICAL DRAWINGS FOR MORE INFORMATION.

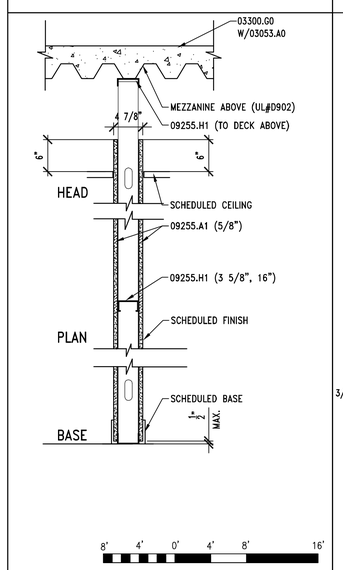

TYPE	OVERALL THICKNESS	STUD/ BLOCK SIZE	FIRE RATING	U.L. LISTING	S.T.C. RATING
A	AS NOTED	3 5/8"	N.R.	---	---

COMMENT

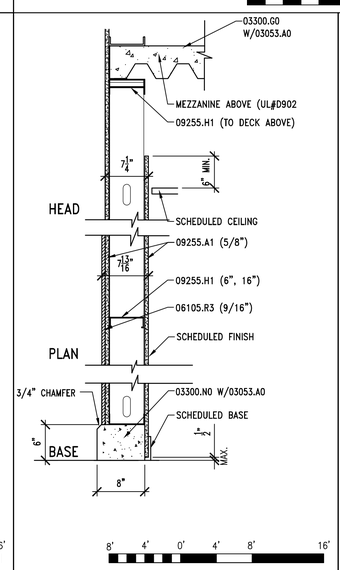

TYPE	OVERALL THICKNESS	STUD/ BLOCK SIZE	FIRE RATING	U.L. LISTING	S.T.C. RATING
B	AS NOTED	6"	N.R.	---	---

COMMENT

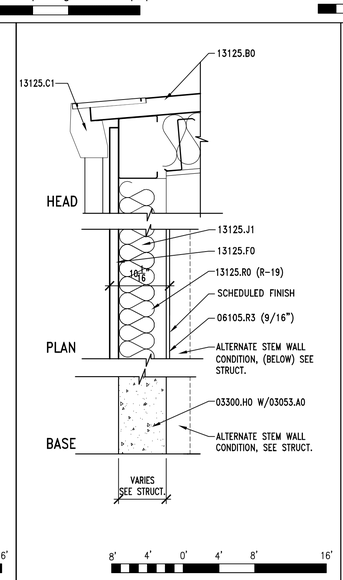

TYPE	OVERALL THICKNESS	STUD/ BLOCK SIZE	FIRE RATING	U.L. LISTING	S.T.C. RATING
C	AS NOTED	–	N.R.	---	---

COMMENT

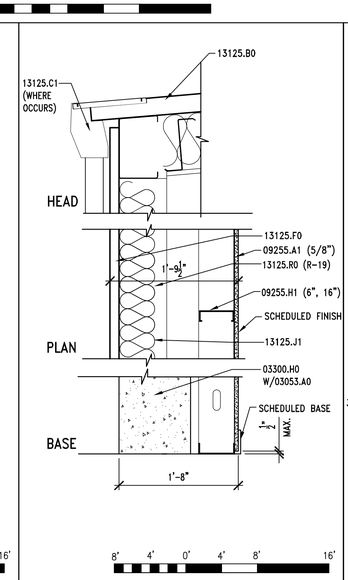

TYPE	OVERALL THICKNESS	STUD/ BLOCK SIZE	FIRE RATING	U.L. LISTING	S.T.C. RATING
D	AS NOTED	–	N.R.	---	---

COMMENT

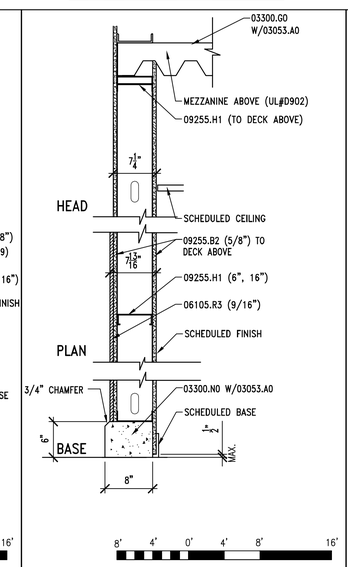

TYPE	OVERALL THICKNESS	STUD/ BLOCK SIZE	FIRE RATING	U.L. LISTING	S.T.C. RATING
E	AS NOTED	6"	1 HR.	UL419	---

COMMENT

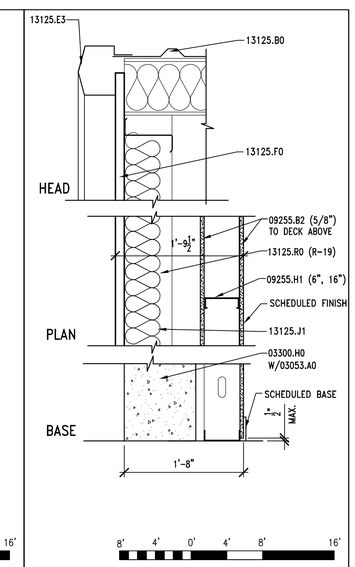

TYPE	OVERALL THICKNESS	STUD/ BLOCK SIZE	FIRE RATING	U.L. LISTING	S.T.C. RATING
F	AS NOTED	–	1 HR.	UL419	---

COMMENT

A1 | WALL TYPES

AE501 REF. AE101 SCALE: 1" = 1'-0"

CLIENT

VERNAL
MAINTENANCE FACILITY
STATION #3437
2773 NORTH VERNAL AVENUE
VERNAL, UTAH 84078

DESIGNER

ARCHIPLEX GROUP
architecture · planning · design services
1135 South West Temple, Ste. A
Salt Lake City, UT 84101
P:(801) 961–7070
F:(801) 961–7373

CONSULTANTS

PROFESSIONAL SEAL

STATE OF UTAH
RALPH M. STANISLAW
95–310818–0301
LICENSED ARCHITECT

ISSUE

MARK	DATE	DESCRIPTION
	6–27–06	RE–BID SET
	3–31–06	CONSTRUCTION DOCUMENTS
	1–20–06	FINAL REVIEW SET
	8–22–05	PRELIMINARY SUBMITTAL

DFCM PROJECT NO:	05056900
ARCHIPLEX PROJECT NO:	050011.01
DRAWN BY:	K. PHILLIPS
CHECKED BY:	R. STANISLAW
SCALE:	AS SHOWN
DATE:	JUNE 27, 2006

KEY PLAN

SHEET TITLE

WALL TYPES AND MISC. DETAILS

AE501

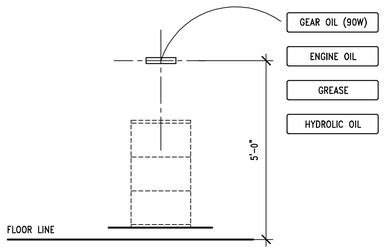

RE: SPECIFICATION – 10425 FOR MORE INFORMATION

D1 | SIGNAGE "A"

AE502 | REF. AE101 | SCALE: NO SCALE

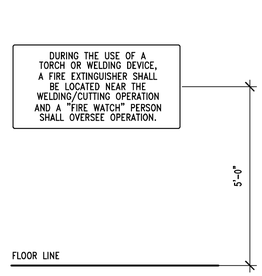

RE: SPECIFICATION – 10425 FOR MORE INFORMATION

D2 | SIGNAGE "B"

AE502 | REF. AE101 | SCALE: NO SCALE

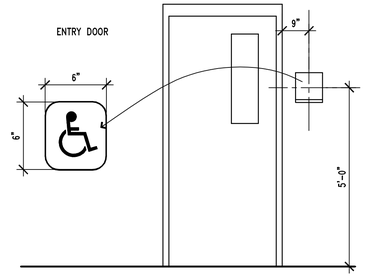

RE: SPECIFICATION – 10425 FOR INFO.

D3 | SIGNAGE "C"

AE502 | REF. AE101 | SCALE: NO SCALE

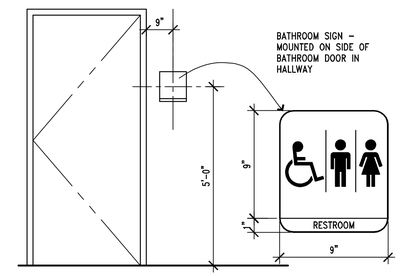

RE: SPECIFICATION – 10425 FOR INFO.

D4 | SIGNAGE "D"

AE502 | REF. AE101 | SCALE: NO SCALE

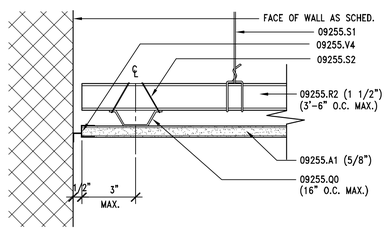

C1 | CEILING DETAIL

AE502 | REF. AE502 | SCALE: 1/2" = 1'-0"

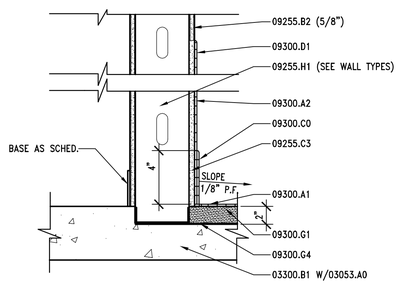

C2 | TILE/TILE BASE DETAIL

AE502 | REF. AE401 | SCALE: 1 1/2" = 1'-0"

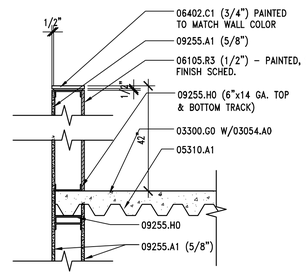

C3 | LOW PARTITION WALL DTL.

AE502 | REF. AE101 | SCALE: 3/4" = 1'-0"

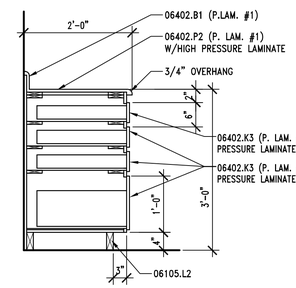

C4 | BASE CABINET SECTION

AE502 | REF. AE402 | SCALE: 3/4" = 1'-0"

KEYNOTES

03053.A0	CONCRETE WATER PROOFING ADMIXTURE
03054.A0	OLIOPHOBIC SEALER, OVER CONCRETE WATER PROOFING SYSTEM
03300.A1	CONCRETE SLAB–ON–GRADE – RE: STRUCTURAL
03300.B1	CONCRETE SLAB – RE:STRUCTURAL
03300.D0	CONCRETE PAD (SIZE)
03300.F1	CAST–IN–PLACE REINFORCED CONCRETE, WITH ARCHITECTURAL FINISH
03300.G0	CONCRETE OVER METAL DECK – RE:STRUCTURAL
03300.N0	CONCRETE CURB (HEIGHT)
05310.A1	METAL DECK – RE: STRUCTURAL
05510.A1	LADDER RUNGS
05510.B1	LADDER RAILS
05510.C0	LADDER MOUNTING BRACKET
05510.D1	RUBBER SHOE AT BOTTOM OF EACH RAIL
05510.E1	1 1/2" O.D. HANDRAILING
05521.A1	1 1/2" O.D. STEEL GUARDRAIL
06105.L2	BLOCKING AS REQUIRED
06105.P1	2 x 4
06105.P6	4 x 4
06105.R2	SHEATHING – PLYWOOD (THICKNESS) GRADE (SIZE)
06105.V6	PEGBOARD (THICKNESS)
06105.R3	G1S A/C PLYWOOD (THICKNESS)
06402.B1	PLASTIC LAMINATE BACKSPLASH (HEIGHT)
06402.C1	PAINT GRADE WOOD CAP (THICK.)
06402.H1	ADJUSTABLE SHELVES
06402.K0	BASE UNIT (FINISH)
06402.K3	BASE UNIT WITH DRAWERS (FINISH)
06402.P2	COUNTERTOP – P. LAM. ON 3/4" PLYWOOD
09255.A1	GYPSUM BOARD (THICKNESS)
09255.B2	TYPE "X" GYPSUM BOARD (THICKNESS)
09255.C3	CEMENT BOARD (THICKNESS)
09255.H0	METAL STUD
09255.H1	METAL STUDS, (SIZE, SPACING)
09255.Q0	7/8" METAL FURRING CHANNEL
09255.R2	CHANNEL (SIZE, SPACING)
09255.S1	8 GA. WIRE HANGERS
09255.S2	18 GA. WIRE TIES
09255.S4	14 GA. STAINLESS STEEL COUNTER TOP (FINISH)
09255.V4	VINYL TRIM
09300.A1	TILE UNGLAZED CERAMIC MOSAIC–TILE TYPE#1
09300.A2	TILE GLAZED WALL–TILE TYPE #2
09300.C0	TILE BASE
09300.D1	BULLNOSE TRIM UNIT
09300.G1	MORTAR BED
09300.G4	WATERPROOF MEMBRANE
10500.A0	METAL LOCKERS

GENERAL NOTES

1. FIELD VERIFY ALL EXISTING CONDITIONS AND THEIR COMPATIBILITY WITH NEW CONSTRUCTION PRIOR TO THE COMMENCEMENT OF WORK. COORDINATE DISCREPANCIES WITH ARCHITECT.
2. DO NOT SCALE DRAWINGS.
3. SEE SHEET AE602 FOR PLASTIC LAMINATE COLORS.

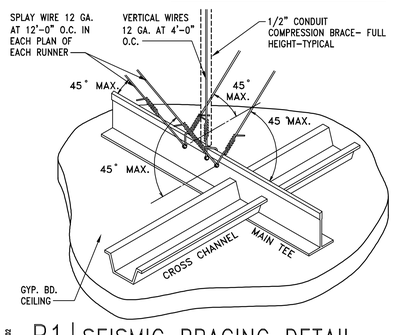

B1 | SEISMIC BRACING DETAIL

AE502 | REF. AE121 | SCALE: NONE

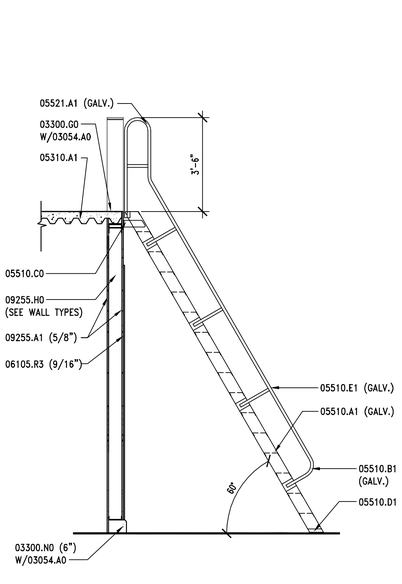

NOTE: ALL STEEL USED IN FABRICATION OF SHIPS LADDER SHALL BE HOT DIP GALVANIZED

A3 | SHIPS LADDER DETAIL

AE502 | REF. AE401 | SCALE: 3/8" = 1'-0"

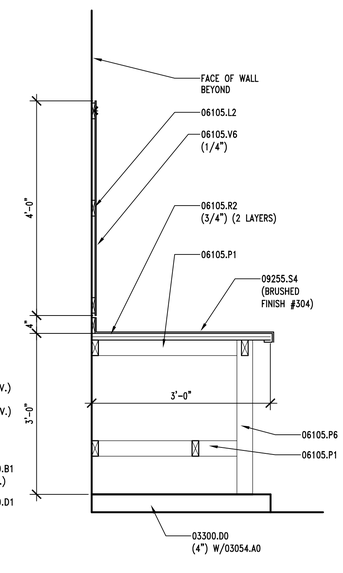

NOTE: ALL ROUGH WOOD MEMBERS SHALL BE PAINTED, SEE FINISH SCHEDULE

A4 | WORK BENCH SECTION

AE502 | REF. AE402 | SCALE: 3/4" = 1'-0"

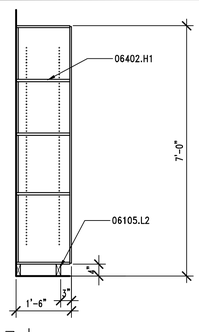

B5 | SHELVING SECTION

AE502 | REF. AE502 | SCALE: 1/2" = 1'-0"

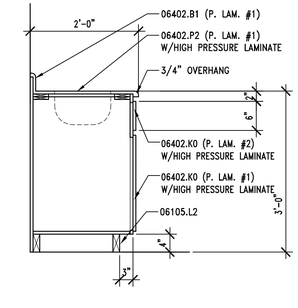

A2 | BASE CABINET SECTION

AE502 | REF. AE402 | SCALE: 3/4" = 1'-0"

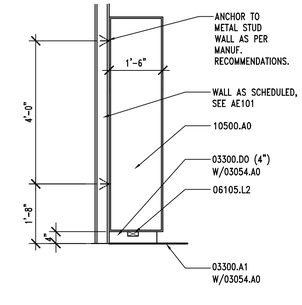

A5 | LOCKER SECTION

AE502 | REF. AE402 | SCALE: 1/2" = 1'-0"

CLIENT

VERNAL
MAINTENANCE FACILITY
STATION #3437
2773 NORTH VERNAL AVENUE
VERNAL, UTAH 84078

DESIGNER

ARCHIPLEX GROUP
architecture · planning · design services
1135 South West Temple, Ste. A
Salt Lake City, UT 84101
P:(801) 961–7070
F:(801) 961–7373

CONSULTANTS

PROFESSIONAL SEAL

STATE OF UTAH
RALPH M. STANISLAW
95–310818–0301
LICENSED ARCHITECT

ISSUE

MARK	DATE	DESCRIPTION
	6–27–06	RE–BID SET
	3–31–06	CONSTRUCTION DOCUMENTS
	1–20–06	FINAL REVIEW SET
	8–22–05	PRELIMINARY SUBMITTAL

DFCM PROJECT NO:	05056900
ARCHIPLEX PROJECT NO:	050011.01
DRAWN BY:	K. PHILLIPS
CHECKED BY:	R. STANISLAW
SCALE:	AS SHOWN
DATE:	JUNE 2, 2006

KEY PLAN

SHEET TITLE

SIGNAGE AND MISC. DETAILS

AE502

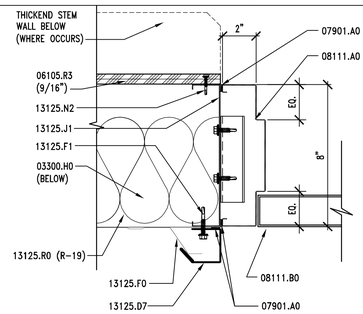

XVL-AE0T01A601

D1 DOOR JAMB DETAIL

AE601 | REF. AE601 | SCALE: 3" = 1'-0"

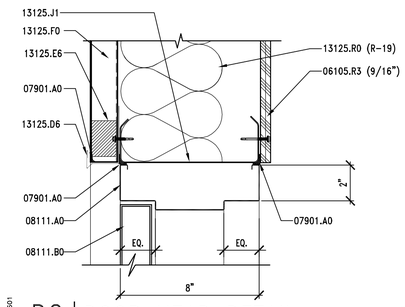

XVL-AE0T02A601

D2 DOOR HEAD DETAIL

AE601 | REF. AE601 | SCALE: 3" = 1'-0"

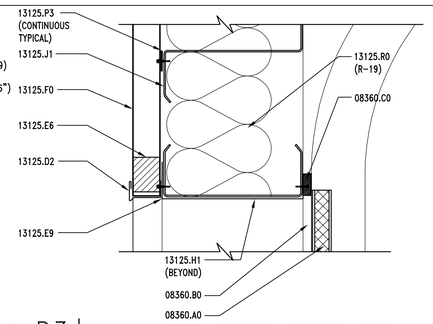

XVL-AE0T03A601

D3 SECTIONAL DOOR HEAD DTL.

AE601 | REF. AE601 | SCALE: 3" = 1'-0"

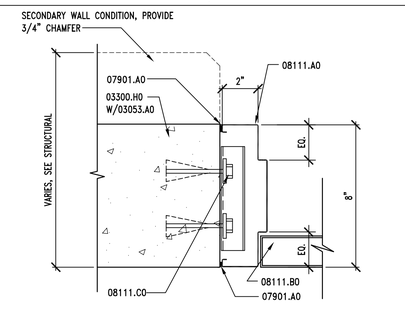

XVL-AE0T04A601

D4 DOOR JAMB DETAIL

AE601 | REF. AE601 | SCALE: 3" = 1'-0"

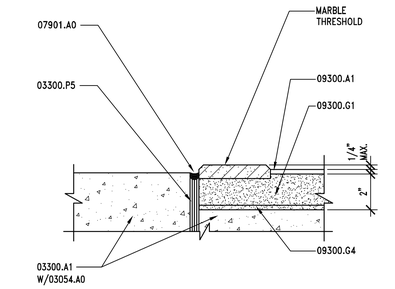

XVL-AE0T01A601

C1 MARBLE THRESHOLD DETAIL

AE601 | REF. AE601 | SCALE: 3" = 1'-0"

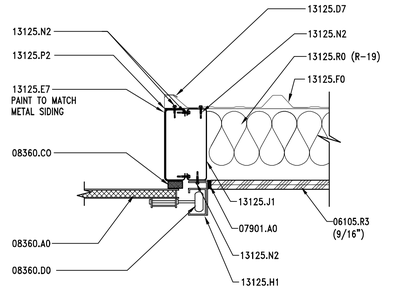

XVL-AE0T02A601

C2 SECTIONAL DOOR JAMB DTL.

AE601 | REF. AE601 | SCALE: 1 1/2" = 1'-0"

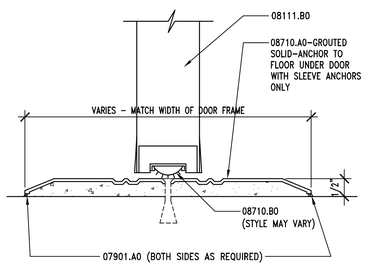

XVL-AE0T01B601

B1 THRESHOLD DETAIL

AE601 | REF. AE601 | SCALE: NONE

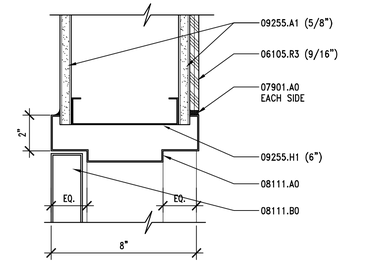

XVL-AE0T02B601

B2 DOOR HEAD DETAIL

AE601 | REF. AE601 | SCALE: 3" = 1'-0"

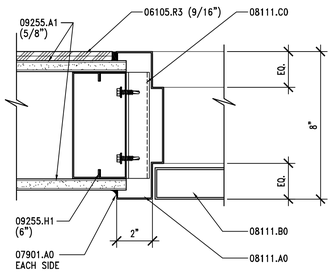

XVL-AE0TA1A601

A1 DOOR JAMB DETAIL

AE601 | REF. AE601 | SCALE: 3" = 1'-0"

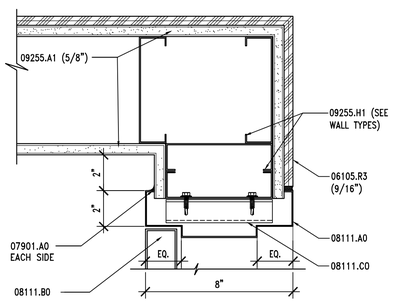

XVL-AE0TA2A601

A2 DOOR JAMB DETAIL

AE601 | REF. AE601 | SCALE: 3" = 1'-0"

DOOR FRAME TYPES

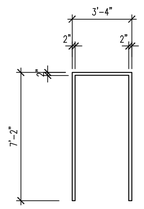

TYPE A

DOOR TYPES

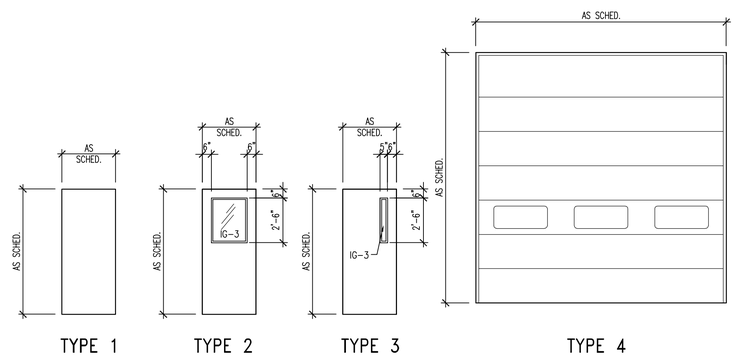

TYPE 1 TYPE 2 TYPE 3 TYPE 4

KEYNOTES

03053.A0	CONCRETE WATER PROOFING ADMIXTURE
03054.A0	OLIOPHOBIC SEALER, OVER CONCRETE WATER PROOFING SYSTEM
03300.A1	CONCRETE SLAB ON GRADE - RE: STRUCTURAL
03300.H0	FOUNDATION WALL, RE: STRUCTURAL
03300.P5	ISOLATION JOINT
06105.R3	G1S A/C PLYWOOD (THICKNESS)
07901.A0	SEALANT
08111.A0	PRESSED METAL FRAME
08111.B0	HOLLOW METAL DOOR
08111.C0	JAMB ANCHOR
08360.A0	OVERHEAD SECTIONAL DOOR
08360.B0	DOOR TRACK
08360.C0	WEATHERSTRIPPING
08360.D0	DOOR GUIDE
08710.A0	THRESHOLD
08710.B0	DOOR SWEEP
09255.A1	GYPSUM BOARD (THICKNESS)
09255.H1	METAL STUDS (SIZE)
09300.A1	UNGLAZED CERAMIC MOSAIC TILE
09300.G1	MORTAR BED
09300.G4	WATERPROOF MEMBRANE
13125.D2	METAL HEAD FLASHING
13125.D6	DOOR HEAD FLASHING
13125.D7	JAMB FLASHING
13125.E6	WALL CLOSURE
13125.E7	METAL OUTSIDE CLOSURE
13125.E9	FRAMED OPENING HEADER
13125.F0	METAL WALL PANEL
13125.F1	METAL WALL FASTENER
13125.H1	METAL ANGLE
13125.J1	STRUCTURAL GIRT
13125.N2	FASTENER (SPACING)
13125.P2	SEALANT
13125.P3	THERMAL BREAK
13125.R0	INSULATION & VAPOR BARRIER (R-VALUE)

GENERAL NOTES

1. SEE SHEET AE602 FOR GLAZING TYPES.
2. SEE SPECIFICATIONS FOR DOOR HARDWARE GROUPS

DOOR SCHEDULE

DOOR #	ROOM #	DOORS TYPE	DOORS WIDTH	DOORS HEIGHT	DOORS THICK.	DOORS MATERIAL	DOORS FINISH	DOORS GLASS	FRAMES TYPE	FRAMES MATERIAL	FRAMES FINISH	DETAILS HEAD	DETAILS JAMB	DETAILS THRESH.	LABEL	REMARKS
D101A	101	3	3'-0"	7'-0"	1 3/4"	HM	PT	T	A	HM	PT	D2/AE601	D1 & D4/AE601	B1/AE601	-	INSULATED
D101B	101	4	14'-0"	14'-0"	-	ST	-	T	-	ST	PT	D3/AE601	C2/AE601	-	-	SECTIONAL INSULATED DOOR
D102A	102	3	3'-0"	7'-0"	1 3/4"	HM	PT	T	A	HM	PT	D2/AE601	D4 & D1/AE601	B1/AE601	-	INSULATED
D102B	102	4	14'-0"	14'-0"	-	ST	-	T	-	ST	PT	D3/AE601	C2/AE601	-	-	SECTIONAL INSULATED DOOR
D102C	102	4	14'-0"	14'-0"	-	ST	-	T	-	ST	PT	D3/AE601	C2/AE601	-	-	SECTIONAL INSULATED DOOR
D102D	102	4	14'-0"	14'-0"	-	ST	-	T	-	ST	PT	D3/AE601	C2/AE601	-	-	SECTIONAL INSULATED DOOR
D102E	102	4	14'-0"	14'-0"	-	ST	-	T	-	ST	PT	D3/AE601	C2/AE601	-	-	SECTIONAL INSULATED DOOR
D102F	102	3	3'-0"	7'-0"	1 3/4"	HM	PT	T	A	HM	PT	D2/AE601	D1 & D4/AE601	B1/AE601	-	INSULATED
D102G	102	4	14'-0"	14'-0"	-	ST	-	T	-	ST	PT	D3/AE601	C2/AE601	-	-	SECTIONAL INSULATED DOOR
D102H	102	4	14'-0"	14'-0"	-	ST	-	T	-	ST	PT	D3/AE601	C2/AE601	-	-	SECTIONAL INSULATED DOOR
D102J	102	4	14'-0"	14'-0"	-	ST	-	T	-	ST	PT	D3/AE601	C2/AE601	-	-	SECTIONAL INSULATED DOOR
D102K	102	4	14'-0"	14'-0"	-	ST	-	T	-	ST	PT	D3/AE601	C2/AE601	-	-	SECTIONAL INSULATED DOOR
D103A	103	1	3'-0"	7'-0"	1 3/4"	HM	PT	-	A	HM	PT	B2/AE601	A2 & A1/AE601	-	20 MIN.	
D104A	104	1	3'-0"	7'-0"	1 3/4"	HM	PT	-	A	HM	PT	B2/AE601	A2 & A1/AE601	C1/AE601	-	
D105A	105	2	3'-0"	7'-0"	1 3/4"	HM	PT	-	A	HM	PT	B2/AE601	A2 & A1/AE601	-	-	
D106A	106	3	3'-0"	7'-0"	1 3/4"	HM	PT	T	A	HM	PT	B2/AE601	A1/AE601	-	-	
D1010SA	1010S	1	3'-0"	7'-0"	1 3/4"	HM	PT	-	A	HM	PT	D2/AE601	D1 & D4/AE601	-	-	SECTIONAL INSULATED DOOR - ADD ALTERNATE #2
D1020SB	1020S	4	14'-0"	14'-0"	-	ST	-	T	-	ST	PT	D3/AE601	C2/AE601	-	-	SECTIONAL INSULATED DOOR - ADD ALTERNATE #2

CLIENT

VERNAL
MAINTENANCE FACILITY
STATION #3437
2773 NORTH VERNAL AVENUE
VERNAL, UTAH 84078

DESIGNER

ARCHIPLEX GROUP
architecture · planning · design services
1135 South West Temple, Ste. A
Salt Lake City, UT 84101
P:(801) 961-7070
F:(801) 961-7373

CONSULTANTS

PROFESSIONAL SEAL

STATE OF UTAH
RALPH M. STANISLAW
95-310818-0301
LICENSED ARCHITECT

ISSUE

MARK	DATE	DESCRIPTION
	6-27-06	RE-BID SET
	3-31-06	CONSTRUCTION DOCUMENTS
	1-20-06	FINAL REVIEW SET
	8-22-05	PRELIMINARY SUBMITTAL

DFCM PROJECT NO:	05056900
ARCHIPLEX PROJECT NO:	050011.01
DRAWN BY:	K. PHILLIPS
CHECKED BY:	R. STANISLAW
SCALE:	AS SHOWN
DATE:	JUNE 2, 2006

KEY PLAN

SHEET TITLE

DOOR SCHEDULE AND DETAILS

AE601

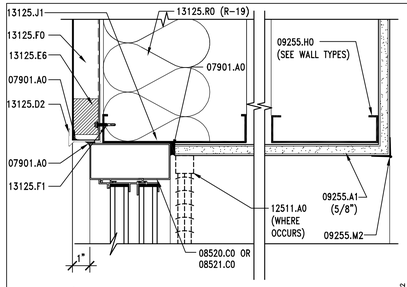

D1 | WINDOW HEAD DETAIL

AE602 REF. AE602 SCALE: 3" = 1'-0"

4" 3" 2" 1" 0 2" 4" 8"

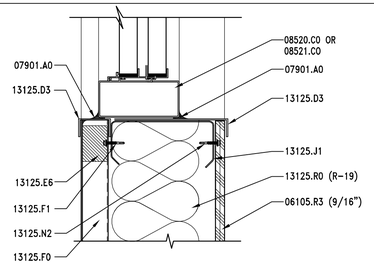

D2 | WINDOW SILL DETAIL

AE602 REF. AE602 SCALE: 3" = 1'-0"

4" 3" 2" 1" 0 2" 4" 8"

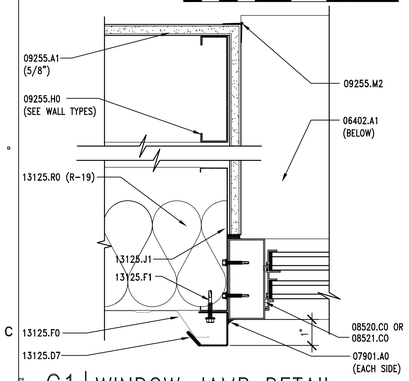

C1 | WINDOW JAMB DETAIL

AE602 REF. AE602 SCALE: 3" = 1'-0"

4" 3" 2" 1" 0 2" 4" 8"

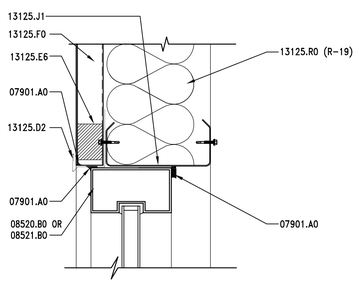

C2 | WINDOW HEAD DETAIL

AE602 REF. AE602 SCALE: 3" = 1'-0"

4" 3" 2" 1" 0 2" 4" 8"

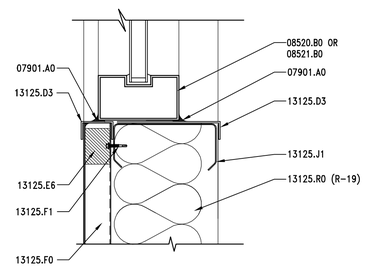

C3 | WINDOW SILL DETAIL

AE602 REF. AE602 SCALE: 3" = 1'-0"

4" 3" 2" 1" 0 2" 4" 8"

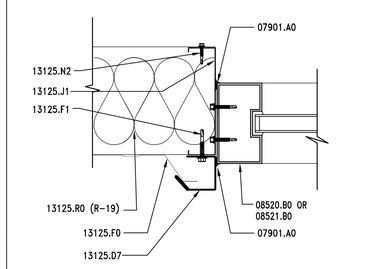

B1 | WINDOW JAMB DETAIL

AE602 REF. AE602 SCALE: 3" = 1'-0"

4" 3" 2" 1" 0 2" 4" 8"

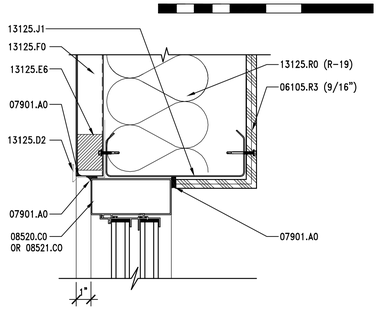

B2 | WINDOW HEAD DETAIL

AE602 REF. AE602 SCALE: 3" = 1'-0"

4" 3" 2" 1" 0 2" 4" 8"

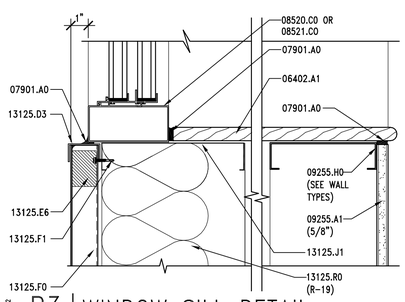

B3 | WINDOW SILL DETAIL

AE602 REF. AE602 SCALE: 3" = 1'-0"

4" 3" 2" 1" 0 2" 4" 8"

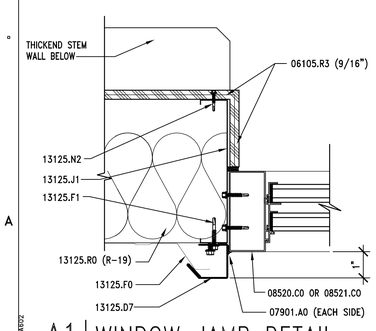

A1 | WINDOW JAMB DETAIL

AE602 REF. AE602 SCALE: 3" = 1'-0"

4" 3" 2" 1" 0 2" 4" 8"

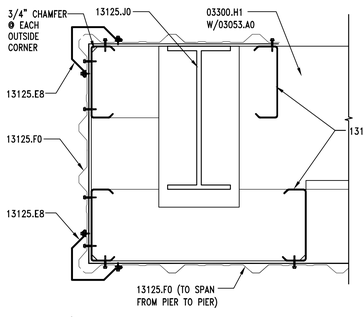

A2 | COLUMN DTL -ADD ALT. #1

AE602 REF. AE703 SCALE: 1 1/2" = 1'-0"

8" 6" 4" 2" 0 4" 8" 16"

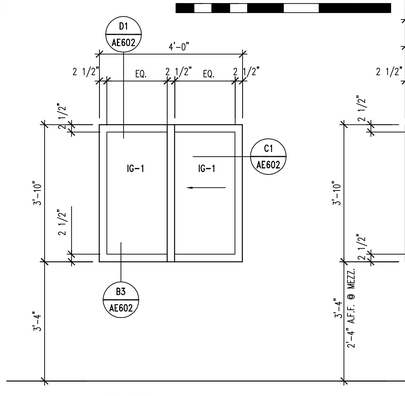

TYPE A

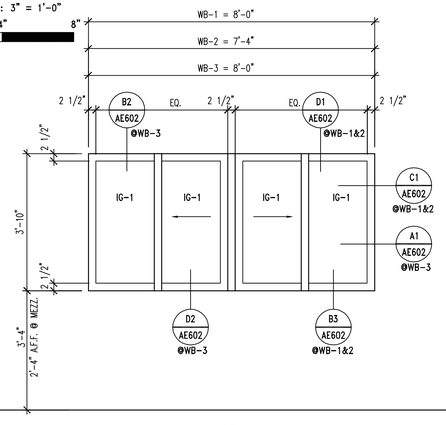

TYPE B

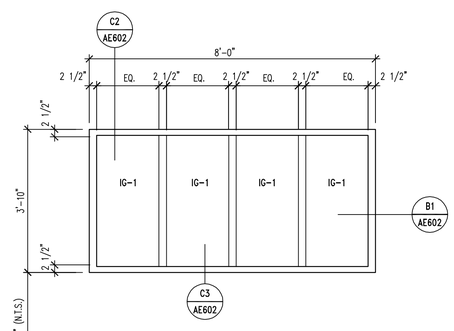

TYPE C

ROOM FINISH SCHEDULE

ROOM NAME & NUMBER		FLOOR	BASE	WALLS				DOOR/FRAMES	P. LAM.	REMARKS
				WEST	EAST	NORTH	SOUTH			
101	MAINTENANCE BAY	1	–	–	1	1	1	1	–	PAINT WORKBENCHES-B. M. #2127-60-FEATHER GRAY-SEMI GLOSS FIN.
102	VEHICLE STORAGE BAYS	1	–	1	1 & 3	1	1 & 3	1	–	SHIPS LADDER – MATCH DOOR FRAME COLOR #1
103	STORAGE	1	2	3	3	3	3	1	3	–
104	RESTROOM	3	3	2 & 4	2 & 4	2 & 4	2 & 4	2	–	USE BULLNOSE AT TOP OF WAINSCOT
105	TRAINING ROOM	2	1	2	2	2	2	2	1 & 2	PAINT WINDOW SILL TO MATCH DOOR COLOR #2
106	OFFICE	2	1	2	2	2	2	2	–	PAINT WINDOW SILL TO MATCH DOOR COLOR #2
201	MEZZANINE	1	–	–	1	–	1	–	–	PAINT GUARDRAIL & DECK ANGLE TO MATCH DOOR COLOR #1
101 OS	OPEN BAYS	1	–	–	–	–	–	–	–	ADD ALTERNATE #2
102 OS	ENCLOSED BAY	1	–	1	1	1	1	3	–	ADD ALTERNATE #2

ROOM FINISH LEGEND

FLOOR	WALL	BASE	DOOR & FRAMES	PLASTIC LAMINATE
1. CONCRETE FLOOR SLAB. 2. 12" x 12" VINYL COMPOSITION TILE – ARMSTRONG STANDARD EXCELON IMPERIAL TEXTURE #51858-SANDRIFT WHITE OR EQUAL 3. 2" x 2" CERAMIC TILE – DALTILE, KEYSTONES, MEXICAN SAND SPECKLE W/MAPEI GROUT #05 – CHAMOIS OR EQUAL	1. G1S A/C PLYWOOD – PAINTED BENJAMIN MOORE #2127-60 – FEATHER GRAY OR EQUAL 2. GYPSUM BOARD – PAINTED BENJAMIN MOORE – NAVAJO WHITE OR EQUAL 3. GYPSUM BOARD – PAINTED BENJAMIN MOORE #2127-60 – FEATHER GRAY OR EQUAL 4. 4" x 4" CERAMIC WALL TILE – DALTILE #6520 – MATTE FAWN W/MAPEI GROUT #05 – CHAMOIS OR EQUAL	1. 4" RUBBER BASE – JOHNSONITE #49 – BEIGE OR EQUAL 2. 4" RUBBER BASE – JOHNSONITE #38 – PEWTER OR EQUAL 3. 2" x 2" COVED TILE BASE – DALTILE, KEYSTONES, MEXICAN SAND SPECKLE OR EQUAL	1. PAINTED – BENJAMIN MOORE #2124-30 DEEP SILVER OR EQUAL 2. PAINTED – ICI #427 – DEERFIELD OR EQUAL 3. MATCH EXTERIOR DOOR COLOR	1. COUNTER TOP/CABINET FACE – WILSONART #4781-60 SUNSTONE OR EQUAL 2. CABINET FACE – WILSONART #4794-60 WINDSWEPT BRONZE OR EQUAL 3. SHELVING – WILSONART #D73-60 PEWTER OR EQUAL

KEYNOTES

03053.A0 CONCRETE WATER PROOFING SYSTEM – ADD ALT. #1
03300.H1 CONCRETE PIER, RE: STRUCTURAL

06105.R3 G1S A/C PLYWOOD (THICKNESS)
06402.A1 3/4" PAINTED WOOD SILL

07901.A0 SEALANT

08520.B0 FIXED WINDOW
08520.C0 ALUM. WINDOW W/SLIDING GLASS PANEL
08521.B0 FIXED VINYL WINDOW
08521.C0 VINYL WINDOW W/SLIDING GLASS PANEL

09255.A1 GYPSUM BOARD (THICKNESS)
09255.H0 METAL STUD
09255.M2 METAL CORNER BEAD (TYP)

12511.A0 HORIZONTAL LOUVER BLINDS

13125.D2 METAL HEAD FLASHING
13125.D3 METAL SILL FLASHING
13125.D7 JAMB FLASHING
13125.E6 WALL CLOSURE
13125.E7 METAL OUTSIDE CLOSURE
13125.E8 CORNER TRIM
13125.F0 METAL WALL PANEL
13125.F1 METAL WALL FASTENER
13125.J0 STRUCTURAL MEMBER
13125.J1 STRUCTURAL GIRT
13125.N2 FASTENER (SPACING)
13125.R0 INSULATION & VAPOR BARRIER (R-VALUE)

GENERAL NOTES

1. ALL FLASHING TO BE PRE-FINISHED OR PAINTED TO MATCH WINDOW FRAMES
2. SEE SPECIFICATIONS FOR ALL GLAZING TYPES.

CLIENT

VERNAL
MAINTENANCE FACILITY
STATION #3437
2773 NORTH VERNAL AVENUE
VERNAL, UTAH 84078

DESIGNER

ARCHIPLEX GROUP
architecture · planning · design services
1135 South West Temple, Ste. A
Salt Lake City, UT 84101
P:(801) 961-7070
F:(801) 961-7373

CONSULTANTS

PROFESSIONAL SEAL

STATE OF UTAH
RALPH M. STANISLAW
95-310818-0301
LICENSED ARCHITECT

ISSUE

MARK	DATE	DESCRIPTION
	6-27-06	RE-BID SET
	3-31-06	CONSTRUCTION DOCUMENTS
	1-20-06	FINAL REVIEW SET
	8-22-05	PRELIMINARY SUBMITTAL

DFCM PROJECT NO:	05056900
ARCHIPLEX PROJECT NO:	050011.01
DRAWN BY:	K. PHILLIPS
CHECKED BY:	R. STANISLAW
SCALE:	AS SHOWN
DATE:	JUNE 2, 2006

KEY PLAN

SHEET TITLE

WINDOW FRAME TYPES, GLAZING & FINISH SCHEDULES AND DETAILS

AE602

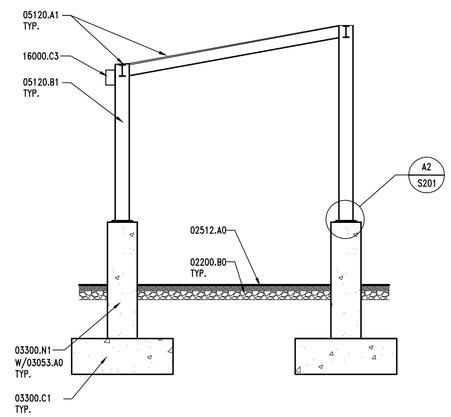

C3 | SANDER RACKS SECTION

AE701 | REF. AE701 | SCALE: 1/4" = 1'-0"

4' 3' 2' 1' 0' 2' 4' 8'

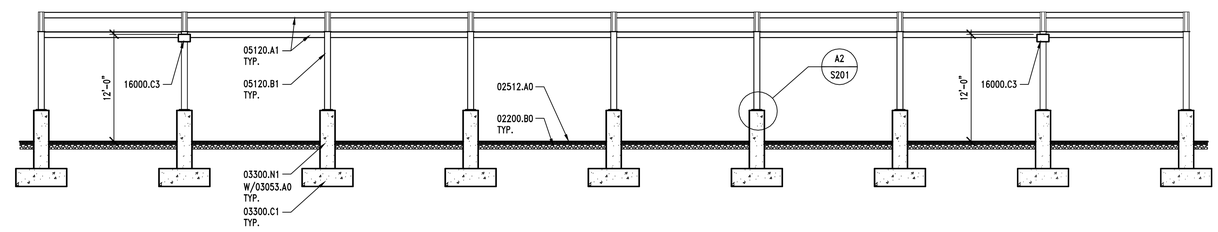

B3 | SANDER RACKS ELEVATION

AE701 | REF. AE701 | SCALE: 1/8" = 1'-0"

8' 6' 4' 2' 0' 4' 8' 16'

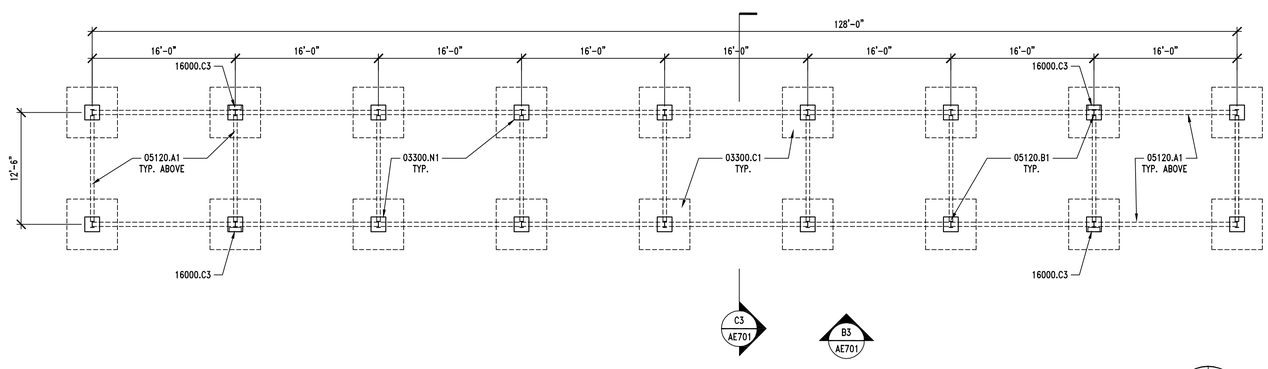

A3 | SANDER RACKS. - FLOOR PLAN

AE701 | REF. | SCALE: 1/8" = 1'-0"

8' 6' 4' 2' 0' 4' 8' 16'

PLAN NORTH

KEYNOTES

02512.A0	ZERO VOIDS ASPHALT PAVING (THICKNESS)
02200.B0	GRAVEL BASE
03053.A0	CONCRETE WATER PROOFING ADMIXTURE
03300.C1	FOOTING – RE: STRUCTURAL
03300.N1	REINFORCED CONCRETE PIERS
05120.A1	STEEL BEAM – RE: STRUCTURAL – GALVANIZED
05120.B1	COLUMN – RE: STRUCTURAL – GALVANIZED
16000.C3	EXTERIOR WALL MOUNTED FLOOD LIGHTS

GENERAL NOTES

1. FIELD VERIFY ALL EXISTING CONDITIONS AND THEIR COMPATIBILITY WITH NEW CONSTRUCTION PRIOR TO THE COMMENCEMENT OF WORK. COORDINATE DISCREPANCIES WITH ARCHITECT.

2. DO NOT SCALE DRAWINGS.

3. SEE CIVIL & STRUCTURAL DRAWINGS FOR MORE INFORMATION.

CLIENT

VERNAL
MAINTENANCE FACILITY
STATION #3437
2773 NORTH VERNAL AVENUE
VERNAL, UTAH 84078

DESIGNER

ARCHIPLEX GROUP
architecture · planning · design services
1135 South West Temple, Ste. A
Salt Lake City, UT 84101
P:(801) 961-7070
F:(801) 961-7373

CONSULTANTS

PROFESSIONAL SEAL

STATE OF UTAH
RALPH M. STANISLAW
95-310818-0301
LICENSED ARCHITECT

ISSUE

MARK	DATE	DESCRIPTION
	6-27-06	RE-BID SET
	3-31-06	CONSTRUCTION DOCUMENTS
	1-20-06	FINAL REVIEW SET
	8-22-05	PRELIMINARY SUBMITTAL

DFCM PROJECT NO:	05056900
ARCHIPLEX PROJECT NO:	050011.01
DRAWN BY:	K. PHILLIPS
CHECKED BY:	R. STANISLAW
SCALE:	
DATE:	JUNE 27, 2006

KEY PLAN

SHEET TITLE

SITE STRUCTURES
SANDER RACK PLAN
SECTION & ELEV.

AE701

KEYNOTES

03053.A0	CONCRETE WATER PROOFING ADMIXTURE
03300.A1	CONCRETE SLAB-ON-GRADE – RE: STRUCTURAL
03300.P7	SAWCUT CONSTRUCTION JOINT, TYP.
03300.S2	CONCRETE SWALE
05120.B1	COLUMN – RE: STRUCTURAL – GALVANIZED
05500.J1	PIPE BOLLARD (DIAMETER) GALVANIZED & PAINTED
05510.F1	STEEL STRINGER – (SIZE) – GALVANIZED
05521.A2	PIPE GUARDRAIL (DIAMETER) – GALVANIZED & PAINTED
05521.B2	PIPE HANDRAIL (DIAMETER) – GALVANIZED & PAINTED
05530.C1	METAL GRATE PANEL – GALV.
05530.C2	METAL GRATE TREAD – GALV.

GENERAL NOTES

1. FIELD VERIFY ALL EXISTING CONDITIONS AND THEIR COMPATIBILITY WITH NEW CONSTRUCTION PRIOR TO THE COMMENCEMENT OF WORK. COORDINATE DISCREPANCIES WITH ARCHITECT.

2. DO NOT SCALE DRAWINGS.

3. SEE CIVIL & STRUCTURAL DRAWINGS FOR MORE INFORMATION.

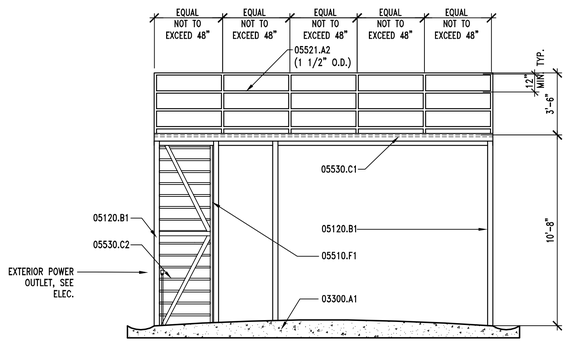

B1 | WASH RACK ELEVATION 4' 3' 2' 1' 0' 2' 4' 8'

AE702 | REF. AE702 | SCALE: 1/4" = 1'-0"

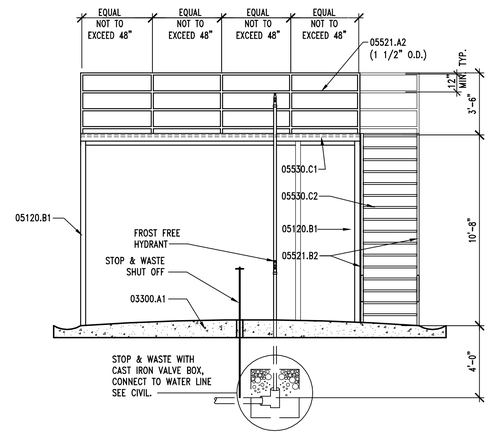

B2 | WASH RACK ELEVATION 4' 3' 2' 1' 0' 2' 4' 8'

AE702 | REF. AE702 | SCALE: 1/4" = 1'-0"

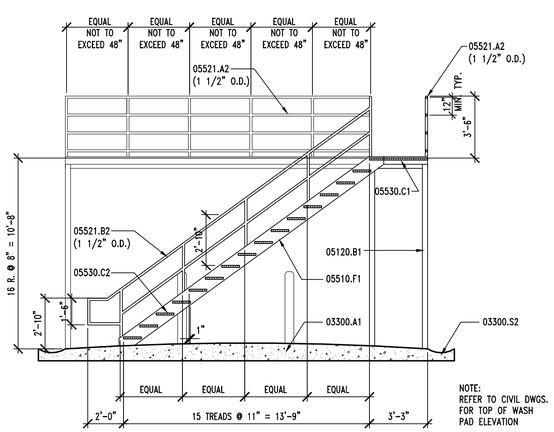

A1 | WASH RACK SECTION 4' 3' 2' 1' 0' 2' 4' 8'

AE702 | REF. AE702 | SCALE: 1/4" = 1'-0"

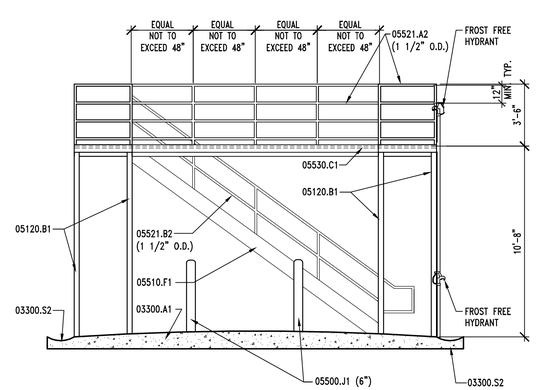

A2 | WASH RACK ELEVATION 4' 3' 2' 1' 0' 2' 4' 8'

AE702 | REF. AE702 | SCALE: 1/4" = 1'-0"

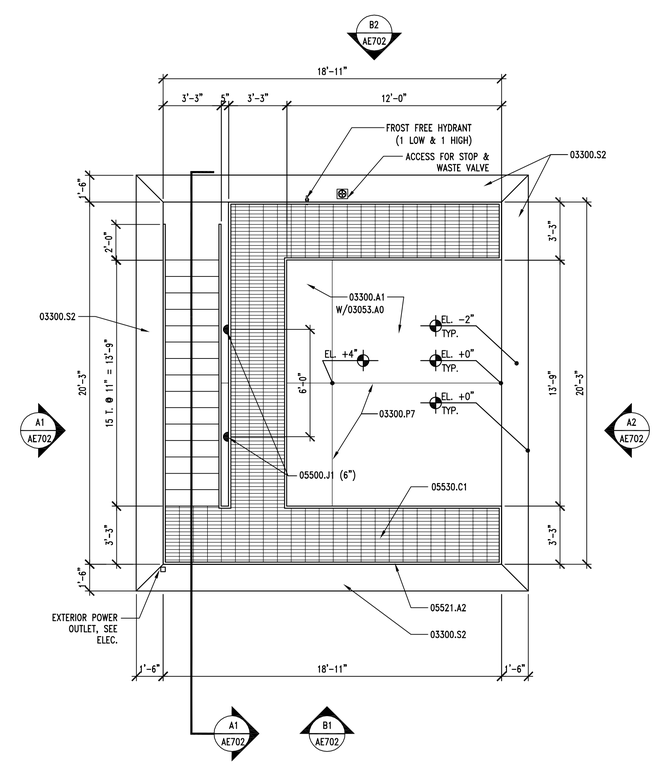

A3 | WASH RACK PLAN 4' 3' 2' 1' 0' 2' 4' 8'

AE702 | REF. | SCALE: 1/4" = 1'-0"

PLAN NORTH

CLIENT

VERNAL
MAINTENANCE FACILITY
STATION #3437
2773 NORTH VERNAL AVENUE
VERNAL, UTAH 84078

DESIGNER

ARCHIPLEX GROUP
architecture · planning · design services
1135 South West Temple, Ste. A
Salt Lake City, UT 84101
P:(801) 961-7070
F:(801) 961-7373

CONSULTANTS

PROFESSIONAL SEAL

STATE OF UTAH
RALPH M. STANISLAW
95-310818-0301
LICENSED ARCHITECT

ISSUE

MARK	DATE	DESCRIPTION
	6-27-06	RE-BID SET
	3-31-06	CONSTRUCTION DOCUMENTS
	1-20-06	FINAL REVIEW SET
	8-22-05	PRELIMINARY SUBMITTAL

DFCM PROJECT NO:	05056900
ARCHIPLEX PROJECT NO:	050011.01
DRAWN BY:	K. PHILLIPS
CHECKED BY:	R. STANISLAW
SCALE:	1/4"=1'-0"
DATE:	JUNE 27, 2006

KEY PLAN

SHEET TITLE

SITE STRUCTURES
WASH RACK PLAN,
SECTIONS & ELEV.

AE702

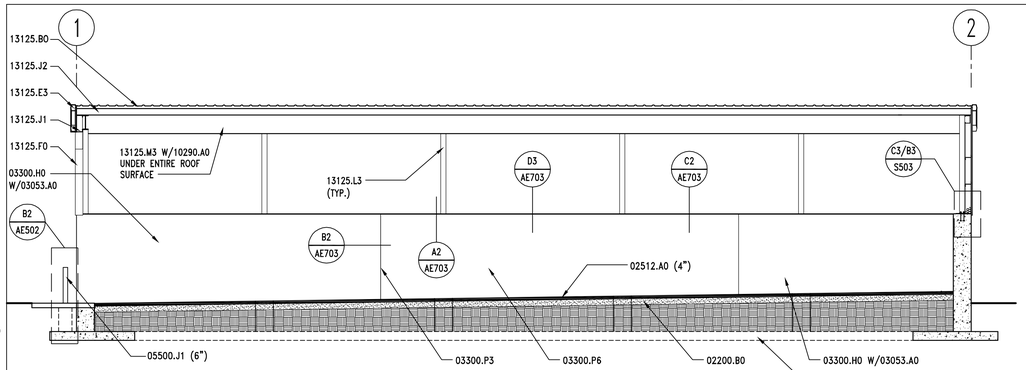

D1 | SALT STORAGE BLDG. - SECTION

AE703 | REF. AE703 | SCALE: 1/8" = 1'-0"

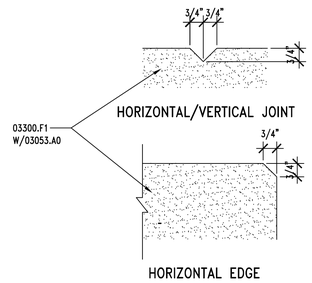

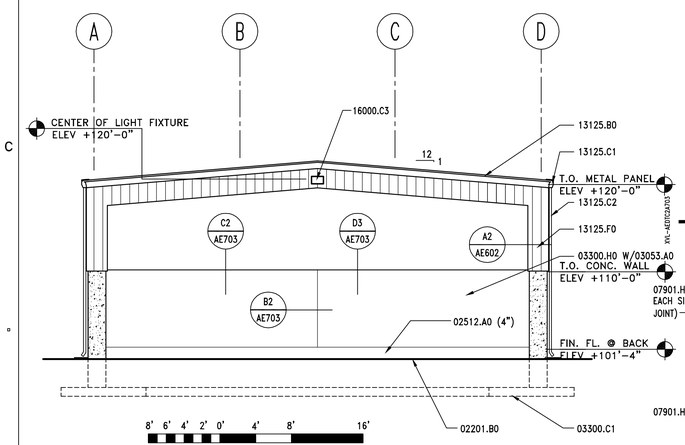

B1 | SALT STORAGE BLDG. - ELEVATION

AE703 | REF. AE703 | SCALE: 1/8" = 1'-0"

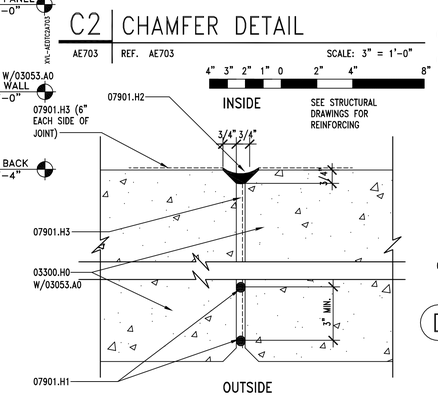

B2 | JOINT DETAIL

AE703 | REF. AE703 | SCALE: 3" = 1'-0"

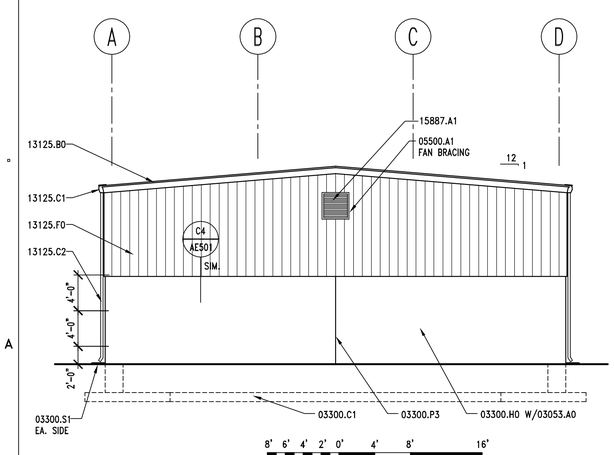

A1 | SALT STORAGE BLDG. - WEST ELEVATION

AE703 | REF. AE703 | SCALE: 1/8" = 1'-0"

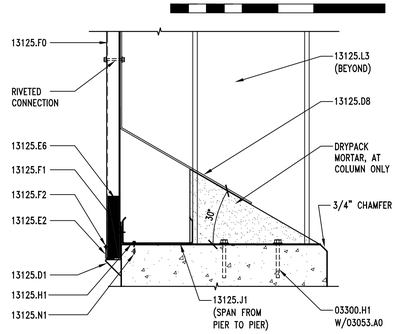

A2 | PANEL @ CONCRETE PIER

AE703 | REF. AE703 | SCALE: 1 1/2" = 1'-0"

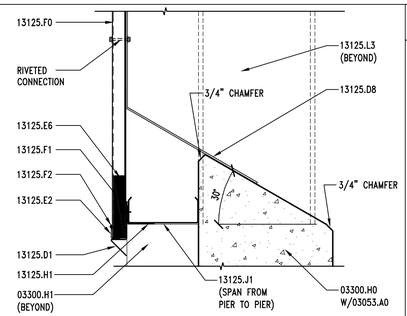

D3 | PANEL @ CONCRETE WALL

AE703 | REF. AE703 | SCALE: 1 1/2" = 1'-0"

KEYNOTES

02200.B0	GRAVEL BASE
02512.A0	ZERO VOIDS ASPHALTIC PAVING (THICKNESS)
03053.A0	CONCRETE WATER PROOFING SYSTEM - ADD ALT. #1
03300.C1	FOOTING RE: STRUCTURAL
03300.H0	FOUNDATION WALL, RE: STRUCTURAL
03300.H1	CONCRETE PIER, RE: STRUCTURAL
03300.P3	CONTROL JOINT RE: STRUCTURAL DETAIL B2/S503
03300.P6	CHAMFER JOINT SEE DETAIL A1/AE502
03300.S1	SPLASH BLOCK
05500.A1	ANGLE - RE: STRUCTURAL
05500.J1	PIPE BOLLARD (DIAMETER) GALVANIZED & PAINTED
07901.H1	5/8" BEAD OF DE NEFF SWELLSEAL WA MASTIC
07901.H2	CONCENTRATED DRY PAC
07901.H3	CONCENTRATED SLURRY COAT
10290.A0	BIRD CONTROL NETTING
13125.B0	STANDING SEAM METAL ROOF
13125.C1	METAL RAIN GUTTER
13125.C2	DOWNSPOUT
13125.D1	METAL DRIP FLASHING
13125.D8	CONTINUOUS PRE-FINISHED SHEET METAL CLOSURE
13125.E2	PANEL TRIM
13125.E3	RAKE TRIM
13125.E6	WALL CLOSURE
13125.F0	METAL WALL PANEL
13125.F1	METAL WALL FASTENER
13125.F2	BLIND RIVET
13125.H1	METAL ANGLE
13125.L3	STEEL COLUMN - GALVANIZED
13125.J1	STRUCTURAL GIRT
13125.J2	PURLIN
13125.M3	STEEL BEAM - GALVANIZED
13125.N1	ANCHOR
15887.A1	LOUVER WITH BIRD SCREEN (36" x 36" RUSHKIN #ELF-3750)
16000.A0	INTERIOR LIGHTS - SEE ELECTRICAL
16000.C3	EXTERIOR WALL MOUNTED FLOOD LIGHTS

GENERAL NOTES

1. FIELD VERIFY ALL EXISTING CONDITIONS AND THEIR COMPATIBILITY WITH NEW CONSTRUCTION PRIOR TO THE COMMENCEMENT OF WORK. COORDINATE DISCREPANCIES WITH ARCHITECT.

2. DO NOT SCALE DRAWINGS.

3. SEE CIVIL, STRUCTURAL, MECHANICAL AND ELECTRICAL DRAWINGS FOR MORE INFORMATION.

4. SEE B5/AE301 FOR TYPICAL PIPE BOLLARD DETAIL.

5. ALL EXPOSED STEEL IN SALT STORAGE BUILDING TO BE EPOXY COATED. RE: STRUCTURAL DRAWINGS.

6. PROVIDE 3/4" CHAMFER AT ALL OUTSIDE CORNERS.

EXTERIOR COLOR SCHEDULE

(13125.B0, G0, C1 & E3) METAL ROOF, FASCIA, GUTTERS & RAKE TRIM: KYNAR 500 "SIERRA TAN" OR EQUAL
(13125.F0) METAL WALL PANEL: KYNAR 500 "ALMOND" OR EQUAL
(13125.C2) DOWN SPOUTS: PREFINISHED TO MATCH CORNER TRIM.
(08111.A0, B0 & 08360.A0) DOORS & FRAMES: KYNAR 500 "BONE WHITE" OR EQUAL
(05500.J1) BOLLARDS: OSHA SAFETY YELLOW

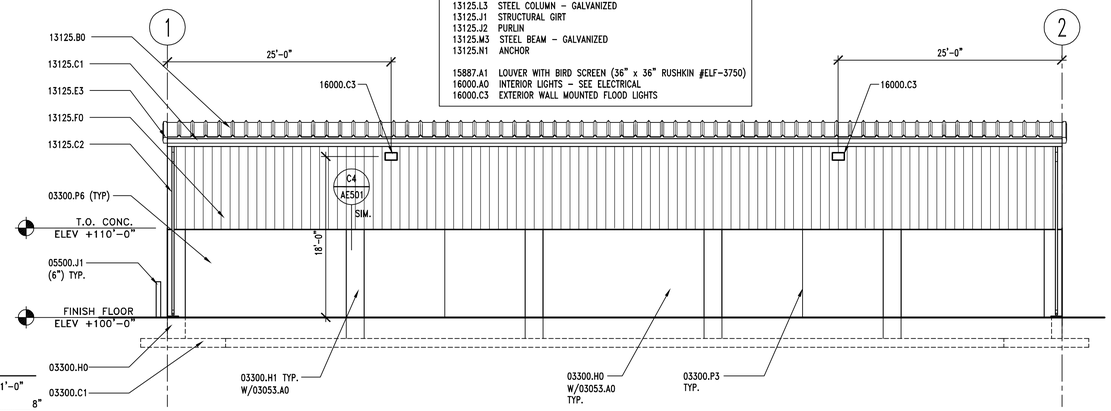

C3 | SALT STORAGE BLDG. - NORTH/SOUTH ELEVATION

AE703 | REF. AE703 | SCALE: 1/8" = 1'-0"

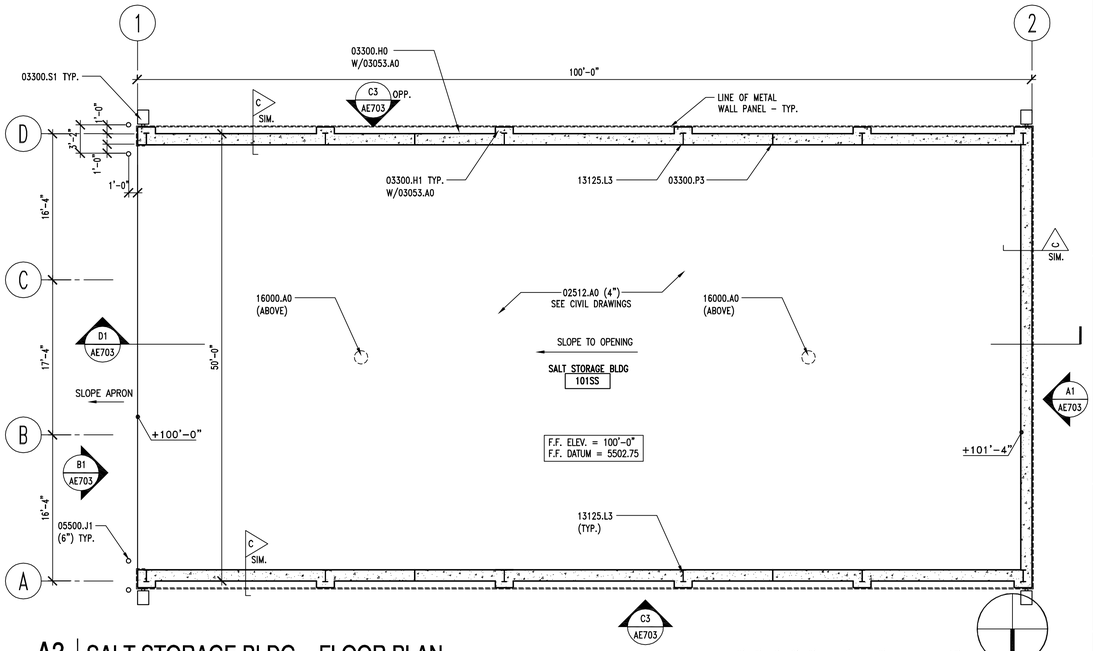

A3 | SALT STORAGE BLDG. - FLOOR PLAN

AE703 | REF. AE703 | SCALE: 1/8" = 1'-0"

CLIENT

VERNAL
MAINTENANCE FACILITY
STATION #3437
2773 NORTH VERNAL AVENUE
VERNAL, UTAH 84078

DESIGNER

ARCHIPLEX GROUP
architecture · planning · design services
1135 South West Temple, Ste. A
Salt Lake City, UT 84101
P:(801) 961-7070
F:(801) 961-7373

CONSULTANTS

PROFESSIONAL SEAL

STATE OF UTAH
RALPH M. STANISLAW
95-310818-0301
LICENSED ARCHITECT

ISSUE

MARK	DATE	DESCRIPTION
	6-27-06	RE-BID SET
	3-31-06	CONSTRUCTION DOCUMENTS
	1-20-06	FINAL REVIEW SET
	8-22-05	PRELIMINARY SUBMITTAL

DFCM PROJECT NO:	05056900
ARCHIPLEX PROJECT NO:	050011.01
DRAWN BY:	K. PHILLIPS
CHECKED BY:	R. STANISLAW
SCALE:	1/8"=1'-0"
DATE:	JUNE 2, 2006

KEY PLAN

SHEET TITLE

SITE STRUCTURES
ADD ALTERNATE #1
SALT STORAGE PLAN,
SECTIONS & ELEVS.

AE703

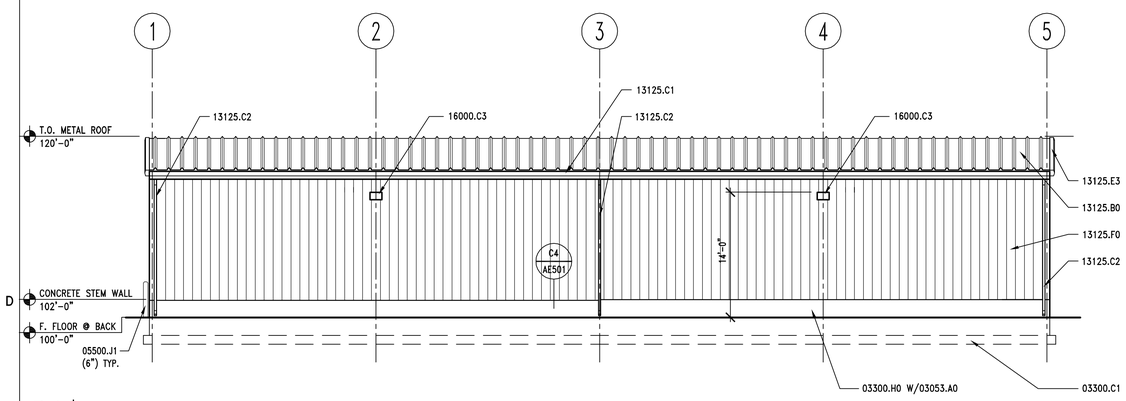

D1 OPEN STORAGE BLDG. – NORTH ELEVATION

AE704 REF. AE704 SCALE: 1/8" = 1'-0"

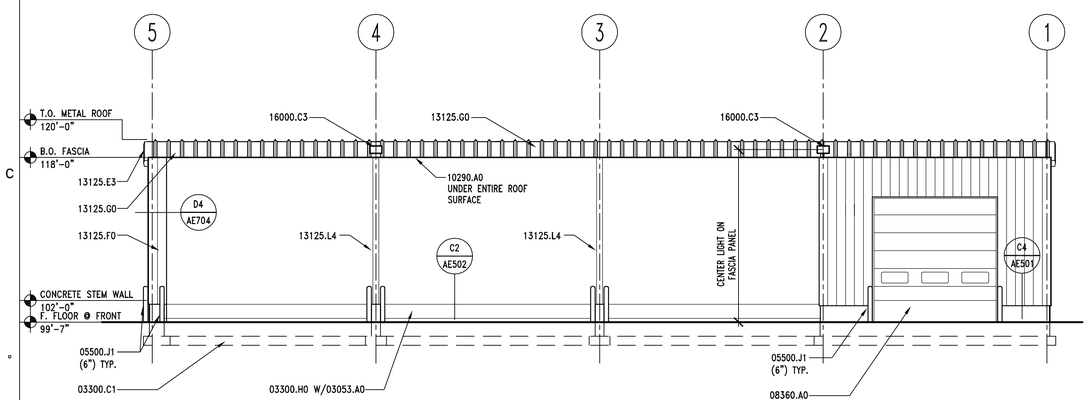

B1 OPEN STORAGE BLDG. – SOUTH ELEVATION

AE704 REF. AE704 SCALE: 1/8" = 1'-0"

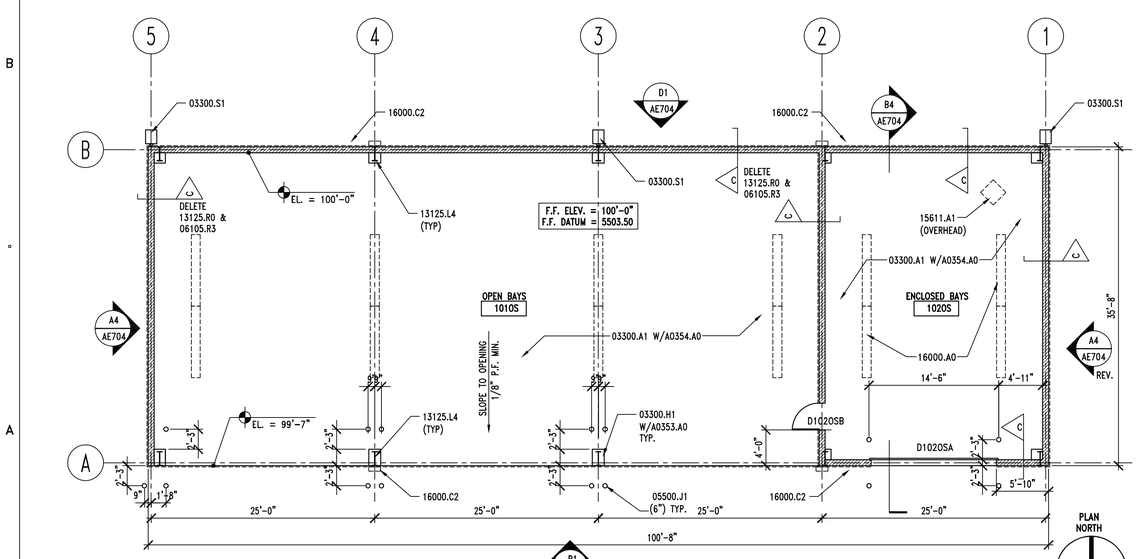

A1 OPEN STORAGE BLDG. – FLOOR PLAN

AE704 REF. SCALE: 1/8" = 1'-0"

GENERAL NOTES

1. FIELD VERIFY ALL EXISTING CONDITIONS AND THEIR COMPATIBILITY WITH NEW CONSTRUCTION PRIOR TO THE COMMENCEMENT OF WORK. COORDINATE DISCREPANCIES WITH ARCHITECT.

2. DO NOT SCALE DRAWINGS.

3. SEE CIVIL, STRUCTURAL, MECHANICAL AND ELECTRICAL DRAWINGS FOR MORE INFORMATION.

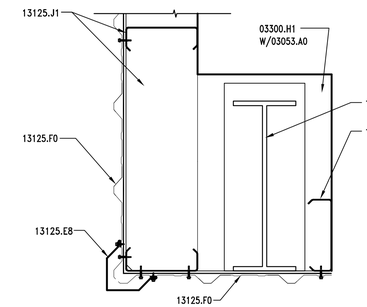

D4 COLUMN DETAIL

AE704 REF. AE704 SCALE: 1 1/2" = 1'-0"

XVL-AE704A702

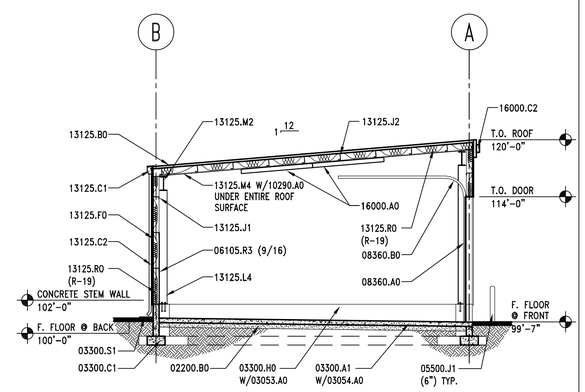

B4 OPEN STORAGE BLDG. – SECTION

AE704 REF. AE704 SCALE: 1/8" = 1'-0"

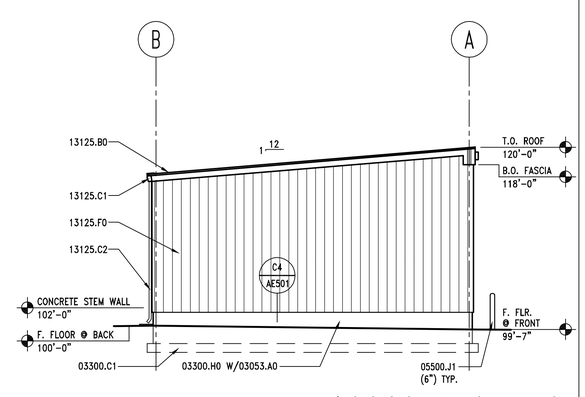

A4 OPEN STORAGE BLDG. – EAST/WEST ELEV.

AE704 REF. AE704 SCALE: 1/8" = 1'-0"

KEYNOTES

02200.B0	GRAVEL BASE
03053.A0	CONCRETE WATER PROOFING ADMIXTURE
03054.A0	OLIOPHOBIC SEALER, OVER CONCRETE WATER PROOFING SYSTEM
03300.A1	CONCRETE SLAB-ON-GRADE – RE: STRUCTURAL
03300.C1	FOOTING – RE: STRUCTURAL
03300.H0	FOUNDATION WALL, RE: STRUCTURAL
03300.H1	CONCRETE PIER, RE: STRUCTURAL
03300.S1	SPLASH BLOCK
05500.J1	PIPE BOLLARD (DIAMETER) – GALV. & PAINTED
06105.R3	G1S A/C PLYWOOD (THICKNESS)
08360.A0	OVERHEAD SECTIONAL DOOR
08360.B0	DOOR TRACK
10290.A0	BIRD CONTROL NETTING
13125.B0	STANDING SEAM METAL ROOF
13125.C1	METAL RAIN GUTTER
13125.C2	DOWNSPOUT
13125.E3	RAKE TRIM
13125.E8	CORNER TRIM
13125.F0	METAL WALL PANEL
13125.G0	STANDING SEAM METAL FACIA
13125.J1	STRUCTURAL GIRT
13125.J2	PURLIN
13125.L4	STEEL COLUMN – PRIMED AND PAINTED
13125.M4	STEEL BEAM – PRIMED AND PAINTED
13125.R0	INSULATION & VAPOR BARRIER (R-VALUE)
15611.A1	PROPANE FIRED FURNACE
16000.A0	INTERIOR LIGHTS
16000.C3	EXTERIOR WALL MOUNTED FLOOD LIGHTS

EXTERIOR COLOR SCHEDULE

(13125.B0, G0, C1 & E3) METAL ROOF, FASCIA, GUTTERS & RAKE TRIM: KYNAR 500 "SIERRA TAN" OR EQUAL
(13125.F0) METAL WALL PANEL: KYNAR 500 "ALMOND" OR EQUAL
(13125.C2) DOWN SPOUTS: PREFINISHED TO MATCH METAL WALL PANEL @ GRID 3.
(13125.C2) DOWN SPOUTS: PREFINISHED TO MATCH CORNER TRIM @ GRIDS 1 & 5.
(08111.A0, B0 & 08360.A0) DOORS & FRAMES: KYNAR 500 "BONE WHITE" OR EQUAL
(05500.J1) BOLLARDS: OSHA SAFETY YELLOW

CODE ANALYSIS

APPLICABLE CODES

	Year		Year
International Building Code	2003	National Electrical Code	2002
International Mechanical Code	2003	Uniform Code for Building Conservation	N.A.
International Plumbing Code	2003	ADA Accessibility Guidelines	2002
International Fire Code	2003		
International Energy Conservation Code	2003		

A. Occupancy and Group: S1 MAINT. FAC.

Change in Use: Yes ___ No X Mixed Occupancy: Yes ___ No X
Special Use and Occupancy (e.g. High Rise, Covered Mall): N.A.

B. Seismic Design Category: D Design Wind Speed: 90 mph

C. Type of Construction (circle one):

I/A I/B II/A II/B III/A III/B IV/HT V/A (V/B)

D. Fire Resistance Rating Requirements for the Exterior Walls based on the fire separation distance (in hours):
North: 0 South: 0 East: 0 West: 0

E. Mixed Occupancies: NO Nonseparated Uses: NO

F: Sprinklers:

Required: NO Provided: NO Type of Sprinkler System: N.A.

G: Number of Stories: 1 Building Height: 20'-0"

H: Actual Area per Floor (square feet): 3591 SF

I: Tabular Area: 9000 SF

J: Area Modifications:

a) $A_a = A_1 + \left[\frac{A_1 I_1}{100}\right] + \left[\frac{A_2 I_2}{100}\right]$ $I_f = 100\left[\frac{F}{P} - 0.25\right]\frac{W}{30}$

$15750\ SF = 9000 + \left[\frac{9000\ (75)}{100}\right] + \left[\frac{9000\ (0)}{100}\right]$

b) Sum of the Ratio Calculations for Mixed Occupancies:

$\frac{\text{Actual Area}}{\text{Allowable Area}} \leq 1 \quad \frac{9856\ SF}{15750\ SF} = .228$

c) Total Allowable Area for:
1) One Story: 15750 SF
2) Two Story: $A_a(2)$ N.A.
3) Three Story: $A_a(3)$ N.A.

d) Unlimited Area Building: Yes ___ No X Code Section: ___

K. Fire Resistance Rating Requirements for Building Elements (hours).

Element	Hours	Assembly Listing	Element	Hours	Assembly Listing
Exterior Bearing Walls	0	N.A.	Floors - Ceiling Floors	0	U.L. D902
Interior Bearing Walls	0	N.A.	Roofs - Ceiling Roofs	0	N.A.
Exterior Non-Bearing Walls	0	N.A.	Exterior Doors and Windows	0	N.A.
Structural Frame	0	N.A.	Shaft Enclosures	0	N.A.
Partitions - Permanent	0	N.A.	Fire Walls	0	N.A.
Fire Barriers	0	N.A.	Fire Partitions	0	I.B.C. 13-1.2
			Smoke Partitions	0	N.A.

L. Design Occupant Load: 8* *MAX. OCCUPANTS BASED ON UDOT STAFFING FOR 4 BAY FACILITY
Exit Width Required: 3" Exit Width Provided: 3'-0"

M. Minimum Number of Required Plumbing Facilities: IBC 2902.4
a) Water Closets - Required (m) 0 (f) 0 Provided (m) 0 (f) 0
b) Lavatories - Required (m) 0 (f) 0 Provided (m) 0 (f) 0
c) Bath Tubs or Showers: 0
d) Drinking Fountains: 0 Service Sinks: 0

CLIENT

VERNAL
MAINTENANCE FACILITY
STATION #3437
2773 NORTH VERNAL AVENUE
VERNAL, UTAH 84078

DESIGNER

ARCHIPLEX GROUP
architecture · planning · design services
1135 South West Temple, Ste. A
Salt Lake City, UT 84101
P:(801) 961-7070
F:(801) 961-7373

CONSULTANTS

PROFESSIONAL SEAL

STATE OF UTAH
RALPH M. STANISLAW
95-310818-0301
LICENSED ARCHITECT

ISSUE

MARK	DATE	DESCRIPTION
	6-27-06	RE-BID SET
	3-31-06	CONSTRUCTION DOCUMENTS
	1-20-06	FINAL REVIEW SET
	8-22-05	PRELIMINARY SUBMITTAL

DFCM PROJECT NO:	05056900
ARCHIPLEX PROJECT NO:	050011.01
DRAWN BY:	K. PHILLIPS
CHECKED BY:	R. STANISLAW
SCALE:	1/8"=1'-0"
DATE:	JUNE 27, 2006

KEY PLAN

SHEET TITLE

SITE STRUCTURES
ADD ALTERNATE #2
OPEN STORAGE PLAN,
SECTIONS & ELEVS.

AE704

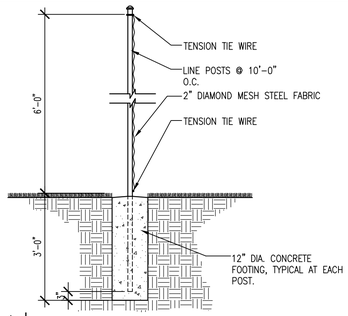

C1 | CHAIN LINK FENCE DETAIL–ADD ALT #3

AE705 | REF. SCALE: 1/2" = 1'-0"

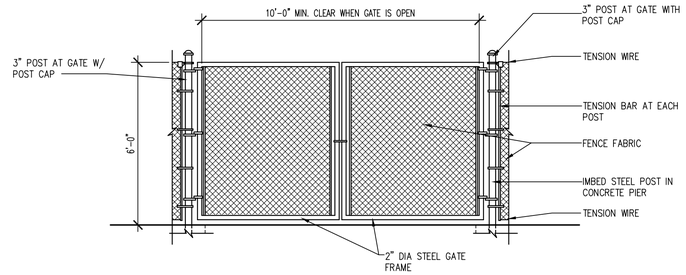

C2 | CHAIN LINK GATE ELEV.–ADD ALT #3

AE705 | REF. SCALE: 3/8" = 1'-0"

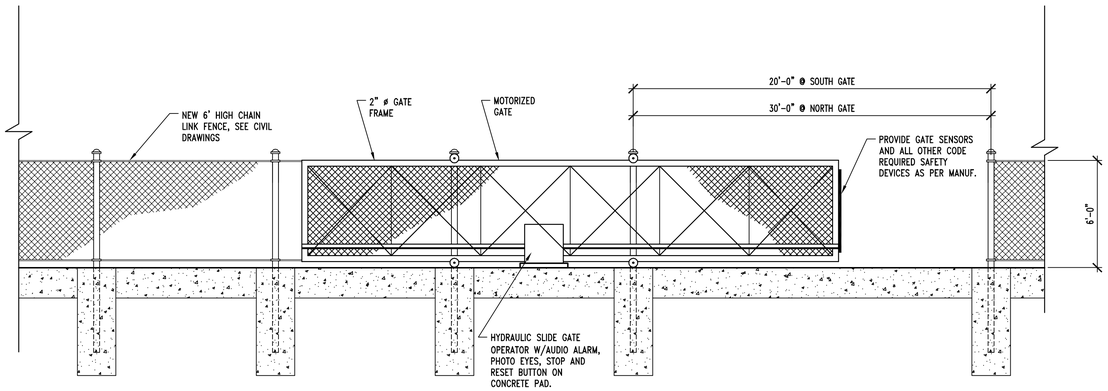

B2 | MOTORIZED GATE ELEVATION–ADD ALT #3

AE705 | REF. AE705 SCALE: 1/4" = 1'-0"

4' 3' 2' 1' 0' 2' 4' 8'

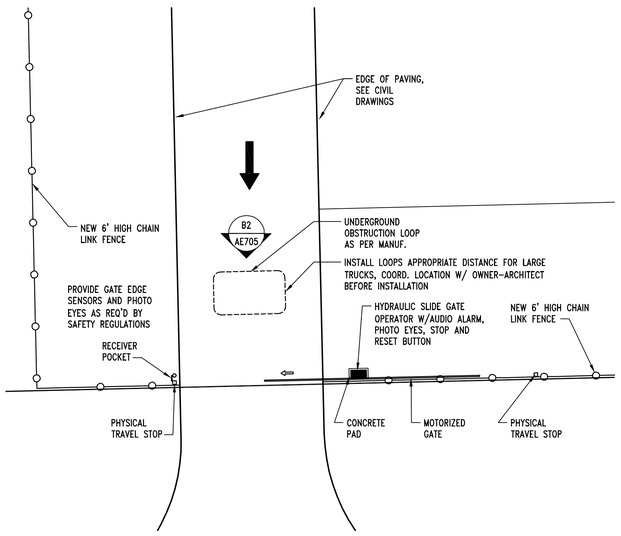

A1 | SOUTH GATE PLAN–ADD ALT #4

AE705 | REF. SCALE: 1" = 10'-0"

10' 5' 0' 5' 10' 20' NORTH

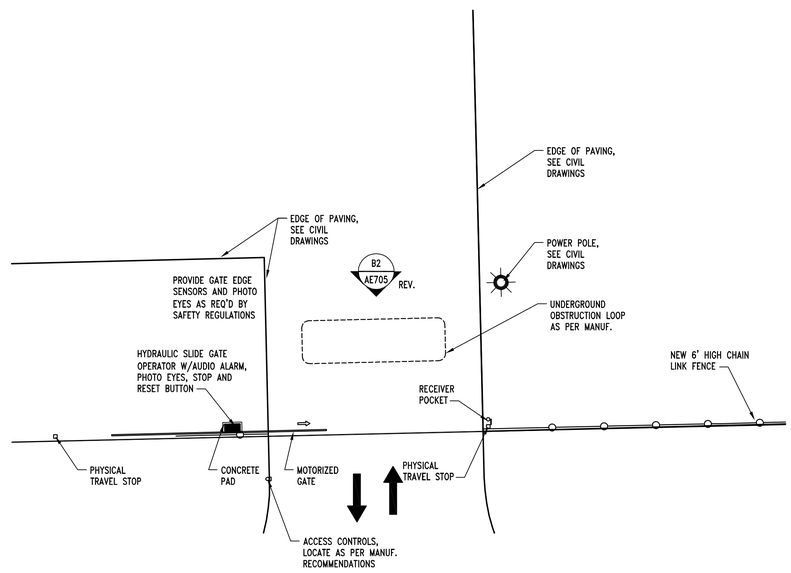

A4 | NORTH GATE PLAN–ADD ALT #3

AE705 | REF. SCALE: 1" = 10'-0"

10' 5' 0' 5' 10' 20' NORTH

GENERAL NOTES

1. FIELD VERIFY ALL EXISTING CONDITIONS AND THEIR COMPATIBILITY WITH NEW CONSTRUCTION PRIOR TO THE COMMENCEMENT OF WORK. COORDINATE DISCREPANCIES WITH ARCHITECT.
2. DO NOT SCALE DRAWINGS.
3. SEE CIVIL AND ELECTRICAL DRAWINGS FOR MORE INFORMATION.

CLIENT

VERNAL
MAINTENANCE FACILITY
STATION #3437
2773 NORTH VERNAL AVENUE
VERNAL, UTAH 84078

DESIGNER

ARCHIPLEX GROUP
architecture · planning · design services
1135 South West Temple, Ste. A
Salt Lake City, UT 84101
P:(801) 961-7070
F:(801) 961-7373

CONSULTANTS

PROFESSIONAL SEAL

STATE OF UTAH
RALPH M. STANISLAW
95-310818-0301
LICENSED ARCHITECT

ISSUE

MARK	DATE	DESCRIPTION
	6-27-06	RE-BID SET
	3-31-06	CONSTRUCTION DOCUMENTS
	1-20-06	FINAL REVIEW SET
	8-22-05	PRELIMINARY SUBMITTAL

DFCM PROJECT NO:	05056900
ARCHIPLEX PROJECT NO:	050011.01
DRAWN BY:	K. PHILLIPS
CHECKED BY:	R. STANISLAW
SCALE:	1/8"=1'-0"
DATE:	JUNE 27, 2006

KEY PLAN

SHEET TITLE

SITE STRUCTURES
ADD ALT. #3 & #4
MOTOR. GATE PLANS,
ELEVATIONS & DETAILS

AE705

GENERAL STRUCTURAL NOTES

GENERAL

1. The structural notes are intended to complement the project specifications. Specific notes and details in the drawings shall govern over the structural notes and typical details.
2. Typical details and sections shall apply where specific details are not shown.
3. The contractor shall verify all site conditions and dimensions. If actual conditions differ from those shown in the contract drawings, the contractor shall immediately notify the architect/engineer before proceeding with the fabrication or construction of any effected elements.
4. Omissions or conflicts between the contract drawings and/or specifications shall be brought to the attention of the architect/engineer before proceeding with any work involved. In case of conflict, follow the most stringent requirement as directed by the architect/engineer at no additional cost to the owner.
5. The contractor shall submit a written request to the architect/engineer before proceeding with any changes, substitutions or modifications. Any work done by the contractor before receiving written approval will be at the contractor's risk.
6. The contractor shall coordinate with all trades any items that are to be integrated into the structural system such as openings, penetrations, mechanical and electrical equipment, etc. Sizes and locations of mechanical and other equipment that differs from those shown on the contract drawings shall be reported to the architect/engineer.
7. The contractor shall provide adequate shoring and bracing as required for his method of erection. Shoring and bracing shall remain in place until final connections for the permanent members are completed. The building shall not be considered stable until all connections are completed. Walls shall not be considered self-supporting and shall be braced until the floor/roof system is completed.
8. Site observations by BHB Consulting Engineers, P.C.'s field representative shall not be construed as approval of construction procedures nor special inspection.
9. Detailing and shop drawing production for structural elements will require information (including dimensions) contained in the architectural, structural and/or other consultants' drawings. The structural drawings shall be used in conjunction with the architectural and other consultant's drawings. Some dimensions and elements such as elevations, depressions, slopes, mechanical housekeeping pads, etc. are not shown in the structural drawings. All dimensions shown on structural drawings shall be verified by contractor with architectural, mechanical and electrical drawings.
10. Review of shop drawing submittals by BHB Consulting Engineers, P.C. is for general compliance only and is not intended for approval. The shop drawing review shall not relieve the contractor from the responsibility of completing the project according to the contract documents.
11. Shop drawings made from reproductions of the contract drawings will be rejected unless the contractor signs a release agreement prior to the shop drawings being reviewed.
12. Only an authorized representative of BHB Consulting Engineers, P.C. may make changes to these contract drawings. BHB Consulting Engineers, P.C. shall not be held responsible or liable for any claims arising directly or indirectly from changes made without written authorization by an authorized representative of BHB Consulting Engineers, P.C.

BASIS OF DESIGN

1. Governing Building Code — International Building Code 2003
2. Mezzanine Floor Loads
   a. Dead — 54 psf
   b. Live — 125 psf
3. Seismic Loads
   a. Short Period Mapped Spectral Acceleration — $S_S = 0.36$
   b. Soil Site Class — E
   c. Short Period Site Coefficient — $F_a = 2.15$
   d. 5% Damped Design Spectral Response Acceleration — $S_{DS} = 2/3 * F_a * S_S$
   e. Seismic Importance Factor — $I_e = 1.00$
   f. Response Modification Coefficient — R = 5.0
   g. Seismic Response Coefficient — $C_s = S_{DS} * I_e / R$
   h. W — Dead Loads of Structure
   i. Building Seismic Design Category — D
   j. System Overstrength Factor — 2.5
   k. Deflection Amplification Factor — 2.5
   l. Base Shear — $V = C_S * W = 0.10\,W$ (Strength Design)
5. Wind Loads
   a. Wind Velocity (3 Second Gust) — 90 mph
   b. Exposure Type — C
   c. Wind Importance Factor — 1.00

FOUNDATION

1. Soils Investigation Report: Earthtec Testing and Engineering, P.C dated 23 December 2005
2. Soil bearing pressure: 1500 psf
3. Frost Protection: 30 inches minimum.
4. Clear excavations of debris and loose soil prior to placing footings. All footings shall bear on a minimum of 18" of engineered compacted fill over a Mirafi 500x geotextile fabric as noted in the geotechnical report.

EARTHWORK

1. Consult the project specifications and soils report for further earthwork requirements.

CONCRETE

1. Materials, unless noted otherwise:
   a. Normal weight aggregates — ASTM C 33
   b. Reinforcing Steel — ASTM 615 Grade 60 (Fy = 60 ksi); Use Grade 40 (Fy = 40 ksi) for field bent dowels with spacings indicated reduced by 1/3.
   c. Deformed Bar Anchors (DBA) — ASTM A496
   d. Admixtures:
      i. Air-entraining admixtures comply with ASTM C 260 (when used).
      ii. Calcium chloride shall not be added to the concrete mix.
   e. Type I cement complying with ASTM C-150 shall be used for all concrete.
   f. The water/cement ratios shall meet the requirements of ACI 318.
   g. Provide air entraining as recommended by ACI 318.
   h. No aluminum conduit or product containing aluminum or any other material injurious to concrete shall be embedded in concrete.
2. Compressive strengths of concrete at 28 days shall be as follows:
   a. Footings ....3,000 psi
   b. Interior Slabs on Grade ....4,000 psi
   c. Walls ....3,000 psi
   d. Normal Weight concrete over Steel Deck ....3,500 psi
   e. All Site Concrete ....4,000 psi
3. 5 1/2" thick (total thickness) normal weight concrete slab shall be poured over the steel deck. Reinforce slab with 6" x 6" - W2.1/W2.1 welded wire fabric minimum, unless noted otherwise. Welded Wire Fabric shall be placed 1" to 1-1/2" below the top of the slab.
   a. At contractor's option, the welded wire fabric may be substituted with 100% virgin polypropylene synthetic fiber containing no reprocessed olefin materials and specifically manufactured to an optimum gradation for use as concrete secondary reinforcement. Application shall be 1.5 lbs minimum per cubic yard.
4. Only one grade or type of concrete shall be poured on the site at any given time.
5. The contractor shall be responsible for the design, detailing, care, placement and removal of all formwork and shores.
   a. Supporting forms and shoring shall not be removed until structural members have acquired sufficient strength to safely support their own weight and any construction load to which they may be subjected. In no case, however, shall forms and shoring be removed in less than 24 hours after concrete placement.
   b. Suspended slabs shall be re-supported after form removal until concrete reaches its 28-day specified compressive strength.
6. Reinforcement shall have the following concrete cover:
   Cast-in-place Concrete: ....Clear Cover
   a. Cast against and permanently exposed to earth ....3"
   b. Formed concrete exposed to earth or weather:
      #6 thru #18 bars ....2"
      #5 and smaller bars ....1-1/2"
   c. Concrete not exposed to weather or in contact with ground:
      Slabs, Walls, Joists: #11 bars and smaller ....3/4"
      Beams, Columns: Primary Reinf., Ties, Stirrups, Spirals ....1-1/2"
7. Construction Joints and Control Joints:
   a. Provide a formed and beveled 2 x 4 x continuous keyway in all horizontal and vertical construction joints including between top of footing and foundation walls, unless noted otherwise. In addition, all joints shall be intentionally roughened to a full amplitude of approximately 1/4 inch.
   b. Control joints shall be installed in slabs on grade so the length to width ratio of the slab is no more than 1.25:1. Control joints shall be completed within 12 hours of concrete placement. Control joints may be installed by:
      i. Saw cut a depth of 1/4 the thickness of the slab
      ii. Tooled joints a depth of 1/4 the thickness of the slab
   c. Install construction or control joints in slabs on grade at a spacing not to exceed 75 times the slab thickness in any direction for reinforced slabs, unless noted otherwise. Construction joints shall not exceed a distance of 125'-0" o.c. in any direction.
   d. In exposed areas, install construction or control joints in concrete over metal deck at a spacing not to exceed 10 feet o/c. Coordinate location with architectural drawings.
8. Construction
   a. Use chairs or other support devices recommended by the CRSI to support and tie reinforcement bars and WWF prior to placing concrete. WWF shall be continuously supported at 36" o.c. maximum. Reinforcing steel for slabs on grade shall be adequately supported on precast concrete units. Lifting the reinforcing off the grade during placement of concrete is not permitted.
   b. Concrete to be mechanically consolidated during placement per ACI standards.
   c. Contractor shall coordinate placement of all openings, curbs, dowels, sleeves, conduits, bolts, inserts and other embedded items prior to concrete placement.
   d. All embeds and dowels shall be securely tied to formwork or to adjacent reinforcing prior to the placement of concrete.
   e. No pipes, ducts, sleeves, etc shall be placed in structural concrete unless specifically detailed or approved by the structural engineer. Penetrations through walls when approved shall be built into the wall prior to concrete placement. Penetrations will not be allowed in footings or grade beams unless detailed. Piping shall be routed around these elements and footings stepped to avoid piping.
   f. Reinforcing Bars shall not be welded. Do not substitute reinforcing bars for DBAs or HSAs.
9. Detailing:
   a. Lap splice lengths shall be detailed to comply with the "Reinforcing Bar Lap Splice Schedule" on sheet S601. Splices may be made with mechanical splices capable of 125% tension capacity of the bar being spliced. Mechanical splices shall be the positive connecting type coupler and shall meet all Uniform Building Code requirements. Use "Cadweld", "Lenton" Standard Couplers, "Bar-Lock" or equal with internal protector. If mechanical splices are used, splices or couplers on adjacent bars shall be staggered a minimum of 24" apart along the longitudinal axis of the reinforcing bars.
   b. At joints provide reinforcing dowels to match the member reinforcing, unless noted otherwise.
   c. At all discontinuous control or construction slab on grade joints, provide 2 - #4 x 48 inches.
   d. Provide corner bars at intersecting wall corners using the same bar size and spacing as the horizontal wall reinforcing.
   e. All vertical reinforcing shall be doweled to footings, or to the structure below with the same size and spacing as the vertical reinforcing for the element above. Dowels extending into footings shall terminate with a 90 degree standard hook and shall extend to within 4" of the bottom of the footing. Footing dowels (#8 bars and smaller) with hooks need not extend more than 20" into footings.
   f. Horizontal wall reinforcing shall terminate at ends of walls and openings into the far end of the jamb column with a 90-degree standard hook plus a 6 bar diameter extension. Horizontal wall reinforcing shall be continuous through construction and control joints.
   g. See detail B2/S501 for reinforcing around miscellaneous openings (8" to 36" wide). For openings wider than 36", contact the engineer. All recesses that interrupt reinforcing shall be reinforced the same as an opening.

EPOXY

1. Epoxy shall be "HIT HY 150 MAX" or "HIT RE 500 " by Hilti Corporation, "Anchor-It" by Adhesive Technology Corporation, "Epcon Injection System" by Ramset/Redhead, "Power-Fast" by Rawl, or approved equal.
2. All drilled holes shall be 1/8 inch larger than the bar or anchor bolt being installed.
3. After drilling the proper size hole, clean the walls and bottom of the hole of all dust and debris using a nylon brush in conjunction with oil free compressed air. The hole shall be free of dust, debris and standing water.
4. Follow all manufacturer's recommendations for epoxy installation.

STRUCTURAL STEEL

1. Material:
   a. Other shapes & Plates — ASTM A36
   b. Deformed Bar Anchors (DBA) — ASTM A496
   c. Bolted Connections: — ASTM A325
2. Fabrication and construction shall comply with the latest edition of the following Codes and Standards:
   a. American Institute of Steel Construction (AISC), "Specification for the Design, Fabrication and Erection of Structural Steel for Buildings," with "Commentary".
   b. AISC "Code of Standard Practice" excluding the following: Section 3.4, Section 4.4, Section 4.4.1,
   c. AISC "Specification for Structural Joints Using ASTM A325 or A490 Bolts"
   d. American Welding Society (AWS), Structural Welding Code (specific items do not apply when they conflict with the AISC requirements).
   e. AISC "Seismic Provision for Structural Steel Buildings"
3. Welding
   a. All welding and cutting shall be performed by AWS certified welders.
   b. Use E-70 XX or as noted otherwise.
   c. All intersecting steel shapes which are not bolted shall be connected by a fillet weld all around, unless noted otherwise. Where fillet weld sizes are not shown they shall be 1/16" less than the thinnest of the connected parts for thicknesses 1/4" and larger. Fillet welds on plates less than 1/4" shall be of the same size as the thinnest of the connected part.
   d. Reinforcing Bars: Do not weld rebar. Do not substitute reinforcing bars for deformed bar anchors (DBAs), machine bolts, or headed stud anchors(HSAs).
   e. Do not weld anchor bolts, including "tack" welds.
   f. Headed Stud Anchors (HSAs) welding and deformed bar anchor welding shall conform to the manufacturer's specifications.
4. Bolted Connections:
   a. Use ASTM A325N bolts for steel to steel connections, as noted herein or as noted on the drawings. A325N bolts shall be used in connections for simple span framing and beam (or girder) to bearing plate connections. Tighten bolts to a snug tight condition.
   b. Use hardened washers beneath the turned element of all bolts or nuts. Use hardened beveled washers, to compensate for the lack of parallelism, where the outer face of the bolted parts has a slope greater than one in twenty with respect to the plane normal to the bolt axis. At oversized holes hardened washers or plates shall conform with ASTM F-436 and shall completely cover the slot after installation.
   c. Where a steel to steel beam connection is not shown, provide a standard AISC framed connection for one half the total uniform load capacity of the beam for the span and steel specified.
   d. Bolts, nuts and washers shall not be reused.

METAL DECKING

1. Steel deck shall comply with the latest requirements of the Steel Deck Institute.
2. All deck shall be 3-span continuous minimum. In areas where 3-span conditions are not possible, the contractor shall provide heavier gauge deck as required to provide the equivalent loading of the deck under a three span condition.
3. All deck supporting members shall be dry before welding.
4. Crimp seams before button punching or welding interlocking seams.
5. Where deck is to receive sprayed-on fire proofing, painted deck shall be coated with special paint that will allow the sprayed-on fire proofing to adhere to the painted deck.

Steel Floor Deck

a. Steel floor deck shall be 2" deep X 20 gauge minimum galvanized Non-Composite Formlock deck with interlocking side seams and #10 screws at 8" o.c. with the following properties:

	20 Gauge
Minimum S (in^3/ft) =	0.361
Minimum I (in^4/ft) =	0.423

b. Steel deck with 5 1/2" thick (overall thickness) normal weight concrete slab shall have a minimum diaphragm shear capacity of 450 lbs/ft. for a 1 deck span.
c. Deck Attachment:
   i. Frame Fastening: #12 STS @ 35/5 Pattern.
   ii Stitch Fastening: (1) # 10 STS per plan.
d. Attach interlocking seams with 3/16" Ø button punch at 18" o.c., with 1 1/2" top seam weld at 36" o.c. or with Verco PunchLok System at 36" o.c. or with ASC DeltaGrip Sytsem at 36"o/c Closer spacings may be used to develop minimum shear requirements.
e. Provide a 2-inch minimum bearing at supports.

COLD-FORMED STEEL

1. All cold-formed steel shall meet the requirements of "Specifications for the Design of Cold-Formed Steel Structural Members" by American Iron and Steel Institute (AISI).
2. Light Gauge Steel Framing:
   a. Galvanized steel must meet the minimum requirements of ASTM A446 Grade D (Fy = 50 ksi) for 12, 14 and 16-gauge and ASTM A446 Grade A (Fy = 33 ksi) for 18-gauge and lighter. Galvanized coatings must meet the ASTM A525 specification.
   b. Follow all manufacturers' recommendations for the use of these products.
   c. Unless noted otherwise, all welded connections shall be done according to AWS standards.
   d. All interior non-bearing steel-stud walls that extend above the ceiling but do not attach to the structure above shall be brace with diagonal metal-stud braces (45 degrees). The kl/r ratio of the brace shall not exceed 200 and shall not be spaced further apart than 10'-0" o/c. Connect diagonal braces to the top of the steel stud walls and to the top flange of the steel beams with two #10 tek screws minimum. Where a concrete deck occurs above, use two powder-driven fasteners per diagonal brace. Other approved methods may be used.
3. Prefabricated Systems: Submit complete shop drawings and calculations of all elements for review. Shop Drawings shall bear the stamp of a Professional Engineer registered in the State of Utah.

PREFABRICATED METAL BUILDING

1. The design, fabrication and erection of all prefabricated elements and associated hardware shall comply with the latest requirements of the IBC, AISC, SDI and AISI.
2. Prior to fabrication and installation of anchor bolts, the metal building supplier shall submit complete shop drawings and calculations including reactions bearing the stamp of a Registered Design Professional licensed in the State of Utah. Complete calculations shall be submitted with the shop drawings.
3. Do not modify any structural element of the prefabricated metal building without the written consent and direction from the manufacturer. Send copies of the consent and modifications to the Architect and Engineer.
4. The design of the premanufactured structural roof system including the steel deck, joists, girders, columns, and the lateral force resisting system (including rigid frames) is the responsibility of the premanufactured metal building supplier. Refer to the prefabricated structural roof system supplier's drawings and calculations for the exact gravity roof load values and for the design of the roof and lateral systems.

SPECIAL INSPECTION AND QUALITY ASSURANCE

Special inspection and quality assurance, as required by section 1704 of the IBC, shall be provided by an independent agency employed by the owner unless waived by the building official. The contractor shall coordinate and cooperate with the required inspections. All testing and inspection reports shall be sent to the engineer for review. Items requiring special inspection and quality assurance are:

1. Concrete placement (IBC Section 1704.4)
   a. Continuous special inspection shall be provided
   b. See specifications for concrete testing requirements.
   c. Cylinders, slump and air-entrainment shall be done for every 50 cubic yards or each day's production if less than 50 cubic yards
2. Bolts installed in concrete (IBC Section 1704.4)
   a. All bolts shall be inspected prior to and during concrete placement.
3. Concrete reinforcing steel placement (IBC Section 1704.4)
   a. Reinforcing shall be inspected prior to concrete placement.
4. Structural welding, including steel deck (IBC 1704.3)
   a. Periodic special inspection of metal floor and roof decks
   b. Periodic special inspection of single pass fillet welds less than or equal to 5/16"
   c. Continuous special inspection of single pass fillet welds greater than 5/16" and multi-pass fillet welds.
   d. Continuous special inspection of complete and partial penetration welds.
5. High Strength bolted connections (IBC Section 1704.3.3)
   a. Periodic special inspection of bearing type connections.
   b. Continuous special inspection of slip critical connections. Special inspector shall be present to observe the pre-installation testing and calibration procedures.
6. Epoxy Anchors (IBC Section 1704.13)
   a. Special inspection shall verify all drilled holes' size and depth prior to installation of epoxy and anchor rod.

DEFERRED SUBMITTALS

For the purpose of this section, deferred submittals are defined as per section 106.3.4.2 of the IBC. Submittal documents for deferred submittal items shall be submitted to the engineer/architect for their review for general conformance with the design of the building. Deferred structural submittals for this project are:

1. Prefabricated Metal Building

LEGEND OF MARKS AND ABREVIATIONS

AB	ANCHOR BOLT(S)	JST	JOIST
ABV	ABOVE		
ALT	ALTERNATE	k	KIP(S) = 1000 POUNDS
APPROX	APPROXIMATE	KLF	KIPS PER LINEAL FOOT
ARCH	ARCHITECT(URAL)	KSF	KIPS PER SQUARE FOOT
BLDG	BUILDING	LBS	POUNDS
BLW	BELOW	LF	LINEAL FOOT
BM	BEAM	LLH	LONG LEG HORIZONTAL
BOT	BOTTOM	LLV	LONG LEG VERTICAL
BRG	BEARING	LSV	LONG SIDE VERTICAL
BTWN	BETWEEN		
		MAX	MAXIMUM
CC	CENTER-TO CENTER	MECH	MECHANICAL
CJ	CONST/CONTROL JOINT	MFR	MANUFACTURER
COL	COLUMN	MIN	MINIMUM
CONC	CONCRETE	MISC	MISCELLANEOUS
CONST	CONSTRUCTION		
CTR	CENTER	NIC	NOT IN CONTRACT
CW-x	CONCRETE WALL	NTS	NOT TO SCALE
DBA	DEFORMED BAR ANCHOR	O.C.	ON CENTER
DBE	DECK BEARING ELEVATION	O.F.	OUTSIDE FACE
DBL	DOUBLE	OPNG	OPENING
DET	DETAIL	OPP	OPPOSITE
DIA	DIAMETER		
DIM	DIMENSION	PCF	POUNDS PER CUBIC FOOT
DN	DOWN	PL	PLATE
DWG	DRAWING	PLF	POUNDS PER LINEAL FOOT
DWL	DOWEL	PSF	POUNDS PER SQUARE FOOT
		PSI	POUNDS PER SQUARE INCH
EA	EACH	PT	POINT
E.F.	EACH FACE		
ELEC	ELECTRICAL	REINF	REINFORCING
ELEV	ELEVATION	REQD	REQUIRED
EQUIP	EQUIPMENT		
EQ	EQUAL		
E.W.	EACH WAY	SHT	SHEET
EXST	EXISTING	SI	SPECIAL INSPECTION
EXP	EXPANSION	SIM	SIMILAR
EXT	EXTERIOR	SOG	SLAB-ON-GRADE
		SQ	SQUARE
FC-x	CONTINUOUS FOOTING MARK	STAG	STAGGERED
F.D.	FLOOR DRAIN	STD	STANDARD
FDN	FOUNDATION	STL	STEEL
F.F.	FINISHED FLOOR	STR	STRUCTURAL
FS-x	SQUARE FOOTING MARK	STS	SELF TAPPING SCREWS
FT	FOOT		
FTG	FOOTING	T&B	TOP AND BOTTOM
FTS-x	THICKEN SLAB MARK	TEMP	TEMPERATURE
		THDS	THREADS
GA	GAUGE	T.O.	TOP OF
GALV	GALVANIZED	TOC	TOP OF CONCRETE
GSN	GENERAL STRUCTURAL NOTES	TOD	TOP OF DECK
		TOF	TOP OF FOOTING
HORIZ	HORIZONTAL	TOW	TOP OF WALL
HT	HEIGHT	TYP	TYPICAL
ICBO	INTERNATIONAL CONFERENCE OF BUILDING OFFICIALS	UNO	UNLESS NOTED OTHERWISE
IBC	INTERNATIONAL BUILDING CODE		
I.F.	INSIDE FACE	VERT	VERTICAL
IN.	INCH		
INT	INTERIOR	W/	WITH
		WWF	WELDED WIRE FABRIC
JT	JOINT	WWM	WELDED WIRE MESH

CLIENT

VERNAL
MAINTENANCE FACILITY
STATION #3437
2773 NORTH VERNAL AVENUE
VERNAL, UTAH 84078

DESIGNER

ARCHIPLEX GROUP
architecture · planning · design services
1135 South West Temple, Ste. A
Salt Lake City, UT 84101
P:(801) 961-7070
F:(801) 961-7373

CONSULTANTS

"Engineering Results"
BHB Consulting Engineers
A Professional Corporation
344 West 300 North
Suite 200
Salt Lake City, Utah 84103
Phone: 801.355.5656
Fax: 801.355.5950
Email: bhb@bhbengineers.com

PROFESSIONAL SEAL

ISSUE

MARK	DATE	DESCRIPTION
	6-27-06	JUNE 27, RE-BID SET
	3-31-06	CONSTRUCTION DOCUMENTS
	1-20-06	FINAL REVIEW SET
	8-22-05	PRELIMINARY SUBMITTAL

PROJECT NO:	05194
DRAWN BY:	C. BROWN
CHECKED BY:	C. HOFHEINS
SCALE:	AS SHOWN
DATE:	MARCH 31, 2006

KEY PLAN

SHEET TITLE

GENERAL STRUCTURAL NOTES

S001

© 2006 ARCHIPLEX GROUP

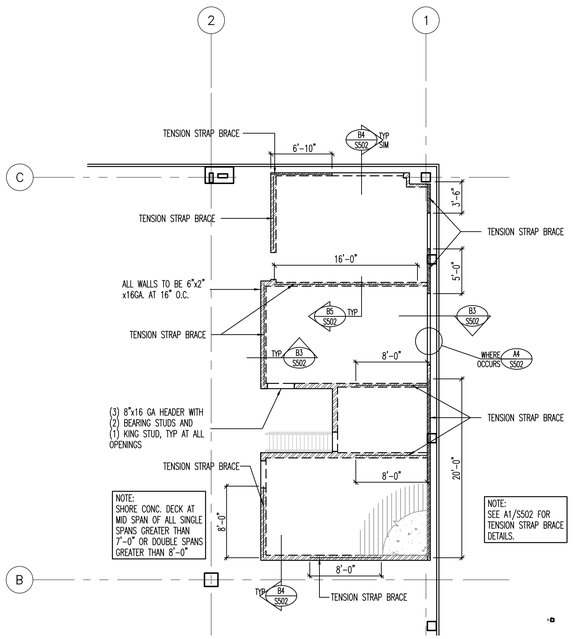

MEZZANINE FRAMING PLAN

SCALE: 1/8"=1'-0"

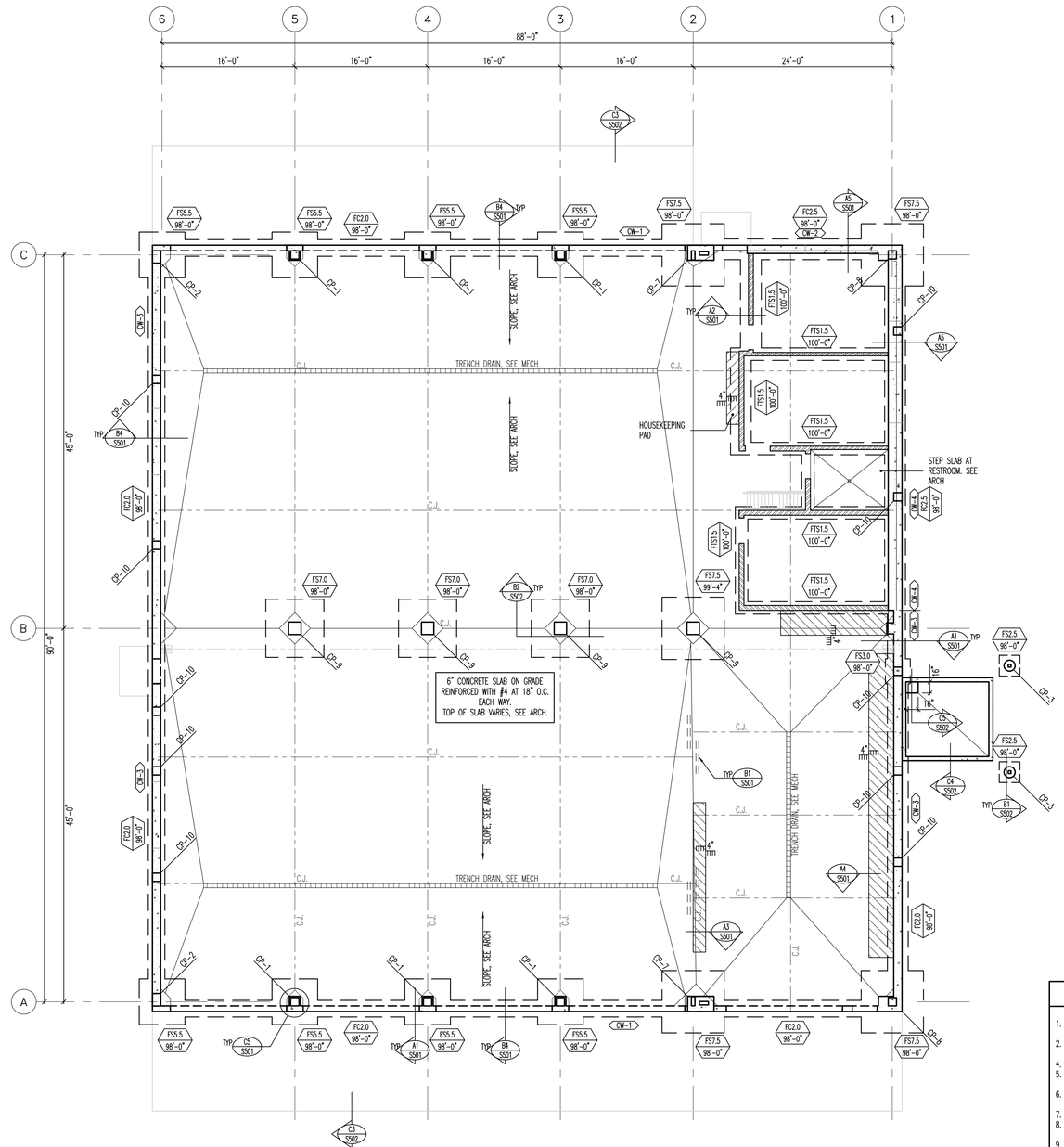

FOOTING AND FOUNDATION PLAN

SCALE: 1/8"=1'-0"

MARKS AND SYMBOLS LEGEND

- SECTION MARK / SHEET NUMBER
- FOOTING DESIGNATION / TOP OF FOOTING ELEVATION
- INDICATES CONCRETE WALL.
- DEPRESS FOUNDATION WALL AND POUR SLAB OVER. SEE DETAIL B4/S501 AND C3/S502.
- INDICATES CONCRETE OVER METAL FLOOR DECK. SEE GENERAL STRUCTURAL NOTES ON SHEET S001.
- INDICATES 4" THICK CONCRETE HOUSE-KEEPING PAD. REINF WITH #4 BARS AT 12" O.C. EACH WAY.
- CWx — INDICATES CONCRETE FOUNDATION WALL TYPE, SEE SCHEDULE ON SHEET S601.
- FCxx — INDICATES CONTINUOUS FOOTING. SEE SCHEDULE ON SHEET S601.
- FSxx — INDICATES SPOT FOOTING. SEE SCHEDULE ON SHEET S601.
- CPx — INDICATES CONCRETE PIER TYPE, SEE SCHEDULE ON SHEET S601.
- C.J. — INDICATES CONTROL/CONSTRUCTION JOINT. SEE DETAILS C3/S501 AND C4/S501.

FOOTING AND FOUNDATION PLAN NOTES

1. COORDINATE LOCATION OF DEPRESSED SLABS, SLOPED SLABS, AND FLOOR DRAINS WITH ARCHITECTURAL AND MECHANICAL DRAWINGS.
2. SEE ARCHITECTURAL AND CIVIL DRAWINGS FOR EXTERIOR CONCRETE WORK AT DOORS, SIDEWALKS, ETC.
4. ALL SPOT FOOTINGS SHALL BE CENTERED UNDER COLUMNS (UNO).
5. SEE DETAILS C1/S501 AND C2/S501 FOR CONDITION WHERE BURIED PIPES RUN PARALLEL AND PERPENDICULAR TO FOOTINGS.
6. SEE DETAIL C3/S501 AND C4/S501 FOR TYPICAL CONTROL/CONSTRUCTION JOINTS IN CONCRETE SLAB ON GRADE AND AT SLAB DEPRESSIONS.
7. SEE DETAIL B1/S501 FOR SLAB REINFORCING WHERE CONTROL JOINTS ARE DISCONTINUOUS.
8. SEE DETAIL B2/S501 FOR ADDITIONAL REINFORCING AT MISCELLANEOUS OPENINGS IN CONCRETE WALLS.
9. SEE DETAIL A3/S501 AND A4/S501 FOR ANCHORAGE OF HOUSEKEEPING PADS.
10. SEE ARCHITECTURAL DRAWINGS FOR DIMENSIONS TO ALL STEEL COLUMNS.
11. FOOTING AND CONCRETE PIER SIZES SHOWN ARE AN ESTIMATE OF ACTUAL SIZES. ACTUAL SIZES WILL BE PROVIDED AFTER PREFABRICATED METAL BUILDER IS SELECTED. ALL BIDDERS SHALL PROVIDE UNIT PRICES FOR ADDING OR SUBTRACTING VOLUME OF CONCRETE, WEIGHT OF REINFORCING STEEL AND VOLUME OF EARTHWORK.
12. SEE "EARTHWORK" NOTES ON SHEET S001 AND DETAIL C1/S502 FOR MINIMUM FILL REQUIRED BENEATH FOOTINGS.

CLIENT

VERNAL
MAINTENANCE FACILITY
STATION #3437
2773 NORTH VERNAL AVENUE
VERNAL, UTAH 84078

DESIGNER

ARCHIPLEX GROUP
architecture · planning · design services
1135 South West Temple, Ste. A
Salt Lake City, UT 84101
P:(801) 961-7070
F:(801) 961-7373

CONSULTANTS

"Engineering Results"
BHB Consulting Engineers
A Professional Corporation
244 West 300 North
Suite 200
Salt Lake City, Utah 84103
Phone: 801.355.5656
Fax: 801.355.5950
Email: bhb@bhbengineers.com

PROFESSIONAL SEAL

ISSUE

MARK	DATE	DESCRIPTION
	6-27-06	JUNE 27, RE-BID SET
	3-31-06	CONSTRUCTION DOCUMENTS
	1-20-06	FINAL REVIEW SET
	8-22-05	PRELIMINARY SUBMITTAL

PROJECT NO:	05194
DRAWN BY:	C. BROWN
CHECKED BY:	C. HOFHEINS
SCALE:	AS SHOWN
DATE:	MARCH 31, 2006

KEY PLAN

SHEET TITLE

FOOTING AND FOUNDATION PLAN

S101

© 2006 ARCHIPLEX GROUP

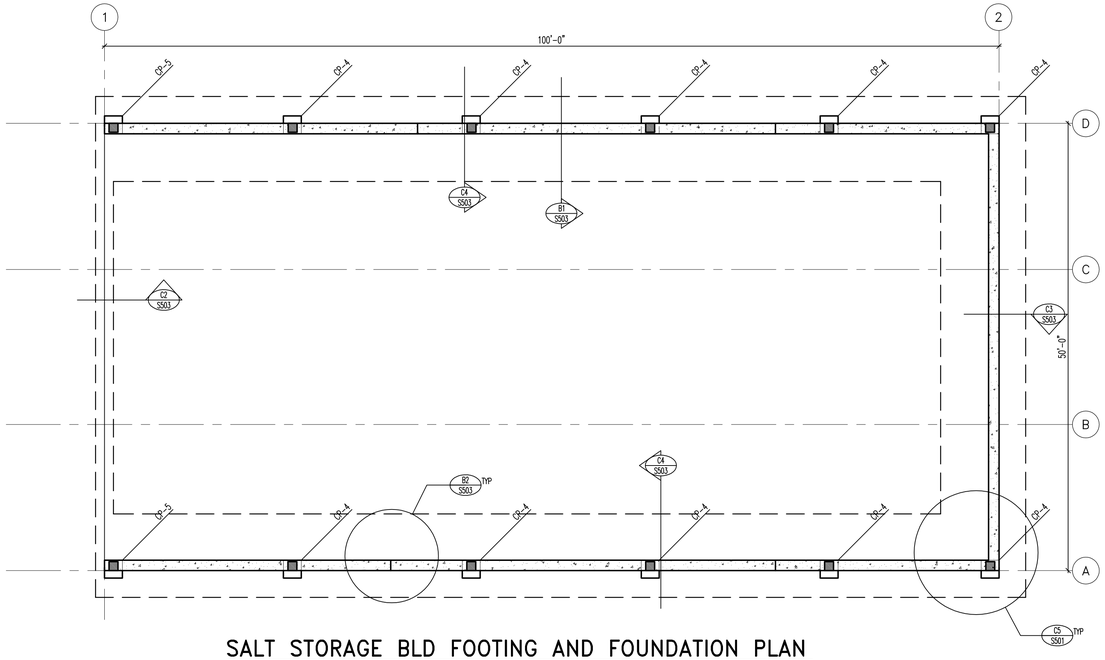

SALT STORAGE BLD FOOTING AND FOUNDATION PLAN
ADD ALT #1

SCALE: 1/8"=1'-0"

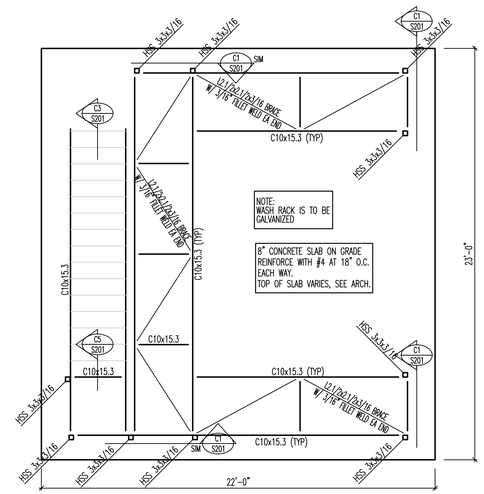

WASH RACK PLAN

SCALE: 1/4"=1'-0"

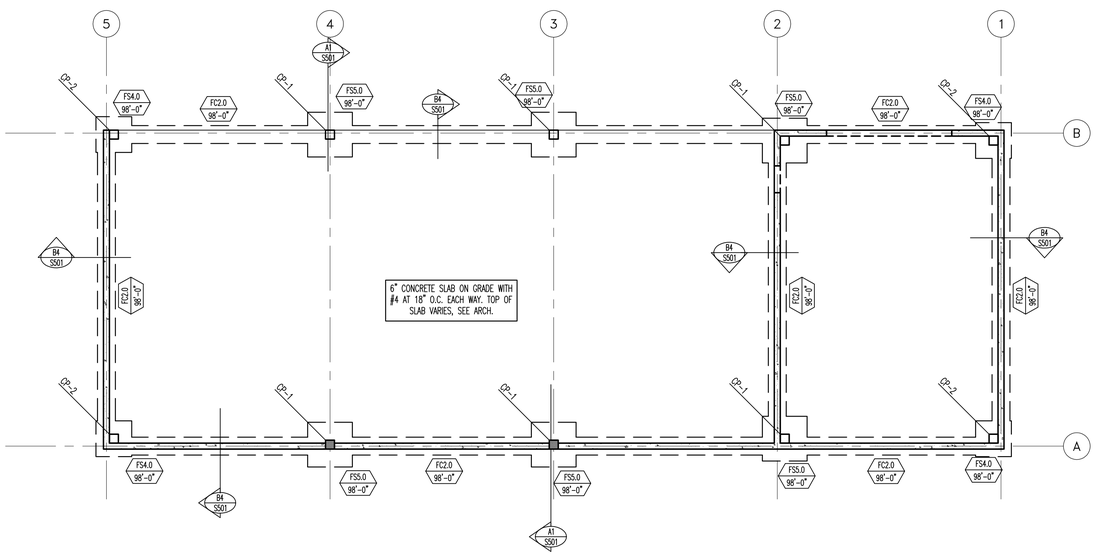

OPEN STORAGE BLD FOOTING AND FOUNDATION PLAN
ADD ALT #2

SCALE: 1/8"=1'-0"

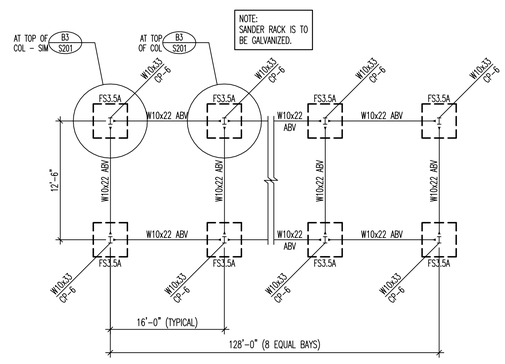

SANDER RACK PLAN

NO SCALE

MARKS AND SYMBOLS LEGEND

- SECTION MARK / SHEET NUMBER
- FOOTING DESIGNATION / TOP OF FOOTING ELEVATION
- INDICATES CONCRETE WALL.
- DEPRESS FOUNDATION WALL AND POUR SLAB OVER. SEE DETAIL B4/S501 AND C3/S502.
- INDICATES CONCRETE OVER METAL FLOOR DECK. SEE GENERAL STRUCTURAL NOTES ON SHEET S001.
- INDICATES 4" THICK CONCRETE HOUSE-KEEPING PAD. REINF WITH #4 BARS AT 12" O.C. EACH WAY.
- CWx — INDICATES CONCRETE FOUNDATION WALL TYPE, SEE SCHEDULE ON SHEET S601.
- FCxx — INDICATES CONTINUOUS FOOTING. SEE SCHEDULE ON SHEET S601.
- FSxx — INDICATES SPOT FOOTING. SEE SCHEDULE ON SHEET S601.
- CPx — INDICATES CONCRETE PIER TYPE, SEE SCHEDULE ON SHEET S601.
- C.J. — INDICATES CONTROL/CONSTRUCTION JOINT. SEE DETAILS C3/S501 AND C4/S501.

FOOTING AND FOUNDATION PLAN NOTES

1. COORDINATE LOCATION OF DEPRESSED SLABS, SLOPED SLABS, AND FLOOR DRAINS WITH ARCHITECTURAL AND MECHANICAL DRAWINGS.
2. SEE ARCHITECTURAL AND CIVIL DRAWINGS FOR EXTERIOR CONCRETE WORK AT DOORS, SIDEWALKS, ETC.
4. ALL SPOT FOOTINGS SHALL BE CENTERED UNDER COLUMNS (UNO).
5. SEE DETAILS C1/S501 AND C2/S501 FOR CONDITION WHERE BURIED PIPES RUN PARALLEL AND PERPENDICULAR TO FOOTINGS.
6. SEE DETAIL C3/S501 AND C4/S501 FOR TYPICAL CONTROL/CONSTRUCTION JOINTS IN CONCRETE SLAB ON GRADE AND AT SLAB DEPRESSIONS.
7. SEE DETAIL B1/S501 FOR SLAB REINFORCING WHERE CONTROL JOINTS ARE DISCONTINUOUS.
8. SEE DETAIL B2/S501 FOR ADDITIONAL REINFORCING AT MISCELLANEOUS OPENINGS IN CONCRETE WALLS.
9. SEE DETAIL A3/S501 AND A4/S501 FOR ANCHORAGE OF HOUSEKEEPING PADS.
10. SEE ARCHITECTURAL DRAWINGS FOR DIMENSIONS TO ALL STEEL COLUMNS.
11. FOOTING AND CONCRETE PIER SIZES SHOWN ARE AN ESTIMATE OF ACTUAL SIZES. ACTUAL SIZES WILL BE PROVIDED AFTER PREFABRICATED METAL BUILDER IS SELECTED. ALL BIDDERS SHALL PROVIDE UNIT PRICES FOR ADDING OR SUBTRACTING VOLUME OF CONCRETE, WEIGHT OF REINFORCING STEEL AND VOLUME OF EARTHWORK.
12. SEE "EARTHWORK" NOTES ON SHEET S001 AND DETAIL C1/S502 FOR MINIMUM FILL REQUIRED BENEATH FOOTINGS.

CLIENT

VERNAL
MAINTENANCE FACILITY
STATION #3437
2773 NORTH VERNAL AVENUE
VERNAL, UTAH 84078

DESIGNER

ARCHIPLEX GROUP
architecture · planning · design services
1135 South West Temple, Ste. A
Salt Lake City, UT 84101
P:(801) 961-7070
F:(801) 961-7373

CONSULTANTS

"Engineering Results"
BHB Consulting Engineers
A Professional Corporation
344 West 300 North
Suite 200
Salt Lake City, Utah 84103
Phone: 801.355.5656
Fax: 801.355.5950
Email: bhb@bhbengineers.com

PROFESSIONAL SEAL

ISSUE

MARK	DATE	DESCRIPTION
	6-27-06	JUNE 27, RE-BID SET
	3-31-06	CONSTRUCTION DOCUMENTS
	1-20-06	FINAL REVIEW SET
	8-22-05	PRELIMINARY SUBMITTAL

PROJECT NO:	05194
DRAWN BY:	C. BROWN
CHECKED BY:	C. HOFHEINS
SCALE:	AS SHOWN
DATE:	MARCH 31, 2006

KEY PLAN

SHEET TITLE

OUT BUILDING PLANS

S102

© 2006 ARCHIPLEX GROUP

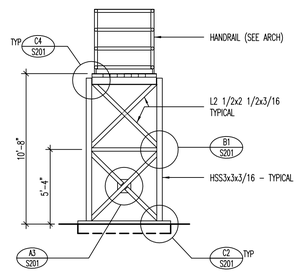

C1 WASH RACK ELEVATION

04167_S-701 NO SCALE

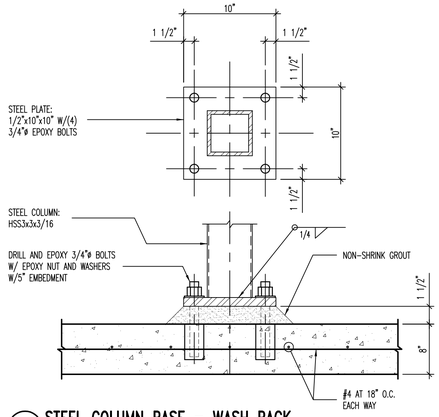

C2 STEEL COLUMN BASE - WASH RACK

04167_S-701 NO SCALE

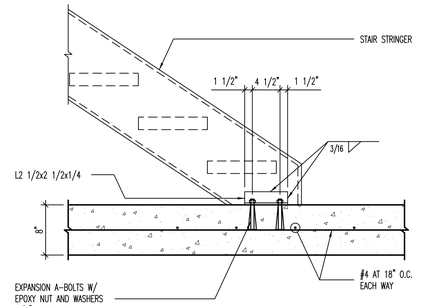

C3 STRINGER ANCHORAGE DETAIL - WASH RACK

04167_S-701 NO SCALE

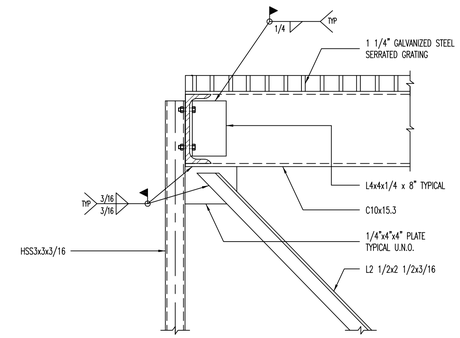

C4 TYPICAL BRACE DETAIL - WASH RACK

04167_S-701 NO SCALE

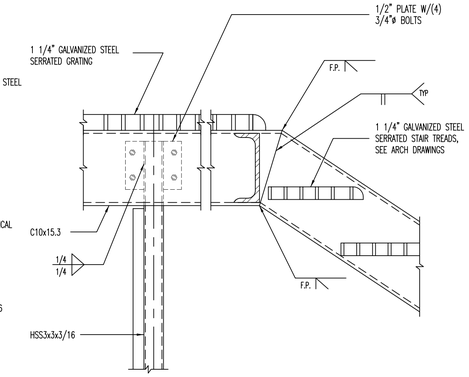

C5 STAIR SUPPORT DETAIL - WASH RACK

04167_S-701 NO SCALE

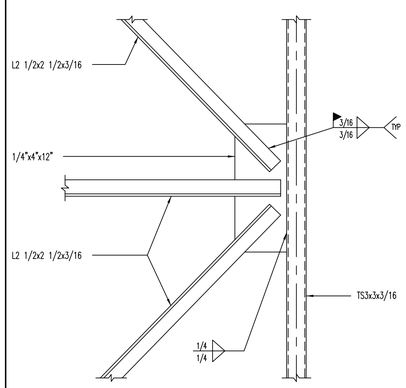

B1 BRACE DETAIL - WASH RACK

04167_S-701 NO SCALE

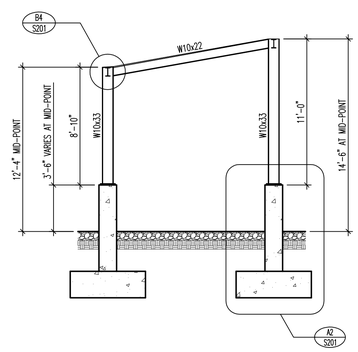

B2 SECTION AT SANDER RACK

04167_S-701 NO SCALE

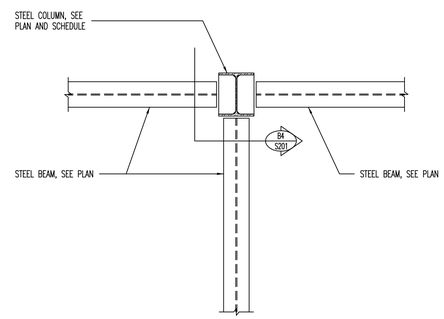

B3 MOMENT CONNECTION DETAIL AT SANDER RACK [PLAN VIEW]

04167_S-701 NO SCALE

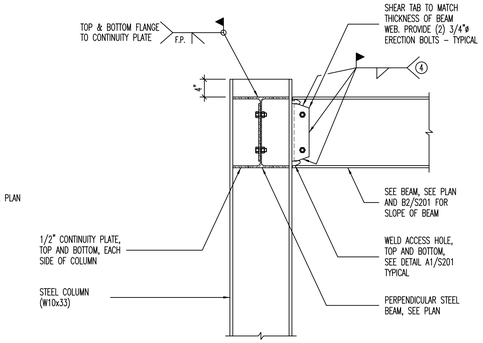

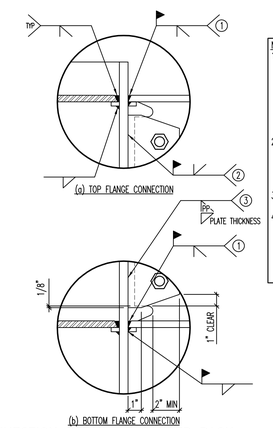

(a) TOP FLANGE CONNECTION

(b) BOTTOM FLANGE CONNECTION

NOTES:
1. CJP GROOVE WELD AT TOP AND BOTTOM FLANGES. AT TOP FLANGE, EITHER (1) REMOVE WELD BACKING, BACKGOUGE, AND ADD 5/16" MIN FILLET WELD, OR (2) LEAVE BACKING IN PLACE AND ADD 5/16" FILLET UNDER BACKING. AT BOTTOM FLANGE, REMOVE WELD BACKING, BACKGOUGE, AND ADD 5/16" MIN FILLET WELD.
2. CJP GROOVE WELD FULL LENGTH OF WEB BETWEEN WELD ACCESS HOLES. PROVIDE NON-FUSIBLE WELD TABS. REMOVE WELD TABS AFTER WELDING AND GRIND END OF WELD SMOOTH AT WELD ACCESS HOLE.
3. FULL DEPTH PARTIAL PENETRATION FROM FAR SIDE.
4. FILLET WELD SHEAR TAB TO BEAM WEB. WELD SIZE SHALL BE EQUAL TO THICKNESS OF SHEAR TAB MINUS 1/16". WELD SHALL EXTEND OVER THE TOP AND BOTTOM ONE-THIRD OF THE SHEAR TAB HEIGHT AND ACROSS THE TOP AND BOTTOM.

B4 WELDED UNREINFORCED FLANGE-WELDED WEB MOMENT CONNECTION DETAIL AT SANDER RACK

13R024-21 NO SCALE

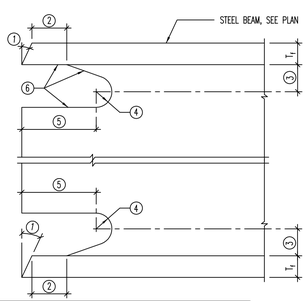

NOTES:
1. BEVEL AS REQUIRED BY AWS D1.1 FOR SELECTED GROOVE WELD PROCEDURE.
   A. TOLERANCES SHALL NOT ACCUMULATE TO THE EXTENT THAT THE ANGLE OF THE ACCESS HOLE CUT TO THE FLANGE SURFACE EXCEEDS 25°.
2. LARGER OF T_1 OR 1/2".
3. 3/4 T_1 TO T_1, 3/4" MIN.
4. 3/8" MINIMUM RADIUS.
5. 3 T_1.
6. SEE *FEMA-353, Recommended Specifications and Quality Assurance Guidelines for Steel Moment-Frame Construction for Seismic Applications*, FOR FABRICATION DETAILS INCLUDING CUTTING METHODS AND SMOOTHNESS REQUIREMENTS.

A1 RATHOLE DETAIL AT MOMENT CONNECTION AT SANDER RACK

13128-21 NO SCALE

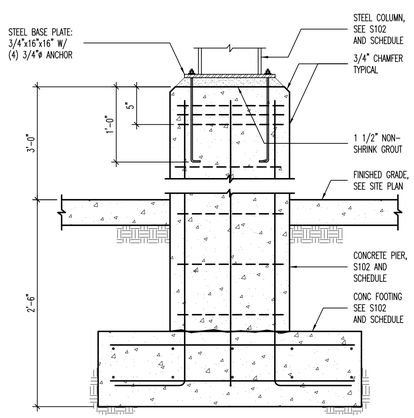

A2 SANDER RACK FOOTING DETAIL

04167_S-701 NO SCALE

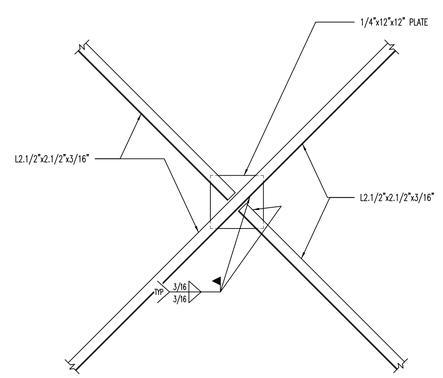

A3 DETAIL

03SMS201 NO SCALE

CLIENT

VERNAL
MAINTENANCE FACILITY
STATION #3437
2773 NORTH VERNAL AVENUE
VERNAL, UTAH 84078

DESIGNER

ARCHIPLEX GROUP
architecture · planning · design services
1135 South West Temple, Ste. A
Salt Lake City, UT 84101
P:(801) 961-7070
F:(801) 961-7373

CONSULTANTS

"Engineering Results"
BHB Consulting Engineers
A Professional Corporation
344 West 300 North
Suite 200
Salt Lake City, Utah 84103
Phone: 801.355.5656
Fax: 801.355.5950
Email: bhb@bhbengineers.com

PROFESSIONAL SEAL

ISSUE

MARK	DATE	DESCRIPTION
	6-27-06	JUNE 27, RE-BID SET
	3-31-06	CONSTRUCTION DOCUMENTS
	1-20-06	FINAL REVIEW SET
	8-22-05	PRELIMINARY SUBMITTAL

PROJECT NO:	05194
DRAWN BY:	C. BROWN
CHECKED BY:	C. HOFHEINS
SCALE:	AS SHOWN
DATE:	MARCH 31, 2006

KEY PLAN

SHEET TITLE

SANDER AND
WASH RACK
DETAILS

S201

© 2006 ARCHIPLEX GROUP

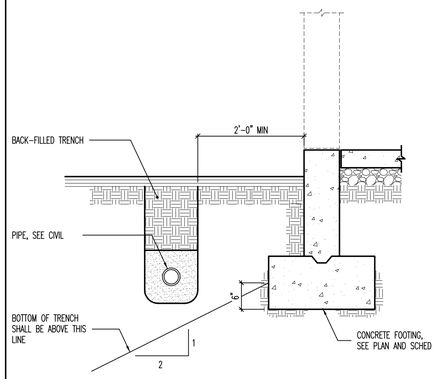

C1 CONDITION AT PIPE PARALLEL TO CONCRETE FOOTING
NO SCALE

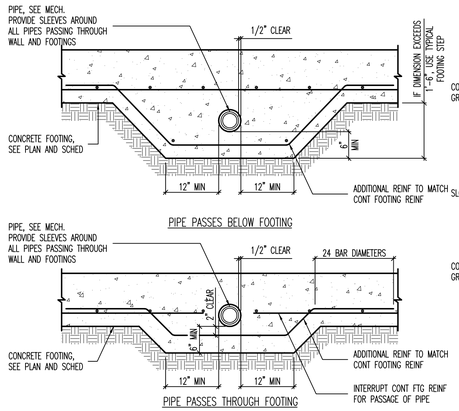

C2 CONDITIONS AT PIPE PERPENDICULAR TO FOOTING
NO SCALE

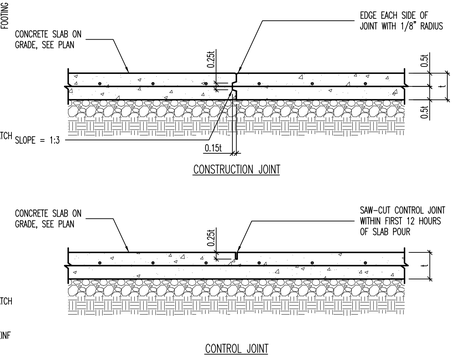

C3 TYPICAL SLAB ON GRADE JOINT DETAILS
NO SCALE

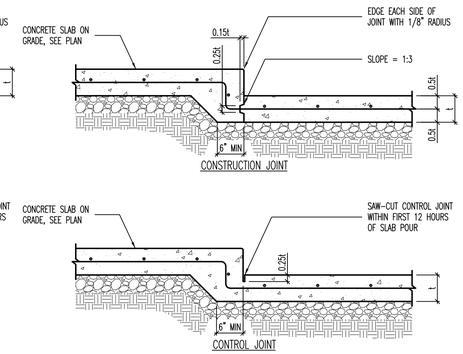

C4 JOINT DETAILS AT SLAB DEPRESSIONS
NO SCALE

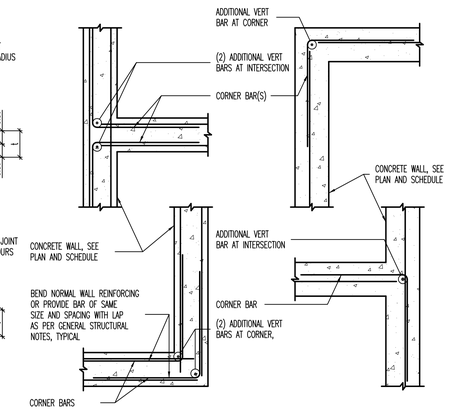

C5 TYPICAL CORNER WALL REINFORCING AT CONCRETE WALLS [PLAN VIEW]
NO SCALE

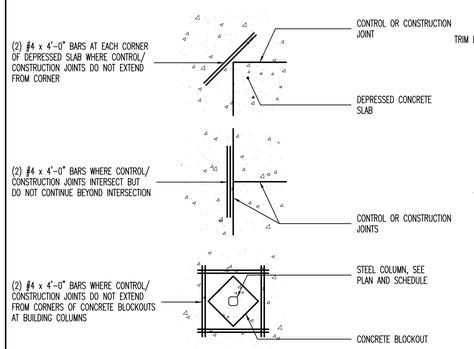

B1 LOCATIONS REQUIRING ADDITIONAL SLAB REINFORCING [PLAN VIEW]
NO SCALE

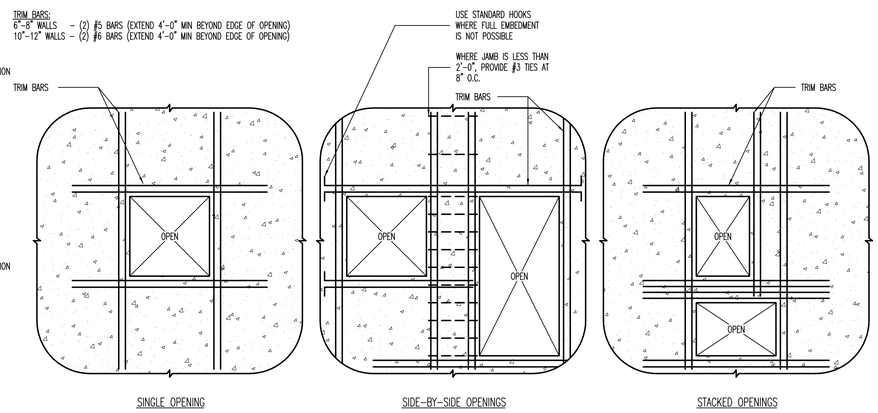

B2 TYPICAL REINFORCING FOR MISCELLANEOUS OPENINGS LESS THAN 3'-0" IN CONCRETE WALLS
WHERE MISCELLANEOUS OPENING WIDTH IS GREATER THAN 3'-0" WIDE, CONTACT STRUCTURAL ENGINEER.
NO SCALE

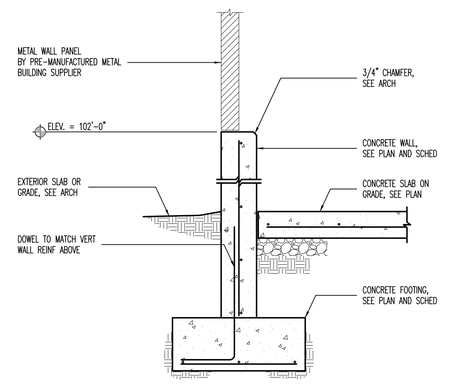

B4 FOUNDATION WALL DETAIL
NO SCALE

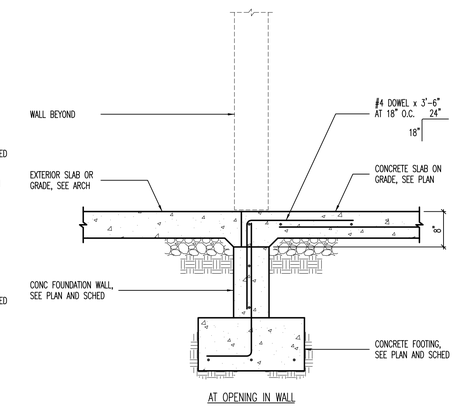

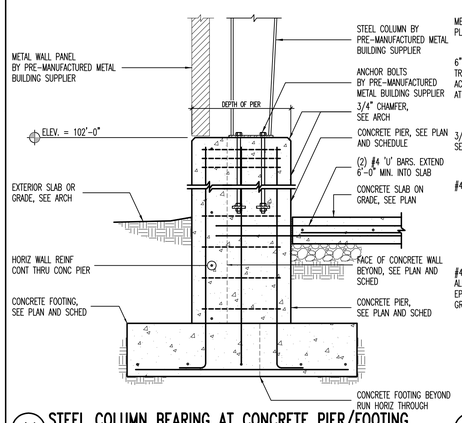

A1 STEEL COLUMN BEARING AT CONCRETE PIER/FOOTING
NO SCALE

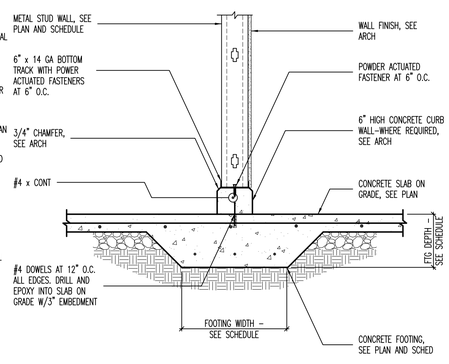

A2 THICKENED SLAB FOOTING AT INTERIOR STUD WALL
NO SCALE

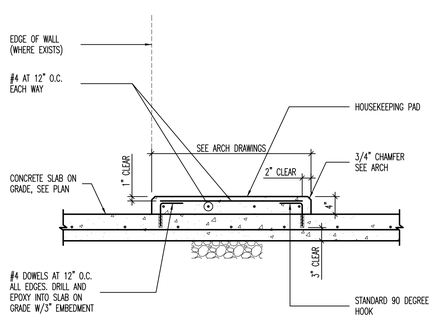

A3 TYPICAL HOUSEKEEPING PAD
NO SCALE

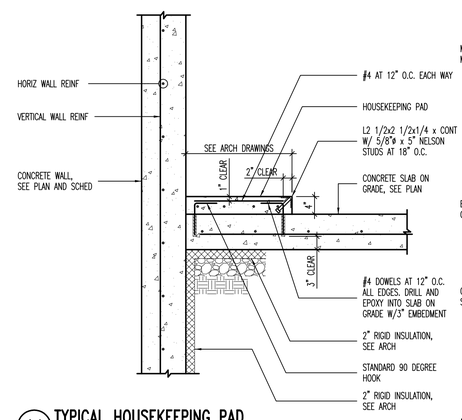

A4 TYPICAL HOUSEKEEPING PAD
NO SCALE

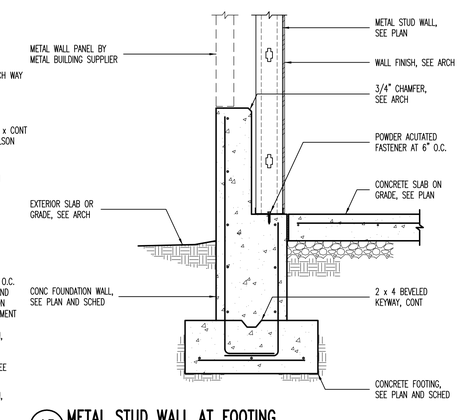

A5 METAL STUD WALL AT FOOTING
NO SCALE

CLIENT

VERNAL
MAINTENANCE FACILITY
STATION #3437
2773 NORTH VERNAL AVENUE
VERNAL, UTAH 84078

DESIGNER

ARCHIPLEX GROUP
architecture · planning · design services
1135 South West Temple, Ste. A
Salt Lake City, UT 84101
P:(801) 961-7070
F:(801) 961-7373

CONSULTANTS

"Engineering Results"
BHB Consulting Engineers
A Professional Corporation
344 West 300 North
Suite 204
Salt Lake City, Utah 84103
Phone: 801.355.5656
Fax: 801.355.5950
Email: bhb@bhbengineers.com

PROFESSIONAL SEAL

ISSUE

MARK	DATE	DESCRIPTION
	6-27-06	JUNE 27, RE-BID SET
	3-31-06	CONSTRUCTION DOCUMENTS
	1-20-06	FINAL REVIEW SET
	8-22-05	PRELIMINARY SUBMITTAL

PROJECT NO:	05194
DRAWN BY:	C. BROWN
CHECKED BY:	C. HOFHEINS
SCALE:	AS SHOWN
DATE:	MARCH 31, 2006

KEY PLAN

SHEET TITLE

FOOTING AND FOUNDATION DETAILS

S501

© 2006 ARCHIPLEX GROUP

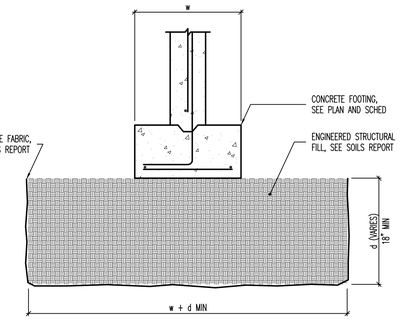

C1 ENGINEERED STRUCTURAL FILL DETAIL

NO SCALE

C2 NOT USED

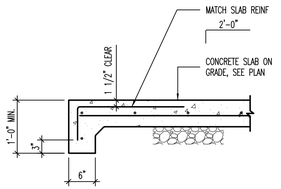

C3 SLAB TURNDOWN DETAIL

NO SCALE

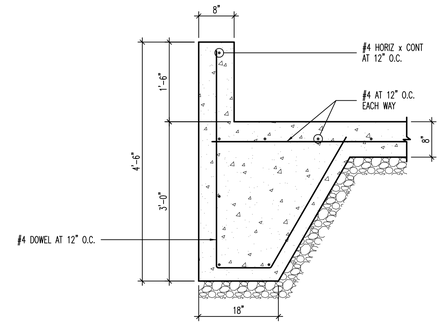

C4 WASTE OIL SLAB DETAIL

NO SCALE

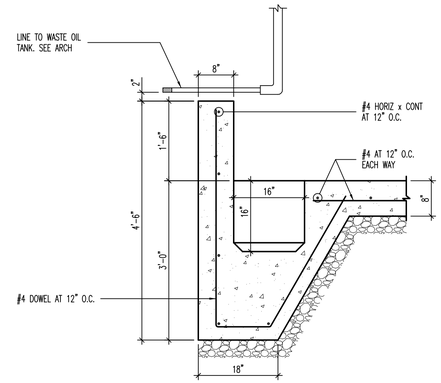

C5 WASTE OIL SLAB DETAIL

NO SCALE

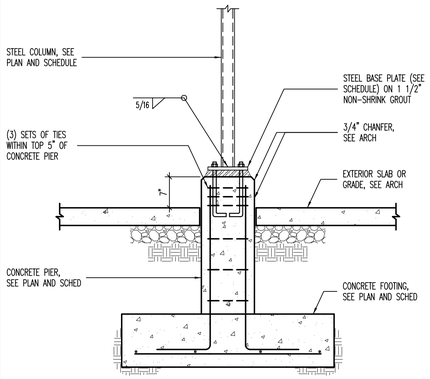

B1 EXTERIOR STEEL COLUMN BEARING ON CONCRETE PIER

NO SCALE

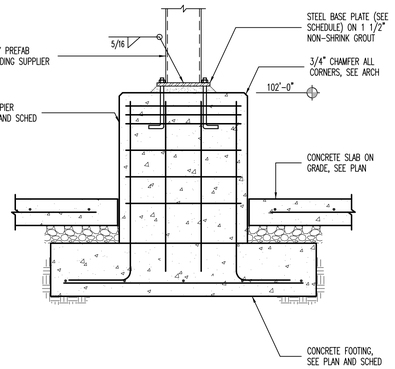

B2 TYPICAL INTERIOR STEEL COLUMN TO FOOTING DETAIL

NO SCALE

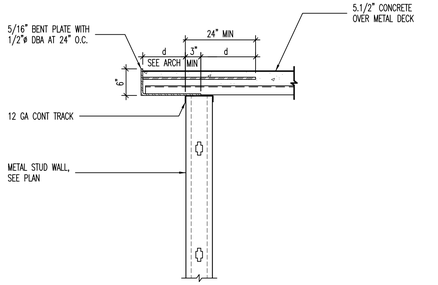

B3 STEEL DECK EDGE DETAIL PERPENDICULAR TO WALL

NO SCALE

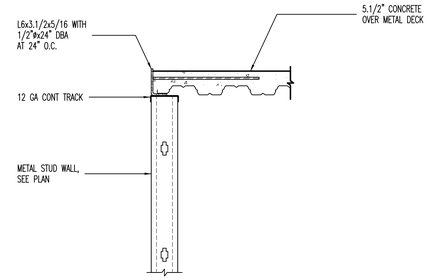

B4 STEEL DECK EDGE DETAIL PERPENDICULAR TO WALL

NO SCALE

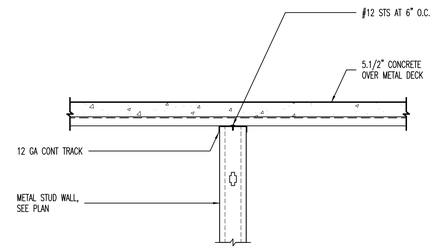

B5 STEEL DECK ON INTERIOR BEARING WALL

NO SCALE

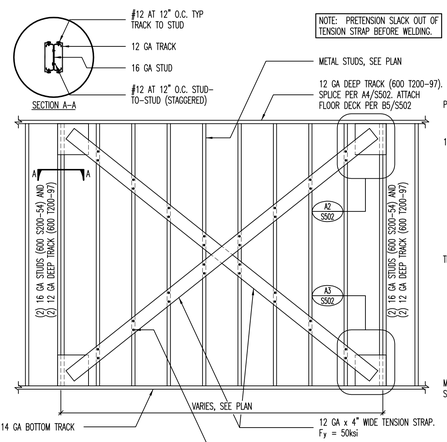

A1 TENSION STRAP BRACE

NO SCALE

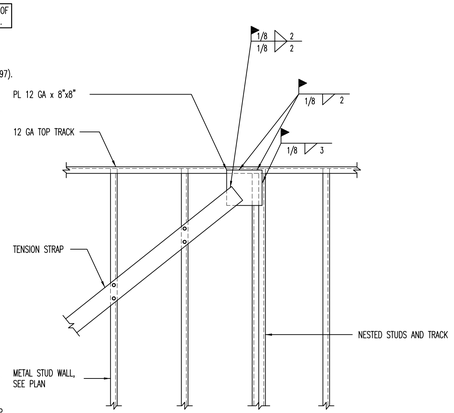

A2 TENSION STRAP BRACE

NO SCALE

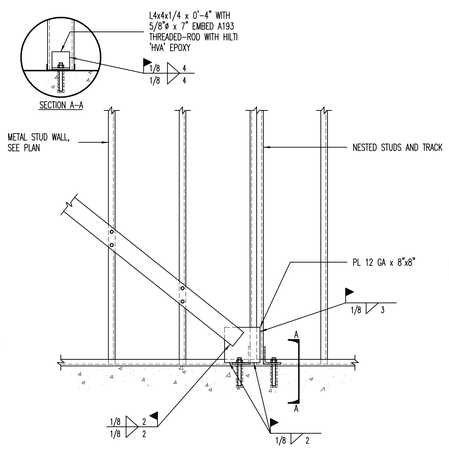

A3 TENSION STRAP BRACE

NO SCALE

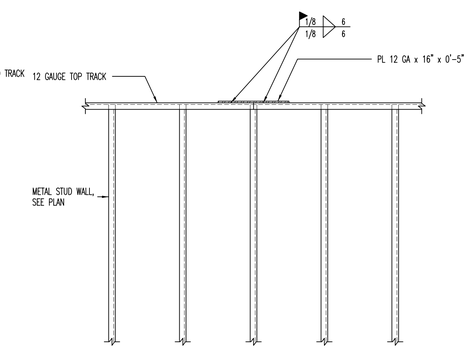

A4 TOP TRACK SPLICE DETAIL

NO SCALE

CLIENT

VERNAL
MAINTENANCE FACILITY
STATION #3437
2773 NORTH VERNAL AVENUE
VERNAL, UTAH 84078

DESIGNER

ARCHIPLEX GROUP
architecture · planning · design services
1135 South West Temple, Ste. A
Salt Lake City, UT 84101
P:(801) 961-7070
F:(801) 961-7373

CONSULTANTS

"Engineering Results"
BHB Consulting Engineers
A Professional Corporation
344 West 300 North
Suite 200
Salt Lake City, Utah 84103
Phone: 801.355.5656
Fax: 801.355.5950
Email: bhb@bhbengineers.com

PROFESSIONAL SEAL

ISSUE

MARK	DATE	DESCRIPTION
	6-27-06	JUNE 27, RE-BID SET
	3-31-06	CONSTRUCTION DOCUMENTS
	1-20-06	FINAL REVIEW SET
	8-22-05	PRELIMINARY SUBMITTAL

PROJECT NO:	05194
DRAWN BY:	C. BROWN
CHECKED BY:	C. HOFHEINS
SCALE:	AS SHOWN
DATE:	MARCH 31, 2006

KEY PLAN

SHEET TITLE

FOOTING AND FOUNDATION DETAILS

S502

© 2006 ARCHIPLEX GROUP

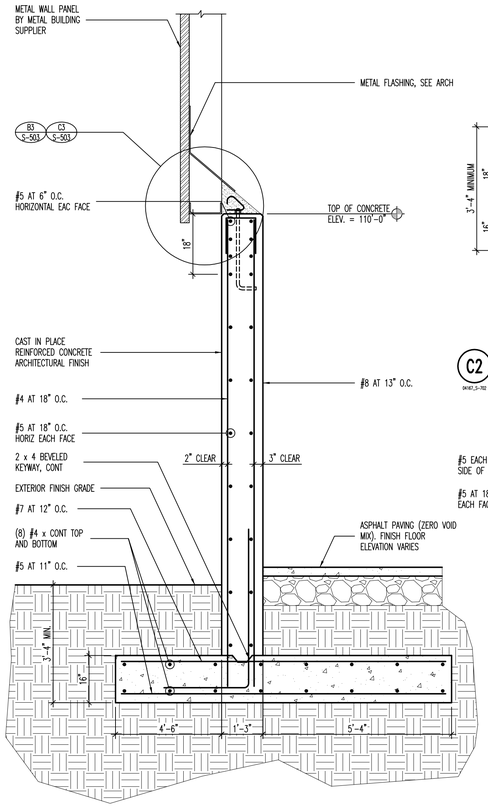

B1 WALL AND FOOTING DETAIL - SALT STORAGE
04167_S-702
NO SCALE

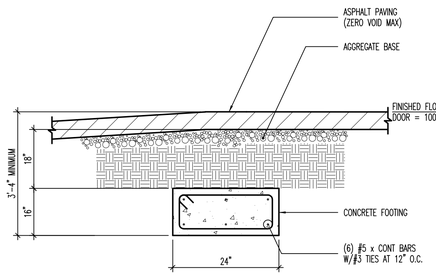

C2 FOOTING DETAIL - SALT STORAGE
04167_S-702
NO SCALE

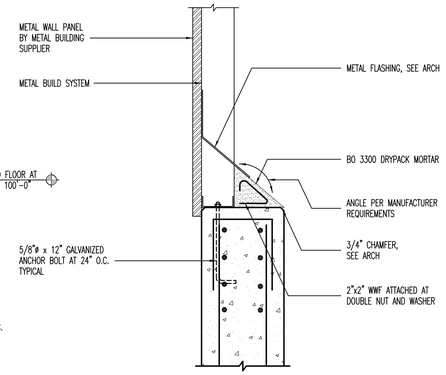

C3 WALL SECTION AT GRID 2 - SALT STORAGE
04167_S-702
NO SCALE

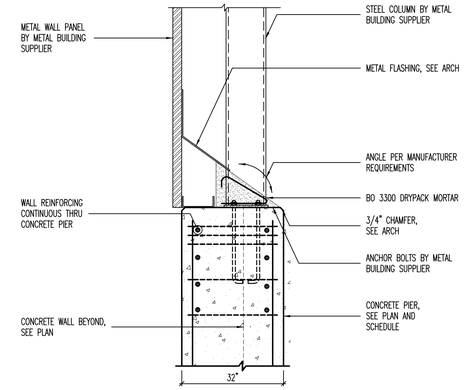

C4 WALL SECTION AT COLUMNS AT GRIDS A AND D - SALT STORAGE
DETL
NO SCALE

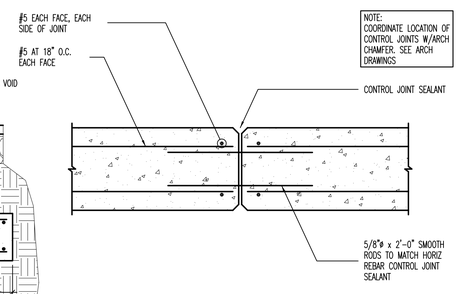

NOTE:
COORDINATE LOCATION OF CONTROL JOINTS W/ARCH CHAMFER. SEE ARCH DRAWINGS

B2 JOINT DETAIL - SALT STORAGE
04167_S-702
NO SCALE

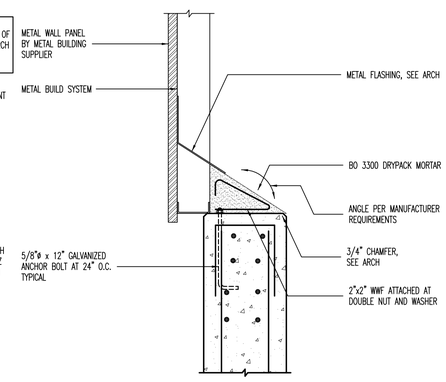

B3 WALL SECTION AT GRIDS A & D - SALT STORAGE
04167_S-702
NO SCALE

CLIENT

VERNAL
MAINTENANCE FACILITY
STATION #3437
2773 NORTH VERNAL AVENUE
VERNAL, UTAH 84078

DESIGNER

ARCHIPLEX GROUP
architecture · planning · design services
1135 South West Temple, Ste. A
Salt Lake City, UT 84101
P:(801) 961-7070
F:(801) 961-7373

CONSULTANTS

"Engineering Results"
BHB Consulting Engineers
A Professional Corporation
344 West 300 North
Suite 200
Salt Lake City, Utah 84103
Phone: 801.355.5656
Fax: 801.355.5950
Email: bhb@bhbengineers.com

PROFESSIONAL SEAL

ISSUE

MARK	DATE	DESCRIPTION
	6-27-06	JUNE 27, RE-BID SET
	3-31-06	CONSTRUCTION DOCUMENTS
	1-20-06	FINAL REVIEW SET
	8-22-05	PRELIMINARY SUBMITTAL

PROJECT NO:	05194
DRAWN BY:	C. BROWN
CHECKED BY:	C. HOFHEINS
SCALE:	AS SHOWN
DATE:	MARCH 31, 2006

KEY PLAN

SHEET TITLE

ADD ALT #1
FOOTING AND
FOUNDATION
DETAILS

S503

© 2006 ARCHIPLEX GROUP

CONCRETE FOOTING SCHEDULE

MARK	WIDTH	LENGTH	DEPTH	REINFORCING CROSSWISE				REINFORCING LENGTHWISE				COMMENTS
				No.	SIZE	LENGTH	SPACING	No.	SIZE	LENGTH	SPACING	
FTS1.5	1'-6"	CONT	12"	–	–	–	–	2	#4	CONT	EQ	THICKENED SLAB
FC2.0	2'-0"	CONT	12"	–	–	–	–	3	#4	CONT	EQ	
FC2.5	2'-6"	CONT	12"	–	#5	2'-0"	14"	3	#5	CONT	EQ	
FS2.5	2'-6"	2'-6"	12"	3	#5	2'-0"	EQ	3	#5	2'-0"	EQ	
FS3.0	3'-0"	3'-0"	12"	3	#5	2'-6"	EQ	3	#5	2'-6"	EQ	
FS3.5	3'-6"	3'-6"	12"	3	#5	3'-0"	EQ	3	#5	3'-0"	EQ	
FS4.0	4'-0"	4'-0"	12"	4	#5	3'-6"	EQ	4	#5	3'-6"	EQ	
FS4.5	4'-6"	4'-6"	12"	4	#5	4'-0"	EQ	4	#5	4'-0"	EQ	
FS5.0	5'-0"	5'-0"	12"	5	#5	4'-6"	EQ	5	#5	4'-6"	EQ	
FS5.5	5'-6"	5'-6"	12"	5	#5	5'-0"	EQ	5	#5	5'-0"	EQ	
FS6.0	6'-0"	6'-0"	12"	6	#5	5'-6"	EQ	6	#5	5'-6"	EQ	
FS7.0	7'-0"	7'-0"	14"	8	#5	6'-6"	EQ	8	#5	6'-6"	EQ	
FS7.5	7'-6"	7'-6"	14"	8	#5	7'-0"	EQ	8	#5	7'-0"	EQ	

CONCRETE FOOTING NOTES:
1. PLACE ALL FOOTING REINFORCING IN THE BOTTOM OF THE FOOTING WITH 3" CLEAR CONCRETE COVER (UNO).
2. TOP REINFORCING, WHERE OCCURS, SHALL BE PLACED IN THE TOP OF THE FOOTING WITH 2" MINIMUM CONCRETE COVER.
3. IF FOOTINGS ARE EARTH-FORMED, FOOTINGS SHALL BE 6" LONGER AND WIDER THAN SCHEDULED.
4. SEE GENERAL STRUCTURAL NOTES FOR ADDITIONAL REQUIREMENTS.
5. SOME SCHEDULED FOOTINGS MAY NOT BE USED, SEE FOOTING AND FOUNDATION PLAN FOR FOOTING MARKS.

C1 CONCRETE FOOTING SCHEDULE

S2403_CONC_FTG-C3000-S1500

NO SCALE

CONCRETE WALL SCHEDULE

MARK	THICKNESS	REINFORCING			WALL TYPE	COMMENTS
		VERTICAL	HORIZONTAL	TOP AND BOTTOM		
CW-1	8"	#4 AT 18" O.C.	#4 AT 12" O.C.	(1) #4	A	.
CW-2	8"	#4 AT 18" O.C.	#4 AT 12" O.C.	(1) #4	A	ABV. ELEV. 100'-0"
	16"	#4 AT 18" O.C. E.F.	#4 AT 12" O.C. E.F.	(2) #4	C	BELOW ELEV. 100'-0"
CW-3	12"	#4 AT 18" O.C. E.F.	#4 AT 12" O.C. E.F.	(2) #4	C	
CW-4	12"	#4 AT 18" O.C.	#4 AT 12" O.C.	(1) #4	A	ABV. ELEV. 100'-0"
	20"	#4 AT 18" O.C. E.F.	#4 AT 12" O.C. E.F.	(2) #4	C	BELOW ELEV. 100'-0"

CONCRETE FOUNDATION WALL NOTES:
1. SEE GENERAL STRUCTURAL NOTES FOR ADDITIONAL REQUIREMENTS.
2. CONCRETE FOUNDATION WALLS NOT DESIGNATED ON PLANS SHALL BE REINFORCED AS FOLLOWS:

THICKNESS	VERTICAL REINFORCING	HORIZONTAL REINFORCING
6"	#4 BARS AT 18" O.C.	#4 BARS AT 16" O.C.
8"	#4 BARS AT 18" O.C.	#4 BARS AT 12" O.C.
10"	#4 BARS AT 16" O.C.	#5 BARS AT 15" O.C.
12"	#4 BARS AT 18" O.C. E.F.	#4 BARS AT 16" O.C. E.F.

ABBREVIATIONS:
E.F. EACH FACE
I.F. INSIDE FACE
O.F. OUTSIDE FACE

WALL REINFORCING PLACEMENT TYPES:

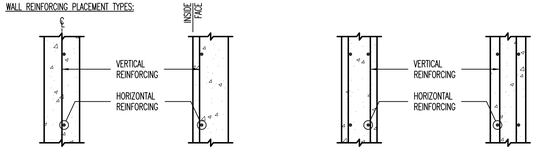

TYPE 'A' TYPE 'B' TYPE 'C' TYPE 'D'

A1 CONCRETE WALL SCHEDULE

S2403_CONC_WAL-01

NO SCALE

CONCRETE PIER SCHEDULE

MARK	PIER SIZE	REINFORCING		TYPE	COMMENTS
		VERTICAL	TIES		
CP-1	16" x 22"	(10) #5	(3) #3 AT 8" O.C.	A	
CP-2	18" x 12"	(10) #5	(3) #3 AT 8" O.C.	B	
CP-3	16"ø	(4) #5	#3 AT 8" O.C.	C	
CP-4	23" x 24"	(16) #6	(3) #3 AT 8" O.C.	E	
CP-5	23" x 24"	(16) #6	(3) #3 AT 8" O.C.	F	
CP-6	20" x 20"	(8) #8	(3) #3 AT 8" O.C.	D	
CP-7	22" x 36"	(20) #5	(3) #3 AT 8" O.C.	F	
CP-8	20" x 34"	(20) #5	(3) #3 AT 8" O.C.	E	
CP-9	18" x 18"	(12) #5	(3) #3 AT 8" O.C.	D	
CP-10	12" x 12"	(8) #5	(3) #3 AT 8" O.C.	G	

CONCRETE PIER NOTES:
1. INSTALL (3) SETS OF TIES AT 3" O.C. AT TOP OF ALL PIERS (UNO).
2. RUN HORIZONTAL CONCRETE WALL REINFORCING CONTINUOUS THROUGH PIER WHEN PIER IS POURED MONOLITHICALLY WITH CONCRETE WALL.
3. SEE GENERAL STRUCTURAL NOTES FOR ADDITIONAL REQUIREMENTS.

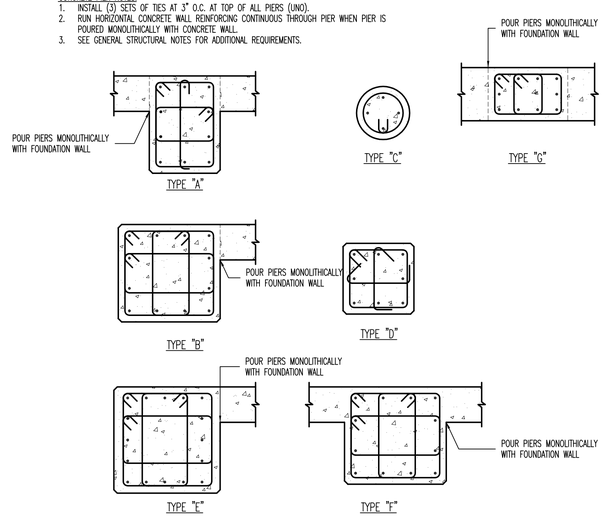

TYPE "A" TYPE "C" TYPE "G" TYPE "B" TYPE "D" TYPE "E" TYPE "F"

C2 CONCRETE PIER SCHEDULE

S2403_CONC_PER-01

NO SCALE

CONCRETE REINFORCING BAR LAP SPLICE SCHEDULE

BAR SIZE	f'c = 3000psi				f'c = 4000psi				f'c = 5000psi				f'c = 6000psi			
	REGULAR		TOP		REGULAR		TOP		REGULAR		TOP		REGULAR		TOP	
	CLASS		CLASS		CLASS		CLASS		CLASS		CLASS		CLASS		CLASS	
	A	B	A	B	A	B	A	B	A	B	A	B	A	B	A	B
#3	13"	17"	17"	21"	12"	16"	16"	21"	12"	16"	16"	21"	12"	16"	16"	21"
#4	17"	22"	22"	28"	15"	19"	19"	25"	13"	17"	17"	22"	12"	16"	16"	21"
#5	21"	27"	27"	35"	18"	24"	24"	31"	16"	21"	21"	27"	15"	19"	19"	25"
#6	27"	36"	36"	46"	24"	31"	31"	40"	21"	28"	28"	36"	20"	25"	25"	33"
#7	37"	48"	48"	63"	32"	42"	42"	54"	29"	38"	38"	49"	27"	34"	34"	44"
#8	49"	64"	64"	82"	42"	55"	55"	71"	38"	49"	49"	64"	35"	45"	45"	58"
#9	62"	80"	80"	104"	54"	70"	70"	90"	48"	62"	62"	81"	44"	57"	57"	74"
#10	78"	102"	102"	132"	68"	88"	88"	115"	61"	79"	79"	102"	56"	72"	72"	94"
#11	96"	125"	125"	162"	83"	108"	108"	141"	76"	97"	97"	126"	68"	88"	88"	115"

CONCRETE REINFORCING BAR LAP SPLICE NOTES:
1. THIS SCHEDULE SHALL BE USED FOR ALL BAR SPLICES IN CONCRETE WALLS, UNLESS NOTED OTHERWISE.
2. CLASS 'A' SPLICES MAY BE USED ONLY IN CASES WHERE 50% OR LESS OF THE BARS ARE SPLICED WITHIN THE LAP SPLICE LENGTH.
3. CLASS 'B' SPLICES SHALL BE USED FOR ALL SPLICES UNLESS THE REQUIREMENTS OF NOTE No. 2 ABOVE ARE MET.
4. TIES AND STIRRUPS SHALL NOT BE SPLICED.
5. SPLICES FOR BUNDLED BARS:
   a. FOR BUNDLED BARS OF THREE OR LESS, LAP SPLICE LENGTHS SHALL BE MULTIPLIED BY 1.2.
   b. FOR BUNDLED BARS OF FOUR OR MORE, LAP SPLICE LENGTHS SHALL BE MULTIPLIED BY 1.33.
   c. INDIVIDUAL BAR SPLICES WITHIN A BUNDLE SHALL NOT OVERLAP.
   d. ENTIRE BUNDLES SHALL NOT BE LAP SPLICED.
6. FOR ALL LIGHTWEIGHT CONCRETE, LAP LENGTHS SHALL BE MULTIPLIED BY 1.3.
7. FOR ALL EPOXY COATED BARS, LAP LENGTHS SHALL BE MULTIPLIED BY 1.3 FOR TOP BARS AND 1.5 FOR REGULAR BARS.
8. TOP BARS ARE CLASSIFIED AS HORIZONTAL BARS WHERE 12", OR MORE, OF FRESH CONCRETE IS CAST BELOW THE REINFORCING BAR.
9. SEE GENERAL STRUCTURAL NOTES FOR ADDITIONAL REQUIREMENTS.

A2 CONCRETE REINFORCING BAR LAP SPLICE SCHEDULE

S2403_CONC_REBAR-01

NO SCALE

EPOXY DOWEL EMBED SCHEDULE

DOWEL SIZE	MINIMUM EMBEDMENT INTO EXISTING CONCRETE
#4	6 1/2"
#5	7 1/2"
#6	10"
#7	1'-1"
#8	1'-4"

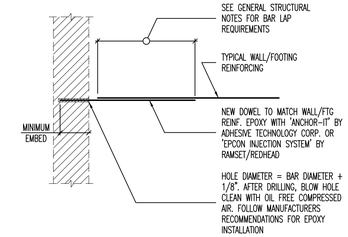

C4 EPOXY DOWEL EMBED SCHEDULE

S2403_MIS_WAL-01

NO SCALE

CLIENT

VERNAL
MAINTENANCE FACILITY
STATION #3437
2773 NORTH VERNAL AVENUE
VERNAL, UTAH 84078

DESIGNER

ARCHIPLEX GROUP
architecture · planning · design services
1135 South West Temple, Ste. A
Salt Lake City, UT 84101
P:(801) 961-7070
F:(801) 961-7373

CONSULTANTS

"Engineering Results"
BHB Consulting Engineers
A Professional Corporation
344 West 300 North
Suite 200
Salt Lake City, Utah 84103
Phone: 801.355.5656
Fax: 801.355.5950
Email: bhb@bhbengineers.com

PROFESSIONAL SEAL

ISSUE

MARK	DATE	DESCRIPTION
	6-27-06	JUNE 27, RE-BID SET
	3-31-06	CONSTRUCTION DOCUMENTS
	1-20-06	FINAL REVIEW SET
	8-22-05	PRELIMINARY SUBMITTAL

PROJECT NO:	05194
DRAWN BY:	C. BROWN
CHECKED BY:	C. HOFHEINS
SCALE:	AS SHOWN
DATE:	MARCH 31, 2006

KEY PLAN

SHEET TITLE

STRUCTURAL SCHEDULES

S601

© 2006 ARCHIPLEX GROUP

MECHANICAL LEGEND
(NOT ALL USED)

- RETURN OR EXHAUST DUCT DOWN
- RETURN OR EXHAUST DUCT UP
- SUPPLY AIR DUCT DOWN
- SUPPLY AIR DUCT UP
- SPIN-IN FITTING W/MVD
- FLEXIBLE DUCT
- CEILING SLOT DIFFUSER
- CEILING DIFFUSER
- CEILING EXHAUST GRILLE
- CEILING GRILLE
- ACCESS PANEL
- MANUAL VOLUME DAMPER
- MOTORIZED DAMPER
- FIRE DAMPER — F
- COMBINATION FIRE/SMOKE DAMPER — FS
- THERMOSTAT OR TEMP SENSOR — T
- POINT OF CONNECTION TO EXISTING
- DETAIL TAG — DETAIL NO. / DRAWING NO.
- KEYED NOTE — NOTE NO.
- SECTION CUT LINE — SECTION NO. / DRAWING NO.
- CONTROL TRANSFORMER — TRX

GENERAL NOTES:

1. COORDINATE ALL AIR DEVICE LOCATIONS WITH REFLECTED CEILING PLANS AND ELECTRICAL DRAWINGS.
2. ALL DUCTWORK SHALL RECEIVE 1" – 1.5 LBS/CU.FT. DUCT LINER, ATTACH TO DUCT WITH MECHANICAL FASTENERS AND TRIM AND SEAL JOINTS. LOW PRESSURE ROUND FLEXIBLE DUCT TO BE 1-½" THICK INSULATED AND A MAXIMUM OF 6 FT. LONG. ALL INSULATION TO MEET NFPA 90 PER UL 181-CLASS 1. NO DUCTBOARD ALLOWED.
3. ALL DUCTWORK IS TO BE LINED OR WRAPPED IF ROUND. NO DUCTBOARD IS ALLOWED.
4. DUCTWORK AND PIPE ROUTING AS SHOWN ON DRAWINGS IS DIAGRAMMATIC AND IS NOT TO BE SCALED. WHERE ALTERNATE ROUTING, OFFSETS AND TRANSITIONS ARE REQUIRED FOR COORDINATION OF WORK, THIS CONTRACTOR SHALL MAKE CHANGES WITHOUT ADDITIONAL COSTS.
5. THIS CONTRACTOR SHALL CLOSELY COORDINATE NEW MECHANICAL WITH NEW ELECTRICAL, ARCHITECTURAL AND BUILDING STRUCTURE.
6. THIS CONTRACTOR SHALL FIELD VERIFY ALL MECHANICAL ITEMS PRIOR TO STARTING NEW WORK. ADDITIONAL COST WILL NOT BE ALLOWED FOR CONTRACTOR'S FAILURE TO BECOME FAMILIAR WITH SITE CONDITIONS.
7. THIS CONTRACTOR SHALL USE SMACNA DUCT CONSTRUCTION STANDARDS FOR SHEET METAL DUCTS. ALL DUCTWORK (UNLESS OTHERWISE NOTED ON FLOOR PLANS) SHALL BE CONSTRUCTED OF 1" W.C. SEAL CLASS "B".
8. ALL MECHANICAL SYSTEMS SHALL BE INSTALLED IN ACCORDANCE WITH THE CURRENT ADOPTED EDITION OF THE BUILDING CODES, FIRE CODES, MECHANICAL CODES AND PLUMBING CODES.
9. THIS CONTRACTOR SHALL PROVIDE SUBMITTALS ON ITEMS LISTED IN MECHANICAL EQUIPMENT LIST TO THE ENGINEER FOR REVIEW PRIOR TO THE ORDER, PURCHASE OR INSTALLATION.
10. ALL DIFFUSERS MUST BE BALANCED TO THE VALUES INDICATED ON THE FLOOR PLANS. PROVIDE BALANCE REPORT TO ENGINEER PRIOR TO PROJECT CLOSEOUT.
11. DUCT DIMENSIONS SHOWN ARE INSIDE CLEAR DIMENSIONS.
12. NOT USED
13. EACH TRADE IS RESPONSIBLE THEIR OWN FIRE CAULKING.
14. HOUSEKEEPING PADS FOR ALL EQUIPMENT IS PROVIDED AND INSTALLED BY GENERAL CONTRACTOR. COORDINATE LOCATION WITH MECHANICAL CONTRACTOR.
15. ALL RETURN AIR GRILLES SHALL HAVE SOUND BOOTS W/ LINED INSULATION. INSULATION IS TO BE PAINTED FLAT BLACK.
16. DIVISION 15 TO SUBMIT TO ENGINEER ALL AS-BUILTS OF BUILDINGS MECHANCIAL AND PLUMBING SYSTEMS PRIOR TO JOB COMPLETION AND FINAL PAYMENT.

AIR DEVICE SCHEDULE

GRILLE NUMBER — GRILLE CFM

PLAN CODE	TYPE & DUTY	NECK SIZE	CEILING TYPE	N.C. LEVEL MAX	SP	MAX. CFM	DAMPER	COLOR	MANUFACTURER & MODEL NO.	REMARKS
1	4-WAY SUPPLY	6"ø	SEE PLANS	20	0.05	176	IN DUCT	WHITE	PRICE #SCDA	1 3 4
2	4-WAY SUPPLY	8"ø	SEE PLANS	20	0.05	280	IN DUCT	WHITE	PRICE #SCDA	2 3 4
3	4-WAY SUPPLY	10"ø	SEE PLANS	21	0.05	436	IN DUCT	WHITE	PRICE #SCDA	2 3 4
4	RETURN	12" X 12"	SEE PLANS	15	0.06	630	OBD	WHITE	PRICE #80D	
5	TRANSFER GRILLE	12" X 12"	SEE PLANS	15	0.06	N.A.	N.A.	WHITE	PRICE #80D	

1 12" X 12" FACE MODULE 2 24" X 24" FACE MODULE 3 3 CONCENTRIC CONES 4 SET FOR HORIZONTAL DISCHARGE

EXHAUST FAN SCHEDULE

SYMBOL	NO. REQ'D	LOCATION	CFM	TOTAL SP	LB'S	SONES	ROOF OR WALL OPENING	MOTOR HP	MOTOR ø	MOTOR CYCLES	MOTOR VOLTS	MOTOR RPM	COMMENTS
EF-1	AS SHOWN	RESTROOM	120	0.15	22	1.7	8/10	50 WATTS	1	60	120	1200	COOK #GC-240 4 5 6
EF-2	AS SHOWN	VEHICLE SVC BAY	10920	0.25"	685	17.0	57" SQ.	2.0	1	60	208	321	COOK #54XLP 1 2 3 7 8 9

1 PROVIDE INSULATED HOUSING AROUND MOTOR 2 CONTROL WITH CARBON MONOXIDE DETECTOR THROUGH ON/AUTO SWITCH 3 INNER LOCK LOUVER MOTOR WITH FAN MOTOR 4 CEILING GRILLE 5 COOK WCA-2 WALL CAP AND DAMPER 6 CONTROL WITH MOTION DETECTOR 7 OUTLET LOUVER. SEE NOTE 10 ON DWG. M201 8 MOTORIZED DAMPER. INTERLOCK DAMPER WITH FAN MOTOR 9 SAFETY INLET SCREEN

CONDENSING UNIT SCHEDULE

CODE	MFR. & MODEL NO.	SEN. MBH	AMB. TEMP.	SEER	SUCTION TEMP.	FLA	MCA	MOP	VOLTAGE/ PHASE	REMARKS
CU-1	TRANE #2TTB2042A100	31	95	12	45	18.8	23	40	208/1	1 2 3 4 5 6 7 8 9

1 PROVIDE WITH FUSED DISCONNECT 2 CONNECT TO EVAPORATOR COIL IN F-1 3 ANTI-SHORT CYCLE 4 CONVENIENCE OUTLET 5 PROGRAMMABLE THERMOSTAT 6 HIGH/LOW PRESSURE SWITCH 7 FACTORY INSTALLED ACCUMULATOR 8 NOMINAL 3.5 TON UNIT 9 CONDENSER, EVAPORATOR AND FURNACE BY SAME MANUFACTURER

FURNACE SCHEDULE

SYMBOL	INPUT BTU	OUTPUT BTU 2	CFM	EXT S.P.	FAN SPEED	FILTER NO.	FILTER SIZE	MOTOR HP	MOTOR ø	MOTOR CYCLES	MOTOR VOLT	MOTOR DRIVE	MANUFACTURER AND MODEL NO.	COMMENTS
F-1	100,000	93,000	1400	0.5	1100 RPM	1	24"x25"x1"	3/4	60	1	115	DIRECT	TRANE #TUX100C960D	1 3 4 5 6 7

1 AFUE – 93 2 AT ELEVATION 3 R-22 4 PROVIDE W/TXC050C4HPD EVAPORATOR 5 PROPANE GAS KIT 6 CONCENTRIC VENT KIT 7 CONDENSER, EVAPORATOR AND FURNACE BY SAME MANUFACTURER

GAS-FIRED RADIANT HEATERS

SYMBOL	LOCATION	INPUT BTU	WEIGHT	CONFIG	MOTOR AMPS	MOTOR VOLTS	MOTOR ø	MOTOR CYCLES	FLUE SIZE	MAKE AND MODEL NUMBER	COMMENTS
B-1	AS SHOWN	100,000	35	SEE PLANS	1.0 RUN	120	1	60	4"ø	ROBERTS GORDON CO-RAY-VAC #B-10	1 2 3 4

1 ROBERS GORDON #EP-200 VACUUM PUMP, 3/4HP, 120 VOLT 2 PROVIDE FRESH AIR INTAKE 3 7-DAY PROGRAMMABLE THERMOSTAT 4 HEAT TREATED ALUMIZED STEEL TUBE AND POLISHED ALUMINUM REFLECTOR

UNIT HEATER SCHEDULE UH-

PLAN CODE	MOUNTING	MANUFACTURER & MODEL NO	HEATING CAP. MBH (INPUT) @ SEA LEVEL	HEATING CAP. MBH (OUTPUT) @ ALT.	EFFICIENCY (%)	FLUE SIZE (in.)	FLUE TYPE	UNIT WEIGHT (lbs)	MOTOR HP	MOTOR VOLTAGE & PHASE	COMMENTS
UH-1	VERTICAL	TRANE #GAND012	125	100	80%	4"ø	B	197	1/4	115/1	SEPARATED COMBUSTION WITH ROOF INLET TERMINAL AND ADAPTER PROPANE KIT

Copyright (C) 2005 by PVE, Inc. Salt Lake City, Utah. All rights reserved. Unauthorized copying and/or use is illegal and subject to prosecution.

File name: M:\PROJECTS\2005\05152.00\DRAWINGS\M001.DWG Last edited: 12/12/2005 @ 10:06

CLIENT

VERNAL
MAINTENANCE FACILITY
STATION #3437
2773 North Vernal Avenue
VERNAL, UTAH 84078

DESIGNER

ARCHIPLEX GROUP
architecture · planning · design services
1135 South West Temple, Ste. A
Salt Lake City, UT 84101
P:(801) 961-7070
F:(801) 961-7373

CONSULTANTS

PVE Inc.
Consulting Mechanical Engineers
90 South 400 West, Suite 340
Salt Lake City UT, 84101
Phone: (801) 359-3158
Fax: (801) 521-4114

PROFESSIONAL SEAL

REGISTERED PROFESSIONAL ENGINEER
ALAN D. SPENDLOVE
166911
STATE OF UTAH

NOT VALID UNLESS SIGNED

ISSUE

MARK	DATE	DESCRIPTION
	6-27-06	RE-BID-SET
	3-31-06	CONSTRUCTION DOCUMENTS
	1-20-06	FINAL REVIEW SET
	8-22-05	PRELIMINARY SUBMITTAL

DFCM PROJECT NO:	05056900/067023
ARCHIPLEX PROJECT NO:	050011.01
PVE PROJECT NO:	05152.00
DRAWN BY:	M.M.
CHECKED BY:	A.D.S.
DATE:	JUNE 2, 2006

KEY PLAN

SHEET TITLE

MECHANICAL
SCHEDULE SHEET

M001

© 2004 ARCHIPLEX GROUP

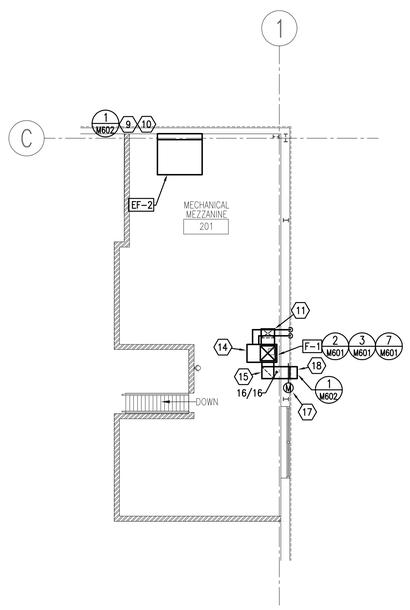

2 M201 MEZZANINE FLOOR PLAN
SCALE:1/8" = 1' – 0"

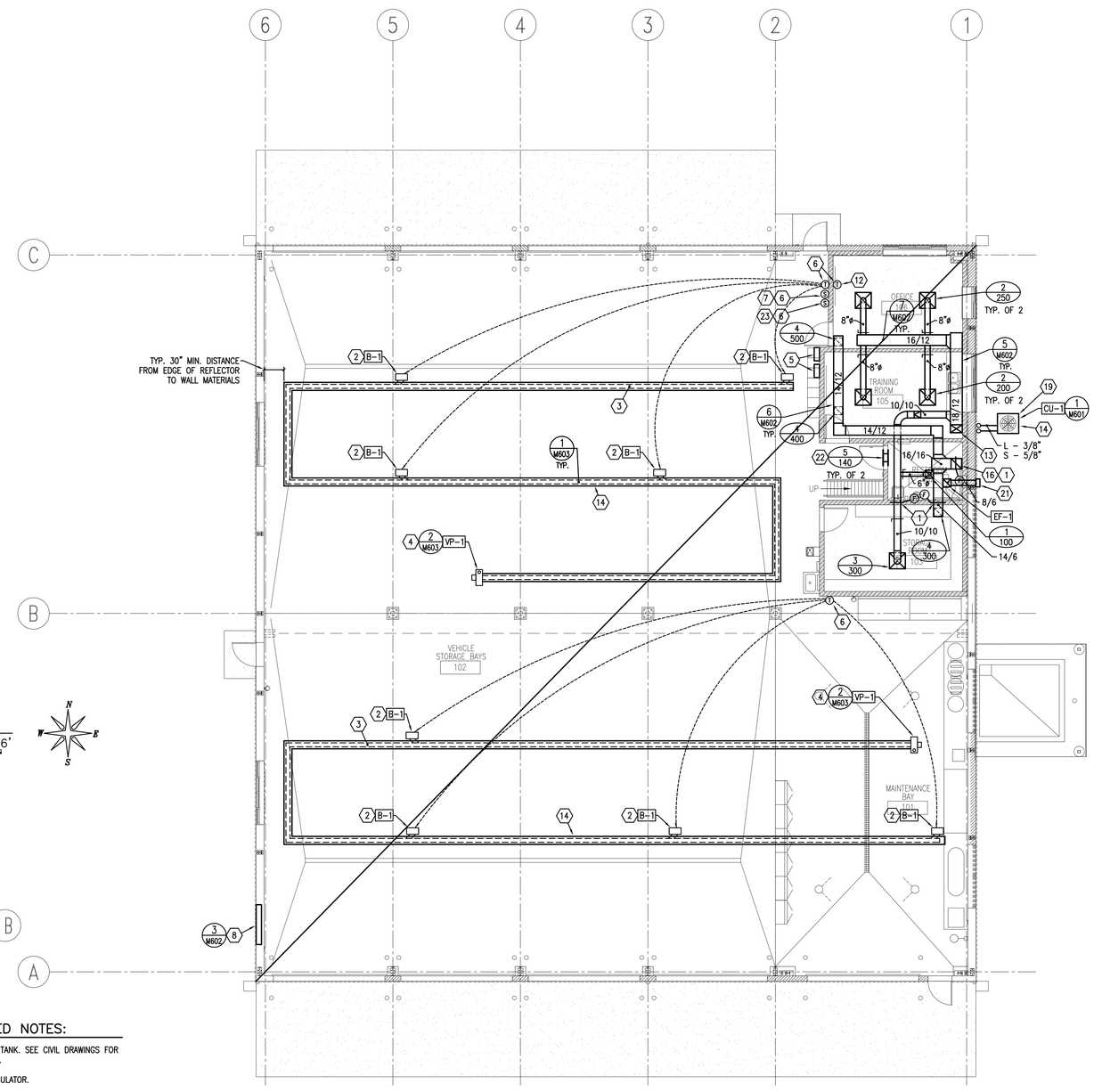

1 M201 MECHANICAL FLOOR PLAN
SCALE:1/8" = 1' – 0"

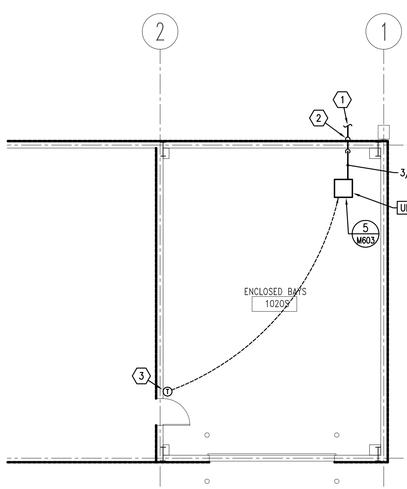

3 M201 ADD ALTERNATE #2
STORAGE BLDG. MECHANICAL FLOOR PLAN
SCALE:1/8" = 1' – 0"

KEYED NOTES:

1. PROVIDE FIRE DAMPER AND DUCT ACCESS DOOR.
2. 4" COMBUSTION THROUGH ROOF.
3. MOUNT RADIANT HEATERS PARALLEL WITH ROLL UP DOORS. (TYPICAL)
4. 4" TYPE B FLUE THROUGH ROOF. INSTALL PER MANUFACTURERS RECOMENDATIONS.
5. RADIANT HEAT SYSTEM CONTROL PANEL.
6. MOUNT 5'-0" AFF.
7. CARBON MONOXIDE DETECTOR. INTERLOCK THROUGH AUTO/ON SWITCH WITH EXHAUST FAN EF-2.
8. 72" X 72" COMBINATION LOUVER, ALUMINUM RUSKIN ELC445D. PROVIDE WITH ACTUATOR. INTERLOCK ACTUATOR WITH EF-2. REFER TO ARCHITECTURAL DRAWINGS FOR LOCATION.
9. REFERENCE ARCH. DRAWINGS FOR LOCATION.
10. 72" X 72" RUSKIN #ELF-4450X LOUVER. LOUVER COLOR BY ARCHITECT.
11. DROP 18" X 12" DUCT DOWN THROUGH FLOOR.
12. THERMOSTAT TO CONTROL F-1.
13. 18" X 12" DUCT UP THROUGH MEZZANINE FLOOR.
14. MECHANICAL CONTRACTOR SHALL COORDINATE ANY/ALL CHANGES TO SUPPLIED EQUIPMENT ELECTRICAL WITH ELECTRICAL CONTRACTOR.
15. 16" X 16" RETURN DOWN THROUGH FLOOR.
16. 16" X 16" RETURN DUCT UP THROUGH MEZZANINE FLOOR.
17. INTERLOCK DAMPER MOTOR WITH F-1.
18. 16" X 16" O.S.A. LOUVER. RUSKIN #ELF811DD. PROVIDE INSECT SCREEN AND BALANCING DAMPER. SET DAMPER TO 200 CFM.
19. MOUNT CONDENSING UNIT ON CONCRETE PAD.
20. REFRIGERATION LINE SIZES ARE FOR BIDDING PURPOSES ONLY. PROVIDE REFRIGERATION LINE SETS PER MANUFACTURER'S RECOMMENDATIONS.
21. EXHAUST FAN WALL CAP. REFER TO SCHEDULE.
22. MOUNT TRANSFER GRILLE ABOVE DOOR WITH CHANNEL BOARDER ON BOTH SIDES OF THE WALL.
23. MANUAL OVERRIDE SWITCH LOCATION FOR EF-2. SEE ELECTRICAL DRAWINGS

KEYED NOTES:

1. TO PROPANE TANK. SEE CIVIL DRAWINGS FOR CONTINUATION.
2. PROPANE REGULATOR.
3. MOUNT THERMOSTAT 5'-0" A.F.F. MOUNT THERMOSTAT ON INSULATED BASE.

CLIENT

VERNAL
MAINTENANCE FACILITY
STATION #3437
2773 North Vernal Avenue
VERNAL, UTAH 84078

DESIGNER

ARCHIPLEX GROUP
architecture · planning · design services
1135 South West Temple, Ste. A
Salt Lake City, UT 84101
P:(801) 961-7070
F:(801) 961-7373

CONSULTANTS

PVE Inc.
Consulting Mechanical Engineers
90 South 400 West, Suite 340
Salt Lake City UT, 84101
Phone: (801) 359-3158
Fax: (801) 521-4114

PROFESSIONAL SEAL

REGISTERED PROFESSIONAL ENGINEER
ALAN D. SPENDLOVE
166911
STATE OF UTAH

NOT VALID UNLESS SIGNED

ISSUE

MARK	DATE	DESCRIPTION
	6-27-06	RE-BID-SET
	3-31-06	CONSTRUCTION DOCUMENTS
	1-20-06	FINAL REVIEW SET
	8-22-05	PRELIMINARY SUBMITTAL

DFCM PROJECT NO:	05056900/067023
ARCHIPLEX PROJECT NO:	050011.01
PVE PROJECT NO:	05152.00
DRAWN BY:	M.M.
CHECKED BY:	A.D.S.
DATE:	JUNE 2, 2006

KEY PLAN

SHEET TITLE

MECHANICAL FLOOR PLAN

M201

© 2004 ARCHIPLEX GROUP

Copyright (C) 2005 by PVE, Inc. Salt Lake City, Utah. All rights reserved. Unauthorized copying and/or use is illegal and subject to prosecution.

File name: M:\PROJECTS\2005\05152.00\DRAWINGS\M201.DWG Last edited: 03/30/2006 @ 09:16

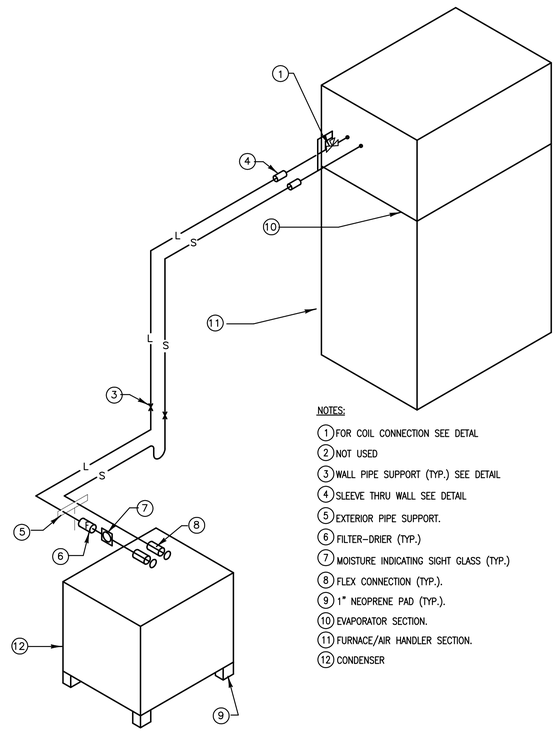

NOTES:

1. FOR COIL CONNECTION SEE DETAL
2. NOT USED
3. WALL PIPE SUPPORT (TYP.) SEE DETAIL
4. SLEEVE THRU WALL SEE DETAIL
5. EXTERIOR PIPE SUPPORT.
6. FILTER-DRIER (TYP.)
7. MOISTURE INDICATING SIGHT GLASS (TYP.)
8. FLEX CONNECTION (TYP.).
9. 1" NEOPRENE PAD (TYP.).
10. EVAPORATOR SECTION.
11. FURNACE/AIR HANDLER SECTION.
12. CONDENSER

1 M601 RERIGERANT PIPING SCHEMATIC DETAIL

NO SCALE

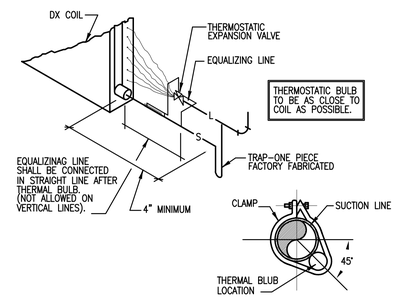

2 M601 REFRIGERANT COIL CONNECTION DETAIL

NO SCALE

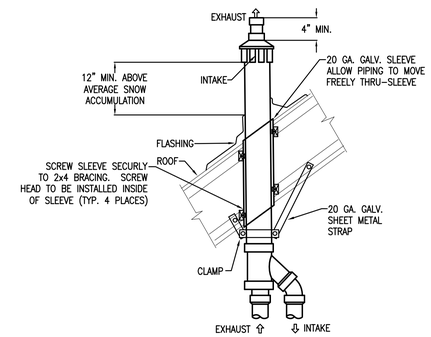

3 M601 CONCENTRIC ROOF TEMINATION DETAIL

NO SCALE

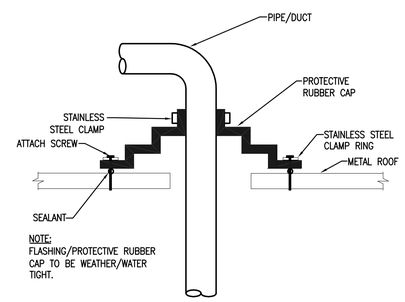

4 M601 METAL ROOF PENETRATION DETAIL

NO SCALE

NOTE:
PROVIDE ON ALL UNACCESSABLE DAMPERS

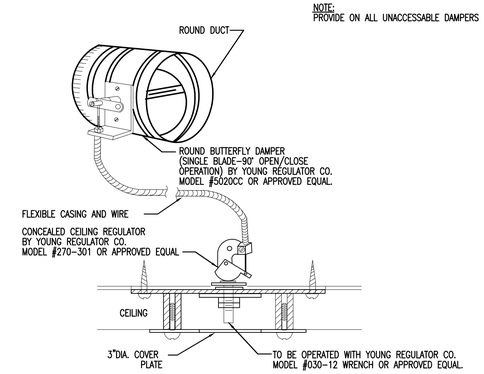

5 M601 DAMPER AND REGULATOR DETAIL

NO SCALE

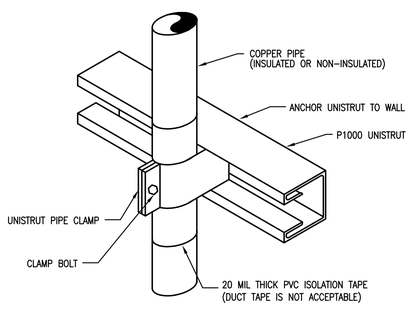

6 M601 PIPE SUPPORT DETAIL

NO SCALE

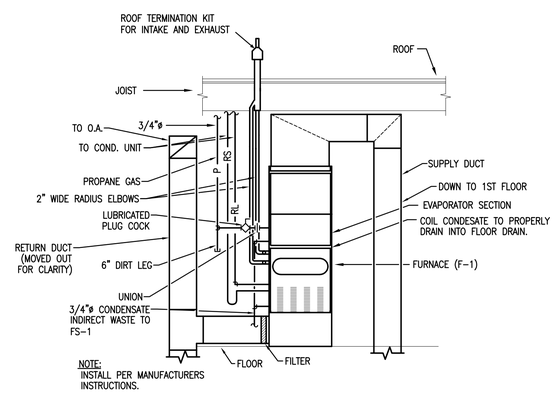

7 M601 90% EFFICIENT PROPANE FURNACE DETAIL

NO SCALE

Copyright (C) 2005 by PVE, Inc. Salt Lake City, Utah. All rights reserved. Unauthorized copying and/or use is illegal and subject to prosecution.

File name: M:\PROJECTS\2005\05152.00\DRAWINGS\M601.DWG Last edited: 12/12/2005 @ 10:05

CLIENT

VERNAL
MAINTENANCE FACILITY
STATION #3437
2773 North Vernal Avenue
VERNAL, UTAH 84078

DESIGNER

ARCHIPLEX GROUP
architecture · planning · design services
1135 South West Temple, Ste. A
Salt Lake City, UT 84101
P:(801) 961-7070
F:(801) 961-7373

CONSULTANTS

PVE Inc.
Consulting Mechanical Engineers
90 South 400 West, Suite 340
Salt Lake City UT, 84101
Phone: (801) 359-3158
Fax: (801) 521-4114

PROFESSIONAL SEAL

REGISTERED PROFESSIONAL ENGINEER
ALAN D. SPENDLOVE
166911
STATE OF UTAH

NOT VALID UNLESS SIGNED

ISSUE

MARK	DATE	DESCRIPTION
	6-27-06	RE-BID-SET
	3-31-06	CONSTRUCTION DOCUMENTS
	1-20-06	FINAL REVIEW SET
	8-22-05	PRELIMINARY SUBMITTAL

DFCM PROJECT NO:	05056900/067023
ARCHIPLEX PROJECT NO:	050011.01
PVE PROJECT NO:	05152.00
DRAWN BY:	M.M.
CHECKED BY:	A.D.S.
DATE:	JUNE 2, 2006

KEY PLAN

SHEET TITLE

MECHANICAL DETAIL SHEET

M601

© 2004 ARCHIPLEX GROUP

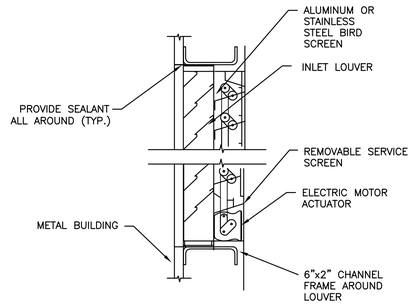

1 M602 OUTLET / INLET LOUVER DETAIL

NO SCALE

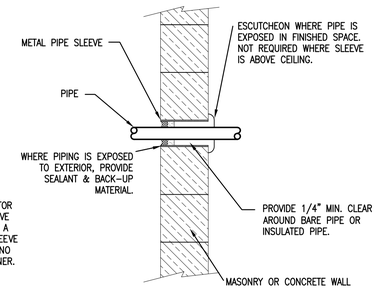

NOTE:
PIPE SLEEVES ARE REQUIRED ON THIS PROJECT. CONTRACTOR SHALL BE REQUIRED TO REMOVE ANY PIPE INSTALLED WITHOUT A PIPE SLEEVE, INSTALL THE SLEEVE AND REINSTALL THE PIPE AT NO ADDITIONAL COST TO THE OWNER.

2 M602 PIPE THRU WALL ABOVE GRADE

NO SCALE

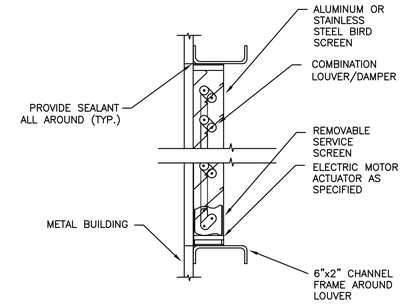

3 M602 COMBINATION LOUVER/DAMPER DETAIL

NO SCALE

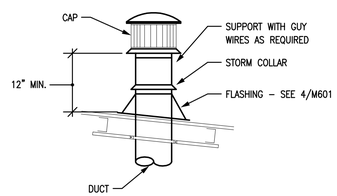

4 M602 INTAKE VENT PIPE DETAIL

NO SCALE

DIMENSION OF LONGEST SIDE, INCHES	SHEET METAL GAGE (ALL FOUR SIDES)	MINIMUM REINFORCING ANGLE SIZE & MAXIMUM LONGITUDINAL SPACING BETWEEN JOINTS &/OR INTERMEDIATE REINFORCING	TRANSVERSE REINFORCING ① AT JOINTS								
			MIN. H, IN.	DRIVE SLIP / PLAIN S SLIP RECOMMENDED GAGE	STANDARD S SLIP RECOMMENDED GAGE	ALTERNT BAR SLIP RECOMMENDED GAGE	REINFOR. BAR SLIP RECOMMENDED GAGE	BAR SLIP / ANGLE SLIP RECOMMENDED GAGE	REINFORCED ANGLE SIZE	STAND. SEAM / ANGLE REINFOR. STAND.SEAM RECOMMENDED GAGE	REINFORCED ANGLE SIZE
UP THRU 12	26	NONE REQ.	1	26	26	24	24	24	NOT REQ.	NOT REQ.	24
13 - 18	24	NONE REQ.	1	24	24	24	24	24	NOT REQ.	NOT REQ.	24
19 - 30	24	1X1X1/8 @ 60"	1	-	24	24	24	24	NOT REQ.	NOT REQ.	24
31 - 42	22	1X1X1/8 @ 60"	1	-	-	22	22	22	NOT REQ.	NOT REQ.	22
43 - 54	22	1.5X1.5X1/8@60"	1 1/2	-	-	22	22	22	1.5X1.5X1/8	NOT REQ.	22
55 - 60	20	1.5X1.5X1/8@60"	1 1/2	-	-	-	22	22	1.5X1.5X1/8	NOT REQ.	22
61 - 84	20	1.5X1.5X1/8@30"	1 1/2	-	-	-	22	22	1.5X1.5X1/8	1.5X1.5X1/8	22

① TRANSVERSE REINFORCING SIZE IS DETERMINED BY DIMENSION OF SIDE TO WHICH ANGLE IS APPLIED

5 M602 DUCT CONSTRUCTION DETAIL

NO SCALE

HANGER SIZES FOR RECTANGULAR DUCT

MAX. SIDE	HANGER	HORIZANTAL SUPPORT ANGLE	MAXIMUM SPACING
30"	1"X16" GAGE STRAP	NONE REQUIRED	10'-0"
36"	1/4" ROUND ROD	1 1/2" X 1 1/2" X 1/8"	8'-0"
48"	1/4" ROUND ROD	2" X 2" X 1/8"	8'-0"
60"	5/16" ROUND ROD	2" X 2" X 1/8"	8'-0"
84"	3/8" ROUND ROD	2" X 2" X 1/8"	8'-0"

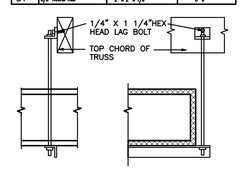

NO POP RIVETS ALLOWED

SELF TAPPING CADMIUM PLATED HEX HEAD SHEET METAL SCREW STRAPS TO BE TIGHT AGAINST DUCT.

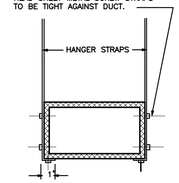

6 M602 DUCT STRAP HANGER DETAIL

NO SCALE

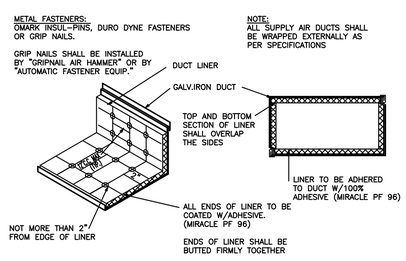

7 M602 DUCT LINER DETAIL

NO SCALE

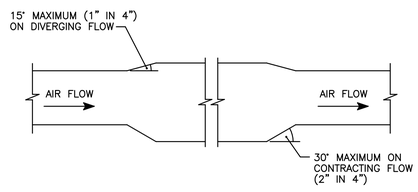

NOTE:
THE 15° MAXIMUM TRANSITION ANGLE NOTED ON THIS DETAIL IS MORE RESTRICTIVE THAN THE SMACNA ALLOWANCE OF 20°.

8 M602 CONVERGING AND DIVERGING TRANSITIONS

NO SCALE

Copyright (C) 2005 by PVE, Inc. Salt Lake City, Utah. All rights reserved. Unauthorized copying and/or use is illegal and subject to prosecution.

File name: M:\PROJECTS\2005\05152.00\DRAWINGS\M602.DWG Last edited: 12/12/2005 @ 10:05

CLIENT

VERNAL
MAINTENANCE FACILITY
STATION #3437
2773 North Vernal Avenue
VERNAL, UTAH 84078

DESIGNER

ARCHIPLEX GROUP
architecture · planning · design services
1135 South West Temple, Ste. A
Salt Lake City, UT 84101
P:(801) 961-7070
F:(801) 961-7373

CONSULTANTS

PVE Inc.
Consulting Mechanical Engineers
90 South 400 West, Suite 340
Salt Lake City UT, 84101
Phone: (801) 359-3158
Fax: (801) 521-4114

PROFESSIONAL SEAL

REGISTERED PROFESSIONAL ENGINEER
ALAN D. SPENDLOVE
166911
STATE OF UTAH

NOT VALID UNLESS SIGNED

ISSUE

MARK	DATE	DESCRIPTION
	6-27-06	RE-BID-SET
	3-31-06	CONSTRUCTION DOCUMENTS
	1-20-06	FINAL REVIEW SET
	8-22-05	PRELIMINARY SUBMITTAL

DFCM PROJECT NO:	05056900/067023
ARCHIPLEX PROJECT NO:	050011.01
PVE PROJECT NO:	05152.00
DRAWN BY:	M.M.
CHECKED BY:	A.D.S.
DATE:	JUNE 2, 2006

KEY PLAN

SHEET TITLE

MECHANICAL DETAIL SHEET

M602

© 2004 ARCHIPLEX GROUP

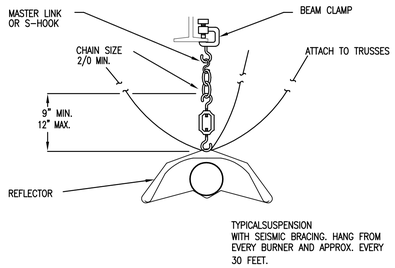

1 M603 RADIANT HEATING SEISMIC DETAIL

NO SCALE

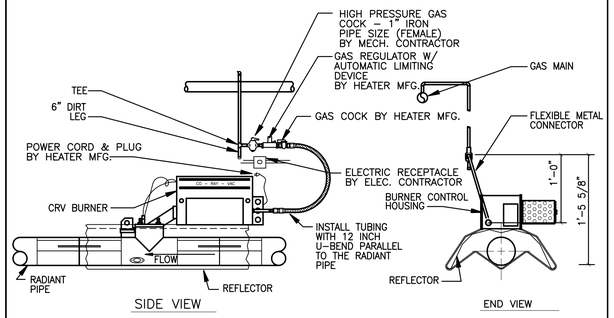

2 M603 GAS CONNECTION TO CRV BURNER DETAIL

NO SCALE

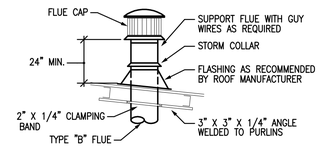

3 M603 FLUE CAP DETAIL

NO SCALE

NOT USED

4 M603

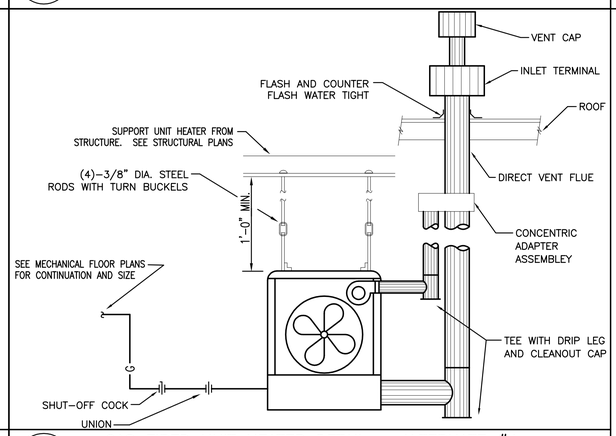

5 M603 GAS FIRED UNIT HEATER DETAIL – ALTERNATE #4

NO SCALE

Copyright (C) 2005 by PVE, Inc. Salt Lake City, Utah. All rights reserved. Unauthorized copying and/or use is illegal and subject to prosecution.

File name: M:\PROJECTS\2005\05152.00\DRAWINGS\M603.DWG Last edited: 12/12/2005 @ 10:05

CLIENT

VERNAL
MAINTENANCE FACILITY
STATION #3437
2773 North Vernal Avenue
VERNAL, UTAH 84078

DESIGNER

ARCHIPLEX GROUP
architecture · planning · design services
1135 South West Temple, Ste. A
Salt Lake City, UT 84101
P:(801) 961-7070
F:(801) 961-7373

CONSULTANTS

PVE Inc.
Consulting Mechanical Engineers
90 South 400 West, Suite 340
Salt Lake City UT, 84101
Phone: (801) 359-3158
Fax: (801) 521-4114

PROFESSIONAL SEAL

REGISTERED PROFESSIONAL ENGINEER
ALAN D. SPENDLOVE
166911
STATE OF UTAH

NOT VALID UNLESS SIGNED

ISSUE

MARK	DATE	DESCRIPTION
	6-27-06	RE-BID-SET
	3-31-06	CONSTRUCTION DOCUMENTS
	1-20-06	FINAL REVIEW SET
	8-22-05	PRELIMINARY SUBMITTAL

DFCM PROJECT NO:	05056900/067023
ARCHIPLEX PROJECT NO:	050011.01
PVE PROJECT NO:	05152.00
DRAWN BY:	M.M.
CHECKED BY:	A.D.S.
DATE:	JUNE 2, 2006

KEY PLAN

SHEET TITLE

MECHANICAL
DETAIL SHEET

M603

© 2004 ARCHIPLEX GROUP

Copyright (C) 2005 by PVE, Inc. Salt Lake City, Utah. All rights reserved. Unauthorized copying and/or use is illegal and subject to prosecution.

PIPING LEGEND
(NOT ALL USED)

GATE VALVE		CHILLED WATER SUPPLY	CHS
OS & Y PATTERN GATE VALVE		CHILLED WATER RETURN	CHR
BALL VALVE		CONDENSER WATER SUPPLY	CWS
BUTTERFLY VALVE		CONDENSER WATER RETURN	CWR
MOTORIZED BUTTERFLY VALVE		HEATING WATER SUPPLY	HWS
HEAT TRACING		HEATING WATER RETURN	HWR
DEIONIZED WATER	DI	WATER TREATMENT	WT
CHECK VALVE		FIRE DEPT. HORN & LIGHT	
SOLENOID VALVE		HOT GAS	HG
AUTOMATIC CONTROL VALVE (2-WAY)		FLEXIBLE PIPE CONNECTION	
AUTOMATIC CONTROL VALVE (3-WAY)		REDUCED PRESSURE BACKFLOW PREVENTER	RPBP
PRESSURE REDUCING VALVE		DIRECTION OF FLOW	
P & T RELIEF VALVE		ELBOW DOWN (DN)	
AIR VENT (AUTOMATIC)		ELBOW UP	
REFRIGERANT LIQUID	RL	PIPE CAP	
REFRIGERANT SUCTION	RS	TEE DOWN	
THERMAL EXPANSION VALVE		UNION	
STRAINER		DOMESTIC COLD WATER	
CIRCUIT SETTER		DOMESTIC HOT WATER	
FLOW METER		HOT WATER CIRC.	
PET COCK OR GAUGE COCK		TEMPERED WATER	T
PRESSURE GAUGE W/GAUGE COCK		SANITARY (PLBG) VENT	
THERMOMETER		SANITARY SEWER ABOVE GRADE	
TEMPERATURE & PRESSURE TEST PLUG		SANITARY SEWER BELOW GRADE	
IN-LINE PUMP		DRAIN	D
FLOW SWITCH		ROOF DRAIN PIPING	RD
AQUASTAT	A	OVERFLOW DRAIN PIPING	OD
HOSE BIBB OR SILLCOCK		STORM DRAIN PIPING ABOVE GRADE	SD
VACUUM	V	STORM DRAIN PIPING BELOW GRADE	SD
FLOOR DRAIN		FIRE SERVICE	F
FLOOR SINK		PROPANE	P
HOT GAS BYPASS	HGBP	COMPRESSED AIR	CA
WALL CLEANOUT OR CLEANOUT		VENT THROUGH ROOF	
FLOOR OR GRADE CLEANOUT		STEAM	S
GRADE CLEANOUT W/ CONCRETE PAD		CONDENSATE	C

GENERAL NOTES:

1. COORDINATE ALL AIR DEVICE LOCATIONS WITH REFLECTED CEILING PLANS AND ELECTRICAL DRAWINGS.
2. DUCTWORK AND PIPE ROUTING AS SHOWN ON DRAWINGS IS DIAGRAMMATIC AND IS NOT TO BE SCALED. WHERE ALTERNATE ROUTING, OFFSETS AND TRANSITIONS ARE REQUIRED FOR COORDINATION OF WORK, THIS CONTRACTOR SHALL MAKE CHANGES WITHOUT ADDITIONAL COSTS.
3. THIS CONTRACTOR SHALL CLOSELY COORDINATE NEW MECHANICAL WITH NEW ELECTRICAL, ARCHITECTURAL AND BUILDING STRUCTURE.
4. THIS CONTRACTOR SHALL FIELD VERIFY ALL MECHANICAL ITEMS PRIOR TO STARTING NEW WORK. ADDITIONAL COST WILL NOT BE ALLOWED FOR CONTRACTOR'S FAILURE TO BECOME FAMILIAR WITH SITE CONDITIONS.
5. ALL MECHANICAL SYSTEMS SHALL BE INSTALLED IN ACCORDANCE WITH THE CURRENT ADOPTED EDITION OF THE BUILDING CODES, FIRE CODES, MECHANICAL CODES AND PLUMBING CODES.
6. THIS CONTRACTOR SHALL PROVIDE SUBMITTALS ON ITEMS LISTED IN MECHANICAL EQUIPMENT LIST TO THE ENGINEER FOR REVIEW PRIOR TO THE ORDER, PURCHASE OR INSTALLATION.
7. NOT USED
8. ALL DOMESTIC COLD AND DOMESTIC HEATING WATER PIPING SHALL BE TYPE 'L' COPPER. ALL WASTE AND VENT PIPING SHALL BE CAST IRON. ALL ROOF AND OVERFLOW DRAINAGE PIPING TO BE CAST IRON.
9. PROVIDE INSULATION FOR THE FOLLOWING:
   a. DOMESTIC HOT WATER PIPING: 1" THICK FOR ALL PIPE SIZES.
   b. DOMESTIC COLD WATER PIPING: ½" THICK FOR PIPE SIZES ¾" TO 6". (PROVIDE CONTINUOUS VAPOR BARRIER.)
10. INSULATE PIPING WITH FIBERGLASS PIPE COVERING WITH ALL SERVICE JACKET AND SELF-CAP SEAL. FITTINGS SHALL BE MITERED PIPING COVERING OF GLASS FIBER MOLDED FITTINGS FOR USE IN A RETURN AIR PLENUM. THERMAL CONDUCTIVITY SHALL BE A MAXIMUM OF .25/INCH THICKNESS AT 75°F.
11. EACH TRADE IS RESPONSIBLE THEIR OWN FIRE CAULKING.
12. HOUSEKEEPING PADS FOR ALL EQUIPMENT IS PROVIDED AND INSTALLED BY GENERAL CONTRACTOR. COORDINATE LOCATION WITH MECHANICAL CONTRACTOR.
13. DIVISION 15 TO SUBMIT TO ENGINEER ALL AS-BUILTS OF BUILDINGS MECHANCIAL AND PLUMBING SYSTEMS PRIOR TO JOB COMPLETION AND FINAL PAYMENT.

PLUMBING FIXTURE CONNECTION SCHEDULE

PLAN CODE	DESCRIPTION	CONNECTION SIZE C.W.	H.W.	WASTE	VENT	TRAP	COMMENTS
WC-1	WATER CLOSET	1/2"	-	4"	2"	INT.	FLOOR MOUNTED TANK TYPE, CRANE - HYMONT #31055, 18 INCH RIM HEIGHT, MAXIMUM WATER USAGE OF 1.6 GALLON'S PER FLUSH. TANK TO HAVE PRESSURE ASSISTED FLUISH. SEAT - PROVIDE SPLIT FRONT TYPE WITH CHECK HINGE, BEMIS #1955C PROVIDE CHROME PLATED SUPPLY AND STOP
L-1	LAVATORY	1/2"	1/2"	1-1/2"	1-1/2"	1-1/2"	WALL MOUNTED, CRANE #1412V, HANDICAP TYPE, VITREOUS CHINA, SELF SUPPORTING FIXTURE, SIZE 24"X21". FAUCET AND DRAIN - SYMMONS S-6080 WITH DRAIN GRID, BATTERY OPERATED WITH BATTERY INSIDE BODY OF FAUCET. PROVIDE CHROME PLATED SUPPLIES AND STOPS. DEARBORN, 17 GA TUBE "P" TRAP, CHROME PLATED. FITTINGS AND TRAP TO BE INSULATED TO MEET ADA REQUIREMENTS PROVIDE MCGUIRES PROWRAP. PROVIDE WITH CARRIER.
S-1	UTILITY SINK	1/2"	1/2"	3"	1-1/2"	3"	ELKAY ESSW 2520-C, WALL MOUNTED 304 14 GAUGE STAINLESS STEEL SERVICE SINK WITH HOSE THREAD, VACUUM BREAKER, WALL BRACKET AND PAIL HOOK SPOUT AND LK173 CAST IRON P-TRAP.
U-1	URINAL	3/4"	-	2"	1-1/2"	INT.	WALL MOUNTED URINAL CRANE #7197, 1.0 GPF. VITEROUS CHINA, MOUNT 17" A.F.F. TO MEET ADA REQUIREMENTS. PROVIDE WITH SLOAN #8186 G2 OPTIMA PLUS BATTERY OPERATED FLUSHMETER, FLUSHMETER TO HAVE MANUAL OVERRIDE (URINAL SHALL FIT SPACE AVAILABLE.) PROVIDE CARRIER.
HB-1	HOSE BIBB	3/4"	-	-	-	-	SINGLE SPOUT WITH HOSE CONNECTION. PROVIDE WITH VACUUM BREAKER AND METAL HANDLE. (PLASTIC HANDLES ARE NOT ACCEPTABLE). CHICAGO MODEL NO. 293 WITH E27 VACUUM BREAKER
WH-1	WALL HYDRANT	3/4"	-	-	-	-	WADE W8600,175, NON-FREEZE WALL HYDRANT WITH NICKEL BRONZE BOX, COMPLETE WITH CHROME PLATED LOCKING COVER AND BOX WITH INTEGRAL VACUUM BREAKER. WALL HYDRANT TO BE SIZED FOR WALL THICKNESS.
FD-1	FLOOR DRAIN	-	-	3"	1-1/2"	2"	FLOOR DRAIN J.R. SMITH #2005-A. WITH NICKEL BRONZE STRAINER, TRAP PRIMER CONNECTION AND DEEP SEAL TRAP.
FD-2	FLOOR DRAIN	-	-	4"	2"	4"	SMITH #2340 NB, FLOOR DRAIN WITH SEDIMENT BUCKET, DEEP SEAL P-TRAP, AND NICKEL BRONZE TOP.
ES-1	EMERGENCY EYEWASH & SHOWER	1-1/4"	-	-	-	-	BRADLEY S19-310SBFW, FLOOR MOUNTED SAFETY STATION COMBINATION EYEWASH AND EMERGENCY SHOWER. ALUMINUM FLOOR FLANGE AND GALVANIZED INTERMEDIATE PIPE AND FITTINGS, TWO SOFT STREAM OUTLET HEADS, STAINLESS STEEL BOWL AND STAY OPEN TYPE VALVE ON EYEWASH, ORANGE CYCOLAC PLASTIC SHOWER HEAD WITH STAY OPEN VALVE (OPERATED BY PULL ROD AND HANDLE), 1-1/4" IPS FEMALE INLET AND OUTLET.
S-2	DOUBLE COMPARTMENT SINK	1/2"	1/2"	2"	1-1/2"	2"	JUST #DL-ADA-2233-A-GR, STAINLESS STEEL DOUBLE COMPARTMENT, SELF RIMMING, SIZE 22"X33" OD WITH TWO COMPARTMENTS THAT ARE 16"X14"X8" DEEP, MATERIAL - 18 GAUGE TYPE 304 STAINLESS STEEL, SEAMLESS DIE DRAWN. INTERIOR SURFACES POLISHED TO A NON-POROUS FINISH. UNDERSIDE TO BE FULLY COATED INSULATED FOR SOUND AND CONDENSATION REDUCTION. FAUCET AND DRAIN - GOOSENECK WITH SPRAY. JUST JWF-201 WITH TEAR DROP HANDLES AND JB-99 DRAIN OR APPROVED EQUAL. PROVIDE WITH CHROME PLATED SUPPLY AND STOPS. DEARBORN 17 GA TUBE "P" TRAP, CHROME PLATED.
FS-1	FLOOR SINK	-	-	2"	1-1/2"	2"	FLOOR SINK J.R. SMITH #3020. COMPLETE WITH ACID RESISTANT COATED INTERIOR AND POLISHED ALUMINUM DOME BOTTOM STRAINER
TP-1	TRAP PRIMER	1/2"	-	-	-	-	TRAP PRIMER MIFAB #500 COMPLETE WITH MIFAB MI-GAP AIR GAP FITTING AND STAINLESS STEEL ACCESS DOOR.
DF-1	DRINKING FOUNTAIN	1/2"	-	2"	1-1/2"	2"	ADA COMPLIANT WATER COOLER, 12 GPH, SEMI-RECKSSEL, 115 VOLTS, 400 WATTS, 4.8 AMPS, ELKAY #ESRWC-13.
TD-1	TRENCH DRAIN	-	-	3"	2"	3"	TRENCH DRAIN J.R. SMITH #9931, COMPLETE WITH HEAVY DUTY FRAME, LOAD CLASS C STAINLESS STEEL SLOTTED GRATE, FULLY SLOPED CHANNELS.
TMV-1	TEMPERATURE MIXING VALVE	1/2"	1/2"	-	-	-	EMERGENCY FIXTURE THERMOSTATIC MIXING VALVE. BRADLEY #S19-2100 COMPLETE WITH CHROME PLATED FINISH, STAINLESS STEEL SURFACE MOUNTED BOX, INTEGRAL STRAINER CHECK STOPS ON INLET BUILT IN COLD WATER BYPASS, HOT WATER SHUT OFF WHEN COLD SUPPLY IS LOST, OUTLET TEMPERATURE GAUGE. 25 GPM @ 15 PSI PRESSURE DROP. SET TEMPERATURE TO 85°.

GAS FIRED WATER HEATER SCHEDULE

SYMBOL	MFR. CATALOG NO.	SERVICE	CAPACITY GALLONS	FUEL GAS	INPUT BTU	RECOV GPH	TANK SIZE	TEMP F IN/OUT	FLUE SIZE	REMARKS
WH-1	BRADFORD WHITE #M-I-40T6EN (LP)	HOT WATER	40	PROPANE	40,000	41	20"	40°/140°	3"	*

* PROVIDE WITH EXPANSION TANK. A.O. SMITH-AMTROL ST-5-2 GAL, 8"#x12"H

AIR COMPRESSOR AC-

PLAN CODE	DUTY	ACFM @ 175 PSI	RECEIVER CAP. (GAL)	ELECTRICAL VOLT/PH	HP	MANUFACTURER & MODEL NO
AC-1	SHOP AIR	24	80V	208/3	7.5	SPEEDAIRE WW GRAINGER #5F565

* START/STOP, WITH PROVISION FOR NO LOAD START. INCLUDE MAGNETIC STARTER

CIRCULATION PUMP SCHEDULE CP-

PLAN CODE	DUTY	GPM	FEET OF HEAD	PUMP RPM	MOTOR H.P.	MOTOR VOLTAGE & PHASE	MANUFACTURER & MODEL NO.	COMMENTS
CP-1	DOMESTIC HOT WATER RECIRCULATION	1	4	3250	1/40	115	TACO #003PNP	SEE HOT WATER HEATER DETAIL FOR INSTALLATION REQ.

CLIENT

VERNAL
MAINTENANCE FACILITY
STATION #3437
2773 North Vernal Avenue
VERNAL, UTAH 84078

DESIGNER

ARCHIPLEX GROUP
architecture · planning · design services
1135 South West Temple, Ste. A
Salt Lake City, UT 84101
P:(801) 961-7070
F:(801) 961-7373

CONSULTANTS

PVE Inc.
Consulting Mechanical Engineers
90 South 400 West, Suite 340
Salt Lake City UT, 84101
Phone: (801) 359-3158
Fax: (801) 521-4114

PROFESSIONAL SEAL

REGISTERED PROFESSIONAL ENGINEER
ALAN D. SPENDLOVE
166911
STATE OF UTAH

NOT VALID UNLESS SIGNED

ISSUE

MARK	DATE	DESCRIPTION
	6-27-06	RE-BID-SET
	3-31-06	CONSTRUCTION DOCUMENTS
	1-20-06	FINAL REVIEW SET
	8-22-05	PRELIMINARY SUBMITTAL

DFCM PROJECT NO:	05056900/067023
ARCHIPLEX PROJECT NO:	050011.01
PVE PROJECT NO:	05152.00
DRAWN BY:	M.M.
CHECKED BY:	A.D.S.
DATE:	JUNE 2, 2006

KEY PLAN

SHEET TITLE

PLUMBING
SCHEDULE SHEET

P001

© 2004 ARCHIPLEX GROUP

File name: M:\PROJECTS\2005\05152.00\DRAWINGS\P001.DWG Last edited: 12/12/2005 @ 10:05

Copyright (C) 2005 by PVE, Inc. Salt Lake City, Utah. All rights reserved. Unauthorized copying and/or use is illegal and subject to prosecution.

File name: M:\PROJECTS\2005\05152.00\DRAWINGS\P201.DWG Last edited: 03/30/2006 @ 09:25

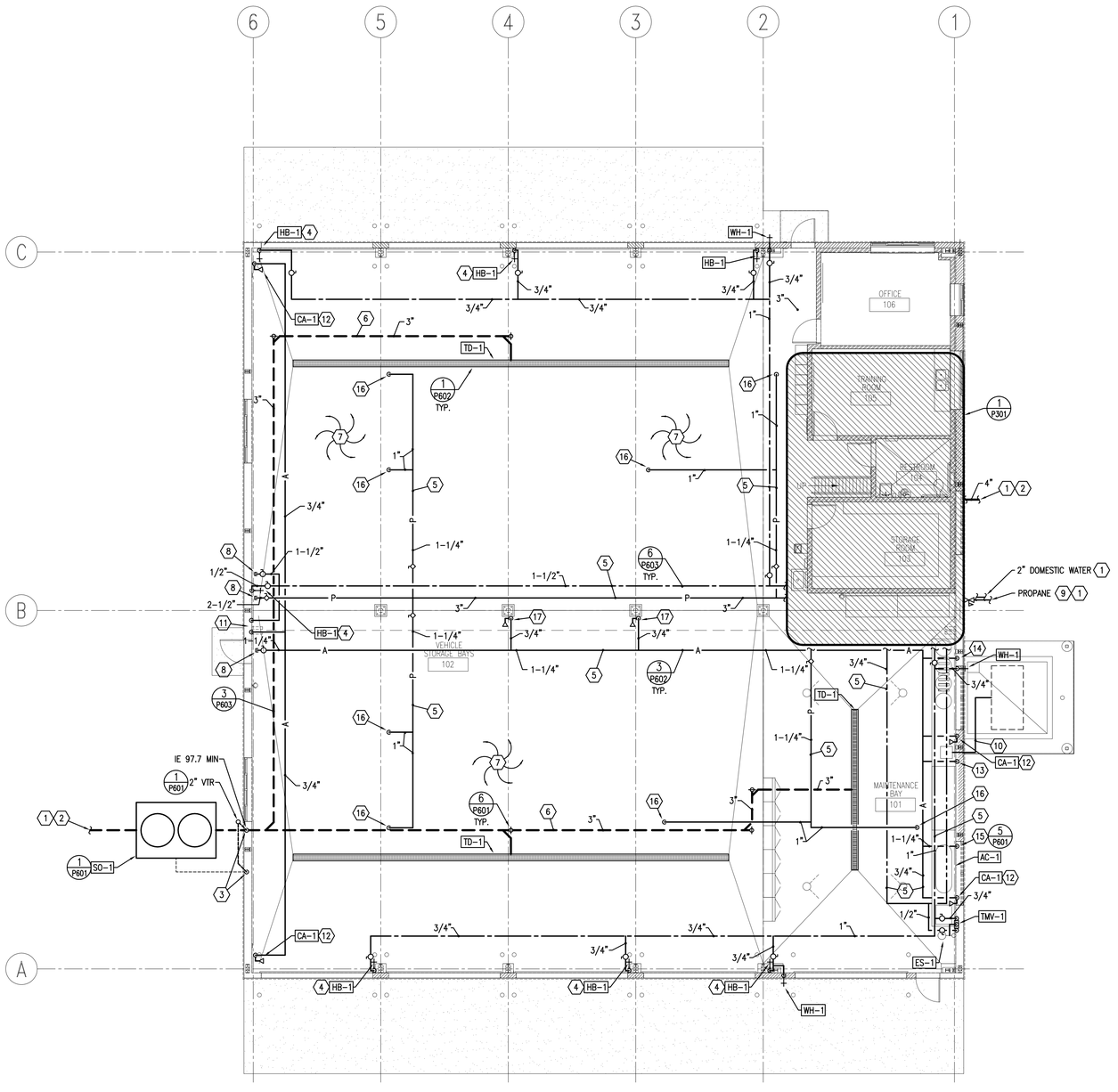

1 P201 PLUMBING FLOOR PLAN

SCALE:1/8" = 1' – 0"

KEYED NOTES:

1. SEE SITE DRAWINGS FOR CONTINUATION.
2. SEE CIVIL DRAWINGS FOR INVERT ELEVATION. GENERAL CONTRACTOR IS TO COORDINATE WITH HIS SUBS TO VERIFY SITE SANITARY SEWER AND BUILDING SANITARY SEWER PIPE WILL PROPERLY CONNECT PRIOR TO INSTALLING ANY SANITARY PIPE IN THE SITE OR BUILDING. IF A PROBLEM EXISTS, THE CONTRACTOR IS TO INFORM THE ARCHITECT OF THE PROBLEM PRIOR TO INSTALLING ANY PIPE. IF PIPE IS INSTALLED AND A PROBLEM ARISES, THE CONTRACTOR, AT HIS EXPENSE, SHALL PERFORM ANY WORK REQUIRED SUCH THAT THE SANITARY PIPE CAN BE INSTALLED CORRECTLY TO CODE STANDARDS.
3. VENTS FROM SAND/OIL SEPARATOR MAY BE COMBINED AFTER THEY ARE 10' ABOVE FLOOD RIM OF SEPARATOR AND THEN CONNECTED TO VEHICLE STORAGE BAY WASTE SYSTEM VENT PIPE.
4. PROVIDE PVC COVER OVER INSULATION TO 8'–0" AFF. MOUNT HB–1 3'–0" AFF.
5. ROUTE PIPING ABOVE STRUCTURE.
6. ALL WASTE PIPING 3" AND GREATER TO SLOPE ⅛" PER FOOT.
7. PIPE SLEEVES REQUIRED ON THIS PROJECT. IF CONTRACTOR FAILS TO INSTALL PIPE SLEEVES, THE CONTRACTOR SHALL REMOVE PIPE, INSTALL SLEEVE AND REINSTALL PIPE AT NO ADDITIONAL EXPENSE TO THE OWNER.
8. CAP LINE FOR FUTURE EXPANSION.
9. PROPANE LINE FROM TANKS TO BUILDING WITH REGULATOR ON OUTSIDE OF BUILDING. PROVIDE APPLIANCE REGULATOR AT EACH APPLIANCE TO REDUCE PRESSURE.
10. CONNECT OIL DRAIN LINE TO DRAIN PUMP. RUN DRAIN LINE OUT TO CATCH TANK. PROVIDE SHUT–OFF VALVE AND UNION. CATCH TANK FURNISHED BY OWNER, INSTALLED BY CONTRACTOR. DRAIN PUMP BY CONTRACTOR. VERIFY LOCATION.
11. CONNECT 1" COMPRESSED AIR LINE AND ¾" CW LINE TO OVERHEAD HOSE REEL. PROVIDE SHUT–OFF AND UNION. HOSE REEL BY CONTRACTOR.
12. ¾" COMPRESSED AIR DROP DOWN TO QUICK DISCONNECT. PROVIDE SHUT–OFF VALVE. VERIFY MOUNTING HEIGHT WITH OWNER. REFER TO DETAIL 5/P601.
13. DROP ¾" COMPRESSED AIR DOWN TO OIL DRAIN PUMP. PROVIDE SHUT–OFF VALVE.
14. DROP 1" COMPRESSED AIR LINE TO LUBE BARRELS. PROVIDE SHUT–OFF VALVE. LUBE BARRELS BY OWNER, INSTALLED BY CONTRACTOR.
15. AIR COMPRESSOR BY CONTRACTOR. CONNECT 1–½" COMPRESSED AIR LINE TO COMPRESSOR. PROVIDE SHUT–OFF VALVE AND UNION.
16. PROPANE LINE DOWN TO BURNER. PROVIDE SHUT–OFF VALVE, UNION AND APPLIANCE REGULATOR REFERENCE DETAIL 2/M603.
17. DROP AIR LINE DOWN COLUMN FACE AND TERMINATE WITH QUICK COUPLER 3'–0" A.F.F.

CLIENT

VERNAL
MAINTENANCE FACILITY
STATION #3437
2773 North Vernal Avenue
VERNAL, UTAH 84078

DESIGNER

ARCHIPLEX GROUP
architecture · planning · design services
1135 South West Temple, Ste. A
Salt Lake City, UT 84101
P:(801) 961–7070
F:(801) 961–7373

CONSULTANTS

PVE Inc.
Consulting Mechanical Engineers
90 South 400 West, Suite 340
Salt Lake City UT, 84101
Phone: (801) 359-3158
Fax: (801) 521-4114

PROFESSIONAL SEAL

REGISTERED PROFESSIONAL ENGINEER
ALAN D. SPENDLOVE
166911
STATE OF UTAH

NOT VALID UNLESS SIGNED

ISSUE

MARK	DATE	DESCRIPTION
	6–27–06	RE–BID–SET
	3–31–06	CONSTRUCTION DOCUMENTS
	1–20–06	FINAL REVIEW SET
	8–22–05	PRELIMINARY SUBMITTAL

DFCM PROJECT NO:	05056900/067023
ARCHIPLEX PROJECT NO:	050011.01
PVE PROJECT NO:	05152.00
DRAWN BY:	M.M.
CHECKED BY:	A.D.S.
DATE:	JUNE 2, 2006

KEY PLAN

SHEET TITLE

PLUMBING FLOOR PLAN

P201

© 2004 ARCHIPLEX GROUP

Copyright (C) 2005 by PVE, Inc. Salt Lake City, Utah. All rights reserved. Unauthorized copying and/or use is illegal and subject to prosecution.

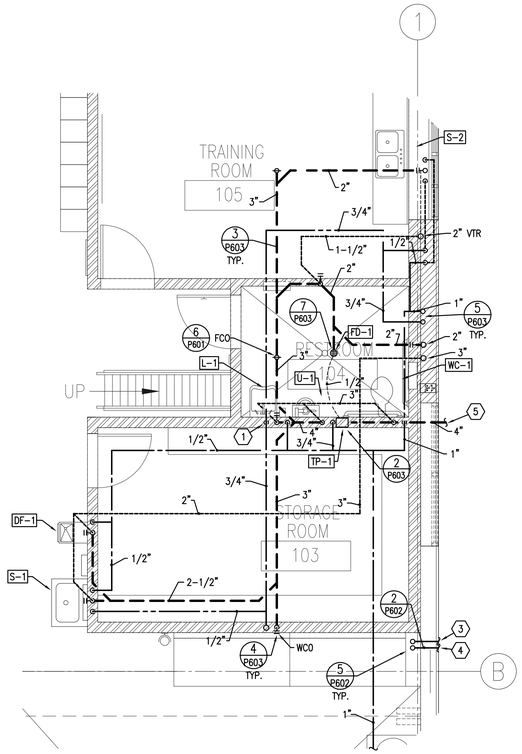

KEYED NOTES:

1. 1/2" HOT WATER DOWN TO L-1
2. 3/4" DRAIN LINE. AIR GAP TO FS-1
3. 2" WATER LINE.
4. 3" PROPANE LINE.
5. SEE SITE PLAN FOR CONTINUATION.

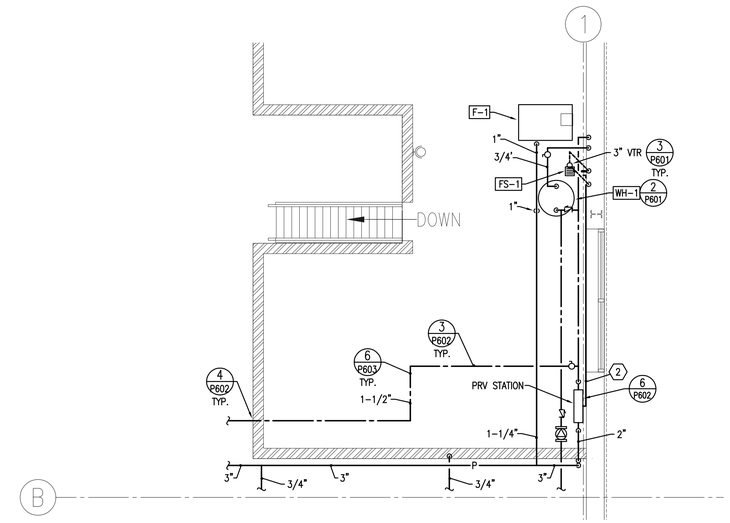

2 / P301 MEZZANINE PLUMBING PLAN

SCALE:1/4" = 1' – 0" 6' 0 4' 8' 12' 16'

1 / P301 PLUMBING ENLARGEMENT

SCALE:1/4" = 1' – 0" 6' 0 4' 8' 12' 16'

File name: M:\PROJECTS\2005\05152.00\DRAWINGS\P301.DWG Last edited: 03/30/2006 @ 09:27

CLIENT

VERNAL
MAINTENANCE FACILITY
STATION #3437
2773 North Vernal Avenue
VERNAL, UTAH 84078

DESIGNER

ARCHIPLEX GROUP
architecture · planning · design services
1135 South West Temple, Ste. A
Salt Lake City, UT 84101
P:(801) 961-7070
F:(801) 961-7373

CONSULTANTS

PVE Inc.
Consulting Mechanical Engineers
90 South 400 West, Suite 340
Salt Lake City UT, 84101
Phone: (801) 359-3158
Fax: (801) 521-4114

PROFESSIONAL SEAL

REGISTERED PROFESSIONAL ENGINEER
ALAN D. SPENDLOVE
166911
STATE OF UTAH

NOT VALID UNLESS SIGNED

ISSUE

MARK	DATE	DESCRIPTION
	6-27-06	RE-BID-SET
	3-31-06	CONSTRUCTION DOCUMENTS
	1-20-06	FINAL REVIEW SET
	8-22-05	PRELIMINARY SUBMITTAL

DFCM PROJECT NO:	05056900/067023
ARCHIPLEX PROJECT NO:	050011.01
PVE PROJECT NO:	05152.00
DRAWN BY:	M.M.
CHECKED BY:	A.D.S.
DATE:	JUNE 2, 2006

KEY PLAN

SHEET TITLE

PLUMBING ENLARGEMENTS

P301

© 2004 ARCHIPLEX GROUP

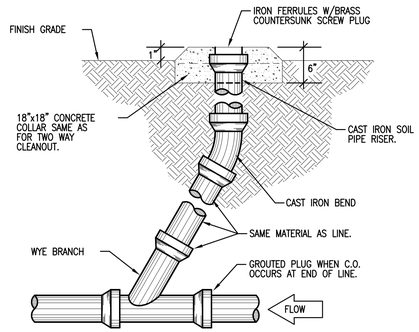

1 P601 EXTERIOR CLEANOUT DETAIL

NO SCALE

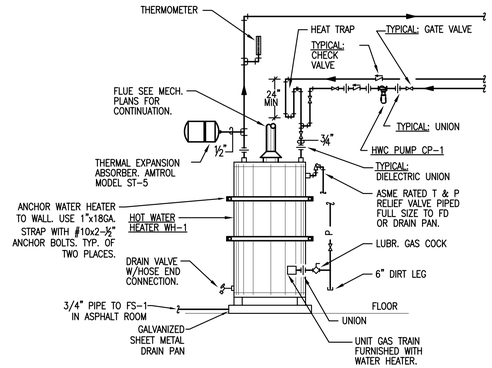

2 P601 GAS FIRED WATER HEATER

NO SCALE

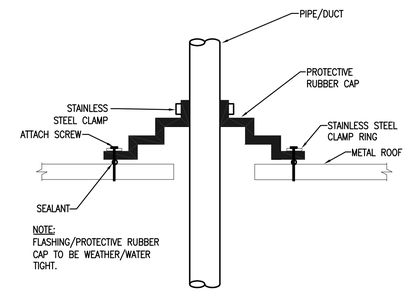

3 P601 METAL ROOF PENETRATION DETAIL

NO SCALE

KEYED NOTES:

1. C.I. PIPE SAME SIZE AS INLET PIPE.
2. (2) 2" VENTS MAY BE CONNECTED TOGETHER +42" AFG WITH COMMON SEPERATE 2" VENT EXTEND TO 3" VTR AS REQUIRED BY BLDG DEPT.

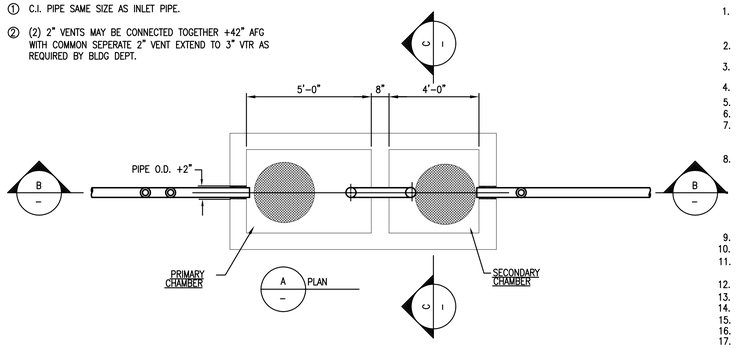

NOTES:

1. PIPING, CLEANOUT CONFIGURATION, SIZE AND TYPE OF PIPING MATERIAL AS PER CITY OR SANITARY DISTRICT. INSPECTION BY SOUTH VALLEY WATER RECLAMATION DISTRICT (SVWRF) PRIOR TO BACKFILLIING IS REQUIRED.
2. INTERCEPTOR PIPING AND OTHER ASSOCIATED PIPING CHANGES THAT ARE NECESSARY TO INSTALL INTERCEPTOR MUST BE IN ACCORDANCE WITH LOCAL REGULATIONS.
3. INTERCEPTOR MUST BE PROPERLY VENTED IN ACCORDANCE WITH INTERNATIONAL PLUMBING CODE STANDARDS.
4. CONCRETE SHALL HAVE A MINIMUM 28 DAY COMPRESSIVE STRENGTH OF 4000 PSI.
5. REINFORCEMENT STEEL SHALL BE ASTEM A605 GRADE 60.
6. THE CONCRETE COVER OVER REINFORCEMENT STEEL SHALL BE A MINIMUM OF 1-½".
7. THE STRUCTURE SHALL BE DESIGNED BY A REGISTERED PROFESSIONAL ENGINEER LICENSED IN THE STATE OF UTAH. THE DESIGNED SHALL BE SUBMITTED FOR APPROVAL TO THE ARCHITECT PRIOR TO INSTALLATION.
8. THE STRUCTUR SHALL BE DESIGNED FOR THE FOLLOWING LOADING CRETERIA.
   A. WALL DESIGN FOR A SATURATED EQUIVLANT FULID AT-REST SOIL PRESSURE OF 90 PCF PLUS TRUCK SURCHARGES.
   B. TRUCK LOADING USING AN AASHTO H-20 TRUCK LOAD.
9. MANWAY FRAME & COVER SHALL BE A TRAFFIC TYPE CASTING FOR H-20 TRUCK LOAD.
10. THE INLET PIPE SHALL BE AT AN ELEVATION 1" HIGHER THAN THE OUTLET PIPE.
11. WHERE THE SEWER LINE ALREADY EXIST, THE SEWER INVER INTO AND OUT OF THE INTERCEPTOR SHALL BE 4'-0" ABOVE THE INTERCEPTOR FLOOR.
12. THE BAFFLE IN THE INTERCEPTOR SHALL BE WITHIN 3" OF THE CEILING OF THE INTERCEPTOR.
13. COVERS SHALL BE CIRCULAR AND BE SOLID.
14. SANITARY WASTE FROM TOILETS MUST NOT BE POUMBED THROUGH THE INTERCEPTOR.
15. INTERCEPTOR MUST BE LOCATED IN SUCH A MANNER THAT IT IS READILY ACCESSIBLE FOR CLEANING.
16. FIELD VERIFY INVERT ELEVATIONS OF INLET AND OUTLET PIPING PRIOR TO INSTALLING INTERCEPTOR.
17. CONTRACTOR SHALL OBTAIN OFFICIAL SOUTH VALLEY WATER RECLAMATION DISTRICT INTERCEPTOR DESIGN AND INSTALL PER THEIR REQUIREMENTS.

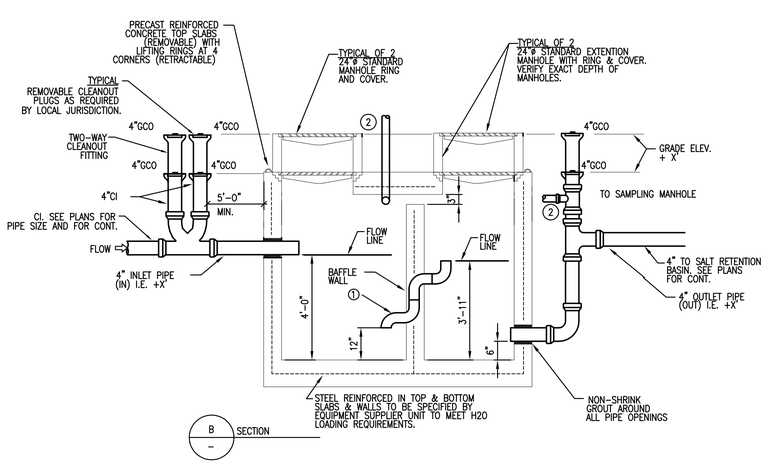

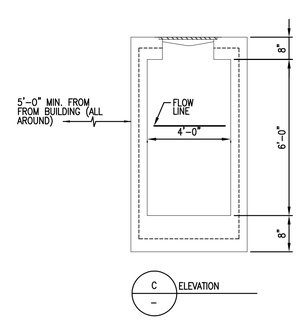

4 P601 1000 GALLON GREASE INTERCEPTOR DETAIL-2 COMPARTMENT

NO SCALE

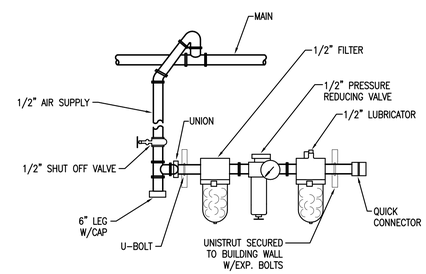

5 P601 COMPRESSED AIR OUTLET CONNECTION DETAIL

NO SCALE

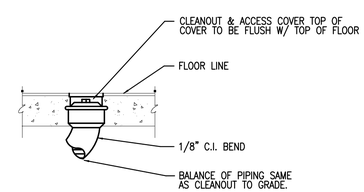

6 P601 FLOOR CLEANOUT

NO SCALE

Copyright (C) 2005 by PVE, Inc. Salt Lake City, Utah. All rights reserved. Unauthorized copying and/or use is illegal and subject to prosecution.

File name: M:\PROJECTS\2005\05152.00\DRAWINGS\P601.DWG Last edited: 12/12/2005 @ 10:05

CLIENT

VERNAL
MAINTENANCE FACILITY
STATION #3437
2773 North Vernal Avenue
VERNAL, UTAH 84078

DESIGNER

ARCHIPLEX GROUP
architecture · planning · design services
1135 South West Temple, Ste. A
Salt Lake City, UT 84101
P:(801) 961-7070
F:(801) 961-7373

CONSULTANTS

PVE Inc.
Consulting Mechanical Engineers
90 South 400 West, Suite 340
Salt Lake City UT, 84101
Phone: (801) 359-3158
Fax: (801) 521-4114

PROFESSIONAL SEAL

REGISTERED PROFESSIONAL ENGINEER
ALAN D. SPENDLOVE
166911
STATE OF UTAH

NOT VALID UNLESS SIGNED

ISSUE

MARK	DATE	DESCRIPTION
	6-27-06	RE-BID-SET
	3-31-06	CONSTRUCTION DOCUMENTS
	1-20-06	FINAL REVIEW SET
	8-22-05	PRELIMINARY SUBMITTAL

DFCM PROJECT NO:	05056900/067023
ARCHIPLEX PROJECT NO:	050011.01
PVE PROJECT NO:	05152.00
DRAWN BY:	M.M.
CHECKED BY:	A.D.S.
DATE:	JUNE 2, 2006

KEY PLAN

SHEET TITLE

PLUMBING
DETAIL SHEET

P601

© 2004 ARCHIPLEX GROUP

Copyright (C) 2005 by PVE, Inc. Salt Lake City, Utah. All rights reserved. Unauthorized copying and/or use is illegal and subject to prosecution.

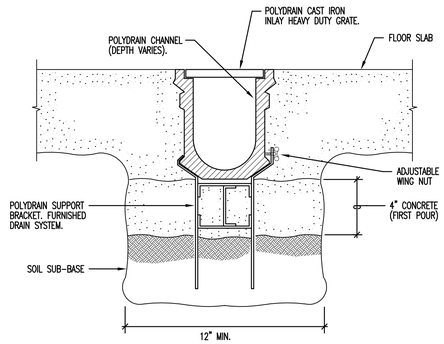

TRENCH DRAIN INSTALLATION

NOTE:
REFER TO ARCHITECTURAL DRAWINGS FOR WEATHERPROOF REQUIREMENTS.

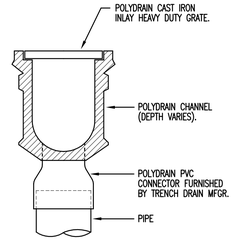

TRENCH DRAIN PIPING

1 / P602 TYPICAL TRENCH DRAIN DETAIL

NO SCALE

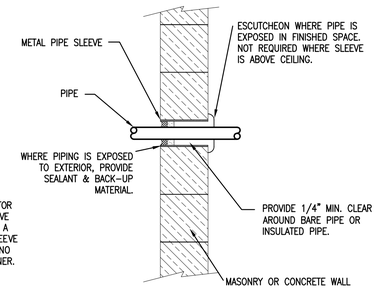

NOTE:
PIPE SLEEVES ARE REQUIRED ON THIS PROJECT. CONTRACTOR SHALL BE REQUIRED TO REMOVE ANY PIPE INSTALLED WITHOUT A PIPE SLEEVE, INSTALL THE SLEEVE AND REINSTALL THE PIPE AT NO ADDITIONAL COST TO THE OWNER.

2 / P602 PIPE THRU WALL ABOVE GRADE

NO SCALE

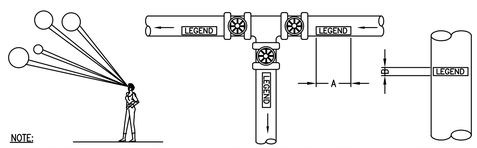

NOTE:
IDENDIFICATION MARKERS OR STRIPS TO BE PLACED ON ALL EXPOSED COVERED AND UNCOVERED PIPES AT 50'-0" INTERVALS AND AT ALL VALVES, BRANCHES, CHANGE IN DIRECTION OF FLOW AND ON BOTH SIDES OF WALLS WHERE PIPES PASS THROUGH SAME, ARROWS OF SAME COLOR AS IDENTIFICATION MARKERS SHALL ALSO BE PLACED ON PIPES POINTING AWAY FROM MARKER INDICATION DIRECTION OF FLOW.

OUTSIDE DIAMETER OF PIPE OR COVERING		LENGTH OF COLOR FIELD A		SIZE OF LETTERS B	
INCHES	MM	INCHES	MM	INCHES	MM
3/4" TO 1-1/4"	19 TO 32	8"	200	1/2"	13
1-1/2" TO 2"	38 TO 51	8"	200	3/4"	19
2-1/2" TO 6"	64 TO 150	12"	300	1-1/4"	32
8" TO 10"	200 TO 250	24"	600	2-1/2"	64
OVER 10"	OVER 250	32"	800	3-1/2"	89

SERVICE	BACKGROUND OR COLOR BAND	IDENTIFICATION MARKER
DOMESTIC COLD WATER	GREEN	WHITE ON GREEN
DOMESTIC HOT WATER	YELLOW	BLACK ON YELLOW
DOMESTIC HOT WATER RETURN	YELLOW	BLACK ON YELLOW
FIRE PROTECTION (SPRINKLER)	RED	WHITE ON RED
NATURAL GAS	YELLOW	BLACK ON YELLOW
SANITARY DRAIN	GREEN	WHITE ON GREEN
STORM WATER	GREEN	WHITE ON GREEN

3 / P602 PIPE IDENTIFICATION DETAIL

NO SCALE

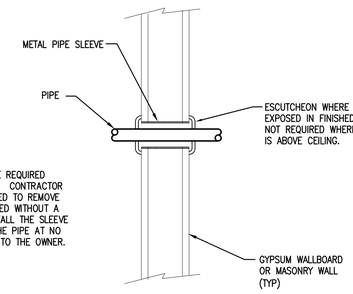

NOTE:
PIPE SLEEVES ARE REQUIRED ON THIS PROJECT. CONTRACTOR SHALL BE REQUIRED TO REMOVE ANY PIPE INSTALLED WITHOUT A PIPE SLEEVE, INSTALL THE SLEEVE AND REINSTALL THE PIPE AT NO ADDITIONAL COST TO THE OWNER.

4 / P602 PIPING THRU GYPSUM WALL

NO SCALE

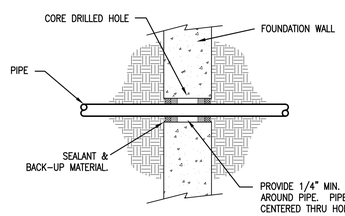

NOTE:
PIPE SLEEVES ARE REQUIRED ON THIS PROJECT. CONTRACTOR SHALL BE REQUIRED TO REMOVE ANY PIPE INSTALLED WITHOUT A PIPE SLEEVE, INSTALL THE SLEEVE AND REINSTALL THE PIPE AT NO ADDITIONAL COST TO THE OWNER.

5 / P602 PIPE THRU WALL – BELOW GRADE

NO SCALE

PRV STATION SCHEDULE				
PLAN CODE	SIZE	GPM	PRESSURE SETTING (PSIG)	MANUFACTURER & MODEL NO.
PRV-1	3/4"	10	5	WATTS 223S
PRV-2	3/4"	20	10	WATTS 223S
PRV-3	1"	40	15	WATTS 223S
RPBP	1-1/2"	50	15	WATTS 009

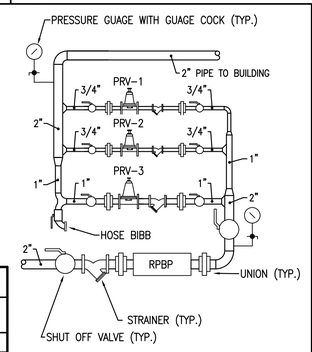

NOTE: COORDINATE REQUIREMENTS OF REDUCE PRESSURE BACKFLOW PREVENTOR WITH LOCAL JURISDICTION.

6 / P602 PRV STATION DETAIL

NO SCALE

CLIENT

VERNAL
MAINTENANCE FACILITY
STATION #3437
2773 North Vernal Avenue
VERNAL, UTAH 84078

DESIGNER

ARCHIPLEX GROUP
architecture • planning • design services
1135 South West Temple, Ste. A
Salt Lake City, UT 84101
P:(801) 961-7070
F:(801) 961-7373

CONSULTANTS

PVE Inc.
Consulting Mechanical Engineers
90 South 400 West, Suite 340
Salt Lake City UT, 84101
Phone: (801) 359-3158
Fax: (801) 521-4114

PROFESSIONAL SEAL

REGISTERED PROFESSIONAL ENGINEER
ALAN D. SPENDLOVE
186911
STATE OF UTAH

NOT VALID UNLESS SIGNED

ISSUE

MARK	DATE	DESCRIPTION
	6-27-06	RE-BID-SET
	3-31-06	CONSTRUCTION DOCUMENTS
	1-20-06	FINAL REVIEW SET
	8-22-05	PRELIMINARY SUBMITTAL

DFCM PROJECT NO:	05056900/067023
ARCHIPLEX PROJECT NO:	050011.01
PVE PROJECT NO:	05152.00
DRAWN BY:	M.M.
CHECKED BY:	A.D.S.
DATE:	JUNE 2, 2006

KEY PLAN

SHEET TITLE

PLUMBING
DETAIL SHEET

P602

© 2004 ARCHIPLEX GROUP

File name: M:\PROJECTS\2005\05152.00\DRAWINGS\P602.DWG Last edited: 01/05/06 @ 07:20

Copyright (C) 2005 by PVE, Inc. Salt Lake City, Utah. All rights reserved. Unauthorized copying and/or use is illegal and subject to prosecution.

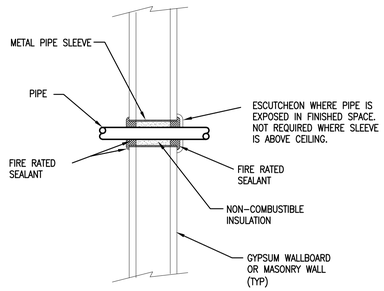

1 P603 PIPING THRU FIRE-RATED WALL

NO SCALE

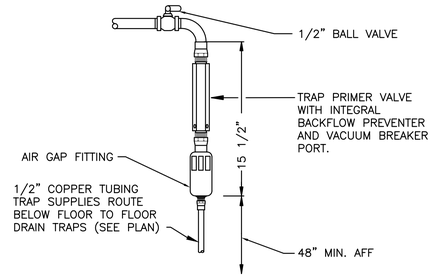

2 P603 TRAP PRIMER DETAIL

NO SCALE

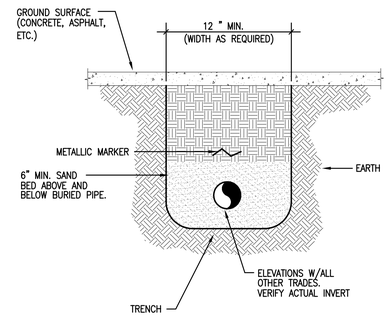

3 P603 BURIED PIPE DETAIL

NO SCALE

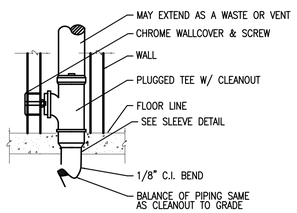

4 P603 WALL CLEANOUT – ALL VERTICAL PIPE

NO SCALE

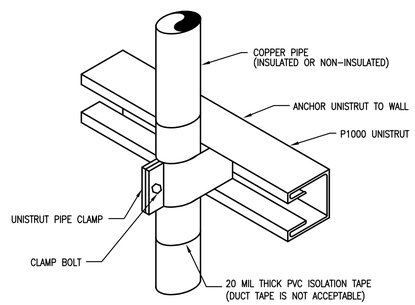

5 P603 PIPE SUPPORT DETAIL

NO SCALE

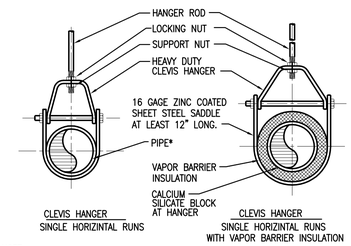

NOTE:

*INSTALL 20 MIL THICK PVC ISOLATION TAPE BETWEEN PIPE AND HANGER FOR DISSIMILAR MATERIAL. WRAP TAPE AROUND PIPE (DUCT TAPE OR ELECTRICIAN TAPE IS NOT ACCEPTABLE)

*PLUMBER'S TAPE IS NOT AN ACCEPTABLE METHOD TO HANG PIPE.

6 P603 PIPE HANGERS DETAIL

NO SCALE

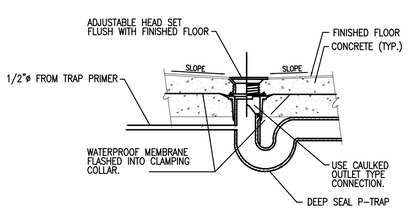

7 P603 FLOOR DRAIN DETAIL

NO SCALE

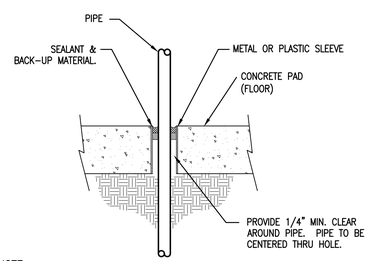

NOTE:

ALL PIPES TO BE SLEEVED. THIS INCLUDES WATER, SEWER ETC.

8 P603 PIPING THRU ON GRADE FLOOR

NO SCALE

CLIENT

VERNAL
MAINTENANCE FACILITY
STATION #3437
2773 North Vernal Avenue
VERNAL, UTAH 84078

DESIGNER

ARCHIPLEX GROUP
architecture · planning · design services
1135 South West Temple, Ste. A
Salt Lake City, UT 84101
P:(801) 961-7070
F:(801) 961-7373

CONSULTANTS

PVE Inc.
Consulting Mechanical Engineers
90 South 400 West, Suite 340
Salt Lake City UT, 84101
Phone: (801) 359-3158
Fax: (801) 521-4114

PROFESSIONAL SEAL

REGISTERED PROFESSIONAL ENGINEER
ALAN D. SPENDLOVE
166911
STATE OF UTAH

NOT VALID UNLESS SIGNED

ISSUE

MARK	DATE	DESCRIPTION
	6-27-06	RE-BID-SET
	3-31-06	CONSTRUCTION DOCUMENTS
	1-20-06	FINAL REVIEW SET
	8-22-05	PRELIMINARY SUBMITTAL

DFCM PROJECT NO:	05056900/067023
ARCHIPLEX PROJECT NO:	050011.01
PVE PROJECT NO:	05152.00
DRAWN BY:	M.M.
CHECKED BY:	A.D.S.
DATE:	JUNE 2, 2006

KEY PLAN

SHEET TITLE

PLUMBING DETAIL SHEET

P603

© 2004 ARCHIPLEX GROUP

File name: M:\PROJECTS\2005\05152.00\DRAWINGS\P603.DWG Last edited: 12/12/2005 @ 10:06

ELECTRICAL SPECIFICATIONS

SECTION 16000 - GENERAL PROVISIONS

WORK CONSISTS OF FURNISHING LABOR, MATERIALS, EQUIPMENT AND SERVICES REQUIRED FOR THE COMPLETE INSTALLATION OF ELECTRICAL WORK SHOWN IN THE CONTRACT DOCUMENTS AND SPECIFIED IN DIVISION 16.

INCLUDE ALL PARTS AND LABOR, WHICH ARE INCIDENTAL AND NECESSARY FOR A COMPLETE AND OPERABLE INSTALLATION EVEN THOUGH NOT SPECIFICALLY MENTIONED IN THE CONTRACT DOCUMENTS. SUCH ITEMS INCLUDE NUTS, BOLTS, ANCHORS, BRACKETS, SLEEVES, OFFSETS IN CONDUIT, FITTINGS, RELAYS, ETC.

OBTAIN ALL TEMPORARY AND PERMANENT PERMITS AND LICENSES REQUIRED IN CONNECTION WITH THIS DIVISIONS WORK. PAY ALL FEES AND EXPENSES REQUIRED FOR SUCH PERMITS AND LICENSES.

REQUEST INSPECTIONS AS REQUIRED BY REGULATING AGENCIES AND/OR REGULATIONS. PAY ALL CHARGES FOR INSPECTIONS BY REGULATING AGENCIES OF INSTALLATIONS OF PLANS AND SPECIFICATIONS.

INCLUDE STATE AND LOCAL SALES TAXES IN THE BID. KEEP ACCURATE RECORDS OF THESE TAXES AND FURNISH SUCH RECORDS TO THE OWNER UPON REQUEST.

MEET OR EXCEED ALL CURRENT APPLICABLE CODES, ORDINANCES AND REGULATIONS FOR ALL INSTALLATIONS. PROMPTLY NOTIFY THE ENGINEER, IN WRITING, IF THE CONTRACT DOCUMENTS APPEAR TO CONFLICT WITH GOVERNING CODES AND REGULATIONS. CONTRACTOR ASSUMES ALL RESPONSIBILITY AND COSTS FOR CORRECTING NON-COMPLYING WORK INSTALLED WITHOUT NOTIFYING THE ENGINEER.

HIGHER QUALITY OF WORKMANSHIP AND MATERIALS INDICATED IN THE CONTRACT DOCUMENTS TAKES PRECEDENCE OVER THAT ALLOWED IN REFERENCED CODES AND STANDARDS.

THE TERMS DEFINED BELOW APPLY TO ALL WORK INCLUDED IN DIVISION 16.

a. THE WORK - AS DEFINED IN THE 1997 AIA DOCUMENT A201: "THE TERM "WORK" MEANS THE CONSTRUCTION AND SERVICES REQUIRED BY THE CONTRACT DOCUMENTS WHETHER COMPLETED OR PARTIALLY COMPLETED, AND INCLUDES ALL OTHER LABOR, MATERIALS, EQUIPMENT AND SERVICES PROVIDED OR TO BE PROVIDED BY THE CONTRACTOR TO FULFILL THE CONTRACTORS OBLIGATIONS. THE WORK MAY CONSTITUTE THE WHOLE OR A PART OF THE PROJECT".

b. FURNISH - TO OBTAIN IN NEW CONDITION READY FOR INSTALLATION INTO THE WORK.

c. INSTALL - TO STORE, SET IN PLACE, CONNECT AND PLACE INTO OPERATION INTO THE WORK.

d. PROVIDE - TO FURNISH AND INSTALL.

e. CONNECT - TO BRING SERVICE TO THE EQUIPMENT AND MAKE FINAL ATTACHMENT INCLUDING NECESSARY SWITCHES, OUTLETS, BOXES, TERMINATIONS, ETC.

f. CONDUIT - INCLUDES IN ADDITION TO CONDUIT, ALL FITTINGS, PULL BOXES, HANGERS AND OTHER SUPPORTS AND ACCESSORIES RELATED TO SUCH CONDUIT.

h. CONCEALED - HIDDEN FROM SIGHT IN CHASES, FURRED SPACES, SHAFTS, HUNG CEILINGS, EMBEDDED IN CONSTRUCTION, IN CRAWL SPACES OR BURIED.

g. EXPOSED - NOT INSTALLED UNDERGROUND NOR CONCEALED AS DEFINED ABOVE.

THE DRAWINGS AND SPECIFICATIONS CONSTITUTE THE CONTRACT DOCUMENTS. ANY ITEM NOTED IN THE SPECIFICATION OR SHOWN ON THE DRAWINGS IS INCLUDED IN THE CONTRACT DOCUMENTS.

ALL ELECTRICAL DETAILS AND DRAWINGS ARE DIAGRAMMATIC, UNLESS SPECIFICALLY NOTED. FIELD VERIFY ALL DIMENSIONS AND NOTIFY THE ENGINEER OF ANY CONFLICTS OR DISCREPANCIES, IN WRITING, PRIOR TO INSTALLATION.

INITIATE, MAINTAIN AND SUPERVISE ALL SAFETY PRECAUTIONS REQUIRED WITH THIS WORK IN ACCORDANCE WITH THE REGULATIONS OF THE OCCUPATIONAL SAFETY AND HEALTH ADMINISTRATION (OSHA) AND OTHER GOVERNING AGENCIES.

DO NOT REMOVE OR DISTURB ANY ASBESTOS CONTAINING MATERIALS FROM THE PROJECT. IMMEDIATELY STOP WORK AND NOTIFY THE TENANT IF ASBESTOS CONTAINING MATERIALS ARE SUSPECTED.

BEFORE SUBMITTING A PROPOSAL ON THE WORK CONTEMPLATED, EXAMINE THE SITE OF THE PROPOSED WORK AND BECOME THOROUGHLY FAMILIAR WITH EXISTING CONDITIONS AND LIMITATIONS. NO EXTRA COMPENSATION WILL BE ALLOWED BECAUSE OF MISUNDERSTANDING AS TO THE AMOUNT OF WORK INVOLVED NOR BIDDERS LACK OF KNOWLEDGE OF EXISTING CONDITIONS WHICH COULD HAVE BEEN DISCOVERED OR REASONABLY ANTICIPATED PRIOR TO BIDDING.

CONDUITS, PIPES, DUCTS, LIGHTS, DEVICES, SPEAKERS, ETC., SHOWN ON THE DRAWINGS AS EXISTING HAVE BEEN BASED ON THE EXISTING PLANS AND MAY NOT BE INSTALLED AS ORIGINALLY SHOWN. IT IS THE CONTRACTORS RESPONSIBILITY TO VISIT THE SITE AND MAKE EXACT DETERMINATION OF THE EXISTANCE, LOCATION AND CONDITION OF SUCH FACILITIES PRIOR TO SUBMITTING A BID.

CONSULT THE DRAWINGS AND SPECIFICATIONS OF MECHANICAL AND OTHER TRADES FOR CORRELATING INFORMATION AND LAY OUT WORK SO THAT IT WILL COORDINATE WITH OTHER TRADES. VERIFY DIMENSIONS AND CONDITIONS (I.E., FINISHED CEILING HEIGHTS, FOOTING AND FOUNDATION ELEVATIONS, BEAM DEPTHS, ETC). WITH THE ARCHITECTURAL AND STRUCTURAL DRAWINGS. NOTIFY THE ARCHITECT/ENGINEER OF ANY CONFLICTS THAT CANNOT BE RESOLVED, IN THE FIELD, BY AFFECTED TRADES. REPLACEMENT OF WORK DUE TO LACK OF COORDINATION AND FAILURE TO VERIFY EXISTING CONDITIONS WILL BE COMPLETED AT NO COST TO THE OWNER.

INSTALL ALL CONDUIT, CABLE TRAY, BUSDUCT, EQUIPMENT, ETC. ALLOWING PROPER CODE AND MAINTENANCE CLEARANCES AND TO AVOID BLOCKING PASSAGEWAYS AND ACCESS PANELS.

WHERE WORK MUST BE REPLACED DUE TO FAILURE OF THE CONTRACTOR TO VERIFY THE CONDITIONS EXISTING ON THE JOB, SUCH REPLACEMENT MUST BE ACCOMPLISHED AT NO COST TO THE OWNER. THIS APPLIES TO SHOP FABRICATED WORK AS WELL AS TO WORK FABRICATED INPLACE.

THROUGHOUT THE COURSE OF THE WORK, MINOR CHANGES AND ADJUSTMENTS TO THE INSTALLATION MAY BE REQUESTED BY THE ENGINEER. THE CONTRACTOR SHALL MAKE ADJUSTMENTS WITHOUT ADDITIONAL COST TO THE OWNER, WHERE SUCH ADJUSTMENTS ARE NECESSARY TO THE PROPER INSTALLATION AND OPERATION WITHIN THE INTENT OF THE CONTRACT DOCUMENTS. THIS DOES NOT INCLUDE WORK ALREADY COMPLETED.

OBTAIN EXACT LOCATION OF CONNECTION TO EQUIPMENT, FURNISHED BY OTHERS, FROM THE PERSON FURNISHING THE EQUIPMENT.

DRAWINGS AND SPECIFICATIONS ARE COMPLEMENTARY AND WHAT IS CALLED FOR IN EITHER ONE IS AS BINDING AS IF CALLED FOR IN BOTH.

INCLUDE THE BETTER QUALITY, GREATER QUANTITY OR HIGHER COST FOR AN ITEM OR ARRANGEMENT WHERE A DISAGREEMENT EXISTS IN THE DRAWINGS AND SPECIFICATIONS.

GUARANTEE AND MAINTAIN THE STABILITY OF WORK AND MATERIALS AND KEEP SAME IN PERFECT REPAIR AND CONDITION FOR THE PERIOD OF ONE (1) YEAR AFTER THE FINAL COMPLETION OF THE WORK AS EVIDENCED BY ISSUANCE OF THE FINAL CERTIFICATE BY THE OWNER.

DEFECTS OF ANY KIND DUE TO FAULTY WORK OR MATERIALS APPEARING DURING THE ABOVE MENTIONED PERIOD MUST BE IMMEDIATELY MADE GOOD BY THE CONTRACTOR AT HIS OWN EXPENSE TO THE ENTIRE SATISFACTION OF THE OWNER. INCLUDE DAMAGE TO THE FINISH OR THE BUILDING RESULTING FROM THE ORIGINAL DEFECT OR REPAIRS.

REPLACE ALL RECEPTACLES, SWITCHES, COVERPLATES, ETC. DAMAGED BY ANY CONTRACTOR DURING THE COURSE OF CONSTRUCTION.

MATERIALS FURNISHED FOR THE TEMPORARY LIGHT AND POWER SYSTEM REMAIN CONTRACTORS PROPERTY. REMOVE WHEN THERE IS NO LONGER ANY NEED FOR TEMPORARY LIGHT AND POWER.

COORDINATE/SCHEDULE ALL WORK WITH THE OWNER TO MINIMIZE ANY DISRUPTIONS. CONFINE ALL INTERRUPTIONS TO THE SMALLEST POSSIBLE AREA. PROVIDE TEMPORARY CONNECTIONS IF REQUIRED TO PROVIDE CONTINUITY OF SERVICE.

INSPECT ALL AREAS AFFECTED BY THE INTERRUPTIONS AND RETURN ALL AUTOMATICALLY CONTROLLED EQUIPMENT, ELECTRICALLY OPERATED EQUIPMENT TO THE SAME OPERATING CONDITION PRIOR TO THE INTERRUPTION.

DO NOT DISTURB NORMAL USE OF THE FACILITY, EXCEPT WITHIN THE IMMEDIATE CONSTRUCTION AREA. KEEP WALKS, DRIVEWAYS, ENTRANCES, ETC. FREE AND CLEAR OF EQUIPMENT, MATERIAL AND DEBRIS.

STORE ALL EQUIPMENT AND MATERIAL IN A PLACE AND MANNER THAT MINIMIZES CONGESTION AND IS APPROVED BY THE OWNER.

PROVIDE NEW MATERIAL AND EQUIPMENT, UNLESS NOTED OTHERWISE. PROTECT EQUIPMENT AND MATERIAL FROM DAMAGE, DIRT AND THE WEATHER.

PROVIDE THE HIGHEST QUALITY WORKMANSHIP AND PERFORM ALL WORK ONLY BY SKILLED MECHANICS. INSTALL MATERIAL AND EQUIPMENT IN ACCORDANCE WITH MANUFACTURERS RECOMMENDATIONS, INSTRUCTIONS AND CURRENT NECA STANDARDS.

THE OWNER RESERVES THE RIGHT TO REJECT MATERIAL OR WORKMANSHIP NOT IN ACCORDANCE WITH THE SPECIFICATIONS, BEFORE OR AFTER INSTALLATION.

PERFORM ALL CUTTING AND PATCHING NECESSARY TO WORK, UNLESS SPECIFICALLY DELEGATED TO THE GENERAL CONTRACTOR. OBTAIN SPECIAL PERMISSION FROM THE LANDLORD BEFORE CUTTING STRUCTURAL MEMBERS OR FINISHED MATERIAL. PERFORM ALL PATCHING IN SUCH A MANNER AS TO LEAVE NO VISIBLE TRACE AND RETURN THE AREA AFFECTED TO THE CONDITION OF UNDISTURBED WORK. PERFORM ALL PATCHING BY WORKERS EXPERIENCED, SKILLED, AND LICENSED FOR THE PARTICULAR TYPE OF WORK INVOLVED. INFERIOR WORK WILL NOT BE ACCEPTED.

PATCH ALL HOLES LEFT AS A RESULT OF DEMOLITION OF ELECTRICAL EQUIPMENT AND DEVICES.

PREVENT THE SPREAD OF DUST, DEBRIS, AND OTHER MATERIAL INTO ADJACENT AREAS.

REFINISH ALL ELECTRICAL EQUIPMENT DAMAGED DURING SHIPPING AND/OR INSTALLATION TO ITS ORIGINAL CONDITION. REMOVE ALL RUST: PRIME, AND PAINT PER MANUFACTURERS RECOMMENDATIONS FOR FINISH EQUAL TO ORIGINAL.

AFTER TESTS HAVE BEEN MADE AND ACCEPTED, CLEAN LIGHT FIXTURES, PANELS AND OTHER EQUIPMENT INSTALLED BY THE CONTRACTOR, LEAVING THE ENTIRE WORK AREA IN A CLEAN AND COMPLETE WORKING ORDER.

OPERATE EQUIPMENT AND SYSTEMS IN ALL THIER OPERATING MODES, TO VERIFY PROPER OPERATION, PRIOR TO FINAL INSPECTION AND OWNER INSTRUCTIONS. NOTIFY THE ENGINEER, IN WRITING, THAT ALL SYSTEMS HAVE BEEN TESTED AND ARE FUNCTIONING AND OPERATING PROPERLY.

CONTRACTOR IS RESPONSIBLE FOR ANY DAMAGE TO ELECTRICAL EQUIPMENT OR MATERIALS UNTIL FINAL ACCEPTANCE OF THE ENTIRE PROJECT BY THE OWNER.

PROVIDE TEMPORARY WIRING AND CONNECTIONS TO MAINTAIN EXISTING SYSTEMS, INCLUDING TELEPHONE AND DATA SYSTEMS, IN SERVICE DURING CONSTRUCTION. WHEN WORK MUST BE PERFORMED ON ENERGIZED EQUIPMENT OR CIRCUITS, USE PERSONNEL EXPERIENCED IN SUCH OPERATIONS.

EXISTING ELECTRICAL SERVICE: MAINTAIN EXISTING SYSTEM IN SERVICE DISABLE SYSTEM ONLY TO MAKE SWITCHOVERS AND CONNECTIONS. NOTIFY AND OBTAIN PERMISSION FROM OWNER/ENGINEER AT LEAST 24 HOURS BEFORE PARTIALLY OR DISABLING SYSTEM. MINIMIZE OUTAGE DURATION. MAKE TEMPORARY CONNECTIONS TO MAINTAIN SERVICE IN AREAS ADJACENT TO WORK AREA.

EXISTING TELEPHONE, DATA, CCTV & SECURITY SYSTEM MAINTAIN EXISTING SYSTEMS IN SERVICE.

DEMOLISH AND EXTEND EXISTING ELECTRICAL WORK UNDER AND THIS SECTION, AND AS INDICATED ON THE DRAWINGS. REMOVE, RELOCATE, AND EXTEND EXISTING INSTALLATIONS TO ACCOMODATE NEW CONSTRUCTION.

PROVIDE SUPPORTS FOR ALL EXISTING ELECTRICAL EQUIPMENT THAT WAS SUPPORTED PREVIOUSLY BY DEMOLISHED WALLS, FLOORS, CEILING OR OTHER STRUCTURES. PROVIDE NEW SUPPORTS FROM STRUCTURAL MEMBERS NOT SLATED FOR DEMOLITION, PRIOR TO ANY DEMOLITION.

OWNER RESERVES THE RIGHT OF FIRST REFUSAL TO OBTAIN MATERIAL SHOWN TO BE REMOVED UNDER THIS CONTRACT. ITEMS NOT RETAINED BY THE OWNER BECOME THE PROPERTY OF THE CONTRACTOR AND MUST BE REMOVED FROM THE PREMISES.

EXTEND EXISTING INSTALLATIONS USING MATERIALS AND METHODS COMPATIBLE WITH EXISTING ELECTRICAL INSTALLATIONS, OR AS SPECIFIED. RELOCATE AND REROUTE CONDUIT AND WIRING AS REQUIRED FOR CONDUIT CONCEALED IN WALLS OR STRUCTURE BEING ALTERED AS PART OF THE REMODELING. MAINTAIN CONTINUITY TO ALL DEVICES IN AND DOWNSTREAM OF REMODELED WORK.

REROUTE EXISTING RACEWAY AND WIRING, WHICH IS EXPOSED DUE TO REMOVAL OF EXISTING CONSTRUCTION. CONCEAL NEW RACEWAY AND WIRING AND MAINTAIN OPERATION.

SECTION 16050 - BASIC MATERIALS AND METHODS

ENCASE ALL CONDUCTORS IN A CONTINUOUS RACEWAY SYSTEM. PROVIDE PULL AND JUNCTION BOXES AS REQUIRED BY THE NEC. SIZE ALL RACEWAY PER THE NEC WITH OVERSIZED CONDUITS AS INDICATED.

PROVIDE JUNCTION BOXES OR GUTTER AT BRANCH PANEL AND ROUTE EMT CONDUIT INTO PANELBOARD.

PROVIDE EXPANSION FITTINGS WHERE RACEWAY CROSSES BUILDING EXPANSION JOINTS.

RUN ALL EXPOSED CONDUIT IN A NEAT, WORKMANLIKE MANNER PARALLEL TO THE BUILDING LINES, TIGHT TO THE WALL AND CEILING SURFACES, AND FIRMLY SUPPORT WITH CONDUIT CLAMPS OR HANGERS. PROVIDE TWO (2) HOLE MOUNTING STRAPS, MINIMUM THREE (3) FEET ON CENTER, FOR ALL SURFACE CONDUIT MOUNTED ON WALLS LESS THAN SIX (6) FEET ABOVE FINISHED FLOOR. PLACE CONDUITS AT LEAST 8" AWAY FROM ALL HOT PIPING AND SURFACES INCLUDING DOMESTIC HOT WATER LINES.

PROVIDE GALVANIZED CODE GUAGE STEEL JUNCTION AND PULL BOXES WITH SCREW ON COVERS OF TYPE, SHAPE AND SIZE REQUIRED TO SUIT EACH INSTALLATION. PROVIDE GASKETING IN DAMP AND DUSTY LOCATIONS. PROVIDE CAST BOXES IN WEATHERPROOF, VAPOR TIGHT AND EXPLOSION PROOF ENVIROMENTS.

PROVIDE 4" BOXES THROUGHOUT. PROVIDE 3-1/2" DEEP BOXES WHERE INSTALLED IN MASONRY, 2-1/2" MINIMUM ELSEWHERE. VAPOR TIGHT GANG MUD OR TILE RING FOR SINGLE DEVICES.

COORDINATE THE LOCATION OF ALL OUTLETS WITH MECHANICAL DRAWINGS BEFORE INSTALLATION.

PROVIDE WIRE AND CABLE WITH INSULATION VOLTAGE RATING EQUAL TO OR GREATER THAN THE APPLIED SYSTEM VOLTAGE. PROVIDE SOLID OR STRANDED COPPER CONDUCTORS WITH TYPE THWN, THHN, OR XHHN INSULATION FOR NO. 12 AWG AND NO. 10 AWG CONDUCTORS. PROVIDE MINIMUM NO. 12 AWG CONDUCTOR SIZE, UNLESS NOTED OTHERWISE. USE THE MINIMUM CONDUCTOR SIZE WHEN NO SIZE IS INDICATED. ALL CONDUCTORS TO BE COLOR-CODED.

SECTION 16501 - BUILDING LIGHTING

PROVIDE LIGHTING FIXTURES AS SCHEDULED C/W HOUSING LAMPS, LAMP HOLDERS, REFLECTORS, BALLASTS & WIRING.

FLUORESCENT LAMP BALLAST FOR T8 & T5 LAMPS SHALL BE ELECTRONIC CBM CERTIFIED W/ THD LESS THAN 20% RAPID START.

SUPPORT ALL RECESSED LIGHTING FIXTURES W/ 4 # 12GA. WIRES INDEPENDENT FROM CEILING SUPPORT SYSTEM.

INDEX OF ELECTRICAL DRAWINGS

E001 ELECTRICAL SYMBOLS & NOTES
E100 ELECTRICAL SITE PLAN
E201 LIGHTING PLAN (MAINT. BLDG.)
E202 ELECTRICAL PLANS (OUT-BLDGS.)
E301 POWER PLAN (MAINT. BLDG.)

PANELBOARD SCHEDULE

PANEL 'A' — 120/208 VOLTS — 3 PH — 4 W
MOUNTING: FLUSH / XX SURFACE
RATING: 10,000
AMP 225 - MLO
LOCATION: MEZZ. 201
PROJECT: VERNAL M.S.

ITEM	AMPS	POLE	WIRE SIZE	CIR. NO.	LEFT PHASE LOAD A	B	C	RIGHT PHASE LOAD A	B	C	CIR. NO.	AMPS	POLE	WIRE SIZE	ITEM
LIGHTING	20	1	12	1	1100			1000			2	20	1	12	RECEPTACLES
				3		1000			600		4				
				5			1300			600	6				
				7	1500			600			8				
OUTDOOR LIGHTING				9		1100			400		10				
				11			1100			1000	12				
				13	1800			1000			14				
DOORS				15		1000			600		16				
				17			1000			600	18				
				19	1000			400			20				
				21		1000			700		22				BURNERS
				23			1000			1500	24	25	1	10	VACUUM PUMP
				25	1000			1500			26	25	1	10	VACUUM PUMP
				27		1000			600		28	20	1	12	RECEPTACLE
				29			1000			600	30				
				31	1000			600			32				
FLOOD LIGHTS				33		1800			600		34				
FLOOD LIGHTS				35			1800			600	36				
SPARE				37				600			38				
SPARE				39					600		40				
SPARE				41						600	42				
					7400	6900	7200	5700	4100	5500					
				TOTAL	13100	11000	12700								

LOAD TOTAL 36,800
FLA 102

PANELBOARD SCHEDULE

PANEL 'M' — 120/208 VOLTS — 3 PH — 4 W
MOUNTING: FLUSH / XX SURFACE
RATING: 22,000 SERVICE RATED
AMP 400 - MB
LOCATION: MEZZ. 201
PROJECT: VERNAL M.S.

ITEM	AMPS	POLE	WIRE SIZE	CIR. NO.	LEFT PHASE LOAD A	B	C	RIGHT PHASE LOAD A	B	C	CIR. NO.	AMPS	POLE	WIRE SIZE	ITEM
COMPRESSOR	50	3	6	1	2900			13100			2	125	3	1/0	PANEL 'A'
7-1/2 HP-VERIFY	–	–	–	3		2900			11000		4	–	–	–	–
–	–	–	–	5			2900			12700	6	–	–	–	–
STORAGE PUMP	60	2	3	7				2400			8	40	2	8	COND. UNIT
–	–	–	–	9					2400		10	–	–	–	–
SPARE	20	1		11							12	20	1	12	LIGHTING
SPARE	20	1		13	1500			900			14	20	3	3	EXH. FAN
SPECIAL OUTLET	60	2	6	15		3500			900		16	–	–	–	EF-2 2HP
–	–	–	–	17			3500			900	18	–	–	–	–
SPECIAL OUTLET	60	2	6	19	3500			2900			20	50	3	6	MOBILE LIFT
–	–	–	–	21		3500			2900		22	–	–	–	–
WASH RACK	20	1	12	23			1000			2900	24	–	–	–	–
GATE	20	3	12	25	500			2900			26	50	3	6	HOIST
–	–	–	–	27		500			2900		28	–	–	–	7-1/2HP
–	–	–	–	29			500			2900	30	–	–	–	–
GATE	20	3	12	31	500						32	50	3	–	SPARE
–	–	–	–	33		500					34	–	–	–	–
–	–	–	–	35			500				36	–	–	–	–
LIGHTING	20	1	12	37				4400			38	100	3	1	PANEL 'S'
LIGHTING	20	1	12	39					1600		40	–	–	–	–
LIGHTING	20	1	12	41						2500	42	–	–	–	–
					9900	12400	10200	24800	22600	22300					
				TOTAL	34700	35000	32500								

LOAD TOTAL 102,200
FLA 284

PANELBOARD SCHEDULE

PANEL 'S' — 120/208 VOLTS — 3 PH — 4 W
MOUNTING: FLUSH / XX SURFACE
RATING: 10,000
AMP 100 - MB
LOCATION: OPEN STOR. BLDG.
PROJECT: VERNAL M.S.

ITEM	AMPS	POLE	WIRE SIZE	CIR. NO.	LEFT PHASE LOAD A	B	C	RIGHT PHASE LOAD A	B	C	CIR. NO.	AMPS	POLE	WIRE SIZE	ITEM
LIGHTING	20	1	12	1	1000			800			2	20	1	12	RECEPTACLES
FLOOD LIGHTS				3		1800			500		4				RECEPTACLE
LIGHTING				5			900			500	6				RECEPTACLE
SPARE				7				800			8				RECEPTACLE
SPARE				9					200		10				UH-1
				11						1100	12				DOOR
				13							14				SPARE
				15							16				
				17							18				
				19							20				
				21							22				
				23							24				
				25							26				
				27							28				
				29							30				
				31							32				
				33							34				
				35							36				
				37							38				
				39							40				
				41							42				
					1000	1800	900	1600	700	1600					
				TOTAL	2600	2500	2500								

LOAD TOTAL 7600
FLA 21

ALTERNATE #4

LIGHTING FIXTURE SCHEDULE

FIXTURE TYPE	MANUFACTURE	CATALOG NUMBER	DESCRIPTION	LAMPS	QTY	FIX WATTS	MTG	VOLTS
A	METALUX	STDIM232-120V	8' 4-LAMP INDUSTRIAL FLUORESCENT FIXTURE	F32T8 SP35	4	110	PEND.	120
B	METALUX	2FC8-332A-120V EB81	RECESSED FLANGED 2'X4' 3-LAMP FLUORESCENT FIXTURE	F32T8 SP35	3	98	REC.	120
C	METALUX	WS232A-120V EB81	SURFACE MOUNTED FLUORESCENT WRAP AROUND FIXTURE	F32T8 SP35	2	68	SURF.	120
EL	SURELITES	CC7NCSD-SM	EMERGENCY BATTERY PACK	C/W UNIT	2	32	SURF.	120
X1	SURELITES	LPX70DG-WH	LED EXIT SIGN	LED	-	32	UNIV.	120
OA	LUMARK	MHWL250-120V	OUTDOOR 250W METAL HALIDE WALLPACK	250W MH	1	275	SURF.	120
OB	McGRAW EDISON	AMF-Y-400MH-MT-76-BK	OUTDOOR 400W METAL HALIDE FLOOD LIGHT	400W MH	1	460	WALL	120
OC	McGRAW EDISON	CML-AM-400MH-120-S3-FG-AP/MA1007-AP-RS56M30SV	400M.H. POLE MOUNTED FIXTURE ON 30FT. POLE	400W MH	1	460	POLE BASE	120
OD	LUMARK	MHCL250-120V	250W METAL HALIDE FIXTURE	250W MH	1	275	SURF.	120

GENERAL NOTES

1. DO NOT SCALE DRAWINGS VERIFY DIMENSIONS IN FIELD PRIOR TO MAKING ANY ROUGH-INS.
2. FINAL CONNECTIONS TO EQUIPMENT SHALL BE MADE AS PER MANUFACTURERS WRITTEN INSTRUCTIONS AND APPROVED WIRING DIAGRAMS AND DETAILS. IT SHALL BE THE CONTRACTORS RESPONSIBILITY TO PROVIDE ALL MATERIALS AND EQUIPMENT COMPATIBLE WITH EQUIPMENT ACTUALLY SUPPLIED.
3. CONSULT ARCHITECTS REFLECTED CEILING PLANS FOR EXACT LOCATIONS OF LIGHTING FIXTURES, SPEAKERS, SMOKE DETECTORS ETC.
4. ELECTRICAL CONTRACTOR SHALL MEET WITH THE CEILING AND MECHANICAL CONTRACTORS TO COORDINATE LOCATIONS, CLEARANCES, CEILING TYPES AND ROUGH-IN REQUIREMENTS OF ALL LIGHTING FIXTURES PRIOR TO DUCT, PIPING AND CEILING INSTALLATIONS.
5. ALL EMPTY RACEWAY SYSTEMS SHALL HAVE A 200LB RATED PULL CORD INSTALLED AND SHALL BE IDENTIFIED AT EACH JUNCTION, PULL AND TERMINATION POINT, USING PERMANANT MARKER IN THE BOX. ID SHALL INDICATE INTENDED USE OF CONDUIT, ORIGINATION AND TERMINATION POINTS OF EACH INDIVIDUAL CONDUIT.
6. ALL PENETRATIONS OF FIRE RATED FLOORS, CEILING AND WALLS SHALL BE SEALED WITH APPROVED AND RATED FIRE STOP MATERIAL TO MAINTAIN FIRE RATING OF ASSEMBLY.
7. ELECTRICAL BOXES SHALL NOT BE LOCATED IN MASONRY OR CONCRETE COLUMNS, BOND BEAMS OR GROUTED CELLS OF MASONRY WALLS ADJACENT TO OPENINGS WITHOUT COORDINATION WITH THE MASONRY CONTRACTOR.
8. IT IS THE INTENT OF THESE DRAWINGS AND SPECIFICATIONS TO ESTABLISH A A STANDARD OF QUALITY. THE ENGINEER RESERVES THE RIGHT TO VERBALLY APPROVE METHODS AND MATERIALS NOT REFLECTED HEREIN.
9. CONTRACTOR SHALL REVIEW ARCHITECTURAL, STRUCTURAL, MECHANICAL, PLUMBING AND OTHER DRAWINGS PRIOR TO BID.
10. WORK SHALL BE PERFORMED IN A PROFESSIONAL WORKMANLIKE MANNER TO THE SATISFACTION OF THE ARCHITECT AND ENGINEER.
11. WORK, MATERIALS AND EQUIPMENT SHALL CONFORM TO THE LATEST EDITIONS OF LOCAL, STATE AND NATIONAL CODES, STANDARDS AND ORDINANCES.
12. CONTRACTOR SHALL SECURE AND PAY FOR ALL NECESSARY BUILDING PERMITS AND INSPECTION FEES.
13. THE CONTRACTOR SHALL GUARANTEE THE INSTALLATION AGAINST DEFECTS IN MATERIALS AND WORKMANSHIP, WHICH MAY OCCUR UNDER NORMAL USAGE FOR A PERIOD OF ONE YEAR AFTER SUBSTANTIAL COMPLETION. DEFECTS SHALL BE PROMPTLY CORRECTED.
14. PROVIDE RECORD DRAWINGS IN ACCORDANCE WITH THE PROJECT SPECIFICATIONS.
15. VERIFY EXACT LOCATION OF EQUIPMENT TO BE FURNISHED BY OTHERS PRIOR TO ROUGH-IN.
16. ELECTRICAL CONTRACTOR SHALL VERIFY ALL EQUIPMENT DIMENSIONS AND LOCATIONS BEFORE BEGINNING ROUGH-INS. CONSULT CONTRACT DOCUMENT DRAWINGS AND SHOP DRAWINGS TO VERIFY ALL CODE AND MAINTENANCE REQUIRED CLEARANCES ARE MAINTAINED.
17. CONTRACTOR SHALL VERIFY ACTUAL ELECTRICAL LOADS OF EACH PIECE OF EQUIPMENT REQUIRING POWER. BRING ANY DESCREPANCIES TO THE ATTENTION OF THE PROJECT ENGINEER.
18. SYSTEMS SHALL BE TESTED FOR PROPER OPERATION. IF TESTS RESULT IN DEFECT OR IMPROPER OPERATION THE CONTRACTOR SHALL MAKE ANY CORRECTIONS NECESSARY AT NO ADDITIONAL COSTS TO THE OWNER.
19. WIRE SHALL BE COPPER 75° C RATED FOR GENERAL USE. FOR HID FIXTURES AND WIRING WITHIN 3" OF FLUORESCENT BALLAST SHALL BE COPPER, MINIMUM 90° C RATED. CONDUCTOR SIZES INDICATED ARE FOR INSTALLATION IN A MAXIMUM 30° C AMBIENT TEMPERATURE ENVIROMENT. CONDUCTOR AMPACITY SHALL BE DERATED FOR HIGHER AMBIENT INSTALLATIONS.
20. SPLICES IN EXTERIOR PULLBOXES AND MANHOLES SHALL BE MADE WATERPROOF USING "SCOTCAST" SPLICE KIT OR APPROVED EQUAL. SEAL ENDS OF CONDUITS AND DUCTS ENTERING BOXES WITH "DUCTSEAL" OR EQUAL.
21. SUBMIT SHOP DRAWINGS IN ACCORDANCE WITH SPECIFICATIONS BOUND IN A THREE RING BINDER, INDEXED IN A NEAT AND ORDERLY MANNER WITH TYPE AND MODEL NUMBERS INDICATED. SUBMITTALS SHALL INCLUDE BUT NOT LIMITED TO: LIGHTING FIXTURES, LAMPS, WIRING DEVICES, OCCUPANCY SENSORS, CONTACTORS, TIME CLOCKS, PHOTOCELLS, RELAYS, SWITCHBOARDS, PANELBOARDS, MOTOR CONTROL CENTERS, SAFETY SWITCHES, MOTOR STARTERS, OVERCURRENT PROTECTION DEVICES, TRANSFORMERS, CONDUCTORS OVER 600 VOLTS AND ALL SPECIAL SYSTEMS SUCH AS FIRE ALARM, LIGHTING CONTROLS, SECURITY SYSTEMS, SOUND SYSTEMS ETC.
22. VERIFY EXACT LOCATIONS OF ALL NEW AND EXISTING UNDERGROUND SITE UTILITIES, PIPING AND RACEWAY SYSTEMS PRIOR TO TRENCHING. PROVIDE NECESSARY TRENCHING, BACKFILL EXCAVATION, SUPPORTS, SERVICE FEEDERS, (CONDUIT AND/OR WIRE), PULL BOXES, TRANSFORMER PADS, SAW CUTTING AND PATCHING, CONCRETE PAVING ETC, REQUIRED. BACKFILL TRENCHES TO 90% COMPACTION AND PATCHING TO MATCH EXISTING. CONTRACTOR SHALL OBTAIN AND VERIFY EXACT UTILITY COMPANY DRAWINGS AND REQUIREMENTS FOR ALL SITE UTILITIES. ELECTRICAL CONTRACTOR SHALL ALSO COORDINATE ELECTRICAL RELATED UTILITIES WITH THE CIVIL AND MECHANICAL ENGINEERS AND CONTRACTORS.
23. PULLBOXES, CABINETS, ETC. MOUNTED ON THE EXTERIOR OF THE BUILDING AT GRADE LEVEL, SHALL BE WEATHERPROOF TYPE WITH HINGED GASKETED LOCKABLE COVERS SECURED WITH TAMPERPROOF SCREWS.

ELECTRICAL SYMBOL SCHEDULE

STANDARD MOUNTING HEIGHT UNLESS OTHERWISE NOTED ON PLANS

SYMBOL	DESCRIPTION	MOUNTING HEIGHT	NOTES
	ONE CIRCUIT, TWO WIRE HOME RUN TO PANEL		
	2 CIRCUIT, 3 WIRE, COMMON NEUTRAL HOME RUN		
	3 CIRCUIT, 4 WIRE, COMMON NEUTRAL HOME RUN		
	CONDUIT RUN CONCEALED IN WALL OR CEILING		
	CONDUIT RUN CONCEALED IN FLOOR OR GROUND		
	CONDUIT UP		
	CONDUIT DOWN		
	CONDUIT STUB LOCATION	CAP CONDUIT	
	CEILING LIGHT FIXTURE	CEILING	
	WALL LIGHT FIXTURE	AS NOTED	
	RECESSED DOWNLIGHT FIXTURE	CEILING	
	FLUORESCENT LIGHT FIXTURE	AS NOTED	
	FLUORESCENT EGRESS LIGHT FIXTURE	AS NOTED	UNSWITCHED
	CEILING MOUNTED EXIT LIGHT	CEILING	
	WALL MOUNTED EXIT LIGHT	AS NOTED	
$	SINGLE POLE SWITCH	+4'-0"	
$a	SINGLE POLE SWITCH	+4'-0"	
$3	THREE-WAY SWITCH	+4'-0"	
$4	FOUR-WAY SWITCH	+4'-0"	
$K	KEY OPERATED SWITCH	+4'-0"	
$P	SWITCH WITH PILOT LIGHT	+4'-0"	
	VARIABLE INTENSITY SWITCH	+4'-0"	
T	TIMER SWITCH	+4'-0"	
	DUPLEX RECEPTACLE	+16"	
A	DUPLEX RECEPTACLE		
W	ELECTRIC WATER COOLER RECEPTACLE		
WP	WEATHERPROOF RECEPTACLE	+24"	
IG	ISOLATED GROUND RECEPTACLE	+16"	
	GROUND FAULT INTERRUPTER DUPLEX RECEPTACLE	+16"	
	DUPLEX RECEPTACLE EMERGEMCY POWER (RED)	+16"	
	FOURPLEX RECEPTACLE	+16"	
E	FOURPLEX RECEPTACLE EMERGEMCY POWER (RED)	+16"	
	FLOOR OUTLET WITH 20A DEVICE	FLOOR	
	SPECIAL PURPOSE OUTLET	+16" OR AS NOTED	
	DATA OUTLET	+16"	
	TELEPHONE OUTLET	+16"	
	TELEPHONE/DATA OUTLET	+16"	
	TELEPHONE OUTLET	FLOOR	
J	JUNCTION BOX ('F' IN FLOOR)	AS NOTED	
	MOTOR OUTLET	TO SUIT EQUIP.	
	NON-FUSED DISCONNECT SWITCH	+5'-0"	
F	FUSED DISCONNECT SWITCH	+5'-0"	
$T	MANUAL STARTER THERMAL OVERLOAD SWITCH WITH PILOT LIGHT	+4'-0"	
	PANEL BOARD	TOP AT +6'-0"	
	MAIN DISTRIBUTION PANEL		
	TELEPHONE TERMINAL BOARD		
842	ARCHITECTURAL ROOM NUMBER		
A	LIGHT FIXTURE (LETTER DESIGNATES TYPE)		
EQ 34	EQUIPMENT NUMBER		

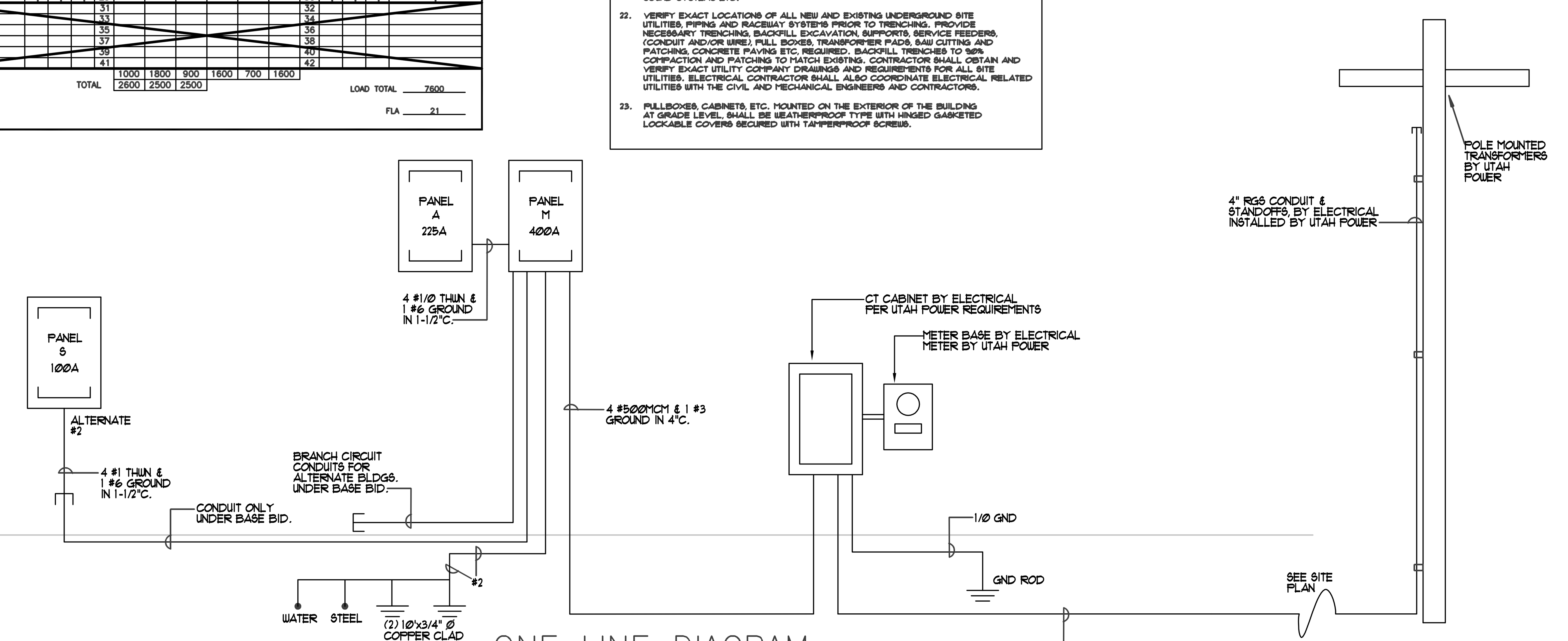

ONE LINE DIAGRAM

CLIENT

VERNAL MAINTENANCE FACILITY
STATION #3437
2773 North Vernal Avenue
VERNAL, UTAH 84078

DESIGNER

ARCHIPLEX GROUP
architecture • planning • design services
1135 South West Temple, Ste. A
Salt Lake City, UT 84101
P:(801) 961-7070
F:(801) 961-7373

CONSULTANTS

PVE Inc. Consulting Mechanical Engineers
90 South 400 West, Suite 340
Salt Lake City UT, 84101
Phone: (801) 359-3158
Fax: (801) 521-4114

PROFESSIONAL SEAL

REGISTERED PROFESSIONAL ENGINEER — No. 154867 DEAN P. LEVORSEN — STATE OF UTAH

ISSUE

	DATE	ISSUE
	6-27-06	RE-BID SET
	3-31-06	CONSTRUCTION DOCUMENTS
	1-20-06	FINAL REVIEW
	8-22-05	PRELIMINARY SUBMITTAL

DFCM PROJECT NO: 05056900/067023
ARCHIPLEX PROJECT NO: 05152.01
DRAWN BY: K.M.
CHECKED BY: R.K.R.
SCALE:
DATE: MARCH 31, 2006

KEY PLAN

SHEET TITLE

ELECTRICAL SCHEDULES, NOTES & DIAGRAM

E001

© 2004 ARCHIPLEX GROUP

File name: M:\PROJECTS\2004\04080.02\DRAWINGS\M201.DWG Last edited: 06/16/2005 @ 10:32

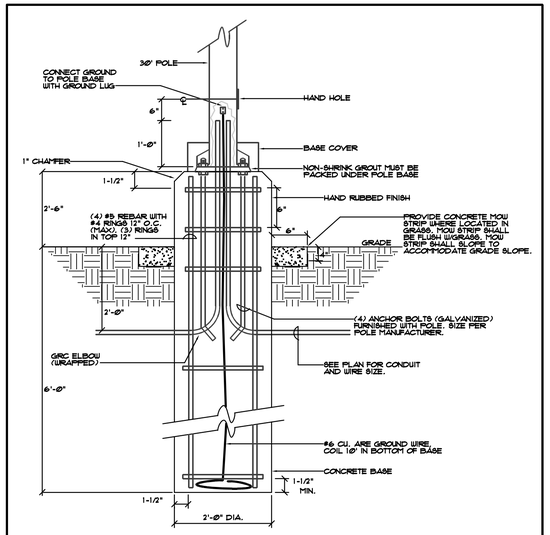

DETAIL 1/E100 LIGHTING POLE FOUNDATION

KEYED NOTES:

1. ALL MOTORIZED GATE EQUIPMENT PROVIDED & INSTALLED BY THE GENERAL CONTRACTOR. COORDINATE ALL CONNECTIONS & ROUGH-INS W/G.C. & SHOP DRAWINGS SEE ARCHITECTURAL DRAWING AE705.
2. UTAH POWER IS TO BRING 3-PHASE POWER SERVICE TO THIS SITE FROM THE SOUTH TO THIS POLE LOCATION. E.C. TO COORDINATE SERVICE REQUIREMENTS WITH LANE SERGEANT UTAH POWER-VERNAL (435-781-5604.
3. JUNCTION BOXES TO NON-FERROUS TYPE WITH GASKETED COVERS.
4. SEE SHEET E202 FOR LIGHTING & POWER REQUIREMENTS.

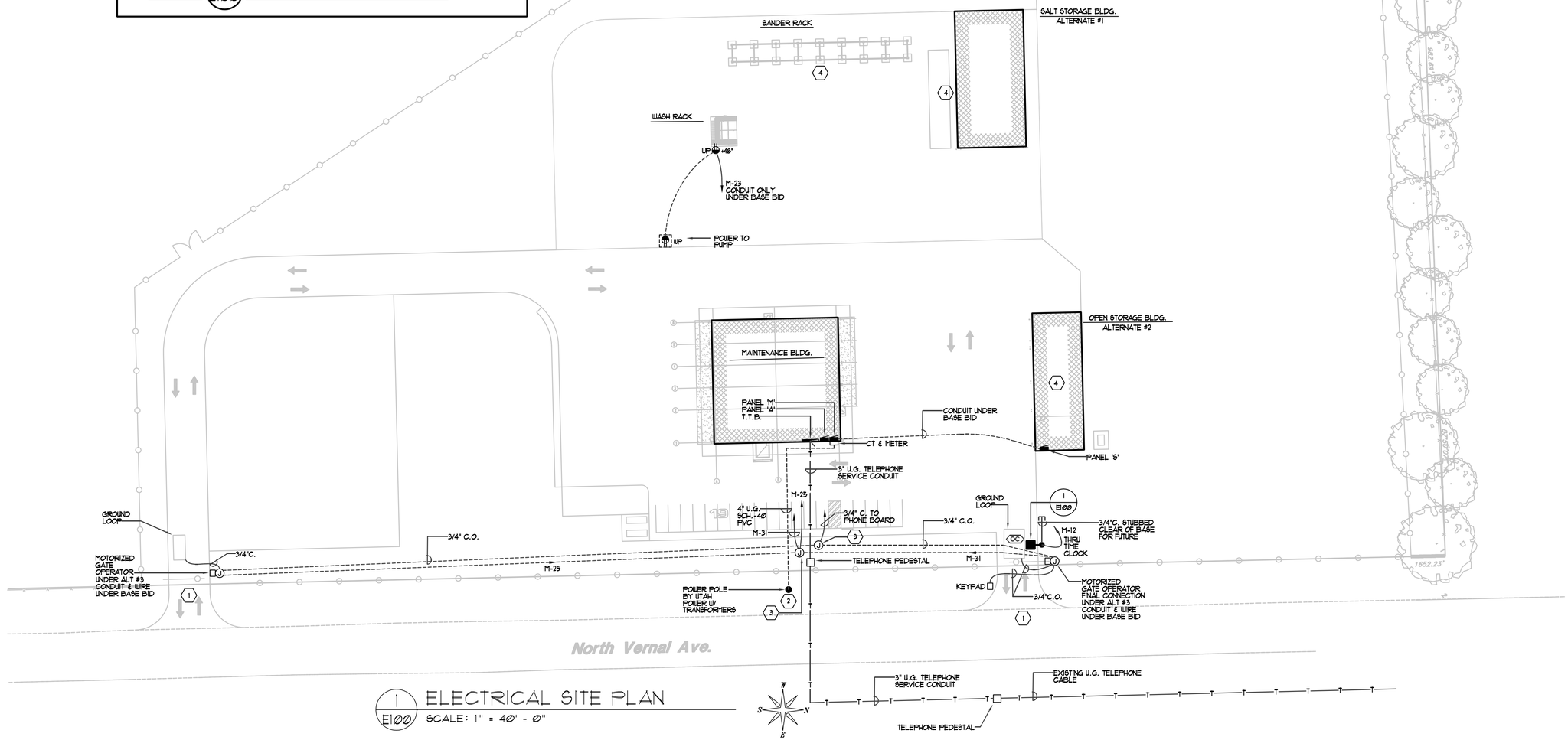

1/E100 ELECTRICAL SITE PLAN
SCALE: 1" = 40' - 0"

CLIENT

VERNAL
MAINTENANCE FACILITY
STATION #3437
2773 North Vernal Avenue
VERNAL, UTAH 84078

DESIGNER

ARCHIPLEX GROUP
architecture - planning - design services
1135 South West Temple, Ste. A
Salt Lake City, UT 84101
P:(801) 961-7070
F:(801) 961-7373

CONSULTANTS

PVE Inc.
Consulting Mechanical Engineers
90 South 400 West, Suite 340
Salt Lake City UT, 84101
Phone: (801) 359-3158
Fax: (801) 521-4114

PROFESSIONAL SEAL

REGISTERED PROFESSIONAL ENGINEER
No. 154867
DEAN P. LEVORSEN
STATE OF UTAH

ISSUE		
	6-27-06	RE-BID SET
	3-31-06	CONSTRUCTION DOCUMENTS
	1-20-06	FINAL REVIEW
	8-22-05	PRELIMINARY SUBMITTAL

DFCM PROJECT NO:	05056900/067023
ARCHIPLEX PROJECT NO:	05152.01
DRAWN BY:	K.M.
CHECKED BY:	R.K.R.
SCALE:	AS SHOWN
DATE:	MARCH 31, 2006

KEY PLAN

SHEET TITLE

ELECTRICAL SITE PLAN

E100

© 2004 ARCHIPLEX GROUP

KEYED NOTES:

1. WIRE OUTDOOR LIGHTING CIRCUIT THROUGH TIME CLOCK.
2. SEE ARCHITECTURAL ELEVATION FOR MOUNTING HEIGHTS.
3. SWITCHES FOR FLOOD LIGHTS.

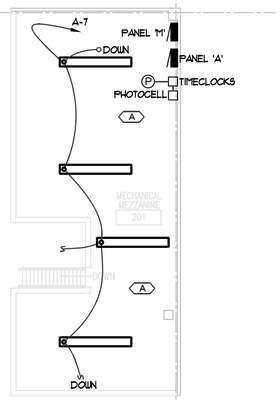

2 / E201 MEZZANINE FLOOR PLAN (LTG).
SCALE: 1/8" = 1' - 0"

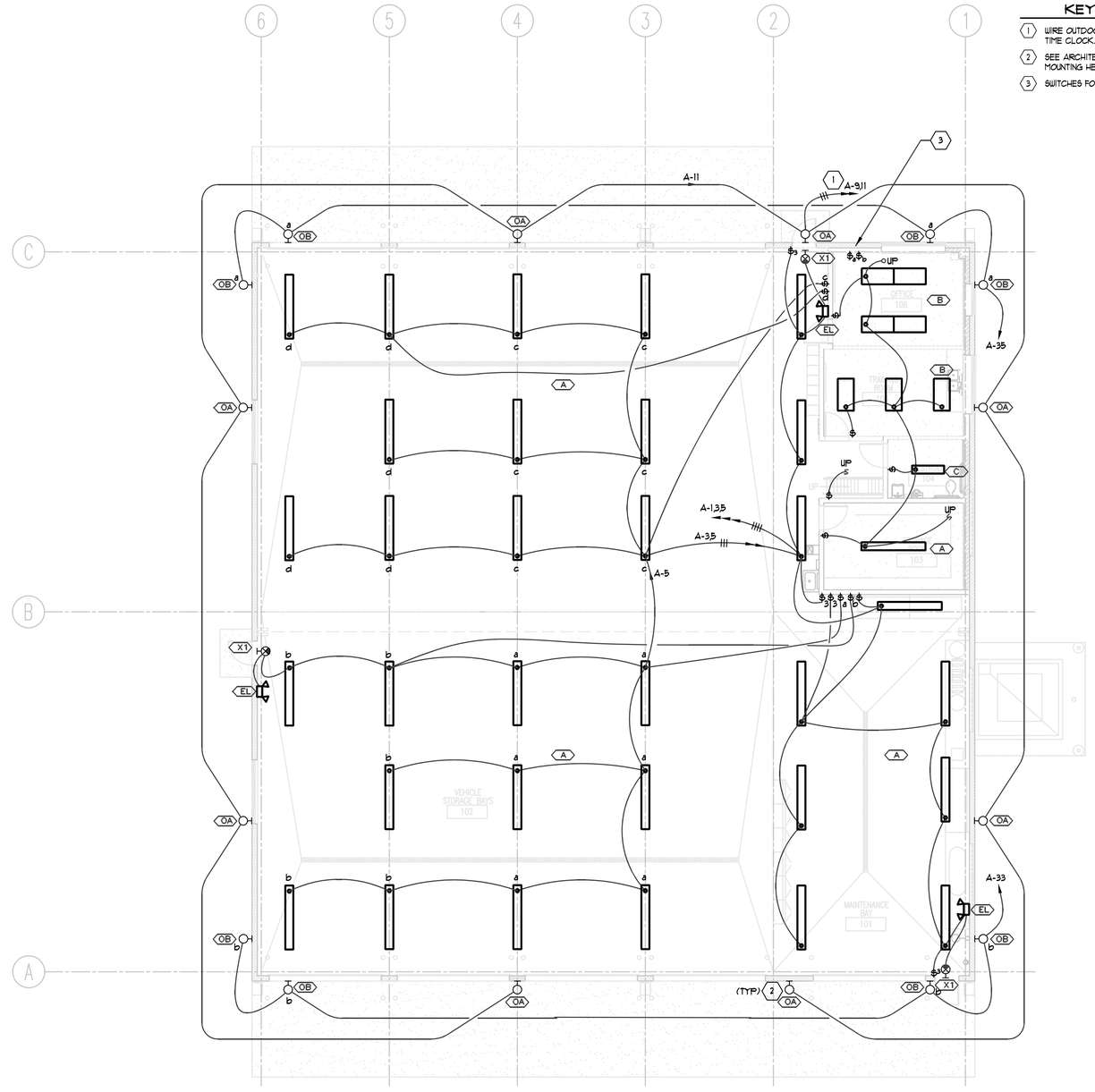

1 / E201 LIGHTING FLOOR PLAN
SCALE: 1/8" = 1' - 0"

File name: M:\PROJECTS\KNUTE'S MISC. STUFF\ARCHIPLEX MAINTENANCE STATIONS\BRIGHAM MAINTENANCE FACILITY\DRAWINGS\M201.DWG Last edited: 09/02/05 @ 09:52

CLIENT

VERNAL
MAINTENANCE FACILITY
STATION #3437
2773 North Vernal Avenue
VERNAL, UTAH 84078

DESIGNER

ARCHIPLEX GROUP
architecture · planning · design services
1135 South West Temple, Ste. A
Salt Lake City, UT 84101
P:(801) 961-7070
F:(801) 961-7373

CONSULTANTS

PVE Inc.
Consulting Mechanical Engineers
90 South 400 West, Suite 340
Salt Lake City UT, 84101
Phone: (801) 359-3158
Fax: (801) 521-4114

PROFESSIONAL SEAL

REGISTERED PROFESSIONAL ENGINEER
No. 154867
DEAN P. LEVORSEN
STATE OF UTAH

ISSUE

	6-27-06	RE-BID SET
	3-31-06	CONSTRUCTION DOCUMENTS
	1-20-06	FINAL REVIEW
	8-22-05	PRELIMINARY SUBMITTAL

DFCM PROJECT NO:	05056900/067023
ARCHIPLEX PROJECT NO:	05152.01
DRAWN BY:	K.M.
CHECKED BY:	R.K.R.
SCALE:	
DATE:	MARCH 31, 2006

KEY PLAN

SHEET TITLE

LIGHTING FLOOR PLAN

E201

© 2004 ARCHIPLEX GROUP

KEYED NOTES:

1. PROVIDE WEATHERPROOF SWITCHES.
2. DOOR CONTROLS PROVIDED BY DOOR SUPPLIER. INSTALLED & WIRED BY ELECTRICAL.

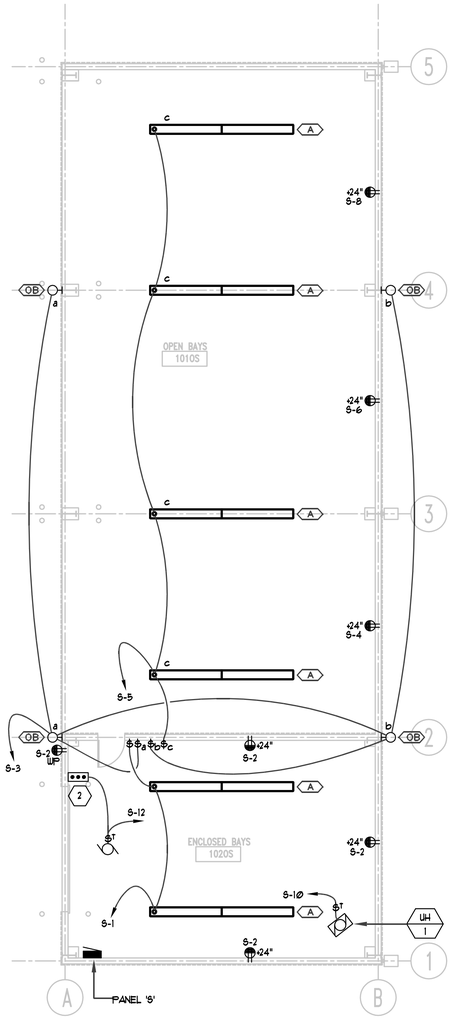

1 E202 OPEN STOR. BLDG. ELECTRICAL
SCALE: 1/8" = 1' - 0"
ALTERNATE #2

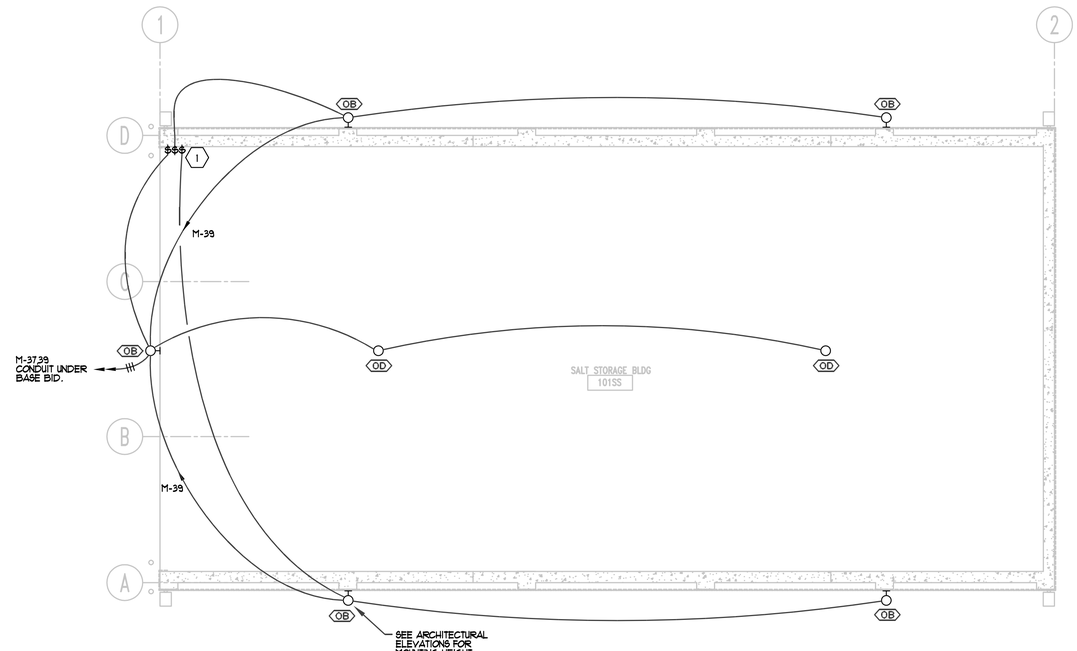

3 E202 SALT STORAGE BLDG. ELECTRICAL
SCALE: 1/8" = 1' - 0"
ALTERNATE #1

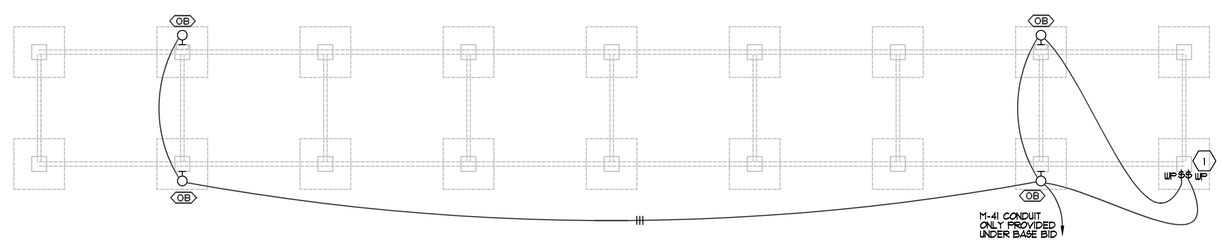

2 E202 SANDER RACK ELECTRICAL
SCALE: 1/8" = 1' - 0"

CLIENT

VERNAL
MAINTENANCE FACILITY
STATION #3437
2773 North Vernal Avenue
VERNAL, UTAH 84078

DESIGNER

ARCHIPLEX GROUP
architecture · planning · design services
1135 South West Temple, Ste. A
Salt Lake City, UT 84101
P:(801) 961-7070
F:(801) 961-7373

CONSULTANTS

PVE Inc.
Consulting Mechanical Engineers
90 South 400 West, Suite 340
Salt Lake City UT, 84101
Phone: (801) 359-3158
Fax: (801) 521-4114

PROFESSIONAL SEAL

REGISTERED PROFESSIONAL ENGINEER
No. 154867
DEAN P. LEVORSEN
STATE OF UTAH

ISSUE

	6-27-06	RE-BID SET
	3-31-06	CONSTRUCTION DOCUMENTS
	1-20-06	FINAL REVIEW
	8-22-05	PRELIMINARY SUBMITTAL

DFCM PROJECT NO:	05056900/067023
ARCHIPLEX PROJECT NO:	05152.01
DRAWN BY:	K.M.
CHECKED BY:	R.K.R.
SCALE:	
DATE:	MARCH 31, 2006

KEY PLAN

SHEET TITLE

OUT-BUILDINGS
ELECTRICAL PLANS

E202

© 2004 ARCHIPLEX GROUP

File name: M:\PROJECTS\KNUTE'S MISC. STUFF\ARCHIPLEX MAINTENANCE STATIONS\BRIGHAM MAINTENANCE FACILITY\DRAWINGS\M201.DWG Last edited: 09/02/05 @ 09:52

KEYED NOTES:

1. ALL RECEPTACLES IN VEHICLE STORAGE BAYS AND MAINTENANCE BAY SHALL BE MOUNTED A MINIMUM OF 24" A.F.F. AND BE A GFCI TYPE RECEPTACLE.
2. RADIANT HEATING CONTROLS BY MECHANICAL. RUN 3/4" CONDUIT TO STRUCTURE FOR WIRING BY MECHANICAL CONTRACTOR.
3. PUSH BUTTON CONTROL TO EXHAUST FAN EF-2. COORDINATE WITH CARBON MONOXIDE EXHAUST SYSTEM CONTROLS.

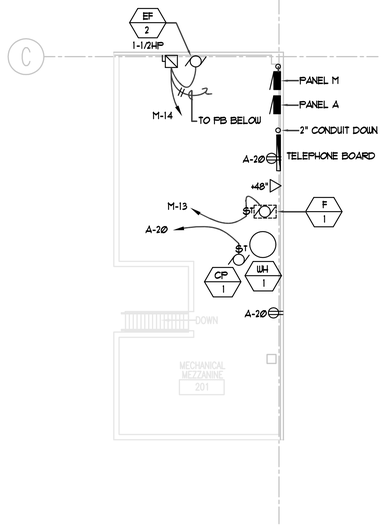

2 E301 MEZZANINE FLOOR PLAN (POWER)
SCALE: 1/8" = 1' - 0"

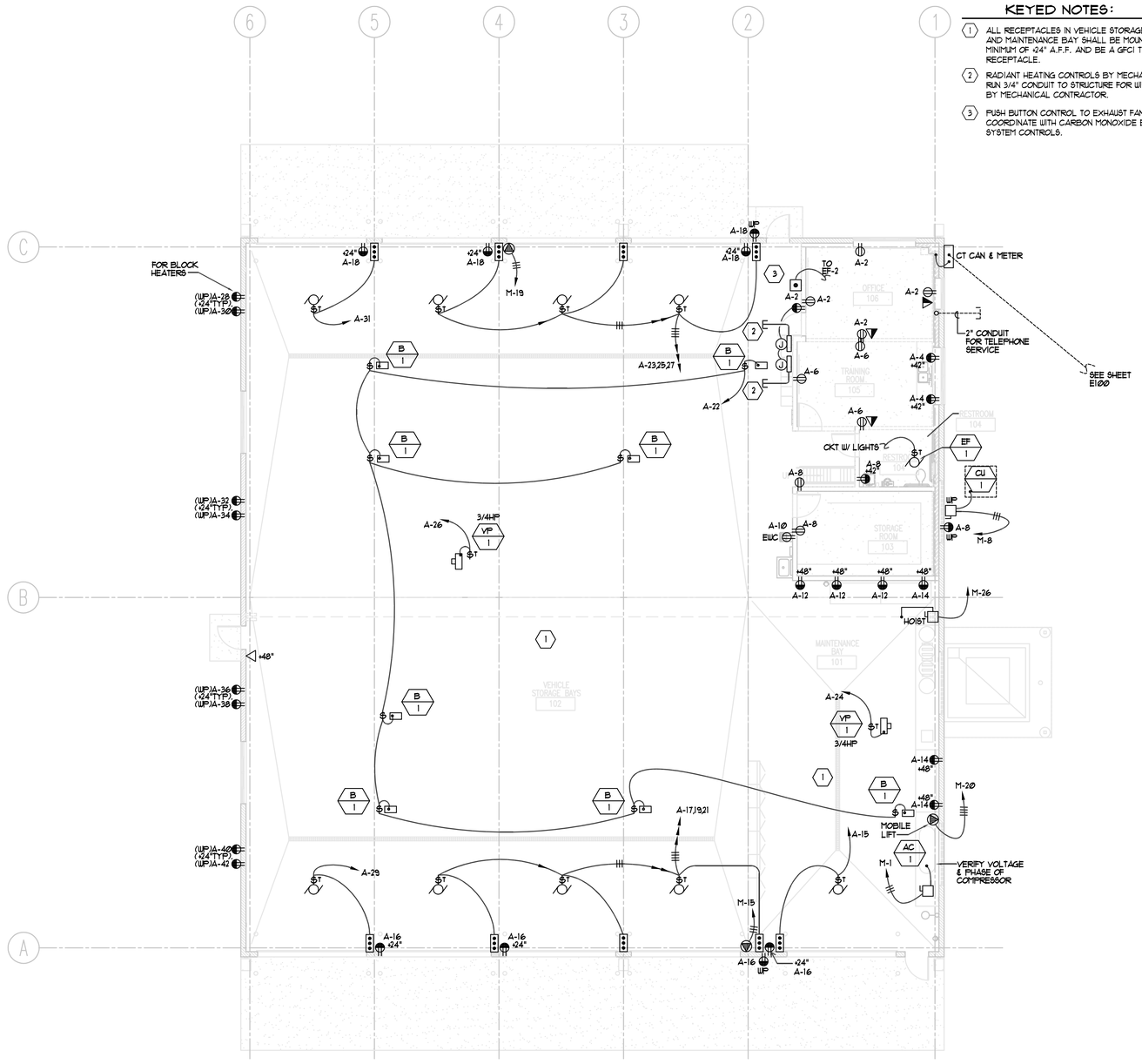

1 E301 POWER FLOOR PLAN
SCALE: 1/8" = 1' - 0"

File name: M:\PROJECTS\KNUTE'S MISC. STUFF\ARCHIPLEX MAINTENANCE STATIONS\BRIGHAM MAINTENANCE FACILITY\DRAWINGS\M201.DWG Last edited: 09/02/05 @ 09:52

CLIENT

VERNAL
MAINTENANCE FACILITY
STATION #3437
2773 North Vernal Avenue
VERNAL, UTAH 84078

DESIGNER

ARCHIPLEX GROUP
architecture · planning · design services
1135 South West Temple, Ste. A
Salt Lake City, UT 84101
P:(801) 961-7070
F:(801) 961-7373

CONSULTANTS

PVE Inc.
Consulting Mechanical Engineers
90 South 400 West, Suite 340
Salt Lake City UT, 84101
Phone: (801) 359-3158
Fax: (801) 521-4114

PROFESSIONAL SEAL

REGISTERED PROFESSIONAL ENGINEER
No. 154867
DEAN P. LEVORSEN
STATE OF UTAH

ISSUE

	6-27-06	RE-BID SET
	3-31-06	CONSTRUCTION DOCUMENTS
	1-20-06	FINAL REVIEW
	8-22-05	PRELIMINARY SUBMITTAL

DFCM PROJECT NO:	05056900/067023
ARCHIPLEX PROJECT NO:	05152.01
DRAWN BY:	K.M.
CHECKED BY:	R.K.R.
SCALE:	
DATE:	MARCH 31, 2006

KEY PLAN

SHEET TITLE

POWER FLOOR PLAN

E301

© 2004 ARCHIPLEX GROUP