SOUTHERN UTAH UNIVERSITY
BOILER PLANT AUTOMATION & POWER METERING SYSTEM

351 WEST UNIVERSITY BOULEVARD, CEDAR CITY, UTAH 84720
PROPERTY NO. 0206
DFCM PROJECT NO. 05120730
FEBRUARY 2006

State of Utah–Department of Administrative Services

DIVISION OF FACILITIES CONSTRUCTION AND MANAGEMENT
4110 State Office Building/Salt Lake City, Utah 84114/538–3018

APPROVALS:

Prime Agency — Date

DFCM — Date

APPROVAL DOES NOT RELIEVE A/E OF DESIGN LIABILITY

APPROVALS:

Prime Agency — Date

DFCM — Date

APPROVAL DOES NOT RELIEVE A/E OF DESIGN LIABILITY

INDEX OF SHEETS

G–001	COVER SHEET
G–002	GENERAL ARRANGEMENT PLAN
G–003	SYMBOLS AND ABBREVIATIONS
M–101	MECHANICAL PLAN
M–601	MECHANICAL SCHEMATICS
E–101	SINGLE LINE DIAGRAMS
E–102	ELECTRICAL SITE PLAN
E–103	ELECTRICAL VAULT AND ELECTRICAL ROOM LAYOUT
E–501	CONSTRUCTION DETAILS

State of Utah–Department of Administrative Services
DIVISION OF FACILITIES CONSTRUCTION AND MANAGEMENT
4110 State Office Building/Salt Lake City, Utah 84114/538–3018

CONSULTANTS

Intermountain Consumer Professional Engineers, Inc.
CONSULTING ENGINEERS
1145 E. SOUTH UNION AVE.
MIDVALE, UTAH 84047
BUS. (801) 255–1111 FAX. 566–0088

SOUTHERN UTAH UNIVERSITY

CEDAR CITY, UTAH

BOILER PLANT AUTOMATION AND POWER PLANT METERING SYSTEM

STATE PROPERTY ID. #0206
DFCM PROJECT #05120730

MARK	DATE	DESCRIPTION

ISSUE DATE:	03/09/06
PROJECT NO:	01–116
CAD DWG FILE:	01116_G–001
DRAWN BY:	RDT
CHECKED BY:	CMY

SHEET TITLE

COVER SHEET

G–001

SHEET 1 OF 9

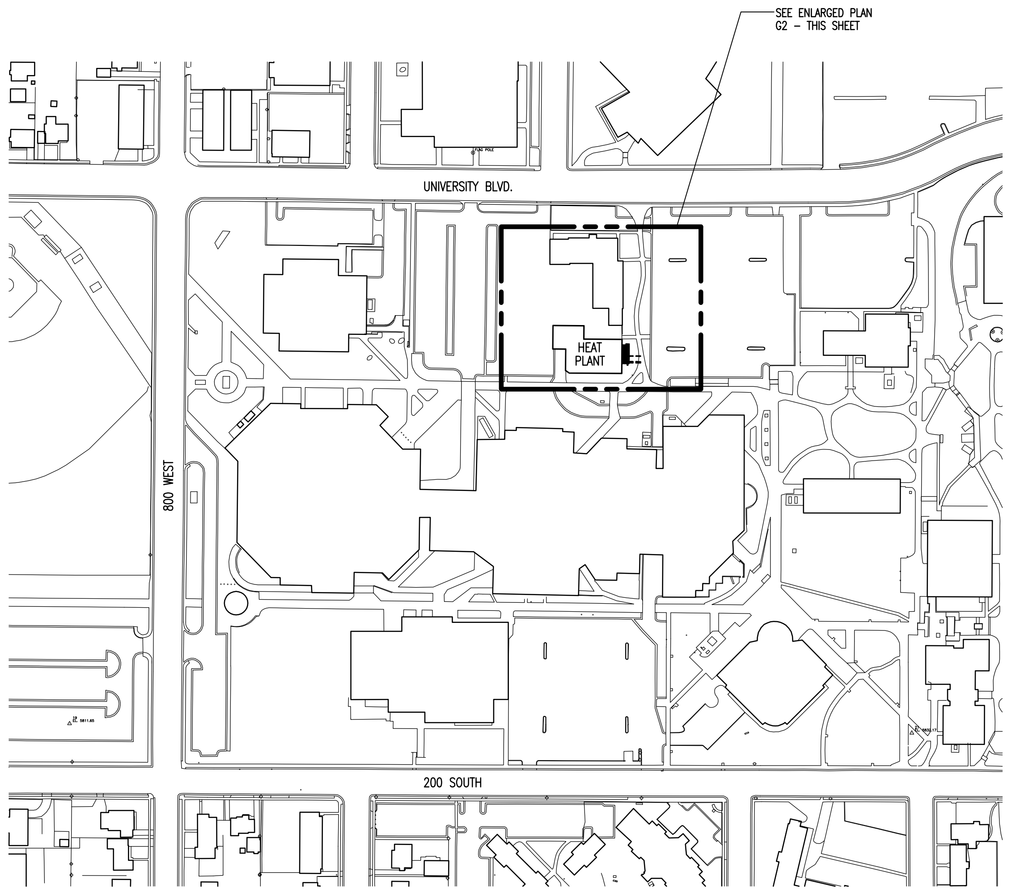

PLAN NORTH

G1 GENERAL PLAN

SCALE: 1" = 150'-0"

0 75' 300'
37.5' 150'

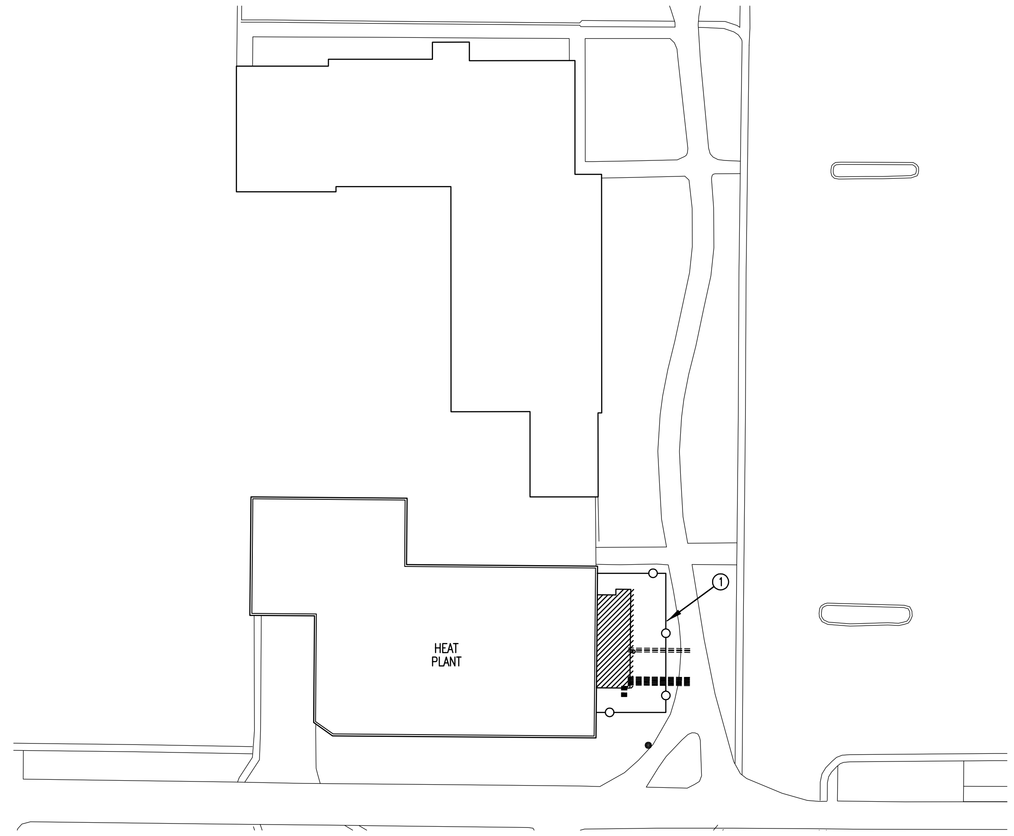

PLAN NORTH

G2 ENLARGED PLAN

SCALE: 1" = 30'-0"

0 15' 60'
7.5' 30'

Keyed Notes

1. CONSRUCTION AREA FENCE.

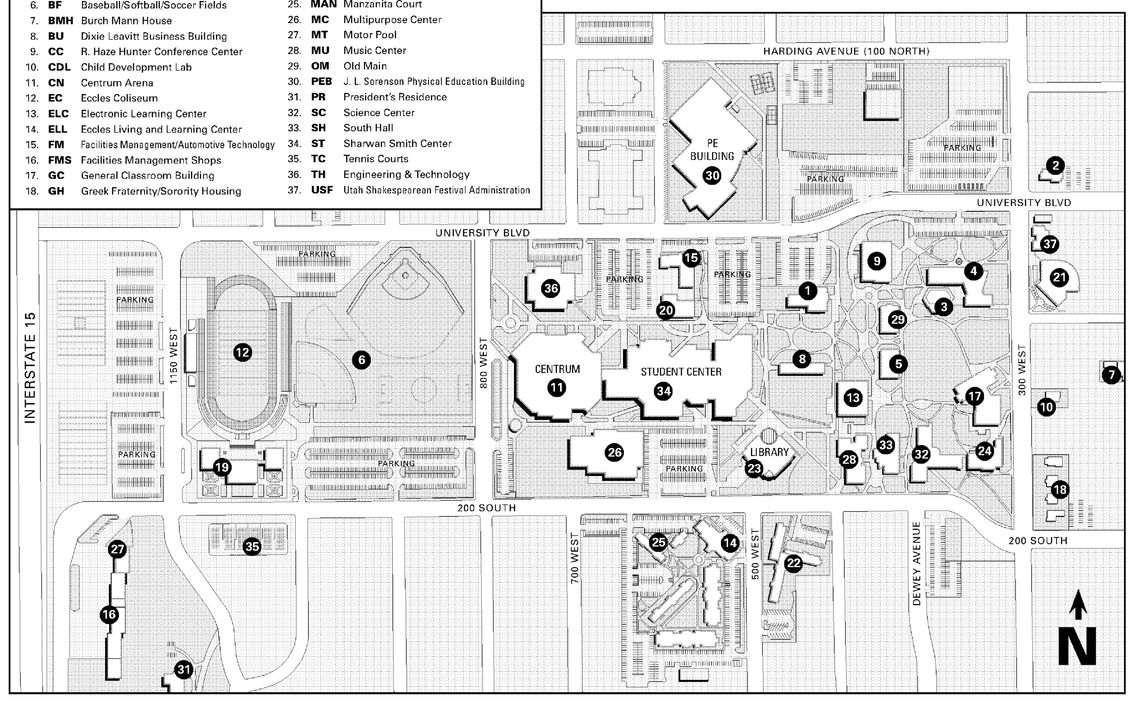

State of Utah–Department of Administrative Services

DIVISION OF FACILITIES CONSTRUCTION AND MANAGEMENT

4110 State Office Building/Salt Lake City, Utah 84114/538-3018

CONSULTANTS

Intermountain Consumer Professional Engineers, Inc.
CONSULTING ENGINEERS
1145 E. SOUTH UNION AVE.
MIDVALE, UTAH 84047
BUS. (801) 255-1111 FAX. 566-0088

SOUTHERN UTAH UNIVERSITY

CEDAR CITY, UTAH

BOILER PLANT AUTOMATION AND POWER PLANT METERING SYSTEM

STATE PROPERTY ID. #0206

DFCM PROJECT #05120730

MARK	DATE	DESCRIPTION

ISSUE DATE:	03/09/06
PROJECT NO:	01-116
CAD DWG FILE:	01116_G-002
DRAWN BY:	RDT
CHECKED BY:	CMY

SHEET TITLE

GENERAL ARRANGEMENT PLAN

G-002

SHEET 2 OF 9

LEGEND OF SYMBOLS AND ABBREVIATIONS

NOTE:NOT ALL SYMBOLS MAY BE USED

PIPING SYMBOLS

CP	CULVERT PIPE LINE
HTWR	HIGH TEMPERATURE HOT WATER RETURN
IW	INDIRECT WASTE LINE
PW	PUBLIC WATER MAIN
SS	SANITARY SEWER-ABOVE GROUND
SS	SANITARY SEWER-BELOW GROUND
SV	COMBINATION VENT AND WASTE LINE
TWS	TEMPERED WATER SUPPLY
TWR	TEMPERED WATER RETURN
	DOMESTIC COLD WATER PIPE (CW)
	DOMESTIC HOT WATER PIPE (HW)
	DOMESTIC HOT WATER RETURN PIPE (HWR)

A	COMPRESSED AIR LINE
ACID	ACID WASTE LINE
AR	ARGON LINE
ATV	AIR RELIEF LINE
B	BRINE SUPPLY LINE
BR	BRINE RETURN LINE
BBD	BOILER BLOW DOWN
C	CONDENSATE LINE
CR	CONDENSATE RETURN
CHWR	CHILLED WATER RETURN
CHWS	CHILLED WATER SUPPLY
CWR	CONDENSER WATER RETURN
CWS	CONDENSER WATER SUPPLY
CS	CHEMICAL SUPPLY PIPE
D	STORM DRAIN LINE
DTR	DUAL TEMPERATURE RETURN LINE
DTS	DUAL TEMPERATURE SUPPLY
FILL	FILL LINE
FOD	FUEL OIL DISCHARGE
FOF	FUEL OIL FLOW LINE
FOG	FUEL OIL GAUGE LINE
FOR	FUEL OIL RETURN
FOS	FUEL OIL SUCTION SUPPLY
FOV	FUEL OIL TANK VENT
G	NATURAL GAS LINE
MG	MEDIUM PRESSURE NATURAL GAS LINE
GHR	GLYCOL HEATING RETURN
GHS	GLYCOL HEATING SUPPLY
H	HYDROGEN LINE
HE	HELIUM LINE
HG	HIGH PRESSURE GAS
HPC	HIGH PRESSURE CONDENSATE RETURN
LPC	LOW PRESSURE CONDENSATE RETURN
HPS	HIGH PRESSURE STEAM
LPS	LOW PRESSURE STEAM
MPS	MEDIUM PRESSURE STEAM
HWR	LOW TEMPERATURE HOT WATER RETURN
HWS	LOW TEMPERATURE HOT WATER SUPPLY
LN	LIQUID NITROGEN LINE

LOX	LIQUID OXYGEN LINE
LPG	LIQUID PETROLEUM GAS LINE
MPC	MEDIUM PRESSURE CONDENSATE RETURN
MTWR	MEDIUM TEMPERATURE HOT WATER RETURN
MTWS	MEDIUM TEMPERATURE HOT WATER SUPPLY
MU	MAKE-UP WATER LINE
N	NITROGEN LINE
NO	NITROUS OXIDE LINE
O	OXYGEN LINE
PC	PUMPED CONDENSATE
RD	REFRIGERANT DISCHARGE
RL	REFRIGERANT LIQUID
RS	REFRIGERANT SUCTION
ST	CONDENSATE DRAIN LINE
SW	SOFT WATER LINE
VAC	VACUUM AIR LINE
VC	VACUUM CLEANING LINE
VPD	VACUUM PUMP DISCHARGE

CI	CAST IRON PIPE
CT	CLAY TILE PIPE
DI	DUCTILE IRON PIPE
ICW	INDUSTRIAL COLD WATER LINE
IHR	INDUSTRIAL HOT WATER RETURN
IHW	INDUSTRIAL WASTE LINE
INW	INDUSTRIAL HOT WATER SUPPLY
RCP	REINFORCED CONCRETE PIPE

CSP	COMBINATION STAND PIPE
DSP	DRY STAND PIPE
F	FIRE LINE
S	FIRE SPRINKLER LINE-MAIN SUPPLY
SP	FIRE SPRINKLER LINE
WSP	WET STAND PIPE

MECHANICAL SYMBOLS

PS	PRESSURE SWITCH
FS	FLOW SWITCH
S	TEMPERATURE SENSOR
T	THERMOSTAT
TN	NIGHT THERMOSTAT
	ROOF DRAIN (RD)
	ROOF DRAIN OVERFLOW (RDO)
	FLOOR DRAIN (FD)
VTR	VENT THROUGH ROOF (VTR)
	PRESSURE GUAGE W/ COCK
	THERMOMETER
	AUTOMATIC AIR VENT
	MANUAL AIR VENT
	FLOW ARROW
	DIRECTION OF PIPE SLOPE (DOWN)

	SLEEVE
	PIPE GUIDES
	PIPE TO BE REMOVED
	EXPANSION LOOP
	FLEXIBLE CONNECTION
	EXPANSION JOINT
	REDUCING FLANGE
HB	WALL HYDRANT OR HOSE BIB
	DOWNSPOUT
	PIPE ANCHOR
	VALVE IN RISER
	FIRE DEPARTMENT CONNECTION
	REDUCED PRESSURE BACKFLOW PREVENTER
	CONCENTRIC REDUCER
	ECCENTRIC REDUCER
	45° ELBOW
	STRAIGHT TEE
	90° ELBOW
	INTERSECTION
	SIDE OUT UP
	PIPE DROP OR RISE
	CONNECT OUT OF TOP
	CONNECT OUT OF BOTTOM
	DROP IN PIPING (IN LINE)
	RISE IN PIPING (IN LINE)
	DROP IN PIPING AT END
	RISE IN PIPING AT END
	CAP IN PIPING
	PIPE BREAK
	DOUBLE LINE PIPE BREAK
	UNION
	PUMP
	AIR ELIMINATOR
A / M.1	SECTION NO / SHEET NO.
A / E-F	DETAIL TAG — DETAIL NO. / SHEET NO.
D-CFM	DIFFUSER OR REGISTER NO.
S / 1	PLUMBING FIXTURE DESIGNATION — FIXTURE SYMBOL / ITEM NO.
A	EQUIPMENT SYMBOL
A	REVISION MARKER
1	KEYED NOTE IDENTIFICATION
	REMOVE EXISTING; UP TO THIS POINT POINT OF DEMOLITION
	POINT OF CONNECTION TO EXISTING

VALVES

	STRAINER
	STRAINER WITH BLOW-OFF VALVE
	STEAM TRAP
	BALL VALVE
	CALIBRATED BALANCING VALVE
	CHECK VALVE
S	SOLENOID VALVE
	THREE WAY VALVE
	GATE VALVE
	GLOBE VALVE
	CONTROL VALVE - 2 WAY
	CONTROL VALVE - 3 WAY
	BUTTERFLY VALVE
	RELIEF VALVE
	3-WAY RELIEF VALVE
	PRESSURE REDUCING VALVE
	PRESSURE REGULATING VALVE (PRV)
	FLOW METER
	NATURAL GAS MODULATING CONTROL VALVE
	NATURAL GAS PILOT OPERATED CONTROL VALVE
	GAS VALVE
	COMBINATION BALANCING & SHUT OFF VALVE
	GAS PRESSURE REGULATOR

PLUMBING

COTG	CLEAN OUT TO GRADE
FCO	FLOOR CLEAN OUT
WCO	WALL CLEAN OUT

SITE PLAN SYMBOLS

	CONSTRUCTION BOUNDRY
	FENCE

STRUCTURAL SYMBOLS

	FILLET WELD SYMBOL
	BEVEL WELD SYMBOL
	GROOVE WELD SYMBOL
	TACK WELD SYMBOL
	FIELD WELD
	CONTROL POINT

ELECTRICAL SYMBOLS

	EXPOSED CONDUIT
	UNDERGROUND CONDUIT
	EXISTING CONDUIT, RE-USED
	CONDUIT IN DUCT BANK
	POST TOP LIGHT POLE
	FLUORESCENT LIGHTING FIXTURE
	GFI RECEPTACLE
$	SINGLE POLE TOGGLE SWITCH
$3	3-WAY TOGGLE SWITCH
$4	4-WAY TOGGLE SWITCH
J	JUNCTION BOX
PB	PULL BOX FOR OUTDOOR LIGHTING
	SINGLE PHASE MOTOR
$M	SINGLE PHASE MOTOR STARTING SWITCH
	COMBINATION MAGNETIC STARTER
	PANEL BOARD
	SAFETY SWITCH
	LIGHTING FIXTURE

ABBREVIATIONS

AFF	ABOVE FINISHED FLOOR
AH	ADHESIVE ANCHOR SYSTEM WITH EMBEDMENT AS FOLLOWS: — ALL THREAD ROD OR REBAR SIZE / MINIMUN EMBEDMENT: #4 OR 1/4"ø — 4"; #5 OR 5/8"ø — 5-1/2"; #7 OR 7/8"ø — 7"; #8 OR 1"ø — 8-1/2"
AMPS	AMPERES
APD	AIR PRESSURE DROP
ASL	ABOVE SEA LEVEL
BD	BACKDRAFT DAMPER
BHP	BRAKE HORSEPOWER
BTUH	BRITISH THERMAL UNITS PER HOUR
CI	CAST IRON
CJ	CONSTRUCTION JOINT
CFM	CUBIC FEET PER MINUTE
℄	CENTER LINE
CMU	CONCRETE MASONRY UNIT
COMM.	COMMUNICATION
COND.	CONDENSATE
DB	DRY BULB TEMPERATURE
DEG OR °	DEGREE
DIA OR ø	DIAMETER
DG	DOOR GRILLE
DN	DOWN
DS	DOWNSPOUT
DWL	DOWEL
(E) OR EX	EXISTING
EA	EXHAUST AIR
EG	EXHAUST AIR GRILLE
EAR	EXHAUST AIR REGISTER
EAT	ENTERING AIR TEMPERATURE
EER	EQUIPMENT EFFICIENCY RATING
EL OR ELEV	ELEVATION
EMB	EMBEDMENT
EQUIP.	EQUIPMENT
ESP	EXTERNAL STATIC PRESSURE
EW	EACH WAY
EXP	EXPANSION
EXT	EXTENSION
F/SD	FIRE/SMOKE DAMPER
FA	FIRE ALARM
FDC	FIRE DEPARTMENT CONNECTION
FDV	FIRE DEPARTMENT VALVE
FIN	FINISH (ED)
FLA	FULL LOAD AMPS
FPM	FEET PER MINUTE
FR	FIRE RISER
FT	FOOT
GA	GAGE OR GAUGE
GALV	GALVANIZED
HB	HOSE BIBB
H PT	HIGH POINT
HORZ	HORIZONTAL
HP	HORSEPOWER
HZ	HERTZ
ID	INSIDE DIAMETER
IN	INCH
KW	KILOWATTS
LAT	LEAVING AIR TEMPERATURE
LBS	POUNDS
LRA	LOCKED ROTOR AMPS
MAX.	MAXIMUM
MBH	BRITISH THERMAL UNITS PER HOUR (THOUSANDS)
MECH.	MECHANICAL
MH	MANHOLE
MIN	MINIMUM
OA	OUTSIDE AIR
OCC	OCCUPIED
OD	OUTSIDE DIAMETER
PD	PRESSURE DROP
PL	PLATE
PH	PHASE
PSIG	POUNDS PER SQUARE INCH GAGE
PSI	POUNDS PER SQUARE INCH
PROP	PROPELLER
PWR	POWER
(R)	RELOCATE OR RELOCATED
RA	RETURN AIR
(REF)	REFERENCE
RD	ROOF DRAIN
RDO	ROOF DRAIN OVERFLOW
RH	RELATIVE HUMIDITY
RPM	REVOLUTIONS PER MINUTE
SA	SUPPLY AIR
STD	STANDARD
SP	STATIC PRESSURE
SQFT OR SF	SQUARE FEET
STA	STATION
T/C	TOP OF CONCRETE
TEMP	TEMPERATURE
TOS OR T/S	TOP OF STEEL
TSP	TOTAL STATIC PRESSURE
TYP.	TYPICAL
UNOCC	UNOCCUPIED
UON	UNLESS OTHERWISE NOTED
V	VOLTAGE
VAC	VACUUM
VFD	VARIABLE FREQUENCY DRIVE
WB	WET BULB TEMPERATURE
WC	WATER COLUMN
WS	WATERSTOP
WT	WEIGHT
@	AT
W/	WITH

State of Utah-Department of Administrative Services

DIVISION OF FACILITIES CONSTRUCTION AND MANAGEMENT

4110 State Office Building/Salt Lake City, Utah 84114/538-3018

CONSULTANTS

Intermountain Consumer Professional Engineers, Inc.
CONSULTING ENGINEERS
1145 E. SOUTH UNION AVE.
MIDVALE, UTAH 84047
BUS. (801) 255-1111 FAX. 566-0088

SOUTHERN UTAH UNIVERSITY

CEDAR CITY, UTAH

BOILER PLANT AUTOMATION AND POWER PLANT METERING SYSTEM

STATE PROPERTY ID. #0206

DFCM PROJECT #05120730

MARK	DATE	DESCRIPTION
0		

ISSUE DATE:	03/09/06
PROJECT NO:	01-116
CAD DWG FILE:	01116_G-003
DRAWN BY:	RDT
CHECKED BY:	CMY

SHEET TITLE

SYMBOLS AND ABBREVIATIONS

G-003

SHEET 3 OF 9

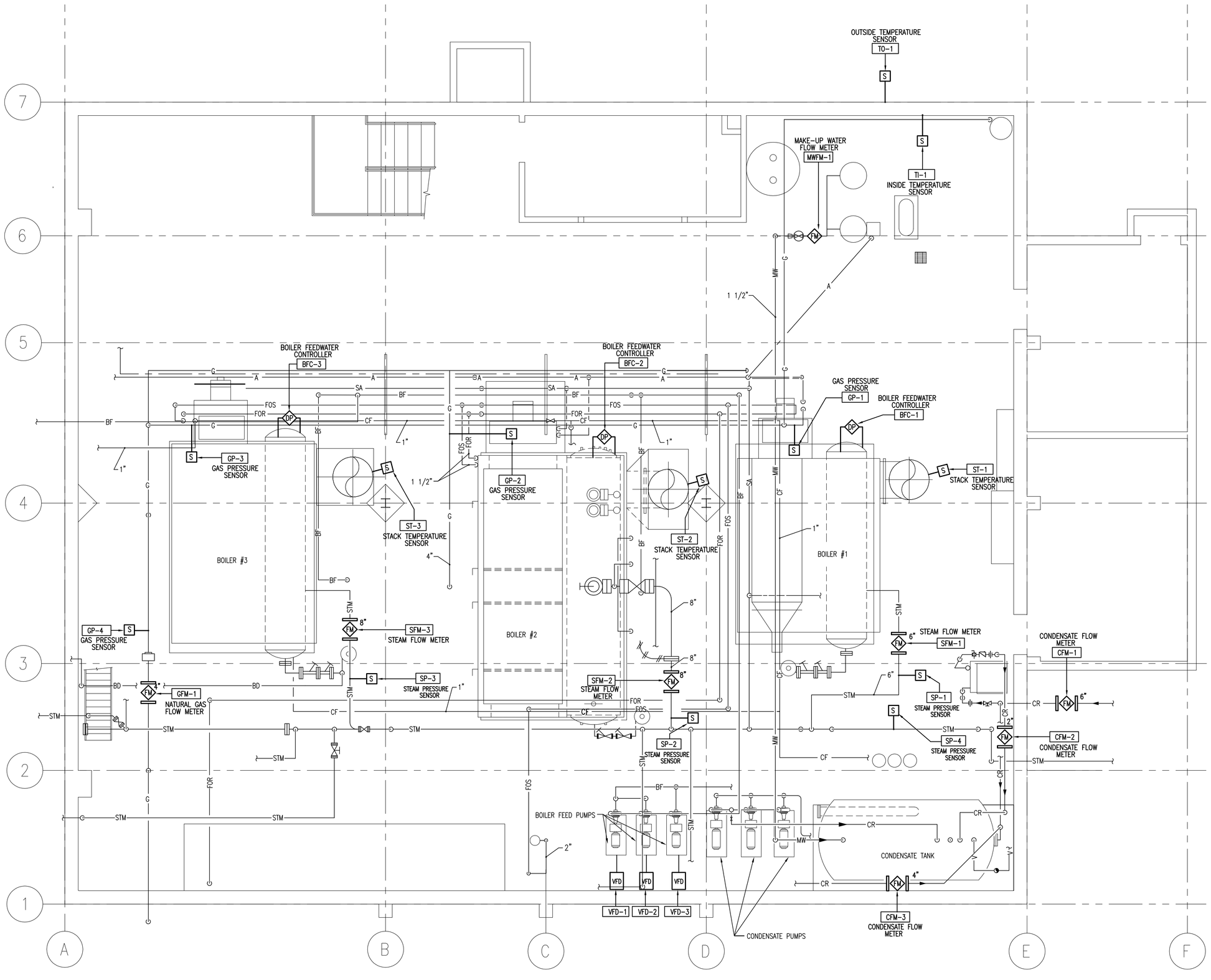

NORTH

M1 BOILER ROOM PLAN

SCALE: 1/4" = 1'-0"

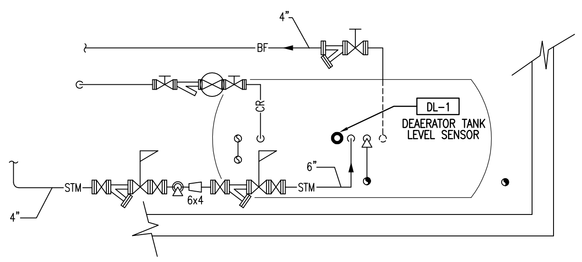

NORTH

M2 UPPER PLATFORM PLAN

SCALE: 1/4" = 1'-0"

General Notes

1. THIS DRAWING SHOWS GENERAL LOCATION OF CONTROL ITEMS. SEE SHEET M-601 FOR DETAILED FLOW DIAGRAM AND CONTROL LEGEND.

State of Utah-Department of Administrative Services

DIVISION OF FACILITIES CONSTRUCTION AND MANAGEMENT

4110 State Office Building/Salt Lake City, Utah 84114/538-3018

CONSULTANTS

Intermountain Consumer Professional Engineers, Inc.
CONSULTING ENGINEERS
1145 E. SOUTH UNION AVE.
MIDVALE, UTAH 84047
BUS. (801) 255-1111 FAX. 566-0088

SOUTHERN UTAH UNIVERSITY

CEDAR CITY, UTAH

BOILER PLANT AUTOMATION AND POWER PLANT METERING SYSTEM

STATE PROPERTY ID. #0206

DFCM PROJECT #05120730

MARK	DATE	DESCRIPTION

ISSUE DATE:	03/09/06
PROJECT NO:	01-116
CAD DWG FILE:	01116_M-101
DRAWN BY:	RDT
CHECKED BY:	CMY

SHEET TITLE

MECHANICAL FLOOR PLAN

M-101

SHEET 4 OF 9

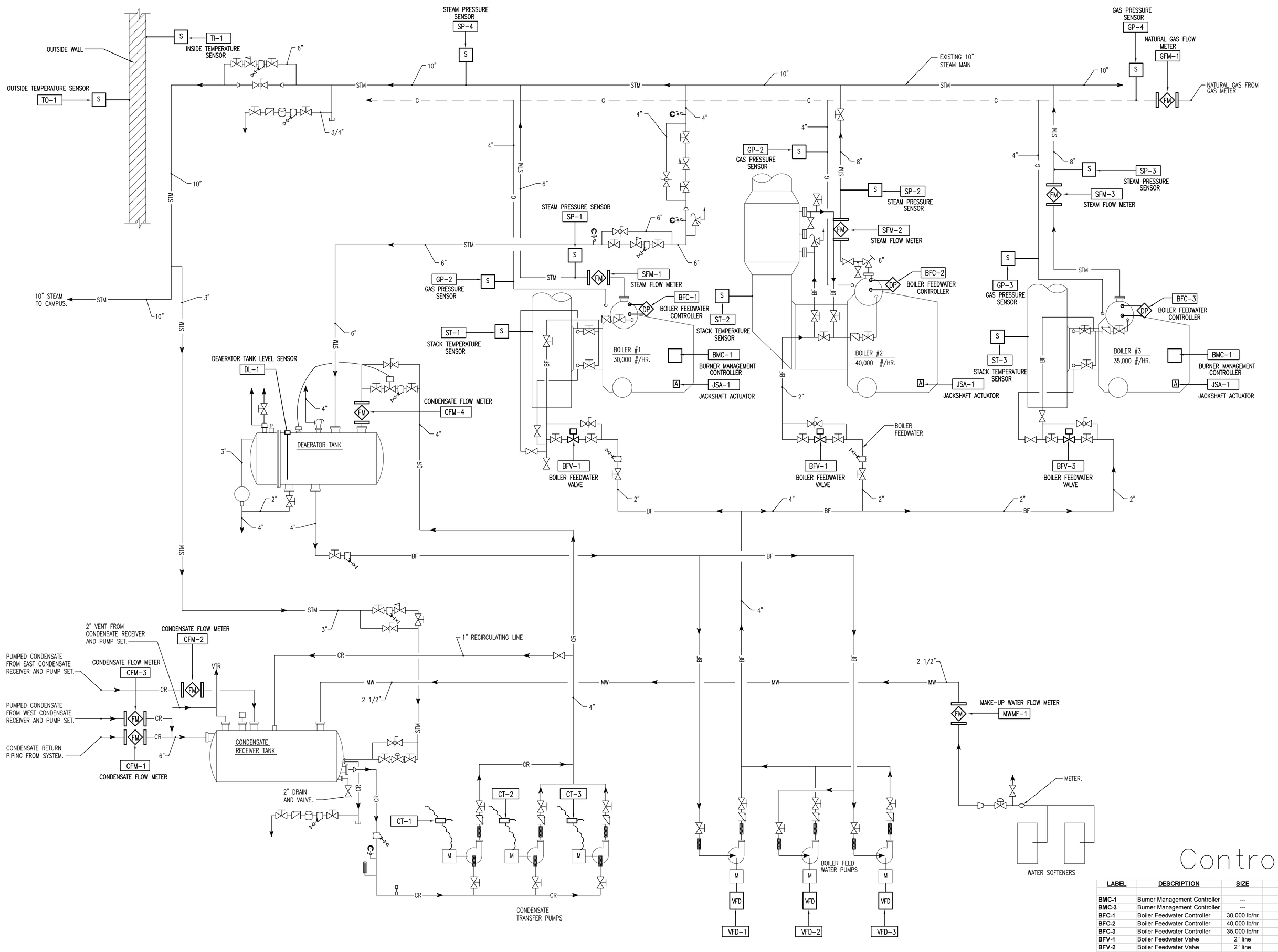

SYSTEM FLOW DIAGRAM

SCALE: NO SCALE

Control Item Legend

LABEL	DESCRIPTION	SIZE	LOCATION	MANUFACTURER & MODEL
BMC-1	Burner Management Controller	---	Boiler #1	Coen - BMS-2000 w/ Allen-Bradley PLC
BMC-3	Burner Management Controller	---	Boiler #3	Coen - BMS-2000 w/ Allen-Bradley PLC
BFC-1	Boiler Feedwater Controller	30,000 lb/hr	Boiler #1	Preferred - PCC III Controller w/ Foxboro Drum DP Transmitter
BFC-2	Boiler Feedwater Controller	40,000 lb/hr	Boiler #2	Preferred - PCC III Controller w/ Foxboro Drum DP Transmitter
BFC-3	Boiler Feedwater Controller	35,000 lb/hr	Boiler #3	Preferred - PCC III Controller w/ Foxboro Drum DP Transmitter
BFV-1	Boiler Feedwater Valve	2" line	Boiler #1	Valtek - Flowserve Mark One Control Valve w/ Positioner
BFV-2	Boiler Feedwater Valve	2" line	Boiler #2	Valtek - Flowserve Mark One Control Valve w/ Positioner
BFV-3	Boiler Feedwater Valve	2" line	Boiler #3	Valtek - Flowserve Mark One Control Valve w/ Positioner
CFM-1	Condensate Flow Meter	6"	system return - east tunnel	GE Infrastructure - UTX878 w/ UTXDR transducer
CFM-2	Condensate Flow Meter	2"	discharge of east condensate pump	GE Infrastructure - UTX878 w/ UTXDR transducer
CFM-3	Condensate Flow Meter	4"	discharge of west condensate pump	GE Infrastructure - UTX878 w/ UTXDR transducer
CFM-4	Condensate Flow Meter	4"	condensate return to DA tank	GE Infrastructure - UTX878 w/ UTXDR transducer
CT-1	Current Transformer	---	condensate transfer pump	Honeywell CT
CT-2	Current Transformer	---	condensate transfer pump	Honeywell CT
CT-3	Current Transformer	---	condensate transfer pump	Honeywell CT
DL-1	Deaerator Tank Level Sensor		Deaerator Tank	Endress + Hauser - FMU-40 Ultrasonic Level Transmitter
GFM-1	Natural Gas Flow Meter	4"	natural gas line near Boiler #3	GE Infrastructure - XGM878 w/ GFA4-04 transducer
GP-1	Gas Pressure Sensor	5 lb	Boiler #1- gas train	Honeywell - PGS100AxxA1A
GP-2	Gas Pressure Sensor	5 lb	Boiler #2- gas train	Honeywell - PGS100AxxA1A
GP-3	Gas Pressure Sensor	5 lb	Boiler #3- gas train	Honeywell - PGS100AxxA1A
GP-4	Gas Pressure Sensor	5 lb	natural gas line near Boiler #3	Honeywell - PGS100AxxA1A
JSA-1	Jackshaft Actuator		Boiler #1	RCS Electronic Actuators
JSA-2	Jackshaft Actuator		Boiler #2	RCS Electronic Actuators
JSA-3	Jackshaft Actuator		Boiler #3	RCS Electronic Actuators
MWFM-1	Make-up Water Flow Meter	*2 1/2"	make-up line off water softeners	GE Infrastructure - UTX878 w/ UTXDR transducer
SFM-1	Steam Flow Meter	6"	Boiler #1 steam header	GE Infrastructure - GS868 w/ Flowcell-A-6" spool
SFM-2	Steam Flow Meter	8"	Boiler #2 steam header	GE Infrastructure - GS868 w/ Flowcell-A-8" spool
SFM-3	Steam Flow Meter	8"	Boiler #3 steam header	GE Infrastructure - GS868 w/ Flowcell-A-8" spool
SP-1	Steam Pressure Sensor	150 psi	Boiler #1 steam header	Honeywell - PGS100AxxA1A
SP-2	Steam Pressure Sensor	150 psi	Boiler #2 steam header	Honeywell - PGS100AxxA1A
SP-3	Steam Pressure Sensor	150 psi	Boiler #3 steam header	Honeywell - PGS100AxxA1A
SP-4	Steam Pressure Sensor	150 psi	main steam header after Boiler #1	Honeywell - PGS100AxxA1A
ST-1	Stack Temperature Sensor	700 deg. F	Boiler #1 stack	Honeywell - TE500H4C21Exx
ST-2	Stack Temperature Sensor	600 deg. F	Boiler #2 stack	Honeywell - TE500H4C21Exx
ST-3	Stack Temperature Sensor	600 deg. F	Boiler #3 stack	Honeywell - TE500H4C21Exx
TI-1	Inside Temperature Sensor	100 deg. F	inside wall near control room	Honeywell - T7770A1006
TO-1	Outside Temperature Sensor	-30 deg. F	outside wall near control room	Honeywell - C7041F200
VFD-1	Variable Frequency Drive	25 hp 208/3	boiler feed pump #1	Honeywell - NXS0250B1009
VFD-2	Variable Frequency Drive	25 hp 208/3	boiler feed pump #2	Honeywell - NXS0250B1009
VFD-3	Variable Frequency Drive	20 hp 208/3	boiler feed pump #3	Honeywell - NXS0200B1000

State of Utah–Department of Administrative Services
DIVISION OF FACILITIES CONSTRUCTION AND MANAGEMENT
4110 State Office Building/Salt Lake City, Utah 84114/538-3018

CONSULTANTS

Intermountain Consumer Professional Engineers, Inc.
CONSULTING ENGINEERS
1145 E. SOUTH UNION AVE.
MIDVALE, UTAH 84047
BUS. (801) 255-1111 FAX. 566-0088

SOUTHERN UTAH UNIVERSITY

CEDAR CITY, UTAH

BOILER PLANT AUTOMATION AND POWER PLANT METERING SYSTEM

STATE PROPERTY ID. #0206

DFCM PROJECT #05120730

MARK	DATE	DESCRIPTION

ISSUE DATE:	03/09/06
PROJECT NO:	01–116
CAD DWG FILE:	01116_M–601
DRAWN BY:	RDT
CHECKED BY:	CMY

SHEET TITLE

MECHANICAL FLOW DIAGRAM

M—601

SHEET 5 OF 9

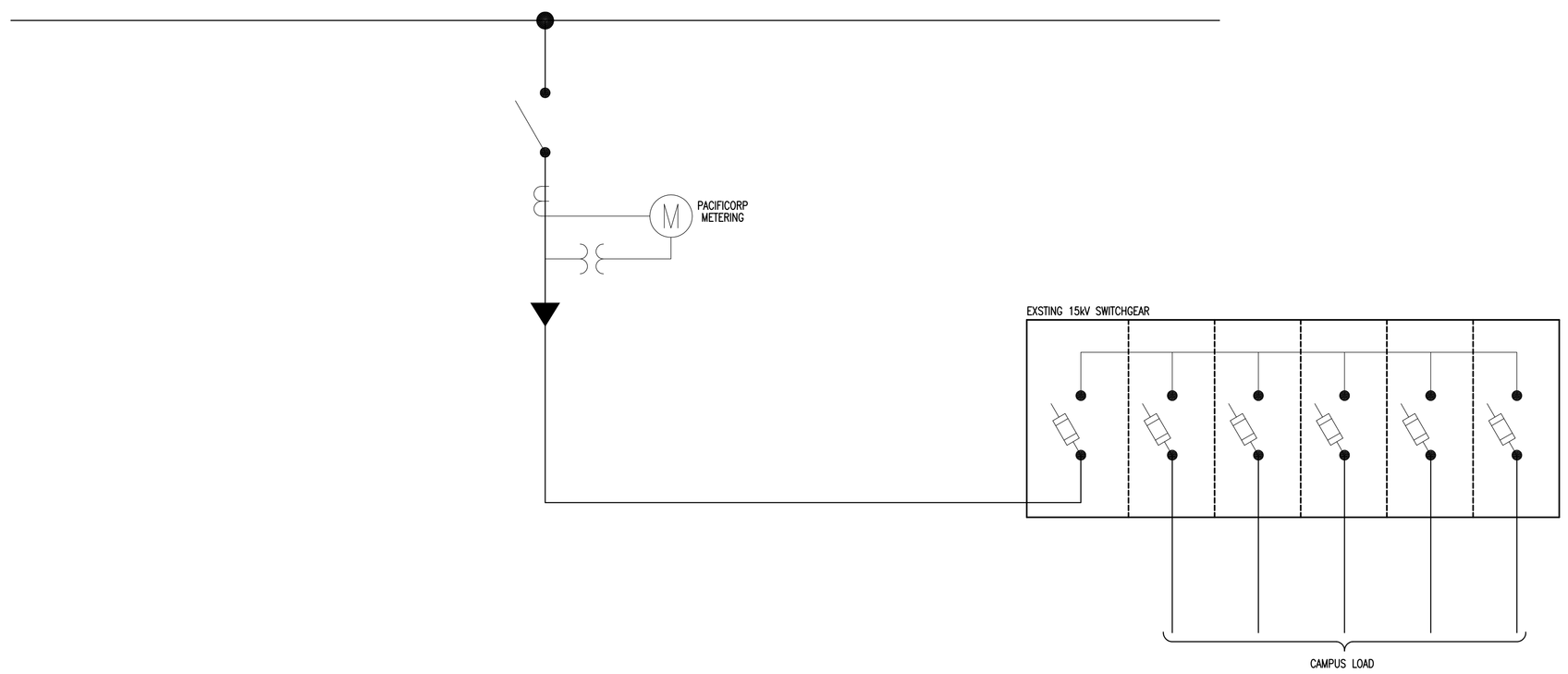

EXISTING SINGLE LINE DIAGRAM

SCALE : NO SCALE

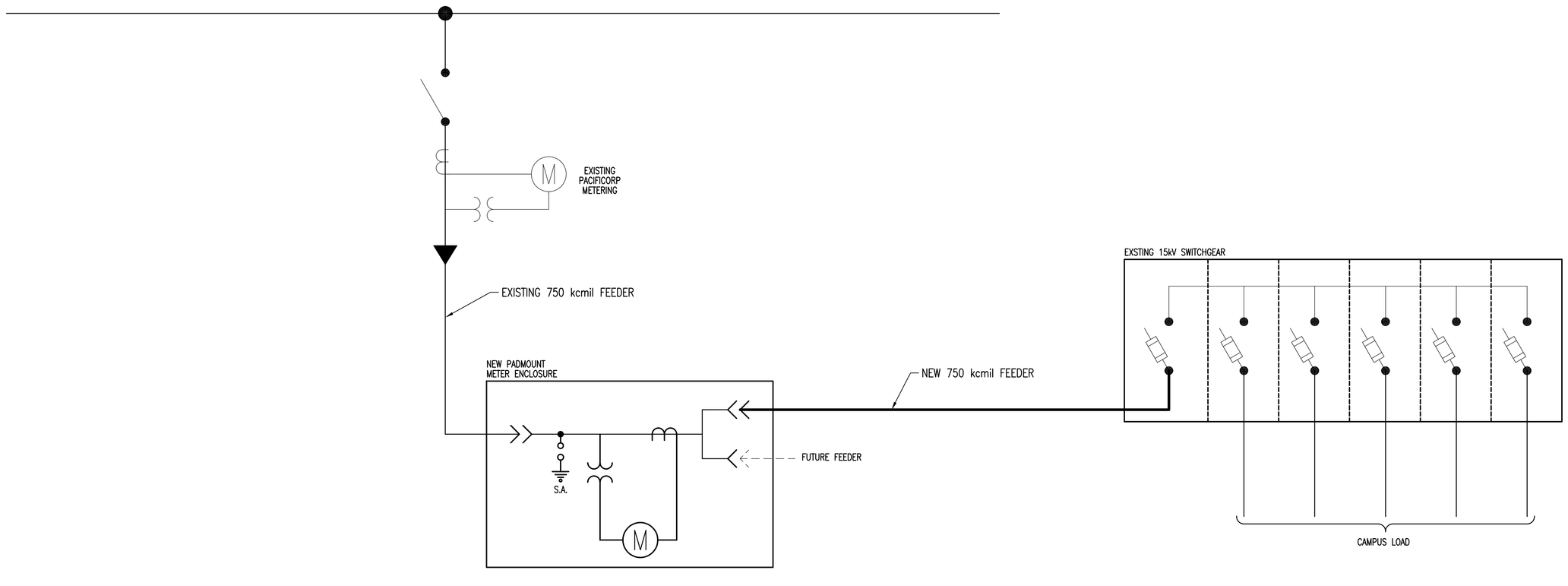

SINGLE LINE DIAGRAM

SCALE : NO SCALE

State of Utah–Department of Administrative Services

DIVISION OF FACILITIES CONSTRUCTION AND MANAGEMENT

4110 State Office Building/Salt Lake City, Utah 84114/538-3018

CONSULTANTS

Intermountain Consumer Professional Engineers, Inc.
CONSULTING ENGINEERS
1145 E. SOUTH UNION AVE.
MIDVALE, UTAH 84047
BUS. (801) 255-1111 FAX. 566-0088

SOUTHERN UTAH UNIVERSITY

CEDAR CITY, UTAH

BOILER PLANT AUTOMATION AND POWER PLANT METERING SYSTEM

STATE PROPERTY ID. #0206

DFCM PROJECT #05120730

MARK	DATE	DESCRIPTION

ISSUE DATE:	03/09/06
PROJECT NO:	05120730
CAD DWG FILE:	01116_E101
DRAWN BY:	KAC
CHECKED BY:	CBM

SHEET TITLE

SINGLE LINE DIAGRAMS

E—101

SHEET 6 OF 9

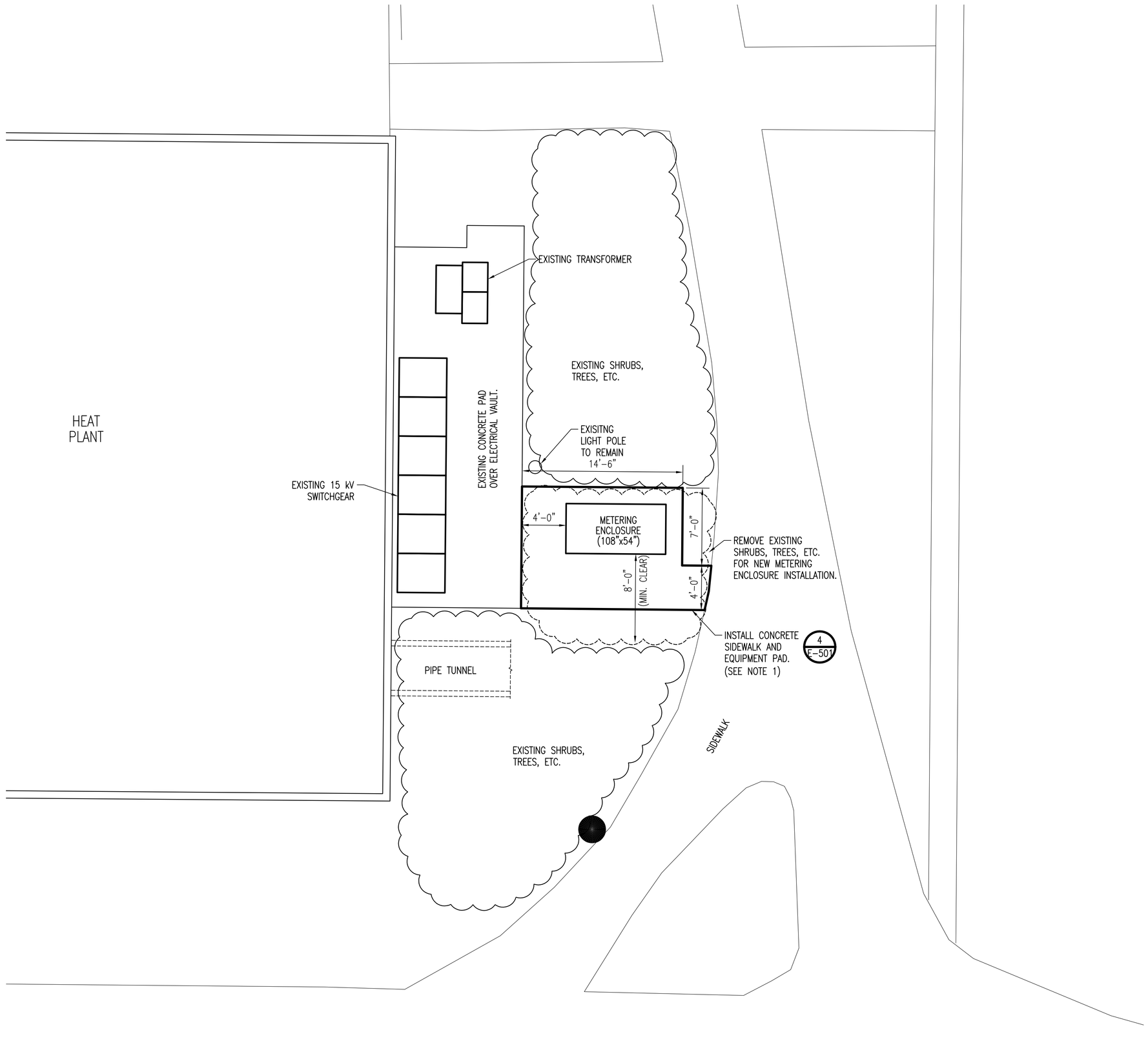

NORTH

E1 **ELECTRICAL SITE PLAN**

SCALE: 1" = 5'-0"

0 2.5' 5.0' 10'

NOTE:

1. DIMENSIONS SHOWN ARE FOR A METERING ENCLOSURE THAT IS 108"x54". CONTRACTOR IS RESPONSIBLE FOR MODIFICATIONS TO DIMENSIONS WHICH ARE A RESULT OF PROVIDING A METER ENCLOSURE WITH DIFFERENT DIMENSIONS.

State of Utah—Department of Administrative Services

DIVISION OF FACILITIES CONSTRUCTION AND MANAGEMENT

4110 State Office Building/Salt Lake City, Utah 84114/538-3018

CONSULTANTS

Intermountain Consumer Professional Engineers, Inc.
CONSULTING ENGINEERS
1145 E. SOUTH UNION AVE.
MIDVALE, UTAH 84047
BUS. (801) 255-1111 FAX. 566-0088

SOUTHERN UTAH UNIVERSITY

CEDAR CITY, UTAH

BOILER PLANT AUTOMATION AND POWER PLANT METERING SYSTEM

STATE PROPERTY ID. #0206

DFCM PROJECT #05120730

MARK	DATE	DESCRIPTION

ISSUE DATE:	02/16/06
PROJECT NO:	05120730
CAD DWG FILE:	01116_E102
DRAWN BY:	KAC
CHECKED BY:	CBM

SHEET TITLE

ELECTRICAL SITE PLAN

E — 102

SHEET 7 OF 9

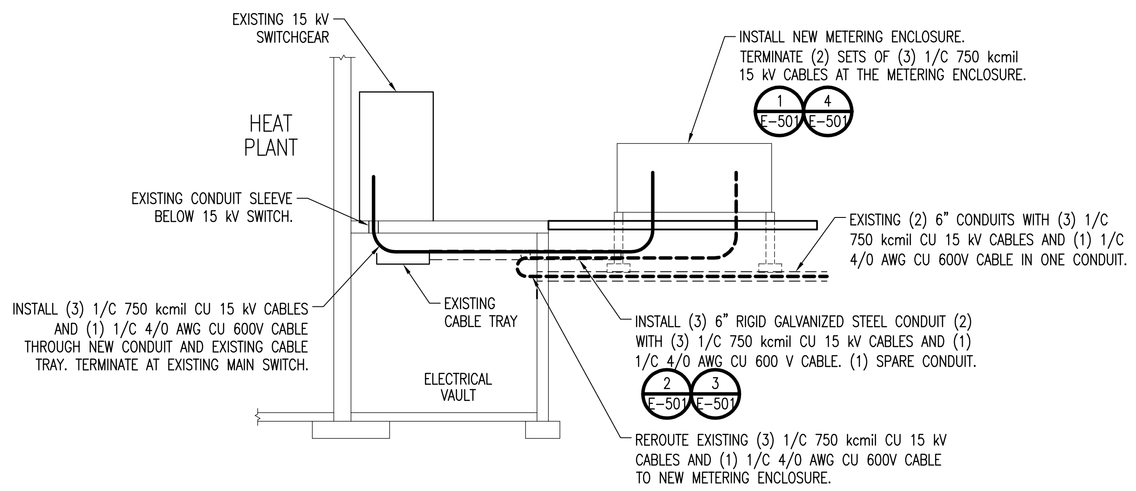

SECTION A –
SCALE: 1"=5'-0"

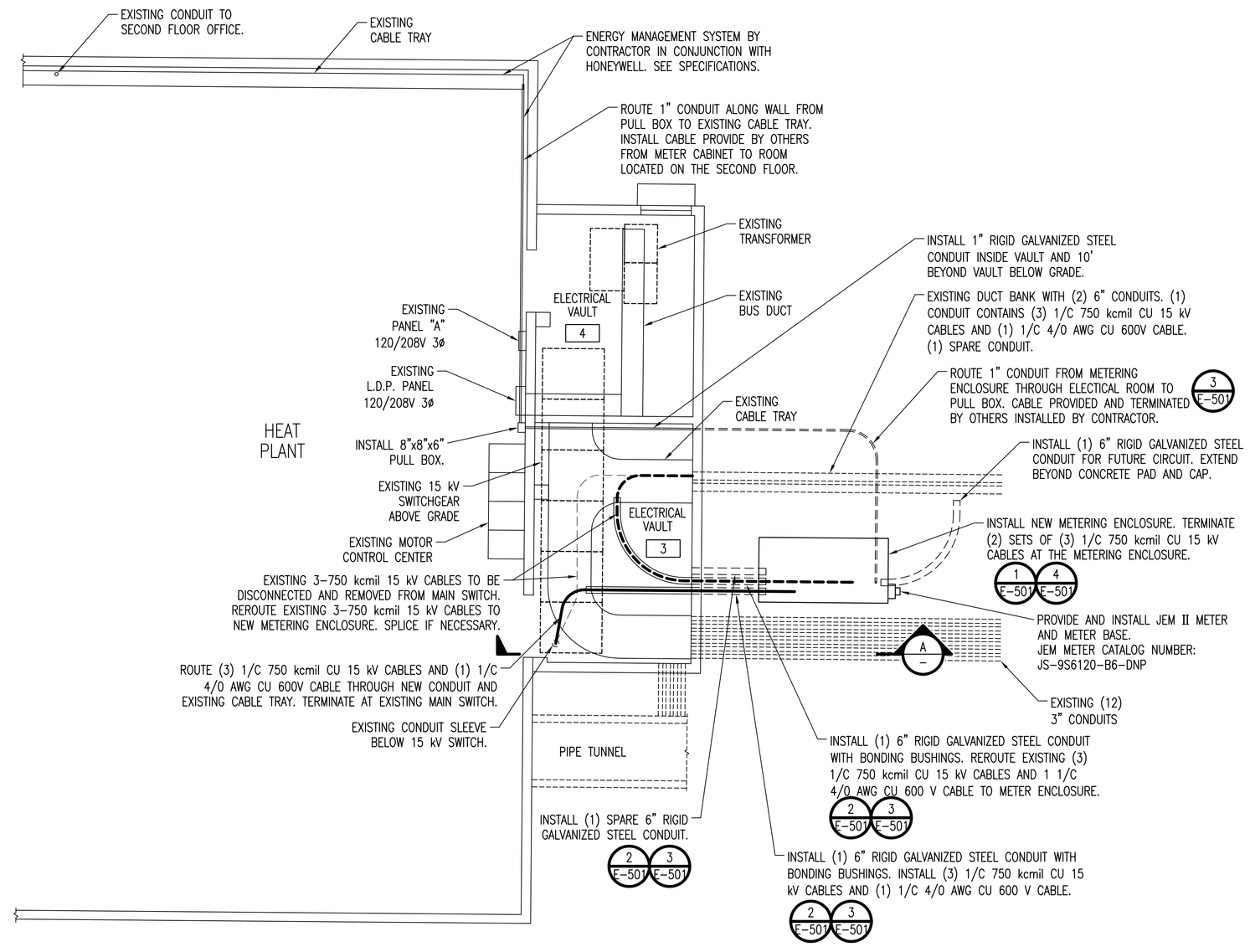

PLAN NORTH

1 ELECTRICAL PLAN
SCALE: 1" = 5'-0"
0 2.5' 5.0' 10'

State of Utah–Department of Administrative Services
DIVISION OF FACILITIES CONSTRUCTION AND MANAGEMENT
4110 State Office Building/Salt Lake City, Utah 84114/538-3018

CONSULTANTS

Intermountain Consumer Professional Engineers, Inc.
CONSULTING ENGINEERS
1145 E. SOUTH UNION AVE.
MIDVALE, UTAH 84047
BUS. (801) 255-1111 FAX. 566-0088

SOUTHERN UTAH UNIVERSITY

CEDAR CITY, UTAH

BOILER PLANT AUTOMATION AND POWER PLANT METERING SYSTEM

STATE PROPERTY ID. #0206
DFCM PROJECT #05120730

MARK	DATE	DESCRIPTION

ISSUE DATE:	03/09/06
PROJECT NO:	05120730
CAD DWG FILE:	01116_E103
DRAWN BY:	KAC
CHECKED BY:	CBM

SHEET TITLE

ELECTRICAL VAULT AND ELECTRICAL ROOM LAYOUT

E—103
SHEET 8 OF 9

BILL OF MATERIAL		
ITEM	QUANTITY	DESCRIPTION
E21	6	600A NON-LOADBREAK ELBOW CONNECTOR 750 CU, 15kV SHEILDED CABLE
G7	AS REQ'D	#1/0 AWG STRANDED BARE COPPER WIRE
G19	2	GROUNDING CONNECTOR, CABLE TO EQUIPMENT
G20	2	10' x 5/8" GROUND ROD
G21	2	GROUND ROD CONNECTOR
I30	9	600A NON-LOADBREAK BUSHING PLUG INSERT
I31	3	600A NON-LOADBREAK INSULATING RECEPTACLE
L20	1	PADLOCK (KEYED AS PER OWNER DIRECTION)
M1	1	METERING CABINET, 3ø, 15kV

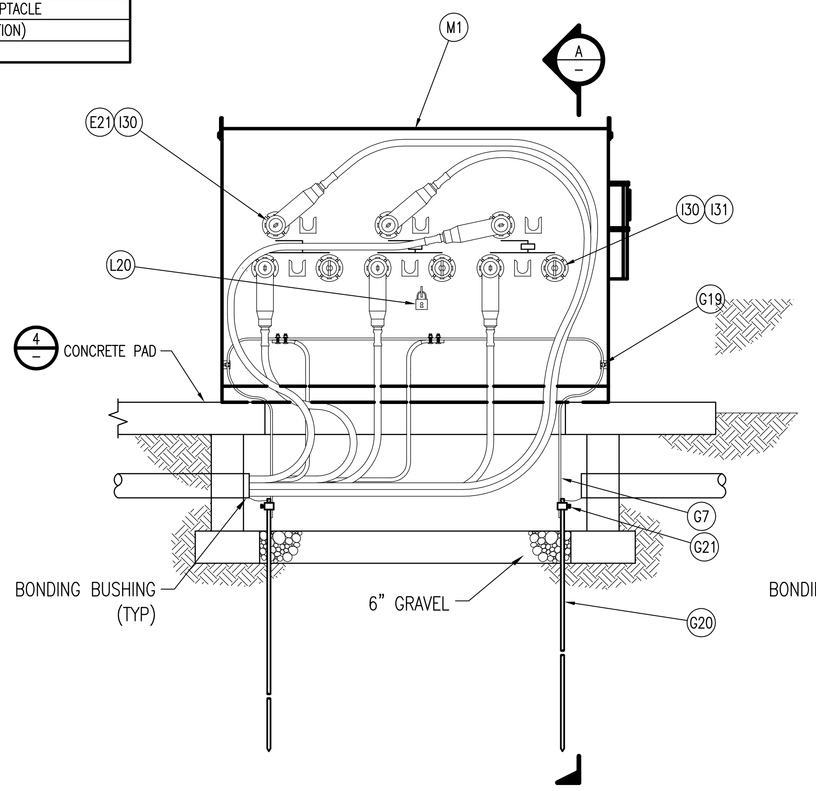

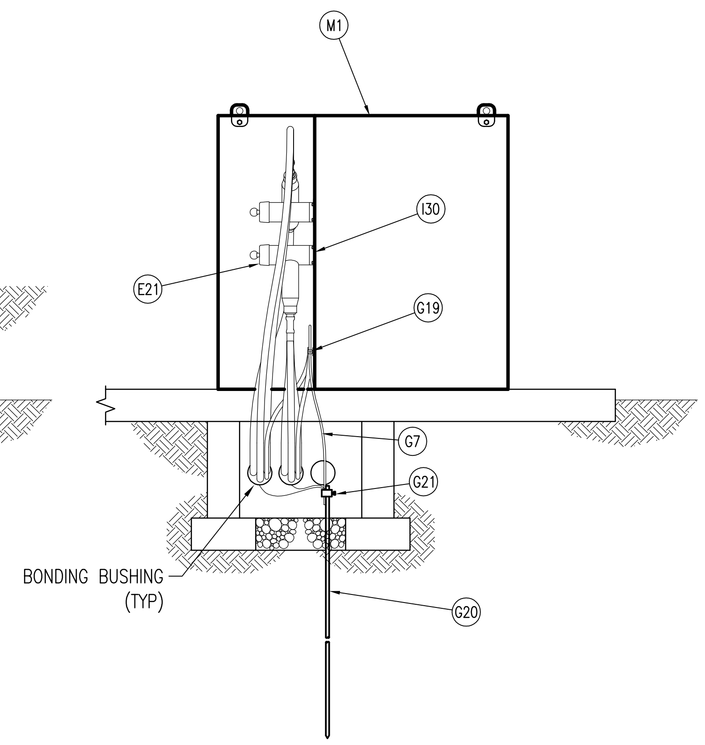

SECTION A
SCALE: 3/4"=1'-0"

METERING CABINET DETAIL 1 E-501
SCALE: 3/4"=1'-0"

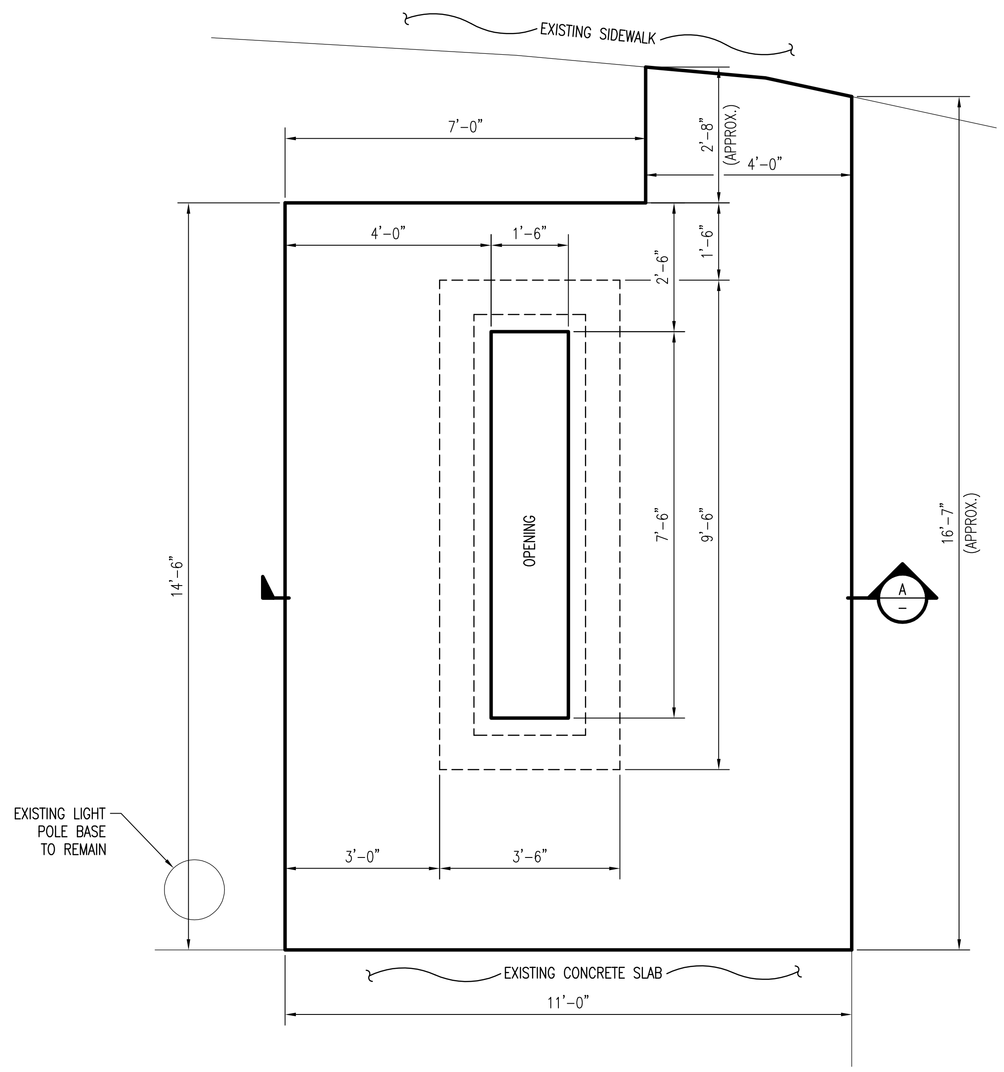

NORTH

PLAN VIEW
SCALE: 1"=1'-0"

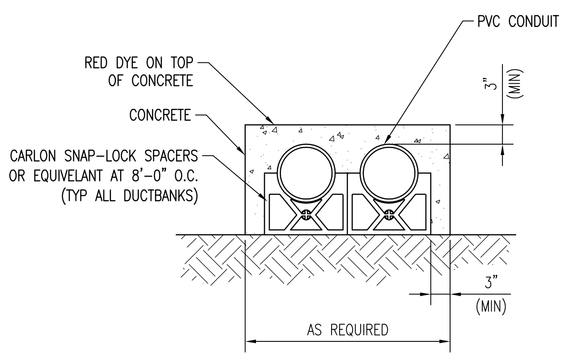

NOTES:

1. CONCRETE TO BE 2500 PSI.
2. CONDUIT IN TRENCH SHOULD BE PROTECTED FROM SUNLIGHT AND HARSH COLD BEFORE POURING CONCRETE.
3. DIMENSIONS SHOWN ARE TYPICAL.
4. CONDUITS INSTALLED UNDER CONCRETE PADS DO NOT REQUIRE CONCRETE ENCASEMENT.

TWO CONCRETE ENCASED CONDUITS DETAIL 2 E-501
SCALE: NTS

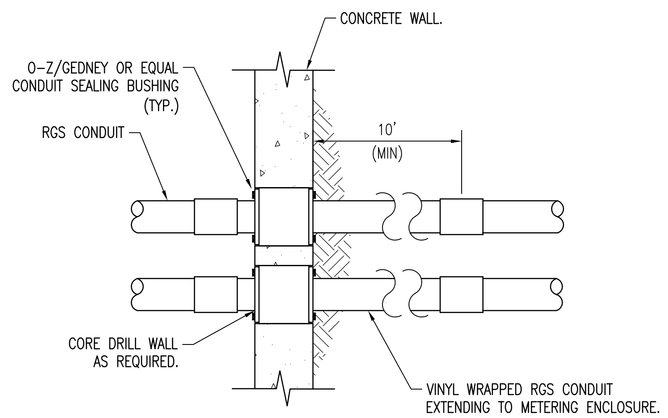

NOTES:

1. QUANTITY OF CONDUITS VARIES. SEE DRAWINGS FOR QUANTITY AND SIZE OF CONDUITS.
2. SEAL WALL AROUND ALL CONDUITS USING SEALING BUSHINGS.

CONCRETE WALL CONDUIT PENETRATION DETAIL 3 E-501
SCALE: NTS

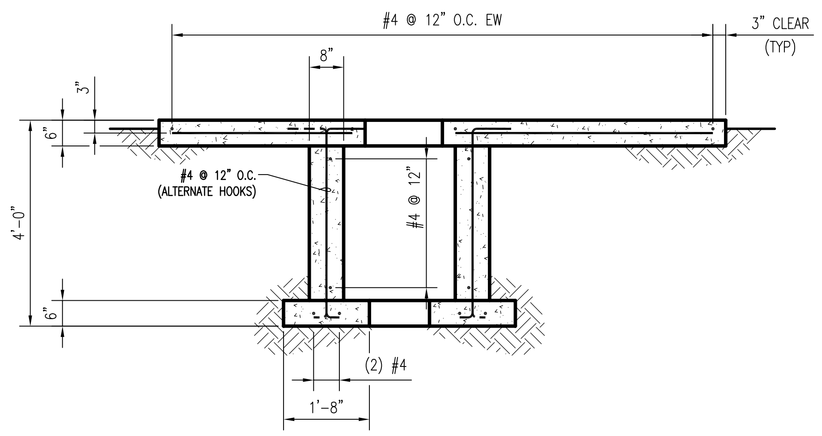

SECTION A
SCALE: 1"=1'-0"

NOTE:

1. DIMENSIONS SHOWN ARE FOR A METERING ENCLOSURE THAT IS 108"x54". CONTRACTOR IS RESPONSIBLE FOR MODIFICATIONS TO DIMENSIONS WHICH ARE A RESULT OF PROVIDING A METER ENCLOSURE WITH DIFFERENT DIMENSIONS.

CONCRETE PAD DETAIL 4 E-501
SCALE: AS NOTED

State of Utah–Department of Administrative Services

DIVISION OF FACILITIES CONSTRUCTION AND MANAGEMENT
4110 State Office Building/Salt Lake City, Utah 84114/538-3018

CONSULTANTS

Intermountain Consumer Professional Engineers, Inc.
CONSULTING ENGINEERS
1145 E. SOUTH UNION AVE.
MIDVALE, UTAH 84047
BUS. (801) 255-1111 FAX. 566-0088

SOUTHERN UTAH UNIVERSITY

CEDAR CITY, UTAH

BOILER PLANT AUTOMATION AND POWER PLANT METERING SYSTEM

STATE PROPERTY ID. #0206
DFCM PROJECT #05120730

MARK	DATE	DESCRIPTION

ISSUE DATE:	03/09/06
PROJECT NO:	05120730
CAD DWG FILE:	01116_E501
DRAWN BY:	KAC
CHECKED BY:	CBM

SHEET TITLE

CONSTRUCTION DETAILS

E-501

SHEET 9 OF 9