snow college
activities center
dance studio addition | remodel
ephraim, utah

Architect
GouldEvans
1000 South Main St., Suite 100
Salt Lake City, Ut 84101
801 . 532 . 6100
Fax 801 . 532 . 6102

Civil
Larsen & Malmquist, Inc.
1574 West 1700 South, Suite 2D
Salt Lake City, Utah 84104
801 . 972 . 2634
Fax 801 . 972 . 2698

Structural
Reaveley Engineers & Associates Inc.
1515 South 1100 East
Salt Lake City, Utah 84105
801 . 486 . 3883
Fax 801 . 485 . 0911

Mechanical
WHW Engineering Inc.
1354 East 3300 South, Suite 200
Salt Lake City, Utah 84106
801 . 466 . 4021
Fax 801 . 466 . 8536

Electrical
BNA Consulting Engineers II
635 South State Street
Salt Lake City, Utah 84111
801 . 532 . 2196
Fax 801 . 532 . 2305

GouldEvans

©2002 Gould Evans Associates, L.C.

1000 South Main Street • Suite 100
Salt Lake City, Utah 84101
Voice 801.532.6100
Fax 801.532.6102
www.gouldevans.com

kansas city • lawrence • phoenix
salt lake city • san antonio • tampa

DFCM PROJECT NO: 05266700
STATE PROPERTY ID: 01791
RISK MANAGEMENT NO:
CAD PROJECT NO:
CAD DWG FILE:
DRAWN BY:
CHECKED BY:
COPYRIGHT: STATE OF UTAH

snow college
activities center
dance studio addition | remodel
ephraim, utah

REVISION DATE

Project no: 0906-0260
Date: July 21, 2006
Sheet:

Cover Sheet
GI001

100% Construction Documents

CODE ANALYSIS

APPLICABLE CODES

Code	Year	Code	Year
International Building Code	2003	National Electrical Code	2005
International Mechanical Code	2003	Uniform Code for Building Conservation	1997
International Plumbing Code	2003	ADA Accessibility Guildelines	2002
International Fire Code	2003		
International Energy Conservation Code	2003		

A. Occupancy and Group: ASSEMBLY GROUP A4

Change in Use: Yes ______ No X Mixed Occupancy: Yes ______ No X

Special Use and Occupancy (e.g. High Rise, Covered Mall): N/A

B. Seismic Design Category: D Design Wind Speed: 90 mph

C. Type of Construction (circle one):

I/A I/B II/A (II/B circled) III/A III/B IV/HT V/A V/B

D. Fire Resistance Rating Requirements for the Exterior Walls based on the fire separation distance (in hours):

North: 0 South: 0 East: 0 West: 0

E. Mixed Occupancies: NO Nonseparated Uses: NO

F: Sprinklers:

Required: YES Provided: YES Type of Sprinkler System: Wet-pipe w/ automatic smoke/heat detection amd fire alarm

G: Number of Stories: 1 Building Height: 42'

H: Actual Area per Floor (square feet): Existing: 78,583; New: 4,530

I: Tabular Area: Existing: 78,583; New: 4,530; Total 83,113

J: Area Modifications:

a) $A_a = A_t + \left[\frac{A_t I_f}{100}\right] + \left[\frac{A_t I_s}{100}\right]$ $I_f = 100\left[\frac{F}{P} - 0.25\right]\frac{W}{30}$

Unlimited building area per section 507.2. No area modification calculations required

b) Sum of the Ratio Calculations for Mixed Occupancies:

$\frac{\text{Actual Area}}{\text{Allowable Area}} \leq 1$

c) Total Allowable Area for:

1) One Story: ______

2) Two Story: A_a(2)______

3) Three Story: A_a(3)______

d) Unlimited Area Building: Yes X No ______ Code Section: 507.2

K. Fire Resistance Rating Requirements for Building Elements (hours).

Element	Hours	Assembly Listing	Element	Hours	Assembly Listing
Exterior Bearing Walls	0		Floors - Ceiling Floors	0	
Interior Bearing Walls	0		Roofs - Ceiling Roofs	0	
Exterior Non-Bearing Walls	0		Exterior Doors and Windows	0	
Structural Frame	0		Shaft Enclosures	0	
Partitions - Permanent	0		Fire Walls	0	
Fire Barriers	0		Fire Partitions	0	
			Smoke Partitions	0	

L. Design Occupant Load: 85

Exit Width Required: 12.75" Exit Width Provided: 108"

THE FOLLOWING NUMBERS REFLECT THE PLUMBING FIXTURE REQUIREMENTS FOR BOTH PHASES OF THE BUILDING ADDITION. REQUIREMENTS FOR WATER CLOSETS, LAVATORIES, DRINKING FOUNTAINS & SERVICE SINKS WERE SATISFIED IN PHASE I OF CONSTRUCTION FOR BOTH PHASE I AND II. HOWEVER, BEYOND THE REQUIRED FIXTURES, ONE ADDITIONAL UNISEX RESTROOM AND TWO DRINKING FOUNTAINS ARE BEING PROVIDED IN PHASE II AS OUTLINED IN THESE DRAWINGS.

M. Minimum Number of Required Plumbing Facilities:

a) Water Closets - Required (m) 3 (f) 3 Provided (m) 3 (f) 3

b) Lavatories - Required (m) 3 (f) 3 Provided (m) 3 (f) 3

c) Bath Tubs or Showers: 0

d) Drinking Fountains: 6 Service Sinks: 1

FOOTNOTES:

1) In case of conflict with the U.S. Department of Justice Federal Registers Parts I through V - ADA Guidelines and specific reference to the International Building Code Accessibility Chapters, the more restrictive requirement shall govern.

2) Additional Code Information shall be provided at the discretion of the Building Official for Complex Buildings. Including, but not limited to:

a) High Rise Requirements.
b) Atriums.
c) Performance Based Criteria.
d) Means or Egress Analysis.
e) Fire Assembly Locator Sheet.
f) Exterior and Interior Accessibility Route.
g) Fire Stopping, Including Tested Design Number.

Drawing Symbols

BUILDING SECTION MARK 1/A101
WALL SECTION MARK 1/A101
ELEVATION MARK 1/A101
DETAIL REFERENCE MARK 1/A101
PLAN REFERENCE MARK 1/A101
DOOR MARK — DOOR TYPE, FRAME TYPE, ROOM NO., HARDWARE GROUP (A 1 / 201/1 / 5)
WINDOW MARK (A)
ROOM TITLE — CLASSROOM 100
MATCH LINE — 1/A101 1/A102
PLAN NOTE (1)
DEMOLITION NOTE (1)
ELEVATION DATUM — 100'-0" T.O.STEEL
WALL PARTITION TYPE (A)
REVISION MARK & CLOUD (1)
NORTH ARROW — NORTH
CEILING TAG — 100 9'-6" ACT.-2

Materials Legend

GYPSUM BOARD
CMU WALL
CONCRETE
STEEL
RIGID INSULATION
BATT INSULATION
SOIL
GRAVEL
PLYWOOD
WOOD BLOCKING
HARD WOOD
ROOF INSULATION
FACE BRICK
ACOUSTICAL CEILING
EXISTING WALL
STUD WALL
PROTECTION BOARD
FABRIC

Abbreviations

A.C.	ARCHITECTURAL CONCRETE
A.F.F.	ABOVE FINISH FLOOR
ALT.	ALTERNATE
BLKG.	BLOCKING
BM.	BEAM
BND.	BEYOND
BD.	BOARD
B.O.	BOTTOM OF
C.C.	CENTER TO CENTER
CMU.	CONCRETE MASONRY UNIT
CONC.	CONCRETE
D.F.	DRINKING FOUNTAIN
DIM.	DIMENSION
D.S.	DOWNSPOUT
ELEV.	ELEVATION
EQ.	EQUAL
EXIST.	EXISTING
F.D.	FLOOR DRAIN
F.E.	FIRE EXTINGUISHER
F.E.C.	FIRE EXTINGUISHER CABINET
FIN.	FINISH
FLUOR.	FLUORESCENT
FLR.	FLOOR
FNDN.	FOUNDATION
F.O.W.	FACE OF WALL (EXISTING)
F.S.	FLOOR SINK
F.V.	FIELD VERIFY
GA.	GAUGE
GALV.	GALVANIZED
GR.	GROMMET
GYP. BD.	GYPSUM BOARD
HCF.	HANDICAP ACCESSIBLE FOUNTAIN
HT.	HEIGHT
H.M.	HOLLOW METAL
I.D.	INSIDE DIAMETER
JT.	JOINT
LAV.	LAVATORY
M.B.	MARKER BOARD
MFGD.	MANUFACTURED
MFGR.	MANUFACTURER
MTD.	MOUNTED
MTL.	METAL
N.I.C.	NOT IN CONTRACT
N.T.S.	NOT TO SCALE
O.C.	ON CENTER
O.D.	OUTSIDE DIAMETER
OFD.	OVERFLOW DRAIN
OPG.	OPENING
OPP.	OPPOSITE
PLAS. LAM.	PLASTIC LAMINATE
PLYWD.	PLYWOOD
PT.	PAPER TOWEL
Q.T.	QUARRY TILE
REV.	REVERSE
RD.	ROOF DRAIN
R.I.	ROUGH IN
R.I.C.	ROUGH IN AND CONNECT
SHT.	SHEET
SIM.	SIMILAR
SPEC.	SPECIFICATIONS
STL.	STEEL
STRUCT.	STRUCTURAL
SUSP.	SUSPENDED
TB.	TACK BOARD
T.O.	TOP OF
TYP.	TYPICAL
U.L.	UNDERWRITERS LABORATORIES
U.N.O.	UNLESS NOTED OTHERWISE
WC.	WATER CLOSET
W.P.	WORKING POINT
W/	WITH

General Notes:

1. WE CERTIFY THAT TO THE BEST OF OUR KNOWLEDGE AND INFORMATION, WE HAVE COMPLIED WITH APPLICABLE PORTIONS OF ANSI A117.1. 1998 EDITION AND THE UTAH STATE LAW PERTAINING TO BUILDING ACCESSIBILITY FOR THE PHYSICALLY HANDICAPPED (ARS34-401 THROUGH 34-411), IBC CHAPTER 11, ON ACCESSIBILITY, 1988 UNIFORM FEDERAL ACCESSIBILITY STANDARDS (UFAS) AND 1990 AMERICANS WITH DISABILITIES ACT (ADA) TITLE III ACCESSIBILITY GUIDELINES FOR BUILDING AND FACILITIES.

2. ALL DIMENSIONS ARE TO THE FACE OF FINISH AT FRAME WALLS AND TO THE FACE OF CONCRETE AND MASONRY WALLS AS SHOWN, UNLESS NOTED OTHERWISE.

3. INSTALL SEALANT AT EXTERIOR SIDE OF ALL JOINTS, SEAMS, CONNECTIONS OR OPENINGS WHICH WOULD ALLOW WATER OR AIR INFILTRATION EXCEPT AS NOTED OTHERWISE. SEALANT COLOR TO MATCH ADJACENT SURFACE. COLOR REQUIRES ARCHITECTS APPROVAL.

4. DOOR OPENINGS IN FRAME CONSTRUCTION WHICH ARE NOT DIMENSIONED ARE EITHER CENTERED IN THE WALL, FACE OF JAMB OR LOCATED 4" FROM THE FACE OF STUD TO THE FINISHED JAMB. IF THE FLOOR PLANS APPEAR TO BE A GREATER OR SMALLER DIMENSION THAN THIS, BRING THIS TO THE ATTENTION OF THE ARCHITECT FOR CLARIFICATION.

5. ALL SPECIAL ACCESSIBLE FACILITIES SHALL BE IDENTIFIED WITH APPROVED SIGNAGE.

6. THE CONTRACTOR IS RESPONSIBLE FOR PRODUCING A WEATHER TIGHT BUILDING, DETAILS AND OMISSIONS TO DRAWINGS NOTWITHSTANDING. ALL DRAWING CONFLICTS WHICH MAY NOT ALLOW A WEATHERTIGHT CONDITION SHALL BE BROUGHT TO THE ATTENTION OF THE ARCHITECT.

7. DISCREPANCIES BETWEEN ACTUAL CONDITIONS AND PLANS SHALL BE BROUGHT TO THE ATTENTION OF THE ARCHITECT. CONTRACTOR SHALL SUBMIT SPECIFIC DISCREPANCIES FOR ARCHITECT REVIEW.

8. LOCATION OF EXISTING UTILITIES ARE SHOWN TO THE BEST OF OUR KNOWLEDGE. CONTRACTOR TO REVIEW ALL OWNER DOCUMENTS AND FAMILIARIZE HIMSELF WITH ALL EXISTING UTILITIES. CONTRACTOR SHALL HAVE THE RESPONSIBILITY OF VERIFYING IN THE FIELD (BY EMPLOYING PRIVATE FIELD UTILITY LOCATING SERVICES BEFORE CONSTRUCTION STARTS) AND FOR COORDINATING ALL NEW UTILITY LOCATIONS, CONNECTIONS, AND PENETRATIONS.

9. ALL REQUIRED EXITS SHALL BE OPERABLE FROM THE INSIDE WITHOUT SPECIAL KNOWLEDGE OR THE USE OF A KEY.

10. PROVIDE FULL METAL BACKING PLATE (16 GAUGE X 6" HIGH SECURED TO 3 STUDS MIN.) AS REQUIRED TO SECURELY ANCHOR ALL WALL MOUNTED EQUIPMENT (CABINETS, TOILET ROOM ACCESSORIES, HARDWARE, ETC.). BLOCKING SHALL PROVIDE A RIGID CONNECTION CAPABLE OF SUPPORTING DESIGN LOADS. PROVIDE A 16 GAUGE X 6" STL. STUD/TRACK SECURED TO 2 STUDS TO SECURELY SUPPORT ALL WALL STOPS (DOOR BUMPER).

11. THE GENERAL CONTRACTOR SHALL VERIFY AND COORDINATE WITH ALL TRADES, SIZES AND LOCATIONS OF ALL OPENINGS FOR MECHANICAL, PLUMBING AND ELECTRICAL EQUIPMENT, EQUIPMENT PADS OR BASES, AS WELL AS ELECTRIC POWER, WATER, AND DRAIN INSTALLATIONS, BEFORE PROCEEDING WITH WORK. CONTRACTOR SHALL PROVIDE COORDINATION DRAWINGS FOR PROPER PLACEMENT OF ALL TRADES' WORK. ANY CONCERNS, SPACE LIMITATIONS OR STRUCTURAL CONFLICTS, SHALL BE BROUGHT TO THE ATTENTION OF THE ARCHITECT. A REASONABLE RESPONSE TIME SHALL BE ALLOWED AS NOTED IN THE SPECIFICATIONS.

12. ALL FLOOR OR WALL OPENINGS REQUIRED FOR PIPES, DUCTS, CONDUITS,ETC. SHALL BE SEALED IN AN APPROVED MANNER.

13. ALL FIRE SPRINKLER WORK WILL REQUIRE APPROVALS BY THE CITY AND STATE FIRE MARSHAL. APPROVALS BY THE FIRE MARSHAL ARE TO BE OBTAINED BY THE CONTRACTOR PRIOR TO SUBMITTAL TO ARCHITECT. SUBMITTAL TO THE ARCHITECT ALSO INDICATES THAT THE CONTRACTOR HAS REVIEWED AND COORDINATED FIRE-SPRINKLER PIPING LOCATIONS WITH ALL TRADES.

14. ROOMS ENCLOSED WITH RATED WALLS REQUIRE RATED DOORS. ANY DUCTS PASSING THROUGH WALLS REQUIRE FIRE DAMPERS AND OR FIRE/ SMOKE DAMPERS. ANY CONDUIT OR PIPING REQUIRES RATED SEALANT AT JOINTS.

15. GENERAL STRUCTURAL NOTES GOVERN TYPICAL CONDITIONS WHETHER OR NOT SPECIFICALLY DETAILED OR NOTED.

16. CONTROL JOINTS SHALL BE PROVIDED IN CONCRETE FLOOR SLABS AND MASONRY WALLS WHETHER OR NOT SPECIFICALLY REFERENCED ON PLANS. THE MAXIMUM AREA PERMITTED BETWEEN JOINTS SHALL BE 650 SQUARE FEET FOR REINFORCED CONCRETE SLABS, 250 SQUARE FEET FOR NON-REINFORCED SLABS AND 24 LINEAL FEET FOR MASONRY UNLESS SHOWN OTHERWISE.

17. IT IS THE CONTRACTOR'S RESPONSIBILITY TO COORDINATE AND LOCATE ELECTRICAL, DATA AND PHONE RECEPTACLES, SWITCHES, ETC. TO AVOID CASEWORK, DOORS, ETC.

18. THE DRAWINGS AND SPECIFICATIONS INDICATE THE GENERAL SCOPE OF THE PROJECT IN TERMS OF THE ARCHITECTURAL AND STRUCTURAL DESIGN CONCEPT. THE DIMENSIONS OF THE BUILDING, THE TYPE OF STRUCTURAL, MECHANICAL, ELECTICAL AND UTILITY SYSTEMS AND MAJOR ARCHITECTURAL ELEMENTS OF CONSTRUCTION AS "SCOPE" DOCUMENTS.
THE DRAWINGS AND SPECIFICATIONS DO NOT NECESSARILY INDICATE OR DESCRIBE ALL WORK REQUIRED FOR THE FULL PERFORMANCE AND COMPLETION OF THE WORK. CONTRACTS SHALL BE LET ON THE BASIS OF SUCH DOCUMENTS, WITH THE UNDERSTANDING THAT THE CONTRACTOR IS TO FURNISH ALL ITEMS REQUIRED FOR PROPER COMPLETION OF THE WORK WITH OUT ADJUSTMENT TO CONTRACT PRICE. IT IS INTENDED THAT THE WORK TO BE OF SOUND AND QUALITY CONSTRUCTION AND THE CONTRACTOR SHALL BE SOLELY RESPONSIBLE FOR THE INCLUSION OF ADEQUATE AMOUNTS TO COVER INSTALLATION OF ALL ITEMS INDICATED, DESCRIBED OR REASONABLY IMPLIED.

Site Locator Map

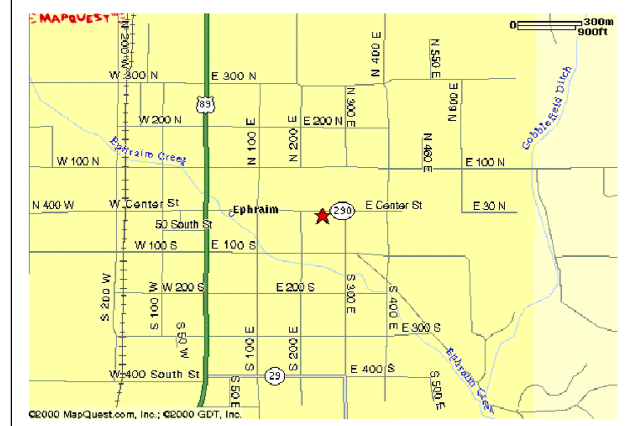

Index Of Drawings

GENERAL INFORMATION:

GI001 Cover Sheet
GI002 Code Plan and Project Information

CIVIL:

C-1 Utility and Paving Plan
C-2 Grading and Drainage Plan
C-3 Demolition Plan

ARCHITECTURAL:

AS101 Architectural Site Plan
AS110 Enlarged Site Plans and Site Details
AS111 Enlarged Site Plans and Site Details
AS112 Architectural Planting Plan
AD101 Demolition Plan
AK101 Edge of Foundation Plan
AE101 Floor Plan
AE105 Roof Plan
AE110 Reflected Ceiling Plan
AE201 Exterior Elevations
AE210 Interior Elevations
AE211 Interior Elevations
AE301 Building Sections
AE310 Wall Sections
AE311 Wall Sections
AE312 Wall Sections
AE313 Wall Sections
AE314 Wall Sections
AE315 Wall Sections
AE316 Wall Sections
AE501 Wall Types
AE502 Details
AE503 Details
AE504 Details
AE601 Door Schedule, Door/Frame Types, Window Types
AE602 Finish Schedule
AE610 Finish Plan

STRUCTURAL:

SE001 General Structural Notes
SE002 General Structural Notes
SB101 Footing & Foundation Plan
SB501 Footing & Foundation Details
SB502 Footing & Foundation Details
SB601 Structural Schedules
SF101 Roof Framing Plan
SF201 Wall Elevation
SF501 Roof Framing Details
SF502 Roof Framing Details
SF503 Roof Framing Details
SF601 Structural Schedules

MECHANICAL:

M001 Mechanical General Notes and Legend
MD101 Mech. Demo. Floor Plan
ME101 Mechanical Floor Plan
ME401 Large Scale Mechanical Floor Plans
ME501 Mechanical Details
ME502 Mechanical Details
ME503 Mechanical Details
ME601 Mechanical Schedules

PLUMBING:

P001 Plumb. General Notes & Legend
PD101 Plumbing Demolition Floor Plan
PE101 Plumbing Floor Plan
PE102 Plumbing Roof Plan
PE501 Plumbing Details and Schedules

ELECTRICAL:

EG001 Symbols, Schedules and Notes
ES001 Electrical Site Plan
EL101 Lighting Floor Plan
EP101 Power Floor Plan
EX500 Electrical Details
EX600 Panel Schedules and One-Line Diagram

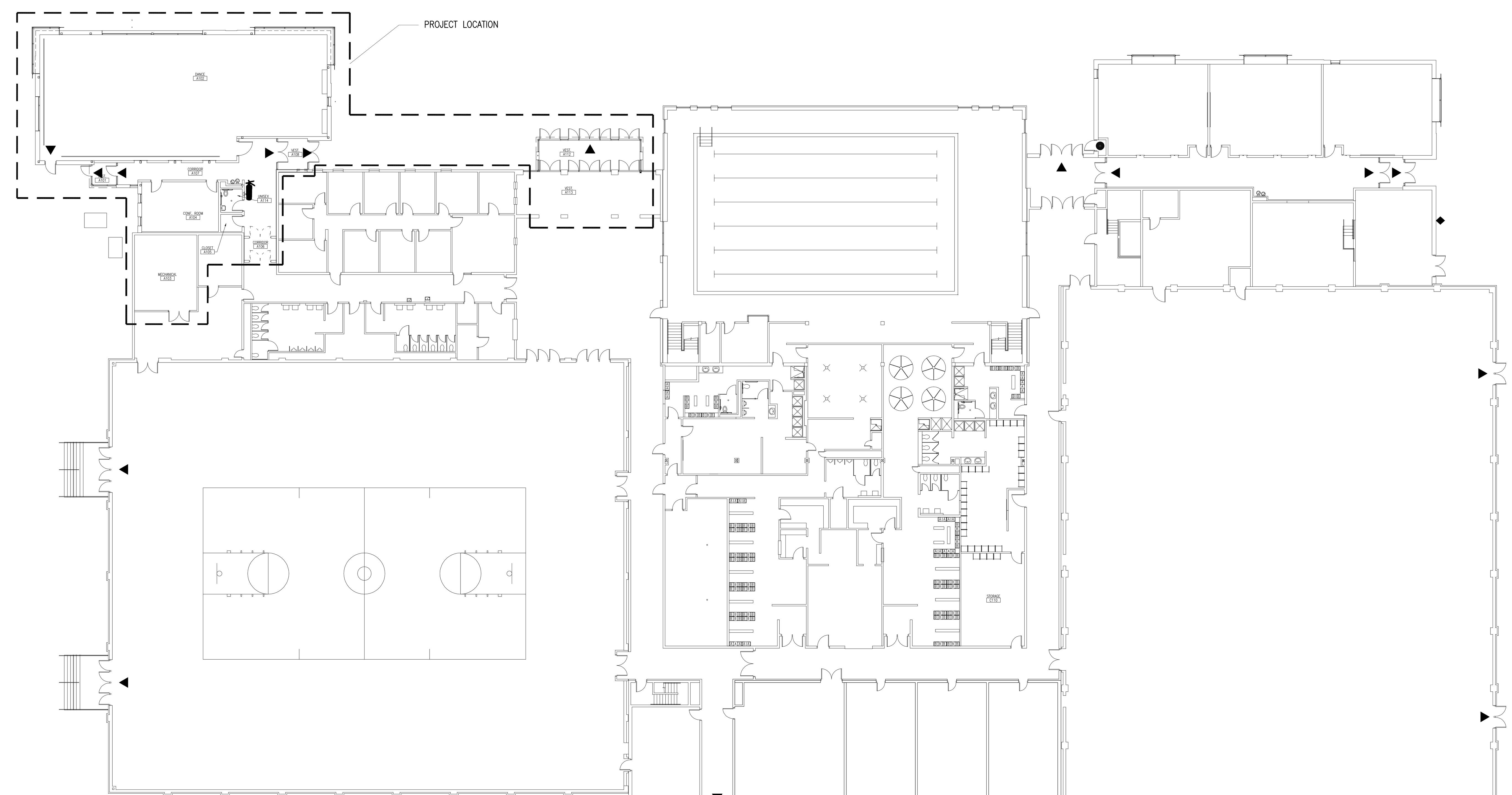

code legend:

● MULTIPURPOSE DRY CHEMICAL TYPE - UL-RATED 2-A:40 - B:C, 10LB NOMINAL CAPACITY, IN ENAMELED STEEL CONTAINER - SEE SECTIONS 906 IFC

▶ EXIT

◆ FIRE DEPARTMENT CONNECTION

NEW FIRE EXTINGUISHER LOCATION

Code Plan A6
N.T.S.

PEGGY A. McDONOUGH No. 6090093-0301 LICENSED ARCHITECT STATE OF UTAH
7.21.2006

GouldEvans

©2002 Gould Evans Associates, L.C.
1000 South Main Street • Suite 100
Salt Lake City, Utah 84101
Voice 801.532.6100
Fax 801.532.6102
www.gouldevans.com

kansas city • lawrence • phoenix
salt lake city • san antonio • tampa

DFCM PROJECT NO: 05266700
STATE PROPERTY ID: 01791
RISK MANAGEMENT NO:
CAD PROJECT NO:
CAD DWG FILE:
DRAWN BY:
CHECKED BY:
COPYRIGHT: STATE OF UTAH

snow college
activities center
dance studio addition | remodel
ephraim, utah

REVISION DATE

Project no: 0906-0260
Date: July 21, 2006
Sheet:

Code Plan and Project Information

GI002

100% Construction Documents

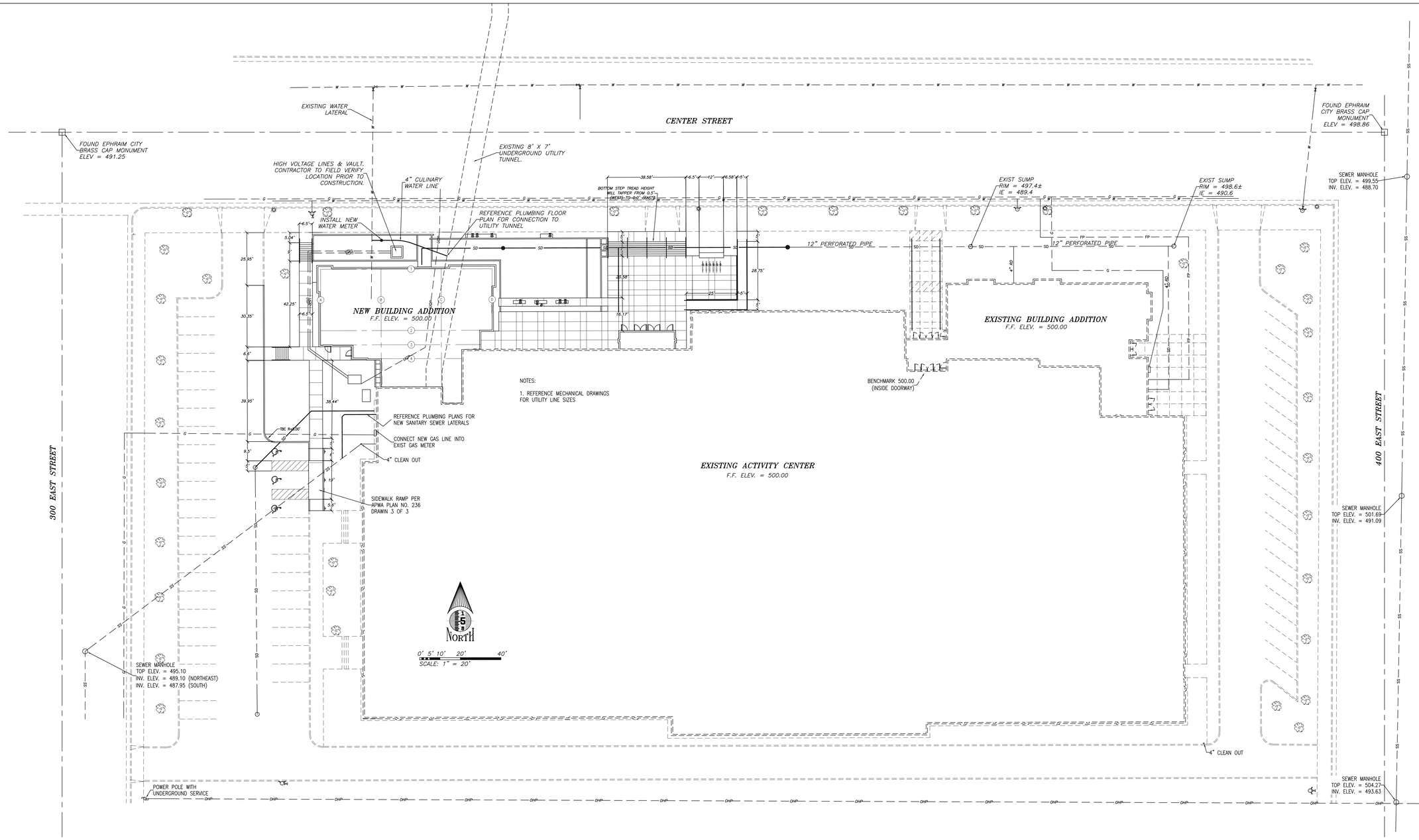

GENERAL NOTES

1. BENCHMARK: FINISH FLOOR INSIDE DOORWAY, ELEV = 500.00, SEE SHEET C-1.

2. ALL IMPROVEMENTS SHALL COMPLY WITH THE STANDARDS AND REGULATIONS OF EPHRAIM CITY. CONTACT THE PUBLIC WORKS OFFICE BEFORE BEGINNING WORK.

3. CONTRACTOR TO FIELD VERIFY LOCATION, SIZE AND AVAILABILITY OF EXISTING UTILITIES. UTILITIES DAMAGED DURING CONSTRUCTION SHALL BE REPAIRED BY THE CONTRACTOR AT HIS EXPENSE.

4. PARKING PAVEMENT MARKINGS ARE 4" WIDE, PAINTED WHITE, LENGTH AS SHOWN.

5. ALL EXTERIOR SLABS ON GRADE, WALKWAYS, CURB AND GUTTER SHALL BE CONSTRUCTED WITH CONCRETE HAVING f'c= 4000 PSI IN 28 DAYS. PROVIDE AIR ENTRAINMENT OF 6% ± 1%.

6. ALL GRADING SHALL BE DONE UNDER THE SUPERVISION OF A QUALIFIED SOILS ENGINEER WHO SHALL VERIFY THAT ALL FILL HAS BEEN PLACED IN ACCORDANCE WITH PROVISIONS IN APPENDIX K 2003 INTERNATIONAL BUILDING CODE.

7. COMPACTION TEST REPORTS SHALL BE MADE AVAILABLE TO THE ENGINEER WITHIN 24 HOURS OF A REQUEST. FINAL REPORTS AS SPECIFIED IN APPENDIX K 2003 INTERNATIONAL BUILDING CODE SHALL BE SUBMITTED TO THE ENGINEER WITHIN TEN (10) DAYS AFTER COMPLETION OF GRADING.

8. ALL STORM DRAIN PIPE SHALL BE INSTALLED ACCORDING TO THE MANUFACTURERS RECOMMENDATIONS AND EPHRAIM CITY STANDARDS AND SPECIFICATIONS.

9. ALL WATER AND SANITARY SEWER LINES AND APPURTENANCES SHALL COMPLY WITH THE STANDARDS AND REQUIREMENTS OF EPHRAIM CITY BEFORE BEGINNING LINE WORK.

10. ALL ROOF DRAINS SHALL BE CONNECTED TO THE STORM DRAIN LINES IN ACCORDANCE WITH THE APPLICABLE PLUMBING CODE.

11. REFERENCE SITE UTILITY PLAN AND GRADING AND DRAINAGE PLAN FOR PIPE SIZES, TYPES AND LOCATIONS.

12. PIPE BEDDING SHALL BE 3/8" MAXIMUM AGGREGATE. USE 3/4" MAXIMUM SIZE ROAD BASE FOR BACKFILL MATERIAL COMPACT TO 95% STANDARD PROCTOR DENSITY. MAXIMUM LIFT 8 INCHES.

13. UTILITY INFORMATION INDICATED ON DRAWINGS IS BASED UPON VISUAL OBSERVATION OR INFORMATION FURNISHED BY MUNICIPAL AUTHORITIES WHICH MAY NOT BE VALID.

14. THE CONTRACTOR SHALL VERIFY ALL DIMENSIONS AND CHECK CONDITIONS AT THE SITE BEFORE STARTING WORK AND SHALL IMMEDIATELY NOTIFY THE ENGINEER OF ANY DISCREPANCIES.

15. TYPICAL DETAILS SHALL APPLY IN GENERAL CONSTRUCTION UNLESS SPECIFICALLY DETAILED. WHERE NO DETAILS ARE GIVEN, CONSTRUCTION WILL BE AS FOR SIMILAR WORK. DO NOT SCALE DRAWINGS.

16. ANY OMISSIONS OR CONFLICTS BETWEEN THE VARIOUS ELEMENTS OF THE WORKING DRAWINGS AND/OR SPECIFICATIONS SHALL BE BROUGHT TO THE ATTENTION OF THE ENGINEER BEFORE PROCEEDING WITH ANY WORK SO INVOLVED.

17. BRACING AND SHORING – CONTRACTOR IS SOLELY RESPONSIBLE FOR JOBSITE SAFETY AND SHALL PROVIDE AND MAINTAIN ADEQUATE BRACING AND SHORING AT ALL TIMES DURING CONSTRUCTION.

LEGEND

EXISTING		NEW
499.70 TBC PC	Spot Elevations	124 69.70 TBC PC
	Drainage Arrows	
	Fire Hydrant	
	Light Pole	
	Handicap Parking	
	Center Line	
	Property Line	
	Curb & Gutter	
	Curb Wall	
4269	Contour Line	69.00
G	Gas Line with Valve	G
OHP	Power Line with Pole (Overhead)	OHP
UGP	Power Line with Box (Underground)	UGP
SD	Storm Drain Line with Catch Basin	SD
SS	Sanitary Sewer Line with Manhole	SS
T	Telephone Line with Box	T
W	Water Line with Valves	W

VICINITY MAP

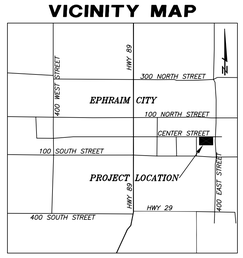

GouldEvans

©2002 Gould Evans Associates, L.C.
1000 South Main Street • Suite 100
Salt Lake City, Utah 84101
Voice 801.532.6100
Fax 801.532.6102
www.gouldevans.com

kansas city • lawrence • phoenix
salt lake city • san antonio • tampa

LARSEN & MALMQUIST INC.
CIVIL ENGINEERS & LAND SURVEYORS
1574 West 1700 South, 2D, SLC, UT 84104
Phone: (801) 972-2634 Fax: (801) 972-2698

DFCM PROJECT NO:
STATE PROPERTY ID: 01791
RISK MANAGEMENT NO:
CAD PROJECT NO:
CAD DWG FILE:
DRAWN BY:
CHECKED BY:
COPYRIGHT: STATE OF UTAH

snow college
activities center
addition | remodel
ephraim, utah

REVISION	DATE

Project no: 0906-0260
Date: 6/08/06
Sheet: C-1 of 3

UTILITY AND PAVING PLAN

C-1

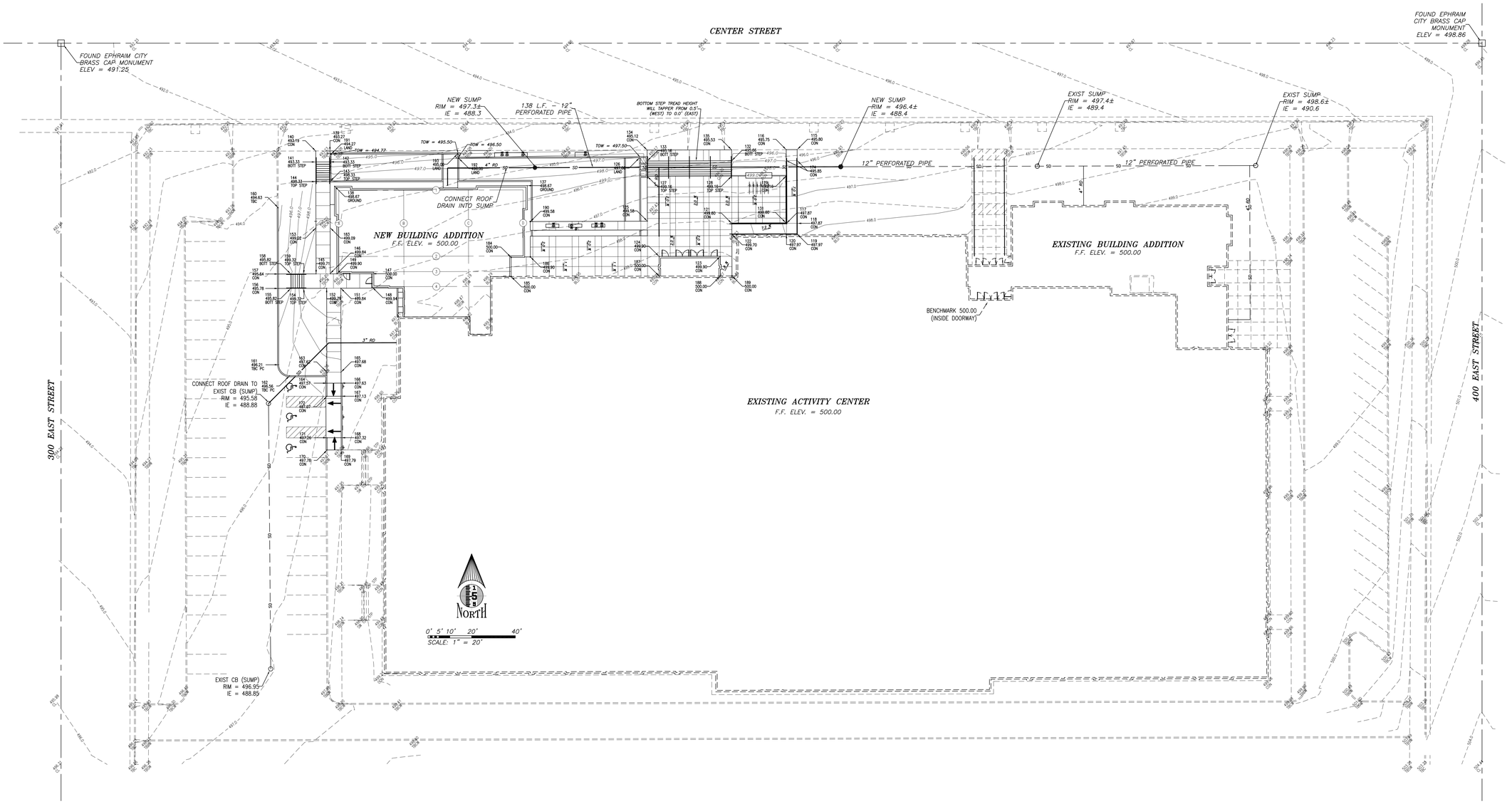

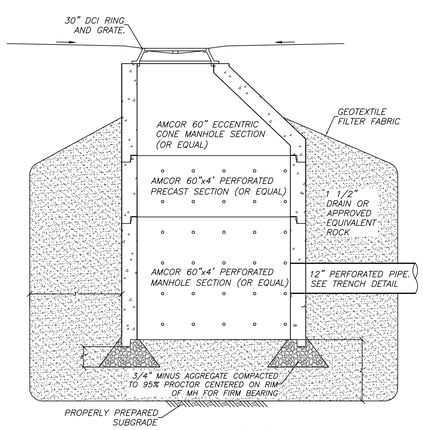

SUMP DETAIL

NOTE: USE THIS DETAIL IF EXISTING SUMPS ARE IN POOR CONDITION. IF THE EXISTING SUMPS ARE USED, CONTRACTOR SHALL PROVIDE GEOTEXTILE FILTER FABRIC AND DRAIN ROCK AS SHOWN IN THE ABOVE DETAIL.

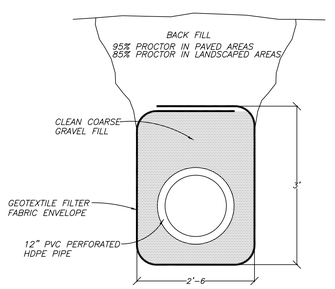

PERFORATED PIPE TRENCH DETAIL
SCALE: NONE

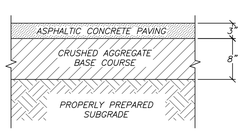

TYPICAL AC PAVEMENT SECTION
SCALE: 1" = 1'-0"

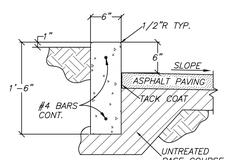

CONCRETE CURB WALL
SCALE: 1" = 1'-0"

275905
KEVIN L. TAYLOR
7/21/06
STATE OF UTAH

GouldEvans

©2002 Gould Evans Associates, L.C.

1000 South Main Street • Suite 100
Salt Lake City, Utah 84101
Voice 801.532.6100
Fax 801.532.6102
www.gouldevans.com

kansas city • lawrence • phoenix
salt lake city • san antonio • tampa

DFCM PROJECT NO:
STATE PROPERTY ID: 01791
RISK MANAGEMENT NO:
CAD PROJECT NO:
CAD DWG FILE:
DRAWN BY:
CHECKED BY:

COPYRIGHT: STATE OF UTAH

LARSEN & MALMQUIST INC.
CIVIL ENGINEERS & LAND SURVEYORS
1574 West 1700 South, 2D, SLC, UT 84104
Phone: (801) 972-2634 Fax: (801) 972-2698

snow college
activities center
addition | remodel
ephraim, utah

REVISION	DATE

Project no: 0906-0260
Date: 6/08/06
Sheet: C-2 of 3

GRADING AND DRAINAGE PLAN

C-2

NORTH

0' 5' 10' 20' 40'
SCALE: 1" = 20'

CENTER STREET

FOUND EPHRAIM CITY BRASS CAP MONUMENT ELEV = 491.25

FOUND EPHRAIM CITY BRASS CAP MONUMENT ELEV = 498.86

EXISTING 8' X 7' UNDERGROUND UTILITY TUNNEL.

300 EAST STREET

400 EAST STREET

REMOVE EXIST BUILDING SIGN

REMOVE EXIST BIKE RACK

REMOVE EXIST CB (SUMP)
RIM = 496.43
IE = 491.78

REMOVE EXIST CB (SUMP)
RIM = 495.76
IE = 487.76

12" PERFORATED PIPE

EXIST SUMP
RIM = 497.4±
IE = 489.4

EXIST SUMP
RIM = 498.6±
IE = 490.6

SEWER MANHOLE
TOP ELEV. = 499.55
INV. ELEV. = 488.70

REMOVE EXIST WATER MANHOLE

EXISTING BUILDING ADDITION
F.F. ELEV. = 500.00

BENCHMARK 500.00
(INSIDE DOORWAY)

REMOVE EXIST GAS REGULATOR

CONNECT NEW GAS LINE INTO EXIST GAS METER

4" CLEAN OUT

EXISTING ACTIVITY CENTER
F.F. ELEV. = 500.00

SEWER MANHOLE
TOP ELEV. = 501.69
INV. ELEV. = 491.09

SEWER MANHOLE
TOP ELEV. = 495.10
INV. ELEV. = 489.10 (NORTHEAST)
INV. ELEV. = 487.95 (SOUTH)

TREES SHOWN ON THIS SHEET ARE TO BE REMOVED

EXISTING AC AND PCC PAVMENT TO BE REMOVED. SEE SHEETS C-1 & C-2 FOR NEW CONSTRUCTION.

4" CLEAN OUT

POWER POLE WITH UNDERGROUND SERVICE

SEWER MANHOLE
TOP ELEV. = 504.27
INV. ELEV. = 493.63

275905
KEVIN L. TAYLOR
7/21/06
STATE OF UTAH

GouldEvans

©2002 Gould Evans Associates, L.C.
1000 South Main Street • Suite 100
Salt Lake City, Utah 84101
Voice 801.532.6100
Fax 801.532.6102
www.gouldevans.com

kansas city • lawrence • phoenix
salt lake city • san antonio • tampa

DFCM PROJECT NO:
STATE PROPERTY ID: 01791
RISK MANAGEMENT NO:
CAD PROJECT NO:
CAD DWG FILE:
DRAWN BY:
CHECKED BY:

COPYRIGHT: STATE OF UTAH

LARSEN & MALMQUIST INC.
CIVIL ENGINEERS & LAND SURVEYORS
1574 West 1700 South, 2D, SLC, UT 84104
Phone: (801) 972-2634 Fax: (801) 972-2698

snow college
activities center
addition | remodel
ephraim, utah

REVISION DATE

Project no: 0906-0260
Date: 6/08/06
Sheet: C-3 of 3

DEMOLITION PLAN

C-3

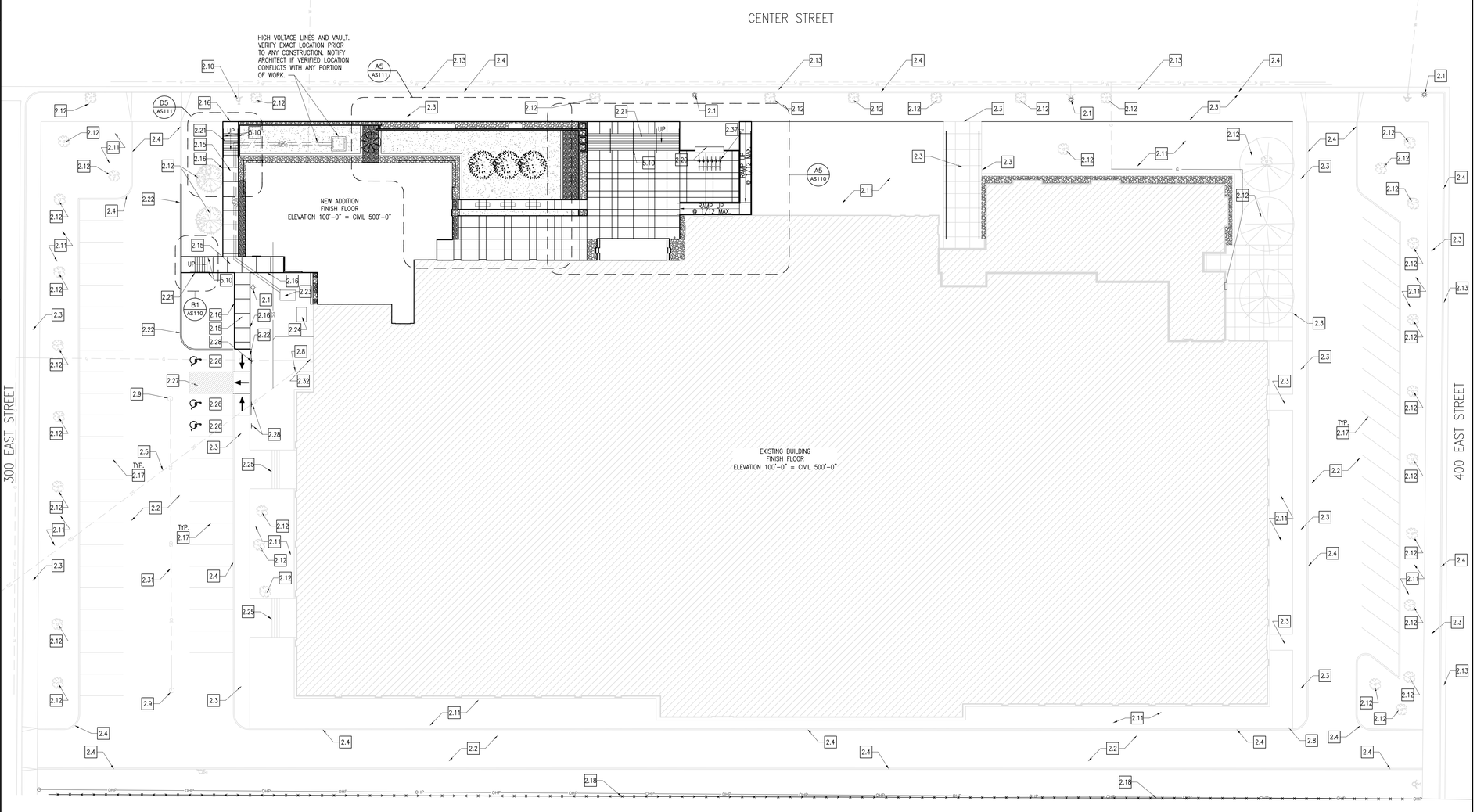

Architectural Site Plan A5
1" = 20'

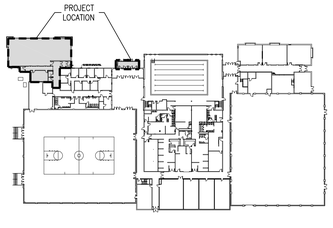

Key Plan A6
N.T.S.

DIVISION 1 – GENERAL NOTES
1.1 FINISH FLOOR
1.2 FINISH GRADE
1.3 LINE OF BUILDING ABOVE
1.4 EDGE OF WALL BELOW
1.5 UTILITY TUNNEL
1.6 EXISTING WALL
1.7 EXISTING FOOTING
1.8 EXISTING BUILDING
1.9 EXISTING FOUNDATION WALL
1.10 EXISTING CONCRETE SLAB

DIVISION 2 – SITE WORK
2.1 EXISTING LIGHT POLE W/ OVERHEAD POWER TO REMAIN
2.2 EXISTING ASPHALT PAVING TO REMAIN
2.3 EXISTING CONCRETE SIDEWALK TO REMAIN
2.4 EXISTING CURB TO REMAIN
2.5 EXISTING SEWER LINE TO REMAIN
2.6 EXISTING POWER POLE W/ UNDERGROUND POWER LINE TO REMAIN
2.7 EXISTING SEWER MANHOLE TO REMAIN
2.8 EXISTING 4" CLEAN OUT TO REMAIN
2.9 EXISTING CATCH BASIN TO REMAIN
2.10 EXISTING FIRE HYDRANT TO REMAIN
2.11 EXISTING LANDSCAPING TO REMAIN
2.12 EXISTING TREE TO REMAIN; FULLY PROTECTED
2.13 EXISTING GUTTER TO REMAIN
2.14 COMPACTED FILL
2.15 NEW CONCRETE PAVING
2.16 LINE OF NEW CONCRETE PAVING
2.17 EXISTING PARKING STALLS TO REMAIN
2.18 EXISTING FENCE TO REMAIN
2.19 NEW SUMP
2.20 EXISTING STONE SIGNAGE RELOCATED FROM OLD GYMNASIUM – COORDINATE WITH OWNER.
2.21 NEW CONCRETE STAIRS – SEE ENLARGED PLANS FOR DIMENSIONS
2.22 NEW CONCRETE CURB
2.23 EXISTING HIGH VOLTAGE SWITCHGEAR TO REMAIN
2.24 EXISTING 500 KVA TRANSFORMER
2.25 EXISTING CONCRETE STAIRS TO REMAIN
2.26 HANDICAP ACCESSIBLE PARKING STALL
2.27 HANDICAP ACCESSIBLE AISLE
2.28 HANDICAP ACCESSIBLE PARKING SIGN
2.29 NEW GAS METER
2.30 NEW STORM DRAIN LINE
2.31 EXISTING STORM DRAIN LINE TO REMAIN
2.32 EXISTING GAS METER TO REMAIN
2.33 EXISTING GAS LINE TO REMAIN
2.34 NEW GAS LINE TO BE CONNECTED TO EXISTING GAS LINE
2.35 EXISTING WATER LINE
2.36 NEW WATER LINE
2.37 NEW BIKE RACK
2.38 GRAVEL MULCH TO BE ¾" "SILVER NICKEL" PLACED 3" DEEP OVER WEED BARRIER
2.39 NEW CONCRETE 12" WIDE MOW STRIP, SEE DETAIL A1/AS110
2.40 GRAVEL MULCH TO BE PEA GRAVEL PLACED 3" DEEP OVER WEED BARRIER
2.41 NEW TURF
2.42 NEW TREE – SEE PLANTING PLAN
2.43 NEW PLANT – SEE PLANTING PLAN
2.44 CONCRETE BENCH. BRAND: "MATERIALS, INC." STYLE: "GOTHIC" OR SIMILAR. ALT BRAND & STYLE ACCEPTABLE W/PRIOR APPROVAL.

DIVISION 3 – CONCRETE
3.1 4" CONCRETE SLAB
3.2 CONCRETE FOOTING
3.3 NOT USED
3.4 CONCRETE ON STEEL DECK
3.5 CONC EQUIPMENT PAD
3.6 CAST IN PLACE CONCRETE
3.7 CONCRETE RETAINING WALL

DIVISION 4 – MASONRY
4.1 NOT USED
4.2 MASONRY CONTROL JOINT
4.3 NOT USED
4.4 NOT USED
4.5 STANDARD BRICK VENEER, COLOR AS SELECTED BY ARCHITECT
4.6 EXISTING MASONRY, CLEANED AND SEALED

DIVISION 5 – METALS
5.1 STEEL COLUMN; REF STRUCT. DWG
5.2 STEEL BEAM; REF STRUCT. DWGS
5.3 STEEL JOIST; REF STRUCT. DWGS
5.4 STEEL ROOF DECK
5.5 STEEL LADDER
5.6 4" STRUCT STL STUDS @ 16" O.C.
5.7 STEEL ANGLE
5.8 STEEL CHANNEL
5.9 HORIZONTAL STEEL JOIST BRIDGING
5.10 1 1/2"ø ALUMINUM PIPE HANDRAIL
5.11 6" STRUCT STL STUDS @16" OC
5.12 3 5/8" STRUCT STL STUDS @16" OC
5.13 STEEL PLATE
5.14 STEEL TUBE, REF STRUCT. DWG
5.15 1 1/2"ø ALUMINUM PIPE VERTICAL SUPPORTS
5.16 1 1/2" STRUCT STL STUDS @ 16" O.C.
5.17 EXPOSED STEEL COLUMN; REF STRUCT. DWGS; PAINT, COLOR BY ARCH.
5.18 EXPOSED STEEL BEAM; REF STRUCT. DWGS; PAINT, COLOR BY ARCH.
5.19 2" STRUCT STL STUDS @ 16" OC
5.20 2-1/2" STRUCT STL STUDS @ 16" OC
5.21 EXPOSED STEEL JOIST; REF STRUCT. DWGS; PAINT, COLOR BY ARCH.
5.22 ALUMINUM ANGLE
5.23 ALUMINUM PLATE
5.24 ⅞" HAT CHANNELS
5.25 1 1/2"ø ALUMINUM PIPE GUARDRAIL
5.26 3-⅜" STL STUD SLIP TRACK SYSTEM W/ 2" LEG ON TOP TRACK AND 1-½" SLOT.

DIVISION 6 – WOOD AND PLASTICS
6.1 WOOD BLOCKING OR BACKING PLATE 16 GA X 6" HIGH FOR INTERIOR ARCHITECTURAL WOODWORK, HARDWARE, TOILET COMPARTMENTS, BATH ACCESSORIES, ETC
6.2 PLASTIC LAMINATE COUNTERTOP
6.3 NOT USED
6.4 ACRYLIC PANEL
6.5 PLASTIC LAMINATE MILLWORK
6.6 MAPLE CHAIR RAIL, SEE E5/AE504

DIVISION 7 THERMAL & MOISTURE PROTECTION
7.1 RIDGE
7.2 VALLEY, MIN SLOPE 3/16" PER LINEAL FT
7.3 CRICKET, MIN. SLOPE 1/4" PER FOOT AT VALLEY, FORM W/ TAPERED RIGID BD. INSULATION
7.4 ROOF HATCH
7.5 ROOF CURB. SEE DETAIL C2/AE504.
7.6 ROOF DRAIN & OVERFLOW DRAIN
7.7 TYPICAL PIPE/CONDUIT PENETRATION

DIVISION 7 CONT'D THERMAL & MOISTURE PROTECTION
7.8 SINGLE PLY ROOF MEMBRANE MECHANICALLY FASTENED OVER MIN 4" TAPERED RIGID INSULATION SLOPED TO DRAIN 1/4"/FT MIN
7.9 1" EXPANSION JOINT
7.10 ROOF SCUPPER
7.11 SEALANT
7.12 R-11 BATTS, FACED MINERAL-FIBER BLANKET INSULATION
7.13 R-19 BATTS, FACED MINERAL-FIBER BLANKET INSULATION
7.14 NOT USED
7.15 FIRE SAFING INSULATION
7.16 NOT USED
7.17 RIGID INSULATION
7.18 METAL REGLET & COUNTER FLASHING
7.19 METAL FASCIA
7.20 METAL CLOSURE
7.21 PRE-FINISHED METAL COPING; COLOR BY ARCH. FROM MANUF. FULL RANGE
7.22 COMPOSITE SHEET WATERPROOFING
7.23 NOT USED
7.24 2" INSULATED METAL PANEL SYSTEM, COLOR BY ARCHITECT
7.25 EXISTING METAL COPING TO REMAIN

DIVISION 8 DOORS & WINDOWS
8.1 HOLLOW METAL DOOR & FRAME
8.2 FLUSH WOOD DOOR
8.3 ACCESS DOOR
8.4 ANODIZED ALUM. STOREFRONT WINDOW
8.5 ANODIZED ALUM. STOREFRONT DOOR AND FRAME
8.6 1" INSULATED GLASS SET IN ALUM. CURTAIN WALL FRAME
8.7 1" INSULATED SANDBLASTED GLASS SET IN ALUM. CURTAIN WALL FRAME
8.8 1" INSULATED SANDBLASTED GLASS SET IN ANODIZED ALUMINUM STOREFRONT
8.9 BUTT GLAZING
8.10 MIRROR
8.11 1/2" TEMPERED SAFETY GLASS W/ SAND BLASTED FINISH
8.12 ADA AUTOMATIC DOOR
8.13 ALUM. STOREFRONT SYSTEM RELOCATED FROM EXISTING VESTIBULE. SEE SHEET AD101ALT.
8.14 1/2" TEMPERED SAFETY GLASS
8.15 ALUM. STOREFRONT SYSTEM

DIVISION 9 FINISHES
9.1 GYP BOARD, PAINT – COLOR BY ARCH.
9.2 CERAMIC TILE
9.3 ACOUSTICAL PANEL CEILING
9.4 NOT USED
9.5 RESILIENT MNTD. HARDWOOD FLOOR
9.6 NOT USED
9.7 RUBBER BASE
9.8 CERAMIC TILE BASE
9.9 VINYL COMPOSITION TILE
9.10 CARPET

DIVISION 10 SPECIALITIES
10.1 36" GRAB BAR
10.2 WHITE BOARD; PROVIDE BLKG
10.3 TOILET PAPER DISPENSER
10.4 SIGN – MAXIMUM OCCUPANT LOAD
10.5 FIRE EXT.; RECESSED CABINET
10.6 42" GRAB BAR
10.7 MARKER BOARD
10.8 OWNER SUPPLIED SIGN IDENTIFYING LOCATION OF UNISEX RESTROOM
10.9 BULLETIN BOARD

DIVISION 11 EQUIPMENT
11.1 AV EQUIPMENT SEE AV DWGS
11.2 AV PANEL SEE AV DWGS
11.3 SPEAKER, N.I.C.
11.4 AV FLOOR POCKET
11.5 ADJUSTABLE BALLET BARRE

DIVISION 15 MECHANICAL
15.1 FIRE CONNECTION
15.2 MECHANICAL ROOF HOOD
15.3 MECHANICAL EXHAUST FAN
15.4 MECHANICAL CONDENSING UNIT
15.5 FIRE SPRINKLER MAIN SHOWN FOR COORDINATION ONLY; CONTRACTOR TO PROVIDE SHOP DWGS PER SPEC & CODE
15.6 NOT USED
15.7 WATER METER RE: CIVIL, PLUMB. DWGS
15.8 GAS METER RE: PLUMB. DWGS
15.9 NOT USED
15.10 SINK, REF: PLUMB. DWGS
15.11 SUMP PUMP BELOW GRADE
15.12 TOILET
15.13 ADA TOILET
15.14 ADA URINAL
15.15 ADA LAV
15.16 ADA SHOWER
15.17 ADA ELECTRIC DRINKING FOUNTAIN
15.18 FLOOR DRAIN
15.19 STORM DRAIN
15.20 ROOF DRAIN
15.21 MECHANICAL UNIT
15.22 MECHANICAL DIFFUSER
15.23 MECHANICAL RETURN AIR GRILLE
15.24 MECHANICAL EXHAUST FAN GRILLE
15.25 MECHANICAL EXPOSED DUCT
15.26 MECH EXPOSED DUCT SUPPORT
15.27 ROOF & OVERFLOW DRAIN SEE E5/AE504
15.28 MECHANICAL DUCT
15.29 LAMBS TONGUE
15.30 SUMP PUMP
15.31 DRINKING FOUNTAIN
15.32 AREA DRAIN
15.33 MECHANICAL DUCT BELOW GRADE
15.34 MECHANICAL LOUVER

DIVISION 16 ELECTRICAL
16.1 ELECTRIC LIGHT
16.2 ELECTRIC PANEL
16.3 ELECTRIC TRANSFORMER
16.4 HORN/STROBE, REF: ELECT.
16.5 EMERGENCY LIGHTING, REF: ELECT.
16.6 DUPLEX OUTLET, REF: ELECT.
16.7 DATA OUTLET, REF. ELECT.
16.8 CABLE TRAY SEE EP DWGS
16.9 EXIT LIGHT SEE EL DWGS
16.10 HIGH VOLTAGE SWITCH
16.11 COMMUNICATION BOX
16.12 ADA DOOR ACTUATOR POST
16.13 ADA DOOR ACTUATOR PANEL
16.14 GENERATOR
16.15 FIRE GONG
16.16 UNDERCABINET LIGHT

GENERAL NOTES
1. AT BRICK VENEER, PROVIDE SOLID BRICKS WHERE TOP OR BOTTOM SURFACE IS EXPOSED BY 1" OR MORE.

LICENSED ARCHITECT
PEGGY A. McDONOUGH
No. 6006020-5301
STATE OF UTAH
7.21.2006

GouldEvans

©2002 Gould Evans Associates, L.C.
1000 South Main Street • Suite 100
Salt Lake City, Utah 84101
Voice 801.532.6100
Fax 801.532.6102
www.gouldevans.com

kansas city • lawrence • phoenix
salt lake city • san antonio • tampa

DFCM PROJECT NO: 05266700
STATE PROPERTY ID: 01791
RISK MANAGEMENT NO:
CAD PROJECT NO:
CAD DWG FILE:
DRAWN BY:
CHECKED BY:
COPYRIGHT: STATE OF UTAH

snow college
activities center
dance studio addition | remodel
ephraim, utah

REVISION	DATE

Project no: 0906-0260
Date: July 21, 2006
Sheet:

Architectural Site Plan
AS101

100% Construction Documents

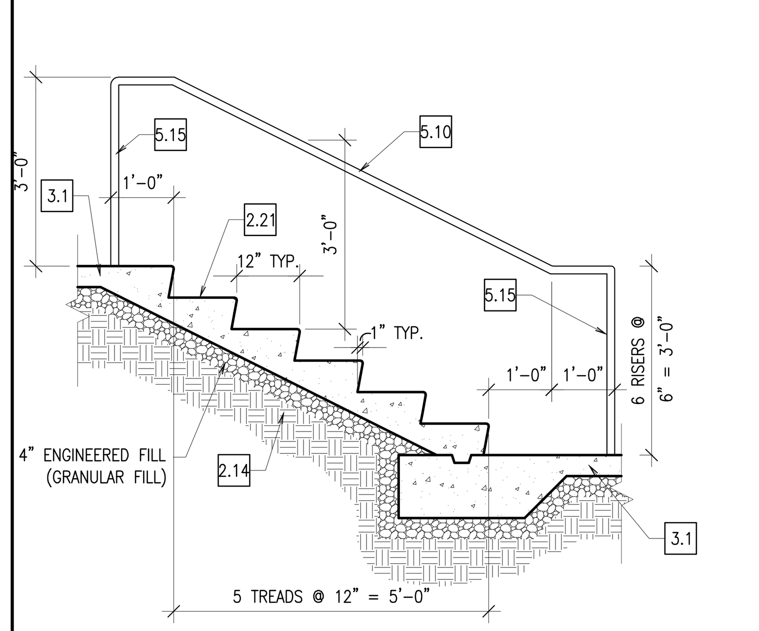

Stair Section **E1**
1/2" = 1'-0"

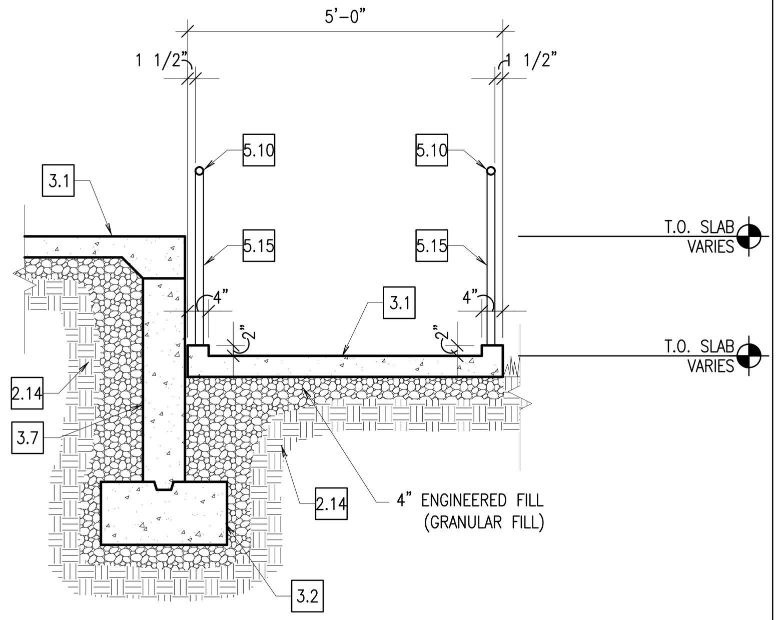

Detail **E2**
1/2" = 1'-0"

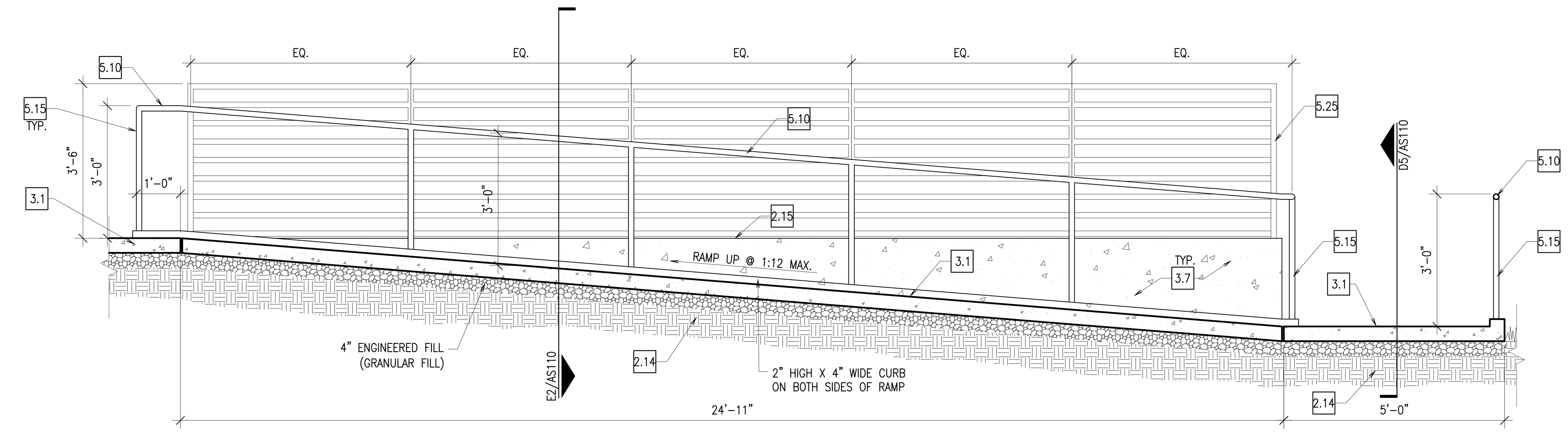

ADA Accessible Ramp Section **E5**
1/2" = 1'-0"

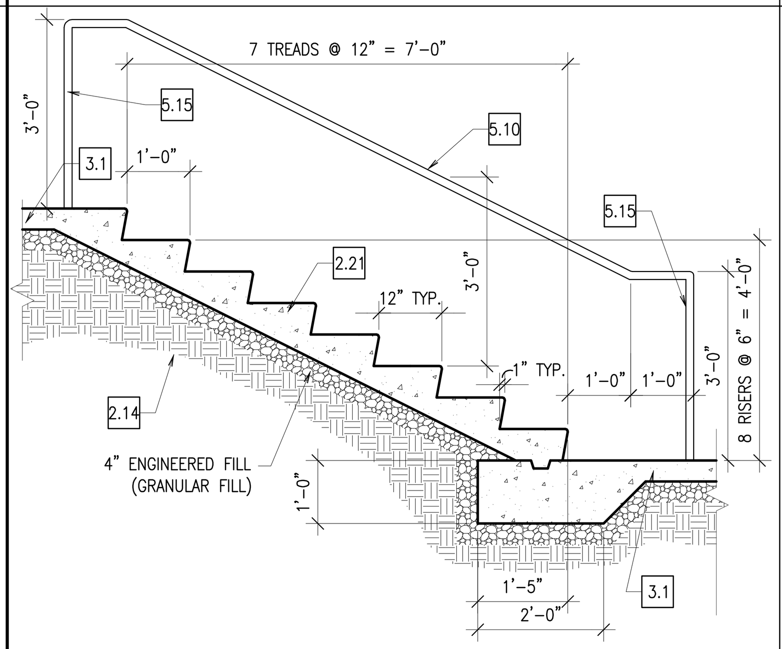

Stair Section **D1**
1/2" = 1'-0"

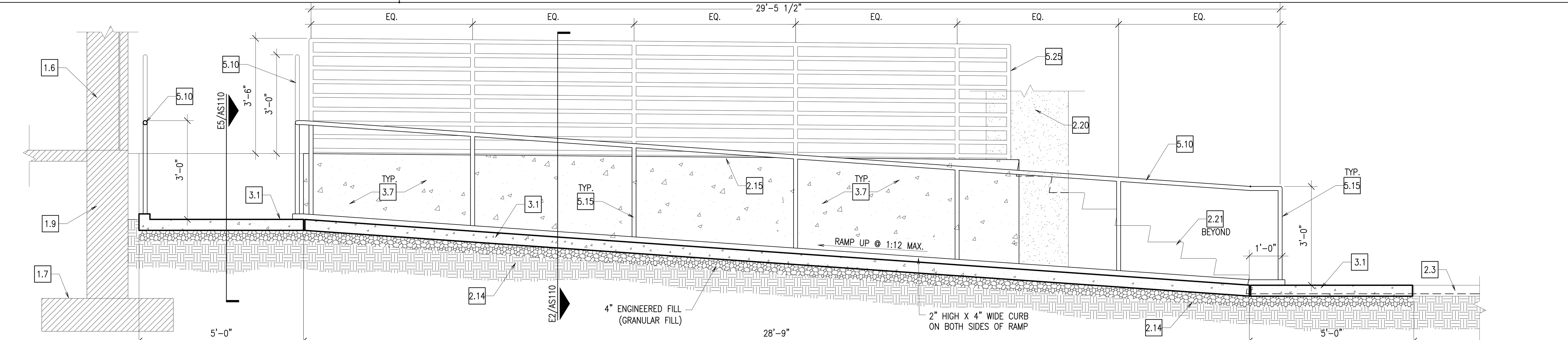

ADA Accessible Ramp Section **D5**
1/2" = 1'-0"

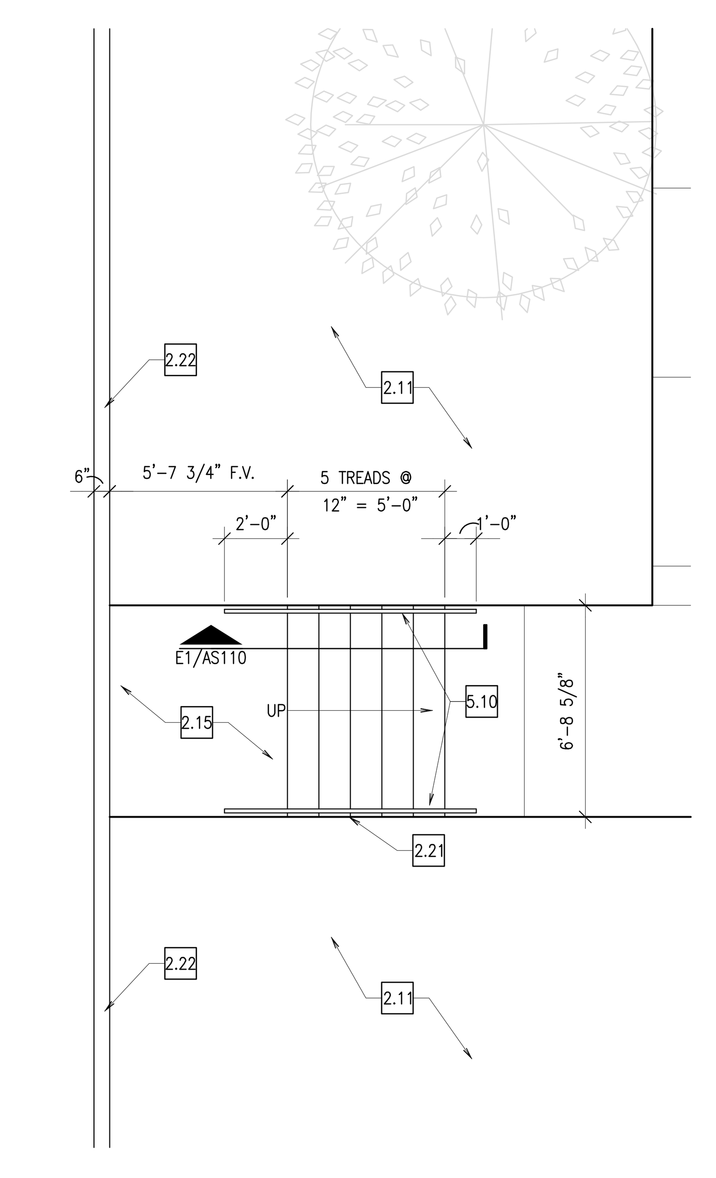

Architectural Enlarged Site Plan **B1**
1/4" = 1'-0"

1. CONCRETE
2. 3" DEEP GRAVEL – SEE SITE DRAWINGS
3. LAWN

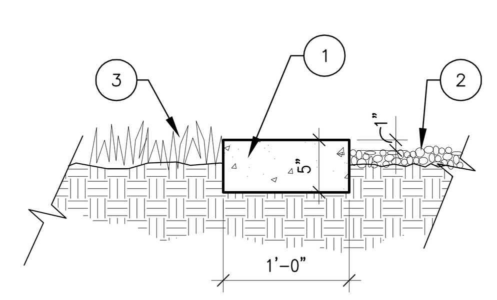

Mow Strip Detail **A1**
1" = 1'-0"

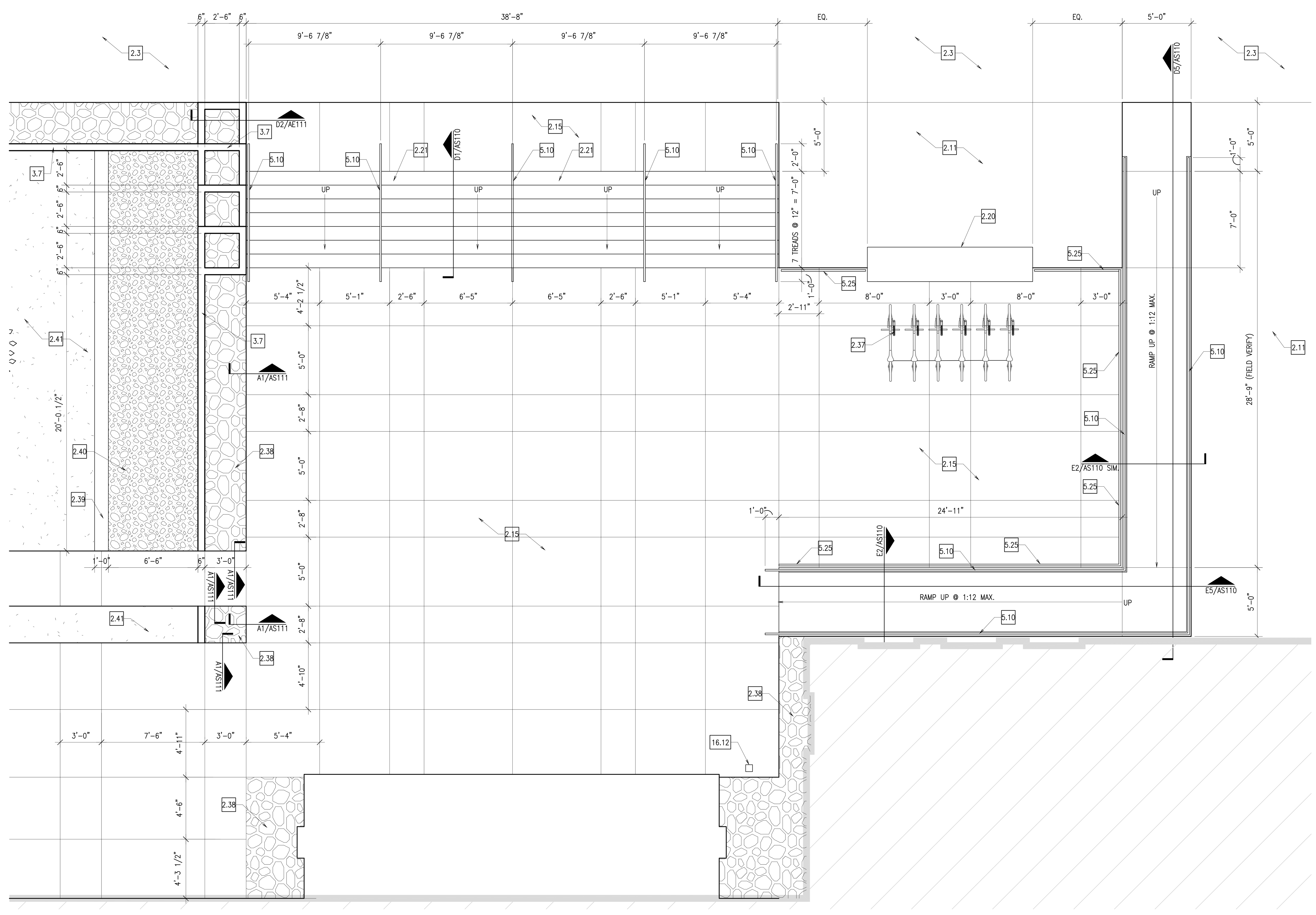

Enlarged Site Plan **A5**
1/4" = 1'-0"

DIVISION 1 – GENERAL NOTES
1.1 FINISH FLOOR
1.2 FINISH GRADE
1.3 LINE OF BUILDING ABOVE
1.4 EDGE OF WALL BELOW
1.5 UTILITY TUNNEL
1.6 EXISTING WALL
1.7 EXISTING FOOTING
1.8 EXISTING BUILDING
1.9 EXISTING FOUNDATION WALL
1.10 EXISTING CONCRETE SLAB

DIVISION 2 – SITE WORK
2.1 EXISTING LIGHT POLE W/ OVERHEAD POWER TO REMAIN
2.2 EXISTING ASPHALT PAVING TO REMAIN
2.3 EXISTING CONCRETE SIDEWALK TO REMAIN
2.4 EXISTING CURB TO REMAIN
2.5 EXISTING SEWER LINE TO REMAIN
2.6 EXISTING POWER POLE W/ UNDERGROUND POWER LINE TO REMAIN
2.7 EXISTING SEWER MANHOLE TO REMAIN
2.8 EXISTING 4" CLEAN OUT TO REMAIN
2.9 EXISTING CATCH BASIN TO REMAIN
2.10 EXISTING FIRE HYDRANT TO REMAIN
2.11 EXISTING LANDSCAPING TO REMAIN
2.12 EXISTING TREE TO REMAIN; FULLY PROTECTED
2.13 EXISTING GUTTER TO REMAIN
2.14 COMPACTED FILL
2.15 NEW CONCRETE PAVING
2.16 LINE OF NEW CONCRETE PAVING
2.17 EXISTING PARKING STALLS TO REMAIN
2.18 EXISTING FENCE TO REMAIN
2.19 NEW SUMP
2.20 EXISTING STONE SIGNAGE RELOCATED FROM OLD GYMNASIUM – COORDINATE WITH OWNER.
2.21 NEW CONCRETE STAIRS – SEE ENLARGED PLANS FOR DIMENSIONS
2.22 NEW CONCRETE CURB
2.23 EXISTING HIGH VOLTAGE SWITCHGEAR TO REMAIN
2.24 EXISTING 500 KVA TRANSFORMER
2.25 EXISTING CONCRETE STAIRS TO REMAIN
2.26 HANDICAP ACCESSIBLE PARKING STALL
2.27 HANDICAP ACCESSIBLE AISLE
2.28 HANDICAP ACCESSIBLE PARKING SIGN
2.29 NEW GAS METER
2.30 NEW STORM DRAIN LINE
2.31 EXISTING STORM DRAIN LINE TO REMAIN
2.32 EXISTING GAS METER TO REMAIN
2.33 EXISTING GAS LINE TO REMAIN
2.34 NEW GAS LINE TO BE CONNECTED TO EXISTING GAS LINE
2.35 EXISTING WATER LINE
2.36 NEW WATER LINE
2.37 NEW BIKE RACK
2.38 GRAVEL MULCH TO BE ½" "SILVER NICKEL" PLACED 3" DEEP OVER WEED BARRIER
2.39 NEW CONCRETE 12" WIDE MOW STRIP, SEE DETAIL A1/AS110
2.40 GRAVEL MULCH TO BE PEA GRAVEL PLACED 3" DEEP OVER WEED BARRIER
2.41 NEW TURF
2.42 NEW TREE – SEE PLANTING PLAN
2.43 NEW PLANT – SEE PLANTING PLAN
2.44 CONCRETE BENCH. BRAND: "MATERIALS, INC." STYLE: "GOTHIC" OR SIMILAR. ALT BRAND & STYLE ACCEPTABLE W/PRIOR APPROVAL.

DIVISION 3 – CONCRETE
3.1 4" CONCRETE SLAB
3.2 CONCRETE FOOTING
3.3 NOT USED
3.4 CONCRETE ON STEEL DECK
3.5 CONC EQUIPMENT PAD
3.6 CAST IN PLACE CONCRETE
3.7 CONCRETE RETAINING WALL

DIVISION 4 – MASONRY
4.1 NOT USED
4.2 MASONRY CONTROL JOINT
4.3 NOT USED
4.4 NOT USED
4.5 STANDARD BRICK VENEER, COLOR AS SELECTED BY ARCHITECT
4.6 EXISTING MASONRY, CLEANED AND SEALED

DIVISION 5 – METALS
5.1 STEEL COLUMN; REF STRUCT. DWG
5.2 STEEL BEAM; REF STRUCT. DWGS
5.3 STEEL JOIST; REF STRUCT. DWGS
5.4 STEEL ROOF DECK
5.5 STEEL LADDER
5.6 4" STRUCT STL STUDS @ 16" O.C.
5.7 STEEL ANGLE
5.8 STEEL CHANNEL
5.9 HORIZONTAL STEEL JOIST BRIDGING
5.10 1 1/2"ø ALUMINUM PIPE HANDRAIL
5.11 6" STRUCT STL STUDS @16" OC
5.12 3 5/8" STRUCT STL STUDS @16" OC
5.13 STEEL PLATE
5.14 STEEL TUBE, REF STRUCT. DWG
5.15 1 1/2"ø ALUMINUM PIPE VERTICAL SUPPORTS
5.16 1 1/2" STRUCT STL STUDS @ 16" O.C.
5.17 EXPOSED STEEL COLUMN; REF STRUCT. DWGS; PAINT, COLOR BY ARCH.
5.18 EXPOSED STEEL BEAM; REF STRUCT. DWGS; PAINT, COLOR BY ARCH.
5.19 2" STRUCT STL STUDS @ 16" OC
5.20 2-1/2" STRUCT STL STUDS @ 16" OC
5.21 EXPOSED STEEL JOIST; REF STRUCT. DWGS; PAINT, COLOR BY ARCH.
5.22 ALUMINUM ANGLE
5.23 ALUMINUM PLATE
5.24 ⅞" HAT CHANNELS
5.25 1 1/2"ø ALUMINUM PIPE GUARDRAIL
5.26 3-⅝" STL STUD SLIP TRACK SYSTEM W/ 2" LEG ON TOP TRACK AND 1-½" SLOT.

DIVISION 6 – WOOD AND PLASTICS
6.1 WOOD BLOCKING OR BACKING PLATE 16 GA X 6" HIGH FOR INTERIOR ARCHITECTURAL WOODWORK, HARDWARE, TOILET COMPARTMENTS, BATH ACCESSORIES, ETC
6.2 PLASTIC LAMINATE COUNTERTOP
6.3 NOT USED
6.4 ACRYLIC PANEL
6.5 PLASTIC LAMINATE MILLWORK
6.6 MAPLE CHAIR RAIL, SEE E5/AE504

DIVISION 7 THERMAL & MOISTURE PROTECTION
7.1 RIDGE
7.2 VALLEY, MIN SLOPE 3/16" PER LINEAL FT
7.3 CRICKET, MIN. SLOPE 1/4" PER FOOT AT VALLEY, FORM W/ TAPERED RIGID BD. INSULATION
7.4 ROOF HATCH
7.5 ROOF CURB. SEE DETAIL C2/AE504.
7.6 ROOF DRAIN & OVERFLOW DRAIN
7.7 TYPICAL PIPE/CONDUIT PENETRATION

DIVISION 7 CONT'D THERMAL & MOISTURE PROTECTION
7.8 SINGLE PLY ROOF MEMBRANE MECHANICALLY FASTENED OVER MIN 4" TAPERED RIGID INSULATION SLOPED TO DRAIN 1/4"/FT MIN
7.9 1" EXPANSION JOINT
7.10 ROOF SCUPPER
7.11 SEALANT
7.12 R-11 BATTS, FACED MINERAL-FIBER BLANKET INSULATION
7.13 R-19 BATTS, FACED MINERAL-FIBER BLANKET INSULATION
7.14 NOT USED
7.15 FIRE SAFING INSULATION
7.16 NOT USED
7.17 RIGID INSULATION
7.18 METAL REGLET & COUNTER FLASHING
7.19 METAL FASCIA
7.20 METAL CLOSURE
7.21 PRE-FINISHED METAL COPING; COLOR BY ARCH. FROM MANUF. FULL RANGE
7.22 COMPOSITE SHEET WATERPROOFING
7.23 NOT USED
7.24 2" INSULATED METAL PANEL SYSTEM, COLOR BY ARCHITECT
7.25 EXISTING METAL COPING TO REMAIN

DIVISION 8 DOORS & WINDOWS
8.1 HOLLOW METAL DOOR & FRAME
8.2 FLUSH WOOD DOOR
8.3 ACCESS DOOR
8.4 ANODIZED ALUM. STOREFRONT WINDOW
8.5 ANODIZED ALUM. STOREFRONT DOOR AND FRAME
8.6 1" INSULATED GLASS SET IN ALUM. CURTAIN WALL FRAME
8.7 1" INSULATED SANDBLASTED GLASS SET IN ALUM. CURTAIN WALL FRAME
8.8 1" INSULATED SANDBLASTED GLASS SET IN ANODIZED ALUMINUM STOREFRONT
8.9 BUTT GLAZING
8.10 MIRROR
8.11 1/2" TEMPERED SAFETY GLASS W/ SAND BLASTED FINISH
8.12 ADA AUTOMATIC DOOR
8.13 ALUM. STOREFRONT SYSTEM RELOCATED FROM EXISTING VESTIBULE. SEE SHEET AD101ALT.
8.14 1/2" TEMPERED SAFETY GLASS
8.15 ALUM. STOREFRONT SYSTEM

DIVISION 9 FINISHES
9.1 GYP BOARD, PAINT – COLOR BY ARCH.
9.2 CERAMIC TILE
9.3 ACOUSTICAL PANEL CEILING
9.4 NOT USED
9.5 RESILIENT MNTD. HARDWOOD FLOOR
9.6 NOT USED
9.7 RUBBER BASE
9.8 CERAMIC TILE BASE
9.9 VINYL COMPOSITION TILE
9.10 CARPET

DIVISION 10 SPECIALITIES
10.1 36" GRAB BAR
10.2 WHITE BOARD; PROVIDE BLKG
10.3 TOILET PAPER DISPENSER
10.4 SIGN – MAXIMUM OCCUPANT LOAD
10.5 FIRE EXT.; RECESSED CABINET
10.6 42" GRAB BAR
10.7 MARKER BOARD
10.8 OWNER SUPPLIED SIGN IDENTIFYING LOCATION OF UNISEX RESTROOM
10.9 BULLETIN BOARD

DIVISION 11 EQUIPMENT
11.1 AV EQUIPMENT SEE AV DWGS
11.2 AV PANEL SEE AV DWGS
11.3 SPEAKER, N.I.C.
11.4 AV FLOOR POCKET
11.5 ADJUSTABLE BALLET BARRE

DIVISION 15 MECHANICAL
15.1 FIRE CONNECTION
15.2 MECHANICAL ROOF HOOD
15.3 MECHANICAL EXHAUST FAN
15.4 MECHANICAL CONDENSING UNIT
15.5 FIRE SPRINKLER MAIN SHOWN FOR COORDINATION ONLY; CONTRACTOR TO PROVIDE SHOP DWGS PER SPEC & CODE
15.6 NOT USED
15.7 WATER METER RE: CIVIL, PLUMB. DWGS
15.8 GAS METER RE: PLUMB. DWGS
15.9 NOT USED
15.10 SINK, REF: PLUMB. DWGS
15.11 SUMP PUMP BELOW GRADE
15.12 TOILET
15.13 ADA TOILET
15.14 ADA URINAL
15.15 ADA LAV
15.16 ADA SHOWER
15.17 ADA ELECTRIC DRINKING FOUNTAIN
15.18 FLOOR DRAIN
15.19 STORM DRAIN
15.20 ROOF DRAIN
15.21 MECHANICAL UNIT
15.22 MECHANICAL DIFFUSER
15.23 MECHANICAL RETURN AIR GRILLE
15.24 MECHANICAL EXHAUST FAN GRILLE
15.25 MECHANICAL EXPOSED DUCT
15.26 MECH EXPOSED DUCT SUPPORT
15.27 ROOF & OVERFLOW DRAIN SEE E5/AE504
15.28 MECHANICAL DUCT
15.29 LAMBS TONGUE
15.30 SUMP PUMP
15.31 DRINKING FOUNTAIN
15.32 AREA DRAIN
15.33 MECHANICAL DUCT BELOW GRADE
15.34 MECHANICAL LOUVER

DIVISION 16 ELECTRICAL
16.1 ELECTRIC LIGHT
16.2 ELECTRIC PANEL
16.3 ELECTRIC TRANSFORMER
16.4 HORN/STROBE, REF: ELECT.
16.5 EMERGENCY LIGHTING, REF: ELECT.
16.6 DUPLEX OUTLET, REF: ELECT.
16.7 DATA OUTLET, REF. ELECT.
16.8 CABLE TRAY SEE EP DWGS
16.9 EXIT LIGHT SEE EL DWGS
16.10 HIGH VOLTAGE SWITCH
16.11 COMMUNICATION BOX
16.12 ADA DOOR ACTUATOR POST
16.13 ADA DOOR ACTUATOR PANEL
16.14 GENERATOR
16.15 FIRE GONG
16.16 UNDERCABINET LIGHT

GENERAL NOTES
1. AT BRICK VENEER, PROVIDE SOLID BRICKS WHERE TOP OR BOTTOM SURFACE IS EXPOSED BY 1" OR MORE.

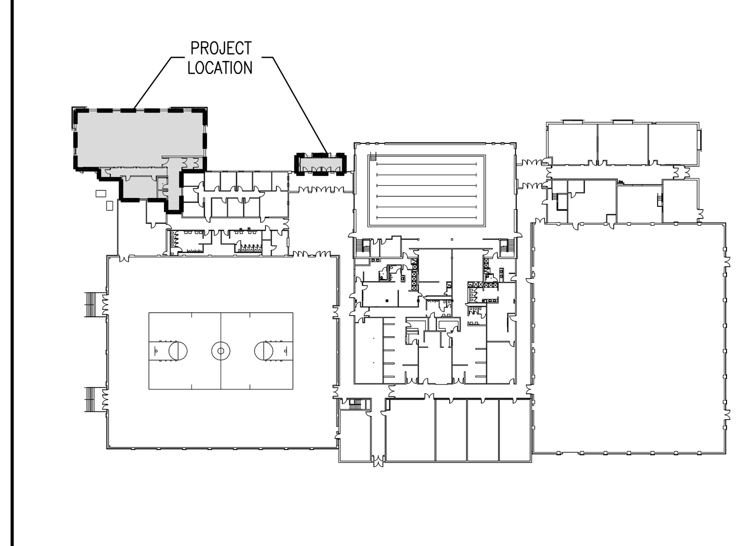

Key Plan **A6**
N.T.S.

LICENSED ARCHITECT PEGGY A. McDONOUGH No. 6090093-0301 STATE OF UTAH
7.21.2006

GouldEvans

©2002 Gould Evans Associates, L.C.
1000 South Main Street • Suite 100
Salt Lake City, Utah 84101
Voice 801.532.6100
Fax 801.532.6102
www.gouldevans.com

kansas city • lawrence • phoenix
salt lake city • san antonio • tampa

DFCM PROJECT NO: 05266700
STATE PROPERTY ID: 01791
RISK MANAGEMENT NO:
CAD PROJECT NO:
CAD DWG FILE:
DRAWN BY:
CHECKED BY:
COPYRIGHT: STATE OF UTAH

snow college
activities center
dance studio addition | remodel
ephraim, utah

REVISION	DATE

Project no:	0906-0260
Date:	July 21, 2006
Sheet:	

Enlarged Site Plan And Site Details

AS110

100% Construction Documents

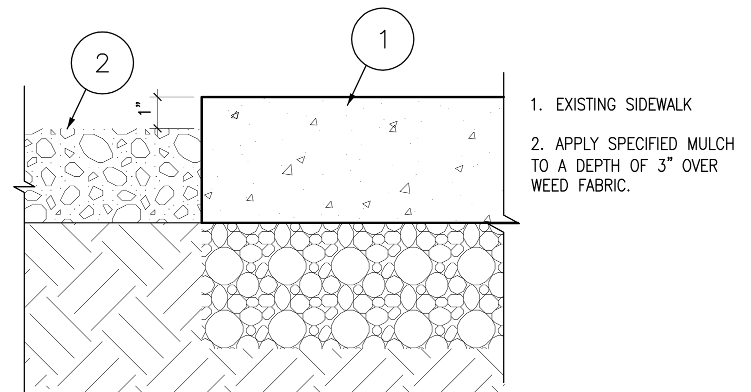

1. EXISTING SIDEWALK
2. APPLY SPECIFIED MULCH TO A DEPTH OF 3" OVER WEED FABRIC.

Gravel Mulch Detail E1

3" = 1'-0"

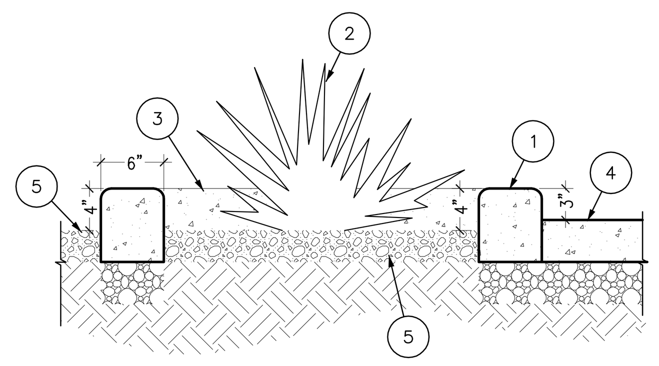

1. CONCRETE CURB
2. PLANT – SEE PLANTING PLAN
CONCRETE REATINING WALL, REF. STRUCT. DWGS
3. LINE OF CONCRETE CURB BEYOND
4. NEW SIDEWALK
5. APPLY SPECIFIED MULCH TO A DEPTH OF 3" OVER WEED FABRIC.

Concrete Curb Detail D2

1" = 1'-0"

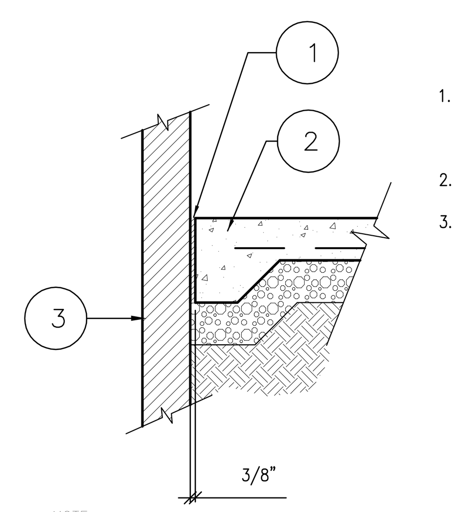

1. 3/8" EXP. JOINT MATERIAL W/ POLYURETHANE SEALANT. (TYP.)
2. CONCRETE WALK
3. EXTERIOR BUILDING WALL

NOTE:
MED. BROOM FINISH PERPENDICULAR TO TRAFFIC PATTERN, NO BANDING (OVERSTRIKE) AT JOINT OR EDGE.

Expansion Joint & Concrete Detail D3

1" = 1'-0"

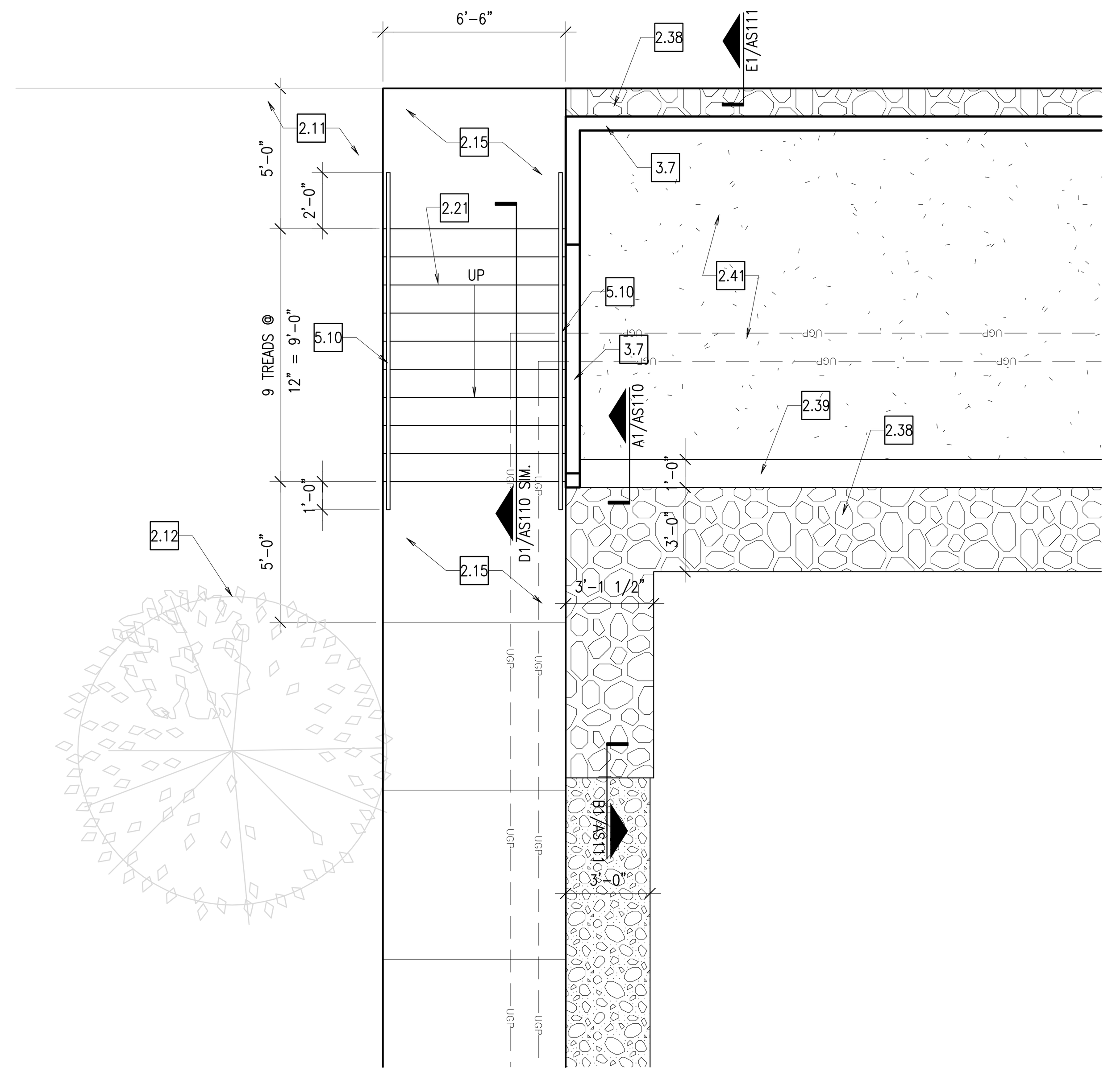

Enlarged Site Plan D5

1/4" = 1'-0"

1. CAST IN PLACE CONC. EXTERIOR BENCH
2. CONCRETE REATINING WALL
3. HORIZONTAL WALL REINFORCING. #4 @ 12" O.C.
4. EXISTING SIDEWALK
5. APPLY SPECIFIED MULCH TO A DEPTH OF 3" OVER WEED FABRIC.
6. NEW TURF
7. #5 x CONTINUOUS TOP & BOTTOM OF WALL
8. VERTICAL WALL REINFORCING. #4 @ 12" O.C. @ CENTER OF WALL
9. DOWELLS TO MATCH VERTICAL WALL REINFORCING (MIN 18" LAP LENGTH)
10. INTENTIONALLY ROUGHEN SURFACE TO 1/4" AMPLITUDE
11. 3'-0" WIDE X 12" THICK CONTINUOUS FOOTING
12. #5 X 2'-6" LONG@ 14" O.C.
13. 3 – #5 X CONTINUOUS

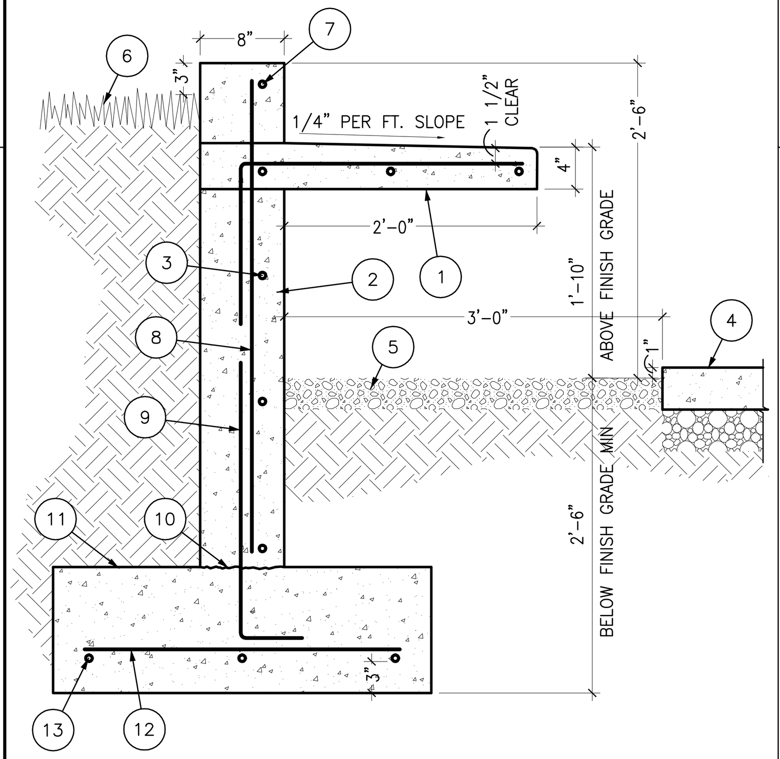

Concrete Bench & Retaining Wall Detail C1

1" = 1'-0"

1. APPLY SPECIFIED MULCH TO A DEPTH OF 3" OVER WEED FABRIC. CONCEAL STAKES IN EDGING WITH MULCH
2. 1/8" X 6" STEEL EDGING WITH STAKES EVERY 24" MINIMUM.
3. COMPACTED SUBGRADE

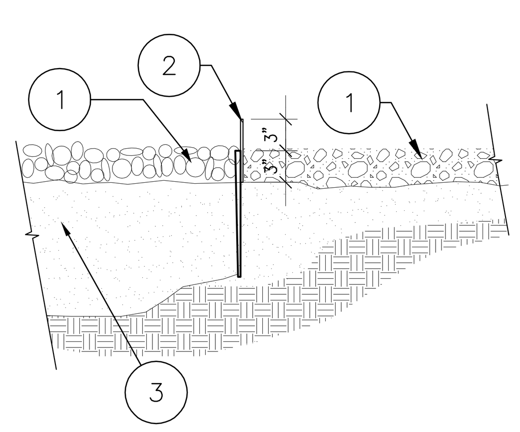

Landscape Edging Detail B1

1" = 1'-0"

1. APPLY SPECIFIED MULCH TO A DEPTH OF 3" OVER WEED FABRIC. CONCEAL STAKES IN EDGING WITH MULCH
2. 4" GRAVEL SUBBASE
3. COMPACTED SUBGRADE
4. CONCRETE SIDEWALK
5. 1/8" X 6" STEEL EDGING WITH STAKES EVERY 24" MINIMUM.
6. 1/2" THICK GRAY SPONGE RUBBER EXPANSION JOINT BETWEEN EDGING AND CONCRETE. RECESS 1/2" BELOW FINISH SURFACE OF CONCRETE SLAB.

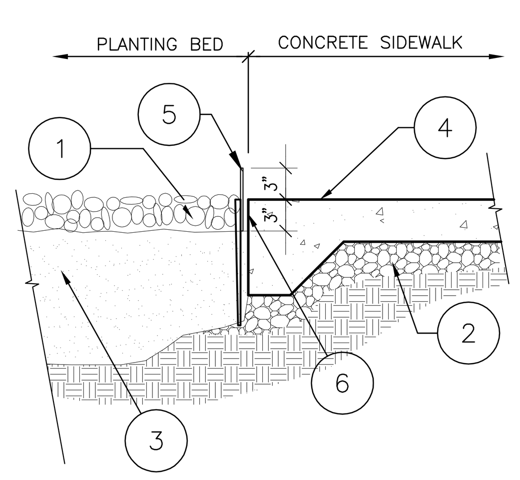

Landscape Edging Detail A1

1" = 1'-0"

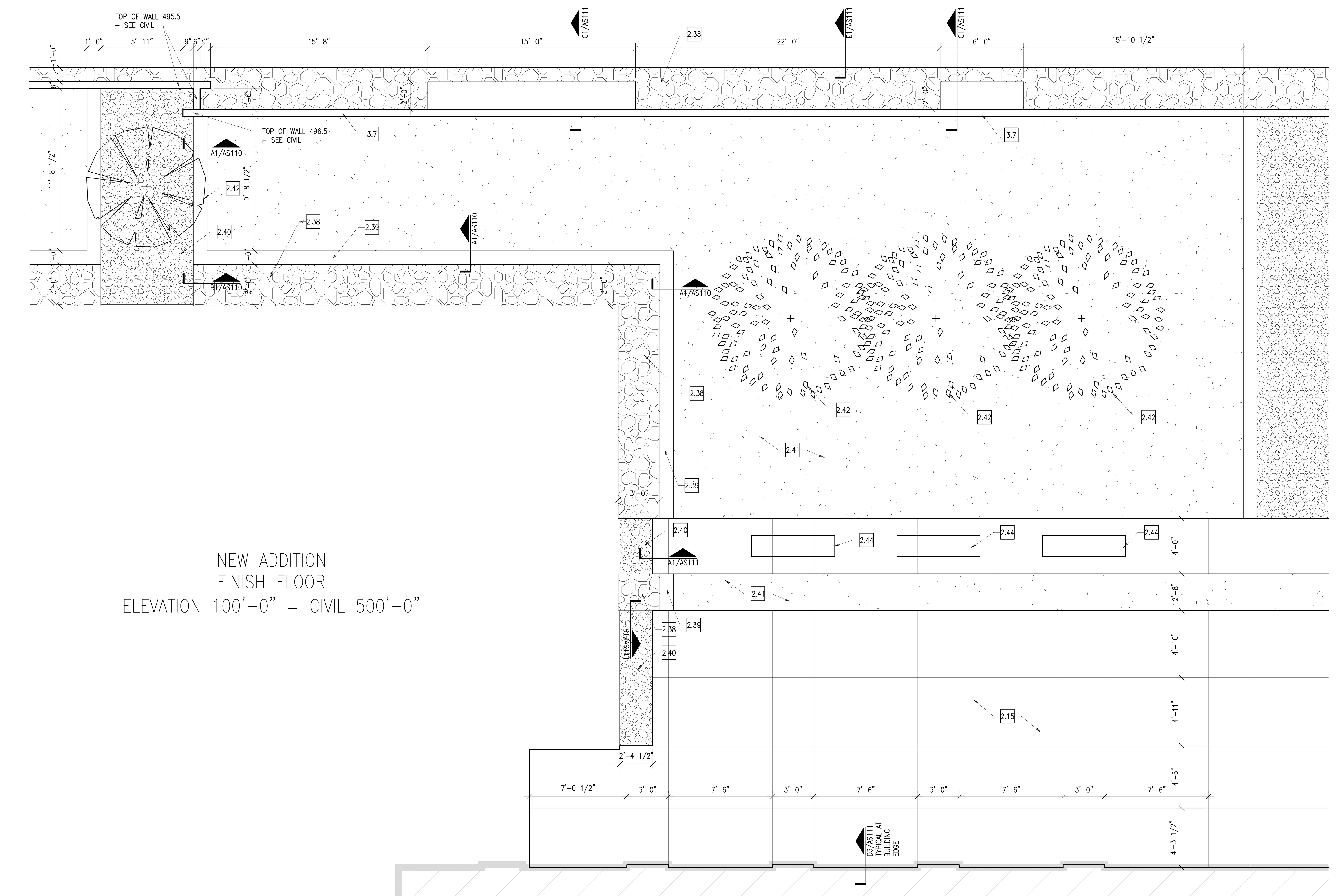

Enlarged Site Plan A5

1/4" = 1'-0"

DIVISION 1 – GENERAL NOTES
1.1 FINISH FLOOR
1.2 FINISH GRADE
1.3 LINE OF BUILDING ABOVE
1.4 EDGE OF WALL BELOW
1.5 UTILITY TUNNEL
1.6 EXISTING WALL
1.7 EXISTING FOOTING
1.8 EXISTING BUILDING
1.9 EXISTING FOUNDATION WALL
1.10 EXISTING CONCRETE SLAB

DIVISION 2 – SITE WORK
2.1 EXISTING LIGHT POLE W/ OVERHEAD POWER TO REMAIN
2.2 EXISTING ASPHALT PAVING TO REMAIN
2.3 EXISTING CONCRETE SIDEWALK TO REMAIN
2.4 EXISTING CURB TO REMAIN
2.5 EXISTING SEWER LINE TO REMAIN
2.6 EXISTING POWER POLE W/ UNDERGROUND POWER LINE TO REMAIN
2.7 EXISTING SEWER MANHOLE TO REMAIN
2.8 EXISTING 4" CLEAN OUT TO REMAIN
2.9 EXISTING CATCH BASIN TO REMAIN
2.10 EXISTING FIRE HYDRANT TO REMAIN
2.11 EXISTING LANDSCAPING TO REMAIN
2.12 EXISTING TREE TO REMAIN; FULLY PROTECTED
2.13 EXISTING GUTTER TO REMAIN
2.14 COMPACTED FILL
2.15 NEW CONCRETE PAVING
2.16 LINE OF NEW CONCRETE PAVING
2.17 EXISTING PARKING STALLS TO REMAIN
2.18 EXISTING FENCE TO REMAIN
2.19 NEW SUMP
2.20 EXISTING STONE SIGNAGE RELOCATED FROM OLD GYMNASIUM – COORDINATE WITH OWNER.
2.21 NEW CONCRETE STAIRS – SEE ENLARGED PLANS FOR DIMENSIONS
2.22 NEW CONCRETE CURB
2.23 EXISTING HIGH VOLTAGE SWITCHGEAR TO REMAIN
2.24 EXISTING 500 KVA TRANSFORMER
2.25 EXISTING CONCRETE STAIRS TO REMAIN
2.26 HANDICAP ACCESSIBLE PARKING STALL
2.27 HANDICAP ACCESSIBLE AISLE
2.28 HANDICAP ACCESSIBLE PARKING SIGN
2.29 NEW GAS METER
2.30 NEW STORM DRAIN LINE
2.31 EXISTING STORM DRAIN LINE TO REMAIN
2.32 EXISTING GAS METER TO REMAIN
2.33 EXISTING GAS LINE TO REMAIN
2.34 NEW GAS LINE TO BE CONNECTED TO EXISTING GAS LINE
2.35 EXISTING WATER LINE
2.36 NEW WATER LINE
2.37 NEW BIKE RACK
2.38 GRAVEL MULCH TO BE ½" "SILVER NICKEL" PLACED 3" DEEP OVER WEED BARRIER
2.39 NEW CONCRETE 12" WIDE MOW STRIP, SEE DETAIL A1/AS110
2.40 GRAVEL MULCH TO BE PEA GRAVEL PLACED 3" DEEP OVER WEED BARRIER
2.41 NEW TURF
2.42 NEW TREE – SEE PLANTING PLAN
2.43 NEW PLANT – SEE PLANTING PLAN
2.44 CONCRETE BENCH. BRAND: "MATERIALS, INC." STYLE: "GOTHIC" OR SIMILAR. ALT BRAND & STYLE ACCEPTABLE W/PRIOR APPROVAL.

DIVISION 3 – CONCRETE
3.1 4" CONCRETE SLAB
3.2 CONCRETE FOOTING
3.3 NOT USED
3.4 CONCRETE ON STEEL DECK
3.5 CONC EQUIPMENT PAD
3.6 CAST IN PLACE CONCRETE
3.7 CONCRETE RETAINING WALL

DIVISION 4 – MASONRY
4.1 NOT USED
4.2 MASONRY CONTROL JOINT
4.3 NOT USED
4.4 NOT USED
4.5 STANDARD BRICK VENEER, COLOR AS SELECTED BY ARCHITECT
4.6 EXISTING MASONRY, CLEANED AND SEALED

DIVISION 5 – METALS
5.1 STEEL COLUMN; REF STRUCT. DWG
5.2 STEEL BEAM; REF STRUCT. DWGS
5.3 STEEL JOIST; REF STRUCT. DWGS
5.4 STEEL ROOF DECK
5.5 STEEL LADDER
5.6 4" STRUCT STL STUDS @ 16" O.C.
5.7 STEEL ANGLE
5.8 STEEL CHANNEL
5.9 HORIZONTAL STEEL JOIST BRIDGING
5.10 1 1/2"ø ALUMINUM PIPE HANDRAIL
5.11 6" STRUCT STL STUDS @16" OC
5.12 3 5/8" STRUCT STL STUDS @16" OC
5.13 STEEL PLATE
5.14 STEEL TUBE, REF STRUCT. DWG
5.15 1 1/2"ø ALUMINUM PIPE VERTICAL SUPPORTS
5.16 1 1/2" STRUCT STL STUDS @ 16" O.C.
5.17 EXPOSED STEEL COLUMN; REF STRUCT. DWGS; PAINT, COLOR BY ARCH.
5.18 EXPOSED STEEL BEAM; REF STRUCT. DWGS; PAINT, COLOR BY ARCH.
5.19 2" STRUCT STL STUDS @ 16" OC
5.20 2-1/2" STRUCT STL STUDS @ 16" OC
5.21 EXPOSED STEEL JOIST; REF STRUCT. DWGS; PAINT, COLOR BY ARCH.
5.22 ALUMINUM ANGLE
5.23 ALUMINUM PLATE
5.24 ⅞" HAT CHANNELS
5.25 1 1/2"ø ALUMINUM PIPE GUARDRAIL
5.26 3-⅝" STL STUD SLIP TRACK SYSTEM W/ 2" LEG ON TOP TRACK AND 1-½" SLOT.

DIVISION 6 – WOOD AND PLASTICS
6.1 WOOD BLOCKING OR BACKING PLATE 16 GA X 6" HIGH FOR INTERIOR ARCHITECTURAL WOODWORK, HARDWARE, TOILET COMPARTMENTS, BATH ACCESSORIES, ETC
6.2 PLASTIC LAMINATE COUNTERTOP
6.3 NOT USED
6.4 ACRYLIC PANEL
6.5 PLASTIC LAMINATE MILLWORK
6.6 MAPLE CHAIR RAIL, SEE E5/AE504

DIVISION 7 THERMAL & MOISTURE PROTECTION
7.1 RIDGE
7.2 VALLEY, MIN SLOPE 3/16" PER LINEAL FT
7.3 CRICKET, MIN. SLOPE 1/4" PER FOOT AT VALLEY, FORM W/ TAPERED RIGID BD. INSULATION
7.4 ROOF HATCH
7.5 ROOF CURB. SEE DETAIL C2/AE504.
7.6 ROOF DRAIN & OVERFLOW DRAIN
7.7 TYPICAL PIPE/CONDUIT PENETRATION

DIVISION 7 CONT'D THERMAL & MOISTURE PROTECTION
7.8 SINGLE PLY ROOF MEMBRANE MECHANICALLY FASTENED OVER MIN 4" TAPERED RIGID INSULATION SLOPED TO DRAIN 1/4"/FT MIN
7.9 1" EXPANSION JOINT
7.10 ROOF SCUPPER
7.11 SEALANT
7.12 R-11 BATTS, FACED MINERAL-FIBER BLANKET INSULATION
7.13 R-19 BATTS, FACED MINERAL-FIBER BLANKET INSULATION
7.14 NOT USED
7.15 FIRE SAFING INSULATION
7.16 NOT USED
7.17 RIGID INSULATION
7.18 METAL REGLET & COUNTER FLASHING
7.19 METAL FASCIA
7.20 METAL CLOSURE
7.21 PRE-FINISHED METAL COPING; COLOR BY ARCH. FROM MANUF. FULL RANGE
7.22 COMPOSITE SHEET WATERPROOFING
7.23 NOT USED
7.24 2" INSULATED METAL PANEL SYSTEM, COLOR BY ARCHITECT
7.25 EXISTING METAL COPING TO REMAIN

DIVISION 8 DOORS & WINDOWS
8.1 HOLLOW METAL DOOR & FRAME
8.2 FLUSH WOOD DOOR
8.3 ACCESS DOOR
8.4 ANODIZED ALUM. STOREFRONT WINDOW
8.5 ANODIZED ALUM. STOREFRONT DOOR AND FRAME
8.6 1" INSULATED GLASS SET IN ALUM. CURTAIN WALL FRAME
8.7 1" INSULATED SANDBLASTED GLASS SET IN ALUM. CURTAIN WALL FRAME
8.8 1" INSULATED SANDBLASTED GLASS SET IN ANODIZED ALUMINUM STOREFRONT
8.9 BUTT GLAZING
8.10 MIRROR
8.11 1/2" TEMPERED SAFETY GLASS W/ SAND BLASTED FINISH
8.12 ADA AUTOMATIC DOOR
8.13 ALUM. STOREFRONT SYSTEM RELOCATED FROM EXISTING VESTIBULE. SEE SHEET AD101ALT.
8.14 1/2" TEMPERED SAFETY GLASS
8.15 ALUM. STOREFRONT SYSTEM

DIVISION 9 FINISHES
9.1 GYP BOARD, PAINT – COLOR BY ARCH.
9.2 CERAMIC TILE
9.3 ACOUSTICAL PANEL CEILING
9.4 NOT USED
9.5 RESILIENT MNTD. HARDWOOD FLOOR
9.6 NOT USED
9.7 RUBBER BASE
9.8 CERAMIC TILE BASE
9.9 VINYL COMPOSITION TILE
9.10 CARPET

DIVISION 10 SPECIALITIES
10.1 36" GRAB BAR
10.2 WHITE BOARD; PROVIDE BLKG
10.3 TOILET PAPER DISPENSER
10.4 SIGN – MAXIMUM OCCUPANT LOAD
10.5 FIRE EXT.; RECESSED CABINET
10.6 42" GRAB BAR
10.7 MARKER BOARD
10.8 OWNER SUPPLIED SIGN IDENTIFYING LOCATION OF UNISEX RESTROOM
10.9 BULLETIN BOARD

DIVISION 11 EQUIPMENT
11.1 AV EQUIPMENT SEE AV DWGS
11.2 AV PANEL SEE AV DWGS
11.3 SPEAKER, N.I.C.
11.4 AV FLOOR POCKET
11.5 ADJUSTABLE BALLET BARRE

DIVISION 15 MECHANICAL
15.1 FIRE CONNECTION
15.2 MECHANICAL ROOF HOOD
15.3 MECHANICAL EXHAUST FAN
15.4 MECHANICAL CONDENSING UNIT
15.5 FIRE SPRINKLER MAIN SHOWN FOR COORDINATION ONLY; CONTRACTOR TO PROVIDE SHOP DWGS PER SPEC & CODE
15.6 NOT USED
15.7 WATER METER RE: CIVIL, PLUMB. DWGS
15.8 GAS METER RE: PLUMB. DWGS
15.9 NOT USED
15.10 SINK, REF: PLUMB. DWGS
15.11 SUMP PUMP BELOW GRADE
15.12 TOILET
15.13 ADA TOILET
15.14 ADA URINAL
15.15 ADA LAV
15.16 ADA SHOWER
15.17 ADA ELECTRIC DRINKING FOUNTAIN
15.18 FLOOR DRAIN
15.19 STORM DRAIN
15.20 ROOF DRAIN
15.21 MECHANICAL UNIT
15.22 MECHANICAL DIFFUSER
15.23 MECHANICAL RETURN AIR GRILLE
15.24 MECHANICAL EXHAUST FAN GRILLE
15.25 MECHANICAL EXPOSED DUCT
15.26 MECH EXPOSED DUCT SUPPORT
15.27 ROOF & OVERFLOW DRAIN SEE E5/AE504
15.28 MECHANICAL DUCT
15.29 LAMBS TONGUE
15.30 SUMP PUMP
15.31 DRINKING FOUNTAIN
15.32 AREA DRAIN
15.33 MECHANICAL DUCT BELOW GRADE
15.34 MECHANICAL LOUVER

DIVISION 16 ELECTRICAL
16.1 ELECTRIC LIGHT
16.2 ELECTRIC PANEL
16.3 ELECTRIC TRANSFORMER
16.4 HORN/STROBE, REF: ELECT.
16.5 EMERGENCY LIGHTING, REF: ELECT.
16.6 DUPLEX OUTLET, REF: ELECT.
16.7 DATA OUTLET, REF. ELECT.
16.8 CABLE TRAY SEE EP DWGS
16.9 EXIT LIGHT SEE EL DWGS
16.10 HIGH VOLTAGE SWITCH
16.11 COMMUNICATION BOX
16.12 ADA DOOR ACTUATOR POST
16.13 ADA DOOR ACTUATOR PANEL
16.14 GENERATOR
16.15 FIRE GONG
16.16 UNDERCABINET LIGHT

GENERAL NOTES
1. AT BRICK VENEER, PROVIDE SOLID BRICKS WHERE TOP OR BOTTOM SURFACE IS EXPOSED BY 1" OR MORE.

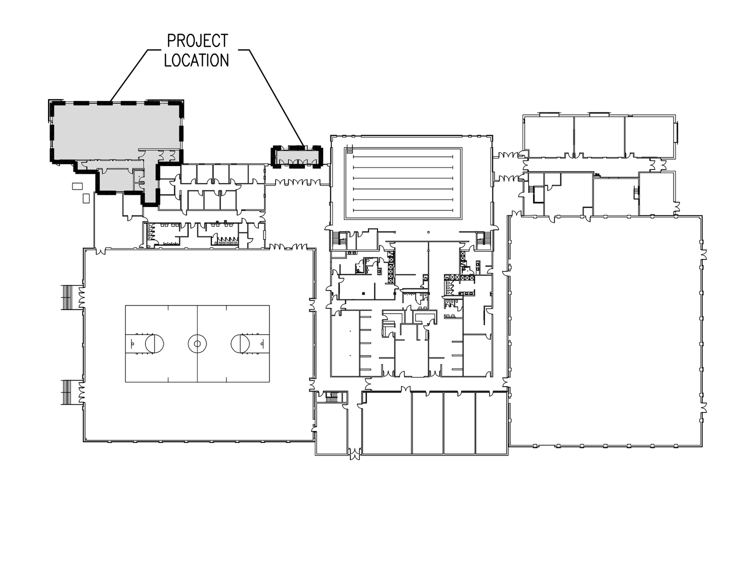

Key Plan A6

N.T.S.

LICENSED ARCHITECT
PEGGY A. McDONOUGH
No. 6090093-0301
STATE OF UTAH
7.21.2006

GouldEvans

©2002 Gould Evans Associates, L.C.
1000 South Main Street • Suite 100
Salt Lake City, Utah 84101
Voice 801.532.6100
Fax 801.532.6102
www.gouldevans.com

kansas city • lawrence • phoenix
salt lake city • san antonio • tampa

DFCM PROJECT NO: 05266700
STATE PROPERTY ID: 01791
RISK MANAGEMENT NO:
CAD PROJECT NO:
CAD DWG FILE:
DRAWN BY:
CHECKED BY:
COPYRIGHT: STATE OF UTAH

snow college
activities center
dance studio addition | remodel
ephraim, utah

REVISION	DATE

Project no: 0906-0260
Date: July 21, 2006
Sheet:

Enlarged Site Plans And Site Details

AS111

100% Construction Documents

KEY

PLANTING SCHEDULE

Label	Quantity	Description
Trees		
T1		Columnner Maple (Acer Plantanoides 'Columner')
T2		Superior Red Amur Maple (Acer Ginnala 'Berglana Flame')
Ornamental Grasses		
G1		Elijah Blue Fescue (Festuca Ovina Glauca)
G2		Flame Grass (Miscanthus Sinensis var. Purpurascens)
G3		Karl Foerster Feather Reed Grass (Calamagrostis x Acutiflora 'Karl Foerster')
Misc Plantings		
P1		Whipple Penstemon (Penstemon Whippleanus)
P2		Ivory Tower Yucca (Yucca Flaccida 'Ivory tower')
P3		English Lavender (Lavandula Angustifolia)

General Notes For This Sheet:

1. PRIOR TO COMMENCEMENT OF ANY WORK, LANDSCAPE CONTRACTOR SHALL VERIFY LOCATIONS AND DEPTHS OF UNDERGROUND UTILITIES THAT MAY BE EFFECTED BY HIS WORK AND HE SHALL BE RESPONSIBLE FOR DAMAGES CAUSED AS A RESULT OF HIS INSTALLATIONS.

2. LANDSCAPE CONTRACTOR TO VERIFY ALL GRADES AND ELEVATIONS. CONTRACTOR SHALL BE RESPONSIBLE TO NOTIFY SITE EARTHWORK CONTRACTOR OF MAJOR DEFICIENCIES IN ELEVATIONS. CONTRACTOR SHALL ADJUST MINOR DEFICIENCIES FOR PROPOSED FINAL GRADES.

3. CONTRACTOR TO FOLLOW LANDSCAPE PLAN IF THERE ARE ANY DISCREPENCIES WITH PLANT QUANTITY.

4. LANDSCAPE CONTRACTOR TO FOLLOW ALL LOCAL CODES FOR PLANTING PROCEDURES AND STANDARDS. ANY DISCREPANCIES FOUND SHALL BE NOTIFIED TO ARCHITECT.

5. SUBSTITUTIONS SHALL NOT BE ALLOWED UNLESS AUTHORIZED IN WRITING BY ARCHITECT PRIOR TO BID SUBMITTAL. AFTER THE BID IS AWARDED, IT WILL BE REQUIRED THAT ALL SPECIFIED AND/OR APPROVED SUBSTITUTIONS SHALL BE INSTALLED BY CONTRACTOR WITH NO EXCEPTIONS.

6. SEE ARCHITECTURAL SITE PLAN FOR ALL SURFACE MATERIALS INCLUDING BUT NOT LIMITED TO GRAVEL MULCHES AND TURF.

7. IF EXISTING IRRIGATION SYSTEM IS DAMAGED OR SEVERED BY ANY CONSTRUCTION, IRRIGATION CONTRACTOR SHALL REPAIR OR REPLACE AFFECTED AREAS TO RESTORE TO ORIGINAL FUNCTION. DETERMINATION OF AFFECTED AREAS AND COORDINATION WITH WITH OTHER CONSTRUCTION WORK SHALL BE THE RESPONSIBILITY OF THE IRRIGATION CONTRACTOR.

8. SOME AREAS IN NEED OF DRIP IRRIGATION MAY REQUIRE INSTALLATION OF GROUND SLEEVES IN CONCRETE SLABS. IRRIGATION CONTRACTOR SHALL BE RESPONSIBLE FOR INSTALLATION OF GROUND SLEEVES PRIOR TO POURING CONCRETE SLABS.

Bid Materials and Labor For:

PREP SITE FOR ALL LANDSCAPE PLANTINGS

WEED CONTROL FABRIC UNDER ALL GRAVEL AREAS

1/2" "SILVER NICKEL" GRAVEL MULCH 3" DEEP WHERE SHOWN

PEA GRAVEL 3" DEEP WHERE SHOWN

TOPSOIL AND/OR SOIL AMENDMENTS IN ALL PLANTING AREAS

ORNAMENTAL GRASSES AS SHOWN

TREES AS SHOWN, INCLUDING GUYING

OTHER MISC PLANTS AS SHOWN

DRIP IRRIGATION SYSTEM AT TREES, ORNAMENTAL GRASSES, AND OTHER PLANTINGS.

SPRAY IRRIGATION AT ALL TURF AREAS

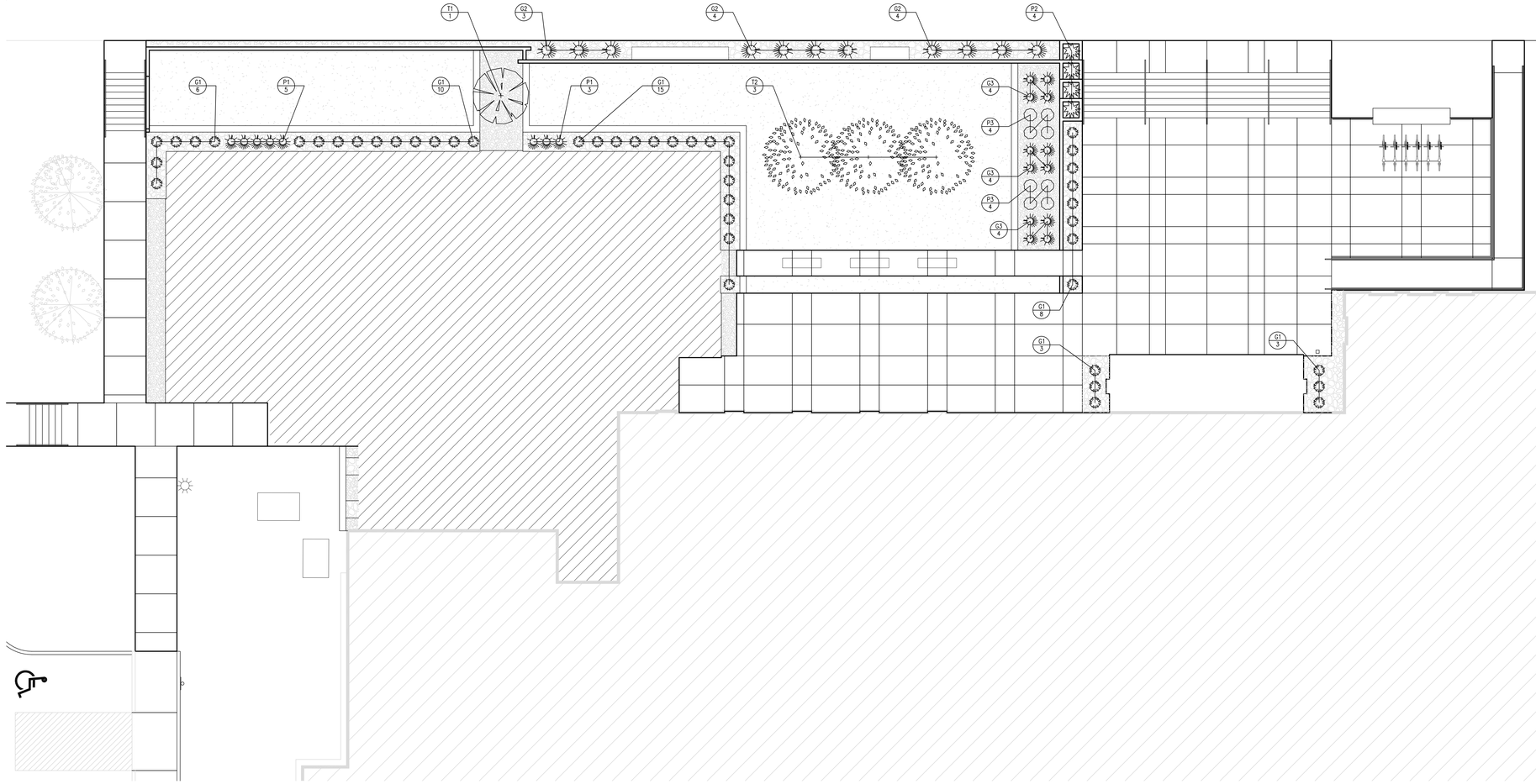

Architectural Planting and Irrigation Plan **A5**
SCALE: 1/8" = 1-0"

DIVISION 1 – GENERAL NOTES
1.1 FINISH FLOOR
1.2 FINISH GRADE
1.3 LINE OF BUILDING ABOVE
1.4 EDGE OF WALL BELOW
1.5 UTILITY TUNNEL
1.6 EXISTING WALL
1.7 EXISTING FOOTING
1.8 EXISTING BUILDING
1.9 EXISTING FOUNDATION WALL
1.10 EXISTING CONCRETE SLAB

DIVISION 2 – SITE WORK
2.1 EXISTING LIGHT POLE W/ OVERHEAD POWER TO REMAIN
2.2 EXISTING ASPHALT PAVING TO REMAIN
2.3 EXISTING CONCRETE SIDEWALK TO REMAIN
2.4 EXISTING CURB TO REMAIN
2.5 EXISTING SEWER LINE TO REMAIN
2.6 EXISTING POWER POLE W/ UNDERGROUND POWER LINE TO REMAIN
2.7 EXISTING SEWER MANHOLE TO REMAIN
2.8 EXISTING 4" CLEAN OUT TO REMAIN
2.9 EXISTING CATCH BASIN TO REMAIN
2.10 EXISTING FIRE HYDRANT TO REMAIN
2.11 EXISTING LANDSCAPING TO REMAIN
2.12 EXISTING TREE TO REMAIN; FULLY PROTECTED
2.13 EXISTING GUTTER TO REMAIN
2.14 COMPACTED FILL
2.15 NEW CONCRETE PAVING
2.16 LINE OF NEW CONCRETE PAVING
2.17 EXISTING PARKING STALLS TO REMAIN
2.18 EXISTING FENCE TO REMAIN
2.19 NEW SUMP
2.20 EXISTING STONE SIGNAGE RELOCATED FROM OLD GYMNASIUM – COORDINATE WITH OWNER.
2.21 NEW CONCRETE STAIRS – SEE ENLARGED PLANS FOR DIMENSIONS
2.22 NEW CONCRETE CURB
2.23 EXISTING HIGH VOLTAGE SWITCHGEAR TO REMAIN
2.24 EXISTING 500 KVA TRANSFORMER
2.25 EXISTING CONCRETE STAIRS TO REMAIN
2.26 HANDICAP ACCESSIBLE PARKING STALL
2.27 HANDICAP ACCESSIBLE AISLE
2.28 HANDICAP ACCESSIBLE PARKING SIGN
2.29 NEW GAS METER
2.30 NEW STORM DRAIN LINE
2.31 EXISTING STORM DRAIN LINE TO REMAIN
2.32 EXISTING GAS METER TO REMAIN
2.33 EXISTING GAS LINE TO REMAIN
2.34 NEW GAS LINE TO BE CONNECTED TO EXISTING GAS LINE
2.35 EXISTING WATER LINE
2.36 NEW WATER LINE
2.37 NEW BIKE RACK
2.38 GRAVEL MULCH TO BE ¾" "SILVER NICKEL" PLACED 3" DEEP OVER WEED BARRIER
2.39 NEW CONCRETE 12" WIDE MOW STRIP, SEE DETAIL A1/AS110
2.40 GRAVEL MULCH TO BE PEA GRAVEL PLACED 3" DEEP OVER WEED BARRIER
2.41 NEW TURF
2.42 NEW TREE – SEE PLANTING PLAN
2.43 NEW PLANT – SEE PLANTING PLAN
2.44 CONCRETE BENCH. BRAND: "MATERIALS, INC." STYLE: "GOTHIC" OR SIMILAR. ALT BRAND & STYLE ACCEPTABLE W/PRIOR APPROVAL.

DIVISION 3 – CONCRETE
3.1 4" CONCRETE SLAB
3.2 CONCRETE FOOTING
3.3 NOT USED
3.4 CONCRETE ON STEEL DECK
3.5 CONC EQUIPMENT PAD
3.6 CAST IN PLACE CONCRETE
3.7 CONCRETE RETAINING WALL

DIVISION 4 – MASONRY
4.1 NOT USED
4.2 MASONRY CONTROL JOINT
4.3 NOT USED
4.4 NOT USED
4.5 STANDARD BRICK VENEER, COLOR AS SELECTED BY ARCHITECT
4.6 EXISTING MASONRY, CLEANED AND SEALED

DIVISION 5 – METALS
5.1 STEEL COLUMN; REF STRUCT. DWG
5.2 STEEL BEAM; REF STRUCT. DWGS
5.3 STEEL JOIST; REF STRUCT. DWGS
5.4 STEEL ROOF DECK
5.5 STEEL LADDER
5.6 4" STRUCT STL STUDS @ 16" O.C.
5.7 STEEL ANGLE
5.8 STEEL CHANNEL
5.9 HORIZONTAL STEEL JOIST BRIDGING
5.10 1 1/2"ø ALUMINUM PIPE HANDRAIL
5.11 6" STRUCT STL STUDS @16" OC
5.12 3 5/8" STRUCT STL STUDS @16" OC
5.13 STEEL PLATE
5.14 STEEL TUBE, REF STRUCT. DWG
5.15 1 1/2"ø ALUMINUM PIPE VERTICAL SUPPORTS
5.16 1 1/2" STRUCT STL STUDS @ 16" O.C.
5.17 EXPOSED STEEL COLUMN; REF STRUCT. DWGS; PAINT, COLOR BY ARCH.
5.18 EXPOSED STEEL BEAM; REF STRUCT. DWGS; PAINT, COLOR BY ARCH.
5.19 2" STRUCT STL STUDS @ 16" OC
5.20 2-1/2" STRUCT STL STUDS @ 16" OC
5.21 EXPOSED STEEL JOIST; REF STRUCT. DWGS; PAINT, COLOR BY ARCH.
5.22 ALUMINUM ANGLE
5.23 ALUMINUM PLATE
5.24 ⅞" HAT CHANNELS
5.25 1 1/2"ø ALUMINUM PIPE GUARDRAIL
5.26 3-⅝" STL STUD SLIP TRACK SYSTEM W/ 2" LEG ON TOP TRACK AND 1-⅜" SLOT.

DIVISION 6 – WOOD AND PLASTICS
6.1 WOOD BLOCKING OR BACKING PLATE 16 GA X 6" HIGH FOR INTERIOR ARCHITECTURAL WOODWORK, HARDWARE, TOILET COMPARTMENTS, BATH ACCESSORIES, ETC
6.2 PLASTIC LAMINATE COUNTERTOP
6.3 NOT USED
6.4 ACRYLIC PANEL
6.5 PLASTIC LAMINATE MILLWORK
6.6 MAPLE CHAIR RAIL, SEE E5/AE504

DIVISION 7 THERMAL & MOISTURE PROTECTION
7.1 RIDGE
7.2 VALLEY, MIN SLOPE 3/16" PER LINEAL FT
7.3 CRICKET, MIN. SLOPE 1/4" PER FOOT AT VALLEY, FORM W/ TAPERED RIGID BD. INSULATION
7.4 ROOF HATCH
7.5 ROOF CURB. SEE DETAIL C2/AE504.
7.6 ROOF DRAIN & OVERFLOW DRAIN
7.7 TYPICAL PIPE/CONDUIT PENETRATION

DIVISION 7 CONT'D THERMAL & MOISTURE PROTECTION
7.8 SINGLE PLY ROOF MEMBRANE MECHANICALLY FASTENED OVER MIN 4" TAPERED RIGID INSULATION SLOPED TO DRAIN 1/4"/FT MIN
7.9 1" EXPANSION JOINT
7.10 ROOF SCUPPER
7.11 SEALANT
7.12 R-11 BATTS, FACED MINERAL-FIBER BLANKET INSULATION
7.13 R-19 BATTS, FACED MINERAL-FIBER BLANKET INSULATION
7.14 NOT USED
7.15 FIRE SAFING INSULATION
7.16 NOT USED
7.17 RIGID INSULATION
7.18 METAL REGLET & COUNTER FLASHING
7.19 METAL FASCIA
7.20 METAL CLOSURE
7.21 PRE-FINISHED METAL COPING; COLOR BY ARCH. FROM MANUF. FULL RANGE
7.22 COMPOSITE SHEET WATERPROOFING
7.23 NOT USED
7.24 2" INSULATED METAL PANEL SYSTEM, COLOR BY ARCHITECT
7.25 EXISTING METAL COPING TO REMAIN

DIVISION 8 DOORS & WINDOWS
8.1 HOLLOW METAL DOOR & FRAME
8.2 FLUSH WOOD DOOR
8.3 ACCESS DOOR
8.4 ANODIZED ALUM. STOREFRONT WINDOW
8.5 ANODIZED ALUM. STOREFRONT DOOR AND FRAME
8.6 1" INSULATED GLASS SET IN ALUM. CURTAIN WALL FRAME
8.7 1" INSULATED SANDBLASTED GLASS SET IN ALUM. CURTAIN WALL FRAME
8.8 1" INSULATED SANDBLASTED GLASS SET IN ANODIZED ALUMINUM STOREFRONT
8.9 BUTT GLAZING
8.10 MIRROR
8.11 1/2" TEMPERED SAFETY GLASS W/ SAND BLASTED FINISH
8.12 ADA AUTOMATIC DOOR
8.13 ALUM. STOREFRONT SYSTEM RELOCATED FROM EXISTING VESTIBULE. SEE SHEET AD101ALT.
8.14 1/2" TEMPERED SAFETY GLASS
8.15 ALUM. STOREFRONT SYSTEM

DIVISION 9 FINISHES
9.1 GYP BOARD, PAINT – COLOR BY ARCH.
9.2 CERAMIC TILE
9.3 ACOUSTICAL PANEL CEILING
9.4 NOT USED
9.5 RESILIENT MNTD. HARDWOOD FLOOR
9.6 NOT USED
9.7 RUBBER BASE
9.8 CERAMIC TILE BASE
9.9 VINYL COMPOSITION TILE
9.10 CARPET

DIVISION 10 SPECIALITIES
10.1 36" GRAB BAR
10.2 WHITE BOARD; PROVIDE BLKG
10.3 TOILET PAPER DISPENSER
10.4 SIGN – MAXIMUM OCCUPANT LOAD
10.5 FIRE EXT.; RECESSED CABINET
10.6 42" GRAB BAR
10.7 MARKER BOARD
10.8 OWNER SUPPLIED SIGN IDENTIFYING LOCATION OF UNISEX RESTROOM
10.9 BULLETIN BOARD

DIVISION 11 EQUIPMENT
11.1 AV EQUIPMENT SEE AV DWGS
11.2 AV PANEL SEE AV DWGS
11.3 SPEAKER, N.I.C.
11.4 AV FLOOR POCKET
11.5 ADJUSTABLE BALLET BARRE

DIVISION 15 MECHANICAL
15.1 FIRE CONNECTION
15.2 MECHANICAL ROOF HOOD
15.3 MECHANICAL EXHAUST FAN
15.4 MECHANICAL CONDENSING UNIT
15.5 FIRE SPRINKLER MAIN SHOWN FOR COORDINATION ONLY; CONTRACTOR TO PROVIDE SHOP DWGS PER SPEC & CODE
15.6 NOT USED
15.7 WATER METER RE: CIVIL, PLUMB. DWGS
15.8 GAS METER RE: PLUMB. DWGS
15.9 NOT USED
15.10 SINK, REF: PLUMB. DWGS
15.11 SUMP PUMP BELOW GRADE
15.12 TOILET
15.13 ADA TOILET
15.14 ADA URINAL
15.15 ADA LAV
15.16 ADA SHOWER
15.17 ADA ELECTRIC DRINKING FOUNTAIN
15.18 FLOOR DRAIN
15.19 STORM DRAIN
15.20 ROOF DRAIN
15.21 MECHANICAL UNIT
15.22 MECHANICAL DIFFUSER
15.23 MECHANICAL RETURN AIR GRILLE
15.24 MECHANICAL EXHAUST FAN GRILLE
15.25 MECHANICAL EXPOSED DUCT
15.26 MECH EXPOSED DUCT SUPPORT
15.27 ROOF & OVERFLOW DRAIN SEE E5/AE504
15.28 MECHANICAL DUCT
15.29 LAMBS TONGUE
15.30 SUMP PUMP
15.31 DRINKING FOUNTAIN
15.32 AREA DRAIN
15.33 MECHANICAL DUCT BELOW GRADE
15.34 MECHANICAL LOUVER

DIVISION 16 ELECTRICAL
16.1 ELECTRIC LIGHT
16.2 ELECTRIC PANEL
16.3 ELECTRIC TRANSFORMER
16.4 HORN/STROBE, REF: ELECT.
16.5 EMERGENCY LIGHTING, REF: ELECT.
16.6 DUPLEX OUTLET, REF: ELECT.
16.7 DATA OUTLET, REF: ELECT.
16.8 CABLE TRAY SEE EP DWGS
16.9 EXIT LIGHT SEE EL DWGS
16.10 HIGH VOLTAGE SWITCH
16.11 COMMUNICATION BOX
16.12 ADA DOOR ACTUATOR POST
16.13 ADA DOOR ACTUATOR PANEL
16.14 GENERATOR
16.15 FIRE GONG
16.16 UNDERCABINET LIGHT

GENERAL NOTES
1. AT BRICK VENEER, PROVIDE SOLID BRICKS WHERE TOP OR BOTTOM SURFACE IS EXPOSED BY 1" OR MORE.

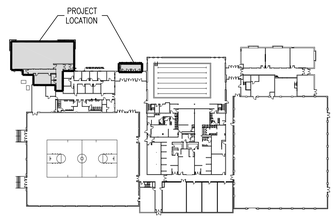

Key Plan N.T.S. **A6**

LICENSED ARCHITECT
PEGGY A. McDONOUGH
No. 6006020-6201
STATE OF UTAH
7-21-2006

GouldEvans
©2002 Gould Evans Associates, L.C.
1000 South Main Street • Suite 100
Salt Lake City, Utah 84101
Voice 801.532.6100
Fax 801.532.6102
www.gouldevans.com
kansas city • lawrence • phoenix
salt lake city • san antonio • tampa

DFCM PROJECT NO: 05266700
STATE PROPERTY ID: 01791
RISK MANAGEMENT NO:
CAD PROJECT NO:
CAD DWG FILE:
DRAWN BY:
CHECKED BY:
COPYRIGHT: STATE OF UTAH

snow college activities center
dance studio addition | remodel
ephraim, utah

REVISION	DATE

Project no: 0906-0260
Date: July 21, 2006
Sheet:

Planting and Irrigation Plan
AS112

100% Construction Documents

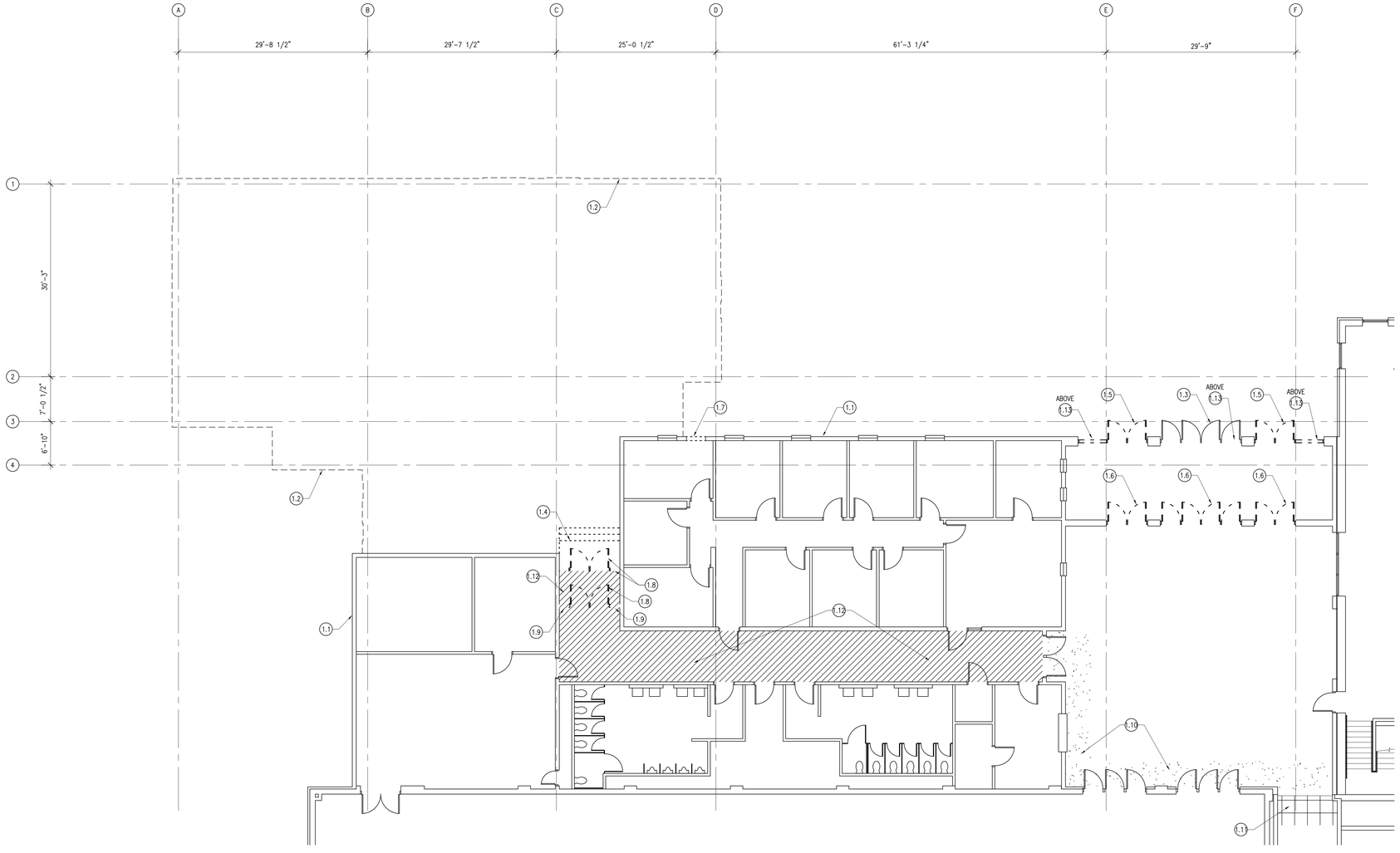

Demolition Plan A5
1/8" = 1'-0"

DEMOLITION KEYNOTES

DIVISION 1 – GENERAL REQUIREMENTS

1.1 EXISTING BUILDING

1.2 OUTLINE OF NEW ADDITION

1.3 DOORS AND FRAMES TO REMAIN UNCHANGED.

1.4 EXISTING EXTERIOR CONCRETE STAIR TO BE REMOVED, INCLUDING ALL HANDRAIL SYSTEMS.

1.5 REMOVE EXISTING ALUMINUM STOREFRONT DOORS AND FRAMES. REUSE DOORS IN SAME LOCATION WITH DIFFERENT FRAME. SEE SHEET AE101.

1.6 REMOVE EXISTING ALUMINUM STOREFRONT DOORS AND FRAMES. REUSE DOORS ON NEW VESTIBULE EXTERIOR. SEE SHEET AE101.

1.7 REMOVE PORTION OF WALL FOR NEW WINDOW, SEE SHEET AE101 FOR LOCATION.

1.8 EXISTING ALUMINUM STOREFRONT DOOR AND WINDOW SYSTEM TO BE REMOVED.

1.9 EXISTING WALL TO BE REMOVED AS SHOWN, INCLUDING ALL ELECTRICAL, MECHANICAL, PLUMBING AND OTHER UTILITIES.

1.10 REMOVE PORTION OF EXISTING GYP BD CEILING TO ACCOMODATE INSTALLATION OF NEW PLUMBING. REMOVE AS LITTLE AS POSSIBLE TO ACCOMPLISH TASK.

1.11 REMOVE CEILING TILE IN THIS AREA TO ACCOMODATE INSTALLATION OF NEW PLUMBING. DO NOT REMOVE CEILING GRID IF PLUMBING WORK CAN BE DONE WITH GRID IN PLACE. SAVE REMOVED CEILING TILES, AND REPLACE WHEN PLUMBING WORK IS FINISHED. IF CEILING TILES OR CEILING GRID ARE DAMAGED PRIOR TO COMPLETION OF PLUMBING WORK, REPLACE WITH NEW MATERIAL TO MATCH EXISTING.

1.12 REMOVE ENTIRE CEILING SYSTEM, INCLUDING GLUED-ON TILES AND GYP BD SUBSTRATE.

1.13 REMOVE EXISTING BLUE TILE ABOVE DOORS AND STOREFRONT GLAZING. IF ADJACENT MATERIALS, INCLUDING PARAPET CAP AND MASONRY ARE DAMAGED DURING DEMOLITION, REPLACE DAMAGED MATERIAL TO MATCH PREVIOUS CONDITION.

DEMOLITION GENERAL NOTES

1. COORDINATE WITH PLANS FROM OTHER DISCIPLINES FOR EXTENT OF UTILITY AND STRUCTURAL DEMOLITION, INCLUDING PIPING, HVAC, CONTROLS/DISTRIBUTION, POWER, LIGHTING, PUBLIC ANNOUNCEMENT, AND DATA SYSTEMS.

2. CLEAN AND PREPARE ALL SURFACES TO REMAIN TO RECEIVE NEW CONSTRUCTION.

3. COORDINATE WITH OWNER ALL FURNISHINGS, EQUIPMENT, ACCESSORIES, ETC. SCHEDULED TO BE REMOVED FOR SALVAGE OF MATERIALS.

4. PREPATORY TO INSTALLATION OF NEW COMPONENTS OR REFINISHING OF EXISTING SURFACES, PATCH AND REPAIR ANY DAMAGED SURFACE TO EXACTLY MATCH ADJACENT SURFACES. REPAIRED AND EXISTING SURFACES SHALL BE COPLANAR AND FLAT OR PLUMB.

5. COORDINATE ALL DEMOLITION WITH REQUIREMENTS FOR NEW CONSTRUCTION AS INDICATED IN THE DRAWINGS AND SPECIFICATION FOR NEW WORK, INCLUDING DIMENSIONS/EXTENTS, LOCATIONS, AND FINISHES OF NEW WORK.

DEMOLITION LEGEND

EXISTING WALL TO REMAIN

EXISTING WALL TO BE REMOVED

EXISTING DOOR TO BE REMOVED

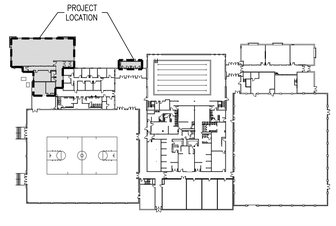

Key Plan A6
N.T.S.

LICENSED ARCHITECT
PEGGY A. McDONOUGH
No. 6006030-6301
STATE OF UTAH
7-21-2006

GouldEvans

©2002 Gould Evans Associates, L.C.
1000 South Main Street • Suite 100
Salt Lake City, Utah 84101
Voice 801.532.6100
Fax 801.532.6102
www.gouldevans.com

kansas city • lawrence • phoenix
salt lake city • san antonio • tampa

DFCM PROJECT NO: 05266700

STATE PROPERTY ID: 01791

RISK MANAGEMENT NO:

CAD PROJECT NO:

CAD DWG FILE:

DRAWN BY:

CHECKED BY:

COPYRIGHT: STATE OF UTAH

snow college
activities center
dance studio addition | remodel
ephraim, utah

REVISION	DATE

Project no: 0906-0260
Date: July 21, 2006
Sheet:

Demolition Plan
AD101

100% Construction Documents

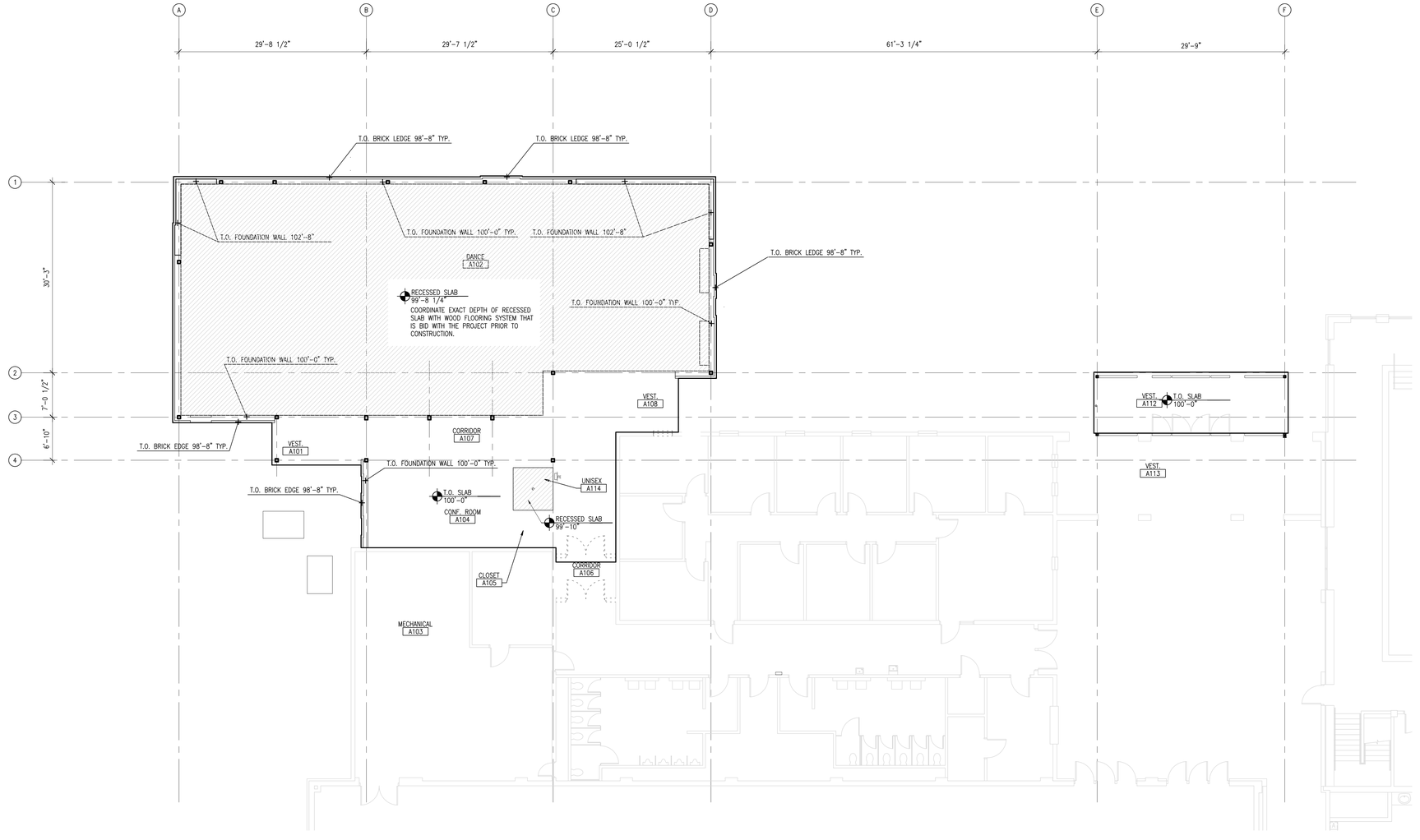

Edge Of Foundation Plan A5
1/8" = 1'-0"

DIVISION 1 – GENERAL NOTES
1.1 FINISH FLOOR
1.2 FINISH GRADE
1.3 LINE OF BUILDING ABOVE
1.4 EDGE OF WALL BELOW
1.5 UTILITY TUNNEL
1.6 EXISTING WALL
1.7 EXISTING FOOTING
1.8 EXISTING BUILDING
1.9 EXISTING FOUNDATION WALL
1.10 EXISTING CONCRETE SLAB

DIVISION 2 – SITE WORK
2.1 EXISTING LIGHT POLE W/ OVERHEAD POWER TO REMAIN
2.2 EXISTING ASPHALT PAVING TO REMAIN
2.3 EXISTING CONCRETE SIDEWALK TO REMAIN
2.4 EXISTING CURB TO REMAIN
2.5 EXISTING SEWER LINE TO REMAIN
2.6 EXISTING POWER POLE W/ UNDERGROUND POWER LINE TO REMAIN
2.7 EXISTING SEWER MANHOLE TO REMAIN
2.8 EXISTING 4" CLEAN OUT TO REMAIN
2.9 EXISTING CATCH BASIN TO REMAIN
2.10 EXISTING FIRE HYDRANT TO REMAIN
2.11 EXISTING LANDSCAPING TO REMAIN
2.12 EXISTING TREE TO REMAIN; FULLY PROTECTED
2.13 EXISTING GUTTER TO REMAIN
2.14 COMPACTED FILL
2.15 NEW CONCRETE PAVING
2.16 LINE OF NEW CONCRETE PAVING
2.17 EXISTING PARKING STALLS TO REMAIN
2.18 EXISTING FENCE TO REMAIN
2.19 NEW SUMP
2.20 EXISTING STONE SIGNAGE RELOCATED FROM OLD GYMNASIUM – COORDINATE WITH OWNER.
2.21 NEW CONCRETE STAIRS – SEE ENLARGED PLANS FOR DIMENSIONS
2.22 NEW CONCRETE CURB
2.23 EXISTING HIGH VOLTAGE SWITCHGEAR TO REMAIN
2.24 EXISTING 500 KVA TRANSFORMER
2.25 EXISTING CONCRETE STAIRS TO REMAIN
2.26 HANDICAP ACCESSIBLE PARKING STALL
2.27 HANDICAP ACCESSIBLE AISLE
2.28 HANDICAP ACCESSIBLE PARKING SIGN
2.29 NEW GAS METER
2.30 NEW STORM DRAIN LINE
2.31 EXISTING STORM DRAIN LINE TO REMAIN
2.32 EXISTING GAS METER TO REMAIN
2.33 EXISTING GAS LINE TO REMAIN
2.34 NEW GAS LINE TO BE CONNECTED TO EXISTING GAS LINE
2.35 EXISTING WATER LINE
2.36 NEW WATER LINE
2.37 NEW BIKE RACK
2.38 GRAVEL MULCH TO BE ¾" "SILVER NICKEL" PLACED 3" DEEP OVER WEED BARRIER
2.39 NEW CONCRETE 12" WIDE MOW STRIP, SEE DETAIL A1/AS110
2.40 GRAVEL MULCH TO BE PEA GRAVEL PLACED 3" DEEP OVER WEED BARRIER
2.41 NEW TURF
2.42 NEW TREE – SEE PLANTING PLAN
2.43 NEW PLANT – SEE PLANTING PLAN
2.44 CONCRETE BENCH. BRAND: "MATERIALS, INC." STYLE: "GOTHIC" OR SIMILAR. ALT BRAND & STYLE ACCEPTABLE W/PRIOR APPROVAL.

DIVISION 3 – CONCRETE
3.1 4" CONCRETE SLAB
3.2 CONCRETE FOOTING
3.3 NOT USED
3.4 CONCRETE ON STEEL DECK
3.5 CONC EQUIPMENT PAD
3.6 CAST IN PLACE CONCRETE
3.7 CONCRETE RETAINING WALL

DIVISION 4 – MASONRY
4.1 NOT USED
4.2 MASONRY CONTROL JOINT
4.3 NOT USED
4.4 NOT USED
4.5 STANDARD BRICK VENEER, COLOR AS SELECTED BY ARCHITECT
4.6 EXISTING MASONRY, CLEANED AND SEALED

DIVISION 5 – METALS
5.1 STEEL COLUMN; REF STRUCT. DWG
5.2 STEEL BEAM; REF STRUCT. DWGS
5.3 STEEL JOIST; REF STRUCT. DWGS
5.4 STEEL ROOF DECK
5.5 STEEL LADDER
5.6 4" STRUCT STL STUDS @ 16" O.C.
5.7 STEEL ANGLE
5.8 STEEL CHANNEL
5.9 HORIZONTAL STEEL JOIST BRIDGING
5.10 1 1/2"ø ALUMINUM PIPE HANDRAIL
5.11 6" STRUCT STL STUDS @16" OC
5.12 3 5/8" STRUCT STL STUDS @16" OC
5.13 STEEL PLATE
5.14 STEEL TUBE, REF STRUCT. DWG
5.15 1 1/2"ø ALUMINUM PIPE VERTICAL SUPPORTS
5.16 1 1/2" STRUCT STL STUDS @ 16" O.C.
5.17 EXPOSED STEEL COLUMN; REF STRUCT. DWGS; PAINT, COLOR BY ARCH.
5.18 EXPOSED STEEL BEAM; REF STRUCT. DWGS; PAINT, COLOR BY ARCH.
5.19 2" STRUCT STL STUDS @ 16" OC
5.20 2-1/2" STRUCT STL STUDS @ 16" OC
5.21 EXPOSED STEEL JOIST; REF STRUCT. DWGS; PAINT, COLOR BY ARCH.
5.22 ALUMINUM ANGLE
5.23 ALUMINUM PLATE
5.24 ⅞" HAT CHANNELS
5.25 1 1/2"ø ALUMINUM PIPE GUARDRAIL
5.26 3-⅝" STL STUD SLIP TRACK SYSTEM W/ 2" LEG ON TOP TRACK AND 1-½" SLOT.

DIVISION 6 – WOOD AND PLASTICS
6.1 WOOD BLOCKING OR BACKING PLATE 16 GA X 6" HIGH FOR INTERIOR ARCHITECTURAL WOODWORK, HARDWARE, TOILET COMPARTMENTS, BATH ACCESSORIES, ETC
6.2 PLASTIC LAMINATE COUNTERTOP
6.3 NOT USED
6.4 ACRYLIC PANEL
6.5 PLASTIC LAMINATE MILLWORK
6.6 MAPLE CHAIR RAIL, SEE E5/AE504

DIVISION 7 THERMAL & MOISTURE PROTECTION
7.1 RIDGE
7.2 VALLEY, MIN SLOPE 3/16" PER LINEAL FT
7.3 CRICKET, MIN. SLOPE 1/4" PER FOOT AT VALLEY, FORM W/ TAPERED RIGID BD. INSULATION
7.4 ROOF HATCH
7.5 ROOF CURB. SEE DETAIL C2/AE504.
7.6 ROOF DRAIN & OVERFLOW DRAIN
7.7 TYPICAL PIPE/CONDUIT PENETRATION

DIVISION 7 CONT'D THERMAL & MOISTURE PROTECTION
7.8 SINGLE PLY ROOF MEMBRANE MECHANICALLY FASTENED OVER MIN 4" TAPERED RIGID INSULATION SLOPED TO DRAIN 1/4"/FT MIN
7.9 1" EXPANSION JOINT
7.10 ROOF SCUPPER
7.11 SEALANT
7.12 R-11 BATTS, FACED MINERAL-FIBER BLANKET INSULATION
7.13 R-19 BATTS, FACED MINERAL-FIBER BLANKET INSULATION
7.14 NOT USED
7.15 FIRE SAFING INSULATION
7.16 NOT USED
7.17 RIGID INSULATION
7.18 METAL REGLET & COUNTER FLASHING
7.19 METAL FASCIA
7.20 METAL CLOSURE
7.21 PRE-FINISHED METAL COPING; COLOR BY ARCH. FROM MANUF. FULL RANGE
7.22 COMPOSITE SHEET WATERPROOFING
7.23 NOT USED
7.24 2" INSULATED METAL PANEL SYSTEM, COLOR BY ARCHITECT
7.25 EXISTING METAL COPING TO REMAIN

DIVISION 8 DOORS & WINDOWS
8.1 HOLLOW METAL DOOR & FRAME
8.2 FLUSH WOOD DOOR
8.3 ACCESS DOOR
8.4 ANODIZED ALUM. STOREFRONT WINDOW
8.5 ANODIZED ALUM. STOREFRONT DOOR AND FRAME
8.6 1" INSULATED GLASS SET IN ALUM. CURTAIN WALL FRAME
8.7 1" INSULATED SANDBLASTED GLASS SET IN ALUM. CURTAIN WALL FRAME
8.8 1" INSULATED SANDBLASTED GLASS SET IN ANODIZED ALUMINUM STOREFRONT
8.9 BUTT GLAZING
8.10 MIRROR
8.11 1/2" TEMPERED SAFETY GLASS W/ SAND BLASTED FINISH
8.12 ADA AUTOMATIC DOOR
8.13 ALUM. STOREFRONT SYSTEM RELOCATED FROM EXISTING VESTIBULE. SEE SHEET AD101ALT.
8.14 1/2" TEMPERED SAFETY GLASS
8.15 ALUM. STOREFRONT SYSTEM

DIVISION 9 FINISHES
9.1 GYP BOARD, PAINT – COLOR BY ARCH.
9.2 CERAMIC TILE
9.3 ACOUSTICAL PANEL CEILING
9.4 NOT USED
9.5 RESILIENT MNTD. HARDWOOD FLOOR
9.6 NOT USED
9.7 RUBBER BASE
9.8 CERAMIC TILE BASE
9.9 VINYL COMPOSITION TILE
9.10 CARPET

DIVISION 10 SPECIALITIES
10.1 36" GRAB BAR
10.2 WHITE BOARD; PROVIDE BLKG
10.3 TOILET PAPER DISPENSER
10.4 SIGN – MAXIMUM OCCUPANT LOAD
10.5 FIRE EXT.; RECESSED CABINET
10.6 42" GRAB BAR
10.7 MARKER BOARD
10.8 OWNER SUPPLIED SIGN IDENTIFYING LOCATION OF UNISEX RESTROOM
10.9 BULLETIN BOARD

DIVISION 11 EQUIPMENT
11.1 AV EQUIPMENT SEE AV DWGS
11.2 AV PANEL SEE AV DWGS
11.3 SPEAKER, N.I.C.
11.4 AV FLOOR POCKET
11.5 ADJUSTABLE BALLET BARRE

DIVISION 15 MECHANICAL
15.1 FIRE CONNECTION
15.2 MECHANICAL ROOF HOOD
15.3 MECHANICAL EXHAUST FAN
15.4 MECHANICAL CONDENSING UNIT
15.5 FIRE SPRINKLER MAIN SHOWN FOR COORDINATION ONLY; CONTRACTOR TO PROVIDE SHOP DWGS PER SPEC & CODE
15.6 NOT USED
15.7 WATER METER RE: CIVIL, PLUMB. DWGS
15.8 GAS METER RE: PLUMB. DWGS
15.9 NOT USED
15.10 SINK, REF: PLUMB. DWGS
15.11 SUMP PUMP BELOW GRADE
15.12 TOILET
15.13 ADA TOILET
15.14 ADA URINAL
15.15 ADA LAV
15.16 ADA SHOWER
15.17 ADA ELECTRIC DRINKING FOUNTAIN
15.18 FLOOR DRAIN
15.19 STORM DRAIN
15.20 ROOF DRAIN
15.21 MECHANICAL UNIT
15.22 MECHANICAL DIFFUSER
15.23 MECHANICAL RETURN AIR GRILLE
15.24 MECHANICAL EXHAUST FAN GRILLE
15.25 MECHANICAL EXPOSED DUCT
15.26 MECH EXPOSED DUCT SUPPORT
15.27 ROOF & OVERFLOW DRAIN SEE E5/AE504
15.28 MECHANICAL DUCT
15.29 LAMBS TONGUE
15.30 SUMP PUMP
15.31 DRINKING FOUNTAIN
15.32 AREA DRAIN
15.33 MECHANICAL DUCT BELOW GRADE
15.34 MECHANICAL LOUVER

DIVISION 16 ELECTRICAL
16.1 ELECTRIC LIGHT
16.2 ELECTRIC PANEL
16.3 ELECTRIC TRANSFORMER
16.4 HORN/STROBE, REF: ELECT.
16.5 EMERGENCY LIGHTING, REF: ELECT.
16.6 DUPLEX OUTLET, REF: ELECT.
16.7 DATA OUTLET, REF. ELECT.
16.8 CABLE TRAY SEE EP DWGS
16.9 EXIT LIGHT SEE EL DWGS
16.10 HIGH VOLTAGE SWITCH
16.11 COMMUNICATION BOX
16.12 ADA DOOR ACTUATOR POST
16.13 ADA DOOR ACTUATOR PANEL
16.14 GENERATOR
16.15 FIRE GONG
16.16 UNDERCABINET LIGHT

GENERAL NOTES
1. AT BRICK VENEER, PROVIDE SOLID BRICKS WHERE TOP OR BOTTOM SURFACE IS EXPOSED BY 1" OR MORE.

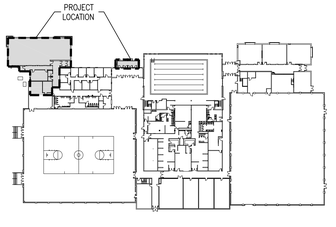

Key Plan N.T.S. A6

LICENSED ARCHITECT
PEGGY A. McDONOUGH
No. 6006020-5501
STATE OF UTAH
7-21-2006

GouldEvans
©2002 Gould Evans Associates, L.C.
1000 South Main Street • Suite 100
Salt Lake City, Utah 84101
Voice 801.532.6100
Fax 801.532.6102
www.gouldevans.com
kansas city • lawrence • phoenix
salt lake city • san antonio • tampa

DFCM PROJECT NO: 05266700
STATE PROPERTY ID: 01791
RISK MANAGEMENT NO:
CAD PROJECT NO:
CAD DWG FILE:
DRAWN BY:
CHECKED BY:
COPYRIGHT: STATE OF UTAH

snow college
activities center
dance studio addition | remodel
ephraim, utah

REVISION	DATE

Project no: 0906-0260
Date: July 21, 2006
Sheet:

Edge of Foundation Plan

AK101

100% Construction Documents

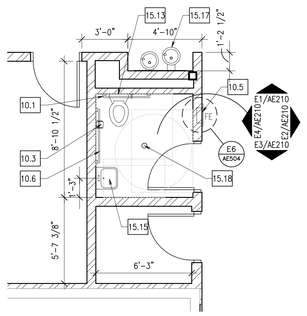

Enlarged Unisex Restroom Plan E1

1/4" = 1'-0"

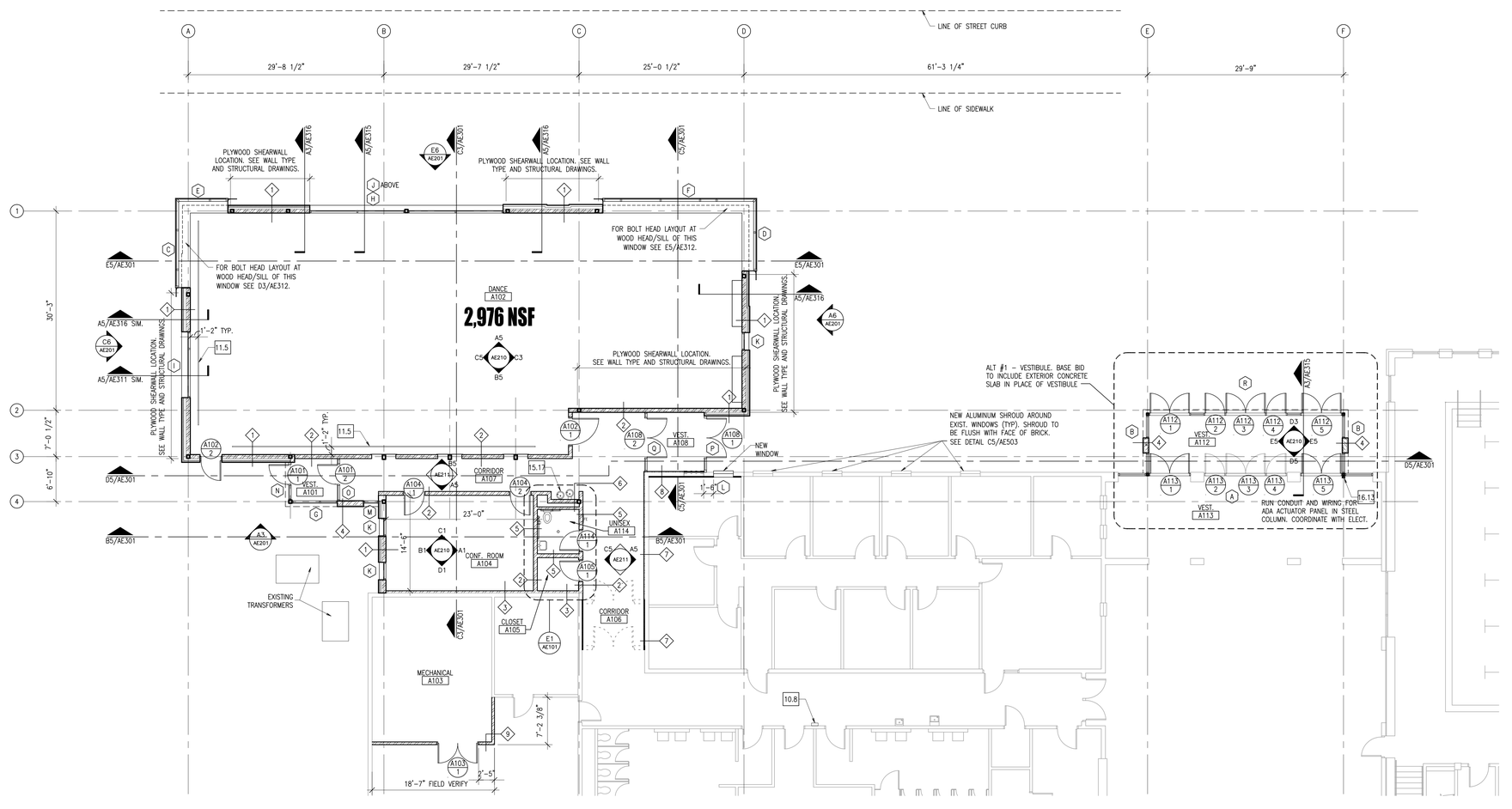

Floor Plan A5

1/8" = 1'-0"

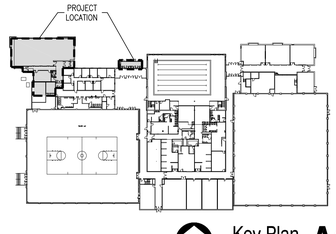

Key Plan A6

N.T.S.

DIVISION 1 – GENERAL NOTES
1.1 FINISH FLOOR
1.2 FINISH GRADE
1.3 LINE OF BUILDING ABOVE
1.4 EDGE OF WALL BELOW
1.5 UTILITY TUNNEL
1.6 EXISTING WALL
1.7 EXISTING FOOTING
1.8 EXISTING BUILDING
1.9 EXISTING FOUNDATION WALL
1.10 EXISTING CONCRETE SLAB

DIVISION 2 – SITE WORK
2.1 EXISTING LIGHT POLE W/ OVERHEAD POWER TO REMAIN
2.2 EXISTING ASPHALT PAVING TO REMAIN
2.3 EXISTING CONCRETE SIDEWALK TO REMAIN
2.4 EXISTING CURB TO REMAIN
2.5 EXISTING SEWER LINE TO REMAIN
2.6 EXISTING POWER POLE W/ UNDERGROUND POWER LINE TO REMAIN
2.7 EXISTING SEWER MANHOLE TO REMAIN
2.8 EXISTING 4" CLEAN OUT TO REMAIN
2.9 EXISTING CATCH BASIN TO REMAIN
2.10 EXISTING FIRE HYDRANT TO REMAIN
2.11 EXISTING LANDSCAPING TO REMAIN
2.12 EXISTING TREE TO REMAIN; FULLY PROTECTED
2.13 EXISTING GUTTER TO REMAIN
2.14 COMPACTED FILL
2.15 NEW CONCRETE PAVING
2.16 LINE OF NEW CONCRETE PAVING
2.17 EXISTING PARKING STALLS TO REMAIN
2.18 EXISTING FENCE TO REMAIN
2.19 NEW SUMP
2.20 EXISTING STONE SIGNAGE RELOCATED FROM OLD GYMNASIUM - COORDINATE WITH OWNER.
2.21 NEW CONCRETE STAIRS - SEE ENLARGED PLANS FOR DIMENSIONS
2.22 NEW CONCRETE CURB
2.23 EXISTING HIGH VOLTAGE SWITCHGEAR TO REMAIN
2.24 EXISTING 500 KVA TRANSFORMER
2.25 EXISTING CONCRETE STAIRS TO REMAIN
2.26 HANDICAP ACCESSIBLE PARKING STALL
2.27 HANDICAP ACCESSIBLE AISLE
2.28 HANDICAP ACCESSIBLE PARKING SIGN
2.29 NEW GAS METER
2.30 NEW STORM DRAIN LINE
2.31 EXISTING STORM DRAIN LINE TO REMAIN
2.32 EXISTING GAS METER TO REMAIN
2.33 EXISTING GAS LINE TO REMAIN
2.34 NEW GAS LINE TO BE CONNECTED TO EXISTING GAS LINE
2.35 EXISTING WATER LINE
2.36 NEW WATER LINE
2.37 NEW BIKE RACK
2.38 GRAVEL MULCH TO BE ¾" "SILVER NICKEL" PLACED 3" DEEP OVER WEED BARRIER
2.39 NEW CONCRETE 12" WIDE MOW STRIP, SEE DETAIL A1/AS110
2.40 GRAVEL MULCH TO BE PEA GRAVEL PLACED 3" DEEP OVER WEED BARRIER
2.41 NEW TURF
2.42 NEW TREE – SEE PLANTING PLAN
2.43 NEW PLANT – SEE PLANTING PLAN
2.44 CONCRETE BENCH. BRAND: "MATERIALS, INC." STYLE: "GOTHIC" OR SIMILAR. ALT BRAND & STYLE ACCEPTABLE W/PRIOR APPROVAL.

DIVISION 3 – CONCRETE
3.1 4" CONCRETE SLAB
3.2 CONCRETE FOOTING
3.3 NOT USED
3.4 CONCRETE ON STEEL DECK
3.5 CONC EQUIPMENT PAD
3.6 CAST IN PLACE CONCRETE
3.7 CONCRETE RETAINING WALL

DIVISION 4 – MASONRY
4.1 NOT USED
4.2 MASONRY CONTROL JOINT
4.3 NOT USED
4.4 NOT USED
4.5 STANDARD BRICK VENEER, COLOR AS SELECTED BY ARCHITECT
4.6 EXISTING MASONRY, CLEANED AND SEALED

DIVISION 5 – METALS
5.1 STEEL COLUMN; REF STRUCT. DWG
5.2 STEEL BEAM; REF STRUCT. DWGS
5.3 STEEL JOIST; REF STRUCT. DWGS
5.4 STEEL ROOF DECK
5.5 STEEL LADDER
5.6 4" STRUCT STL STUDS @ 16" O.C.
5.7 STEEL ANGLE
5.8 STEEL CHANNEL
5.9 HORIZONTAL STEEL JOIST BRIDGING
5.10 1 1/2"ø ALUMINUM PIPE HANDRAIL
5.11 6" STRUCT STL STUDS @16" OC
5.12 3 5/8" STRUCT STL STUDS @16" OC
5.13 STEEL PLATE
5.14 STEEL TUBE, REF STRUCT. DWG
5.15 1 1/2"ø ALUMINUM PIPE VERTICAL SUPPORTS
5.16 1 1/2" STRUCT STL STUDS @ 16" O.C.
5.17 EXPOSED STEEL COLUMN; REF STRUCT. DWGS; PAINT, COLOR BY ARCH.
5.18 EXPOSED STEEL BEAM; REF STRUCT. DWGS; PAINT, COLOR BY ARCH.
5.19 2" STRUCT STL STUDS @ 16" OC
5.20 2-1/2" STRUCT STL STUDS @ 16" OC
5.21 EXPOSED STEEL JOIST; REF STRUCT. DWGS; PAINT, COLOR BY ARCH.
5.22 ALUMINUM ANGLE
5.23 ALUMINUM PLATE
5.24 ⅞" HAT CHANNELS
5.25 1 1/2"ø ALUMINUM PIPE GUARDRAIL
5.26 3-⅜" STL STUD SLIP TRACK SYSTEM W/ 2" LEG ON TOP TRACK AND 1-½" SLOT.

DIVISION 6 – WOOD AND PLASTICS
6.1 WOOD BLOCKING OR BACKING PLATE 16 GA X 6" HIGH FOR INTERIOR ARCHITECTURAL WOODWORK, HARDWARE, TOILET COMPARTMENTS, BATH ACCESSORIES, ETC
6.2 PLASTIC LAMINATE COUNTERTOP
6.3 NOT USED
6.4 ACRYLIC PANEL
6.5 PLASTIC LAMINATE MILLWORK
6.6 MAPLE CHAIR RAIL, SEE E5/AE504

DIVISION 7 THERMAL & MOISTURE PROTECTION
7.1 RIDGE
7.2 VALLEY, MIN SLOPE 3/16" PER LINEAL FT
7.3 CRICKET, MIN. SLOPE 1/4" PER FOOT AT VALLEY, FORM W/ TAPERED RIGID BD. INSULATION
7.4 ROOF HATCH
7.5 ROOF CURB. SEE DETAIL C2/AE504.
7.6 ROOF DRAIN & OVERFLOW DRAIN
7.7 TYPICAL PIPE/CONDUIT PENETRATION

DIVISION 7 CONT'D THERMAL & MOISTURE PROTECTION
7.8 SINGLE PLY ROOF MEMBRANE MECHANICALLY FASTENED OVER MIN 4" TAPERED RIGID INSULATION SLOPED TO DRAIN 1/4"/FT MIN
7.9 1" EXPANSION JOINT
7.10 ROOF SCUPPER
7.11 SEALANT
7.12 R-11 BATTS, FACED MINERAL-FIBER BLANKET INSULATION
7.13 R-19 BATTS, FACED MINERAL-FIBER BLANKET INSULATION
7.14 NOT USED
7.15 FIRE SAFING INSULATION
7.16 NOT USED
7.17 RIGID INSULATION
7.18 METAL REGLET & COUNTER FLASHING
7.19 METAL FASCIA
7.20 METAL CLOSURE
7.21 PRE-FINISHED METAL COPING; COLOR BY ARCH. FROM MANUF. FULL RANGE
7.22 COMPOSITE SHEET WATERPROOFING
7.23 NOT USED
7.24 2" INSULATED METAL PANEL SYSTEM, COLOR BY ARCHITECT
7.25 EXISTING METAL COPING TO REMAIN

DIVISION 8 DOORS & WINDOWS
8.1 HOLLOW METAL DOOR & FRAME
8.2 FLUSH WOOD DOOR
8.3 ACCESS DOOR
8.4 ANODIZED ALUM. STOREFRONT WINDOW
8.5 ANODIZED ALUM. STOREFRONT DOOR AND FRAME
8.6 1" INSULATED GLASS SET IN ALUM. CURTAIN WALL FRAME
8.7 1" INSULATED SANDBLASTED GLASS SET IN ALUM. CURTAIN WALL FRAME
8.8 1" INSULATED SANDBLASTED GLASS SET IN ANODIZED ALUMINUM STOREFRONT
8.9 BUTT GLAZING
8.10 MIRROR
8.11 1/2" TEMPERED SAFETY GLASS W/ SAND BLASTED FINISH
8.12 ADA AUTOMATIC DOOR
8.13 ALUM. STOREFRONT SYSTEM RELOCATED FROM EXISTING VESTIBULE. SEE SHEET AD101ALT.
8.14 1/2" TEMPERED SAFETY GLASS
8.15 ALUM. STOREFRONT SYSTEM

DIVISION 9 FINISHES
9.1 GYP BOARD, PAINT – COLOR BY ARCH.
9.2 CERAMIC TILE
9.3 ACOUSTICAL PANEL CEILING
9.4 NOT USED
9.5 RESILIENT MNTD. HARDWOOD FLOOR
9.6 NOT USED
9.7 RUBBER BASE
9.8 CERAMIC TILE BASE
9.9 VINYL COMPOSITION TILE
9.10 CARPET

DIVISION 10 SPECIALITIES
10.1 36" GRAB BAR
10.2 WHITE BOARD; PROVIDE BLKG
10.3 TOILET PAPER DISPENSER
10.4 SIGN – MAXIMUM OCCUPANT LOAD
10.5 FIRE EXT.; RECESSED CABINET
10.6 42" GRAB BAR
10.7 MARKER BOARD
10.8 OWNER SUPPLIED SIGN IDENTIFYING LOCATION OF UNISEX RESTROOM
10.9 BULLETIN BOARD

DIVISION 11 EQUIPMENT
11.1 AV EQUIPMENT SEE AV DWGS
11.2 AV PANEL SEE AV DWGS
11.3 SPEAKER, N.I.C.
11.4 AV FLOOR POCKET
11.5 ADJUSTABLE BALLET BARRE

DIVISION 15 MECHANICAL
15.1 FIRE CONNECTION
15.2 MECHANICAL ROOF HOOD
15.3 MECHANICAL EXHAUST FAN
15.4 MECHANICAL CONDENSING UNIT
15.5 FIRE SPRINKLER MAIN SHOWN FOR COORDINATION ONLY; CONTRACTOR TO PROVIDE SHOP DWGS PER SPEC & CODE
15.6 NOT USED
15.7 WATER METER RE: CIVIL, PLUMB. DWGS
15.8 GAS METER RE: PLUMB. DWGS
15.9 NOT USED
15.10 SINK, REF: PLUMB. DWGS
15.11 SUMP PUMP BELOW GRADE
15.12 TOILET
15.13 ADA TOILET
15.14 ADA URINAL
15.15 ADA LAV
15.16 ADA SHOWER
15.17 ADA ELECTRIC DRINKING FOUNTAIN
15.18 FLOOR DRAIN
15.19 STORM DRAIN
15.20 ROOF DRAIN
15.21 MECHANICAL UNIT
15.22 MECHANICAL DIFFUSER
15.23 MECHANICAL RETURN AIR GRILLE
15.24 MECHANICAL EXHAUST FAN GRILLE
15.25 MECHANICAL EXPOSED DUCT
15.26 MECH EXPOSED DUCT SUPPORT
15.27 ROOF & OVERFLOW DRAIN SEE E5/AE504
15.28 MECHANICAL DUCT
15.29 LAMBS TONGUE
15.30 SUMP PUMP
15.31 DRINKING FOUNTAIN
15.32 AREA DRAIN
15.33 MECHANICAL DUCT BELOW GRADE
15.34 MECHANICAL LOUVER

DIVISION 16 ELECTRICAL
16.1 ELECTRIC LIGHT
16.2 ELECTRIC PANEL
16.3 ELECTRIC TRANSFORMER
16.4 HORN/STROBE, REF: ELECT.
16.5 EMERGENCY LIGHTING, REF: ELECT.
16.6 DUPLEX OUTLET, REF: ELECT.
16.7 DATA OUTLET, REF: ELECT.
16.8 CABLE TRAY SEE EP DWGS
16.9 EXIT LIGHT SEE EL DWGS
16.10 HIGH VOLTAGE SWITCH
16.11 COMMUNICATION BOX
16.12 ADA DOOR ACTUATOR POST
16.13 ADA DOOR ACTUATOR PANEL
16.14 GENERATOR
16.15 FIRE GONG
16.16 UNDERCABINET LIGHT

GENERAL NOTES
1. AT BRICK VENEER, PROVIDE SOLID BRICKS WHERE TOP OR BOTTOM SURFACE IS EXPOSED BY 1" OR MORE.

LICENSED ARCHITECT
PEGGY A. McDONOUGH
No. 6006020-5301
STATE OF UTAH
7.21.2006

GouldEvans
©2002 Gould Evans Associates, L.C.
1000 South Main Street • Suite 100
Salt Lake City, Utah 84101
Voice 801.532.6100
Fax 801.532.6102
www.gouldevans.com
kansas city • lawrence • phoenix
salt lake city • san antonio • tampa

DFCM PROJECT NO: 05266700
STATE PROPERTY ID: 01791
RISK MANAGEMENT NO:
CAD PROJECT NO:
CAD DWG FILE:
DRAWN BY:
CHECKED BY:
COPYRIGHT: STATE OF UTAH

snow college activities center
dance studio addition | remodel
ephraim, utah

REVISION	DATE

Project no: 0906-0260
Date: July 21, 2006
Sheet:

Floor Plan
AE101

100% Construction Documents

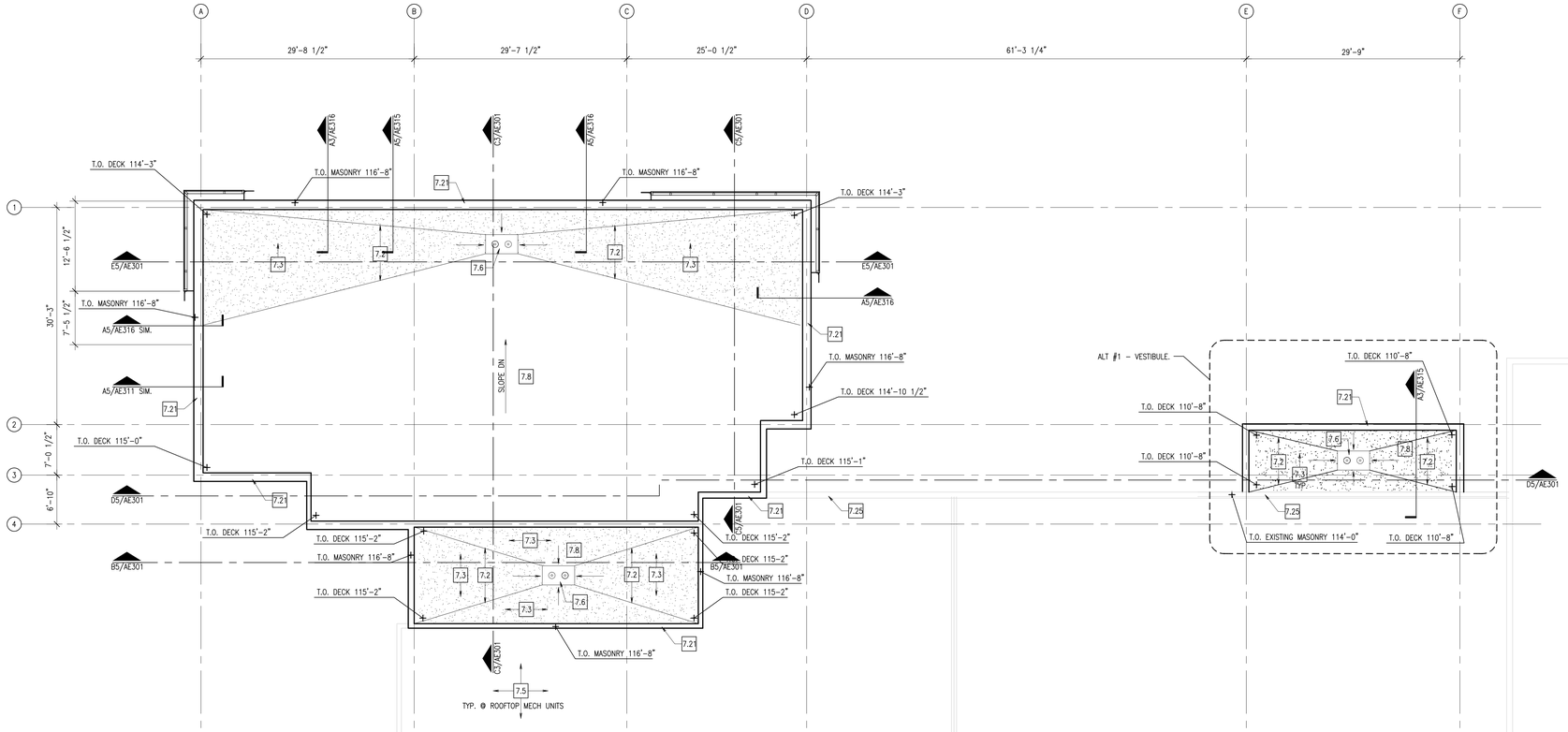

Roof Plan A5
1/8" = 1'-0"

DIVISION 1 – GENERAL NOTES
1.1 FINISH FLOOR
1.2 FINISH GRADE
1.3 LINE OF BUILDING ABOVE
1.4 EDGE OF WALL BELOW
1.5 UTILITY TUNNEL
1.6 EXISTING WALL
1.7 EXISTING FOOTING
1.8 EXISTING BUILDING
1.9 EXISTING FOUNDATION WALL
1.10 EXISTING CONCRETE SLAB

DIVISION 2 – SITE WORK
2.1 EXISTING LIGHT POLE W/ OVERHEAD POWER TO REMAIN
2.2 EXISTING ASPHALT PAVING TO REMAIN
2.3 EXISTING CONCRETE SIDEWALK TO REMAIN
2.4 EXISTING CURB TO REMAIN
2.5 EXISTING SEWER LINE TO REMAIN
2.6 EXISTING POWER POLE W/ UNDERGROUND POWER LINE TO REMAIN
2.7 EXISTING SEWER MANHOLE TO REMAIN
2.8 EXISTING 4" CLEAN OUT TO REMAIN
2.9 EXISTING CATCH BASIN TO REMAIN
2.10 EXISTING FIRE HYDRANT TO REMAIN
2.11 EXISTING LANDSCAPING TO REMAIN
2.12 EXISTING TREE TO REMAIN; FULLY PROTECTED
2.13 EXISTING GUTTER TO REMAIN
2.14 COMPACTED FILL
2.15 NEW CONCRETE PAVING
2.16 LINE OF NEW CONCRETE PAVING
2.17 EXISTING PARKING STALLS TO REMAIN
2.18 EXISTING FENCE TO REMAIN
2.19 NEW SUMP
2.20 EXISTING STONE SIGNAGE RELOCATED FROM OLD GYMNASIUM – COORDINATE WITH OWNER.
2.21 NEW CONCRETE STAIRS – SEE ENLARGED PLANS FOR DIMENSIONS
2.22 NEW CONCRETE CURB
2.23 EXISTING HIGH VOLTAGE SWITCHGEAR TO REMAIN
2.24 EXISTING 500 KVA TRANSFORMER
2.25 EXISTING CONCRETE STAIRS TO REMAIN
2.26 HANDICAP ACCESSIBLE PARKING STALL
2.27 HANDICAP ACCESSIBLE AISLE
2.28 HANDICAP ACCESSIBLE PARKING SIGN
2.29 NEW GAS METER
2.30 NEW STORM DRAIN LINE
2.31 EXISTING STORM DRAIN LINE TO REMAIN
2.32 EXISTING GAS METER TO REMAIN
2.33 EXISTING GAS LINE TO REMAIN
2.34 NEW GAS LINE TO BE CONNECTED TO EXISTING GAS LINE
2.35 EXISTING WATER LINE
2.36 NEW WATER LINE
2.37 NEW BIKE RACK
2.38 GRAVEL MULCH TO BE ¾" "SILVER NICKEL" PLACED 3" DEEP OVER WEED BARRIER
2.39 NEW CONCRETE 12" WIDE MOW STRIP, SEE DETAIL A1/AS110
2.40 GRAVEL MULCH TO BE PEA GRAVEL PLACED 3" DEEP OVER WEED BARRIER
2.41 NEW TURF
2.42 NEW TREE – SEE PLANTING PLAN
2.43 NEW PLANT – SEE PLANTING PLAN
2.44 CONCRETE BENCH. BRAND: "MATERIALS, INC." STYLE: "GOTHIC" OR SIMILAR. ALT BRAND & STYLE ACCEPTABLE W/PRIOR APPROVAL.

DIVISION 3 – CONCRETE
3.1 4" CONCRETE SLAB
3.2 CONCRETE FOOTING
3.3 NOT USED
3.4 CONCRETE ON STEEL DECK
3.5 CONC EQUIPMENT PAD
3.6 CAST IN PLACE CONCRETE
3.7 CONCRETE RETAINING WALL

DIVISION 4 – MASONRY
4.1 NOT USED
4.2 MASONRY CONTROL JOINT
4.3 NOT USED
4.4 NOT USED
4.5 STANDARD BRICK VENEER, COLOR AS SELECTED BY ARCHITECT
4.6 EXISTING MASONRY, CLEANED AND SEALED

DIVISION 5 – METALS
5.1 STEEL COLUMN; REF STRUCT. DWG
5.2 STEEL BEAM; REF STRUCT. DWGS
5.3 STEEL JOIST; REF STRUCT. DWGS
5.4 STEEL ROOF DECK
5.5 STEEL LADDER
5.6 4" STRUCT STL STUDS @ 16" O.C.
5.7 STEEL ANGLE
5.8 STEEL CHANNEL
5.9 HORIZONTAL STEEL JOIST BRIDGING
5.10 1 1/2"ø ALUMINUM PIPE HANDRAIL
5.11 6" STRUCT STL STUDS @16" OC
5.12 3 5/8" STRUCT STL STUDS @16" OC
5.13 STEEL PLATE
5.14 STEEL TUBE, REF STRUCT. DWG
5.15 1 1/2"ø ALUMINUM PIPE VERTICAL SUPPORTS
5.16 1 1/2" STRUCT STL STUDS @ 16" O.C.
5.17 EXPOSED STEEL COLUMN; REF STRUCT. DWGS; PAINT, COLOR BY ARCH.
5.18 EXPOSED STEEL BEAM; REF STRUCT. DWGS; PAINT, COLOR BY ARCH.
5.19 2" STRUCT STL STUDS @ 16" OC
5.20 2-1/2" STRUCT STL STUDS @ 16" OC
5.21 EXPOSED STEEL JOIST; REF STRUCT. DWGS; PAINT, COLOR BY ARCH.
5.22 ALUMINUM ANGLE
5.23 ALUMINUM PLATE
5.24 ⅜" HAT CHANNELS
5.25 1 1/2"ø ALUMINUM PIPE GUARDRAIL
5.26 3-⅜" STL STUD SLIP TRACK SYSTEM W/ 2" LEG ON TOP TRACK AND 1-⅜" SLOT.

DIVISION 6 – WOOD AND PLASTICS
6.1 WOOD BLOCKING OR BACKING PLATE 16 GA X 6" HIGH FOR INTERIOR ARCHITECTURAL WOODWORK, HARDWARE, TOILET COMPARTMENTS, BATH ACCESSORIES, ETC
6.2 PLASTIC LAMINATE COUNTERTOP
6.3 NOT USED
6.4 ACRYLIC PANEL
6.5 PLASTIC LAMINATE MILLWORK
6.6 MAPLE CHAIR RAIL, SEE E5/AE504

DIVISION 7 THERMAL & MOISTURE PROTECTION
7.1 RIDGE
7.2 VALLEY, MIN SLOPE 3/16" PER LINEAL FT
7.3 CRICKET, MIN. SLOPE 1/4" PER FOOT AT VALLEY, FORM W/ TAPERED RIGID BD. INSULATION
7.4 ROOF HATCH
7.5 ROOF CURB. SEE DETAIL C2/AE504.
7.6 ROOF DRAIN & OVERFLOW DRAIN
7.7 TYPICAL PIPE/CONDUIT PENETRATION

DIVISION 7 CONT'D THERMAL & MOISTURE PROTECTION
7.8 SINGLE PLY ROOF MEMBRANE MECHANICALLY FASTENED OVER MIN 4" TAPERED RIGID INSULATION SLOPED TO DRAIN 1/4"/FT MIN
7.9 1" EXPANSION JOINT
7.10 ROOF SCUPPER
7.11 SEALANT
7.12 R-11 BATTS, FACED MINERAL-FIBER BLANKET INSULATION
7.13 R-19 BATTS, FACED MINERAL-FIBER BLANKET INSULATION
7.14 NOT USED
7.15 FIRE SAFING INSULATION
7.16 NOT USED
7.17 RIGID INSULATION
7.18 METAL REGLET & COUNTER FLASHING
7.19 METAL FASCIA
7.20 METAL CLOSURE
7.21 PRE-FINISHED METAL COPING; COLOR BY ARCH. FROM MANUF. FULL RANGE
7.22 COMPOSITE SHEET WATERPROOFING
7.23 NOT USED
7.24 2" INSULATED METAL PANEL SYSTEM, COLOR BY ARCHITECT
7.25 EXISTING METAL COPING TO REMAIN

DIVISION 8 DOORS & WINDOWS
8.1 HOLLOW METAL DOOR & FRAME
8.2 FLUSH WOOD DOOR
8.3 ACCESS DOOR
8.4 ANODIZED ALUM. STOREFRONT WINDOW
8.5 ANODIZED ALUM. STOREFRONT DOOR AND FRAME
8.6 1" INSULATED GLASS SET IN ALUM. CURTAIN WALL FRAME
8.7 1" INSULATED SANDBLASTED GLASS SET IN ALUM. CURTAIN WALL FRAME
8.8 1" INSULATED SANDBLASTED GLASS SET IN ANODIZED ALUMINUM STOREFRONT
8.9 BUTT GLAZING
8.10 MIRROR
8.11 1/2" TEMPERED SAFETY GLASS W/ SAND BLASTED FINISH
8.12 ADA AUTOMATIC DOOR
8.13 ALUM. STOREFRONT SYSTEM RELOCATED FROM EXISTING VESTIBULE. SEE SHEET AD101ALT.
8.14 1/2" TEMPERED SAFETY GLASS
8.15 ALUM. STOREFRONT SYSTEM

DIVISION 9 FINISHES
9.1 GYP BOARD, PAINT – COLOR BY ARCH.
9.2 CERAMIC TILE
9.3 ACOUSTICAL PANEL CEILING
9.4 NOT USED
9.5 RESILIENT MNTD. HARDWOOD FLOOR
9.6 NOT USED
9.7 RUBBER BASE
9.8 CERAMIC TILE BASE
9.9 VINYL COMPOSITION TILE
9.10 CARPET

DIVISION 10 SPECIALITIES
10.1 36" GRAB BAR
10.2 WHITE BOARD; PROVIDE BLKG
10.3 TOILET PAPER DISPENSER
10.4 SIGN – MAXIMUM OCCUPANT LOAD
10.5 FIRE EXT.; RECESSED CABINET
10.6 42" GRAB BAR
10.7 MARKER BOARD
10.8 OWNER SUPPLIED SIGN IDENTIFYING LOCATION OF UNISEX RESTROOM
10.9 BULLETIN BOARD

DIVISION 11 EQUIPMENT
11.1 AV EQUIPMENT SEE AV DWGS
11.2 AV PANEL SEE AV DWGS
11.3 SPEAKER, N.I.C.
11.4 AV FLOOR POCKET
11.5 ADJUSTABLE BALLET BARRE

DIVISION 15 MECHANICAL
15.1 FIRE CONNECTION
15.2 MECHANICAL ROOF HOOD
15.3 MECHANICAL EXHAUST FAN
15.4 MECHANICAL CONDENSING UNIT
15.5 FIRE SPRINKLER MAIN SHOWN FOR COORDINATION ONLY; CONTRACTOR TO PROVIDE SHOP DWGS PER SPEC & CODE
15.6 NOT USED
15.7 WATER METER RE: CIVIL, PLUMB. DWGS
15.8 GAS METER RE: PLUMB. DWGS
15.9 NOT USED
15.10 SINK, REF: PLUMB. DWGS
15.11 SUMP PUMP BELOW GRADE
15.12 TOILET
15.13 ADA TOILET
15.14 ADA URINAL
15.15 ADA LAV
15.16 ADA SHOWER
15.17 ADA ELECTRIC DRINKING FOUNTAIN
15.18 FLOOR DRAIN
15.19 STORM DRAIN
15.20 ROOF DRAIN
15.21 MECHANICAL UNIT
15.22 MECHANICAL DIFFUSER
15.23 MECHANICAL RETURN AIR GRILLE
15.24 MECHANICAL EXHAUST FAN GRILLE
15.25 MECHANICAL EXPOSED DUCT
15.26 MECH EXPOSED DUCT SUPPORT
15.27 ROOF & OVERFLOW DRAIN SEE E5/AE504
15.28 MECHANICAL DUCT
15.29 LAMBS TONGUE
15.30 SUMP PUMP
15.31 DRINKING FOUNTAIN
15.32 AREA DRAIN
15.33 MECHANICAL DUCT BELOW GRADE
15.34 MECHANICAL LOUVER

DIVISION 16 ELECTRICAL
16.1 ELECTRIC LIGHT
16.2 ELECTRIC PANEL
16.3 ELECTRIC TRANSFORMER
16.4 HORN/STROBE, REF: ELECT.
16.5 EMERGENCY LIGHTING, REF: ELECT.
16.6 DUPLEX OUTLET, REF: ELECT.
16.7 DATA OUTLET, REF. ELECT.
16.8 CABLE TRAY SEE EP DWGS
16.9 EXIT LIGHT SEE EL DWGS
16.10 HIGH VOLTAGE SWITCH
16.11 COMMUNICATION BOX
16.12 ADA DOOR ACTUATOR POST
16.13 ADA DOOR ACTUATOR PANEL
16.14 GENERATOR
16.15 FIRE GONG
16.16 UNDERCABINET LIGHT

GENERAL NOTES
1. AT BRICK VENEER, PROVIDE SOLID BRICKS WHERE TOP OR BOTTOM SURFACE IS EXPOSED BY 1" OR MORE.

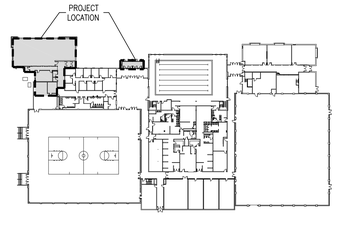

Key Plan N.T.S. A6

LICENSED ARCHITECT
PEGGY A. McDONOUGH
No. 6006020-5301
STATE OF UTAH
7-21-2006

GouldEvans
©2002 Gould Evans Associates, L.C.
1000 South Main Street • Suite 100
Salt Lake City, Utah 84101
Voice 801.532.6100
Fax 801.532.6102
www.gouldevans.com
kansas city • lawrence • phoenix
salt lake city • san antonio • tampa

DFCM PROJECT NO: 05266700
STATE PROPERTY ID: 01791
RISK MANAGEMENT NO:
CAD PROJECT NO:
CAD DWG FILE:
DRAWN BY:
CHECKED BY:
COPYRIGHT: STATE OF UTAH

snow college activities center
dance studio addition | remodel
ephraim, utah

REVISION	DATE

Project no: 0906-0260
Date: July 21, 2006
Sheet:

Roof Plan
AE105

100% Construction Documents

REFLECTED CEILING PLAN GENERAL NOTES

1. ALL LAY-IN CEILING GRIDS TO BE CENTERED AND EQUALLY SPACED IN THE ROOM UNLESS SHOWN OTHERWISE
2. SPRINKLER PIPING TO BE HELD TIGHT TO THE BOTTOM OF BEAMS OR JOIST WHERE POSSIBLE. HEADS TO BE DIRECTED UP IN EXPOSED CONDITIONS AND DIRECTED DOWN AT CEILING LOCATIONS
3. FIRE SPRINKLER HEADS TO BE LOCATED IN THE CENTER OF ACOUSTIC LAY-IN PANELS OR 12" FROM THE END OF A 24" X 48" PANEL.
4. ALL CEILING HEIGHTS ARE FROM FINISHED FLOOR OF ROOM (U.N.O.)
5. VERIFY ALL LIGHTS, SMOKE DETECTORS, EXIT SIGNS, WITH ELECTRICAL DRAWINGS.
6. VERIFY ALL MECHANICAL DUCTS, GRILLES, DIFFUSERS, & VENTS WITH MECHANICAL DRAWINGS.
7. VERIFY ALL SPRINKLER LINES, SPRINKLER HEADS, PIPING, & ROOF DRAIN LINES WITH PLUMBING DRWG'S.
8. ATTIC ACCESS HATCHES TO BE MINIMUM 22 1/2" X 30".
9. ALL EXPOSED STEEL BEAMS, JOISTS, COLUMNS, DECK AND MISC STEEL COMPONENTS TO BE PAINTED U.N.O. PAINT COLOR BY ARCHITECT
10. PROVIDE ACCESS DOORS IN GYPSUM BOARD CEILINGS WHERE REQUIRED FOR DAMPER LOCATIONS. SEE MECH DRAWINGS.

RCP LEGEND

L002 / 0'-0" / EXP — ROOM NUMBER; CEILING FINISH (SEE FINISH SCHEDULE); CEILING ELEVATION ABOVE FINISH FLOOR (U.N.O.)

- EXIT SIGN (WALL MOUNTED)
- EXIT SIGN (SURFACE MOUNTED)
- S.D. SMOKE DETECTOR
- H.D. HEAT DETECTOR
- CEILING DIFFUSER
- LINEAR CEILING DIFFUSER & GRILLE
- RETURN AIR GRILLE
- RETURN AIR GRILLE
- EXHAUST AIR GRILLE
- CEILING/ROOF ACCESS HATCH
- 2' X 2' LAY IN CEILING TILE
- 2' X 4' LAY IN CEILING TILE
- PAINTED GYP CEILING OR SOFFIT
- PATCH AND REPAIR GYP BOARD CEILING

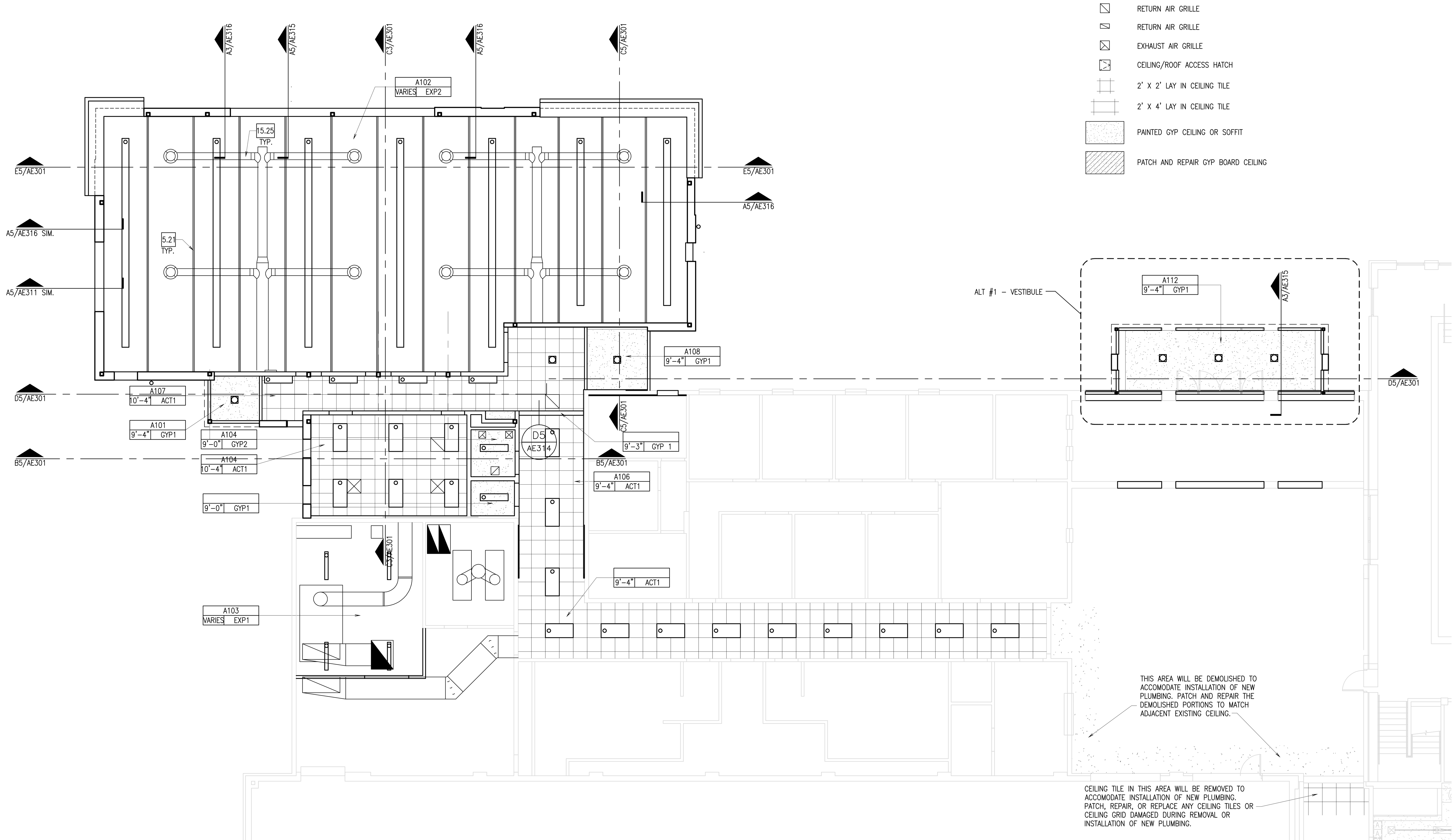

Floor Plan A5
1/8" = 1'-0"

DIVISION 1 – GENERAL NOTES
1.1 FINISH FLOOR
1.2 FINISH GRADE
1.3 LINE OF BUILDING ABOVE
1.4 EDGE OF WALL BELOW
1.5 UTILITY TUNNEL
1.6 EXISTING WALL
1.7 EXISTING FOOTING
1.8 EXISTING BUILDING
1.9 EXISTING FOUNDATION WALL
1.10 EXISTING CONCRETE SLAB

DIVISION 2 – SITE WORK
2.1 EXISTING LIGHT POLE W/ OVERHEAD POWER TO REMAIN
2.2 EXISTING ASPHALT PAVING TO REMAIN
2.3 EXISTING CONCRETE SIDEWALK TO REMAIN
2.4 EXISTING CURB TO REMAIN
2.5 EXISTING SEWER LINE TO REMAIN
2.6 EXISTING POWER POLE W/ UNDERGROUND POWER LINE TO REMAIN
2.7 EXISTING SEWER MANHOLE TO REMAIN
2.8 EXISTING 4" CLEAN OUT TO REMAIN
2.9 EXISTING CATCH BASIN TO REMAIN
2.10 EXISTING FIRE HYDRANT TO REMAIN
2.11 EXISTING LANDSCAPING TO REMAIN
2.12 EXISTING TREE TO REMAIN; FULLY PROTECTED
2.13 EXISTING GUTTER TO REMAIN
2.14 COMPACTED FILL
2.15 NEW CONCRETE PAVING
2.16 LINE OF NEW CONCRETE PAVING
2.17 EXISTING PARKING STALLS TO REMAIN
2.18 EXISTING FENCE TO REMAIN
2.19 NEW SUMP
2.20 EXISTING STONE SIGNAGE RELOCATED FROM OLD GYMNASIUM – COORDINATE WITH OWNER.
2.21 NEW CONCRETE STAIRS – SEE ENLARGED PLANS FOR DIMENSIONS
2.22 NEW CONCRETE CURB
2.23 EXISTING HIGH VOLTAGE SWITCHGEAR TO REMAIN
2.24 EXISTING 500 KVA TRANSFORMER
2.25 EXISTING CONCRETE STAIRS TO REMAIN
2.26 HANDICAP ACCESSIBLE PARKING STALL
2.27 HANDICAP ACCESSIBLE AISLE
2.28 HANDICAP ACCESSIBLE PARKING SIGN
2.29 NEW GAS METER
2.30 NEW STORM DRAIN LINE
2.31 EXISTING STORM DRAIN LINE TO REMAIN
2.32 EXISTING GAS METER TO REMAIN
2.33 EXISTING GAS LINE TO REMAIN
2.34 NEW GAS LINE TO BE CONNECTED TO EXISTING GAS LINE
2.35 EXISTING WATER LINE
2.36 NEW WATER LINE
2.37 NEW BIKE RACK
2.38 GRAVEL MULCH TO BE ½" "SILVER NICKEL" PLACED 3" DEEP OVER WEED BARRIER
2.39 NEW CONCRETE 12" WIDE MOW STRIP, SEE DETAIL A1/AS110
2.40 GRAVEL MULCH TO BE PEA GRAVEL PLACED 3" DEEP OVER WEED BARRIER
2.41 NEW TURF
2.42 NEW TREE – SEE PLANTING PLAN
2.43 NEW PLANT – SEE PLANTING PLAN
2.44 CONCRETE BENCH. BRAND: "MATERIALS, INC." STYLE: "GOTHIC" OR SIMILAR. ALT BRAND & STYLE ACCEPTABLE W/PRIOR APPROVAL.

DIVISION 3 – CONCRETE
3.1 4" CONCRETE SLAB
3.2 CONCRETE FOOTING
3.3 NOT USED
3.4 CONCRETE ON STEEL DECK
3.5 CONC EQUIPMENT PAD
3.6 CAST IN PLACE CONCRETE
3.7 CONCRETE RETAINING WALL

DIVISION 4 – MASONRY
4.1 NOT USED
4.2 MASONRY CONTROL JOINT
4.3 NOT USED
4.4 NOT USED
4.5 STANDARD BRICK VENEER, COLOR AS SELECTED BY ARCHITECT
4.6 EXISTING MASONRY, CLEANED AND SEALED

DIVISION 5 – METALS
5.1 STEEL COLUMN; REF STRUCT. DWG
5.2 STEEL BEAM; REF STRUCT. DWGS
5.3 STEEL JOIST; REF STRUCT. DWGS
5.4 STEEL ROOF DECK
5.5 STEEL LADDER
5.6 4" STRUCT STL STUDS @ 16" O.C.
5.7 STEEL ANGLE
5.8 STEEL CHANNEL
5.9 HORIZONTAL STEEL JOIST BRIDGING
5.10 1 1/2"ø ALUMINUM PIPE HANDRAIL
5.11 6" STRUCT STL STUDS @16" OC
5.12 3 5/8" STRUCT STL STUDS @16" OC
5.13 STEEL PLATE
5.14 STEEL TUBE, REF STRUCT. DWG
5.15 1 1/2"ø ALUMINUM PIPE VERTICAL SUPPORTS
5.16 1 1/2" STRUCT STL STUDS @ 16" O.C.
5.17 EXPOSED STEEL COLUMN; REF STRUCT. DWGS; PAINT, COLOR BY ARCH.
5.18 EXPOSED STEEL BEAM; REF STRUCT. DWGS; PAINT, COLOR BY ARCH.
5.19 2" STRUCT STL STUDS @ 16" OC
5.20 2-1/2" STRUCT STL STUDS @ 16" OC
5.21 EXPOSED STEEL JOIST; REF STRUCT. DWGS; PAINT, COLOR BY ARCH.
5.22 ALUMINUM ANGLE
5.23 ALUMINUM PLATE
5.24 ⅞" HAT CHANNELS
5.25 1 1/2"ø ALUMINUM PIPE GUARDRAIL
5.26 3-⅝" STL STUD SLIP TRACK SYSTEM W/ 2" LEG ON TOP TRACK AND 1-½" SLOT.

DIVISION 6 – WOOD AND PLASTICS
6.1 WOOD BLOCKING OR BACKING PLATE 16 GA X 6" HIGH FOR INTERIOR ARCHITECTURAL WOODWORK, HARDWARE, TOILET COMPARTMENTS, BATH ACCESSORIES, ETC
6.2 PLASTIC LAMINATE COUNTERTOP
6.3 NOT USED
6.4 ACRYLIC PANEL
6.5 PLASTIC LAMINATE MILLWORK
6.6 MAPLE CHAIR RAIL, SEE E5/AE504

DIVISION 7 THERMAL & MOISTURE PROTECTION
7.1 RIDGE
7.2 VALLEY, MIN SLOPE 3/16" PER LINEAL FT
7.3 CRICKET, MIN. SLOPE 1/4" PER FOOT AT VALLEY, FORM W/ TAPERED RIGID BD. INSULATION
7.4 ROOF HATCH
7.5 ROOF CURB. SEE DETAIL C2/AE504.
7.6 ROOF DRAIN & OVERFLOW DRAIN
7.7 TYPICAL PIPE/CONDUIT PENETRATION

DIVISION 7 CONT'D THERMAL & MOISTURE PROTECTION
7.8 SINGLE PLY ROOF MEMBRANE MECHANICALLY FASTENED OVER MIN 4" TAPERED RIGID INSULATION SLOPED TO DRAIN 1/4"/FT MIN
7.9 1" EXPANSION JOINT
7.10 ROOF SCUPPER
7.11 SEALANT
7.12 R-11 BATTS, FACED MINERAL-FIBER BLANKET INSULATION
7.13 R-19 BATTS, FACED MINERAL-FIBER BLANKET INSULATION
7.14 NOT USED
7.15 FIRE SAFING INSULATION
7.16 NOT USED
7.17 RIGID INSULATION
7.18 METAL REGLET & COUNTER FLASHING
7.19 METAL FASCIA
7.20 METAL CLOSURE
7.21 PRE-FINISHED METAL COPING; COLOR BY ARCH. FROM MANUF. FULL RANGE
7.22 COMPOSITE SHEET WATERPROOFING
7.23 NOT USED
7.24 2" INSULATED METAL PANEL SYSTEM, COLOR BY ARCHITECT
7.25 EXISTING METAL COPING TO REMAIN

DIVISION 8 DOORS & WINDOWS
8.1 HOLLOW METAL DOOR & FRAME
8.2 FLUSH WOOD DOOR
8.3 ACCESS DOOR
8.4 ANODIZED ALUM. STOREFRONT WINDOW
8.5 ANODIZED ALUM. STOREFRONT DOOR AND FRAME
8.6 1" INSULATED GLASS SET IN ALUM. CURTAIN WALL FRAME
8.7 1" INSULATED SANDBLASTED GLASS SET IN ALUM. CURTAIN WALL FRAME
8.8 1" INSULATED SANDBLASTED GLASS SET IN ANODIZED ALUMINUM STOREFRONT
8.9 BUTT GLAZING
8.10 MIRROR
8.11 1/2" TEMPERED SAFETY GLASS W/ SAND BLASTED FINISH
8.12 ADA AUTOMATIC DOOR
8.13 ALUM. STOREFRONT SYSTEM RELOCATED FROM EXISTING VESTIBULE. SEE SHEET AD101ALT.
8.14 1/2" TEMPERED SAFETY GLASS
8.15 ALUM. STOREFRONT SYSTEM

DIVISION 9 FINISHES
9.1 GYP BOARD, PAINT – COLOR BY ARCH.
9.2 CERAMIC TILE
9.3 ACOUSTICAL PANEL CEILING
9.4 NOT USED
9.5 RESILIENT MNTD. HARDWOOD FLOOR
9.6 NOT USED
9.7 RUBBER BASE
9.8 CERAMIC TILE BASE
9.9 VINYL COMPOSITION TILE
9.10 CARPET

DIVISION 10 SPECIALITIES
10.1 36" GRAB BAR
10.2 WHITE BOARD; PROVIDE BLKG
10.3 TOILET PAPER DISPENSER
10.4 SIGN – MAXIMUM OCCUPANT LOAD
10.5 FIRE EXT.; RECESSED CABINET
10.6 42" GRAB BAR
10.7 MARKER BOARD
10.8 OWNER SUPPLIED SIGN IDENTIFYING LOCATION OF UNISEX RESTROOM
10.9 BULLETIN BOARD

DIVISION 11 EQUIPMENT
11.1 AV EQUIPMENT SEE AV DWGS
11.2 AV PANEL SEE AV DWGS
11.3 SPEAKER, N.I.C.
11.4 AV FLOOR POCKET
11.5 ADJUSTABLE BALLET BARRE

DIVISION 15 MECHANICAL
15.1 FIRE CONNECTION
15.2 MECHANICAL ROOF HOOD
15.3 MECHANICAL EXHAUST FAN
15.4 MECHANICAL CONDENSING UNIT
15.5 FIRE SPRINKLER MAIN SHOWN FOR COORDINATION ONLY; CONTRACTOR TO PROVIDE SHOP DWGS PER SPEC & CODE
15.6 NOT USED
15.7 WATER METER RE: CIVIL, PLUMB. DWGS
15.8 GAS METER RE: PLUMB. DWGS
15.9 NOT USED
15.10 SINK, REF: PLUMB. DWGS
15.11 SUMP PUMP BELOW GRADE
15.12 TOILET
15.13 ADA TOILET
15.14 ADA URINAL
15.15 ADA LAV
15.16 ADA SHOWER
15.17 ADA ELECTRIC DRINKING FOUNTAIN
15.18 FLOOR DRAIN
15.19 STORM DRAIN
15.20 ROOF DRAIN
15.21 MECHANICAL UNIT
15.22 MECHANICAL DIFFUSER
15.23 MECHANICAL RETURN AIR GRILLE
15.24 MECHANICAL EXHAUST FAN GRILLE
15.25 MECHANICAL EXPOSED DUCT
15.26 MECH EXPOSED DUCT SUPPORT
15.27 ROOF & OVERFLOW DRAIN SEE E5/AE504
15.28 MECHANICAL DUCT
15.29 LAMBS TONGUE
15.30 SUMP PUMP
15.31 DRINKING FOUNTAIN
15.32 AREA DRAIN
15.33 MECHANICAL DUCT BELOW GRADE
15.34 MECHANICAL LOUVER

DIVISION 16 ELECTRICAL
16.1 ELECTRIC LIGHT
16.2 ELECTRIC PANEL
16.3 ELECTRIC TRANSFORMER
16.4 HORN/STROBE, REF: ELECT.
16.5 EMERGENCY LIGHTING, REF: ELECT.
16.6 DUPLEX OUTLET, REF: ELECT.
16.7 DATA OUTLET, REF. ELECT.
16.8 CABLE TRAY SEE EP DWGS
16.9 EXIT LIGHT SEE EL DWGS
16.10 HIGH VOLTAGE SWITCH
16.11 COMMUNICATION BOX
16.12 ADA DOOR ACTUATOR POST
16.13 ADA DOOR ACTUATOR PANEL
16.14 GENERATOR
16.15 FIRE GONG
16.16 UNDERCABINET LIGHT

GENERAL NOTES
1. AT BRICK VENEER, PROVIDE SOLID BRICKS WHERE TOP OR BOTTOM SURFACE IS EXPOSED BY 1" OR MORE.

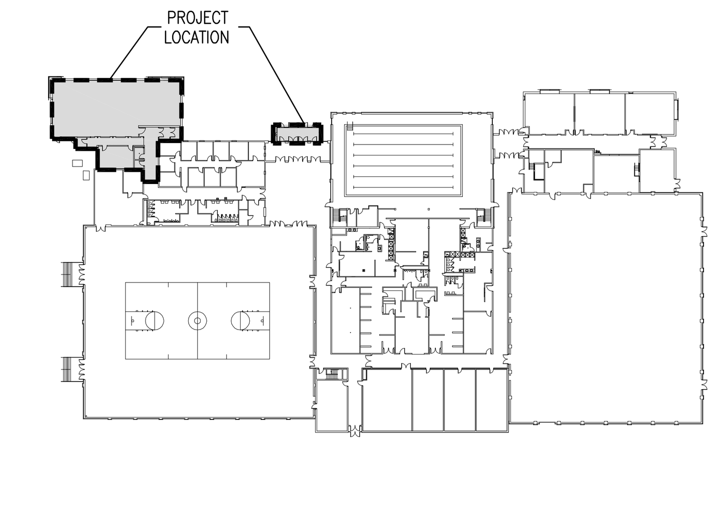

Key Plan A6
N.T.S.

LICENSED ARCHITECT PEGGY A. McDONOUGH No. 6090093-0301 STATE OF UTAH
7-21-2006

GouldEvans

©2002 Gould Evans Associates, L.C.
1000 South Main Street • Suite 100
Salt Lake City, Utah 84101
Voice 801.532.6100
Fax 801.532.6102
www.gouldevans.com

kansas city • lawrence • phoenix
salt lake city • san antonio • tampa

DFCM PROJECT NO: 05266700
STATE PROPERTY ID: 01791
RISK MANAGEMENT NO:
CAD PROJECT NO:
CAD DWG FILE:
DRAWN BY:
CHECKED BY:
COPYRIGHT: STATE OF UTAH

snow college
activities center
dance studio addition | remodel
ephraim, utah

REVISION	DATE

Project no: 0906-0260
Date: July 21, 2006
Sheet:

Reflected Ceiling Plan

AE110

100% Construction Documents

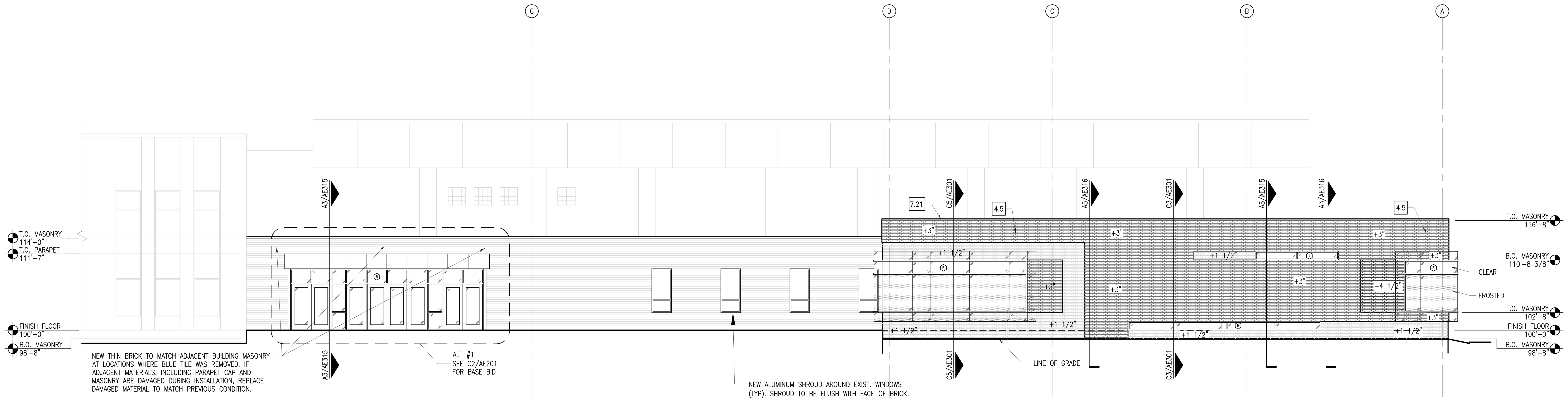

Exterior Elevation - North **E6**
1/8" = 1'-0"

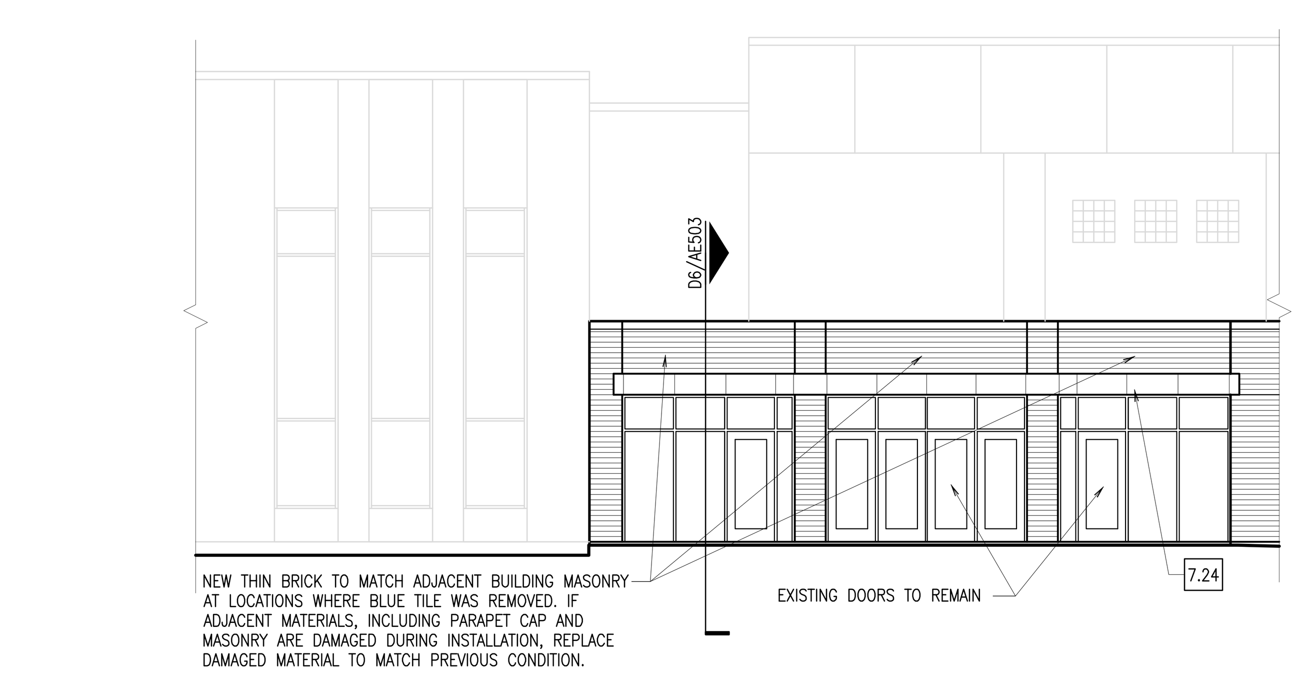

Exterior Elevation - North - Base Bid **C2**
1/8" = 1'-0"

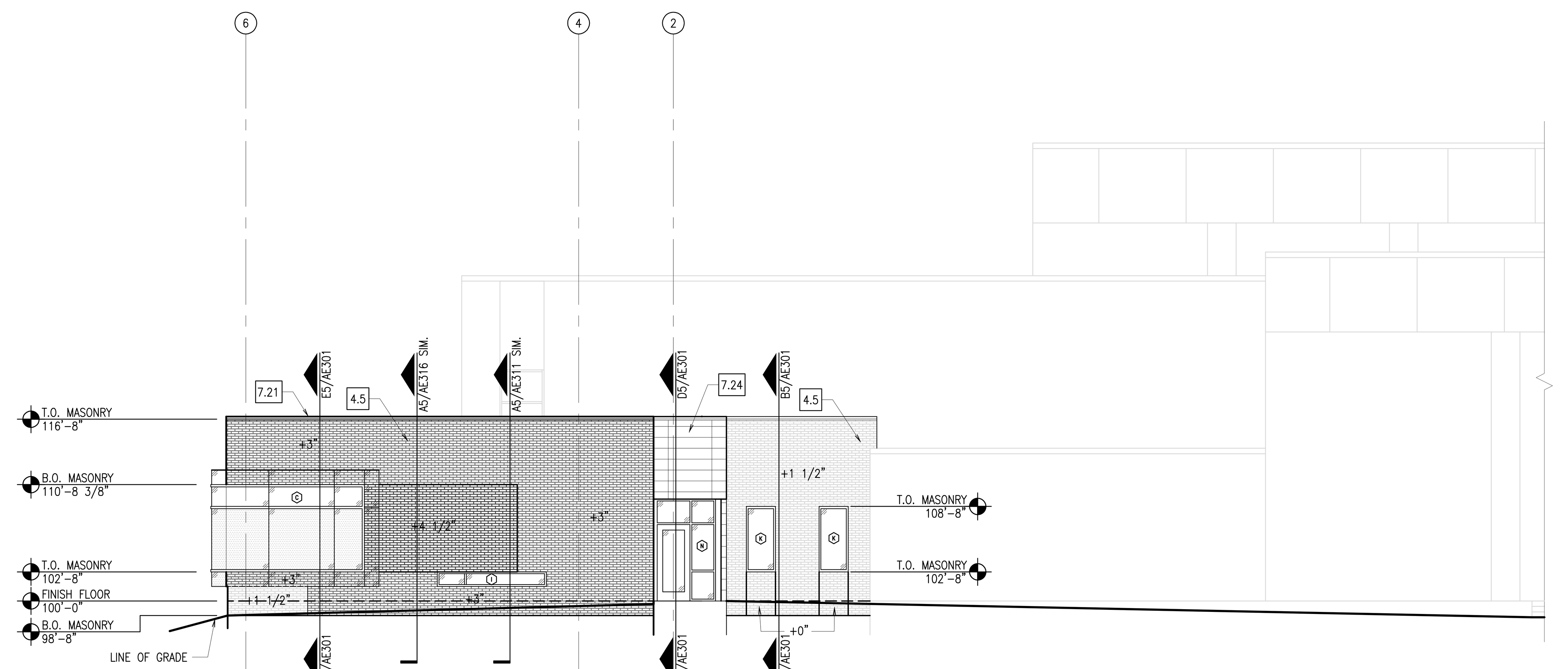

Exterior Elevation - West **C6**
1/8" = 1'-0"

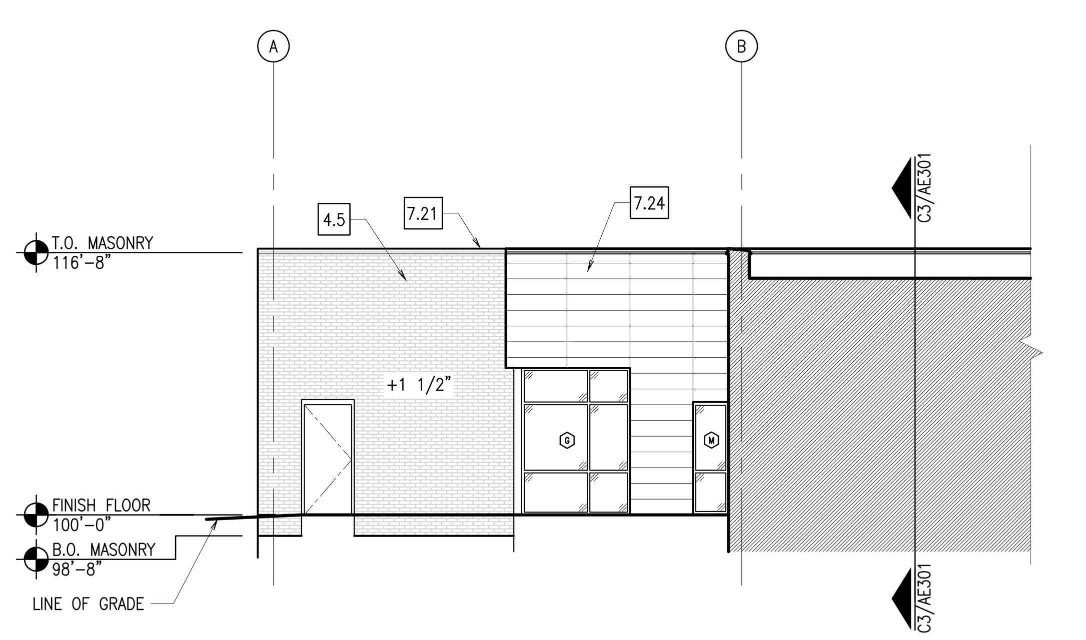

Exterior Elevation - South **A3**
1/8" = 1'-0"

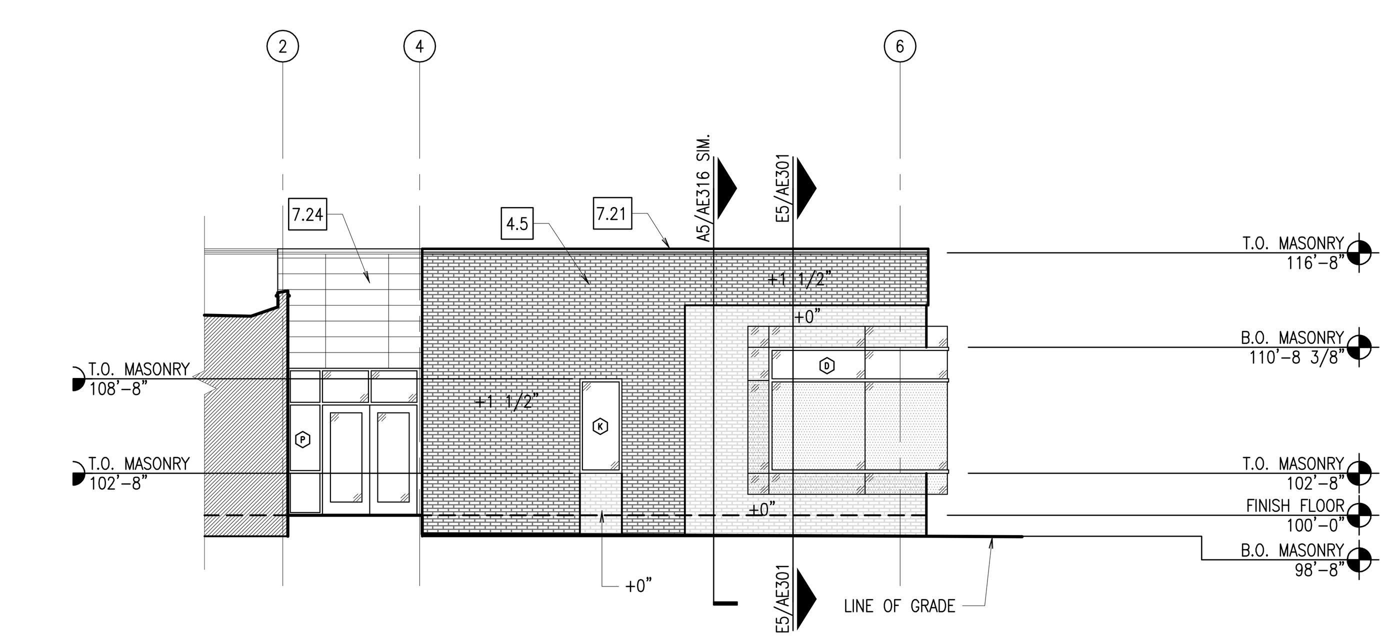

Exterior Elevation - East **A6**
1/8" = 1'-0"

DIVISION 1 – GENERAL NOTES
1.1 FINISH FLOOR
1.2 FINISH GRADE
1.3 LINE OF BUILDING ABOVE
1.4 EDGE OF WALL BELOW
1.5 UTILITY TUNNEL
1.6 EXISTING WALL
1.7 EXISTING FOOTING
1.8 EXISTING BUILDING
1.9 EXISTING FOUNDATION WALL
1.10 EXISTING CONCRETE SLAB

DIVISION 2 – SITE WORK
2.1 EXISTING LIGHT POLE W/ OVERHEAD POWER TO REMAIN
2.2 EXISTING ASPHALT PAVING TO REMAIN
2.3 EXISTING CONCRETE SIDEWALK TO REMAIN
2.4 EXISTING CURB TO REMAIN
2.5 EXISTING SEWER LINE TO REMAIN
2.6 EXISTING POWER POLE W/ UNDERGROUND POWER LINE TO REMAIN
2.7 EXISTING SEWER MANHOLE TO REMAIN
2.8 EXISTING 4" CLEAN OUT TO REMAIN
2.9 EXISTING CATCH BASIN TO REMAIN
2.10 EXISTING FIRE HYDRANT TO REMAIN
2.11 EXISTING LANDSCAPING TO REMAIN
2.12 EXISTING TREE TO REMAIN; FULLY PROTECTED
2.13 EXISTING GUTTER TO REMAIN
2.14 COMPACTED FILL
2.15 NEW CONCRETE PAVING
2.16 LINE OF NEW CONCRETE PAVING
2.17 EXISTING PARKING STALLS TO REMAIN
2.18 EXISTING FENCE TO REMAIN
2.19 NEW SUMP
2.20 EXISTING STONE SIGNAGE RELOCATED FROM OLD GYMNASIUM – COORDINATE WITH OWNER.
2.21 NEW CONCRETE STAIRS – SEE ENLARGED PLANS FOR DIMENSIONS
2.22 NEW CONCRETE CURB
2.23 EXISTING HIGH VOLTAGE SWITCHGEAR TO REMAIN
2.24 EXISTING 500 KVA TRANSFORMER
2.25 EXISTING CONCRETE STAIRS TO REMAIN
2.26 HANDICAP ACCESSIBLE PARKING STALL
2.27 HANDICAP ACCESSIBLE AISLE
2.28 HANDICAP ACCESSIBLE PARKING SIGN
2.29 NEW GAS METER
2.30 NEW STORM DRAIN LINE
2.31 EXISTING STORM DRAIN LINE TO REMAIN
2.32 EXISTING GAS METER TO REMAIN
2.33 EXISTING GAS LINE TO REMAIN
2.34 NEW GAS LINE TO BE CONNECTED TO EXISTING GAS LINE
2.35 EXISTING WATER LINE
2.36 NEW WATER LINE
2.37 NEW BIKE RACK
2.38 GRAVEL MULCH TO BE ½" "SILVER NICKEL" PLACED 3" DEEP OVER WEED BARRIER
2.39 NEW CONCRETE 12" WIDE MOW STRIP, SEE DETAIL A1/AS110
2.40 GRAVEL MULCH TO BE PEA GRAVEL PLACED 3" DEEP OVER WEED BARRIER
2.41 NEW TURF
2.42 NEW TREE – SEE PLANTING PLAN
2.43 NEW PLANT – SEE PLANTING PLAN
2.44 CONCRETE BENCH. BRAND: "MATERIALS, INC." STYLE: "GOTHIC" OR SIMILAR. ALT BRAND & STYLE ACCEPTABLE W/PRIOR APPROVAL.

DIVISION 3 – CONCRETE
3.1 4" CONCRETE SLAB
3.2 CONCRETE FOOTING
3.3 NOT USED
3.4 CONCRETE ON STEEL DECK
3.5 CONC EQUIPMENT PAD
3.6 CAST IN PLACE CONCRETE
3.7 CONCRETE RETAINING WALL

DIVISION 4 – MASONRY
4.1 NOT USED
4.2 MASONRY CONTROL JOINT
4.3 NOT USED
4.4 NOT USED
4.5 STANDARD BRICK VENEER, COLOR AS SELECTED BY ARCHITECT
4.6 EXISTING MASONRY, CLEANED AND SEALED

DIVISION 5 – METALS
5.1 STEEL COLUMN; REF STRUCT. DWG
5.2 STEEL BEAM; REF STRUCT. DWGS
5.3 STEEL JOIST; REF STRUCT. DWGS
5.4 STEEL ROOF DECK
5.5 STEEL LADDER
5.6 4" STRUCT STL STUDS @ 16" O.C.
5.7 STEEL ANGLE
5.8 STEEL CHANNEL
5.9 HORIZONTAL STEEL JOIST BRIDGING
5.10 1 1/2"ø ALUMINUM PIPE HANDRAIL
5.11 6" STRUCT STL STUDS @16" OC
5.12 3 5/8" STRUCT STL STUDS @16" OC
5.13 STEEL PLATE
5.14 STEEL TUBE, REF STRUCT. DWG
5.15 1 1/2"ø ALUMINUM PIPE VERTICAL SUPPORTS
5.16 1 1/2" STRUCT STL STUDS @ 16" O.C.
5.17 EXPOSED STEEL COLUMN; REF STRUCT. DWGS; PAINT, COLOR BY ARCH.
5.18 EXPOSED STEEL BEAM; REF STRUCT. DWGS; PAINT, COLOR BY ARCH.
5.19 2" STRUCT STL STUDS @ 16" OC
5.20 2-1/2" STRUCT STL STUDS @ 16" OC
5.21 EXPOSED STEEL JOIST; REF STRUCT. DWGS; PAINT, COLOR BY ARCH.
5.22 ALUMINUM ANGLE
5.23 ALUMINUM PLATE
5.24 ⅞" HAT CHANNELS
5.25 1 1/2"ø ALUMINUM PIPE GUARDRAIL
5.26 3-⅝" STL STUD SLIP TRACK SYSTEM W/ 2" LEG ON TOP TRACK AND 1-½" SLOT.

DIVISION 6 – WOOD AND PLASTICS
6.1 WOOD BLOCKING OR BACKING PLATE 16 GA X 6" HIGH FOR INTERIOR ARCHITECTURAL WOODWORK, HARDWARE, TOILET COMPARTMENTS, BATH ACCESSORIES, ETC
6.2 PLASTIC LAMINATE COUNTERTOP
6.3 NOT USED
6.4 ACRYLIC PANEL
6.5 PLASTIC LAMINATE MILLWORK
6.6 MAPLE CHAIR RAIL, SEE E5/AE504

DIVISION 7 THERMAL & MOISTURE PROTECTION
7.1 RIDGE
7.2 VALLEY, MIN SLOPE 3/16" PER LINEAL FT
7.3 CRICKET, MIN. SLOPE 1/4" PER FOOT AT VALLEY, FORM W/ TAPERED RIGID BD. INSULATION
7.4 ROOF HATCH
7.5 ROOF CURB. SEE DETAIL C2/AE504.
7.6 ROOF DRAIN & OVERFLOW DRAIN
7.7 TYPICAL PIPE/CONDUIT PENETRATION

DIVISION 7 CONT'D THERMAL & MOISTURE PROTECTION
7.8 SINGLE PLY ROOF MEMBRANE MECHANICALLY FASTENED OVER MIN 4" TAPERED RIGID INSULATION SLOPED TO DRAIN 1/4"/FT MIN
7.9 1" EXPANSION JOINT
7.10 ROOF SCUPPER
7.11 SEALANT
7.12 R-11 BATTS, FACED MINERAL-FIBER BLANKET INSULATION
7.13 R-19 BATTS, FACED MINERAL-FIBER BLANKET INSULATION
7.14 NOT USED
7.15 FIRE SAFING INSULATION
7.16 NOT USED
7.17 RIGID INSULATION
7.18 METAL REGLET & COUNTER FLASHING
7.19 METAL FASCIA
7.20 METAL CLOSURE
7.21 PRE-FINISHED METAL COPING; COLOR BY ARCH. FROM MANUF. FULL RANGE
7.22 COMPOSITE SHEET WATERPROOFING
7.23 NOT USED
7.24 2" INSULATED METAL PANEL SYSTEM, COLOR BY ARCHITECT
7.25 EXISTING METAL COPING TO REMAIN

DIVISION 8 DOORS & WINDOWS
8.1 HOLLOW METAL DOOR & FRAME
8.2 FLUSH WOOD DOOR
8.3 ACCESS DOOR
8.4 ANODIZED ALUM. STOREFRONT WINDOW
8.5 ANODIZED ALUM. STOREFRONT DOOR AND FRAME
8.6 1" INSULATED GLASS SET IN ALUM. CURTAIN WALL FRAME
8.7 1" INSULATED SANDBLASTED GLASS SET IN ALUM. CURTAIN WALL FRAME
8.8 1" INSULATED SANDBLASTED GLASS SET IN ANODIZED ALUMINUM STOREFRONT
8.9 BUTT GLAZING
8.10 MIRROR
8.11 1/2" TEMPERED SAFETY GLASS W/ SAND BLASTED FINISH
8.12 ADA AUTOMATIC DOOR
8.13 ALUM. STOREFRONT SYSTEM RELOCATED FROM EXISTING VESTIBULE. SEE SHEET AD101ALT.
8.14 1/2" TEMPERED SAFETY GLASS
8.15 ALUM. STOREFRONT SYSTEM

DIVISION 9 FINISHES
9.1 GYP BOARD, PAINT – COLOR BY ARCH.
9.2 CERAMIC TILE
9.3 ACOUSTICAL PANEL CEILING
9.4 NOT USED
9.5 RESILIENT MNTD. HARDWOOD FLOOR
9.6 NOT USED
9.7 RUBBER BASE
9.8 CERAMIC TILE BASE
9.9 VINYL COMPOSITION TILE
9.10 CARPET

DIVISION 10 SPECIALITIES
10.1 36" GRAB BAR
10.2 WHITE BOARD; PROVIDE BLKG
10.3 TOILET PAPER DISPENSER
10.4 SIGN – MAXIMUM OCCUPANT LOAD
10.5 FIRE EXT.; RECESSED CABINET
10.6 42" GRAB BAR
10.7 MARKER BOARD
10.8 OWNER SUPPLIED SIGN IDENTIFYING LOCATION OF UNISEX RESTROOM
10.9 BULLETIN BOARD

DIVISION 11 EQUIPMENT
11.1 AV EQUIPMENT SEE AV DWGS
11.2 AV PANEL SEE AV DWGS
11.3 SPEAKER, N.I.C.
11.4 AV FLOOR POCKET
11.5 ADJUSTABLE BALLET BARRE

DIVISION 15 MECHANICAL
15.1 FIRE CONNECTION
15.2 MECHANICAL ROOF HOOD
15.3 MECHANICAL EXHAUST FAN
15.4 MECHANICAL CONDENSING UNIT
15.5 FIRE SPRINKLER MAIN SHOWN FOR COORDINATION ONLY; CONTRACTOR TO PROVIDE SHOP DWGS PER SPEC & CODE
15.6 NOT USED
15.7 WATER METER RE: CIVIL, PLUMB. DWGS
15.8 GAS METER RE: PLUMB. DWGS
15.9 NOT USED
15.10 SINK, REF: PLUMB. DWGS
15.11 SUMP PUMP BELOW GRADE
15.12 TOILET
15.13 ADA TOILET
15.14 ADA URINAL
15.15 ADA LAV
15.16 ADA SHOWER
15.17 ADA ELECTRIC DRINKING FOUNTAIN
15.18 FLOOR DRAIN
15.19 STORM DRAIN
15.20 ROOF DRAIN
15.21 MECHANICAL UNIT
15.22 MECHANICAL DIFFUSER
15.23 MECHANICAL RETURN AIR GRILLE
15.24 MECHANICAL EXHAUST FAN GRILLE
15.25 MECHANICAL EXPOSED DUCT
15.26 MECH EXPOSED DUCT SUPPORT
15.27 ROOF & OVERFLOW DRAIN SEE E5/AE504
15.28 MECHANICAL DUCT
15.29 LAMBS TONGUE
15.30 SUMP PUMP
15.31 DRINKING FOUNTAIN
15.32 AREA DRAIN
15.33 MECHANICAL DUCT BELOW GRADE
15.34 MECHANICAL LOUVER

DIVISION 16 ELECTRICAL
16.1 ELECTRIC LIGHT
16.2 ELECTRIC PANEL
16.3 ELECTRIC TRANSFORMER
16.4 HORN/STROBE, REF: ELECT.
16.5 EMERGENCY LIGHTING, REF: ELECT.
16.6 DUPLEX OUTLET, REF: ELECT.
16.7 DATA OUTLET, REF. ELECT.
16.8 CABLE TRAY SEE EP DWGS
16.9 EXIT LIGHT SEE EL DWGS
16.10 HIGH VOLTAGE SWITCH
16.11 COMMUNICATION BOX
16.12 ADA DOOR ACTUATOR POST
16.13 ADA DOOR ACTUATOR PANEL
16.14 GENERATOR
16.15 FIRE GONG
16.16 UNDERCABINET LIGHT

GENERAL NOTES
1. AT BRICK VENEER, PROVIDE SOLID BRICKS WHERE TOP OR BOTTOM SURFACE IS EXPOSED BY 1" OR MORE.

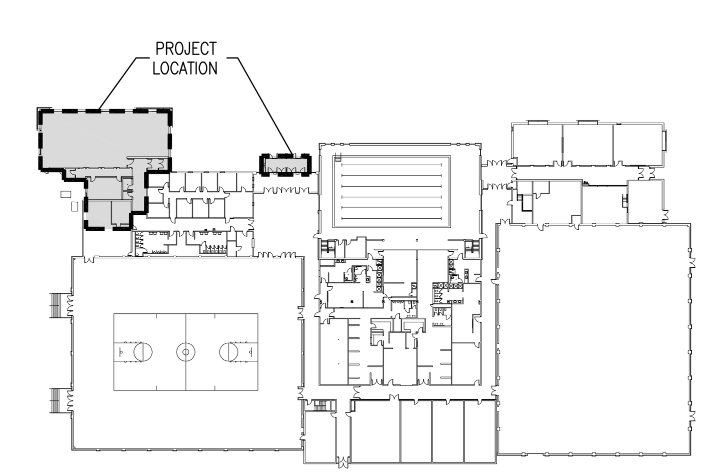

Key Plan
N.T.S.

GouldEvans

©2002 Gould Evans Associates, L.C.
1000 South Main Street • Suite 100
Salt Lake City, Utah 84101
Voice 801.532.6100
Fax 801.532.6102
www.gouldevans.com

kansas city • lawrence • phoenix
salt lake city • san antonio • tampa

DFCM PROJECT NO: 05266700
STATE PROPERTY ID: 01791
RISK MANAGEMENT NO:
CAD PROJECT NO:
CAD DWG FILE:
DRAWN BY:
CHECKED BY:
COPYRIGHT: STATE OF UTAH

snow college
activities center
dance studio addition | remodel
ephraim, utah

REVISION	DATE

Project no:	0906-0260
Date:	July 21, 2006
Sheet:	

Exterior Elevations
AE201

100% Construction Documents

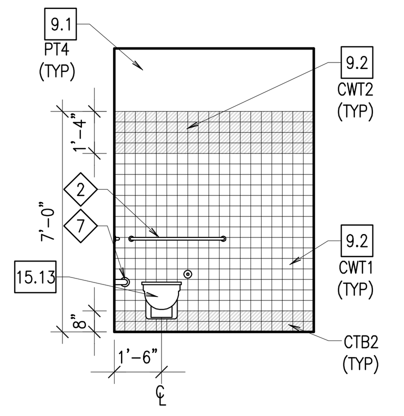

Unisex: North **E1**
1/4" = 1'-0"

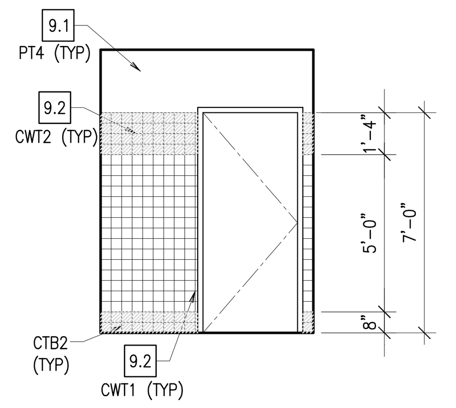

Unisex: East **E2**
1/4" = 1'-0"

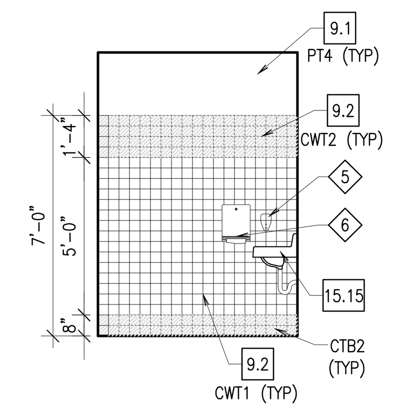

Unisex: South **E3**
1/4" = 1'-0"

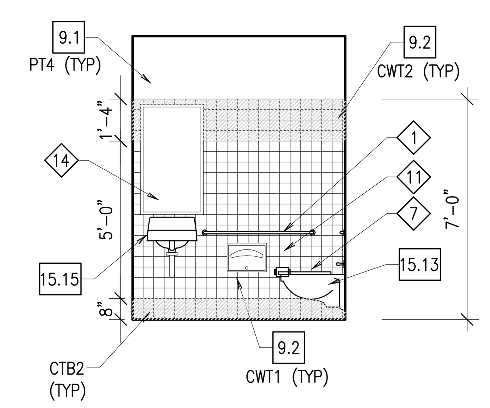

Unisex: West **E4**
1/4" = 1'-0"

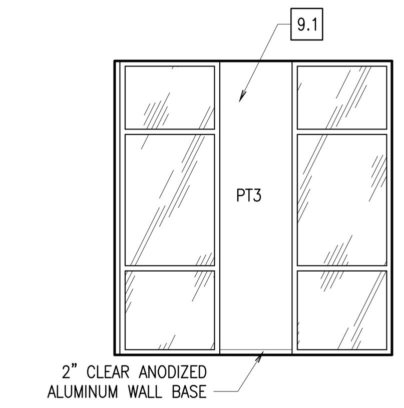

Vestibule : East & West **E5**
1/4" = 1'-0"

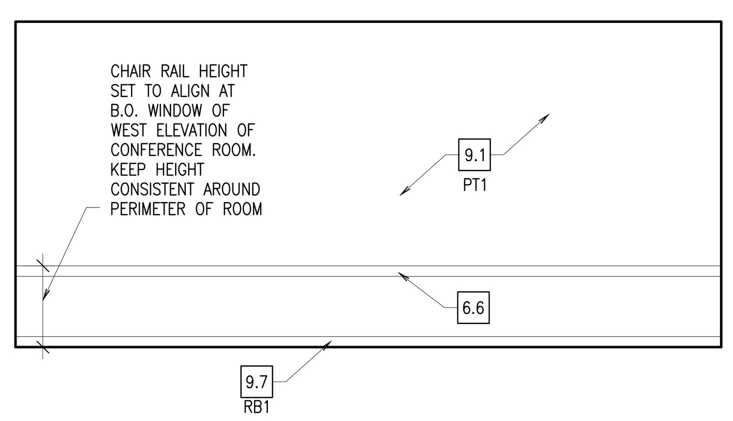

Conference: South **D1**
1/4" = 1'-0"

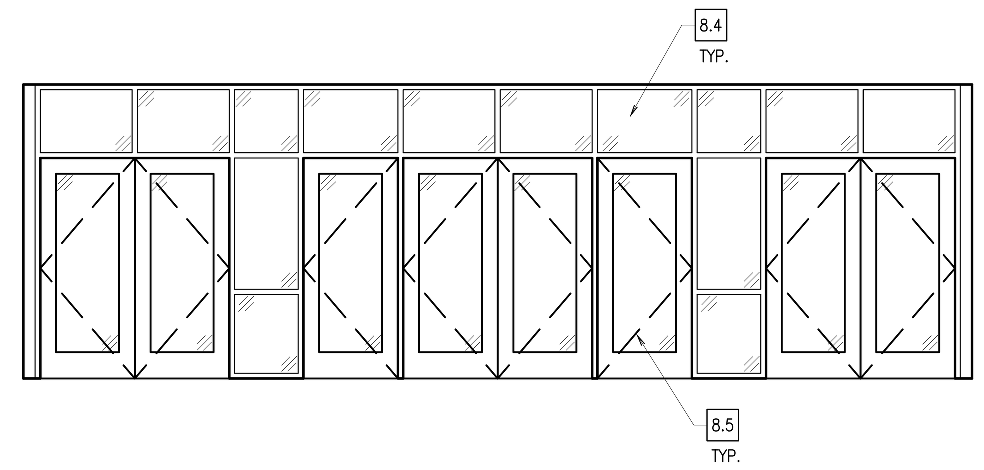

Vestibule : North **D3**
1/4" = 1'-0"

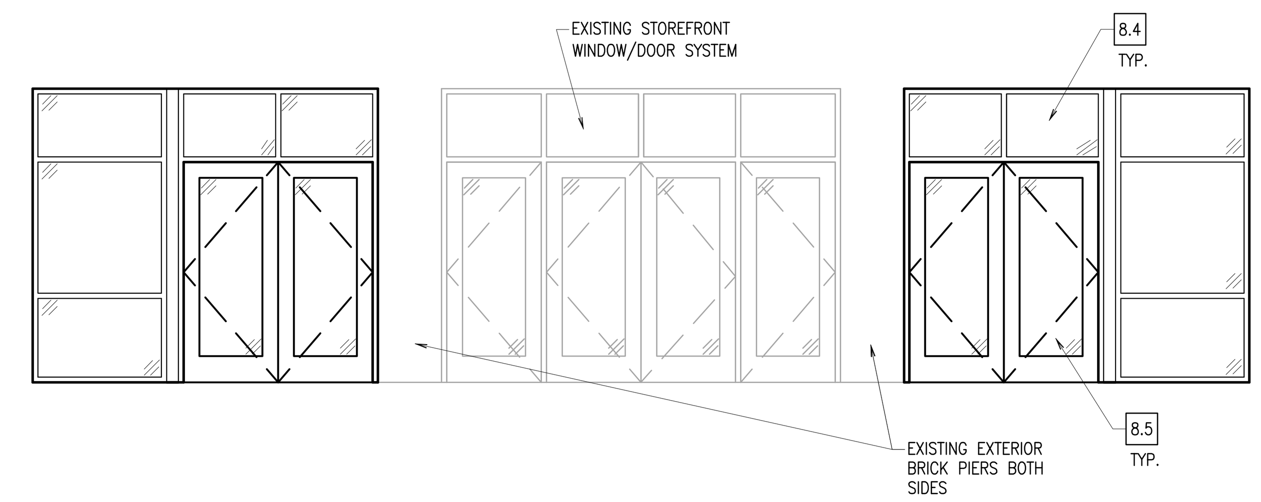

Vestibule : South **D5**
1/4" = 1'-0"

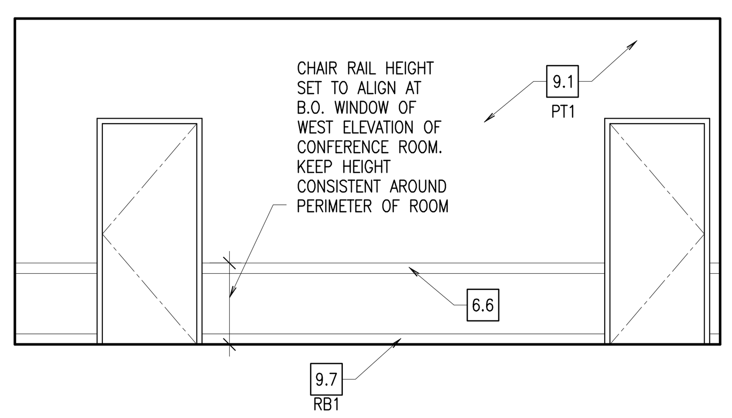

Conference: North **C1**
1/4" = 1'-0"

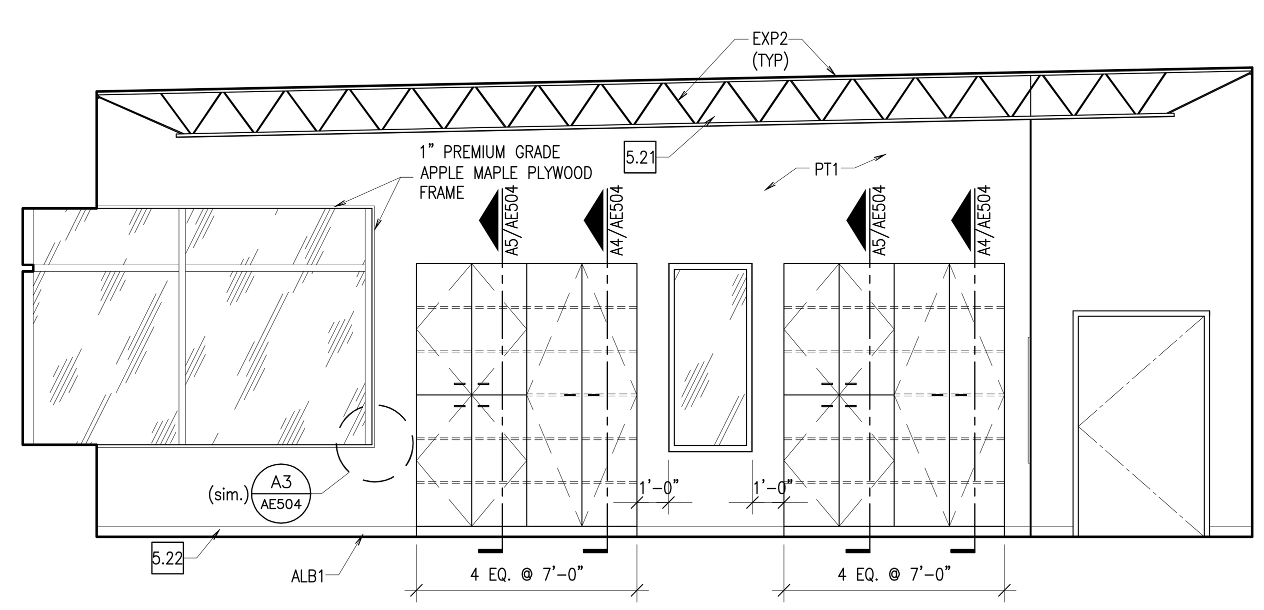

Dance - East **C3**
1/4" = 1'-0"

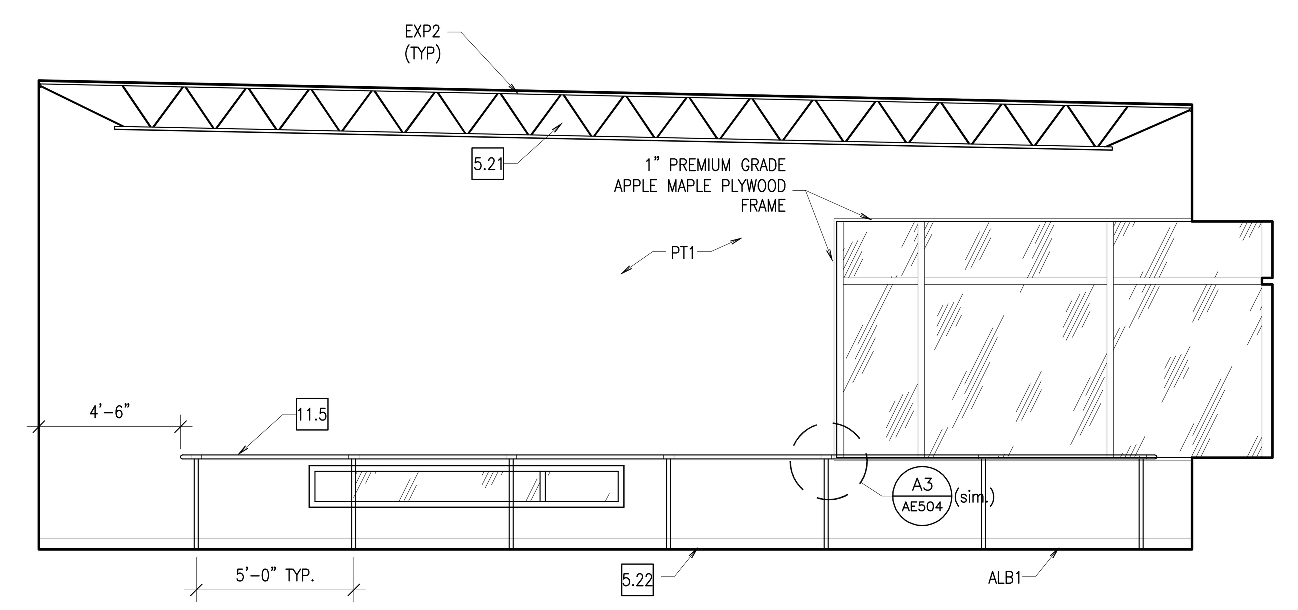

Dance - West **C5**
1/4" = 1'-0"

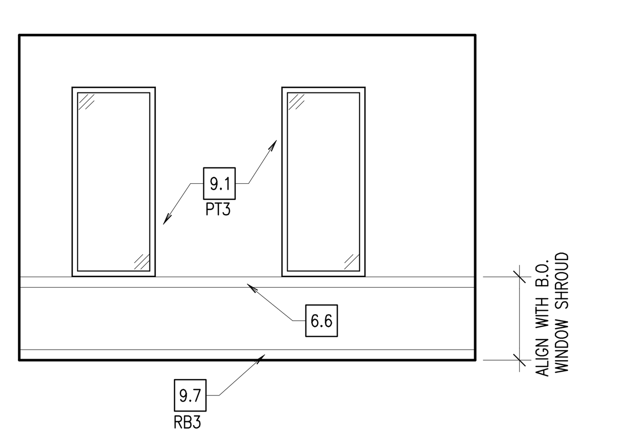

Conference: West **B1**
1/4" = 1'-0"

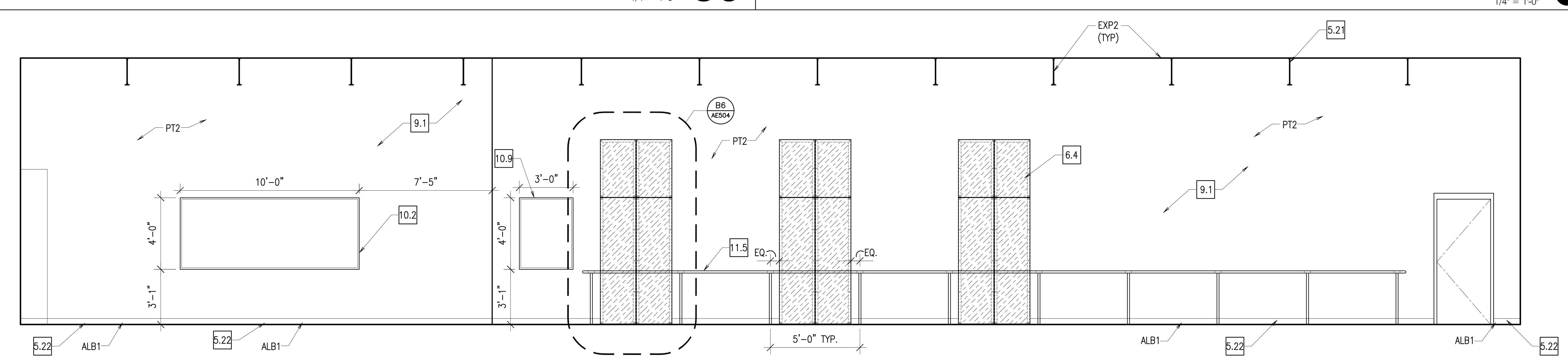

Dance - South **B5**
1/4" = 1'-0"

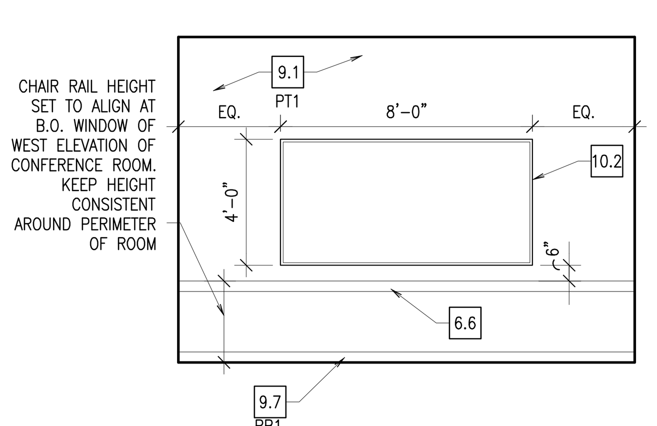

Conference: East **A1**
1/4" = 1'-0"

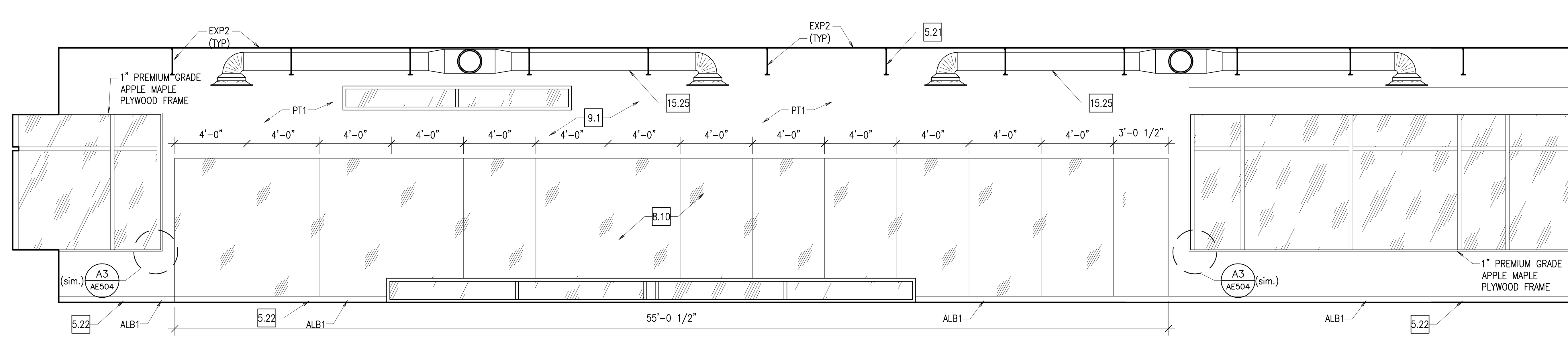

Dance - North **A5**
1/4" = 1'-0"

DIVISION 1 – GENERAL NOTES
1.1 FINISH FLOOR
1.2 FINISH GRADE
1.3 LINE OF BUILDING ABOVE
1.4 EDGE OF WALL BELOW
1.5 UTILITY TUNNEL
1.6 EXISTING WALL
1.7 EXISTING FOOTING
1.8 EXISTING BUILDING
1.9 EXISTING FOUNDATION WALL
1.10 EXISTING CONCRETE SLAB

DIVISION 2 – SITE WORK
2.1 EXISTING LIGHT POLE W/ OVERHEAD POWER TO REMAIN
2.2 EXISTING ASPHALT PAVING TO REMAIN
2.3 EXISTING CONCRETE SIDEWALK TO REMAIN
2.4 EXISTING CURB TO REMAIN
2.5 EXISTING SEWER LINE TO REMAIN
2.6 EXISTING POWER POLE W/ UNDERGROUND POWER LINE TO REMAIN
2.7 EXISTING SEWER MANHOLE TO REMAIN
2.8 EXISTING 4" CLEAN OUT TO REMAIN
2.9 EXISTING CATCH BASIN TO REMAIN
2.10 EXISTING FIRE HYDRANT TO REMAIN
2.11 EXISTING LANDSCAPING TO REMAIN
2.12 EXISTING TREE TO REMAIN; FULLY PROTECTED
2.13 EXISTING GUTTER TO REMAIN
2.14 COMPACTED FILL
2.15 NEW CONCRETE PAVING
2.16 LINE OF NEW CONCRETE PAVING
2.17 EXISTING PARKING STALLS TO REMAIN
2.18 EXISTING FENCE TO REMAIN
2.19 NEW SUMP
2.20 EXISTING STONE SIGNAGE RELOCATED FROM OLD GYMNASIUM – COORDINATE WITH OWNER.
2.21 NEW CONCRETE STAIRS – SEE ENLARGED PLANS FOR DIMENSIONS
2.22 NEW CONCRETE CURB
2.23 EXISTING HIGH VOLTAGE SWITCHGEAR TO REMAIN
2.24 EXISTING 500 KVA TRANSFORMER
2.25 EXISTING CONCRETE STAIRS TO REMAIN
2.26 HANDICAP ACCESSIBLE PARKING STALL
2.27 HANDICAP ACCESSIBLE AISLE
2.28 HANDICAP ACCESSIBLE PARKING SIGN
2.29 NEW GAS METER
2.30 NEW STORM DRAIN LINE
2.31 EXISTING STORM DRAIN LINE TO REMAIN
2.32 EXISTING GAS METER TO REMAIN
2.33 EXISTING GAS LINE TO REMAIN
2.34 NEW GAS LINE TO BE CONNECTED TO EXISTING GAS LINE
2.35 EXISTING WATER LINE
2.36 NEW WATER LINE
2.37 NEW BIKE RACK
2.38 GRAVEL MULCH TO BE ½" "SILVER NICKEL" PLACED 3" DEEP OVER WEED BARRIER
2.39 NEW CONCRETE 12" WIDE MOW STRIP, SEE DETAIL A1/AS110
2.40 GRAVEL MULCH TO BE PEA GRAVEL PLACED 3" DEEP OVER WEED BARRIER
2.41 NEW TURF
2.42 NEW TREE – SEE PLANTING PLAN
2.43 NEW PLANT – SEE PLANTING PLAN
2.44 CONCRETE BENCH. BRAND: "MATERIALS, INC." STYLE: "GOTHIC" OR SIMILAR. ALT BRAND & STYLE ACCEPTABLE W/PRIOR APPROVAL.

DIVISION 3 – CONCRETE
3.1 4" CONCRETE SLAB
3.2 CONCRETE FOOTING
3.3 NOT USED
3.4 CONCRETE ON STEEL DECK
3.5 CONC EQUIPMENT PAD
3.6 CAST IN PLACE CONCRETE
3.7 CONCRETE RETAINING WALL

DIVISION 4 – MASONRY
4.1 NOT USED
4.2 MASONRY CONTROL JOINT
4.3 NOT USED
4.4 NOT USED
4.5 STANDARD BRICK VENEER, COLOR AS SELECTED BY ARCHITECT
4.6 EXISTING MASONRY, CLEANED AND SEALED

DIVISION 5 – METALS
5.1 STEEL COLUMN; REF STRUCT. DWG
5.2 STEEL BEAM; REF STRUCT. DWGS
5.3 STEEL JOIST; REF STRUCT. DWGS
5.4 STEEL ROOF DECK
5.5 STEEL LADDER
5.6 4" STRUCT STL STUDS @ 16" O.C.
5.7 STEEL ANGLE
5.8 STEEL CHANNEL
5.9 HORIZONTAL STEEL JOIST BRIDGING
5.10 1 1/2"ø ALUMINUM PIPE HANDRAIL
5.11 6" STRUCT STL STUDS @16" OC
5.12 3 5/8" STRUCT STL STUDS @16" OC
5.13 STEEL PLATE
5.14 STEEL TUBE, REF STRUCT. DWG
5.15 1 1/2"ø ALUMINUM PIPE VERTICAL SUPPORTS
5.16 1 1/2" STRUCT STL STUDS @ 16" O.C.
5.17 EXPOSED STEEL COLUMN; REF STRUCT. DWGS; PAINT, COLOR BY ARCH.
5.18 EXPOSED STEEL BEAM; REF STRUCT. DWGS; PAINT, COLOR BY ARCH.
5.19 2" STRUCT STL STUDS @ 16" OC
5.20 2-1/2" STRUCT STL STUDS @ 16" OC
5.21 EXPOSED STEEL JOIST; REF STRUCT. DWGS; PAINT, COLOR BY ARCH.
5.22 ALUMINUM ANGLE
5.23 ALUMINUM PLATE
5.24 ⅞" HAT CHANNELS
5.25 1 1/2"ø ALUMINUM PIPE GUARDRAIL
5.26 3-⅝" STL STUD SLIP TRACK SYSTEM W/ 2" LEG ON TOP TRACK AND 1-½" SLOT.

DIVISION 6 – WOOD AND PLASTICS
6.1 WOOD BLOCKING OR BACKING PLATE 16 GA X 6" HIGH FOR INTERIOR ARCHITECTURAL WOODWORK, HARDWARE, TOILET COMPARTMENTS, BATH ACCESSORIES, ETC
6.2 PLASTIC LAMINATE COUNTERTOP
6.3 NOT USED
6.4 ACRYLIC PANEL
6.5 PLASTIC LAMINATE MILLWORK
6.6 MAPLE CHAIR RAIL, SEE E5/AE504

DIVISION 7 THERMAL & MOISTURE PROTECTION
7.1 RIDGE
7.2 VALLEY, MIN SLOPE 3/16" PER LINEAL FT
7.3 CRICKET, MIN. SLOPE 1/4" PER FOOT AT VALLEY, FORM W/ TAPERED RIGID BD. INSULATION
7.4 ROOF HATCH
7.5 ROOF CURB. SEE DETAIL C2/AE504.
7.6 ROOF DRAIN & OVERFLOW DRAIN
7.7 TYPICAL PIPE/CONDUIT PENETRATION

DIVISION 7 CONT'D THERMAL & MOISTURE PROTECTION
7.8 SINGLE PLY ROOF MEMBRANE MECHANICALLY FASTENED OVER MIN 4" TAPERED RIGID INSULATION SLOPED TO DRAIN 1/4"/FT MIN
7.9 1" EXPANSION JOINT
7.10 ROOF SCUPPER
7.11 SEALANT
7.12 R-11 BATTS, FACED MINERAL-FIBER BLANKET INSULATION
7.13 R-19 BATTS, FACED MINERAL-FIBER BLANKET INSULATION
7.14 NOT USED
7.15 FIRE SAFING INSULATION
7.16 NOT USED
7.17 RIGID INSULATION
7.18 METAL REGLET & COUNTER FLASHING
7.19 METAL FASCIA
7.20 METAL CLOSURE
7.21 PRE-FINISHED METAL COPING; COLOR BY ARCH. FROM MANUF. FULL RANGE
7.22 COMPOSITE SHEET WATERPROOFING
7.23 NOT USED
7.24 2" INSULATED METAL PANEL SYSTEM, COLOR BY ARCHITECT
7.25 EXISTING METAL COPING TO REMAIN

DIVISION 8 DOORS & WINDOWS
8.1 HOLLOW METAL DOOR & FRAME
8.2 FLUSH WOOD DOOR
8.3 ACCESS DOOR
8.4 ANODIZED ALUM. STOREFRONT WINDOW
8.5 ANODIZED ALUM. STOREFRONT DOOR AND FRAME
8.6 1" INSULATED GLASS SET IN ALUM. CURTAIN WALL FRAME
8.7 1" INSULATED SANDBLASTED GLASS SET IN ALUM. CURTAIN WALL FRAME
8.8 1" INSULATED SANDBLASTED GLASS SET IN ANODIZED ALUMINUM STOREFRONT
8.9 BUTT GLAZING
8.10 MIRROR
8.11 1/2" TEMPERED SAFETY GLASS W/ SAND BLASTED FINISH
8.12 ADA AUTOMATIC DOOR
8.13 ALUM. STOREFRONT SYSTEM RELOCATED FROM EXISTING VESTIBULE. SEE SHEET AD101ALT.
8.14 1/2" TEMPERED SAFETY GLASS
8.15 ALUM. STOREFRONT SYSTEM

DIVISION 9 FINISHES
9.1 GYP BOARD, PAINT – COLOR BY ARCH.
9.2 CERAMIC TILE
9.3 ACOUSTICAL PANEL CEILING
9.4 NOT USED
9.5 RESILIENT MNTD. HARDWOOD FLOOR
9.6 NOT USED
9.7 RUBBER BASE
9.8 CERAMIC TILE BASE
9.9 VINYL COMPOSITION TILE
9.10 CARPET

DIVISION 10 SPECIALITIES
10.1 36" GRAB BAR
10.2 WHITE BOARD; PROVIDE BLKG
10.3 TOILET PAPER DISPENSER
10.4 SIGN – MAXIMUM OCCUPANT LOAD
10.5 FIRE EXT.; RECESSED CABINET
10.6 42" GRAB BAR
10.7 MARKER BOARD
10.8 OWNER SUPPLIED SIGN IDENTIFYING LOCATION OF UNISEX RESTROOM
10.9 BULLETIN BOARD

DIVISION 11 EQUIPMENT
11.1 AV EQUIPMENT SEE AV DWGS
11.2 AV PANEL SEE AV DWGS
11.3 SPEAKER, N.I.C.
11.4 AV FLOOR POCKET
11.5 ADJUSTABLE BALLET BARRE

DIVISION 15 MECHANICAL
15.1 FIRE CONNECTION
15.2 MECHANICAL ROOF HOOD
15.3 MECHANICAL EXHAUST FAN
15.4 MECHANICAL CONDENSING UNIT
15.5 FIRE SPRINKLER MAIN SHOWN FOR COORDINATION ONLY; CONTRACTOR TO PROVIDE SHOP DWGS PER SPEC & CODE
15.6 NOT USED
15.7 WATER METER RE: CIVIL, PLUMB. DWGS
15.8 GAS METER RE: PLUMB. DWGS
15.9 NOT USED
15.10 SINK, REF: PLUMB. DWGS
15.11 SUMP PUMP BELOW GRADE
15.12 TOILET
15.13 ADA TOILET
15.14 ADA URINAL
15.15 ADA LAV
15.16 ADA SHOWER
15.17 ADA ELECTRIC DRINKING FOUNTAIN
15.18 FLOOR DRAIN
15.19 STORM DRAIN
15.20 ROOF DRAIN
15.21 MECHANICAL UNIT
15.22 MECHANICAL DIFFUSER
15.23 MECHANICAL RETURN AIR GRILLE
15.24 MECHANICAL EXHAUST FAN GRILLE
15.25 MECHANICAL EXPOSED DUCT
15.26 MECH EXPOSED DUCT SUPPORT
15.27 ROOF & OVERFLOW DRAIN SEE E5/AE504
15.28 MECHANICAL DUCT
15.29 LAMBS TONGUE
15.30 SUMP PUMP
15.31 DRINKING FOUNTAIN
15.32 AREA DRAIN
15.33 MECHANICAL DUCT BELOW GRADE
15.34 MECHANICAL LOUVER

DIVISION 16 ELECTRICAL
16.1 ELECTRIC LIGHT
16.2 ELECTRIC PANEL
16.3 ELECTRIC TRANSFORMER
16.4 HORN/STROBE, REF: ELECT.
16.5 EMERGENCY LIGHTING, REF: ELECT.
16.6 DUPLEX OUTLET, REF: ELECT.
16.7 DATA OUTLET, REF. ELECT.
16.8 CABLE TRAY SEE EP DWGS
16.9 EXIT LIGHT SEE EL DWGS
16.10 HIGH VOLTAGE SWITCH
16.11 COMMUNICATION BOX
16.12 ADA DOOR ACTUATOR POST
16.13 ADA DOOR ACTUATOR PANEL
16.14 GENERATOR
16.15 FIRE GONG
16.16 UNDERCABINET LIGHT

GENERAL NOTES
1. AT BRICK VENEER, PROVIDE SOLID BRICKS WHERE TOP OR BOTTOM SURFACE IS EXPOSED BY 1" OR MORE.

CERAMIC WALL TILE LEGEND:

CWT1

CWT2

1 GRAB BAR (42" LONG)	9 SANITARY NAPKIN DISPOSAL
2 GRAB BAR (36" LONG)	10 PAPER TOWEL DISPOSAL
3 URINAL SCREEN	11 SEAT COVER DISPENSER
4 TOILET PARTITION	12 SHOWER SEAT – L SHAPED
5 SOAP DISPENSER	13 2 WALL SHOWER GRAB BAR
6 PAPER TOWEL DISPENSER	14 MIRROR 24" X 42"
7 TOILET PAPER DISPENSER	15 MOP AND BROOM HOLDER
8 SANITARY NAPKIN DISPENSER	16 SHOWER ROD & CURTAIN

LICENSED ARCHITECT PEGGY A. McDONOUGH No. 6090093-0301 STATE OF UTAH
7.21.2006

GouldEvans
1000 South Main Street • Suite 100
Salt Lake City, Utah 84101
Voice 801.532.6100
Fax 801.532.6102
www.gouldevans.com
kansas city • lawrence • phoenix
salt lake city • san antonio • tampa

©2002 Gould Evans Associates, L.C.

DFCM PROJECT NO: 05266700
STATE PROPERTY ID: 01791
RISK MANAGEMENT NO:
CAD PROJECT NO:
CAD DWG FILE:
DRAWN BY:
CHECKED BY:
COPYRIGHT: STATE OF UTAH

snow college
activities center
dance studio addition | remodel
ephraim, utah

REVISION DATE

Project no: 0906-0260
Date: July 21, 2006
Sheet:

Interior Elevations
AE210

100% Construction Documents

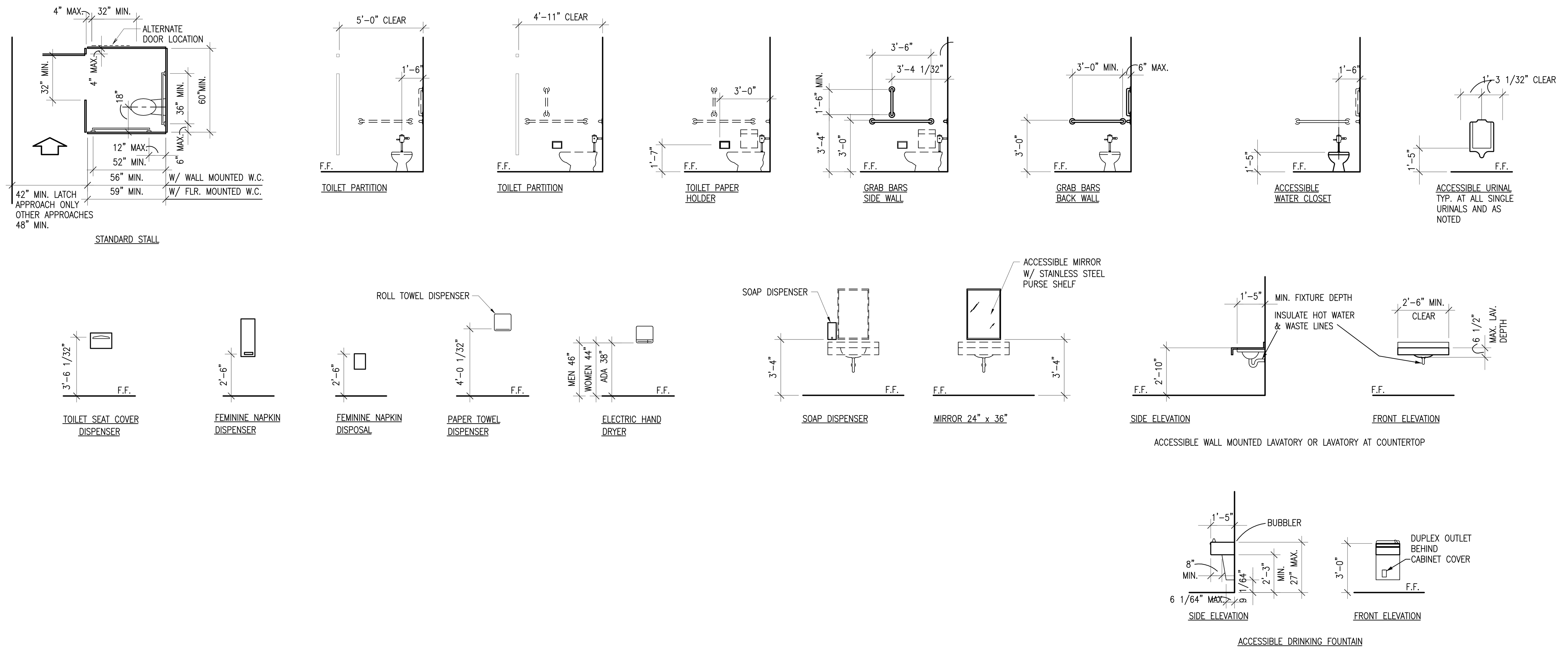

Restroom Mounting Heights and Space Requirements for Accessibility **D5**
1/4" = 1'-0"

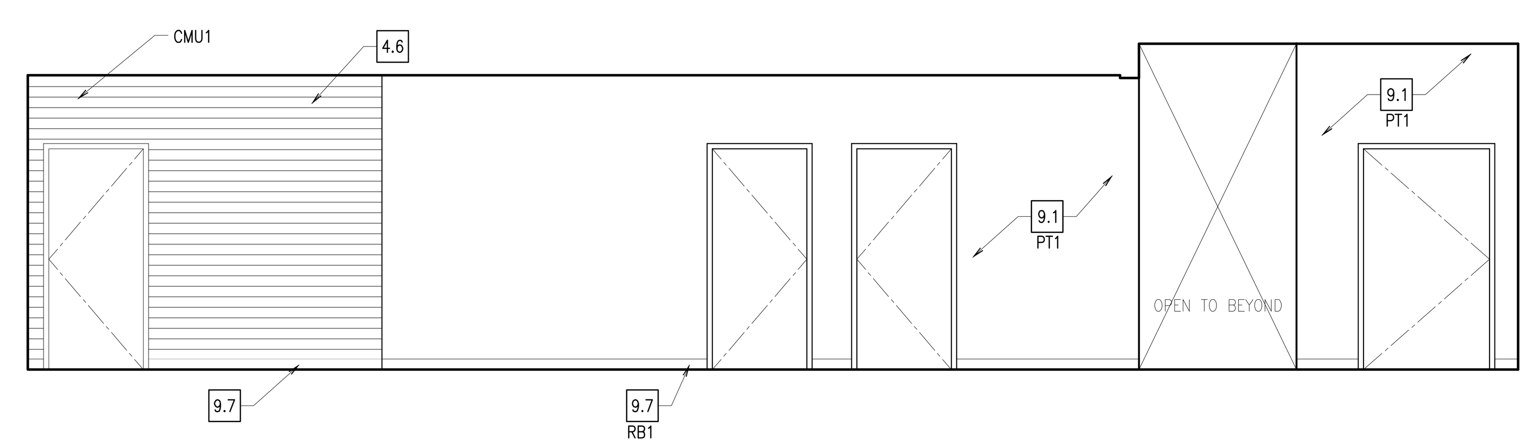

Interior Elevation - A106: West **C5**
1/4" = 1'-0"

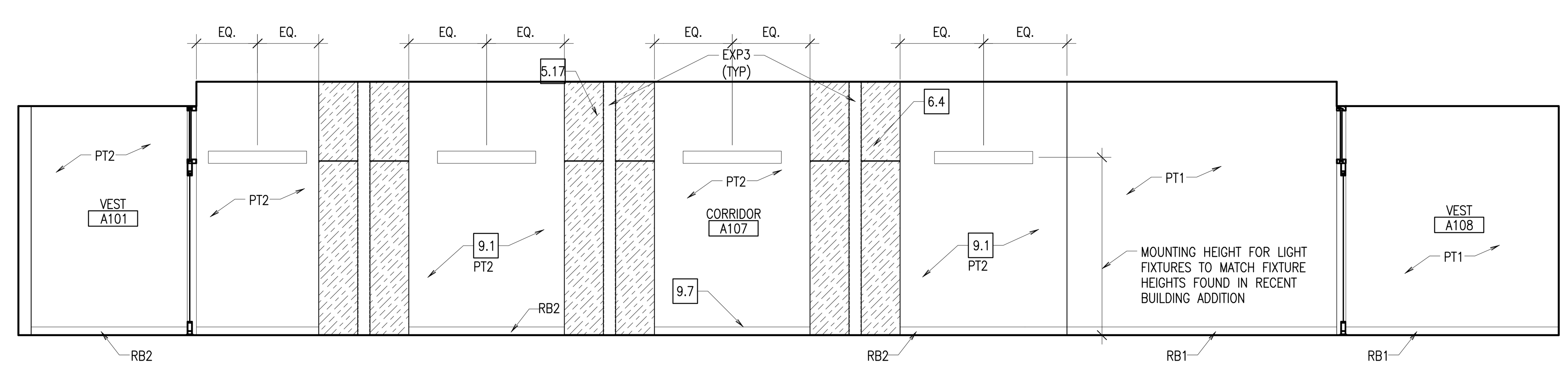

Interior Elevation - A107 Corridor /A101 Vest./A108 Vest.: North **B5**
1/4" = 1'-0"

EXP3
(TYP)

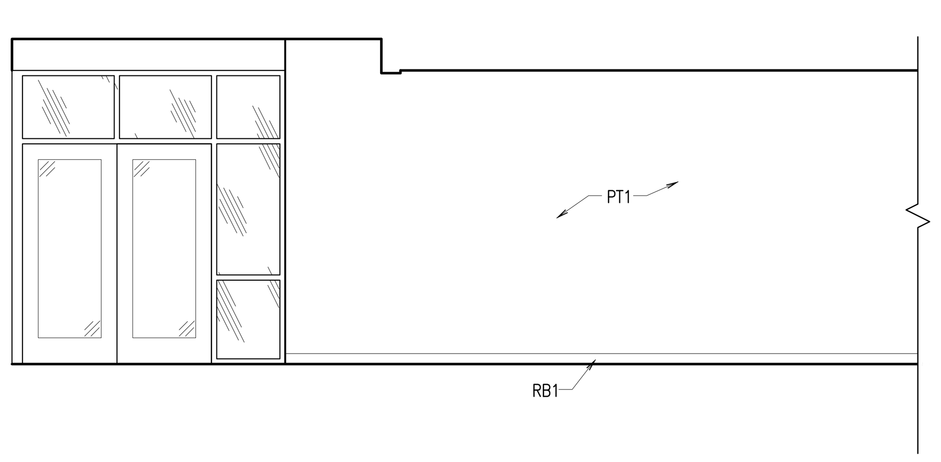

Interior Elevation - A106 Corridor **A5**
1/4" = 1'-0"

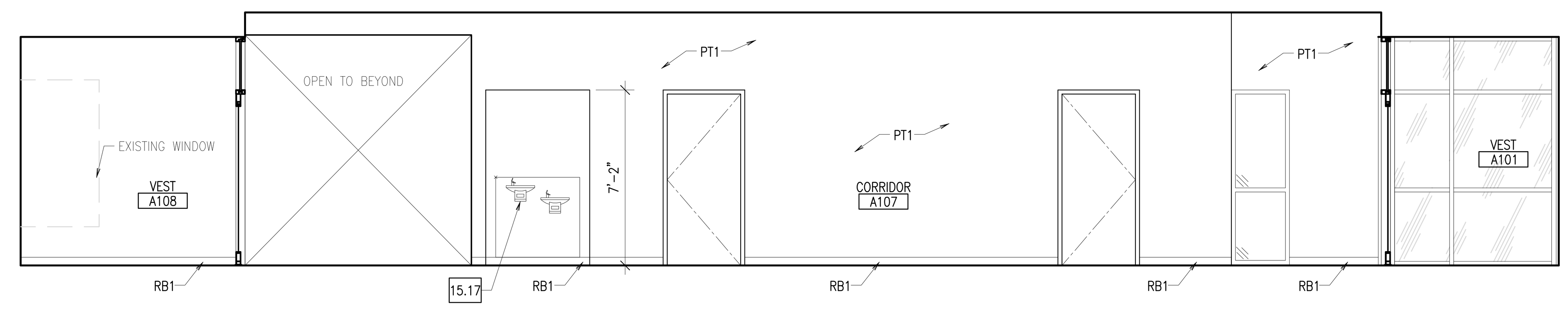

Interior Elevation - A107 Corridor /A101 Vest./A108 Vest.: South **A5**
1/4" = 1'-0"

DIVISION 1 – GENERAL NOTES
1.1 FINISH FLOOR
1.2 FINISH GRADE
1.3 LINE OF BUILDING ABOVE
1.4 EDGE OF WALL BELOW
1.5 UTILITY TUNNEL
1.6 EXISTING WALL
1.7 EXISTING FOOTING
1.8 EXISTING BUILDING
1.9 EXISTING FOUNDATION WALL
1.10 EXISTING CONCRETE SLAB

DIVISION 2 – SITE WORK
2.1 EXISTING LIGHT POLE W/ OVERHEAD POWER TO REMAIN
2.2 EXISTING ASPHALT PAVING TO REMAIN
2.3 EXISTING CONCRETE SIDEWALK TO REMAIN
2.4 EXISTING CURB TO REMAIN
2.5 EXISTING SEWER LINE TO REMAIN
2.6 EXISTING POWER POLE W/ UNDERGROUND POWER LINE TO REMAIN
2.7 EXISTING SEWER MANHOLE TO REMAIN
2.8 EXISTING 4" CLEAN OUT TO REMAIN
2.9 EXISTING CATCH BASIN TO REMAIN
2.10 EXISTING FIRE HYDRANT TO REMAIN
2.11 EXISTING LANDSCAPING TO REMAIN
2.12 EXISTING TREE TO REMAIN; FULLY PROTECTED
2.13 EXISTING GUTTER TO REMAIN
2.14 COMPACTED FILL
2.15 NEW CONCRETE PAVING
2.16 LINE OF NEW CONCRETE PAVING
2.17 EXISTING PARKING STALLS TO REMAIN
2.18 EXISTING FENCE TO REMAIN
2.19 NEW SUMP
2.20 EXISTING STONE SIGNAGE RELOCATED FROM OLD GYMNASIUM – COORDINATE WITH OWNER.
2.21 NEW CONCRETE STAIRS – SEE ENLARGED PLANS FOR DIMENSIONS
2.22 NEW CONCRETE CURB
2.23 EXISTING HIGH VOLTAGE SWITCHGEAR TO REMAIN
2.24 EXISTING 500 KVA TRANSFORMER
2.25 EXISTING CONCRETE STAIRS TO REMAIN
2.26 HANDICAP ACCESSIBLE PARKING STALL
2.27 HANDICAP ACCESSIBLE AISLE
2.28 HANDICAP ACCESSIBLE PARKING SIGN
2.29 NEW GAS METER
2.30 NEW STORM DRAIN LINE
2.31 EXISTING STORM DRAIN LINE TO REMAIN
2.32 EXISTING GAS METER TO REMAIN
2.33 EXISTING GAS LINE TO REMAIN
2.34 NEW GAS LINE TO BE CONNECTED TO EXISTING GAS LINE
2.35 EXISTING WATER LINE
2.36 NEW WATER LINE
2.37 NEW BIKE RACK
2.38 GRAVEL MULCH TO BE ½" "SILVER NICKEL" PLACED 3" DEEP OVER WEED BARRIER
2.39 NEW CONCRETE 12" WIDE MOW STRIP, SEE DETAIL A1/AS110
2.40 GRAVEL MULCH TO BE PEA GRAVEL PLACED 3" DEEP OVER WEED BARRIER
2.41 NEW TURF
2.42 NEW TREE – SEE PLANTING PLAN
2.43 NEW PLANT – SEE PLANTING PLAN
2.44 CONCRETE BENCH. BRAND: "MATERIALS, INC." STYLE: "GOTHIC" OR SIMILAR. ALT BRAND & STYLE ACCEPTABLE W/PRIOR APPROVAL.

DIVISION 3 – CONCRETE
3.1 4" CONCRETE SLAB
3.2 CONCRETE FOOTING
3.3 NOT USED
3.4 CONCRETE ON STEEL DECK
3.5 CONC EQUIPMENT PAD
3.6 CAST IN PLACE CONCRETE
3.7 CONCRETE RETAINING WALL

DIVISION 4 – MASONRY
4.1 NOT USED
4.2 MASONRY CONTROL JOINT
4.3 NOT USED
4.4 NOT USED
4.5 STANDARD BRICK VENEER, COLOR AS SELECTED BY ARCHITECT
4.6 EXISTING MASONRY, CLEANED AND SEALED

DIVISION 5 – METALS
5.1 STEEL COLUMN; REF STRUCT. DWG
5.2 STEEL BEAM; REF STRUCT. DWGS
5.3 STEEL JOIST; REF STRUCT. DWGS
5.4 STEEL ROOF DECK
5.5 STEEL LADDER
5.6 4" STRUCT STL STUDS @ 16" O.C.
5.7 STEEL ANGLE
5.8 STEEL CHANNEL
5.9 HORIZONTAL STEEL JOIST BRIDGING
5.10 1 1/2"ø ALUMINUM PIPE HANDRAIL
5.11 6" STRUCT STL STUDS @16" OC
5.12 3 5/8" STRUCT STL STUDS @16" OC
5.13 STEEL PLATE
5.14 STEEL TUBE, REF STRUCT. DWG
5.15 1 1/2"ø ALUMINUM PIPE VERTICAL SUPPORTS
5.16 1 1/2" STRUCT STL STUDS @ 16" O.C.
5.17 EXPOSED STEEL COLUMN; REF STRUCT. DWGS; PAINT, COLOR BY ARCH.
5.18 EXPOSED STEEL BEAM; REF STRUCT. DWGS; PAINT, COLOR BY ARCH.
5.19 2" STRUCT STL STUDS @ 16" OC
5.20 2-1/2" STRUCT STL STUDS @ 16" OC
5.21 EXPOSED STEEL JOIST; REF STRUCT. DWGS; PAINT, COLOR BY ARCH.
5.22 ALUMINUM ANGLE
5.23 ALUMINUM PLATE
5.24 ⅞" HAT CHANNELS
5.25 1 1/2"ø ALUMINUM PIPE GUARDRAIL
5.26 3-⅝" STL STUD SLIP TRACK SYSTEM W/ 2" LEG ON TOP TRACK AND 1-½" SLOT.

DIVISION 6 – WOOD AND PLASTICS
6.1 WOOD BLOCKING OR BACKING PLATE 16 GA X 6" HIGH FOR INTERIOR ARCHITECTURAL WOODWORK, HARDWARE, TOILET COMPARTMENTS, BATH ACCESSORIES, ETC
6.2 PLASTIC LAMINATE COUNTERTOP
6.3 NOT USED
6.4 ACRYLIC PANEL
6.5 PLASTIC LAMINATE MILLWORK
6.6 MAPLE CHAIR RAIL, SEE E5/AE504

DIVISION 7 THERMAL & MOISTURE PROTECTION
7.1 RIDGE
7.2 VALLEY, MIN SLOPE 3/16" PER LINEAL FT
7.3 CRICKET, MIN. SLOPE 1/4" PER FOOT AT VALLEY, FORM W/ TAPERED RIGID BD. INSULATION
7.4 ROOF HATCH
7.5 ROOF CURB. SEE DETAIL C2/AE504.
7.6 ROOF DRAIN & OVERFLOW DRAIN
7.7 TYPICAL PIPE/CONDUIT PENETRATION

DIVISION 7 CONT'D THERMAL & MOISTURE PROTECTION
7.8 SINGLE PLY ROOF MEMBRANE MECHANICALLY FASTENED OVER MIN 4" TAPERED RIGID INSULATION SLOPED TO DRAIN 1/4"/FT MIN
7.9 1" EXPANSION JOINT
7.10 ROOF SCUPPER
7.11 SEALANT
7.12 R-11 BATTS, FACED MINERAL-FIBER BLANKET INSULATION
7.13 R-19 BATTS, FACED MINERAL-FIBER BLANKET INSULATION
7.14 NOT USED
7.15 FIRE SAFING INSULATION
7.16 NOT USED
7.17 RIGID INSULATION
7.18 METAL REGLET & COUNTER FLASHING
7.19 METAL FASCIA
7.20 METAL CLOSURE
7.21 PRE-FINISHED METAL COPING; COLOR BY ARCH. FROM MANUF. FULL RANGE
7.22 COMPOSITE SHEET WATERPROOFING
7.23 NOT USED
7.24 2" INSULATED METAL PANEL SYSTEM, COLOR BY ARCHITECT
7.25 EXISTING METAL COPING TO REMAIN

DIVISION 8 DOORS & WINDOWS
8.1 HOLLOW METAL DOOR & FRAME
8.2 FLUSH WOOD DOOR
8.3 ACCESS DOOR
8.4 ANODIZED ALUM. STOREFRONT WINDOW
8.5 ANODIZED ALUM. STOREFRONT DOOR AND FRAME
8.6 1" INSULATED GLASS SET IN ALUM. CURTAIN WALL FRAME
8.7 1" INSULATED SANDBLASTED GLASS SET IN ALUM. CURTAIN WALL FRAME
8.8 1" INSULATED SANDBLASTED GLASS SET IN ANODIZED ALUMINUM STOREFRONT
8.9 BUTT GLAZING
8.10 MIRROR
8.11 1/2" TEMPERED SAFETY GLASS W/ SAND BLASTED FINISH
8.12 ADA AUTOMATIC DOOR
8.13 ALUM. STOREFRONT SYSTEM RELOCATED FROM EXISTING VESTIBULE. SEE SHEET AD101ALT.
8.14 1/2" TEMPERED SAFETY GLASS
8.15 ALUM. STOREFRONT SYSTEM

DIVISION 9 FINISHES
9.1 GYP BOARD, PAINT – COLOR BY ARCH.
9.2 CERAMIC TILE
9.3 ACOUSTICAL PANEL CEILING
9.4 NOT USED
9.5 RESILIENT MNTD. HARDWOOD FLOOR
9.6 NOT USED
9.7 RUBBER BASE
9.8 CERAMIC TILE BASE
9.9 VINYL COMPOSITION TILE
9.10 CARPET

DIVISION 10 SPECIALITIES
10.1 36" GRAB BAR
10.2 WHITE BOARD; PROVIDE BLKG
10.3 TOILET PAPER DISPENSER
10.4 SIGN – MAXIMUM OCCUPANT LOAD
10.5 FIRE EXT.; RECESSED CABINET
10.6 42" GRAB BAR
10.7 MARKER BOARD
10.8 OWNER SUPPLIED SIGN IDENTIFYING LOCATION OF UNISEX RESTROOM
10.9 BULLETIN BOARD

DIVISION 11 EQUIPMENT
11.1 AV EQUIPMENT SEE AV DWGS
11.2 AV PANEL SEE AV DWGS
11.3 SPEAKER, N.I.C.
11.4 AV FLOOR POCKET
11.5 ADJUSTABLE BALLET BARRE

DIVISION 15 MECHANICAL
15.1 FIRE CONNECTION
15.2 MECHANICAL ROOF HOOD
15.3 MECHANICAL EXHAUST FAN
15.4 MECHANICAL CONDENSING UNIT
15.5 FIRE SPRINKLER MAIN SHOWN FOR COORDINATION ONLY; CONTRACTOR TO PROVIDE SHOP DWGS PER SPEC & CODE
15.6 NOT USED
15.7 WATER METER RE: CIVIL, PLUMB. DWGS
15.8 GAS METER RE: PLUMB. DWGS
15.9 NOT USED
15.10 SINK, REF: PLUMB. DWGS
15.11 SUMP PUMP BELOW GRADE
15.12 TOILET
15.13 ADA TOILET
15.14 ADA URINAL
15.15 ADA LAV
15.16 ADA SHOWER
15.17 ADA ELECTRIC DRINKING FOUNTAIN
15.18 FLOOR DRAIN
15.19 STORM DRAIN
15.20 ROOF DRAIN
15.21 MECHANICAL UNIT
15.22 MECHANICAL DIFFUSER
15.23 MECHANICAL RETURN AIR GRILLE
15.24 MECHANICAL EXHAUST FAN GRILLE
15.25 MECHANICAL EXPOSED DUCT
15.26 MECH EXPOSED DUCT SUPPORT
15.27 ROOF & OVERFLOW DRAIN SEE E5/AE504
15.28 MECHANICAL DUCT
15.29 LAMBS TONGUE
15.30 SUMP PUMP
15.31 DRINKING FOUNTAIN
15.32 AREA DRAIN
15.33 MECHANICAL DUCT BELOW GRADE
15.34 MECHANICAL LOUVER

DIVISION 16 ELECTRICAL
16.1 ELECTRIC LIGHT
16.2 ELECTRIC PANEL
16.3 ELECTRIC TRANSFORMER
16.4 HORN/STROBE, REF: ELECT.
16.5 EMERGENCY LIGHTING, REF: ELECT.
16.6 DUPLEX OUTLET, REF: ELECT.
16.7 DATA OUTLET, REF. ELECT.
16.8 CABLE TRAY SEE EP DWGS
16.9 EXIT LIGHT SEE EL DWGS
16.10 HIGH VOLTAGE SWITCH
16.11 COMMUNICATION BOX
16.12 ADA DOOR ACTUATOR POST
16.13 ADA DOOR ACTUATOR PANEL
16.14 GENERATOR
16.15 FIRE GONG
16.16 UNDERCABINET LIGHT

GENERAL NOTES
1. AT BRICK VENEER, PROVIDE SOLID BRICKS WHERE TOP OR BOTTOM SURFACE IS EXPOSED BY 1" OR MORE.

LICENSED ARCHITECT
PEGGY A. McDONOUGH
No. 6090093-0301
STATE OF UTAH
7.21.2006

GouldEvans

©2002 Gould Evans Associates, L.C.
1000 South Main Street • Suite 100
Salt Lake City, Utah 84101
Voice 801.532.6100
Fax 801.532.6102
www.gouldevans.com

kansas city • lawrence • phoenix
salt lake city • san antonio • tampa

DFCM PROJECT NO: 05266700
STATE PROPERTY ID: 01791
RISK MANAGEMENT NO:
CAD PROJECT NO:
CAD DWG FILE:
DRAWN BY:
CHECKED BY:
COPYRIGHT: STATE OF UTAH

snow college
activities center
dance studio addition | remodel
ephraim, utah

REVISION	DATE

Project no: 0906-0260
Date: July 21, 2006
Sheet:

Interior
Elevations

AE211

100% Construction Documents

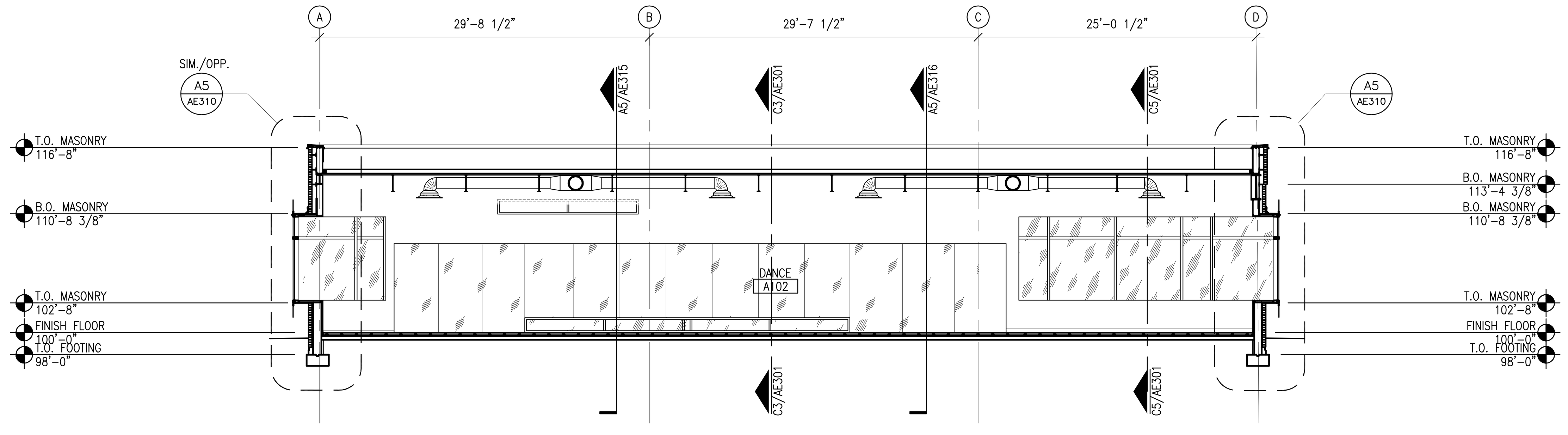

Building Section **E5**
1/8" = 1'-0"

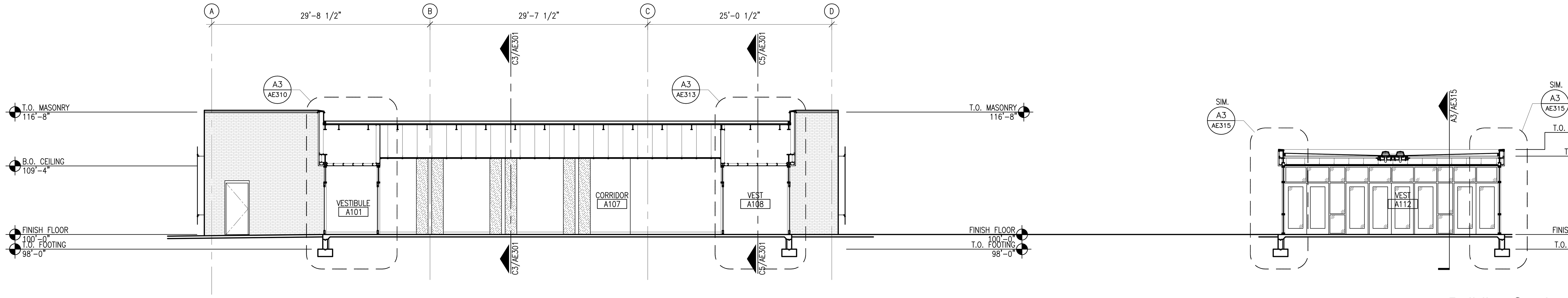

Building Section **D5**
1/8" = 1'-0"

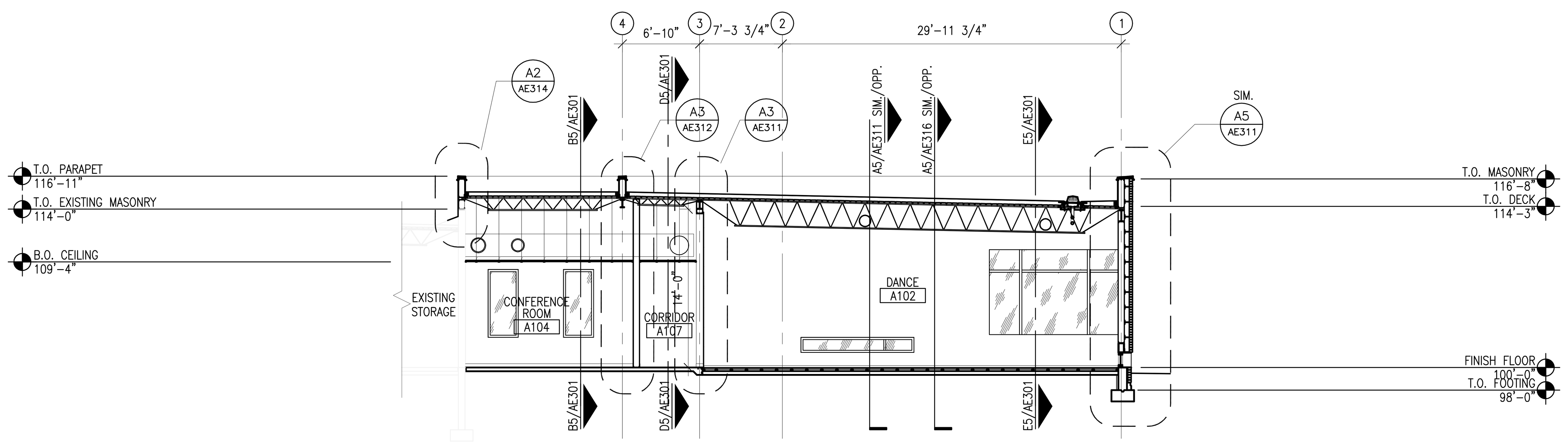

Building Section **C3**
1/8" = 1'-0"

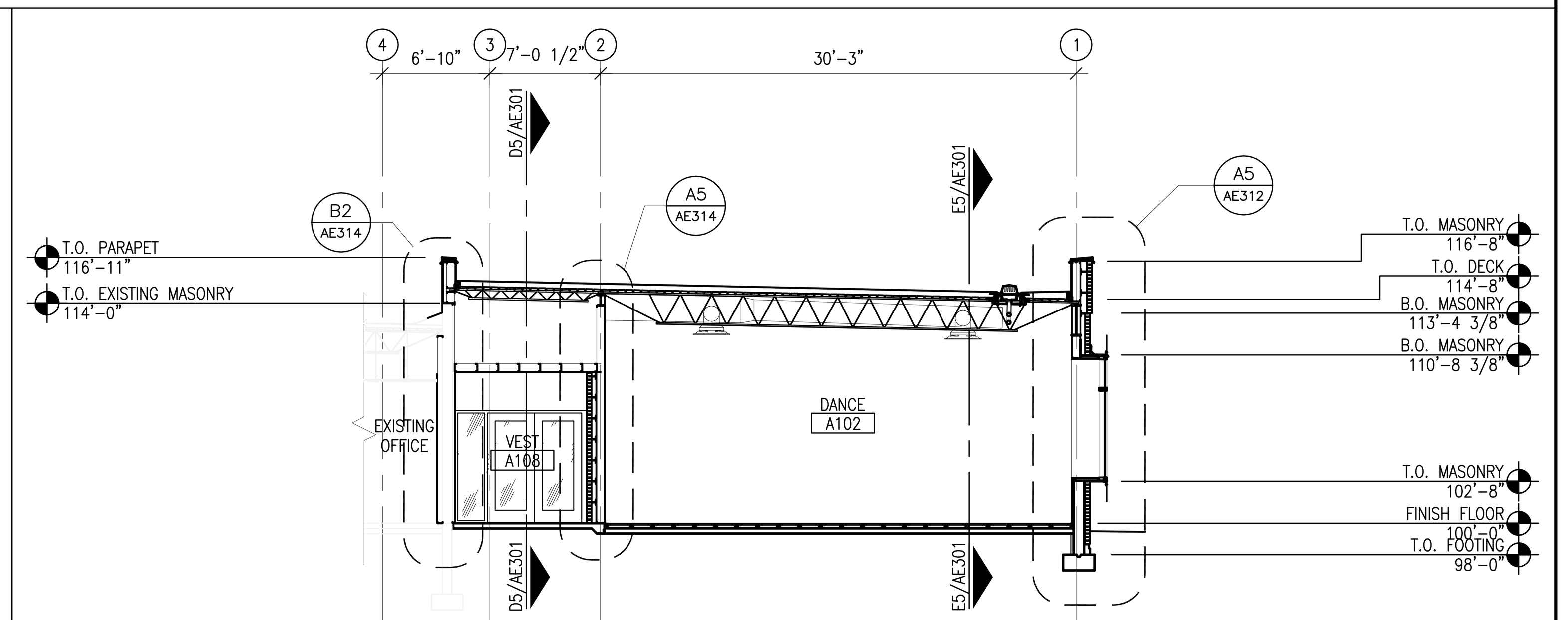

Building Section **C5**
1/8" = 1'-0"

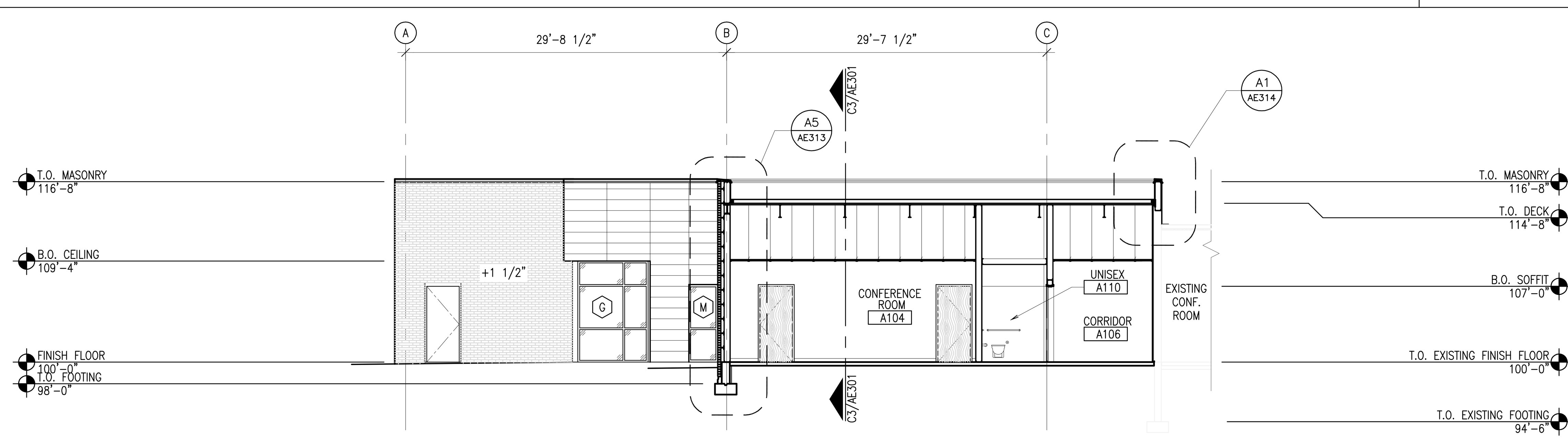

Building Section **B5**
1/8" = 1'-0"

DIVISION 1 – GENERAL NOTES
1.1 FINISH FLOOR
1.2 FINISH GRADE
1.3 LINE OF BUILDING ABOVE
1.4 EDGE OF WALL BELOW
1.5 UTILITY TUNNEL
1.6 EXISTING WALL
1.7 EXISTING FOOTING
1.8 EXISTING BUILDING
1.9 EXISTING FOUNDATION WALL
1.10 EXISTING CONCRETE SLAB

DIVISION 2 – SITE WORK
2.1 EXISTING LIGHT POLE W/ OVERHEAD POWER TO REMAIN
2.2 EXISTING ASPHALT PAVING TO REMAIN
2.3 EXISTING CONCRETE SIDEWALK TO REMAIN
2.4 EXISTING CURB TO REMAIN
2.5 EXISTING SEWER LINE TO REMAIN
2.6 EXISTING POWER POLE W/ UNDERGROUND POWER LINE TO REMAIN
2.7 EXISTING SEWER MANHOLE TO REMAIN
2.8 EXISTING 4" CLEAN OUT TO REMAIN
2.9 EXISTING CATCH BASIN TO REMAIN
2.10 EXISTING FIRE HYDRANT TO REMAIN
2.11 EXISTING LANDSCAPING TO REMAIN
2.12 EXISTING TREE TO REMAIN; FULLY PROTECTED
2.13 EXISTING GUTTER TO REMAIN
2.14 COMPACTED FILL
2.15 NEW CONCRETE PAVING
2.16 LINE OF NEW CONCRETE PAVING
2.17 EXISTING PARKING STALLS TO REMAIN
2.18 EXISTING FENCE TO REMAIN
2.19 NEW SUMP
2.20 EXISTING STONE SIGNAGE RELOCATED FROM OLD GYMNASIUM – COORDINATE WITH OWNER.
2.21 NEW CONCRETE STAIRS – SEE ENLARGED PLANS FOR DIMENSIONS
2.22 NEW CONCRETE CURB
2.23 EXISTING HIGH VOLTAGE SWITCHGEAR TO REMAIN
2.24 EXISTING 500 KVA TRANSFORMER
2.25 EXISTING CONCRETE STAIRS TO REMAIN
2.26 HANDICAP ACCESSIBLE PARKING STALL
2.27 HANDICAP ACCESSIBLE AISLE
2.28 HANDICAP ACCESSIBLE PARKING SIGN
2.29 NEW GAS METER
2.30 NEW STORM DRAIN LINE
2.31 EXISTING STORM DRAIN LINE TO REMAIN
2.32 EXISTING GAS METER TO REMAIN
2.33 EXISTING GAS LINE TO REMAIN
2.34 NEW GAS LINE TO BE CONNECTED TO EXISTING GAS LINE
2.35 EXISTING WATER LINE
2.36 NEW WATER LINE
2.37 NEW BIKE RACK
2.38 GRAVEL MULCH TO BE ½" "SILVER NICKEL" PLACED 3" DEEP OVER WEED BARRIER
2.39 NEW CONCRETE 12" WIDE MOW STRIP, SEE DETAIL A1/AS110
2.40 GRAVEL MULCH TO BE PEA GRAVEL PLACED 3" DEEP OVER WEED BARRIER
2.41 NEW TURF
2.42 NEW TREE – SEE PLANTING PLAN
2.43 NEW PLANT – SEE PLANTING PLAN
2.44 CONCRETE BENCH. BRAND: "MATERIALS, INC." STYLE: "GOTHIC" OR SIMILAR. ALT BRAND & STYLE ACCEPTABLE W/PRIOR APPROVAL.

DIVISION 3 – CONCRETE
3.1 4" CONCRETE SLAB
3.2 CONCRETE FOOTING
3.3 NOT USED
3.4 CONCRETE ON STEEL DECK
3.5 CONC EQUIPMENT PAD
3.6 CAST IN PLACE CONCRETE
3.7 CONCRETE RETAINING WALL

DIVISION 4 – MASONRY
4.1 NOT USED
4.2 MASONRY CONTROL JOINT
4.3 NOT USED
4.4 NOT USED
4.5 STANDARD BRICK VENEER, COLOR AS SELECTED BY ARCHITECT
4.6 EXISTING MASONRY, CLEANED AND SEALED

DIVISION 5 – METALS
5.1 STEEL COLUMN; REF STRUCT. DWG
5.2 STEEL BEAM; REF STRUCT. DWGS
5.3 STEEL JOIST; REF STRUCT. DWGS
5.4 STEEL ROOF DECK
5.5 STEEL LADDER
5.6 4" STRUCT STL STUDS @ 16" O.C.
5.7 STEEL ANGLE
5.8 STEEL CHANNEL
5.9 HORIZONTAL STEEL JOIST BRIDGING
5.10 1 1/2"ø ALUMINUM PIPE HANDRAIL
5.11 6" STRUCT STL STUDS @16" OC
5.12 3 5/8" STRUCT STL STUDS @16" OC
5.13 STEEL PLATE
5.14 STEEL TUBE, REF STRUCT. DWG
5.15 1 1/2"ø ALUMINUM PIPE VERTICAL SUPPORTS
5.16 1 1/2" STRUCT STL STUDS @ 16" O.C.
5.17 EXPOSED STEEL COLUMN; REF STRUCT. DWGS; PAINT, COLOR BY ARCH.
5.18 EXPOSED STEEL BEAM; REF STRUCT. DWGS; PAINT, COLOR BY ARCH.
5.19 2" STRUCT STL STUDS @ 16" OC
5.20 2–1/2" STRUCT STL STUDS @ 16" OC
5.21 EXPOSED STEEL JOIST; REF STRUCT. DWGS; PAINT, COLOR BY ARCH.
5.22 ALUMINUM ANGLE
5.23 ALUMINUM PLATE
5.24 ⅞" HAT CHANNELS
5.25 1 1/2"ø ALUMINUM PIPE GUARDRAIL
5.26 3–⅝" STL STUD SLIP TRACK SYSTEM W/ 2" LEG ON TOP TRACK AND 1–½" SLOT.

DIVISION 6 – WOOD AND PLASTICS
6.1 WOOD BLOCKING OR BACKING PLATE 16 GA X 6" HIGH FOR INTERIOR ARCHITECTURAL WOODWORK, HARDWARE, TOILET COMPARTMENTS, BATH ACCESSORIES, ETC
6.2 PLASTIC LAMINATE COUNTERTOP
6.3 NOT USED
6.4 ACRYLIC PANEL
6.5 PLASTIC LAMINATE MILLWORK
6.6 MAPLE CHAIR RAIL, SEE E5/AE504

DIVISION 7 THERMAL & MOISTURE PROTECTION
7.1 RIDGE
7.2 VALLEY, MIN SLOPE 3/16" PER LINEAL FT
7.3 CRICKET, MIN. SLOPE 1/4" PER FOOT AT VALLEY, FORM W/ TAPERED RIGID BD. INSULATION
7.4 ROOF HATCH
7.5 ROOF CURB. SEE DETAIL C2/AE504.
7.6 ROOF DRAIN & OVERFLOW DRAIN
7.7 TYPICAL PIPE/CONDUIT PENETRATION

DIVISION 7 CONT'D THERMAL & MOISTURE PROTECTION
7.8 SINGLE PLY ROOF MEMBRANE MECHANICALLY FASTENED OVER MIN 4" TAPERED RIGID INSULATION SLOPED TO DRAIN 1/4"/FT MIN
7.9 1" EXPANSION JOINT
7.10 ROOF SCUPPER
7.11 SEALANT
7.12 R–11 BATTS, FACED MINERAL–FIBER BLANKET INSULATION
7.13 R–19 BATTS, FACED MINERAL–FIBER BLANKET INSULATION
7.14 NOT USED
7.15 FIRE SAFING INSULATION
7.16 NOT USED
7.17 RIGID INSULATION
7.18 METAL REGLET & COUNTER FLASHING
7.19 METAL FASCIA
7.20 METAL CLOSURE
7.21 PRE–FINISHED METAL COPING; COLOR BY ARCH. FROM MANUF. FULL RANGE
7.22 COMPOSITE SHEET WATERPROOFING
7.23 NOT USED
7.24 2" INSULATED METAL PANEL SYSTEM, COLOR BY ARCHITECT
7.25 EXISTING METAL COPING TO REMAIN

DIVISION 8 DOORS & WINDOWS
8.1 HOLLOW METAL DOOR & FRAME
8.2 FLUSH WOOD DOOR
8.3 ACCESS DOOR
8.4 ANODIZED ALUM. STOREFRONT WINDOW
8.5 ANODIZED ALUM. STOREFRONT DOOR AND FRAME
8.6 1" INSULATED GLASS SET IN ALUM. CURTAIN WALL FRAME
8.7 1" INSULATED SANDBLASTED GLASS SET IN ALUM. CURTAIN WALL FRAME
8.8 1" INSULATED SANDBLASTED GLASS SET IN ANODIZED ALUMINUM STOREFRONT
8.9 BUTT GLAZING
8.10 MIRROR
8.11 1/2" TEMPERED SAFETY GLASS W/ SAND BLASTED FINISH
8.12 ADA AUTOMATIC DOOR
8.13 ALUM. STOREFRONT SYSTEM RELOCATED FROM EXISTING VESTIBULE. SEE SHEET AD101ALT.
8.14 1/2" TEMPERED SAFETY GLASS
8.15 ALUM. STOREFRONT SYSTEM

DIVISION 9 FINISHES
9.1 GYP BOARD, PAINT – COLOR BY ARCH.
9.2 CERAMIC TILE
9.3 ACOUSTICAL PANEL CEILING
9.4 NOT USED
9.5 RESILIENT MNTD. HARDWOOD FLOOR
9.6 NOT USED
9.7 RUBBER BASE
9.8 CERAMIC TILE BASE
9.9 VINYL COMPOSITION TILE
9.10 CARPET

DIVISION 10 SPECIALITIES
10.1 36" GRAB BAR
10.2 WHITE BOARD; PROVIDE BLKG
10.3 TOILET PAPER DISPENSER
10.4 SIGN – MAXIMUM OCCUPANT LOAD
10.5 FIRE EXT.; RECESSED CABINET
10.6 42" GRAB BAR
10.7 MARKER BOARD
10.8 OWNER SUPPLIED SIGN IDENTIFYING LOCATION OF UNISEX RESTROOM
10.9 BULLETIN BOARD

DIVISION 11 EQUIPMENT
11.1 AV EQUIPMENT SEE AV DWGS
11.2 AV PANEL SEE AV DWGS
11.3 SPEAKER, N.I.C.
11.4 AV FLOOR POCKET
11.5 ADJUSTABLE BALLET BARRE

DIVISION 15 MECHANICAL
15.1 FIRE CONNECTION
15.2 MECHANICAL ROOF HOOD
15.3 MECHANICAL EXHAUST FAN
15.4 MECHANICAL CONDENSING UNIT
15.5 FIRE SPRINKLER MAIN SHOWN FOR COORDINATION ONLY; CONTRACTOR TO PROVIDE SHOP DWGS PER SPEC & CODE
15.6 NOT USED
15.7 WATER METER RE: CIVIL, PLUMB. DWGS
15.8 GAS METER RE: PLUMB. DWGS
15.9 NOT USED
15.10 SINK, REF: PLUMB. DWGS
15.11 SUMP PUMP BELOW GRADE
15.12 TOILET
15.13 ADA TOILET
15.14 ADA URINAL
15.15 ADA LAV
15.16 ADA SHOWER
15.17 ADA ELECTRIC DRINKING FOUNTAIN
15.18 FLOOR DRAIN
15.19 STORM DRAIN
15.20 ROOF DRAIN
15.21 MECHANICAL UNIT
15.22 MECHANICAL DIFFUSER
15.23 MECHANICAL RETURN AIR GRILLE
15.24 MECHANICAL EXHAUST FAN GRILLE
15.25 MECHANICAL EXPOSED DUCT
15.26 MECH EXPOSED DUCT SUPPORT
15.27 ROOF & OVERFLOW DRAIN SEE E5/AE504
15.28 MECHANICAL DUCT
15.29 LAMBS TONGUE
15.30 SUMP PUMP
15.31 DRINKING FOUNTAIN
15.32 AREA DRAIN
15.33 MECHANICAL DUCT BELOW GRADE
15.34 MECHANICAL LOUVER

DIVISION 16 ELECTRICAL
16.1 ELECTRIC LIGHT
16.2 ELECTRIC PANEL
16.3 ELECTRIC TRANSFORMER
16.4 HORN/STROBE, REF: ELECT.
16.5 EMERGENCY LIGHTING, REF: ELECT.
16.6 DUPLEX OUTLET, REF: ELECT.
16.7 DATA OUTLET, REF. ELECT.
16.8 CABLE TRAY SEE EP DWGS
16.9 EXIT LIGHT SEE EL DWGS
16.10 HIGH VOLTAGE SWITCH
16.11 COMMUNICATION BOX
16.12 ADA DOOR ACTUATOR POST
16.13 ADA DOOR ACTUATOR PANEL
16.14 GENERATOR
16.15 FIRE GONG
16.16 UNDERCABINET LIGHT

GENERAL NOTES
1. AT BRICK VENEER, PROVIDE SOLID BRICKS WHERE TOP OR BOTTOM SURFACE IS EXPOSED BY 1" OR MORE.

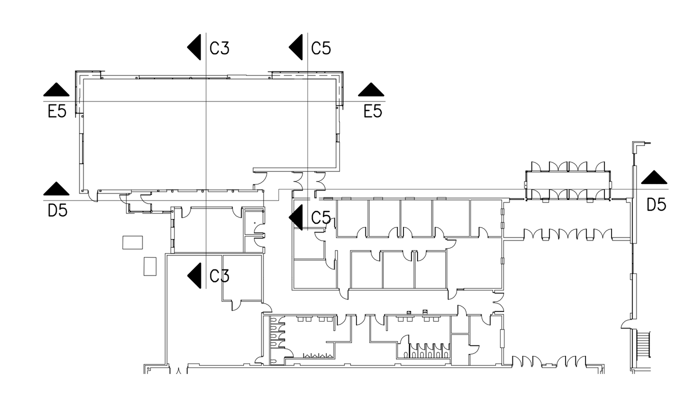

LICENSED ARCHITECT
PEGGY A. McDONOUGH
No. 6090093-0301
STATE OF UTAH
7.21.2006

GouldEvans

©2002 Gould Evans Associates, L.C.
1000 South Main Street • Suite 100
Salt Lake City, Utah 84101
Voice 801.532.6100
Fax 801.532.6102
www.gouldevans.com

kansas city • lawrence • phoenix
salt lake city • san antonio • tampa

DFCM PROJECT NO: 05266700
STATE PROPERTY ID: 01791
RISK MANAGEMENT NO:
CAD PROJECT NO:
CAD DWG FILE:
DRAWN BY:
CHECKED BY:
COPYRIGHT: STATE OF UTAH

snow college
activities center
dance studio addition | remodel
ephraim, utah

REVISION DATE

Project no: 0906-0260
Date: July 21, 2006
Sheet:

Building Sections

AE301

100% Construction Documents

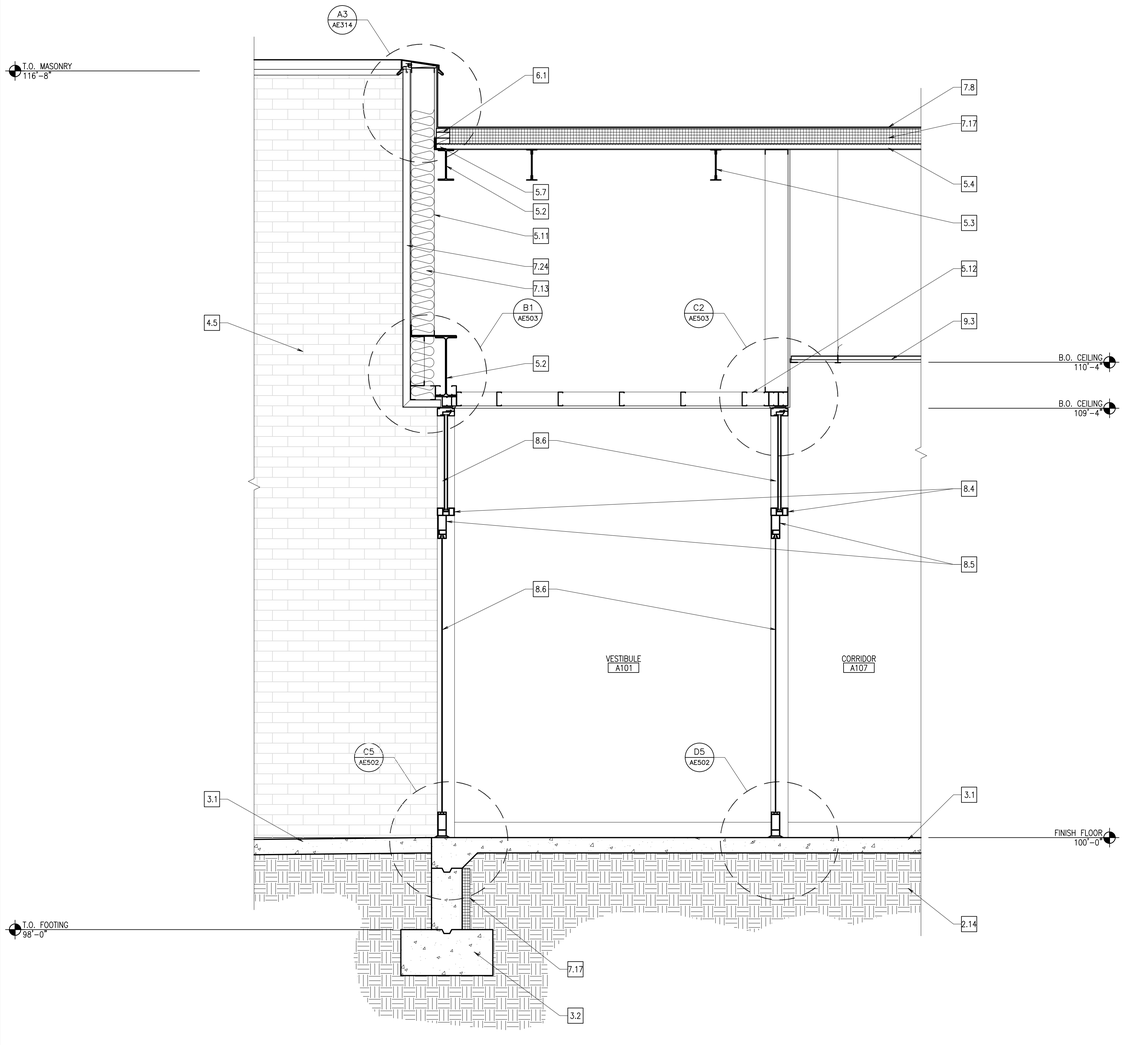

Wall Section **A3**
3/4" = 1'-0"

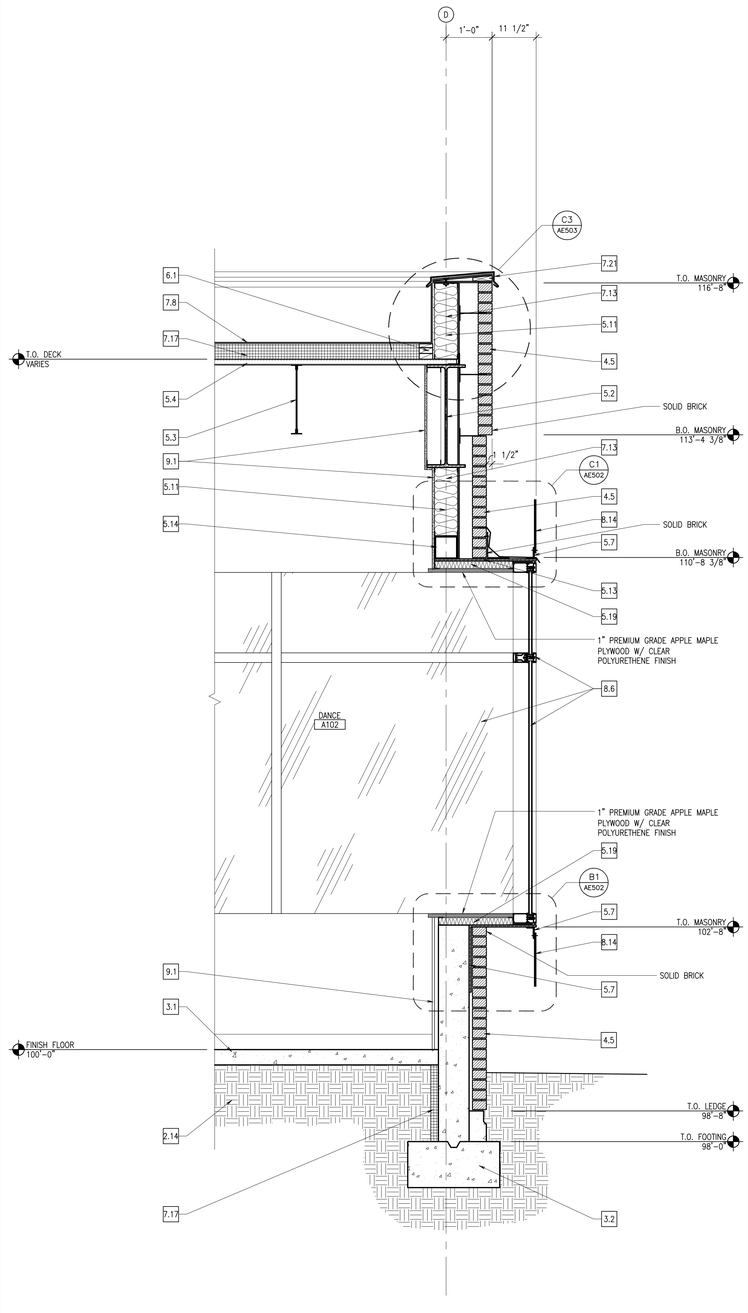

Wall Section **A5**
3/4" = 1'-0"

DIVISION 1 – GENERAL NOTES
1.1 FINISH FLOOR
1.2 FINISH GRADE
1.3 LINE OF BUILDING ABOVE
1.4 EDGE OF WALL BELOW
1.5 UTILITY TUNNEL
1.6 EXISTING WALL
1.7 EXISTING FOOTING
1.8 EXISTING BUILDING
1.9 EXISTING FOUNDATION WALL
1.10 EXISTING CONCRETE SLAB

DIVISION 2 – SITE WORK
2.1 EXISTING LIGHT POLE W/ OVERHEAD POWER TO REMAIN
2.2 EXISTING ASPHALT PAVING TO REMAIN
2.3 EXISTING CONCRETE SIDEWALK TO REMAIN
2.4 EXISTING CURB TO REMAIN
2.5 EXISTING SEWER LINE TO REMAIN
2.6 EXISTING POWER POLE W/ UNDERGROUND POWER LINE TO REMAIN
2.7 EXISTING SEWER MANHOLE TO REMAIN
2.8 EXISTING 4" CLEAN OUT TO REMAIN
2.9 EXISTING CATCH BASIN TO REMAIN
2.10 EXISTING FIRE HYDRANT TO REMAIN
2.11 EXISTING LANDSCAPING TO REMAIN
2.12 EXISTING TREE TO REMAIN; FULLY PROTECTED
2.13 EXISTING GUTTER TO REMAIN
2.14 COMPACTED FILL
2.15 NEW CONCRETE PAVING
2.16 LINE OF NEW CONCRETE PAVING
2.17 EXISTING PARKING STALLS TO REMAIN
2.18 EXISTING FENCE TO REMAIN
2.19 NEW SUMP
2.20 EXISTING STONE SIGNAGE RELOCATED FROM OLD GYMNASIUM – COORDINATE WITH OWNER.
2.21 NEW CONCRETE STAIRS – SEE ENLARGED PLANS FOR DIMENSIONS
2.22 NEW CONCRETE CURB
2.23 EXISTING HIGH VOLTAGE SWITCHGEAR TO REMAIN
2.24 EXISTING 500 KVA TRANSFORMER
2.25 EXISTING CONCRETE STAIRS TO REMAIN
2.26 HANDICAP ACCESSIBLE PARKING STALL
2.27 HANDICAP ACCESSIBLE AISLE
2.28 HANDICAP ACCESSIBLE PARKING SIGN
2.29 NEW GAS METER
2.30 NEW STORM DRAIN LINE
2.31 EXISTING STORM DRAIN LINE TO REMAIN
2.32 EXISTING GAS METER TO REMAIN
2.33 EXISTING GAS LINE TO REMAIN
2.34 NEW GAS LINE TO BE CONNECTED TO EXISTING GAS LINE
2.35 EXISTING WATER LINE
2.36 NEW WATER LINE
2.37 NEW BIKE RACK
2.38 GRAVEL MULCH TO BE ¾" "SILVER NICKEL" PLACED 3" DEEP OVER WEED BARRIER
2.39 NEW CONCRETE 12" WIDE MOW STRIP, SEE DETAIL A1/AS110
2.40 GRAVEL MULCH TO BE PEA GRAVEL PLACED 3" DEEP OVER WEED BARRIER
2.41 NEW TURF
2.42 NEW TREE – SEE PLANTING PLAN
2.43 NEW PLANT – SEE PLANTING PLAN
2.44 CONCRETE BENCH. BRAND: "MATERIALS, INC." STYLE: "GOTHIC" OR SIMILAR. ALT BRAND & STYLE ACCEPTABLE W/PRIOR APPROVAL.

DIVISION 3 – CONCRETE
3.1 4" CONCRETE SLAB
3.2 CONCRETE FOOTING
3.3 NOT USED
3.4 CONCRETE ON STEEL DECK
3.5 CONC EQUIPMENT PAD
3.6 CAST IN PLACE CONCRETE
3.7 CONCRETE RETAINING WALL

DIVISION 4 – MASONRY
4.1 NOT USED
4.2 MASONRY CONTROL JOINT
4.3 NOT USED
4.4 NOT USED
4.5 STANDARD BRICK VENEER, COLOR AS SELECTED BY ARCHITECT
4.6 EXISTING MASONRY, CLEANED AND SEALED

DIVISION 5 – METALS
5.1 STEEL COLUMN; REF STRUCT. DWG
5.2 STEEL BEAM; REF STRUCT. DWGS
5.3 STEEL JOIST; REF STRUCT. DWGS
5.4 STEEL ROOF DECK
5.5 STEEL LADDER
5.6 4" STRUCT STL STUDS @ 16" O.C.
5.7 STEEL ANGLE
5.8 STEEL, CHANNEL
5.9 HORIZONTAL STEEL JOIST BRIDGING
5.10 1 1/2"ø ALUMINUM PIPE HANDRAIL
5.11 6" STRUCT STL STUDS @16" OC
5.12 3 5/8" STRUCT STL STUDS @16" OC
5.13 STEEL PLATE
5.14 STEEL TUBE, REF STRUCT. DWG
5.15 1 1/2"ø ALUMINUM PIPE VERTICAL SUPPORTS
5.16 1 1/2" STRUCT STL STUDS @ 16" O.C.
5.17 EXPOSED STEEL COLUMN; REF STRUCT. DWGS; PAINT, COLOR BY ARCH.
5.18 EXPOSED STEEL BEAM; REF STRUCT. DWGS; PAINT, COLOR BY ARCH.
5.19 2" STRUCT STL STUDS @ 16" OC
5.20 2-1/2" STRUCT STL STUDS @ 16" OC
5.21 EXPOSED STEEL JOIST; REF STRUCT. DWGS; PAINT, COLOR BY ARCH.
5.22 ALUMINUM ANGLE
5.23 ALUMINUM PLATE
5.24 ⅞" HAT CHANNELS
5.25 1 1/2"ø ALUMINUM PIPE GUARDRAIL
5.26 3-⅜" STL STUD SLIP TRACK SYSTEM W/ 2" LEG ON TOP TRACK AND 1-½" SLOT.

DIVISION 6 – WOOD AND PLASTICS
6.1 WOOD BLOCKING OR BACKING PLATE 16 GA X 6" HIGH FOR INTERIOR ARCHITECTURAL WOODWORK, HARDWARE, TOILET COMPARTMENTS, BATH ACCESSORIES, ETC
6.2 PLASTIC LAMINATE COUNTERTOP
6.3 NOT USED
6.4 ACRYLIC PANEL
6.5 PLASTIC LAMINATE MILLWORK
6.6 MAPLE CHAIR RAIL, SEE E5/AE504

DIVISION 7 THERMAL & MOISTURE PROTECTION
7.1 RIDGE
7.2 VALLEY, MIN SLOPE 3/16" PER LINEAL FT
7.3 CRICKET, MIN. SLOPE 1/4" PER FOOT AT VALLEY, FORM W/ TAPERED RIGID BD. INSULATION
7.4 ROOF HATCH
7.5 ROOF CURB. SEE DETAIL C2/AE504.
7.6 ROOF DRAIN & OVERFLOW DRAIN
7.7 TYPICAL PIPE/CONDUIT PENETRATION

DIVISION 7 CONT'D THERMAL & MOISTURE PROTECTION
7.8 SINGLE PLY ROOF MEMBRANE MECHANICALLY FASTENED OVER MIN 4" TAPERED RIGID INSULATION SLOPED TO DRAIN 1/4"/FT MIN
7.9 1" EXPANSION JOINT
7.10 ROOF SCUPPER
7.11 SEALANT
7.12 R-11 BATTS, FACED MINERAL-FIBER BLANKET INSULATION
7.13 R-19 BATTS, FACED MINERAL-FIBER BLANKET INSULATION
7.14 NOT USED
7.15 FIRE SAFING INSULATION
7.16 NOT USED
7.17 RIGID INSULATION
7.18 METAL REGLET & COUNTER FLASHING
7.19 METAL FASCIA
7.20 METAL CLOSURE
7.21 PRE-FINISHED METAL COPING; COLOR BY ARCH. FROM MANUF. FULL RANGE
7.22 COMPOSITE SHEET WATERPROOFING
7.23 NOT USED
7.24 2" INSULATED METAL PANEL SYSTEM, COLOR BY ARCHITECT
7.25 EXISTING METAL COPING TO REMAIN

DIVISION 8 DOORS & WINDOWS
8.1 HOLLOW METAL DOOR & FRAME
8.2 FLUSH WOOD DOOR
8.3 ACCESS DOOR
8.4 ANODIZED ALUM. STOREFRONT WINDOW
8.5 ANODIZED ALUM. STOREFRONT DOOR AND FRAME
8.6 1" INSULATED GLASS SET IN ALUM. CURTAIN WALL FRAME
8.7 1" INSULATED SANDBLASTED GLASS SET IN ALUM. CURTAIN WALL FRAME
8.8 1" INSULATED SANDBLASTED GLASS SET IN ANODIZED ALUMINUM STOREFRONT
8.9 BUTT GLAZING
8.10 MIRROR
8.11 1/2" TEMPERED SAFETY GLASS W/ SAND BLASTED FINISH
8.12 ADA AUTOMATIC DOOR
8.13 ALUM. STOREFRONT SYSTEM RELOCATED FROM EXISTING VESTIBULE. SEE SHEET AD101ALT.
8.14 1/2" TEMPERED SAFETY GLASS
8.15 ALUM. STOREFRONT SYSTEM

DIVISION 9 FINISHES
9.1 GYP BOARD, PAINT – COLOR BY ARCH.
9.2 CERAMIC TILE
9.3 ACOUSTICAL PANEL CEILING
9.4 NOT USED
9.5 RESILIENT MNTD. HARDWOOD FLOOR
9.6 NOT USED
9.7 RUBBER BASE
9.8 CERAMIC TILE BASE
9.9 VINYL COMPOSITION TILE
9.10 CARPET

DIVISION 10 SPECIALITIES
10.1 36" GRAB BAR
10.2 WHITE BOARD; PROVIDE BLKG
10.3 TOILET PAPER DISPENSER
10.4 SIGN – MAXIMUM OCCUPANT LOAD
10.5 FIRE EXT.; RECESSED CABINET
10.6 42" GRAB BAR
10.7 MARKER BOARD
10.8 OWNER SUPPLIED SIGN IDENTIFYING LOCATION OF UNISEX RESTROOM
10.9 BULLETIN BOARD

DIVISION 11 EQUIPMENT
11.1 AV EQUIPMENT SEE AV DWGS
11.2 AV PANEL SEE AV DWGS
11.3 SPEAKER, N.I.C.
11.4 AV FLOOR POCKET
11.5 ADJUSTABLE BALLET BARRE

DIVISION 15 MECHANICAL
15.1 FIRE CONNECTION
15.2 MECHANICAL ROOF HOOD
15.3 MECHANICAL EXHAUST FAN
15.4 MECHANICAL CONDENSING UNIT
15.5 FIRE SPRINKLER MAIN SHOWN FOR COORDINATION ONLY; CONTRACTOR TO PROVIDE SHOP DWGS PER SPEC & CODE
15.6 NOT USED
15.7 WATER METER RE: CIVIL, PLUMB. DWGS
15.8 GAS METER RE: PLUMB. DWGS
15.9 NOT USED
15.10 SINK, REF: PLUMB. DWGS
15.11 SUMP PUMP BELOW GRADE
15.12 TOILET
15.13 ADA TOILET
15.14 ADA URINAL
15.15 ADA LAV
15.16 ADA SHOWER
15.17 ADA ELECTRIC DRINKING FOUNTAIN
15.18 FLOOR DRAIN
15.19 STORM DRAIN
15.20 ROOF DRAIN
15.21 MECHANICAL UNIT
15.22 MECHANICAL DIFFUSER
15.23 MECHANICAL RETURN AIR GRILLE
15.24 MECHANICAL EXHAUST FAN GRILLE
15.25 MECHANICAL EXPOSED DUCT
15.26 MECH EXPOSED DUCT SUPPORT
15.27 ROOF & OVERFLOW DRAIN SEE E5/AE504
15.28 MECHANICAL DUCT
15.29 LAMBS TONGUE
15.30 SUMP PUMP
15.31 DRINKING FOUNTAIN
15.32 AREA DRAIN
15.33 MECHANICAL DUCT BELOW GRADE
15.34 MECHANICAL LOUVER

DIVISION 16 ELECTRICAL
16.1 ELECTRIC LIGHT
16.2 ELECTRIC PANEL
16.3 ELECTRIC TRANSFORMER
16.4 HORN/STROBE, REF: ELECT.
16.5 EMERGENCY LIGHTING, REF: ELECT.
16.6 DUPLEX OUTLET, REF: ELECT.
16.7 DATA OUTLET, REF. ELECT.
16.8 CABLE TRAY SEE EP DWGS
16.9 EXIT LIGHT SEE EL DWGS
16.10 HIGH VOLTAGE SWITCH
16.11 COMMUNICATION BOX
16.12 ADA DOOR ACTUATOR POST
16.13 ADA DOOR ACTUATOR PANEL
16.14 GENERATOR
16.15 FIRE GONG
16.16 UNDERCABINET LIGHT

GENERAL NOTES
1. AT BRICK VENEER, PROVIDE SOLID BRICKS WHERE TOP OR BOTTOM SURFACE IS EXPOSED BY 1" OR MORE.

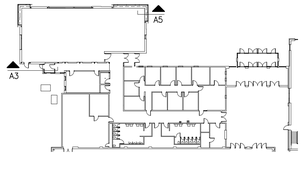

LICENSED ARCHITECT
PEGGY A. McDONOUGH
No. 6006003-0301
STATE OF UTAH
7-21-2006

GouldEvans

©2002 Gould Evans Associates, L.C.
1000 South Main Street • Suite 100
Salt Lake City, Utah 84101
Voice 801.532.6100
Fax 801.532.6102
www.gouldevans.com

kansas city • lawrence • phoenix
salt lake city • san antonio • tampa

DFCM PROJECT NO: 05266700
STATE PROPERTY ID: 01791
RISK MANAGEMENT NO:
CAD PROJECT NO:
CAD DWG FILE:
DRAWN BY:
CHECKED BY:
COPYRIGHT: STATE OF UTAH

snow college
activities center
dance studio addition | remodel
ephraim, utah

REVISION	DATE

Project no: 0906-0260
Date: July 21, 2006
Sheet:

Wall Sections
AE310

100% Construction Documents

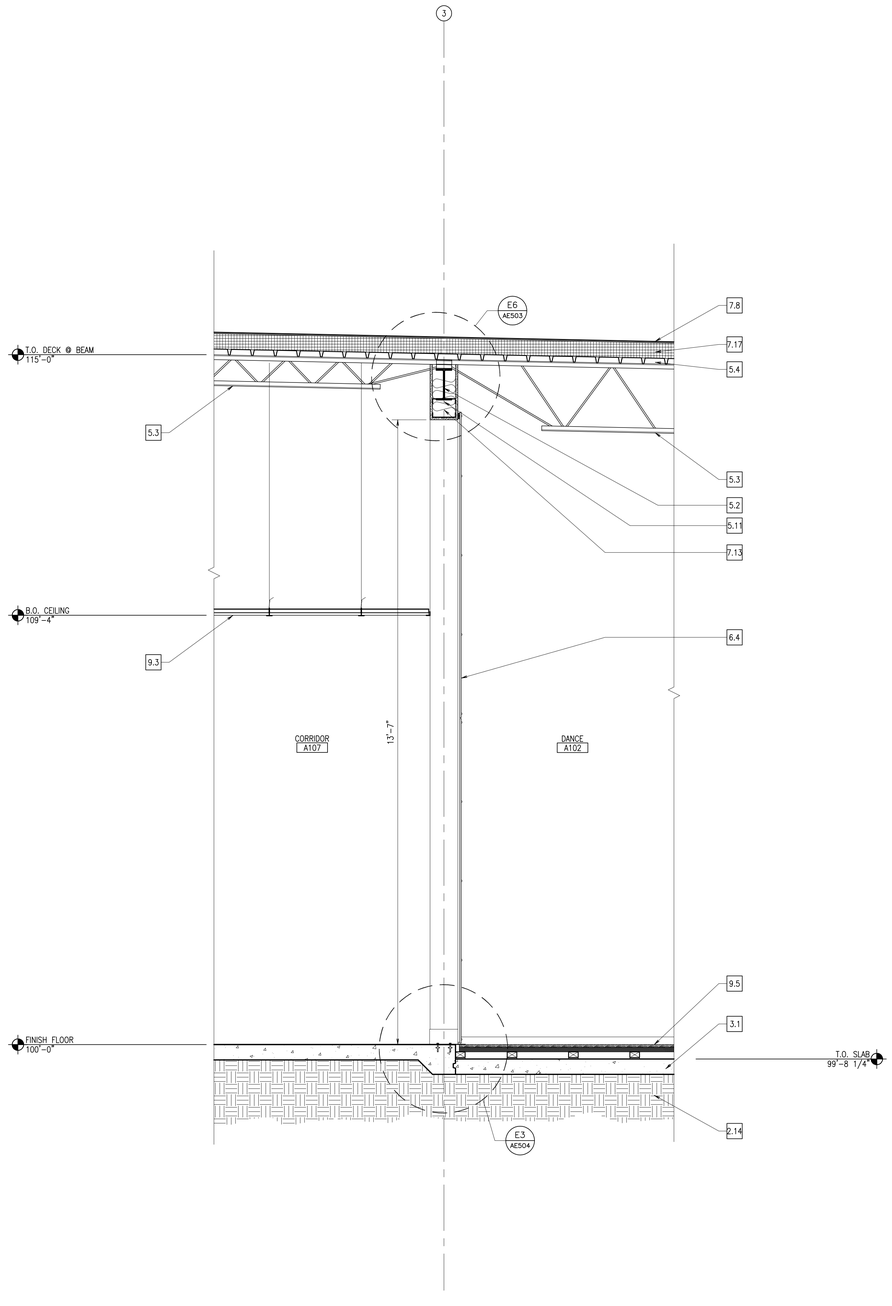

Wall Section **A3**
3/4" = 1'-0"

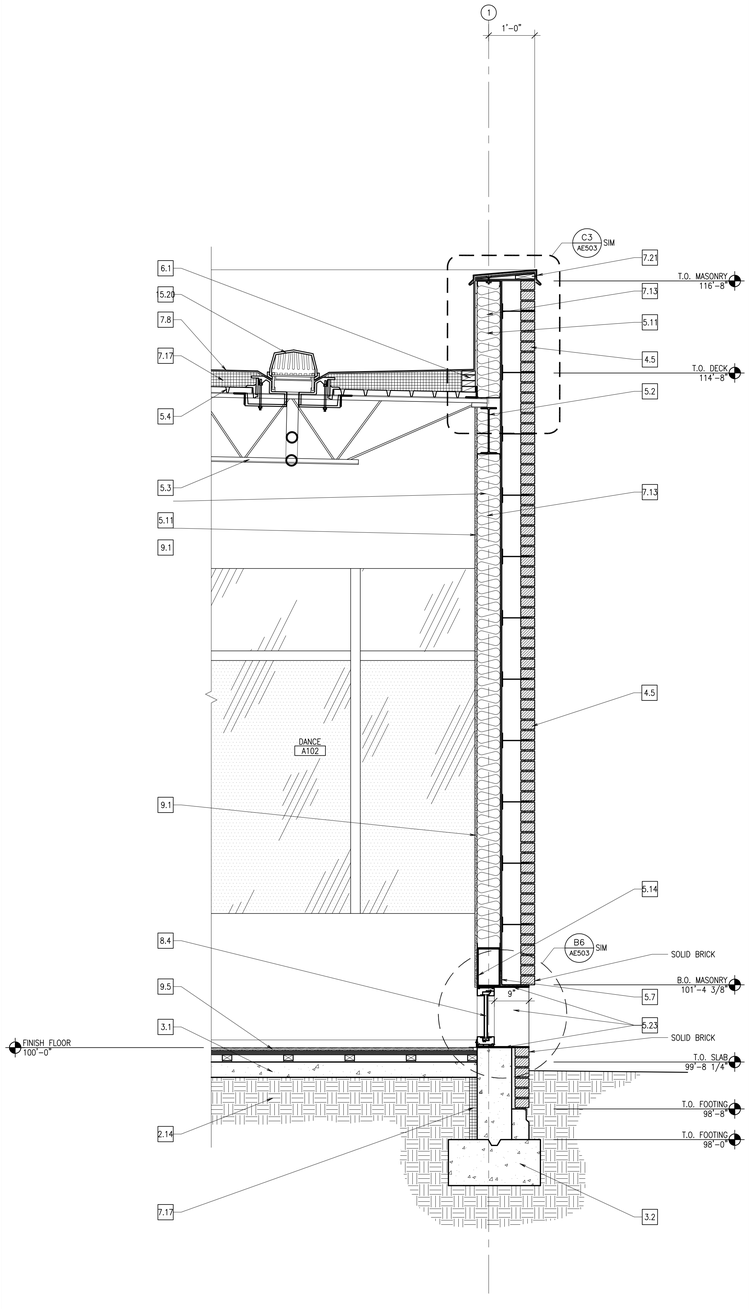

Wall Section **A5**
3/4" = 1'-0"

DIVISION 1 – GENERAL NOTES
1.1 FINISH FLOOR
1.2 FINISH GRADE
1.3 LINE OF BUILDING ABOVE
1.4 EDGE OF WALL BELOW
1.5 UTILITY TUNNEL
1.6 EXISTING WALL
1.7 EXISTING FOOTING
1.8 EXISTING BUILDING
1.9 EXISTING FOUNDATION WALL
1.10 EXISTING CONCRETE SLAB

DIVISION 2 – SITE WORK
2.1 EXISTING LIGHT POLE W/ OVERHEAD POWER TO REMAIN
2.2 EXISTING ASPHALT PAVING TO REMAIN
2.3 EXISTING CONCRETE SIDEWALK TO REMAIN
2.4 EXISTING CURB TO REMAIN
2.5 EXISTING SEWER LINE TO REMAIN
2.6 EXISTING POWER POLE W/ UNDERGROUND POWER LINE TO REMAIN
2.7 EXISTING SEWER MANHOLE TO REMAIN
2.8 EXISTING 4" CLEAN OUT TO REMAIN
2.9 EXISTING CATCH BASIN TO REMAIN
2.10 EXISTING FIRE HYDRANT TO REMAIN
2.11 EXISTING LANDSCAPING TO REMAIN
2.12 EXISTING TREE TO REMAIN; FULLY PROTECTED
2.13 EXISTING GUTTER TO REMAIN
2.14 COMPACTED FILL
2.15 NEW CONCRETE PAVING
2.16 LINE OF NEW CONCRETE PAVING
2.17 EXISTING PARKING STALLS TO REMAIN
2.18 EXISTING FENCE TO REMAIN
2.19 NEW SUMP
2.20 EXISTING STONE SIGNAGE RELOCATED FROM OLD GYMNASIUM – COORDINATE WITH OWNER.
2.21 NEW CONCRETE STAIRS – SEE ENLARGED PLANS FOR DIMENSIONS
2.22 NEW CONCRETE CURB
2.23 EXISTING HIGH VOLTAGE SWITCHGEAR TO REMAIN
2.24 EXISTING 500 KVA TRANSFORMER
2.25 EXISTING CONCRETE STAIRS TO REMAIN
2.26 HANDICAP ACCESSIBLE PARKING STALL
2.27 HANDICAP ACCESSIBLE AISLE
2.28 HANDICAP ACCESSIBLE PARKING SIGN
2.29 NEW GAS METER
2.30 NEW STORM DRAIN LINE
2.31 EXISTING STORM DRAIN LINE TO REMAIN
2.32 EXISTING GAS METER TO REMAIN
2.33 EXISTING GAS LINE TO REMAIN
2.34 NEW GAS LINE TO BE CONNECTED TO EXISTING GAS LINE
2.35 EXISTING WATER LINE
2.36 NEW WATER LINE
2.37 NEW BIKE RACK
2.38 GRAVEL MULCH TO BE ¾" "SILVER NICKEL" PLACED 3" DEEP OVER WEED BARRIER
2.39 NEW CONCRETE 12" WIDE MOW STRIP, SEE DETAIL A1/AS110
2.40 GRAVEL MULCH TO BE PEA GRAVEL PLACED 3" DEEP OVER WEED BARRIER
2.41 NEW TURF
2.42 NEW TREE – SEE PLANTING PLAN
2.43 NEW PLANT – SEE PLANTING PLAN
2.44 CONCRETE BENCH. BRAND: "MATERIALS, INC." STYLE: "GOTHIC" OR SIMILAR. ALT BRAND & STYLE ACCEPTABLE W/PRIOR APPROVAL.

DIVISION 3 – CONCRETE
3.1 4" CONCRETE SLAB
3.2 CONCRETE FOOTING
3.3 NOT USED
3.4 CONCRETE ON STEEL DECK
3.5 CONC EQUIPMENT PAD
3.6 CAST IN PLACE CONCRETE
3.7 CONCRETE RETAINING WALL

DIVISION 4 – MASONRY
4.1 NOT USED
4.2 MASONRY CONTROL JOINT
4.3 NOT USED
4.4 NOT USED
4.5 STANDARD BRICK VENEER, COLOR AS SELECTED BY ARCHITECT
4.6 EXISTING MASONRY, CLEANED AND SEALED

DIVISION 5 – METALS
5.1 STEEL COLUMN; REF STRUCT. DWG
5.2 STEEL BEAM; REF STRUCT. DWGS
5.3 STEEL JOIST; REF STRUCT. DWGS
5.4 STEEL ROOF DECK
5.5 STEEL LADDER
5.6 4" STRUCT STL STUDS @ 16" O.C.
5.7 STEEL ANGLE
5.8 STEEL CHANNEL
5.9 HORIZONTAL STEEL JOIST BRIDGING
5.10 1 1/2"ø ALUMINUM PIPE HANDRAIL
5.11 6" STRUCT STL STUDS @16" OC
5.12 3 5/8" STRUCT STL STUDS @16" OC
5.13 STEEL PLATE
5.14 STEEL TUBE, REF STRUCT. DWG
5.15 1 1/2"ø ALUMINUM PIPE VERTICAL SUPPORTS
5.16 1 1/2" STRUCT STL STUDS @ 16" O.C.
5.17 EXPOSED STEEL COLUMN; REF STRUCT. DWGS; PAINT, COLOR BY ARCH.
5.18 EXPOSED STEEL BEAM; REF STRUCT. DWGS; PAINT, COLOR BY ARCH.
5.19 2" STRUCT STL STUDS @ 16" OC
5.20 2-1/2" STRUCT STL STUDS @ 16" OC
5.21 EXPOSED STEEL JOIST; REF STRUCT. DWGS; PAINT, COLOR BY ARCH.
5.22 ALUMINUM ANGLE
5.23 ALUMINUM PLATE
5.24 ⅞" HAT CHANNELS
5.25 1 1/2"ø ALUMINUM PIPE GUARDRAIL
5.26 3-⅜" STL STUD SLIP TRACK SYSTEM W/ 2" LEG ON TOP TRACK AND 1-½" SLOT.

DIVISION 6 – WOOD AND PLASTICS
6.1 WOOD BLOCKING OR BACKING PLATE 16 GA X 6" HIGH FOR INTERIOR ARCHITECTURAL WOODWORK, HARDWARE, TOILET COMPARTMENTS, BATH ACCESSORIES, ETC
6.2 PLASTIC LAMINATE COUNTERTOP
6.3 NOT USED
6.4 ACRYLIC PANEL
6.5 PLASTIC LAMINATE MILLWORK
6.6 MAPLE CHAIR RAIL, SEE E5/AE504

DIVISION 7 THERMAL & MOISTURE PROTECTION
7.1 RIDGE
7.2 VALLEY, MIN SLOPE 3/16" PER LINEAL FT
7.3 CRICKET, MIN. SLOPE 1/4" PER FOOT AT VALLEY, FORM W/ TAPERED RIGID BD. INSULATION
7.4 ROOF HATCH
7.5 ROOF CURB. SEE DETAIL C2/AE504.
7.6 ROOF DRAIN & OVERFLOW DRAIN
7.7 TYPICAL PIPE/CONDUIT PENETRATION

DIVISION 7 CONT'D THERMAL & MOISTURE PROTECTION
7.8 SINGLE PLY ROOF MEMBRANE MECHANICALLY FASTENED OVER MIN 4" TAPERED RIGID INSULATION SLOPED TO DRAIN 1/4"/FT MIN
7.9 1" EXPANSION JOINT
7.10 ROOF SCUPPER
7.11 SEALANT
7.12 R-11 BATTS, FACED MINERAL-FIBER BLANKET INSULATION
7.13 R-19 BATTS, FACED MINERAL-FIBER BLANKET INSULATION
7.14 NOT USED
7.15 FIRE SAFING INSULATION
7.16 NOT USED
7.17 RIGID INSULATION
7.18 METAL REGLET & COUNTER FLASHING
7.19 METAL FASCIA
7.20 METAL CLOSURE
7.21 PRE-FINISHED METAL COPING; COLOR BY ARCH. FROM MANUF. FULL RANGE
7.22 COMPOSITE SHEET WATERPROOFING
7.23 NOT USED
7.24 2" INSULATED METAL PANEL SYSTEM, COLOR BY ARCHITECT
7.25 EXISTING METAL COPING TO REMAIN

DIVISION 8 DOORS & WINDOWS
8.1 HOLLOW METAL DOOR & FRAME
8.2 FLUSH WOOD DOOR
8.3 ACCESS DOOR
8.4 ANODIZED ALUM. STOREFRONT WINDOW
8.5 ANODIZED ALUM. STOREFRONT DOOR AND FRAME
8.6 1" INSULATED GLASS SET IN ALUM. CURTAIN WALL FRAME
8.7 1" INSULATED SANDBLASTED GLASS SET IN ALUM. CURTAIN WALL FRAME
8.8 1" INSULATED SANDBLASTED GLASS SET IN ANODIZED ALUMINUM STOREFRONT
8.9 BUTT GLAZING
8.10 MIRROR
8.11 1/2" TEMPERED SAFETY GLASS W/ SAND BLASTED FINISH
8.12 ADA AUTOMATIC DOOR
8.13 ALUM. STOREFRONT SYSTEM RELOCATED FROM EXISTING VESTIBULE. SEE SHEET AD101ALT.
8.14 1/2" TEMPERED SAFETY GLASS
8.15 ALUM. STOREFRONT SYSTEM

DIVISION 9 FINISHES
9.1 GYP BOARD, PAINT – COLOR BY ARCH.
9.2 CERAMIC TILE
9.3 ACOUSTICAL PANEL CEILING
9.4 NOT USED
9.5 RESILIENT MNTD. HARDWOOD FLOOR
9.6 NOT USED
9.7 RUBBER BASE
9.8 CERAMIC TILE BASE
9.9 VINYL COMPOSITION TILE
9.10 CARPET

DIVISION 10 SPECIALITIES
10.1 36" GRAB BAR
10.2 WHITE BOARD; PROVIDE BLKG
10.3 TOILET PAPER DISPENSER
10.4 SIGN – MAXIMUM OCCUPANT LOAD
10.5 FIRE EXT.; RECESSED CABINET
10.6 42" GRAB BAR
10.7 MARKER BOARD
10.8 OWNER SUPPLIED SIGN IDENTIFYING LOCATION OF UNISEX RESTROOM
10.9 BULLETIN BOARD

DIVISION 11 EQUIPMENT
11.1 AV EQUIPMENT SEE AV DWGS
11.2 AV PANEL SEE AV DWGS
11.3 SPEAKER, N.I.C.
11.4 AV FLOOR POCKET
11.5 ADJUSTABLE BALLET BARRE

DIVISION 15 MECHANICAL
15.1 FIRE CONNECTION
15.2 MECHANICAL ROOF HOOD
15.3 MECHANICAL EXHAUST FAN
15.4 MECHANICAL CONDENSING UNIT
15.5 FIRE SPRINKLER MAIN SHOWN FOR COORDINATION ONLY; CONTRACTOR TO PROVIDE SHOP DWGS PER SPEC & CODE
15.6 NOT USED
15.7 WATER METER RE: CIVIL, PLUMB. DWGS
15.8 GAS METER RE: PLUMB. DWGS
15.9 NOT USED
15.10 SINK, REF: PLUMB. DWGS
15.11 SUMP PUMP BELOW GRADE
15.12 TOILET
15.13 ADA TOILET
15.14 ADA URINAL
15.15 ADA LAV
15.16 ADA SHOWER
15.17 ADA ELECTRIC DRINKING FOUNTAIN
15.18 FLOOR DRAIN
15.19 STORM DRAIN
15.20 ROOF DRAIN
15.21 MECHANICAL UNIT
15.22 MECHANICAL DIFFUSER
15.23 MECHANICAL RETURN AIR GRILLE
15.24 MECHANICAL EXHAUST FAN GRILLE
15.25 MECHANICAL EXPOSED DUCT
15.26 MECH EXPOSED DUCT SUPPORT
15.27 ROOF & OVERFLOW DRAIN SEE E5/AE504
15.28 MECHANICAL DUCT
15.29 LAMBS TONGUE
15.30 SUMP PUMP
15.31 DRINKING FOUNTAIN
15.32 AREA DRAIN
15.33 MECHANICAL DUCT BELOW GRADE
15.34 MECHANICAL LOUVER

DIVISION 16 ELECTRICAL
16.1 ELECTRIC LIGHT
16.2 ELECTRIC PANEL
16.3 ELECTRIC TRANSFORMER
16.4 HORN/STROBE, REF: ELECT.
16.5 EMERGENCY LIGHTING, REF: ELECT.
16.6 DUPLEX OUTLET, REF: ELECT.
16.7 DATA OUTLET, REF. ELECT.
16.8 CABLE TRAY SEE EP DWGS
16.9 EXIT LIGHT SEE EL DWGS
16.10 HIGH VOLTAGE SWITCH
16.11 COMMUNICATION BOX
16.12 ADA DOOR ACTUATOR POST
16.13 ADA DOOR ACTUATOR PANEL
16.14 GENERATOR
16.15 FIRE GONG
16.16 UNDERCABINET LIGHT

GENERAL NOTES
1. AT BRICK VENEER, PROVIDE SOLID BRICKS WHERE TOP OR BOTTOM SURFACE IS EXPOSED BY 1" OR MORE.

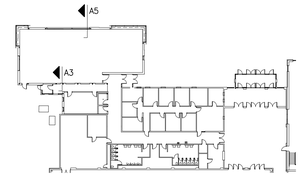

LICENSED ARCHITECT
PEGGY A. McDONOUGH
No. 6006008-5301
STATE OF UTAH
7-21-2006

GouldEvans
©2002 Gould Evans Associates, L.C.
1000 South Main Street • Suite 100
Salt Lake City, Utah 84101
Voice 801.532.6100
Fax 801.532.6102
www.gouldevans.com
kansas city • lawrence • phoenix
salt lake city • san antonio • tampa

DFCM PROJECT NO: 05266700
STATE PROPERTY ID: 01791
RISK MANAGEMENT NO:
CAD PROJECT NO:
CAD DWG FILE:
DRAWN BY:
CHECKED BY:
COPYRIGHT: STATE OF UTAH

snow college activities center
dance studio addition | remodel
ephraim, utah

REVISION	DATE

Project no: 0906-0260
Date: July 21, 2006
Sheet:

Wall Sections
AE311

100% Construction Documents

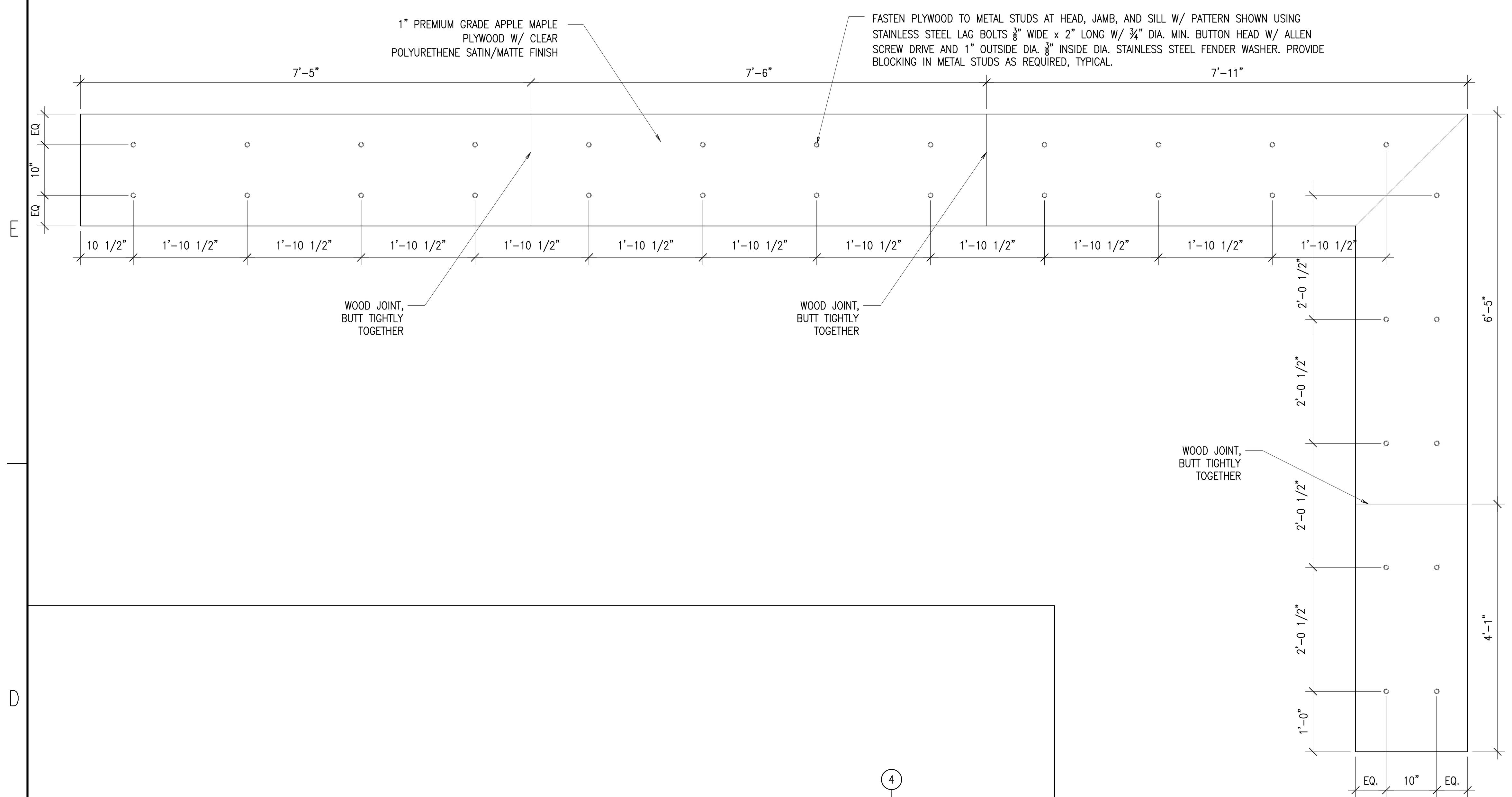

Wood Shroud Head and Sill Detail **D3**
3/4" = 1'-0"

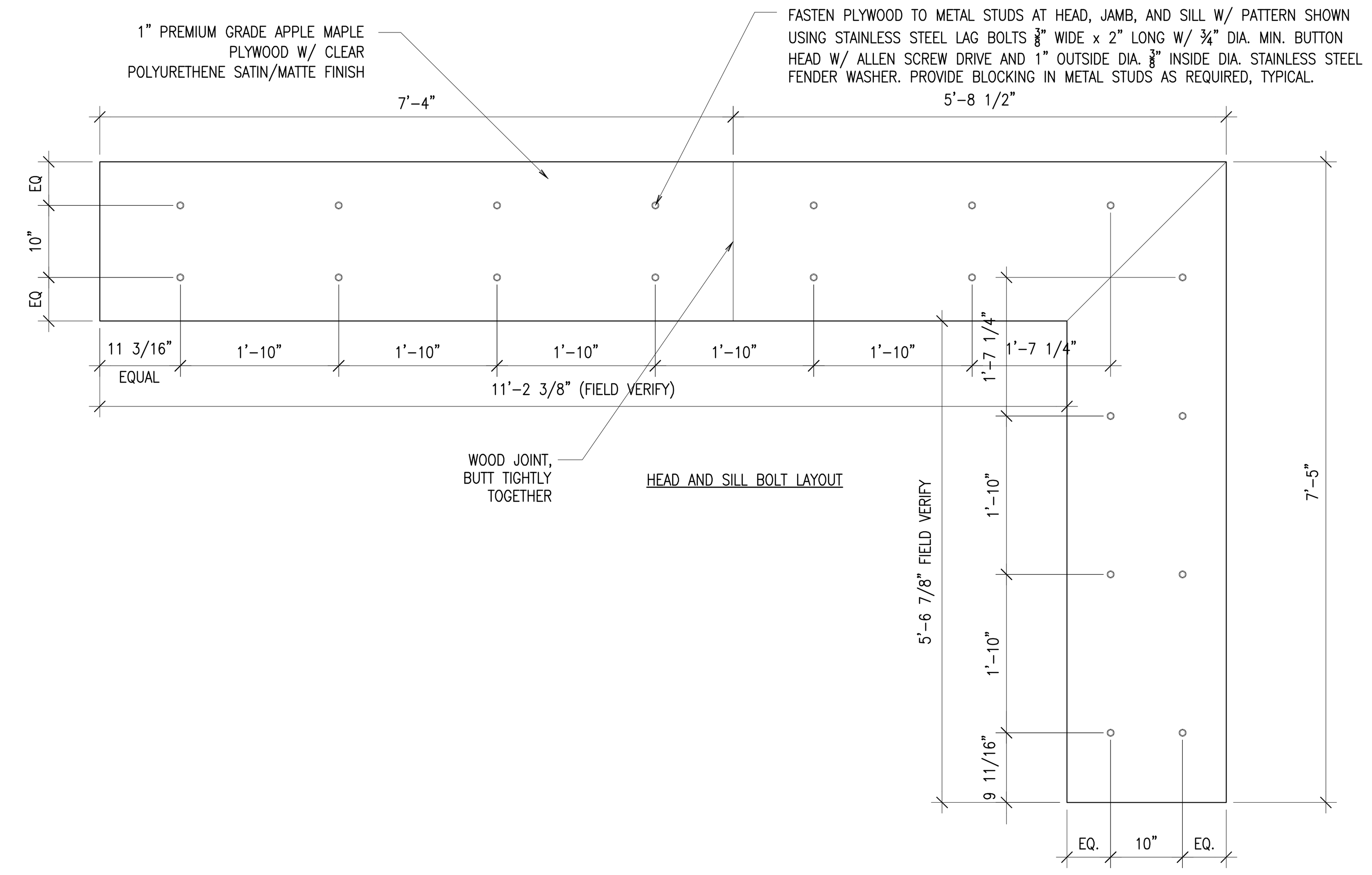

Wood Shroud Head and Sill Detail **E5**
3/4" = 1'-0"

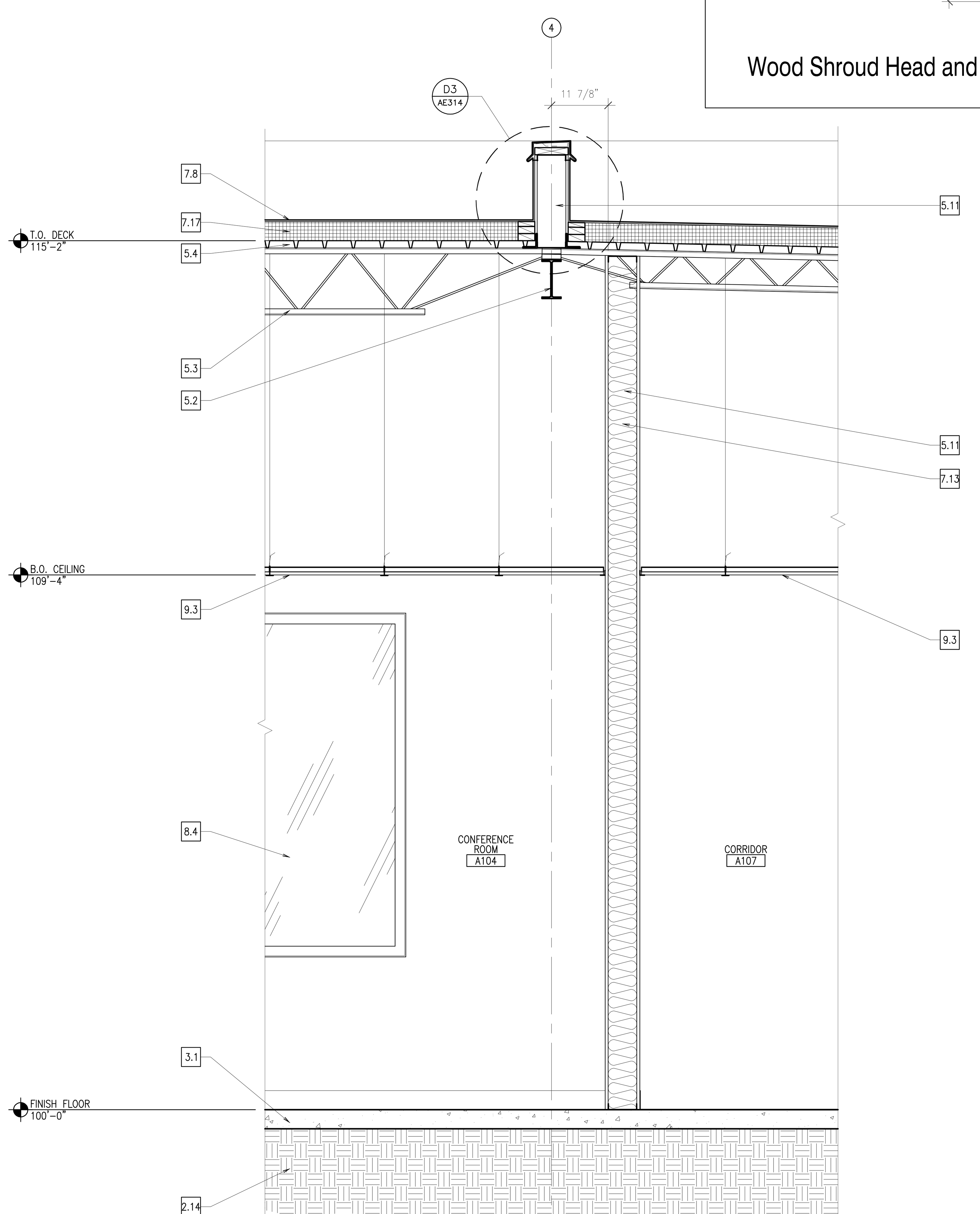

Wall Section **A3**
3/4" = 1'-0"

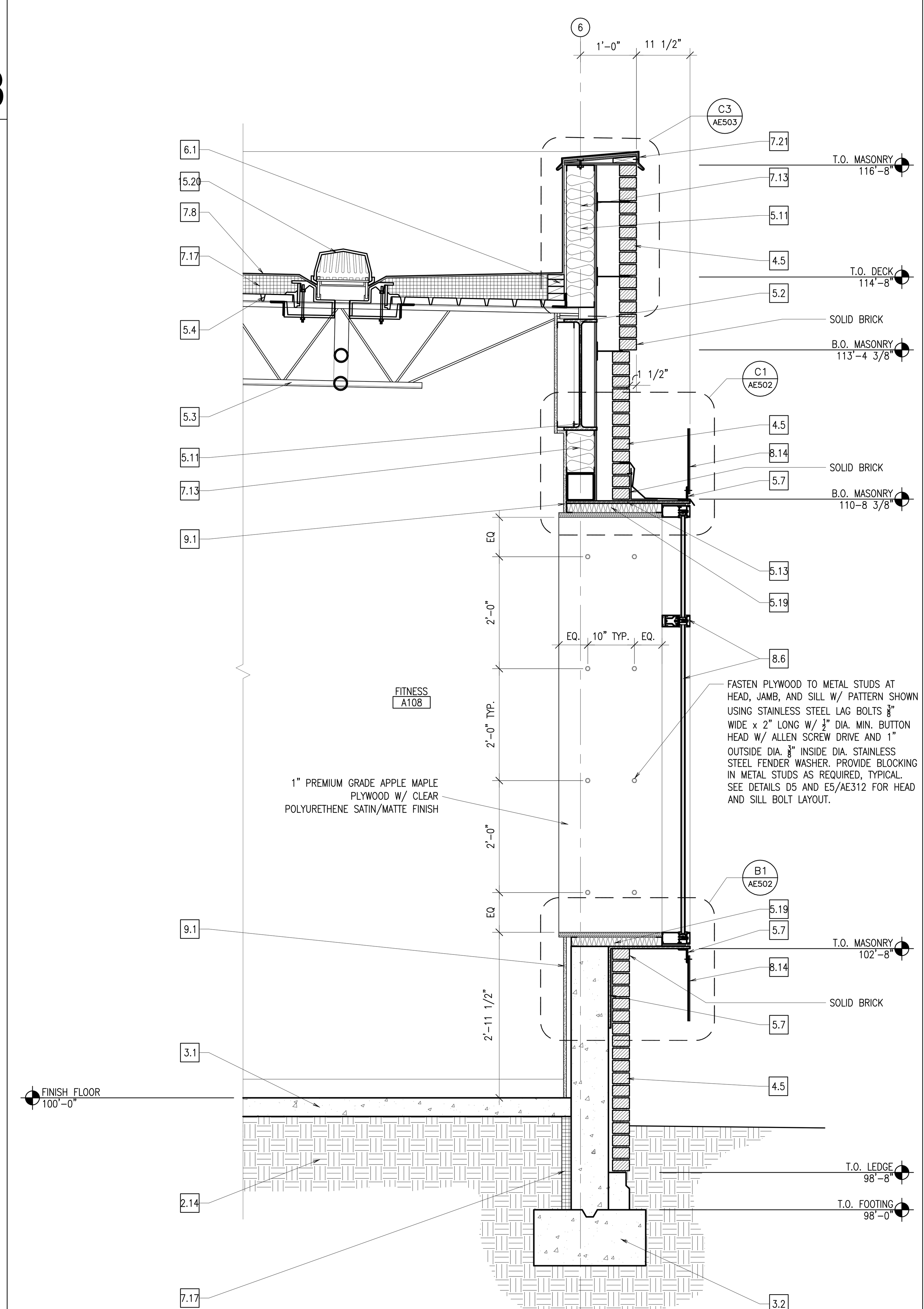

Wall Section **A5**
3/4" = 1'-0"

DIVISION 1 – GENERAL NOTES
1.1 FINISH FLOOR
1.2 FINISH GRADE
1.3 LINE OF BUILDING ABOVE
1.4 EDGE OF WALL BELOW
1.5 UTILITY TUNNEL
1.6 EXISTING WALL
1.7 EXISTING FOOTING
1.8 EXISTING BUILDING
1.9 EXISTING FOUNDATION WALL
1.10 EXISTING CONCRETE SLAB

DIVISION 2 – SITE WORK
2.1 EXISTING LIGHT POLE W/ OVERHEAD POWER TO REMAIN
2.2 EXISTING ASPHALT PAVING TO REMAIN
2.3 EXISTING CONCRETE SIDEWALK TO REMAIN
2.4 EXISTING CURB TO REMAIN
2.5 EXISTING SEWER LINE TO REMAIN
2.6 EXISTING POWER POLE W/ UNDERGROUND POWER LINE TO REMAIN
2.7 EXISTING SEWER MANHOLE TO REMAIN
2.8 EXISTING 4" CLEAN OUT TO REMAIN
2.9 EXISTING CATCH BASIN TO REMAIN
2.10 EXISTING FIRE HYDRANT TO REMAIN
2.11 EXISTING LANDSCAPING TO REMAIN
2.12 EXISTING TREE TO REMAIN; FULLY PROTECTED
2.13 EXISTING GUTTER TO REMAIN
2.14 COMPACTED FILL
2.15 NEW CONCRETE PAVING
2.16 LINE OF NEW CONCRETE PAVING
2.17 EXISTING PARKING STALLS TO REMAIN
2.18 EXISTING FENCE TO REMAIN
2.19 NEW SUMP
2.20 EXISTING STONE SIGNAGE RELOCATED FROM OLD GYMNASIUM – COORDINATE WITH OWNER.
2.21 NEW CONCRETE STAIRS – SEE ENLARGED PLANS FOR DIMENSIONS
2.22 NEW CONCRETE CURB
2.23 EXISTING HIGH VOLTAGE SWITCHGEAR TO REMAIN
2.24 EXISTING 500 KVA TRANSFORMER
2.25 EXISTING CONCRETE STAIRS TO REMAIN
2.26 HANDICAP ACCESSIBLE PARKING STALL
2.27 HANDICAP ACCESSIBLE AISLE
2.28 HANDICAP ACCESSIBLE PARKING SIGN
2.29 NEW GAS METER
2.30 NEW STORM DRAIN LINE
2.31 EXISTING STORM DRAIN LINE TO REMAIN
2.32 EXISTING GAS METER TO REMAIN
2.33 EXISTING GAS LINE TO REMAIN
2.34 NEW GAS LINE TO BE CONNECTED TO EXISTING GAS LINE
2.35 EXISTING WATER LINE
2.36 NEW WATER LINE
2.37 NEW BIKE RACK
2.38 GRAVEL MULCH TO BE ½" "SILVER NICKEL" PLACED 3" DEEP OVER WEED BARRIER
2.39 NEW CONCRETE 12" WIDE MOW STRIP, SEE DETAIL A1/AS110
2.40 GRAVEL MULCH TO BE PEA GRAVEL PLACED 3" DEEP OVER WEED BARRIER
2.41 NEW TURF
2.42 NEW TREE – SEE PLANTING PLAN
2.43 NEW PLANT – SEE PLANTING PLAN
2.44 CONCRETE BENCH. BRAND: "MATERIALS, INC." STYLE: "GOTHIC" OR SIMILAR. ALT BRAND & STYLE ACCEPTABLE W/PRIOR APPROVAL.

DIVISION 3 – CONCRETE
3.1 4" CONCRETE SLAB
3.2 CONCRETE FOOTING
3.3 NOT USED
3.4 CONCRETE ON STEEL DECK
3.5 CONC EQUIPMENT PAD
3.6 CAST IN PLACE CONCRETE
3.7 CONCRETE RETAINING WALL

DIVISION 4 – MASONRY
4.1 NOT USED
4.2 MASONRY CONTROL JOINT
4.3 NOT USED
4.4 NOT USED
4.5 STANDARD BRICK VENEER, COLOR AS SELECTED BY ARCHITECT
4.6 EXISTING MASONRY, CLEANED AND SEALED

DIVISION 5 – METALS
5.1 STEEL COLUMN; REF STRUCT. DWG
5.2 STEEL BEAM; REF STRUCT. DWGS
5.3 STEEL JOIST; REF STRUCT. DWGS
5.4 STEEL ROOF DECK
5.5 STEEL LADDER
5.6 4" STRUCT STL STUDS @ 16" O.C.
5.7 STEEL ANGLE
5.8 STEEL CHANNEL
5.9 HORIZONTAL STEEL JOIST BRIDGING
5.10 1 1/2"ø ALUMINUM PIPE HANDRAIL
5.11 6" STRUCT STL STUDS @16" OC
5.12 3 5/8" STRUCT STL STUDS @16" OC
5.13 STEEL PLATE
5.14 STEEL TUBE, REF STRUCT. DWG
5.15 1 1/2"ø ALUMINUM PIPE VERTICAL SUPPORTS
5.16 1 1/2" STRUCT STL STUDS @ 16" O.C.
5.17 EXPOSED STEEL COLUMN; REF STRUCT. DWGS; PAINT, COLOR BY ARCH.
5.18 EXPOSED STEEL BEAM; REF STRUCT. DWGS; PAINT, COLOR BY ARCH.
5.19 2" STRUCT STL STUDS @ 16" OC
5.20 2–1/2" STRUCT STL STUDS @ 16" OC
5.21 EXPOSED STEEL JOIST; REF STRUCT. DWGS; PAINT, COLOR BY ARCH.
5.22 ALUMINUM ANGLE
5.23 ALUMINUM PLATE
5.24 ⅞" HAT CHANNELS
5.25 1 1/2"ø ALUMINUM PIPE GUARDRAIL
5.26 3–⅝" STL STUD SLIP TRACK SYSTEM W/ 2" LEG ON TOP TRACK AND 1–½" SLOT.

DIVISION 6 – WOOD AND PLASTICS
6.1 WOOD BLOCKING OR BACKING PLATE 16 GA X 6" HIGH FOR INTERIOR ARCHITECTURAL WOODWORK, HARDWARE, TOILET COMPARTMENTS, BATH ACCESSORIES, ETC
6.2 PLASTIC LAMINATE COUNTERTOP
6.3 NOT USED
6.4 ACRYLIC PANEL
6.5 PLASTIC LAMINATE MILLWORK
6.6 MAPLE CHAIR RAIL, SEE E5/AE504

DIVISION 7 THERMAL & MOISTURE PROTECTION
7.1 RIDGE
7.2 VALLEY, MIN SLOPE 3/16" PER LINEAL FT
7.3 CRICKET, MIN. SLOPE 1/4" PER FOOT AT VALLEY, FORM W/ TAPERED RIGID BD. INSULATION
7.4 ROOF HATCH
7.5 ROOF CURB. SEE DETAIL C2/AE504.
7.6 ROOF DRAIN & OVERFLOW DRAIN
7.7 TYPICAL PIPE/CONDUIT PENETRATION

DIVISION 7 CONT'D THERMAL & MOISTURE PROTECTION
7.8 SINGLE PLY ROOF MEMBRANE MECHANICALLY FASTENED OVER MIN 4" TAPERED RIGID INSULATION SLOPED TO DRAIN 1/4"/FT MIN
7.9 1" EXPANSION JOINT
7.10 ROOF SCUPPER
7.11 SEALANT
7.12 R–11 BATTS, FACED MINERAL–FIBER BLANKET INSULATION
7.13 R–19 BATTS, FACED MINERAL–FIBER BLANKET INSULATION
7.14 NOT USED
7.15 FIRE SAFING INSULATION
7.16 NOT USED
7.17 RIGID INSULATION
7.18 METAL REGLET & COUNTER FLASHING
7.19 METAL FASCIA
7.20 METAL CLOSURE
7.21 PRE–FINISHED METAL COPING; COLOR BY ARCH. FROM MANUF. FULL RANGE
7.22 COMPOSITE SHEET WATERPROOFING
7.23 NOT USED
7.24 2" INSULATED METAL PANEL SYSTEM, COLOR BY ARCHITECT
7.25 EXISTING METAL COPING TO REMAIN

DIVISION 8 DOORS & WINDOWS
8.1 HOLLOW METAL DOOR & FRAME
8.2 FLUSH WOOD DOOR
8.3 ACCESS DOOR
8.4 ANODIZED ALUM. STOREFRONT WINDOW
8.5 ANODIZED ALUM. STOREFRONT DOOR AND FRAME
8.6 1" INSULATED GLASS SET IN ALUM. CURTAIN WALL FRAME
8.7 1" INSULATED SANDBLASTED GLASS SET IN ALUM. CURTAIN WALL FRAME
8.8 1" INSULATED SANDBLASTED GLASS SET IN ANODIZED ALUMINUM STOREFRONT
8.9 BUTT GLAZING
8.10 MIRROR
8.11 1/2" TEMPERED SAFETY GLASS W/ SAND BLASTED FINISH
8.12 ADA AUTOMATIC DOOR
8.13 ALUM. STOREFRONT SYSTEM RELOCATED FROM EXISTING VESTIBULE. SEE SHEET AD101ALT.
8.14 1/2" TEMPERED SAFETY GLASS
8.15 ALUM. STOREFRONT SYSTEM

DIVISION 9 FINISHES
9.1 GYP BOARD, PAINT – COLOR BY ARCH.
9.2 CERAMIC TILE
9.3 ACOUSTICAL PANEL CEILING
9.4 NOT USED
9.5 RESILIENT MNTD. HARDWOOD FLOOR
9.6 NOT USED
9.7 RUBBER BASE
9.8 CERAMIC TILE BASE
9.9 VINYL COMPOSITION TILE
9.10 CARPET

DIVISION 10 SPECIALITIES
10.1 36" GRAB BAR
10.2 WHITE BOARD; PROVIDE BLKG
10.3 TOILET PAPER DISPENSER
10.4 SIGN – MAXIMUM OCCUPANT LOAD
10.5 FIRE EXT.; RECESSED CABINET
10.6 42" GRAB BAR
10.7 MARKER BOARD
10.8 OWNER SUPPLIED SIGN IDENTIFYING LOCATION OF UNISEX RESTROOM
10.9 BULLETIN BOARD

DIVISION 11 EQUIPMENT
11.1 AV EQUIPMENT SEE AV DWGS
11.2 AV PANEL SEE AV DWGS
11.3 SPEAKER, N.I.C.
11.4 AV FLOOR POCKET
11.5 ADJUSTABLE BALLET BARRE

DIVISION 15 MECHANICAL
15.1 FIRE CONNECTION
15.2 MECHANICAL ROOF HOOD
15.3 MECHANICAL EXHAUST FAN
15.4 MECHANICAL CONDENSING UNIT
15.5 FIRE SPRINKLER MAIN SHOWN FOR COORDINATION ONLY; CONTRACTOR TO PROVIDE SHOP DWGS PER SPEC & CODE
15.6 NOT USED
15.7 WATER METER RE: CIVIL, PLUMB. DWGS
15.8 GAS METER RE: PLUMB. DWGS
15.9 NOT USED
15.10 SINK, REF: PLUMB. DWGS
15.11 SUMP PUMP BELOW GRADE
15.12 TOILET
15.13 ADA TOILET
15.14 ADA URINAL
15.15 ADA LAV
15.16 ADA SHOWER
15.17 ADA ELECTRIC DRINKING FOUNTAIN
15.18 FLOOR DRAIN
15.19 STORM DRAIN
15.20 ROOF DRAIN
15.21 MECHANICAL UNIT
15.22 MECHANICAL DIFFUSER
15.23 MECHANICAL RETURN AIR GRILLE
15.24 MECHANICAL EXHAUST FAN GRILLE
15.25 MECHANICAL EXPOSED DUCT
15.26 MECH EXPOSED DUCT SUPPORT
15.27 ROOF & OVERFLOW DRAIN SEE E5/AE504
15.28 MECHANICAL DUCT
15.29 LAMBS TONGUE
15.30 SUMP PUMP
15.31 DRINKING FOUNTAIN
15.32 AREA DRAIN
15.33 MECHANICAL DUCT BELOW GRADE
15.34 MECHANICAL LOUVER

DIVISION 16 ELECTRICAL
16.1 ELECTRIC LIGHT
16.2 ELECTRIC PANEL
16.3 ELECTRIC TRANSFORMER
16.4 HORN/STROBE, REF: ELECT.
16.5 EMERGENCY LIGHTING, REF: ELECT.
16.6 DUPLEX OUTLET, REF: ELECT.
16.7 DATA OUTLET, REF. ELECT.
16.8 CABLE TRAY SEE EP DWGS
16.9 EXIT LIGHT SEE EL DWGS
16.10 HIGH VOLTAGE SWITCH
16.11 COMMUNICATION BOX
16.12 ADA DOOR ACTUATOR POST
16.13 ADA DOOR ACTUATOR PANEL
16.14 GENERATOR
16.15 FIRE GONG
16.16 UNDERCABINET LIGHT

GENERAL NOTES
1. AT BRICK VENEER, PROVIDE SOLID BRICKS WHERE TOP OR BOTTOM SURFACE IS EXPOSED BY 1" OR MORE.

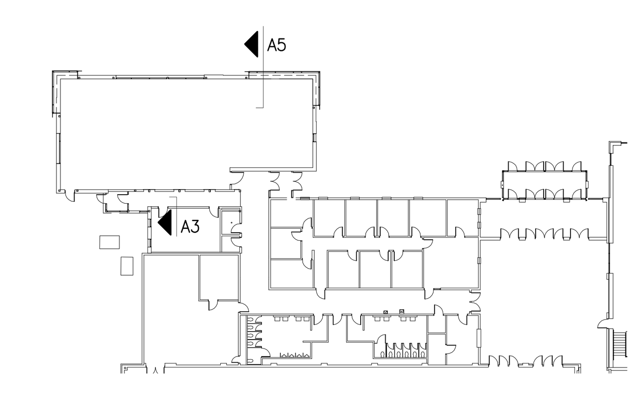

LICENSED ARCHITECT PEGGY A. McDONOUGH No. 6090093-0301 STATE OF UTAH
7.21.2006

GouldEvans

©2002 Gould Evans Associates, L.C.
1000 South Main Street • Suite 100
Salt Lake City, Utah 84101
Voice 801.532.6100
Fax 801.532.6102
www.gouldevans.com
kansas city • lawrence • phoenix
salt lake city • san antonio • tampa

DFCM PROJECT NO: 05266700
STATE PROPERTY ID: 01791
RISK MANAGEMENT NO:
CAD PROJECT NO:
CAD DWG FILE:
DRAWN BY:
CHECKED BY:
COPYRIGHT: STATE OF UTAH

snow college
activities center
dance studio addition | remodel
ephraim, utah

REVISION	DATE

Project no: 0906-0260
Date: July 21, 2006
Sheet:

Wall Sections
AE312

100% Construction Documents

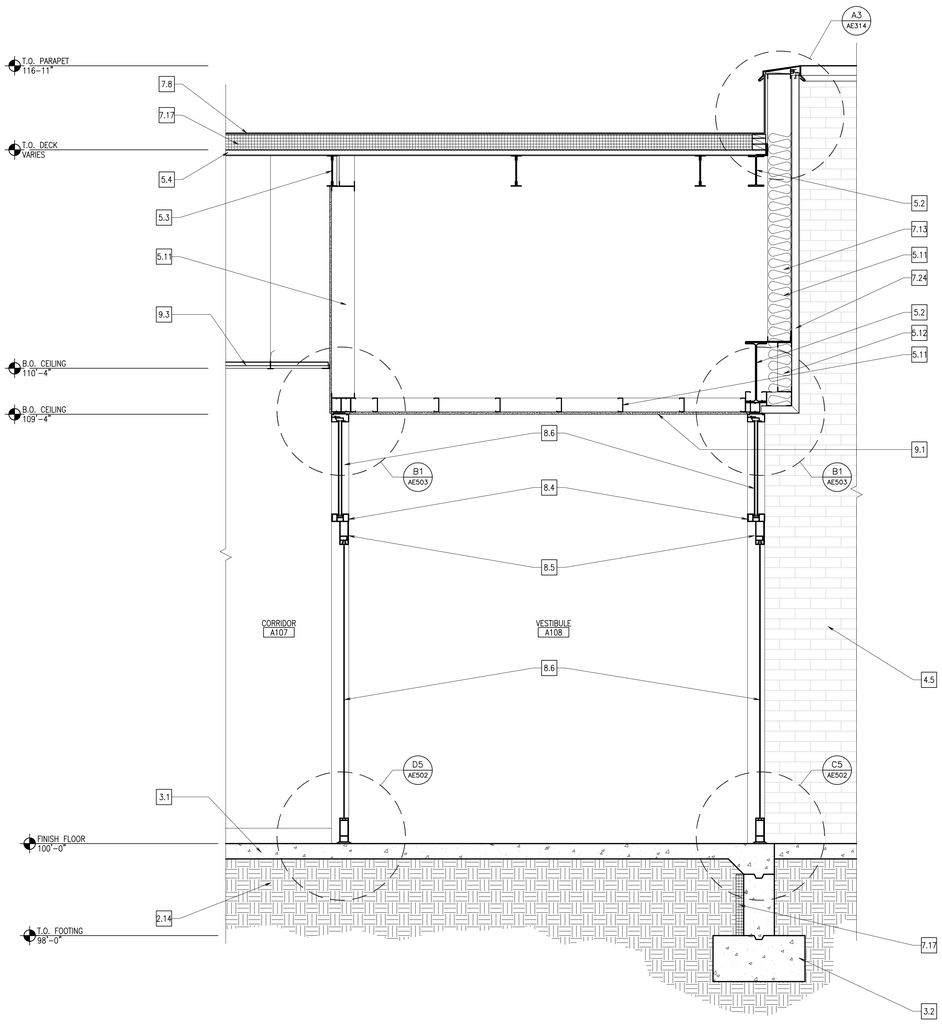

Wall Section **A3**
3/4" = 1'-0"

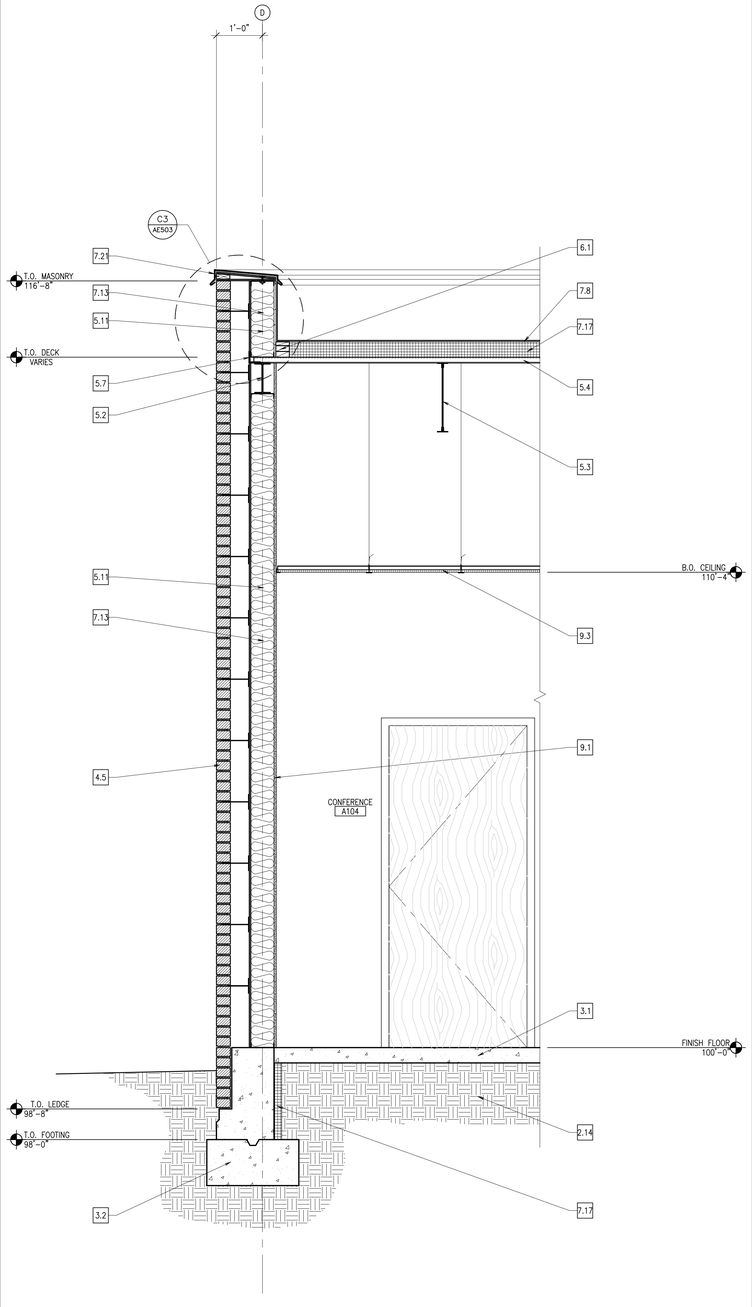

Wall Section **A5**
3/4" = 1'-0"

DIVISION 1 – GENERAL NOTES
1.1 FINISH FLOOR
1.2 FINISH GRADE
1.3 LINE OF BUILDING ABOVE
1.4 EDGE OF WALL BELOW
1.5 UTILITY TUNNEL
1.6 EXISTING WALL
1.7 EXISTING FOOTING
1.8 EXISTING BUILDING
1.9 EXISTING FOUNDATION WALL
1.10 EXISTING CONCRETE SLAB

DIVISION 2 – SITE WORK
2.1 EXISTING LIGHT POLE W/ OVERHEAD POWER TO REMAIN
2.2 EXISTING ASPHALT PAVING TO REMAIN
2.3 EXISTING CONCRETE SIDEWALK TO REMAIN
2.4 EXISTING CURB TO REMAIN
2.5 EXISTING SEWER LINE TO REMAIN
2.6 EXISTING POWER POLE W/ UNDERGROUND POWER LINE TO REMAIN
2.7 EXISTING SEWER MANHOLE TO REMAIN
2.8 EXISTING 4" CLEAN OUT TO REMAIN
2.9 EXISTING CATCH BASIN TO REMAIN
2.10 EXISTING FIRE HYDRANT TO REMAIN
2.11 EXISTING LANDSCAPING TO REMAIN
2.12 EXISTING TREE TO REMAIN; FULLY PROTECTED
2.13 EXISTING GUTTER TO REMAIN
2.14 COMPACTED FILL
2.15 NEW CONCRETE PAVING
2.16 LINE OF NEW CONCRETE PAVING
2.17 EXISTING PARKING STALLS TO REMAIN
2.18 EXISTING FENCE TO REMAIN
2.19 NEW SUMP
2.20 EXISTING STONE SIGNAGE RELOCATED FROM OLD GYMNASIUM – COORDINATE WITH OWNER.
2.21 NEW CONCRETE STAIRS – SEE ENLARGED PLANS FOR DIMENSIONS
2.22 NEW CONCRETE CURB
2.23 EXISTING HIGH VOLTAGE SWITCHGEAR TO REMAIN
2.24 EXISTING 500 KVA TRANSFORMER
2.25 EXISTING CONCRETE STAIRS TO REMAIN
2.26 HANDICAP ACCESSIBLE PARKING STALL
2.27 HANDICAP ACCESSIBLE AISLE
2.28 HANDICAP ACCESSIBLE PARKING SIGN
2.29 NEW GAS METER
2.30 NEW STORM DRAIN LINE
2.31 EXISTING STORM DRAIN LINE TO REMAIN
2.32 EXISTING GAS METER TO REMAIN
2.33 EXISTING GAS LINE TO REMAIN
2.34 NEW GAS LINE TO BE CONNECTED TO EXISTING GAS LINE
2.35 EXISTING WATER LINE
2.36 NEW WATER LINE
2.37 NEW BIKE RACK
2.38 GRAVEL MULCH TO BE ¾" "SILVER NICKEL" PLACED 3" DEEP OVER WEED BARRIER
2.39 NEW CONCRETE 12" WIDE MOW STRIP, SEE DETAIL A1/AS110
2.40 GRAVEL MULCH TO BE PEA GRAVEL PLACED 3" DEEP OVER WEED BARRIER
2.41 NEW TURF
2.42 NEW TREE – SEE PLANTING PLAN
2.43 NEW PLANT – SEE PLANTING PLAN
2.44 CONCRETE BENCH. BRAND: "MATERIALS, INC." STYLE: "GOTHIC" OR SIMILAR. ALT BRAND & STYLE ACCEPTABLE W/PRIOR APPROVAL.

DIVISION 3 – CONCRETE
3.1 4" CONCRETE SLAB
3.2 CONCRETE FOOTING
3.3 NOT USED
3.4 CONCRETE ON STEEL DECK
3.5 CONC EQUIPMENT PAD
3.6 CAST IN PLACE CONCRETE
3.7 CONCRETE RETAINING WALL

DIVISION 4 – MASONRY
4.1 NOT USED
4.2 MASONRY CONTROL JOINT
4.3 NOT USED
4.4 NOT USED
4.5 STANDARD BRICK VENEER, COLOR AS SELECTED BY ARCHITECT
4.6 EXISTING MASONRY, CLEANED AND SEALED

DIVISION 5 – METALS
5.1 STEEL COLUMN; REF STRUCT. DWG
5.2 STEEL BEAM; REF STRUCT. DWGS
5.3 STEEL JOIST; REF STRUCT. DWGS
5.4 STEEL ROOF DECK
5.5 STEEL LADDER
5.6 4" STRUCT STL STUDS @ 16" O.C.
5.7 STEEL ANGLE
5.8 STEEL CHANNEL
5.9 HORIZONTAL STEEL JOIST BRIDGING
5.10 1 1/2"ø ALUMINUM PIPE HANDRAIL
5.11 6" STRUCT STL STUDS @16" OC
5.12 3 5/8" STRUCT STL STUDS @16" OC
5.13 STEEL PLATE
5.14 STEEL TUBE; REF STRUCT. DWG
5.15 1 1/2"ø ALUMINUM PIPE VERTICAL SUPPORTS
5.16 1 1/2" STRUCT STL STUDS @ 16" O.C.
5.17 EXPOSED STEEL COLUMN; REF STRUCT. DWGS; PAINT, COLOR BY ARCH.
5.18 EXPOSED STEEL BEAM; REF STRUCT. DWGS; PAINT, COLOR BY ARCH.
5.19 2" STRUCT STL STUDS @ 16" OC
5.20 2-1/2" STRUCT STL STUDS @ 16" OC
5.21 EXPOSED STEEL JOIST; REF STRUCT. DWGS; PAINT, COLOR BY ARCH.
5.22 ALUMINUM ANGLE
5.23 ALUMINUM PLATE
5.24 ⅞" HAT CHANNELS
5.25 1 1/2"ø ALUMINUM PIPE GUARDRAIL
5.26 3-⅝" STL STUD SLIP TRACK SYSTEM W/ 2" LEG ON TOP TRACK AND 1-⅝" SLOT.

DIVISION 6 – WOOD AND PLASTICS
6.1 WOOD BLOCKING OR BACKING PLATE 16 GA X 6" HIGH FOR INTERIOR ARCHITECTURAL WOODWORK, HARDWARE, TOILET COMPARTMENTS, BATH ACCESSORIES, ETC
6.2 PLASTIC LAMINATE COUNTERTOP
6.3 NOT USED
6.4 ACRYLIC PANEL
6.5 PLASTIC LAMINATE MILLWORK
6.6 MAPLE CHAIR RAIL, SEE E5/AE504

DIVISION 7 THERMAL & MOISTURE PROTECTION
7.1 RIDGE
7.2 VALLEY, MIN SLOPE 3/16" PER LINEAL FT
7.3 CRICKET, MIN. SLOPE 1/4" PER FOOT AT VALLEY, FORM W/ TAPERED RIGID BD. INSULATION
7.4 ROOF HATCH
7.5 ROOF CURB. SEE DETAIL C2/AE504.
7.6 ROOF DRAIN & OVERFLOW DRAIN
7.7 TYPICAL PIPE/CONDUIT PENETRATION

DIVISION 7 CONT'D THERMAL & MOISTURE PROTECTION
7.8 SINGLE PLY ROOF MEMBRANE MECHANICALLY FASTENED OVER MIN 4" TAPERED RIGID INSULATION SLOPED TO DRAIN 1/4"/FT MIN
7.9 1" EXPANSION JOINT
7.10 ROOF SCUPPER
7.11 SEALANT
7.12 R-11 BATTS, FACED MINERAL-FIBER BLANKET INSULATION
7.13 R-19 BATTS, FACED MINERAL-FIBER BLANKET INSULATION
7.14 NOT USED
7.15 FIRE SAFING INSULATION
7.16 NOT USED
7.17 RIGID INSULATION
7.18 METAL REGLET & COUNTER FLASHING
7.19 METAL FASCIA
7.20 METAL CLOSURE
7.21 PRE-FINISHED METAL COPING; COLOR BY ARCH. FROM MANUF. FULL RANGE
7.22 COMPOSITE SHEET WATERPROOFING
7.23 NOT USED
7.24 2" INSULATED METAL PANEL SYSTEM, COLOR BY ARCHITECT
7.25 EXISTING METAL COPING TO REMAIN

DIVISION 8 DOORS & WINDOWS
8.1 HOLLOW METAL DOOR & FRAME
8.2 FLUSH WOOD DOOR
8.3 ACCESS DOOR
8.4 ANODIZED ALUM. STOREFRONT WINDOW
8.5 ANODIZED ALUM. STOREFRONT DOOR AND FRAME
8.6 1" INSULATED GLASS SET IN ALUM. CURTAIN WALL FRAME
8.7 1" INSULATED SANDBLASTED GLASS SET IN ALUM. CURTAIN WALL FRAME
8.8 1" INSULATED SANDBLASTED GLASS SET IN ANODIZED ALUMINUM STOREFRONT
8.9 BUTT GLAZING
8.10 MIRROR
8.11 1/2" TEMPERED SAFETY GLASS W/ SAND BLASTED FINISH
8.12 ADA AUTOMATIC DOOR
8.13 ALUM. STOREFRONT SYSTEM RELOCATED FROM EXISTING VESTIBULE. SEE SHEET AD101ALT.
8.14 1/2" TEMPERED SAFETY GLASS
8.15 ALUM. STOREFRONT SYSTEM

DIVISION 9 FINISHES
9.1 GYP BOARD, PAINT – COLOR BY ARCH.
9.2 CERAMIC TILE
9.3 ACOUSTICAL PANEL CEILING
9.4 NOT USED
9.5 RESILIENT MNTD. HARDWOOD FLOOR
9.6 NOT USED
9.7 RUBBER BASE
9.8 CERAMIC TILE BASE
9.9 VINYL COMPOSITION TILE
9.10 CARPET

DIVISION 10 SPECIALITIES
10.1 36" GRAB BAR
10.2 WHITE BOARD; PROVIDE BLKG
10.3 TOILET PAPER DISPENSER
10.4 SIGN – MAXIMUM OCCUPANT LOAD
10.5 FIRE EXT.; RECESSED CABINET
10.6 42" GRAB BAR
10.7 MARKER BOARD
10.8 OWNER SUPPLIED SIGN IDENTIFYING LOCATION OF UNISEX RESTROOM
10.9 BULLETIN BOARD

DIVISION 11 EQUIPMENT
11.1 AV EQUIPMENT SEE AV DWGS
11.2 AV PANEL SEE AV DWGS
11.3 SPEAKER, N.I.C.
11.4 AV FLOOR POCKET
11.5 ADJUSTABLE BALLET BARRE

DIVISION 15 MECHANICAL
15.1 FIRE CONNECTION
15.2 MECHANICAL ROOF HOOD
15.3 MECHANICAL EXHAUST FAN
15.4 MECHANICAL CONDENSING UNIT
15.5 FIRE SPRINKLER MAIN SHOWN FOR COORDINATION ONLY; CONTRACTOR TO PROVIDE SHOP DWGS PER SPEC & CODE
15.6 NOT USED
15.7 WATER METER RE: CIVIL, PLUMB. DWGS
15.8 GAS METER RE: PLUMB. DWGS
15.9 NOT USED
15.10 SINK, REF: PLUMB. DWGS
15.11 SUMP PUMP BELOW GRADE
15.12 TOILET
15.13 ADA TOILET
15.14 ADA URINAL
15.15 ADA LAV
15.16 ADA SHOWER
15.17 ADA ELECTRIC DRINKING FOUNTAIN
15.18 FLOOR DRAIN
15.19 STORM DRAIN
15.20 ROOF DRAIN
15.21 MECHANICAL UNIT
15.22 MECHANICAL DIFFUSER
15.23 MECHANICAL RETURN AIR GRILLE
15.24 MECHANICAL EXHAUST FAN GRILLE
15.25 MECHANICAL EXPOSED DUCT
15.26 MECH EXPOSED DUCT SUPPORT
15.27 ROOF & OVERFLOW DRAIN SEE E5/AE504
15.28 MECHANICAL DUCT
15.29 LAMBS TONGUE
15.30 SUMP PUMP
15.31 DRINKING FOUNTAIN
15.32 AREA DRAIN
15.33 MECHANICAL DUCT BELOW GRADE
15.34 MECHANICAL LOUVER

DIVISION 16 ELECTRICAL
16.1 ELECTRIC LIGHT
16.2 ELECTRIC PANEL
16.3 ELECTRIC TRANSFORMER
16.4 HORN/STROBE, REF: ELECT.
16.5 EMERGENCY LIGHTING, REF: ELECT.
16.6 DUPLEX OUTLET, REF: ELECT.
16.7 DATA OUTLET, REF. ELECT.
16.8 CABLE TRAY SEE EP DWGS
16.9 EXIT LIGHT SEE EL DWGS
16.10 HIGH VOLTAGE SWITCH
16.11 COMMUNICATION BOX
16.12 ADA DOOR ACTUATOR POST
16.13 ADA DOOR ACTUATOR PANEL
16.14 GENERATOR
16.15 FIRE GONG
16.16 UNDERCABINET LIGHT

GENERAL NOTES
1. AT BRICK VENEER, PROVIDE SOLID BRICKS WHERE TOP OR BOTTOM SURFACE IS EXPOSED BY 1" OR MORE.

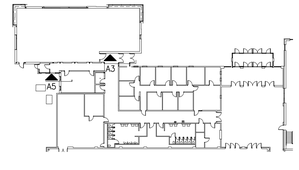

LICENSED ARCHITECT
PEGGY A. McDONOUGH
No. 6006003-0301
STATE OF UTAH
7-21-2006

GouldEvans
©2002 Gould Evans Associates, L.C.
1000 South Main Street • Suite 100
Salt Lake City, Utah 84101
Voice 801.532.6100
Fax 801.532.6102
www.gouldevans.com
kansas city • lawrence • phoenix
salt lake city • san antonio • tampa

DFCM PROJECT NO: 05266700
STATE PROPERTY ID: 01791
RISK MANAGEMENT NO:
CAD PROJECT NO:
CAD DWG FILE:
DRAWN BY:
CHECKED BY:
COPYRIGHT: STATE OF UTAH

snow college
activities center
dance studio addition | remodel
ephraim, utah

REVISION	DATE

Project no: 0906-0260
Date: July 21, 2006
Sheet:

Wall Sections
AE313

100% Construction Documents

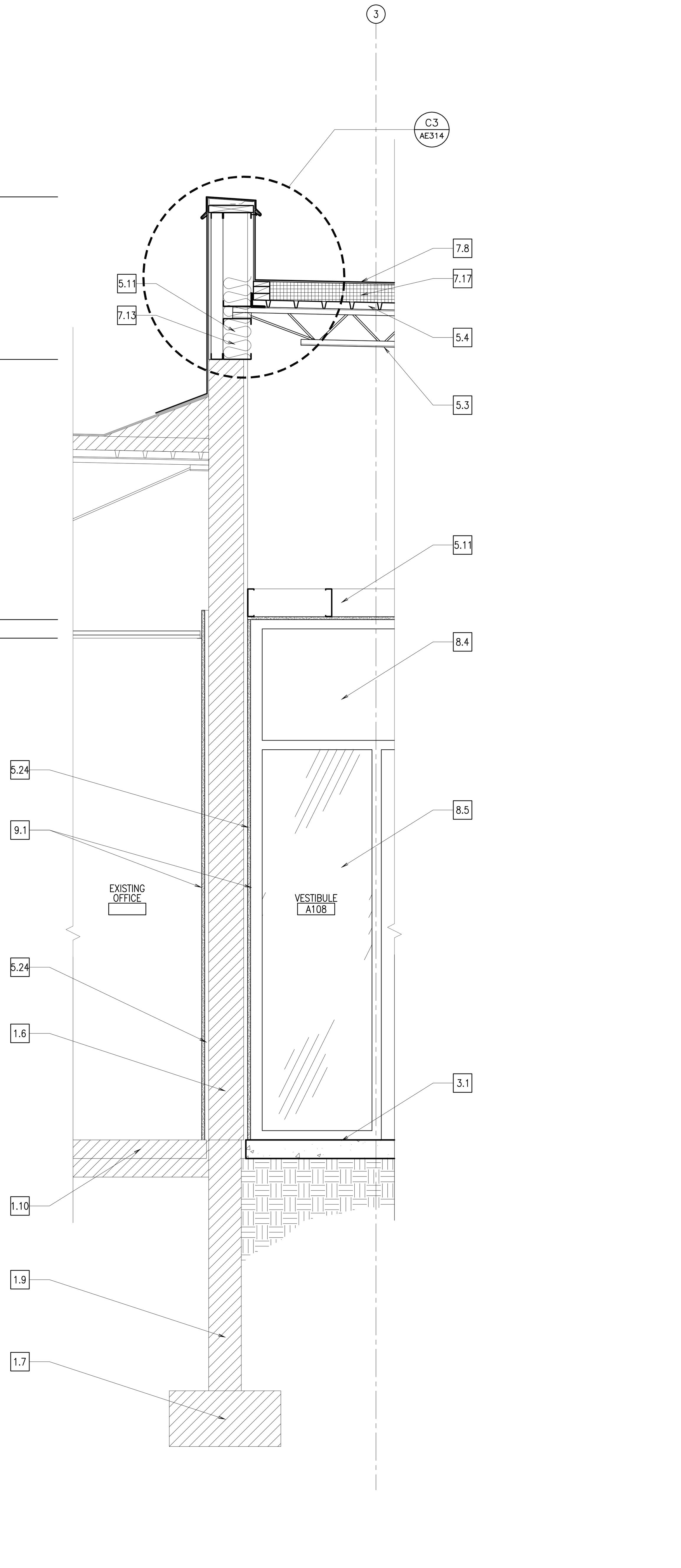

Wall Section **B2**
3/4" = 1'-0"

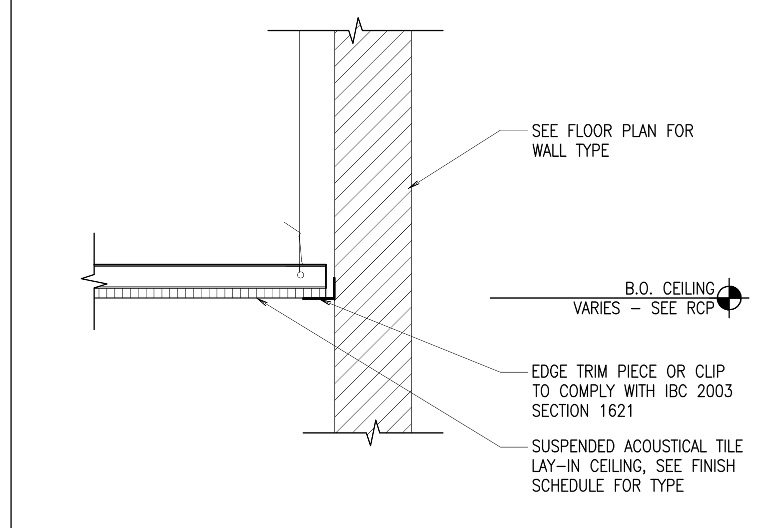

NOTE: ALL SUSPENDED CEILING SYSTEMS SHALL COMPLY WITH IBC 2003 SECTION 1621. SEE SPECIFICATIONS FOR ADDITIONAL SEISMIC REQUIREMENTS. SEE GENERAL STRUCTURAL NOTES FOR REQUIREMENTS FOR ATTACHING HANGERS TO STEEL ROOF DECK.

Ceiling/Wall Detail **E4**
1 1/2" = 1'-0"

NOTE: SPLAY WIRES WITH STRUT TO BE 12'-0" O.C. EACH DIRECTION – THE FIRST POINT OF BRACING TO BE WITHIN 6'-0" FROM EACH WALL.

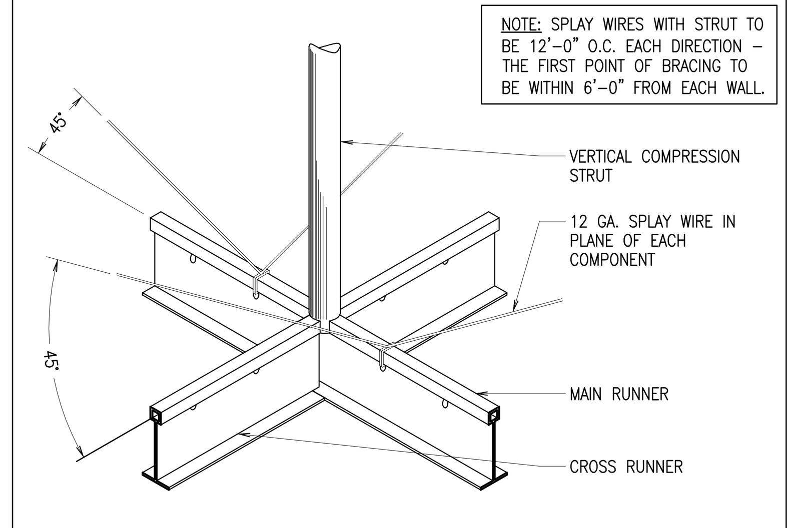

NOTE: ALL SUSPENDED CEILING SYSTEMS SHALL COMPLY WITH IBC 2003 SECTION 1621. SEE SPECIFICATIONS FOR ADDITIONAL SEISMIC REQUIREMENTS. SEE GENERAL STRUCTURAL NOTES FOR REQUIREMENTS FOR ATTACHING HANGERS TO STEEL ROOF DECK.

Seismic Bracing Ceiling Detail **E5**
1 1/2" = 1'-0"

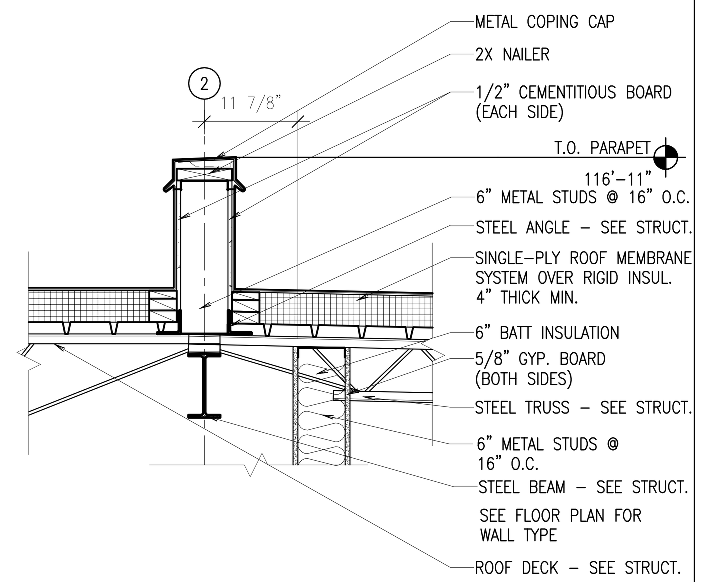

Parapet Detail **D3**
3/4" = 1'-0"

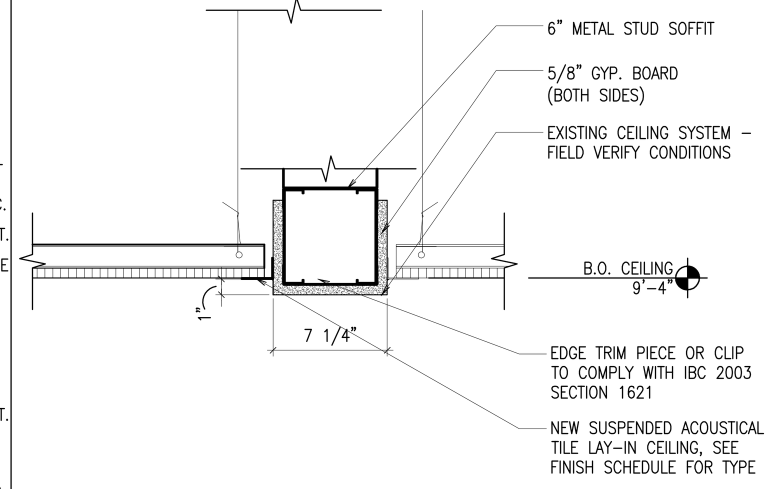

NOTE: ALL SUSPENDED CEILING SYSTEMS SHALL COMPLY WITH IBC 2003 SECTION 1621. SEE SPECIFICATIONS FOR ADDITIONAL SEISMIC REQUIREMENTS. SEE GENERAL STRUCTURAL NOTES FOR REQUIREMENTS FOR ATTACHING HANGERS TO STEEL ROOF DECK.

Ceiling/Soffit Detail **D4**
1 1/2" = 1'-0"

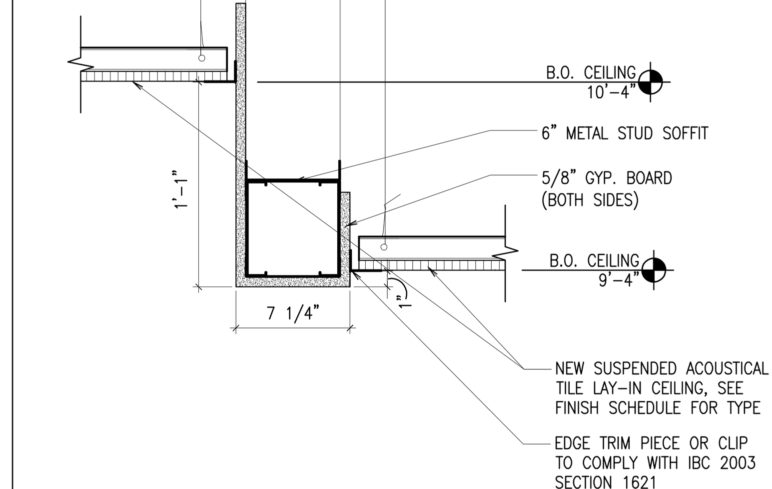

NOTE: ALL SUSPENDED CEILING SYSTEMS SHALL COMPLY WITH IBC 2003 SECTION 1621. SEE SPECIFICATIONS FOR ADDITIONAL SEISMIC REQUIREMENTS. SEE GENERAL STRUCTURAL NOTES FOR REQUIREMENTS FOR ATTACHING HANGERS TO STEEL ROOF DECK.

Ceiling/Soffit Detail **D5**
1 1/2" = 1'-0"

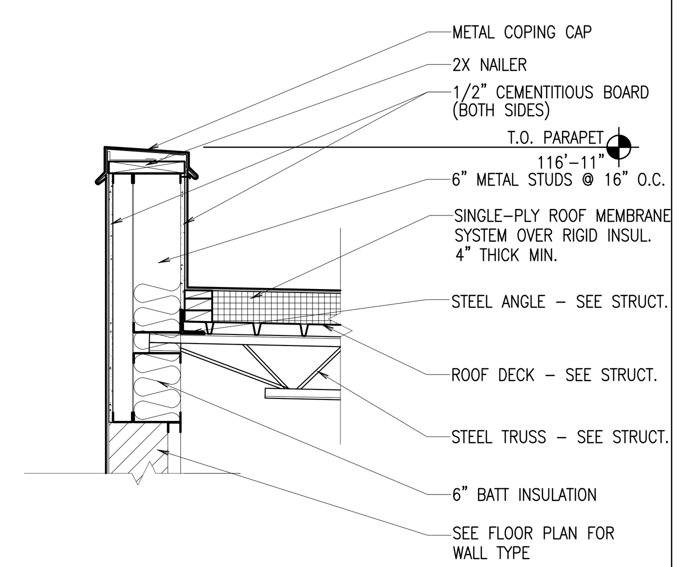

Parapet Detail **C3**
3/4" = 1'-0"

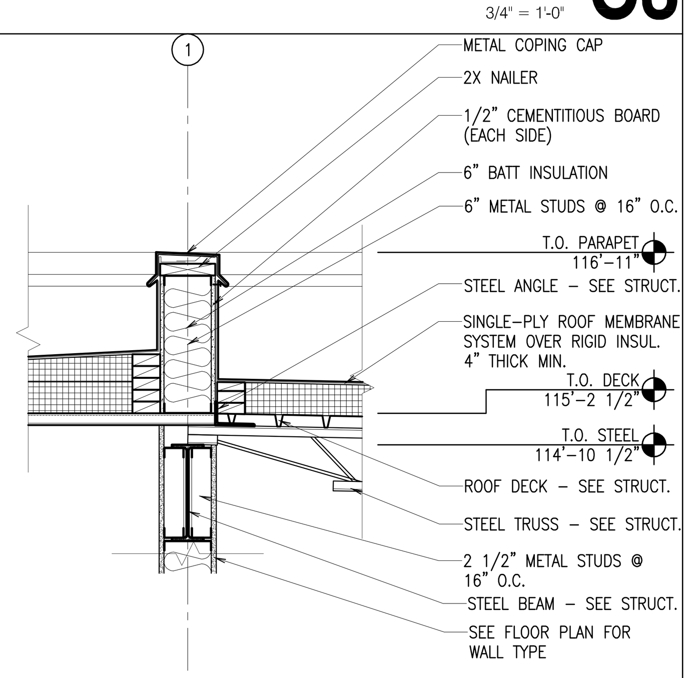

Parapet Detail **B3**
3/4" = 1'-0"

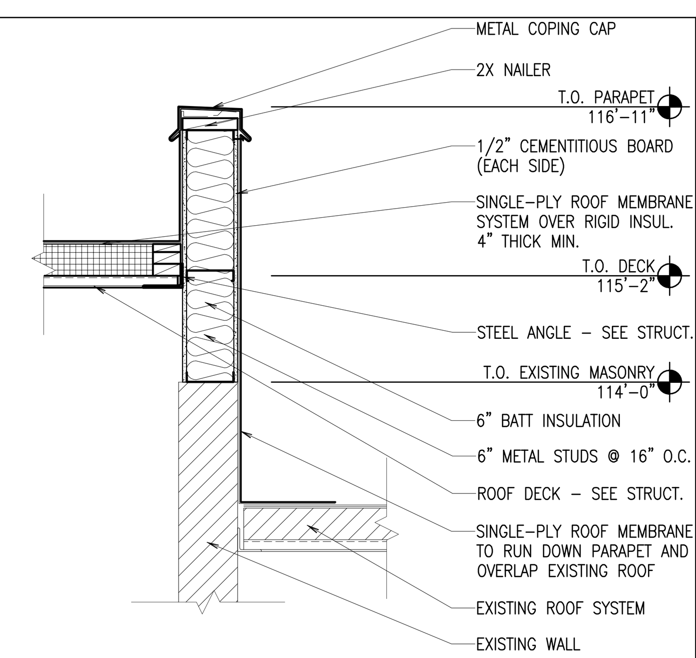

Parapet Detail **A1**
3/4" = 1'-0"

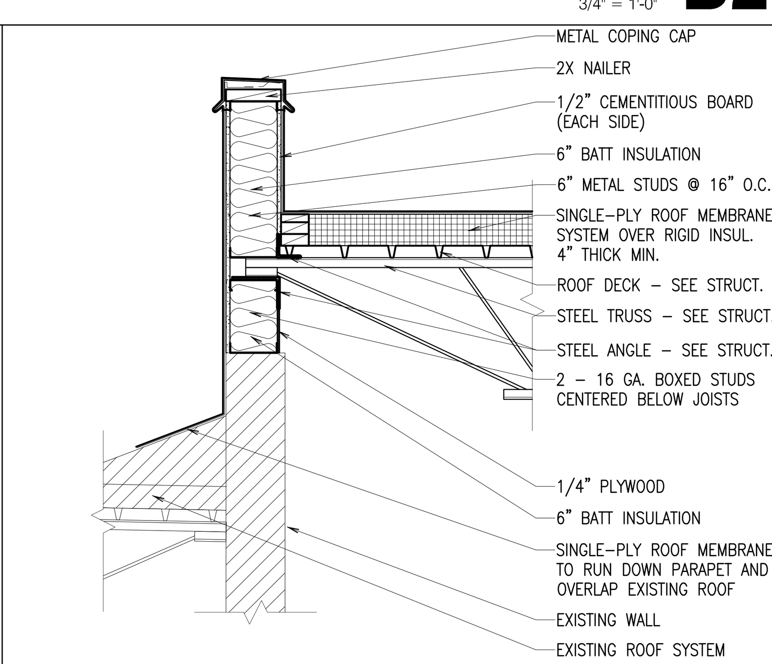

Parapet Detail **A2**
3/4" = 1'-0"

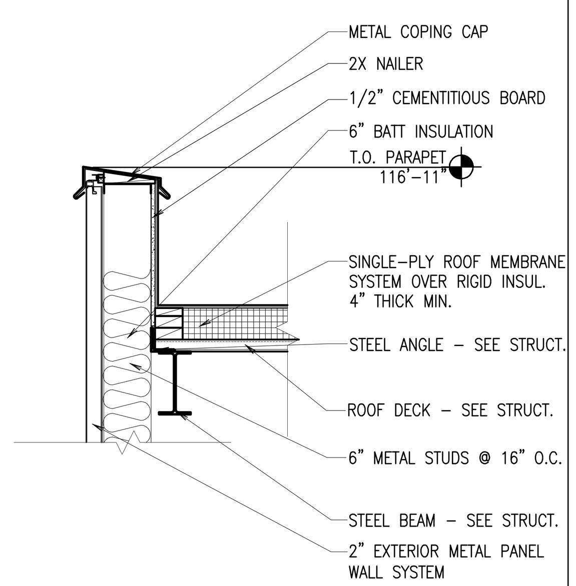

Parapet Detail **A3**
3/4" = 1'-0"

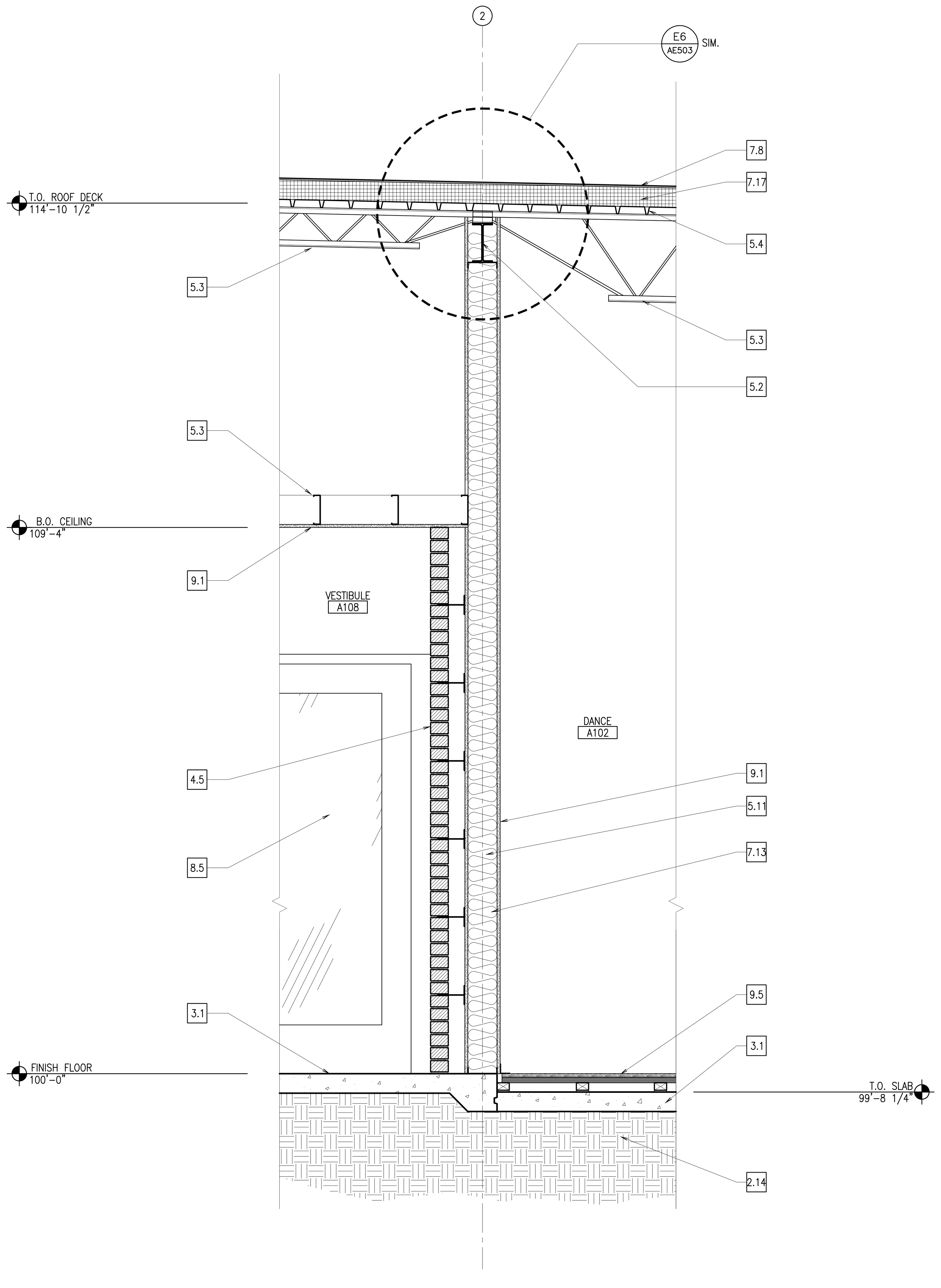

Wall Section **A5**
3/4" = 1'-0"

DIVISION 1 – GENERAL NOTES
1.1 FINISH FLOOR
1.2 FINISH GRADE
1.3 LINE OF BUILDING ABOVE
1.4 EDGE OF WALL BELOW
1.5 UTILITY TUNNEL
1.6 EXISTING WALL
1.7 EXISTING FOOTING
1.8 EXISTING BUILDING
1.9 EXISTING FOUNDATION WALL
1.10 EXISTING CONCRETE SLAB

DIVISION 2 – SITE WORK
2.1 EXISTING LIGHT POLE W/ OVERHEAD POWER TO REMAIN
2.2 EXISTING ASPHALT PAVING TO REMAIN
2.3 EXISTING CONCRETE SIDEWALK TO REMAIN
2.4 EXISTING CURB TO REMAIN
2.5 EXISTING SEWER LINE TO REMAIN
2.6 EXISTING POWER POLE W/ UNDERGROUND POWER LINE TO REMAIN
2.7 EXISTING SEWER MANHOLE TO REMAIN
2.8 EXISTING 4" CLEAN OUT TO REMAIN
2.9 EXISTING CATCH BASIN TO REMAIN
2.10 EXISTING FIRE HYDRANT TO REMAIN
2.11 EXISTING LANDSCAPING TO REMAIN
2.12 EXISTING TREE TO REMAIN; FULLY PROTECTED
2.13 EXISTING GUTTER TO REMAIN
2.14 COMPACTED FILL
2.15 NEW CONCRETE PAVING
2.16 LINE OF NEW CONCRETE PAVING
2.17 EXISTING PARKING STALLS TO REMAIN
2.18 EXISTING FENCE TO REMAIN
2.19 NEW SUMP
2.20 EXISTING STONE SIGNAGE RELOCATED FROM OLD GYMNASIUM – COORDINATE WITH OWNER.
2.21 NEW CONCRETE STAIRS – SEE ENLARGED PLANS FOR DIMENSIONS
2.22 NEW CONCRETE CURB
2.23 EXISTING HIGH VOLTAGE SWITCHGEAR TO REMAIN
2.24 EXISTING 500 KVA TRANSFORMER
2.25 EXISTING CONCRETE STAIRS TO REMAIN
2.26 HANDICAP ACCESSIBLE PARKING STALL
2.27 HANDICAP ACCESSIBLE AISLE
2.28 HANDICAP ACCESSIBLE PARKING SIGN
2.29 NEW GAS METER
2.30 NEW STORM DRAIN LINE
2.31 EXISTING STORM DRAIN LINE TO REMAIN
2.32 EXISTING GAS METER TO REMAIN
2.33 EXISTING GAS LINE TO REMAIN
2.34 NEW GAS LINE TO BE CONNECTED TO EXISTING GAS LINE
2.35 EXISTING WATER LINE
2.36 NEW WATER LINE
2.37 NEW BIKE RACK
2.38 GRAVEL MULCH TO BE ½" "SILVER NICKEL" PLACED 3" DEEP OVER WEED BARRIER
2.39 NEW CONCRETE 12" WIDE MOW STRIP, SEE DETAIL A1/AS110
2.40 GRAVEL MULCH TO BE PEA GRAVEL PLACED 3" DEEP OVER WEED BARRIER
2.41 NEW TURF
2.42 NEW TREE – SEE PLANTING PLAN
2.43 NEW PLANT – SEE PLANTING PLAN
2.44 CONCRETE BENCH. BRAND: "MATERIALS, INC." STYLE: "GOTHIC" OR SIMILAR. ALT BRAND & STYLE ACCEPTABLE W/PRIOR APPROVAL.

DIVISION 3 – CONCRETE
3.1 4" CONCRETE SLAB
3.2 CONCRETE FOOTING
3.3 NOT USED
3.4 CONCRETE ON STEEL DECK
3.5 CONC EQUIPMENT PAD
3.6 CAST IN PLACE CONCRETE
3.7 CONCRETE RETAINING WALL

DIVISION 4 – MASONRY
4.1 NOT USED
4.2 MASONRY CONTROL JOINT
4.3 NOT USED
4.4 NOT USED
4.5 STANDARD BRICK VENEER, COLOR AS SELECTED BY ARCHITECT
4.6 EXISTING MASONRY, CLEANED AND SEALED

DIVISION 5 – METALS
5.1 STEEL COLUMN; REF STRUCT. DWG
5.2 STEEL BEAM; REF STRUCT. DWGS
5.3 STEEL JOIST; REF STRUCT. DWGS
5.4 STEEL ROOF DECK
5.5 STEEL LADDER
5.6 4" STRUCT STL STUDS @ 16" O.C.
5.7 STEEL ANGLE
5.8 STEEL CHANNEL
5.9 HORIZONTAL STEEL JOIST BRIDGING
5.10 1 1/2"ø ALUMINUM PIPE HANDRAIL
5.11 6" STRUCT STL STUDS @16" OC
5.12 3 5/8" STRUCT STL STUDS @16" OC
5.13 STEEL PLATE
5.14 STEEL TUBE, REF STRUCT. DWG
5.15 1 1/2"ø ALUMINUM PIPE VERTICAL SUPPORTS
5.16 1 1/2" STRUCT STL STUDS @ 16" O.C.
5.17 EXPOSED STEEL COLUMN; REF STRUCT. DWGS; PAINT, COLOR BY ARCH.
5.18 EXPOSED STEEL BEAM; REF STRUCT. DWGS; PAINT, COLOR BY ARCH.
5.19 2" STRUCT STL STUDS @ 16" OC
5.20 2-1/2" STRUCT STL STUDS @ 16" OC
5.21 EXPOSED STEEL JOIST; REF STRUCT. DWGS; PAINT, COLOR BY ARCH.
5.22 ALUMINUM ANGLE
5.23 ALUMINUM PLATE
5.24 ⅞" HAT CHANNELS
5.25 1 1/2"ø ALUMINUM PIPE GUARDRAIL
5.26 3-⅝" STL STUD SLIP TRACK SYSTEM W/ 2" LEG ON TOP TRACK AND 1-½" SLOT.

DIVISION 6 – WOOD AND PLASTICS
6.1 WOOD BLOCKING OR BACKING PLATE 16 GA X 6" HIGH FOR INTERIOR ARCHITECTURAL WOODWORK, HARDWARE, TOILET COMPARTMENTS, BATH ACCESSORIES, ETC
6.2 PLASTIC LAMINATE COUNTERTOP
6.3 NOT USED
6.4 ACRYLIC PANEL
6.5 PLASTIC LAMINATE MILLWORK
6.6 MAPLE CHAIR RAIL, SEE E5/AE504

DIVISION 7 THERMAL & MOISTURE PROTECTION
7.1 RIDGE
7.2 VALLEY, MIN SLOPE 3/16" PER LINEAL FT
7.3 CRICKET, MIN. SLOPE 1/4" PER FOOT AT VALLEY, FORM W/ TAPERED RIGID BD. INSULATION
7.4 ROOF HATCH
7.5 ROOF CURB. SEE DETAIL C2/AE504.
7.6 ROOF DRAIN & OVERFLOW DRAIN
7.7 TYPICAL PIPE/CONDUIT PENETRATION

DIVISION 7 CONT'D THERMAL & MOISTURE PROTECTION
7.8 SINGLE PLY ROOF MEMBRANE MECHANICALLY FASTENED OVER MIN 4" TAPERED RIGID INSULATION SLOPED TO DRAIN 1/4"/FT MIN
7.9 1" EXPANSION JOINT
7.10 ROOF SCUPPER
7.11 SEALANT
7.12 R-11 BATTS, FACED MINERAL-FIBER BLANKET INSULATION
7.13 R-19 BATTS, FACED MINERAL-FIBER BLANKET INSULATION
7.14 NOT USED
7.15 FIRE SAFING INSULATION
7.16 NOT USED
7.17 RIGID INSULATION
7.18 METAL REGLET & COUNTER FLASHING
7.19 METAL FASCIA
7.20 METAL CLOSURE
7.21 PRE-FINISHED METAL COPING; COLOR BY ARCH. FROM MANUF. FULL RANGE
7.22 COMPOSITE SHEET WATERPROOFING
7.23 NOT USED
7.24 2" INSULATED METAL PANEL SYSTEM, COLOR BY ARCHITECT
7.25 EXISTING METAL COPING TO REMAIN

DIVISION 8 DOORS & WINDOWS
8.1 HOLLOW METAL DOOR & FRAME
8.2 FLUSH WOOD DOOR
8.3 ACCESS DOOR
8.4 ANODIZED ALUM. STOREFRONT WINDOW
8.5 ANODIZED ALUM. STOREFRONT DOOR AND FRAME
8.6 1" INSULATED GLASS SET IN ALUM. CURTAIN WALL FRAME
8.7 1" INSULATED SANDBLASTED GLASS SET IN ALUM. CURTAIN WALL FRAME
8.8 1" INSULATED SANDBLASTED GLASS SET IN ANODIZED ALUMINUM STOREFRONT
8.9 BUTT GLAZING
8.10 MIRROR
8.11 1/2" TEMPERED SAFETY GLASS W/ SAND BLASTED FINISH
8.12 ADA AUTOMATIC DOOR
8.13 ALUM. STOREFRONT SYSTEM RELOCATED FROM EXISTING VESTIBULE. SEE SHEET AD101ALT.
8.14 1/2" TEMPERED SAFETY GLASS
8.15 ALUM. STOREFRONT SYSTEM

DIVISION 9 FINISHES
9.1 GYP BOARD, PAINT – COLOR BY ARCH.
9.2 CERAMIC TILE
9.3 ACOUSTICAL PANEL CEILING
9.4 NOT USED
9.5 RESILIENT MNTD. HARDWOOD FLOOR
9.6 NOT USED
9.7 RUBBER BASE
9.8 CERAMIC TILE BASE
9.9 VINYL COMPOSITION TILE
9.10 CARPET

DIVISION 10 SPECIALITIES
10.1 36" GRAB BAR
10.2 WHITE BOARD; PROVIDE BLKG
10.3 TOILET PAPER DISPENSER
10.4 SIGN – MAXIMUM OCCUPANT LOAD
10.5 FIRE EXT.; RECESSED CABINET
10.6 42" GRAB BAR
10.7 MARKER BOARD
10.8 OWNER SUPPLIED SIGN IDENTIFYING LOCATION OF UNISEX RESTROOM
10.9 BULLETIN BOARD

DIVISION 11 EQUIPMENT
11.1 AV EQUIPMENT SEE AV DWGS
11.2 AV PANEL SEE AV DWGS
11.3 SPEAKER, N.I.C.
11.4 AV FLOOR POCKET
11.5 ADJUSTABLE BALLET BARRE

DIVISION 15 MECHANICAL
15.1 FIRE CONNECTION
15.2 MECHANICAL ROOF HOOD
15.3 MECHANICAL EXHAUST FAN
15.4 MECHANICAL CONDENSING UNIT
15.5 FIRE SPRINKLER MAIN SHOWN FOR COORDINATION ONLY; CONTRACTOR TO PROVIDE SHOP DWGS PER SPEC & CODE
15.6 NOT USED
15.7 WATER METER RE: CIVIL, PLUMB. DWGS
15.8 GAS METER RE: PLUMB. DWGS
15.9 NOT USED
15.10 SINK, REF: PLUMB. DWGS
15.11 SUMP PUMP BELOW GRADE
15.12 TOILET
15.13 ADA TOILET
15.14 ADA URINAL
15.15 ADA LAV
15.16 ADA SHOWER
15.17 ADA ELECTRIC DRINKING FOUNTAIN
15.18 FLOOR DRAIN
15.19 STORM DRAIN
15.20 ROOF DRAIN
15.21 MECHANICAL UNIT
15.22 MECHANICAL DIFFUSER
15.23 MECHANICAL RETURN AIR GRILLE
15.24 MECHANICAL EXHAUST FAN GRILLE
15.25 MECHANICAL EXPOSED DUCT
15.26 MECH EXPOSED DUCT SUPPORT
15.27 ROOF & OVERFLOW DRAIN SEE E5/AE504
15.28 MECHANICAL DUCT
15.29 LAMBS TONGUE
15.30 SUMP PUMP
15.31 DRINKING FOUNTAIN
15.32 AREA DRAIN
15.33 MECHANICAL DUCT BELOW GRADE
15.34 MECHANICAL LOUVER

DIVISION 16 ELECTRICAL
16.1 ELECTRIC LIGHT
16.2 ELECTRIC PANEL
16.3 ELECTRIC TRANSFORMER
16.4 HORN/STROBE, REF: ELECT.
16.5 EMERGENCY LIGHTING, REF: ELECT.
16.6 DUPLEX OUTLET, REF: ELECT.
16.7 DATA OUTLET, REF. ELECT.
16.8 CABLE TRAY SEE EP DWGS
16.9 EXIT LIGHT SEE EL DWGS
16.10 HIGH VOLTAGE SWITCH
16.11 COMMUNICATION BOX
16.12 ADA DOOR ACTUATOR POST
16.13 ADA DOOR ACTUATOR PANEL
16.14 GENERATOR
16.15 FIRE GONG
16.16 UNDERCABINET LIGHT

GENERAL NOTES
1. AT BRICK VENEER, PROVIDE SOLID BRICKS WHERE TOP OR BOTTOM SURFACE IS EXPOSED BY 1" OR MORE.

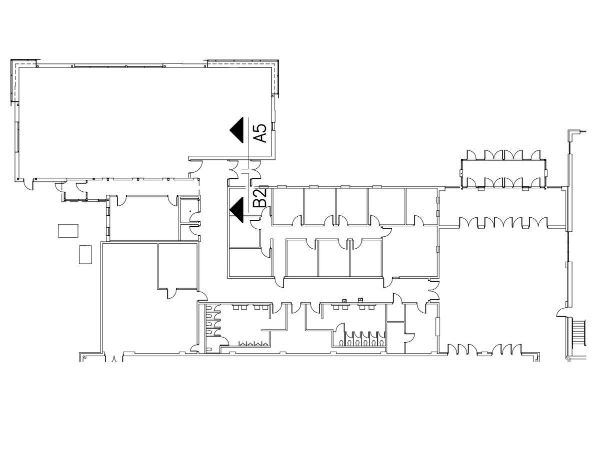

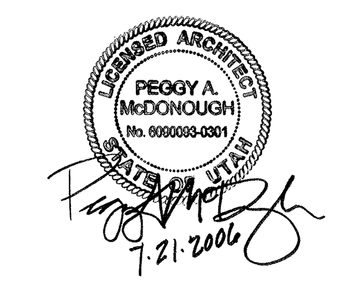

GouldEvans

©2002 Gould Evans Associates, L.C.
1000 South Main Street • Suite 100
Salt Lake City, Utah 84101
Voice 801.532.6100
Fax 801.532.6102
www.gouldevans.com
kansas city • lawrence • phoenix
salt lake city • san antonio • tampa

DFCM PROJECT NO: 05266700
STATE PROPERTY ID: 01791
RISK MANAGEMENT NO:
CAD PROJECT NO:
CAD DWG FILE:
DRAWN BY:
CHECKED BY:
COPYRIGHT: STATE OF UTAH

snow college
activities center
dance studio addition | remodel
ephraim, utah

REVISION	DATE

Project no: 0906-0260
Date: July 21, 2006
Sheet:

Wall Section and Details

AE314

100% Construction Documents

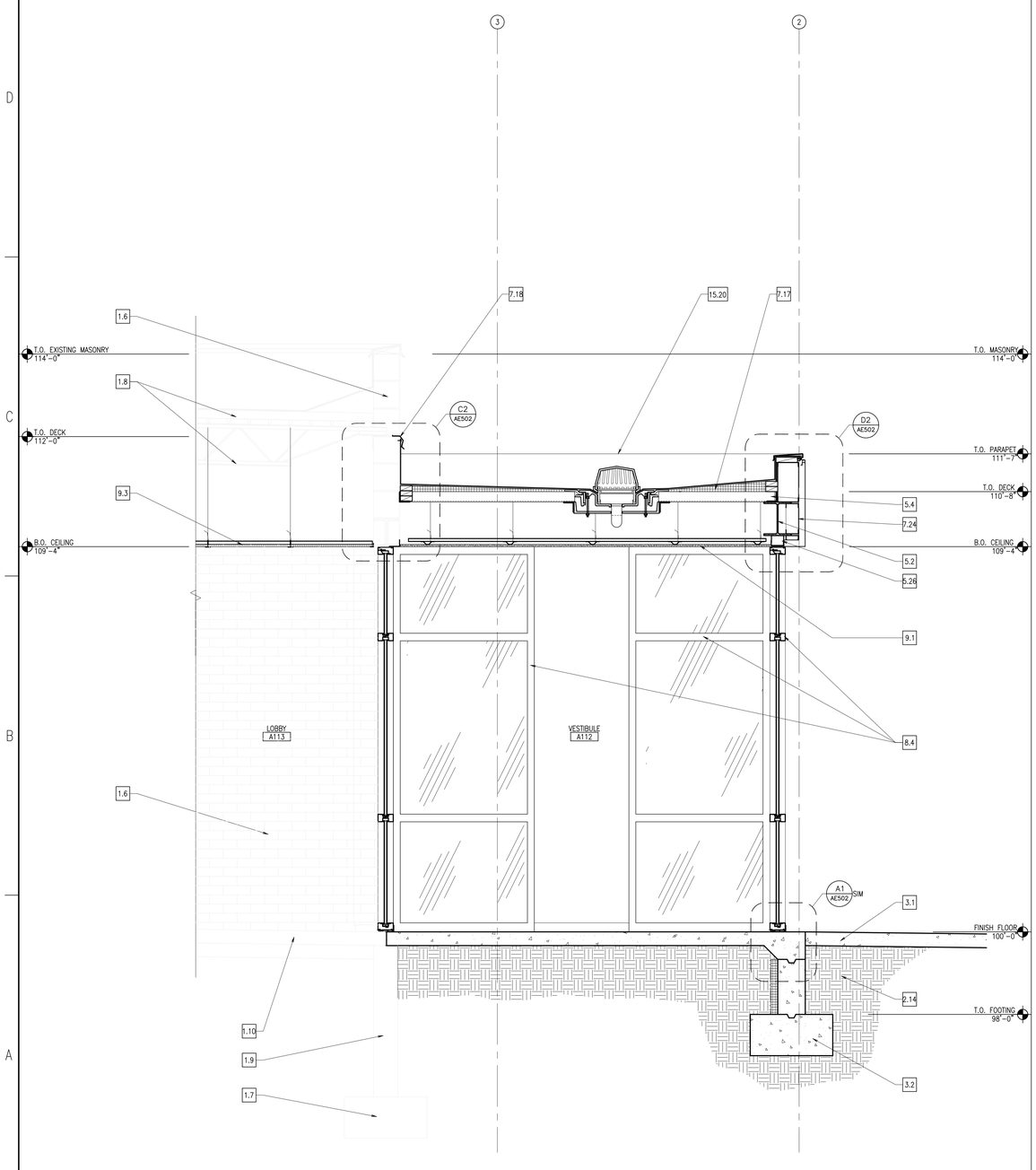

Wall Section **A3**
3/4" = 1'-0"

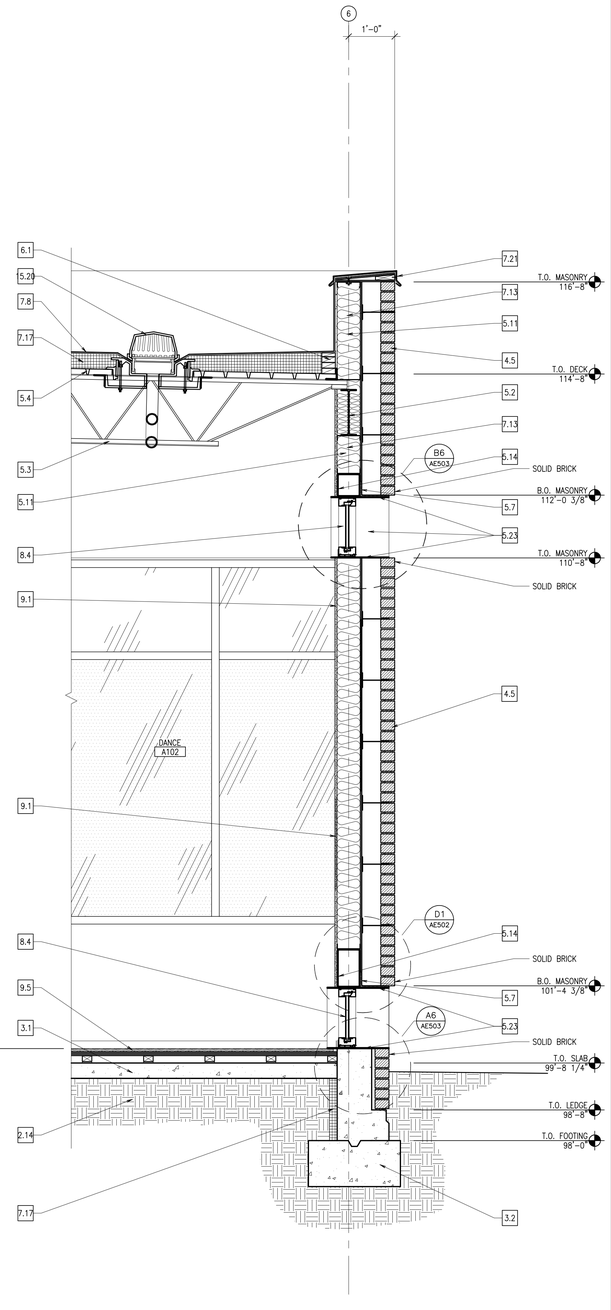

Wall Section **A5**
3/4" = 1'-0"

DIVISION 1 – GENERAL NOTES
1.1 FINISH FLOOR
1.2 FINISH GRADE
1.3 LINE OF BUILDING ABOVE
1.4 EDGE OF WALL BELOW
1.5 UTILITY TUNNEL
1.6 EXISTING WALL
1.7 EXISTING FOOTING
1.8 EXISTING BUILDING
1.9 EXISTING FOUNDATION WALL
1.10 EXISTING CONCRETE SLAB

DIVISION 2 – SITE WORK
2.1 EXISTING LIGHT POLE W/ OVERHEAD POWER TO REMAIN
2.2 EXISTING ASPHALT PAVING TO REMAIN
2.3 EXISTING CONCRETE SIDEWALK TO REMAIN
2.4 EXISTING CURB TO REMAIN
2.5 EXISTING SEWER LINE TO REMAIN
2.6 EXISTING POWER POLE W/ UNDERGROUND POWER LINE TO REMAIN
2.7 EXISTING SEWER MANHOLE TO REMAIN
2.8 EXISTING 4" CLEAN OUT TO REMAIN
2.9 EXISTING CATCH BASIN TO REMAIN
2.10 EXISTING FIRE HYDRANT TO REMAIN
2.11 EXISTING LANDSCAPING TO REMAIN
2.12 EXISTING TREE TO REMAIN; FULLY PROTECTED
2.13 EXISTING GUTTER TO REMAIN
2.14 COMPACTED FILL
2.15 NEW CONCRETE PAVING
2.16 LINE OF NEW CONCRETE PAVING
2.17 EXISTING PARKING STALLS TO REMAIN
2.18 EXISTING FENCE TO REMAIN
2.19 NEW SUMP
2.20 EXISTING STONE SIGNAGE RELOCATED FROM OLD GYMNASIUM – COORDINATE WITH OWNER.
2.21 NEW CONCRETE STAIRS – SEE ENLARGED PLANS FOR DIMENSIONS
2.22 NEW CONCRETE CURB
2.23 EXISTING HIGH VOLTAGE SWITCHGEAR TO REMAIN
2.24 EXISTING 500 KVA TRANSFORMER
2.25 EXISTING CONCRETE STAIRS TO REMAIN
2.26 HANDICAP ACCESSIBLE PARKING STALL
2.27 HANDICAP ACCESSIBLE AISLE
2.28 HANDICAP ACCESSIBLE PARKING SIGN
2.29 NEW GAS METER
2.30 NEW STORM DRAIN LINE
2.31 EXISTING STORM DRAIN LINE TO REMAIN
2.32 EXISTING GAS METER TO REMAIN
2.33 EXISTING GAS LINE TO REMAIN
2.34 NEW GAS LINE TO BE CONNECTED TO EXISTING GAS LINE
2.35 EXISTING WATER LINE
2.36 NEW WATER LINE
2.37 NEW BIKE RACK
2.38 GRAVEL MULCH TO BE ¾" "SILVER NICKEL" PLACED 3" DEEP OVER WEED BARRIER
2.39 NEW CONCRETE 12" WIDE MOW STRIP, SEE DETAIL A1/AS110
2.40 GRAVEL MULCH TO BE PEA GRAVEL PLACED 3" DEEP OVER WEED BARRIER
2.41 NEW TURF
2.42 NEW TREE – SEE PLANTING PLAN
2.43 NEW PLANT – SEE PLANTING PLAN
2.44 CONCRETE BENCH. BRAND: "MATERIALS, INC." STYLE: "GOTHIC" OR SIMILAR. ALT BRAND & STYLE ACCEPTABLE W/PRIOR APPROVAL.

DIVISION 3 – CONCRETE
3.1 4" CONCRETE SLAB
3.2 CONCRETE FOOTING
3.3 NOT USED
3.4 CONCRETE ON STEEL DECK
3.5 CONC EQUIPMENT PAD
3.6 CAST IN PLACE CONCRETE
3.7 CONCRETE RETAINING WALL

DIVISION 4 – MASONRY
4.1 NOT USED
4.2 MASONRY CONTROL JOINT
4.3 NOT USED
4.4 NOT USED
4.5 STANDARD BRICK VENEER, COLOR AS SELECTED BY ARCHITECT
4.6 EXISTING MASONRY, CLEANED AND SEALED

DIVISION 5 – METALS
5.1 STEEL COLUMN; REF STRUCT. DWG
5.2 STEEL BEAM; REF STRUCT. DWGS
5.3 STEEL JOIST; REF STRUCT. DWGS
5.4 STEEL ROOF DECK
5.5 STEEL LADDER
5.6 4" STRUCT STL STUDS @ 16" O.C.
5.7 STEEL ANGLE
5.8 STEEL CHANNEL
5.9 HORIZONTAL STEEL JOIST BRIDGING
5.10 1 1/2"ø ALUMINUM PIPE HANDRAIL
5.11 6" STRUCT STL STUDS @16" OC
5.12 3 5/8" STRUCT STL STUDS @16" OC
5.13 STEEL PLATE
5.14 STEEL TUBE, REF STRUCT. DWG
5.15 1 1/2"ø ALUMINUM PIPE VERTICAL SUPPORTS
5.16 1 1/2" STRUCT STL STUDS @ 16" O.C.
5.17 EXPOSED STEEL COLUMN; REF STRUCT. DWGS; PAINT, COLOR BY ARCH.
5.18 EXPOSED STEEL BEAM; REF STRUCT. DWGS; PAINT, COLOR BY ARCH.
5.19 2" STRUCT STL STUDS @ 16" OC
5.20 2-1/2" STRUCT STL STUDS @ 16" OC
5.21 EXPOSED STEEL JOIST; REF STRUCT. DWGS; PAINT, COLOR BY ARCH.
5.22 ALUMINUM ANGLE
5.23 ALUMINUM PLATE
5.24 ⅞" HAT CHANNELS
5.25 1 1/2"ø ALUMINUM PIPE GUARDRAIL
5.26 3-⅜" STL STUD SLIP TRACK SYSTEM W/ 2" LEG ON TOP TRACK AND 1-½" SLOT.

DIVISION 6 – WOOD AND PLASTICS
6.1 WOOD BLOCKING OR BACKING PLATE 16 GA X 6" HIGH FOR INTERIOR ARCHITECTURAL WOODWORK, HARDWARE, TOILET COMPARTMENTS, BATH ACCESSORIES, ETC
6.2 PLASTIC LAMINATE COUNTERTOP
6.3 NOT USED
6.4 ACRYLIC PANEL
6.5 PLASTIC LAMINATE MILLWORK
6.6 MAPLE CHAIR RAIL, SEE E5/AE504

DIVISION 7 THERMAL & MOISTURE PROTECTION
7.1 RIDGE
7.2 VALLEY, MIN SLOPE 3/16" PER LINEAL FT
7.3 CRICKET, MIN. SLOPE 1/4" PER FOOT AT VALLEY, FORM W/ TAPERED RIGID BD. INSULATION
7.4 ROOF HATCH
7.5 ROOF CURB. SEE DETAIL C2/AE504.
7.6 ROOF DRAIN & OVERFLOW DRAIN
7.7 TYPICAL PIPE/CONDUIT PENETRATION

DIVISION 7 CONT'D THERMAL & MOISTURE PROTECTION
7.8 SINGLE PLY ROOF MEMBRANE MECHANICALLY FASTENED OVER MIN 4" TAPERED RIGID INSULATION SLOPED TO DRAIN 1/4"/FT MIN
7.9 1" EXPANSION JOINT
7.10 ROOF SCUPPER
7.11 SEALANT
7.12 R-11 BATTS, FACED MINERAL-FIBER BLANKET INSULATION
7.13 R-19 BATTS, FACED MINERAL-FIBER BLANKET INSULATION
7.14 NOT USED
7.15 FIRE SAFING INSULATION
7.16 NOT USED
7.17 RIGID INSULATION
7.18 METAL REGLET & COUNTER FLASHING
7.19 METAL FASCIA
7.20 METAL CLOSURE
7.21 PRE-FINISHED METAL COPING; COLOR BY ARCH. FROM MANUF. FULL RANGE
7.22 COMPOSITE SHEET WATERPROOFING
7.23 NOT USED
7.24 2" INSULATED METAL PANEL SYSTEM, COLOR BY ARCHITECT
7.25 EXISTING METAL COPING TO REMAIN

DIVISION 8 DOORS & WINDOWS
8.1 HOLLOW METAL DOOR & FRAME
8.2 FLUSH WOOD DOOR
8.3 ACCESS DOOR
8.4 ANODIZED ALUM. STOREFRONT WINDOW
8.5 ANODIZED ALUM. STOREFRONT DOOR AND FRAME
8.6 1" INSULATED GLASS SET IN ALUM. CURTAIN WALL FRAME
8.7 1" INSULATED SANDBLASTED GLASS SET IN ALUM. CURTAIN WALL FRAME
8.8 1" INSULATED SANDBLASTED GLASS SET IN ANODIZED ALUMINUM STOREFRONT
8.9 BUTT GLAZING
8.10 MIRROR
8.11 1/2" TEMPERED SAFETY GLASS W/ SAND BLASTED FINISH
8.12 ADA AUTOMATIC DOOR
8.13 ALUM. STOREFRONT SYSTEM RELOCATED FROM EXISTING VESTIBULE. SEE SHEET AD101ALT.
8.14 1/2" TEMPERED SAFETY GLASS
8.15 ALUM. STOREFRONT SYSTEM

DIVISION 9 FINISHES
9.1 GYP BOARD, PAINT – COLOR BY ARCH.
9.2 CERAMIC TILE
9.3 ACOUSTICAL PANEL CEILING
9.4 NOT USED
9.5 RESILIENT MNTD. HARDWOOD FLOOR
9.6 NOT USED
9.7 RUBBER BASE
9.8 CERAMIC TILE BASE
9.9 VINYL COMPOSITION TILE
9.10 CARPET

DIVISION 10 SPECIALITIES
10.1 36" GRAB BAR
10.2 WHITE BOARD; PROVIDE BLKG
10.3 TOILET PAPER DISPENSER
10.4 SIGN – MAXIMUM OCCUPANT LOAD
10.5 FIRE EXT.; RECESSED CABINET
10.6 42" GRAB BAR
10.7 MARKER BOARD
10.8 OWNER SUPPLIED SIGN IDENTIFYING LOCATION OF UNISEX RESTROOM
10.9 BULLETIN BOARD

DIVISION 11 EQUIPMENT
11.1 AV EQUIPMENT SEE AV DWGS
11.2 AV PANEL SEE AV DWGS
11.3 SPEAKER, N.I.C.
11.4 AV FLOOR POCKET
11.5 ADJUSTABLE BALLET BARRE

DIVISION 15 MECHANICAL
15.1 FIRE CONNECTION
15.2 MECHANICAL ROOF HOOD
15.3 MECHANICAL EXHAUST FAN
15.4 MECHANICAL CONDENSING UNIT
15.5 FIRE SPRINKLER MAIN SHOWN FOR COORDINATION ONLY; CONTRACTOR TO PROVIDE SHOP DWGS PER SPEC & CODE
15.6 NOT USED
15.7 WATER METER RE: CIVIL, PLUMB. DWGS
15.8 GAS METER RE: PLUMB. DWGS
15.9 NOT USED
15.10 SINK, REF: PLUMB. DWGS
15.11 SUMP PUMP BELOW GRADE
15.12 TOILET
15.13 ADA TOILET
15.14 ADA URINAL
15.15 ADA LAV
15.16 ADA SHOWER
15.17 ADA ELECTRIC DRINKING FOUNTAIN
15.18 FLOOR DRAIN
15.19 STORM DRAIN
15.20 ROOF DRAIN
15.21 MECHANICAL UNIT
15.22 MECHANICAL DIFFUSER
15.23 MECHANICAL RETURN AIR GRILLE
15.24 MECHANICAL EXHAUST FAN GRILLE
15.25 MECHANICAL EXPOSED DUCT
15.26 MECH EXPOSED DUCT SUPPORT
15.27 ROOF & OVERFLOW DRAIN SEE E5/AE504
15.28 MECHANICAL DUCT
15.29 LAMBS TONGUE
15.30 SUMP PUMP
15.31 DRINKING FOUNTAIN
15.32 AREA DRAIN
15.33 MECHANICAL DUCT BELOW GRADE
15.34 MECHANICAL LOUVER

DIVISION 16 ELECTRICAL
16.1 ELECTRIC LIGHT
16.2 ELECTRIC PANEL
16.3 ELECTRIC TRANSFORMER
16.4 HORN/STROBE, REF: ELECT.
16.5 EMERGENCY LIGHTING, REF: ELECT.
16.6 DUPLEX OUTLET, REF: ELECT.
16.7 DATA OUTLET, REF. ELECT.
16.8 CABLE TRAY SEE EP DWGS
16.9 EXIT LIGHT SEE EL DWGS
16.10 HIGH VOLTAGE SWITCH
16.11 COMMUNICATION BOX
16.12 ADA DOOR ACTUATOR POST
16.13 ADA DOOR ACTUATOR PANEL
16.14 GENERATOR
16.15 FIRE GONG
16.16 UNDERCABINET LIGHT

GENERAL NOTES
1. AT BRICK VENEER, PROVIDE SOLID BRICKS WHERE TOP OR BOTTOM SURFACE IS EXPOSED BY 1" OR MORE.

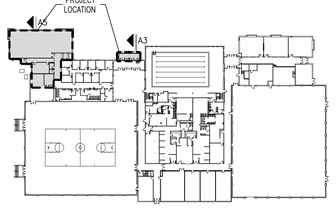

Key Plan **A6**
N.T.S.

LICENSED ARCHITECT
PEGGY A. McDONOUGH
No. 6006020-0301
STATE OF UTAH
7-21-2006

GouldEvans
©2002 Gould Evans Associates, L.C.
1000 South Main Street • Suite 100
Salt Lake City, Utah 84101
Voice 801.532.6100
Fax 801.532.6102
www.gouldevans.com
kansas city • lawrence • phoenix
salt lake city • san antonio • tampa

DFCM PROJECT NO: 05266700
STATE PROPERTY ID: 01791
RISK MANAGEMENT NO:
CAD PROJECT NO:
CAD DWG FILE:
DRAWN BY:
CHECKED BY:
COPYRIGHT: STATE OF UTAH

snow college activities center
dance studio addition | remodel
ephraim, utah

REVISION	DATE

Project no: 0906-0260
Date: July 21, 2006
Sheet:

Wall Sections
AE315

100% Construction Documents

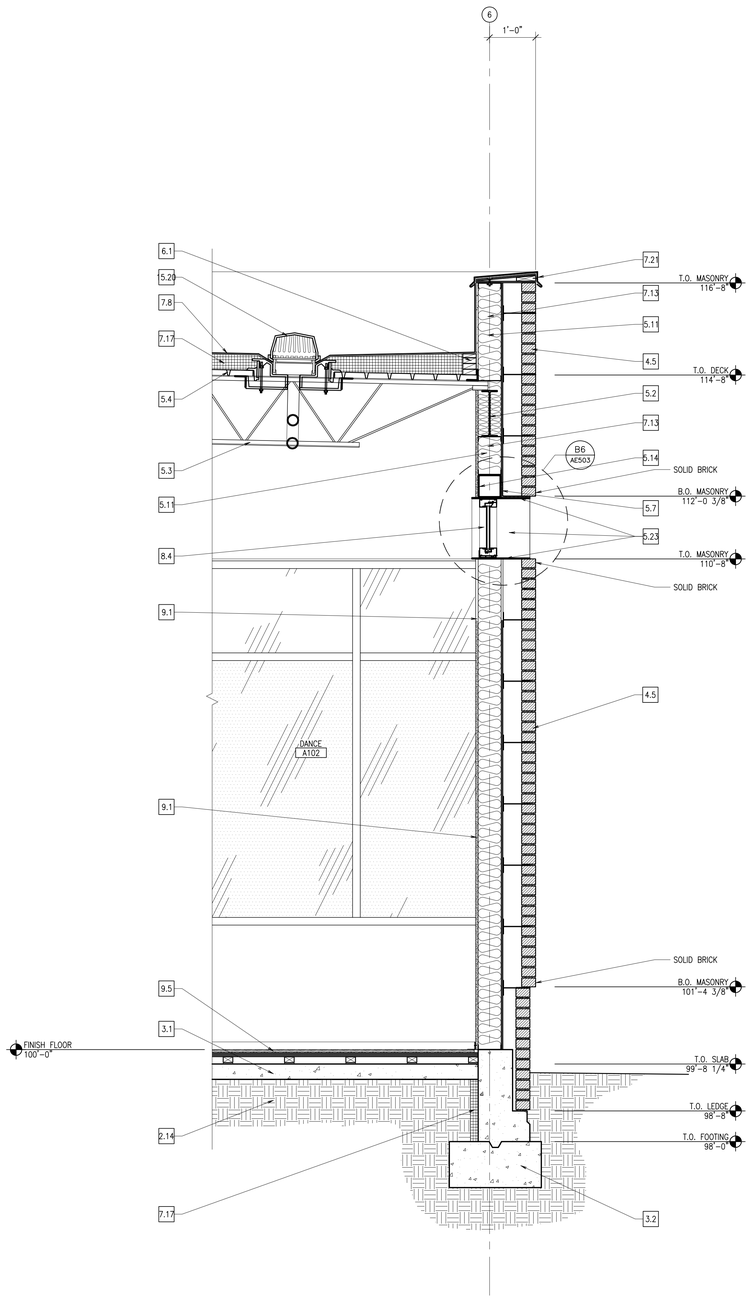

Wall Section **A3**
3/4" = 1'-0"

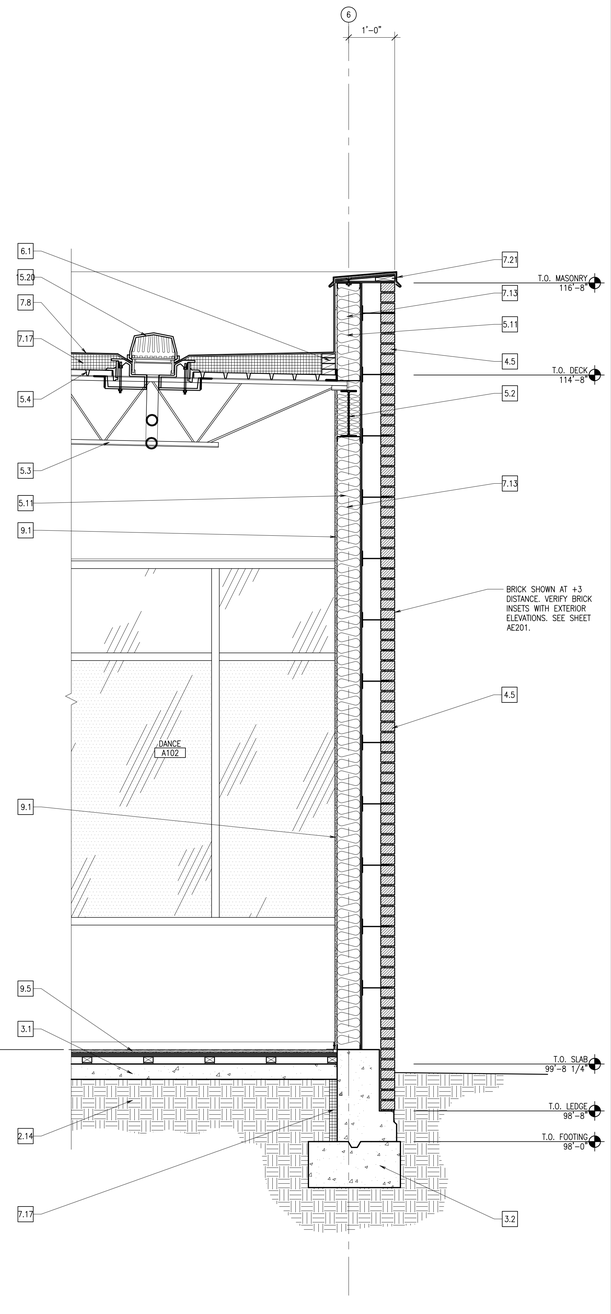

Wall Section **A5**
3/4" = 1'-0"

DIVISION 1 – GENERAL NOTES
1.1 FINISH FLOOR
1.2 FINISH GRADE
1.3 LINE OF BUILDING ABOVE
1.4 EDGE OF WALL BELOW
1.5 UTILITY TUNNEL
1.6 EXISTING WALL
1.7 EXISTING FOOTING
1.8 EXISTING BUILDING
1.9 EXISTING FOUNDATION WALL
1.10 EXISTING CONCRETE SLAB

DIVISION 2 – SITE WORK
2.1 EXISTING LIGHT POLE W/ OVERHEAD POWER TO REMAIN
2.2 EXISTING ASPHALT PAVING TO REMAIN
2.3 EXISTING CONCRETE SIDEWALK TO REMAIN
2.4 EXISTING CURB TO REMAIN
2.5 EXISTING SEWER LINE TO REMAIN
2.6 EXISTING POWER POLE W/ UNDERGROUND POWER LINE TO REMAIN
2.7 EXISTING SEWER MANHOLE TO REMAIN
2.8 EXISTING 4" CLEAN OUT TO REMAIN
2.9 EXISTING CATCH BASIN TO REMAIN
2.10 EXISTING FIRE HYDRANT TO REMAIN
2.11 EXISTING LANDSCAPING TO REMAIN
2.12 EXISTING TREE TO REMAIN; FULLY PROTECTED
2.13 EXISTING GUTTER TO REMAIN
2.14 COMPACTED FILL
2.15 NEW CONCRETE PAVING
2.16 LINE OF NEW CONCRETE PAVING
2.17 EXISTING PARKING STALLS TO REMAIN
2.18 EXISTING FENCE TO REMAIN
2.19 NEW SUMP
2.20 EXISTING STONE SIGNAGE RELOCATED FROM OLD GYMNASIUM – COORDINATE WITH OWNER.
2.21 NEW CONCRETE STAIRS – SEE ENLARGED PLANS FOR DIMENSIONS
2.22 NEW CONCRETE CURB
2.23 EXISTING HIGH VOLTAGE SWITCHGEAR TO REMAIN
2.24 EXISTING 500 KVA TRANSFORMER
2.25 EXISTING CONCRETE STAIRS TO REMAIN
2.26 HANDICAP ACCESSIBLE PARKING STALL
2.27 HANDICAP ACCESSIBLE AISLE
2.28 HANDICAP ACCESSIBLE PARKING SIGN
2.29 NEW GAS METER
2.30 NEW STORM DRAIN LINE
2.31 EXISTING STORM DRAIN LINE TO REMAIN
2.32 EXISTING GAS METER TO REMAIN
2.33 EXISTING GAS LINE TO REMAIN
2.34 NEW GAS LINE TO BE CONNECTED TO EXISTING GAS LINE
2.35 EXISTING WATER LINE
2.36 NEW WATER LINE
2.37 NEW BIKE RACK
2.38 GRAVEL MULCH TO BE ¾" "SILVER NICKEL" PLACED 3" DEEP OVER WEED BARRIER
2.39 NEW CONCRETE 12" WIDE MOW STRIP, SEE DETAIL A1/AS110
2.40 GRAVEL MULCH TO BE PEA GRAVEL PLACED 3" DEEP OVER WEED BARRIER
2.41 NEW TURF
2.42 NEW TREE – SEE PLANTING PLAN
2.43 NEW PLANT – SEE PLANTING PLAN
2.44 CONCRETE BENCH. BRAND: "MATERIALS, INC." STYLE: "GOTHIC" OR SIMILAR. ALT BRAND & STYLE ACCEPTABLE W/PRIOR APPROVAL.

DIVISION 3 – CONCRETE
3.1 4" CONCRETE SLAB
3.2 CONCRETE FOOTING
3.3 NOT USED
3.4 CONCRETE ON STEEL DECK
3.5 CONC EQUIPMENT PAD
3.6 CAST IN PLACE CONCRETE
3.7 CONCRETE RETAINING WALL

DIVISION 4 – MASONRY
4.1 NOT USED
4.2 MASONRY CONTROL JOINT
4.3 NOT USED
4.4 NOT USED
4.5 STANDARD BRICK VENEER, COLOR AS SELECTED BY ARCHITECT
4.6 EXISTING MASONRY, CLEANED AND SEALED

DIVISION 5 – METALS
5.1 STEEL COLUMN; REF STRUCT. DWG
5.2 STEEL BEAM; REF STRUCT. DWGS
5.3 STEEL JOIST; REF STRUCT. DWGS
5.4 STEEL ROOF DECK
5.5 STEEL LADDER
5.6 4" STRUCT STL STUDS @ 16" O.C.
5.7 STEEL ANGLE
5.8 STEEL CHANNEL
5.9 HORIZONTAL STEEL JOIST BRIDGING
5.10 1 1/2"ø ALUMINUM PIPE HANDRAIL
5.11 6" STRUCT STL STUDS @16" OC
5.12 3 5/8" STRUCT STL STUDS @16" OC
5.13 STEEL PLATE
5.14 STEEL TUBE, REF STRUCT. DWG
5.15 1 1/2"ø ALUMINUM PIPE VERTICAL SUPPORTS
5.16 1 1/2" STRUCT STL STUDS @ 16" O.C.
5.17 EXPOSED STEEL COLUMN; REF STRUCT. DWGS; PAINT, COLOR BY ARCH.
5.18 EXPOSED STEEL BEAM; REF STRUCT. DWGS; PAINT, COLOR BY ARCH.
5.19 2" STRUCT STL STUDS @ 16" OC
5.20 2-1/2" STRUCT STL STUDS @ 16" OC
5.21 EXPOSED STEEL JOIST; REF STRUCT. DWGS; PAINT, COLOR BY ARCH.
5.22 ALUMINUM ANGLE
5.23 ALUMINUM PLATE
5.24 ⅞" HAT CHANNELS
5.25 1 1/2"ø ALUMINUM PIPE GUARDRAIL
5.26 3-⅜" STL STUD SLIP TRACK SYSTEM W/ 2" LEG ON TOP TRACK AND 1-½" SLOT.

DIVISION 6 – WOOD AND PLASTICS
6.1 WOOD BLOCKING OR BACKING PLATE 16 GA X 6" HIGH FOR INTERIOR ARCHITECTURAL WOODWORK, HARDWARE, TOILET COMPARTMENTS, BATH ACCESSORIES, ETC
6.2 PLASTIC LAMINATE COUNTERTOP
6.3 NOT USED
6.4 ACRYLIC PANEL
6.5 PLASTIC LAMINATE MILLWORK
6.6 MAPLE CHAIR RAIL, SEE E5/AE504

DIVISION 7 THERMAL & MOISTURE PROTECTION
7.1 RIDGE
7.2 VALLEY, MIN SLOPE 3/16" PER LINEAL FT
7.3 CRICKET, MIN. SLOPE 1/4" PER FOOT AT VALLEY, FORM W/ TAPERED RIGID BD. INSULATION
7.4 ROOF HATCH
7.5 ROOF CURB. SEE DETAIL C2/AE504.
7.6 ROOF DRAIN & OVERFLOW DRAIN
7.7 TYPICAL PIPE/CONDUIT PENETRATION

DIVISION 7 CONT'D THERMAL & MOISTURE PROTECTION
7.8 SINGLE PLY ROOF MEMBRANE MECHANICALLY FASTENED OVER MIN 4" TAPERED RIGID INSULATION SLOPED TO DRAIN 1/4"/FT MIN
7.9 1" EXPANSION JOINT
7.10 ROOF SCUPPER
7.11 SEALANT
7.12 R-11 BATTS, FACED MINERAL-FIBER BLANKET INSULATION
7.13 R-19 BATTS, FACED MINERAL-FIBER BLANKET INSULATION
7.14 NOT USED
7.15 FIRE SAFING INSULATION
7.16 NOT USED
7.17 RIGID INSULATION
7.18 METAL REGLET & COUNTER FLASHING
7.19 METAL FASCIA
7.20 METAL CLOSURE
7.21 PRE-FINISHED METAL COPING; COLOR BY ARCH. FROM MANUF. FULL RANGE
7.22 COMPOSITE SHEET WATERPROOFING
7.23 NOT USED
7.24 2" INSULATED METAL PANEL SYSTEM, COLOR BY ARCHITECT
7.25 EXISTING METAL COPING TO REMAIN

DIVISION 8 DOORS & WINDOWS
8.1 HOLLOW METAL DOOR & FRAME
8.2 FLUSH WOOD DOOR
8.3 ACCESS DOOR
8.4 ANODIZED ALUM. STOREFRONT WINDOW
8.5 ANODIZED ALUM. STOREFRONT DOOR AND FRAME
8.6 1" INSULATED GLASS SET IN ALUM. CURTAIN WALL FRAME
8.7 1" INSULATED SANDBLASTED GLASS SET IN ALUM. CURTAIN WALL FRAME
8.8 1" INSULATED SANDBLASTED GLASS SET IN ANODIZED ALUMINUM STOREFRONT
8.9 BUTT GLAZING
8.10 MIRROR
8.11 1/2" TEMPERED SAFETY GLASS W/ SAND BLASTED FINISH
8.12 ADA AUTOMATIC DOOR
8.13 ALUM. STOREFRONT SYSTEM RELOCATED FROM EXISTING VESTIBULE. SEE SHEET AD101ALT.
8.14 1/2" TEMPERED SAFETY GLASS
8.15 ALUM. STOREFRONT SYSTEM

DIVISION 9 FINISHES
9.1 GYP BOARD, PAINT – COLOR BY ARCH.
9.2 CERAMIC TILE
9.3 ACOUSTICAL PANEL CEILING
9.4 NOT USED
9.5 RESILIENT MNTD. HARDWOOD FLOOR
9.6 NOT USED
9.7 RUBBER BASE
9.8 CERAMIC TILE BASE
9.9 VINYL COMPOSITION TILE
9.10 CARPET

DIVISION 10 SPECIALITIES
10.1 36" GRAB BAR
10.2 WHITE BOARD; PROVIDE BLKG
10.3 TOILET PAPER DISPENSER
10.4 SIGN – MAXIMUM OCCUPANT LOAD
10.5 FIRE EXT.; RECESSED CABINET
10.6 42" GRAB BAR
10.7 MARKER BOARD
10.8 OWNER SUPPLIED SIGN IDENTIFYING LOCATION OF UNISEX RESTROOM
10.9 BULLETIN BOARD

DIVISION 11 EQUIPMENT
11.1 AV EQUIPMENT SEE AV DWGS
11.2 AV PANEL SEE AV DWGS
11.3 SPEAKER, N.I.C.
11.4 AV FLOOR POCKET
11.5 ADJUSTABLE BALLET BARRE

DIVISION 15 MECHANICAL
15.1 FIRE CONNECTION
15.2 MECHANICAL ROOF HOOD
15.3 MECHANICAL EXHAUST FAN
15.4 MECHANICAL CONDENSING UNIT
15.5 FIRE SPRINKLER MAIN SHOWN FOR COORDINATION ONLY; CONTRACTOR TO PROVIDE SHOP DWGS PER SPEC & CODE
15.6 NOT USED
15.7 WATER METER RE: CIVIL, PLUMB. DWGS
15.8 GAS METER RE: PLUMB. DWGS
15.9 NOT USED
15.10 SINK, REF: PLUMB. DWGS
15.11 SUMP PUMP BELOW GRADE
15.12 TOILET
15.13 ADA TOILET
15.14 ADA URINAL
15.15 ADA LAV
15.16 ADA SHOWER
15.17 ADA ELECTRIC DRINKING FOUNTAIN
15.18 FLOOR DRAIN
15.19 STORM DRAIN
15.20 ROOF DRAIN
15.21 MECHANICAL UNIT
15.22 MECHANICAL DIFFUSER
15.23 MECHANICAL RETURN AIR GRILLE
15.24 MECHANICAL EXHAUST FAN GRILLE
15.25 MECHANICAL EXPOSED DUCT
15.26 MECH EXPOSED DUCT SUPPORT
15.27 ROOF & OVERFLOW DRAIN SEE E5/AE504
15.28 MECHANICAL DUCT
15.29 LAMBS TONGUE
15.30 SUMP PUMP
15.31 DRINKING FOUNTAIN
15.32 AREA DRAIN
15.33 MECHANICAL DUCT BELOW GRADE
15.34 MECHANICAL LOUVER

DIVISION 16 ELECTRICAL
16.1 ELECTRIC LIGHT
16.2 ELECTRIC PANEL
16.3 ELECTRIC TRANSFORMER
16.4 HORN/STROBE, REF: ELECT.
16.5 EMERGENCY LIGHTING, REF: ELECT.
16.6 DUPLEX OUTLET, REF: ELECT.
16.7 DATA OUTLET, REF. ELECT.
16.8 CABLE TRAY SEE EP DWGS
16.9 EXIT LIGHT SEE EL DWGS
16.10 HIGH VOLTAGE SWITCH
16.11 COMMUNICATION BOX
16.12 ADA DOOR ACTUATOR POST
16.13 ADA DOOR ACTUATOR PANEL
16.14 GENERATOR
16.15 FIRE GONG
16.16 UNDERCABINET LIGHT

GENERAL NOTES
1. AT BRICK VENEER, PROVIDE SOLID BRICKS WHERE TOP OR BOTTOM SURFACE IS EXPOSED BY 1" OR MORE.

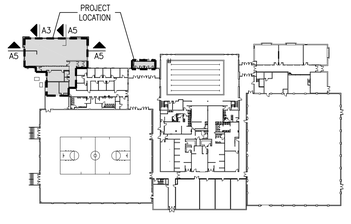

Key Plan **A6**
N.T.S.

LICENSED ARCHITECT
PEGGY A. McDONOUGH
No. 6006020-0301
STATE OF UTAH
7-21-2006

GouldEvans

©2002 Gould Evans Associates, L.C.
1000 South Main Street • Suite 100
Salt Lake City, Utah 84101
Voice 801.532.6100
Fax 801.532.6102
www.gouldevans.com

kansas city • lawrence • phoenix
salt lake city • san antonio • tampa

DFCM PROJECT NO: 05266700
STATE PROPERTY ID: 01791
RISK MANAGEMENT NO:
CAD PROJECT NO:
CAD DWG FILE:
DRAWN BY:
CHECKED BY:
COPYRIGHT: STATE OF UTAH

snow college activities center
dance studio addition | remodel
ephraim, utah

REVISION	DATE

Project no: 0906-0260
Date: July 21, 2006
Sheet:

Wall Sections
AE316

100% Construction Documents

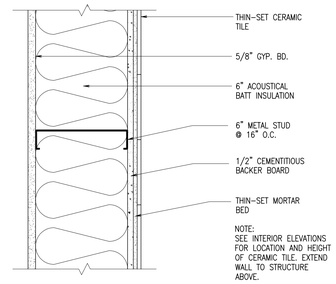

Wall Type **05**
3" = 1'-0"

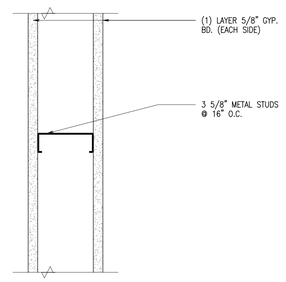

Wall Type **09**
3" = 1'-0"

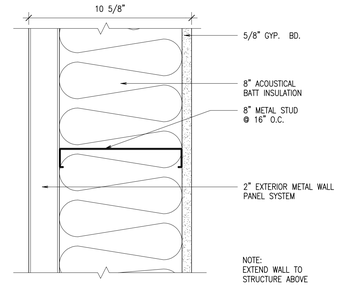

Wall Type **04**
3" = 1'-0"

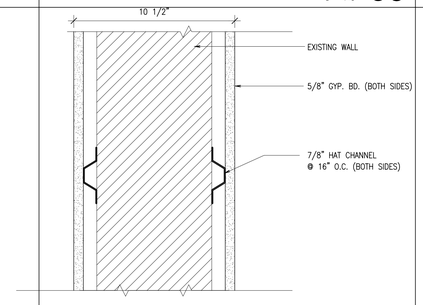

Wall Type **08**
3" = 1'-0"

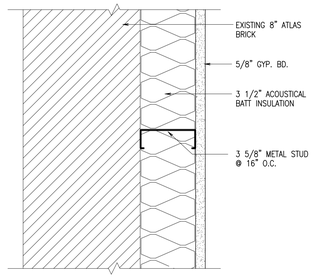

Wall Type **03**
3" = 1'-0"

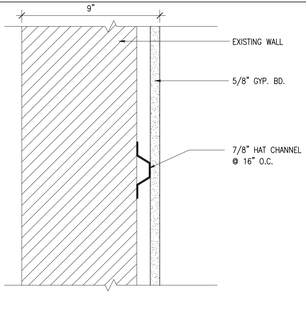

Wall Type **07**
3" = 1'-0"

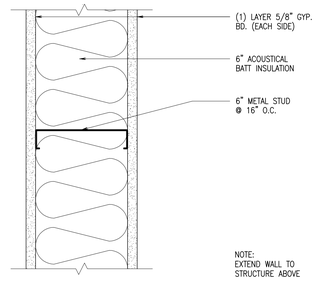

Wall Type **02**
3" = 1'-0"

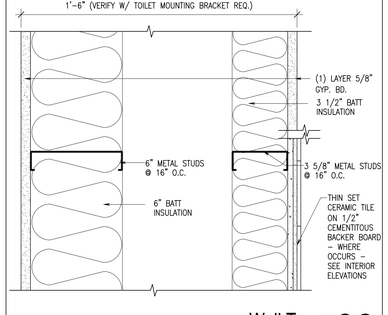

Wall Type **06**
3" = 1'-0"

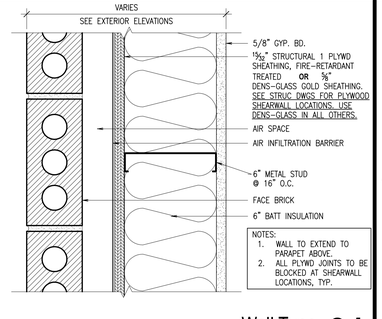

Wall Type **01**
3" = 1'-0"

LICENSED ARCHITECT
PEGGY A. McDONOUGH
No. 6000033-0301
STATE OF UTAH
7.21.2006

GouldEvans

©2002 Gould Evans Associates, L.C.
1000 South Main Street • Suite 100
Salt Lake City, Utah 84101
Voice 801.532.6100
Fax 801.532.6102
www.gouldevans.com
kansas city • lawrence • phoenix
salt lake city • san antonio • tampa

DFCM PROJECT NO: 05266700
STATE PROPERTY ID: 01791
RISK MANAGEMENT NO:
CAD PROJECT NO:
CAD DWG FILE:
DRAWN BY:
CHECKED BY:
COPYRIGHT: STATE OF UTAH

snow college
activities center
dance studio addition | remodel
ephraim, utah

REVISION	DATE

Project no: 0906-0260
Date: July 21, 2006
Sheet:

Wall Types
AE501

100% Construction Documents

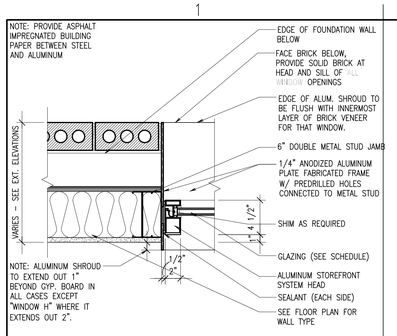

Jamb Detail E1

1" = 1'-0"

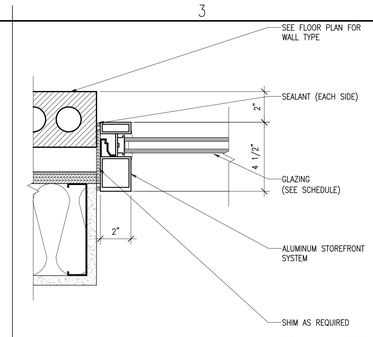

Jamb Detail E3

3" = 1'-0"

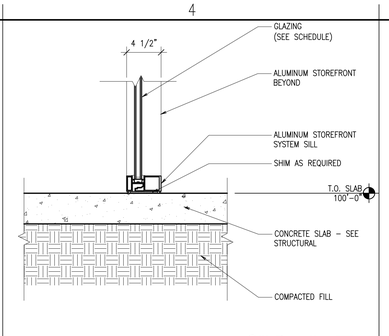

Sill Detail E4

1 1/2" = 1'-0"

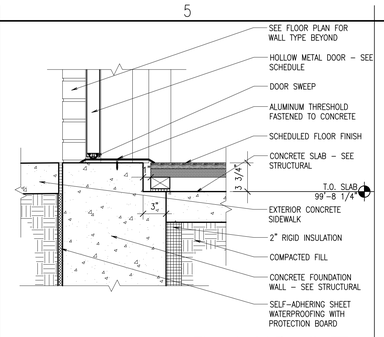

Threshold Detail E5

1 1/2" = 1'-0"

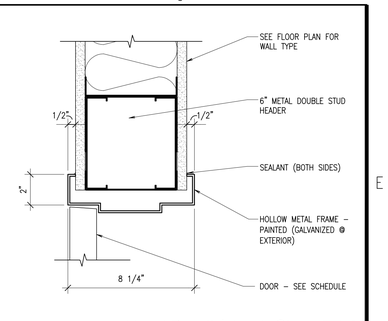

Head Detail / Jamb Sim. E6

3" = 1'-0"

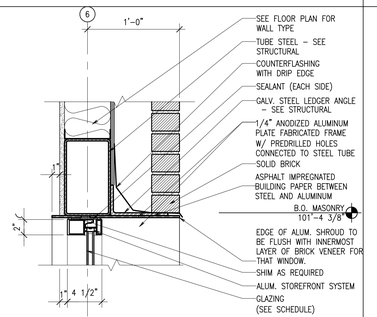

Head Detail D1

1 1/2" = 1'-0"

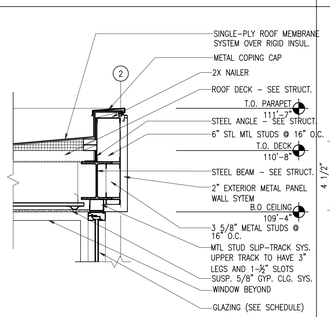

Parapet Detail D2

3/4" = 1'-0"

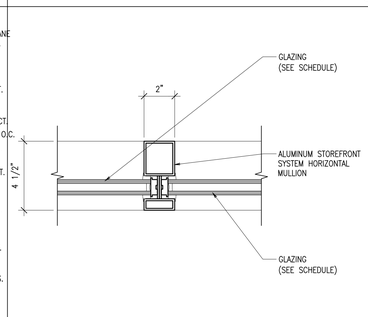

Storefront Vertical Mullion Detail D3

3" = 1'-0"

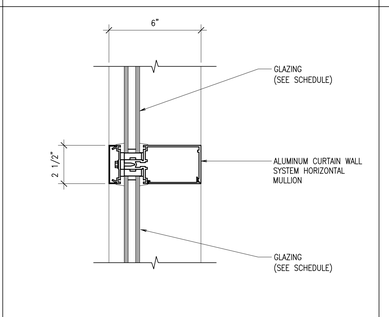

Curtain Wall Horizontal Mullion Detail D4

3" = 1'-0"

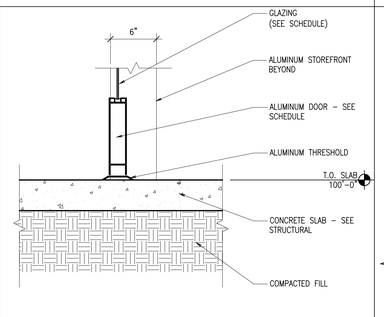

Threshold Detail D5

1 1/2" = 1'-0"

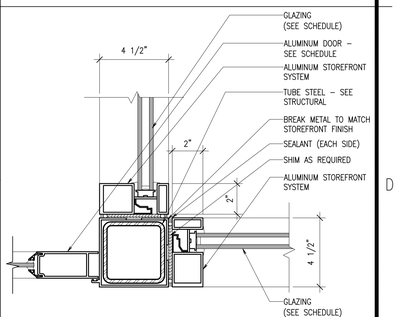

Jamb Detail D6

3" = 1'-0"

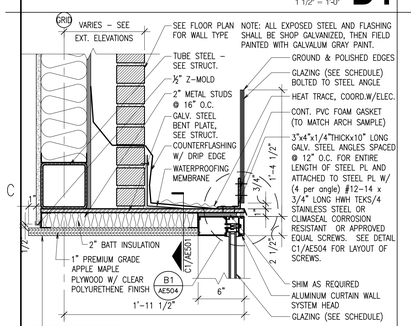

Head Detail / Jamb Sim. C1

1 1/2" = 1'-0"

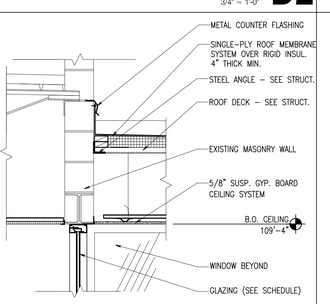

Existing Wall Connection Detail C2

1 1/2" = 1'-0"

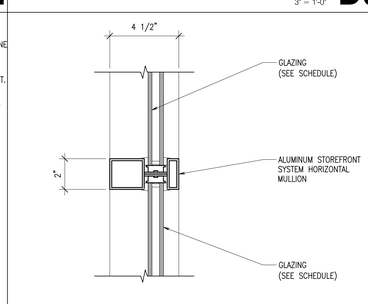

Storefront Horizontal Mullion Detail C3

3" = 1'-0"

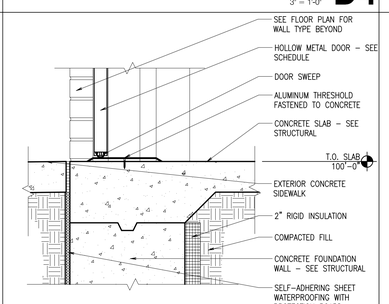

Threshold Detail C4

1 1/2" = 1'-0"

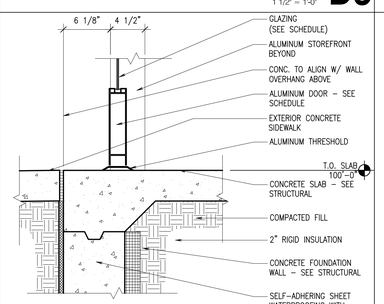

Threshold Detail C5

1 1/2" = 1'-0"

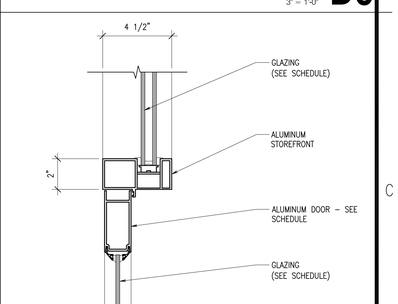

Head Detail / Jamb Sim. C6

3" = 1'-0"

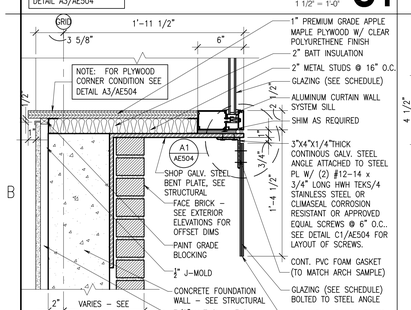

Sill Detail B1

1 1/2" = 1'-0"

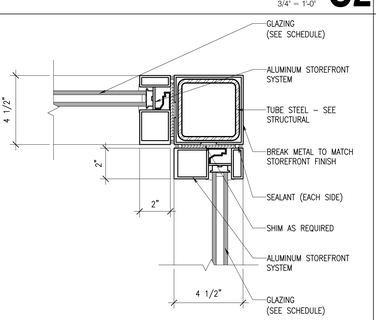

Jamb Detail B2

3" = 1'-0"

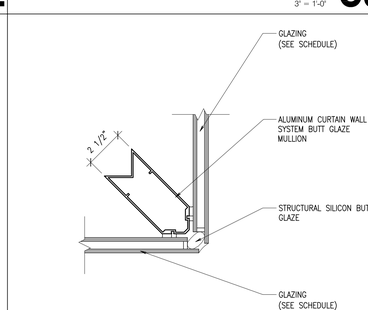

Curtain Wall Butt Glaze Mullion Detail B3

3" = 1'-0"

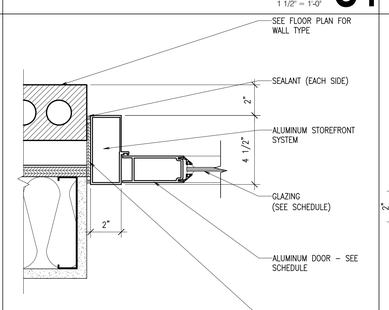

Jamb Detail B4

3" = 1'-0"

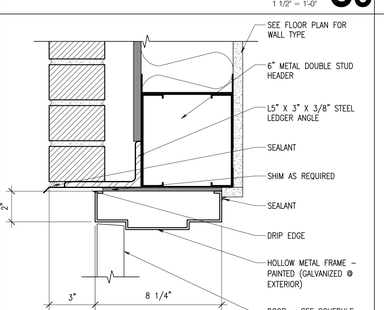

Head Detail / Jamb Sim. B5

3" = 1'-0"

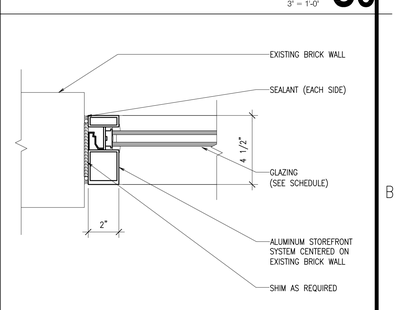

Jamb Detail B6

3" = 1'-0"

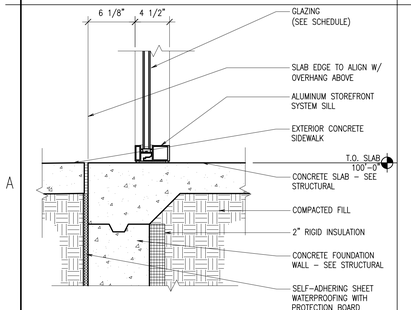

Sill Detail A1

1 1/2" = 1'-0"

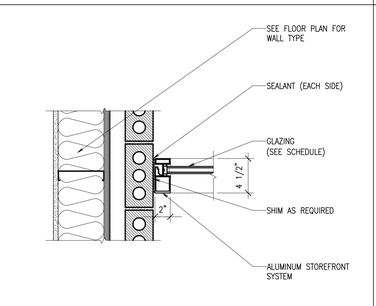

Jamb Detail A2

1 1/2" = 1'-0"

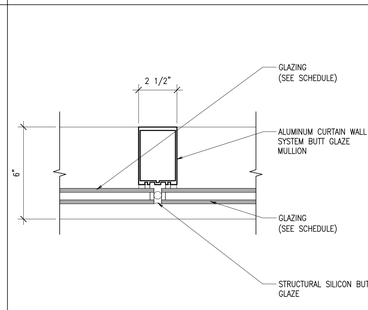

Curtain Wall Butt Glaze Mullion Detail A3

3" = 1'-0"

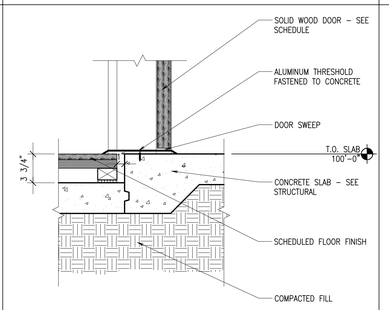

Threshold Detail A4

1 1/2" = 1'-0"

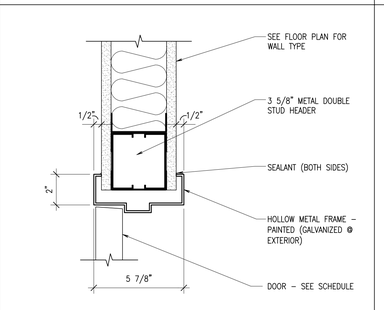

Head Detail / Jamb Sim. A5

3" = 1'-0"

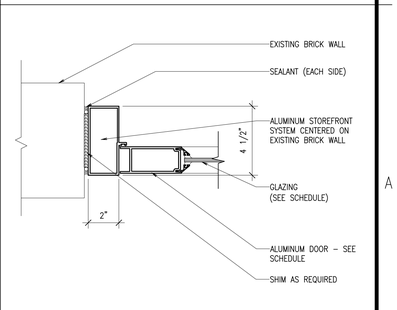

Jamb Detail A6

3" = 1'-0"

PEGGY A. McDONOUGH
No. 6006020-0301
REGISTERED ARCHITECT
STATE OF UTAH
7.21.2006

GouldEvans

©2002 Gould Evans Associates, L.C.
1000 South Main Street • Suite 100
Salt Lake City, Utah 84101
Voice 801.532.6100
Fax 801.532.6102
www.gouldevans.com

kansas city • lawrence • phoenix
salt lake city • san antonio • tampa

DFCM PROJECT NO: 05266700

STATE PROPERTY ID: 01791

RISK MANAGEMENT NO:

CAD PROJECT NO:

CAD DWG FILE:

DRAWN BY:

CHECKED BY:

COPYRIGHT: STATE OF UTAH

snow college activities center
dance studio addition | remodel
ephraim, utah

REVISION	DATE

Project no: 0906-0260
Date: July 21, 2006
Sheet:

Details

AE502

100% Construction Documents

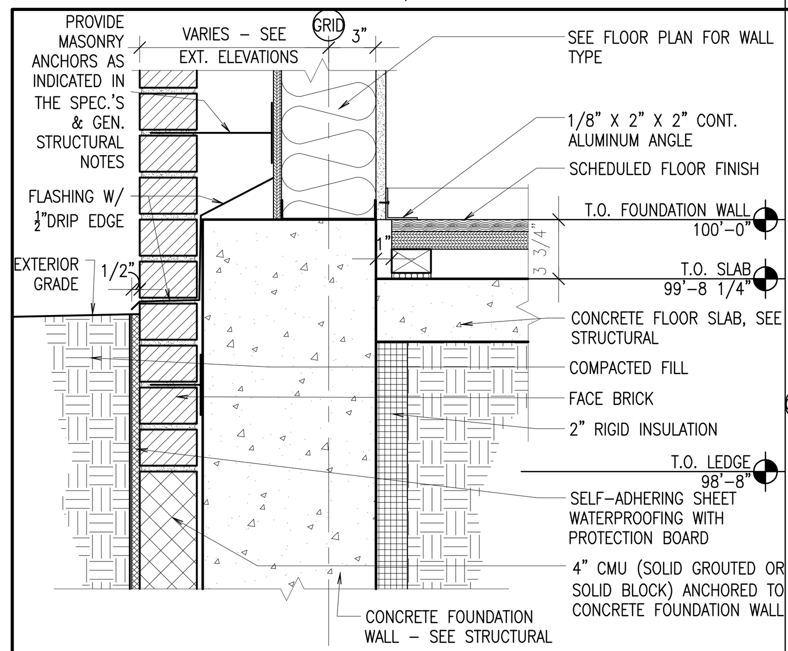

Floor / Wall Transition Detail **E1**
1 1/2" = 1'-0"

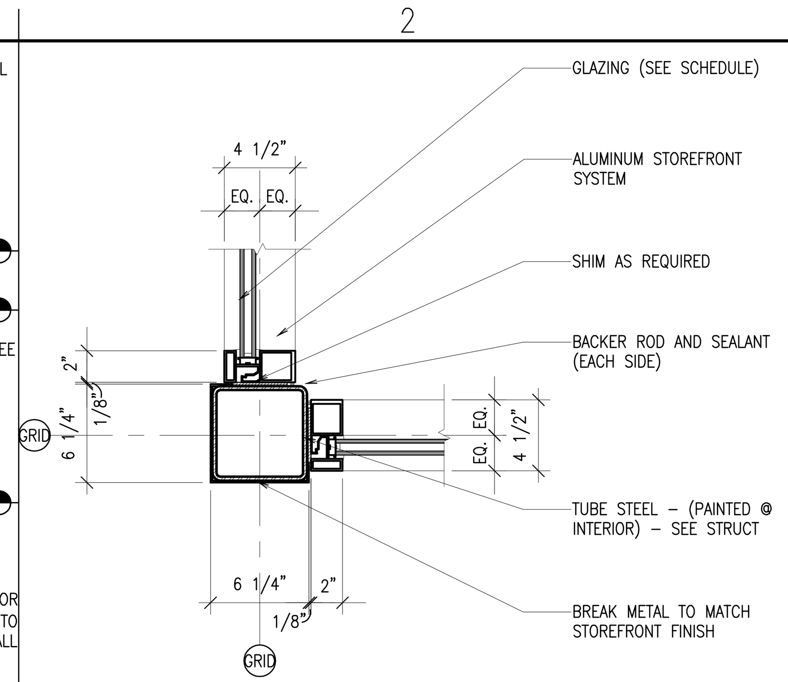

Storefront Vertical Mullion Detail **E2**
1 1/2" = 1'-0"

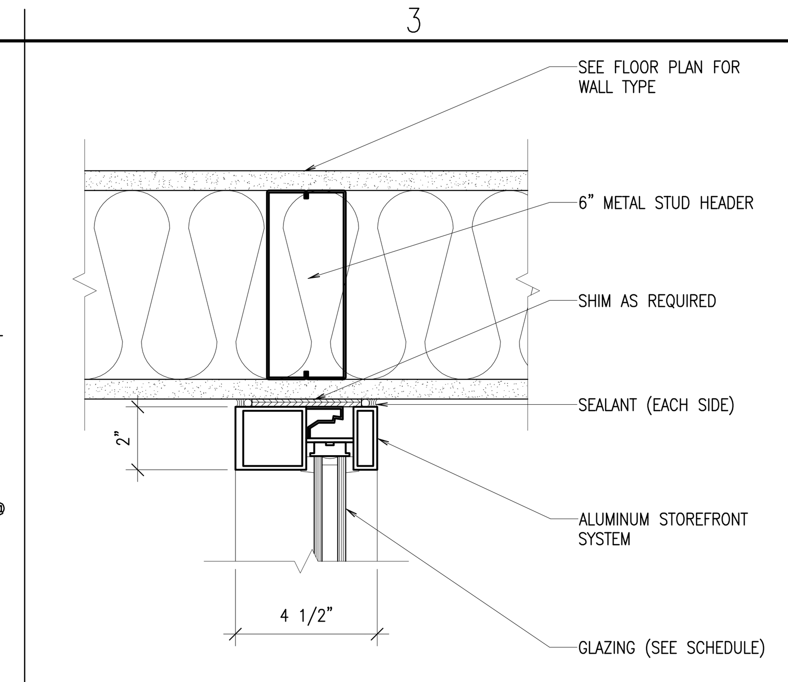

Storefront Jamb Detail **E3**
3" = 1'-0"

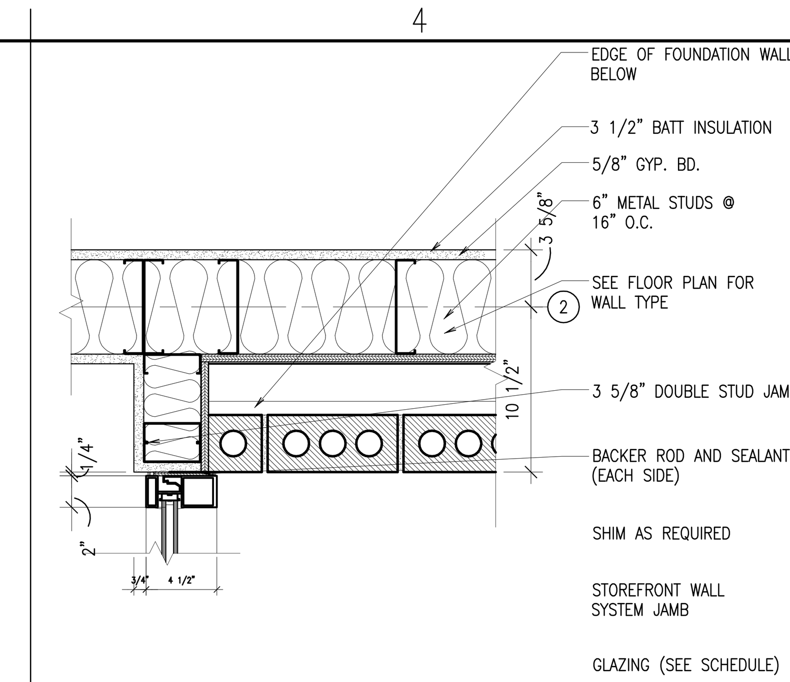

Storefront Jamb Detail **E4**
1 1/2" = 1'-0"

NOTE: PROVIDE ASPHALT IMPREGNATED BUILDING PAPER BETWEEN STEEL AND ALUMINUM

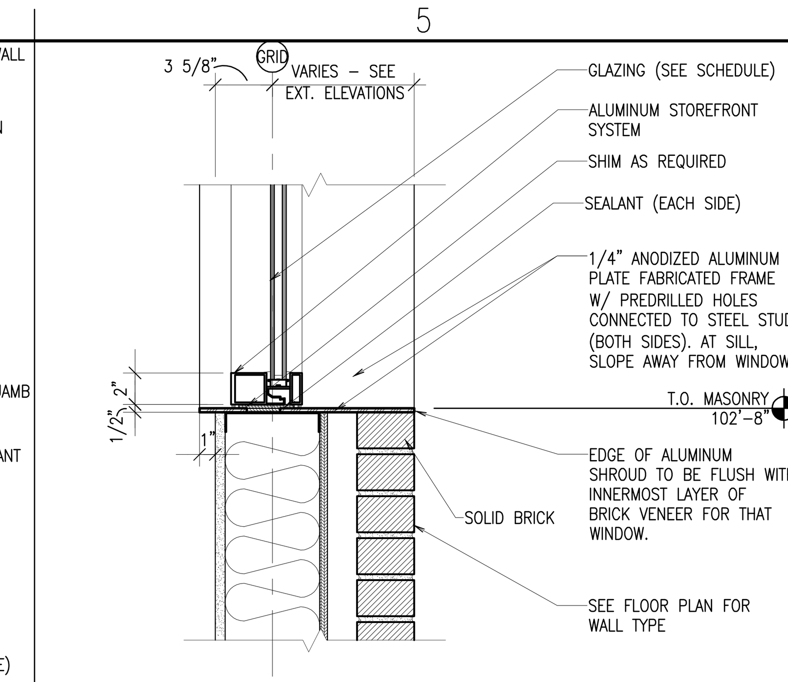

Storefront Sill Detail **E5**
1 1/2" = 1'-0"

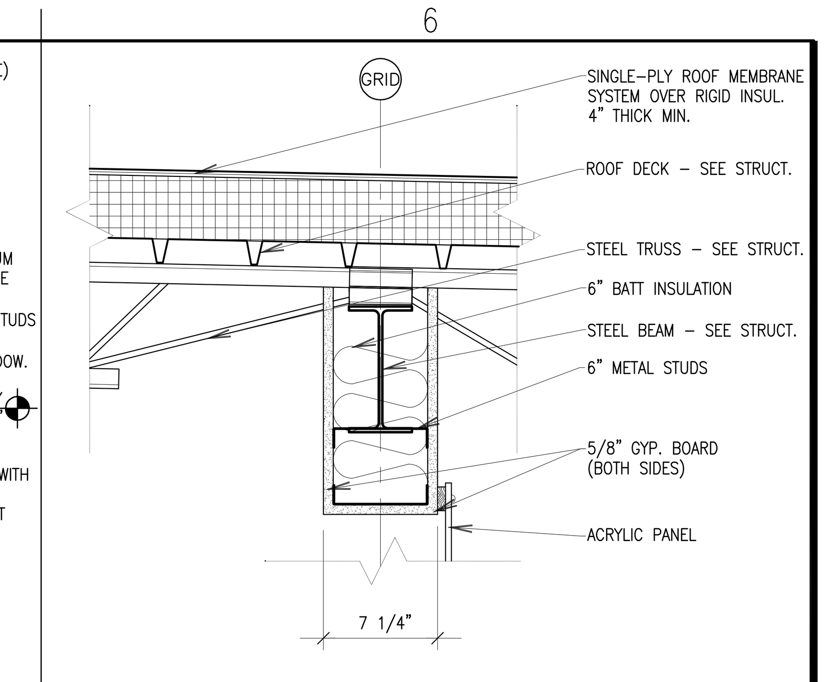

Roof Support Detail **E6**
1 1/2" = 1'-0"

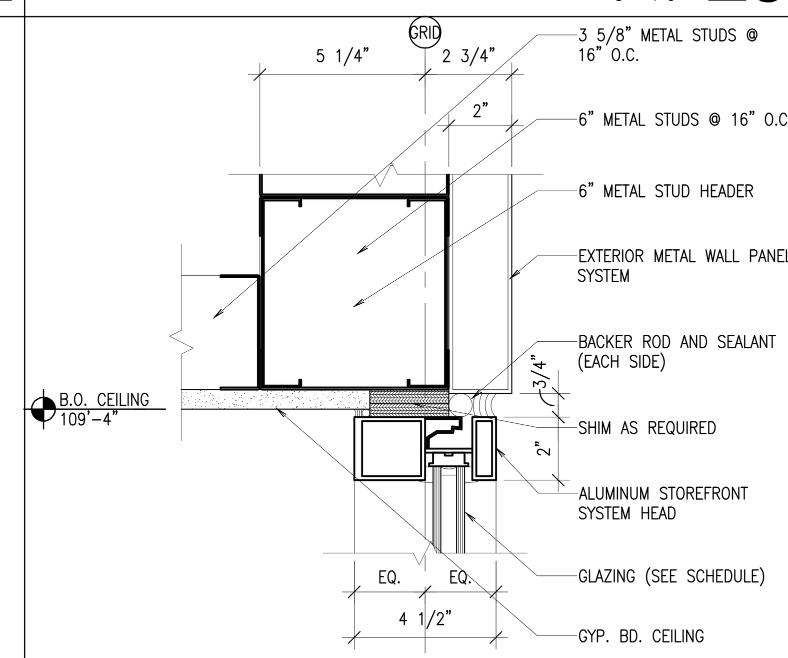

Storefront Head Detail **D3**
3" = 1'-0"

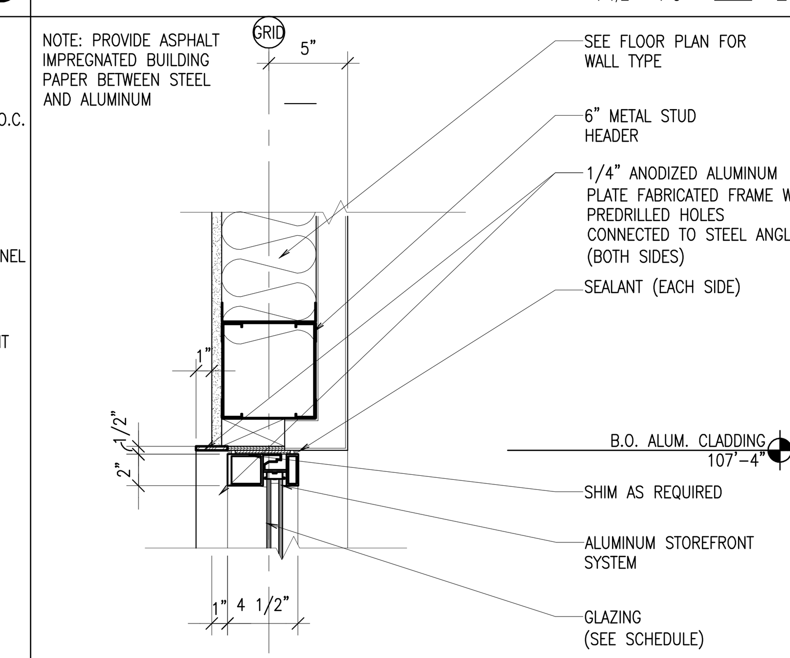

Storefront Head Detail/Jamb Sim. **D4**
1 1/2" = 1'-0"

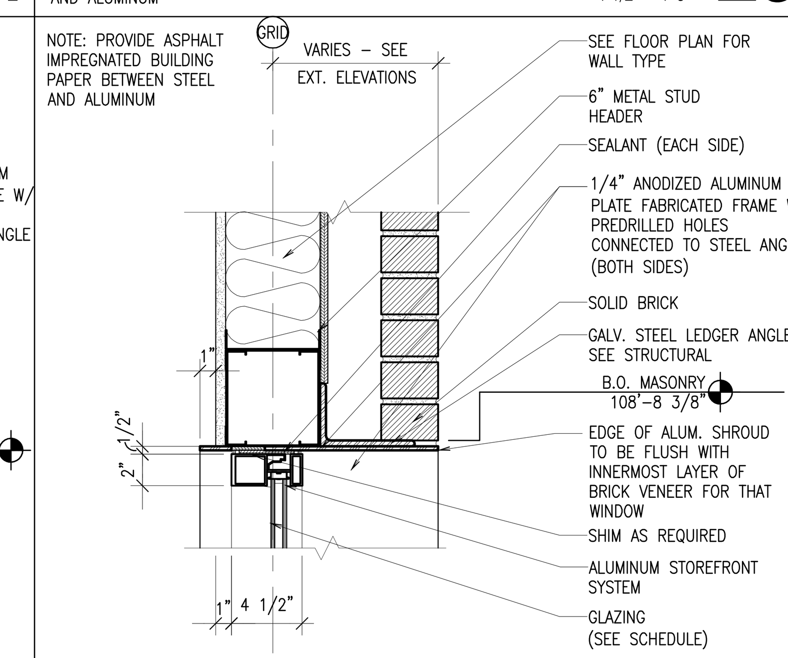

Storefront Head Detail / Jamb Sim. **D5**
1 1/2" = 1'-0"

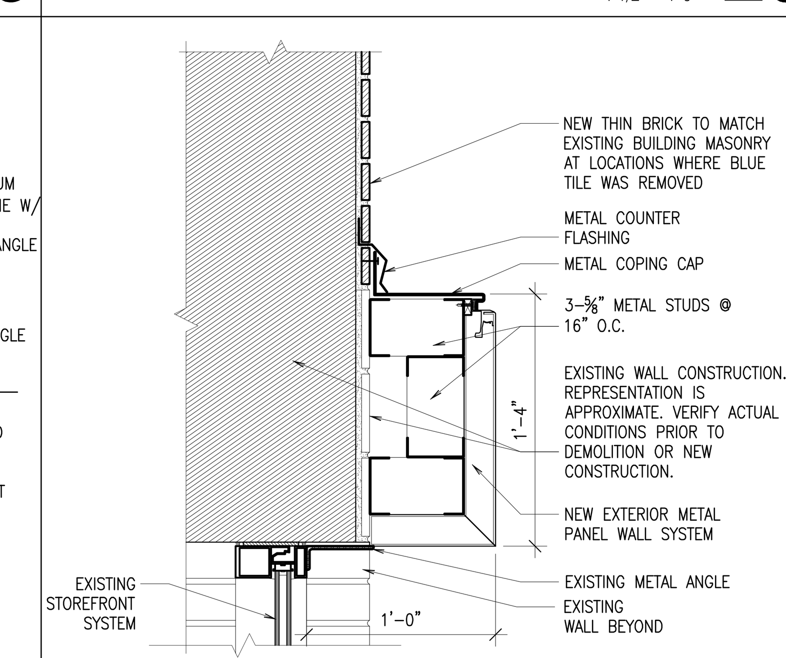

Exterior Brow Detail - Base Bid Only **D6**
1 1/2" = 1'-0"

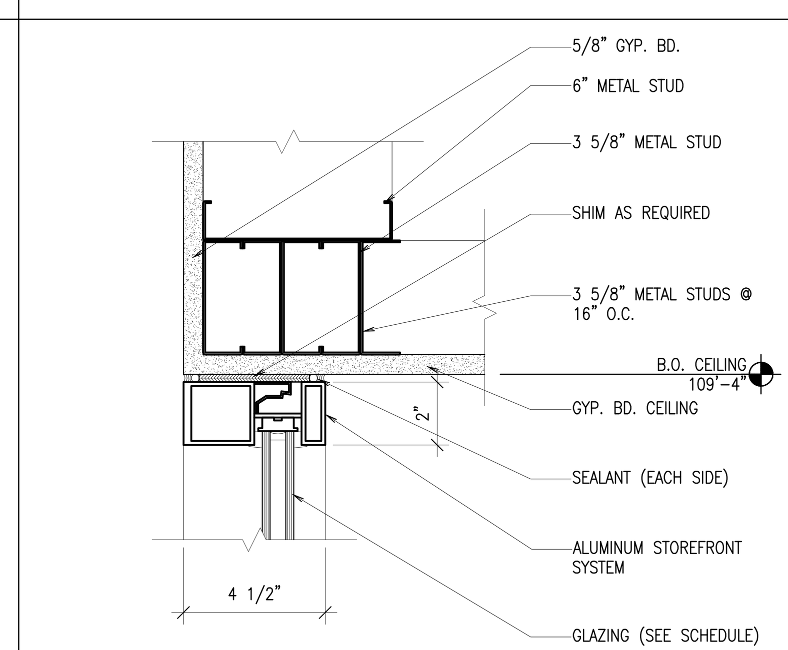

Storefront Head Detail **C2**
3" = 1'-0"

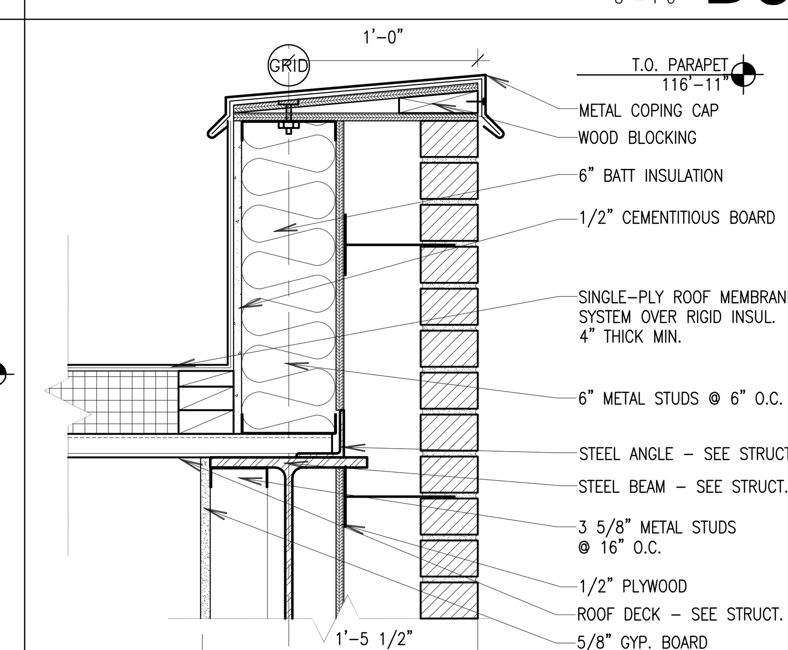

Parapet Detail **C3**
1 1/2" = 1'-0"

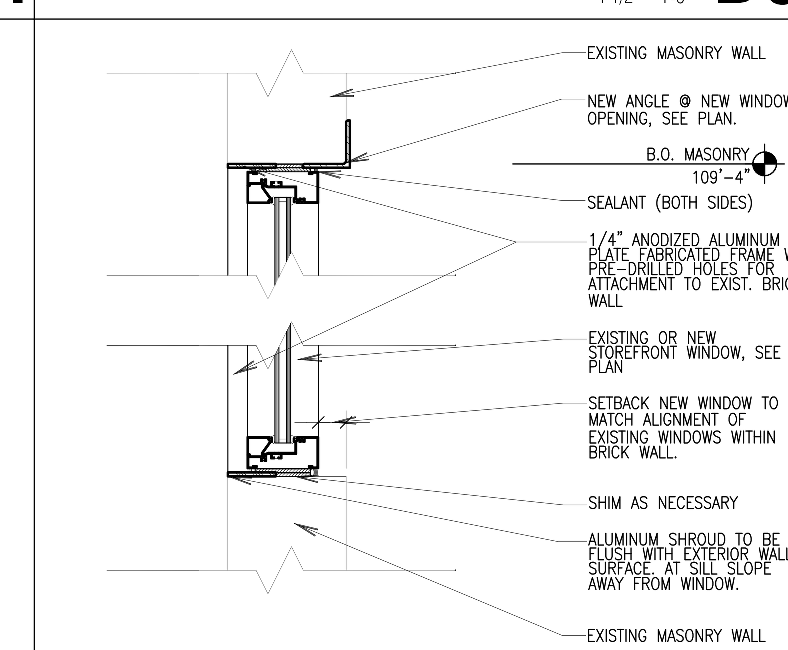

Head Detail / Jamb / Sill Sim. **C5**
3" = 1'-0"

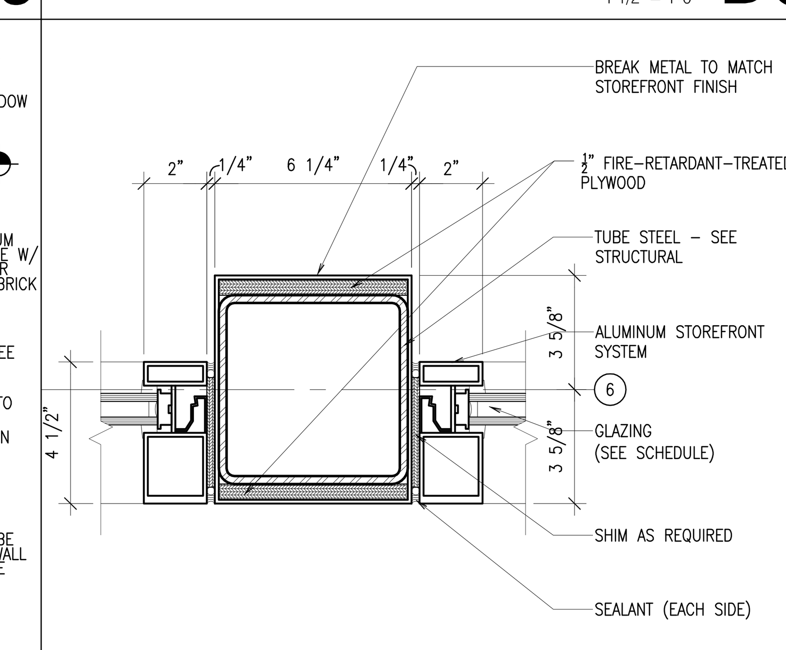

Storefront Vertical Mullion Detail **C6**
3" = 1'-0"

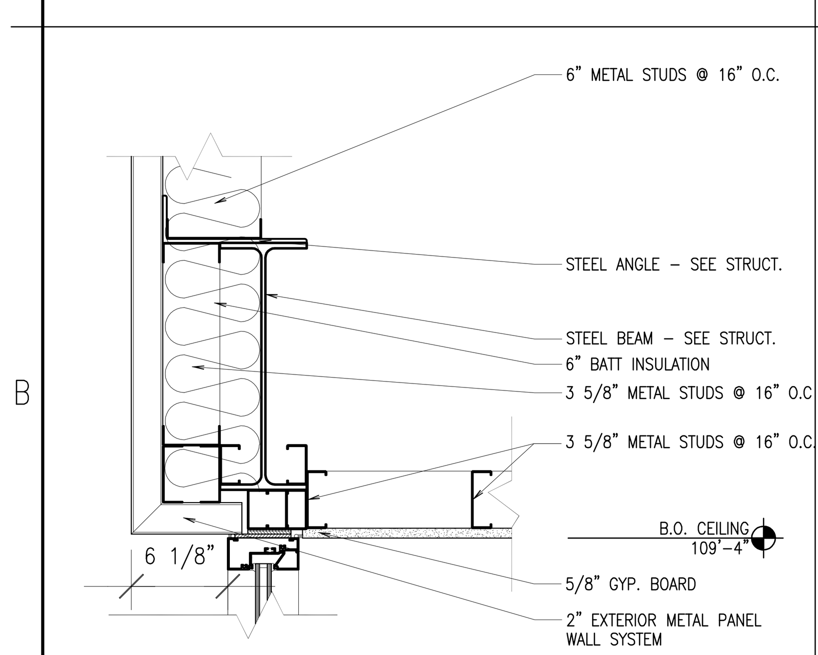

Storefront Head Detail **B1**
1 1/2" = 1'-0"

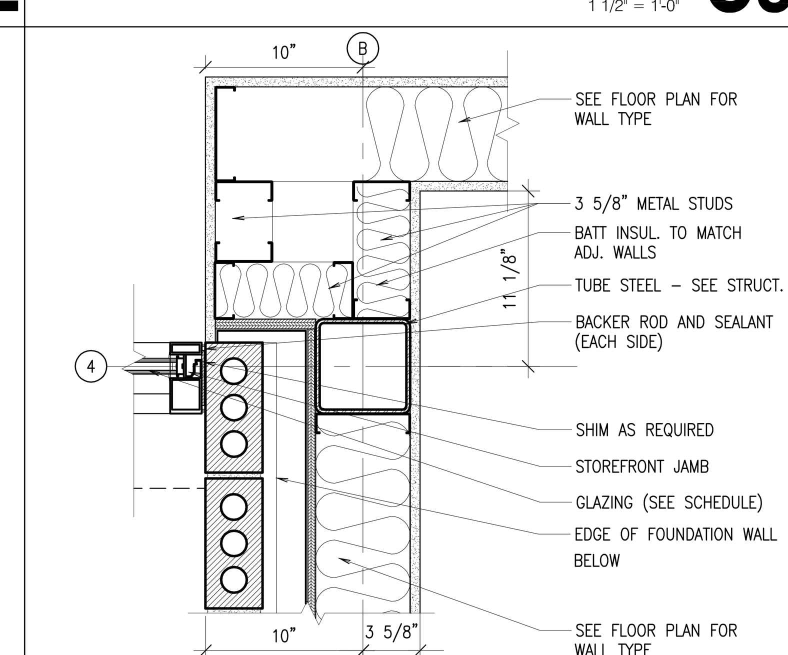

Storefront Wall Jamb Detail **B3**
1 1/2" = 1'-0"

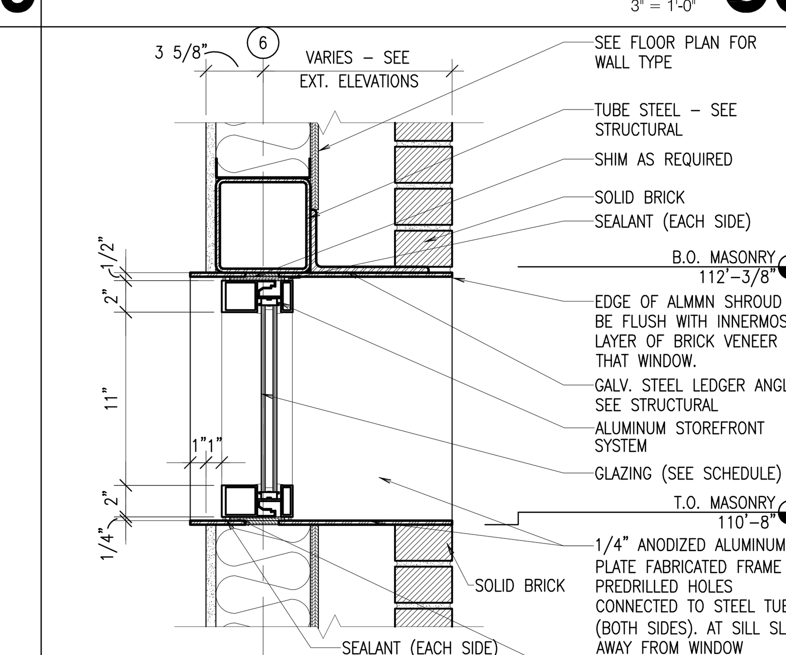

NOTE: PROVIDE ASPHALT IMPREGNATED BUILDING PAPER BETWEEN STEEL AND ALUMINUM

Storefront Detail **B6**
1 1/2" = 1'-0"

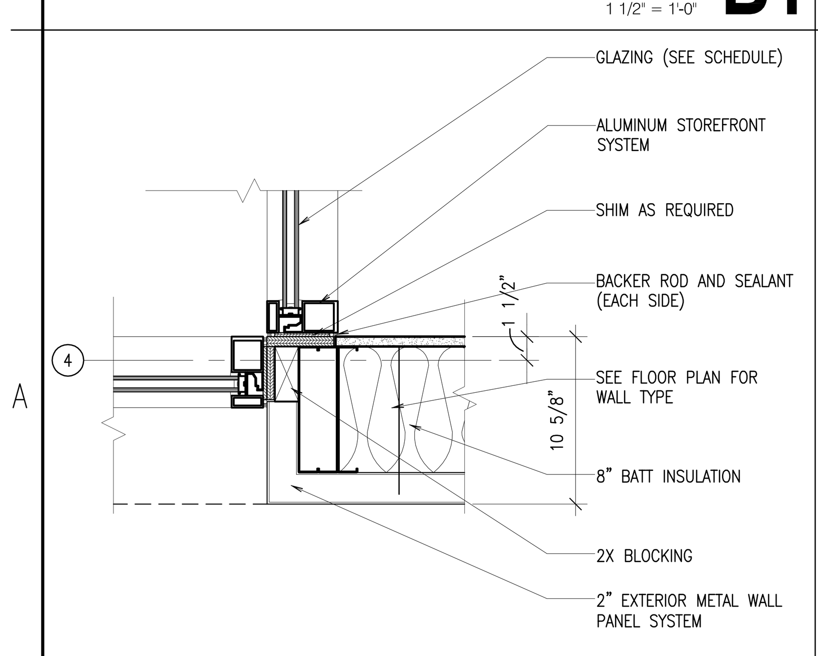

Storefront Vertical Mullion Detail **A1**
1 1/2" = 1'-0"

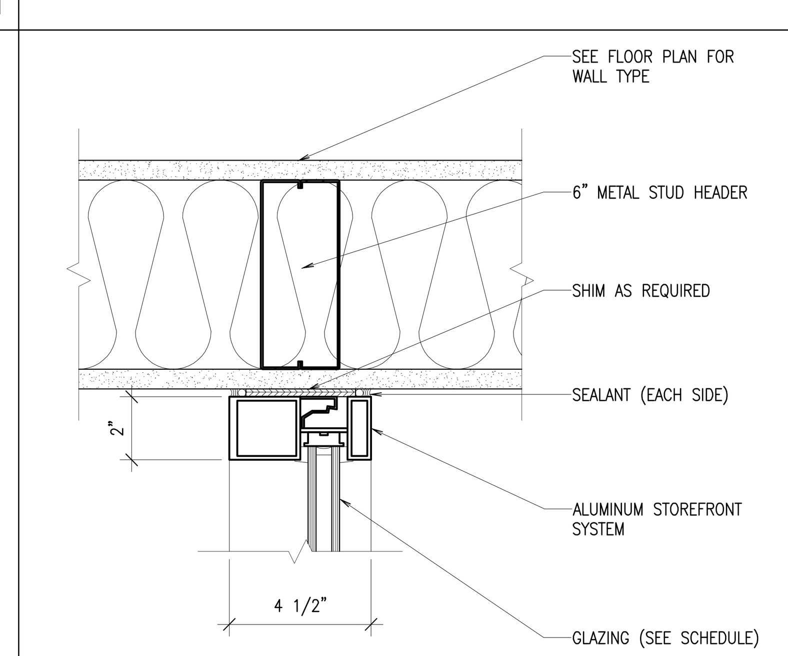

Storefront Jamb Detail **A2**
1 1/2" = 1'-0"

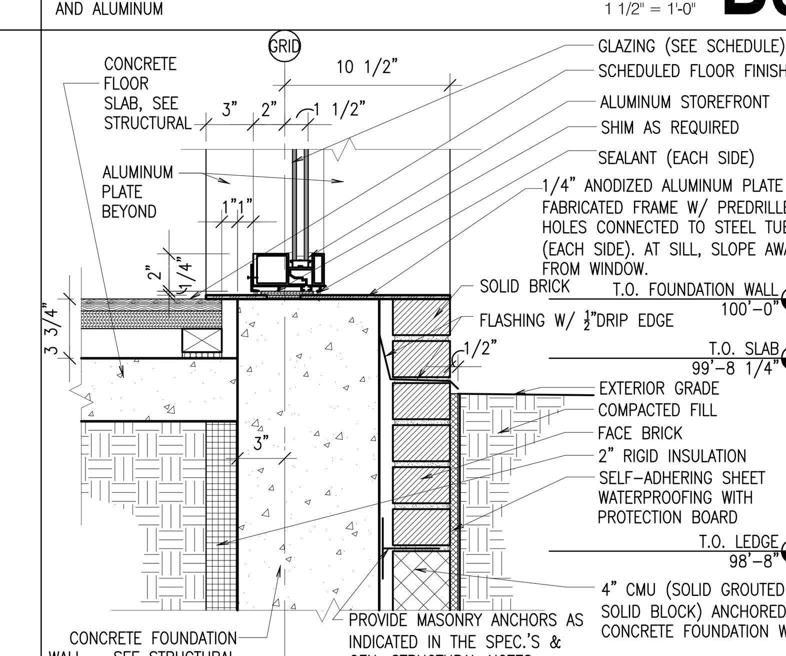

NOTE: EDGE OF ALUMINUM SHROUD TO BE FLUSH WITH INNERMOST LAYER OF BRICK VENEER FOR THAT WINDOW.

Storefront Sill Detail **A6**
1 1/2" = 1'-0"

PEGGY A. McDONOUGH — LICENSED ARCHITECT — No. 6090093-0301 — STATE OF UTAH
7-21-2006

GouldEvans

©2002 Gould Evans Associates, L.C.
1000 South Main Street • Suite 100
Salt Lake City, Utah 84101
Voice 801.532.6100
Fax 801.532.6102
www.gouldevans.com

kansas city • lawrence • phoenix
salt lake city • san antonio • tampa

DFCM PROJECT NO: 05266700
STATE PROPERTY ID: 01791
RISK MANAGEMENT NO:
CAD PROJECT NO:
CAD DWG FILE:
DRAWN BY:
CHECKED BY:
COPYRIGHT: STATE OF UTAH

snow college
activities center
dance studio addition | remodel
ephraim, utah

REVISION	DATE

Project no: 0906-0260
Date: July 21, 2006
Sheet:

Details
AE503

100% Construction Documents

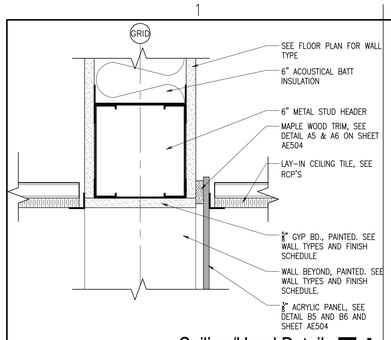

Ceiling/Head Detail E1

SC-det02 3" = 1'-0"

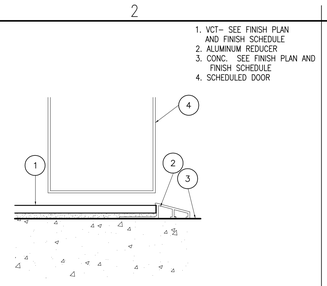

Concrete to VCT Threshold Detail E2

DR-det18 FULL

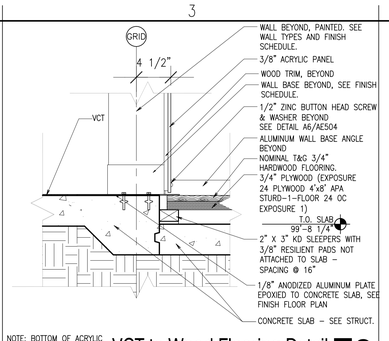

NOTE: BOTTOM OF ACRYLIC PANEL TO BE 3/8" ABOVE FINISH FLOOR.

VCT to Wood Flooring Detail E3

1 1/2" = 1'-0"

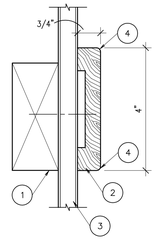

1. BLOCKING
2. 4" MAPLE, SOLID WOOD CHAIR RAIL
3. SEE FLOOR PLAN FOR WALL TYPE
4. 1/8" RADIUS CORNERS

Chair Rail Detail E5

6" = 1'-0"

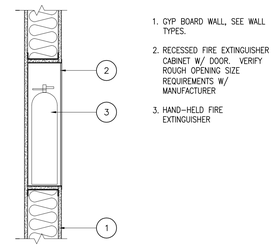

1. GYP BOARD WALL, SEE WALL TYPES.
2. RECESSED FIRE EXTINGUISHER CABINET W/ DOOR. VERIFY ROUGH OPENING SIZE REQUIREMENTS W/ MANUFACTURER
3. HAND-HELD FIRE EXTINGUISHER

Fire Extinguisher Cabinet E6

MIX8F 1" = 1'-0"

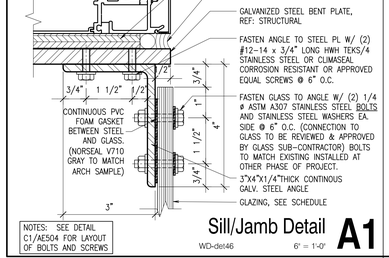

Fastener Detail C1

3" = 1'-0"

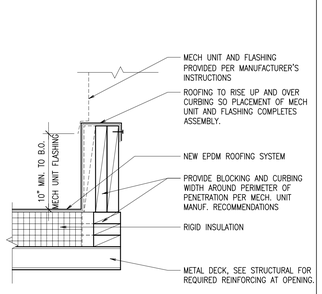

Concrete to Tile Threshold Detail D2

DR-det21 FULL

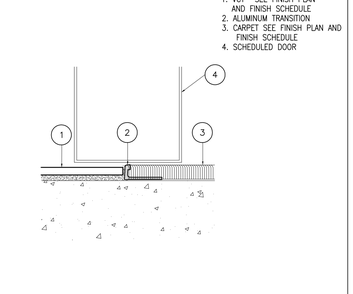

Rubber to VCT Threshold Detail D3

DR-det20 FULL

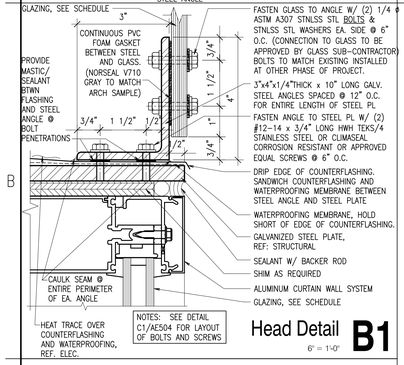

Head Detail B1

6" = 1'-0"

Roof Penetration Detail C2

RF-det05 1 1/2" = 1'-0"

Carpet to VCT Threshold Detail C3

DR-det16 FULL

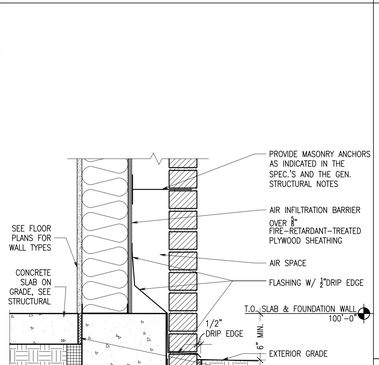

Footing/Foundation Wall Detail A2

WA-det01 1 1/2" = 1'-0"

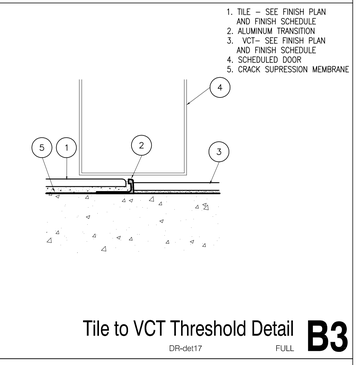

Tile to VCT Threshold Detail B3

DR-det17 FULL

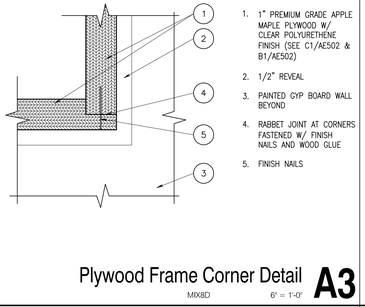

Plywood Frame Corner Detail A3

MIX8D 6" = 1'-0"

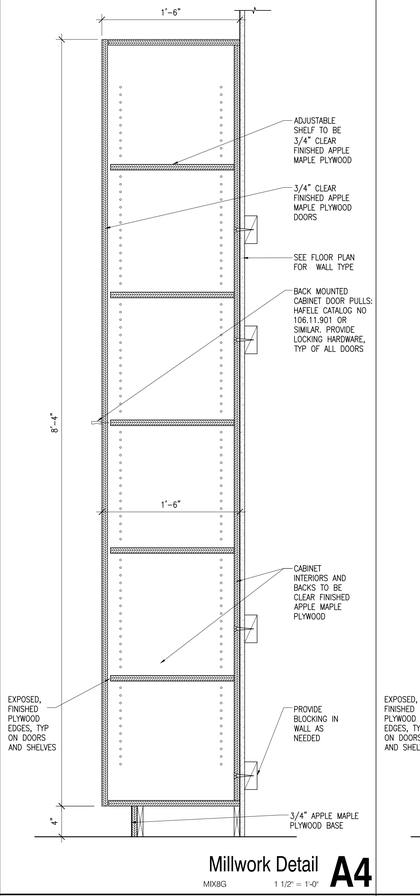

Millwork Detail A4

MIX8G 1 1/2" = 1'-0"

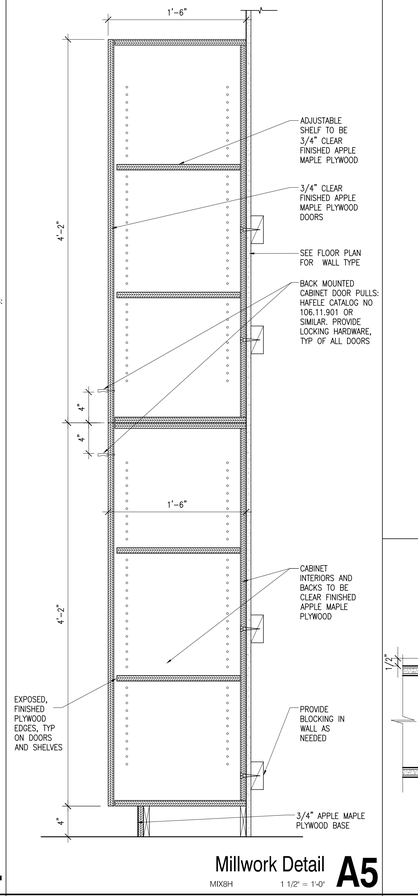

Millwork Detail A5

MIX8H 1 1/2" = 1'-0"

Acrylic Panel Elevation (Base Bid) B6

3/4" = 1'-0"

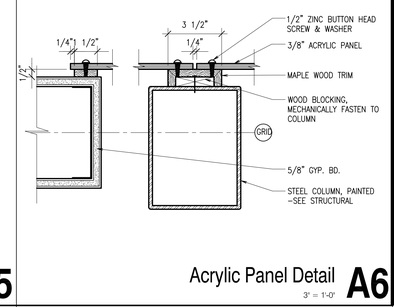

Acrylic Panel Detail A6

3" = 1'-0"

PEGGY A. McDONOUGH
No. 6006035-0301
LICENSED ARCHITECT
STATE OF UTAH
7-21-2006

GouldEvans

©2002 Gould Evans Associates, L.C.
1000 South Main Street • Suite 100
Salt Lake City, Utah 84101
Voice 801.532.6100
Fax 801.532.6102
www.gouldevans.com

kansas city • lawrence • phoenix
salt lake city • san antonio • tampa

DFCM PROJECT NO: 05266700
STATE PROPERTY ID: 01791
RISK MANAGEMENT NO:
CAD PROJECT NO:
CAD DWG FILE:
DRAWN BY:
CHECKED BY:
COPYRIGHT: STATE OF UTAH

snow college
activities center
dance studio addition | remodel
ephraim, utah

REVISION	DATE

Project no: 0906-0260
Date: July 21, 2006
Sheet:

Details
AE504

100% Construction Documents

DOOR					FRAME						REMARKS	
NUMBER	ROOM NAME	TYPE	SIZE	MATERIAL	MATERIAL	TYPE	HEAD	JAMB	JAMB	SILL	HARDWARE	FIRE RTG.
A101/1	VESTIBULE A101	B	3'-0" X 7'-0"	ALUM	ALUM	N	C6/AE502	C6/AE502	B4/AE502	C5/AE502	HW-01	–
A101/2	VESTIBULE A101	B	3'-0" X 7'-0"	ALUM	ALUM	O	C6/AE503	C6/AE502	C6/AE503	D5/AE502	HW-02	–
A102/1	DANCE A102	A	4'-0" X 7'-0"	WD	HM	3	E6/AE502	E6/AE502	E6/AE502	A4/AE502	HW-07	–
A102/2	DANCE A102	C	3'-0" X 7'-0"	HM	HM	1	B5/AE502	B5/AE502	B5/AE502	E5/AE502	HW-04	–
A103/1	MECHANICAL A103	C	PR 3'-0" X 7'-0"	HM	HM	4	A5/AE502	A5/AE502	A5/AE502	E2/AE504	HW-05	–
A104/1	CONFERENCE ROOM A104	A	3'-0" X 7'-0"	WD	HM	2	E6/AE502	E6/AE502	E6/AE502	C3/AE504	HW-06	–
A104/2	CONFERENCE ROOM A104	A	3'-0" X 7'-0"	WD	HM	2	E6/AE502	E6/AE502	E6/AE502	C3/AE504	HW-06	–
A105/1	CLOSET A105	A	3'-0" X 7'-0"	WD	HM	2	E6/AE502	E6/AE502	E6/AE502	NONE	HW-03	–
A108/1	VESTIBULE A108	B	PR 3'-0" X 7'-0"	ALUM	ALUM	P	C6/AE503	C6/AE502	E3/AE503	C5/AE502	HW-01	–
A108/2	VESTIBULE A108	B	PR 3'-0" X 7'-0"	ALUM	ALUM	Q	C6/AE502	C6/AE502	D5/AE502	D5/AE502	HW-02	–
A112/1	VESTIBULE A112	B	PR 3'-0" X 7'-0"	ALUM	ALUM	R	C6/AE502	B2/AE502	C6/AE502	C5/AE502	HW-01	–
A112/2	VESTIBULE A112	B	PR 3'-0" X 7'-0"	ALUM	ALUM	R	C6/AE502	C6/AE502	C6/AE502	C5/AE502	HW-01	–
A112/3	VESTIBULE A112	B	PR 3'-0" X 7'-0"	ALUM	ALUM	R	C6/AE502	C6/AE502	C6/AE502	C5/AE502	HW-01	–
A112/4	VESTIBULE A112	B	PR 3'-0" X 7'-0"	ALUM	ALUM	R	C6/AE502	C6/AE502	C6/AE502	C5/AE502	HW-01	–
A112/5	VESTIBULE A112	B	PR 3'-0" X 7'-0"	ALUM	ALUM	R	C6/AE502	C6/AE502	B2/AE502	C5/AE502	HW-01	–
A113/1	LOBBY A113	B	PR 3'-0" X 7'-0"	ALUM	ALUM	A	C6/AE502	D6/AE502	A6/AE502	D5/AE502	HW-02	–
A113/5	LOBBY A113	B	PR 3'-0" X 7'-0"	ALUM	ALUM	A	C6/AE502	A6/AE502	D6/AE502	D5/AE502	HW-02	–
A114/1	UNISEX A110	A	3'-0" X 7'-0"	WD	HM	2	E6/AE502	E6/AE502	E6/AE502	B3/AE504	HW-03	–

Door Schedule N.T.S **B6**

HARDWARE TYPES:

HW-01: CONCEALED CLOSER (W/ ADJUSTABLE STOP), PANIC HARDWARE FOR STOREFRONT DOORS, LOCKSET.
HW-02: CONCEALED CLOSER (W/ ADJUSTABLE STOP), PUSH / PULL FOR STOREFRONT DOORS.
HW-03: CONCEALED CLOSER, WALL STOP, LATCH, LEVER HANDLE W/ LOCKSET.
HW-04: CONCEALED CLOSER (W/ ADJUSTABLE STOP), PANIC HARDWARE, NO EXTERIOR HANDLE, SIDE AND TOP GASKETS, FULLY MORTICED AUTOMATIC THRESHOLD DROP SEAL DOOR BOTTOM.
HW-05: DOOR COORDINATORS, LATCH, LEVER HANDLE W/ LOCKSET, WALL STOPS.
HW-06: CONCEALED CLOSER, FLOOR STOP, LATCH, LEVER HANDLE W/ LOCKSET.
HW-07: CONCEALED CLOSER, WALL STOP, LATCH, LEVER HANDLE W/ LOCKSET, TOP AND SIDE GASKETS, FULLY MORTICED AUTOMATIC THRESHOLD DROP SEAL DOOR BOTTOM.

NOTE 1: PROVIDE REMOVABLE CENTER MULLION AT ALL STOREFRONT ENTRY DOOR LOCATIONS.
NOTE 2: ALL EXPOSED HARDWARE TO BE BRUSHED OR MATTE-FINISHED STAINLESS STEEL.
NOTE 3: ALL STOREFRONT DOORS AND EXTERIOR & INTERIOR HOLLOW METAL DOORS TO HAVE CONTINUOUS HINGES.
NOTE 4: ALL INTERIOR INTERIOR WOOD DOORS TO HAVE THREE SETS OF HINGES, MINIMUM.
NOTE 5: PROVIDE EXTERIOR GRADE, WEATHER RESISTANT HARDWARE AT ALL EXTERIOR LOCATIONS.

Hardware Types N.T.S **D4**

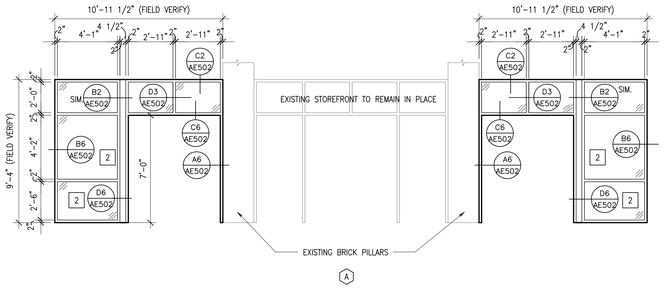

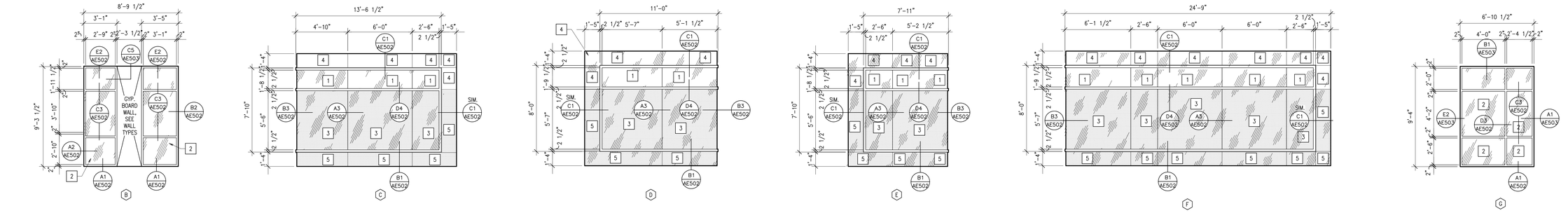

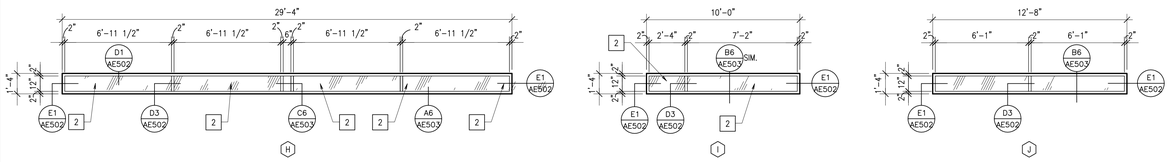

NOTE:
USE DETAIL B6/AE503 FOR HEAD AND SILL DETAIL FOR WINDOW (1) WITH THE FOLLOWING CHANGES –

B.O. MASONRY AT WINDOW HEAD = 102'–8⅝"
T.O. MASONRY AT WINDOW SILL = 101'– 4"

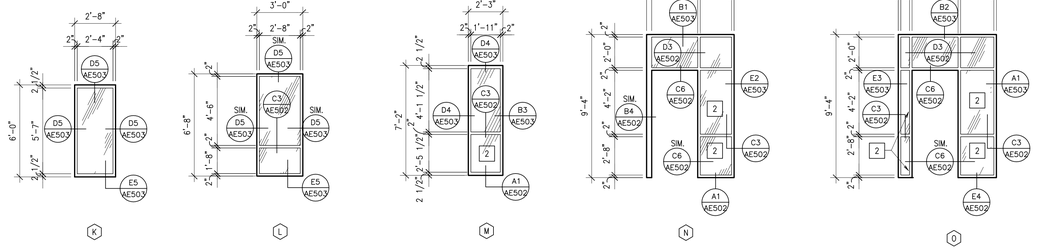

GLAZING SCHEDULE:

1	1" INSULATED CLEAR GLASS
2	1" INSULATED TEMPERED CLEAR GLASS
3	1" INSULATED SANDBLASTED GLASS
4	1/2" FULLY TEMPERED CLEAR GLASS
5	1/2" FULLY TEMPERED SANDBLASTED GLASS

ALL GLAZING NOT MARKED W/ A WINDOW TAG – TO BE CONSIDERED WINDOW TAG NO.1 – 1" INSULATED CLEAR GLASS

SEE DOOR & WINDOW TYPES FOR GLAZING MARKS

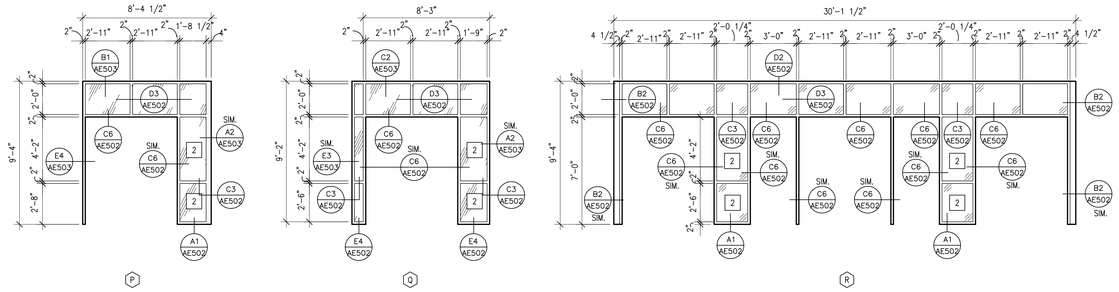

Window Types 1/4" = 1'-0" **B6**

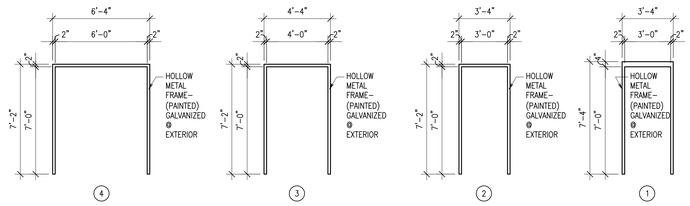

Door Frame Types 1/4" = 1'-0" **A5**

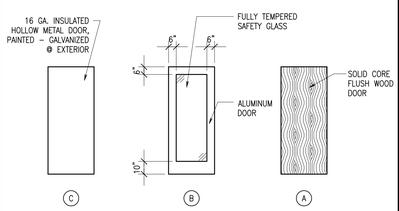

Door Types 1/4" = 1'-0" **A6**

PEGGY A. McDONOUGH
No. 6006020-0301
STATE OF UTAH
REGISTERED ARCHITECT
7.21.2006

GouldEvans

©2002 Gould Evans Associates, L.C.

1000 South Main Street • Suite 100
Salt Lake City, Utah 84101
Voice 801.532.6100
Fax 801.532.6102
www.gouldevans.com

kansas city • lawrence • phoenix
salt lake city • san antonio • tampa

DFCM PROJECT NO: 05266700
STATE PROPERTY ID: 01791
RISK MANAGEMENT NO:
CAD PROJECT NO:
CAD DWG FILE:
DRAWN BY:
CHECKED BY:

COPYRIGHT: STATE OF UTAH

snow college
activities center
dance studio addition | remodel
ephraim, utah

REVISION	DATE

Project no: 0906-0260
Date: July 21, 2006
Sheet:

Window Types
Door/Frame Types
Door Schedule

AE601

100% Construction Documents

FINISH LEGEND

CODE		MATERIAL	PRODUCT	CONTACT	LOCATION	REMARKS
FLOOR	CPT1	CARPET	MANNINGTON – VISUAL JAZZ	–	–	–
	WDF1	WOOD FLOOR	3/4" T&G MAPLE HARDWOOD PLANKS OVER 3/4" PLYWOOD ON 2"X3" KD SLEEPERS W/ 3/8" RESILIENT PADS – SPACING @ 16" O.C.	–	–	–
	CFT1	CERAMIC TILE	DALTILE – K175 BISCUIT, 2"X2" (SLIP RESISTANT FINISH)	–	–	–
	VCT1	VINYL COMPOSITION TILE	ARMSTRONG – IMPERIAL TEXTURE STANDARD EXCELON, 51899 COOL WHITE, 12"X12", 1/8" THK	–	–	–
	VCT2	VINYL COMPOSITION TILE	ARMSTRONG – IMPERIAL TEXTURE STANDARD EXCELON, 51868 SMOKEY BROWN, 12"X12", 1/8" THK	–	–	–
				–	–	–
	WM1	WALK OFF MAT	–	–	–	–
	SC1	SEALED CONCRETE	SEALED CONCRETE	–	–	–
	–	–	–	–	–	–
	–	–	–	–	–	–
	–	–	–	–	–	–
BASE	RB1	RUBBER	ROPPE – P122 NATURAL, 4" HIGH	–	–	–
	RB2	RUBBER	ROPPE – P177 STEEL BLUE, 4" HIGH	–	–	–
	RB3	RUBBER	ROPPE – P127 HARVEST YELLOW, 4" HIGH	–	–	–
	RB4	RUBBER	MATCH EXISTING	–	–	–
	CTB2	CERAMIC TILE	DALTILE – 1469 GALAXY, COVED BASE, 4"X4"	–	–	–
	ALB1	ALUMINUM ANGLE	2"X2"X1/8" THK CLEAR ANODIZED ALUMINUM ANGLE	–	–	–
	–	–	–	–	–	–
	–	–	–	–	–	–
	–	–	–	–	–	–
	–	–	–	–	–	–
	–	–	–	–	–	–
	–	–	–	–	–	–
	–	–	–	–	–	–
	–	–	–	–	–	–
	–	–	–	–	–	–
	–	–	–	–	–	–
	–	–	–	–	–	–
	–	–	–	–	–	–
	–	–	–	–	–	–
WALLS	PT1	PAINTED GYPSUM BOARD	KWAL HOWELLS – CW021W LEMON PEEL LRV 83, SATIN FINISH	–	–	–
	PT2	PAINTED GYPSUM BOARD	KWAL HOWELLS – 8485D NAPOLEON LRV20, SATIN FINISH	–	–	–
	PT3	PAINTED GYPSUM BOARD	NOT USED	–	–	–
	PT4	PAINTED GYPSUM BOARD	KWAL HOWELLS – CW021W LEMON PEEL LRV 83, EPOXY BASED, SATIN FINISH	–	–	–
	PT5	PAINTED MASONRY/CONC.	KWAL HOWELLS – CW021W LEMON PEEL LRV 83, SATIN FINISH	–	–	–
	CMU1	SEALED MASONRY/CONC.	–	–	–	–
	CWT1	CERAMIC WALL TILE	DALTILE – K175 BISCUIT, 4"X4"	–	–	–
	CWT2	CERAMIC WALL TILE	DALTILE – 1469 GALAXY, 4"X4"	–	–	–
	–	–	–	–	–	–
	–	–	–	–	–	–
	–	–	–	–	–	–
	–	–	–	–	–	–
	–	–	–	–	–	–
	–	–	–	–	–	–
	–	–	–	–	–	–
	–	–	–	–	–	–
	–	–	–	–	–	–
	–	–	–	–	–	–
	–	–	–	–	–	–
CEILING	ACT1	ACOUSTICAL TILE	USG – MARS CLIMAPLUS, 2'X2' TILE, FLB EDGE W/ CENTRICTEE GRID PROFILE	–	–	–
	GYP1	PAINTED GYPSUM BOARD	KWAL HOWELLS – CW021W LEMON PEEL LRV 83, SATIN FINISH	–	–	–
	GYP2	PAINTED GYPSUM BOARD	KWAL HOWELLS – CW021W LEMON PEEL LRV 83, EPOXY BASED, SATIN FINISH	–	–	–
	EXP1	EXPOSED STRUCTURE	NO CEILING FINISH	–	–	–
	EXP2	EXPOSED STRUCTURE WITH 2" BLACK FACED INSULATION FASTENED TO UNDERSIDE OF STEEL DECK	PAINT – COLOR TO BE SELECTED BY ARCHITECT FROM MANUFACTURERS FULL RANGE	–	–	PAINT ALL STRUCTURAL COMPONENTS AND UTILITIES, INCLUDING BUT NOT LIMITED TO JOISTS, STEEL DECK, BRACING, CONDUIT, PLUMBING, PIPING, ETC. PAINTING IS NOT REQUIRED DIRECTLY UNDER AREAS TO RECEIVE INSULATION. AREAS ADJACENT TO INSULATION MUST BE PAINTED INCLUDING ANY EXPOSED AREAS BETWEEN INSULATION. DO NOT PAINT INSULATION, DO NOT PAINT DUCTS.
	EXP3	EXPOSED STRUCTURE	GALVANIZED FINISH	–	–	–
	–	–	–	–	–	–
	–	–	–	–	–	–
	–	–	–	–	–	–
	–	–	–	–	–	–
	–	–	–	–	–	–
	–	–	–	–	–	–
	–	–	–	–	–	–
	–	–	–	–	–	–
	–	–	–	–	–	–

ROOM FINISH SCHEDULE

	ROOMS		FLOORS				WALLS				CEILINGS		REMARKS
	Rm#	Room Name	Floor	Floor	Base	Base	N	E	S	W	Type	Height	
MAIN LEVEL	A101	VESTIBULE	SC1	WM1	RB2	–	PT2	–	–	–	GYP1	9'–4"	–
	A102	DANCE	WDF1	–	ALB1	–	PT1	PT1	PT2	PT1	EXP3	VARIES	–
	A103	MECHANICAL	SC1	–	RB4	–	PT5	PT1/PT5	PT1	PT5	EXP1	VARIES	–
	A104	CONFERENCE RM.	CPT1	–	RB1		PT1	PT1	PT1	PT1	ACT1	10'–4"	–
	A105	STORAGE	VCT1	–	RB1	–	PT1	PT1	PT1	PT1	GYP1	9'–0"	–
	A106	CORRIDOR	VCT1/VCT2		RB1	RB4	–	CMU1/PT1	–	PT1/CMU1	ACT1	9'–4"	–
	A107	CORRIDOR	VCT1/VCT2		RB1/RB2	RB4	PT1/PT2	PT1	PT1	PT1	ACT1	10'–4"	–
	A108	VESTIBULE	SC1	WM1	RB2	–	PT2	–	PT2	–	GYP1	9'–4"	–
	A112	VESTIBULE	SC1	WM1	RB2	–	–	PT2	CMU1	PT2	GYP1	9'–4"	–
	A114	UNISEX	CFT1	–	CTB2	–	CWT1/CWT2/PT4	CWT1/CWT2/PT4	CWT1/CWT2/PT4	CWT1/CWT2/PT4	GYP2	9'–0"	–
	–	–	–	–	–	–	–	–	–	–	–	–	–
	–	–	–	–	–	–	–	–	–	–	–	–	–
	–	–	–	–	–	–	–	–	–	–	–	–	–
	–	–	–	–	–	–	–	–	–	–	–	–	–
	–	–	–	–	–	–	–	–	–	–	–	–	–
	–	–	–	–	–	–	–	–	–	–	–	–	–
	–	–	–	–	–	–	–	–	–	–	–	–	–
	–	–	–	–	–	–	–	–	–	–	–	–	–
	–	–	–	–	–	–	–	–	–	–	–	–	–
	–	–	–	–	–	–	–	–	–	–	–	–	–

GouldEvans

©2002 Gould Evans Associates, L.C.
1000 South Main Street • Suite 100
Salt Lake City, Utah 84101
Voice 801.532.6100
Fax 801.532.6102
www.gouldevans.com

kansas city • lawrence • phoenix
salt lake city • san antonio • tampa

DFCM PROJECT NO: 05266700

STATE PROPERTY ID: 01791

RISK MANAGEMENT NO:

CAD PROJECT NO:

CAD DWG FILE:

DRAWN BY:

CHECKED BY:

COPYRIGHT: STATE OF UTAH

snow college
activities center
dance studio addition | remodel
ephraim, utah

REVISION	DATE

Project no: 0906-0260
Date: July 21, 2006
Sheet:

Finish Schedule
AE602

100% Construction Documents

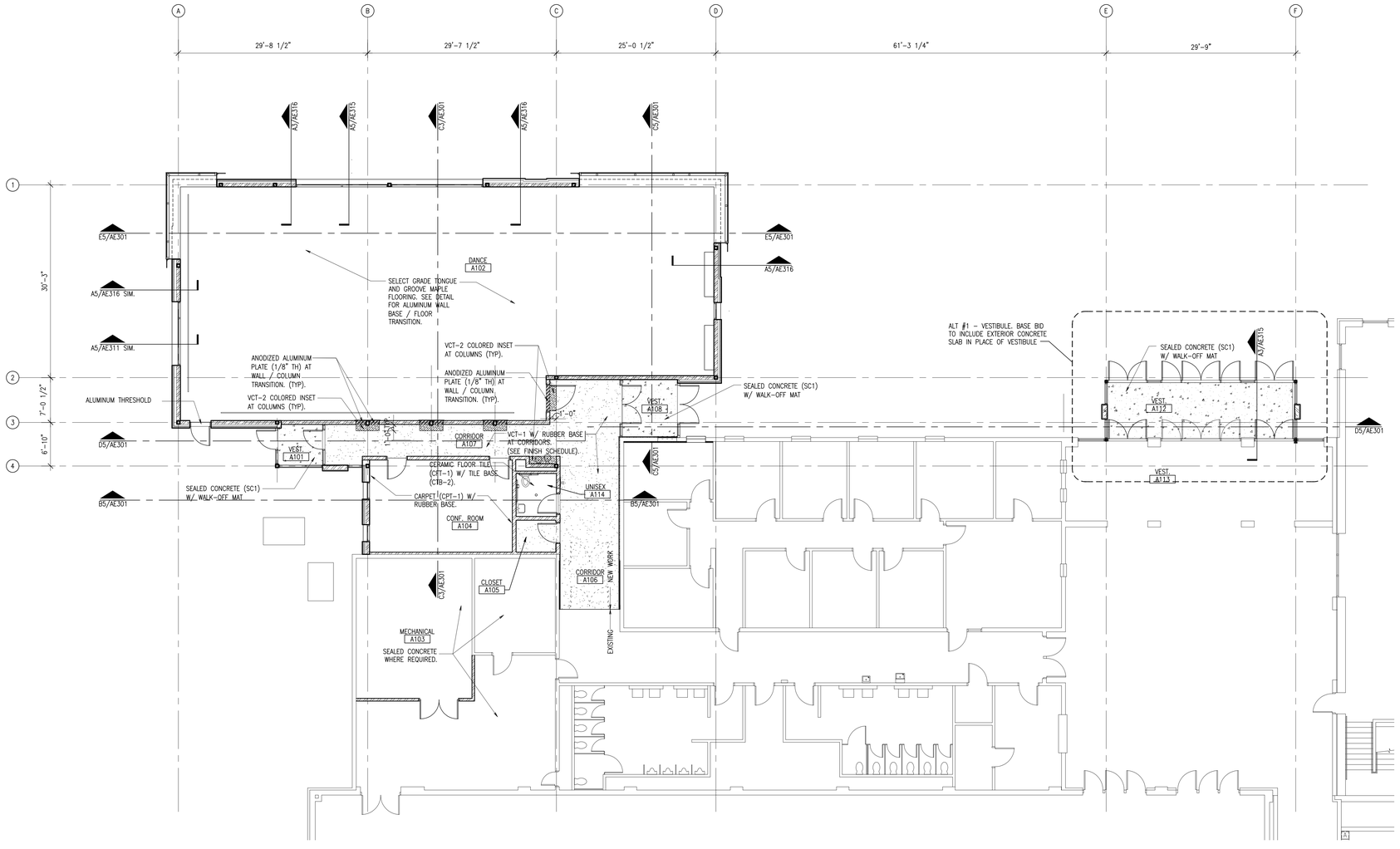

Floor Finish Plan "Area A" A5
1/8" = 1'-0"

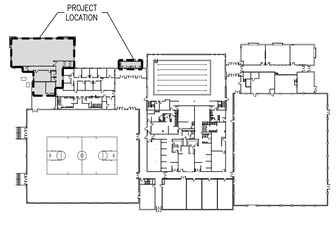

Key Plan A6
N.T.S.

LICENSED ARCHITECT
PEGGY A. McDONOUGH
No. 6000093-0301
STATE OF UTAH
7-21-2006

GouldEvans

©2002 Gould Evans Associates, L.C.
1000 South Main Street • Suite 100
Salt Lake City, Utah 84101
Voice 801.532.6100
Fax 801.532.6102
www.gouldevans.com
kansas city • lawrence • phoenix
salt lake city • san antonio • tampa

DFCM PROJECT NO: 05266700
STATE PROPERTY ID: 01791
RISK MANAGEMENT NO:
CAD PROJECT NO:
CAD DWG FILE:
DRAWN BY:
CHECKED BY:
COPYRIGHT: STATE OF UTAH

snow college
activities center
dance studio addition | remodel
ephraim, utah

REVISION DATE

Project no: 0906-0260
Date: July 21, 2006
Sheet:

Floor Finish Plan
AE610

100% Construction Documents

GENERAL STRUCTURAL NOTES

I. Design Criteria

A. Governing Building Code: 2003 International Building Code (IBC)

B. Roof Live Loading:
1. Roof Live Load: . . . . . 20 psf
2. Roof Snow Load: . . . . . 33 psf + Drift per IBC
   a. Ground Snow Load, Pg: . . . . . 43 psf
   b. Snow Exposure Factor, Ce: 1.0
   c. Importance Factor, Is: 1.1
   d. Thermal Factor, Ct: 1.0

C. Earthquake Loading:
1. Seismic Use Group:. II
2. Seismic Design Category:. . . . . D
3. Spectral Response Accelerations:
   Ss = 0.064 g Sds = 0.550 g
   S1 = 0.020 g Sd1 = 0.267 g
4. Soil Site Class: . . . . . D
   Fa = 1.29 Fv = 2.00
5. Basic Seismic Force Resisting System: . . . . . Light framed walls sheathed with wood structural panels rated for shear resistance.
   R = 6.50 Omega = 2.50 Cd = 4.25
6. Importance Factor, Ie:. 1.25
7. Design Base Shear:. . . . . 19 kips
8. Design Story Drift, D:. . . . . 2.5 in
9. Analysis Procedure: . . . . . Equivalent Lateral Force (Static)

D. Wind:
1. Basic Wind Speed (3-second gust): . . . . . 90 mph
2. Importance Factor, Iw: 1.15
3. Exposure: . . . . . B
4. Internal Pressure Coefficient, Gcpi: 0.18

E. Foundation:
1. Subsurface Conditions:
   Soils report and log of borings was obtained by the Owner for the Engineer's use in the design of the foundation, and is not a part of the Contract Documents. This report and log of borings is available for the Contractor's information, but is not a warranty of the subsurface conditions. The Contractor may use the report at his own risk.
2. Soils Report by AMEC Earth and Environmental, Inc., dated February 16, 2004.
3. Soil Bearing Pressure: . . . . . 2000 psf, on suitable non-collapsible natural soils and/or compacted structural fill extending to suitable natural soil.
4. Lateral Soil Pressure Fluid Equivalent Density.
   a. Active: . . . . . 35 pcf (retaining walls)
   b. At Rest: . . . . . 65 pcf (rigid foundation walls)
   c. Passive: . . . . . 600 pcf
5. Coefficient of Friction: 0.4

F. Classification for Fire Rated Construction:
1. For the purpose of determining fire-resistive assemblies, the steel roof framing members shall be considered unrestrained.
2. All members in vertical braced frames shall be considered as primary members for fire proofing protection.

II. Earthwork

A. Clearing: The entire building area shall be scraped to remove the top 4 inches of soil, including all vegetation and debris.

B. Near surface collapsible soil: The depth of this material is approximately six feet. Do not place any footing on this material. Remove all collapsible soil material from below footings and replace it with compacted structural fill. Remove an area that is equal to the width of the footing plus one foot for each foot of fill thickness, see C2/SB501.

C. Proof rolling: The natural undisturbed soil below all footings shall be proof rolled prior to placing concrete. Remove all soft spots and replace with compacted structural fill.

D. Compacted structural fill: All fill material shall be a well-graded granular material with a maximum size less than 4 inches and with not more than 10 percent passing a No. 200 sieve. It shall be compacted to 95 percent of the maximum laboratory density as determined by ASTM D1557. All fill shall be tested (See Specifications and the Quality Assurance section of the GSN).

III. Masonry

A. Construction Requirements:
1. Masonry Veneer Attachment and Reinforcing:
   a. To steel stud and wood stud walls: Veneer shall be attached to the studs Dur-O-Wal D/A 213 S seismic veneer anchors or Hohmann & Barnard DW-10 or DW-10HS seismic veneer anchors (or equal) spaced at 16" o.c. Veneer anchors shall be attached to studs with #10 corrosion resistant self drilling screws. Attach the veneer to the anchors with Dur-O-Wal Seismic Steel Pintles or Hohmann & Barnard 3/16" Byna-Tie with Seismiclips (or equal) spaced at a maximum of 16" o.c. in both directions. Anchor ties shall engage to a galvanized No. 9 gauge horizontal joint reinforcement wire in the veneer which shall be continuous and shall be placed at 16" o.c. maximum at the center of the veneer.
   b. To concrete walls: 22 gauge galvanized dovetail slots shall be installed vertically in concrete at 16" o.c. Attach the veneer to dovetail slots with Dur-O-Wal 16 gage seismic dovetail anchor ties or Hohmann & Barnard 3/16" Byna-Tie with Seismiclips (or equal) spaced at a maximum of 16" o.c. in both vertical and horizontal directions. Anchor ties shall engage to a galvanized No. 9 gauge horizontal joint reinforcement wire in the veneer which shall be continuous and shall be placed at 16" o.c. maximum at the center of the veneer. Dovetail slots and anchor ties shall be galvanized.
   c. Other methods of attachment may be used after written acceptance by the architect and structural engineer.
   d. Steel Lintels: Provide steel angle lintels at all openings through the masonry veneer. Provide one inch of bearing for each foot of width of opening, with a minimum bearing of six inches. See the Steel Angle Lintel Schedule for size.

IV. Concrete

A. Materials shall comply with the Standards specified in ACI 318-99, "Building Code Requirements for Structural Concrete."
1. Compressive strengths of concrete at 28 days shall be as follows:
   a. Footings. . . . . 3000 psi
   b. Slabs on Grade. . . . . 3000 psi
   c. Walls . . . . . 4000 psi
   d. Columns . . . . . 4000 psi
   e. Beams . . . . . 4000 psi
   f. All other Site Cast Concrete. . . . . 4000 psi
2. Concrete Density (Maximum Air Dry Weight):
   a. Normal weight concrete shall be approximately 145 to 155 pounds per cubic foot.
3. Reinforcement steel:
   a. ASTM A615 Grade 60, fy = 60,000 psi min. unless noted otherwise.
4. Admixtures:
   a. Air-entraining admixtures, comply with ASTM C 260 (when used).
      (1) When air content of a trowel finished floor slab exceeds 3%, there is an increased risk for delaminations and blistering to occur. When this situation is present, the contractor shall pay special attention to the finishing procedures to help minimize such risks. Refer to ACI 302.1R-96 "Guide for Concrete Floor and Slab Construction" for proper finishing guidelines.
   b. Calcium chloride shall not be added to the concrete mix.
5. Only one grade or type of concrete shall be poured on the site at any given time.

B. Formwork shall comply with ACI Standards Publication 347 and the project specifications. The contractor shall be responsible for the design, detailing, care, placement and removal of the formwork and shores.

C. Concrete cover requirements for deformed bar reinforcing steel shall comply with ACI 318, "Building Code Requirements for Structural Concrete".
1. Cast-in-place Concrete: Clear Cover
   a. Cast against and permanently exposed to earth . . . . . 3"
   b. Formed concrete exposed to earth or weather:
      #6 thru #18 bars . . . . . 2"
      #5 and smaller bars . . . . . 1.1/2"

D. Construction Joints and Control Joints:
1. Provide a continuous 2 X 4 keyway or a surface intentionally roughened to a full amplitude of approximately 1/4" in all wall footings, unless noted otherwise. See details. Adjust the keyway as necessary to provide for proper bar placements.
2. All horizontal and vertical construction joints shall have a continuous 2 X 4 keyway along the joint or joints shall be intentionally roughened to a full amplitude of approximately 1/4", unless noted otherwise. See details.
3. Provide reinforcement to match the member reinforcement across the joint, unless noted otherwise.
4. Slabs on grade shall have construction or control joints spaced not to exceed 30 times the slab thickness in any direction. All discontinuous control or construction joints shall be reinforced with 2 - #4 x 48". See structural details. Construction joints shall not exceed a distance of 125'-0" o.c. in any direction.
5. Control joints shall be installed in slabs on grade so the length to width ratio of the slab is no more than 1.25:1. Control joints shall be completed within 12 hours of concrete placement. Control joints may be installed by:
   a. Saw cut a depth of 1/4 the thickness of the slab
   b. Tooled joints a depth of 1/4 the thickness of the slab
6. Control joints in visually exposed walls, unless noted otherwise: (Joints shall line up with masonry and architectural joints, see drawings.)
   a. Vertical control joints at 10'-0" on center.
   b. Reinforcing shall be continuous through control and construction joints, unless noted otherwise.
   c. Control joints in concrete foundation walls shall line up with masonry control joints.

E. Detailing: All reinforcing, including WWF, shall be detailed, bolstered & supported to comply with ACI 315, "Details and Detailing of Concrete Reinforcement" and the Concrete Reinforcing Steel Institute (CRSI) recommendations. Reinforcing bars shall not be welded unless specifically shown on drawings.
1. Lap splice lengths shall be detailed to comply with the "Reinforcing Bar Lap Splice Schedule" contained within the contract drawings. Splices may be made with mechanical splices capable of 125% tension capacity of the bar being spliced. Mechanical splices shall be the positive connecting type coupler. They shall be covered by a current ICBO Evaluation Report. Use "Cadweld" splice sleeves with ferrous filler, "Lenton" taper threaded rebar splices, "Bar-Lock" lockshear bolt coupling sleeves, or approved equivalent. If mechanical splices are used, splices or couplers on adjacent bars shall be staggered a minimum of 24" apart along the longitudinal axis of the reinforcing bars.
2. All embedments and dowels shall be securely tied to formwork or to adjacent reinforcing prior to the placement of concrete.
3. Use chairs or other support devices recommended by the CRSI to support and tie reinforcement bars and WWF prior to placing concrete. WWF shall be continuously supported at 36" o.c. maximum.
4. Provide corner bars at intersecting wall corners using the same bar size and spacing as the horizontal wall reinforcing. Unless noted otherwise, corner bar lap lengths shall conform with reinforcing bar lap splice lengths as noted above.
5. All vertical reinforcing shall be doweled to footings, or to the structure below. Dowels shall be the same size and at the same spacing as the vertical reinforcing scheduled (or detailed) for the element above. Lap splice lengths shall comply as noted above or as shown in the drawings. Dowels extending into footings shall terminate with a 90 degree standard ACI hook and shall extend to within 4" of the bottom of the footing. Footing dowels (#8 bars and smaller) with hooks need not extend more than 20" into footings.
6. Horizontal wall reinforcing shall terminate at ends of walls and openings into the far end of the jamb column with a 90 degree standard ACI hook, unless shown otherwise. Lap horizontal bar splices as noted above or as shown in the drawings. Horizontal wall reinforcing shall be continuous through construction and control joints. Splices in horizontal reinforcement shall be staggered, so the splice laps will not overlap. Splices in two curtains where used shall not occur in the same location, splice laps shall not overlap.
7. Provide 2-#5 X 4'-0" diagonal bars (or 1 - #7 x 4'-0" bar in 10" walls and thinner) at the corners of all openings. Diagonal bars shall be centered on the corner of the opening. All recesses in concrete walls that interrupt reinforcing steel shall be reinforced the same as an opening.
8. Contractor shall coordinate placement of all openings, curbs, dowels, sleeves, conduits, bolts, inserts and other embedded items prior to concrete placement.
9. Column crossties shall have a 135 degree hook at one end and a 90 degree hook at the other. The hooks shall engage the vertical column reinforcement. The 135 degree hooks of consecutive crossties engaging the same vertical bars shall engage alternate vertical bars.
10. All reinforcement shall be bent cold, and shall be bent only once at the same location. All reinforcement shall be shop bent, unless otherwise permitted by the engineer.

F. Minimum Reinforcing: Wall reinforcing shall be as follows, unless noted otherwise:

Wall Thickness	Horizontal Reinf.	Vertical Reinf.
6"	#4 @ 13" o.c.	#4 @ 18" o.c.
8"	#5 @ 15" o.c.	#4 @ 16" o.c.
10"	#5 @ 12" o.c.	#4 @ 13" o.c.
12"	#4 @ 13" o.c. Each Face	#4 @ 18" o.c. Each Face
Others	0.25% of Wall Area	0.15% of Wall Area

Place steel in the center of the wall (except in walls thicker than 10" and where shown otherwise). Walls thicker than 10" shall have two curtains of reinforcing (placed near each face of the wall), unless otherwise shown on the structural drawings. Spacing shall not exceed three times the wall thickness nor 18". In addition to the above reinforcing, 2 - #5 (or 1 - #7 in 10" walls and thinner) x continuous horizontal bars shall be placed at the bottom of the wall (near the footing) and at each floor level, at the roof level and at the top of wall.

G. No aluminum conduit or product containing aluminum or any other material injurious to concrete shall be embedded in concrete.

H. Unless otherwise noted, all slabs on grade shall be 4" thick.

V. Structural Steel

A. Material:
1. W-Shapes: ASTM A992 (Fy = 50 ksi), except as noted otherwise.
2. All Other Shapes and Plates: ASTM A36 (Fy = 36 ksi), except as noted otherwise.
3. Rectangular and Square Hollow Structural Sections (HSS): ASTM A500, Grade B (Fy = 46 ksi).
4. Deformed Bar Anchors (DBA): ASTM A496.
5. Headed Stud Anchors (HSA): ASTM A108, with dimensions complying with AISC specifications.
6. Anchor Rods: ASTM F1554, Grade 36 with ASTM A563 heavy hex nuts and ASTM F436 hardened washers, unless noted otherwise.
7. All steel shapes and plates which are a part of the seismic force resisting system shall have Charpy V-Notch absorbed energy of 20 ft-lbs or greater at 70 degrees Fahrenheit, as indicated below:
   a. Shapes: Group 3 (with flanges 1.1/2" or thicker), Groups 4 and 5.
   b. Plates: 2" and thicker.
   c. Test Frequency: heat.

B. Fabrication and construction shall comply with the following Codes and Standards:
1. American Institute of Steel Construction (AISC) 335-89, "Specification for Structural Steel Buildings - Allowable Stress Design and Plastic Design," including Supplement No. 1, 2001.
2. AISC LRFD 1999, "Load and Resistance Factor Design Specification for Structural Steel Buildings."
3. AISC 341-02, "Seismic Provisions for Structural Steel Buildings," dated May 21, 2002.
4. AISC HSS 2000, "Load and Resistance Factor Design Specification for Steel Hollow Structural Sections."
5. AISC 2000, "Code of Standard Practice" excluding the following: Section 3.3 (last sentence), Section 3.4, Section 4.4, Section 4.4.1, Section 4.4.2, Section 4.5, and Section 7.13.3.

a. The architectural drawings are the prime contract drawings. Consultants' drawings by other disciplines are supplementary to the architectural drawings. The structural drawings shall be used in conjunction with the architectural drawings. Detailing and shop drawing production for structural elements will require information (including dimensions) contained in architectural, structural, and/or other consultants' drawings. Refer to VII. Special Instructions, notes VII.B and VII.C on this sheet.

6. AISC/RCSC 2000, "Specification for Structural Joints Using ASTM A325 or A490 Bolts"
7. American Welding Society (AWS) D1.1-00, "Structural Welding Code - Steel" (specific items do not apply when they conflict with the AISC requirements).
8. Steel Joist Institute (SJI) 1994, "Standard Specification, Load Tables and Weight Tables for Steel Joists and Joist Girders," and "Recommended Code of Standard Practice."
9. American Iron and Steel Institute (AISI) 20011996, "North American Specification for the Design of Cold-Formed Steel Structural Members."

C. Structural shapes and plates shall be fabricated from newly rolled (milled) one piece sections without splices, unless specifically noted otherwise on the structural drawings. Connections for structural steel shall comply with the structural drawings, unless written approval is given by the structural engineer.

D. Welding:
1. Certification of Welders: All shop and field welding shall be executed by AWS certified welders who have been specifically certified for the type of work to be performed. Certification shall be considered current if dated within the past 12 months. Welders will be considered certified if they have been certified under AWS and their work records are current within every six month period thereafter as required by AWS. Certification and records must comply with AWS Standards. Certification and appropriate records must be provided to the architect prior to beginning work.
2. Electrodes: E-70 XX or as noted otherwise. E60 XX may be used for welding steel floor and roof decks.
3. Minimum Welds: All intersecting steel shapes that are not bolted shall be connected by a fillet weld all around, unless noted otherwise. Fillet weld sizes that are not shown shall be 1/16" less than the thinnest of the connected parts for thicknesses 1/4" and larger. Fillet welds on plates less than 1/4" shall be of the same size as the thinnest of the connected parts.
4. Reinforcing Bars: Do not weld rebar except as specifically detailed in the drawings. In such cases, use only AWS standards. Do not substitute reinforcing bars for deformed bar anchors (DBAs), machine bolts, or headed stud anchors(HSAs).
5. Bolts: Do not apply any welds, including "tack" welds to bolts, including anchor bolts, except as specifically detailed in the drawings.
6. It is recommended the steel erection contractor and steel fabricator contact the Quality Assurance Agency prior to beginning any of the above welds. A program of joint preparation and welding procedures should be worked out between the two parties before the welding is started so that correct welds will be made from the beginning.
7. Headed Stud Anchor (HSA) welding and Deformed Bar Anchor (DBA) welding shall conform to the manufacturer's specifications. Welding shall comply with AWS D1.1 Section 7.6 through 7.8 and Annex IX.
8. Special Provisions for full penetration welds used in moment frames: Welding methods, procedures and quality control shall comply with AWS D1.1 and the following.
   a. Tack weld quality comply with Section 5.18.
   b. Arc Strikes, gouges an other imperfections within or adjacent to the joint, shall be repaired or removed.
   c. Preheat, and interpass requirements as outlined in Section 3.5.
   d. Use weld tabs at beam flange connections; after welding, remove the weld tabs and finish to a smooth contour per Section 5.31.3.
   e. Backer bars shall be removed from the beam bottom flange connections to columns. The root of the weld shall be back gouged to sound metal to remove all slag and cracks. Weld the backgouged region and finish welding using a reinforcing fillet weld, according to Section 5.10.4.
   f. Backer bars need not be removed from the beam top flange connections to columns provided that the backer bars are welded to the column flange with a continuous fillet weld for the entire length of the backer bar.
   g. Unrepaired cracks, gouges, grooves and notches will not be permitted in the joint area.
   h. Use electrodes with Charpy V-notch absorbed energy equal to or greater than 20 ft-lbs at 0 degrees Fahrenheit under AWS A5 classification test methods, and 40 ft-lbs at 70 degrees Fahrenheit using test procedures prescribed in Appendix A of FEMA 353. Acceptable electrodes include E70TG-K2, E71T-8, and E71T-1.
9. Braced Frame welding: lengths shown for fillet welds for brace-to-gusset, gusset-to-baseplate, and column-to-gusset connections are minimums, intended for establishing gusset plate dimensions. Weld entire contact length at these joints, typical.

E. Bolted Connections:
1. Use ASTM A325SC bolts for all steel to steel connections, unless noted otherwise. Tighten bolts by the turn of the nut, calibrated wrench, or direct tension indicator method. Alternate fastener designs as defined by AISC shall be submitted to the engineer for review and acceptability prior to installation.
2. Use ASTM A325N bolts for all steel to steel connections, where indicated. Tighten bolts by the turn of the nut, calibrated wrench, or direct tension indicator method. Alternate fastener designs as defined by AISC shall be submitted to the engineer for review and acceptability prior to installation.
3. Provide hardened washers beneath the turned element of all bolts or nuts. Provide hardened beveled washers beneath turned element.
   washers, to compensate for the lack of parallelism, where the outer face of the bolted parts has a slope greater than one in twenty with respect to the plane normal to the bolt axis. Hardened washers or plates installed over oversized holes or slotted holes shall be at least 5/16" thick and shall conform to ASTM F436. Plates or bars installed at slotted holes shall have a size sufficient to completely cover the slot after installation.
4. Where a steel to steel beam connection is not detailed in the drawings, provide a standard AISC framed connection with the capacity to support one half of the total uniform load capacity of the given shape for the span and for the steel specified.
5. Bolts, nuts and washers shall not be reused.

F. Steel Lintels:
Provide steel angle lintels at all openings through the masonry veneer. Provide one inch of bearing for each foot of width of opening, with a minimum bearing of six inches. See the Steel Angle Lintel Schedule for size.

G. Beam Web Stiffener Plates:
Provide full height web stiffener plates to each side of all beams above all bearing points. Stiffener plates shall be the thickness noted below unless noted otherwise and shall be welded on both sides of the stiffener plate with fillet welds (noted below) all around.

Beam Web stiffener thickness	For beams with flange widths between	Weld Size
1/4 inch thick	0" and less than 8 1/4"	3/16"
3/8 inch thick	8 1/4" and less than 12 1/4"	1/4"
1/2 inch thick	12 1/4" and less than 16 1/2"	5/16"
5/8 inch thick	16 1/2" and less than 20 3/4"	3/8"

GouldEvans
©2002 Gould Evans Associates, L.C.
1000 South Main Street • Suite 100
Salt Lake City, Utah 84101
Voice 801.532.6100
Fax 801.532.6102
www.gouldevans.com
kansas city • lawrence • phoenix
salt lake city • san antonio • tampa

DFCM PROJECT NO: 05266700
STATE PROPERTY ID: 01791
RISK MANAGEMENT NO:
CAD PROJECT NO:
CAD DWG FILE:
DRAWN BY:
CHECKED BY:
COPYRIGHT: STATE OF UTAH

REAVELEY
ENGINEERS + ASSOCIATES
Consulting Structural Engineers

REGISTERED CERTIFIED STRUCTURAL ENGINEER
#170179
MARK R. HARRIS
UTAH
7-18-06

snow college
activities center
dance studio addition | remodel
ephraim, utah

REVISION DATE

Project no: 0906-0260
Date: July 21, 2006
Sheet:

GENERAL STRUCTURAL NOTES

SE001

100% Construction Documents

GENERAL STRUCTURAL NOTES

V. Structural Steel (continued)

H. Open Web Steel Joists and Girders:
1. The steel joist supplier shall be responsible for the design of all open web steel joists and girders. Joists or girders with slopes greater than 1/2 inch per foot shall be designed to meet or exceed the load capacities, listed in the SJI load tables, of the joist or girder sizes indicated on the framing plan, as if the joists or girders were installed level.
2. Open web joists and girders shall be designed with deflection limits of L/240 for total load and L/360 for live load, where L is the joist span.
3. Where uplift loads due to wind are indicated, rows of bottom chord bridging shall be provided at the first bottom chord panel points per SJI Specifications. This is in addition to the bridging shown on the framing plans.
4. Provide special bearing ends to accommodate slopes from sloped joists, sloped girders or sloped bearing conditions.
5. Camber: All joists shall be cambered as specified in the SJI specifications, unless noted otherwise.
6. Field Modifications: Do not modify any joist or girder, including holes through the top and bottom chords, without the written consent and direction from the manufacturer.
7. Shop Drawings and Design Calculations: Shop drawings for all joists and girders used in the project shall be submitted for review. Prior to the fabrication of joists and girders, the open web steel joist and girder manufacturer shall prepare complete joist and girder calculations under the direct supervision of a professional engineer licensed in the State of Utah. Calculations shall be submitted for review for joists and girders designated as SPECIAL or SP and for all joist or girders with axial loads or additional concentrated loads (as noted on the drawings). Submitted calculations shall bear the seal of a professional engineer licensed in the State of Utah.
8. Stabilizer Plates: Provide steel joist and joist girder stabilizer plates as indicated. Stabilizer plates shall be 6" x 6" with a 13/16" diameter hole with 1.1/2" minimum edge distance, and shall extend 3" minimum below the bottom chord of the joist or girder. Plate thickness shall be equal to the chord gap minus 1/4", or 3/4", whichever is less.
9. Verify size, weight, location and configuration of all roof top equipment with architect and mechanical engineer. Provide steel frames for support of roof top equipment as indicated on structural details in the structural drawings. Coordinate openings with the mechanical and general contractor.
10. All concentrated loads greater than 100 pounds supported by open web steel joists and girders shall be located within 6 inches of joist or girder panel points or the joist or girder shall be reinforced with an additional web member. Refer to the "TYPICAL DETAIL AT ADDITIONAL CONCENTRATED POINT LOAD" in the structural drawings.
11. Concentrated point loads, single or multiple, totaling 100 pounds or less can be located at any point along the top or bottom chord of an open web steel joist or girder between adjacent panel points without meeting the requirements above. A limit of four concentrated 100# maximum point loads per joist or girder will be permitted on spans of 12' or greater, one concentrated 100# max. load on spans less than 12', unless specifically noted otherwise on the structural drawings.
12. Joist bridging shall never be used to support hanging loads.
13. Bracing of miscellaneous items (mechanical, electrical, plumbing, etc.) to the bottom chord of joists or girders will not be allowed in any instance. All lateral braces must connect to the top flange/top chord of the framing member above unless noted otherwise on the structural drawings.

I. Steel Roof Deck:
1. Steel roof deck shall comply with the latest requirements of the Steel Deck Institute (SDI). Submit ICBO report with load and lateral shear capacities with shop drawings.
2. Steel roof deck shall be 1 1/2" deep X 20 Gauge minimum galvanized (G60), type "B" wide rib deck with interlocking side seams with the following properties:

	20 Gauge	18 Gauge
Minimum S (in3/ft)=	0.234	0.322
Minimum I (in4/ft)=	0.213	0.296

Painted roof deck shall be coated with special paint to receive sprayed-on fire proofing, where required.
3. Minimum allowable deck diaphragm shear values shall be 500 lb/ft. for a 7'-0" deck span.
4. Maximum allowable deck flexibility factor (F) shall be $80x10^6$ in/lb for a 7'-0" deck span.
5. Weld steel roof deck to supporting framing members with 3/4" diameter puddle welds at the following spacings (Closer spacings may be used to develop minimum shear requirements.):
   a. 12" o.c. to all supports perpendicular to deck corrugations (4 welds per 36" sheet).
   b. 12" o.c. to the following supports parallel to deck corrugations: All perimeter supports, all concrete or masonry shear/bearing walls, all joists or joist girders with a "T/C" designation, and all steel beams that are on a grid line with braced frames or moment frames.
   c. 12" o.c. to all other supports parallel to deck corrugations
   d. All welded surfaces shall be dry before welding deck to supports.
6. Attach interlocking seams with 1 1/2" long top seam welds at 24" o.c. minimum between adjacent pieces of decking. Crimp side seams before welding. Closer spacings may be used to develop minimum shear requirements.
7. Alternate means of deck attachment and fastening using screws, pins or other mechanical fastening methods are permitted with approval of the engineer. The contractor shall submit the proposed attachment system and the code evaluation report demonstrating the system has the strength to meet the required deck shears and specified above (in item 3) and on the plans. The flexibility factor of the proposed deck attachment system shall meet the required flexibility factor specified above (in item 4) and on the plans. If the alternate attachment method is approved, it is the responsibility of the contractor to ensure that the deck type and profile is compatible with the fastening system being used.
8. Provide a 2" minimum bearing and a 4-inch lap at the splice points of all pieces of deck.
9. All deck shall be 3-span continuous minimum where possible. The contractor shall provide heavier gauge deck as required for one or two span conditions to meet equivalent loading of the above deck under a three span condition.
10. Steel roof deck shall not be used to support loads from plumbing, HVAC ducts, light fixtures, architectural elements or equipment of any kind, unless specifically noted otherwise. Lightweight suspended acoustical ceilings with a total weight per wire not exceeding 50# may be hung from the steel roof deck. The hangers should be staggered to distribute the load over multiple deck flutes.

J. Cold-Formed Steel
1. Light Gauge Steel Framing:
   a. Where steel framing size designators are used in the drawings, they follow the convention established by the Steel Stud Manufacturers' Association (SSMA) and the North American Steel Framing Alliance (NASFA). Framing members provided shall comply with the designations according to this convention.
   b. All load bearing stud (and/or) joist framing members along with all runner, bridging, and end track shall be of the designation shown on the plans. All studs with base metal thickness of 54 mil and 68 mil, and joists with base metal thickness of 54 mil, 68 mil and 97 mil, shall be formed from steel meeting the requirements of ASTM A570 except that the steel shall have a 50,000 psi yield stress. All track and end closures with base metal thickness of 54 mil and 68 mil, bridging with base metal thickness of 54 mil, and studs and track with base metal thickness of 43 mil and 33 mil, shall be formed from steel with a minimum yield of 33,000 psi. All components shall be galvanized.
   c. Follow all manufacturers' recommendations for the use of these products.
   d. Unless noted otherwise, all welded connections shall be done using 1/8" AWS type 6013 or 7014 rod with a welding heat of 60-110 amperes depending on the gauge of material and the fit of the parts. Wire tying of framing components shall not be permitted.
   e. All interior non-bearing steel stud walls that extend above the ceiling but do not attach to the floor or roof diaphragm (above), shall have diagonal braces at 45 degrees (+/-). The KL/r ratio of the brace shall not exceed 200 and shall not be spaced further apart than 10'-0". Connect diagonal braces to the top of the steel stud walls and to the underside of the top flange of the steel beams, open web joists or girders, etc. with 1/8" fillet welds all around. Diagonal angle braces may be connected to 8" x 8" x 1/4" steel plates which shall be anchored to the floor or roof decks that have concrete fill above with 2- 3/8" dia. expansion anchors for each plate. Connect angle to plate with a 1/4" fillet weld all around. Connect diagonal braces to roof decking that does not have concrete fill above per the non-bearing wall brace connection details shown on the structural drawings. Diagonal braces may be constructed from cold formed light gauge steel studs but must conform to the kl/r ratio of less than 200 requirement. When diagonal brace lengths exceed 10'-0" (+/-), cold formed box sections made from two 600S137-54 steel studs will likely be required.

VI. Special Instructions

A. The project specifications are not superseded by the General Structural Notes but are intended to be complementary to them. Consult the specifications for additional requirements in each section. Notes and specific details on the drawings shall take precedence over General Structural Notes and typical details.

B. The architectural drawings are the prime contract drawings. Consultant drawings by other disciplines are supplementary to the architectural drawings. All omissions or conflicts, including dimensions, between the various elements of the consultants' drawings and/or specifications shall be brought to the attention of the Architect before proceeding with any work involved. In case of conflict, follow the most stringent requirement as directed by the Architect without additional cost to the owner. Any work done by the contractor after discovery of such discrepancy shall be done at the contractor's risk.

C. The structural drawings shall be used in conjunction with the architectural drawings. Primary structural elements and overall structural layout are indicated within the structural plans and details. Some secondary elements, architectural layouts, alcoves, elevations, slopes, depressions, curbs, mechanical equipment and electrical equipment, are not indicated within the structural drawings. Detailing and shop drawing production for structural elements will require information (including dimensions) contained in the architectural, structural and/or other consultants' drawings.

D. Shoring and Bracing Requirements:
1. Floor and Roof Structures -- The General Contractor is responsible for the method and sequence of all structural erection. He shall provide temporary shoring and bracing as his method of erection requires to provide adequate vertical and lateral support. Shoring and bracing shall remain in place as the chosen method requires until all permanent members are in place and all final connections are completed, including all roof and floor attachments. The building shall not be considered stable until all connections are complete.
2. Foundation walls must be braced until the complete floor or roof systems is completed. Do not backfill until floor or roof systems are in place.
3. Walls above grade shall be braced until the structural system is complete. Walls shall not be considered to be self supporting.

E. Submittals: A copy of all shop drawings that have been submitted for review must be kept at the construction site for reference. These drawings must bear the appropriate review stamps. The shop drawing review shall not relieve the contractor of the responsibility of completing the project according to the contract documents. The general contractor shall review and mark all shop drawings prior to submitting them to the Architect for his review. Shop Drawings made from reproductions of (these) contract drawings will be rejected.

F. Project Coordination: It shall be the responsibility of the general contractor to coordinate with all trades any and all items that are to be integrated into the structural system. Openings or penetrations through, or attachments to the structural system that are not indicated on these drawings shall be the responsibility of the general contractor and shall be coordinated with the Architect/Engineers. The order of construction is the responsibility of the general contractor. It is the contractor's obligation to provide all items necessary for his chosen procedure.

G. Contractor shall field verify all dimensions, and conditions. If the contract drawings do not represent actual conditions, contractor shall notify architect/engineer prior to fabrication or construction within that area.

H. Notice of Copyright: The structural drawings, plans, schedules, notes and details are hereby copyrighted by Reaveley Engineers and Associates, Inc., All Rights reserved. Submission or distribution of documents to meet official regulatory requirements or for similar purposes in connection with the project is not to be construed as publication in derogation of Reaveley Engineers & Associates, Inc.'s reserved rights. The documents defining the structure are instruments of service prepared by Reaveley Engineers and Associates, Inc. for one use only. Furthermore, these documents shall not be reproduced, or copied, in whole or in part by the contractor or his subcontractors for preparation of shop drawings or other submittals.

ABBREVIATIONS

AB	ANCHOR BOLT (S)	F.D	FLOOR DRAIN	NIC	NOT IN CONTRACT
ABV	ABOVE	FDTN	FOUNDATION	NTS	NOT TO SCALE
@	AT	F.F.	FINISH FLOOR		
ALT	ALTERNATE	FIN	FINISH	OPNG	OPENING
APPROX	APPROXIMATE	FL	FLOOR	OPP	OPPOSITE
ARCH	ARCHITECT(URAL)	FT	FOOT	O.C.	ON CENTER
		FTG	FOOTING	O.F.	OUTSIDE FACE
BM	BEAM	FV	FIELD VERIFY	OWSJ	OPEN WEB STEEL JOIST
BLW	BELOW				
		GA	GAUGE	PCF	POUNDS/CUBIC FOOT
BRG	BEARING	GALV	GALVANIZED	PL	PLATE
BTWN	BETWEEN	GLB	GLU-LAMINATED BEAM	PLF	POUNDS/LINEAL FOOT
BLDG	BUILDING	GR	GRADE	PNL	PANEL
BOT	BOTTOM	GSN	GENERAL STRUCTURAL NOTES	PSF	POUNDS/SQ FOOT
				PSI	POUNDS/SQ INCH
C.J.	CONSTRUCTION JOINT OR CONTROL JOINT			PT	POINT
		HB	HORIZONTAL BRIDGING		
CJP	COMPLETE JOINT PENETRATION	HT	HEIGHT	REINF	REINFORCING
		HORIZ	HORIZONTAL	R.D.	ROOF DRAIN
CMU	CONC MASONRY UNIT	HSA	HEADED STUD ANCHORS	REQ'D	REQUIRED
COL	COLUMN				
CONC	CONCRETE	IBC	INTERNATIONAL BUILDING CODE	SHT	SHEET
CONST	CONSTRUCTION			SI	SPECIAL INSPECTION
CONT	CONTINUOUS	ICBO	INTERNATIONAL CONFERENCE OF BUILDING OFFICIALS	SOG	SLAB ON GRADE
CONTR	CONTRACTOR			STD	STANDARD
CTR	CENTER	ICC	INTERNATIONAL CODE COUNCIL	STIFF	STIFFENER
				STL	STEEL
DB	DECK BEARING	IN.	INCH	SQ	SQUARE
DBA	DEFORMED BAR ANCHORS	INSUL	INSULATION	SIM	SIMILAR
		INT	INTERIOR	STR	STRUCTURAL
DBL	DOUBLE	I.F.	INSIDE FACE	STAG	STAGGERED
DET	DETAIL				
DIA	DIAMETER	JT	JOINT	T&B	TOP AND BOTTOM
DIM	DIMENSION	JST	JOIST	TEMP	TEMPERATURE
DN	DOWN	KLF	KIPS PER LINEAL FOOT	THDS	THREADS
DWG	DRAWING	KSF	KIPS PER SQUARE FOOT	T.O.	TOP OF
DWL	DOWEL	KSI	KIPS PER SQUARE INCH	TOC	TOP OF CONCRETE
		K	KIPS - 1,000 POUNDS	TOF	TOP OF FOOTING
EA	EACH			TOS	TOP OF SLAB
E.J.	EXPANSION JOINT (SEISMIC SEPARATION JOINT)	LF	LINEAL FOOT	TOW	TOP OF WALL
		LBS	POUNDS	TYP	TYPICAL
ELEV	ELEVATION	LLH	LONG LEG HORIZONTAL		
ELEC	ELECTRICAL	LLV	LONG LEG VERTICAL	UNO	UNLESS NOTED OTHERWISE
EQUIP	EQUIPMENT				
EQ	EQUAL	MAS	MASONRY	VERT	VERTICAL
EXIST	EXISTING	MAX	MAXIMUM	W/	WITH
EXP	EXPANSION / EXPOSED	MCJ	MASONRY C.J.	WWF	WELDED WIRE FABRIC
EXT	EXTERIOR	MECH	MECHANICAL		
E.F.	EACH FACE	MFR	MANUFACTURER		
E.W.	EACH WAY	MIN	MINIMUM		
		MISC	MISCELLANEOUS		

VII. Quality Assurance

A. Quality Assurance Agency Requirements:
1. The owner shall engage a qualified Quality Assurance Agency (QAA) to provide all special inspection and quality assurance testing for the project. All quality assurance personnel assigned to the project shall demonstrate competence, to the satisfaction of the building official, for inspection of the particular type of construction or operation requiring special inspection.
2. Prior to construction, the QAA shall prepare a written Quality Assurance Implementation Plan (QAIP) for the project. The QAIP shall include a list of personnel assigned to the project including management personnel, inspection procedures and frequency, proposed testing methods and frequency of testing, and reporting procedures. The QAIP shall also outline methods of documenting deficiencies and reporting corrections. A copy of the QAIP shall be given to the contractor for review and coordination with subcontractors.
3. Prior to construction, the QAA shall submit the following information to the Architect and Engineer of Record for approval:
   a. A copy of the Quality Assurance Implementation Plan for the project.
   b. A copy of the appropriate certification and training records for each individual performing inspections or testing.
   c. A list of the testing equipment designated for the project and recent calibration records for the equipment.
   d. Sample inspection and testing reports and the distribution list for the reports.
4. The special inspector shall inspect the work per Chapter 17 of the IBC for conformance with the contract documents. The special inspector shall send reports to the owner, building official, architect, engineer, and contractor. All discrepancies shall be brought to the immediate attention of the contractor for correction. The QAA shall submit a final signed report stating that the special inspection work was, to the best of their knowledge, in conformance with the plans, specifications and applicable workmanship provisions of the IBC.

B. Seismic Force Resisting Systems
1. Elements that are a part of the Main Seismic Force Resisting System for the structure may require increased quality assurance inspection and testing. The Main Seismic Force Resisting system for the structure includes the following elements:
   a. Steel columns and beams that attach directly to steel stud shearwalls.
   b. Footings and foundation systems that directly support walls, columns and braces referenced above.
   c. Roof decking.
   d. Floor decking and/or slab systems.
   e. All elements labeled as "drag struts" or "chords."
   f. Connections between the elements referenced above.

C. Special Inspection: Special Inspection shall be provided for the following elements per IBC sections 1704 and 1707:
1. Concrete and elements embedded in concrete shall be special inspected prior to and during placement of concrete. Special inspection of concrete shall include the following:
   a. Reinforcing steel size and placement.
   b. Surface preparation at cold joints including placement of keyways.
   c. Bolt and embed size, configuration and placement.
   d. Concrete shall receive continuous special inspection during placement, and periodic inspection after placement to ensure proper curing and weather protection procedures.
2. Structural steel fabrication and erection shall be special inspected, including the following:
   a. High strength bolts per IBC 1704.3.3 and IBC section 2209.
   b. Fillet welds smaller than 5/16" per AWS D1.1.
   c. Fillet welds larger than 5/16", multiple pass welds, and all groove welds shall receive continuous special inspection during weld placement per AWS D1.1.
   d. Welding of reinforcing steel shall receive continuous special inspection during weld placement per AWS D1.1.
   e. Welding of Headed Stud Anchors (HSA) and Deformed Bar Anchors (DBA) shall be inspected to comply with AWS D1.1 Section 7.6 through 7.8 and Annex IX.
   f. Welding or fastening of floor or roof deck per AWS D1.3. or per the code evaluation report for the fastening method.
3. Post-installed anchors, including but not limited to expansion anchors, adhesive anchors and rebar dowels, and low velocity fasteners, shall receive special inspection per the code evaluation reports for the anchors.
   a. Continuous special inspection is required during the installation of all adhesive anchors and rebar dowels. Special inspector shall verify the following:
      (1) Anchor size and steel grade.
      (2) Hole diameter, location, and type of drill bit.
      (3) Cleanliness of hole and anchor.
      (4) Adhesive application.
      (5) Anchor embedment.
4. Wood: Fastening of wood shearwalls and installation of anchor bolts, and other elements of the main seismic force resisting system shall receive special inspection per IBC 1707.3.

D. Structural Testing: The following materials shall be tested per IBC sections 1704 and 1708. The owner reserves the right to test any and all materials using any appropriate non-destructive procedure. Any items found to be deficient shall be corrected and retested at no additional cost to the owner.
1. Earthwork: All compacted structural fill shall be tested to verify soil gradation, lift thickness, and compaction requirements. See the specifications and earthwork section of the GSN for testing frequency and acceptability criteria.
2. Concrete Strength Verification and Testing. All concrete shall be tested to verify strength, slump, unit weight, air content, and temperature. See the specifications for testing criteria, testing frequency and acceptability criteria.
3. Welded connections shall be tested for compliance according to IBC Table 1704.3, AWS D1.1 and the contract specifications and plans. As a minimum, the testing shall include the following:
   a. All complete penetration groove welds shall be tested 100 percent either by ultrasonic testing or by radiography.
   b. Partial penetration groove welds shall be tested either by ultrasonic testing or radiography. A minimum of 50 these welds shall be tested.
   c. Base metal thicker than 1 1/2", when subjected to through thickness weld shrinkage strains, shall be ultrasonically inspected for discontinuities directly behind such welds and three inches above and below the weld after joint assembly completion.
   d. Any material discontinuities shall be accepted or rejected on the basis of the defect rating in accordance with the testing in AWS D1.1 Chapter 6, excluding Sections 6.1 through and including 6.6. All deficient welds shall be corrected and retested at no additional cost to the owner.
4. Post-installed anchors, including but not limited to expansion anchors, adhesive anchors, and low velocity fasteners, shall be tested per the code evaluation reports for the anchors.

E. Structural Observations by the Engineer of Record.
1. The Engineer of Record may perform structural observations at critical phases of the project. Copies of the engineer's report will be distributed to the architect, contractor, owner, and QAA.
2. Observation visits to the site by the Engineer's field representatives shall not be construed as inspection or approval of construction.
3. Notification of Engineer: The contractor shall notify the engineer twenty-four hours prior to:
   a. Placing concrete in any footing.
   b. Closing any wall forms.
   c. Placing concrete in any beam.
   d. Completing the welding of major sections of steel decking.
   e. Completing the fastening of plywood shearwalls.

F. Contractor Responsibility: The contractor shall prepare and submit a written statement of responsibility to the building official and the owner prior to commencement of work on the project. As a minimum the statement shall contain the following information:
1. Acknowledgment of the quality assurance requirements for the structure.
2. Acknowledgment of receipt of the Quality Assurance Implementation Plan (QAIP) from the testing agency.
3. Acknowledgment that control will be exercised to obtain conformance to the Contract Documents and the QAIP.
4. Quality control procedures within the contractors organization, methods and frequency of reporting, and distribution of the reports.
5. Identification and qualifications of the person(s) responsible for quality control and their position(s) in the organization.

GouldEvans
©2002 Gould Evans Associates, L.C.
1000 South Main Street • Suite 100
Salt Lake City, Utah 84101
Voice 801.532.6100
Fax 801.532.6102
www.gouldevans.com
kansas city • lawrence • phoenix
salt lake city • san antonio • tampa

DFCM PROJECT NO: 05266700
STATE PROPERTY ID: 01791
RISK MANAGEMENT NO:
CAD PROJECT NO:
CAD DWG FILE:
DRAWN BY:
CHECKED BY:
COPYRIGHT: STATE OF UTAH

REAVELEY
ENGINEERS + ASSOCIATES
Consulting Structural Engineers

snow college
activities center
dance studio addition | remodel
ephraim, utah

REVISION DATE

Project no: 0906-0260
Date: July 21, 2006
Sheet:

GENERAL STRUCTURAL NOTES

SE002

100% Construction Documents

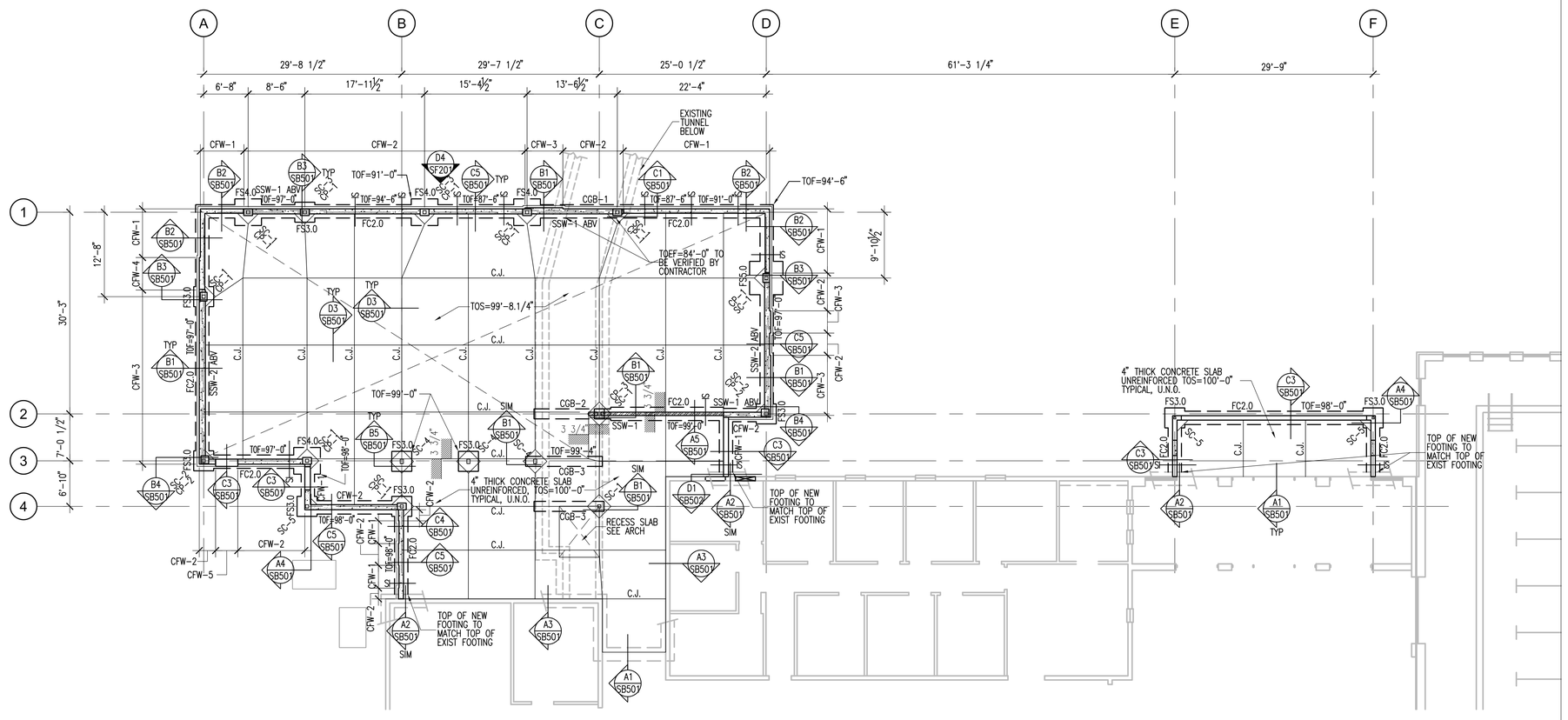

FOOTING & FOUNDATION PLAN

SCALE: 1/8"=1'-0"

NORTH

FOOTING & FOUNDATION PLAN LEGEND

LEG-FOOTING

- IS FOOTING STEP
- FOOTING – CONTINUOUS
- FOOTING – THICKENED SLAB
- FOOTING – SQUARE FOOTING – RECTANGULAR FOOTING – MAT FOOTING
- CONCRETE WALL, CONCRETE FOUNDATION WALL, OR CONCRETE RETAINING WALL
- CONCRETE FOUNDATION WALL – RECESSED
- CONCRETE PIER IN CONCRETE WALL. TOP OF PIER RECESSED 8" BELOW SLAB. TYP U.N.O.
- CONCRETE COLUMN
- STEEL STUD WALL – STRUCTURAL
- STEEL COLUMN – TUBE
- 6" CHANGE IN ELEVATION
- SLAB BLOCK-OUT AT COLUMN
- CJ / F3 SLAB CONTROL/CONSTRUCTION JOINT
- SPECIAL SLAB AREA
- RECESSED/DEPRESSED SLAB
- OPENING

FOOTING & FOUNDATION PLAN NOTES

NOTE-FOOTING

1. SEE ARCHITECTURAL, CIVIL AND LANDSCAPE DRAWINGS FOR EXTERIOR CONCRETE WORK AT DOORS, SIDEWALKS ETC.
2. SEE ARCHITECTURAL DRAWINGS AND FINISH SCHEDULE FOR SLAB AREAS TO RECEIVE FLOOR TILE.
3. SEE ARCHITECTURAL DRAWINGS FOR SLAB DEPRESSIONS AND SLOPES TO DRAINS, ETC.
4. SEE ARCHITECTURAL, CIVIL AND LANDSCAPE DRAWINGS FOR ADDITIONAL EXTERIOR CONCRETE RETAINING AND / OR SITE WALLS NOT SHOWN ON THE STRUCTURAL DRAWINGS.
5. SEE D1/SB501 FOR TYPICAL EXTERIOR CONCRETE FOOTING STEP DETAIL.
6. SEE D2/SB501 FOR TYPICAL REINFORCEMENT AT WALL CORNERS AND INTERSECTIONS.
7. SEE D3/SB501 FOR TYPICAL DETAIL AT SLAB JOINTS IN CONCRETE SLABS ON GRADE.
8. SEE D4/SB501 FOR TYPICAL DETAIL AT DEPRESSED CONCRETE SLABS ON GRADE.
9. SEE D5/SB501 FOR REINFORCEMENT AT DISCONTINUOUS CONSTRUCTION / CONTROL JOINTS IN CONCRETE SLAB ON GRADE.
10. SEE C1/SB501 FOR NEW WALL & FOOTING TO EXISTING STRUCTURE.
11. REFER TO GENERAL STRUCTURAL NOTES AND SEE C2/SB501 FOR COMPACTED STRUCTURAL FILL REQUIREMENTS BELOW FOOTINGS.
12. NEAR SURFACE COLLAPSIBLE SOIL WITH A DEPTH OF APPROXIMATELY 5-6 FEET ARE PRESENT AT THE SITE. DO NOT PLACE ANY FOOTING ON THIS MATERIAL. REMOVE ALL COLLAPSIBLE SOIL FROM BELOW FOOTINGS AND REPLACE WITH COMPACTED STRUCTURAL FILL SEE DETAIL C1/SB501.
13. THE CONTRACTOR SHALL VERIFY ALL EXISTING CONDITIONS PRIOR TO DETAILING, ERECTING OR MANUFACTURING ANY GIVEN STRUCTURAL ELEMENT. IF CONDITIONS ENCOUNTERED DO NOT MATCH EXISTING CONDITIONS, CONTACT THE STRUCTURAL ENGINEER IMMEDIATELY.

EXISTING ITEMS PLAN LEGEND

LEG-EXIST

- EXISTING FOOTING – CONTINUOUS
- EXISTING CONCRETE SHEAR WALL, FOUNDATION WALL OR RETAINING WALL
- EXISTING OPENING THROUGH CONCRETE WALL

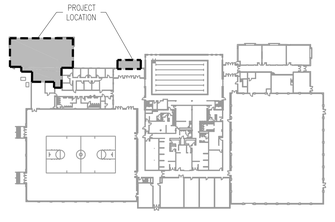

GouldEvans

©2002 Gould Evans Associates, L.C.
1000 South Main Street • Suite 100
Salt Lake City, Utah 84101
Voice 801.532.6100
Fax 801.532.6102
www.gouldevans.com

kansas city • lawrence • phoenix
salt lake city • san antonio • tampa

DFCM PROJECT NO: 05266700
STATE PROPERTY ID: 01791
RISK MANAGEMENT NO:
CAD PROJECT NO:
CAD DWG FILE:
DRAWN BY:
CHECKED BY:
COPYRIGHT: STATE OF UTAH

REAVELEY
ENGINEERS + ASSOCIATES
Consulting Structural Engineers

snow college
activities center
dance studio addition | remodel
ephraim, utah

REVISION	DATE

Project no: 0906-0260
Date: July 21, 2006
Sheet:

FOOTING & FOUNDATION PLAN

SB101

100% Construction Documents

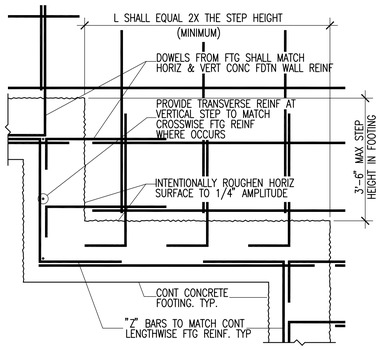

D1 TYPICAL STEPPED FOOTING DETAIL
SB501 NO SCALE
CF-TYP01

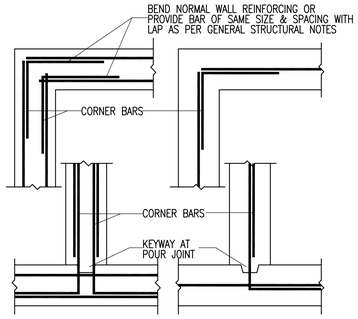

D2 PLAN VIEW - TYPICAL WALL CORNERS & INTERSECTION
SB501 NO SCALE
CF-TYP02

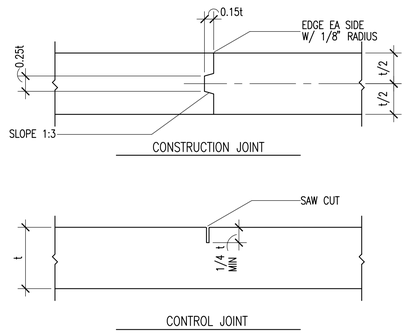

D3 TYPICAL SLAB JOINTS
SB501 NO SCALE
CF-TYP03

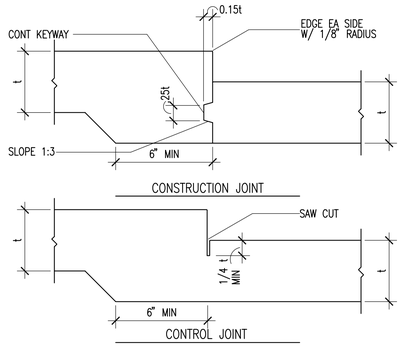

D4 TYPICAL SLAB JOINTS AT DEPRESSED SLAB
SB501 NO SCALE
CF-TYP05

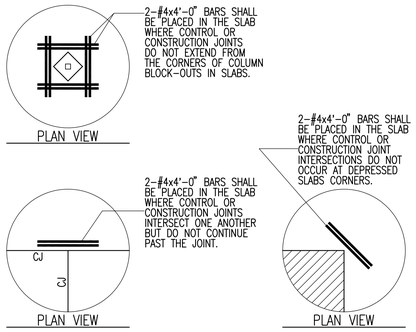

D5 TYPICAL SLAB REINFORCING AT DISCONTINUOUS SLAB JOINTS
SB501 NO SCALE
CF-TYP10

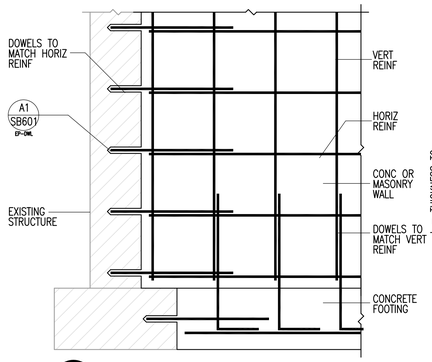

C1 NEW WALL & FOOTING TO EXISTING STRUCTURE
SB501 NO SCALE
CF-TYP14

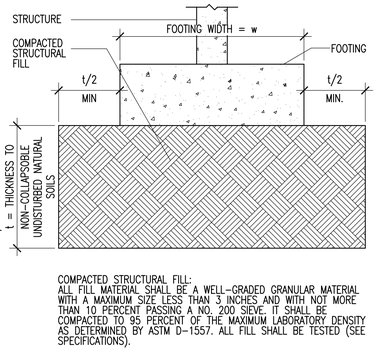

COMPACTED STRUCTURAL FILL:
ALL FILL MATERIAL SHALL BE A WELL-GRADED GRANULAR MATERIAL WITH A MAXIMUM SIZE LESS THAN 3 INCHES AND WITH NOT MORE THAN 10 PERCENT PASSING A NO. 200 SIEVE. IT SHALL BE COMPACTED TO 95 PERCENT OF THE MAXIMUM LABORATORY DENSITY AS DETERMINED BY ASTM D-1557. ALL FILL SHALL BE TESTED (SEE SPECIFICATIONS).

C2 TYP COMPACTED STRUCTURAL FILL DETAIL
SB501 NO SCALE
CF-TYP09

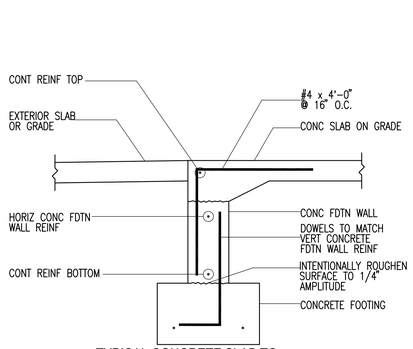

C3 TYPICAL CONCRETE SLAB TO FOUNDATION WALL AT DOOR OPENING
SB501 NO SCALE
CW1-CF16

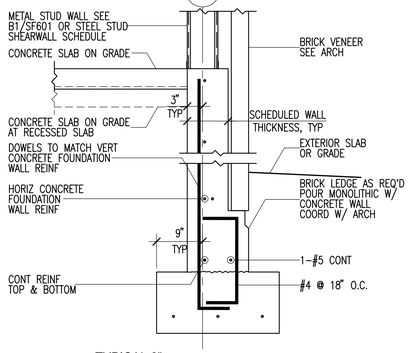

C4 TYPICAL 8" EXTERIOR CONCRETE FOUNDATION WALL
SB501 NO SCALE
2006-109-SB501/C4

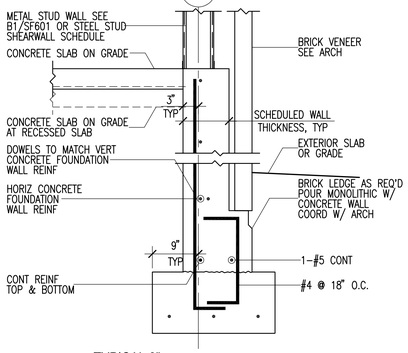

C5 TYPICAL 9" EXTERIOR CONCRETE FOUNDATION WALL
SB501 NO SCALE
2006-109-SB501/C5

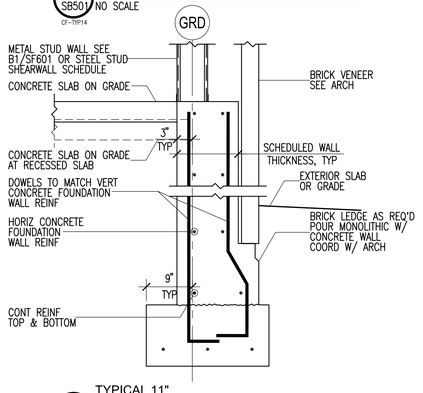

B1 TYPICAL 11" EXTERIOR CONCRETE FOUNDATION WALL
SB501 NO SCALE
2006-109-SB501/B1

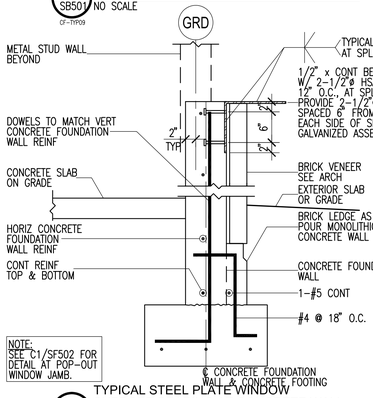

B2 TYPICAL STEEL PLATE WINDOW SUPPORT BEARING AT CONCRETE WALL
SB501 NO SCALE
2006-109-SB501/B2

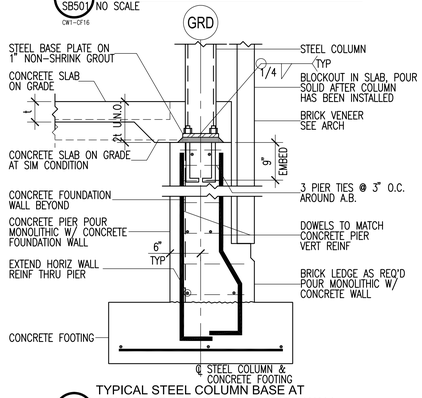

B3 TYPICAL STEEL COLUMN BASE AT CONCRETE PIER IN FOUNDATION WALL
SB501 NO SCALE
2006-109-SB501/B3

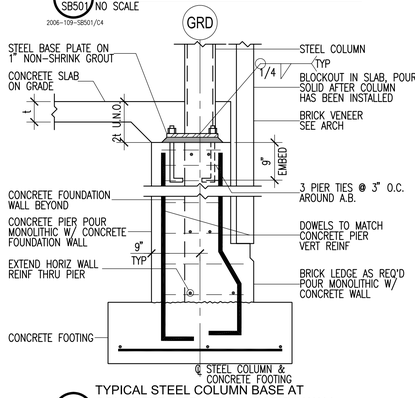

B4 TYPICAL STEEL COLUMN BASE AT CONCRETE PIER IN FOUNDATION WALL
SB501 NO SCALE
2006-109-SB501/B4

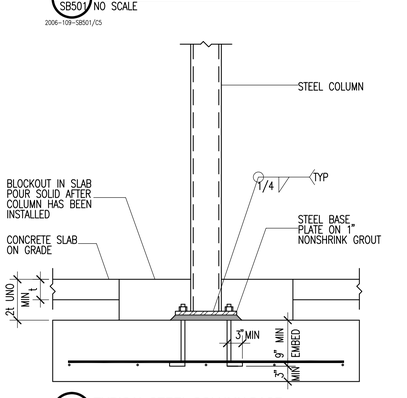

B5 TYPICAL STEEL COLUMN BASE
SB501 NO SCALE
SC-CF-01

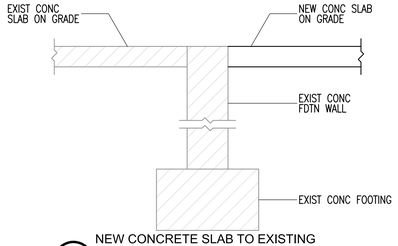

A1 NEW CONCRETE SLAB TO EXISTING FOUNDATION WALL AT DOOR OPENING
SB501 NO SCALE
2006-109-SB501/A1

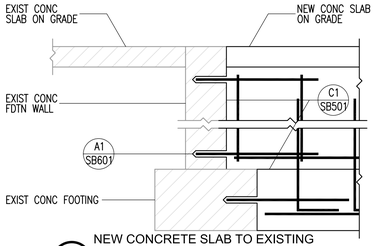

A2 NEW CONCRETE SLAB TO EXISTING FOUNDATION WALL AT DOOR OPENING
SB501 NO SCALE
2006-109-SB501/A2

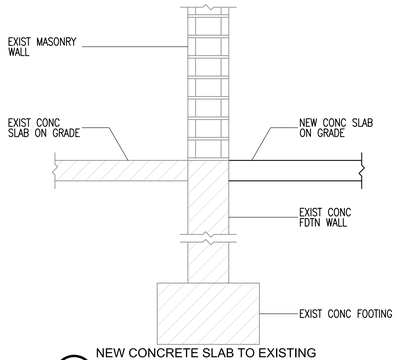

A3 NEW CONCRETE SLAB TO EXISTING FOUNDATION WALL AT DOOR OPENING
SB501 NO SCALE
2006-109-SB501/A3

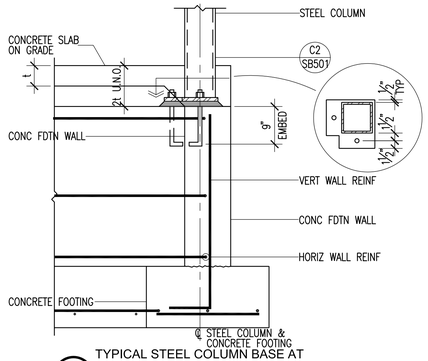

A4 TYPICAL STEEL COLUMN BASE AT CONCRETE PIER IN FOUNDATION WALL
SB501 NO SCALE
2006-109-SB501/A4

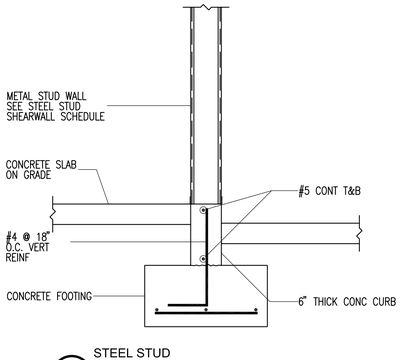

A5 STEEL STUD SHEARWALL AT CONCRETE CURB
SB501 NO SCALE
2006-109-SB501/A5

GouldEvans
©2002 Gould Evans Associates, L.C.
1000 South Main Street • Suite 100
Salt Lake City, Utah 84101
Voice 801.532.6100
Fax 801.532.6102
www.gouldevans.com
kansas city • lawrence • phoenix
salt lake city • san antonio • tampa

DFCM PROJECT NO: 05266700
STATE PROPERTY ID: 01791
RISK MANAGEMENT NO:
CAD PROJECT NO:
CAD DWG FILE:
DRAWN BY:
CHECKED BY:
COPYRIGHT: STATE OF UTAH

REAVELEY ENGINEERS + ASSOCIATES
Consulting Structural Engineers

snow college
activities center
dance studio addition | remodel
ephraim, utah

REVISION DATE

Project no: 0906-0260
Date: July 21, 2006
Sheet:

FOOTING & FOUNDATION DETAILS
SB501

100% Construction Documents

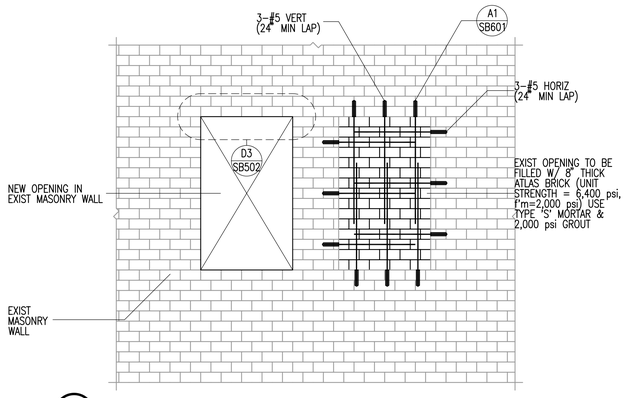

D1 SB502 EXISTING MASONRY WALL WINDOW IN-FILL & NEW OPENING
NO SCALE

2006-109-SB502/D1

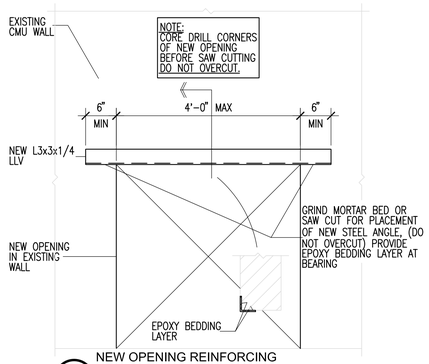

D3 SB502 NEW OPENING REINFORCING IN EXISTING WALL USING STEEL ANGLE
NO SCALE

2006-109-SB502/D3

GouldEvans

©2002 Gould Evans Associates, L.C.
1000 South Main Street • Suite 100
Salt Lake City, Utah 84101
Voice 801.532.6100
Fax 801.532.6102
www.gouldevans.com

kansas city • lawrence • phoenix
salt lake city • san antonio • tampa

DFCM PROJECT NO: 05266700
STATE PROPERTY ID: 01791
RISK MANAGEMENT NO:
CAD PROJECT NO:
CAD DWG FILE:
DRAWN BY:
CHECKED BY:
COPYRIGHT: STATE OF UTAH

REAVELEY
ENGINEERS + ASSOCIATES
Consulting Structural Engineers

snow college
activities center
dance studio addition | remodel
ephraim, utah

REVISION	DATE

Project no: 0906-0260
Date: July 21, 2006
Sheet:

FOOTING & FOUNDATION DETAILS

SB502

100% Construction Documents

CONCRETE FOUNDATION WALL SCHEDULE

CFW-1

MARK	THICK	HORIZONTAL REINFORCING	VERTICAL REINFORCING	TOP & BOTTOM HORIZONTAL BARS	PLACEMENT
CFW-1	8"	#4 @ 12" O.C.	#4 @ 12" O.C.	1-#5 T&B	TYPE A
CFW-2	9"	#4 @ 10" O.C.	#4 @ 12" O.C.	1-#5 T&B	TYPE A
CFW-3	11"	#4 @ 18" O.C. E.F.	#4 @ 18" O.C. E.F.	2-#5 T&B	TYPE D
CFW-4	10"	#4 @ 18" O.C. E.F.	#4 @ 18" O.C. E.F.	2-#5 T&B	TYPE D
CFW-5	13"	#4 @ 18" O.C. E.F.	#4 @ 15" O.C. E.F.	2-#5 T&B	TYPE D

PLACEMENT TYPE

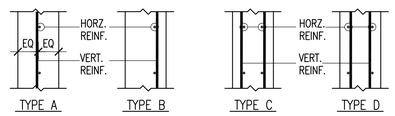

TYPE A TYPE B TYPE C TYPE D

E.F. = EACH FACE
O.F. = OUTSIDE FACE (AGAINST SOIL)
I.F. = INSIDE FACE
3L = THREE LAYERS

CONCRETE PIER SCHEDULE

CP-1

MARK	SIZE	REINFORCING		REMARKS
		VERTICAL	TIES	
CP-1	12" x 16"	4-#7	#3 @ 8" O.C.	
CP-2	14" x 14"	4-#7	#3 @ 8" O.C.	
CP-3	18" x 18"	4-#9	#3 @ 8" O.C.	

CONCRETE GRADE BEAM SCHEDULE

CGB-1

MARK	WIDTH	DEPTH	REINFORCING		REMARKS
			HORIZONTAL	STIRRUPS	
CGB-1	TO MATCH CFW THICKNSS (SEE PLAN)	66"	2-#5 T&B	#4 @ 18" O.C.	4-#4 LONGITUDINAL EA SIDE
CGB-2	18"	18"	3-#6 T&B	#4 @ 18" O.C.	
CGB-3	18"	12"	3-#5 T&B	#4 @ 18" O.C.	

CONCRETE FOOTING SCHEDULE

CF-2000

MARK	WIDTH	LENGTH	THICK	CROSSWISE REINFORCING				LENGTHWISE REINFORCING				REMARKS
				NO.	SIZE	LENGTH	SPACE	NO.	SIZE	LENGTH	SPACE	
FC2.0	2'-0"	CONT.	12"	--	NONE	REQ'D	--	3	#4	CONT.	9"	
FS3.0	3'-0"	3'-0"	12"	3	#5	2'-6"	15"	3	#5	2'-6"	15"	
FS4.0	4'-0"	4'-0"	12"	4	#5	3'-6"	14"	4	#5	3'-6"	14"	
FS5.0	5'-0"	5'-0"	12"	5	#5	4'-6"	13.5"	5	#5	4'-6"	13.5"	

NOTES:
1. PLACE ALL FOOTING REINFORCING IN BOTTOM OF FOOTING WITH 3" CLEAR CONCRETE COVER UNLESS NOTED OTHERWISE.
2. TOP REINFORCING, WHERE SPECIFIED, SHALL BE PLACED IN THE TOP OF THE FOOTING WITH 2" CLEAR CONCRETE COVER.
3. SPOT FOOTINGS SHALL BE CENTERED UNDER COLUMNS AND CONTINUOUS FOOTINGS SHALL BE CENTERED UNDER WALLS, UNLESS NOTED OTHERWISE.
4. ALL FOOTINGS SHALL BE FORMED. FOOTINGS SHALL NOT BE EARTH FORMED OR OVERSIZED WITHOUT WRITTEN PERMISSION FROM THE STRUCTURAL ENGINEER.

CONCRETE REINFORCING BAR LAP SPLICE SCHEDULE

RBLS-

BAR SIZE Fy = 60 KSI	TENSION BARS														COMP. BARS
	f'c = 3000 PSI				f'c = 4000 PSI				f'c = 5000 PSI				f'c = 6000 PSI				f'c = ALL
	REGULAR CLASS		TOP CLASS		REGULAR CLASS		TOP CLASS		REGULAR CLASS		TOP CLASS		REGULAR CLASS		TOP CLASS		
	A	B	A	B	A	B	A	B	A	B	A	B	A	B	A	B	
#3	17"	22"	22"	28"	15"	19"	19"	25"	13"	17"	17"	22"	12"	16"	16"	20"	12"
#4	22"	29"	29"	38"	19"	25"	25"	33"	17"	23"	23"	29"	16"	21"	21"	27"	15"
#5	28"	36"	36"	47"	24"	31"	31"	41"	22"	28"	28"	36"	20"	26"	26"	33"	19"
#6	33"	43"	43"	56"	29"	37"	37"	49"	26"	34"	34"	44"	24"	31"	31"	40"	23"
#7	48"	63"	63"	81"	42"	54"	54"	71"	38"	49"	49"	63"	34"	45"	45"	58"	27"
#8	55"	72"	72"	93"	48"	62"	62"	81"	43"	56"	56"	72"	39"	51"	51"	66"	30"
#9	62"	81"	81"	105"	54"	70"	70"	91"	48"	63"	63"	81"	44"	57"	57"	74"	34"
#10	70"	91"	91"	118"	61"	79"	79"	102"	54"	71"	71"	92"	50"	64"	64"	84"	39"
#11	78"	101"	101"	131"	67"	87"	87"	114"	60"	78"	78"	102"	55"	71"	71"	93"	43"

NOTES: THESE NOTES SHALL BE USED FOR ALL SPLICES, UNLESS NOTED OTHERWISE ON DRAWINGS.

1. TOP BARS ARE HORIZONTAL BARS, SPLICED SO THAT 12" OR MORE OF FRESH CONCRETE IS CAST IN THE MEMBER BELOW THE REINFORCING BAR.
2. CLASS A SPLICES MAY BE USED ONLY WHEN 50% OR LESS OF THE BARS ARE SPLICED WITHIN THE LAP SPLICE LENGTH.
3. CLASS B SPLICES SHALL BE USED FOR ALL SPLICES IN SLABS, BEAMS, JOISTS, WALLS, MOMENT RESISTING COLUMNS, AND JAMB COLUMNS, UNLESS THEY MEET THE REQUIREMENTS OF NOTE #2 ABOVE.
4. TIES AND STIRRUPS SHALL NOT BE SPLICED.
5. A. FOR BUNDLED BARS OF THREE OR LESS, LAP SPLICE LENGTHS SHALL BE MULTIPLIED BY 1.2.
   B. FOR BUNDLED BARS OF FOUR OR MORE, LAP LENGTHS SHALL BE MULTIPLIED BY 1.33.
   C. INDIVIDUAL BAR SPLICES WITHIN A BUNDLE SHALL NOT OVERLAP. ENTIRE BUNDLES SHALL NOT BE LAP SPLICED.
6. FOR ALL LIGHTWEIGHT CONCRETE, LAP LENGTHS SHALL BE MULTIPLIED BY 1.3.
7. FOR ALL EPOXY COATED BARS WITH COVER LESS THAN 3 BAR DIAMETERS OF CLEAR SPACING LESS THAN 6 BAR DIAMETERS THE LAP SPLICE LENGTHS SHALL BE MULTIPLIED BY 1.5. FOR ALL OTHER EPOXY BARS THE SPLICE LENGTHS SHALL BE MULTIPLIED BY 1.2
8. THE BAR LAP SPLICE LENGTHS SHALL BE MULTIPLIED BY 1.5 WHEN EITHER OF THE FOLLOWING IS TRUE:
   A. CLEAR SPACING OF BARS BEING DEVELOPED IS LESS THAN ONE BAR DIAMETER, CLEAR COVER IS LESS THAN ONE BAR DIAMETER AND STIRRUPS OR TIES ALONG THE LENGTH OF THE SPLICE ARE LESS THAN THE CODE MINIMUM.
   B. CLEAR SPACING OF BARS BEING DEVELOPED IS LESS THAN 2 BAR DIAMETERS AND CLEAR COVER IS LESS THAN ONE BAR DIAMETER.

AS PER ACI 318-02

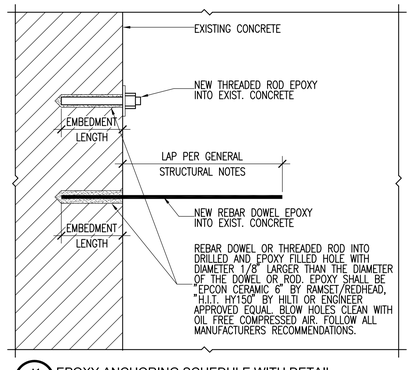

EPOXY ANCHORING SCHEDULE

REBAR DOWEL SIZE	THREADED ROD DIAMETER	EMBEDMENT LENGTH
#3	3/8"	4.1/2"
#4	1/2"	6.1/2"
#5	5/8"	7.1/2"
#6	3/4"	10"
#7	7/8"	12"
#8	1"	13"
#9	1.1/8"	14"
#10	1.1/4"	15"
#11	1.3/8"	16"

NOTES:
1. EMBEDMENT LENGTHS SPECIFIED ON PLANS OR DETAILS TAKE PRECEDENCE OVER EMBEDMENT LENGTHS IN THIS SCHEDULE.
2. EMBEDMENT LENGTHS SHALL BE ADJUSTED WHEN EXISTING CONCRETE IS OF EQUAL OR LESS THICKNESS THAN SCHEDULE REQUIRES. IN THESE CASES THE EMBEDMENT LENGTH SHALL BE THE CONCRETE THICKNESS MINUS THE CLEAR COVER REQUIREMENTS, SEE GSN.
3. CONTINUOUS SPECIAL INSPECTION REQUIRED DURING INSTALLATION FOR ALL DOWELS AND THREADED RODS.

A1 SB601 EP-DUEL EPOXY ANCHORING SCHEDULE WITH DETAIL
NO SCALE

GouldEvans
©2002 Gould Evans Associates, L.C.
1000 South Main Street • Suite 100
Salt Lake City, Utah 84101
Voice 801.532.6100
Fax 801.532.6102
www.gouldevans.com
kansas city • lawrence • phoenix
salt lake city • san antonio • tampa

DFCM PROJECT NO: 05266700
STATE PROPERTY ID: 01791
RISK MANAGEMENT NO:
CAD PROJECT NO:
CAD DWG FILE:
DRAWN BY:
CHECKED BY:
COPYRIGHT: STATE OF UTAH

REAVELEY ENGINEERS + ASSOCIATES
Consulting Structural Engineers

snow college
activities center
dance studio addition | remodel
ephraim, utah

REVISION DATE

Project no: 0906-0260
Date: July 21, 2006
Sheet:

STRUCTURAL SCHEDULES
SB601

100% Construction Documents

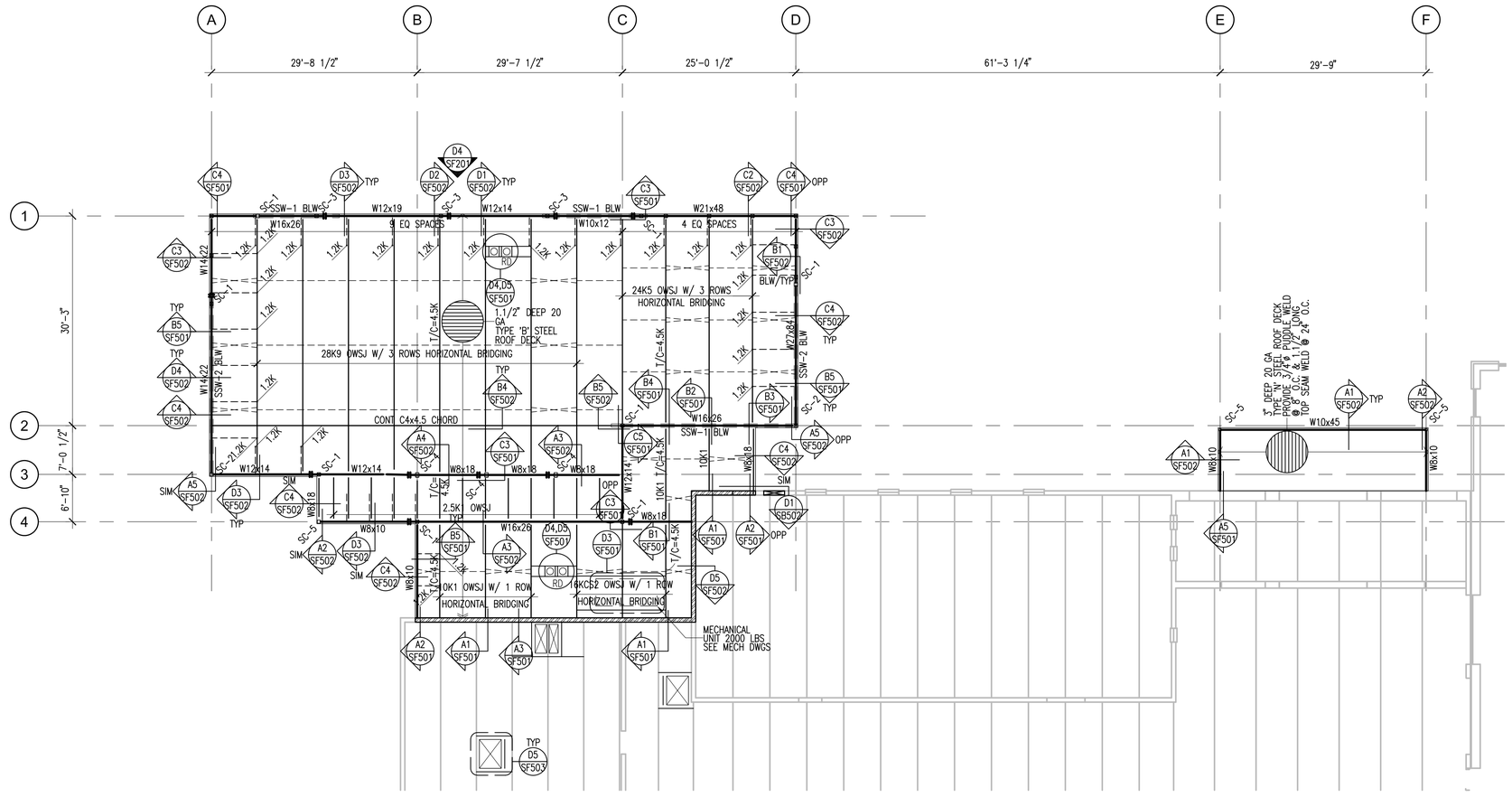

ROOF FRAMING PLAN

SCALE: 1/8"=1'-0"

NORTH

ROOF FRAMING PLAN LEGEND

LEG-ROOF

- CONCRETE WALL
- CONCRETE LINTEL IN CONCRETE WALL
- CONCRETE COLUMN IN CONCRETE WALL
- CONCRETE COLUMN
- STEEL COLUMN – TUBE
- MOMENT CONNECTION
- STEEL BEAM OR GIRDER
- STEEL JOIST OR PURLIN
- CROSS BRIDGING
- HORIZONTAL BRIDGING
- STEEL STUD WALL – STRUCTURAL
- STEEL HEADER IN STEEL STUD WALL
- STEEL STUD WALL – BELOW
- CHANGE IN ELEVATION
- CONCRETE ON METAL DECK
- ROOF DECK
- SPECIAL DECK AREA
- RECESSED/DEPRESSED SLAB ON METAL DECK
- OPENING

ROOF FRAMING PLAN NOTES

NOTE-ROOF

1. VERIFY SIZE, WEIGHT, LOCATION AND CONFIGURATION OF ALL ROOF TOP EQUIPMENT WITH ARCHITECT AND MECHANICAL ENGINEER. PROVIDE STEEL FRAMES FOR SUPPORT OF ROOF TOP EQUIPMENT AS INDICATED IN DETAIL D3/SF501 COORDINATE OPENINGS WITH MECHANICAL AND ELECTRICAL AND GENERAL CONTRACTORS.
2. ALL ROOF OPENINGS SHALL BE FRAMED AS INDICATED IN DETAIL D2/SF501. FOR ROUND OPENINGS WHICH ARE LESS THAN 12"ø SEE DETAIL C1/SF501.
3. SEE ARCHITECTURAL FOR ROOF SLOPES AND DRAINS. SEE D4 & D5/SF501 FOR ROOF DRAIN OPENING FRAME.
4. OPEN WEB STEEL JOISTS AND JOIST GIRDERS SHALL BE DESIGNED BY THE MANUFACTURER TO SUPPORT THE MECHANICAL AND LATERAL LOADS SHOWN ON THE ROOF FRAMING PLANS IN ADDITION TO THE UNIFORM AND POINT LOADS SHOWN.
5. ±#.#K ADD – INDICATES ADDITIONAL UPLIFT / DOWNWARD FORCE ON STEEL JOIST IN ADDITION TO REGULAR LOADS.

   T/C=#.#K – INDICATES ADDITIONAL TOP CHORD AXIAL FORCE ON STEEL JOIST OR GIRDER IN ADDITION TO REGULAR LOADS. THIS FORCE IS A SEISMIC LRFD LEVEL FORCE THAT SHALL BE CONSIDERED IN BOTH TENSION AND COMPRESSION.
6. ALL LOADS SUPPORTED BY OPEN WEB STEEL JOISTS AND GIRDERS SHALL BE LOCATED WITHIN 6" OF JOIST OR GIRDER PANEL POINT OR THE JOIST OR GIRDER SHALL BE REINFORCED PER DETAIL D1/SF501.
7. SEE DETAIL C2/SF501 FOR SUPPORT OF HANGING MECHANICAL UNITS.
8. HORIZONTAL AND CROSS BRIDGING SHALL BE SIZED AND SUPPLIED BY THE JOIST MANUFACTURER. CONNECT TO WALLS AS INDICATED IN DETAILS.
9. WHERE SKYLIGHTS OR MECHANICAL UNITS INTERRUPT HORIZONTAL BRIDGING PROVIDE CROSS BRIDGING AT JOIST SPACES ON EACH SIDE. TYPICAL.
10. THE CONTRACTOR SHALL VERIFY ALL EXISTING CONDITIONS PRIOR TO DETAILING, ERECTING OR MANUFACTURING ANY GIVEN STRUCTURAL ELEMENT. IF CONDITIONS ENCOUNTERED DO NOT MATCH EXISTING CONDITIONS. CONTACT THE STRUCTURAL ENGINEER IMMEDIATELY.

EXISTING ITEMS PLAN LEGEND

LEG-EXIST

- EXISTING MASONRY WALL
- EXISTING OPENING THROUGH MASONRY WALL
- NEW OPENING THROUGH EXISTING MASONRY WALL
- EXISTING STEEL JOIST OR PURLIN

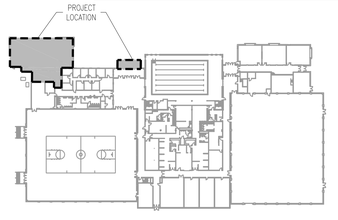

GouldEvans

©2002 Gould Evans Associates, L.C.
1000 South Main Street • Suite 100
Salt Lake City, Utah 84101
Voice 801.532.6100
Fax 801.532.6102
www.gouldevans.com

kansas city • lawrence • phoenix
salt lake city • san antonio • tampa

DFCM PROJECT NO: 05266700
STATE PROPERTY ID: 01791
RISK MANAGEMENT NO:
CAD PROJECT NO:
CAD DWG FILE:
DRAWN BY:
CHECKED BY:
COPYRIGHT: STATE OF UTAH

REAVELEY
ENGINEERS + ASSOCIATES
Consulting Structural Engineers

snow college
activities center
dance studio addition | remodel
ephraim, utah

REVISION DATE

Project no: 0906-0260
Date: July 21, 2006
Sheet:

ROOF FRAMING PLAN

SF101

100% Construction Documents

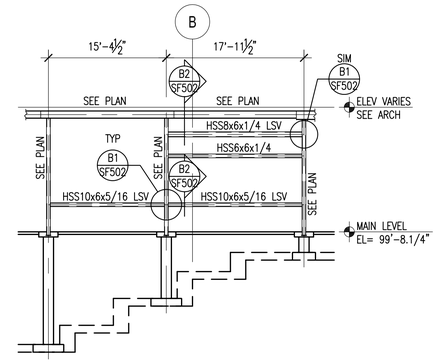

D4 / SF201 WALL ELEVATION AT GRID 1

SCALE: 1/8"=1'-0"

GouldEvans

©2002 Gould Evans Associates, L.C.
1000 South Main Street • Suite 100
Salt Lake City, Utah 84101
Voice 801.532.6100
Fax 801.532.6102
www.gouldevans.com

kansas city • lawrence • phoenix
salt lake city • san antonio • tampa

DFCM PROJECT NO: 05266700
STATE PROPERTY ID: 01791
RISK MANAGEMENT NO:
CAD PROJECT NO:
CAD DWG FILE:
DRAWN BY:
CHECKED BY:
COPYRIGHT: STATE OF UTAH

REAVELEY
ENGINEERS + ASSOCIATES
Consulting Structural Engineers

snow college
activities center
dance studio addition | remodel
ephraim, utah

REVISION DATE

Project no: 0906-0260
Date: July 21, 2006
Sheet:

WALL ELEVATION
SF201

100% Construction Documents

NOTE:
WHEN CONCENTRATED LOADS (GREATER THAN 100#) ON OPEN WEB JOISTS OR GIRDERS ARE LOCATED MORE THAN 6 INCHES FROM THE PANEL WORKPOINTS AT EITHER THE TOP OR BOTTOM CHORD ADDITIONAL DIAGONAL WEB MEMBERS SHALL BE FURNISHED AND INSTALLED AT THE LOCATION OF THE CONCENTRATED LOAD BY THE CONTRACTOR. CONCENTRATED POINT LOADS, SINGLE OR MULTIPLE, TOTALING 100# OR LESS CAN BE LOCATED AT ANY POINT ALONG THE TOP OR BOTTOM CHORD OF AN OPEN WEB JOIST OR GIRDER BETWEEN ADJACENT PANEL POINTS WITHOUT MEETING THESE REQUIREMENTS. A LIMIT OF FOUR CONCENTRATED 100# MAX. POINT LOADS PER JOIST OR GIRDER WILL BE PERMITTED ON SPANS OF 12' & GREATER, ONE CONCENTRATED 100# MAX. LOAD ON SPANS LESS THAN 12', UNLESS SPECIFICALLY NOTED OTHERWISE ON THE DRAWINGS. JOIST BRIDGING SHALL NEVER BE USED TO SUPPORT HANGING LOADS.

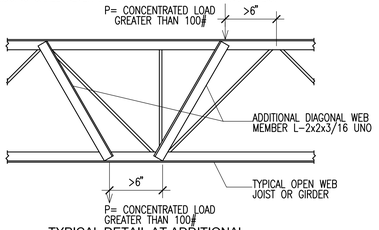

D1 TYPICAL DETAIL AT ADDITIONAL CONCENTRATED POINT LOAD
SF501 NO SCALE
JK1RT512

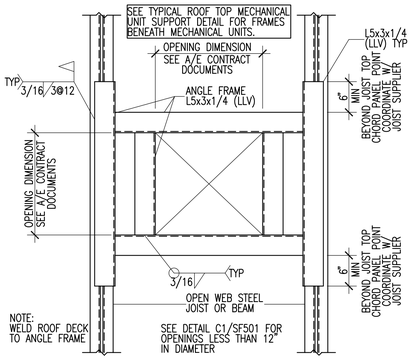

D2 TYPICAL ROOF OPENING DETAIL (PLAN VIEW)
SF501 NO SCALE
JK2RT507

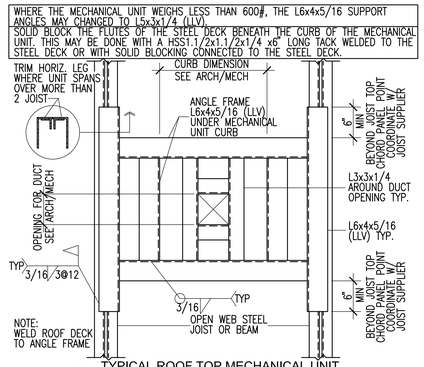

D3 TYPICAL ROOF TOP MECHANICAL UNIT SUPPORT DETAIL (PLAN VIEW)
SF501 NO SCALE
JK2RT508

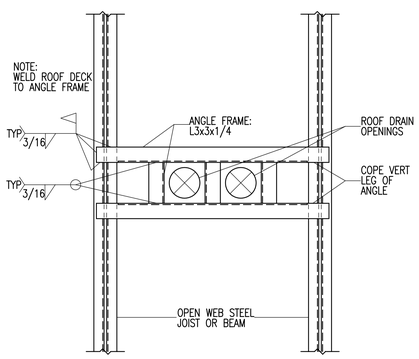

D4 TYPICAL ROOF DRAIN OPENING (PLAN VIEW)
SF501 NO SCALE
JK2RT515

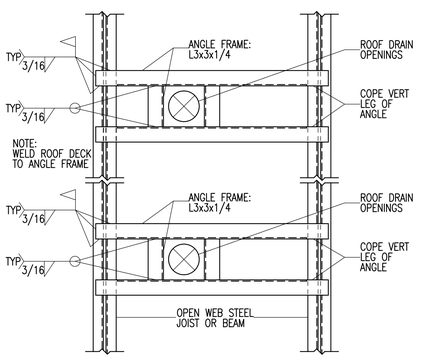

D5 TYPICAL ROOF DRAIN OPENING (PLAN VIEW)
SF501 NO SCALE
JK2RT516

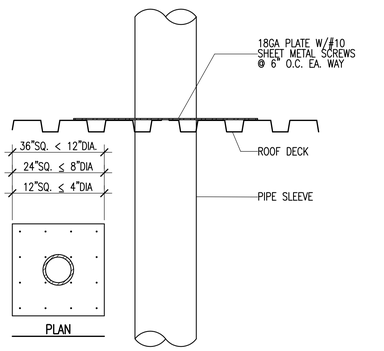

C1 TYPICAL PIPE SLEEVE HOLE THRU ROOF DECK
SF501 NO SCALE
JK2RT509

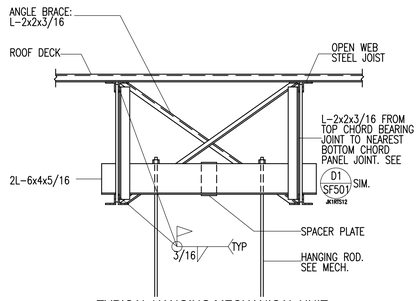

C2 TYPICAL HANGING MECHANICAL UNIT SUPPORT DETAIL
SF501 NO SCALE
JK1RT515

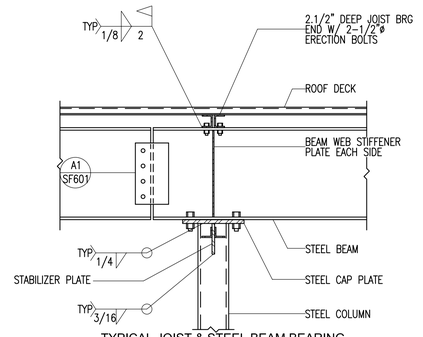

C3 TYPICAL JOIST & STEEL BEAM BEARING AT STEEL COLUMN
SF501 NO SCALE
JK1RMW14

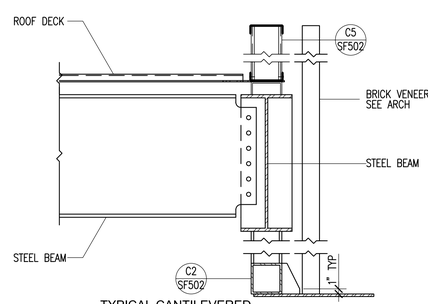

C4 TYPICAL CANTILEVERED BEAM TO CANTILEVERED BEAM
SF501 NO SCALE
2006-109-SF501/C4

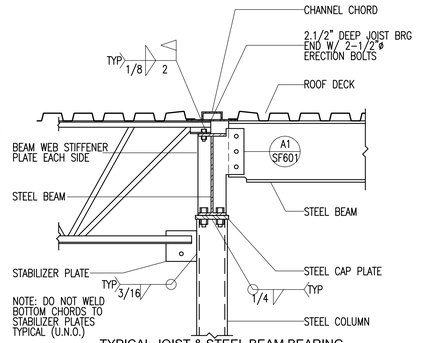

C5 TYPICAL JOIST & STEEL BEAM BEARING AT STEEL COLUMN
SF501 NO SCALE
JK1RMW12

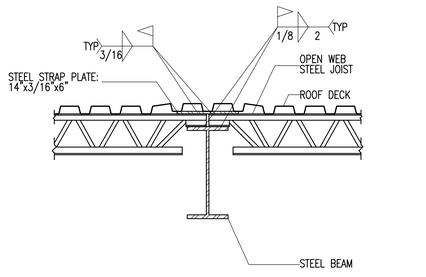

B1 TYPICAL JOIST CHORD TIE/DRAG STRUT AT STEEL BEAM
SF501 NO SCALE
JK1RMW09

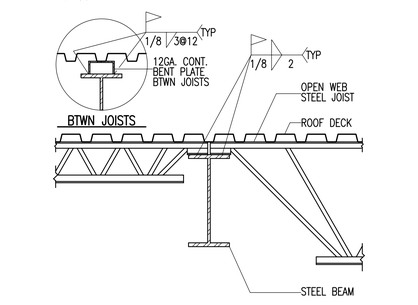

B2 TYPICAL JOIST BEARING AT STEEL BEAM
SF501 NO SCALE
JK1RMW09

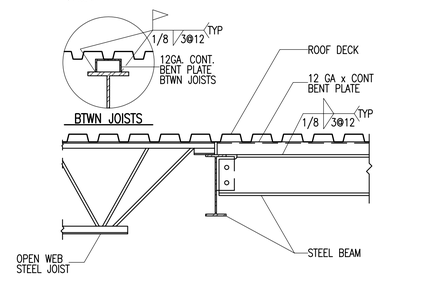

B3 TYPICAL OPEN WEB STEEL JOIST & STEEL BEAM TO STEEL BEAM
SF501 NO SCALE
2006-109-SF503/B3

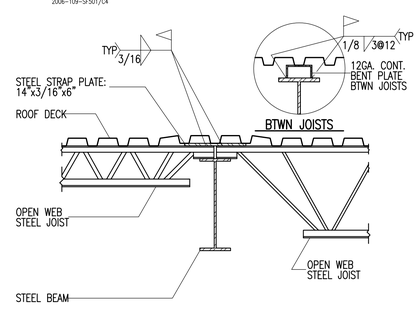

B4 TYPICAL JOIST CHORD TIE/DRAG STRUT AT STEEL BEAM
SF501 NO SCALE
JL2RT508

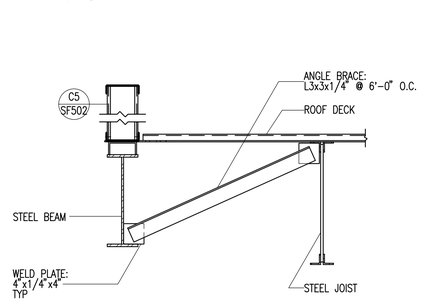

B5 TYPICAL BRACE CONNECTION TO STEEL BEAM & OPEN WEB STEEL JOIST
SF501 NO SCALE
2006-109-SF501/B5

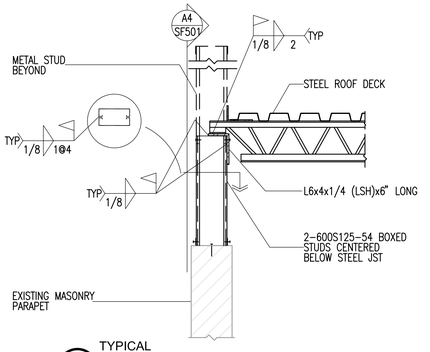

A1 TYPICAL STEEL JOIST BEARING AT METAL STUDS
SF501 NO SCALE
2006-109-SF501/A1

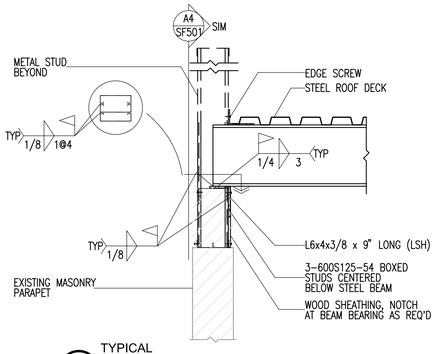

A2 TYPICAL STEEL BEAM BEARING AT METAL STUDS
SF501 NO SCALE
2006-109-SF501/A2

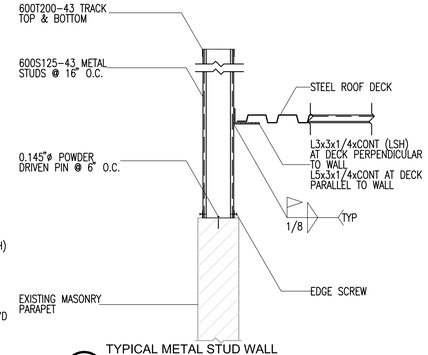

A3 TYPICAL METAL STUD WALL BEARING AT EXISTING MASONRY PARAPET
SF501 NO SCALE
2006-109-SF501/A3

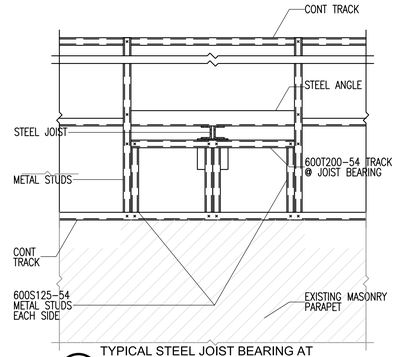

A4 TYPICAL STEEL JOIST BEARING AT METAL STUD WALL (ELEVATION VIEW)
SF501 NO SCALE
2006-109-SF501/A4

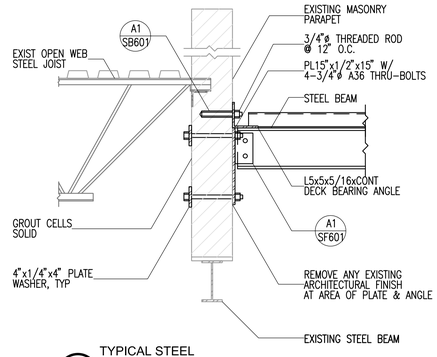

A5 TYPICAL STEEL BEAM TO EXISTING MASONRY PARAPET
SF501 NO SCALE
2006-109-SF501/A5

GouldEvans
©2002 Gould Evans Associates, L.C.
1000 South Main Street • Suite 100
Salt Lake City, Utah 84101
Voice 801.532.6100
Fax 801.532.6102
www.gouldevans.com
kansas city • lawrence • phoenix
salt lake city • san antonio • tampa

DFCM PROJECT NO: 05266700
STATE PROPERTY ID: 01791
RISK MANAGEMENT NO:
CAD PROJECT NO:
CAD DWG FILE:
DRAWN BY:
CHECKED BY:
COPYRIGHT: STATE OF UTAH

REAVELEY
ENGINEERS + ASSOCIATES
Consulting Structural Engineers

REGISTERED CERTIFIED STRUCTURAL ENGINEER #7707579 MARK R. HARRIS UTAH 7-18-06

snow college
activities center
dance studio addition | remodel
ephraim, utah

REVISION DATE

Project no: 0906-0260
Date: July 21, 2006
Sheet:

ROOF FRAMING DETAILS
SF501

100% Construction Documents

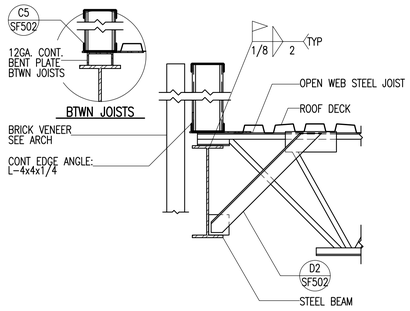

D1 SF502 — TYPICAL JOIST BEARING AT STEEL BEAM W/ CHORD TIE/DRAG STRUT
NO SCALE
2006-109-SF502/D1

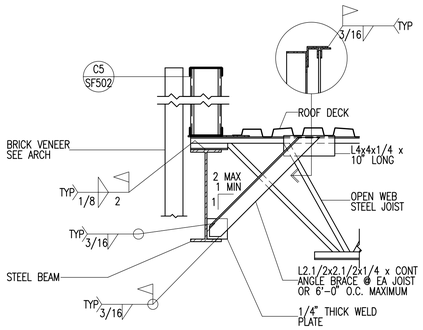

D2 SF502 — TYPICAL STEEL BEAM BOTTOM FLANGE BRACE CONNECTION
NO SCALE
2006-109-SF502/D2

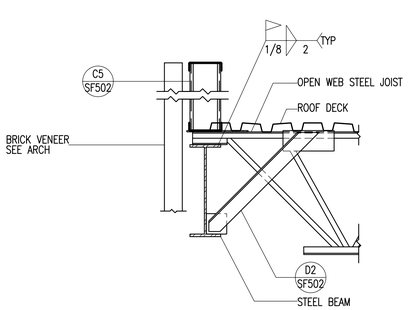

D3 SF502 — TYPICAL JOIST BEARING AT STEEL BEAM
NO SCALE
2006-109-SF502/D3

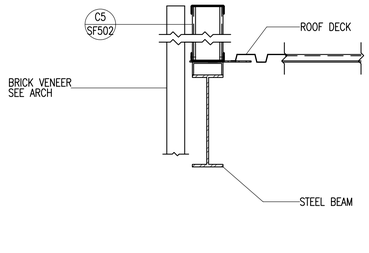

D4 SF502 — TYPICAL STEEL ROOF BEAM AT ROOF EDGE DETAIL UP TO 6"
NO SCALE
2006-109-SF502/D4

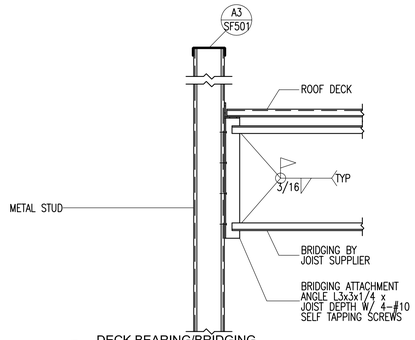

D5 SF502 — DECK BEARING/BRIDGING CONNECTION AT METAL STUDS
NO SCALE
2006-109-SF502/D5

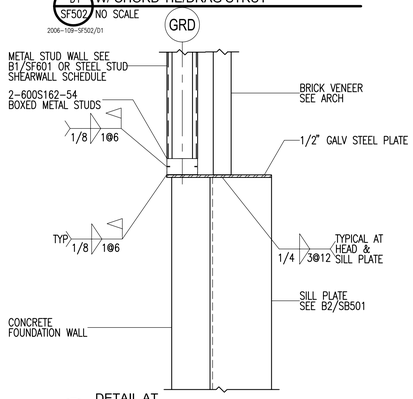

C1 SF502 — DETAIL AT POP-OUT WINDOW JAMB - PLAN VIEW
NO SCALE
2006-109-SF502/C1

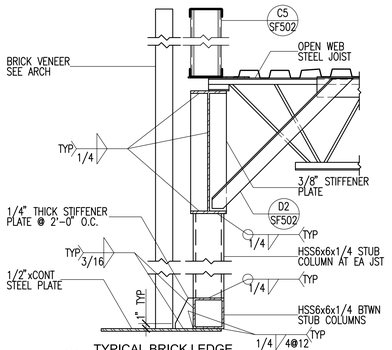

C2 SF502 — TYPICAL BRICK LEDGE SUPPORT AT POP-OUT WINDOWS
NO SCALE
2006-109-SF502/C2

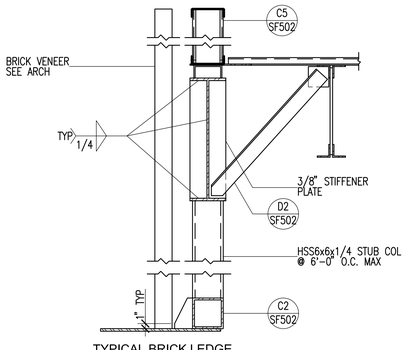

C3 SF502 — TYPICAL BRICK LEDGE SUPPORT AT POP-OUT WINDOWS
NO SCALE
2006-109-SF502/C3

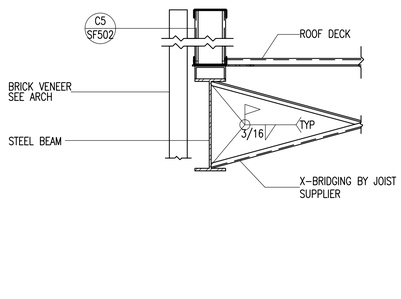

C4 SF502 — TYPICAL EDGE BEAM W/ BRIDGING
NO SCALE
2006-109-SF502/C4

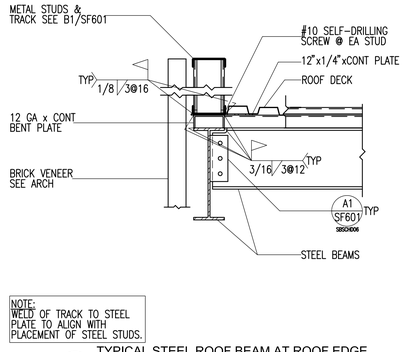

NOTE:
WELD OF TRACK TO STEEL PLATE TO ALIGN WITH PLACEMENT OF STEEL STUDS.

C5 SF502 — TYPICAL STEEL ROOF BEAM AT ROOF EDGE DETAIL UP TO 6"
NO SCALE
2006-109-SF502/C5

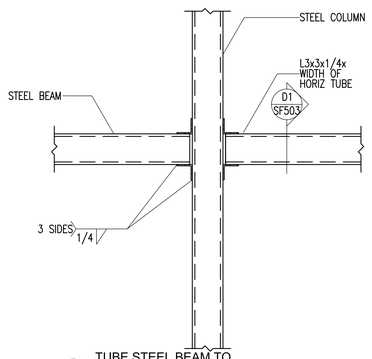

B1 SF502 — TUBE STEEL BEAM TO TUBE STEEL COLUMN CONNECTION
NO SCALE
2006-109-SF502/B1

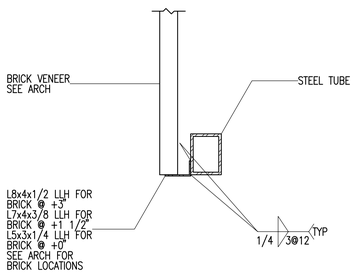

B2 SF502 — TYPICAL STEEL ANGLE BRICK LEDGE BEARING AT STEEL TUBE
NO SCALE
2006-109-SF502/B2

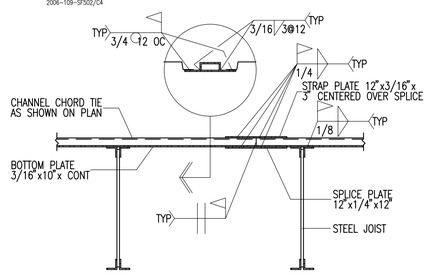

B4 SF502 — TYPICAL CHANNEL CHORD TIE DETAIL
NO SCALE
CTLBRK07

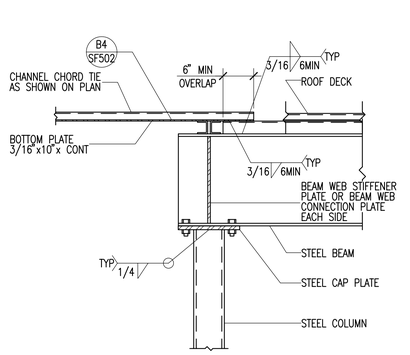

B5 SF502 — TYPICAL STEEL BEAM TO STEEL COLUMN
NO SCALE
SB2-RF03-MOD

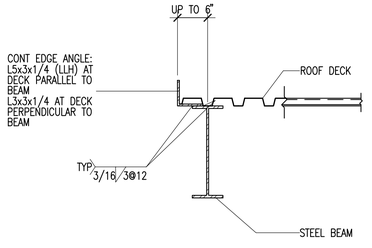

A1 SF502 — TYPICAL STEEL ROOF BEAM AT ROOF EDGE DETAIL UP TO 6"
NO SCALE
SB1-RF08

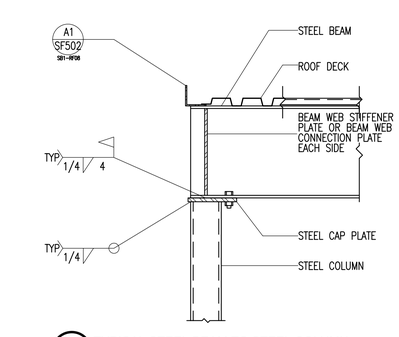

A2 SF502 — TYPICAL STEEL BEAM TO STEEL COLUMN
NO SCALE
SB2-RF03

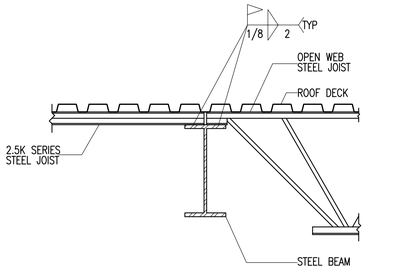

A3 SF502 — TYPICAL JOIST BEARING AT STEEL BEAM
NO SCALE
JKTRM809-MOD

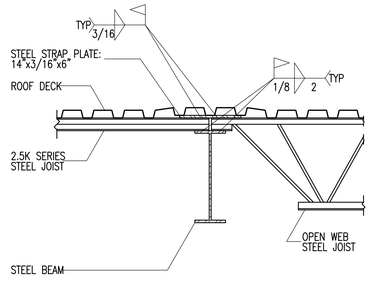

A4 SF502 — TYPICAL JOIST CHORD TIE/DRAG STRUT AT STEEL BEAM
NO SCALE
JJSRTS08-MOD

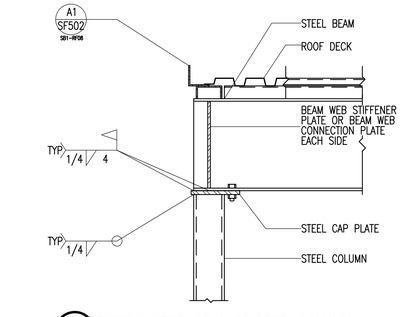

A5 SF502 — TYPICAL STEEL BEAM TO STEEL COLUMN
NO SCALE
SB2-RF03-MOD

GouldEvans
©2002 Gould Evans Associates, L.C.
1000 South Main Street • Suite 100
Salt Lake City, Utah 84101
Voice 801.532.6100
Fax 801.532.6102
www.gouldevans.com
kansas city • lawrence • phoenix
salt lake city • san antonio • tampa

DFCM PROJECT NO: 05266700
STATE PROPERTY ID: 01791
RISK MANAGEMENT NO:
CAD PROJECT NO:
CAD DWG FILE:
DRAWN BY:
CHECKED BY:
COPYRIGHT: STATE OF UTAH

REAVELEY
ENGINEERS + ASSOCIATES
Consulting Structural Engineers

snow college
activities center
dance studio addition | remodel
ephraim, utah

REVISION DATE

Project no: 0906-0260
Date: July 21, 2006
Sheet:

ROOF FRAMING DETAILS
SF502

100% Construction Documents

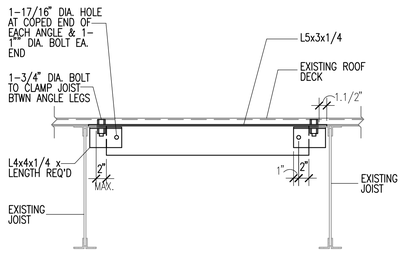

D1 SF503 EX-RF-06 — NEW FRAMING AT EXISTING STEEL JOISTS (ALTERNATE TO DETAIL D4/SF503) — NO SCALE

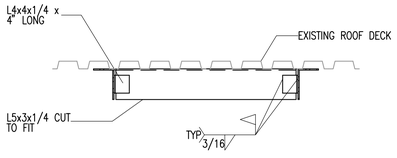

D2 SF503 EX-RF-07 — NEW FRAMING AT EXISTING ROOF DECK (ALTERNATE TO DETAIL D3/SF503) — NO SCALE

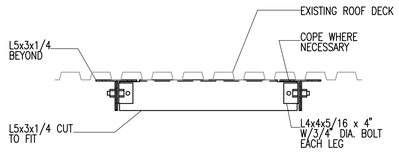

NOTE: SEE DETAIL D2/SF503 FOR ALTERNATE

D3 SF503 EX-RF-05 — NEW FRAMING AT EXISTING ROOF DECK — NO SCALE

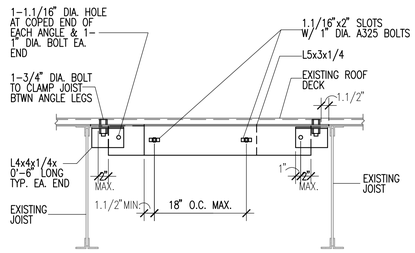

NOTE: SEE DETAIL D1/SF503 FOR ALTERNATE

D4 SF503 EX-RF-04 — NEW FRAMING AT EXISTING STEEL JOISTS — NO SCALE

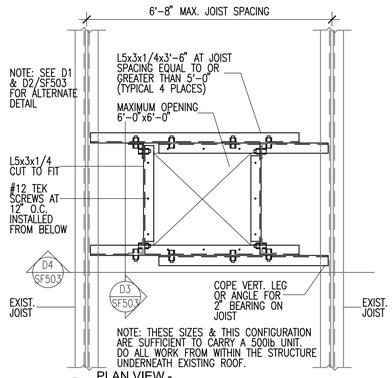

PLAN VIEW -

D5 SF503 EX-RF-01 — NEW FRAMING AT EXISTING JOISTS — NO SCALE

GouldEvans

©2002 Gould Evans Associates, L.C.
1000 South Main Street • Suite 100
Salt Lake City, Utah 84101
Voice 801.532.6100
Fax 801.532.6102
www.gouldevans.com

kansas city • lawrence • phoenix
salt lake city • san antonio • tampa

DFCM PROJECT NO: 05266700
STATE PROPERTY ID: 01791
RISK MANAGEMENT NO:
CAD PROJECT NO:
CAD DWG FILE:
DRAWN BY:
CHECKED BY:
COPYRIGHT: STATE OF UTAH

REAVELEY
ENGINEERS + ASSOCIATES
Consulting Structural Engineers

snow college
activities center
dance studio addition | remodel
ephraim, utah

REVISION DATE

Project no: 0906-0260
Date: July 21, 2006
Sheet:

ROOF FRAMING DETAILS

SF503

100% Construction Documents

STEEL COLUMN SCHEDULE

SC-1

MARK	SIZE	STEEL BASE PLATE	STEEL CAP PLATE	REMARKS
SC-1	HSS5x5x5/16	3/4" SBP-2	3/4" SCP-1	
SC-2	HSS5x5x5/16	3/4" SBP-3	3/4" SCP-2	
SC-3	HSS6x6x1/4	3/4" SBP-2	3/4" SCP-1	
SC-4	HSS8x6x3/16	3/4" SBP-2	3/4" SCP-1	
SC-5	HSS4x4x3/16	3/4" SEE A4/SB501	3/4" SCP-2	

NOTES:

1. UNLESS NOTED OTHERWISE, ALL COLUMNS SHALL BE INSTALLED W/4-3/4" DIAMETER A.B. W/ 3" (MIN) HOOKS. PROJECT ANCHOR BOLTS 3" (MIN) ABOVE THE TOP OF THE BASE PLATE. EMBEDMENT SHALL BE 9" (MIN). ALL BOLTS SHALL BE INSTALLED W/ HARDENED WASHERS BENEATH THE NUT. ANY BOLT HOLES LARGER THAN THE BOLT DIAMETER PLUS 5/16" SHALL HAVE 5/16" PLATE WASHERS INSTALLED BENEATH THE HARDENED WASHERS.
2. ALL BOLTS IN CAP PLATES SHALL BE 3/4" DIA, A325N BOLTS TYPICAL U.N.O.
3. COLUMN SPLICES SHALL BE LOCATED PER SPLICE DETAILS, TYPICAL, U.N.O.
4. WELDS SHALL NOT BE MADE TO ANCHOR BOLTS.

STEEL ANGLE LINTEL SCHEDULE

STL-LINT

BEARING EQUALS 1" PER FOOT OF OPENING OR 6" MINIMUM TYPICAL

OPENING SIZE	ANGLE SIZE
0'-0" - 7'-0"	L3.1/2x3.1/2x1/4
7'-0" - 9'-0"	L4x3.1/2x1/4
9'-0" - 10'-0"	L5x3.1/2x1/4

NOTES:

LINTELS ARE DESIGNED TO SUPPORT UNIFORM LOADS CONSISTING ONLY OF WEIGHT OF WALL WITHIN A 60 DEGREE ISOSCELES TRIANGLE AREA ABOVE OPENING.

ALL STEEL LINTELS ARE TO HAVE LONG LEG VERTICAL.

LINTEL SCHEDULE FOR 4" VENEER

ALL ANGLE LINTELS SHALL BE GALVANIZED.

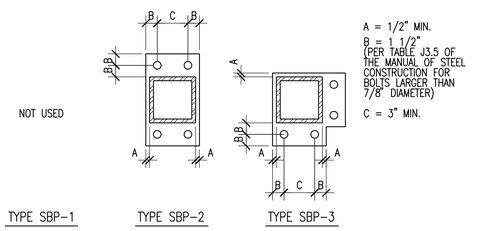

A = 1/2" MIN.
B = 1 1/2" (PER TABLE J3.5 OF THE MANUAL OF STEEL CONSTRUCTION FOR BOLTS LARGER THAN 7/8" DIAMETER)
C = 3" MIN.

D3 / SF601 (SBP-1) TYPICAL STEEL BASE PLATES - PLAN VIEW
NO SCALE

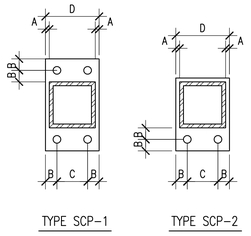

A = 1/2" MIN.
B = 1 1/2" MIN.
C = GAGE OF CONNECTED MEMBER
D = COLUMN WIDTH + 1", BEAM OR GIRDER WIDTH + 1", OR BOLT GAGE + 3", WHICHEVER IS GREATER.

C3 / SF601 (SCP-1) TYPICAL STEEL CAP PLATES - REFLECTED PLAN VIEW
NO SCALE

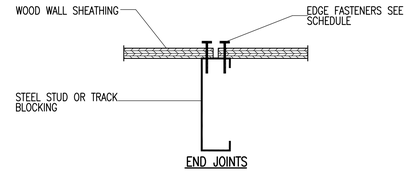

C5 / SF601 (WDTYP08) TYPICAL STEEL STUD SHEAR WALL PANEL JOINT DETAIL
NO SCALE

STEEL STUD SHEARWALL SCHEDULE

MARK	WALL FRAMING					WALL ANCHORAGE			WALL SHEATHING	EDGE FASTENERS		FIELD FASTENERS		REMARKS
	STUDS	SPACING	BOTTOM TRACK	TOP TRACK	END STUDS	BOTTOM TRACK ANCHORAGE	TOP TRACK ANCHORAGE TO STEEL BEAM (NOTE 10)	END STUDS OR POST ANCHORAGE		SIZE	SPACING	SIZE	SPACING	
SSW-1	600S137-43	16" O.C.	600T200-54	600T200-54	SEE A4/SF601	1/2"ø SIMPSON TITAN HD ANCHORS @ 36" O.C.	SEE A5/SF601	SEE A4/SF601	15/32" STRUCT	NOTE 8	6"	NOTE 8	12"	
SSW-2	600S137-43	16" O.C.	600T200-54	600T200-54	SEE A4/SF601	1/2"ø SIMPSON TITAN HD ANCHORS @ 12" O.C.	SEE A5/SF601	SEE A4/SF601	15/32" STRUCT	NOTE 8	4"	NOTE 8	12"	

NOTES:

1. ALL SHEAR WALL SHEATHING SHALL BE A.P.A. RATED SHEATHING, EXPOSURE 1 AND SHALL BE TREATED WITH FIRE RETARDANT (PRESSURE TREAT WITH DRICON OR EQUAL AS APPROVED BY THE ARCHITECT).
2. WHERE STUD MUST BE CUT DUE TO THE PLACEMENT OF ANCHOR BOLTS OR OTHER PRODUCTS, AN ADDITIONAL STUD SHALL BE INSERTED ALONG SIDE.
3. ALL PANEL EDGES SHALL BE SOLID BLOCKED PER DETAIL C5/SF601.
4. DISTANCE FROM PANEL EDGE TO NAILING SHALL BE NOT LESS THAN 3/8".
5. SHEATHING SHALL BE APPLIED WITH EDGES 1/8" APART AT SIDE JOINTS AND 1/16" APART AT END JOINTS.
6. MINIMUM 2 ANCHOR BOLTS PER WALL PANEL.
7. THE "HD" MARK REFERS TO "SIMPSON" HOLD-DOWN ANCHORS.
8. ALL SCREWS SHALL BE #10 SELF TAPPING SCREWS W/FLAT HEAD AND A MINIMUM HEAD DIAMETER OF 0.292 INCHES.
9. ALL ANCHOR BOLTS FOR BOTTOM TRACK ANCHORAGE SHALL BE SIMPSON TITAN HD OR EQUIVALENT WITH 3.1/2" MIN EMBEDMENT.
10. ALL POWDER ACTUATED FASTENERS (PAF) SHALL BE MIN 0.145" DIA. PINS. FASTENERS SHALL HAVE MIN 1/2" EDGE DISTANCE. FASTENERS SHALL ACHIEVE COMPLETE PENETRATION THROUGH STRUCTURAL STEEL MEMBER.

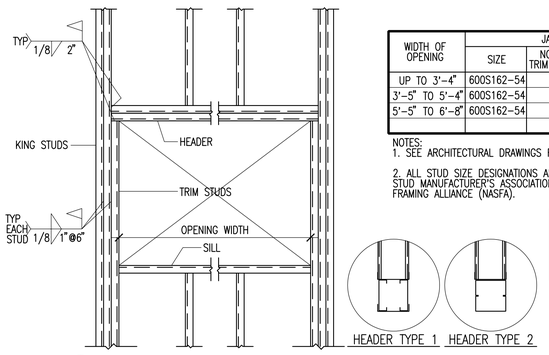

WIDTH OF OPENING	JAMB			SILL	HEADER	
	SIZE	NO. OF TRIM STUDS	NO. OF KING STUDS	SIZE	SIZE	TYPE
UP TO 3'-4"	600S162-54		1	(1)600S162-54	(2)600S162-54	2
3'-5" TO 5'-4"	600S162-54		2	(1)600S162-54	(2)600S162-54	2
5'-5" TO 6'-8"	600S162-54		2	(2)600S162-54	(3)600S162-54	2

NOTES:
1. SEE ARCHITECTURAL DRAWINGS FOR LOCATIONS OF ALL OPENINGS IN STUD WALLS.
2. ALL STUD SIZE DESIGNATIONS ARE PER THE STANDARD ESTABLISHED BY THE STEEL STUD MANUFACTURER'S ASSOCIATION (SSMA) AND THE NORTH AMERICAN STEEL FRAMING ALLIANCE (NASFA).

TYPICAL STUD WALL CONSTRUCTION	
6" STUD WALLS	600S137-43 @ 16" O.C.
TYP TOP & BOT TRACK	600T200-43

NOTES:
1. FASTEN BOTTOM TRACK TO CONCRETE W/ 0.145"ø POWDER ACTUATED FASTENER @ 16" O.C.
2. FASTEN STUDS TO TOP & BOTTOM TRACK W/ #10 SCREWS AT EACH STUD FLANGE.

B1 / SF601 (STLSTD01) TYPICAL EXTERIOR STUD WALL FRAMING SCHEDULE WITH FRAMED OPENING DETAIL
NO SCALE

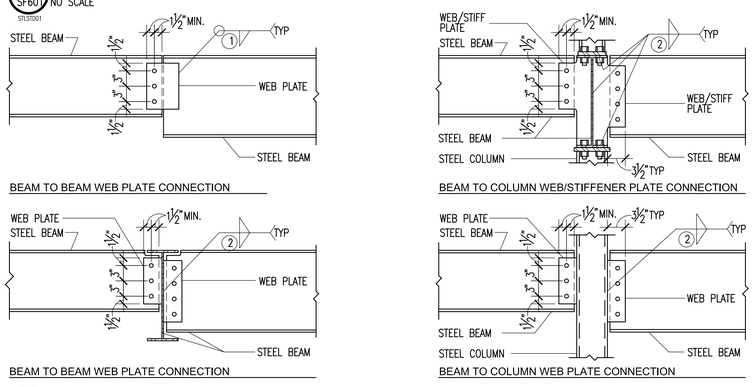

A1 / SF601 (SBSCH006) TYPICAL BOLTED WEB PLATE CONNECTIONS W/ BOLT SCHEDULE (SINGLE SHEAR)
NO SCALE

A325 BOLT SCHEDULE

MAXIMUM BEAM SIZE IN EACH BEAM DEPTH GROUP	WEB PLATE THICKNESS	A325N BOLTS	
		NUMBER	SIZE
W8	5/16"	2	3/4"ø
W10	5/16"	2	3/4"ø
W12	5/16"	3	3/4"ø
W14	5/16	3	3/4"ø
W16	3/8"	4	3/4"ø
W24	7/16"	7	3/4"ø

NOTES:
1. FILLET WELDS ONE SIDE SHALL EQUAL THE PLATE THICKNESS MINUS 1/16" (1/4" MIN.)
2. FILLET WELDS TWO SIDES SHALL BE 3/4 THE PLATE THICKNESS (1/4" MIN.) EACH SIDE
3. BOLT EDGE DISTANCE SHALL BE 1.1/2" MIN. AT ALL EDGES. BOLT SPACING SHALL BE 3" MIN.
4. THICKNESS EQUALS BEAM FLANGE THICKNESS OF BEAM FRAMING INTO COLUMN WEB. (3/8" MIN.)

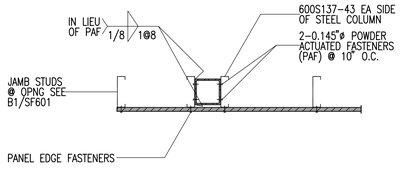

A4 / SF601 (2006-109-SF601/A4) TYPICAL STEEL STUD SHEAR WALL END STUDS AT STEEL COLUMNS - PLAN VIEW
NO SCALE

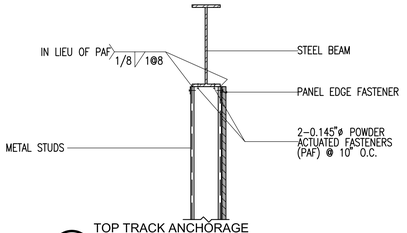

A5 / SF601 (2006-109-SF601/A5) TOP TRACK ANCHORAGE TO STEEL BEAM
NO SCALE

GouldEvans
©2002 Gould Evans Associates, L.C.
1000 South Main Street • Suite 100
Salt Lake City, Utah 84101
Voice 801.532.6100
Fax 801.532.6102
www.gouldevans.com
kansas city • lawrence • phoenix
salt lake city • san antonio • tampa

DFCM PROJECT NO: 05266700
STATE PROPERTY ID: 01791
RISK MANAGEMENT NO:
CAD PROJECT NO:
CAD DWG FILE:
DRAWN BY:
CHECKED BY:
COPYRIGHT: STATE OF UTAH

REAVELEY ENGINEERS + ASSOCIATES
Consulting Structural Engineers

snow college
activities center
dance studio addition | remodel
ephraim, utah

REVISION DATE

Project no: 0906-0260
Date: July 21, 2006
Sheet:

STRUCTURAL SCHEDULES
SF601

100% Construction Documents

MECHANICAL LEGEND

SYMBOL	ABR.	DESCRIPTION	SYMBOL	ABR.	DESCRIPTION
AIR SIDE			WET SIDE		
		EXISTING AIR DUCT TO BE REMOVED			PUMP
		EXISTING AIR DUCT TO REMAIN			UNION
		NEW AIR DUCT			MANUAL ACTUATOR (BALL, BUTTERFLY, NEEDLE, ETC. VALVES)
		RECT. TO RECT. AIR DUCT TAKE-OFF			
		RECT. TO RND. AIR DUCT TAKE-OFF			MANUAL ACTUATOR (GATE, GLOBE, S&D, OS&Y, ETC. VALVES)
		RND. TO RND. AIR DUCT TAKE-OFF			
		RECT. TAKE-OFF AT END OF MAIN			PNEUMATIC DIAPHRAGM ACTUATOR
		FLEXIBLE AIR DUCT	M		ELECTRIC MOTOR ACTUATOR
		LINED DUCT			THREADED OR SWEAT VALVE CONNECTION
		VANED ELBOW			FLANGED VALVE CONNECTION
		RADIUS ELBOW			BUTTERFLY VALVE
		CONCENTRIC DUCT TRANSITION			GATE VALVE
		ECCENTRIC DUCT TRANSITION			GLOBE VALVE - STRAIGHT PATTERN
		FLEXIBLE DUCT CONNECTION	M		MOTORIZED 2-WAY CONTROL VALVE
VD		VOLUME DAMPER	M		MOTORIZED 3-WAY CONTROL VALVE
		SUPPLY AIR DIFFUSER			CHECK VALVE
		RETURN AIR, FRESH AIR, AND TRANSFER AIR		CBV	CIRCUIT BALANCING VALVE
		CEILING MOUNTED EXHAUST FAN OR EXHAUST GRILLE		BV	BALL VALVE
		RETURN OR OUTSIDE AIR DUCT UP	P	PRV	PRESSURE RELIEF VALVE
		SUPPLY DUCT UP	3D	TDV	TRIPLE DUTY VALVE
		EXHAUST AIR INTAKE UP		TDV	TRIPLE DUTY VALVE - ANGLE
		RETURN OR OUTSIDE AIR DUCT DOWN			
		SUPPLY DUCT DOWN		TDV	TRIPLE DUTY VALVE - STRAIGHT
		EXHAUST DUCT DOWN			
		ROUND DUCT UP			AUTOMATIC AIR VENT
		ROUND DUCT DOWN			MANUAL AIR VENT
		FLEXIBLE DUCT CONNECTION			STRAINER
	AP	ACCESS PANEL			STRAINER W/ PLUGGED BLOW OFF
		EXISTING EQUIPMENT TO BE REMOVED			PRESSURE GAUGE AND GAUGE COCK -WATER
		EXISTING EQUIPMENT TO REMAIN			
		NEW EQUIPMENT			THERMOMETER AND THERMOWELL
A	A	AUTOMATIC DAMPER			
BD	BD	BACKDRAFT DAMPER	S		WATER TEMPERATURE SENSOR AND THERMOWELL
F	FD	FIRE DAMPER			
FS	FS	FIRE & SMOKE DAMPER		TW	THERMOWELL
T	TSTAT	WALL MOUNTED THERMOSTAT			PRESS. & TEMP. TAP
S		WALL MOUNTED TEMP. SENSOR			ELBOW UP
SA		SUPPLY AIR			ELBOW DOWN
RA		RETURN AIR			TEE UP
EA		EXHAUST AIR			TEE DOWN
CA		COMBUSTION AIR			EXISTING PIPING TO BE REMOVED
MA		MIXED AIR			EXISTING PIPING TO REMAIN
FA		FRESH AIR			NEW PIPING
RF		RELIEF AIR			PIPE CAP OR PLUG
GENERAL TERMINOLOGY					CONCENTRIC REDUCER
A / M-5		SECTION LETTER DESIGNATION / SECTION DRAWN ON THIS SHEET			ECCENTRIC REDUCER
					FLEXIBLE CONNECTION
2 / M-5		DETAIL NUMBER DESIGNATION / DETAIL DRAWN ON THIS SHEET	CD		CONDENSATE DRAIN
			GF		GLYCOL FEED LINE
AH / 1		MECHANICAL EQUIPMENT DESIGNATION / EQUIPMENT ITEM DESIGNATION	MU		MAKE-UP WATER LINE
				CW	CULINARY COLD WATER
D-1 / CFM		REGISTER, GRILLE OR DIFFUSER DESIGNATION WITH BALANCING CFM LISTED BELOW		HW	CULINARY HOT WATER
			HWS		HEATING WATER SUPPLY
R-1		GRILLE, OR LOUVER DESIGNATION WHERE BALANCING NOT REQUIRED	HWR		HEATING WATER RETURN
			LPS		LOW PRESSURE STEAM SUPPLY
1		REVISION DESIGNATOR AND NUMBER	LPR		LOW PRESSURE STEAM RETURN
1		KEY NOTE DESIGNATOR AND NUMBER	HGS		HEATING GLYCOL SUPPLY
	POC	POINT OF CONNECTION	HGR		HEATING GLYCOL RETURN
	POR	POINT OF REMOVAL	S		REFRIGERANT SUCTION LINE
GC		GENERAL CONTRACTOR	L		LIQUID SUCTION LINE
MC		MECHANICAL CONTRACTOR	HG		HOT GAS BYPASS LINE
CC		CONTROL CONTRACTOR			
EC		ELECTRICAL CONTRACTOR			
FPC		FIRE PROTECTION CONTRACTOR			
NIC		NOT IN CONTRACT			
NTS		NOT TO SCALE			
C		COMMON			
NC		NORMALLY CLOSED			
NO		NORMALLY OPEN			

MECHANICAL GENERAL NOTES:

G-1 MECHANICAL INFORMATION IS NOT LIMITED TO THE MECHANICAL DRAWINGS. CONTRACTOR SHALL BE RESPONSIBLE FOR INFORMATION ON ALL OTHER CONSTRUCTION DOCUMENTS INCLUDING DRAWINGS BY OTHER DISCIPLINES AND SPECIFICATIONS.

A - EACH DRAWING SHEET AND THE SPECIFICATIONS HAVE BEEN PREPARED TO SUPPLEMENT EACH OTHER AND THEY SHALL BE INTERPRETED AS AN INTEGRAL UNIT WITH ITEMS SHOWN AND NOTED ON ONE AND NOT THE OTHER BEING FURNISHED AND INSTALLED AS THOUGH SHOWN AND CALLED OUT IN ALL PLACES. ITEMS IN SPECIFICATIONS OR DRAWINGS LISTED WHICH ARE DIFFERING IN EFFICIENCY OR QUALITY SHALL BE HELD TO THE GREATEST OF: EFFICIENCY, QUALITY OR GOVERNING CODE.

B - THE CONTRACTOR WILL BE HELD RESPONSIBLE FOR THE INSTALLATION OF THE SYSTEMS ACCORDING TO THE TRUE INTENT AND MEANING OF THE CONTRACT DOCUMENTS.

C - THE CONTRACTOR SHALL INSTALL ALL EQUIPMENT WITH PROPER SERVICE ACCESS AND CLEARANCES ACCORDING TO MANUFACTURERS RECOMMENDATIONS. THE CONTRACTOR SHALL REVIEW SUPPLIERS BID PACKAGES FOR COMPLETENESS AND COMPLIANCE TO THE SPECIFICATIONS, SCHEDULES, AND DESIGN INTENT (ALL EQUIPMENT AND METHODS). THE CONTRACTOR SHALL REMOVE AND REINSTALL CORRECTLY AT HIS OWN EXPENSE ANY EQUIPMENT NOT IN COMPLIANCE.

D - THE CONTRACTOR SHALL CONSULT MANUFACTURERS INSTALLATION INSTRUCTIONS FOR SIZES, METHODS, ACCESSORIES, AND CLEARANCES IN SPACE AVAILABLE PRIOR TO BIDDING PROJECT.

E - ANYTHING NOT CLEAR OR IN CONFLICT WILL BE EXPLAINED BY MAKING APPLICATION TO THE ENGINEER IN WRITING.

G-2 ANY AND ALL ALTERATIONS TO THE SYSTEM SHOWN SHALL BE THE RESPONSIBILITY OF THIS CONTRACTOR. ENGINEER SHALL BE NOTIFIED IN WRITING PRIOR TO CHANGES.

G-3 CONTRACTOR SHALL FIELD VERIFY ALL DIMENSIONS AND LOCATIONS.

G-4 THE WORKING DRAWINGS ARE DIAGRAMMATIC. THEY DO NOT SHOW EVERY OFFSET, BEND, OR ELBOW NECESSARY FOR THE COMPLETE INSTALLATION IN THE SPACE PROVIDED. ALL LOCATIONS FOR MECHANICAL EQUIPMENT SHALL BE FIELD VERIFIED AND COORDINATED WITH ALL DRAWINGS. THE CONTRACTOR SHALL PROVIDE PROVISIONS FOR BLOCKOUTS OR CORE DRILLS THROUGH STRUCTURE.

G-5 THE INSTRUCTION TO "PROVIDE" ALSO INCLUDES INSTALLATION.

G-6 MECHANICAL CONTRACTOR SHALL PROVIDE AND INSTALL SMOKE AND FIRE DAMPERS AS REQUIRED BY LOCAL CODES AND AUTHORITIES.

G-7 SHEET METAL DUCT SIZES SHOWN ON DRAWINGS ARE FREE AREA DIMENSIONS.

G-8 PROVIDE AND INSTALL BALANCING DAMPERS IN ALL SUPPLY AIR AND EXHAUST AIR BRANCH DUCTS. BALANCE TO CFM SHOWN ON PLAN.

G-9 PROVIDE TURNING VANES IN ALL ELBOWS OF RECTANGULAR DUCT.

G-10 THE CONTRACTOR SHALL ASSUME ALL RESPONSIBILITY IN HANDLING AND DISPOSING OF REFRIGERANTS, OILS, ETC. ALL SUCH MATERIALS SHALL BE HANDLED, DISPOSED, AND USED ON ACCORDANCE WITH ALL LOCAL, STATE, AND FEDERAL LAWS.

G-11 THE MECHANICAL CONTRACTOR SHALL VERIFY MOTOR VOLTAGES WITH THE ELECTRICAL DRAWING BEFORE ORDERING MOTORIZED EQUIPMENT AND CONTROLS. MOTOR NAMEPLATE VOLTAGE SHALL BE NEMA STANDARD 200 VOLT FOR 208 VOLT, THREE PHASE SYSTEM AND SHALL BE NEMA STANDARD 230 VOLT FOR 240 VOLT, THREE PHASE, OR SINGLE PHASE SYSTEM.

G-12 C.F.M. LISTED IS ACTUAL AIR.

G-13 SUPPLIERS SHALL REVIEW ALL DRAWINGS AND THE SPECIFICATIONS PRIOR TO SUBMITTING PRICES TO THE CONTRACTOR. ALL QUESTIONS AND DISCREPANCIES SHALL BE BROUGHT TO THE ENGINEERS ATTENTION PRIOR TO BIDDING.

G-14 CONTRACTOR SHALL THOROUGHLY REVIEW AND SIGN SUBMITTALS FOR COMPLETENESS AND COMPLIANCE TO THE SPECIFICATIONS PRIOR TO ENGINEERS REVIEW. SUPPLIERS SHALL HIGHLIGHT OR MARK ALL INFORMATION REQUIRED TO SHOW COMPLIANCE TO THE SPECIFICATIONS. ALL REQUESTED EXCEPTIONS TO THE SPECIFICATIONS, OR SCHEDULES SHALL BE CLEARLY NOTED AND EXPLAINED. SUBMITTAL REVIEW AND ACCEPTANCE IS FOR DESIGN CONCEPT ONLY, AND DOES NOT AT ANY TIME RELIEVE THE CONTRACTOR OF RESPONSIBILITY TO MEET SPECIFICATIONS, CAPACITIES, OR DESIGN INTENT.

G-15 ALL MECHANICAL SHALL BE INSTALLED AND CONFORM TO THE 2003 EDITION OF THE IMC AND IPC WITH UTAH ANNOTATIONS COLLEGE REQUIREMENTS.

07/21/06
WINWARD M. PACKER
No. 375080
STATE OF UTAH

GouldEvans

©2002 Gould Evans Associates, L.C.

1000 South Main Street • Suite 100
Salt Lake City, Utah 84101
Voice 801.532.6100
Fax 801.532.6102
www.gouldevans.com

kansas city • lawrence • phoenix
salt lake city • san antonio • tampa

DFCM PROJECT NO: 05266700
STATE PROPERTY ID: 01791
RISK MANAGEMENT NO:
CAD PROJECT NO:
CAD DWG FILE:
DRAWN BY: LGD
CHECKED BY: WMP

COPYRIGHT: STATE OF UTAH

WHW ENGINEERING INC.
PROFESSIONAL MECHANICAL ENGINEERING
1354 East 3300 South Suite 200
SALT LAKE CITY, UTAH 84106
(801)466-4321, FAX 466-8636
EMAIL: ecollette@whw-engineering.com

snow college
activities center
dance studio addition remodel
ephraim, utah

REVISION DATE

Project no: 0906-0260
Date: July 21 2006
Sheet:

MECH. GENERAL NOTES & LEGEND

M001

100% Construction Documents

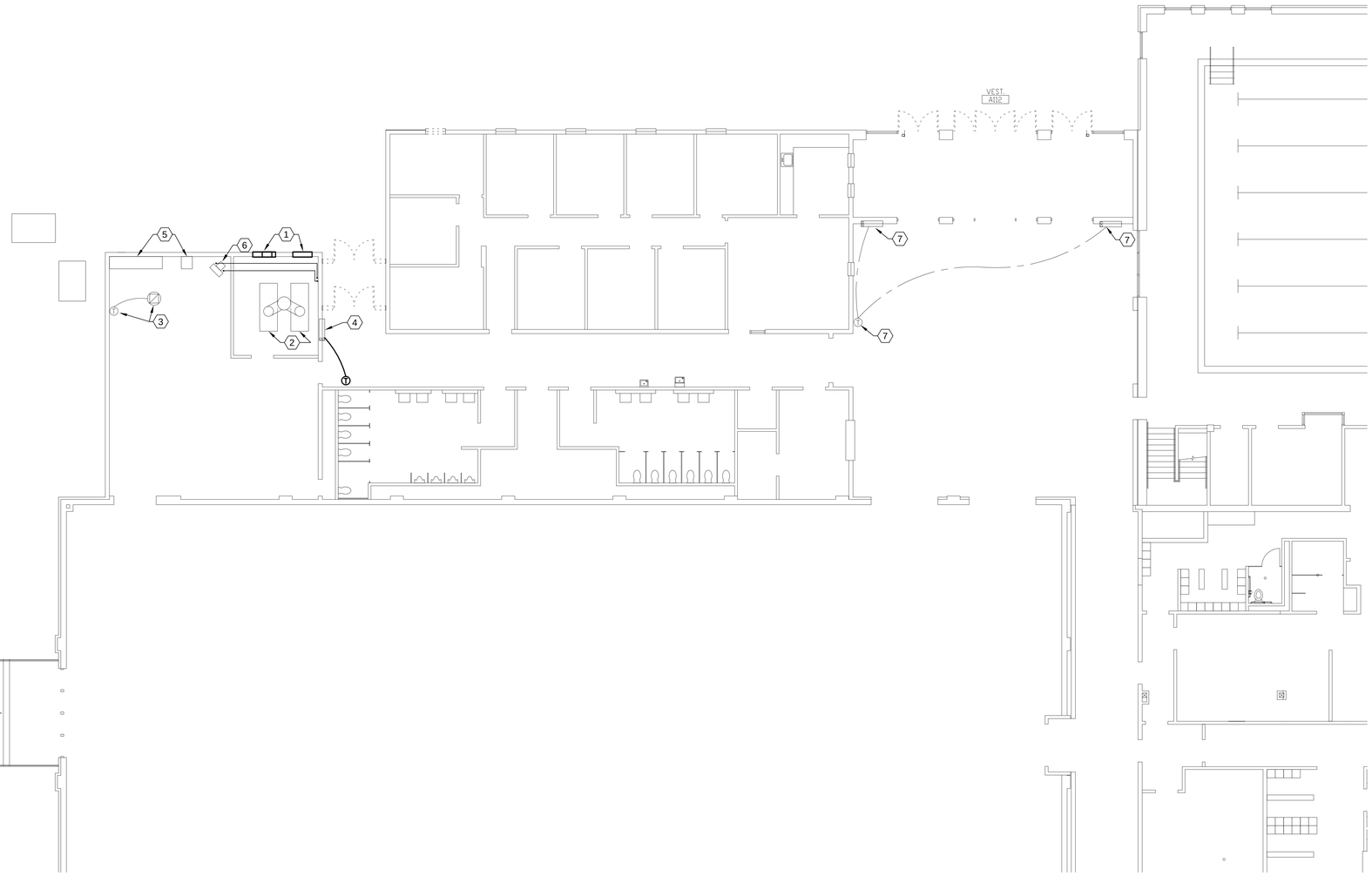

A1 MECHANICAL DEMOLITION FLOOR PLAN
SCALE: 1/8" = 1'

NORTH

SHEET NOTES:

1. REMOVE EXISTING LOUVER. COORDINATE WITH ARCHITECTURAL FOR WALL PATCHING.
2. EXISTING BOILER SHALL REMAIN.
3. EXISTING EXHAUST FAN SHALL REMAIN.
4. DISCONNECT, CAP PIPING, AND ABANDON IN PLACE.
5. EXISTING ELECTRICAL EQUIPMENT. SEE ELECTRICAL DRAWINGS.
6. EXISTING UNIT HEATER AND ASSOCIATED THERMOSTAT SHALL REMAIN. MOUNT LOWER TO ACCOMMODATE NEW DUCTWORK. SEE SHEET ME401.
7. EXISTING CABINET UNIT HEATER AND ASSOCIATED THERMOSTAT SHALL REMAIN.

PROFESSIONAL ENGINEER
07/21/06
WINWARD M. PACKER
No. 375080
STATE OF UTAH

GouldEvans

©2002 Gould Evans Associates, L.C.
1000 South Main Street • Suite 100
Salt Lake City, Utah 84101
Voice 801.532.6100
Fax 801.532.6102
www.gouldevans.com

kansas city • lawrence • phoenix
salt lake city • san antonio • tampa

DFCM PROJECT NO: 05266700
STATE PROPERTY ID: 01791
RISK MANAGEMENT NO:
CAD PROJECT NO:
CAD DWG FILE:
DRAWN BY: LGD
CHECKED BY: WMP
COPYRIGHT: STATE OF UTAH

WHW ENGINEERING INC.
PROFESSIONAL MECHANICAL ENGINEERING
1354 East 3300 South Suite 200
SALT LAKE CITY, UTAH 84106
(801)486-4321, FAX 486-8536
EMAIL: ecadiemo@whw-engineering.com

snow college
activities center
dance studio addition remodel
ephraim, utah

REVISION DATE

Project no: 0906-0260
Date: July 21 2006
Sheet:

MECH. DEMO.
FLOOR PLAN

MD101

100% Construction Documents

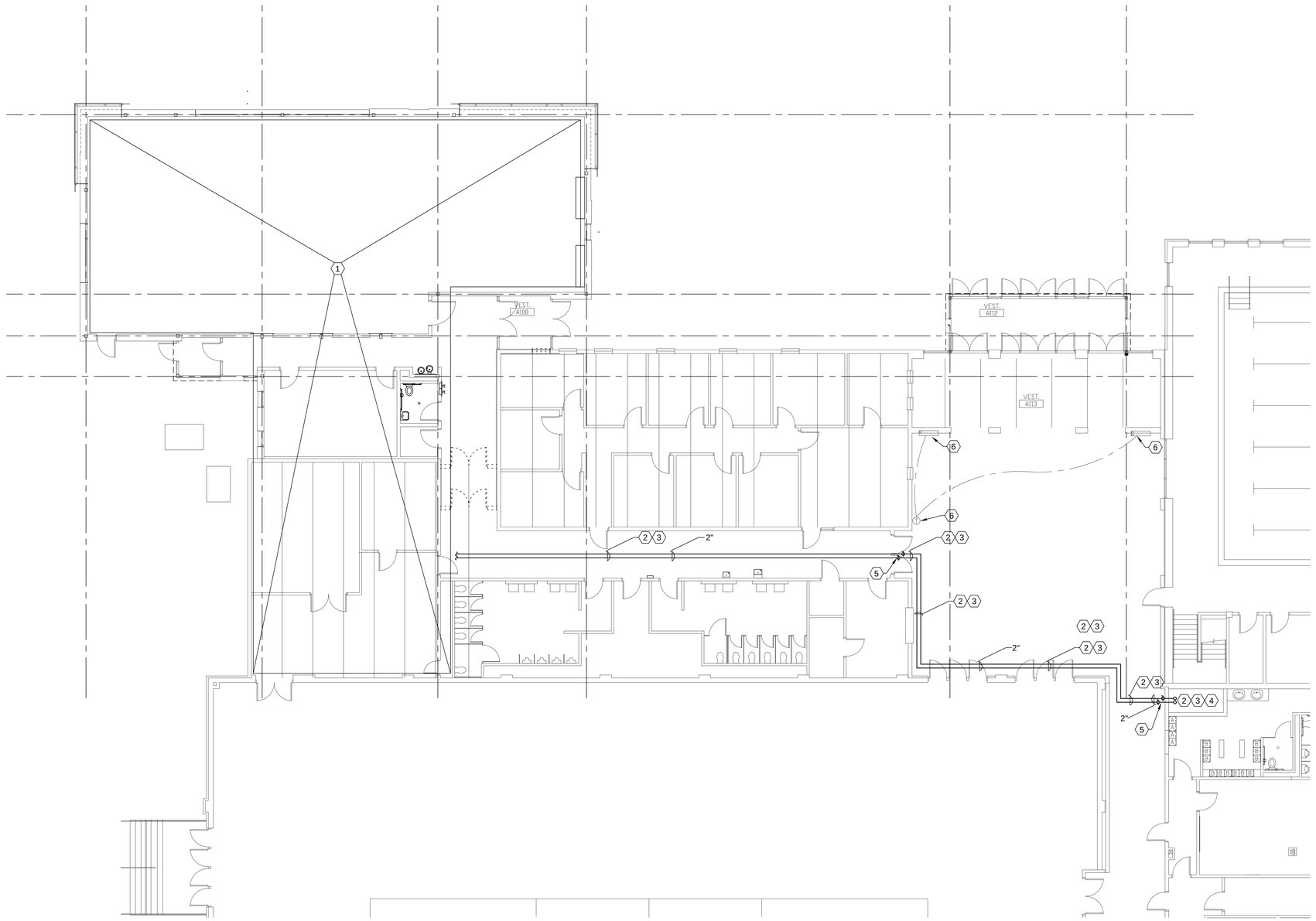

A1 MECHANICAL FLOOR PLAN
SCALE: 1/8" = 1'

NORTH

SHEET NOTES:

1. SEE LARGE SCALE PLAN SHEET ME401 FOR THIS AREA.
2. ROUTE NEW HOT WATER PIPING FROM EXISTING MECHANICAL ROOM TO NEW AIR HANDLER.
3. COORDINATE WITH G.C. TO CUT AND PATCH CEILING IN LOBBY WHERE NECESSARY. USE ACCESS THROUGH LIGHTS WHERE POSSIBLE. ALL CONCEALED PIPING SHALL BE SCHEDULE 80 AND WELDED.
4. TIE INTO EXISTING 2-1/2" STUB-OUTS IN EXISTING MECHANICAL ROOM.
5. PROVIDE ISOLATION VALVES AS SHOWN.
6. EXISTING CABINET UNIT HEATER AND ASSOCIATED THERMOSTAT SHALL REMAIN.

PROFESSIONAL ENGINEER
07/21/06
WINWARD M. PACKER
No. 375080
STATE OF UTAH

GouldEvans

©2002 Gould Evans Associates, L.C.
1000 South Main Street • Suite 100
Salt Lake City, Utah 84101
Voice 801.532.6100
Fax 801.532.6102
www.gouldevans.com

kansas city • lawrence • phoenix
salt lake city • san antonio • tampa

DFCM PROJECT NO: 05266700
STATE PROPERTY ID: 01791
RISK MANAGEMENT NO:
CAD PROJECT NO:
CAD DWG FILE:
DRAWN BY: LGD
CHECKED BY: WMP
COPYRIGHT: STATE OF UTAH

WHW ENGINEERING INC.
PROFESSIONAL MECHANICAL ENGINEERING
1354 East 3300 South Suite 200
SALT LAKE CITY, UTAH 84106
(801)486-4231, FAX 486-8530
EMAIL: acadiana@whw-engineering.com

snow college
activities center
dance studio addition remodel
ephraim, utah

REVISION DATE

Project no: 0906-0260
Date: July 21 2006
Sheet:

MECHANICAL FLOOR PLAN
ME101

100% Construction Documents

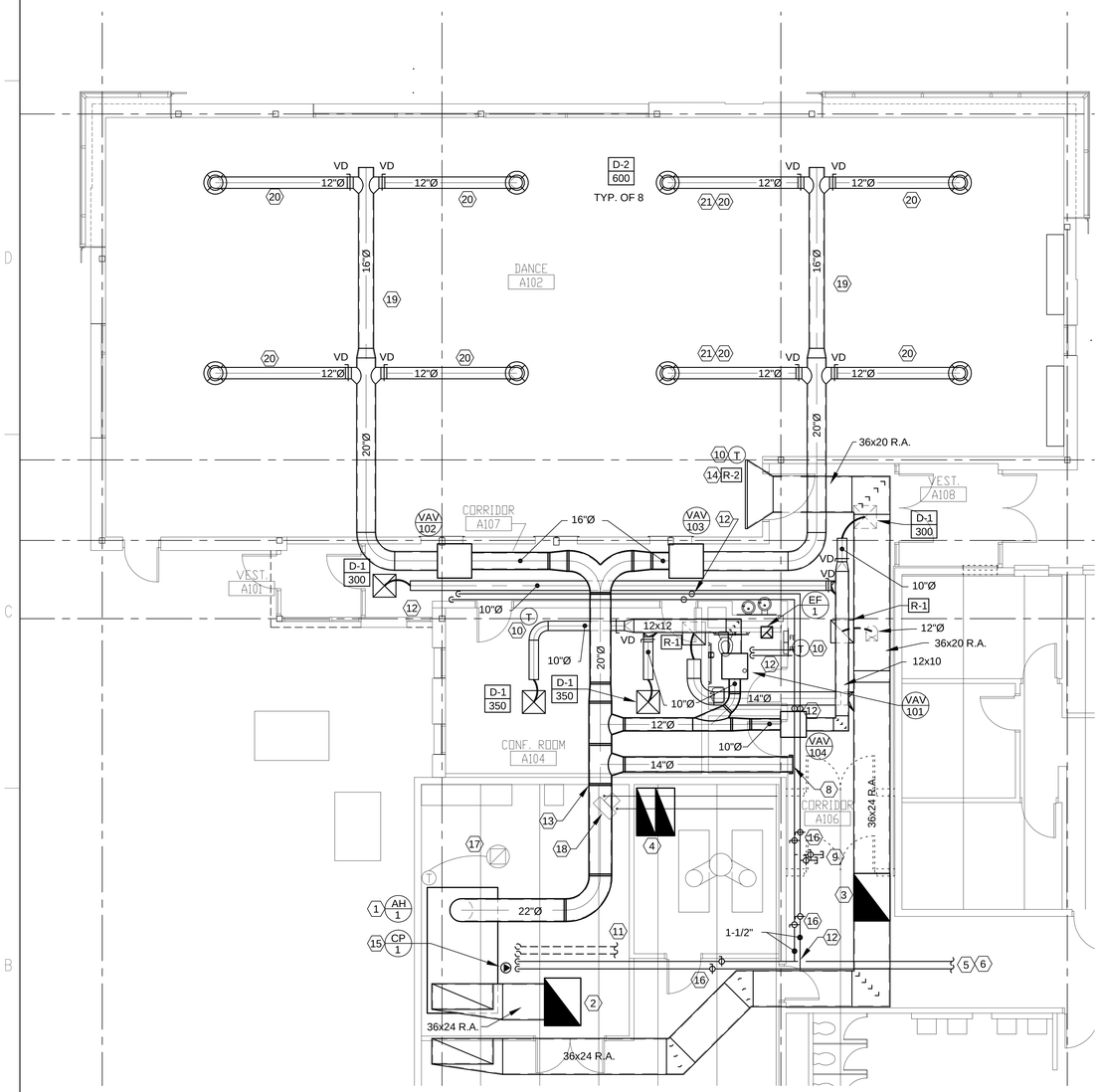

A1 LARGE SCALE MECHANICAL FLOOR PLAN
SCALE: 3/16" = 1'

NORTH

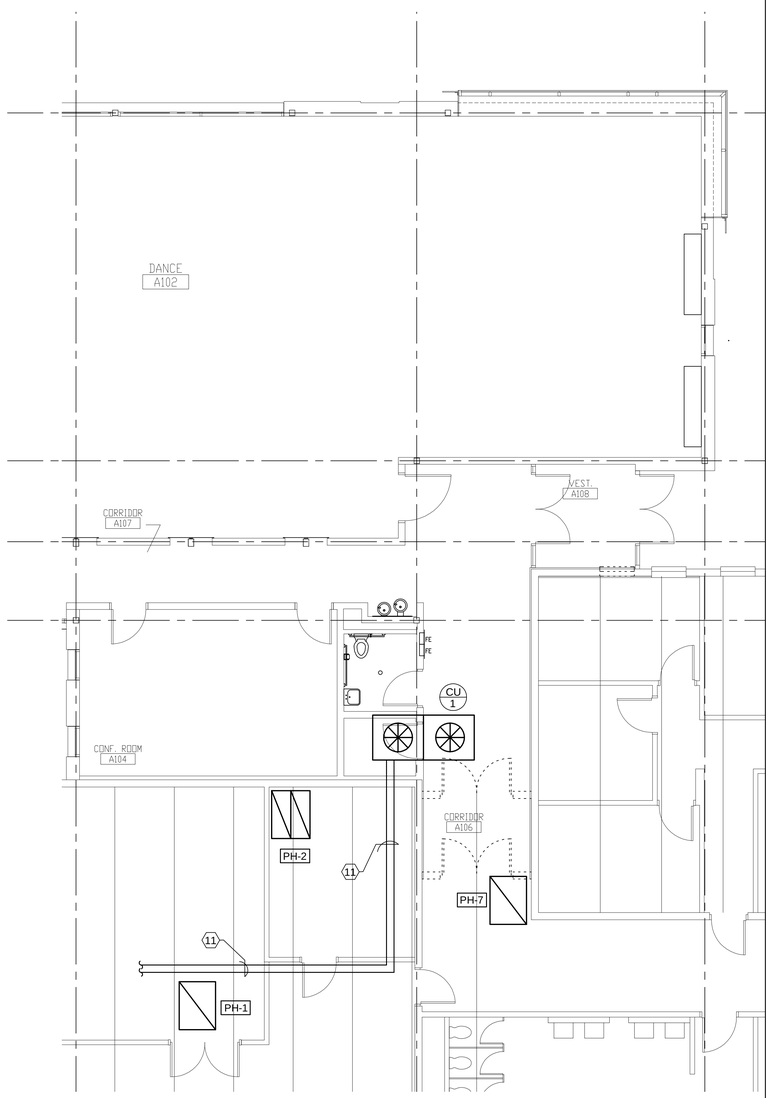

A4 LARGE SCALE ROOF PLAN
SCALE: 3/16" = 1'

NORTH

SHEET NOTES:

1. PROVIDE NEW AIR HANDLING UNIT. COORDINATE EXACT LOCATION WITH EXISTING CONDITIONS, ELECTRICAL EQUIPMENT, ETC. COORDINATE WITH ARCH TO PROVIDE NE MECHANICAL ROOM.
2. PROVIDE NEW FRESH AIR IN-TAKE PENTHOUSE. TRANSITION FROM PENTHOUSE TO 36x24 DUCT AND TRANSITION FROM DUCT TO AIR HANDLER.
3. ROUTE RELIEF DUCT TO RELIEF AIR PENTHOUSE. PROVIDE AUTOMATIC RELIEF AIR DAMPER. COORDINATE WITH ATC. TRANSITION FROM RETURN DUCT TO PENTHOUSE.
4. PROVIDE NEW ROOF MOUNTED COMBUSTION AIR PENTHOUSE. ROUTE ONE DUCT TO 12" BELOW CEILING AND ONE DUCT TO 12" AFF. ROUTE ONE DUCT ON EACH SIDE OF ROOF JOIST.
5. ROUTE NEW HOT WATER PIPING FROM EXISTING MECHANICAL ROOM TO NEW AIR HANDLER.
6. COORDINATE WITH G.C. TO CUT AND PATCH CEILING IN LOBBY WHERE NECESSARY. USE ACCESS THROUGH LIGHTS WHERE POSSIBLE. ALL CONCEALED PIPING SHALL BE SCHEDULE 80 AND WELDED.
7. PROVIDE ROOF MOUNTED CONDENSING UNIT. ROUTE REFRIGERANT PIPING FROM CONDENSING UNIT TO AIR HANDLER.
8. ROUTE 14" ROUND STUB OUT TO CORRIDOR AND CAP FOR FUTURE CONNECTION.
9. PROVIDE 1-1/4" HOT WATER STUB-OUTS WITH ISOLATION VALVES. CAP FOR FUTURE CONNECTION.
10. PROVIDE THERMOSTAT IN THIS APPROXIMATE LOCATION. COORDINATE WITH OWNER, ARCHITECT, AND ALL OTHER DISCIPLINES.
11. ROUTE REFRIGERANT PIPING FROM CONDENSING UNIT ON ROOF TO AIR HANDLING UNIT. PIPE PER MANUFACTURER'S RECOMMENDATIONS. PROVIDE SHEET METAL COVER OVER ALL EXTERIOR REFRIGERANT PIPING PER DETAILS.
12. ROUTE HOT WATER PIPING TO NEW VAV BOXES. PIPE PER DETAIL.
13. COORDINATE WITH G.C. TO CUT OR CORE DRILL WALL FOR DUCT PENETRATION.
14. PROVIDE HIGH SIDEWALL RETURN GRILLE ABOVE DOOR.
15. PROVIDE HOT WATER COIL CIRCULATING PUMP. PIPE PER DETAILS.
16. PROVIDE ISOLATION VALVES AS SHOWN.
17. EXISTING EXHAUST FAN AND THERMOSTAT SHALL REMAIN.
18. RE-LOCATE EXISTING UNIT HEATER LOWER ON WALL TO ACCOMMODATE NEW DUCTWORK OVERHEAD.
19. ROUTE DUCTWORK IN DANCE AREA EXPOSED BETWEEN TRUSSES. COORDINATE EXACT LOCATION WITH ARCHITECTURAL PLANS.
20. PROVIDE INTERNAL PERFORATED LINER IN MAIN DUCT LINES, BUT NO LINER IN 12" BRANCHES.
21. OFFSET BRANCH DUCTS AS NECESSARY WHERE TRUSSES SHIFT TO ROUTE BETWEEN WEBBING.

PROFESSIONAL ENGINEER
07/21/06
WINWARD M. PACKER
No. 375080
STATE OF UTAH

GouldEvans

©2002 Gould Evans Associates, L.C.
1000 South Main Street • Suite 100
Salt Lake City, Utah 84101
Voice 801.532.6100
Fax 801.532.6102
www.gouldevans.com

kansas city • lawrence • phoenix
salt lake city • san antonio • tampa

DFCM PROJECT NO: 05266700
STATE PROPERTY ID: 01791
RISK MANAGEMENT NO:
CAD PROJECT NO:
CAD DWG FILE:
DRAWN BY: LGD
CHECKED BY: WMP
COPYRIGHT: STATE OF UTAH

WHW
ENGINEERING INC.
PROFESSIONAL MECHANICAL ENGINEERING
1354 East 3300 South Suite 200
SALT LAKE CITY, UTAH 84106
(801)466-4321, FAX 466-8836
EMAIL: ocallaros@whw-engineering.com

snow college
activities center
dance studio addition remodel
ephraim, utah

REVISION	DATE

Project no: 0906-0260
Date: July 21 2006
Sheet:

LARGE SCALE MECHANICAL FLOOR PLANS
ME401

100% Construction Documents

LOW PRESSURE ROUND DUCT CONSTRUCTION SCHEDULE

DUCT DIAMETER IN INCHES	MAXIMUM 2" W.G. STATIC POSITIVE		MAXIMUM 2" W.G. STATIC NEGATIVE	
	SPIRAL SEAM GAUGE	LONGITUDINAL SEAM GAUGE	SPIRAL SEAM GAUGE	LONGITUDINAL SEAM GAUGE
3 thru 8	28	28	28	24
9 thru 14	28	26	26	24
15 thru 26	26	24	24	22
27 thru 36	24	22	22	20
37 thru 50	22	20	20	18

E1 LOW PRESSURE ROUND DUCT CONSTRUCTION DETAIL
SCALE: NONE

DIMENSION OF LONGEST SIDE, INCHES	SHEET METAL GAGE (ALL FOUR SIDES)	MINIMUM REINFORCING ANGLE SIZE AND MAXIMUM LONGITUDINAL SPACING BETWEEN TRANSVERSE JOINTS &/OR INTERMEDIATE REINFORCING	TRANSVERSE REINFORCING (1) AT JOINTS				
			MIN. H. IN.	DRIVE SLIP / PLAIN S SLIP	HEMMED S SLIP	ALTER'NT BAR SLIP	REIN-FORCED BAR SLIP
				RECOM-MENDED GAGE	RECOM-MENDED GAGE	RECOM-MENDED GAGE	RECOM-MENDED GAGE
UP THRU 12	26	NONE REQUIRED	1	26	26	24	24
13 - 18	24	NONE REQUIRED	1	24	24	24	24
19 - 30	24	1"X1"X1/8" @ 60 IN	1	-	24	24	24
31 - 36	22	1"X1"X1/8" @ 60 IN	1	-	-	22	22

1. TRANSVERSE REINFORCING SIZE IS DETERMINED BY DIMENSION OF SIDE TO WHICH ANGLE IS APPLIED.

D1 DUCT CONSTRUCTION DETAIL
SCALE: NONE

NOTE:
TAKE-OFFS SHOULD NOT BE INSTALLED CLOSER THAN TWO WIDTHS TO ELBOWS OR INTERSECTIONS.

NOTE:
AREA OF A x B SHALL BE EQUAL TO 1.5 x AREA BRANCH DUCT.

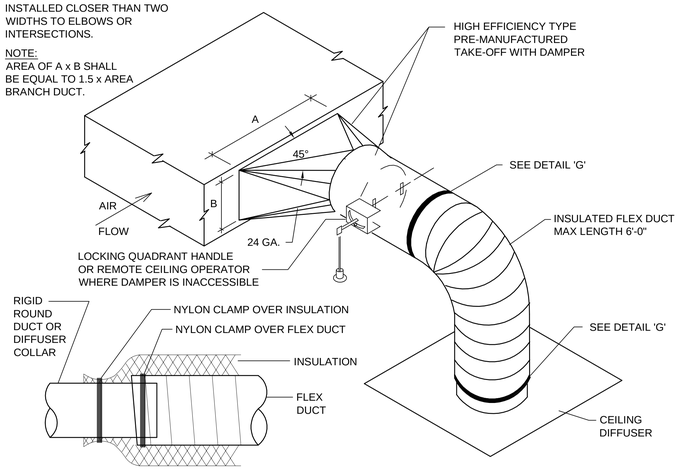

DETAIL
SCALE: NONE

D3 SQUARE-TO-ROUND TAKE-OFF DETAIL
SCALE: NONE

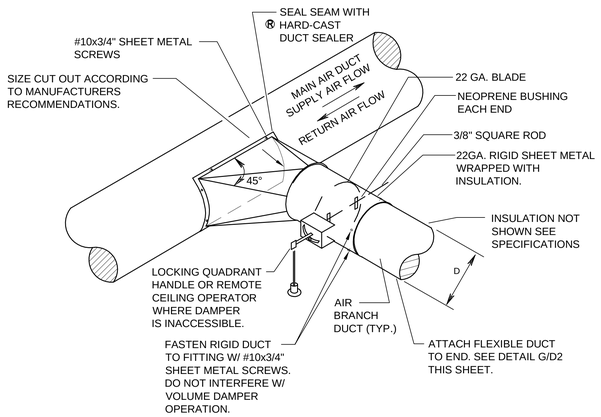

D5 ROUND-TO-ROUND DUCT CONSTRUCTION DETAIL
SCALE: NONE

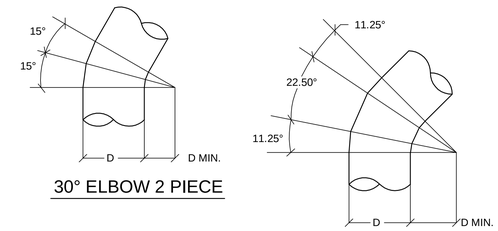

B5 TYPICAL HIGH PRESSURE DUCT FITTINGS
SCALE: NONE

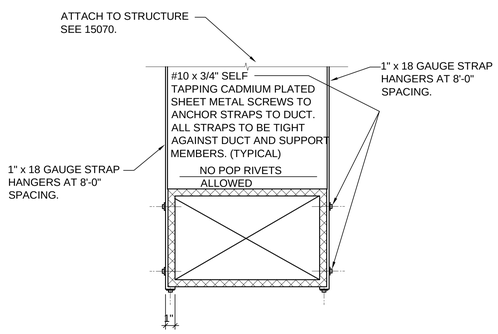

B1 DUCT STRAP HANGER DETAIL
SCALE: NONE

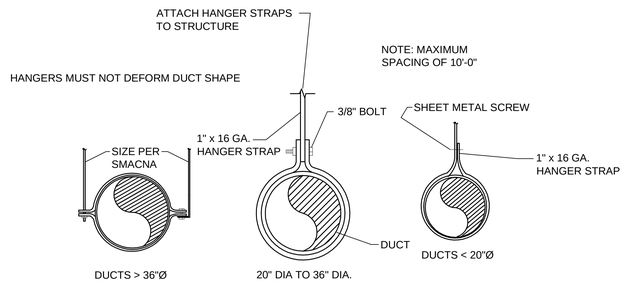

B3 ROUND DUCT SUPPORT DETAIL
SCALE: NONE

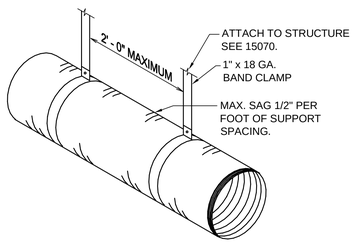

A1 FLEXIBLE DUCT SUPPORT DETAIL
SCALE: NONE

NOTE:
DUCT SHALL BE WRAPPED EXTERNALLY AS PER THE SPECIFICATIONS.

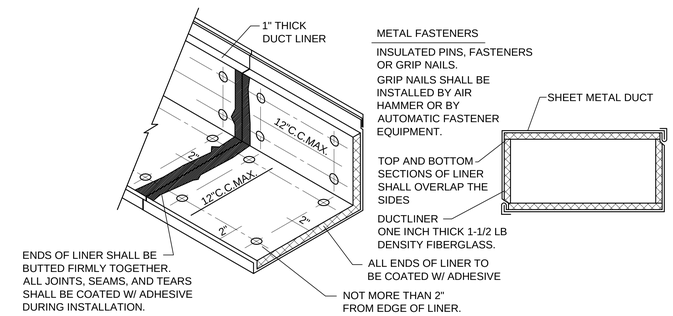

A4 DUCT LINER DETAIL
SCALE: NONE

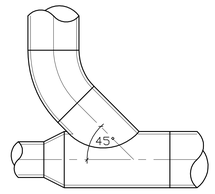

A5 TYPICAL HIGH PRESSURE DUCT CONN.
SCALE: NONE

PROFESSIONAL ENGINEER
07/21/06
WINWARD M. PACKER
No. 375080
STATE OF UTAH

GouldEvans

©2002 Gould Evans Associates, L.C.
1000 South Main Street • Suite 100
Salt Lake City, Utah 84101
Voice 801.532.6100
Fax 801.532.6102
www.gouldevans.com

kansas city • lawrence • phoenix
salt lake city • san antonio • tampa

DFCM PROJECT NO: 05266700
STATE PROPERTY ID: 01791
RISK MANAGEMENT NO:
CAD PROJECT NO:
CAD DWG FILE:
DRAWN BY: LGD
CHECKED BY: WMP
COPYRIGHT: STATE OF UTAH

WHW ENGINEERING INC.
PROFESSIONAL MECHANICAL ENGINEERING
1354 East 3300 South Suite 200
SALT LAKE CITY, UTAH 84106
(801)466-4321, FAX 466-8836
EMAIL: ecallaros@whw-engineering.com

snow college
activities center
dance studio addition remodel
ephraim, utah

REVISION	DATE

Project no: 0906-0260
Date: July 21 2006
Sheet:

MECHANICAL DETAILS

ME501

100% Construction Documents

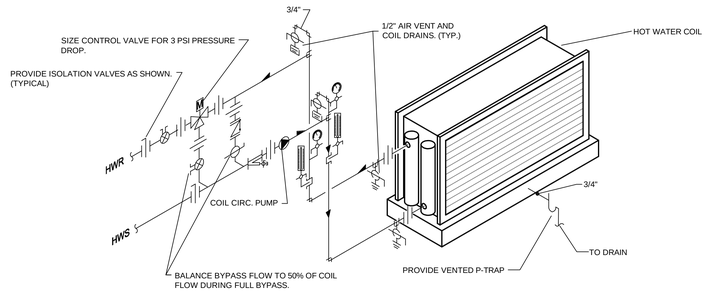

AIR HANDLER HW COIL WITH CIRC. PUMP

E1 SCALE: NONE

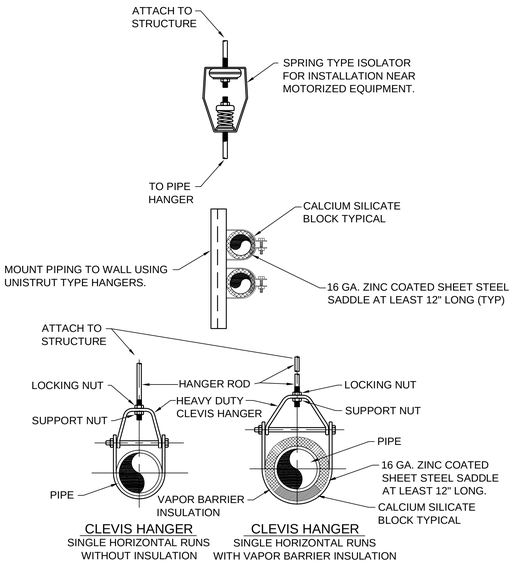

PIPE HANGER DETAIL

D3 SCALE: NONE

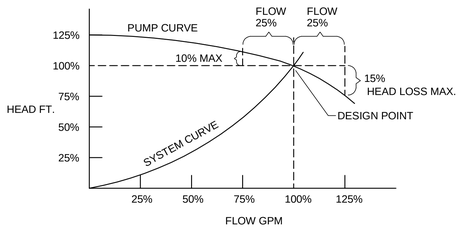

PUMP CURVE DETAIL

E5 SCALE: NONE

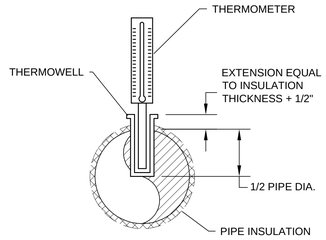

THERMOWELL DETAIL

D5 SCALE: NONE

REFRIGERANT PIPING LEGEND	
SYMBOL	DESCRIPTION
	EXPANSION VALVE. SEE DETAIL (D5 ME504)
	MOISTURE INDICATING SIGHT GLASS
	FLEXIBLE CONNECTION
	FILTER DRIER
	PIPE SUPPORT. SEE DETAILS (B3 ME503)
	EXTERIOR PIPE SUPPORT. SEE DETAIL (B3 ME503)
	TRAP. ONE PIECE FACTORY FABRICATED
	DIRECTION OF SLOPE DOWN
S	SUCTION LINE
L	LIQUID LINE

CEILING EXHAUST FAN DETAIL

C1 SCALE: NONE

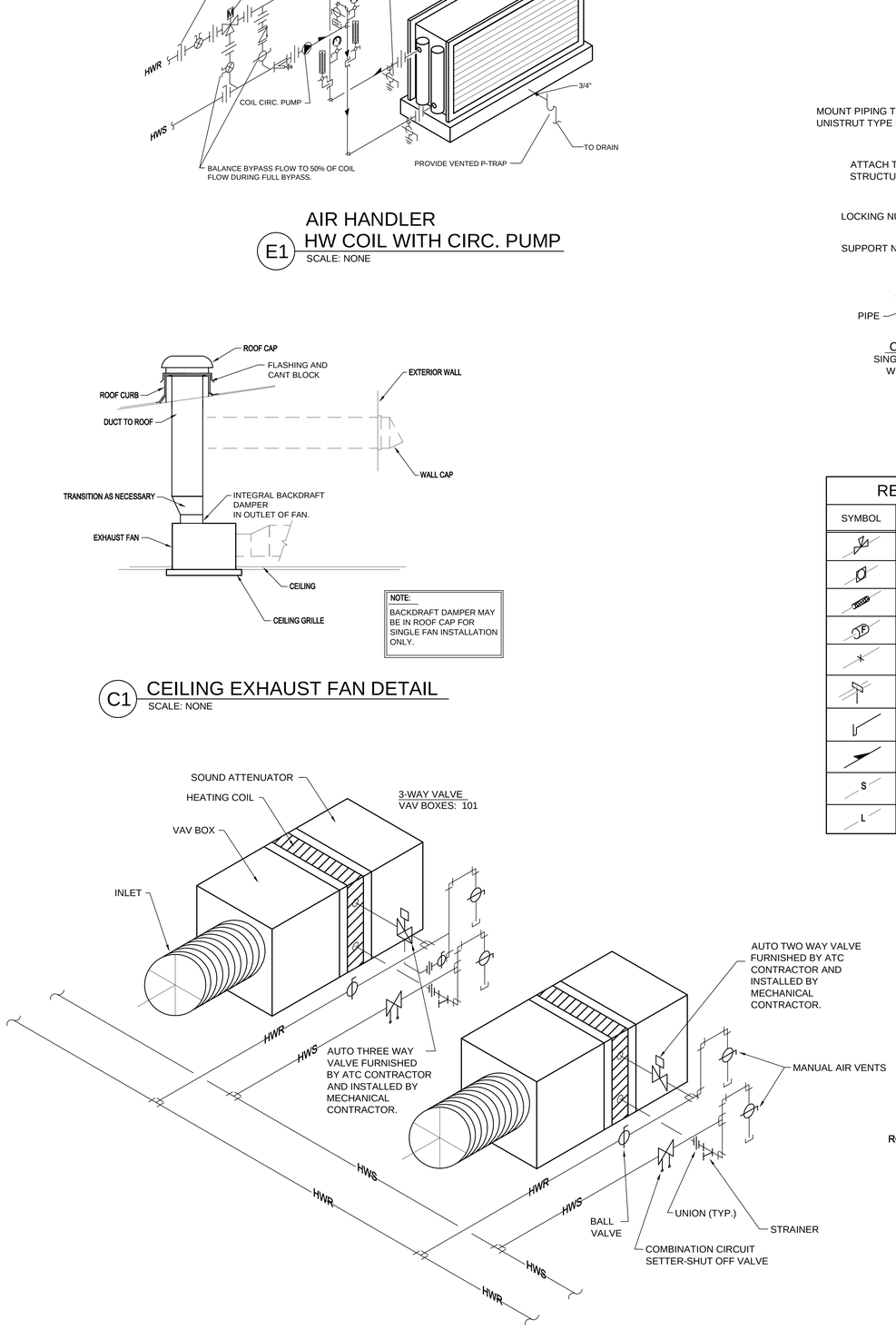

VAV BOX (W/ HEATING COIL) HOT WATER PIPING DETAIL

A2 SCALE: NONE

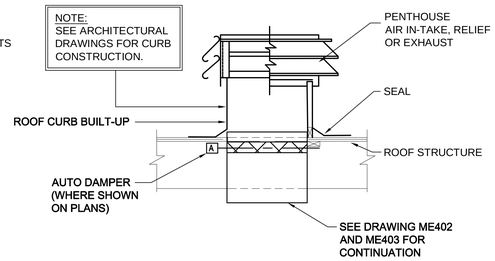

PENTHOUSE DETAIL

A3 SCALE: NONE

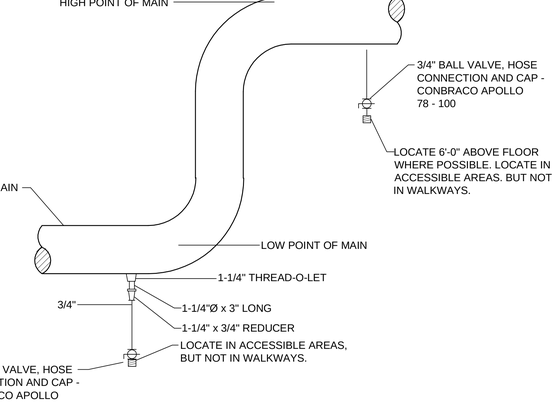

MANUAL AIR VENT AND DRAIN DETAIL

B5 SCALE: NONE

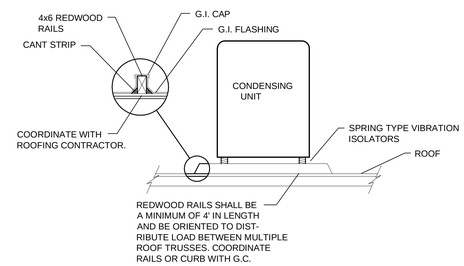

ROOFTOP AIR COOLED CONDENSER DETAIL

A5 SCALE: NONE

PROFESSIONAL ENGINEER
07/21/06
WINWARD M. PACKER
No. 375080
STATE OF UTAH

GouldEvans

©2002 Gould Evans Associates, L.C.
1000 South Main Street • Suite 100
Salt Lake City, Utah 84101
Voice 801.532.6100
Fax 801.532.6102
www.gouldevans.com

kansas city • lawrence • phoenix
salt lake city • san antonio • tampa

DFCM PROJECT NO: 05266700
STATE PROPERTY ID: 01791
RISK MANAGEMENT NO:
CAD PROJECT NO:
CAD DWG FILE:
DRAWN BY: LGD
CHECKED BY: WMP
COPYRIGHT: STATE OF UTAH

WHW ENGINEERING INC.
PROFESSIONAL MECHANICAL ENGINEERING
1354 East 3300 South Suite 200
SALT LAKE CITY, UTAH 84106
(801)466-4321, FAX 466-8836
EMAIL: ocallaran@whw-engineering.com

snow college activities center
dance studio addition remodel
ephraim, utah

REVISION DATE

Project no: 0906-0260
Date: July 21 2006
Sheet:

MECHANICAL DETAILS

ME502

100% Construction Documents

REFRIGERANT PIPE SIZES

CONDENSING UNIT	LIQUID	SUCTION	HOT GAS	SUCTION DIFFUSER
CU 1	7/8"	2-1/8"	1-5/8"	1-5/8"

VERIFY PIPE SIZING WITH MANUFACTURER'S RECOMMENDATIONS. ENGINEER SHALL BE CONTACTED IF MANUFACTURER'S RECOMMENDATIONS ARE DIFFERENT THAN THE ABOVE SIZES. FOLLOW MANUFACTURERS RECOMMENDATIONS TO INSURE MANUFACTURER WARRANTY IS EFFECTIVE UNLESS DIRECTED OTHERWISE BY ENGINEER.

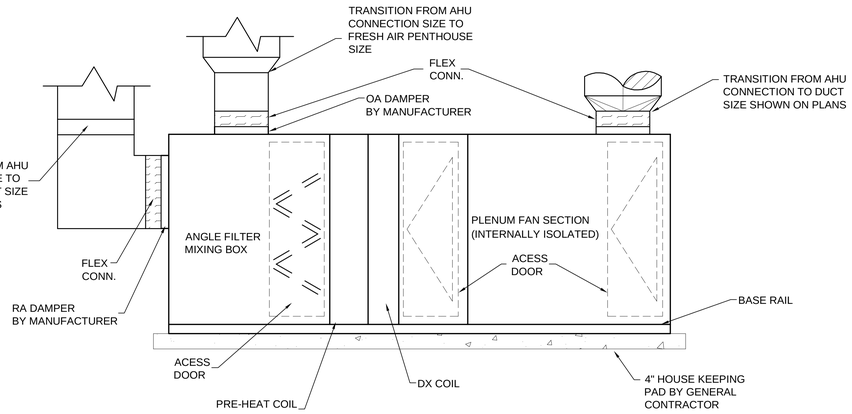

C2 AIR HANDLING UNIT DETAIL
SCALE: NONE

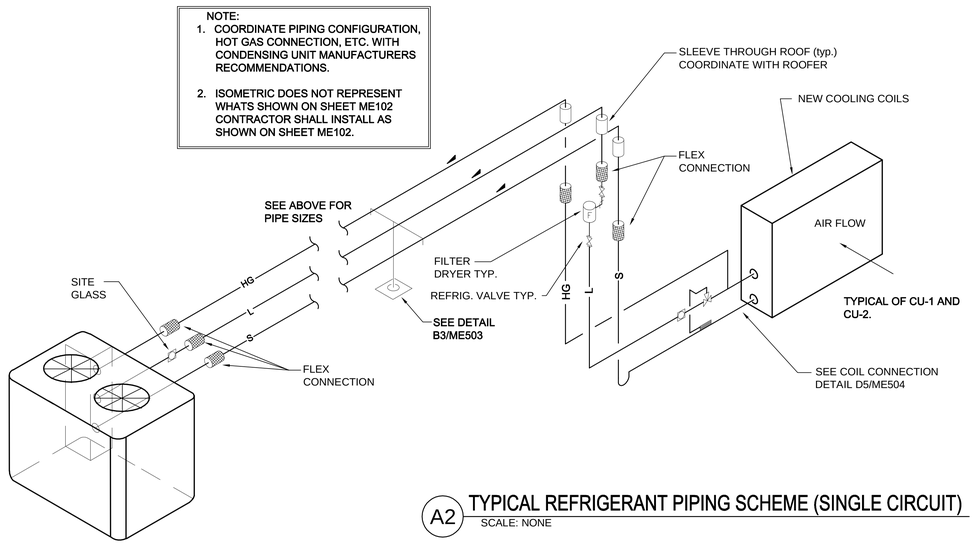

A2 TYPICAL REFRIGERANT PIPING SCHEME (SINGLE CIRCUIT)
SCALE: NONE

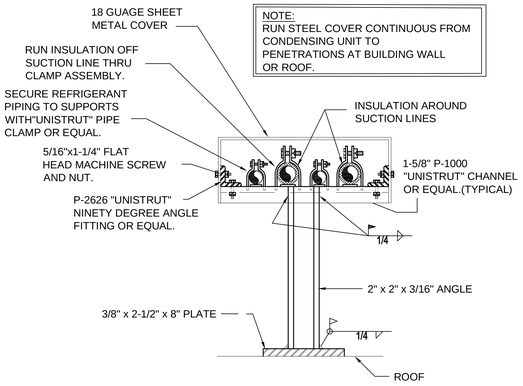

D5 EXTERIOR REFRIGERANT PIPE SUPPORT (ON ROOF)
SCALE: NONE

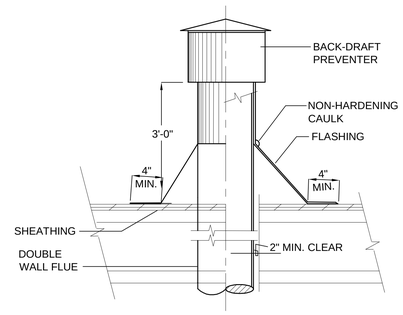

C5 FLUE THRU ROOF DETAIL
SCALE: NONE

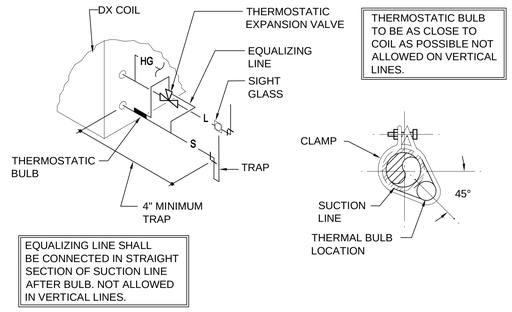

A4 SINGLE REFRIGERANT COIL CONNECTION DETAIL
SCALE: NONE

07/21/06
WINWARD M. PACKER
No. 375080
STATE OF UTAH

GouldEvans

©2002 Gould Evans Associates, L.C.

1000 South Main Street • Suite 100
Salt Lake City, Utah 84101
Voice 801.532.6100
Fax 801.532.6102
www.gouldevans.com

kansas city • lawrence • phoenix
salt lake city • san antonio • tampa

DFCM PROJECT NO: 05266700
STATE PROPERTY ID: 01791
RISK MANAGEMENT NO:
CAD PROJECT NO:
CAD DWG FILE:
DRAWN BY: LGD
CHECKED BY: WMP
COPYRIGHT: STATE OF UTAH

WHW ENGINEERING INC.
PROFESSIONAL MECHANICAL ENGINEERING
1354 East 3300 South Suite 200
SALT LAKE CITY, UTAH 84106
(801)466-4221, FAX 466-8636
EMAIL: ocallaran@whw-engineering.com

snow college
activities center
dance studio addition remodel
ephraim, utah

REVISION DATE

Project no: 0906-0260
Date: July 21 2006
Sheet:

MECHANICAL DETAILS

ME503

100% Construction Documents

VARIABLE VOLUME AIR HANDLING UNIT SCHEDULE

SYMBOL	LOCATION	COOLING CFM	OA CFM	HEATING SIZE	W (IN.) (3)	L (IN.) (3)	H (IN.) (3)	ESP	FAN MOTOR HP (4)	FAN MOTOR VOLT	FAN MOTOR PHASE	FAN MOTOR CYCLE	DX COOLING COIL CAPACITY MAX AIR PD. IN WG.	DX COOLING COIL CAPACITY TOTAL MBH	DX COOLING COIL CAPACITY TONS COOL	DX COOLING COIL CAPACITY EADB	DX COOLING COIL CAPACITY EAWB	DX COOLING COIL CAPACITY LADB	DX COOLING COIL CAPACITY LAWB	HOT WATER HEATING COIL MAX AIR PD	HOT WATER HEATING COIL MBH	HOT WATER HEATING COIL GPM (2)	HOT WATER HEATING COIL EDB	HOT WATER HEATING COIL LDB	HOT WATER HEATING COIL MAX. WATER PD(FT)	WATER INLET TEMP	WATER OUTLET TEMP	AIR TEMP RISE	MANUFACTURER AND MODEL (1)
AHU 1	NORTHWEST MECH. ROOM	8000 (5)	2,050	6000	72	144	53	3.0	7.5	480	3	60	0.58	306	26	80	67	53.8	53.3	0.07	240	24	60	90	5.0	180	160	30	TEMTROL

(1) ALTITUDE IS APPROXIMATELY 5600 FT.
(2) WATER VELOCITY SHALL BE BETWEEN 1.5 FPS AND 3.0 FPS
(3) CONTRACTOR SHALL VERIFY PHYSICAL SPACE ON PLANS IF AIR HANDLER DIMENSIONS DIFFER FROM WHAT IS SHOWN.
(4) VFD BY DIVISION 16
(5) UNIT IS SIZED FOR FUTURE CAPACITY. COORDINATE WITH BALANCER TO BALANCE UNIT INITIALLY TO VAV BOX SCHEDULE.
(6) PROVIDE WITH SHIPPING BREAKS TO ALLOW BRINGING IN AIR HANDLER THROUGH EXISTING DOORS. SEE ARCH. PLANS.

EXHAUST FAN SCHEDULE

SYMBOL	MANUFACTURER & MODEL No.	SERVES	C.F.M.	STATIC PRESSURE IN. WG.	MAX NOISE SONES	MOTOR V - Ø - Hz	MOTOR WATTS	MOTOR RPM	OPER. WT. (LBS)	SCHEDULE NOTES
EF 1	PENN ZEPHYR 25H	RESTROOM	105	0.28	2.8	115/1/60	79	1550	14	

REGISTER, LOUVER & GRILLE SCHEDULE

SYMBOL	TYPE	SERVICE	MAX CFM	NOMINAL SIZE	THROAT SIZE	CEILING TYPE	COMMENTS	SCHEDULE NOTES
R-1	CEILING	RA	700	18x18	14"Ø	LAY-IN	PRICE 535	1,2,3
R-2	SIDEWALL	RA	4800	72x24	72x24	NA	PRICE 535	1,2,4
PH-1	ROOF MTD.	FA	8000	36X48X28	36X48	NA	2	5,6
PH-2	ROOF MTD.	CA	NA	36X48X28	38X48	NA	2	5,6
PH-7	ROOF MTD.	RA	8000	36X48X28	36X48	NA	2	5,6

REGISTER. LOUVER AND DIFFUSER SCHEDULE NOTES:

1. MAXIMUM NC = 25 @ MAXIMUM CFM NOTED.
2. SEE SPECIFICATIONS FOR APPROVED MANUFACTURERS.
3. FINISH SHALL BE OFF-WHITE BAKED ENAMEL.
4. BAKED ENAMEL FINISH WITH COLOR AS DIRECTED BY ARCHITECT.
5. KYNAR FINISH WITH COLOR BY ARCHITECT.
6. PROVIDE ALUMINUM BIRD SCREENS.

AIR COOLED CONDENSING UNIT SCHEDULE

SYMBOL	AREA SERVED	MIN SIZE (TONS)	COMPRESSOR QTY.	MCA	MOCP	EER	IPLV	WEIGHT	MANUF. & MODEL #	SCHEDULE NOTES
CU 1	NORTHWEST ADDITION	28	2	58	70	13.5	13.9	2000	MCQUAY ACZ 028A	1,2,3,4,5,6

1. REFRIGERANT R-22.
2. AT DESIGN CONDITIONS AND 95° F EAT.
3. CONDENSING UNIT SYMBOLS CORRESPOND WITH AIR HANDLER SYMBOLS, EXCEPT AS NOTED.
4. SEE SPECIFICATIONS FOR APPROVED MANUFACTURERS.
5. ELECTRIC SERVICE: 480/3/60
6. PROVIDE WITH ELECTRONIC HOT GAS BYPASS. COORDINATE WITH ATC.

CIRCULATION PUMP SCHEDULE

SYMBOL	TYPE	FLOW GPM	HEAD FT.	SUCTION	DISCHARGE	MOTOR V - Ø - Hz	MOTOR HP	MOTOR RPM	SIZE	COMMENTS	SCHEDULE NOTES
CP 1	IN-LINE CIRCULATOR	24	15	1-1/4"	1-1/4"	120/1/60	0.25	1750	1-1/4x5-1/4	B & G SERIES 60	1,2,

1. SEE SPECIFICATION FOR APPROVED MANUFACTURER'S
2. MAINTENANCE FREE TYPE CIRCULATOR PUMP

DIFFUSER SCHEDULE

SYMBOL	TYPE	MAX CFM	FACE SIZE	NCK SIZE	CEILING TYPE	BLOW	PATTERN	SCHEDULE NOTES
D-1 CFM	CEILING	350	12X12	10"Ø	LAY-IN	4--WAY		1,2,3,4
D-2 CFM	DUCT MTD.	600	22"Ø	12"Ø	EXPOSED	4--WAY		1,2,3,4

1. PROVIDE LAY-IN CEILING AND BORDER / MODULE AS REQUIRED. SEE ARCHITECTURAL CEILING PLANS.
2. MAXIMUM NC 25 AT CFM LISTED.
3. PRICE SMD OR EQUAL IN SPECS.
4. PRICE RCDA OR EQUAL IN SPECS.

VAV BOX SCHEDULE

SYMBOL	SERVES	INLET DIA. (INCHES)	INLET VELOCITY (FPM)	COOLING MAX CFM	COOLING MIN CFM	HEATING (40° DELTA T) COIL EAT	COIL LAT	MAX CFM	COIL MBH	FLOW GPM	EWT	(FT) PD	ROWS	NC LEVEL	MANUF. MODEL #	SCHEDULE NOTES
VAV 101	CONF. ROOM	10	1700	700	210	65	105	525	18.9	2	180	1.0	2	20	PRICE SDV	1
VAV 102	DANCE	16	1700	2400	600	65	105	1800	64.8	6.5	180	1.0	2	25	PRICE SDV	1
VAV 103	DANCE	16	1700	2400	600	65	105	1800	64.8	6.5	180	1.0	2	25	PRICE SDV	1
VAV 104	GENERAL	10	1100	600	180	65	105	450	16.2	1.75	180	1.0	2	25	PRICE SDV	1

1. RATED DISCHARGE NC AT 1.5" ΔPS

GouldEvans
©2002 Gould Evans Associates, L.C.
1000 South Main Street • Suite 100
Salt Lake City, Utah 84101
Voice 801.532.6100
Fax 801.532.6102
www.gouldevans.com
kansas city • lawrence • phoenix
salt lake city • san antonio • tampa

DFCM PROJECT NO: 05266700
STATE PROPERTY ID: 01791
RISK MANAGEMENT NO:
CAD PROJECT NO:
CAD DWG FILE:
DRAWN BY: LGD
CHECKED BY: WMP
COPYRIGHT: STATE OF UTAH

WHW ENGINEERING INC.
PROFESSIONAL MECHANICAL ENGINEERING
1354 East 3300 South Suite 200
SALT LAKE CITY, UTAH 84106
(801)466-6221, FAX 466-6936
EMAIL: ecollette@whw-engineering.com

snow college activities center
dance studio addition remodel
ephraim, utah

REVISION DATE

Project no: 0906-0260
Date: July 21 2006
Sheet:

MECHANICAL SCHEDULES

ME601

100% Construction Documents

LEGEND

MEANING	SYMBOL OR ABBREVIATION	MEANING	SYMBOL OR ABBREVIATION
HOT WATER LINE		WALL CLEANOUT	WCO
HOT WATER RECIRC LINE		CLEANOUT	CO
COLD WATER LINE		CLEANOUT TO GRADE	COTG
VENT LINE		FLOOR CLEANOUT	FCO
WASTE LINE		BALL VALVE	
VENT THRU ROOF	VTR	UNION	
PRIMARY ROOF DRAIN	PRD		
SECONDARY ROOF DRAIN	SRD		

GENERAL LEGEND

NOT ALL SYMBOLS LISTED BELOW ARE USED ON THIS SET OF PLUMBING DRAWINGS

SYMBOL	ABR.	DESCRIPTION
	AFF	ABOVE FINISHED FLOOR
	AP.	ACCESS PANEL
	CI	CAST IRON
	℄ EL.	CENTER LINE ELEVATION
	CC	CONTROL CONTRACTOR
	EC	ELECTRICAL CONTRACTOR
	FPC	FIRE PROTECTION CONTRACTOR
	GC	GENERAL CONTRACTOR
INV. ELEV.		INVERT ELEVATION
	MC	MECHANICAL CONTRACTOR
	NIC	NOT IN CONTRACT
	NTS	NOT TO SCALE
	VCP	VITRIFIED CLAY PIPE
WH-1		PLUMBING FIXTURE AND/OR EQUIPMENT DESIGNATION (TYPICAL)

PLUMBING GENERAL NOTES:

G-1 ALL PLUMBING SHALL BE INSTALLED AND CONFORM TO THE 2003 EDITION OF INTERNATIONAL PLUMBING CODE WITH UTAH ANNOTATIONS AND LOCAL AUTHORITY REQUIREMENTS.

G-2 ALL PIPING MATERIALS SHALL MEET ALL REQUIREMENTS OF IPC AND LOCAL AUTHORITY.

G-3 ALL MATERIALS SHALL BE NEW AND SHALL BE DOMESTIC MADE UNLESS SPECIFICALLY APPROVED OTHERWISE IN WRITING BY ARCHITECT OR OWNER.

G-4 PROVIDE VACUUM BREAKERS AND BACKFLOW PREVENTERS WHERE REQUIRED BY CODE OR WHERE THERE MAY BE ANY POSSIBLE CHANCE FOR CROSS CONTAMINATION. PREVENTERS SHALL BE INSTALLED IN ACCORDANCE WITH UTAH CODE.

G-5 ALL PLUMBING INFORMATION IS NOT LIMITED TO THE PLUMBING DRAWINGS. CONTRACTOR SHALL BE RESPONSIBLE FOR INFORMATION ON ALL OTHER CONSTRUCTION DOCUMENTS INCLUDING ARCHITECTURAL DRAWINGS, STRUCTURAL DRAWINGS, MECHANICAL DRAWINGS, AND ELECTRICAL DRAWINGS.

G-6 THE WORKING DRAWINGS ARE DIAGRAMMATIC. BECAUSE OF THE SMALL SCALE OF THE DRAWINGS, THEY DO NOT SHOW EVERY OFFSET, BEND OR ELBOW NECESSARY FOR THE COMPLETE INSTALLATION IN THE SPACE PROVIDED. ALL PIPING SHALL BE CHECKED AND COORDINATED WITH THE ARCHITECTURAL, STRUCTURAL, MECHANICAL, AND ELECTRICAL DRAWINGS.

G-7 COORDINATE ALL PIPING AND PLUMBING EQUIPMENT WITH ALL OTHER TRADES AND/OR CONTRACTORS PRIOR TO INSTALLATION.

G-8 ANY AND ALL ALTERATIONS TO SYSTEM SHOWN SHALL BE THE RESPONSIBILITY OF THIS CONTRACTOR AND ARCHITECT/ENGINEER SHALL BE NOTIFIED IN WRITING PRIOR TO CHANGES.

G-9 REFER TO SPECIFICATIONS FOR PIPING MATERIALS.

G-10 ALL EQUIPMENT REQUIRING ROUGH-IN SHALL BE ROUGHED-IN IN STRICT ACCORDANCE WITH WITH VENDOR FURNISHED SHOP DRAWINGS.

G-11 SEE ARCHITECTURAL DRAWINGS FOR EXACT LOCATION OF PLUMBING FIXTURES.

G-12 WATER HAMMER ARRESTORS SHALL BE INSTALLED IN ALL WATER LINES WITH QUICK OPEN OR QUICK CLOSE VALVES.

WATER HAMMER ARRESTOR SCHEDULE:
TYPE A 1-11 FIXTURE UNITS
TYPE B 12-32 FIXTURE UNITS
TYPE C 33-60 FIXTURE UNITS
TYPE D 61-113 FIXTURE UNITS

G-13 SUPPORT ALL PIPING INDEPENDENTLY OF EQUIPMENT.

G-14 ALL EQUIPMENT SHALL HAVE AN ISOLATION VALVE.

G-15 PROVIDE WALL CLEANOUT AT BASE OF ALL WASTE AND ROOF DRAIN PIPING RISERS.

PROFESSIONAL ENGINEER
07/21/06
WINWARD M. PACKER
No. 375080
STATE OF UTAH

GouldEvans
©2002 Gould Evans Associates, L.C.
1000 South Main Street • Suite 100
Salt Lake City, Utah 84101
Voice 801.532.6100
Fax 801.532.6102
www.gouldevans.com
kansas city • lawrence • phoenix
salt lake city • san antonio • tampa

DFCM PROJECT NO: 05266700
STATE PROPERTY ID: 01791
RISK MANAGEMENT NO:
CAD PROJECT NO:
CAD DWG FILE:
DRAWN BY: LGD
CHECKED BY: WMP
COPYRIGHT: STATE OF UTAH

WHW ENGINEERING INC.
PROFESSIONAL MECHANICAL ENGINEERING
1354 East 3300 South Suite 200
SALT LAKE CITY, UTAH 84106
(801)466-4321, FAX 466-8836
EMAIL: ocallaros@whw-engineering.com

snow college activities center
dance studio addition remodel
ephraim, utah

REVISION DATE

Project no: 0906-0260
Date: July 21 2006
Sheet:

PLUMB. GENERAL NOTES & LEGEND
P001

100% Construction Documents

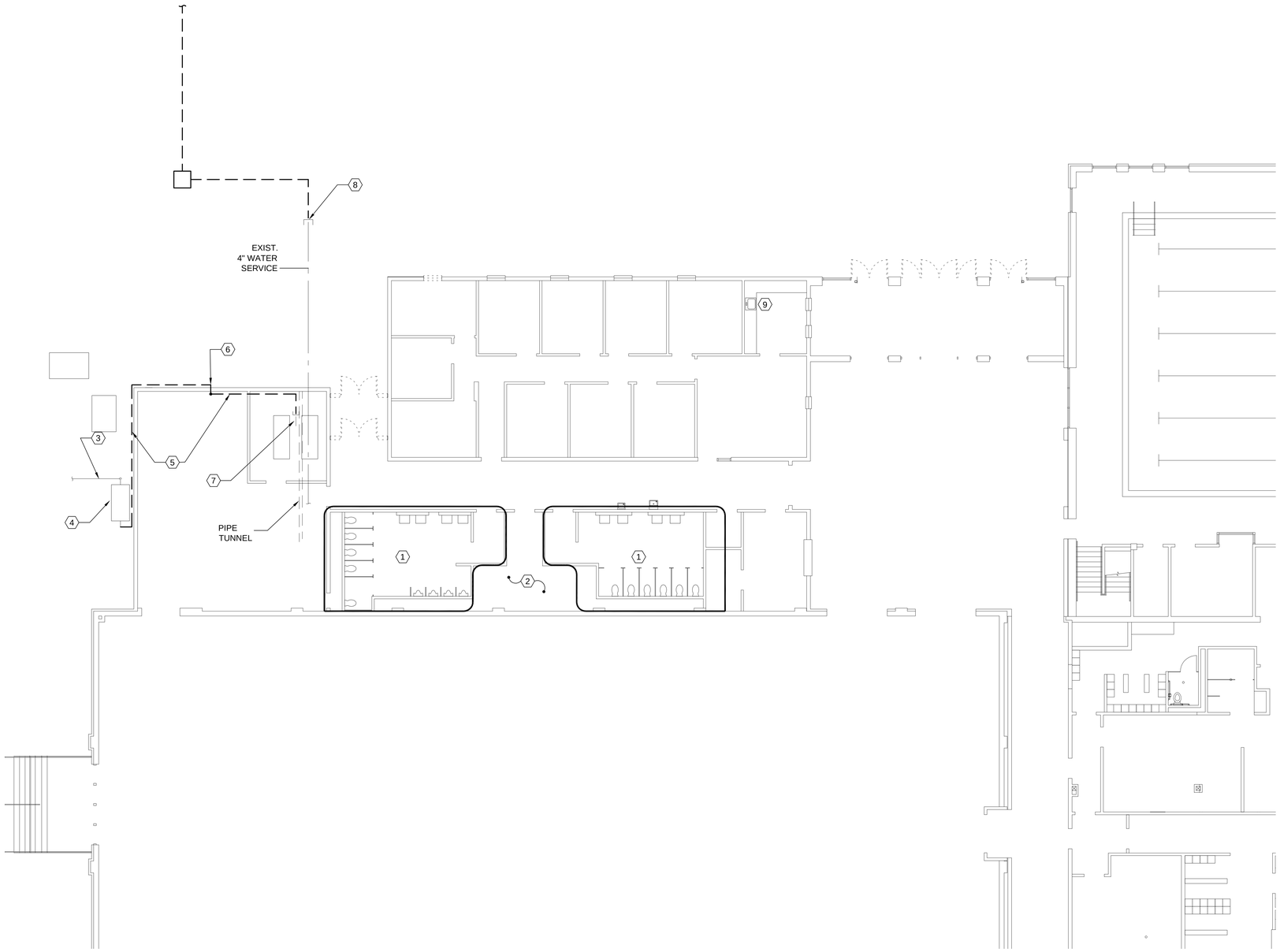

A1 MECHANICAL DEMOLITION FLOOR PLAN
SCALE: 1/8" = 1'

NORTH

SHEET NOTES:

1. EXISTING RESTROOM AREA SHALL REMAIN AS IS.
2. REMOVE AND REPLACE EXISTING POTABLE WATER PIPING INSULATION IN MECHANICAL ROOM. SEE SHEET PE401.
3. APPROXIMATE LOCATION OF EXISTING GAS YARD LINE.
4. APPROXIMATE LOCATION OF EXISTING GAS METER. METER SHALL REMAIN.
5. REMOVE EXISTING EXTERIOR GAS PIPING.
6. REMOVE EXISTING GAS PRESSURE REGULATOR.
7. CAP EXISTING GAS LINE DROP TO BOILERS FOR RECONNECTION TO NEW PIPING.
8. COORDINATE WITH CIVIL TO RE-LOCATE EXISTING METER AND RE-CONNECT TO EXISTING 4" SERVICE IN TUNNEL.
9. EXISTING SINK SHALL REMAIN.

PROFESSIONAL ENGINEER
07/21/06
WINWARD M. PACKER
No. 375080
STATE OF UTAH

GouldEvans

©2002 Gould Evans Associates, L.C.
1000 South Main Street • Suite 100
Salt Lake City, Utah 84101
Voice 801.532.6100
Fax 801.532.6102
www.gouldevans.com

kansas city • lawrence • phoenix
salt lake city • san antonio • tampa

DFCM PROJECT NO: 05266700
STATE PROPERTY ID: 01791
RISK MANAGEMENT NO:
CAD PROJECT NO:
CAD DWG FILE:
DRAWN BY: LGD
CHECKED BY: WMP
COPYRIGHT: STATE OF UTAH

WHW ENGINEERING INC.
PROFESSIONAL MECHANICAL ENGINEERING
1354 East 3300 South Suite 200
SALT LAKE CITY, UTAH 84106
(801)486-4321, FAX 486-8536
EMAIL: ecallanca@whw-engineering.com

snow college
activities center
dance studio addition remodel
ephraim, utah

REVISION DATE

Project no: 0906-0260
Date: July 21 2006
Sheet:

PLUMB. DEMO.
FLOOR PLAN

PD101

100% Construction Documents

NOTE:

A. CONTRACTOR SHALL FIELD VERIFY EXACT SIZES, LOCATION AND DIRECTION OF FLOW OF ALL EXISTING PIPING.

B. FOR PIPE SIZES TO INDIVIDUAL FIXTURES, REFER TO PLUMBING FIXTURE SCHEDULE ON SHEET PE501.

C. ALL NEW POTABLE WATER PIPING SHALL BE INSULATED AS REQUIRED BY SPECIFICATIONS.

D. AFTER INSTALLATION OF NEW WASTE PIPING, ALL EXISTING WASTE PIPING SHALL BE CLEANED.

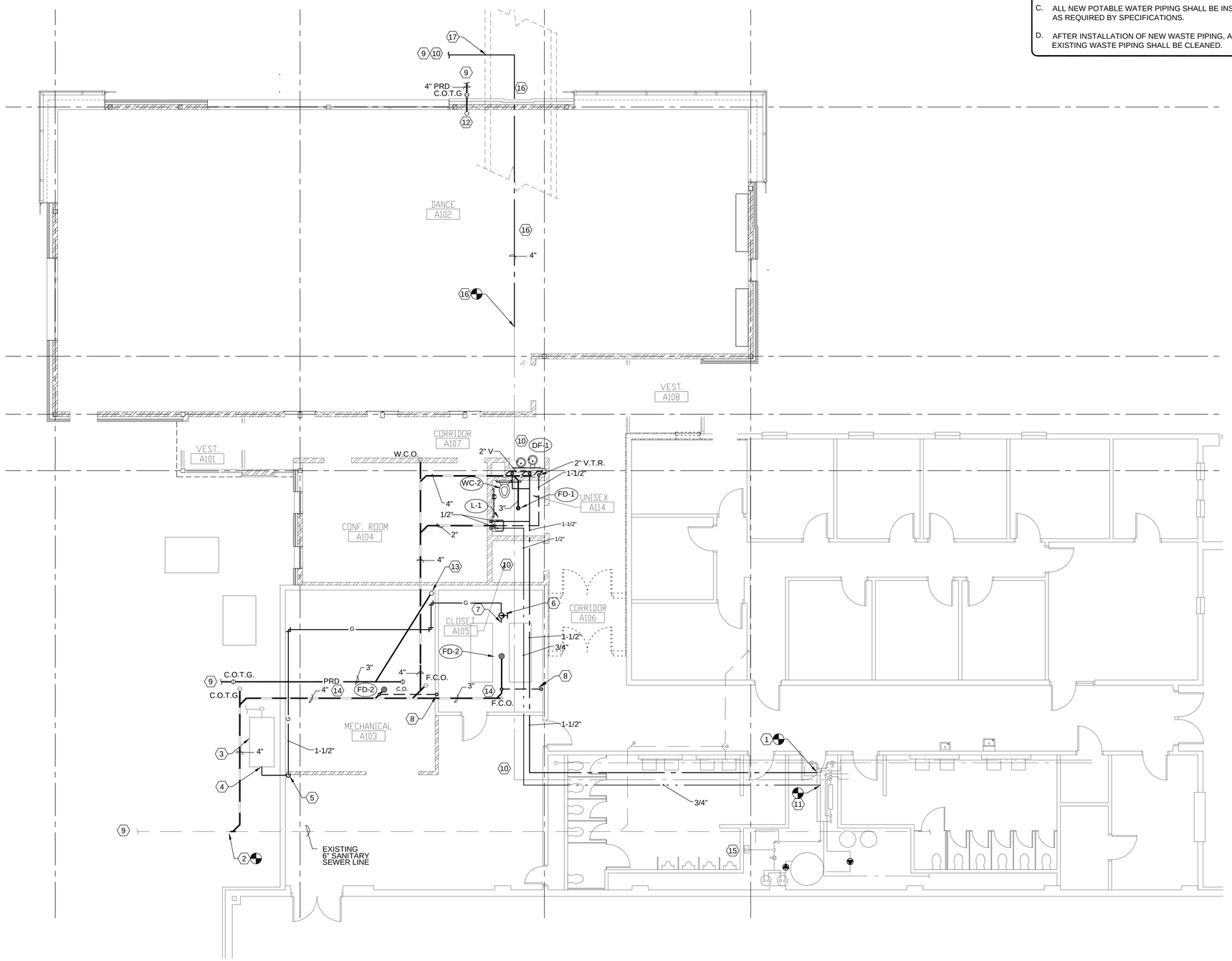

A1 PLUMBING FLOOR PLAN
SCALE: 3/16" = 1'

NORTH

SHEET NOTES:

1. CONNECT INTO EXISTING GALVANIZED CW PIPING AT THIS APPROXIMATE LOCATION. CONTRACTOR SHALL FIELD VERIFY EXACT SIZE AND LOCATION OF PIPING PRIOR TO TIE IN. USE DI-ELECTRIC FITTING AT CONNECTION.
2. CONNECT INTO EXISTING WASTE PIPING AT THIS APPROXIMATE LOCATION. CONTRACTOR SHALL FIELD VERIFY EXACT SIZE, LOCATION AND DEPTH OF PIPING PRIOR TO TIE IN. COORDINATE WITH G.C. FOR EXCAVATION, BACKFILL, ETC.
3. APPROXIMATE LOCATION OF EXISTING GAS METER. METER SHALL REMAIN.
4. CONNECT NEW GAS LINE INTO EXISTING METER. (2 lb. OUTLET PRESSURE.)
5. RISE 1-1/2" GAS LINE UP WALL AND ROUTE GAS PIPING OVERHEAD. COORDINATE LOCATION WITH MECHANICAL EQUIPMENT, DUCTWORK, PIPING, ETC. IN THE AREA. COORDINATE WITH ELECTRICAL PANELS, ETC.
6. PROVIDE NEW PRESSURE REGULATOR. VENT TO ATMOSPHERE AS REQUIRED.
7. CONNECT INTO EXISTING GAS LINE AT BOILER. CONTRACTOR SHALL FIELD VERIFY EXACT SIZE AND LOCATION.
8. 2" V.T.R.
9. SEE SITE PLAN FOR CONTINUATION.
10. COORDINATE WITH CIVIL SITE UTILITY PLANS FOR NEW WATER METER AND NEW PIPING TO TUNNEL.
11. TIE NEW HOT WATER PIPING INTO EXISTING GALVANIZESD PIPING AT THIS APPROXIMATE LOCATION. FIELD VERIFY EXISTING PIPING SIZES AND LOCATIONS. USE DI-ELECTRIC FITTING AT CONNECTION.
12. 4" PRIMARY ROOF DRAIN LINE DROP IN WALL. SEE ROOF PLUMBING PLAN SHEET PE102 FOR CONTINUATION.
13. 3" PRIMARY ROOF DRAIN LINE DROP MECHANICAL ROOM. SEE ROOF PLUMBING PLAN - AREA A ON SHEET PE102 FOR CONTINUATION.
14. COORDINATE WITH G.C. TO CUT AND PATCH EXISTING FLOOR IN EXISTING BOILER ROOM AND NEW MECHANICAL ROOM FOR NEW FLOOR DRAINS, WASTE LINES, AND ROOF DRAIN LINES AS NECESSARY.
15. EXISTING FLOOR SINK SHALL REMAIN.
16. PROVIDE NEW 4" WATER MAIN IN TUNNEL, AND TIE INTO EXISTING 4" MAIN IN TUNNEL AT THIS APPROXIMATE LOCATION. FIELD VERIFY.
17. COORDINATE WITH G.C. TO EXCAVATE AND CORE DRILL EXISTING TUNNEL FOR WATER MAIN PIPE PENETRATION. PROVIDE PIPE SLEEVE, AND WATER TIGHT SEAL EQUAL TO "LINKSEAL" AT PENETRATION. STUB-OUT 4" MAIN TO 5' OUTSIDE TUNNEL FOR SITE UTILITY CONTRACTOR.

PROFESSIONAL ENGINEER
07/21/06
WINWARD M. PACKER
No. 375080
STATE OF UTAH

GouldEvans

©2002 Gould Evans Associates, L.C.
1000 South Main Street • Suite 100
Salt Lake City, Utah 84101
Voice 801.532.6100
Fax 801.532.6102
www.gouldevans.com

kansas city • lawrence • phoenix
salt lake city • san antonio • tampa

DFCM PROJECT NO: 05266700
STATE PROPERTY ID: 01791
RISK MANAGEMENT NO:
CAD PROJECT NO:
CAD DWG FILE:
DRAWN BY: LGD
CHECKED BY: WMP
COPYRIGHT: STATE OF UTAH

WHW ENGINEERING INC.
PROFESSIONAL MECHANICAL ENGINEERING
1304 East 3300 South Suite 200
SALT LAKE CITY, UTAH 84106
(801)486-6321, FAX 486-8536
EMAIL: ecadenas@whw-engineering.com

snow college
activities center
dance studio addition remodel
ephraim, utah

REVISION DATE

Project no: 0906-0260
Date: July 21 2006
Sheet:

PLUMBING FLOOR PLAN
PE101

100% Construction Documents

NOTE:

A. CONTRACTOR SHALL FIELD VERIFY EXACT SIZES, LOCATION AND DIRECTION OF FLOW OF ALL EXISTING PIPING.

B. FOR PIPE SIZES TO INDIVIDUAL FIXTURES, REFER TO PLUMBING FIXTURE SCHEDULE ON SHEET PE501.

C. ALL NEW POTABLE WATER PIPING SHALL BE INSULATED AS REQUIRED BY SPECIFICATIONS.

D. AFTER INSTALLATION OF NEW WASTE PIPING, ALL EXISTING WASTE PIPING SHALL BE CLEANED.

SHEET NOTES:

1. 4" PRIMARY ROOF DRAIN DROP. SEE PE101 FOR CONTINUATION.
2. 3" PRIMARY ROOF DRAIN DROP. SEE PE101 FOR CONTINUATION.
3. 4" SECONDARY ROOF DRAIN LINE. PENETRATE WALL AND TERMINATE WITH DOWNSPOUT NOZZLE.
4. 3" SECONDARY ROOF DRAIN LINE. PENETRATE WALL AND TERMINATE WITH DOWNSPOUT NOZZLE.

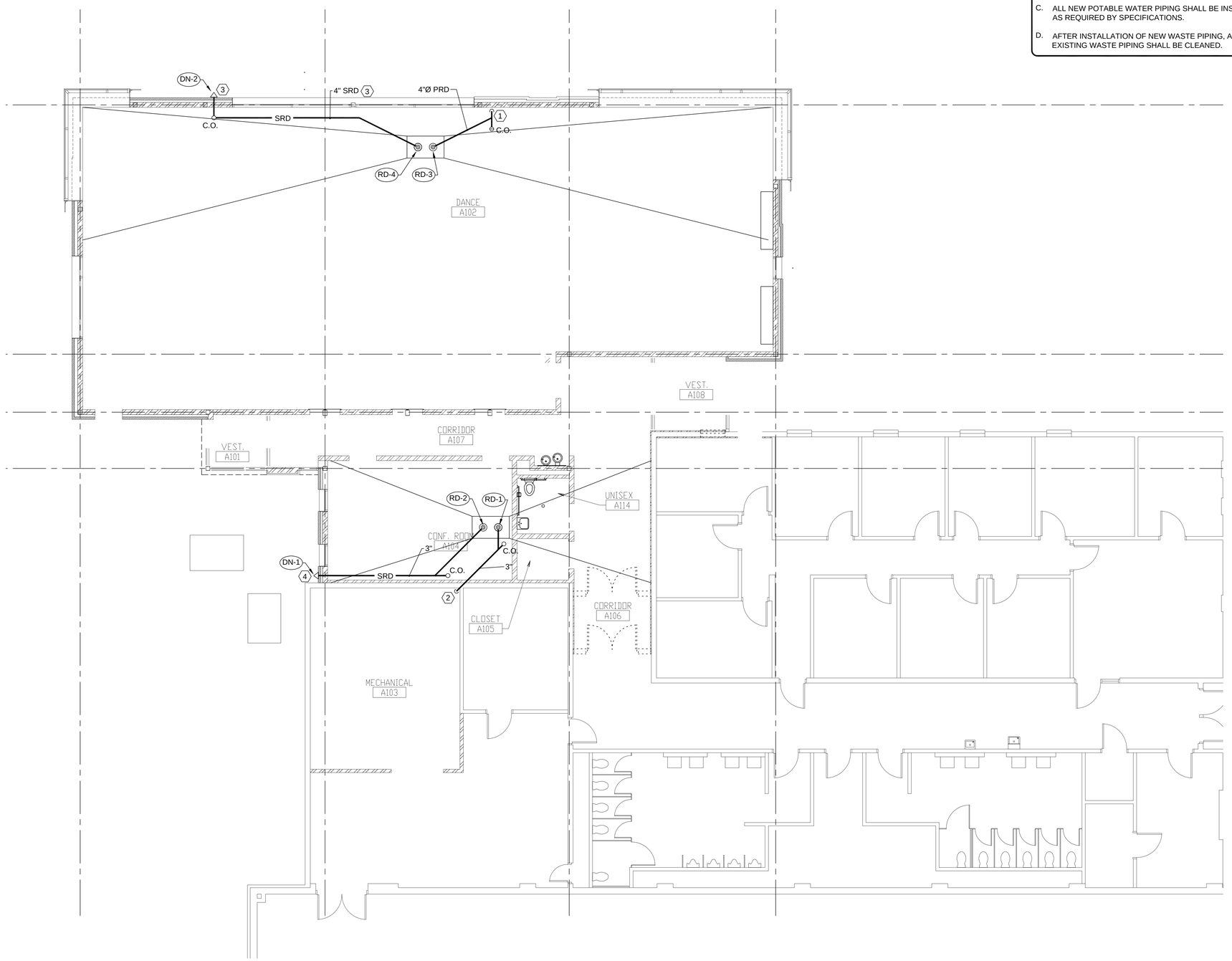

A1 PLUMBING ROOF PLAN
SCALE: 3/16" = 1'

NORTH

PROFESSIONAL ENGINEER
07/21/06
WINWARD M. PACKER
No. 375080
STATE OF UTAH

GouldEvans

©2002 Gould Evans Associates, L.C.
1000 South Main Street • Suite 100
Salt Lake City, Utah 84101
Voice 801.532.6100
Fax 801.532.6102
www.gouldevans.com

kansas city • lawrence • phoenix
salt lake city • san antonio • tampa

DFCM PROJECT NO: 05266700
STATE PROPERTY ID: 01791
RISK MANAGEMENT NO:
CAD PROJECT NO:
CAD DWG FILE:
DRAWN BY: LGD
CHECKED BY: WMP
COPYRIGHT: STATE OF UTAH

WHW ENGINEERING INC.
PROFESSIONAL MECHANICAL ENGINEERING
1354 East 3300 South Suite 200
SALT LAKE CITY, UTAH 84106
(801)486-4321, FAX 486-8530
EMAIL: mcallenna@whw-engineering.com

snow college
activities center
dance studio addition remodel
ephraim, utah

REVISION DATE

Project no: 0906-0260
Date: July 21 2006
Sheet:

PLUMBING ROOF PLAN
PE102

100% Construction Documents

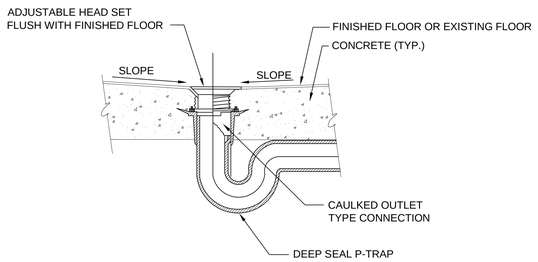

E3 FLOOR DRAIN DETAIL
SCALE: NONE

PLUMBING FIXTURE SCHEDULE							
SYMBOL	FIXTURE	INDIVIDUAL LINE SIZES					REMARKS
		TRAP	WASTE	VENT	C.W.	H.W.	
WC-2	WATER CLOSET	4"	4"	2"	1"	-	WALL MOUNTED. FLUSH VALVE 18" RIM HEIGHT (ADA APPROVED)
L-1	LAVATORY	1-1/2"	1-1/2"	1-1/2"	1/2"	1/2"	COUNTER MOUNTED (ADA APPROVED) PROVIDE WITH LEVER HANDLES AND INSULATION KIT.
DF-1	DRINKING FOUNTAIN	1-1/2"	1-1/2"	1-1/2"	1/2"	-	BI-LEVEL (ADA APPROVED) SEMI-RECESSED DUAL HEIGHT WATER COOLER WITH ROUND BOWLS - ACORN AQUA OR EQUAL
FD-1	FLOOR DRAIN	2"	2"	2"	-	-	WITH DEEP SEAL P-TRAP, AND TRAP PRIMER
FD-2	FLOOR DRAIN	3"	3"	2"	-	-	WITH DEEP SEAL P-TRAP, AND TRAP PRIMER
RD-1	PRIMARY ROOF DRAIN	-	3"	-	-	-	
RD-2	SECONDARY ROOF DRAIN	-	3"	-	-	-	WITH 2" DAM
RD-3	PRIMARY ROOF DRAIN	-	4"	-	-	-	
RD-4	SECONDARY ROOF DRAIN	-	4"	-	-	-	WITH 2" DAM
DN-1	DOWN SPOUT NOZZLE	-	4"	-	-	-	SEE SPECIFICATIONS FOR APPROVED MANUFACTURERS.
DN-2	DOWN SPOUT NOZZLE	-	3"	-	-	-	WITH 2" DAM

(1) SEE SPECIFICATIONS FOR APPROVED MANUFACTURERS

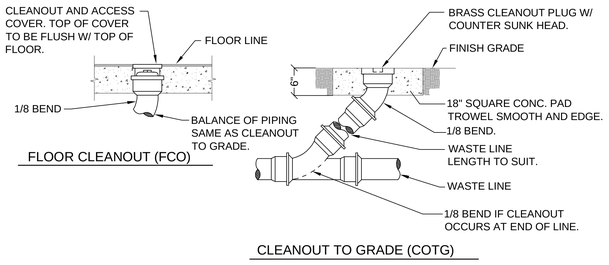

C3 CLEAN-OUT DETAILS
SCALE: NONE

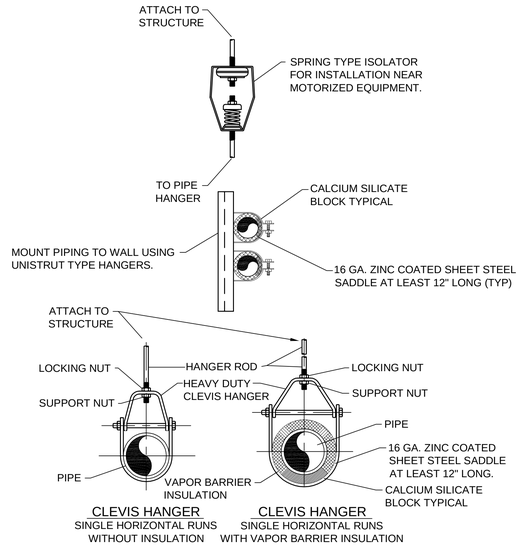

C5 PIPE HANGER DETAIL
SCALE: NONE

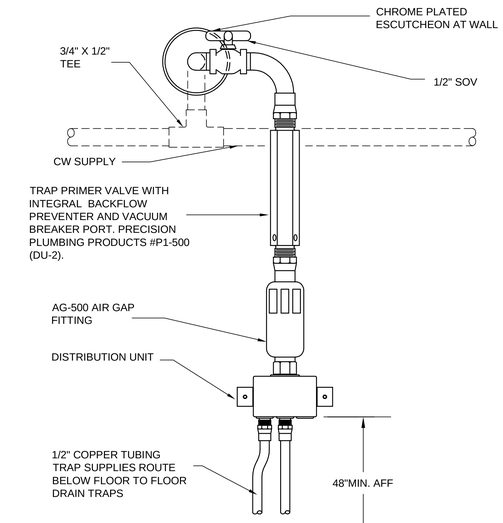

A3 TRAP PRIMER DETAIL
SCALE: NONE

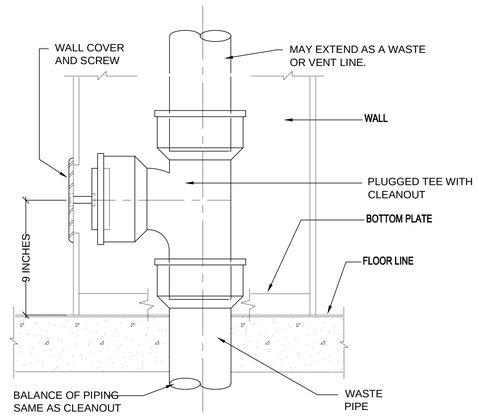

A5 WALL CLEAN-OUT DETAIL
SCALE: NONE

PROFESSIONAL ENGINEER
07/21/06
WINWARD M. PACKER
No. 375080
STATE OF UTAH

GouldEvans

©2002 Gould Evans Associates, L.C.
1000 South Main Street • Suite 100
Salt Lake City, Utah 84101
Voice 801.532.6100
Fax 801.532.6102
www.gouldevans.com

kansas city • lawrence • phoenix
salt lake city • san antonio • tampa

DFCM PROJECT NO: 05266700
STATE PROPERTY ID: 01791
RISK MANAGEMENT NO:
CAD PROJECT NO:
CAD DWG FILE:
DRAWN BY: LGD
CHECKED BY: WMP
COPYRIGHT: STATE OF UTAH

WHW ENGINEERING INC.
PROFESSIONAL MECHANICAL ENGINEERING
1354 East 3300 South Suite 200
SALT LAKE CITY, UTAH 84106
(801)466-4421, FAX 466-8936
EMAIL: excellence@whw-engineering.com

snow college
activities center
dance studio addition remodel
ephraim, utah

REVISION DATE

Project no: 0906-0260
Date: July 21 2006
Sheet:

PLUMB. DETAILS AND SCHEDULES

PE501

100% Construction Documents

GENERAL NOTES

1. CONSULT ARCHITECTURAL REFLECTED CEILING PLANS FOR EXACT LOCATION OF ALL LIGHTING FIXTURES.
2. VERIFY ALL EQUIPMENT DIMENSIONS AND LOCATIONS BEFORE BEGINNING ROUGH-IN. CONSULT ALL APPLICABLE CONTRACT DRAWINGS AND SHOP DRAWINGS TO INSURE NEC CODE CLEARANCES REQUIRED AROUND ALL ELECTRICAL EQUIPMENT.
3. CONTRACTOR SHALL VERIFY ALL ELECTRICAL LOADS (VOLTAGE, PHASE, CONNECTION REQUIREMENTS, ETC.) OF EQUIPMENT FURNISHED UNDER DIVISION 15 WITH APPROVED MECHANICAL SHOP DRAWINGS BEFORE BEGINNING ROUGH-IN.
4. SEE SECTION 16510 OF THE SPECIFICATION REQUIRED COORDINATION MEETINGS WITH MECHANICAL AND CEILING CONTRACTORS.
5. SEE APPLICABLE SHOP DRAWINGS FOR ROUGH-IN LOCATION OF ALL EQUIPMENT, WIRING DEVICES, ETC. WHERE APPLICABLE MOUNT ALL WIRING DEVICES ABOVE BACKSPLASH EXCEPT THOSE SERVING UNDER COUNTER EQUIPMENT.
6. SEE SPECIFICATION FOR ENERGY SAVING LAMP AND BALLAST REQUIREMENTS.
7. FINISHES OF ALL LIGHT FIXTURES SHALL BE AS SELECTED BY ARCHITECT.
8. THE ELECTRICAL CONTRACTOR SHALL NOTIFY AND COOPERATE WITH THE MECHANICAL CONTRACTOR SUCH THAT NO PIPING, DUCTS, OR EQUIPMENT FOREIGN TO THE OPERATION OF THE ELECTRICAL EQUIPMENT SHALL BE PERMITTED TO BE INSTALLED IN, ENTER OR PASS THRU ELECTRICAL ROOMS OR SPACES, OR ABOVE OR BELOW ELECTRICAL EQUIPMENT IN OTHER AREAS.
9. ELECTRICAL BOXES SHALL NOT BE LOCATED IN MASONRY COLUMNS IN BRICK WALLS OR IN GROUTED CELLS ADJACENT TO OPENINGS. COORDINATE LOCATION OF BOXES WITH MASONRY CONTRACTOR.
10. ALL PENETRATIONS OF FIRE RATED FLOORS, WALLS, AND CEILINGS SHALL BE SEALED WITH APPROVED MATERIAL TO MAINTAIN FIRE RATING OF SURFACE PENETRATED.
11. NO SUPPORTS, HANGARS, PENDENTS, CONDUIT STRAPS, LIGHT FIXTURES, CONDUIT, ELECTRICAL BOXES, ETC. SHALL BE ATTATCHED OR FASTENED TO THE ROOF DECK OR SUPPORTED FROM THE ROOF DECK. ELECTRICAL CONTRACTOR SHALL ATTATCH ALL SUCH ITEMS TO STRUCTURAL MEMBERS (JOISTS, BEAMS, ETC.) OR SHALL PROVIDE UNISTRUT SPANNING BETWEEN STRUCTURAL MEMBERS AS REQUIRED TO SUPPORT ELECTRICAL WORK.

DEMOLITION NOTES

1. COORDINATE ALL NEW ELECTRICAL EQUIPMENT REQUIREMENTS AND MAKE CONNECTION TO EXISTING SYSTEMS. THIS INCLUDES LIGHTING, POWER, SIGNAL, RACEWAY AND OTHER SYSTEMS INCLUDED UNDER DIVISION 16.
2. RELOCATE, REWIRE AND/OR RECONNECT EXISTING ELECTRICAL DEVICES AND/OR EQUIPMENT THAT FOR ANY REASON OBSTRUCTS CONSTRUCTION.
3. CONCEAL ALL RACEWAY AND WIRING IN EXISTING WALLS, CEILINGS, FLOORS, ETC. EXCEPT WHERE THE USE OF SURFACE METAL RACEWAYS (E.G. WIRE MOLD) IS INDICATED ON DRAWINGS OR IN SPEC.
4. LEAVE ALL EXISTING EQUIPMENT, IN PORTIONS OF THE BUILDING NOT BEING REMODELED, IN WORKING CONDITION. RESTORE ALL INTERRUPTED BRANCH CIRCUITS, FEEDERS, ETC. TO WORKING CONDITION.
5. EXISTING RACEWAYS MAY BE REUSED (IN PLACE) WHERE POSSIBLE, AND WHERE IN COMPLIANCE WITH THE SPECIFICATIONS AND THE INTENT OF THE CONTRACT DOCUMENTS. INSURE INTEGRITY OF EXISTING RACEWAY BEFORE REUSE.
6. REMOVE ALL RACEWAYS, CONDUCTORS, BOXES, DEVICES, EQUIPMENT, ETC. THAT ARE NOT TO BE REUSED. REMOVE CONDUCTORS BACK TO THE PANEL LABEL CIRCUIT BREAKER AS "SPARE".
7. REMOVE EXISTING LIGHT FIXTURES WHICH ARE NOT TO BE REUSED, PLACE IN CARTON, LABEL APPROPRIATELY, AND RETURN TO OWNER, OR PROPERLY DISPOSE OF PER THE OWNER'S DIRECTIONS.
8. DO NOT PENETRATE STRUCTURAL ELEMENTS OF FLOORS, WALLS, CEILINGS, ROOFS, ETC.
9. DISCONNECT AND RECONNECT ANY/ALL FIXTURES, DEVICES, EQUIPMENT, ETC. REQUIRED FOR PROPER COMPLETION OF THE WORK.
10. INSTALL NEW CONDUCTORS FROM BRANCH PANELS TO EACH EXISTING WIRING DEVICE AND LIGHTING FIXTURE.
11. COORDINATE WITH ARCHITECTURAL DRAWINGS AND SPECIFICATIONS FOR AREAS OF DEMOLITION.
12. COORDIANTE WITH MECHANICAL DRAWINGS AND SPECIFICATIONS FOR MECHANICAL EQUIPMENT BEING REMOVED. REMOVE ALL ASSOCIATED RACEWAY, WIRING, SWITCHES, ETC. ASSOCIATED WITH MECHANICAL DEMOLITION.

FIXTURE SCHEDULE

TYPE	DESCRIPTION	CATALOG NUMBER	VOLTS	LAMPS
A2	2X4 LENSED TROFFER, LAY-IN; 2 LAMP T8 ELECTRONIC A12.125 LENS; FUSED	LITHONIA 2SPG-2-32-A12.125-GLR	277	(2) F32T8-35K
B3	2X4 RECESSED DIRECT/INDIRECT, 3 LAMP FUSED, 2 BALLASTS	LITHONIA 2AV-G-3-32-MDM-277-GLR	277	(3) F32T8-35K
BL	BOLLARD	PACE TESS-BM-4500-S-50MH-120-0-AL	120	(1) 50W MH
DF1	8" COMPACT FLOURESCENT DOWNLIGHT; 42 WATT TRIPLE TUBE; FUSED; 26/32/42 MULTI-WATT BALLAST	LITHONIA AF-1-42TRT-8-AR-LD-GMF	277	(1)CMF42W/GX24Q1-35K
DF2	6" COMPACT FLOURESCENT DOWNLIGHT; 32 WATT TRIPLE TUBE; FUSED;26/32/42 MULTI-WATT BALLAST	LITHONIA AF-1-32TRT-6-AR-LD-GMF	277	(1)CFM32W/GX24Q1-35K
DF3	8" COMPACT FLOURESCENT DOWNLIGHT; PRISMATIC ACRYLIC LENS; 42 WATT TRIPLE TUBE; FUSED 26/32/42 MULTI-WATT BALLAST	LITHONIA AF-1-42TRT-8-AR-LD-A12-GMF	277	(1)CMF42W/GX24Q1-35K
F2	1X4 LENSED TROFFER; FLANGE MOUNT; 2 LAMP T8 ELECTRONIC; A12.125 LENS; FUSED	LITHONIA SPF-2-32-A12.125-GLR	277	(2) F32T8-35K
J2	INDUSTRIAL FL;4';2 LAMP T8 ELECTRONIC; FUSE, WIRE GUARD	LITHONIA EJA-2-32-GLR WG	277	(2) F32T8-35K
L1	DIRECT/INDIRECT LINEAR LIGHT; 2 LAMP T8, WALL MOUNTED EMERGENCY SECTION (SEE PLANS)	LINEAR EL29-B-2-ET8-BR/PVL-WMT-CCBA-FU-EM	277	(2) F32T8-35K
L3	DIRECT/INDIRECT LINEAR; 2 LAMP T5HO SEE PLANS FOR ROW LENGTHS; PENDANT HUNG;EM CIRCUIT SECTION; DUAL LEVEL SWITCHING, CABLE HUNG	LINEAR EL29-B-2-ET5HO-277-DR-PVL-X-AP-FU-(EM)-SC-X	277	(2) F54T5HO-35K PER 4' SECTION
S1	LANDSCAPE UPLIGHT	HYDREL M9720 A 50M 120 MFL	120	INCLUDED
S2	LANDSCAPE FLOODLIGHT	HYDREL 7000 50M 120 FL KM JB BL	120	(1) 50W MH
SC1	EXTERIOR SCONCE WITH PHOTO CELL	LITHONIA WST-70M-FT-277-PE-CBA	277	(1) 70 W MH
SL	STEP LIGHT W/ BODINE EMERGENCY BATTERY PACK	IO 0-01-39-100-3-1-EM	277	INCLUDED
X1	DIE CAST EXT; 1 FACE; LED; GREEN LETTERS; BRUSHED ALUMINUM WITH BATTERY PACK; SEE PLANS FOR MOUNTING AND ARROWS	LITHONIA LES-1-G-ELN	277	LED INCLUDED

LIGHT FIXTURE ABBREVIATION SCHEDULE

NOTE: NOT ALL ABBREVIATIONS WILL NECESSARILY BE USED.

A.F.F.	ABOVE FINISHED FLOOR
WALL@CLG	WALL MOUNT AT CORNER OF WALL AND CEILING
CCBA	CUSTOM PAINTED COLOR AS SELECTED BY THE ARCHITECT
SCBA	STANDARD PAINTED COLOR AS SELECTED BY THE ARCHITECT
CFBA	CUSTOM FINISH AS SELECTED BY THE ARCHITECT
SFBA	STANDARD FINISH AS SELECTED BY THE ARCHITECT
MOD	MODIFY STANDARD LIGHT FIXTURE AS INDICATED

LIGHT FIXTURE GENERAL NOTES

1. REFER TO THE ARCHITECTURAL REFLECTED CEILING PLANS FOR LOCATIONS OF LIGHT FIXTURES. BRING ALL DISCREPANCIES OF LOCATIONS AND QUANTITIES TO THE ATTENTION OF THE ARCHITECT AND ELECTRICAL ENGINEER PRIOR TO BIDDING.
2. REFER TO ARCHITECTURAL ELEVATIONS FOR MOUNTING HEIGHTS AND LOCATIONS OF LIGHT FIXTURES. BRING ALL DISCREPANCIES TO THE ATTENTION OF THE ARCHITECT PRIOR TO BIDDING.
3. REFER TO THE SPECIFICATIONS FOR OTHER LIGHT FIXTURE, FUSING, BALLAST, AND LAMP REQUIREMENTS AND ACCEPTABLE MANUFACTURERS.
4. REFER TO ARCHITECTURAL DRAWINGS AND SPECIFICATIONS FOR LOUVER REQUIREMENTS AS REQUIRED.
5. CONFIRM AVAILABLE MOUNTING DEPTHS OF ALL LIGHT FIXTURES AND COMPARE WITH DEPTHS SHOWN ON SHOP DRAWINGS. BRING ALL POTENTIAL CONFLICT AREAS TO THE ATTENTION OF THE ARCHITECT AND ELECTRICAL ENGINEER PRIOR TO RELEASE.

BIDDING REQUIREMENTS

1. BID ONLY PRODUCTS THAT ARE SPECIFIED OR APPROVED BY ADDENDUM.
2. PACKAGING OF LIGHT FIXTURES WITH OTHER SYSTEMS IS NOT ALLOWED.
3. WHEN ONLY ONE PRODUCT IS APPROVED FOR BIDDING, THE PRICE FOR THAT ITEM SHALL BE BROKEN OUT SEPARATELY WHEN SUBMITTING PRICING TO VARIOUS DISTRIBUTORS AND/OR CONTRACTORS.
4. WHEN A CONTRADICTION EXISTS BETWEEN A SPECIFIC MODEL NUMBER AND THE DESCRIPTION, THE DESCRIPTION SHALL GOVERN.

PRIOR APPROVAL REQUIREMENTS

1. PRIOR APPROVAL IS REQUIRED BEFORE BIDDING THIS PROJECT.
2. PRIOR APPROVALS SHALL BE SUBMITTED TO THE ELECTRICAL ENGINEER'S OFFICE AT LEAST (8) EIGHT WORKING DAYS BEFORE THE BID. PRIOR APPROVALS RECEIVED AFTER THIS TIME PERIOD SHALL BE REJECTED.
3. PRIOR APPROVALS SHALL BE SIGNED BY A PRINCIPAL OF THE SUBMITTING ORGANIZATION STATING THAT THEY HAVE PREPARED AND/OR REVIEWED THE SUBMITTAL AND THAT THE PRODUCTS PROPOSED ARE EQUIVALENT TO THOSE SPECIFIED. ANY EXCEPTIONS SHALL BE SO NOTED.
4. ITEMS THAT ARE SUBMITTED AND HAVE BEEN APPROVED WILL BE LISTED IN THE ADDENDUM(S). VERBAL APPROVAL WILL NOT BE GIVEN ON ANY ITEM.
5. IT IS NOT THE RESPONSIBILITY OF THE ELECTRICAL ENGINEER TO NOTIFY THE SUBMITTING PARTY OF ERRORS IN THE SUBMITTAL. NOTIFICATION OF ERRORS BY THE ELECTRICAL ENGINEER PRIOR TO ISSUANCE OF THE ADDENDUM(S) MAY NOT BE GIVEN.
6. PRIOR APPROVALS SHALL CONSIST OF TWO SETS OF CUT SHEETS DESCRIBING THE PRODUCTS BEING SUBMITTED AS EQUIVALENTS. FAXES ARE NOT ACCEPTABLE. ALL SPECIFICATION INFORMATION SHALL BE CLEARLY MARKED, WITH NON-APPLICABLE INFORMATION CROSSED OUT. COMPLETE PHOTOMETRIC DATA SHALL BE PROVIDED. PRODUCTS WITHOUT PHOTOMETRIC DATA WILL NOT BE APPROVED.
7. SUPPLY POINT-BY-POINTS AS REQUIRED BY THE ELECTRICAL ENGINEER AND/OR LIGHTING DESIGNER.
8. SAMPLE FIXTURES MUST BE SUPPLIED WITH A CORD, PLUG AND 120V BALLAST.

LIGHTING SHOP DRAWING REQUIREMENTS

1. REFER TO SPECIFICATIONS 16001, 16510 & 16551.
2. MUST INCLUDE BALLAST AND LAMP CUT SHEETS.
3. LINEAR LIGHTING MUST INCLUDE DETAILED DRAWINGS WITH SUPPORT DETAILS, STEM LOCATIONS AND HAVE ALL LENGTHS IDENTIFIED WITH STEM LOCATIONS.
4. COLOR SAMPLES MUST BE INCLUDED IN FIRST SUBMITTAL.
5. CUT SHEETS MUST BE STAMPED BY THE FACTORY REPRESENTATIVE'S COMPANY NAME.
6. VALUE ENGINEERING CONDUCTED WITHOUT THE DESIGN TEAM IE; ARCHITECT, OWNER, ENGINEER & LIGHTING CONSULTANT/DESIGNER WILL NOT BE ALLOWED, REVIEWED OR APPROVED.
7. PROVIDE A LIST OF SPARE PARTS, EQUIPMENT & LAMPS.

EQUIPMENT SCHEDULE

UNIT #	FUNCTION	LOAD	VOLT	PHASE	FULL LOAD AMPS	CONDUIT SIZE	NO. SETS	WIRES NO.	WIRES SIZE	OCPD TYPE	OCPD AMPS	REF. NOTES STARTER	REF. NOTES DISCONNECT	REF. NOTES OTHER	REMARKS
AHU-1	AIR HANDLING UNIT	7.5 HP	480	3	11.00	3/4"	1	3	8	CB	20			9A	
CP-1	CIRCUIT PUMP	1/4 HP	120	1	5.80	3/4"	1	2	12	CB	15	4A			
CU-1	CONDENSING UNIT	58 FLA	480	3	58	1-1/4"	1	3	3	CB	80		2A		
EF-1	EXHAUST FAN	79 W	120	1	0.77	3/4"	1	2	12	CB	15	4A			

NOTES:
1. NON-FUSED DISCONNECT SWITCH
2. FUSED DISCONNECT SWITCH
3. BREAKER IN ENCLOSURE
4. MANUAL STARTER W/THERMAL OVERLOAD
5. MAGNETIC STARTER
6. MAGNETIC STARTER/NON-FUSED DISCONNECT COMBINATION
7. MAGNETIC STARTER/FUSED DISCONNECT COMBINATION
8. MAGNETIC STARTER/BREAKER COMBINATION
9. VARIABLE FREQUENCY DRIVE
10. REDUCED VOLTAGE STARTER
11. DIRECT CONNECTION
12. RECEPTACLE/SPECIAL PURPOSE OUTLET/ETC.
13. TWO-SPEED STARTER, COORDINATE W/MOTOR TYPE

A. FURNISHED, INSTALLED, AND CONNECTED UNDER DIVISION 16
B. FURNISHED AND INSTALLED UNDER ANOTHER DIVISION REQUIRING CONNECTION UNDER DIVISION 16.
C. FURNISHED UNDER ANOTHER DIVISION BUT INSTALLED AND CONNECTED UNDER DIVISION 16.
D. FURNISHED, INSTALLED AND CONNECTED UNDER ANOTHER DIVISION.

OVER CURRENT PROTECTIVE DEVICES

CB = CIRCUIT BREAKER - THERMAL MAGNETIC
FN = FUSE - NON INDUCTIVE LOAD
FI = FUSE - INDUCTIVE LOAD
MO = MAGNETIC ONLY CIRCUIT BREAKER

ELECTRICAL SYMBOL SCHEDULE

1. SEE FIXTURE SCHEDULE FOR TYPE, MOUNTING AND WATTAGE.
2. HEIGHT MEASURED TO TOP LINE OF THE BOX FROM THE FINISHED FLOOR.
3. REFER TO DRAWINGS FOR DIRECTIONAL ARROWS.
4. SUBSCRIPT KEYS SWITCH TO FIXTURES CONTROLLED.
5. NEMA TYPE 'ND' NON-FUSED UNLESS NOTED 'F' (FUSED). USE 'HD' 480 V.
6. HEIGHT TO BE THE LOWER OF EITHER 80" A.F.F. OR 6" BELOW CEILING.
7. PROVIDE H.O.A. AND S.S. PUSHBUTTONS AS REQUIRED.
8. DOUBLE ARROWS DENOTE A DOUBLE FACE UNIT.
9. COORDINATE WITH SHOP DRAWINGS.
10. SUBSCRIPT DENOTES NEMA CONFIGURATION.
11. HEIGHT MEASURED TO BOTTOM OF THE BOX FROM FINISHED FLOOR.

STANDARD MOUNTING HEIGHT UNLESS OTHERWISE NOTED ON PLANS

SYMBOL	DESCRIPTION	MOUNTING HEIGHT	NOTES
	ONE CIRCUIT, TWO WIRE HOME RUN TO PANEL		
	2 CIRCUIT, 3 WIRE, COMMON NEUTRAL HOME RUN		
	3 CIRCUIT, 4 WIRE, COMMON NEUTRAL HOME RUN		
	CONDUIT RUN CONCEALED IN WALL OR CEILING		
	CONDUIT RUN CONCEALED IN FLOOR OR GROUND		
	CONDUIT UP		
	CONDUIT DOWN		
	CONDUIT STUB LOCATION	CAP CONDUIT	
	CEILING LIGHT FIXTURE	CEILING	1.
	WALL LIGHT FIXTURE	AS NOTED	1.
	RECESSED DOWNLIGHT FIXTURE	CEILING	1.
	FLUORESCENT LIGHT FIXTURE	AS NOTED	1
	FLUORESCENT EGRESS LIGHT FIXTURE	AS NOTED	UNSWITCHED
	FLOOD OR TRACK FIXTURE	AS NOTED	
	CEILING MOUNTED EXIT LIGHT	CEILING	1.3.8.
	WALL MOUNTED EXIT LIGHT	AS NOTED	1.3.8.
$	SINGLE POLE SWITCH	+4'-0"	2.
$a	SINGLE POLE SWITCH	+4'-0"	4. 2.
$3	THREE-WAY SWITCH	+4'-0"	2.
$4	FOUR-WAY SWITCH	+4'-0"	2.
$K	KEY OPERATED SWITCH	+4'-0"	2.
$P	SWITCH WITH PILOT LIGHT	+4'-0"	2.
	VARIABLE INTENSITY SWITCH	+4'-0"	2.
	DUPLEX RECEPTACLE	+16"	11.
A	DUPLEX RECEPTACLE		9.
W	ELECTRIC WATER COOLER RECEPTACLE		SEE DETAIL
WP	WEATHERPROOF RECEPTACLE	+24"	2.
	GROUND FAULT INTERRUPTER DUPLEX RECEPTACLE	+16"	9. 11.
	DUPLEX RECEPTACLE EMERGENCY POWER (RED)	+16"	11.
	FOURPLEX RECEPTACLE	+16"	9. 11.
	FLOOR OUTLET WITH 20A DEVICE	FLOOR	
	MULTIPLE SERVICE FLOOR BOX	FLOOR	
	SPECIAL PURPOSE OUTLET	+16" OR AS NOTED	10. WITH CAP. 11.
	TELEVISION OUTLET	+16"	11.
	DATA OUTLET	+16"	11.
	TELEPHONE OUTLET	+16"	11.
	TELEPHONE/DATA OUTLET	+16"	11.
	TELEPHONE OUTLET	FLOOR	
J	JUNCTION BOX ('F' IN FLOOR)	AS NOTED	
	MOTOR OUTLET	TO SUIT EQUIP.	
P	PHOTO-ELECTRIC CONTROL	AS NOTED	TORK 2000A
	NON-FUSED DISCONNECT SWITCH	+5'-0"	5.
F	FUSED DISCONNECT SWITCH	+5'-0"	5.
$T	MANUAL STARTER THERMAL OVERLOAD SWITCH WITH PILOT LIGHT	+4'-0"	2.
VFD	VARIABLE FREQUENCY DRIVE	+6'-6"	
	MAGNETIC STARTER / DISCONNECT COMBINATION	+5'-0"	
	PANEL BOARD	TOP AT +6'-0"	
	MAIN DISTRIBUTION PANEL		
	TELEPHONE TERMINAL BOARD		
F	FIRE ALARM MANUAL STATION	+4'-0"	2.
H	FIRE ALARM SIGNAL HORN/STROBE	+6'-8"	6.
S	SMOKE DETECTOR	CEILING	
D	DUCT SMOKE DETECTOR		MTD. IN DUCT
H	HEAT DETECTOR	CEILING	
D	FIRE/SMOKE DAMPER		
S	FIRE ALARM STROBE	+6'-8"	6.
#	SOUND SYSTEM SPEAKER	+8'-0" OR AS NOTED	
V	VOLUME CONTROL	+4'-0"	2.
M	MICROPHONE OUTLET	+16"	11.
	SOUND EQUIPMENT CABINET		CIRCUIT TO 120V
842	ARCHITECTURAL ROOM NUMBER		
A	LIGHT FIXTURE (LETTER DESIGNATES TYPE)		
EQ 34	EQUIPMENT NUMBER		

INDEX OF ELECTRICAL DRAWINGS

EG001 SYMBOLS, SCHEDULES, NOTES
ES100 ELECTRICAL SITE PLAN
EL101 LIGHTING FLOOR PLAN
EP101 POWER FLOOR PLAN
EX500 ELECTRICAL DETAILS
EX600 PANEL SCHEDULES & ONE-LINE DIAGRAM

PROFESSIONAL ENGINEER · LICENSED · 7/21/06 · No. 4816 · GARY W. MESKER · STATE OF UTAH

GouldEvans

1000 South Main Street • Suite 100
Salt Lake City, Utah 84101
Voice 801.532.6100
Fax 801.532.6102
www.gouldevans.com

kansas city • lawrence • phoenix
salt lake city • san antonio • tampa

©2002 Gould Evans Associates, L.C.

DFCM PROJECT NO: 05266700
STATE PROPERTY ID: 01791
RISK MANAGEMENT NO:
CAD PROJECT NO:
CAD DWG FILE:
DRAWN BY: BNA
CHECKED BY: GM
COPYRIGHT: STATE OF UTAH

BNA CONSULTING
635 South State Street
Salt Lake City, Utah 84111
P:801.532.2196
F:801.532.2305
www.bnaconsulting.com
SALT LAKE ST.GEORGE LAS VEGAS PHOENIX

© 2006 BNACONSULTING

snow college activities center

dance studio addition | remodel

ephraim, utah

REVISION	DATE

Project no: 06169A
Date: July 21, 2006
Sheet:

Symbols, Schedules and Notes

EG001

100% Construction Documents

By: cad1; Jul 21, 2006 - 11:50am
F:\2006\169A\DRAW\169A-EG001.dwg

SHEET KEYNOTES

1. ORIGINATES FROM HV SWITCH S11 AT STADIUM ELECTRICAL YARD.
2. SEE GENERAL NOTE 1.

GENERAL NOTES

1. GENERAL CONTRACTOR NEEDS TO FIELD VERIFY EXACT LOCATION OF EXISTING HV DUCTBANK BEFORE EXCAVATING, AND TAKE NECESSARY PRECAUTIONS TO PROTECT IT.

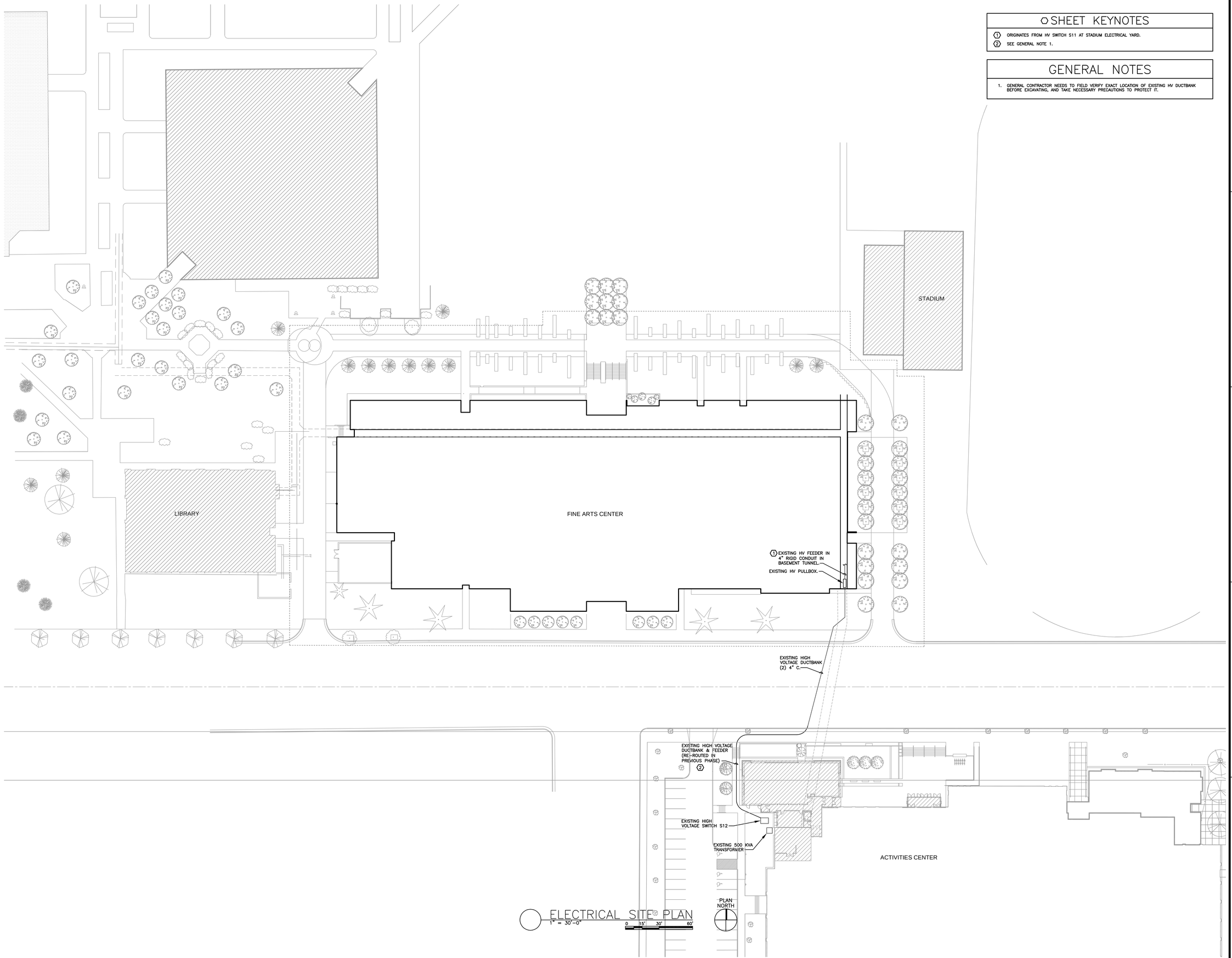

ELECTRICAL SITE PLAN
1" = 30'-0"
0 15' 30' 60'

GouldEvans

©2002 Gould Evans Associates, L.C.
1000 South Main Street • Suite 100
Salt Lake City, Utah 84101
Voice 801.532.6100
Fax 801.532.6102
www.gouldevans.com

kansas city • lawrence • phoenix
salt lake city • san antonio • tampa

DFCM PROJECT NO: 05266700
STATE PROPERTY ID: 01791
RISK MANAGEMENT NO:
CAD PROJECT NO:
CAD DWG FILE:
DRAWN BY: BNA
CHECKED BY: GM
COPYRIGHT: STATE OF UTAH

BNA CONSULTING
635 South State Street
Salt Lake City, Utah 84111
P 801.532.2196
F 801.532.2305
www.bnaconsulting.com
SALT LAKE ST.GEORGE LAS VEGAS PHOENIX

LICENSED PROFESSIONAL ENGINEERS
7/21/06
No. 4816
GARY W. MESSER
STATE OF UTAH

snow college activities center
dance studio addition | remodel
ephraim, utah

REVISION	DATE

Project no: 06169A
Date: July 21, 2006
Sheet:

Electrical Site Plan

ES001

100% Construction Documents

By: cadd1 - Jul 21, 2006 - 11:51am
F:\2006\06169A\BNA\06A-ES100.dwg

SHEET KEYNOTES

1. PROVIDE FIXTURE WITH A LITHONIA PS3000, OR APPROVED EQUAL BATTERY PACK.
2. PROVIDE FIXTURE WITH A LITHONIA PS3000, OR APPROVED EQUAL BATTERY PACK. WIRE FOR NORMAL SWITCHED OPERATION.
3. WIRE EACH CIRCUIT INDICATED TO A 20A/1P BREAKER IN EXISTING PANEL 'LD'. PROVIDE #10 NEUTRAL FOR THREE CIRCUIT HOME RUNS.
4. COORDINATE LIGHT LOCATIONS IN THIS ROOM WITH MECHANICAL CONTRACTOR PRIOR TO ROUGH-IN.
5. DUAL LEVEL SWITCHING.
6. CONNECT TO EXISTING LIGHTING CIRCUIT.
7. PROVIDE FIXTURE WITH RECOMMENDED LITHONIA EMERGENCY BATTERY PACK. WIRE FOR NORMAL SWITCHED OPERATION.
8. ROUTE CIRCUIT THROUGH LIGHTING CONTACTOR.

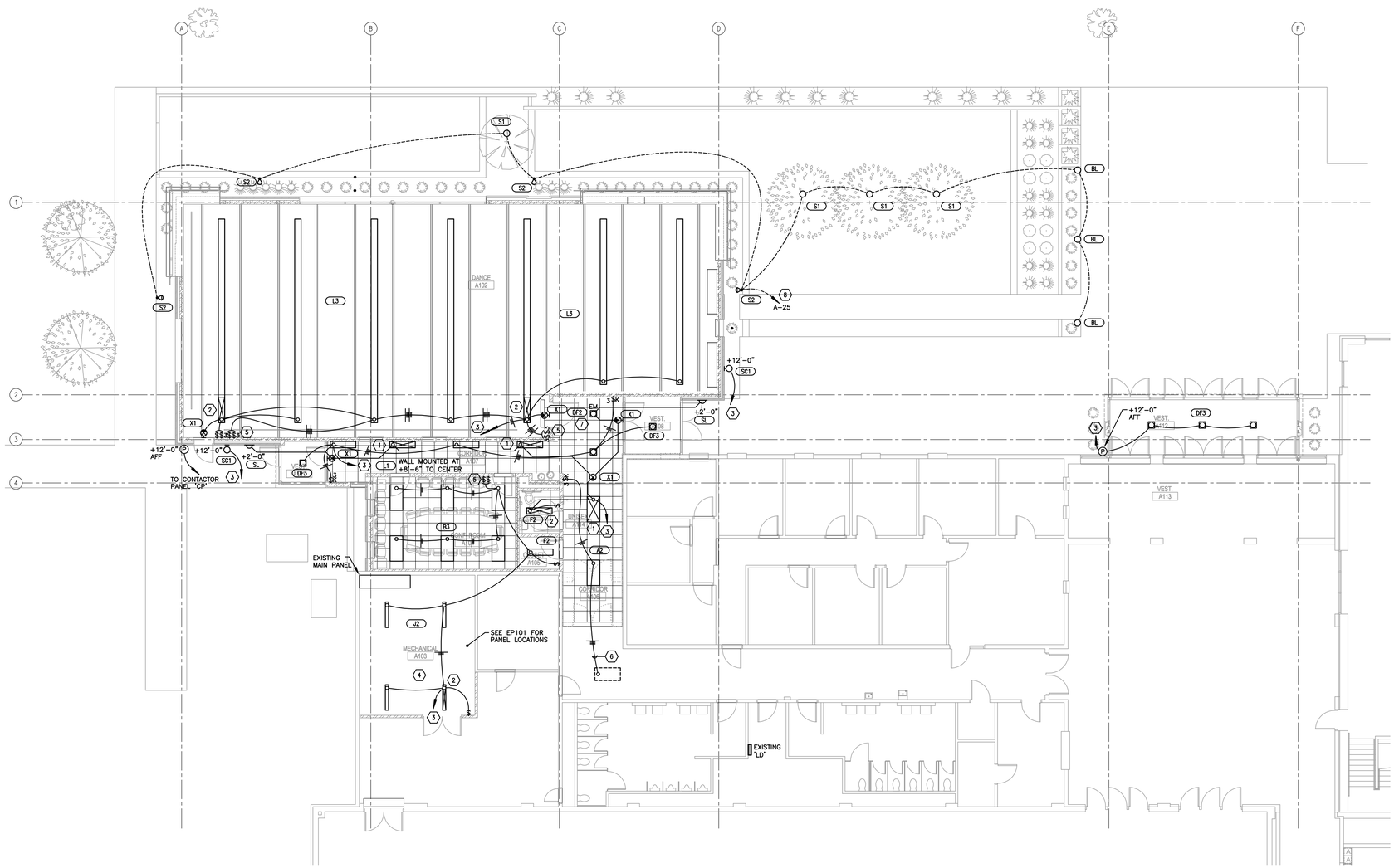

PLAN NORTH

LIGHTING PLAN
1/8" = 1'-0"

0 4 8 16

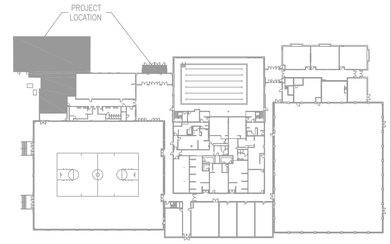

LICENSED PROFESSIONAL ENGINEERS
7/21/06
No. 4816
GARY W. MESSER
STATE OF UTAH

GouldEvans

©2002 Gould Evans Associates, L.C.
1000 South Main Street • Suite 100
Salt Lake City, Utah 84101
Voice 801.532.6100
Fax 801.532.6102
www.gouldevans.com

kansas city • lawrence • phoenix
salt lake city • san antonio • tampa

DFCM PROJECT NO: 05266700
STATE PROPERTY ID: 01791
RISK MANAGEMENT NO:
CAD PROJECT NO:
CAD DWG FILE:
DRAWN BY: BNA
CHECKED BY: GM
COPYRIGHT: STATE OF UTAH

BNA CONSULTING
635 South State Street
Salt Lake City, Utah 84111
P 801.532.2196
F 801.532.2305
www.bnaconsulting.com
SALT LAKE ST.GEORGE LAS VEGAS PHOENIX

snow college activities center
dance studio addition | remodel
ephraim, utah

REVISION	DATE

Project no: 06169A
Date: July 21, 2006
Sheet:

Lighting Floor Plan

EL101

100% Construction Documents

By: cself - Jul 21, 2006 - 11:50am
F:\2006\06169A\CD\BNA\06169A-EL101.dwg

SHEET KEYNOTES

1. EXISTING FIRE ALARM CONTROL PANEL. MODIFY AS REQUIRED FOR NEW DEVICES.
2. EXISTING TELEPHONE TERMINAL BOARD.
3. PROVIDE 3/4" CONDUIT IN THE WALL AND STUB OUT NEAR THE CEILING FOR FUTURE A/V SYSTEM.
4. MOUNT RECEPTACLES IN WALL PARTITION, CENTERED BETWEEN ACRYLIC PANELS.
5. PROVIDE JUNCTION BOX AND 120V CIRCUIT IN CEILING SPACE FOR VAV POWER.
6. PROVIDE POWER TO ATC PANEL, COORDINATE EXACT LOCATION WITH MECHANICAL.
7. EXISTING UNIT HEATER IS BEING LOWERED BY DIVISION 15. ELECTRICAL CONTRACTOR SHALL DISCONNECT AND RECONNECT POWER AND EXTEND EXISTING CIRCUIT AS REQUIRED.
8. PROVIDE 3/4" CONDUIT TO PHONEBOARD IN MECHANICAL ROOM A103.

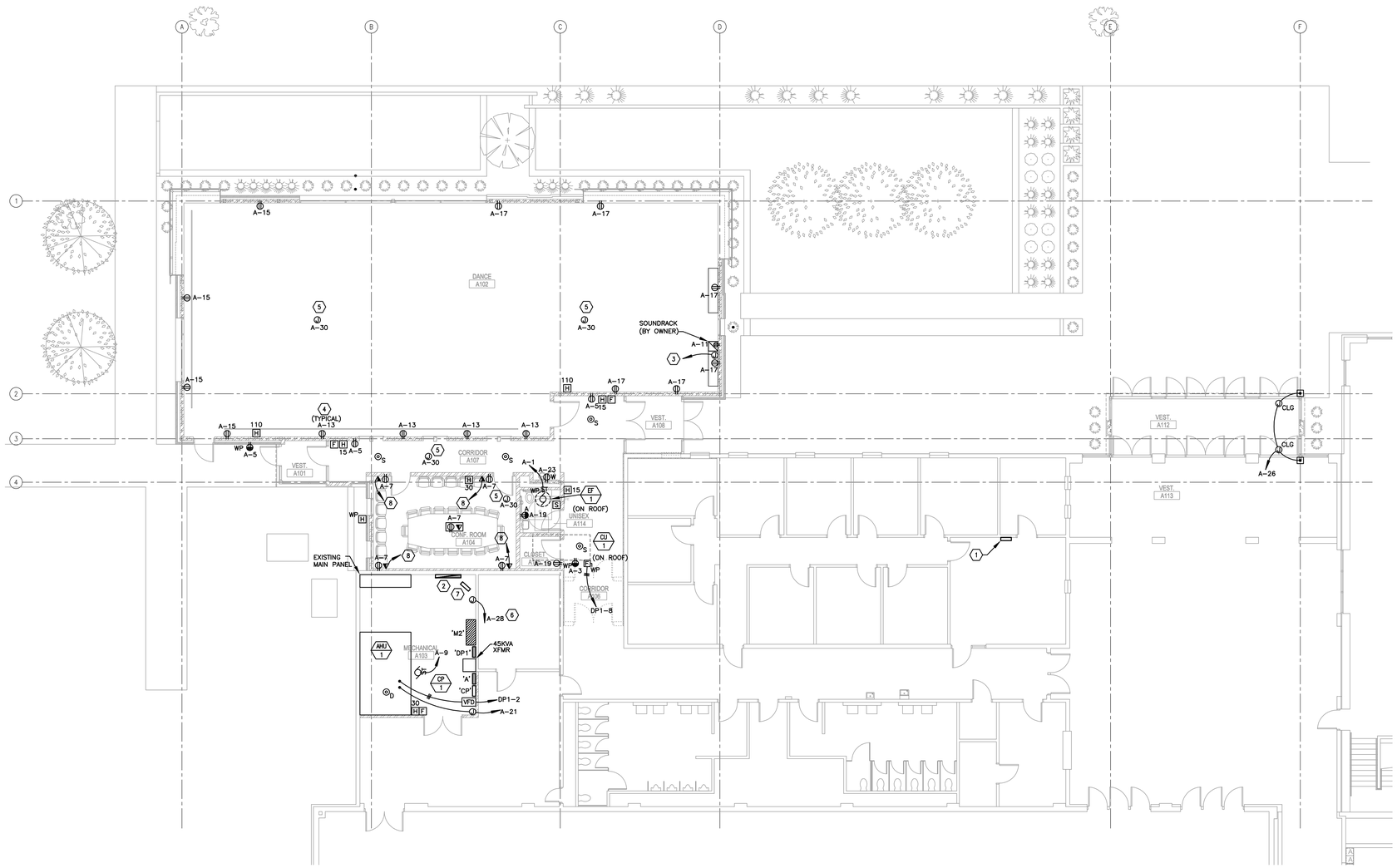

PLAN NORTH

POWER PLAN
1/8" = 1'-0"

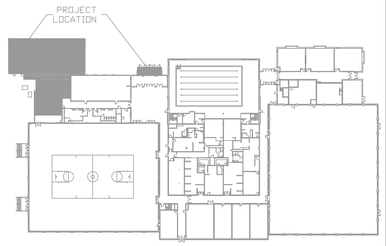

LICENSED PROFESSIONAL ENGINEER
7/21/06
No. 4816
GARY W. MESKER
STATE OF UTAH

GouldEvans

©2002 Gould Evans Associates, L.C.
1000 South Main Street • Suite 100
Salt Lake City, Utah 84101
Voice 801.532.6100
Fax 801.532.6102
www.gouldevans.com

kansas city • lawrence • phoenix
salt lake city • san antonio • tampa

DFCM PROJECT NO: 05266700
STATE PROPERTY ID: 01791
RISK MANAGEMENT NO:
CAD PROJECT NO:
CAD DWG FILE:
DRAWN BY: BNA
CHECKED BY: GM
COPYRIGHT: STATE OF UTAH

BNA CONSULTING
635 South State Street
Salt Lake City, Utah 84111
P:801.532.2196
F:801.532.2205
www.bnaconsulting.com
SALT LAKE ST.GEORGE LAS VEGAS PHOENIX

snow college
activities center
dance studio addition | remodel
ephraim, utah

REVISION	DATE

Project no: 06169A
Date: July 21, 2006
Sheet:

Power
Floor Plan

EP101

100% Construction Documents

By: cad1; Jul 21, 2006 - 11:51am
F:\2006\169A\DRAW\169A-EP101.dwg

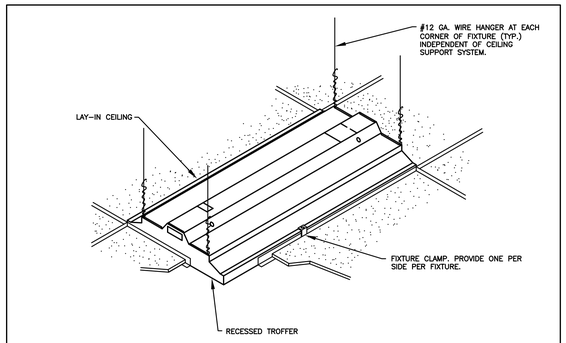

DIAGRAM A001 TYP. RECESSED FIXTURE MOUNTING
NTS

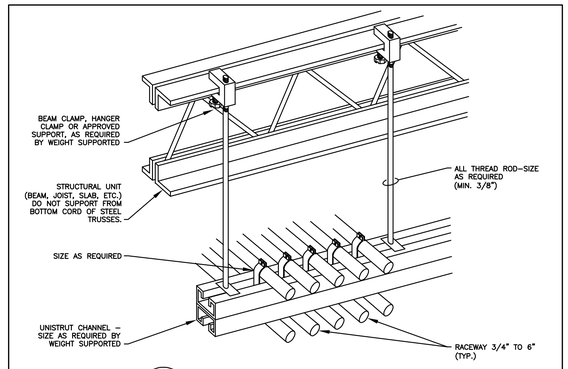

DIAGRAM H001 TYPICAL TRAPEZE CONDUIT RACK
NTS

REFERENCE NOTES

1. TIMED ON/TIMED OFF EACH CHANNEL CAN BE SET FOR MULTIPLE ON/OFF SCHEDULING.
2. SEE CONTACTOR SCHEDULE FOR NUMBER OF POLES REQUIRED AND CIRCUIT.
3. MECHANICALLY HELD CONTACTORS WITH COIL CLEARING CONTACTS SQUARE-D CLASS 8903.
4. CONTACTOR CAN BE PROGRAMMED FOR PHOTO ON / PHOTO OFF.

CONTACTOR SCHEDULE

CONTACTOR #	CIRCUITS CONTROLLED	CONTACTOR SIZE	CONTACTOR PANEL	CONTACTOR CIRCUIT CONTROLLED
1	A-25	30A 4P	'CP'	'A' (PHOTO ON/TIMED OFF)
2				'B' (TIMED ON/TIMED OFF)
3				'C' (TIMED ON/TIMED OFF)
4				'D' (TIMED ON/TIMED OFF)

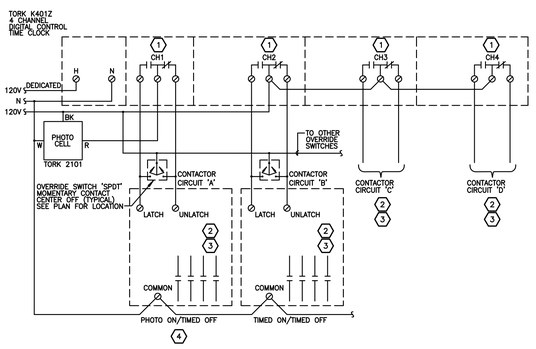

DIAGRAM P005 LIGHTING CONTROL
NTS

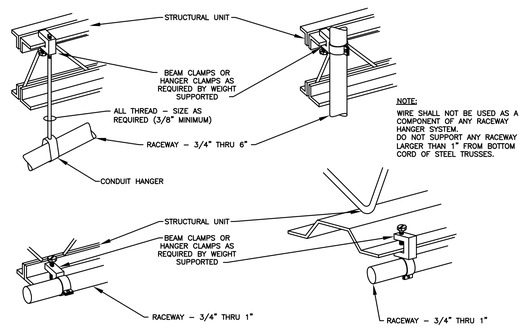

DIAGRAM H003 TYPICAL RACEWAY SUPPORT METHODS
NTS

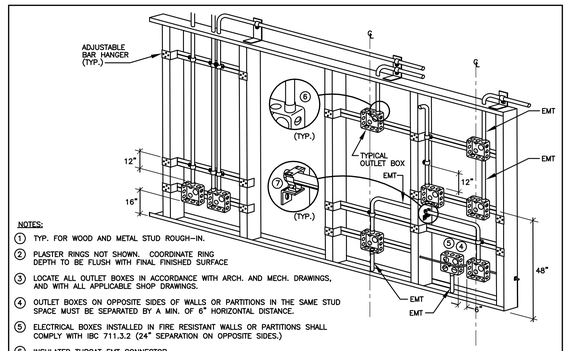

DIAGRAM H004 TYPICAL ROUGH IN REQUIREMENTS
NTS

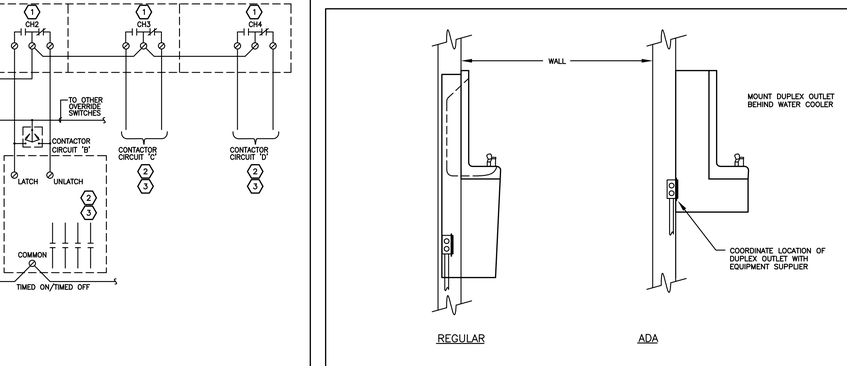

DIAGRAM R002 ELECTRIC WATER COOLER (EWC)
NTS

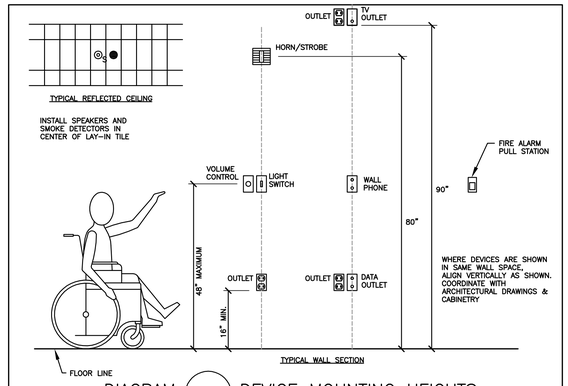

DIAGRAM R001 DEVICE MOUNTING HEIGHTS
NTS

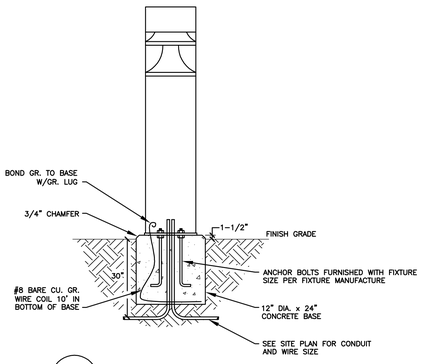

DIAGRAM B005 BOLLARD FIXTURE MOUNTING
NTS

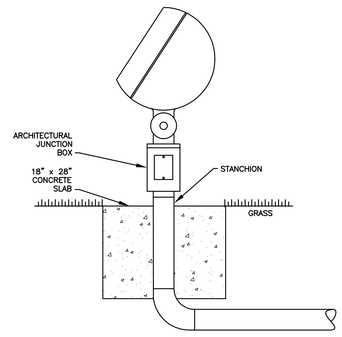

DIAGRAM B020 TYPE 'S2' FIXTURE MOUNTING
NTS

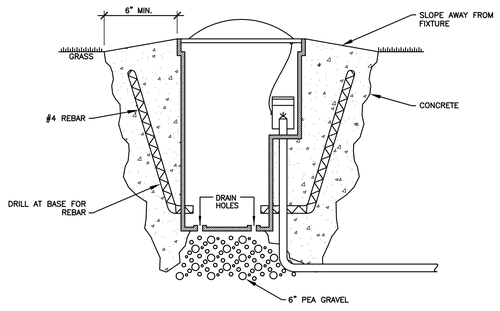

DIAGRAM B010 TYPE 'S1' FIXTURE MOUNTING
NTS

GouldEvans
©2002 Gould Evans Associates, L.C.
1000 South Main Street • Suite 100
Salt Lake City, Utah 84101
Voice 801.532.6100
Fax 801.532.6102
www.gouldevans.com
kansas city • lawrence • phoenix
salt lake city • san antonio • tampa

DFCM PROJECT NO: 05266700
STATE PROPERTY ID: 01791
RISK MANAGEMENT NO:
CAD PROJECT NO:
CAD DWG FILE:
DRAWN BY: BNA
CHECKED BY: GM
COPYRIGHT: STATE OF UTAH

BNA CONSULTING
635 South State Street
Salt Lake City, Utah 84111
P 801.532.2196
F 801.532.2305
www.bnaconsulting.com
SALT LAKE ST.GEORGE LAS VEGAS PHOENIX

snow college activities center
dance studio addition | remodel
ephraim, utah

REVISION	DATE

Project no: 06169A
Date: July 21, 2006
Sheet:

Electrical Details

EX500

100% Construction Documents

LICENSED PROFESSIONAL ENGINEER
7/21/06
No. 4816
GARY W. MESSNER
STATE OF UTAH

By: cadf1, Jul 21, 2006 – 11:51am
F:\2006\06169A\06169A-EX500.dwg

PANELBOARD SCHEDULE

PANEL A — TYPE NQOD — 120/208 VOLTS — 3 PH — 4 W

MOUNTING: X FLUSH / SURFACE — DIMENSIONS: 20 W, 6 D (in.), H — LOCATION: MECHANICAL A103 — AMP: 175 — MAINS: X LUGS / BREAKER / SUBFEED LUGS / ISO GROUND / 200% NEUTRAL

BRANCH BREAKERS

ITEM	AMPS	POLE	WIRE SIZE	CIR. NO.	LEFT PHASE LOAD A	B	C	RIGHT PHASE LOAD A	B	C	CIR. NO.	AMPS	POLE	WIRE SIZE	ITEM
EF-1	15	1	12	1	100						2	20	1		SPARE
WP RECEPT. CU-1	20	1	12	3		180					4	20	1		SPARE
RECEPT. - CORR.	20	1	12	5			540				6	20	1		SPARE
RECEPTACLES CONF.	20	1	12	7	900						8	20	1		SPARE
CP-1	20	1	12	9		540					10	20	1		SPARE
SOUND RACK	20	1	12	11			500				12	20	1		SPARE
RECEPTACLES DANCE	20	1	12	13	720						14	20	1		SPARE
RECEPTACLES DANCE	20	1	12	15		720					16	20	1		SPARE
RECEPTACLES DANCE	20	1	12	17			900				18	20	1		SPARE
RECEPT. - RR	20	1	12	19	360						20	20	1		SPARE
AHU-1 CONTROL	20	1	12	21		100					22	20	1		SPARE
EWC	20	1	12	23			1000				24	20	1		SPARE
LANDSCAPE LIGHTING	20	1	10	25	660			500			26	20	1	12	ADA ENTRY
SPARE	20	1		27					500		28	20	1	12	ATC PANEL
SPARE	20	1		29						100	30	20	1	12	VAV BOXES
SPARE	20	1		31							32	20	1		SPARE
SPARE	20	1		33							34	20	1		SPARE
SPACE ONLY	20	1		35							36	20	1		SPARE
SPACE ONLY	20	1		37							38	20	1		SPACE ONLY
SPACE ONLY	20	1		39							40	20	1		SPACE ONLY
SPACE ONLY	20	1		41							42	20	1		SPACE ONLY
					2740	1540	2940	500	500	100					
					3240	2040	3040	TOTAL							CONNECTED LOAD TOTAL
					27.00	17.00	25.33	AMPS/PHASE							8320 VA

EQUIP RATING 10,000 AMPS RMS SYM.

PANELBOARD SCHEDULE

PANEL DP1 — TYPE NF — 277/480 VOLTS — 3 PH — 4 W

MOUNTING: X FLUSH / SURFACE — DIMENSIONS: 20 W, 6 D (in.), H — LOCATION: MECHAINCAL A103 — AMP: 225A — MAINS: X LUGS / BREAKER / SUBFEED LUGS / ISO GROUND / 200% NEUTRAL

BRANCH BREAKERS

ITEM	AMPS	POLE	WIRE SIZE	CIR. NO.	LEFT PHASE LOAD A	B	C	RIGHT PHASE LOAD A	B	C	CIR. NO.	AMPS	POLE	WIRE SIZE	ITEM
PANEL 'A' XFMR	70	3	4	1	3240			3047			2	20	3	8	AHU-1
-	-	-	-	3		2040			3047		4	-	-	-	-
-	-	-	-	5			3040			3047	6	-	-	-	-
SPACE	100	3		7				16066			8	80	3	3	CU-1
-	-	-		9					16066		10	-	-	-	-
-	-	-		11						16066	12	-	-	-	-
SPACE	100	3		13							14	100	3		SPACE
-	-	-		15							16	-	-		-
-	-	-		17							18	-	-		-
SPARE	20	1		19							20	20	1		SPARE
SPARE	20	1		21							22	20	1		SPARE
SPARE	20	1		23							24	20	1		SPARE
SPACE ONLY	20	1		25							26	20	1		SPACE ONLY
SPACE ONLY	20	1		27							28	20	1		SPACE ONLY
SPACE ONLY	20	1		29							30	20	1		SPACE ONLY
SPACE ONLY	20	1		31							32	20	1		SPACE ONLY
SPACE ONLY	20	1		33							34	20	1		SPACE ONLY
SPACE ONLY	20	1		35							36	20	1		SPACE ONLY
SPACE ONLY	20	1		37							38	20	1		SPACE ONLY
SPACE ONLY	20	1		39							40	20	1		SPACE ONLY
SPACE ONLY	20	1		41							42	20	1		SPACE ONLY
					3240	2040	3040	19113	19113	19113					
					22353	21153	22153	TOTAL							CONNECTED LOAD TOTAL
					80.70	76.36	79.97	AMPS/PHASE							65659 VA

EQUIP RATING 30,000 AMPS RMS SYM.

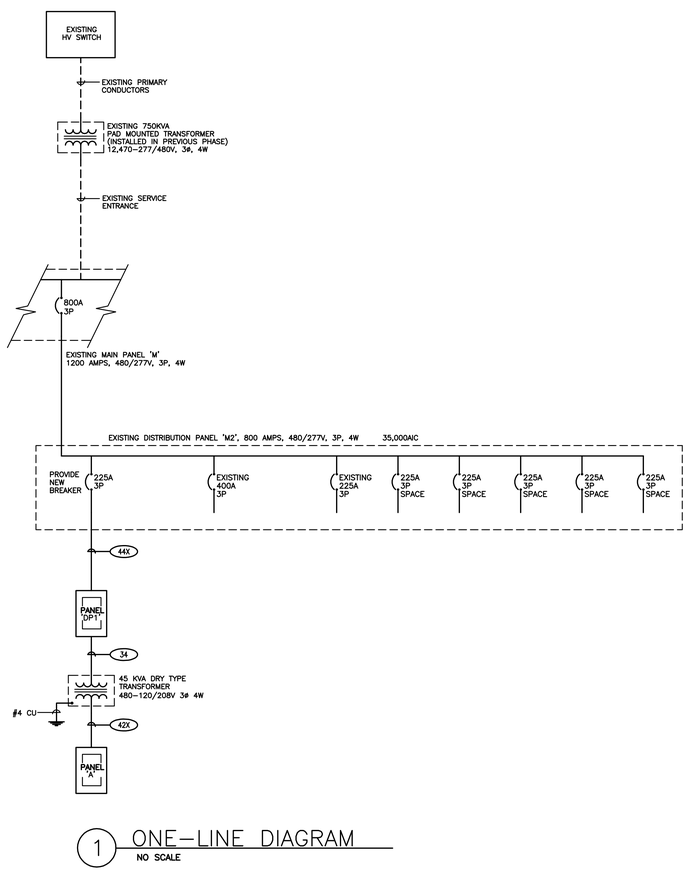

1 ONE-LINE DIAGRAM
NO SCALE

COPPER CONDUCTOR & CONDUIT SCHEDULE

TYPE	AMP.	COND. SIZE	CONDUCTOR QUAN.	CONDUCTOR SIZE	INSUL-ATION	GND. COND.
20	30	3/4"	2	10	THHN THWN	10
30	30	3/4"	3	10	THHN THWN	10
40	30	3/4"	4	10	THHN THWN	10
28	40	3/4"	2	8	THHN THWN	10
38	40	3/4"	3	8	THHN THWN	10
48	40	3/4"	4	8	THHN THWN	10
26	55	3/4"	2	6	THHN THWN	8
36	55	3/4"	3	6	THHN THWN	8
46	55	1"	4	6	THHN THWN	8
24	70	3/4"	2	4	THHN THWN	8
34	70	1"	3	4	THHN THWN	8
44	70	1-1/4"	4	4	THHN THWN	8
23	85	1"	2	3	THHN THWN	8
33	85	1"	3	3	THHN THWN	8
43	85	1-1/4"	4	3	THHN THWN	8
32	95	1-1/4"	3	2	THHN THWN	6
42	95	1-1/4"	4	2	THHN THWN	6
31	110	1-1/4"	3	1	THHN THWN	6
41	110	1-1/2"	4	1	THHN THWN	6
51	110	2"	5	1	THHN THWN	6
31X	150	1-1/2"	3	1/0	THHN THWN	6
41X	150	1-1/2"	4	1/0	THHN THWN	6
51X	150	2"	5	1/0	THHN THWN	6
32X	175	1-1/2"	3	2/0	THHN THWN	6
42X	175	2"	4	2/0	THHN THWN	6
33X	200	2"	3	3/0	THHN THWN	6
43X	200	2"	4	3/0	THHN THWN	6
53X	200	2-1/2"	5	3/0	THHN THWN	6
34X	230	2"	3	4/0	THHN THWN	4
44X	230	2-1/2"	4	4/0	THHN THWN	4
54X	230	2-1/2"	5	4/0	THHN THWN	4
325	255	2"	3	250	THHN THWN	4
425	255	2-1/2"	4	250	THHN THWN	4
525	255	2-1/2"	5	250	THHN THWN	4
335	310	2-1/2"	3	350	THHN THWN	3
435	310	3"	4	350	THHN THWN	3
535	310	3"	5	350	THHN THWN	3
340	335	3"	3	400	THHN THWN	3
440	335	3"	4	400	THHN THWN	3
540	335	3"	5	400	THHN THWN	3
350	380	3-1/2"	3	500	XHHW	3
450	380	3-1/2"	4	500	XHHW	3
550	380	3-1/2"	5	500	XHHW	3

COPPER CONDUCTOR & CONDUIT SCHEDULE FOR PARALLEL RUNS

TYPE	MAX. O.C. PROT.	COND. AMPS	SETS	CONDUCTOR QUAN.	CONDUCTOR SIZE	CONDUIT SIZE	GND. COND.
425-2	600	510	2	4	250	2-1/2"	1
525-2	600	510	2	5	250	2-1/2"	1
435-2	700	620	2	4	350	3"	1/0
440-2	700	670	2	4	400	3"	1/0
450-2	800	760	2	4	500	4"	1/0
550-2	800	760	2	5	500	4"	1/0
460-2	800	840	2	4	600	4"	1/0
435-3	900	930	3	4	350	3"	2/0
440-3	1000	1005	3	4	400	3"	2/0
540-3	1000	1005	3	5	400	3"	2/0
435-4	1200	1240	4	4	350	3"	3/0
535-4	1200	1240	4	5	350	3"	3/0
460-3	1200	1260	3	4	600	4"	3/0
440-4	1600	1675	5	4	400	3"	4/0
540-4	1600	1675	5	5	400	3"	4/0
460-4	1600	1680	4	4	600	4"	4/0
440-6	2000	2010	6	4	400	3"	250
460-6	2500	2520	6	4	600	4"	350
450-8	3000	3040	8	4	500	4"	400
450-11	4000	4180	11	4	500	4"	500

NOTES
IN PARALLEL RUNS SIZE GND. COND. IN ACCORDANCE WITH NEC PARA. 250-122.

GND. CONDUCTOR MAY BE DELETED ON SERVICE ENTRANCE CONDUCTORS

LICENSED PROFESSIONAL ENGINEERS
7/21/06
No. 4816
GARY W. MESSNER
STATE OF UTAH

GouldEvans

©2002 Gould Evans Associates, L.C.

1000 South Main Street • Suite 100
Salt Lake City, Utah 84101
Voice 801.532.6100
Fax 801.532.6102
www.gouldevans.com

kansas city • lawrence • phoenix
salt lake city • san antonio • tampa

DFCM PROJECT NO: 05266700

STATE PROPERTY ID: 01791

RISK MANAGEMENT NO:

CAD PROJECT NO:

CAD DWG FILE:

DRAWN BY: BNA

CHECKED BY: GM

COPYRIGHT: STATE OF UTAH

BNA CONSULTING
SALT LAKE ST.GEORGE LAS VEGAS PHOENIX
635 South State Street
Salt Lake City, Utah 84111
P 801.532.2196
F 801.532.2305
www.bnaconsulting.com

snow college
activities center
dance studio addition | remodel
ephraim, utah

REVISION DATE

Project no: 06169A
Date: July 21, 2006
Sheet:

Panel Schedules & One-Line Diagram

EX600

100% Construction Documents

By: cadt1, Jul 21, 2006 - 11:51am
F:\2006\06169A\CAD\06169A-EX600.dwg