MAINTENANCE SHOP AREA REMODEL
BUILDING 1190
CAMP W. G. WILLIAMS

UTAH NATIONAL GUARD

17800 CAMP WILLIAMS ROAD
BLUFFDALE, UTAH

State of Utah - Department of Administrative Services

DIVISION OF FACILITIES CONSTRUCTION AND MANAGEMENT

DFCM PROJECT No. 06012480

DFCM PRE-BID STAFF REVIEW
Division of Facilities Construction and Management

Architectural _____ Date
Structural _____ Date
Mechanical _____
Electrical _____ Date

PROJECT MANUAL:
Gen. Cond. / Notice To Contractor & Proposal _____ Date
Specs. _____ Date
Deadlines _____ Date
Landscape Architecture _____ Date

ENERGY:
Architectural _____ Date
Mechanical _____ Date
Electrical _____ Date

OTHER AGENCIES
Agency / Institution Maintenance _____ Date
Fire Marshall _____ Date
Agency / Institution _____ Date

REVIEW DOES NOT RELIEVE A/E OF DESIGN LIABILITY

DFCM PLAN CHECK
Division of Facilities Construction and Management

Phase _____ Program Yes ___ No ___

	Approved as Noted	Needed Resubmit	No Comment	Initial	Date
Accessibility					
Architectural					
Civil					
Electrical					
Energy					
HVAC					
Landscape					
Plumbing					
Specification					
Structural					

APPROVAL DOES NOT RELIEVE A/E OF DESIGN LIABILITY

APPROVALS:

Prime Agency _____ Date

DFCM _____ Date

APPROVAL DOES NOT RELIEVE A/E OF DESIGN LIABILITY

DRAWING INDEX

SHEET #	SHEET TITLE	SHEET #	SHEET TITLE
GI001	COVER SHEET, MAPS, GENERAL INFORMATION	EE001	SYMBOL LEGEND, SHEET INDEX
		EE501	DETAILS
AS101	ARCHITECTURAL SITE PLAN	EE502	DETAILS
AD101	DEMOLITION FLOOR PLAN & ELEVATION /	EE601	ONE-LINE DIAGRAM, FIRE ALARM RISER
	MEZZANINE FRAMING PLAN / DETAILS	EE602	LIGHTING FIXTURE & PANEL SCHEDULE
AE001	LIST OF ALTERNATES / GENERAL DEMOLITION,	EE603	EQUIPMENT SCHEDULE
	REMODELING & RENOVATION NOTES	EE701	TYPICAL MOUNTING HEIGHT DETAILS
AE101	FLOOR PLANS / REFLECTED CEILING PLAN	ED101	DEMOLITION PLAN
AE102	EQUIPMENT FLOOR PLAN / EQUIP SCHEDULE	EL101	LIGHTING PLAN
AE103	AIR COMMPRESSOR BUILDING PLANS	EP101	POWER PLAN
AE201	EXTERIOR ELEVATIONS / DETAILS	EY101	FIRE ALARM PLAN
AE301	SECTIONS / DETAILS		
AE302	SECTIONS / DETAILS		
AE601	DOOR SCHEDULE / DETAILS		
AE602	WINDOW & FINISH SCHEDULE / DETAILS		
P101	PLUMBING FLOOR PLAN		
P201	PLUMBING SCHEDULES		
M101	MECHANICAL FLOOR PLAN		
M201	MECHANICAL SCHEDULES		

ARCHITECT:
L. K. SORENSEN ASSOCIATES, INC.
ARCHITECTS/PLANNERS
3448 SOUTH MAIN STREET
SALT LAKE CITY, UTAH 84115
PHONE: (801)478-0800
FAX: (801)487-0816
Email: keith@lksorensenarchitects.com

STRUCTURAL ENGINEER:
DUNN ASSOCIATES, INC.
380 WEST 800 SOUTH, #100
SALT LAKE CITY, UTAH 84101
PHONE: (801) 575-8877
FAX: (801) 575-8875

MECHANICAL ENGINEER:
ADVANCED CONCEPT ENGINEERING
11851 VISTA GLEN COURT
SANDY, UTAH 84092
PHONE: (801) 572-3055
FAX: (801) 572-3075

ELECTRICAL ENGINEER:
SPECTRUM ENGINEERS
175 SOUTH MAIN, SUITE 300
SALT LAKE CITY, UTAH 84111
PHONE: (801) 328-5151
FAX: (801) 328-5155

CODE ANALYSIS

APPLICABLE CODES

	Year		Year
International Building Code	2003	National Electrical Code	2006
International Mechanical Code	2003	Uniform Code for Building Conservation	N/A
International Plumbing Code	2003	ADA Accessibility Guildelines	ANSI
International Fire Code	2003		
International Energy Conservation Code	N/A		

A. Occupancy and Group: B S-1 F-1 _____ _____

Change in Use: Yes _____ No X Mixed Occupancy: Yes X No _____
Special Use and Occupancy (e.g. High Rise, Covered Mall): N/A

B. Seismic Design Category: N1 Design Wind Speed: N/A mph

C. Type of Construction (circle one):

I/A I/B II/A II/B III/A (III/B) IV/HT V/A V/B

D. Fire Resistance Rating Requirements for the Exterior Walls based on the fire separation distance (in hours):
North: 2 South: 2 East: 2 West: 2 EXISTING

E. Mixed Occupancies: YES Nonseparated Uses: YES

F: Sprinklers:
Required: NO Provided: NO Type of Sprinkler System:

G: Number of Stories: 1 Building Height: 30-FEET

H: Actual Area per Floor (square feet): 18,720 SF

I: Tabular Area: -

J: Area Modifications:

1-0.25x30/30=1.75
1.75x12000 = 21000 SF

a) $A_a = A_t + \left[\frac{A_t I_f}{100}\right] + \left[\frac{A_t I_s}{100}\right]$ $I_f = 100\left[\frac{F}{P} - 0.25\right]\frac{W}{30}$

b) Sum of the Ratio Calculations for Mixed Occupancies:
$\frac{\text{Actual Area}}{\text{Allowable Area}} \leq 1$ 18720 / 21000 = 0.89

c) Total Allowable Area for: N/A
1) One Story: _____ ACTUAL AREA IS LESS THAN ALLOWABLE
2) Two Story: $A_a(2)$_____
3) Three Story: $A_a(3)$_____

d) Unlimited Area Building: Yes _____ No X Code Section: _____

K. Fire Resistance Rating Requirements for Building Elements (hours). N/A

Element	Hours	Assembly Listing	Element	Hours	Assembly Listing
Exterior Bearing Walls	2	UL U905	Floors - Ceiling Floors	N	
Interior Bearing Walls	N		Roofs - Ceiling Roofs	N	CLASS C
Exterior Non-Bearing Walls	N/A		Exterior Doors and Windows	N	
Structural Frame	N		Shaft Enclosures	N/A	
Partitions - Permanent	N		Fire Walls	N/A	
Fire Barriers	N		Fire Partitions	N/A	
			Smoke Partitions		

L. Design Occupant Load: 123
Exit Width Required: 5.6" Exit Width Provided: 36" 5 DOORS @ 36-INCHES EACH

M. Minimum Number of Required Plumbing Facilities: EXISTING
a) Water Closets - Required (m) 1.5 (f) 0.5 Provided (m) 4 (f) 1
b) Lavatories - Required (m) 1.5 (f) 0.5 Provided (m) 4 (f) 1
c) Bath Tubs or Showers: 1
d) Drinking Fountains: 1 Service Sinks: 1

FOOTNOTES:
1) In case of conflict with the U.S. Department of Justice Federal Registers Parts I through V - ADA Guidelines and specific reference to the International Building Code Accessibility Chapters, the more restrictive requirement shall govern.
2) Additional Code Information shall be provided at the discretion of the Building Official for Complex Buildings. Including, but not limited to:
a) High Rise Requirements.
b) Atriums.
c) Performance Based Criteria.
d) Means or Egress Analysis.
e) Fire Assembly Locator Sheet.
f) Exterior and Interior Accessibility Route.
g) Fire Stopping, Including Tested Design Number.

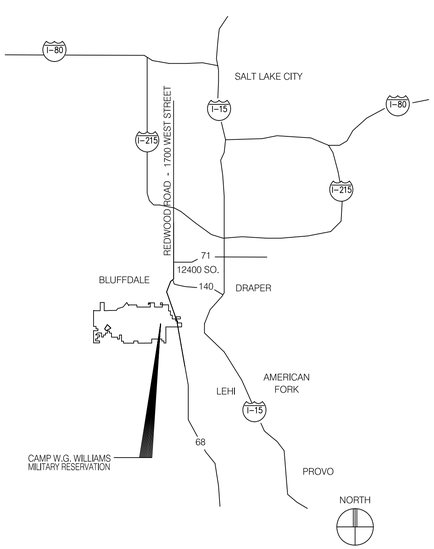

VICINITY MAP

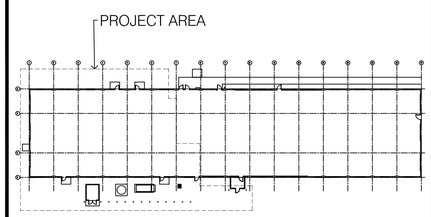

BUILDING 1190
NO SCALE

KEY PLAN

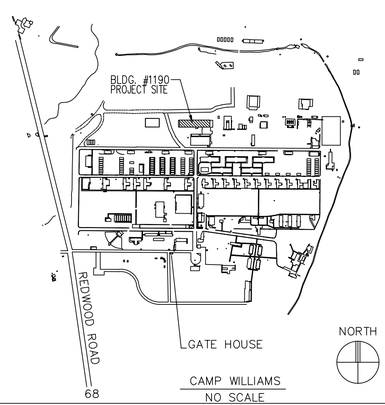

NO SCALE

LOCATION MAP

SYMBOLS

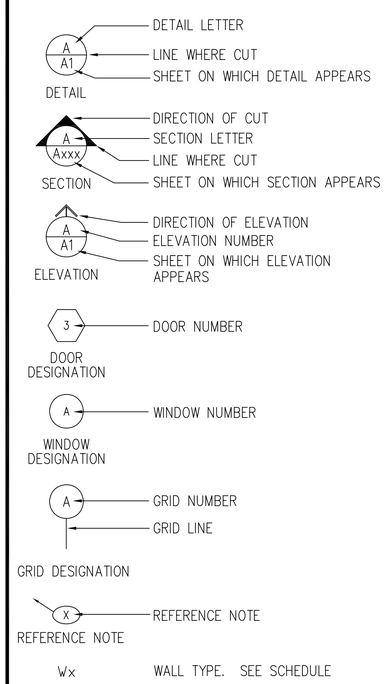

ABBREVIATIONS

A.F.F.	ABOVE FINISHED FLOOR	I.D.	INSIDE DIAMETER
		INSUL.	INSULATION
ACOUS.	ACOUSTICAL	INT.	INTERIOR
ADJ.	ADJUSTABLE	MAX.	MAXIMUM
ALUM.	ALUMINUM	MANUF.	MANUFACTURER
&	AND	MIN.	MINIMUM
@	AT	MTL.	METAL
∠	ANGLE	N.L.B.	NON LOAD BEARING
BLDG.	BUILDING	N.I.C.	NOT IN CONTRACT
BRD.	BOARD	No.	NUMBER
BLK'G.	BLOCKING	O.C.	ON CENTER
BOT.	BOTTOM	O.D.	OUTSIDE DIAMETER
CLG.	CEILING	PART. BRD.	PARTICLE BOARD
CONC.	CONCRETE	?	PLATE
CONST.	CONSTRUCTION	±	PLUS or MINUS
CONT.	CONTINUOUS	PLYWD.	PLYWOOD
COORD.	COORDINATE	PRE-FAB.	PRE-FABRICATED
[	CHANNEL	P.T.D.	PAPER TOWEL DISPENSER
ø	DIAMETER		
DISP.	DISPENSER	REINF.	REINFORCED
DN	DOWN	RM.	ROOM
DRY'G.	DRYING	SCHED.	SCHEDULE
EA.	EACH	SCWD	SOLID CORE WOOD DOOR
EL.	ELEVATION	S.D.	SOAP DISPENSER
EQ.	EQUAL	S.F.	SQUARE FEET
EXIST.	EXISTING	SHT.	SHEET
EXP.	EXPANSION	SPECS.	SPECIFICATIONS
F.E.C.	FIRE EXTINGUISHER CABINET	SQ.	SQUARE
		STD.	STANDARD
FNDTN.	FOUNDATION	T.P.D.	TOILET PAPER DISPENSER
FT.	FEET		
FTG.	FOOTING	TYP.	TYPICAL
F.V.	FIELD VERIFY	U.N.O.	UNLESS NOTED OTHERWISE
GYP. BRD.	GYPSUM BOARD	WATERPRF.	WATERPROOF
H.M.	HOLLOW METAL	w/	WITH

UTAH NATIONAL GUARD
MAINTENANCE SHOP AREA REMODEL
BUILDING 119 - CAMP W. G. WILLIAMS

lks #0611

SET NO.: _____ DATE PRINTED: _____

SHEET NUMBER
GI001

SITE NOTES

(SN1) NEW 5" THICK CONCRETE SLAB w/ #4 @ 16" O/C. PROVIDE GRANULAR FILL AND GRADING AS REQUIRED TO SLOPE 1/4" PER FOOT FROM DOOR OPENING TO EDGE OF SLAB.

(SN2) 6" CONCRETE METER BASE SLAB w/ #4 @ 16" O/C ON GRANUALR FILL AS REQUIRED TO MEET GRADE & LEVEL

(SN3) 8" CONCRETE EQUIPMENT BASE SLAB w/ #4 @ 16" O/C ON GRANULAR FILL AS REQUIRED TO MEET GRADE & LEVEL

(SN4) 12" MINIMUM CONCRETE BAG HOUSE MOUNTING PAD w/ 2 LAYERS #4 @ 16" O/C TO CONFORM w/ EQUIPMENT SUPPLIER REQUIREMENTS. PROVIDE COMPACTED GRANULAR BASE AS REQUIRED FOR STABILIZATION, TO MEET GRADE & LEVEL

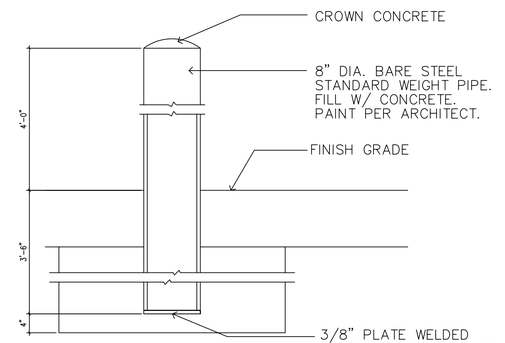

D4 TYPICAL BOLLARD
SCALE: 1-1/2"=1'-0"

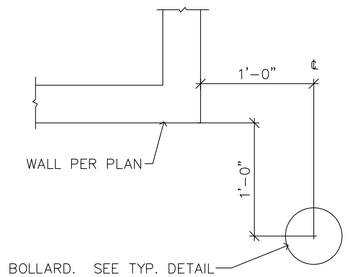

D5 BOLLARD LAYOUT @ CORNER
SCALE: 1-1/2"=1'-0"

C5 DETAIL
NO SCALE

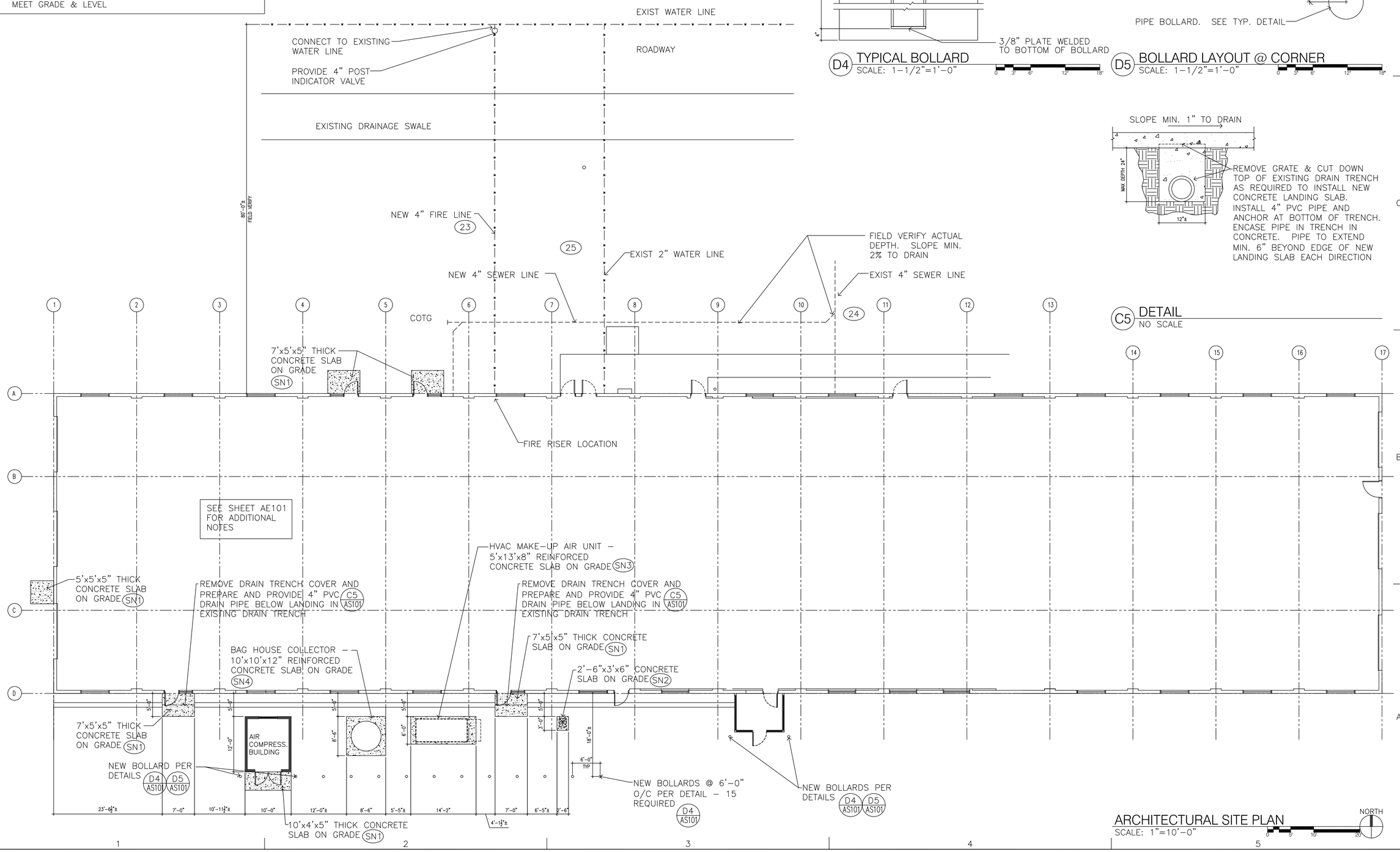

ARCHITECTURAL SITE PLAN
SCALE: 1"=10'-0"

NORTH

L. K. SORENSEN ASSOCIATES, INC.
ARCHITECTS / PLANNERS / LANDSCAPE ARCHITECTS
3448 SOUTH MAIN STREET
SALT LAKE CITY, UTAH 84115
(801)478-0800 Fax (801)478-0816

CONSULTANTS

STRUCTURAL:
DUNN ASSOCIATES, INC.

MECHANICAL:
ADVANCED CONCEPTS ENGINEERINGS

ELECTRICAL:
SPECTRUM ENGINEERS

UTAH NATIONAL GUARD

Maintenance Shop Area Remodel

Building 1190
Camp W. G. Williams
Bluffdale, Utah

MARK	DATE	DESCRIPTION
	8/15/06	CONSTRUCTION DOCUMENTS
	5/24/06	100% SUBMITTAL

D.F.C.M. PROJECT NO:	06012480
ARCH. PROJECT NO:	0611
CAD DWG FILE:	
DRAWN BY:	ajs
CHECKED BY:	lks
DESIGNED BY:	lks
COPYRIGHT:	

THIS PRINT AND ALL INFORMATION HEREON IS SUBJECT TO COPYRIGHT LAWS AND IS THE PROPERTY OF THE STATE OF UTAH AND SHALL NOT BE USED ON ANY OTHER PROJECT WITHOUT WRITTEN PERMISSION OF THE STATE OF UTAH.

SHEET TITLE

ARCHITECTURAL SITE PLAN

AS101

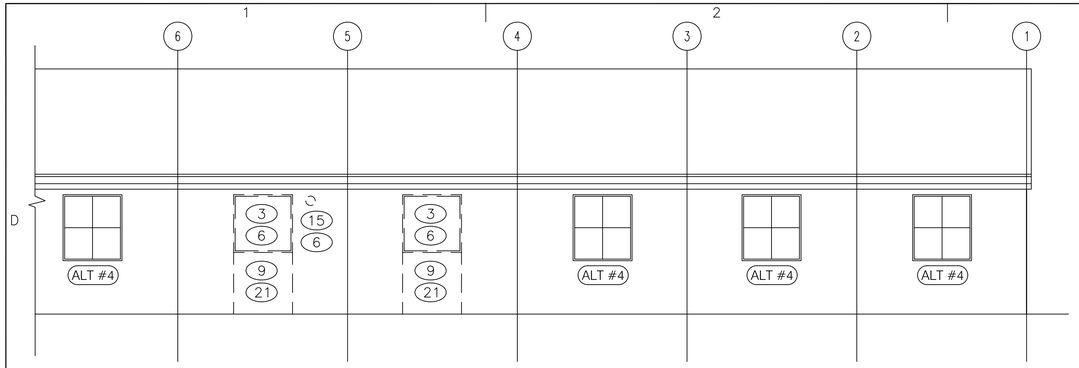

NORTH DEMOLITION ELEVATION

SCALE: 1/8"=1'-0"

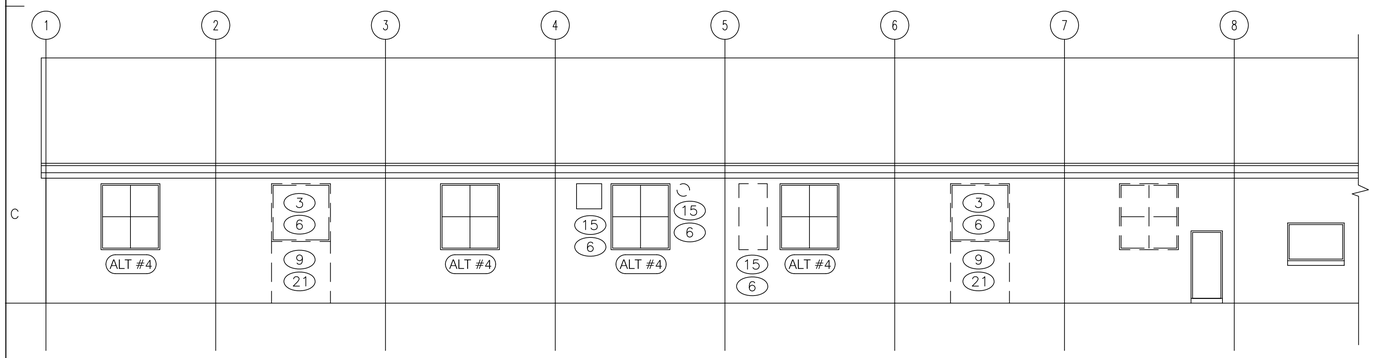

SOUTH DEMOLITION ELEVATION

SCALE: 1/8"=1'-0"

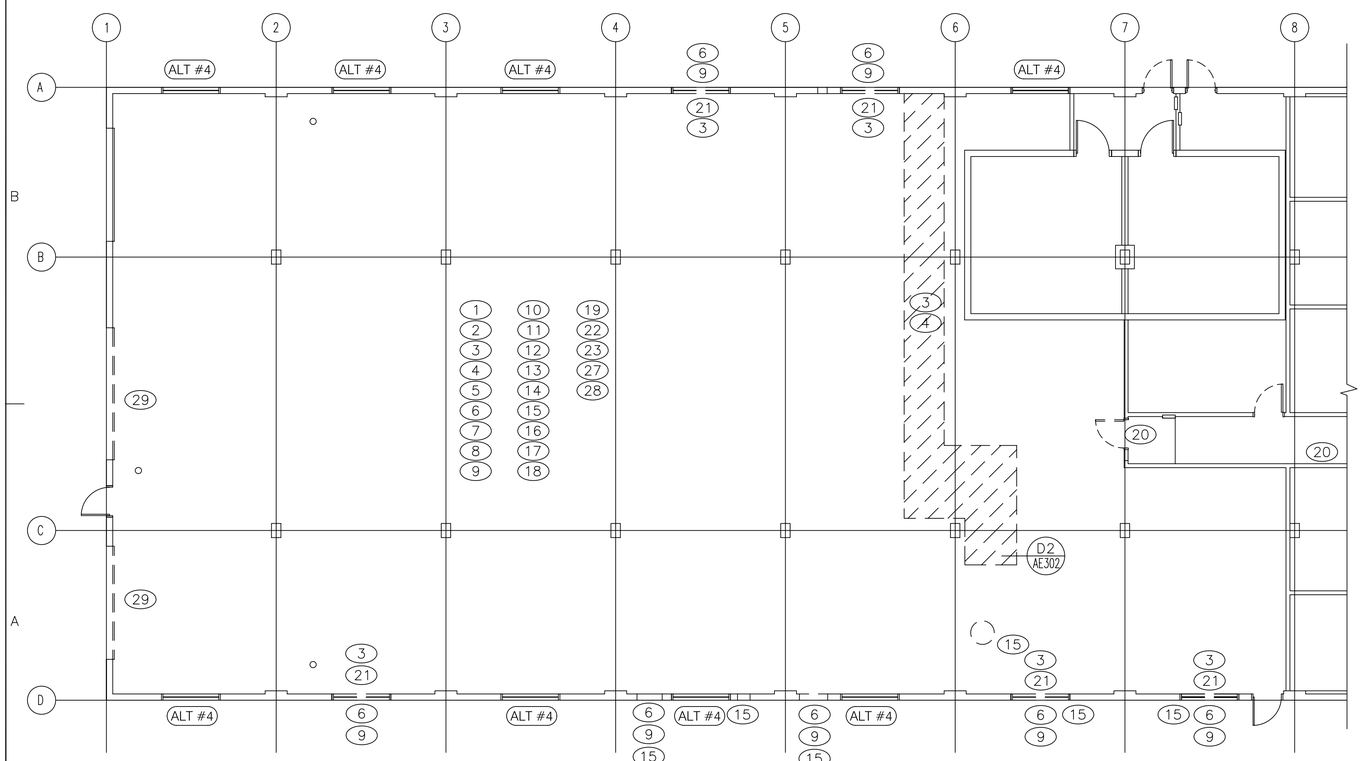

MAIN FLOOR DEMOLITION PLAN

SCALE: 1/8"=1'-0"

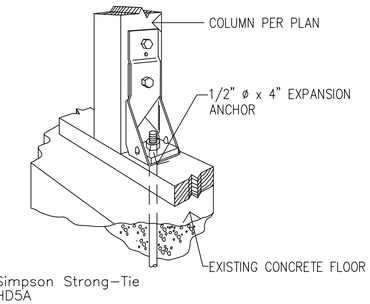

POST ANCHOR TO EXISTING CONCRETE FLOOR

D4 NO SCALE

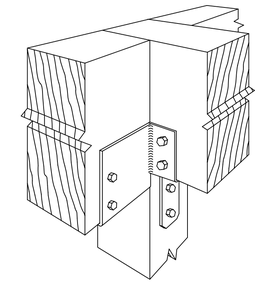

CAP FOR POST RECEIVING BEAMS

D5 NO SCALE

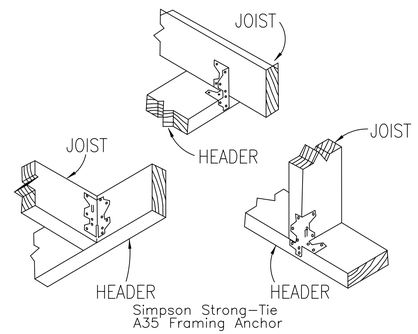

FRAMING ANCHORS FOR ANCHORING NEW JOIST FRAMING - TYP

C4 NO SCALE

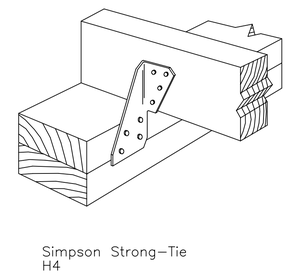

BLOCKING ANCHORS - TYPICAL

C5 NO SCALE

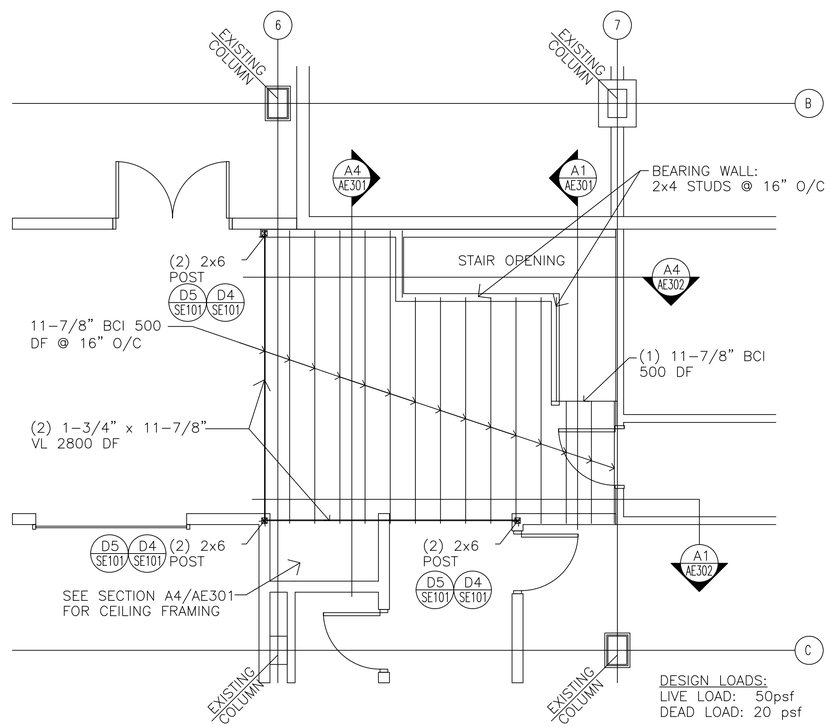

MEZZANINE FRAMING PLAN

SCALE: 1/4"=1'-0"

L. K. SORENSEN ASSOCIATES, INC.
ARCHITECTS / PLANNERS / LANDSCAPE ARCHITECTS
3448 SOUTH MAIN STREET
SALT LAKE CITY, UTAH 84115
(801)478-0800 Fax (801)478-0816

CONSULTANTS

STRUCTURAL:
DUNN ASSOCIATES, INC.

MECHANICAL:
ADVANCED CONCEPTS ENGINEERINGS

ELECTRICAL:
SPECTRUM ENGINEERS

UTAH NATIONAL GUARD

Maintenance Shop Area Remodel

Building 1190
Camp W. G. Williams
Bluffdale, Utah

MARK	DATE	DESCRIPTION
	8/15/06	CONSTRUCTION DOCUMENTS
	5/24/06	100% SUBMITTAL

D.F.C.M. PROJECT NO:	06012480
ARCH. PROJECT NO:	0611
CAD DWG FILE:	
DRAWN BY:	ajs
CHECKED BY:	lks
DESIGNED BY:	lks

COPYRIGHT:
THIS PRINT AND ALL INFORMATION HEREON IS SUBJECT TO COPYRIGHT LAWS AND IS THE PROPERTY OF THE STATE OF UTAH AND SHALL NOT BE USED ON ANY OTHER PROJECT WITHOUT WRITTEN PERMISSION OF THE STATE OF UTAH.

SHEET TITLE

DEMOLITION FLOOR PLAN & ELEVATION / MEZZ. FRAMING PLAN / DETAILS

AD101

GENERAL DEMOLITION, REMODELING, RENOVATION AND CONSTRUCTION NOTES:

THE FOLLOWING NOTES APPLY TO ALL WORK. NOTES INDEXED TO THE DRAWINGS ALSO APPLY TO SPECIFIC TASKS.

1. THE CONTRACTOR SHALL VISIT THE SITE PRIOR TO BIDDING TO EXAMINE AND UNDERSTAND THE SCOPE OF WORK AND ITS IMPACT ON THE EXISTING BUILDING AND IT'S OCCUPANTS. QUESTIONS RESULTING FROM THE SITE VISIT SHALL BE DIRECTED TO THE ARCHITECT FOR RESPONSE PRIOR TO ISSUE OF FINAL ADDENDA FOR BIDDING. THE GENERAL CONTRACTOR WILL COORDINATE AND ASSURE THAT SUBCONTRACT TRADES INCLUDE THIS REQUIREMENT IN THE SCOPE OF THEIR WORK WHETHER SHOWN ON SPECIFIC TRADE DRAWINGS AND OTHER CONTRACT DOCUMENTS OR NOT.

2. ALL DEMOLITION WORK SHALL BE CONDUCTED WITH THE GREATEST OF CARE. PRIOR TO INITIATION OF DEMOLITION WORK, FIELD LOCATE EXISTING UTILITY SERVICE LINES, PIPING, CONTROLS, ETC. FIELD IDENTIFY AND LOCATE ALL BUILDING STRUCTURAL ELEMENTS, CONSTRUCTION TO REMAIN, CONSTRUCTION TO BE REMOVED, DEMOLITION REMOVAL ROUTES AND EQUIPMENT ACCESS, ETC, AS REQUIRED TO COMPLETE THE WORK IN IT'S ENTIRETY.

3. SAW CUTTING IS REQUIRED FOR ALL CONCRETE AND MASONRY WORK REMOVAL. DO NOT DAMAGE OR OTHERWISE COMPROMISE EXISTING STRUCTURE OR ADJACENT FINISHED SURFACES TO REMAIN. ALL NEW OPENINGS IN EXISTING FLOORS, WALLS, CEILINGS, ETC,. SHALL BE CAREFULLY SAW CUT TO EXACT DIMENSIONAL REQUIREMENTS.

4. CAREFULLY REMOVE EXISTING SURFACE FINISHES, FLOORS, WALLS, WINDOWS, DOORS, ETC., TO THE FULL EXTENT SHOWN ON THE DRAWINGS OR AS REQUIRED TO COMPLETE ALL NEW CONSTRUCTION WORK SHOWN OR REQUIRED.

5. ALL PENETRATIONS SHALL BE FIRE SEALED UPON COMPLETION OF INSTALLATION OF PIPING, CONDUIT, DUCTWORK, ETC.

6. ALL EXTERIOR BUILDING WALL PENETRATIONS SHALL BE FINISHED TO ORIGINAL CONDITION MATCHING ADJACENT SURFACES ON BOTH SIDES OF THE WALLS INCLUDING OPENINGS RESULTING FROM REMOVAL OF EXISTING PIPING, DUCTWORK, ETC. EXISTING WALL CONSTRUCTION INCLUDES EXPOSED MASONRY WALLS AND CEMENT PLASTER FINISH ON MASONRY.

7. ALL EXISTING BUILDING COMPONENTS AFFECTED BY THE REMODELING OR NEW CONSTRUCTION WORK INCLUDING, BUT NOT LIMITED TO, CONTROL DEVICES, PIPING, CONDUIT, FIXTURES, DEVICES, OUTLETS, ETC., FOR MECHANICAL (HVAC), CONTROLS, PLUMBING, PIPING, FIXTURES, ELECTRICAL LIGHTING, ETC., SHALL BE SAFELY REMOVED, RELOCATED, OR OTHERWISE MODIFIED AS REQUIRED AND INCLUDED IN THE COST OF THE WORK FOR THIS PROJECT.

8. ALL WORK TO BE DEMOLISHED AND/OR REMOVED SHALL BE ACCOMPLISHED UTILIZING PROTECTIVE, DUST–PROOF BARRIERS BETWEEN EXISTING BUILDING AND THE DEMOLITION/REMODELING WORK.

9. THE CONTRACTOR SHALL CLOSE, SEAL AND FINISH EXPOSED ALL WORK AFFECTED BY THE DEMOLITION OR REMODELING TO MATCH ADJACENT SURFACES, MATERIALS, AND/OR FINISHES INCLUDING PREPARATION FOR AND PAINTING.

10. SCHEDULE: THE UTNG WORKS FOUR, TEN HOUR WORK DAYS FROM MONDAY THRU THURSDAY. THE UTNG MAY CONDUCT ACTIVITIES THAT WOULD KEEP THE CONTRACTOR FROM THE PERFORMANCE OF WORK. ARRANGEMENTS CAN BE MADE TO ALLOW THE WORK TO CONTINUE DURING UTNG NON–WORKING PERIODS. THE CONTRACTOR SHALL COORDINATED HIS WORK SCHEDULE WITH DESIGNATED UTNG REPRESENTATIVES DURING THE CONSTRUCTION WORK WHEN AND IF REQUIRED.

11. MAXIMUM CARE WILL BE EXERCISED TO PROTECT PERSONS WHO WILL USE THE EXISTING BUILDING DURING THE PERFORMANCE OF THIS WORK. THIS WILL INCLUDE, BUT NOT BE LIMITED TO, PROTECTIVE BARRIERS, NOTIFICATION SIGNAGE, ENVIRONMENTAL CONTROLS, AIR, DUST, AND NOISE CONTROL, ETC.

12. WORK DESCRIBED EITHER THE ARCHITECTURAL, PLUMBING, MECHANICAL AND ELECTRICAL DRAWINGS AND SPECIFICATIONS SHALL APPLY INCLUSIVELY TO RESPECTIVE TRADES. THE GENERAL CONTRACTOR SHALL ASSURE THAT EVERY TRADE IS FAMILIAR WITH EACH ELEMENT OF THE CONSTRUCTION DOCUMENTS. IT IS PREREQUISITE THAT EACH TRADE UNDERSTANDS THE SCOPE OF WORK REQUIRED FOR OTHER TRADES THAT INTERFACE WITH THEIR REQUIRED WORK.

13. THE CONTRACTOR SHALL NOTE ALL REQUIREMENTS FOR AND COMPLETE THE INSTALLATION OF NEW, EXISTING, OR OWNER PROVIDED EQUIPMENT INCLUDING, BUT NOT LIMITED TO, UTILITY SERVICE CONNECTIONS INCLUDING APPROPRIATE ELECTRICAL POWER COUPLINGS AND CONNECTION.

14. ALL EQUIPMENT INSTALLATION ON ROOF OR OTHER WORK IMPACTING THE EXISTING ROOFING SHALL BE REPAIRED TO THE ORIGINAL CONDITION BY A LICENSED ROOFING CONTRACTOR. NOTE THAT NO OPENINGS SHALL BE CUT IN THE EXISTING ROOF WITHOUT NOTIFICATION AND APPROVAL FROM THE ARCHITECT. THIS WORK INCLUDES, BUT IS NOT LIMITED TO, ALL EQUIPMENT MOUNTING, FLUES, DUCTWORK AND PIPING PENETRATIONS, ETC.

15. ALL NEW OPENINGS IN EXTERIOR WALLS OF EXISTING BUILDING CAREFULLY SAW CUT TO EXACT DIMENSIONAL REQUIREMENTS. SEE MECHANICAL DRAWINGS FOR REQUIREMENTS AND CONFIRM WITH ACTUAL EQUIPMENT SUPPLIED. ALL EXTERIOR WALL PENETRATIONS SHALL BE SEALED UPON COMPLETION OF INSTALLATION OF PIPING, CONDUIT, DUCTWORK, ETC., AND SHALL BE FINISHED TO ORIGINAL CONDITION MATCHING ADJACENT SURFACES ON BOTH SIDES OF THE WALLS. REINFORCE OPENINGS w/ 3"x3"x1/4" STEEL ANGLE FRAMES AND DOUBLE 4"x4"x3/8" ANGLE LINTELS.

16. CAREFULLY REMOVE EXISTING FLOOR COVERINGS AND BASE AND IRREGULAR FINISHES WHERE THEY EXISTING. PREPARE FLOORS TO RECEIVE NEW FLOOR COVERINGS AND FINISHES AS INDICATED. THE EXISTING CONCRETE FLOOR SLAB IN THE SHOP AREAS SHALL BE CLEANED WITH HIGH PRESSURE HOT WATER PRIOR TO INSTALLATION OF THE FLOOR SEAL SPECIFIED.

17. UNLESS OTHERWISE NOTED, ALL NEW WALLS SHALL BE CONSTRUCTED OF 2x6 WOOD STUDS SPACED AT MAXIMUM 16–INCHES ON CENTER. PROVIDE 5/8–INCH, TYPE "X" GYPSUM WALL BOARD ON BOTH SIDES FROM FINISHED FLOOR TO ROOF DECK. PROVIDE A 3/4–INCH CD–X PLYWOOD WAINSCOT IN ALL WORK SHOPS AND ACCESS CORRIDOR AND OTHER AREAS AS AREAS SHOWN. MATERIALS, CONSTRUCTION AND FINISHES SHALL CONFORM WITH THE SPECIFICATIONS INCLUDING PAINTING

18. REMOVE EXISTING BATT ROOF INSULATION AS REQUIRED TO INSTALL NEW WALL CONSTRUCTION. REINSTALL INSULATION TO ORIGINAL CONDITION UPON COMPLETION.

19. PREPARE AND PAINT THE EXISTING EXPOSED WOOD ROOF STRUCTURE SYSTEM COMPONENTS WHERE STRUCTURE IS LEFT EXPOSED. NEW CEILINGS SHALL BE CONSTRUCTED WHERE AND AS SHOWN AND IN ACCORDANCE WITH THE DRAWINGS AND SPECIFICATIONS.

20. REMOVE EXISTING DOORS, DOOR FRAMES, AND HARDWARE IN THEIR ENTIRETY. REPAIR AND REFINISH FLOOR, WALLS AND CEILING AT DOOR JAMBS TO MATCH ADJACENT SURFACES. PROVIDE NEW METAL DOOR FRAMES, DOORS AND HARDWARE WHERE SHOWN AND AS SPECIFIED.

21. REMOVE EXISTING STEEL SASH WINDOWS IN THEIR ENTIRETY WHERE SHOWN. INSTALL NEW WINDOW AND DOOR SYSTEMS AS SHOWN AND SPECIFIED. REPAIR EXISTING MASONRY AND PLASTER JAMBS REFINISH TO MATCH ORIGINAL ADJACENT SURFACES.

22. PLUMBING AND FIRE SPRINKLER SYSTEMS: SEE PLUMBING DRAWINGS AND DEMOLITION AND REMODELING NOTES. COORDINATE ALL WORK WITH RELATED TRADES.

GENERAL DEMOLITION, REMODELING, RENOVATION AND CONSTRUCTION NOTES (cont.):

23. PROVIDE NEW FIRE SPRINKLER SYSTEM THROUGHOUT. CONNECT FIRE SPRINKLER LINE TO EXISTING FIRE SYSTEM SERVICE LINE ON SITE WITHIN 100 FEET OF EXISTING BUILDING. VERIFY LOCATION AND COORDINATE INSTALLATION WITH UTNG FACILITY MANAGER.

24. CONNECT NEW SEWER LINE TO EXISTING SANITARY SEWER SERVICE LINE ON SITE WITHIN 100 FEET OF EXISTING BUILDING. VERIFY LOCATION AND COORDINATE INSTALLATION WITH UTNG FACILITY MANAGER.

25. PROVIDE MARKER TAPE, FILL AND COMPACTION OF UTILITY TRENCHES IN ACCORDANCE WITH THE SPECIFICATIONS. ALL UTILITY LINE EXCAVATIONS MUST BE OBSERVED BY A UTNG ENVIRONMENTAL REPRESENTATIVE. OBSERVATION MUST BE ARRANGED THROUGH THE UTNG PROJECT REPRESENTATIVE.

26. ALL EXISTING ELECTRICAL POWER SERVICE CONDUIT AND CONDUCTOR AND ALL EXISTING COMPRESSED AIR SERVICE LINES MOUNTED TO EXISTING INTERIOR COLUMNS SHALL BE REMOVED AND CAPPED IN COMPLIANCE WITH GOVERNING CODES AT THEIR SOURCE.

27. SEE MECHANICAL AND PLUMBING DRAWINGS AND DEMOLITION AND REMODELING NOTES FOR ADDITIONAL WORK REQUIREMENTS. COORDINATE ALL WORK WITH RELATED TRADES INCLUDING ELECTRICAL.

28. SEE ELECTRICAL DRAWINGS AND DEMOLITION AND REMODELING NOTES FOR ADDITIONAL WORK REQUIREMENTS. COORDINATE ALL WORK WITH RELATED TRADES.

29. REMOVE EXISTING OVERHEAD DOORS IN THEIR ENTIRETY WHERE SHOWN. INSTALL NEW OVERHEAD DOORS AS SHOWN AND SPECIFIED. REPAIR EXISTING MASONRY AND PLASTER JAMBS REFINISH TO MATCH ORIGINAL ADJACENT SURFACES.

LIST OF ALTERNATES

BASE BID SHALL INCLUDE ALL WORK COMPLETE AS SHOWN OR SPECIFIED IN THE CONSTRUCTION DOCUMENTS INCLUDING, BUT NOT LIMITED TO, THE WORK REQUIRED TO PREPARE FOR THE INSTALLATION OF EVERY ALTERNATE ITEM AS SHOWN OR REQUIRED AS FOLLOWS.

ALTERNATE 1 PROVIDE AND CONSTRUCT THE AIR COMPRESSOR BUILDING COMPLETE AS SHOWN AND SPECIFIED READY FOR INSTALLATION OF AIR COMPRESS ALTERNATE 3.

NOTE: ALL PLUMBING, MECHANICAL (HVAC) SYSTEMS AND EQUIPMENT AND ALL ELECTRICAL POWER SERVICES FOR THE AIR COMPRESSOR BUILDING, AS SHOWN ON THE DRAWINGS AND AS SPECIFIED, SHALL BE INCLUDED IN THE BASE BID COST. PIPING AND CONDUIT SHALL BE STUBBED AND CAPPED AT THE AIR COMPRESSOR LOCATION.

ALTERNATE 2 PROVIDE AND INSTALL THE DUST COLLECTION SYSTEM AS SHOWN AND SPECIFIED INCLUDING CONNECTION TO ALL REQUIRED UTILITY SERVICES.

NOTE: ALL PLUMBING, MECHANICAL (HVAC) SYSTEMS AND EQUIPMENT AND ALL ELECTRICAL POWER SERVICES FOR THE DUST COLLECTION SYSTEM, AS SHOWN ON THE DRAWINGS AND AS SPECIFIED, SHALL BE INCLUDED IN THE BASE BID COST.

ALTERNATE 3 PROVIDE AND INSTALL THE AIR COMPRESSOR AND AIR DISTRIBUTION PIPING SYSTEM AS SHOWN AND SPECIFIED INCLUDING CONNECTION TO ALL REQUIRED UTILITY SERVICES.

NOTE: ALL PLUMBING AND ALL ELECTRICAL POWER SERVICES FOR THE AIR COMPRESSOR AND AIR DISTRIBUTION PIPING SYSTEM, AS SHOWN ON THE DRAWINGS AND AS SPECIFIED, SHALL BE INCLUDED IN THE BASE BID COST.

ALTERNATE 4 CHANGE ALL EIGHT (8) REMAINING, EXISTING 6'–3" BY 7'–0' WINDOWS NOT INCLUDED FOR REPLACEMENT BY BASE BID WORK REQUIREMENTS. THESE WINDOWS SHALL HAVE MULLION CONFIGURATION MATCHING THE EXISTING WINDOWS. THIS WORK SHALL INCLUDE THE REPAIR AND/OR REPLACEMENT OF EXISTING WINDOW OPENING PERIMETER FINISHES WITH 8–INCH CMU UNITS TO MATCH ADJACENT SURFACES WITH SEAL AND FINISH TO PROVIDE A WEATHER–SEALED INSTALLATION. FIELD VERIFY EXACT SIZE OF WINDOW.

ALTERNATE 5 – PROVIDE AND INSTALL THE PAINT BOOTH AS SHOWN AND SPECIFIED INCLUDING CONNECTION TO ALL REQUIRED UTILITY SERVICES.
NOTE: ALL PLUMBING, MECHANICAL (HVAC) SYSTEMS AND EQUIPMENT AND ALL ELECTRICAL POWER SERVICES FOR THE PAINT BOOTH, AS SHOWN ON THE DRAWINGS AND AS SPECIFIED, SHALL BE INCLUDED IN THE BASE BID COST.

UTARNG TELECOMMUNICATIONS / DATA CABLING MANDATORY REQUIREMENTS:

REQUIRED CONTRACTOR TRAINING:
THE CONTRACTOR SHALL BE FULLY CONVERSANT AND CAPABLE IN THE CABLING OF LOW VOLTAGE APPLICATIONS SUCH AS, BUT NOT LIMITED TO DATA, VOICE AND IMAGING NETWORK SYSTEMS. THE CONTRACTOR SHALL AT A MINIMUM POSSES THE FOLLOWING QUALIFICATIONS"

PERSONNEL TRAINED AND CERTIFIED IN THE DESIGN OF THE SIEMON CABLING SYSTEM.

PERSONNEL TRAINED AND CERTIFIED TO INSTALL THE SIEMON CABLING SYSTEM.

THE DESIGNER AND INSTALLER SHALL SHOW PROOF OF CURRENT CERTIFICATION OF THE SIEMON CABLING SYSTEM VIA AN UPDATED CARD GIVEN AFTER ATTENDING THE 5 DAY COURSE OR A RE–CERTIFICATION CLASS GIVEN EVERY TWO YEARS.

PROVIDE REFERENCES OF THE TYPE OF INSTALLATION PROVIDED IN THIS SPECIFICATION.

PERSONNEL TRAINED AND CERTIFIED IN FIBER OPTIC CABLING, SPLICING, TERMINATION AND TESTING TECHNIQUES. PERSONNEL MUST HAVE EXPERIENCE USING A LIGHT METER AND OTDR.

PERSONNEL TRAINED THE INSTALLATION OF PATHWAYS AND SUPPORT FOR HOUSING HORIZONTAL AND BACKBONE CABLING.

SYSTEM WARRANTY
A TWENTY (20) YEAR WARRANTY AVAILABLE FOR THE CATEGORY STRUCTURED CABLING SYSTEM SHALL BE PROVIDED FOR AN END–TO–END CHANNEL MODEL INSTALLATION WHICH COVERS APPLICATIONS ASSURANCE, CABLE, CONNECTING HARDWARE AND THE LABOR COST FOR THE REPAIR OR REPLACEMENT THEREOF.

UTANG CONTACT MIKE HANSEN (801) 523–4118 FOR ADDITIONAL SPECIFIC INFORMATION.

L. K. SORENSEN ASSOCIATES, INC.
ARCHITECTS / PLANNERS / LANDSCAPE ARCHITECTS
3448 SOUTH MAIN STREET
SALT LAKE CITY, UTAH 84115
(801)478-0800 Fax (801)478-0816

CONSULTANTS
STRUCTURAL:
DUNN ASSOCIATES, INC.
MECHANICAL:
ADVANCED CONCEPTS ENGINEERINGS
ELECTRICAL:
SPECTRUM ENGINEERS

UTAH NATIONAL GUARD
Maintenance Shop Area Remodel
Building 1190
Camp W. G. Williams
Bluffdale, Utah

MARK	DATE	DESCRIPTION
	8/15/06	CONSTRUCTION DOCUMENTS
	5/24/06	100% SUBMITTAL

D.F.C.M. PROJECT NO:	06012480
ARCH. PROJECT NO:	0611
CAD DWG FILE:	
DRAWN BY:	ajs
CHECKED BY:	lks
DESIGNED BY:	lks

COPYRIGHT:
THIS PRINT AND ALL INFORMATION HEREON IS SUBJECT TO COPYRIGHT LAWS AND IS THE PROPERTY OF THE STATE OF UTAH AND SHALL NOT BE USED ON ANY OTHER PROJECT WITHOUT WRITTEN PERMISSION OF THE STATE OF UTAH.

SHEET TITLE
LIST OF ALTERNATES / GENERAL DEMOLITION, REMODELING & RENOVATION NOTES / COMMUNICATION NOTES

AE001

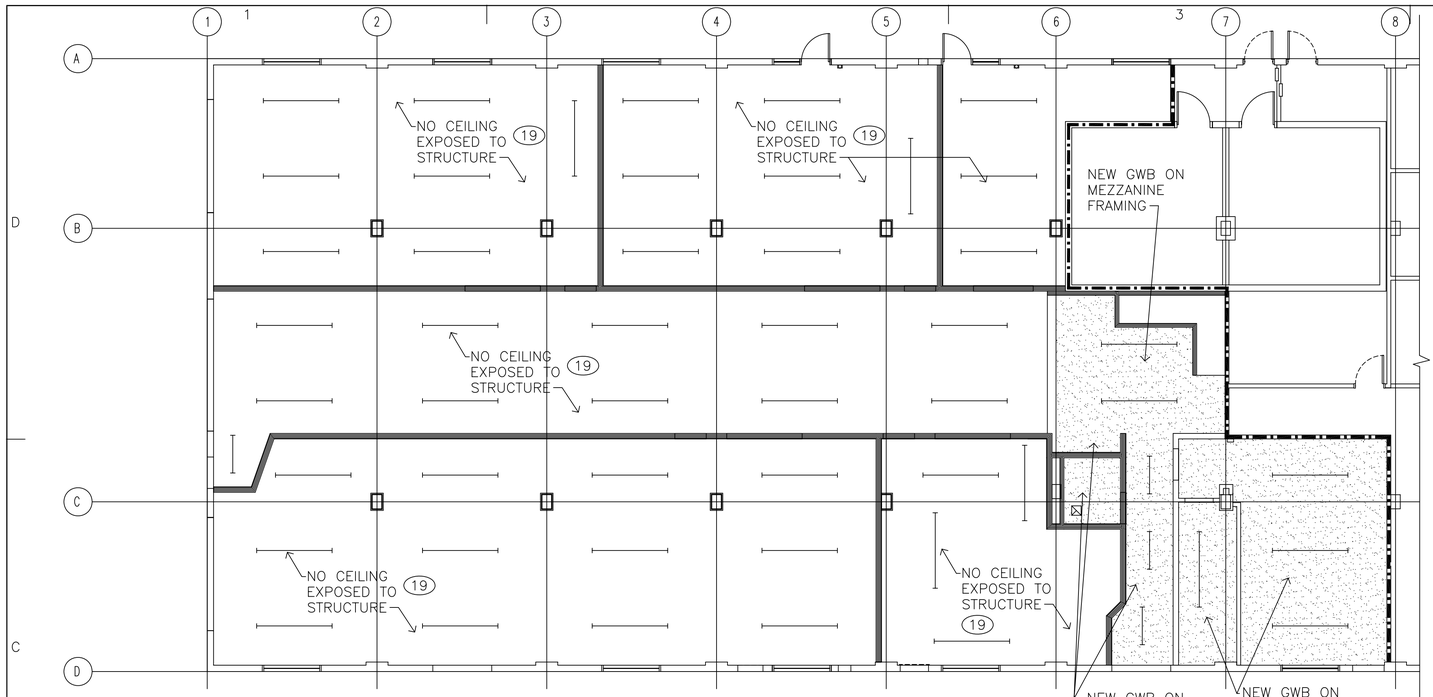

REFLECTED CEILING PLAN

SCALE: 1/8"=1'-0"

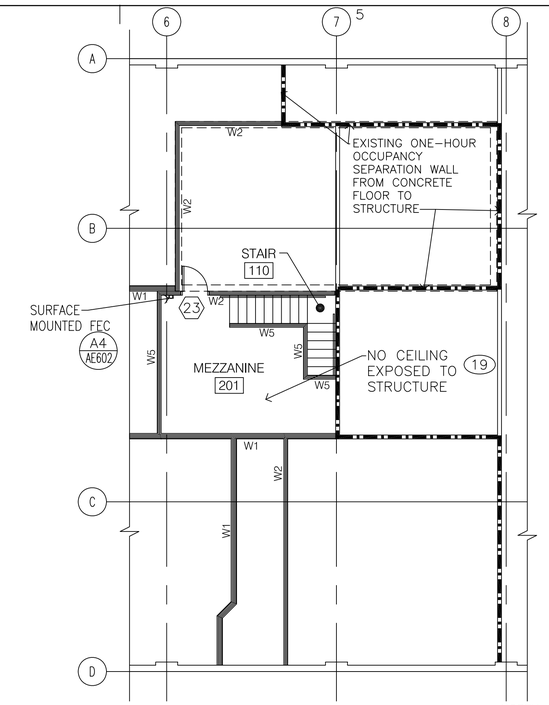

MEZZANINE FLOOR PLAN

SCALE: 1/8"=1'-0"

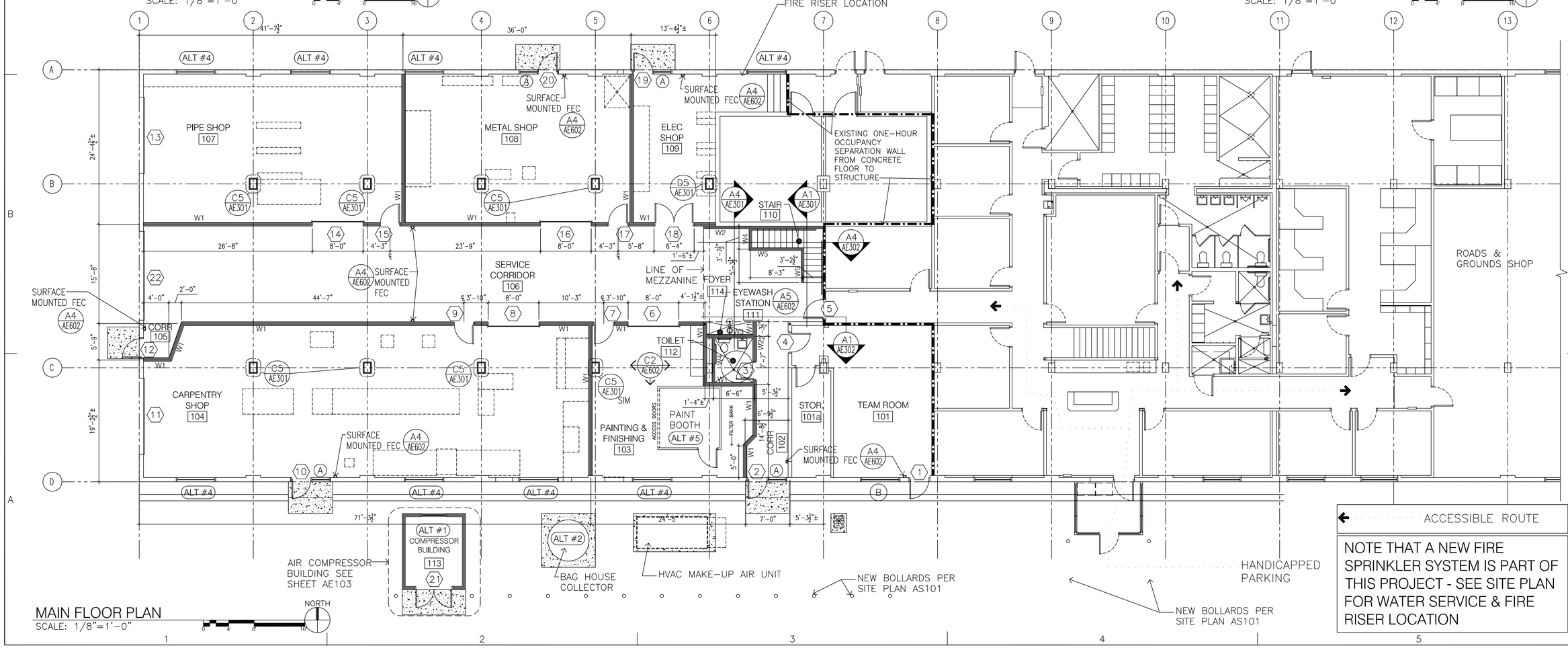

MAIN FLOOR PLAN

SCALE: 1/8"=1'-0"

NOTE THAT A NEW FIRE SPRINKLER SYSTEM IS PART OF THIS PROJECT - SEE SITE PLAN FOR WATER SERVICE & FIRE RISER LOCATION

L. K. SORENSEN ASSOCIATES, INC.
ARCHITECTS / PLANNERS / LANDSCAPE ARCHITECTS
3448 SOUTH MAIN STREET
SALT LAKE CITY, UTAH 84115
(801)478-0800 Fax (801)478-0816

CONSULTANTS

STRUCTURAL:
DUNN ASSOCIATES, INC.

MECHANICAL:
ADVANCED CONCEPTS ENGINEERINGS

ELECTRICAL:
SPECTRUM ENGINEERS

UTAH NATIONAL GUARD

Maintenance Shop Area Remodel

Building 1190
Camp W. G. Williams
Bluffdale, Utah

MARK	DATE	DESCRIPTION
	8/15/06	CONSTRUCTION DOCUMENTS
	5/24/06	100% SUBMITTAL

D.F.C.M. PROJECT NO: 06012480
ARCH. PROJECT NO: 0611
CAD DWG FILE:
DRAWN BY: ajs
CHECKED BY: lks
DESIGNED BY: lks

COPYRIGHT:
THIS PRINT AND ALL INFORMATION HEREON IS SUBJECT TO COPYRIGHT LAWS AND IS THE PROPERTY OF THE STATE OF UTAH AND SHALL NOT BE USED ON ANY OTHER PROJECT WITHOUT WRITTEN PERMISSION OF THE STATE OF UTAH.

SHEET TITLE

FLOOR PLANS / RCP /

AE101

EQUIPMENT SCHEDULE

ITEM	DESCRIPTION	SIZE		ACTION	PLUMB	MECH	POWER
CARPENTRY SHOP							
CS1	RADIAL ARM SAW	38"x48"x35"	EQN1	OFCIM	EQN2	EQN3, EQN5	EQN4
CS2	SHAPER, w/ TABLE	40"x30"x44"	EQN1	OFCIM	EQN2	EQN3, EQN5	EQN4
CS3	JOINER, 12 INCH, w/ TABLE	96"x46"x44"	EQN1	OFCIM	EQN2	EQN3, EQN5	EQN4
CS4	BAND SAW, 36-INCH	24"x24"	EQN1	OFCIM	EQN2	EQN3, EQN5	EQN4
CS5	SCROLL SAW, 16 INCH, PORTABLE	24"x24"	EQN1	OFCIM	EQN2	EQN3, EQN5	EQN4
CS6	PLANER, 24 INCH	30"x44"x26"	EQN1	OFCIM	EQN2	EQN3, EQN5	EQN4
CS7	BELT SANDER, PORTABLE	66"x30"x40"	EQN1	OFCIM	EQN2	EQN3, EQN5	EQN4
CS8	TABLE SAW, 14 INCH BLADE	38"x48"x35"	EQN1	OFCIM	EQN2	EQN3, EQN5	EQN4
CS9	DRILL PRESS, 20 INCH HEAVY DUTY	16"x16"	EQN1	OFCIM	EQN2	EQN3, EQN5	EQN4
CS10	LAYOUT TABLE – PORTABLE	48"x96"	EQN1	OFOI	EQN2	EQN3, EQN5	EQN4
CS11	RADIAL ARM SAW TABLE	48"x120"	EQN1	OFOI	EQN2	EQN3, EQN5	EQN4
CS12	RADIAL ARM SAW TABLE	48"x120"	EQN1	OFOI	EQN2	EQN3, EQN5	EQN4
CS13	JOINER TABLE	16"x96"	EQN1	OFOI	EQN2	EQN3, EQN5	EQN4
CS14	SHAPER TABLE	30"x48"	EQN1	OFOI	EQN2	EQN3, EQN5	EQN4
CS15	SAW DUST COLLECTION SYSTEM, 7000 CFM	96"x96"	EQN1	CFCI	EQN2	EQN3, EQN5	EQN4
CS16	OUT-FEED AND LAYOUT TABLE FROM TABLE SAW	48"x240"	EQN1	OFOI	EQN2	EQN3, EQN5	EQN4
CS17	AIR COMPRESSOR	36"x60"	EQN1	CFCI	EQN2	EQN3, EQN5	EQN4
CS18	AIR-TOOL OPERATION SYSTEM OUTLET	SEE MECH FOR LOCATION		CFCI	EQN2	EQN3, EQN5, EQ6	EQN4
CS19	AIR COMPRESSOR BUILDING	SEE SHEET AE103		CFCI			
PAINTING AND FINISHING							
PF1	PAINT STORAGE LOCKER	24"x96"	EQN1	OFOI			EQN4
PF2	PRE-FAB PAINT SPRAY BOOTH w/ DOORS	10'x10'x10' HT	EQN1	CFCI	EQN2	EQN3, EQN5	EQN4
PF3	PAINT BOOTH MAKE-UP AIR UNIT	SEE MECHANICAL		CFCI	EQN2	EQN3, EQN5	EQN4
PF4	EYE WASH AND EMERGENCY SHOWER	BUILT-IN – SEE PLUMB		CFCI	EQN2	EQN3, EQN5	EQN4

ITEM	DESCRIPTION	SIZE		ACTION	PLUMB	MECH	POWER
PIPE SHOP							
PS1	PIPE THREADER, 4"			OFCIM	EQN2	EQN3, EQN5	EQN4
PS2	PIPE THREADER, 2"			OFCIM	EQN2	EQN3, EQN5	EQN4
PS3	PIPE CUTTING MACHINE			OFCI	EQN2	EQN3, EQN5	EQN4
PS4	LAYOUT TABLE	48" x 120"	EQN1	OFOI	EQN2	EQN3, EQN5	EQN4
PS5	PIPE STORAGE RACKS	40' LENGTH	EQN1	OFOI	EQN2	EQN3, EQN5	EQN4
METAL SHOP							
MS1	HORIZONTAL BREAK, 8' FINGER TYPE	120" x 30"	EQN1	OFCIM	EQN2	EQN3, EQN5	EQN4
MS2	VERTICAL BREAK, 4'	72" x 24"	EQN1	OFCIM	EQN2	EQN3, EQN5	EQN4
MS3	SHEAR, 4'	60" x 30"	EQN1	OFCIM	EQN2	EQN3, EQN5	EQN4
MS4	BAND SAW, 18"	24" x 24"	EQN1	OFCIM	EQN2	EQN3, EQN5	EQN4
MS5	LAYOUT TABLE	48" x 144"	EQN1	OFOI	EQN2	EQN3, EQN5	EQN4
MS6	DRILL PRESS, 20" HEAVY DUTY	16" x 18"	EQN1	OFCIM	EQN2	EQN3, EQN5	EQN4
MS7	WELDER, ARC TYPE	24" x 30"	EQN1	OFCI	EQN2	EQN3, EQN5	EQN4
MS8	WELDER, WIRE FEED TYPE	18" x 30"	EQN1	OFOI	EQN2	EQN3, EQN5	EQN4
MS9	WELDING TABLE AND HOOD	48" x 60"	EQN1	CFCI	EQN2	EQN3, EQN5	EQN4
MS10	METAL STORAGE RACKS			OFOI			
MS11	ACETYLENE TORCH AND TANKS	24" x 30"	EQN1	OFOI	EQN2	EQN3, EQN5	EQN4
ELECTRICAL SHOP							
ES1	STORAGE SHELVING	12" x 36" x 84"		OFCIM			
ES2	WORK BENCH	30" x 120"		OFOI			

EQUIPMENT SCHEDULE NOTES

EQN1 EQUIPMENT DIMENSIONS GIVEN ARE APPROXIMATE AND ARE PROVIDED TO ASSIST THE CONTRACTOR IN EQUIPMENT LOCATION AND PLACEMENT OF SERVICES. NOTE THAT FIELD AND/OR MANUFACTURER VERIFICATION OF ACTUAL EQUIPMENT SIZES BY CONTRACTOR IS REQUIRED.

EQN2 SEE PLUMBING DRAWINGS AND SPECIFICATIONS FOR ALL PLUMBING REQUIREMENTS FOR EACH SPECIFIC EQUIPMENT ITEM.

EQN3 SEE MECHANICAL DRAWINGS AND SPECIFICATIONS FOR ALL HEATING, VENTILATION, AIR CONDITIONING OR OTHER MECHANICAL SYSTEM RELATED REQUIREMENTS FOR EACH SPECIFIC EQUIPMENT ITEM.

EQN4 SEE ELECTRICAL DRAWINGS AND SPECIFICATIONS FOR ALL ELECTRICAL AND CONTROL SYSTEM REQUIREMENTS FOR EACH SPECIFIC EQUIPMENT ITEM.

EQN5 NOTE THAT COORDINATION IS REQUIRED BETWEEN EQUIPMENT INSTALLATION, PLUMBING, MECHANICAL AND ELECTRICAL TRADES FOR ALL EQUIPMENT ITEMS AND UTILITY SYSTEMS.

EQN6 SEE MECHANICAL AIR PIPING DRAWINGS FOR LOCATION.

ACTION COLUMN LEGEND AND NOTES:
CFCI CONTRACTOR FURNISHED AND CONTRACTOR INSTALLED
OFCI OWNER FURNISHED AND CONTRACTOR INSTALLED
OFCIM OWNER FURNISHED AND CONTRACTOR INSTALLED WITH THE ITEM BEING LOCATED FROM ANOTHER LOCATION ON THE CAMP W.G. WILLIAMS CAMPUS
OFOI OWNER FURNISHED AND OWNER INSTALLED

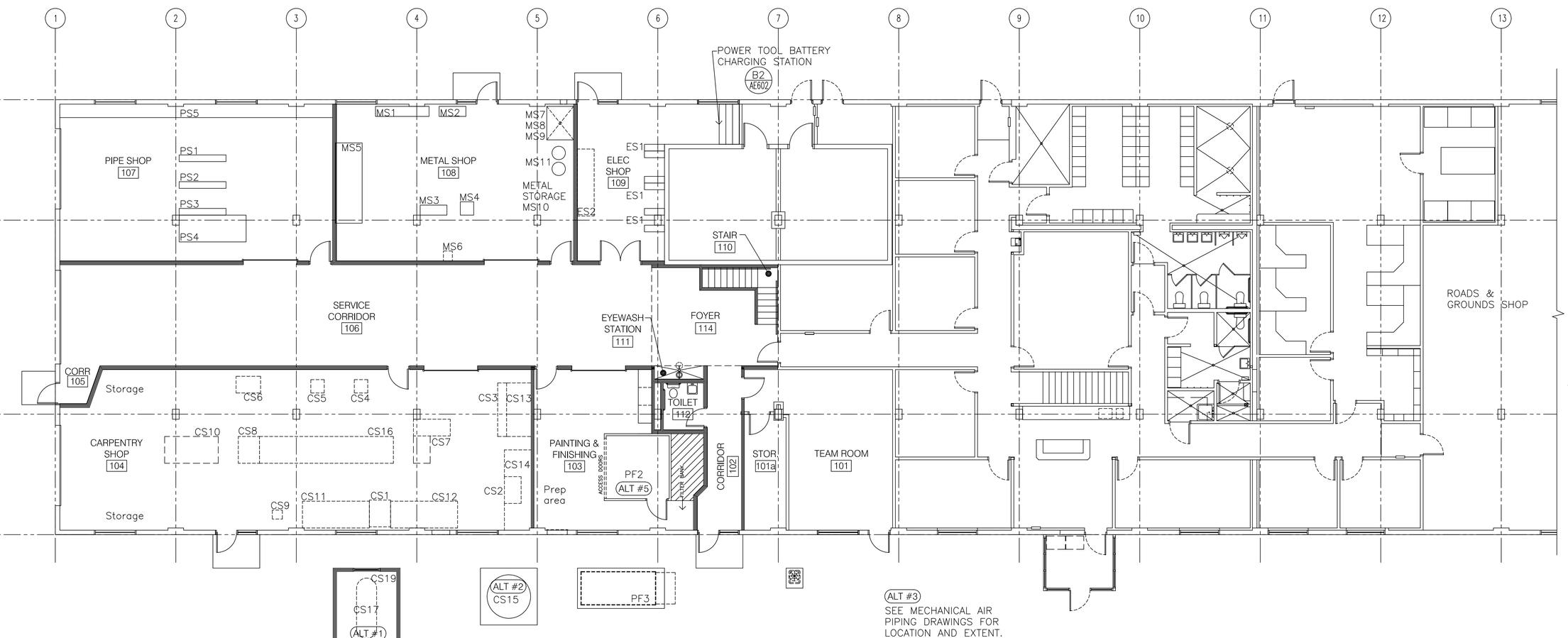

EQUIPMENT FLOOR PLAN
SCALE: 1/8"=1'-0"

L. K. SORENSEN ASSOCIATES, INC.
ARCHITECTS / PLANNERS / LANDSCAPE ARCHITECTS
3448 SOUTH MAIN STREET
SALT LAKE CITY, UTAH 84115
(801)478-0800 Fax (801)478-0816

CONSULTANTS
STRUCTURAL:
DUNN ASSOCIATES, INC.
MECHANICAL:
ADVANCED CONCEPTS ENGINEERINGS
ELECTRICAL:
SPECTRUM ENGINEERS

UTAH NATIONAL GUARD
Maintenance Shop Area Remodel
Building 1190
Camp W. G. Williams
Bluffdale, Utah

MARK	DATE	DESCRIPTION
	8/15/06	CONSTRUCTION DOCUMENTS
	5/24/06	100% SUBMITTAL

D.F.C.M. PROJECT NO: 06012480
ARCH. PROJECT NO: 0611
CAD DWG FILE:
DRAWN BY: ajs
CHECKED BY: lks
DESIGNED BY: lks

COPYRIGHT:
THIS PRINT AND ALL INFORMATION HEREON IS SUBJECT TO COPYRIGHT LAWS AND IS THE PROPERTY OF THE STATE OF UTAH AND SHALL NOT BE USED ON ANY OTHER PROJECT WITHOUT WRITTEN PERMISSION OF THE STATE OF UTAH.

SHEET TITLE
EQUIPMENT FLOOR PLAN / SCHEDULE

AE102

NOTE:
FIELD CONSTRUCTED OR PREFABRICATED STEEL BUILDING PER CONTRACTOR'S OPTION

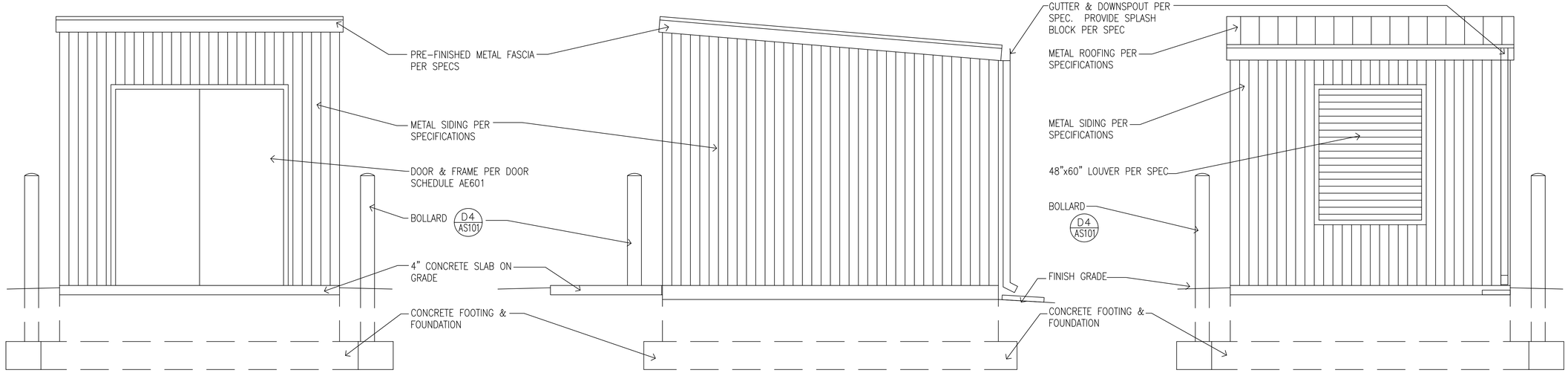

SOUTH ELEVATION
SCALE: 1/2"=1'-0"

EAST ELEVATION (WEST ELEVATION OPP)
SCALE: 1/2"=1'-0"

NORTH ELEVATION
SCALE: 1/2"=1'-0"

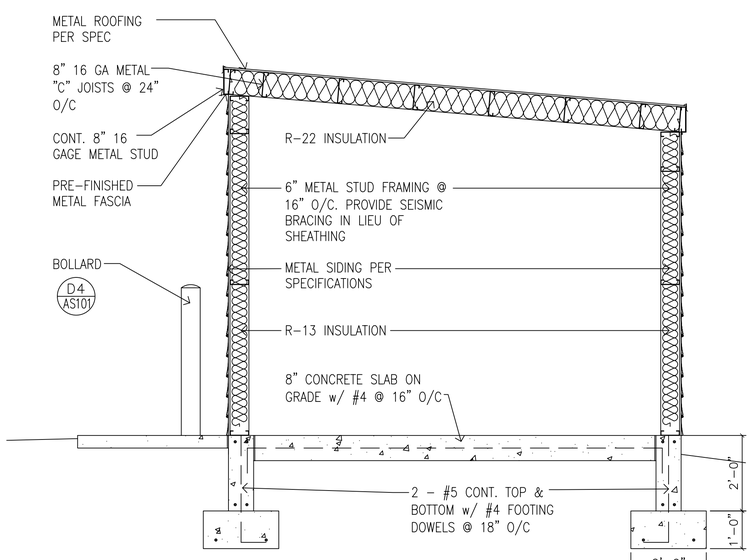

A1 SECTION
SCALE: 1/2"=1'-0"

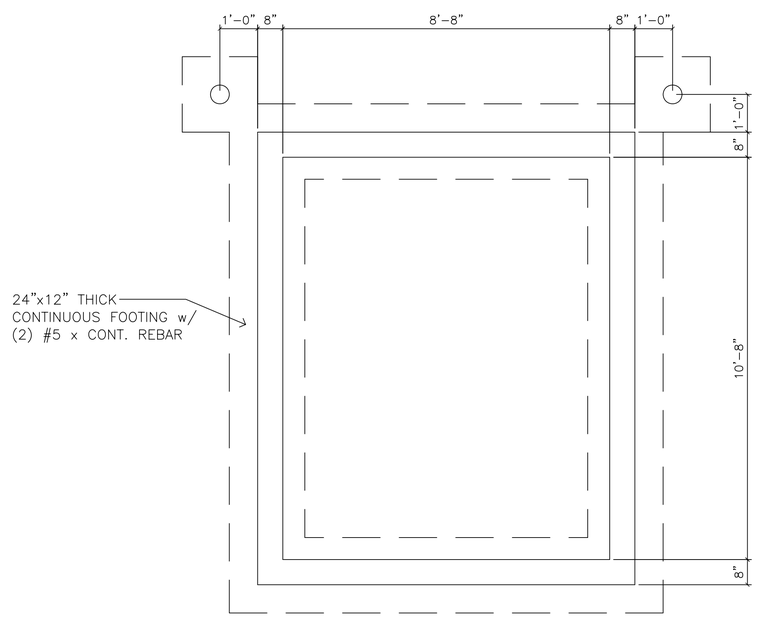

FTG & FNDTN PLAN
SCALE: 1/2"=1'-0"

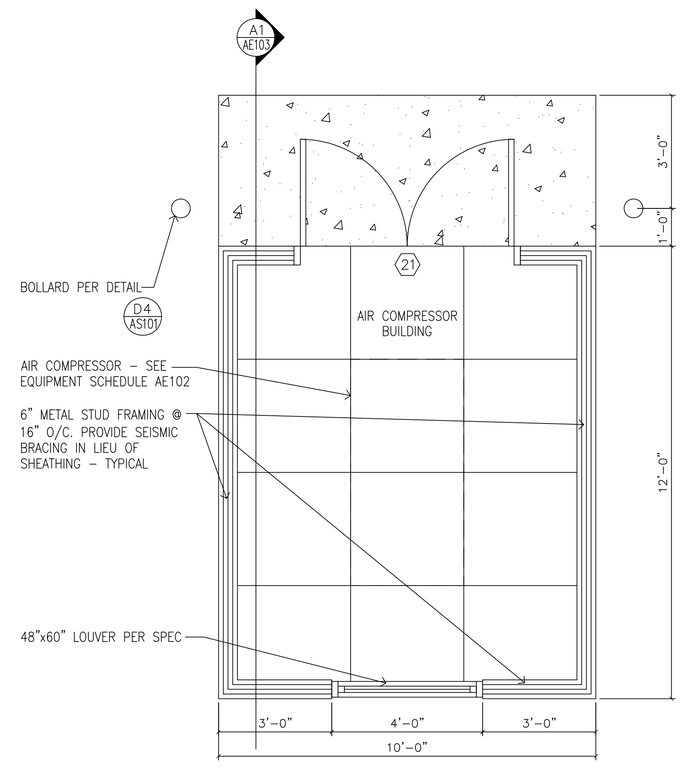

FLOOR PLAN (ALT #1)
SCALE: 1/2"=1'-0"

L. K. SORENSEN ASSOCIATES, INC.
ARCHITECTS / PLANNERS / LANDSCAPE ARCHITECTS
3448 SOUTH MAIN STREET
SALT LAKE CITY, UTAH 84115
(801)478-0800 Fax (801)478-0816

CONSULTANTS
STRUCTURAL:
DUNN ASSOCIATES, INC.
MECHANICAL:
ADVANCED CONCEPTS ENGINEERINGS
ELECTRICAL:
SPECTRUM ENGINEERS

UTAH NATIONAL GUARD
Maintenance Shop Area Remodel
Building 1190
Camp W. G. Williams
Bluffdale, Utah

MARK	DATE	DESCRIPTION
	8/15/06	CONSTRUCTION DOCUMENTS
	5/24/06	100% SUBMITTAL

D.F.C.M. PROJECT NO: 06012480
ARCH. PROJECT NO: 0611
CAD DWG FILE:
DRAWN BY: ajs
CHECKED BY: lks
DESIGNED BY: lks
COPYRIGHT:
THIS PRINT AND ALL INFORMATION HEREON IS SUBJECT TO COPYRIGHT LAWS AND IS THE PROPERTY OF THE STATE OF UTAH AND SHALL NOT BE USED ON ANY OTHER PROJECT WITHOUT WRITTEN PERMISSION OF THE STATE OF UTAH.

SHEET TITLE
AIR COMPRESSOR BUILDING PLANS

AE103

NOTE:
ALL ROOFING REPAIRS SHALL BE MADE BY LICENSED ROOFING CONTRACTOR

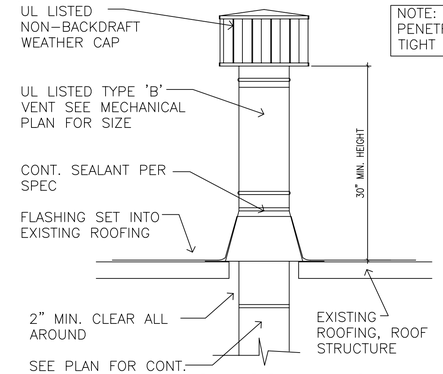

D4 FLUE THROUGH ROOF - TYPICAL
NO SCALE

NOTE: SEAL ALL PENETRATIONS WEATHER TIGHT

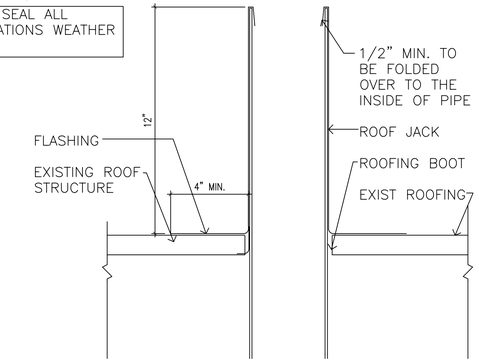

D5 ROOF JACK - TYPICAL
NO SCALE

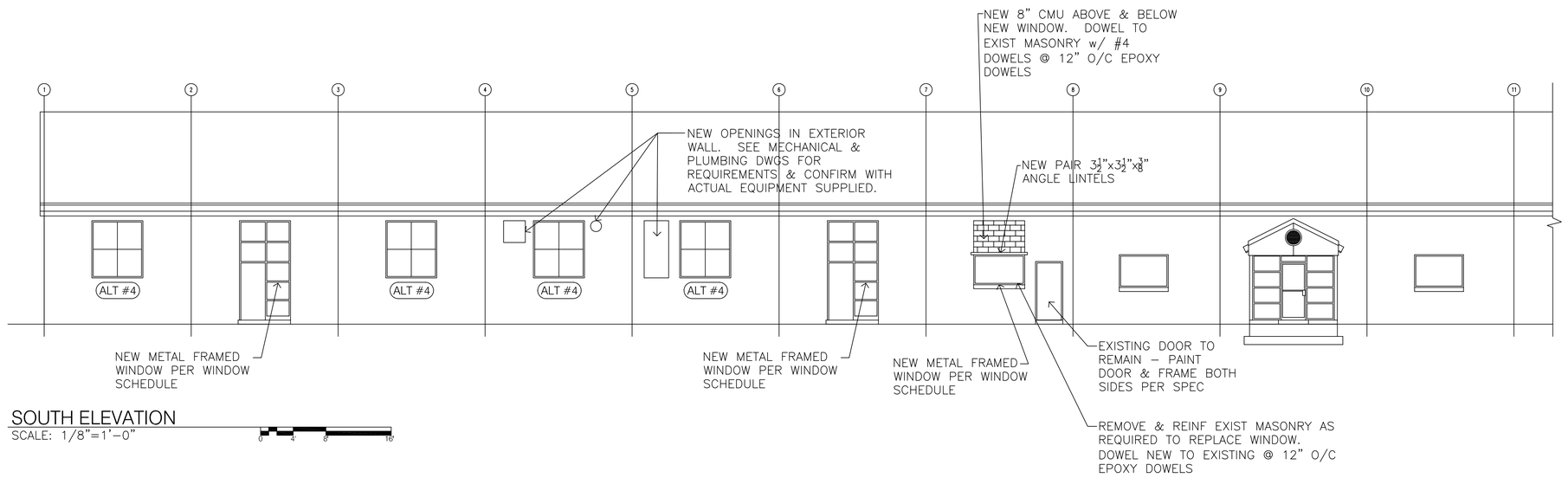

SOUTH ELEVATION
SCALE: 1/8"=1'-0"

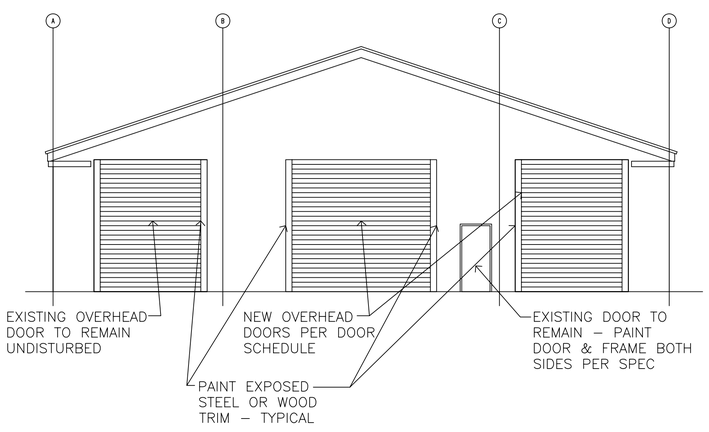

WEST ELEVATION
SCALE: 1/8"=1'-0"

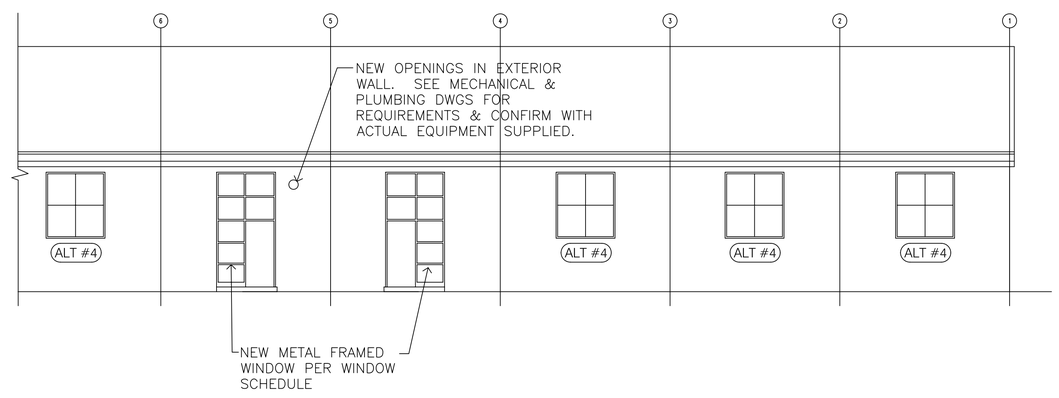

NORTH ELEVATION
SCALE: 1/8"=1'-0"

L. K. SORENSEN ASSOCIATES, INC.
ARCHITECTS / PLANNERS / LANDSCAPE ARCHITECTS
3448 SOUTH MAIN STREET
SALT LAKE CITY, UTAH 84115
(801)478-0800 Fax (801)478-0816

CONSULTANTS
STRUCTURAL:
DUNN ASSOCIATES, INC.
MECHANICAL:
ADVANCED CONCEPTS ENGINEERINGS
ELECTRICAL:
SPECTRUM ENGINEERS

UTAH NATIONAL GUARD
Maintenance Shop Area Remodel
Building 1190
Camp W. G. Williams
Bluffdale, Utah

MARK	DATE	DESCRIPTION
	8/15/06	CONSTRUCTION DOCUMENTS
	5/24/06	100% SUBMITTAL

D.F.C.M. PROJECT NO: 06012480
ARCH. PROJECT NO: 0611
CAD DWG FILE:
DRAWN BY: ajs
CHECKED BY: lks
DESIGNED BY: lks

COPYRIGHT:
THIS PRINT AND ALL INFORMATION HEREON IS SUBJECT TO COPYRIGHT LAWS AND IS THE PROPERTY OF THE STATE OF UTAH AND SHALL NOT BE USED ON ANY OTHER PROJECT WITHOUT WRITTEN PERMISSION OF THE STATE OF UTAH.

SHEET TITLE
EXTERIOR ELEVATIONS / DETAILS

AE201

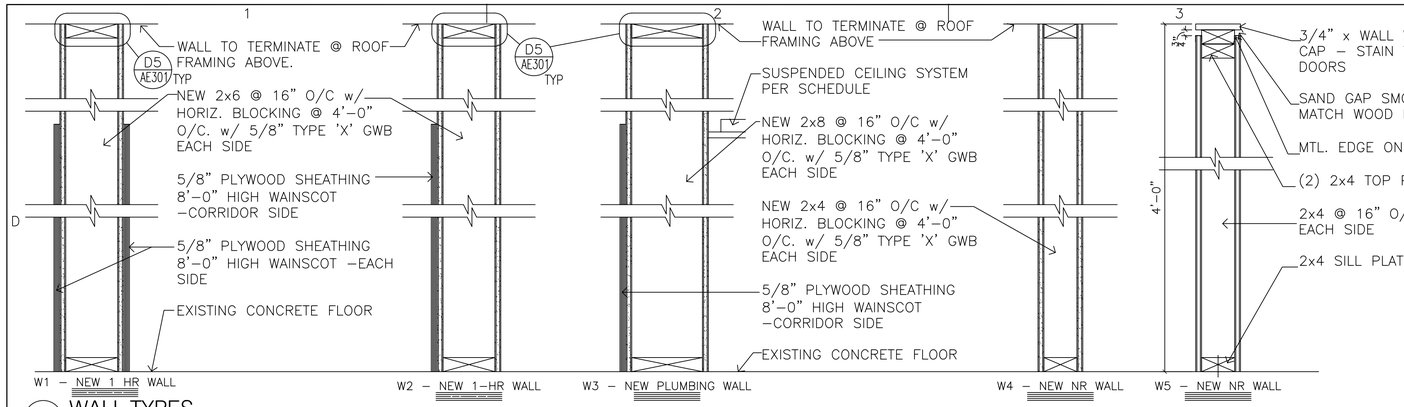

D1 WALL TYPES
SCALE: 1-1/2"=1'-0"

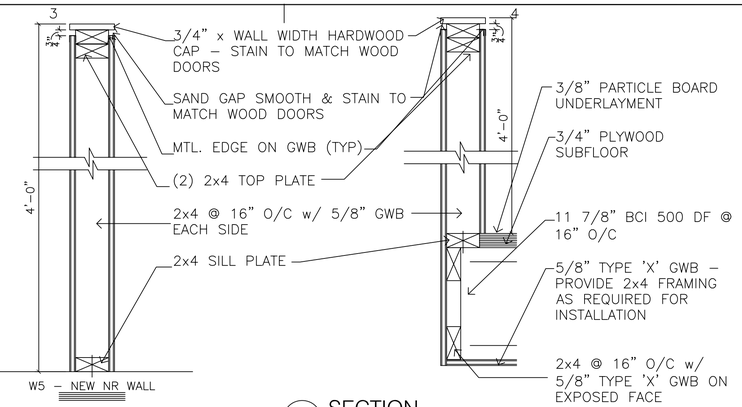

D4 SECTION
SCALE: 1-1/2"=1'-0"

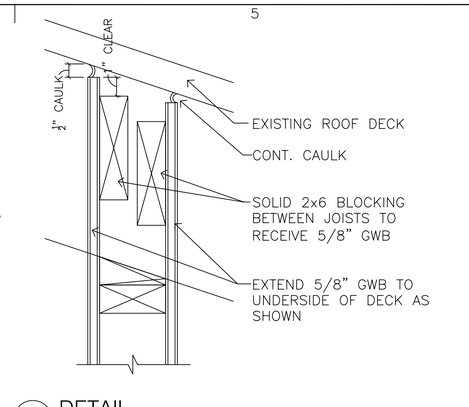

D5 DETAIL
SCALE: 3"=1'-0"

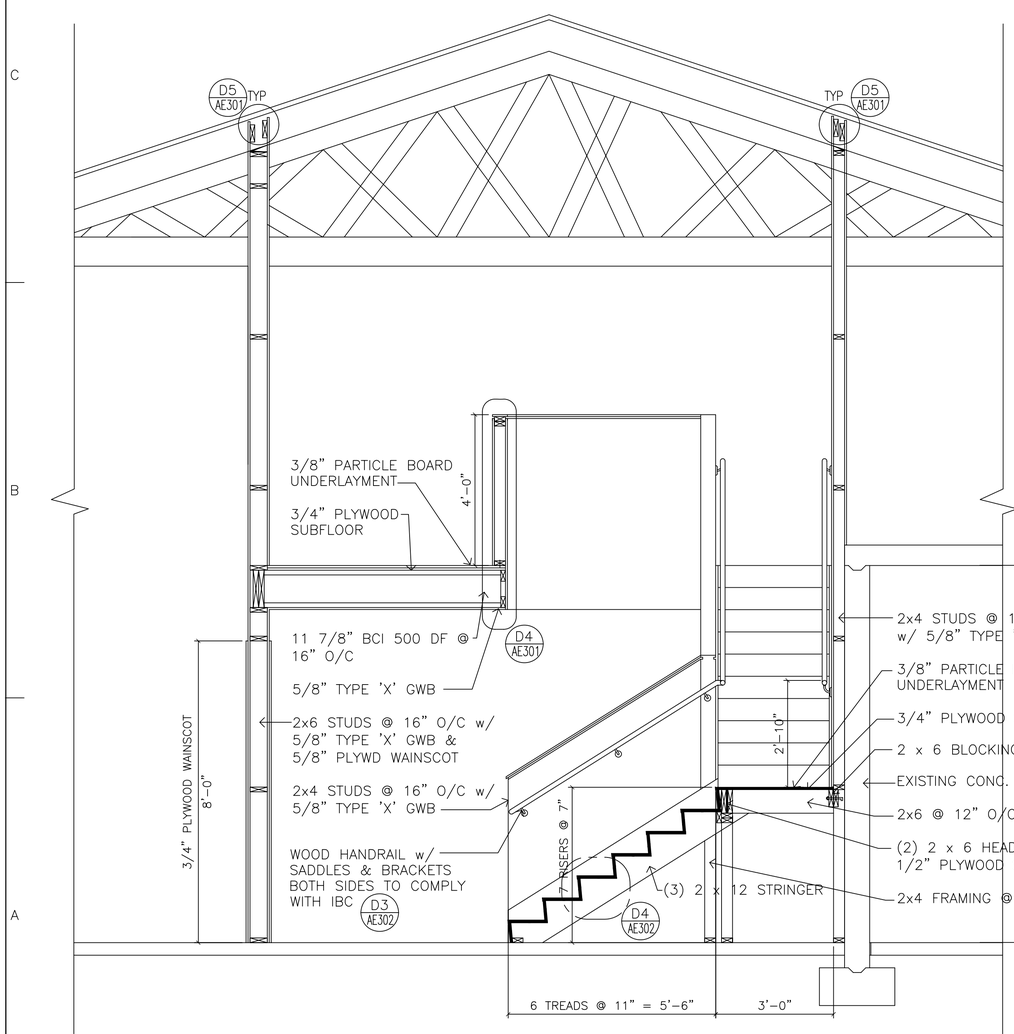

A1 SECTION
SCALE: 1/2"=1'-0"

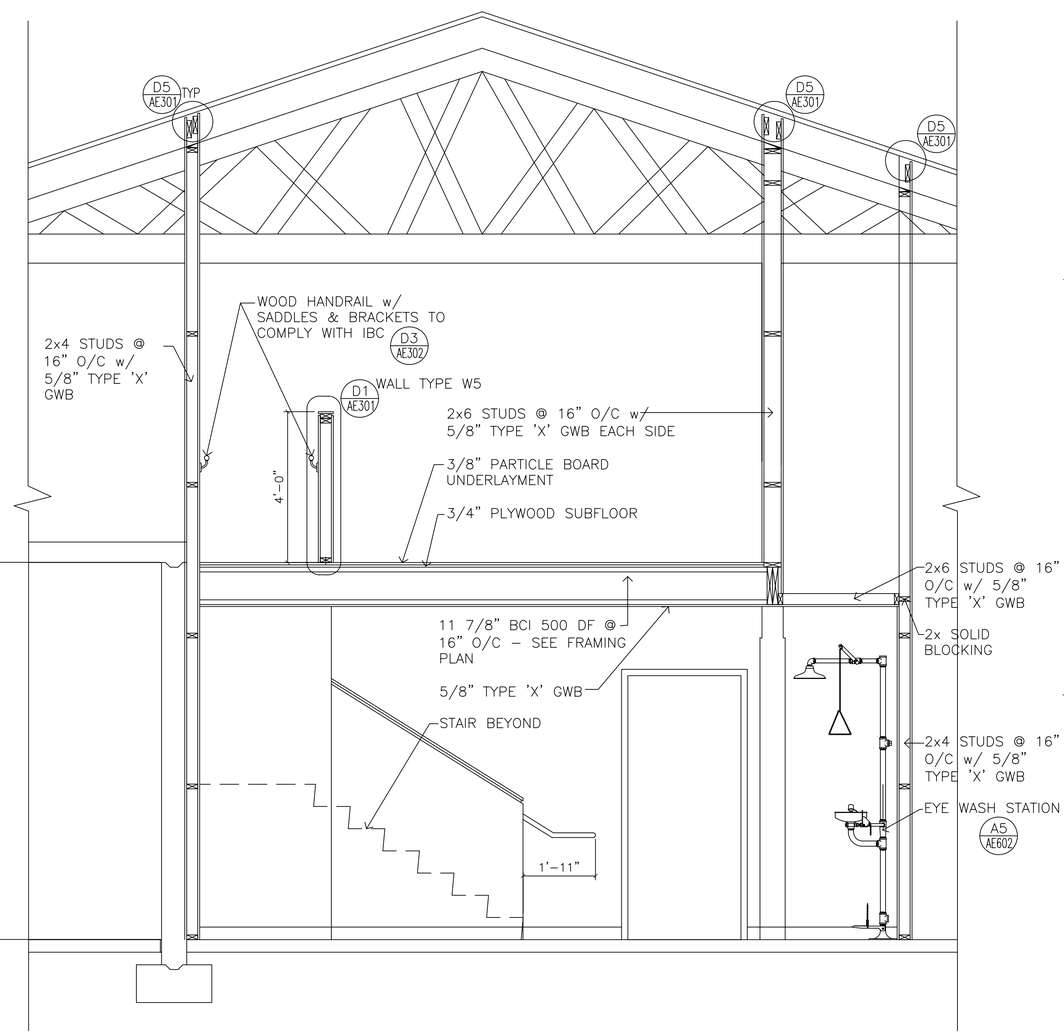

A4 SECTION
SCALE: 1/2"=1'-0"

L. K. SORENSEN ASSOCIATES, INC.
ARCHITECTS / PLANNERS / LANDSCAPE ARCHITECTS
3448 SOUTH MAIN STREET
SALT LAKE CITY, UTAH 84115
(801)478-0800 Fax (801)478-0816

CONSULTANTS

STRUCTURAL:
DUNN ASSOCIATES, INC.

MECHANICAL:
ADVANCED CONCEPTS ENGINEERINGS

ELECTRICAL:
SPECTRUM ENGINEERS

UTAH NATIONAL GUARD

Maintenance Shop Area Remodel

Building 1190
Camp W. G. Williams
Bluffdale, Utah

MARK	DATE	DESCRIPTION
	8/15/06	CONSTRUCTION DOCUMENTS
	5/24/06	100% SUBMITTAL

D.F.C.M. PROJECT NO:	06012480
ARCH. PROJECT NO:	0611
CAD DWG FILE:	
DRAWN BY:	ajs
CHECKED BY:	lks
DESIGNED BY:	lks

COPYRIGHT:
THIS PRINT AND ALL INFORMATION HEREON IS SUBJECT TO COPYRIGHT LAWS AND IS THE PROPERTY OF THE STATE OF UTAH AND SHALL NOT BE USED ON ANY OTHER PROJECT WITHOUT WRITTEN PERMISSION OF THE STATE OF UTAH.

SHEET TITLE

SECTIONS / DETAILS

AE301

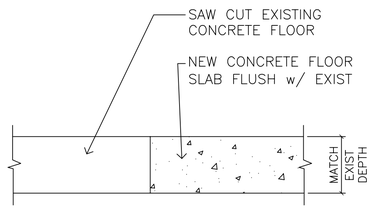

D2 DETAIL
SCALE: 1-1/2"=1'-0"

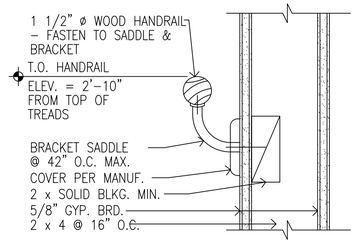

D3 DETAIL
SCALE: 3"=1'-0"

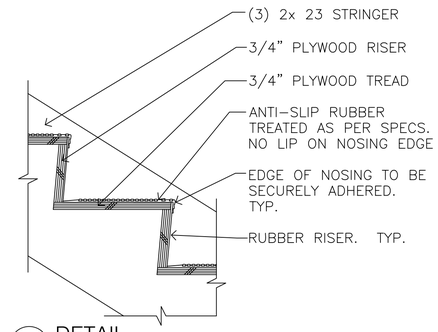

D4 DETAIL
SCALE: 1-1/2"=1'-0"

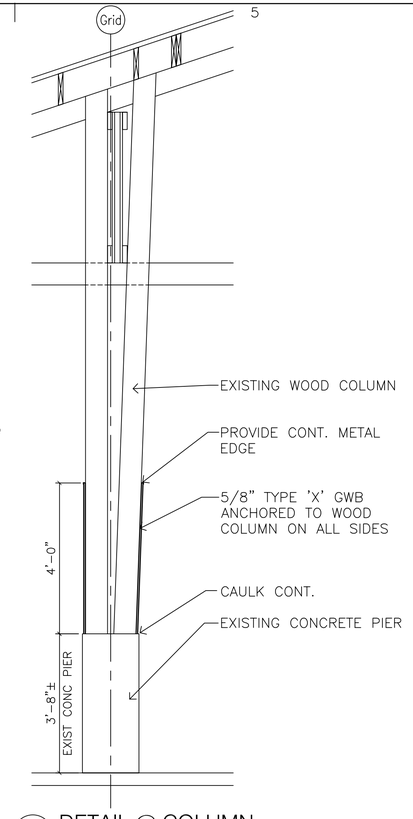

C5 DETAIL @ COLUMN
SCALE: 1/2"=1'-0"

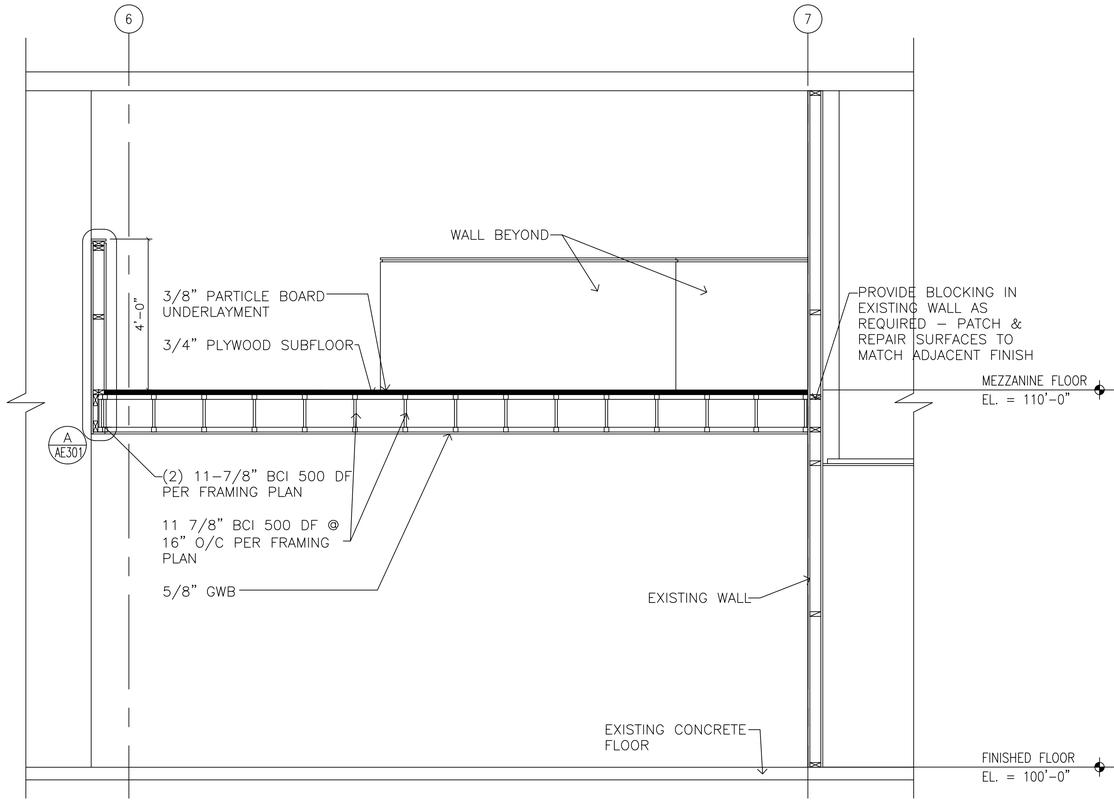

A1 SECTION
SCALE: 1/2"=1'-0"

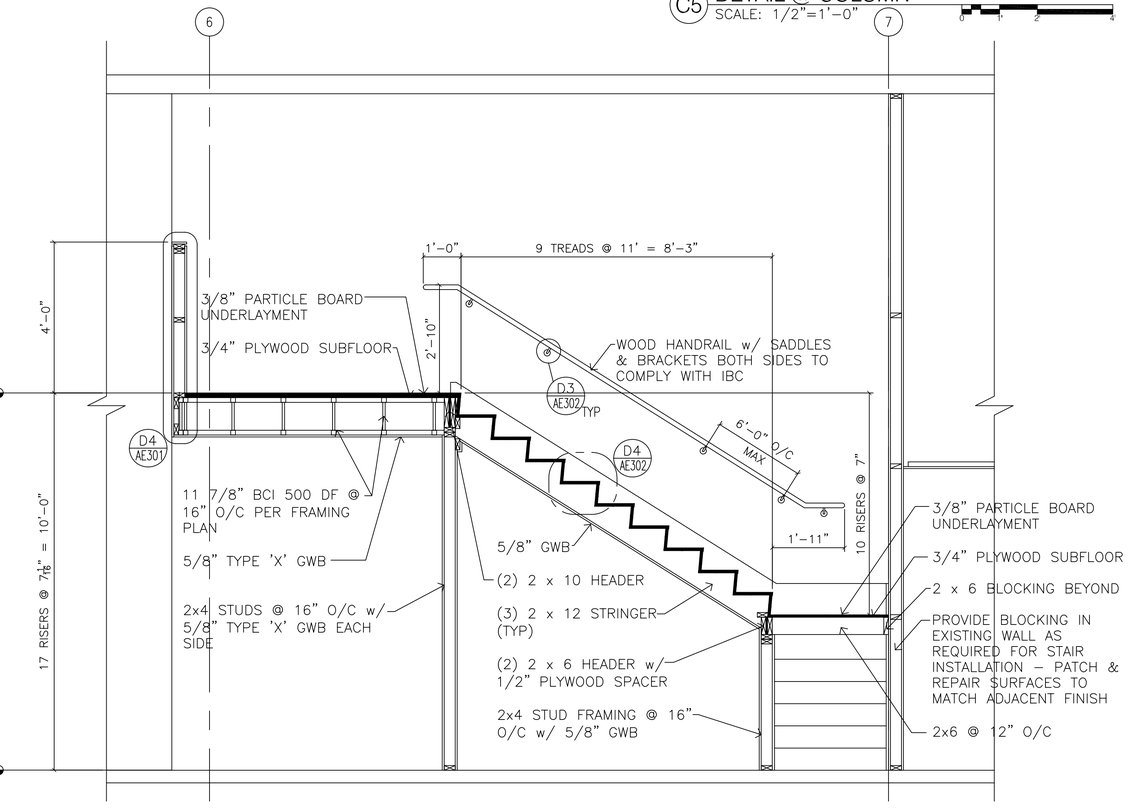

A4 SECTION
SCALE: 1/2"=1'-0"

L. K. SORENSEN ASSOCIATES, INC.
ARCHITECTS / PLANNERS / LANDSCAPE ARCHITECTS
3448 SOUTH MAIN STREET
SALT LAKE CITY, UTAH 84115
(801)478-0800 Fax (801)478-0816

CONSULTANTS

STRUCTURAL:
DUNN ASSOCIATES, INC.

MECHANICAL:
ADVANCED CONCEPTS ENGINEERINGS

ELECTRICAL:
SPECTRUM ENGINEERS

UTAH NATIONAL GUARD

Maintenance Shop Area Remodel

Building 1190
Camp W. G. Williams
Bluffdale, Utah

MARK	DATE	DESCRIPTION
	8/15/06	CONSTRUCTION DOCUMENTS
	5/24/06	100% SUBMITTAL

D.F.C.M. PROJECT NO: 06012480
ARCH. PROJECT NO: 0611
CAD DWG FILE:
DRAWN BY: ajs
CHECKED BY: lks
DESIGNED BY: lks

COPYRIGHT:
THIS PRINT AND ALL INFORMATION HEREON IS SUBJECT TO COPYRIGHT LAWS AND IS THE PROPERTY OF THE STATE OF UTAH AND SHALL NOT BE USED ON ANY OTHER PROJECT WITHOUT WRITTEN PERMISSION OF THE STATE OF UTAH.

SHEET TITLE

SECTIONS / DETAILS

AE302

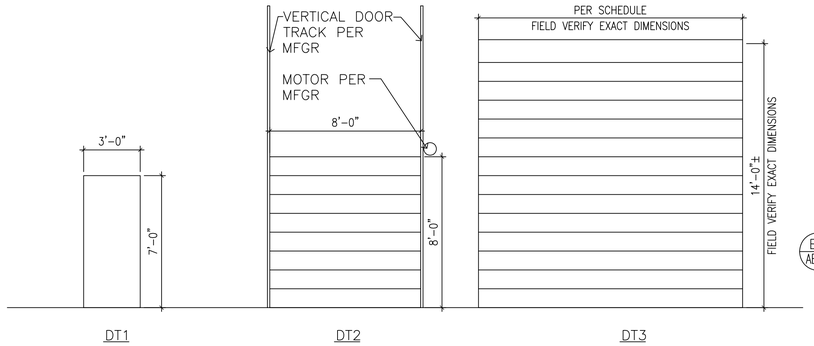

DOOR TYPES
SCALE: 1/4"=1'-0"

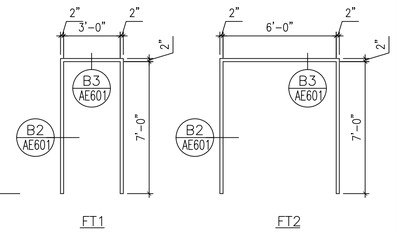

FRAME TYPES
SCALE: 1/4"=1'-0"

DOOR & FRAME SCHEDULE

DOOR No.	NEW OR EXIST.	ROOM NAME	DOOR TYPE	DOOR WIDTH	DOOR HEIGHT	DOOR THICK.	DOOR MAT'L.	FRAME TYPE	FRAME MAT'L.	FRAME DETAILS HEAD	FRAME DETAILS JAMB	FRAME DETAILS THRESH	HDWARE GROUP	LABEL	REMARKS
1	EXIST	TEAM ROOM #101													DN1
2	NEW	CORRIDOR #102	DT1	3'-0"	7'-0"	1 3/4"	MTL	FT1	MTL	B4	B4	A4	2	–	
3	NEW	TOILET #112	DT1	3'-0"	7'-0"	1 3/4"	MTL	FT1	MTL	B3	B2	C2	5	20 MIN	
4	NEW	TEAM ROOM #101	DT1	3'-0"	7'-0"	1 3/4"	MTL	FT1	MTL	B3	B2	–	3	20 MIN	
5	EXIST	SERVICE CORRIDOR #106													DN1
6	NEW	PAINTING & FINISHING #103	DT2	8'-0"	8'-0"	–	MTL			A2	A3	–			SECTIONAL OVERHEAD
7	NEW	PAINTING & FINISHING #103	DT1	3'-0"	7'-0"	1 3/4"	MTL	FT1	MTL	B3	B2	–	3	20 MIN	
8	NEW	CARPENTRY SHOP #104	DT2	8'-0"	8'-0"	–	MTL			A2	A3	–			SECTIONAL OVERHEAD
9	NEW	CARPENTRY SHOP #104	DT1	3'-0"	7'-0"	1 3/4"	MTL	FT1	MTL	B3	B2	–	3	20 MIN	
10	NEW	CARPENTRY SHOP #104	DT1	3'-0"	7'-0"	1 3/4"	MTL		MTL	B4	B4	A4	2	–	
11	NEW	CARPENTRY SHOP #104	DT3	12'-0"	14'-0"	–	MTL			A2	A3	–			
12	EXIST	CORRIDOR #105													DN1
13	EXIST	PIPE SHOP #107													DN1
14	NEW	PIPE SHOP #107	DT2	8'-0"	8'-0"	–	MTL			A2	A3	–			SECTIONAL OVERHEAD
15	NEW	PIPE SHOP #107	DT1	3'-0"	7'-0"	1 3/4"	MTL	FT1	MTL	B3	B2	–	3	20 MIN	
16	NEW	METAL SHOP #106	DT2	8'-0"	8'-0"	–	MTL			A2	A3	–			SECTIONAL OVERHEAD
17	NEW	METAL SHOP #106	DT1	3'-0"	7'-0"	1 3/4"	MTL	FT1	MTL	B3	B2	–	3	20 MIN	
18	NEW	ELEC SHOP #109	DT1	PR 3'-0"	7'-0"	1 3/4"	MTL	FT2	MTL	B3	B2	–	4	20 MIN	
19	NEW	ELEC SHOP #109	DT1	3'-0"	7'-0"	1 3/4"	MTL		MTL	B4	B4	A4	2	–	
20	NEW	METAL SHOP #106	DT1	3'-0"	7'-0"	1 3/4"	MTL		MTL	B4	B4	A4	2	–	
21	NEW	AIR COMPRESSOR BUILDING	DT1	PR 3'-0"	7'-0"	1 3/4"	MTL	FT2	MTL	C1	C1	–	2	–	
22	NEW	SERVICE CORRIDOR #106	DT3	14'-0"	14'-0"	–	MTL			A2	A3	–			
23	NEW	MEZZANINE #201	DT1	3'-0"	7'-0"	1 3/4"	MTL	FT1	MTL	B3	B2	–	3	20 MIN	

DOOR NOTES:

DN1 EXISTING DOOR – PAINT PER SPECIFICATION – INTERIOR AND EXTERIOR SURFACES

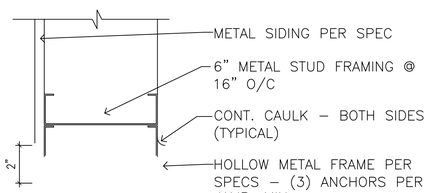

SCALE: 3"=1'-0"

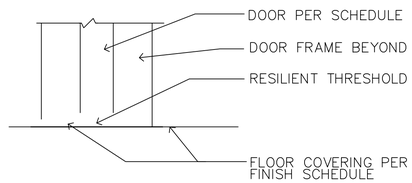

THRESHOLD
SCALE: 3"=1'-0"

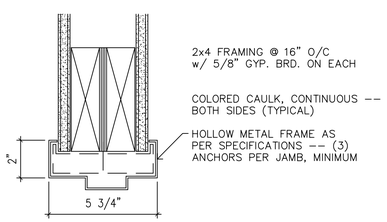

B1 HEAD
SCALE: 3"=1'-0"

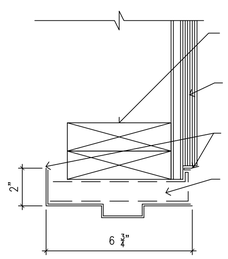

B2 JAMB
SCALE: 3"=1'-0"

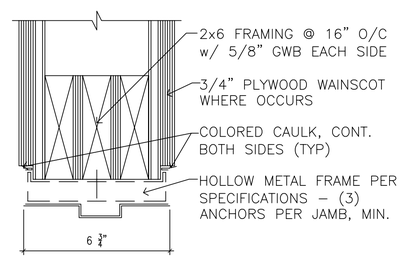

B3 HEAD
SCALE: 3"=1'-0"

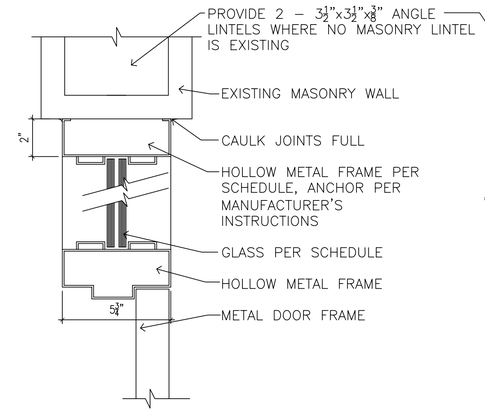

B4 HEAD (JAMB SIM)
SCALE: 3"=1'-0"

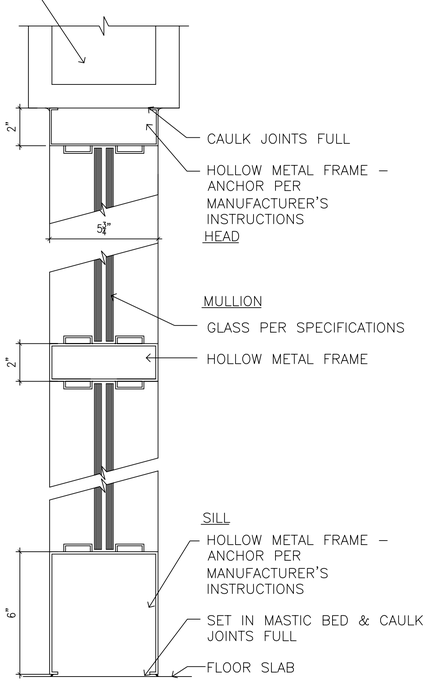

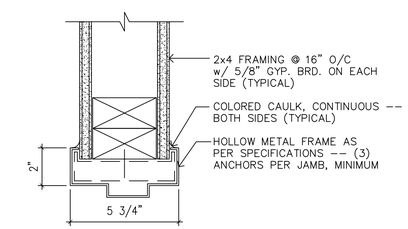

A1 JAMB
SCALE: 3"=1'-0"

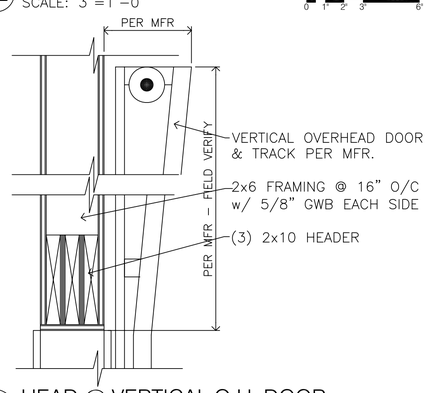

A2 HEAD @ VERTICAL O.H. DOOR
SCALE: 1-1/2"=1'-0"

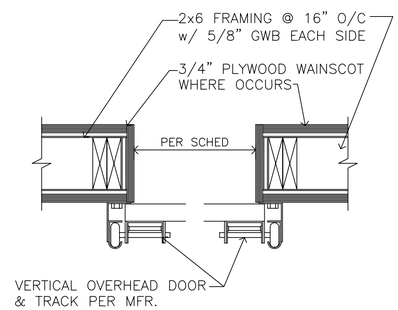

A3 JAMB @ VERTICAL O.H. DOOR
SCALE: 1-1/2"=1'-0"

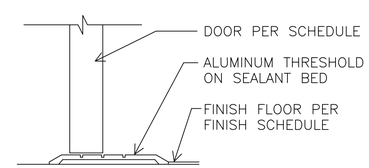

A4 THRESHOLD
SCALE: 3"=1'-0"

A5 STOREFRONT
SCALE: 3"=1'-0"

L. K. SORENSEN ASSOCIATES, INC.
ARCHITECTS / PLANNERS / LANDSCAPE ARCHITECTS
3448 SOUTH MAIN STREET
SALT LAKE CITY, UTAH 84115
(801)478-0800 Fax (801)478-0816

CONSULTANTS
STRUCTURAL:
DUNN ASSOCIATES, INC.

MECHANICAL:
ADVANCED CONCEPTS ENGINEERINGS

ELECTRICAL:
SPECTRUM ENGINEERS

UTAH NATIONAL GUARD

Maintenance Shop Area Remodel

Building 1190
Camp W. G. Williams
Bluffdale, Utah

MARK	DATE	DESCRIPTION
	8/15/06	CONSTRUCTION DOCUMENTS
	5/24/06	100% SUBMITTAL

D.F.C.M. PROJECT NO: 06012480
ARCH. PROJECT NO: 0611
CAD DWG FILE:
DRAWN BY: ajs
CHECKED BY: lks
DESIGNED BY: lks

COPYRIGHT:
THIS PRINT AND ALL INFORMATION HEREON IS SUBJECT TO COPYRIGHT LAW AND IS THE PROPERTY OF THE STATE OF UTAH AND SHALL NOT BE USED ON ANY OTHER PROJECT WITHOUT WRITTEN PERMISSION OF THE STATE OF UTAH.

SHEET TITLE
DOOR SCHEDULE / DETAILS

AE601

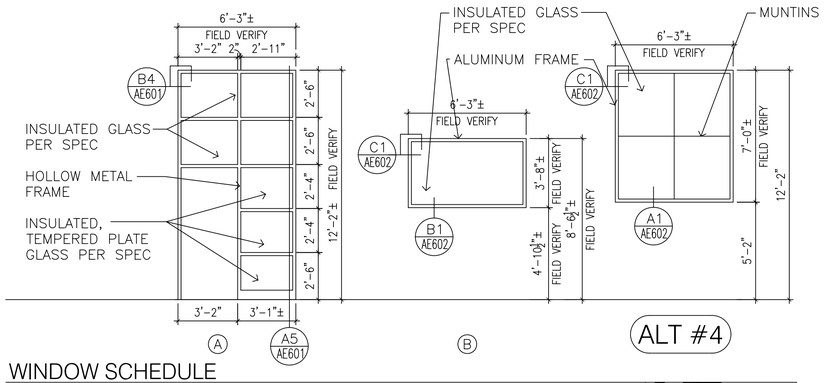

WINDOW SCHEDULE

SCALE: 1/4"=1'-0"

ROOM FINISH SCHEDULE

ROOM No.	ROOM NAME	FLOOR		BASE		NORTH WALL		SOUTH WALL		EAST WALL		WEST WALL		CEILING			DOOR		DOOR FRAME		NOTES
		MAT'L	FINISH	MAT'L	FINISH	MAT'L	FINISH	MAT'L	FINISH	MAT'L	FINISH	MAT'L	FINISH	MAT'L	FINISH	HEIGHT	MAT'L	FINISH	MAT'L	FINISH	
101	TEAM ROOM	VCT	A	RB	A	GWB	B	GWB	B	GWB	B	GWB	B	GWB	B	8'-0"±	MTL	B	MTL	B	
101a	STORAGE	VCT	A	RB	A	GWB	B	GWB	B	GWB	B	GWB	B	GWB	B	8'-0"±	MTL	B	MTL	B	
102	CORRIDOR	CONC	G	–	–	GWB	B	GWB	B	GWB	B	GWB	B	GWB	B	8'-0"±	MTL	B	MTL	B	FN1, FN2
103	PAINTING & FINISHING	CONC	G	–	–	GWB	B	GWB	B	GWB	B	GWB	B	EXP	B	VARIES	MTL	B	MTL	B	FN1, FN2
104	CARPENTRY SHOP	CONC	G	–	–	GWB	B	GWB	B	GWB	B	GWB	B	EXP	B	VARIES	MTL	B	MTL	B	FN1, FN2
105	CORRIDOR	CONC	G	–	–	GWB	B	GWB	B	GWB	B	GWB	B	EXP	B	VARIES	MTL	B	MTL	B	FN1, FN2
106	SERVICE CORRIDOR	CONC	G	–	–	GWB	B	GWB	B	GWB	B	GWB	B	EXP	B	VARIES	MTL	B	MTL	B	FN1, FN2, FN3
107	PIPE SHOP	CONC	G	–	–	GWB	B	GWB	B	GWB	B	GWB	B	EXP	B	VARIES	MTL	B	MTL	B	FN1, FN2
108	METAL SHOP	CONC	G	–	–	GWB	B	GWB	B	GWB	B	GWB	B	EXP	B	VARIES	MTL	B	MTL	B	FN1, FN2
109	ELEC SHOP	CONC	G	–	–	GWB	B	GWB	B	GWB	B	GWB	B	EXP	B	VARIES	MTL	B	MTL	B	FN1, FN2
110	STAIR	RBT	A	RBT	A	GWB	B	GWB	B	GWB	B	GWB	B	EXP	B	VARIES	MTL	B	MTL	B	
111	EYEWASH STATION	CONC	G	–	–	–	–	GWB	D/F	GWB	D/F	GWB	D/F	GWB	D	9'-0"	MTL	B	MTL	B	FN1, FN2, FN4
112	TOILET	VCT	A	RB	A	GWB	D/F	GWB	D/F	GWB	D/F	GWB	D/F	GWB	D	8'-0"	MTL	B	MTL	B	FN2, FN4
113	COMPRESSOR BUILDING	CONC	G	EXP	–	EXP	–	EXP	–	EXP	–	EXP	–	EXP	–	VARIES	MTL	B	MTL	B	FN2
114	FOYER	CONC	G	–	–	GWB	B	GWB	B	GWB	B	GWB	B	GWB	B	8'-0"±	MTL	B	MTL	B	
201	MEZZANINE	PTBD	A	RB	A	GWB	B	GWB	B	GWB	B	GWB	B	EXP	B	VARIES	–	–	–	–	FN3

MATERIAL ABBREVIATIONS:

ACST	ACOUSTIC TILE	MTL	METAL
ALUM	ALUMINUM STOREFRONT	N	NONE
CONC	CONCRETE	PLYWD	PLYWOOD
CMU	CONCRETE MASONRY UNIT	PTBD	PARTICLE BOARD UNDERLAYMENT
CPT	CARPET	RB	RUBBER
CT	CERAMIC TILE	RBT	RUBBER TREAD, SKIRT & RISER
EXIST	EXISTING	SCWD	SOLID CORE WOOD DOOR
GLS	GLASS	STRUCT	FRAMING & DECK
GWB	GYPSUM WALL BOARD	VCT	VINYL COMPOSITION TILE
MR	MEMBRANE FLOORING	WD	WOOD

FINISHES:

A. NO FINISH AFTER INSTALLATION – CLEAN ONLY
B. PAINT IN ACCORDANCE WITH THE SPECIFICATIONS
C. STAIN IN ACCORDANCE WITH THE SPECIFICATIONS
D. EPOXY PAINT IN ACCORDANCE WITH THE SPECIFICATIONS
E. FINISH IN ACCORDANCE WITH MANUFACTURER'S RECOMMENDATIONS
F. FIBERGLASS REINFORCED PANEL IN ACCORDANCE WITH THE SPECIFICATIONS
G. PRESSURE WASH, CLEAN AND DRY NEW AND EXISTING CONCRETE FLOOR SLAB. INSTALL NEW SEALER THROUGHOUT

FINISH NOTES:

FN1 PROVIDE 8'-0" HIGH 3/4" PLYWOOD SHEATHING WAINSCOT – PAINT PER SPECIFICATION
FN2 CLEAN AND SEAL ALL CONCRETE FLOORS IN ALL SHOP AND SERVICE AREAS
FN3 PROVIDE 4" RB BASE @ WALLS WITH NO PLYWOOD SHEATHING WAINSCOT
FN4 FRP – 48" WAINSCOT IN TOILET #112, 86" WAINSCOT IN EYE WASH STATION #111 PER DETAIL A3/AE602

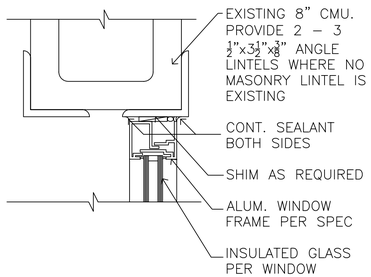

C1 HEAD (JAMB SIM)
SCALE: 3"=1'-0"

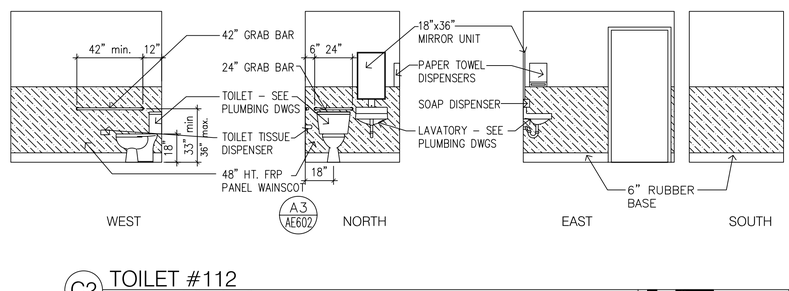

C2 TOILET #112
SCALE: 1/4"=1'-0"

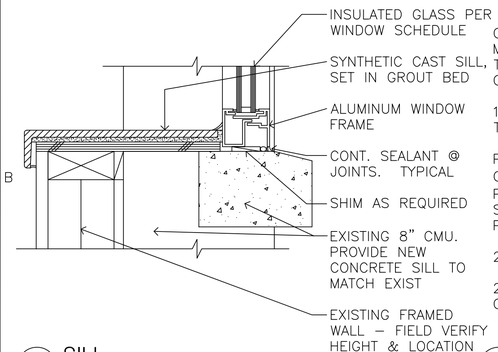

B1 SILL
SCALE: 3"=1'-0"

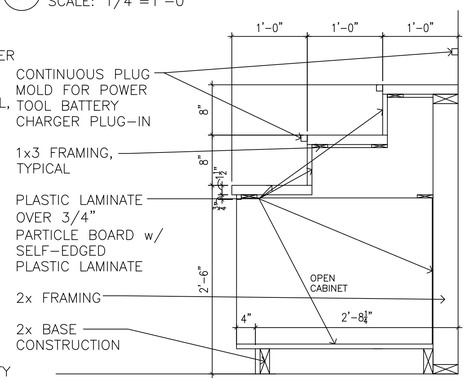

B2 BATTERY CHARGING STATION
NO SCALE

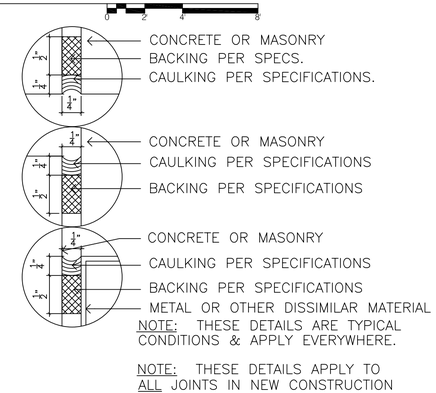

B3 TYPICAL CAULKING DETAILS
NO SCALE

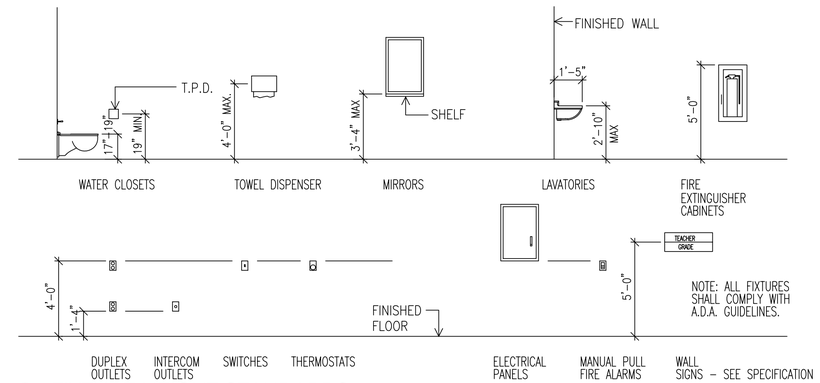

B4 FIXTURE HEIGHT STANDARDS
NO SCALE

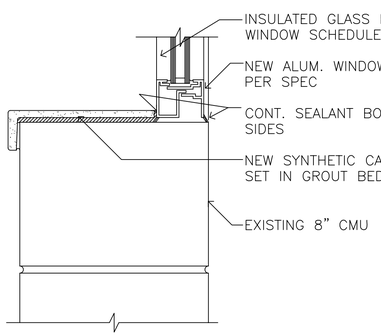

A1 SILL
SCALE: 3"=1'-0"

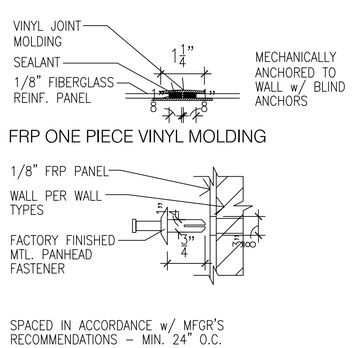

A2 FRP TYPICAL FASTENERS
SCALE: HALF

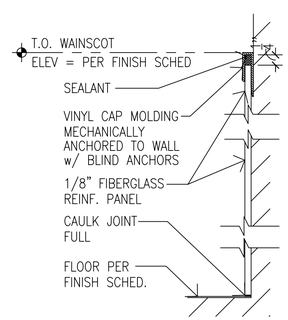

A3 FRP DETAIL
SCALE: HALF

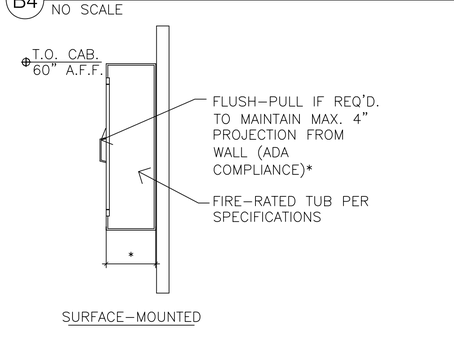

* COMPLY W/ ANSI A117.1-1986, SECT. 4.4 "PROTRUDING OBJECTS"

A4 FIRE EXTINGUISHER CABINET
SCALE: 1" = 1'-0"

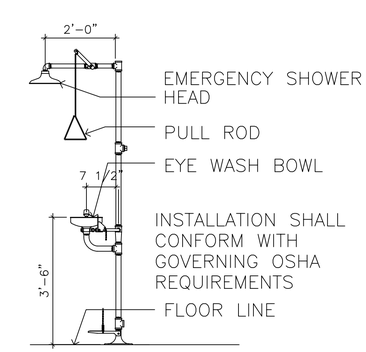

A5 EYEWASH STATION
NO SCALE

L. K. SORENSEN ASSOCIATES, INC.
ARCHITECTS / PLANNERS / LANDSCAPE ARCHITECTS
3448 SOUTH MAIN STREET
SALT LAKE CITY, UTAH 84115
(801)478-0800 Fax (801)478-0816

CONSULTANTS

STRUCTURAL:
DUNN ASSOCIATES, INC.

MECHANICAL:
ADVANCED CONCEPTS ENGINEERINGS

ELECTRICAL:
SPECTRUM ENGINEERS

UTAH NATIONAL GUARD

Maintenance Shop Area Remodel

Building 1190
Camp W. G. Williams
Bluffdale, Utah

MARK	DATE	DESCRIPTION
	8/15/06	CONSTRUCTION DOCUMENTS
	5/24/06	100% SUBMITTAL

D.F.C.M. PROJECT NO: 06012480
ARCH. PROJECT NO: 0611
CAD DWG FILE:
DRAWN BY: ajs
CHECKED BY: lks
DESIGNED BY: lks

COPYRIGHT:
THIS PRINT AND ALL INFORMATION HEREON IS SUBJECT TO COPYRIGHT LAWS AND IS THE PROPERTY OF THE STATE OF UTAH AND SHALL NOT BE USED ON ANY OTHER PROJECT WITHOUT WRITTEN PERMISSION OF THE STATE OF UTAH.

SHEET TITLE

WINDOW & FINISH SCHEDULE / DETAILS

AE602

Plumbing Symbols and Abbreviations

DOMESTIC COLD WATER	
DOMESTIC HOT WATER	
WASTE (SANITARY SEWER)	
VENT (SEWER VENT)	
FUEL GAS (NATURAL GAS)	
COMPRESSED AIR	
FUEL GAS DEMO.	
COMPRESSED AIR DEMO.	
90 DEG. ELBOW UP	
90 DEG. ELBOW DOWN	
90 DEG. TEE UP	
90 DEG. TEE DOWN	
BALL VALVE	
CAPPED PIPE	
REDUCER / INCREASER	
ELEVATION MARK	
POINT OF CONNECTION NEW TO EXISTING	

A	= COMPRESSED AIR
A.F.F.	= ABOVE FINISH FLOOR
CA	= COMPRESSED AIR
CW	= DOMESTIC COLD WATER
DEMO.	= LINE TO BE REMOVED DURING DEMOLITION
DN	= DOWN
(E)	= EXISTING
G	= FUEL GAS (NATURAL GAS)
G.C.	= GENERAL CONTRACTOR
HW	= DOMESTIC HOT WATER
(N)	= NEW PIPING
P-x	= PLUMBING FIXTURE TAG SEE PLUMBING FIXTURE SCHEDULE
V.	= VENT (SANITARY SEWER)
VTR	= SEWER VENT THRU ROOF
W.	= WASTE (SANITARY SEWER)
WCO	= WALL CLEAN OUT

Keyed Reference Notes

1. CUT EXISTING 1-1/2" ABANDONED PIPE AND CAP HERE. REMOVE AS INDICATED BY DASHED LINES.
2. EXTEND AND CONNECT WASTE LINE TO EXISTING WASTE LINE EAST OF THIS POINT. SEE ARCHITECTURAL SITE PLAN, SHEET AS-101, FOR CONTINUATION.
3. REMOVE EXISTING 1/2" COMPRESSED AIR DROP.
4. REMOVE EXISTING ABANDONED 1-1/2" COMPRESSED AIR PIPING.
5. REMOVE EXISTING GAS-FIRED UNIT HEATER AND FLUE THRU ROOF. COORDINATE TO HAVE ROOF REPAIRED BY GENERAL CONTRACTOR.
6. REMOVE EXISTING 3/4" GAS PIPING AS INDICATED BY DASHED LINES.
   REMOVE EXISTING 1/2" COMPRESSED AIR DROP.
7. REMOVE EXISTING 3/4" COMPRESSED AIR LINE. SEE NOTE 9.
8. CUT AND CAP EXISTING ACTIVE COMPRESSED AIR PIPE HERE. SEAL WALL PENETRATION.
9. CUT EXISTING 1" GAS PIPE HERE AND RUN NEW 1" GAS LINE TO NEW UNIT HEATER UH-1.
10. EXISTING HOSE BIBB TO REMAIN.
11. REMOVE EXISTING ABANDONED COMPRESSED AIR PIPE ON OUTSIDE OF BUILDING, AND GROUT HOLE IN MASONRY WALL.
12. NEW GAS-FIRED UNIT HEATER. SEE MECHANICAL DRAWINGS.
13. TEE INTO EXISTING 1-1/2" GAS LINE LOCATED AT 13' ABOVE FLOOR, AND RUN NEW BRANCH LINE AS SHOWN. INSTALL 1-1/4" GAS COCK IN BRANCH LINE.
14. TEE INTO EXISTING 1-1/2" GAS LINE LOCATED AT 13' ABOVE FLOOR, AND RUN NEW BRANCH LINE AS SHOWN. INSTALL 1-1/4" GAS COCK IN BRANCH LINE.
15. CUT AND CAP EXISTING 3/4" GAS LINE HERE.
16. REMOVE EXISTING 3/4" GAS LINE.
17. EXTEND NEW 3/4" HW LINE AND CONNECT TO EXISTING HW LINE AT WATER HEATER. FIELD VERIFY.
18. PROVIDE 3/4" BALL VALVE IN NEW HW LINE.
19. TEE INTO EXISTING 1" CW LINE AND RUN NEW BRANCH LINE AS SHOWN.
20. PROVIDE LINE SIZE BALL VALVE.
21. DROP 3/4" CW AND 1/2" HW INTO WALL TO SERVE FIXTURES.
22. PROVIDE CLEANOUT TO GRADE.
23. DROP 3/4" CW INTO WALL TO SERVE EMERGENCY SHOWER/EYEWASH.
24. RUN NEW WASTE LINES AS SHOWN. CUTTING OF EXISTING CONCRETE FLOOR TO BE BY GENERAL CONTRACTOR.
25. CUT EXISTING 1-1/2" GAS PIPING HERE AND RUN TO NEW UNIT HEATER UH-2.
26. CONNECT TO EXISTING MEDIUM PRESSURE GAS LINE RISER BELOW EXISTING REGULATOR, AND RUN NEW 2 PSIG GAS LINE TO NEW MAKE-UP AIR UNIT. RACK PIPING TO WALL.
27. RISE UP AND PENETRATE WALL ABOVE CEILING LINE. SEAL PENETRATION WATER TIGHT.
28. PENETRATE WALL AND DROP PIPING DOWN EXTERIOR FACE OF BUILDING. SEAL PENETRATION WATER TIGHT.
29. PROVIDE GAS COCK AND 2 PSIG TO 4 OZ PRESSURE REGULATOR. CONNECT GAS LINE TO MAKE-UP AIR UNIT PER CODE. SUPPORT GAS PIPING ON MECHANICAL CHANNEL SUPPORTS.
30. ROUTE NEW 1-1/2" COMPRESSED AIR LINE INTO BUILDING, INSTALL TEE INSIDE BUILDING WITH DIRT LEG AND DRAIN, AND PROVIDE 1-1/2" BALL VALVE INSIDE BUILDING FOR SHUT-OFF.
31. DROP 1/2" AIR LINE TO 48" A.F.F. AND INSTALL BALL VALVE AND AIR CHUCK.
32. PENETRATE WALL AND RUN NEW AIR LINE TO BAG HOUSE.
33. COMBINE 2" PLUMBING VENTS FROM FLOOR DRAINS AND HAND SINKS WITH 4" VENT FROM TOILET STACK AND ROUTE 4" VENT UP THROUGH ROOF.
34. INSTALL FLOOR SINK IN MEZZANINE FLOOR FOR CONDENSATE DRAIN(S)
35. PROVIDE AND INSTALL SHUT-OFF BALL VALVES, FILTER AND REGULATOR FOR NEW COMPRESSED AIR LINE. CONNECT NEW AIR LINE TO COMPRESSOR AS PER MANUFACTURERS RECOMMENDATIONS. NEW AIR COMPRESSOR FURNISHED AND INSTALLED BY GENERAL CONTRACTOR, SEE ARCHITECTURAL DRAWINGS AND SPECIFICATIONS.
36. BREAK OUT FLOOR AND TURN UP 4" BUILDING FIRE SPRINKLER WATER MAIN FOR SPRINKLER RISER "TREE" ASSEMBLY. SEE SPECIFICATIONS FOR FIRE SPRINKLER REQUIREMENTS.
37. EXTEND AND CONNECT NEW 4" FIRE SPRINKLER WATER LINE TO EXISTING WATER MAIN. PROVIDE NEW 4" POST INDICATOR VALVE AT POINT OF CONNECTION. SEE ARCHITECTURAL SITE PLAN FOR ROUTING AND MAIN WATER LINE LOCATION. TRENCHING AND BACKFILL FOR LINE PROVIDED BY GENERAL CONTRACTOR.

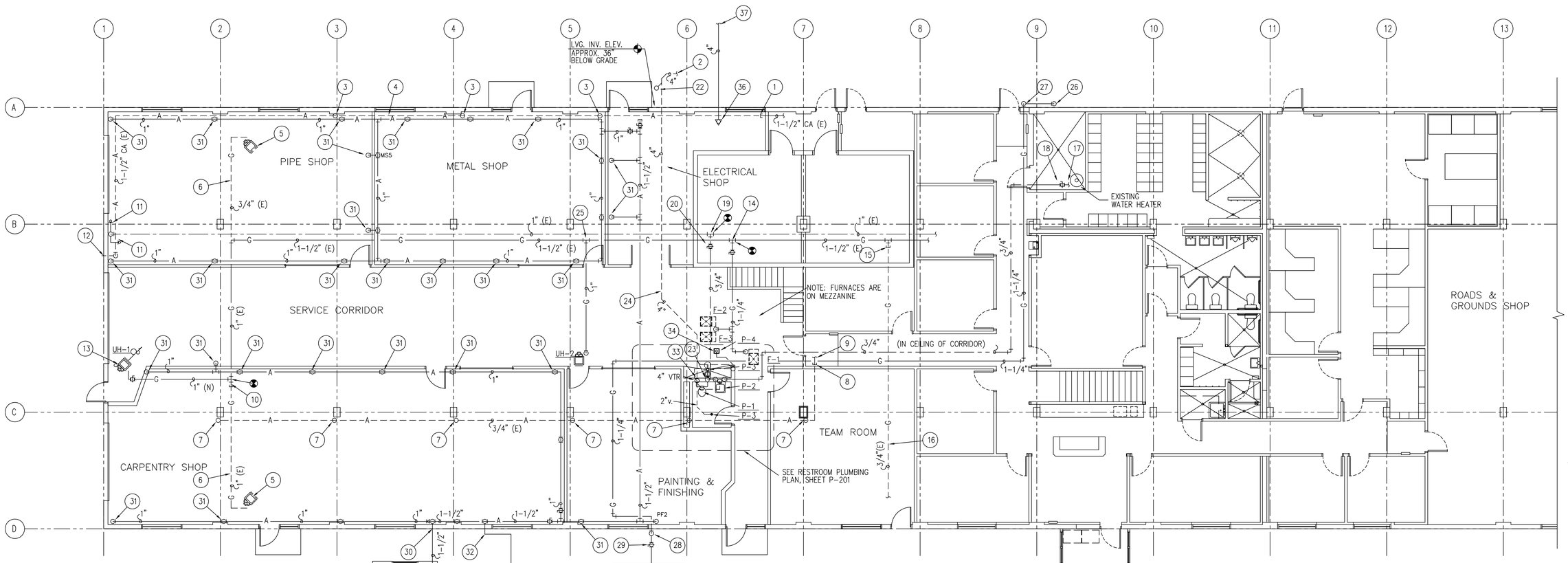

NOTE:

ALTERNATE NO. 1 SHALL BE THE AIR COMPRESSOR BUILDING.

ALTERNATE NO. 3 SHALL BE THE AIR COMPRESSOR AND AIR DISTRIBUTION SYSTEM IN IT'S ENTIRETY.

NOTE:

ALTERNATE NO. 2 SHALL BE THE DUST COLLECTION SYSTEM IN IT'S ENTIRETY, INCLUDING THE DUCT COLLECTOR UNIT, DUCTWORK, AND ALL SPECIALTIES.

NOTE:

ALTERNATE NO. 5 SHALL BE THE PAINT BOOTH, MAKEUP AIR UNIT, AND ALL PIPING AND SPECIALTIES ASSOCIATED WITH THIS EQUIPMENT.

NOTE:
SEE ARCHITECTURAL PLANS FOR SHOP EQUIPMENT SCHEDULES

Main Floor Plumbing Plan

SCALE: 1/8" = 1'-0"

L. K. SORENSEN ASSOCIATES, INC.
ARCHITECTS / PLANNERS / LANDSCAPE ARCHITECTS
3448 SOUTH MAIN STREET
SALT LAKE CITY, UTAH 84115
(801)478-0800 Fax (801)478-0816

STATE OF UTAH LICENSED PROFESSIONAL ENGINEER
CHARLES LUSH
No. 155425

CONSULTANTS

STRUCTURAL:
DUNN ASSOCIATES, INC.

MECHANICAL:
ADVANCED CONCEPTS ENGINEERINGS

ELECTRICAL:
SPECTRUM ENGINEERS

UTAH NATIONAL GUARD

Maintenance Shop Area Remodel

Building 1190
Camp W. G. Williams
Bluffdale, Utah

MARK	DATE	DESCRIPTION
	8/15/06	CONSTRUCTION DOCUMENTS
	5/24/06	100% SUBMITTAL

D.F.C.M. PROJECT NO: 06012480
ARCH. PROJECT NO: 0611
CAD DWG FILE:
DRAWN BY: PS
CHECKED BY: CL
DESIGNED BY: ACE

COPYRIGHT:
THIS PRINT AND ALL INFORMATION HEREON IS SUBJECT TO COPYRIGHT LAWS AND IS THE PROPERTY OF THE STATE OF UTAH AND SHALL NOT BE USED ON ANY OTHER PROJECT WITHOUT WRITTEN PERMISSION OF THE STATE OF UTAH.

SHEET TITLE

PLUMBING FLOOR PLAN

P101

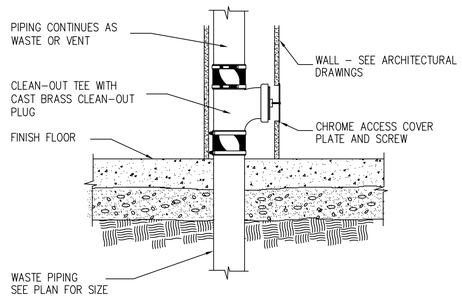

1 / P-200 **Wall Clean Out Detail**

NO SCALE

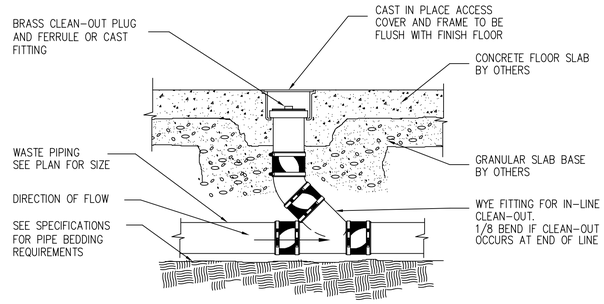

2 / P-200 **Floor Clean Out Detail**

NO SCALE

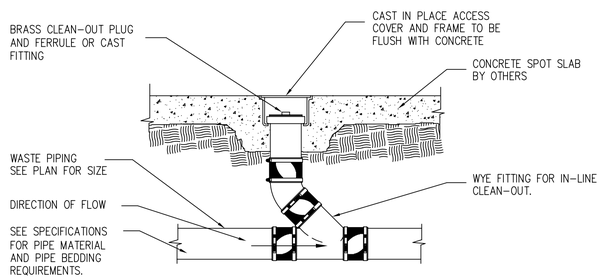

3 / P-200 **Clean Out to Grade Detail**

NO SCALE

Plumbing Fixture Schedule

SYMBOL	FIXTURE TYPE	WASTE	VENT	COLD	HOT	COMMENTS
P-1	STANDARD HEIGHT WATER CLOSET, FLUSH TANK	4"	2"	1/2"	–	FLOOR MOUNTED FLUSH TANK
P-2	WALL HUNG LAVATORY	1-1/2"	1-1/2"	1/2"	1/2"	WALL HUNG WITH TAILPIECE TRAP PRIMER
P-3	FLOOR DRAIN	2"	1-1/2"	--	--	CAST IRON BODY ADJ. MEDIUM DUTY ROUND GRATE DEEP SEAL P-TRAP, TRAP PRIMER
P-4	FLOOR SINK	2"	1-1/2"	–	–	CAST IRON WITH WHITE ENAMEL FINISH 1/2 NICKEL BRONZE GRATE, 6" DEEP
P-5	EMERGENCY SHOWER / EYE WASH STATION	–	–	3/4"	–	SEE SPECIFICATIONS

NOTES:

1 – PROVIDE MANUFACTURERS CONCEALED CARRIERS AND ACCESSORIES TO ASSURE PROPER INSTALLATION OF TOILETS, URINALS AND LAVATORIES.

Branch Water Line Schedule

SYMBOL	FIXTURE UNITS	QUANTITY OF FIXTURES SERVED BY: 1/2"	3/4"	1"	1-1/4"	1-1/2"	2"
WATER CLOSET (FLUSH VALVE)	10	---	---	1	3	5	15
WATER CLOSET (TANK TYPE)	3	1	2	4	10	---	---
URINAL (FLUSH VALVE)	5	---	1	2	6	10	---
LAVATORY OR HAND SINK	2	1	3	6	15	---	---
SERVICE SINK	4	1	3	6	---	---	---
QUANTITY OF FIXTURE UNITS SERVED BY:		3	6	12	30	50	150

NOTE:

WHERE PIPE SIZING SHOWN ON THE DRAWINGS SHALL BE FOLLOWED, OTHERWISE, PROVIDE SIZING ACCORDING TO SCHEDULE. WHERE FIXTURES ON A BRANCH ARE MIXED, USE THE SUM OF THE FIXTURE UNITS TO DETERMINE SIZING. THE BRANCHES SHALL BE REDUCED AS LOAD IS REDUCED. THE MINIMUM SIZE TO ANY ONE (1) FIXTURE SHALL BE 1/2".

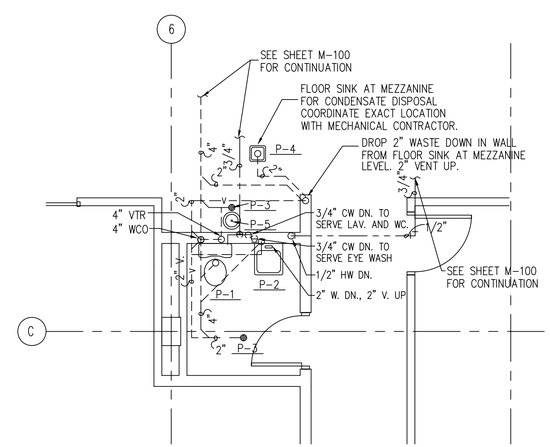

Restroom Area Plumbing Plan

SCALE: 1/4" = 1'-0"

L. K. SORENSEN ASSOCIATES, INC.
ARCHITECTS / PLANNERS / LANDSCAPE ARCHITECTS
3448 SOUTH MAIN STREET
SALT LAKE CITY, UTAH 84115
(801)478-0800 Fax (801)478-0816

STATE OF UTAH LICENSED PROFESSIONAL ENGINEER CHARLES LUSH No. 155425

CONSULTANTS

STRUCTURAL:
DUNN ASSOCIATES, INC.

MECHANICAL:
ADVANCED CONCEPTS ENGINEERINGS

ELECTRICAL:
SPECTRUM ENGINEERS

UTAH NATIONAL GUARD

Maintenance Shop Area Remodel

Building 1190
Camp W. G. Williams
Bluffdale, Utah

MARK	DATE	DESCRIPTION
	8/15/06	CONSTRUCTION DOCUMENTS
	5/24/06	100% SUBMITTAL

D.F.C.M. PROJECT NO:	06012480
ARCH. PROJECT NO:	0611
CAD DWG FILE:	
DRAWN BY:	PS
CHECKED BY:	CL
DESIGNED BY:	ACE

COPYRIGHT:
THIS PRINT AND ALL INFORMATION HEREON IS SUBJECT TO COPYRIGHT LAWS AND IS THE PROPERTY OF THE STATE OF UTAH AND SHALL NOT BE USED ON ANY OTHER PROJECT WITHOUT WRITTEN PERMISSION OF THE STATE OF UTAH.

SHEET TITLE

PLUMBING SCHEDULES DETAILS

P201

Keyed Reference Notes

1. PROVIDE AND INSTALL NEW BAGHOUSE. ANCHOR BAGHOUSE TO CONCRETE PAD PROVIDED BY GENERAL CONTRACTOR; COORDINATE WITH GENERAL CONTRACTOR TO VERIFY PAD SIZE REQUIRED BASED ON ACTUAL DIMENSIONS OF BAGHOUSE. SEE BAGHOUSE SCHEDULE AND SPECIFICATIONS.
2. EXTEND 16" ROUND DUCT THRU WALL OPENING BY GENERAL CONTRACTOR AND TRANSITION TO INLET SIZE OF BAGHOUSE. CONNECT TO BAGHOUSE WITH FLANGED DUCT OR AS REQUIRED BY BAGHOUSE MANUFACTURER. SEAL WALL PENETRATION WATER TIGHT AND INSTALL WALL ESCUTCHEONS OR TRIM ANGLES ON BOTH SIDES OF WALL.
3. DROP 6" DUCT TO TOP OF CS2 SHAPER, AND CONNECT TO OUTLET. INSTALL BLAST GATE AT 5' A.F.F.
4. DROP 6" DUCT TO NEAR FLOOR AND INSTALL BLAST GATE AT 5' A.F.F.
5. RUN 6" FLEXIBLE RUBBER HOSE APPROX. 84" LONG FROM 6" DUCT DROP TO CONNECTION ON BOTTOM OF CS3 JOINTER. SHOP FABRICATE AN ADAPTER TO CONNECT TO OUTLET OF JOINTER.
6. RUN ALL DUCTWORK AS HIGH AS POSSIBLE NEAR BOTTOM OF EXISTING BEAMS. PROVIDE ADDITIONAL SUPPORTS BETWEEN BEAMS SO THAT DUCTS CAN BE SUPPORTED EVERY 4'.
7. DROP 6" DUCT TO NEAR CS1 RADIAL ARM SAW. MAKE 8" DEEP X 6" WIDE X 4" HIGH CAPTURE BOX WITH OPEN FRONT, AND MOUNT IT NEAR THE WALL DIRECTLY BEHIND THE SAW BLADE TO CAPTURE WOOD PARTICLES FROM THE SAW BLADE. ALSO INSTALL A 30-DEGREE ANGLED TAKEOFF FROM THE 6" DUCT AND RUN A 2" FLEXIBLE HOSE TO THE EXISTING CONNECTION NEAR THE FRONT OF THE RADIAL ARM SAW. INSTALL A BLAST GATE IN THE 6" DUCT ABOVE THE 2" DUCT TAKEOFF.
8. DROP 4" DUCT TO FLOOR AND INSTALL FLOOR SWEEP. INSTALL BLAST GATE AT 5' A.F.F.
9. DROP 5" DUCT TO APPROXIMATELY 42" A.F.F., THEN RUN 5" FLEXIBLE HOSE TO CONNECTION ON FRONT OF CS4 BAND SAW. SHOP FABRICATE A CONNECTOR FOR THE 4" X 4" SQUARE OUTLET ON THE FRONT OF THE SAW. INSTALL BLAST GATE AT 5' A.F.F.
10. DROP 6" DUCT TO THE SIDE OF THE CS8 TABLE SAW OUTFEED TABLE TO NEAR THE FLOOR. RUN 6" RUBBER FLEXIBLE HOSE TO THE TABLE SAW CABINET, AND CUT 6" HOLE IN CABINET DOOR. CONNECT THE HOSE TO THE CABINET DOOR WITH AN ADAPTER. INSTALL BLAST GATE AT 7' A.F.F.
11. DROP 8" DUCT DOWN TO THE TOP OF THE CS6 PLANER AND CONNECT TO OUTLET AT TOP OF PLANER. INSTALL BLAST GATE ABOVE PLANER.
12. ALL TRANSITIONS ARE TO BE TAPERED AT 15-DEGREES MAXIMUM, AND THE BRANCH TAKEOFFS SHALL ENTER AT 30-DEGREES TO THE CENTERLINE OF THE TRANSITION.
13. EXTEND 32" X 32" RECIRCULATION DUCT AS SHOWN FROM BAGHOUSE TO OPENING IN WALL (BY GENERAL CONTRACTOR). OFFSET DUCT AS REQUIRED FROM BAGHOUSE TO MEET OPENING IN WALL. SEAL WALL PENETRATION WATERTIGHT AND INSTALL ESCUTCHEONS OR TRIM ANGLES ON BOTH SIDES OF WALL. SUPPORT DUCT FROM THE GROUND ON 2" SQUARE TUBE SUPPORT LEGS WITH CROSS BRACING. EMBED THE LEGS IN 18" OF CONCRETE.
14. PROVIDE 32" X 32" DOUBLE DEFLECTION GRILLE, TITUS 300 OR EQUAL. SPREAD BLADES AT 45-DEGREES.
15. RISE 30" ROUND DUCT FROM PAINT SPRAY BOOTH FAN OUTLET, AND TRANSITION TO 36" X 36". RISE THRU ROOF 3' MINIMUM ABOVE NEAREST ROOF SURFACE, THEN OFFSET TO THE EAST WITH 90-DEGREE ELBOW WITH TURNING VANES. MITER OUTLET OF DUCT AND INSTALL BIRDSCREEN. ROOF PENETRATION AND SEALING BY GENERAL CONTRACTOR.
16. RISE AND TRANSITION DUCT TO 36" WIDE X 100" HIGH.
17. APPROX. 170" X 70" X 6" THICK CONCRETE PAD WITH #4 BAR AT 6" O.C. EA. WAY. CONCRETE PAD PROVIDED BY GENERAL CONTRACTOR; COORDINATE EXACT SIZE REQUIRED WITH G.C. ANCHOR UNIT TO PAD WITH CONCRETE ANCHOR BOLTS.
18. PROVIDE PAD MOUNTED MAKEUP AIR UNIT. SEE SCHEDULE. CONTROLS CONTRACTOR: MAKEUP AIR UNIT SHALL BE INTERLOCKED WITH PAINT SPRAY BOOTH SO THAT MAKE-UP AIR UNIT STARTS WHEN PAINT SPRAY BOOTH FAN IS ENERGIZED. PROVIDE NECESSARY LABOR AND ITEMS FOR THE INTERLOCK.
19. ENTER THE BUILDING WITH 36" WIDE X 100" HIGH DUCT. SEAL WALL PENETRATION WATERTIGHT AND PROVIDE ESCUTCHEON. PROVIDE 36" X 100" DOUBLE DEFLECTION GRILLE, TITUS 300 OR EQUAL.
20. PROVIDE ARTICULATED WELDING SMOKE EXTRACTOR ARM MOUNTED TO EAST WALL AT 9' A.F.F. ARM TO BE E-Z ARM HIGH FLOW BY AIRFLOW SYSTEMS INC., OR APPROVED ALTERNATE BY TORIT OR PLYMOVENT. ARM SHALL BE 7" DIAMETER X 14' LONG. 1300 CFM MINIMUM. COMPLETE WITH WALL BRACKET.
21. MOUNT HIGH PRESSURE RADIAL FAN ON FACTORY WALL BRACKET JUST ABOVE EXTRACTOR ARM WALL BRACKET. FAN TO BE BY SAME MANUFACTURER AS EXTRACTOR ARM, AND SHALL DELIVER 1300 CFM @ 4" S.P. WITH 3 HP 208 VOLT/3-PHASE MOTOR. INSTALL CONNECTOR DUCT BETWEEN THE EXTRACTOR ARM AND THE FAN INLET. SEE NOTE 20.
22. EXTEND DUCT APPROX. 24" PAST BUILDING WALL AND TURN DOWN AT 45-DEGREES. INSTALL BIRDSCREEN IN DUCT OPENING.
23. SEAL WALL PENETRATION WATER TIGHT AND PROVIDE ESCUTCHEONS OR TRIM ANGLES ON BOTH SIDES OF WALL.
24. PROVIDE GAS-FIRED UNIT HEATER AT 10' MAX A.F.F. RUN FLUE THRU ROOF AND INSTALL UL LISTED WEATHER CAP PER CODE. HANG UNIT HEATER ON ALL-THREAD ROD, AND PROVIDE 1/8" AIRCRAFT CABLE SEISMIC RESTRAINTS ON FOUR CORNERS.
25. DROP DUCTWORK DOWN AS NECESSARY TO PROVIDE ADEQUATE CLEARANCE FOR ROUTING BELOW STRUCTURE.
26. INSTALL THERMOSTAT ON WALL IN THIS LOCATION AT APPROX. 54" A.F.F.
27. GAS FIRED UP-FLOW WARM AIR FURNACE TO BE INSTALLED ON EQUIPMENT MEZZANINE. FIELD VERIFY EXACT LOCATION.
28. PROVIDE AND INSTALL SINGLE DEFLECTION RETURN AIR GRILLE MOUNTED IN WALL AT APPROX 180" A.F.F.
29. EXTEND DISCHARGE DUCT FROM UNIT HEATER THROUGH WALL AND INTO ROOM CENTER DUCT OVER DOOR AND AT APPROX. 120" A.F.F. COORDINATE EXACT LOCATION WITH STRUCTURE AND WALL LOCATION.
30. PROVIDE GAS-FIRED UNIT HEATER WITH DISCHARGE AIR ASSEMBLY AT 10' MAX A.F.F. RUN FLUE THRU ROOF AND INSTALL UL LISTED WEATHER CAP PER CODE. HANG UNIT HEATER ON ALL-THREAD ROD, AND PROVIDE 1/8" AIRCRAFT CABLE SEISMIC RESTRAINTS ON FOUR CORNERS.
31. CEILING MOUNTED RESTROOM EXHAUST FAN. SEE EQUIPMENT SCHEDULE FOR ADDITIONAL INFORMATION. SWITCH FAN WITH LIGHTS.
32. PROVIDE AND INSTALL DOUBLE DEFLECTION SUPPLY AIR REGISTER WITH O.B.D. IN HIGH EFFICIENCY TAKE-OFF. STANDARD WHITE FINISH. BALANCE TO CFM SHOWN.
33. ROUTE 6" DIA EXHAUST AIR DUCT FROM CEILING FAN UP THROUGH ROOF TO WEATHER CAP.
34. AIR COOLED DX CONDENSING UNIT. INSTALL ON CONCRETE PAD AT GRADE. ROUTE DX PIPING FROM FURNACE UNIT F-1 TO CONDENSING UNIT. FIELD VERIFY BEST ROUTING. CONCRETE PAD BY GENERAL CONTRACTOR.
35. APPROX. 78" X 78" X 6" THICK CONCRETE PAD WITH #4 BAR AT 6" O.C. EA. WAY. CONCRETE PAD PROVIDED BY GENERAL CONTRACTOR; COORDINATE EXACT SIZE REQUIRED WITH G.C.
36. PROVIDE AND INSTALL DUCT CLEAN-OUTS FOR DUST COLLECTION SYSTEM EVERY 144" (12'-0") MAX. USING EITHER CAPPED END TYPE OR PULL-OUT TYPE CONSTRUCTION. REFERENCE FIGURE 5-24 OF THE "INDUSTRIAL VENTILATION MANUAL OF RECOMMENDED PRACTICES."

Mechanical Symbols and Abbreviations

- DUCT MOUNTED SUPPLY AIR REGISTER
- RETURN AIR GRILLE
- RETURN AIR GRILLE
- RA GRILLES WITH SOUND BOOT
- EXHAUST AIR GRILLE
- ROUND DUCT
- FLEXIBLE ROUND DUCT
- SUPPLY AIR DUCT TURNED UP
- SUPPLY AIR DUCT TURNED DOWN
- RETURN AIR DUCT TURNED UP
- RETURN AIR DUCT TURNED DOWN
- EXH. AIR DUCT TURNED UP
- EXH. AIR DUCT TURNED DOWN
- (T) THERMOSTAT

A.F.F. = ABOVE FINISH FLOOR
ARCH. = ARCHITECT
CU = CONDENSING UNIT
DN = DOWN
E.A. = EXHAUST AIR
EF = EXHAUST FAN
FURN. = FURNACE
G.I. = GALVANIZED IRON / STEEL
MAU = MAKE-UP AIR UNIT
O.A. = OUTSIDE AIR
O.C. = ON CENTER
RA = RETURN AIR
SA = SUPPLY AIR
UH = UNIT HEATER

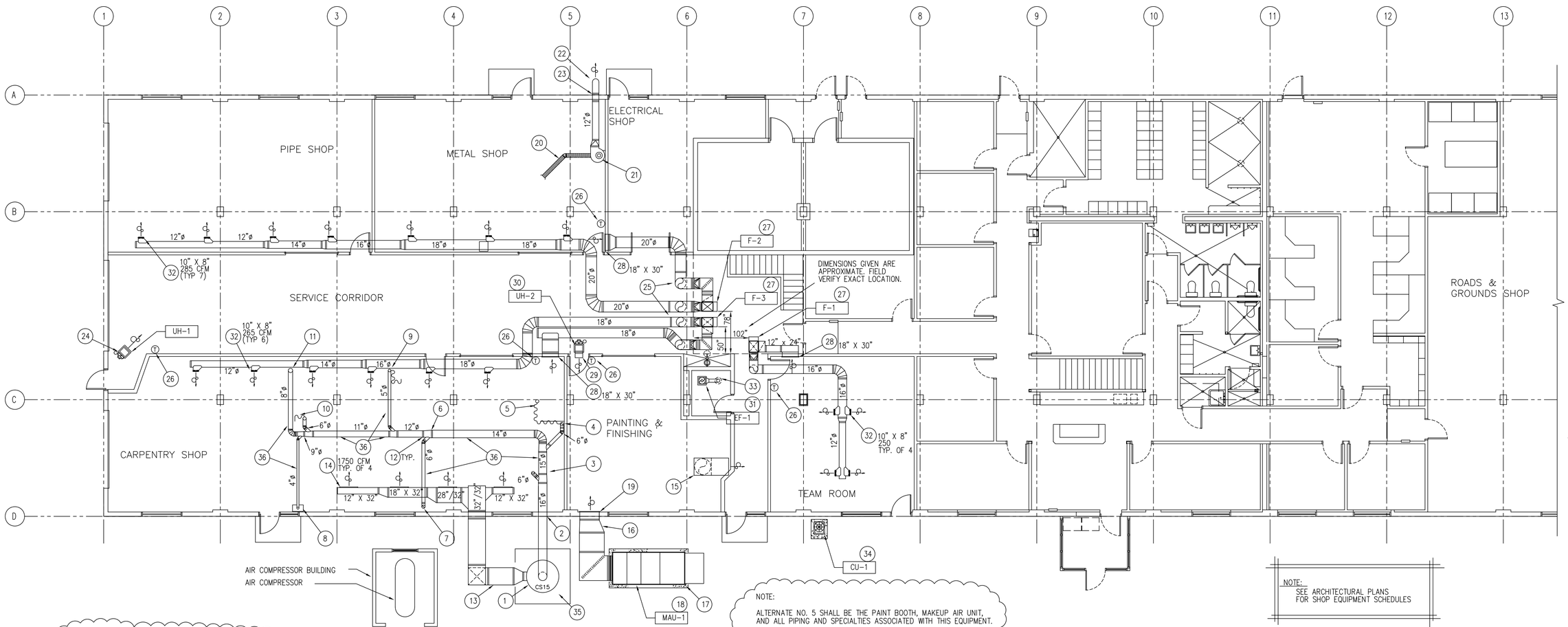

NOTE:
ALTERNATE NO. 1 SHALL BE THE AIR COMPRESSOR BUILDING.
ALTERNATE NO. 3 SHALL BE THE AIR COMPRESSOR AND AIR DISTRIBUTION SYSTEM IN IT'S ENTIRETY.

NOTE:
ALTERNATE NO. 2 SHALL BE THE DUST COLLECTION SYSTEM IN IT'S ENTIRETY, INCLUDING THE DUCT COLLECTOR UNIT, DUCTWORK, AND ALL SPECIALTIES.

NOTE:
ALTERNATE NO. 5 SHALL BE THE PAINT BOOTH, MAKEUP AIR UNIT, AND ALL PIPING AND SPECIALTIES ASSOCIATED WITH THIS EQUIPMENT.

NOTE:
SEE ARCHITECTURAL PLANS FOR SHOP EQUIPMENT SCHEDULES

Main Floor Mechanical Plan

SCALE: 1/8" = 1'-0"

L. K. SORENSEN ASSOCIATES, INC.
ARCHITECTS / PLANNERS / LANDSCAPE ARCHITECTS
3448 SOUTH MAIN STREET
SALT LAKE CITY, UTAH 84115
(801)478-0800 Fax (801)478-0816

STATE OF UTAH
CHARLES LUSH
No. 155425
LICENSED PROFESSIONAL ENGINEER

CONSULTANTS
STRUCTURAL: DUNN ASSOCIATES, INC.
MECHANICAL: ADVANCED CONCEPTS ENGINEERINGS
ELECTRICAL: SPECTRUM ENGINEERS

UTAH NATIONAL GUARD
Maintenance Shop Area Remodel
Building 1190
Camp W. G. Williams
Bluffdale, Utah

MARK	DATE	DESCRIPTION
	8/15/06	CONSTRUCTION DOCUMENTS
	5/24/06	100% SUBMITTAL

D.F.C.M. PROJECT NO:	06012480
ARCH. PROJECT NO:	0611
CAD DWG FILE:	
DRAWN BY:	PS
CHECKED BY:	CL
DESIGNED BY:	ACE

COPYRIGHT:
THIS PRINT AND ALL INFORMATION HEREON IS SUBJECT TO COPYRIGHT LAWS AND IS THE PROPERTY OF THE STATE OF UTAH AND SHALL NOT BE USED ON ANY OTHER PROJECT WITHOUT WRITTEN PERMISSION OF THE STATE OF UTAH.

SHEET TITLE
MECHANICAL FLOOR PLAN

M101

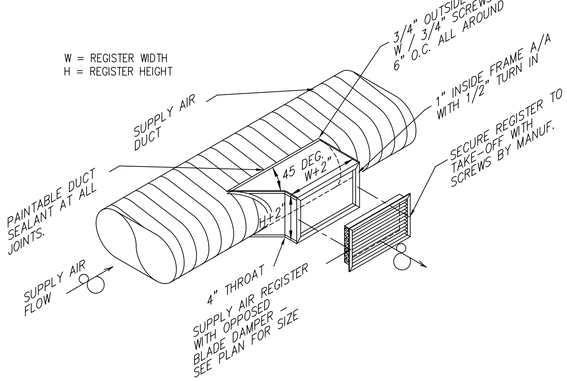

1 / M-200 Duct Mounted Register Detail

NO SCALE

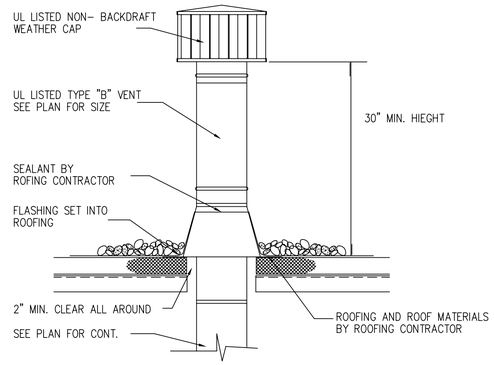

2 / M-200 Flue Through Roof Detail

NO SCALE

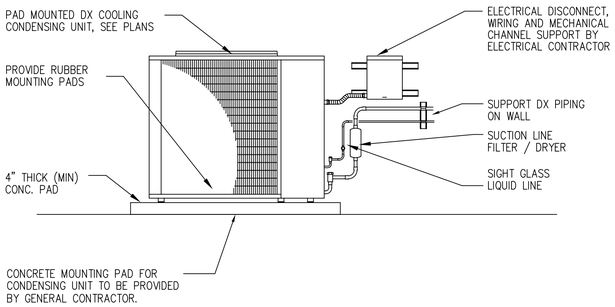

3 / M-200 Condensing Unit Detail

NO SCALE

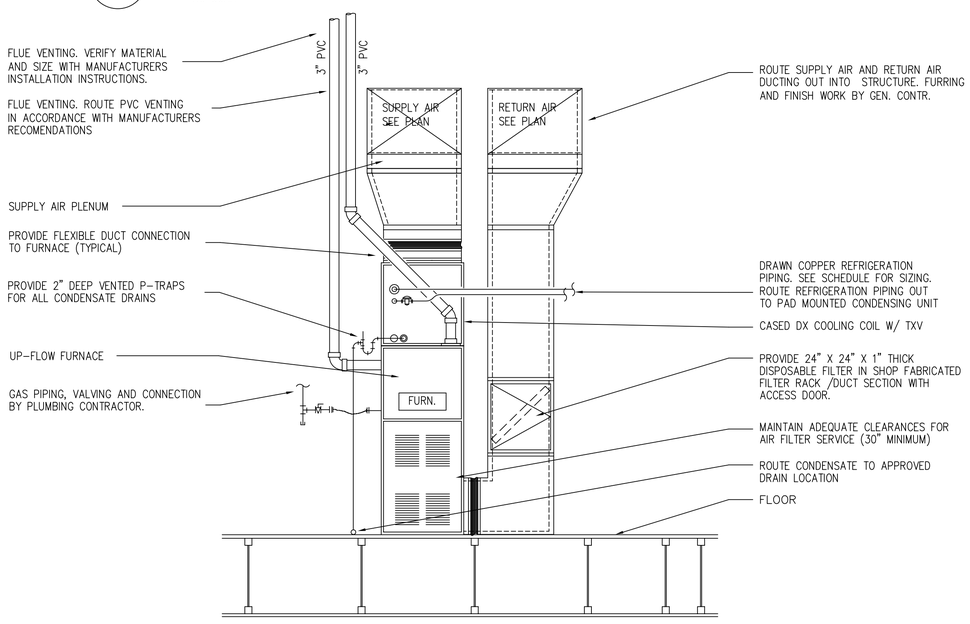

4 / M-200 Typical Furnace Elevation

NO SCALE:

Gas Fired Furnace / Split System

F-1

DESCRIPTION: UP-FLOW GAS FIRED FURNACE COMPLETE WITH: AUTO GAS VALVE, VENTER, ELECTRONIC IGNITOR, HEAT EXCHANGER, SAFETY CONTROLS, IN-SHOT BURNERS, DIRECT DRIVE BLOWER ASSEMBLY WITH HI EFF. 4 SPEED MOTOR, CABINET, FILTER RACK, HIGH ALTITUDE PRESSURE SWITCH KIT, CONCENTRIC VENT KIT. IGNITION PARTS WARRANTY. 130 LBS.

HEATING: 40 MBH INPUT, (32.8 MBH INPUT, 30.1 MBH OUTPUT AT 4500 ELEVATION) MULTI PORT BURNERS, ELECTRONIC IGNITION. 92% AFUE

SUPPLY BLOWER: 1000 CFM SUPPLY AIR AT 0.2 IN. SP. (SEA LEVEL) EXTERNAL HIGH SPEED TAP, DIRECT DRIVE BLOWER, 1075 RPM 1/5 HP. 115 V. 1 PHASE 4 SPEED MOTOR.

MANUFACTURER: TRANE CO. MODEL TUX040C924D OR APPROVED EQUAL.

CU-1

DESCRIPTION: HIGH EFF. SPLIT SYSTEM CONDENSING UNIT WITH MATCHED FURNACE FURNACE EVAPORATOR COIL. UNIT INCLUDES: HERMETIC COMPRESSOR, MULTI-USE VALVES, COND. FAN WITH FAN MOTOR, NOISE GUARD, INTERNAL COMPRESSOR OVERLOAD PROTECTION, CRANKCASE HEATER, LIQUID LINE FILTER DRIER, LOW AMBIENT KIT, TXV KIT, HARD START KIT, ANTI SHORT CYCLE TIMER, LOW PRESSURE SWITCH, HIGH PRES-SURE SWITCH, FIVE YEAR LIMITED COMPRESSOR WARRANTY. 170 LBS OPER. WT.

COOLING: 2.0 NOMINAL TONS. 23.0 MBH NET TOTAL OUTPUT, AT ARI STANDARD INPUT CONDITIONS. 13.0 SEER. RATING.

EVAP. COIL: PROVIDE 2.5 TON CASED COIL MATCHED TO FURNACE UNIT.

UNIT WIRING: 11.0 MCA, 15.0 AMP MAX FUSE AT 208-230 VOLT 1 PHASE.

DX PIPING: 3/8" LIQUID, 3/4" SUCTION

MANUFACTURER: TRANE CO. 2TTR3024A OR APPROVED EQUAL

Gas Fired Furnace

F-2

DESCRIPTION: UP-FLOW GAS FIRED FURNACE COMPLETE WITH: AUTO GAS VALVE, VENTER, ELECTRONIC IGNITOR, HEAT EXCHANGER, SAFETY CONTROLS, IN-SHOT BURNERS, DIRECT DRIVE BLOWER ASSEMBLY WITH HI EFF. 4 SPEED MOTOR, CABINET, FILTER RACK, HIGH ALTITUDE PRESSURE SWITCH KIT, CONCENTRIC VENT KIT. IGNITION PARTS WARRANTY. 185 LBS.

HEATING: 100 MBH INPUT, (82 MBH INPUT, 75.4 MBH OUTPUT AT 4500 ELEVATION) IN-SHOT TYPE BURNERS, ELECTRONIC IGNITION. 94.0% AFUE

SUPPLY BLOWER: 2000 CFM SUPPLY AIR AT 0.4 IN. SP. (SEA LEVEL) EXTERNAL HIGH SPEED TAP, DIRECT DRIVE BLOWER, 1075 RPM 3/4 HP. 115 V. 1 PHASE 4 SPEED MOTOR.

MANUFACTURER: TRANE CO. MODEL TUX100C960D OR APPROVED EQUAL

Gas Fired Furnace

F-3

DESCRIPTION: UP-FLOW GAS FIRED FURNACE COMPLETE WITH: AUTO GAS VALVE, VENTER, ELECTRONIC IGNITOR, HEAT EXCHANGER, SAFETY CONTROLS, IN-SHOT BURNERS, DIRECT DRIVE BLOWER ASSEMBLY WITH HI EFF. 4 SPEED MOTOR, CABINET, FILTER RACK, HIGH ALTITUDE PRESSURE SWITCH KIT, CONCENTRIC VENT KIT. IGNITION PARTS WARRANTY. 185 LBS.

HEATING: 100 MBH INPUT, (82 MBH INPUT, 75.4 MBH OUTPUT AT 4500 ELEVATION) IN-SHOT TYPE BURNERS, ELECTRONIC IGNITION. 94.0% AFUE

SUPPLY BLOWER: 1600 CFM SUPPLY AIR AT 0.5 IN. SP. (SEA LEVEL) EXTERNAL HIGH SPEED TAP, DIRECT DRIVE BLOWER, 1075 RPM 3/4 HP. 115 V. 1 PHASE 4 SPEED MOTOR.

MANUFACTURER: TRANE CO. MODEL TUX100C960D OR APPROVED EQUAL

Unit Heater Schedule

UH-1

DESCRIPTION: UNIT SHALL BE TRANE CO. MODEL GHND-007 PROPELLER FAN NATURAL GAS FIRED UNIT HEATER COMPLETE WITH: NAT. GAS VALVE, ELECTRONIC IGNITOR, HEAT EXCHANGER, SAFETY CONTROLS, MULTI PORT BURNERS, DIRECT DRIVE FAN ASSEMBLY WITH HI EFF. MOTOR, PAINTED CABINET, FAN GUARD. APPROX. 120 LBS.

HEATING: 75 MBH INPUT, (61.5 MBH INPUT, 49.2 MBH OUTPUT AT 4500 ELEVATION) MULTI PORT BURNERS, ELECTRONIC IGNITION. 80.0% AFUE

FAN: 1100 CFM SUPPLY AIR AT 640 FPM OUTLET VELOCITY SINGLE SPEED, DIRECT DRIVE BLOWER, 1075 RPM 1/30 HP. 115 V. 1 PHASE SINGLE SPEED MOTOR.

ELECTRICAL: 15 A. RECOMMENDED FUSE AT 115 V. 1 PH.

Unit Heater Schedule

UH-2

DESCRIPTION: UNIT SHALL BE TRANE CO. MODEL GBND-010 CENTRIFUGAL FAN NATURAL GAS FIRED UNIT HEATER COMPLETE WITH: NAT. GAS VALVE, ELECTRONIC IGNITOR, HEAT EXCHANGER, SAFETY CONTROLS, MULTI PORT BURNERS, DIRECT DRIVE FAN ASSEMBLY WITH HI EFF. MOTOR, PAINTED CABINET, FAN GUARD. APPROX. 265 LBS.

HEATING: 100 MBH INPUT, (82.0 MBH INPUT, 65.6 MBH OUTPUT AT 4500 ELEVATION) TWO STAGE (50 / 50) HEATING VALVE MULTI PORT BURNERS, ELECTRONIC IGNITION 80.0% AFUE

FAN: 1200 CFM SUPPLY AIR AT 880 FPM OUTLET VELOCITY SINGLE SPEED, DIRECT DRIVE BLOWER, 1725 RPM 1/4 HP. 115 V. 1 PHASE SINGLE SPEED MOTOR.

ELECTRICAL: 15 A. RECOMMENDED FUSE AT 115 V. 1 PH.

Gas Fired Make-Up Air Unit

MAU-1

DESCRIPTION: PAD MOUNTED, PACKAGED MAKE-UP AIR UNIT. INDIRECT GAS FIRED MAKE-UP AIR HANDLER COMPLETE WITH: PAINTED GALVANIZED CASING, BLOWER, MOTOR, 409 STAINLESS STEEL HEAT EXCHANGER(S) IN HORIZONTAL DUCT FURNACE SECTIONS, FACTORY WIRED CONTROLS, GAS TRAIN, IGNITION ASSEMBLY, 2 STAGE GAS VALVES, HORIZONTAL INLET/ OUTLET CONFIGURATION, BASE MOUNTING RAILS. 2340 LBS.

HEATING: 1200 MBH MAX INPUT (3 -400 MBH FURNACE SECTIONS) 996 MBH INPUT AT 4500 FT. ELEVATION, 12,500 CFM, 60 DEG.F. TEMP RISE SPARK IGNITION BURNERS WITH ELECTRONIC MODULATION WITH POWER VENTING. 80% AFUE.

SUPPLY BLOWER: 12,500 CFM SUPPLY AIR, 100% OUTSIDE AIR, AT 0.5 IN. SP. EXTERNAL, BELT DRIVE BLOWER, APPROX. 1327 BLOWER RPM. 15 HP, 208/60 3 PHASE MOTOR.

CONTROLS: ELECTRONIC MODULATING GAS CONTROL WITH DUCT THERMOSTAT AND ROOM OVERRIDE. FIELD MOUNTED REMOTE CONTROL STATION AND INTERLOCK RELAY. INTERLOCK WITH PAINT BOOTH FAN.

ELECTRICAL: UNIT PROVIDED WITH FIELD MOUNTED 60 AMP, 208/230 V 3 PH DISCONNECT.

FILTERS: FILTER SECTION WITH 2" DISPOSABLE PLEATED GLASS MEDIA FILTERS IN PERMANENT FRAME. 12,500 CFM AT 400 FPM. MAX. THRU FILTERS WITH 0.10" SP. DROP WHEN CLEAN.

MANUFACTURER: TRANE CO.; MODEL GRAA-012GDJF0 OR APPROVED EQUAL

Dust Collector / Bag House

CS-15

DESCRIPTION: UNIT SHALL BE TORIT DONALDSON PULSE-JET BAG HOUSE MODEL 81MBT8 OR APPROVED EQUAL COMPLETE WITH: POLYESTER FELT BAG FILTERS WITH CAGES, STEEL FAN WHEEL WITH FAN MOTOR, EXPLOSION VENT WITH COVER, HOPPER AND LEG PACK, 55 GAL DRUM COVER W/ LATCHES (W/O GATE), HOPPER INLET W/ INLET DEFLECTORS, 20 HP MOTOR STARTER WITH REMOTE START / STOP, LADDER PACK FROM GROUND TO PLATFORM.

EXHAUST BLOWER: 7000 CFM , AT 10.0 IN. STATIC PRESSURE, 4500 FT. ELEVATION TBI-20 20 HP, 208/230/460 3 PHASE, TEFC FAN MOTOR.

FILTERS: (81) 96" LONG POLYESTER FELT BAG FITERS WITH CAGES 1039 SQ. FT. OF FILTER MEDIA, 7 : 1 AIR TO CLOTH RATIO

REGISTER GRILLE AND DIFFUSER SCHEDULE

SYMBOL	MANUFACTURER MODEL	TYPE	SIZE	PATTERN	DESCRIPTION
SR-1	TITUS INC. 300 RL	SUPPLY REGISTER	SEE PLAN	DOUBLE DEFLECTION	SURFACE MTD. SUPPLY AIR REGISTER STANDARD WHITE FINISH
RG-1	TITUS INC. 350 RL	RETURN GRILLE	SEE PLAN	SINGLE DEFLECTION	SURFACE MTD. RETURN AIR REGISTER STANDARD WHITE FINISH

EXHAUST FAN SCHEDULE

SYMBOL	MANUFACTURER MODEL	TYPE	CFM	SP	FAN RPM	SONES	MOTOR HP.	MOTOR RPM	MOTOR VOLT./PH.	WEIGHT
EF-1	PENN CO. ZT "ZEPHYR"	CEILING FAN	75	.38"	1200	3.0	48 W.	1200	115v./1	14#

L. K. SORENSEN ASSOCIATES, INC.
ARCHITECTS / PLANNERS / LANDSCAPE ARCHITECTS
3448 SOUTH MAIN STREET
SALT LAKE CITY, UTAH 84115
(801)478-0800 Fax (801)478-0816

LICENSED PROFESSIONAL ENGINEER
STATE OF UTAH
CHARLES LUSH
No. 155425

CONSULTANTS

STRUCTURAL:
DUNN ASSOCIATES, INC.

MECHANICAL:
ADVANCED CONCEPTS ENGINEERINGS

ELECTRICAL:
SPECTRUM ENGINEERS

UTAH NATIONAL GUARD

Maintenance Shop Area Remodel

Building 1190
Camp W. G. Williams
Bluffdale, Utah

MARK	DATE	DESCRIPTION
	8/15/06	CONSTRUCTION DOCUMENTS
	5/24/06	100% SUBMITTAL

D.F.C.M. PROJECT NO: 06012480
ARCH. PROJECT NO: 0611
CAD DWG FILE:
DRAWN BY: PS
CHECKED BY: CL
DESIGNED BY: ACE

COPYRIGHT:
THIS PRINT AND ALL INFORMATION HEREON IS SUBJECT TO COPYRIGHT LAWS AND IS THE PROPERTY OF THE STATE OF UTAH AND SHALL NOT BE USED ON ANY OTHER PROJECT WITHOUT WRITTEN PERMISSION OF THE STATE OF UTAH.

SHEET TITLE

MECHANICAL SCHEDULES DETAILS

M201

SYMBOL LEGEND

SYMBOL	DESCRIPTION
REFERENCE AND LINE SYMBOLS	
A5 / E-501	DETAIL INDICATOR: A5 INDICATES DETAIL NUMBER, E-501 INDICATES DRAWING SHEET WHERE DETAIL IS SHOWN.
100	ROOM OR SPACE NUMBER.
1	KEYNOTE INDICATOR.
1	REVISION INDICATOR.
CU-1	EQUIPMENT INDICATOR.
	BREAK, STRAIGHT: TO BREAK PARTS OF DRAWING.
	BREAK, ROUND.
WIRING METHODS	
	WIRING.
A-1,3,5	BRANCH CIRCUIT HOME RUN TO PANELBOARD: NUMBER OF ARROWS INDICATES NUMBER OF CIRCUITS. LETTER AND NUMBER NOTATIONS IDENTIFY PANEL AND CIRCUIT NUMBERS. USE #12 CONDUCTORS, EXCEPT #10 CONDUCTORS SHALL BE INSTALLED IF DISTANCES EXCEED THOSE SPECIFIED IN SECTION 16120.
1 A-1,3,5	BRANCH CIRCUIT HOME RUN TO PANELBOARD: NUMBER OF ARROWS INDICATES NUMBER OF CIRCUITS. LETTER AND NUMBER NOTATIONS IDENTIFY PANEL AND CIRCUIT NUMBERS. NUMBER IN BOX REFERS TO THE CONDUCTOR AND CONDUIT SCHEDULE. FOR BRANCH WIRING USE #12 CONDUCTORS, EXCEPT #10 CONDUCTORS SHALL BE INSTALLED IF DISTANCES EXCEED THOSE SPECIFIED IN SECTION 16120.
	FLEXIBLE WIRING.
	CONDUIT STUB. DIMENSION RECORD DRAWINGS AND MARK.
1	CONDUCTOR & CONDUIT ("CC") SCHEDULE INDICATOR. REFER TO ONE-LINE DIAGRAM.
WIRING DEVICES	
	RECEPTACLE, DUPLEX: NEMA 5-20R.
A	RECEPTACLE, DUPLEX, ABOVE COUNTER: NEMA 5-20R.
WP	RECEPTACLE, DUPLEX, WEATHERPROOF: NEMA 5-20R.
	RECEPTACLE, DUPLEX WITH GROUND FAULT CIRCUIT INTERRUPTER: NEMA 5-20R.
WP	RECEPTACLE, DUPLEX WITH GROUND FAULT CIRCUIT INTERRUPTER, WEATHERPROOF: NEMA 5-20R.
	RECEPTACLE, QUADRAPLEX: NEMA 5-20R.
	RECEPTACLE, SPECIAL PURPOSE. PROVIDE RECEPTACLE TO MATCH EQUIPMENT PLUG.
D	DROP CORD. SEE DETAIL.
X $	SWITCH, SINGLE POLE ("x" INDICATES FIXTURES CONTROLLED).
X $3	SWITCH, THREE-WAY ("x" INDICATES FIXTURES CONTROLLED).
X $4	SWITCH, FOUR-WAY ("x" INDICATES FIXTURES CONTROLLED).
ELECTRICAL POWER AND DISTRIBUTION	
	MOTOR.
	DISCONNECT SWITCH, FUSED.
	PUSHBUTTON.
	PANELBOARD CABINET, SURFACE MOUNTED, 1 SECTION.
	PANELBOARD CABINET, SURFACE MOUNTED, 2 SECTION.
	DISTRIBUTION PANEL OR SWITCHBOARD.

SYMBOL LEGEND

SYMBOL	DESCRIPTION
LIGHTING (REFER TO THE FIXTURE LEGEND FOR FIXTURE SYMBOLS)	
(W-3)	FIXTURE IDENTIFICATION: (W-3) INDICATES FIXTURE TYPE AS SCHEDULED.
(W-3)	FIXTURE IDENTIFICATION, EMERGENCY WITH BATTERY PACK, CONNECTED TO GENERATOR AS INDICATED: (W-3) INDICATES FIXTURE TYPE AS SCHEDULED.
EM	EMERGENCY.
NL	NIGHT LIGHT: DO NOT SWITCH.
↑	EGRESS DIRECTION ARROW.
LIGHTING CONTROL	
D	OCCUPANCY SENSOR, DUAL TECHNOLOGY, CEILING, 360° FOV.
	OCCUPANCY SENSOR, DUAL TECHNOLOGY, DIRECTIONAL.
P	PHOTOCELL.
TC	TIME CLOCK.
STRUCTURED CABLING	
X	TELEPHONE, WALL MOUNTED ("X" INDICATES QUANTITY OF CABLES).
W	TELEPHONE, WALL MOUNTED: WALL PHONE.
X	OUTLET, DATA COMMUNICATION ("X" INDICATES QUANTITY OF CABLES).
	OUTLET, BUILDING STANDARD COMBINATION TELEPHONE/ DATA COMMUNICATION.
	TELEPHONE TERMINAL BOARD, FIRE TREATED PLYWOOD PAINTED.
FIRE ALARM	
FCP	FIRE ALARM CONTROL PANEL, SEMI-RECESSED.
P	FIRE ALARM MANUAL PULL STATION.
	DETECTOR, SMOKE.
	DETECTOR, HEAT.
	STROBE.
WP	ALARM, HORN/SPEAKER, WEATHERPROOF.
75	ALARM, HORN/STROBE, ONE ASSEMBLY. SUBSCRIPT INDICATES CANDELA RATING.
	DETECTOR, FLOW SWITCH: FLOW SWITCHES SHALL BE PROVIDED AND INSTALLED WITH FIRE SPRINKLER SYSTEM AND SHALL BE CONNECTED TO LOCATIONS SHOWN ON THE FIRE SPRINKLER SHOP DRAWINGS.
	DETECTOR, TAMPER SWITCH WITH VALVE: TAMPER SWITCHES SHALL BE PROVIDED AND INSTALLED WITH FIRE SPRINKLER SYSTEM AND SHALL BE CONNECTED TO LOCATIONS SHOWN ON THE FIRE SPRINKLER SHOP DRAWINGS.
CM	CONTROL MODULE.
MM	MONITOR MODULE.
R	SHUT DOWN RELAY: INSTALL RELAY IN CONTROL CIRCUIT OF EQUIPMENT TO BE CONTROLLED IN THE EVENT OF A FIRE.

ABBREVIATIONS

NOTE: ALL ABBREVIATIONS MAY NOT BE USED.

1P	SINGLE POLE	kW	KILOWATT
1PH	SINGLE-PHASE	kWh	KILOWATT HOUR
1WAY	ONE-WAY	LED	LIGHT EMITTING DIODE
2/C	TWO-CONDUCTOR	LFMC	LIQUID TIGHT FLEXIBLE METAL CONDUIT
2WAY	TWO-WAY	LFNC	LIQUID TIGHT FLEXIBLE NONMETALLIC CONDUIT
3/C	THREE-CONDUCTOR	LPS	LOW PRESSURE SODIUM
3PH	THREE-PHASE	LRA	LOCKED ROTOR AMPS
3WAY	THREE-WAY	LTG	LIGHTING
4OUT	QUADRUPLE RECEPTACLE OUTLET	LV	LOW VOLTAGE
4PDT	FOUR-POLE DOUBLE THROW	MATV	MASTER ANTENNA TELEVISION SYSTEM
4PST	FOUR-POLE SINGLE THROW	MAX	MAXIMUM
4W	FOUR-WIRE	MC	METAL CLAD
4WAY	FOUR-WAY	MCA	MINIMUM CIRCUIT AMPS
AC	ARMORED CABLE	MCB	MAIN CIRCUIT BREAKER
ADA	AMERICANS WITH DISABILITIES ACT	MCC	MOTOR CONTROL CENTER
ADJ	ADJACENT	MCP	MOTOR CIRCUIT PROTECTION
AFF	ABOVE FINISHED FLOOR	MDP	MAIN DISTRIBUTION PANEL
AFG	ABOVE FINISHED GRADE	MG	MOTOR GENERATOR
AIC	AMPERE INTERRUPTING CAPACITY	MH	MANHOLE
ALUM	ALUMINUM	MIN	MINIMUM
AMP	AMPERE	MLO	MAIN LUGS ONLY
ANN	ANNUNCIATOR	MOCP	MAXIMUM OVERCURRENT PROTECTION
ASC	AMPS SHORT CIRCUIT	NA	NOT APPLICABLE
ATS	AUTOMATIC TRANSFER SWITCH	NC	NORMALLY CLOSED
AV	AUDIO VISUAL	NEC	NATIONAL ELECTRICAL CODE
AWG	AMERICAN WIRE GAGE	NEMA	NATIONAL ELECTRICAL MANUFACTURERS ASSOCIATION
BB XFMR	BUCK-BOOST TRANSFORMER	NFC	NATIONAL FIRE CODE
CATV	COMMUNITY ANTENNA TELEVISION	NFPA	NATIONAL FIRE PROTECTION ASSOCIATION
CB	CIRCUIT BREAKER	NIC	NOT IN CONTRACT
CCBA	CUSTOM COLOR AS SELECTED BY ARCHITECT	NL	NIGHT LIGHT
CCTV	CLOSED CIRCUIT TELEVISION	NO	NORMALLY OPEN
CFBA	CUSTOM FINISH AS SELECTED BY ARCHITECT	NTS	NOT TO SCALE
CF/CI	CONTRACTOR FURNISHED/ CONTRACTOR INSTALLED	OC	ON CENTER
CF/OI	CONTRACTOR FURNISHED/ OWNER INSTALLED	OCP	OVER CURRENT PROTECTION
CKT	CIRCUIT	OF/CI	OWNER FURNISHED/ CONTRACTOR INSTALLED
CM	CONSTRUCTION MANAGER	OF/OI	OWNER FURNISHED/ OWNER INSTALLED
CND	CONDUIT	OFP	OBTAIN FROM PLANS
CO	CONVENIENCE OUTLET	OH DR	OVERHEAD (COILING) DOOR
COR	CONTRACTING OFFICER'S REPRESENTATIVE	OL	OVERLOAD
CP	CONTROL PANEL	PB	PUSHBUTTON
CT	CURRENT TRANSFORMER	PF	POWER FACTOR
CTV	CABLE TELEVISION	PH	PHASE
CU	COPPER	PNL	PANEL
dBA	UNIT OF SOUND LEVEL	PT	POTENTIAL TRANSFORMER
DPDT	DOUBLE POLE DOUBLE THROW	QTY	QUANTITY
DS	DISCONNECT SWITCH	R	REMOVE
EA	EACH	RCP	REFLECTED CEILING PLAN
EM	EMERGENCY	RMC	RIGID METAL CONDUIT
EMT	ELECTRICAL METALLIC TUBING	RNC	RIGID NONMETALLIC CONDUIT
ENT	ELECTRICAL NONMETALLIC TUBING	RPM	REVOLUTIONS PER MINUTE
EPO	EMERGENCY POWER OFF	RR	REMOVE AND RELOCATE
EQUIP	EQUIPMENT	SCA	SHORT CIRCUIT AMPS
EX	EXISTING	SCBA	STANDARD COLOR AS SELECTED BY ARCHITECT
FA	FIRE ALARM	SF	SQUARE FOOT (FEET)
FCP	FIRE ALARM CONTROL PANEL	SFBA	STANDARD FINISH AS SELECTED BY ARCHITECT
FLA	FULL LOAD AMPS	SPDT	SINGLE POLE, DOUBLE THROW
FMC	FLEXIBLE METAL CONDUIT	SPEC	SPECIFICATION
FOB	FREIGHT ON BOARD	SPST	SINGLE POLE, SINGLE THROW
FVNR	FULL VOLTAGE NON-REVERSING	S/S	START/STOP
FVR	FULL VOLTAGE REVERSING	ST	SINGLE THROW
G	GROUND	SWBD	SWITCHBOARD
GEN	GENERATOR	SWGR	SWITCHGEAR
GFCI	GROUND FAULT CIRCUIT INTERRUPTER	TL	TWIST LOCK
GFP	GROUND FAULT PROTECTION	TP	TELEPHONE POLE
HD	HEAVY DUTY	TP	TWISTED PAIR
HID	HIGH INTENSITY DISCHARGE	TTB	TELEPHONE TERMINAL BOARD
HOA	HAND-OFF-AUTOMATIC	TV	TELEVISION
HP	HORSE POWER	TVSS	TRANSIENT VOLTAGE SURGE SUPPRESSER
HPF	HIGH POWER FACTOR	TYP	TYPICAL
HPS	HIGH PRESSURE SODIUM	UF	UNDERFLOOR
HV	HIGH VOLTAGE	UGND	UNDERGROUND
Hz	HERTZ	UPS	UNINTERRUPTIBLE POWER SUPPLY
IG	ISOLATED GROUND	V	VOLTS
IMC	INTERMEDIATE METAL CONDUIT	VA	VOLT AMPERE
IN/IS	INSULATED/ISOLATED	VFC	VARIABLE FREQUENCY CONTROLLER
I/O	INPUT/OUTPUT	W/	WITH
IR	INFRARED	W/O	WITHOUT
kV	KILOVOLT	WP	WEATHERPROOF
kVA	KILOVOLT AMPERE	XFMR	TRANSFORMER
kVAR	KILOVOLT AMPERE REACTIVE		

DEFINITIONS

NOTE: ALL DEFINITIONS MAY NOT BE USED.

INDICATED: THE TERM "INDICATED" REFERS TO GRAPHIC REPRESENTATIONS, NOTES, OR SCHEDULES ON THE DRAWINGS, OTHER PARAGRAPHS OR SCHEDULES IN THE SPECIFICATIONS, AND SIMILAR REQUIREMENTS IN THE CONTRACT DOCUMENTS. WHERE TERMS SUCH AS "SHOWN", "NOTED", "SCHEDULED", AND "SPECIFIED" ARE USED, IT IS TO HELP THE READER LOCATE THE REFERENCE, NO LIMITATION ON LOCATION IS INTENDED.

DIRECTED: TERMS SUCH AS "DIRECTED", "REQUESTED", AUTHORIZED", "SELECTED", "APPROVED", "REQUIRED", AND "PERMITTED" MEAN "DIRECTED BY THE ENGINEER", "REQUESTED BY THE ENGINEER", AND SIMILAR PHRASES.

APPROVE: THE TERM "APPROVED", WHERE USED IN CONJUNCTION WITH THE ENGINEER'S ACTION ON THE CONTRACTOR'S SUBMITTALS, APPLICATIONS, AND REQUESTS, IS LIMITED TO THE ENGINEER'S DUTIES AND RESPONSIBILITIES AS STATED IN GENERAL AND SUPPLEMENTARY CONDITIONS.

FURNISH: THE TERM "FURNISH" IS USED TO MEAN "SUPPLY AND DELIVER TO THE PROJECT SITE, READY FOR UNLOADING, UNPACKING, ASSEMBLY, INSTALLATION, AND SIMILAR OPERATIONS."

INSTALL: THE TERM "INSTALL" IS USED TO DESCRIBE OPERATIONS AT PROJECT SITE INCLUDING THE ACTUAL "UNLOADING, UNPACKING, ASSEMBLY, ERECTION, PLACING, ANCHORING, APPLYING, WORKING TO DIMENSION, FINISHING, CURING, PROTECTING, CLEANING, AND SIMILAR OPERATIONS."

PROVIDE: THE TERM "PROVIDE" MEANS "TO FURNISH AND INSTALL, COMPLETE AND READY FOR THE INTENDED USE."

INSTALLER: AN "INSTALLER" IS THE CONTRACTOR OR AN ENTITY ENGAGED BY THE CONTRACTOR, EITHER AS AN EMPLOYEE, SUBCONTRACTOR, OR SUB-SUBCONTRACTOR, FOR PERFORMANCE OF A PARTICULAR CONSTRUCTION ACTIVITY, INCLUDING INSTALLATION, ERECTION, APPLICATION, AND SIMILAR OPERATIONS. INSTALLERS ARE REQUIRED TO BE EXPERIENCED IN THE OPERATIONS THEY ARE ENGAGED TO PERFORM.

ELECTRONIC SYSTEMS: THE TERM "ELECTRONIC SYSTEMS" IS USED TO DESCRIBE ALL LOW VOLTAGE SYSTEMS GENERALLY REFERRED TO AS "SPECIAL SYSTEMS". THESE SYSTEMS INCLUDE BUT ARE NOT NECESSARILY LIMITED TO ALL SYSTEMS WHICH UTILIZE VOLTAGES OF LESS THAN 71 VOLTS SUCH AS SOUND SYSTEMS, VIDEO SYSTEMS, TV SYSTEMS, SECURITY SYSTEMS, VOICE AND DATA CABLING SYSTEMS, ETC...

GENERAL ELECTRICAL NOTES

1. CLARIFICATION METHODS: AT THE TIME OF BIDDING, BIDDERS SHALL FAMILIARIZE THEMSELVES WITH THE DRAWINGS AND SPECIFICATIONS. ANY QUESTIONS, MISUNDERSTANDINGS, CONFLICTS, DELETIONS, DISCONTINUED PRODUCTS, CATALOG NUMBER DISCREPANCIES, DISCREPANCIES BETWEEN THE EQUIPMENT SUPPLIED AND THE INTENT OR FUNCTION OF THE EQUIPMENT, ETC, SHALL BE SUBMITTED TO THE ARCHITECT/ENGINEER IN WRITING FOR CLARIFICATION PRIOR TO ISSUANCE OF THE FINAL ADDENDUM AND BIDDING OF THE PROJECT. WHERE DISCREPANCIES OR MULTIPLE INTERPRETATIONS OCCUR, THE MOST STRINGENT (WHICH IS GENERALLY RECOGNIZED AS THE MOST COSTLY) THAT MEETS THE INTENT OF THE DOCUMENTS SHALL BE ENFORCED.

2. OWNER FURNISHED ITEMS: THE OWNER WILL FURNISH MATERIAL AND EQUIPMENT AS INDICATED IN THE CONTRACT DOCUMENTS TO BE INCORPORATED INTO THE WORK. THESE ITEMS ARE ASSIGNED TO THE INSTALLER AND COSTS FOR RECEIVING, HANDLING, STORAGE, IF REQUIRED, AND INSTALLATION ARE INCLUDED IN THE CONTRACT SUM.

   A. THE INSTALLER'S RESPONSIBILITIES ARE THE SAME AS IF THE INSTALLER FURNISHED THE MATERIALS OR EQUIPMENT.

   B. THE OWNER WILL ARRANGE AND PAY FOR DELIVERY OF OWNER FURNISHED ITEMS FREIGHT ON BOARD JOB SITE AND THE INSTALLER WILL INSPECT DELIVERIES FOR DAMAGE. IF OWNER FURNISHED ITEMS ARE DAMAGED, DEFECTIVE OR MISSING, DOCUMENT DAMAGED ITEMS WITH THE TRANSPORT COMPANY AND THE OWNER WILL ARRANGE FOR REPLACEMENT. THE OWNER WILL ALSO ARRANGE FOR MANUFACTURER'S FIELD SERVICES, AND THE DELIVERY OF MANUFACTURER'S WARRANTIES AND BONDS TO THE INSTALLER.

   C. THE INSTALLER IS RESPONSIBLE FOR DESIGNATING THE DELIVERY DATES OF OWNER FURNISHED ITEMS AND FOR RECEIVING, UNLOADING AND HANDLING OWNER FURNISHED ITEMS AT THE SITE. THE INSTALLER IS RESPONSIBLE FOR PROTECTING OWNER FURNISHED ITEMS FROM DAMAGE, INCLUDING DAMAGE FROM EXPOSURE TO THE ELEMENTS, AND TO REPAIR OR REPLACE ITEMS DAMAGED AS A RESULT OF HIS OPERATIONS.

3. EXPOSED STRUCTURE AREAS (EXCLUDING MECHANICAL, ELECTRICAL, AND COMMUNICATION SPACES): INSTALL RACEWAYS BETWEEN DECK AND STRUCTURE WHEREVER POSSIBLE IN EXPOSED STRUCTURE CEILING AREAS. ROUTE RACEWAYS IN CONCEALED AREAS WHEREVER POSSIBLE. REFER ALL CONDITIONS WHERE RACEWAYS MUST BE INSTALLED WHICH CANNOT COMPLY WITH THESE REQUIREMENTS TO THE ARCHITECT.

4. SUBMITTALS: PROVIDE SUBMITTALS IN THREE RING BINDERS WITH JOB NAME, SUBCONTRACTOR, AND VOLUME ON THE BINDING. PREPARE TABS FOR EACH SPECIFICATION SECTION REQUIRING SUBMITTALS. PREPARE INDEX OF EQUIPMENT SUBMITTED IN EACH TAB.

5. REFLECTED CEILING PLANS: COORDINATE THE LOCATION OF LIGHT FIXTURES WITH THE ARCHITECTURAL REFLECTED CEILING PLANS. REFER ALL DISCREPANCIES TO THE ARCHITECT AND ENGINEER.

ELECTRICAL SHEET INDEX

SHEET NO	DRAWINGS
EE001	SHEET INDEX, SYMBOL SCHEDULE
EE501	DETAILS
EE502	DETAILS
EE601	ONE-LINE DIAGRAM, FIRE ALARM RISER
EE602	LIGHTING FIXTURE & PANEL SCHEDULES
EE603	EQUIPMENT SCHEDULE
EE701	TYPICAL MOUNTING HEIGHT DETAILS
ED101	DEMOLITION PLAN
EL101	LIGHTING PLAN
EP101	POWER PLAN
EY101	FIRE ALARM PLAN

L. K. SORENSEN ASSOCIATES, INC
ARCHITECTS / PLANNERS
3690 SOUTH 500 WEST SUITE 102
FIFTH STREET PLAZA
SALT LAKE CITY, UTAH 84115
(801)262-9393 Fax (801)262-9407

LICENSED PROFESSIONAL ENGINEER
No. 185978
PETER E. JOHANSEN
STATE OF UTAH

CONSULTANTS

STRUCTURAL:
DUNN ASSOCIATES, INC.

MECHANICAL:
ADVANCED CONCEPT ENGINEERING

ELECTRICAL:
SPECTRUM ENGINEERS

UTAH NATIONAL GUARD

Maintenance Shop Area Remodel

Building 119
Camp W. G. Williams
Bluffdale, Utah

MARK	DATE	DESCRIPTION
	05/23/06	CONST. DOCUMENTS

D.F.C.M. PROJECT NO: 06012480
ARCH. PROJECT NO: 0226
CAD DWG FILE: 48EE001
DRAWN BY: STS
CHECKED BY: PEJ
DESIGNED BY: PEJ

COPYRIGHT:
THIS PRINT AND ALL INFORMATION HEREON IS SUBJECT TO COPYRIGHT LAWS AND IS THE PROPERTY OF THE STATE OF UTAH AND SHALL NOT BE USED ON ANY OTHER PROJECT WITHOUT WRITTEN PERMISSION OF THE STATE OF UTAH.

SHEET TITLE

SHEET INDEX, SYMBOL SCHEDULE

EE001

File name: P:\2006\20060348\1Drawings\Sheet\48EE001.dwg Last Plotted: 09/07/2006 @ 11:31 By: Sts

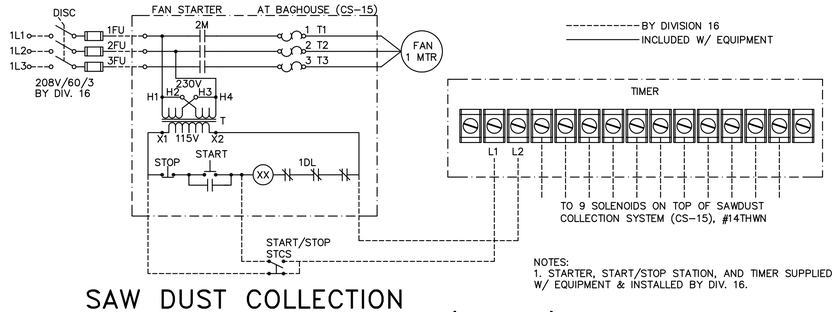

NOTES:
1. STARTER, START/STOP STATION, AND TIMER SUPPLIED W/ EQUIPMENT & INSTALLED BY DIV. 16.

D2 SAW DUST COLLECTION SYSTEM WIRING DIAGRAM (CS-15)

NTS

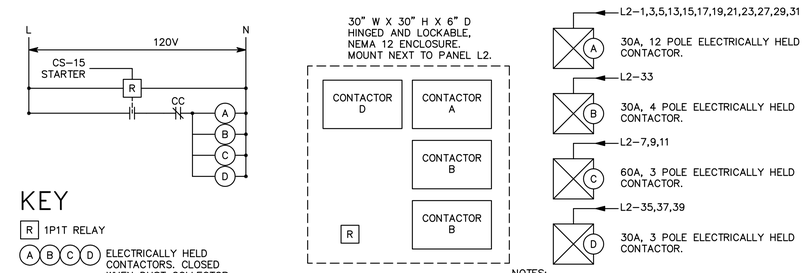

KEY

R 1P1T RELAY

A B C D ELECTRICALLY HELD CONTACTORS. CLOSED WHEN DUST COLLECTOR IS OPERATING.

NOTES:
1. WIRE CS-1,2,3,4,6,7,8 SO DUST COLLECTOR MUST BE RUNNING FOR EQUIPMENT TO BE ABLE TO START.

D4 DUST COLLECTION SYSTEM INTERLOCK

NTS

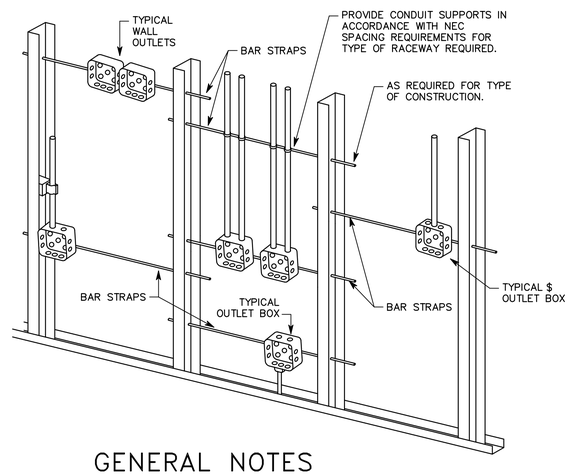

GENERAL NOTES

1. TYPICAL FOR WOOD AND METAL STUD ROUGH-IN.
2. PLASTER RINGS NOT SHOWN.
3. LOCATE ALL OUTLET BOXES IN ACCORDANCE WITH ARCHITECTURAL AND MECHANICAL DRAWINGS AND WITH ALL APPLICABLE SHOP DRAWINGS.
4. IN ACCORDANCE WITH UBC 709-7 EXCEPTION 1, OUTLETS ON OPPOSITE SIDES OF WALLS OR PARTITIONS IN THE SAME STUD SPACE IN A RATED FIRE SEPARATION WALL MUST BE SEPARATED BY A MINIMUM OF 24" HORIZONTAL DISTANCE.
5. IN NON-RATED WALLS, OUTLETS ON OPPOSITE SIDES OF WALLS OR PARTITIONS MUST BE SEPARATED BY 16" FOR SOUND ATTENUATION.

B2 TYPICAL ROUGH-IN REQUIREMENTS DETAIL

NTS

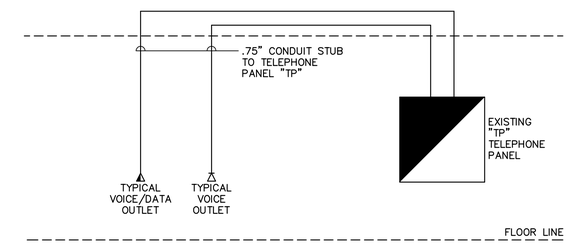

C4 TELEPHONE RISER DIAGRAM

NTS

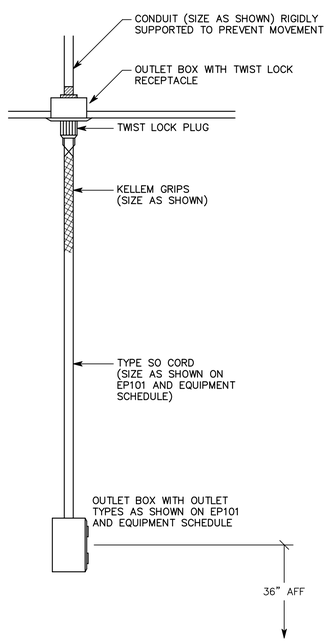

A1 DROP CORD DETAIL

NTS

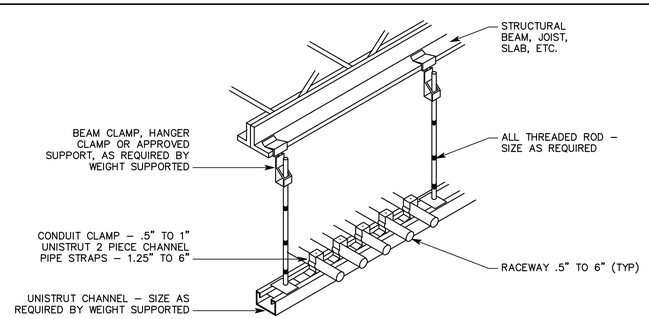

A2 TYPICAL CONDUIT RACK DETAIL

NTS

NOTE: TIE WIRE SHALL NOT BE USED AS A COMPONENT OF ANY RACEWAY HANGER SYSTEM.

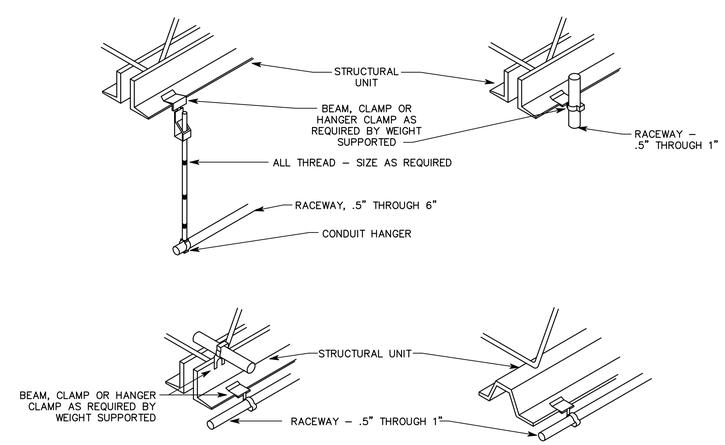

A4 TYPICAL RACEWAY SUPPORT METHODS DETAIL

NTS

L. K. SORENSEN ASSOCIATES, INC
ARCHITECTS / PLANNERS
3690 SOUTH 500 WEST, SUITE 102
FIFTH STREET PLAZA
SALT LAKE CITY, UTAH 84115
(801)262-9393 Fax (801)262-9407

LICENSED PROFESSIONAL ENGINEER
No. 185978
PETER E. JOHANSEN
STATE OF UTAH

CONSULTANTS

STRUCTURAL:
DUNN ASSOCIATES, INC.

MECHANICAL:
ADVANCED CONCEPT ENGINEERING

ELECTRICAL:
SPECTRUM ENGINEERS

UTAH NATIONAL GUARD

Maintenance Shop Area Remodel

Building 119
Camp W. G. Williams
Bluffdale, Utah

MARK	DATE	DESCRIPTION
	05/23/06	CONST. DOCUMENTS

D.F.C.M. PROJECT NO: 06012480
ARCH. PROJECT NO: 0226
CAD DWG FILE: 48EE501
DRAWN BY: STS
CHECKED BY: PEJ
DESIGNED BY: PEJ

COPYRIGHT:
THIS PRINT AND ALL INFORMATION HEREON IS SUBJECT TO COPYRIGHT LAWS AND IS THE PROPERTY OF THE STATE OF UTAH AND SHALL NOT BE USED ON ANY OTHER PROJECT WITHOUT WRITTEN PERMISSION OF THE STATE OF UTAH.

SHEET TITLE

DETAILS

EE501

File name: P:\2006\20060348\1Drawings\Sheet\48EE501.dwg Last Plotted: 09/07/2006 @ 11:31 By: Sts

VOICE/DATA EQUIPMENT/CABLE LIST

THE ITEMS INDICATED BELOW SHALL NOT BE CONSTRUED AS A "BILL OF MATERIALS". THIS LIST IDENTIFIES ITEMS OF SIGNIFICANCE USED DURING THE DESIGN OF THE CABLING INSTALLATION. WHERE THE ITEMS INDICATED ARE ONE PORTION OF AN ASSEMBLY, THE ENTIRE ASSEMBLY SHALL BE PROVIDED UNLESS SPECIFIED OTHERWISE. PROVIDE ALL MISCELLANEOUS HARDWARE AND SUPPORTS WHICH MAY NOT BE LISTED HERE, FOR A COMPLETE INSTALLATION. COMPARE CATALOG NUMBERS WITH DESCRIPTIONS AND NOTIFY ENGINEER OF DISCREPANCIES PRIOR TO BID. IF CATALOG NUMBERS DO NOT MATCH DESCRIPTIONS, THE DESCRIPTIONS TAKE PRECEDENCE. PROVIDE COMPLETE SUBMITTAL FOR APPROVAL PRIOR TO PURCHASING ANY EQUIPMENT OR CABLE. REFER TO SPECIFICATIONS FOR ADDITIONAL REQUIREMENTS.

SYMBOL	DESCRIPTION	ACCEPTABLE TYPES
D	STATION CABLE, CATEGORY 5e, PLENUM RATED, BLUE DATA	COMMSCOPE CAT 5e, YELLOW
V	STATION CABLE, CATEGORY 5e, PLENUM RATED, YELLOW VOICE	COMMSCOPE CAT 5e, BLUE
W	WALL MOUNTED VOICE OUTLET	
	CATEGORY 5e JACK	SIEMONS MX-WP-K5-55
A	DATA OUTLET SINGLE GANG BEZEL, SEE DETAIL	SIEMONS CT4-FP-02
	CATEGORY 5e JACK	SIEMONS CT-C5-C5-02
PP	PATCH PANEL, DATA, 12 PORT W/CAT 5e INSERT. QUANTITY OF PORTS AS REQUIRED +25%.	HD5-89D-12
	CAT5 J-HOOKS	CADDY CAT32Z34
	MODULAR PATCHBLOCKS	SIEMONS SPB-V1-24 PORT
	EXISTING TELEPHONE BOARD	
	VOICE BACKBOARD, BLUE METAL BACKBOARD	M183-B2 (VAR)
	DATA BACKBOARD, YELLOW METAL BACKBOARD	M183-B2 (VAR)

NOTE: ALL RACKS, LADDER, PATCH PANELS, AND ACCESSORIES SHALL BE BLACK IN COLOR.

VOICE/DATA, TV DISTRIBUTION ROUGH-IN EQUIPMENT LIST

SYMBOL	DESCRIPTION
A	DOUBLE GANG, DEEP JUNCTION BOX WITH SINGLE GANG MUD RING. MOUNT ABOVE COUNTER. COORDINATE HEIGHT WITH POWER OUTLET.
W	DOUBLE GANG, DEEP JUNCTION BOX WITH SINGLE GANG MUD RING. MOUNT AT ELECTRICAL SWITCH HEIGHT.

VOICE AND DATA STRUCTURED CABLING SYSTEM NOTES

1. PROVIDE PLENUM RATED CABLE IN ALL AIR PLENUMS. IF A PLENUM RATED CABLE IS NOT SPECIFIED, PROVIDE THE PLENUM RATED EQUIVALENT TO THE SPECIFIED CABLE.
2. ALL CABLE, REGARDLESS OF LENGTH, INSTALLED UNDER THIS CONTRACT IS TO BE LABELED.
3. FOR EVERY CABLE PULL SPECIFIED, COIL 5' OF EXCESS CABLE AT THE CLOSET END, NEATLY COIL AND LABEL.
4. UNLESS OTHERWISE NOTED, INSTALL ALL CABLE INSIDE RACEWAY SYSTEMS. WHERE RACEWAY SYSTEMS HAVE NOT BEEN PROVIDED OR SPECIFIED, INSTALL CABLE THROUGH THE SPECIFIED "CADDY" CLIPS INSTALLED IN TUNNEL AT THE MINIMUM INTERVALS IDENTIFIED IN THE SPECIFICATIONS. SUPPORT "CADDY" CLIPS DIRECTLY FROM THE BUILDING STRUCTURE, NOT FROM OTHER BUILDING SYSTEM SUPPORT WIRES OR CABLE.
5. ALL CABLE, FIBER, AND UTP IS TO BE TERMINATED ON BOTH ENDS.
6. COMPLY WITH ALL UTAH NATIONAL GUARD TELECOMM REQUIREMENTS. CONFIRM ALL PINNING, COMM ROOM, AND CABLE COLORS PRIOR TO INSTALLATION.
7. COORDINATE INSTALLATION OF NEW DEVICES INTO EXISTING SYSTEM WITH NATIONAL GUARD PERSONNEL.
8. ALL WORK SHALL BE IN COMPLIANCE WITH UTNG STANDARD UT-GG-C (2006).
9. ALL WORK SHALL BE COORDINATED WITH MIKE HANSEN (UTNG).
10. THE CONTRACTOR SHALL BE FULLY CONVERSANT AND CAPABLE IN THE CABLING OF LOW VOLTAGE APPLICATIONS SUCH AS, BUT NOT LIMITED TO DATA, VOICE AND IMAGING NETWORK SYSTEMS. THE CONTRACTOR SHALL AT A MINIMUM POSSES THE FOLLOWING QUALIFICATIONS:
    A. PERSONNEL TRAINED AND CERTIFIED IN THE DESIGN OF THE SIEMON CABLING SYSTEM.
    B. PERSONNEL TRAINED AND CERTIFIED TO INSTALL THE SIEMON CABLING SYSTEM.
    C. THE DESIGNER AND INSTALLER SHALL PROOF OF CURRENT CERTIFICATION OF THE SIEMON CABLING SYSTEM VIA AND UPDATED CARD GIVEN AFTER ATTENDING THE 5-DAY COURSE OR A RE-CERTIFICATION CLASS GIVEN EVERY TWO YEARS.
    D. PROVIDE REFERENCES OF THE TYPE OF INSTALLATION PROVIDED IN THIS SPECIFICATION.
    E. PERSONNEL TRAINED AND CERTIFIED IN FIBER OPTIC CABLING, SPLICING, TERMINATION AND TESTING TECHNIQUES. PERSONNEL MUST HAVE EXPERIENCE USING A LIGHT METER AND OTDR.
    F. PERSONNEL TRAINED AND CERTIFIED IN THE INSTALLATION OF PATHWAYS AND SUPPORT FOR HOUSING HORIZONTAL AND BACKBONE CABLING.
11. A TWENTY (20) YEAR WARRANTY AVAILABLE FOR THE CATEGORY _ STRUCTURED CABLING SYSTEM SHALL BE PROVIDED FOR AN END-TO-END CHANNEL MODEL INSTALLATION WHICH COVERS APPLICATIONS ASSURANCE, CABLE, CONNECTING HARDWARE AND THE LABOR COST FOR THE REPAIR OR REPLACEMENT THEREOF.

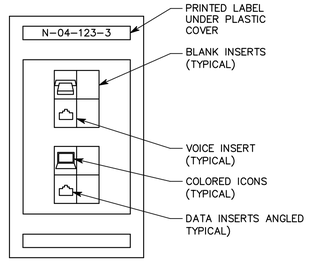

B3 TYPICAL DATA OUTLET DETAIL

NTS

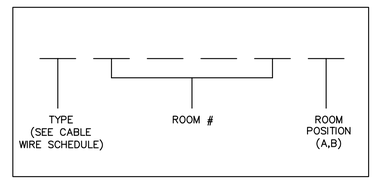

NOTES: 1. ALL CABLE/WIRE, REGARDLESS OF LENGTH, SHALL BE LABELED WITH A UNIQUE IDENTIFYING CODE. LABEL SHALL BE PERMANENT AND SHALL BE MACHINE PRINTED (NOT HAND PRINTED). SUBMIT PROPOSED LABEL MATERIAL FOR APPROVAL.

2. PRIOR TO LABEL CREATION, SUBMIT FOR APPROVAL PROPOSED ROOM NUMBER SCHEME FOR CABLE LABELS.

B4 TYPICAL LABEL DETAIL

NTS

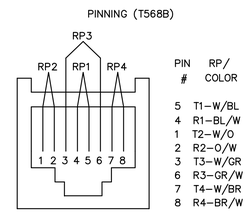

B5 DATA PINNING WIRING DETAIL

NTS

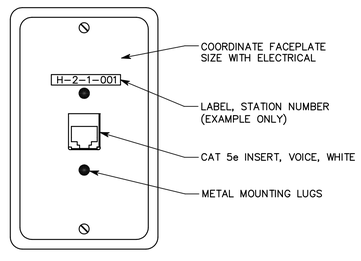

A3 TYPICAL WALL-MOUNT TELEPHONE OUTLET

NTS (W)

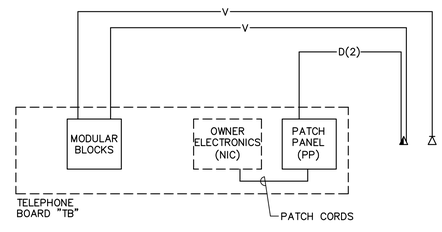

A4 VOICE/DATA RISER DIAGRAM

NTS

L. K. SORENSEN ASSOCIATES, INC
ARCHITECTS / PLANNERS
3690 SOUTH 500 WEST, SUITE 102
FIFTH STREET PLAZA
SALT LAKE CITY, UTAH 84115
(801)262-9393 Fax (801)262-9407

LICENSED PROFESSIONAL ENGINEER
No. 185978
PETER E. JOHANSEN
STATE OF UTAH

CONSULTANTS

STRUCTURAL:
DUNN ASSOCIATES, INC.

MECHANICAL:
ADVANCED CONCEPT ENGINEERING

ELECTRICAL:
SPECTRUM ENGINEERS

UTAH NATIONAL GUARD

Maintenance Shop Area Remodel

Building 119
Camp W. G. Williams
Bluffdale, Utah

MARK	DATE	DESCRIPTION
	05/23/06	CONST. DOCUMENTS

D.F.C.M. PROJECT NO: 06012480
ARCH. PROJECT NO: 0226
CAD DWG FILE: 48EE502
DRAWN BY: STS
CHECKED BY: PEJ
DESIGNED BY: PEJ

COPYRIGHT:
THIS PRINT AND ALL INFORMATION HEREON IS SUBJECT TO COPYRIGHT LAWS AND IS THE PROPERTY OF THE STATE OF UTAH AND SHALL NOT BE USED ON ANY OTHER PROJECT WITHOUT WRITTEN PERMISSION OF THE STATE OF UTAH.

SHEET TITLE

DETAILS

EE502

File name: P:\2006\20060348\1Drawings\Sheet\48EE502.dwg Last Plotted: 09/07/2006 @ 11:30 By: Sts

FIRE ALARM INPUT/ OUTPUT MATRIX

INITIATING DEVICES		OUTPUT DEVICES					
	ZONE	GENERAL ALARM	DOOR HOLDER/CLOSERS	FAN SHUTDOWN	FIRE DAMPER	TROUBLE NOTIFICATION AT PANEL	NOTES
1	MAIN FLOW	•	•	•	•		
2	MAIN TAMPER					•	
3	MAIN LEVEL INITIATING LOOP	•	•	•	•		
4	MAIN LEVEL DUCT DETECTOR	•	•	•	•		
5	2ND LEVEL INITIATING LOOP	•	•	•	•		
6	2ND LEVEL DUCT DETECTOR	•	•	•	•		

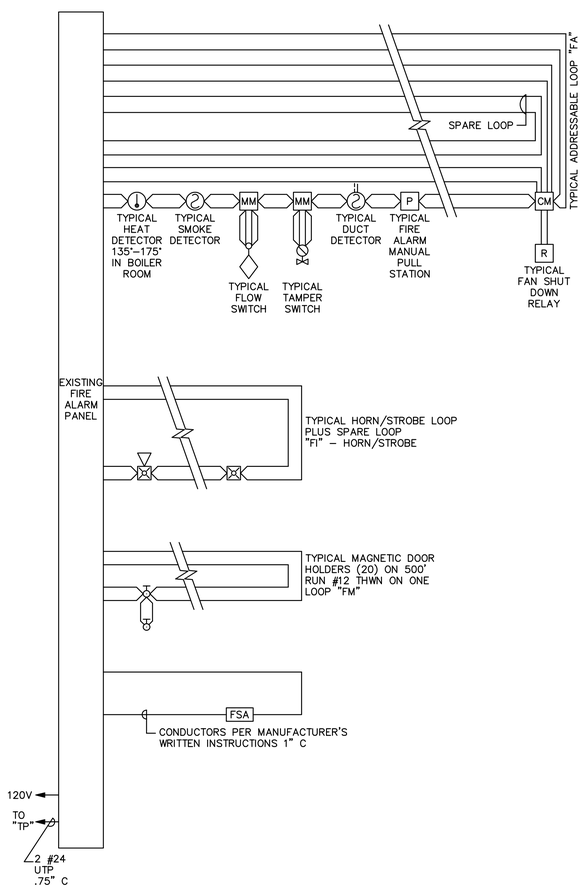

A1 FIRE ALARM RISER
NO SCALE

WIRING SCHEDULE

FUNCTION	< 500'	< 1000'	1000'–3000'	> 3000'
ADDRESSABLE LOOP	#18 TSP	#18 TSP	#16 TSP	#14 TSP
POWER LOOP	#14 THWN	#14 THWN	#12 THWN	#10 THWN
SPARE LOOP	#14 THWN	#14 THWN	#12 THWN	#10 THWN
STROBE HORNS	#14 THWN	#14 THWN	#12 THWN	#10 THWN
MAGNETIC DOOR HOLDER	#12 THWN	#10 THWN		
SPEAKERS	#16 TSP	#16 TSP	#14 TSP	#14 TSP

NOTIFICATION SCHEDULE

SYMBOL	STROBE SIZE	COVERAGE	AVERAGE CURRENT	MAXIMUM PER CIRCUIT ALONE
15	15 CD	20'x20'	.085A	17
30	30 CD	30'x30'	.135A	11
75	75 CD	40'x40'	.200A	7
110	110 CD	50'x50'	.225A	6

ADDRESSABLE LOOP LEGEND

INITIATING LOOP	DESCRIPTION
FA–1	MAINTENANCE SHOP AREA

INDICATING LOOP LEGEND

INDICATING LOOP	DESCRIPTION
FI–1	TEAM ROOM, CORRIDOR, RR, PAINT, CARPENTRY
FI–2	METAL SHOP, PIPE SHOP, ELECT SHOP, CORRIDOR

GENERAL SHEET NOTES

1. PLANS ARE BASED UPON 99 MONITOR AND CONTROL DEVICES PER ADDRESSABLE LOOP. OTHER CONFIGURATIONS ARE ACCEPTABLE SUBJECT TO CONTRACTOR ALLOWING FOR INCREASED WIRING REQUIREMENTS AND SUBMITTAL DRAWINGS SHOWING NEW WIRING CONFIGURATION. MAXIMUM INITIAL DEVICES PER LOOP SHALL NOT EXCEED 75% MAXIMUM ALLOWABLE.
2. PLANS ARE BASED UPON THE WIRING SCHEDULE SHOWN. WHERE MANUFACTURER'S REQUIREMENTS EXCEED REQUIREMENTS SHOWN, INCLUDE ADDITIONAL ASSOCIATED COSTS AND SUBMITTAL DRAWINGS INDICATING NEW WIRING CONFIGURATION.
3. PLANS ARE BASED UPON 2 AMPS AT 24 VDC, NOT TO EXCEED 75% (1.50 AMPS AVAILABLE), POWER SUPPLY CAPACITY PER NOTIFICATION CIRCUIT. NOTIFICATION DEVICE LOADS ARE BASED UPON NOTIFICATION DEVICE SCHEDULE SHOWN. INCLUDE ADDITIONAL ASSOCIATED COSTS FOR INCREASED WIRING AND POWER SUPPLY CAPACITY IF LOADS OF ACTUAL DEVICES PROVIDED EXCEED CIRCUIT CAPACITY, OR IF LOAD OUTPUT OF ACTUAL POWER SUPPLIES PROVIDED IS SIZED DIFFERENTLY. PROVIDE SUBMITTAL DRAWINGS SHOWING NEW WIRING CONFIGURATION.
4. FLOW AND TAMPER CONFIGURATION BASED UPON FIRE SPRINKLER DESIGN CONCEPT. FIELD VERIFY ACTUAL REQUIREMENTS. INCLUDE ANY ADDITIONAL MONITOR MODULES REQUIRED BY ACTUAL DESIGN REQUIREMENTS.
5. HEAT DETECTORS WHEN INSTALLED IN ELEVATOR SHAFTS OR MECHANICAL ROOMS FOR ELEVATOR SHUT DOWN SHALL HAVE HEAT DETECTOR WITH LOWER RESPONSE TIME INDEX THAN SPRINKLER HEAD.
6. ALL OUTPUT DEVICES ARE DESIGNED ON SYSTEMS WITH 2 AMP POWER SUPPLY.
7. HORN/STROBE BASED ON 120 MILLIAMPS, DOOR HOLDERS BASED ON 70 MILLIAMPS.
8. BATTERY CAPACITY TO BE ADEQUATE TO OPERATE 15 MINUTES AFTER 24 HOURS PLUS 25% SPARE CAPACITY.
9. RUN SPARE LOOPS IN SAME CONDUIT.
10. PROVIDE ONE YEAR OFF SITE MONITORING INCLUDING ALL INTERFACE DEVICES AND MONITORING CHARGES. COORDINATE WITH BUILDING OWNER'S OFF SITE MONITORING COMPANY.
11. LOCATE SMOKE DETECTORS MINIMUM 3' FROM AIR SUPPLY LOUVERS.
12. PROVIDE SYNCHRONIZED STROBES THROUGHOUT FACILITY. PROVIDE SYNCHRONIZATION MODULES PER MANUFACTURER'S REQUIREMENTS. INCLUDE ADDITIONAL WIRING, IF REQUIRED.
13. INSTALL DUCT DETECTORS PER NFPA 72 REQUIREMENTS AND PROVIDE ADDITIONAL DUCT DETECTORS DEPENDING UPON FINAL DUCT ARRANGEMENT.

FAULT CURRENT TABLE

BUS	FAULT CURRENT
M	25,230 SCA
L1	14,055 SCA
L2	9,394 SCA

PROVIDE FULLY RATED CIRCUIT BREAKERS IN PANEL–BOARDS FOR THE FAULT CURRENT SHOWN. SERIES RATINGS WITH NEXT LEVEL UPSTREAM OVERCURRENT PROTECTIVE DEVICES ARE PERMITTED SUBJECT TO FACTORY UL DOCUMENTATION OF SERIES RATING SUBMITTED TO ENGINEER. IF DEVICE OR EQUIPMENT FAULT CURRENT RATING IS NOT SHOWN, ASSUME 100,000 AIC.

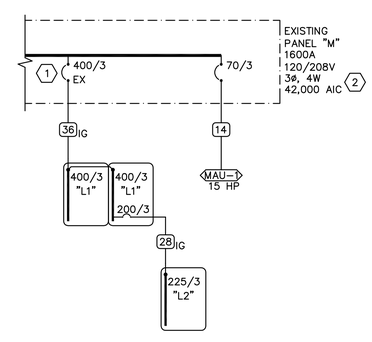

A4 ONE–LINE DIAGRAM
NO SCALE

SHEET KEYNOTES

1. EXISTING 400 AMP SPARE BREAKER.
2. FIELD VERIFY AIC RATING.

CONDUCTOR AND CONDUIT SCHEDULE

SCHEDULE NUMBER
SUBSCRIPT (NOTE 5)
(E.G.) 5 IG

SYM	AMP	CONDUIT SIZE	CONDUCTOR(NOTE 1) QTY	SIZE	GR	IG	SE	NOTES
1	20	.75	2	12	12	12	8	2
2	20	.75	3	12	12	12	8	2,3
3	20	.75	4	12	12	12	8	2,3
4	30	.75	2	10	10	10	8	2
5	30	.75	3	10	10	10	8	2
6	30	.75	4	10	10	10	8	2
7	40	1	2	8	10	8	6	2
8	40	1	3	8	10	8	6	2
9	40	1	4	8	10	8	6	2
10	55	1	2	6	10	8	4	2
11	55	1	3	6	10	8	4	2
12	55	1.25	4	6	10	8	4	2
13	70	1	2	4	8	4	2	2
14	70	1.25	3	4	8	4	2	2
15	70	1.25	4	4	8	4	2	2
16	85	1.25	2	3	8	3	2	2
17	85	1.25	3	3	8	3	2	2
18	85	1.25	4	3	8	3	2	2
19	95	1.25	3	2	8	2	2	2
20	95	1.50	4	2	8	2	2	2
21	130	1.50	3	1	6	2	2	2
22	130	1.50	4	1	6	2	2	2
23	150	2	3	1/0	6	2	1/0	2
24	150	2	4	1/0	6	2	1/0	2
25	175	2	3	2/0	6	2	2/0	2
26	175	2	4	2/0	6	2	2/0	2
27	200	2	3	3/0	6	2	2/0	2
28	200	2.50	4	3/0	6	2	2/0	2
29	230	2.50	3	4/0	4	2	2/0	2
30	230	2.50	4	4/0	4	2	2/0	2
31	255	2.50	3	250	4	1	2/0	2
32	255	2.50	4	250	4	1	2/0	2
33	310	3	3	350	3	1/0	3/0	2
34	310	3	4	350	3	1/0	3/0	2
35	380	3.50	3	500	3	3/0	3/0	2
36	380	4	4	500	3	3/0	3/0	2
37	400	2 EA 2	3	3/0	3	3/0	3/0	2
38	400	2 EA 2.50	4	3/0	3	3/0	3/0	2
39	510	2 EA 2.50	3	250	1	4/0	3/0	2
40	510	2 EA 2.50	4	250	1	4/0	3/0	2
41	620	2 EA 3	3	350	1/0	4/0	3/0	2,4
42	620	2 EA 3	4	350	1/0	4/0	3/0	2,4
43	760	2 EA 3.50	3	500	1/0	4/0	3/0	2,4
44	760	2 EA 4	4	500	1/0	4/0	3/0	2,4
45	855	3 EA 3	3	300	2/0	4/0	3/0	2,4
46	855	3 EA 3	4	300	2/0	4/0	3/0	2,4
47	1000	3 EA 3.50	3	400	2/0	4/0	3/0	4
48	1000	3 EA 3.50	4	400	2/0	4/0	3/0	4
49	1140	3 EA 4	3	500	3/0	4/0	3/0	4
50	1140	3 EA 4	4	500	3/0	4/0	3/0	4
51	1240	4 EA 3	3	350	3/0	4/0	3/0	4
52	1240	4 EA 3	4	350	3/0	4/0	3/0	4
53	1675	5 EA 3.50	4	400	4/0	4/0	4/0	4
54	2010	6 EA 3.50	4	400	250	250	250	4
55	2660	7 EA 4	4	500	350	350	350	4
56	3040	8 EA 4	4	500	500	500	500	4
57	4180	11 EA 4	4	500	500	500	500	4
58		5 EA 4						6
59		5						6
60		10 EA 4						6

CONDUCTOR AND CONDUIT SCHEDULE NOTES

1. CONDUCTORS SHOWN ARE SHOWN FOR EACH CONDUIT WITH MODIFICATIONS AS NOTED IN NOTE 5. ALL CONDUCTORS SHOWN ARE THWN UNLESS OTHERWISE NOTED.
2. PROVIDE EQUIPMENT GROUND CONDUCTORS PER TABLE 250–122 WHEN CIRCUIT BREAKERS ARE SIZED GREATER THAN AMPERE RATING SHOWN IN TABLE.
3. PROVIDE #10 NEUTRALS FOR MULTIWIRE BRANCH CIRCUITS SERVING COMPUTERS.
4. GROUND (GR) CONDUCTOR MAY BE DELETED ON SERVICE ENTRANCE CONDUCTORS.
5. WHEN SYMBOL SUBSCRIPT INDICATES "IG", INCLUDE "IG" OR INSULATED GROUND CONDUCTOR SCHEDULED ALONG WITH GR OR EQUIPMENT GROUND CONDUCTOR. WHEN SYMBOL SUBSCRIPT INDICATES "SE", SUBSTITUTE "SE" CONDUCTOR FOR "GR" CONDUCTOR SHOWN WHICH IS SIZED FOR THE GROUNDING OF THE SECONDARY OF THE SEPARATELY DERIVED SYSTEMS.
6. RACEWAY ONLY. CONDUCTORS PROVIDED BY UTILITY.

L. K. SORENSEN ASSOCIATES, INC
ARCHITECTS / PLANNERS
3690 SOUTH 500 WEST, SUITE 102
FIFTH STREET PLAZA
SALT LAKE CITY, UTAH 84115
(801)262-9393 Fax (801)262-9407

LICENSED PROFESSIONAL ENGINEER
No. 185978
PETER E. JOHANSEN
STATE OF UTAH

CONSULTANTS

STRUCTURAL:
DUNN ASSOCIATES, INC.

MECHANICAL:
ADVANCED CONCEPT ENGINEERING

ELECTRICAL:
SPECTRUM ENGINEERS

UTAH NATIONAL GUARD

Maintenance Shop Area Remodel

Building 119
Camp W. G. Williams
Bluffdale, Utah

MARK	DATE	DESCRIPTION
	05/23/06	CONST. DOCUMENTS

D.F.C.M. PROJECT NO: 06012480
ARCH. PROJECT NO: 0226
CAD DWG FILE: 48EE601
DRAWN BY: STS
CHECKED BY: PEJ
DESIGNED BY: PEJ

COPYRIGHT:
THIS PRINT AND ALL INFORMATION HEREON IS SUBJECT TO COPYRIGHT LAWS AND IS THE PROPERTY OF THE STATE OF UTAH AND SHALL NOT BE USED ON ANY OTHER PROJECT WITHOUT WRITTEN PERMISSION OF THE STATE OF UTAH.

SHEET TITLE
ONE-LINE DIAGRAM, FIRE ALARM RISER

EE601

File name: P:\2006\20060348\1Drawings\Sheet\48EE601.dwg Last Plotted: 09/07/2006 @ 11:30 By: Sts

CLIENT:	LK SORENSEN ASSOCIATES, INC.	JOB:	MAINTENANCE SHOP REMODEL, BLDG 119, CAMP WILLIAMS	05/23/06
PANEL ID: D (EX)	MOUNT: SURFACE	TYPE: FIELD VERIFY	120/208 VOLT 3 PHASE 4 WIRE	
225 AMPERE MAIN LUGS		LOCATION: CARPENTRY SHOP	PANEL SIZE:	22"W x 6"D

ACCESSORIES: UPDATE PANEL DIRECTORY AND LABEL

CIR #	O/C PROT AMP	POLE	OUTLETS LTG	CO'S	PWR	DESCRIPTION	LCL KVA	PHASE LOAD A	B	C	LCL KVA	DESCRIPTION	OUTLETS LTG	CO'S	PWR	O/C PROT AMP	POLE	CIR #
1	20 *	1	3			EXIT SIGNS	0.1	0.1				OUTLETS COLUMNS (EX)				20	1	2
3	20	1				OUTLETS UPSTAIRS (EX)			0			OUTLETS COLUMNS (EX)				20	1	4
5	20	1				LIGHTS (EX)				0		OUTLETS COLUMNS (EX)				20	1	6
7	20	1				LIGHTS UPSTAIRS (EX)		0				LIGHTS WEST BANK EX				20	1	8
9	20	1				FIRE ALARM (EX)			0			OUTLETS COLUMNS (EX)				20	1	10
11	20	1				SPACE HEATER W. AREA (EX)				0		LIGHTS EAST BANK				20	1	12
13	20 *	1			2	UH-1 & UH-2	0.2	0.2				LIGHTS				20	1	14
15	20 *	1			1	FURNACE F-2	1.4		3.16		1.76	TEAM,CORR,PAINT LTS	11			20 *	1	16
17	20 *	1			1	FURNACE F-3	1.4			3.25	1.85	SERVICE CORR. E. LTS	9		1	20 *	1	18
19	20 *	1			1	FURNACE F-1	0.7	2.21			1.51	SERVICE CORR. W. LTS	7			20 *	1	20
21	20 *	2			1	CONDENSING UNIT CU-1	1.3		2.68		1.38	PIPE SHOP LTS	7			20 *	1	22
23	–	–				–	1.3			2.68	1.38	METAL SHOP LTS	7			20 *	1	24
25	30 *	3			1	PAINT SPRAY BOOTH – PF2	2	2.6			0.6	ELECT. SHOP LTS	3			20 *	1	26
27	–	–				–	2		3.2		1.2	E. CARPENTRY LTS	6			20 *	1	28
29	–	–				–	2			3.2	1.2	W. CARPENTRY LTS	6			20 *	1	30
31	20 *	1	(4)		1	PAINT SPRAY LTS – PF2	0.4	3.3			2.9	MAKE-UP AIR UNIT MAU-1			1	40 *	3	32
33	20	1				SPACE			2.9		2.9	–				–	–	34
35	20	1				SPACE				2.9	2.9	–				–	–	36
37	20	1				SPACE		0				SPACE				20	1	38
39	20	1				SPACE			0			SPACE				20	1	40
41	20	1				SPACE				0		SPACE				20	1	42
TOTALS:			KVA PER PHASE					**8.41**	**11.94**	**12.03**	TOTAL KVA						**32.38**	
			AMPS PER PHASE					**70**	**100**	**100**	AVERAGE AMPS PER PHASE						**90**	

WIRING: EXISTING CUTLER-HAMMER PANEL. UPDATE TO REFLECT DEMOLISHED EQUIPMENT HAVING BEEN REMOVED.
* PROVIDE A NEW CB.

CLIENT:	LK SORENSEN ASSOCIATES, INC.	JOB:	MAINTENANCE SHOP REMODEL, BLDG 119, CAMP WILLIAMS	05/23/06
PANEL ID: L1	MOUNT: SURFACE	TYPE: BOLT-ON	120/208 VOLT 3 PHASE 4 WIRE	
400 AMPERE MAIN LUGS		LOCATION: METAL SHOP	PANEL SIZE:	22"W x 6"D

ACCESSORIES: PANEL DIRECTORY, IDENTIFICATION, GROUNDING BAR, INSULATED GROUND BAR, SUBFEED LUGS, HINGED FRONT COVER

CIR #	O/C PROT AMP	POLE	OUTLETS LTG	CO'S	PWR	DESCRIPTION	LCL KVA	PHASE LOAD A	B	C	LCL KVA	DESCRIPTION	OUTLETS LTG	CO'S	PWR	O/C PROT AMP	POLE	CIR #
1	60	3			1	AIR COMPRESSOR – CS17	3.7	5.7			2	PIPE THREADER, 5" – PS1		1		30	3	2
3	–	–				–	3.7		5.7		2	–				–	–	4
5	–	–				–	3.7			5.7	2	–				–	–	6
7	20	3			1	WELDING HOOD FAN MS9	1.3	3.22			1.92	PIPE THREADER, 2" – PS2		1		20	1	8
9	–	–				–	1.3		4.3		3	PIPE CUTTER – PS3		1		30	3	10
11	–	–				–	1.3			4.3	3	–				–	–	12
13	20	1		1		TOILET PLUG	0.18	3.18			3	–				–	–	14
15	20	1			1	EM EYE WASH ALRM –PF3	0.01		0.55		0.54	SOUTH PLUGS, PIPE SHOP		3		20	1	16
17	20	1		4		PAINTING PLUGS	0.72			1.26	0.54	NORTH PLUGS, PIPE SHOP		3		20	1	18
19	40	3		1		SHEAR – MS3	2.9	3.26			0.36	EAST PLUGS, PIPE SHOP		2		20	1	20
21	–	–				–	2.9		3.44		0.54	W, S PLUGS, METAL SHOP		3		20	1	22
23	–	–				–	2.9			3.62	0.72	N, E PLUGS, METAL SHOP		4		20	1	24
25	15	3		1		BAND SAW – MS4	0.79	1.15			0.36	WEST BENCH PLUGS		2		20	1	26
27	–	–				–	0.79		1.15		0.36	WEST BENCH PLUGS		2		20	1	28
29	–	–				–	0.79			1.33	0.54	N, E PLUGS, ELECT SHOP		3		20	1	30
31	20	2		1		DRILL PRESS – MS6	1	2.08			1.08	SERV CORR, EXTERIOR PLGS		6		20	1	32
33	–	–				–	1		2		1	BATT CHARGER			1	20	1	34
35	50	2		1		ARC WELDER – MS7	4			5	1	BATT CHARGER			1	20	1	36
37	–	–				–	4	4.4			0.4	GARAGE DOOR			1	20	1	38
39	20	1		1		WELDER, WIRE FEED – MS8	1.92		1.92			SPARE				20	1	40
41	20	1				SPARE				0		SPARE				20	1	42
43	20	1			1	PAINTING OH DOOR	1.2	1.2				SPARE				20	1	44
45	20	1			1	METAL SHOP OH DOOR	1.2		1.2			SPARE				20	1	46
47	20	1			1	PIPE SHOP OH DOOR	1.2			1.2		SPARE				20	1	48
49	20	1				SPARE		0				SPARE				20	1	50
51	20	1				SPARE			0			SPACE				20	1	52
53	20	1				SPARE				0		SPACE				20	1	54
55	20	1				SPACE		0				SPACE				20	1	56
57	20	1				SPACE			0			SPACE				20	1	58
59	20	1				SPACE				0		SPACE				20	1	60
								24			24	PANEL L2				225 *	3	
									23.2		23.2	–				–	–	
										22.7	22.7	–				–	–	
TOTALS:			KVA PER PHASE					**48.19**	**43.46**	**45.11**	TOTAL KVA						**136.76**	
			AMPS PER PHASE					**402**	**362**	**376**	AVERAGE AMPS PER PHASE						**380**	

WIRING: * SUBFEED CB.

CLIENT:	LK SORENSEN ASSOCIATES, INC.	JOB:	MAINTENANCE SHOP REMODEL, BLDG 119, CAMP WILLIAMS	05/23/06
PANEL ID: L2	MOUNT: SURFACE	TYPE: BOLT-ON	120/208 VOLT 3 PHASE 4 WIRE	
225 AMPERE MAIN LUGS		LOCATION: CARPENTRY SHOP	PANEL SIZE:	22"W x 6"D

ACCESSORIES: PANEL DIRECTORY, IDENTIFICATION, GROUNDING BAR, INSULATED GROUND BAR, HINGED FRONT COVER

CIR #	O/C PROT AMP	POLE	OUTLETS LTG	CO'S	PWR	DESCRIPTION	LCL KVA	PHASE LOAD A	B	C	LCL KVA	DESCRIPTION	OUTLETS LTG	CO'S	PWR	O/C PROT AMP	POLE	CIR #
1	30	3		1		RADIAL ARM SAW – CS1	2	2.55			0.55	DRILL PRESS – CS9		1		15	3	2
3	–	–				–	2		2.55		0.55	–				–	–	4
5	–	–				–	2			2.55	0.55	–				–	–	6
7	40	3		1		SHAPER – CS2	2.9	10			7.1	SAWDUST COLLECT. –CS15			1	100	3	8
9	–	–				–	2.9		10		7.1	–				–	–	10
11	–	–				–	2.9			10	7.1	–				–	–	12
13	20	3		1		JOINER – CS3	1.27	1.87			0.6	SOUTHWEST PLUGS		3		20	1	14
15	–	–				–	1.27		1.87		0.6	NORTHWEST PLUGS		3		20	1	16
17	–	–				–	1.27			2.07	0.8	EAST PLUGS		4		20	1	18
19	30	3		1		BAND SAW – CS4	2	2.73			0.73	EXT PLUGS, COMPRS LTG	1	3		20	1	20
21	–	–				–	2		2.4		0.4	GARAGE DOOR			1	20	1	22
23	–	–				–	2			2.4	0.4	GARAGE DOOR			1	20	1	24
25	20	1		1		SCROLL SAW – CS5	1.92	1.92				SPARE				20	1	26
27	30	3		1		PLANER – CS6	2		2			SPARE				20	1	28
29	–	–				–	2			2		SPARE				20	1	30
31	–	–				–	2	2				SPARE				20	1	32
33	20	1		1		BELT SANDER – CS7	1.92		1.92			SPACE				20	1	34
35	40	3		1		TABLE SAW – CS8	2.9			2.9		SPACE				20	1	36
37	–	–				–	2.9	2.9				SPACE				20	1	38
39	–	–				–	2.9		2.9			SPACE				20	1	40
41	20	1			1	CARP. SHOP OH DOOR	1.2			1.2		SPACE				20	1	42
TOTALS:			KVA PER PHASE					**23.97**	**23.64**	**23.12**	TOTAL KVA						**70.73**	
			AMPS PER PHASE					**200**	**197**	**193**	AVERAGE AMPS PER PHASE						**197**	

WIRING:

LIGHTING FIXTURE SCHEDULE

NOTE TO BIDDERS: COMPLY WITH THE LIGHTING SPECIFICATIONS.

REFER TO SPECIFICATIONS FOR IMPORTANT TECHNICAL REQUIREMENTS FOR LIGHTING FIXTURES, BALLASTS, AND LAMPS. THE CATALOG NUMBERS LISTED BELOW HAVE BEEN CAREFULLY PREPARED TO ASSIST BIDDERS IN SELECTING PRODUCTS TO ACHIEVE THE DESIGN CONCEPT, HOWEVER, PRIOR TO BIDDING, EACH MANUFACTURER SHALL COMPARE THE CATALOG NUMBERS SHOWN WITH THE DESCRIPTION AND REQUIREMENTS ON THE DRAWINGS, AND SHALL NOTIFY THE ARCHITECT/ENGINEER OF ANY DISCREPANCIES. SPECIFICALLY INCLUDED IN THIS EVALUATION SHALL BE THE VERIFYING OF PROPER MOUNTING KITS OR ACCESSORIES TO FACILITATE INSTALLATION AS SHOWN AT EACH LOCATION ON THE DRAWINGS. NO ALLOWANCE OR REDRESS WILL BE ALLOWED FOR DISCREPANCIES THAT WERE NOT REPORTED TO THE ARCHITECT/ENGINEER IN TIME FOR CORRECTION OR CLARIFICATION BEFORE THE BID. THE REPORTING OF ANY AMBIGUITY IS THE RESPONSIBILITY OF THE BIDDER. PROVIDE UNIT PRICES AND FIXTURE BRAND SELECTED FOR ADD/DELETE CHANGES FOR EACH FIXTURE TYPES SHOWN WITHIN 48 BUSINESS HOURS OF THE BID DATE. FAILURE TO COMPLY WITH THIS REQUIREMENT MAY DISQUALIFY THE PRODUCTS AND EMPOWER THE ENGINEER TO DETERMINE FAIR VALUE FOR FIXTURE AND INSTALLATION CHANGES, WITHOUT FURTHER INPUT FROM THE CONTRACTOR OR INSTALLER. SUBMITTAL PACKAGE SHALL INCLUDE LAMP MANUFACTURER AND CATALOG NUMBER ON EACH FIXTURE SHEET. ON ALL PENDANT MOUNTED FIXTURES, PROVIDE A SECOND SET OF PENDANTS, OF A DIFFERENT LENGTH, AS DIRECTED BY THE ARCHITECT/ENGINEER, PROVIDED AND INSTALLED AT NO ADDITIONAL CHARGE. ALL FIXTURES SHALL BE APPROVED BY UL OR ANOTHER ACCEPTABLE TESTING LAB FOR THE PURPOSE INTENDED AND WITH THE LAMP AND BALLAST PROPOSED. UNIVERSAL VOLTAGE (120/277) BALLASTS REQUIRED UNLESS NOTED OTHERWISE.

SYMBOL	MARK	FIXTURE CHARACTERISTICS BODY / AIR / MOUNTING / DOOR LENS/LOUVER/REFLECTOR/OTHER	LAMP	WATTS	VOLTS	MANUFACTURER	CATALOG NUMBER	NOTES
	E	E PREFIX INDICATES THAT FIXTURE IS PROVIDED WITH AN EMERGENCY BATTERY PACK TO PROVIDE POWER TO ANY 2, 3, 4 OR 8 FOOT FLOURESCENT LAMP COMPATIBLE WITH ALL STANDARD AND ELECTRONIC BALLASTS; COMPLETELY SELF-CONTAINED TO PROVIDE 90 MINUTES OF EMERGENCY POWER TO FIXTURE BALLAST; MINIMUM LIGHT OUTPUT FOR TYPICAL 4' LAMP SHALL BE 1100 LUMENS OR HIGHER;UNIVERSAL TRANSFORMER FOR 120 OR 277 VOLTS; LOW VOLTAGE PROTECTION, COMBINATION TEST SWITCH AND AC "ON" INDICATOR; 10 YEAR PRO-RATA WARRANTY; INSTALL TEST SWITCH IN A MANNER THAT REQUIRES NO DISASSEMBLY FOR TESTING.						
	E	EMERGENCY BATTERY PACK.		120/277V	V3W	IOTA	I-80	
						BODINE	B50	
						LITHONIA	PS-1400	
						PRESCOLITE	EFPS-5	
						HUBBELL	E96	
						CHLORIDE	CFP841	
						LIGHTOLIER	FBP50	
	E3	EXIT SIGN: CAST ALUMINIUM HOUSING; UNIVERSAL MOUNTING; UNIVERSAL ARROWS PER PLANS; EMERGENCY BATTERY PACK WITH 10 YEAR PRO-RATA WARRANTY; LED, DIFFUSE LENS PANEL; GREEN LETTERS ON WHITE BACKGROUND. MUST MEET NFPA ILLUMINATION STANDARDS.						
	E3-1	SINGLE FACE:	LED	1W	120/277V	DUAL-LITE	LCSGWE	
						HUBBELL	CWPGWL9	
						LITHONIA	LES W 1 G 120/277 ELN	
						SURE-LITES	CX7170GW	
						MCPHILBEN	ER55L-1-12/27-WG	
						CHLORIDE	CXLN1GW	
						LIGHTOLIER	LDN1GW	
	E3-2	DUAL FACE:	LED	2W	120/277V	DUAL-LITE	LCDGWE	
						HUBBELL	CDPGWL9	
						LITHONIA	LES W 2 G 120/277 ELN	
						SURE-LITES	CX7270GW	
						MCPHILBEN	ER55L-2-12/27-WG	
						CHLORIDE	CXLN2GW	
						LIGHTOLIER	LDN2GW	
	OC	WALL PACK: ADJUSTABLE CUT OFF; FULL PERIMETER GASKETING: WET LOCATION; STAINLESS STEEL HINGES AND LATCHES; PROJECTING LENS; HPF BALLAST; SEE ELEVATION FOR MOUNTING HEIGHT, COLOR AS SPECIFIED BY ARCHITECT.						
	OC-14	70 HPS, RECESSED J BOX. TYPE 4 CUTOFF OPTICS, DECORATIVE	70HPS	100W	277/120V	KIM	WD14D4/70HPS120/XX	
						LSI	WDRS-FT-70HPS-F-MT-XXX-NO	
						GREENLEE	WWS-70HPS-MT-FT-CBA	
						GE	CCSX07S0H1BDKBZD	
	SS	GENERAL PURPOSE INDUSTRIAL: WHITE ENAMEL, NONAPERTURED REFLECTOR; PROGRAM START ELECTRONIC BALLASTS; T8 LAMPS; ONE BALLAST PER FIXTURE WHERE POSSIBLE; UNLESS TWO LEVEL SWITCHING IS SHOWN ON THE PLANS, STEM MOUNTED WITH TONG HANGERS.						
	SS-1	4', 2 LAMP.	2-F32T8 RE835	65W	277/120V	LITHONIA	EJ232-MVOLT-TUBRHP-THUN	
						LIGHTOLIER	TFS232-U-SOP	
						METALUX	DCIM-232-UNV-PROGRAM START	
						HUBBELL	IG142R-PP00-UPS	
						COLUMBIA	KL4-232-ST-EB8120/277 PROG-CSTH	
						DAYBRITE	IF232-UNV-1/2-EB-SPEC	
	SS-4	8', 6 LAMP.	6-F32T8 RE835	180W	277/120V	LITHONIA	TEJ332-MVOLT-2/3TUBRHP-THUN	
						LIGHTOLIER	TFS342-120/277-U-SOP	
						METALUX	8T-DCIM-332-UNV-PROGRAM START	
						HUBBELL	IGT86R-PP00-UPS	
						COLUMBIA	KL8-332-ST-4EB8120/277 PROG-CSTH	
						DAYBRITE	TIF332-UNV-2/3-EB-SPEC	
	SS-6	8', 8 LAMP.	8-F32T8 RE835	240W	277/120V	LITHONIA	TEJ432-MVOLT-2/4TUBRHP-THUN	
						LIGHTOLIER	N/A	
						METALUX	8T-DCIM-432-UNV-PROGRAM START	
						HUBBELL	IGT88R-PP00-UPS	
						COLUMBIA	KL8-432-ST-4EB8120/277 PROG-CSTH	
						DAYBRITE	TIF432-UNV-2/4-EB-SPEC	
	WB	WALL MOUNTED FLUORESCENT LOCATED ABOVE WALL ELEMENT (MIRROR/WHITEBOARD, ETC.): AS INDICATED ON DRAWINGS; WITH ACRYLIC INJECTION MOLDED; PROGRAM START ELECTRONIC BALLASTS; T8 LAMPS; ONE BALLAST PER FIXTURE WHERE POSSIBLE, UNLESS TWO LEVEL SWITCHING IS SHOWN ON THE PLANS.						
	WB-3	2-LAMP, WALL MOUNT 48", STEEL ENCLOSURE, DOWNLIGHT ONLY; ACRYLIC INJECTION MOLDED PRISMATIC DIFFUSER.	2-F32T8 RE835	65W	277/120V	DAYBRITE	CD232W-UNV-1/2-EB-SPEC	
						LIGHTOLIER	CWB232-WB-U-SOP	
						METALUX	BI-232-UNV-PROGRAM START	
						L.A.L.	BSQ100-2-4R-INJ-WHT-T8EB-120/277-UPS	
						COLUMBIA	WAL4-232-EBPS120/277	
						LITHONIA	WP 232 DO MVOLT-TUBPHP	

L. K. SORENSEN ASSOCIATES, INC
ARCHITECTS / PLANNERS
3690 SOUTH 500 WEST, SUITE 102
FIFTH STREET PLAZA
SALT LAKE CITY, UTAH 84115
(801)262-9393 Fax (801)262-9407

LICENSED PROFESSIONAL ENGINEER
No. 185978
PETER E. JOHANSEN
STATE OF UTAH

CONSULTANTS

STRUCTURAL:
DUNN ASSOCIATES, INC.

MECHANICAL:
ADVANCED CONCEPT ENGINEERING

ELECTRICAL:
SPECTRUM ENGINEERS

UTAH NATIONAL GUARD

Maintenance Shop Area Remodel

Building 119
Camp W. G. Williams
Bluffdale, Utah

MARK	DATE	DESCRIPTION
	05/23/06	CONST. DOCUMENTS

D.F.C.M. PROJECT NO: 06012480
ARCH. PROJECT NO: 0226
CAD DWG FILE: 48EE602
DRAWN BY: STS
CHECKED BY: PEJ
DESIGNED BY: PEJ

COPYRIGHT:
THIS PRINT AND ALL INFORMATION HEREON IS SUBJECT TO COPYRIGHT LAWS AND IS THE PROPERTY OF THE STATE OF UTAH AND SHALL NOT BE USED ON ANY OTHER PROJECT WITHOUT WRITTEN PERMISSION OF THE STATE OF UTAH.

SHEET TITLE

LIGHTING FIXTURE & PANEL SCHEDULES

EE602

File name: P:\2006\20060348\Drawings\Sheet\48EE602.dwg Last Plotted: 09/07/2006 @ 11:30 By: Sts

LEGEND
E – DIVISION 16
Q – FURNISHED WITH THE EQUIPMENT
* – COORDINATE WITH THE DIVISION 15 TEMPATURE CONTROL INSTALLER
** – AUTOMATIC CONTROL WIRING BY DIVISION 15

ELECTRICAL REQUIREMENTS

			LOAD DATA								WIRING	O/C PROTECTION			DISCONNECT			STARTER DATA														
EQUIP ID	QTY	DESCRIPTION	HP	KW	FLA	MCA	MOCP	VOLTAGE	PHASE	Hz	WIRE AND CONDUIT SIZE	FURNISHED BY	DEVICE	LOCATION	FURNISHED BY	DEVICE	LOCATION	FURNISHED BY	DEVICE	LOCATION	SIZE	SPEED	CONTROL VOLTAGE	SELECTOR SWITCH	PUSH BUTTON	PILOT LAMP	N.O. CONTACTS	N.C. CONTACTS	PHASE FAILURE RELAY	SCEMATIC REFERENCE	REMOTE CONTROL	EQUIP ID	REMARKS
CS1	1	RADIAL ARM SAW	5		16.7			208	3	60	3#10 THWN CU	E	30A 3P	PANEL	E	NEMA 15–30	ADJ. TO	Q														CS1	PROVIDE CORD AND PLUG.
CS1		CARPENTRY SHOP									1#10 GR, 3/4"C		CB	L2		RECEPTACLE	EQUIP.																INTERLOCK STARTING W/ DUST COLLECTOR.
CS2	1	SHAPER	7.5		24.2			208	3	60	3#8 THWN CU	E	40A 3P	PANEL	E	NEMA 15–50	ADJ. TO	Q														CS2	PROVIDE CORD AND PLUG.
CS2		CARPENTRY SHOP									1#10 GR, 1"C		CB	L2		RECEPTACLE	EQUIP.																INTERLOCK STARTING W/ DUST COLLECTOR.
CS3	1	JOINER	3		10.6			208	3	60	3#12 THWN CU	E	20A 3P	PANEL	E	NEMA 15–20	ADJ. TO	Q														CS3	PROVIDE CORD AND PLUG.
CS3		CARPENTRY SHOP									1#12 GR, 3/4"C		CB	L2		RECEPTACLE	EQUIP.																INTERLOCK STARTING W/ DUST COLLECTOR.
CS4	1	BAND SAW	5		16.7			208	3	60	3#10 THWN CU	E	30A 3P	PANEL	E	NEMA 15–30	ADJ. TO	Q														CS4	PROVIDE CORD AND PLUG.
CS4		CARPENTRY SHOP									1#10 GR, 3/4"C		CB	L2		RECEPTACLE	EQUIP.																INTERLOCK STARTING W/ DUST COLLECTOR.
CS5	1	SCROLL SAW			20			120	1	60	2#12 THWN CU	E	20A 1P	PANEL	E	NEMA 5–20	ADJ. TO	Q														CS5	PROVIDE CORD AND PLUG.
CS5		CARPENTRY SHOP									1#12 GR, 3/4"C		CB	L2		RECEPTACLE	EQUIP.																
CS6	1	PLANER	5		16.7			208	3	60	3#10 THWN CU	E	30A 3P	PANEL	E	NEMA 15–30	ADJ. TO	Q														CS6	PROVIDE CORD AND PLUG.
CS6		CARPENTRY SHOP									1#10 GR, 3/4"C		CB	L2		RECEPTACLE	EQUIP.																INTERLOCK STARTING W/ DUST COLLECTOR.
CS7	1	BELT SANDER, PORTABLE			20			120	1	60	2#12 THWN CU	E	20A 1P	PANEL	E	NEMA 5–20	ADJ. TO	Q														CS7	PROVIDE CORD AND PLUG.
CS7		CARPENTRY SHOP									1#12 GR, 3/4"C		CB	L2		RECEPTACLE	EQUIP.																INTERLOCK STARTING W/ DUST COLLECTOR.
CS8	1	TABLE SAW	7.5		24.2			208	3	60	3#8 THWN CU	E	40A 3P	PANEL	E	NEMA L15–50	ADJ. TO	Q														CS8	PROVIDE DROP CORD AND PLUG.
CS8		CARPENTRY SHOP									1#10 GR, 1"C		CB	L2		RECEPTACLE	EQUIP.																INTERLOCK STARTING W/ DUST COLLECTOR.
CS9	1	DRILL PRESS	1		4.6			208	3	60	3#12 THWN CU	E	15A 3P	PANEL	E	NEMA 15–20	ADJ. TO	Q														CS9	PROVIDE DROP CORD AND PLUG.
CS9		CARPENTRY SHOP									1#12 GR, 3/4"C		CB	L2		RECEPTACLE	EQUIP.																
CS15	1	SAWDUST COLLECTOR	20		59.4			208	3	60	3#3 THWN CU	E	100A 3P	PANEL	E	100A 3P 3F	ADJ. TO	Q														CS15	
CS15		OUTSIDE CARPNTRY SHOP									1#8 GR, 1.25"C		CB			RK5–80	EQUIP.																
CS17	1	COMPRESSOR	10		30.8			208	3	60	3#8 THWN CU	E	60A 3P	PANEL	E	60A 3P 3F	ADJ. TO	Q														CS17	
CS17		ELECTRICAL SHOP									1#10 GR, 1"C		CB	L1		RK5–40	EQUIP.																
PF2	1	PAINT SPRAY BOOTH	5		16.7			208	3	60	3#12 THWN CU	E	30A 3P	PANEL	E	30A 3P 3F	ADJ. TO	Q														PF2	PROVIDE A 120 V CIRCUIT FOR LIGHTS.
PF2		PAINT ROOM									1#12 GR, 3/4"C		CB	D		RK5–25	EQUIP.																
PF–2	1	EXHAUST FAN	3		10.6			208	3	60	3#12 THWN CU	E	20A 3P	PANEL	E	30 30P–35	ADJ. TO	E	FVNR	ADJ. TO	0	1	*		HOA	R	1	1				PF–2	INSTALL DISCONNECT PROVIDED W/ EQUIPMENT.
PF–2		PAINT BOOTH									1#12 GR, .75"C		C/B	D		RK5 20	EQUIP.			EQUIP.													
PS1	1	PIPE THREADER, 4"	5		16.7			208	3	60	3#10 THWN CU	E	30A 3P	PANEL	E	NEMA L15–30	ADJ. TO	Q														PS1	PROVIDE CORD AND PLUG.
PS1		PIPE SHOP									1#10 GR, 3/4"C		CB	L1		RECEPTACLE	EQUIP.																
PS2	1	PIPE THREADER, 2"	0.5					120	1	60	2#12 THWN CU	E	20A 1P	PANEL	E	NEMA L5–20	ADJ. TO	Q														PS2	PROVIDE DROP CORD AND PLUG.
PS2		PIPE SHOP									1#12 GR, 3/4"C		CB	L1		RECEPTACLE	EQUIP.																
PS3	1	PIPE CUTTING MACHINE						208		60	3#10 THWN CU	E	30 A 3P	PANEL	E	30A 3P 3F	ADJ. TO	Q														PS3	FIELD VERIFY ELECTRICAL REQUIREMENTS AND
PS3		PIPE SHOP									1#10 GR, 3/4"C		CB	L1		RK5–30	EQUIP.																ADJUST WIRING AS NECESSARY.
MS3	1	SHEAR	7.5		24.2			208	3	60	3#8 THWN CU	E	40A 3P	PANEL	E	NEMA 15–50	ADJ. TO	Q														MS3	PROVIDE CORD AND PLUG.
MS3		METAL SHOP									1#10 GR, 1"C		CB	L1		RECEPTACLE	EQUIP.																
MS4	1	BAND SAW	1.5		6.6			208	3	60	3#12 THWN CU	E	15A 3P	PANEL	E	NEMA L15–20	ADJ. TO	Q														MS4	PROVIDE DROP CORD AND PLUG.
MS4		METAL SHOP									1#12 GR, 3/4"C		CB	L1		RECEPTACLE	EQUIP.																
MS6	1	DRILL PRESS	1		8			208	1	60	2#12 THWN CU	E	20A 2P	PANEL	E	NEMA 6–20	ADJ. TO	Q														MS6	ROUTE CKT THROUGH VACUUM INTERLOCK.
MS6		METAL SHOP									1#12 GR, 3/4"C		CB	L1		RECEPTACLE	EQUIP.																PROVIDE CORD AND PLUG.
MS7	1	ARC WELDER			50			220	1	60	3#6 THWN CU	E	50A 2P	PANEL	E	NEMA 14–50	ADJ. TO	Q														MS7	PROVIDE CORD AND PLUG.
MS7		METAL SHOP									1#10 GR, 1"C		CB	L1		RECEPTACLE	EQUIP.																
MS8	1	WELDER, WIRE FEED			20			120	1	60	2#12 THWN CU	E	20A 1P	PANEL	E	NEMA 5–20	ADJ. TO	Q														MS8	PROVIDE CORD AND PLUG.
MS8		METAL SHOP									1#12 GR, 3/4"C		CB	L1		RECEPTACLE	EQUIP.																
MS9	1	WELDING TABLE & HOOD	3		10.6			120	1	60	3#12 THWN CU	E	20A 3P	PANEL	Q	30A 3P 3F	INCL. W/	E	FVNR	ADJ. TO	0	1	*		ON/	R	1	1				MS9	FIELD VERIFY ELECTRICAL REQUIREMENTS AND
MS9		METAL SHOP									1#12 GR, 3/4"C		C/B	L1		RK5–15	STARTR			EQUIP.					OFF								ADJUST WIRING AS NECESSARY.
CU–1	1	CONDENSING UNIT				11		208	1	60	2 #12 THWN CU	E	C/B	PANEL	E	30A 2P 2F	ADJ. TO	Q														CU–1	
CU–1											1#12 GR, 3/4"C		20	D		RK5 15	EQUIP.																
EF–1	1	EXHAUST FAN		0.048				120	1	60	2#12 THWN CU	E	20A 1P	PANEL	E	LIGHT	WALL	E	SAME AS													EF–1	
EF–1		TOILET 299									1#12 GR, 3/4"C		C/B	L1		SWITCH			DISCONNECT														
F–1	1	GAS FIRED FURNACE	1/5					120	1	60	2#12 THWN CU	E	20A 1P	PANEL	E	THERMAL	ADJ. TO	Q														F–1	
F–1											1#12 GR, 3/4"C		C/B	D		SWITCH	EQUIP.																
F–2	1	GAS FIRED FURNACE	3/4					120	1	60	2#12 THWN CU	E	20A 1P	PANEL	E	THERMAL	ADJ. TO	Q														F–2	
F–2											1#12 GR, 3/4"C		C/B	D		SWITCH	EQUIP.																
F–3	1	GAS FIRED FURNACE	3/4					120	1	60	2#12 THWN CU	E	20A 1P	PANEL	E	THERMAL	ADJ. TO	Q														F–3	
F–3											1#12 GR, 3/4"C		C/B	D		SWITCH	EQUIP.																
MAU–1	1	MAKE–UP AIR UNIT	15		46.2			208	3	60	3#4 THWN CU	E	60A 3P	PANEL	Q		ADJ. TO	Q														MAU–1	INSTALL DISCONNECT PROVIDED W/ EQUIPMENT.
MAU–1											1#8 GR, 1.25"C		C/B	D			EQUIP.																
UH–1	1	UNIT HEATER	1/30				15	120	1	60	2#12 THWN CU	E	20A 1P	PANEL	E	30A 1P 1F	ADJ. TO	Q														UH–1	
UH–1											1#12 GR, 3/4"C		C/B	D		RK5 15	EQUIP.																
UH–2	1	UNIT HEATER	1/4				15	120	1	60	2#12 THWN CU	E	20A 1P	PANEL	E	30A 1P 1F	ADJ. TO	Q														UH–2	
UH–2											1#12 GR, 3/4"C		C/B	D		RK5 15	EQUIP.																

L. K. SORENSEN ASSOCIATES, INC
ARCHITECTS / PLANNERS
3690 SOUTH 500 WEST, SUITE 102
FIFTH STREET PLAZA
SALT LAKE CITY, UTAH 84115
(801)262-9393 Fax (801)262-9407

LICENSED PROFESSIONAL ENGINEER
No. 185978
PETER E. JOHANSEN
STATE OF UTAH

CONSULTANTS

STRUCTURAL:
DUNN ASSOCIATES, INC.

MECHANICAL:
ADVANCED CONCEPT ENGINEERING

ELECTRICAL:
SPECTRUM ENGINEERS

UTAH NATIONAL GUARD
Maintenance Shop Area Remodel
Building 119
Camp W. G. Williams
Bluffdale, Utah

MARK	DATE	DESCRIPTION
	05/23/06	CONST. DOCUMENTS

D.F.C.M. PROJECT NO: 06012480
ARCH. PROJECT NO: 0226
CAD DWG FILE: 48EE603
DRAWN BY: STS
CHECKED BY: PEJ
DESIGNED BY: PEJ

COPYRIGHT:
THIS PRINT AND ALL INFORMATION HEREON IS SUBJECT TO COPYRIGHT LAWS AND IS THE PROPERTY OF THE STATE OF UTAH AND SHALL NOT BE USED ON ANY OTHER PROJECT WITHOUT WRITTEN PERMISSION OF THE STATE OF UTAH.

SHEET TITLE
EQUIPMENT SCHEDULE

EE603

File name: P:\2006\20060348\1Drawings\Sheet\48EE603.dwg Last Plotted: 09/07/2006 @ 11:30 By: Sts

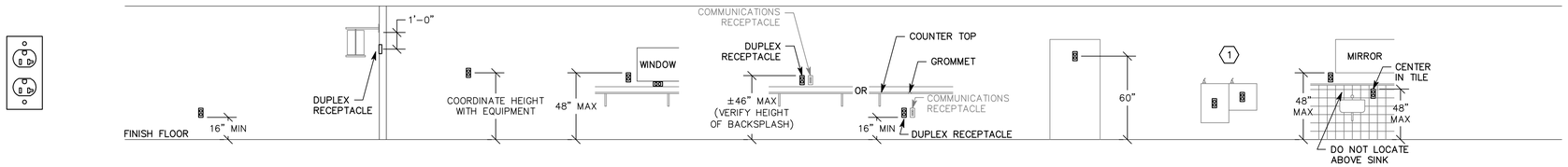

DUPLEX RECEPTACLES | GENERAL USE: NO SPECIAL REQUIREMENTS | WALL BRACKET TV | DEDICATED RECEPTACLE FOR SPECIAL EQUIPMENT | ABOVE COUNTER – TYPICAL | RECEPTACLES ABOVE OR BELOW COUNTER | FULL HEIGHT REFRIGERATOR | DRINKING FOUNTAIN | TILE WALLS

REFER TO ARCHITECTURAL ELEVATIONS FOR PLACEMENT OF OUTLETS.

D1 RECEPTACLE MOUNTING DETAILS
NTS

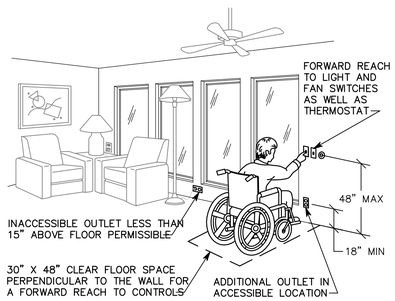

C1 ADA DETAIL
NTS

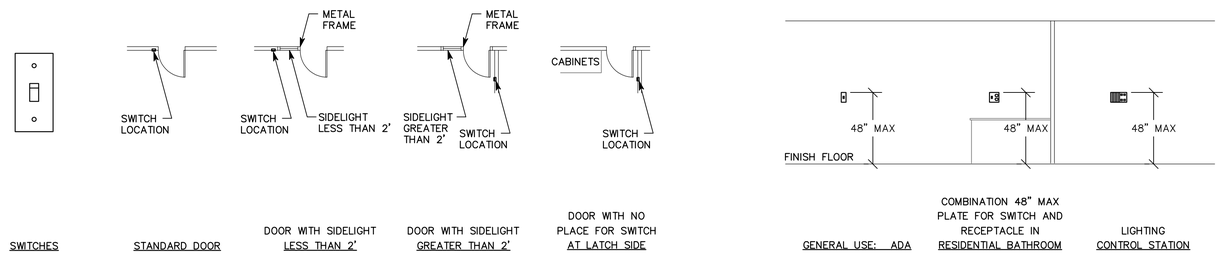

SWITCHES | STANDARD DOOR | DOOR WITH SIDELIGHT LESS THAN 2' | DOOR WITH SIDELIGHT GREATER THAN 2' | DOOR WITH NO PLACE FOR SWITCH AT LATCH SIDE | GENERAL USE: ADA | COMBINATION 48" MAX PLATE FOR SWITCH AND RECEPTACLE IN RESIDENTIAL BATHROOM | LIGHTING CONTROL STATION

C2 SWITCH MOUNTING DETAILS
NTS

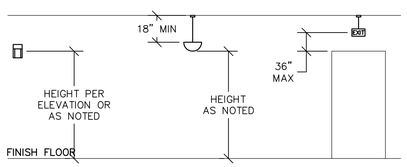

WALL MOUNTED LIGHT FIXTURE | PENDANT LIGHTING FIXTURE | PENDANT EXIT SIGNS

B1 LIGHTING MOUNTING DETAILS
NTS

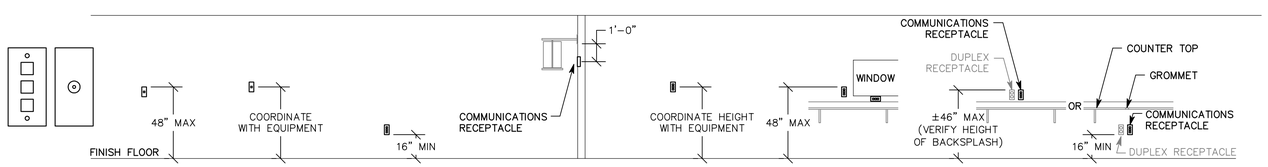

COMMUNICATION RECEPTACLES | WALL PHONE | PAY PHONE | GENERAL USE: NO SPECIAL REQUIREMENTS | WALL BRACKET TV | DEDICATED RECEPTACLE FOR SPECIAL EQUIPMENT | ABOVE COUNTER – TYPICAL | RECEPTACLES ABOVE OR BELOW COUNTER

B2 COMMUNICATION MOUNTING DETAILS
NTS

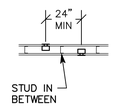

BOXES ON OPPOSITE SIDES OF WALL

B5 BOX MOUNTING DETAILS
NTS

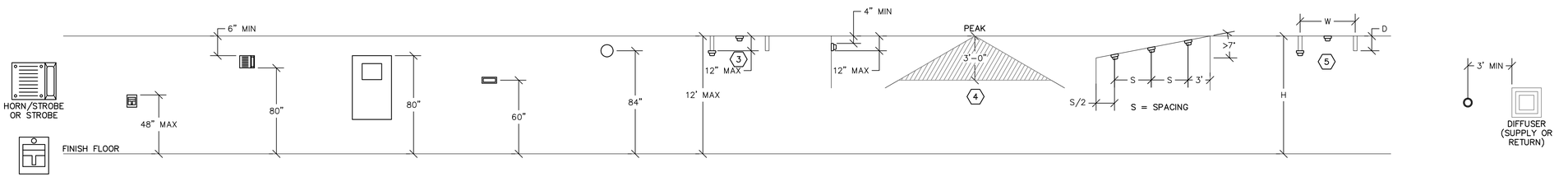

FIRE ALARM | PULL STATION | HORN, CHIME, OR STROBE | FIRE ALARM CONTROL PANEL "FCP" | FIRE SYSTEM ANNUNCIATOR "FSA" | BELL | SMOKE DETECTOR BETWEEN BEAMS | WALL MOUNTED SMOKE DETECTOR | SMOKE DETECTOR ON PEAKED CEILING | SMOKE DETECTOR ON SHED CEILING | HEAT DETECTOR BETWEEN BEAMS | SMOKE DETECTOR ADJACENT TO SUPPLY AIR

A1 FIRE ALARM MOUNTING DETAILS
NTS

GENERAL SHEET NOTES

1. DETERMINE MOUNTING HEIGHTS OF ELECTRICAL AND ELECTRONIC EQUIPMENT IN THE FOLLOWING ORDER OF PRIORITY:
   1 – ELEVATIONS (ARCHITECTURAL, ELECTRICAL, MECHANICAL, ETC).
   2 – EQUIPMENT SHOP DRAWINGS.
   3 – FIELD INSTRUCTIONS.
2. LOCATE RECEPTACLES SERVING THE SAME TYPE OF USE AT A UNIFORM HEIGHT UNLESS DIRECTED OTHERWISE.
3. MECHANICAL, ELECTRICAL, AND COMMUNICATION ROOMS: COORDINATE LOCATION OF LIGHTING AND POWER RECEPTACLES WITH EQUIPMENT, PIPING, AND DUCTWORK. DO NOT INSTALL RECEPTACLES BEHIND EQUIPMENT OR WHERE OTHERWISE INACCESSIBLE. POSITION LIGHTING REGARDLESS OF WHERE SHOWN ON DRAWING TO PROVIDE PROPER ILLUMINATION.
4. MOUNT RECEPTACLE BOXES FOR SWITCHES AND RECEPTACLES WITH LONG AXIS OF THE DEVICE VERTICAL UNLESS OTHERWISE INDICATED.
5. SET BOXES WITH PLASTER RINGS FLUSH WITH FINISHED SURFACE.
6. LOCATE BOX COVERS OR DEVICE PLATES SO THEY WILL NOT SPAN DIFFERENT TYPES OF BUILDING FINISHES EITHER VERTICALLY OR HORIZONTALLY.
7. VERIFY ALL DOOR CONDITIONS ON ARCHITECTURAL DRAWINGS PRIOR TO INSTALLING SWITCHES.
8. LOCATE WIRING DEVICES WHICH ARE ADJACENT AND ARE COMPATIBLE VOLTAGES IN ONE PLATE.

SHEET KEYNOTES

1. LOCATE RECEPTACLES BEHIND DRINKING FOUNTAINS.
2. REFER TO ARCHITECTURAL ELEVATIONS FOR PLACEMENT OF OUTLETS.
3. LOCATE AT BOTTOM OF BEAMS (OR JOISTS) OR AT CEILING. (REDUCE SPACING BY .5 PERPENDICULAR TO BEAM OR JOIST DIRECTION.) FOR OTHER CONDITIONS, REFER TO NFPA 72.
4. LOCATE SMOKE DETECTOR IN SHADED AREA.
5. LOCATE AT BOTTOM OF BEAMS IF EITHER D/H < .1 OR W/H < .4; OTHERWISE, LOCATE IN BEAM POCKET.

L. K. SORENSEN ASSOCIATES, INC
ARCHITECTS / PLANNERS
3690 SOUTH 500 WEST SUITE 102
FIFTH STREET PLAZA
SALT LAKE CITY, UTAH 84115
(801)262-9393 Fax (801)262-9407

LICENSED PROFESSIONAL ENGINEER
No. 185978
PETER E. JOHANSEN
STATE OF UTAH

CONSULTANTS

STRUCTURAL:
DUNN ASSOCIATES, INC.

MECHANICAL:
ADVANCED CONCEPT ENGINEERING

ELECTRICAL:
SPECTRUM ENGINEERS

UTAH NATIONAL GUARD

Maintenance Shop Area Remodel

Building 119
Camp W. G. Williams
Bluffdale, Utah

MARK	DATE	DESCRIPTION
	05/23/06	CONST. DOCUMENTS

D.F.C.M. PROJECT NO: 06012480
ARCH. PROJECT NO: 0226
CAD DWG.FILE: 48EE701
DRAWN BY: STS
CHECKED BY: PEJ
DESIGNED BY: PEJ

COPYRIGHT:
THIS PRINT AND ALL INFORMATION HEREON IS SUBJECT TO COPYRIGHT LAWS AND IS THE PROPERTY OF THE STATE OF UTAH AND SHALL NOT BE USED ON ANY OTHER PROJECT WITHOUT WRITTEN PERMISSION OF THE STATE OF UTAH.

SHEET TITLE
TYPICAL MOUNTING HEIGHT DETAILS

EE701

File name: P:\2006\20060348\1Drawings\Sheet\48EE701.dwg Last Plotted: 09/07/2006 @ 11:30 By: Sts

SHEET KEYNOTES

1. REMOVE POWER TO UNIT HEATER.

GENERAL SHEET NOTES

1. REMOVE OR REROUTE ALL ELECTRICAL AFFECTED BY CONSTRUCTION WHETHER SHOWN ON PLANS OR NOT. SEE 16050 "SELECTIVE DEMOLITION". FIELD VERIFY ALL CONDITIONS PRIOR TO BID.

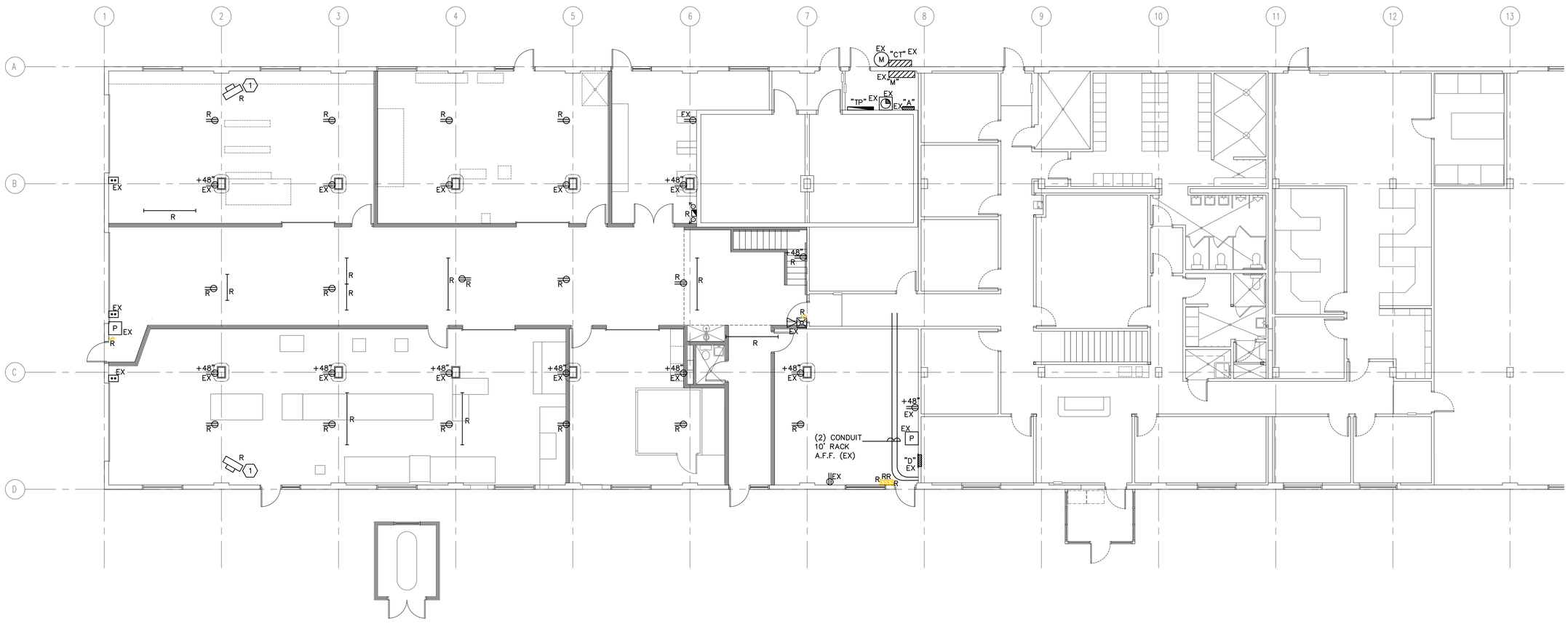

DEMOLITION PLAN

SCALE: 1/8"=1'-0"

L. K. SORENSEN ASSOCIATES, INC
ARCHITECTS / PLANNERS
3690 SOUTH 500 WEST, SUITE 102
FIFTH STREET PLAZA
SALT LAKE CITY, UTAH 84115
(801)262-9393 Fax (801)262-9407

LICENSED PROFESSIONAL ENGINEER
No. 185978
PETER E. JOHANSEN
STATE OF UTAH

CONSULTANTS

STRUCTURAL:
DUNN ASSOCIATES, INC.

MECHANICAL:
ADVANCED CONCEPT ENGINEERING

ELECTRICAL:
SPECTRUM ENGINEERS

UTAH NATIONAL GUARD

Maintenance Shop Area Remodel

Building 119
Camp W. G. Williams
Bluffdale, Utah

MARK	DATE	DESCRIPTION
	05/23/06	CONST. DOCUMENTS

D.F.C.M. PROJECT NO: 06012480
ARCH. PROJECT NO: 0226
CAD DWG FILE: 48ED101
DRAWN BY: STS
CHECKED BY: PEJ
DESIGNED BY: PEJ

COPYRIGHT:
THIS PRINT AND ALL INFORMATION HEREON IS SUBJECT TO COPYRIGHT LAWS AND IS THE PROPERTY OF THE STATE OF UTAH AND SHALL NOT BE USED ON ANY OTHER PROJECT WITHOUT WRITTEN PERMISSION OF THE STATE OF UTAH.

SHEET TITLE

DEMOLITION PLAN

ED101

File name: P:\2006\20060348\1Drawings\Sheet\48ED101.dwg Last Plotted: 09/07/2006 @ 11:31 By: Sts

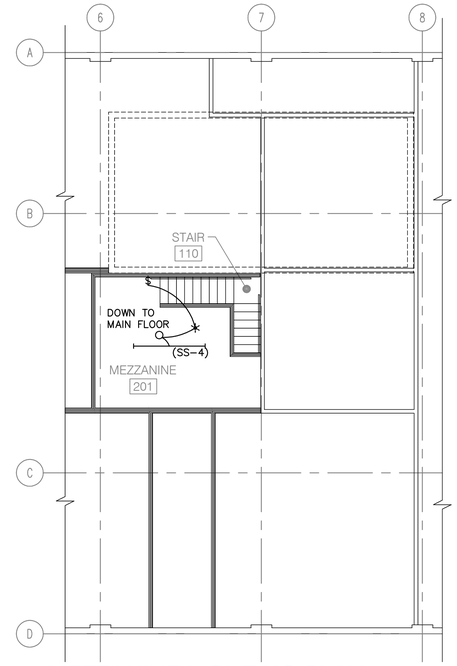

MEZZANINE LIGHTING PLAN

SCALE: 1/8"=1'-0"

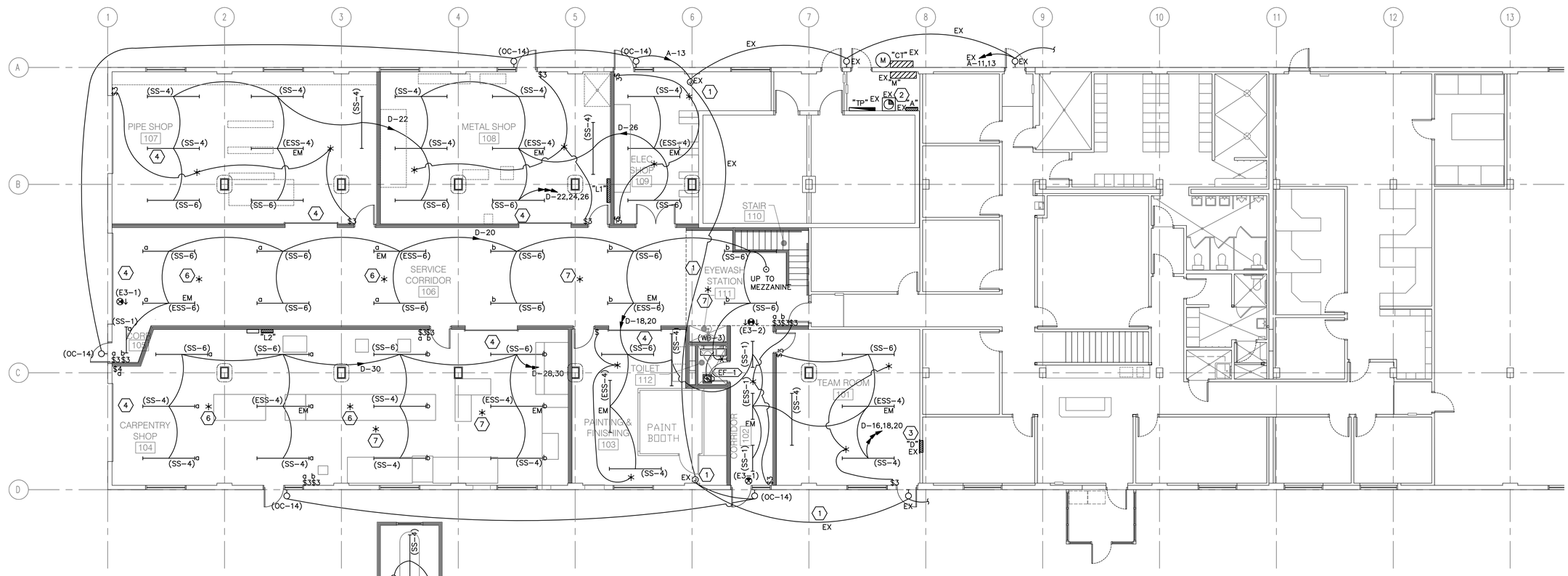

LIGHTING PLAN

SCALE: 1/8"=1'-0"

GENERAL SHEET NOTES

1. CIRCUIT EXIT SIGNS TO D-1.
2. MOUNT FIXTURES SO BOTTOM IS LEVEL W/ BOTTOM OF TRUSSES.

SHEET KEYNOTES

1. ACCORDING TO THE AS-BUILT PLANS, J-BOXES HAVE BEEN PROVIDED TO CONNECT FUTURE EXTERIOR LIGHTING. CIRCUITS A-11,13 ARE SHOWN TO BE SWITCHED THROUGH A CONTACTOR CONTROLLED BY A PHOTOCELL/ TIMECLOCK. FIELD VERIFY ALL EXISTING WIRING & SWITCHING.
2. EXISTING TIMECLOCK.
3. ALL CIRCUITS TO EXISTING (CUTLER HAMMER) PANEL "D" WILL REQUIRE A NEW 80 AMP SINGLE POLE BREAKER. PROVIDE NEW PANEL LABEL.
4. COORDINATE LIGHTS W/ OVERHEAD DOORS.
5. BID AIR COMPRESSOR AS PART OF ADD ALTERNATE #1.
6. OCCUPANCY SENSOR FOR LIGHTS ON (a) SWITCH LEG.
7. OCCUPANCY SENSOR FOR LIGHTS ON (b) SWITCH LEG.

L. K. SORENSEN ASSOCIATES, INC
ARCHITECTS / PLANNERS
3690 SOUTH 500 WEST, SUITE 102
FIFTH STREET PLAZA
SALT LAKE CITY, UTAH 84115
(801)262-9393 Fax (801)262-9407

LICENSED PROFESSIONAL ENGINEER
No. 185978
PETER E. JOHANSEN
STATE OF UTAH

CONSULTANTS

STRUCTURAL:
DUNN ASSOCIATES, INC.

MECHANICAL:
ADVANCED CONCEPT ENGINEERING

ELECTRICAL:
SPECTRUM ENGINEERS

UTAH NATIONAL GUARD

Maintenance Shop Area Remodel

Building 119
Camp W. G. Williams
Bluffdale, Utah

MARK	DATE	DESCRIPTION
	05/23/06	CONST. DOCUMENTS

D.F.C.M. PROJECT NO:	06012480
ARCH. PROJECT NO:	0226
CAD DWG FILE:	48EL101
DRAWN BY:	STS
CHECKED BY:	PEJ
DESIGNED BY:	PEJ

COPYRIGHT:
THIS PRINT AND ALL INFORMATION HEREON IS SUBJECT TO COPYRIGHT LAWS AND IS THE PROPERTY OF THE STATE OF UTAH AND SHALL NOT BE USED ON ANY OTHER PROJECT WITHOUT WRITTEN PERMISSION OF THE STATE OF UTAH.

SHEET TITLE

LIGHTING PLAN

EL101

File name: P:\2006\20060348\1Drawings\Sheet\48EL101.dwg Last Plotted: 09/07/2006 @ 11:30 By: Sts

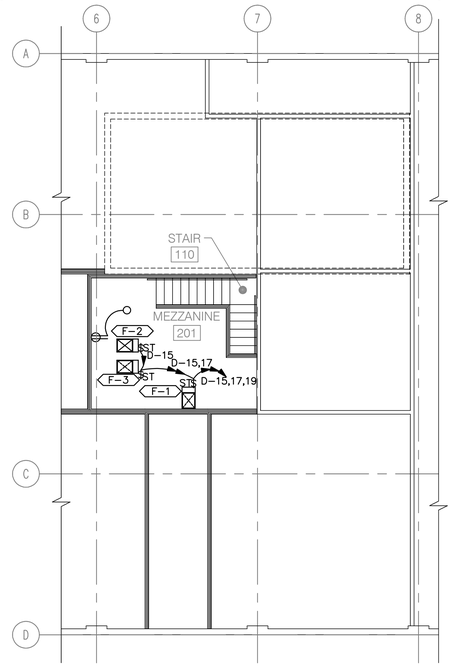

MEZZANINE POWER PLAN

SCALE: 1/8"=1'-0"

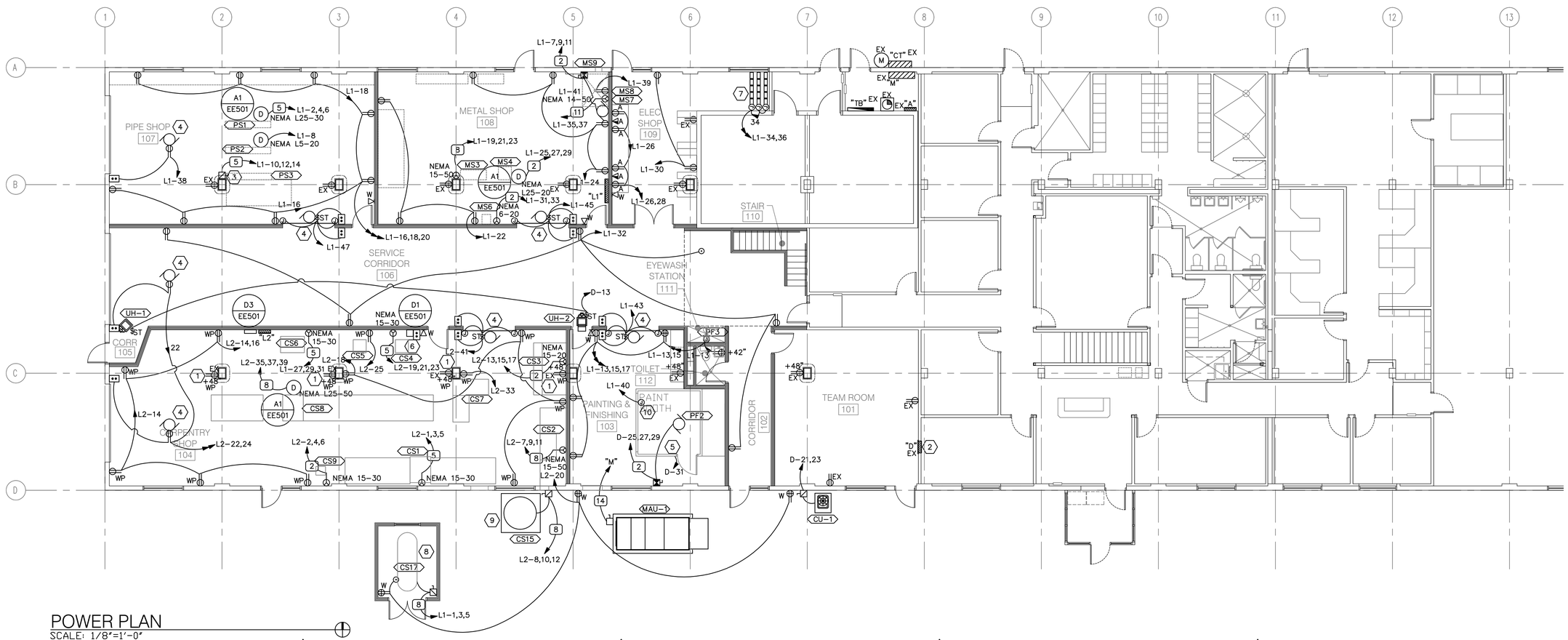

POWER PLAN

SCALE: 1/8"=1'-0"

GENERAL SHEET NOTES

1. REPLACE ALL EXISTING RECEPTACLES W/ NEW DEVICES.
2. WHERE EQUIPMENT IS TO BE HARD WIRED, IF THE EQUIPMENT IS NOT AVAILABLE FOR CONNECTION AT THE END OF THE CONSTURCTION AND THE OWNER HAS MADE NO OTHER ARRANGEMENTS, LABEL EACH DISCONNECT, J-BOX ETC. FROM WHICH EQUIPMENT WILL BE CONNECTED WITH THE CIRCUIT NUMBER(S) WIRE SIZE, AND EQUIPMENT FOR WHICH IT IS TO BE CONNECTED.

⬡SHEET KEYNOTES

1. REPLACE EXISTING OUTLET W/ WEATHER PROOF RECEPTACLE. MAINTAIN EXISTING CIRCUITING TO THESE OUTLETS.
2. ALL CIRCUITS TO EXISTING (CUTLER HAMMER) PANEL "D" WILL REQUIRE A NEW 20 AMP SINGLE POLE BREAKER. PROVIDE NEW PANEL LABEL.
3. VERIFY ELECTRICAL REQUIREMENTS FOR PIPE CUTTER IN THE FIELD.
4. POWER FOR OVER HEAD DOOR OPENER. PROVIDE CONDUIT & J-BOXES FOR SENSORS & PUSH BUTTONS AS NECESSARY. WIRE TO DOOR CONTROLLER. WIRE PER MANUFACTURER'S WRITTEN INSTRUCTIONS. COORDINATE SENSOR TYPE & WIRING NEEDS W/INSTALLER PRIOR TO ROUGH-IN.
5. POWER FOR PAINT SPRAY BOOTH LIGHTS. WIRE PER MANUFACTURER'S INSTRUCTIONS FOR ALL PAINT BOOTH WIRING. BID ELECTRICAL TO PAINT BOOTH AS ADD ALTERNATE #5.
6. START/STOP STATION & TIMER FOR SAWDUST COLLECTION SYSTEM. LABEL CONTROLS. VERIFY EXACT LOCATION W/ ARCHITECT.
7. POWER FOR BATTERY CHARGING STATION. PROVIDE THREE LEVELS OF PLUGMOLD IN STEP-TOP CABINET (SEE ARCHITECTS ELEVATIONS).
8. BID AIR COMPRESSOR BUILDING AS ADD ALTERNATE #1.
9. BID ELECTRICAL TO DUST COLLECTOR AS BID ALTERNATE #2.
10. POWER FOR EYEWASH AND ALARM.

L. K. SORENSEN ASSOCIATES, INC
ARCHITECTS / PLANNERS
3690 SOUTH 500 WEST SUITE 102
FIFTH STREET PLAZA
SALT LAKE CITY, UTAH 84115
(801)262-9393 Fax (801)262-9407

LICENSED PROFESSIONAL ENGINEER
No. 185978
PETER E. JOHANSEN
STATE OF UTAH

CONSULTANTS

STRUCTURAL:
DUNN ASSOCIATES, INC.

MECHANICAL:
ADVANCED CONCEPT ENGINEERING

ELECTRICAL:
SPECTRUM ENGINEERS

UTAH NATIONAL GUARD

Maintenance Shop Area Remodel

Building 119
Camp W. G. Williams
Bluffdale, Utah

MARK	DATE	DESCRIPTION
	05/23/06	CONST. DOCUMENTS

D.F.C.M. PROJECT NO: 06012480
ARCH. PROJECT NO: 0226
CAD DWG FILE: 48EP101
DRAWN BY: STS
CHECKED BY: PEJ
DESIGNED BY: PEJ

COPYRIGHT:
THIS PRINT AND ALL INFORMATION HEREON IS SUBJECT TO COPYRIGHT LAWS AND IS THE PROPERTY OF THE STATE OF UTAH AND SHALL NOT BE USED ON ANY OTHER PROJECT WITHOUT WRITTEN PERMISSION OF THE STATE OF UTAH.

SHEET TITLE

POWER PLAN

EP101

File name: P:\2006\20060348\1Drawings\Sheet\48EP101.dwg Last Plotted: 09/07/2006 @ 11:30 By: Sts

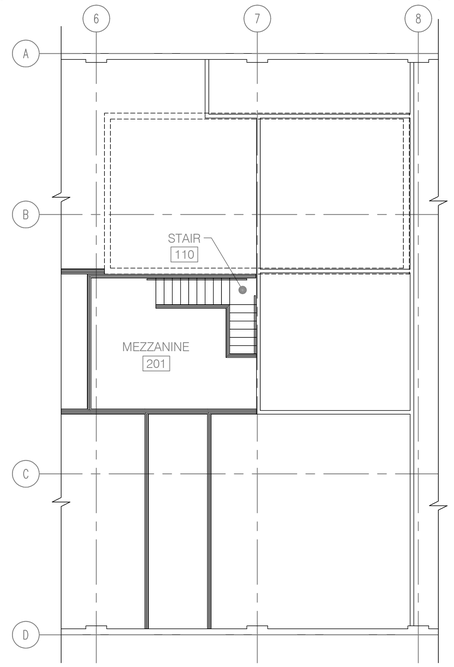

MEZZANINE FIRE ALARM PLAN

SCALE: 1/8"=1'-0"

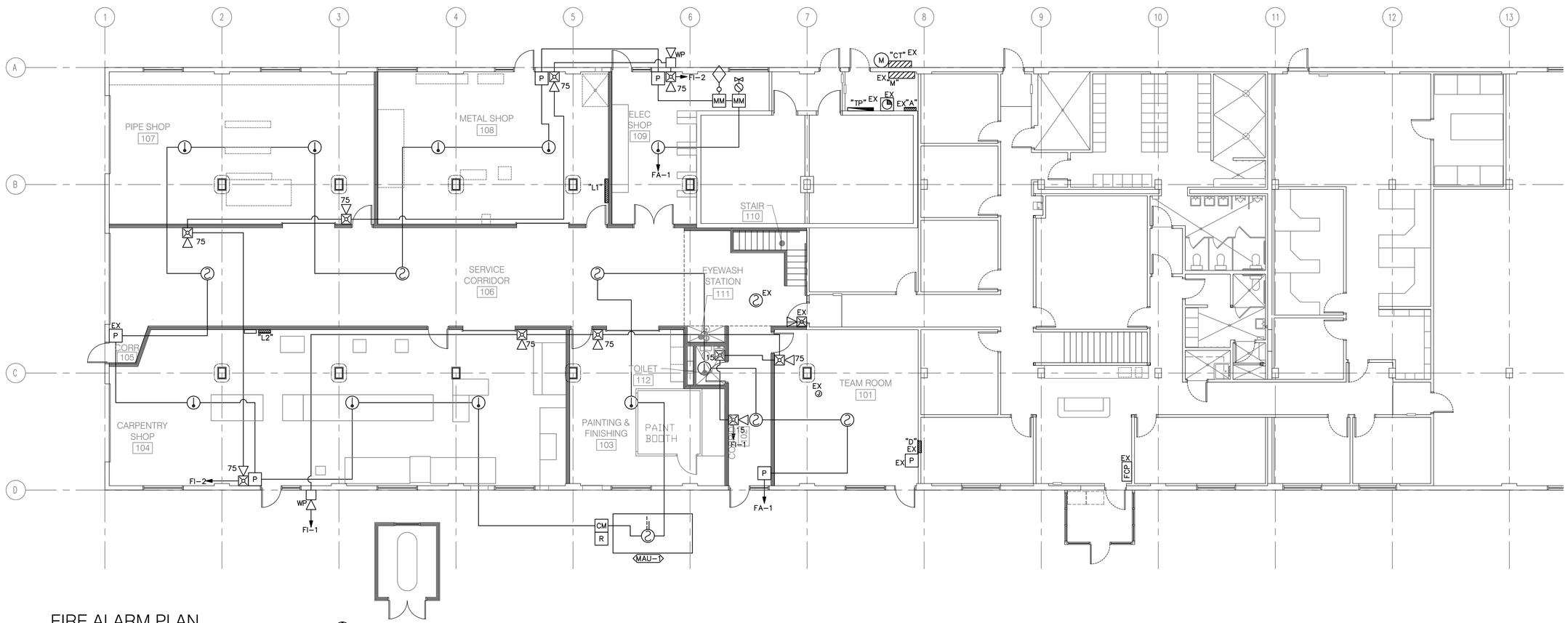

FIRE ALARM PLAN

SCALE: 1/8"=1'-0"

SHEET KEYNOTES

1. EXISTING SIMPLEX FIRE ALARM PANEL.

L. K. SORENSEN ASSOCIATES, INC
ARCHITECTS / PLANNERS
3690 SOUTH 500 WEST, SUITE 102
FIFTH STREET PLAZA
SALT LAKE CITY, UTAH 84115
(801)262-9393 Fax (801)262-9407

LICENSED PROFESSIONAL ENGINEER
No. 185978
PETER E. JOHANSEN
STATE OF UTAH

CONSULTANTS

STRUCTURAL:
DUNN ASSOCIATES, INC.

MECHANICAL:
ADVANCED CONCEPT ENGINEERING

ELECTRICAL:
SPECTRUM ENGINEERS

UTAH NATIONAL GUARD

Maintenance Shop Area Remodel

Building 119
Camp W. G. Williams
Bluffdale, Utah

MARK	DATE	DESCRIPTION
	05/23/06	CONST. DOCUMENTS

D.F.C.M. PROJECT NO: 06012480
ARCH. PROJECT NO: 0226
CAD DWG FILE: 48EY101
DRAWN BY: STS
CHECKED BY: PEJ
DESIGNED BY: PEJ

COPYRIGHT:
THIS PRINT AND ALL INFORMATION HEREON IS SUBJECT TO COPYRIGHT LAWS AND IS THE PROPERTY OF THE STATE OF UTAH AND SHALL NOT BE USED ON ANY OTHER PROJECT WITHOUT WRITTEN PERMISSION OF THE STATE OF UTAH.

SHEET TITLE

FIRE ALARM PLAN

EY101

File name: P:\2006\20060348\1Drawings\Sheet\48EY101.dwg Last Plotted: 09/07/2006 @ 11:31 By: Sts