State of Utah

JON M. HUNTSMAN, JR.
Governor

GARY R. HERBERT
Lieutenant Governor

Department of Administrative Services
KIMBERLY K. HOOD
Executive Director

Division of Facilities Construction and Management
DAVID G. BUXTON
Director

ADDENDUM #2

Date:	May 6, 2008
To:	Contractors
From:	Mike Ambre, Project Manager, DFCM
Reference:	Window Replacement – Browning Woodbury Business Buildings Utah Valley State College – Orem, Utah DFCM Project No. 06066790
Subject:	**Addendum No. 2**

Pages	Addendum	1	page
	Revised Bid Form	2	pages
	Architect's Addendum	23	pages
	Total	26	pages

Note: This Addendum shall be included as part of the Contract Documents. Items in this Addendum apply to all drawings and specification sections whether referenced or not involving the portion of the work added, deleted, modified, or otherwise addressed in the Addendum. Acknowledge receipt of this Addendum in the space provided on the Bid Form. Failure to do so may subject the Bidder to Disqualification.

1.1 **SCHEDULE CHANGES –** There are no changes to the project schedule.

1.2 **GENERAL –** The 2008 Utah Legislature passed SB 220 entitled: "Cause of Action for Defective Construction." The Governor of the State of Utah has signed the bill. The bill becomes effective 60 days after the close of the 2008 Legislative General Session.
While we contend that SB220 should only be potentially applicable to a contract issued after the effective date of said bill, this is to clarify that for purposes of this contract, regardless of the execution or effective dates of this contract, the status of Utah Law and remedies available to the State of Utah and DFCM, as it relates to any matter referred to or affected by said SB220, shall be the Utah law in effect at the time of the issuance of this Addendum.

1.3 **Revised Bid Form -** Two additive alternates were added to the bid form.

STATE OF UTAH - DEPARTMENT OF ADMINISTRATIVE SERVICES

Division of Facilities Construction and Management

DFCM

BID FORM – REVISED
PER ADDENDUM NO. 2 DATED MAY 6, 2008

NAME OF BIDDER _____ DATE _____

To the Division of Facilities Construction and Management
4110 State Office Building
Salt Lake City, Utah 84114

The undersigned, responsive to the "Notice to Contractors" and in accordance with the "Instructions to Bidders", in compliance with your invitation for bids for the **WINDOW REPLACEMENT – BROWNING ADMINISTRATION AND WOODBURY BUSINESS BUILDINGS – UTAH VALLEY STATE COLLEGE – OREM, UTAH – DFCM PROJECT NO. 06066790** and having examined the Contract Documents and the site of the proposed Work and being familiar with all of the conditions surrounding the construction of the proposed Project, including the availability of labor, hereby proposes to furnish all labor, materials and supplies as required for the Work in accordance with the Contract Documents as specified and within the time set forth and at the price stated below. This price is to cover all expenses incurred in performing the Work required under the Contract Documents of which this bid is a part:

I/We acknowledge receipt of the following Addenda: _____

BASE BID: For all work shown on the Drawings and described in the Specifications and Contract Documents for the removal of the existing windows in the north vestibule and adjacent window at the Pope Science Building, north doorway adjacent to stairs at the Browning Administration Building, and all windows and doors indicated at the Sparks Automotive Building, fabrication and installation of new windows (including all coordination of equipment mounted on or penetrating through the windows systems), I/we agree to perform for the sum of:

_____ DOLLARS ($_____)
(In case of discrepancy, written amount shall govern)

ADDITIVE ALTERNATE NO. 1: For all work shown on the Drawings and described in the Specifications and Contract Documents for the removal of all windows/doors indicated on the lower level northwest façade of the Woodbury Business Building, fabrication and installation of new windows (including all coordination of equipment mounted on or penetrating through the windows systems), I/we agree to perform for the sum of:

_____ DOLLARS ($_____)
(In case of discrepancy, written amount shall govern)

ADDITIVE ALTERNATE NO. 2: For all work shown on the Drawings and described in the Specifications and Contract Documents for the removal of all existing windows on both the north and south side of the concourse between the Woodbury Business Building and the Browning Administration Building, fabrication and installation of new windows (including all coordination of equipment mounted on or penetrating through the windows systems), I/we agree to perform for the sum of:

_____ DOLLARS ($_____)
(In case of discrepancy, written amount shall govern)

I/We guarantee that the Work will be Substantially Complete by **August 22, 2008**, should I/we be the successful bidder, and agree to pay liquidated damages in the amount of **$ 200.00** per day for each day after expiration of the Contract Time as stated in Article 3 of the Contractor's Agreement.

This bid shall be good for 45 days after bid opening.

Enclosed is a 5% bid bond, as required, in the sum of _____

The undersigned Contractor's License Number for Utah is _____.

Upon receipt of notice of award of this bid, the undersigned agrees to execute the contract within ten (10) days, unless a shorter time is specified in the Contract Documents, and deliver acceptable Performance and Payment bonds in the prescribed form in the amount of 100% of the Contract Sum for faithful performance of the contract.

The Bid Bond attached, in the amount not less than five percent (5%) of the above bid sum, shall become the property of the Division of Facilities Construction and Management as liquidated damages for delay and additional expense caused thereby in the event that the contract is not executed and/or acceptable l00% Performance and Payment bonds are not delivered within the time set forth.

Type of Organization: _____ (Corporation, Partnership, Individual, etc.)

Any request and information related to Utah Preference Laws: _____

Respectfully submitted,

_____
Name of Bidder

ADDRESS:

_____

_____

_____
Authorized Signature

SECTION 087100 - DOOR HARDWARE

PART 1 - GENERAL

1.1 RELATED DOCUMENTS

A. Drawings and general provisions of the Contract, including General and Supplementary Conditions and Division 01 Specification Sections, apply to this Section.

1.2 SUMMARY

A. This Section includes the following:

1. Commercial door hardware for the following:

a. Swinging doors.
b. Other doors to the extent indicated.

2. Cylinders for doors specified in other Sections.
3. Electrified door hardware.

B. Related Sections include the following:

1. Division 08 Section "Aluminum-Framed Entrances and Storefronts" for interior vestibule storefront doors.

C. Products furnished, but not installed, under this Section include the following. Coordinating, purchasing, delivering, and scheduling remain requirements of this Section.

1. Thresholds, weather stripping, and cylinders for locks specified in other Sections.

1.3 SUBMITTALS

A. Product Data: Include construction and installation details, material descriptions, dimensions of individual components and profiles, and finishes.

B. Shop Drawings: Details of electrified door hardware, indicating the following:

1. Wiring Diagrams: Power, signal, and control wiring. Include the following:

a. System schematic.
b. Point-to-point wiring diagram.
c. Riser diagram.
d. Elevation of each door.

2. Detail interface between electrified door hardware and fire alarm, access control, security, building control system.

3. Operation Narrative: Describe the operation of doors controlled by electrified door hardware.

C. Samples for Verification: For exposed door hardware of each type, in specified finish, full size. Tag with full description for coordination with the door hardware sets. Submit Samples before, or concurrent with, submission of the final door hardware sets, if requested.

1. Samples will be returned to Contractor. Units that are acceptable and remain undamaged through submittal, review, and field comparison process may, after final check of operation, be incorporated into the Work, within limitations of keying requirements.

D. Qualification Data: For Installer.

E. Product Test Reports: Based on evaluation of comprehensive tests performed by manufacturer and witnessed by a qualified testing agency, for locks, latches, and closers as requested.

F. Maintenance Data: For each type of door hardware to include in maintenance manuals. Include final hardware and keying schedule.

G. Warranty: Special warranty specified in this Section.

H. Door Hardware Sets: Prepared by or under the supervision of Architectural Hardware Consultant, detailing fabrication and assembly of door hardware, as well as procedures and diagrams. Coordinate the final door hardware sets with doors, frames, and related work to ensure proper size, thickness, hand, function, and finish of door hardware.

1. Format: Use same scheduling sequence and format and use same door numbers as in the Contract Documents.
2. Content: Include the following information:

a. Identification number, location, hand, fire rating, and material of each door and frame.
b. Type, style, function, size, quantity, and finish of each door hardware item.
c. Complete designations of every item required for each door or opening including name and manufacturer.
d. Fastenings and other pertinent information.
e. Location of each door hardware set, cross-referenced to Drawings, both on floor plans and in door and frame schedule.
f. Explanation of abbreviations, symbols, and codes contained in schedule.
g. Mounting locations for door hardware.
h. Door and frame sizes and materials.
i. Description of each electrified door hardware function, including location, sequence of operation, and interface with other building control systems.

1) Sequence of Operation: Include description of component functions that occur in the following situations: authorized person wants to enter; authorized person wants to exit; unauthorized person wants to enter; unauthorized person wants to exit.

j. List of related door devices specified in other Sections for each door and frame.

3. Submittal Sequence: Submit the final door hardware sets at earliest possible date, particularly where approval of the door hardware sets must precede fabrication of other work that is critical in Project construction schedule. Include Product Data, Samples, Shop Drawings of other work affected by door hardware, and other information essential to the coordinated review of the door hardware sets.

I. Keying Schedule: Prepared by or under the supervision of Architectural Hardware Consultant, detailing Owner's final keying instructions for locks. Include schematic keying diagram and index each key set to unique door designations.

1.4 QUALITY ASSURANCE

A. Installer Qualifications: An employer of workers trained and approved by lock manufacturer.

1. Installer's responsibilities include supplying and installing door hardware and providing a qualified Architectural Hardware Consultant available during the course of the Work to consult with Contractor, Architect, and Owner about door hardware and keying.
2. Installer shall have warehousing facilities in Project's vicinity.
3. Scheduling Responsibility: Preparation of door hardware and keying schedules.
4. Engineering Responsibility: Preparation of data for electrified door hardware, including Shop Drawings, based on testing and engineering analysis of manufacturer's standard units in assemblies similar to those indicated for this Project.

B. Architectural Hardware Consultant Qualifications: A person who is currently certified by DHI as an Architectural Hardware Consultant and who is experienced in providing consulting services for door hardware installations that are comparable in material, design, and extent to that indicated for this Project.

C. Source Limitations: Obtain each type and variety of door hardware from a single manufacturer, unless otherwise indicated.

1. Provide electrified door hardware from same manufacturer as mechanical door hardware, unless otherwise indicated. Manufacturers that perform electrical modifications and that are listed by a testing and inspecting agency acceptable to authorities having jurisdiction are acceptable.

D. Fire-Rated Door Assemblies: Assemblies complying with NFPA 80 that are listed and labeled by a testing and inspecting agency acceptable to authorities having jurisdiction, for fire ratings indicated, based on testing according to NFPA 252 and UBC Standard 7-2.

1. Test Pressure: After 5 minutes into the test, neutral pressure level in furnace shall be established at 40 inches (1016 mm) or less above the sill.

E. Electrified Door Hardware: Listed and labeled as defined in NFPA 70, Article 100, by a testing agency acceptable to authorities having jurisdiction, and marked for intended use.

F. Keying Conference: Conduct conference at Project site to comply with requirements in Division 01 Section "Project Management and Coordination." In addition to Owner, Construction Manager, Contractor, and Architect, conference participants shall also include Installer's Architectural Hardware Consultant and Owner's Security Consultant.

Incorporate keying conference decisions into final keying schedule after reviewing door hardware keying system including, but not limited to, the following:

1. Function of building, flow of traffic, purpose of each area, degree of security required, and plans for future expansion.
2. Preliminary key system schematic diagram.
3. Requirements for key control system.
4. Address for delivery of keys.

G. Pre-installation Conference: Conduct conference at Project site to comply with requirements in Division 01 Section "Project Management and Coordination."

1.5 DELIVERY, STORAGE, AND HANDLING

A. Inventory door hardware on receipt and provide secure lock-up for door hardware delivered to Project site.

B. Tag each item or package separately with identification related to the final door hardware sets, and include basic installation instructions, templates, and necessary fasteners with each item or package.

C. Deliver keys to Owner’s Representative by registered mail or overnight package service.

1.6 COORDINATION

A. Coordinate layout and installation of recessed hardware with floor construction. Cast anchoring inserts into concrete. Concrete, reinforcement, and formwork requirements are specified in Division 03.

B. Templates: Distribute door hardware templates for doors, frames, and other work specified to be factory prepared for installing door hardware. Check Shop Drawings of other work to confirm that adequate provisions are made for locating and installing door hardware to comply with indicated requirements.

C. Coordinate with aluminum entrance door supplier for door hardware installation.

D. Electrical System Roughing-in: Coordinate layout and installation of electrified door hardware with connections to power supplies, fire alarm system and detection devices, access control system, security system, and building control system.

E. Existing Openings: Where new hardware components are scheduled for application to existing construction or where modifications to existing door hardware are required, field verify existing conditions and coordinate installation of door hardware to suit opening conditions and to provide for proper operation.

1.7 WARRANTY

A. Special Warranty: Manufacturer's standard form in which manufacturer agrees to repair or replace components of door hardware that fail in materials or workmanship within specified warranty period.

1. Failures include, but are not limited to, the following:

a. Structural failures including excessive deflection, cracking, or breakage.
b. Faulty operation of operators and door hardware.
c. Deterioration of metals, metal finishes, and other materials beyond normal weathering and use.

2. Warranty Period: Three (3) years from date of Substantial Completion, except as follows:

a. Electromagnetic Locks: Five (5) years from date of Substantial Completion.
b. Exit Devices: Two (2) years from date of Substantial Completion.
c. Manual Closers: Ten (10) years from date of Substantial Completion.

1.8 MAINTENANCE SERVICE

A. Maintenance Tools and Instructions: Furnish a complete set of specialized tools and maintenance instructions as needed for Owner's continued adjustment, maintenance, and removal and replacement of door hardware.

B. Maintenance Service: Beginning at Substantial Completion, provide six (6) months' full maintenance by skilled employees of door hardware Installer. Include quarterly preventive maintenance, repair or replacement of worn or defective components, lubrication, cleaning, and adjusting as required for proper door hardware operation. Provide parts and supplies same as those used in the manufacture and installation of original products.

PART 2 - PRODUCTS

2.1 MANUFACTURERS

A. Manufacturers: Subject to compliance with requirements, provide products by one of the following:

1. Products:

a. Finish: Match existing hardware finishes. Finishes listed are basis of design.
b. Manufacture Standard:

1) Butts: Hager, McKinney, Stanley, Ives*
2) Locksets: Schlage, Best, Sargent*
3) Closers: Sargent, Dorma, LCN*
4) Exit Devices: Von Duprin, Precision, Sargent*

5) Trim: BBW, Rockwood, Hager, Ives*
6) Weatherstrip: Pemko, Hager, National Guard*
7) Continuous Hinges: HagerRoton, Markar, Ives*
8) Magnetic Door Holders: Rixson, LCN*
9) Rem Mullion: Von Duprin, Precision, Sargent*

B. Substitution requests will be made in accordance with Division 01 requirements.

2.2 SCHEDULED HARDWARE

A. Requirements for design, grade, function, finish, size, and other distinctive qualities of each type of finish hardware are indicated in the "Hardware Schedule" at the end of this Section. Products are identified by using hardware designation numbers of the following:

1. Manufacturer's Product Designations: The product designation and name of one manufacturer are listed for each hardware type required for the purpose of establishing minimum requirements. Provide either the product designated or, where more than one manufacturer is specified under the Article "Manufacturers" in Part 2 for each hardware type, the comparable product of one of the other manufacturers that complies with requirements.

2. ANSI/BHMA designations used elsewhere in this Section or in schedules to describe hardware items or to define quality or function are derived from the following standards. Provide products complying with these standards and requirements specified elsewhere in this Section.

a. Butts and Hinges: ANSI A156.1.
b. Bored and Preassembled Locks and Latches: ANSI/BHMA A156.2.
c. Exit Devices: ANSI A156.3.
d. Door Controls - Closers: ANSI A156.4. 180 degree swing only!
e. Auxiliary Locks and Associated Products: ANSI/BHMA A156.5.
f. Architectural Door Trim: ANSI A156.6.
g. Template Hinge Dimensions: ANSI A156.7.
h. Door Controls - Overhead Holders: ANSI A156.8.
i. Mortise Locks and Latches: ANSI A156.13.
j. Closer Holder Release Devices: ANSI A156.15.
k. Auxiliary Hardware: ANSI A156.16.
l. Self-Closing Hinges and Pivots: ANSI A156.17.
m. Materials and Finishes: ANSI A156.18.

2.3 MATERIALS AND FABRICATION

A. Base Metals: Produce hardware units of basic metal and forming method indicated, using manufacturer's standard metal alloy, composition, temper, and hardness, but in no case of lesser (commercially recognized) quality than specified for applicable hardware units by applicable ANSI/BHMA A156 series standards for each type of hardware item and with ANSI/BHMA A156.18 for finish designations indicated. Do not furnish "optional" materials or forming methods for those indicated, except as otherwise specified.

B. Fasteners: Provide hardware manufactured to conform to published templates, generally prepared for machine screw installation. Do not provide hardware that has been prepared for self-tapping sheet metal screws, except as specifically indicated.

C. Furnish screws for installation with each hardware item. Provide Phillips flat-head screws except as otherwise indicated. Finish exposed (exposed under any condition) screws to match hardware finish or, if exposed in surfaces of other work, to match finish of this other work as closely as possible including "prepared for paint" surfaces to receive painted finish.

D. Provide concealed fasteners for hardware units that are exposed when door is closed except to the extent no standard units of type specified are available with concealed fasteners. Do not use thru-bolts for installation where bolt head or nut on opposite face is exposed in other work unless their use is the only means of reinforcing the work adequately to fasten the hardware securely. Where thru-bolts are used as a means of reinforcing the work, provide sleeves for each thru-bolt or use sex screw fasteners.

2.4 HINGES, GENERAL

A. Quantity: Provide the following, unless otherwise indicated:

1. Two Hinges: For doors with heights up to 60 inches.
2. Three Hinges: For doors with heights 61 to 90 inches.

B. Template Requirements: Except for hinges and pivots to be installed entirely (both leaves) into wood doors and frames, provide only template-produced units.

C. Hinge Weight: Unless otherwise indicated, provide the following:

1. Entrance Doors: Heavy-weight hinges.
2. Doors with Closers: Antifriction-bearing hinges.
3. Interior Doors: Standard-weight hinges.

D. Hinge Base Metal: Unless otherwise indicated, provide the following:

1. Exterior Hinges: Stainless steel with stainless-steel pin.
2. Interior Hinges: Steel with steel pin.
3. Hinges for Fire-Rated Assemblies: Steel with steel pin.

E. Hinge Options: Where indicated in door hardware sets or on Drawings:

1. Safety Stud: Designed for stud in one leaf to engage hole in opposing leaf.
2. Nonremovable Pins: Provide set screw in hinge barrel that, when tightened into a groove in hinge pin, prevents removal of pin while door is closed; for outswinging doors.
3. Corners: Square.

F. Fasteners: Comply with the following:

1. Machine Screws: For metal doors and frames. Install into drilled and tapped holes.
2. Wood Screws: For wood doors and frames.
3. Threaded-to-the-Head Wood Screws: For fire-rated wood doors.

2.5 CONTINUOUS HINGES

A. Hinges shall be a geared continuous hinge utilizing a single gear section for the door leaf and a separate gear section for the frame side of the door. The door leaf and jamb leaf shall fully mortised where scheduled, and full surface where scheduled.. Geared hinges are to be certified to ANSI 156.25, Grade 2 and UL 10C tested and approved for 90 minutes.

2.6 LOCKS, LATCHES, AND BOLTS

A. Strikes: Provide manufacturer's standard wrought box strike for each latch or lock bolt, with curved lip extended to protect frame, finished to match hardware set, unless otherwise indicated.

B. Lock Throw: Provide 5/8-inch (16-mm) minimum throw of latch on pairs of doors. Comply with UL requirements for throw of bolts and latch bolts on rated fire openings.

C. Flush Bolt Heads: Minimum of 1/2-inch- (13-mm-) diameter rods of brass, bronze, or stainless steel with minimum 12-inch- (300-mm-) long rod for doors up to 84 inches (2100 mm) in height. Provide longer rods as necessary for doors exceeding 84 inches (2100 mm) in height.

2.7 KEYING REQUIREMENTS

A. General: Supplier will meet with Owner to finalize keying requirements and obtain final instructions in writing.

B. Review the keying system with the Owner and provide a master, grandmaster or great-grandmaster integrated with Owner's existing system. If key pinning charts are required, owner to furnish charts to hardware supplier.

C. Furnish temporary keyed cores for the construction period, and remove these when directed. The construction cores remain property of the supplier and shall be returned to the supplier when they are removed. Contractor shall install the permanent cores in the presence of the owner’s representative.

D. Permanent Keys: Secured shipment direct from point of origination to Owner’s Representative

1. For estimate: 2 keys per change combination, 5 master keys per group, 5 grand-master keys, 3 control keys.

2.8 PUSH/PULL UNITS

A. Exposed Fasteners: Provide manufacturer's standard exposed fasteners for installation, thru-bolted.

2.9 CLOSERS

A. Accessibility Requirements: Where handles, pulls, latches, locks and other operating devices are indicated to comply with accessibility requirements, comply with the U.S. Architectural

Transportations Barriers Compliance Board's "Americans with Disabilities Act (ADA), Accessibility Guidelines for Buildings and Facilities (ADAAG)."

1. Comply with the following maximum opening-force requirements:

   a. Interior, Non-fire-rated Hinged Doors: 5 lbf applied perpendicular to door.
   b. Fire Doors: Minimum opening force allowable by Authorities Having Jurisdiction (AHJ).

B. Door Closers for Means of Egress Doors: Comply with NFPA 101. Door closers shall not require more than 30 lbf to set door in motion and not more than 15lbf to open door to minimum required width.

C. Cylinder: Shall be of high strength cast iron construction. All door exterior closers shall be tested to ANSI/BHMA A156.4 test requirements by a BHMA certified independent testing laboratory. A written certification showing successful completion of a minimum of 10,000,000 cycles for all exterior door closers must be provided. Cylinder shall have been manufactured and in the marketplace for a minimum of 10 years

D. Size of Units: Unless otherwise indicated, comply with manufacturer's written recommendations for size of door closers depending on size of door, exposure to weather, and anticipated frequency of use. Provide factory sized closers, adjustable to meet field conditions and requirements for opening force.

E. Surface Closers: BHMA A156.4 Grade 1. Provide type of arm required for closer to be located on non-public side of door, unless otherwise indicated.

   1. Full rack-and-pinion type cylinder with removable non-ferrous cover and cost iron body. Double heat-treated pinion shaft, single piece forged piston, chrome silicon steel spring.
   2. ISO 2000 certified. Units stamped with date-of-manufacture code.
   3. Independent lab-tested 10,000,000 cycles.
   4. Thru-bolts at wood doors unless doors are provided with closer blocking. Non-sized, non-handed, and adjustable. Place closer inside building, stairs, and rooms.
   5. Plates, brackets and special templating when needed for interface with particular header, door and wall conditions and neighboring hardware.
   6. Opening pressure: Exterior doors 8.5 lb., interior doors 5 lb., labeled fire doors 15 lb.
   7. Separate adjusting valves for closing speed, latching speed and backcheck, fourth valve for delayed action where scheduled.
   8. Extra-duty arms (EDA) at exterior doors scheduled with parallel arm units.
   9. Exterior doors do not require seasonal adjustments in temperates from 120 degrees F to -30 degrees F, furnish data on request.
   10. Non-flaming fluid will not fuel door or floor covering fires.
   11. Pressure relief values are not allowed.

2.10 DOOR OPERATORS / ADA SPECIAL CLOSERS

A. Where low kinetic energy, as defined by ANSI Standard A156.19, Surface Door Operators shall be electrically powered closers complying with the 1990 ADA requirements for opening force and time to close standards. Full closing force controlled by the hydraulic sweep and latch valves shall be provided when the power or assist cycle ends.

B. Door Operators shall be rack and pinion action with one-piece forged steel pistons. Pinion shaft diameter shall be a minimum of 11/16".

C. Separate adjusting valves shall be provided for closing speed, latching speed and back-check.

D. Adjusting valves shall be made of a metal material, regulating the fluid through a "V-SLOT" valve, concealed, adjustable only with special wrench, and shall be seated with "O" type rings.

E. Door Operators and supporting equipment shall carry a manufacturers two (2) year warranty.

F. Door Operator shall have built in the following features:

1. Opening Speed adjustment.
2. Opening Force adjustment (15 lb. Maximum).
3. Time Delay.
4. On-board Diagnostics.
5. On-board power supply.
6. Factory default memory.
7. On/off switch.
8. Hold open switch.
9. On-board capabilities to be either wired for simultaneous or sequential operation at vestibules.
10. Out-put triggers for electric strikes or electric latch retraction.

2.11 EXIT DEVICES/PANIC HARDWARE

A. General features: BHMA A156.3, Grade 1.

B. Accessibility Requirements: Where handles, pulls, latches, locks and other operating devices are indicated to comply with accessibility requirements, comply with the U.S. Architectural Transportations Barriers Compliance Board's "Americans with Disabilities Act (ADA), Accessibility Guidelines for Buildings and Facilities (ADAAG)."

1. Provide operating devices that do not require tight grasping, pinching, or twisting of the wrist and that operate with a force of not more than 5 lbf.

C. Exit Devices for Means of Egress Doors: Comply with NFPA 101. Exit devices shall not require more than 15lbf to release the latch. Locks shall not require use of a key, tool of special knowledge for operation.

D. Panic Exit Devices: Listed and labeled by a testing and inspecting agency acceptable to AHJ for panic protection, based on testing according to UL 305.

1. Independent lab-tested 10,000,000 cycles.
2. Push-through touch pad design. No exposed touch bar fasteners, no exposed cavities when operated. Return stroke fluid dampeners and rubber bottoming dampeners, plus anti-rattle devices.

3. No exposed screws to show through glass doors.
4. Non-handed basic device design with center case interchangeable with all functions, no extra parts required to effect change of function.

E. Specific features:

1. Non-Fire Rated Devices: Cylindrical dogging.
2. Lever Trim: Vandal resistant, forged brass or bronze escutcheon min .130” thickness, match lockset lever design.
3. Fire-Labeled Devices: UL label indicating “Fire Exit Hardware”. Vertical rod devices less bottom rod (LBR) unless otherwise scheduled.
4. Electrically Operated Devices: Single manufacturer source for electric latch retraction devices, electrically controlled trim, power transfers, power supplies, monitoring switches and controls.
5. Furnish all exit devices with deadlocking latchbolts.
6. End caps shall be sloped and of heavy-duty metal alloy construction and provide horizontal adjustment to provide flush alignment with device cover plate. When device end cap is installed, no raised edges will protrude. End cap shall be cast metal or forged aluminum and have a minimum thickness of (.250"). Plastic or metal stamping will not be acceptable.
7. Provide all shim kits and filler plates to allow flush mounting of exit devices on all types of doors used in this project.
8. Removable Mullions: Removable with single turn of building key. Securely reinstalled without need for key.

2.12 TRIM AND STOPS

A. Push plates, pull plates, door pulls, and miscellaneous door trim shall be shown in the hardware schedule.

B. Doorstops shall be furnished for all doors to prevent damage to doors or hardware from striking adjacent walls or fixtures. Wall stops are preferred. Floor stops are used only where noted in hardware schedule. Where conditions prohibit the use wall type stops, furnish overhead stops either surface mounted or concealed as noted in hardware sets.

2.13 WEATHERSTRIPPING AND SEALS

A. General: Provide continuous weatherstripping on exterior doors and smoke, light, or sound seals on interior doors where indicated or scheduled. Provide noncorrosive fasteners for exterior applications and elsewhere as indicated.

2.14 THRESHOLDS

A. General: Except as otherwise indicated, provide standard metal threshold unit of type, size, and profile as shown or scheduled.

2.15 ELECTRICAL HARDWARE

A. Furnish wiring diagrams to electrical contractor for use in installing electrical hardware products.

B. Electrical contractor to run all wiring and make all final connections for electrified hardware. Hardware supplier shall be responsible to furnish all wiring diagrams to operate electrified hardware. Access control material and electrified hardware to interface at junction boxes.

2.16 HARDWARE FINISHES

A. Match items to the manufacturer's standard color and texture finish for the latch and locksets (or push-pull units if no latch or lock sets).

B. Provide finishes that match those established by BHMA or, if none established, match the Architect's sample.

C. Provide quality of finish, including thickness of plating or coating (if any), composition, hardness, and other qualities complying with manufacturer's standards, but in no case less than specified by referenced standards for the applicable units of hardware.

D. The designations used in schedules and elsewhere to indicate hardware finishes are those listed in ANSI/BHMA A156.18, "Materials and Finishes," including coordination with the traditional U.S. finishes shown by certain manufacturers for their products.

PART 3 - EXECUTION

3.1 EXAMINATION

A. Examine doors and frames, with Installer present, for compliance with requirements for installation tolerances, labeled fire door assembly construction, wall and floor construction, and other conditions affecting performance.

B. Examine roughing-in for electrical power systems to verify actual locations of wiring connections before electrified door hardware installation.

C. Proceed with installation only after unsatisfactory conditions have been corrected.

3.2 PREPARATION

A. Steel Doors and Frames: Comply with DHI A115 Series.

1. Surface-Applied Door Hardware: Drill and tap doors and frames according to ANSI A250.6.

B. Wood Doors: Comply with DHI A115-W Series.

3.3 INSTALLATION

A. Mounting Heights: Mount door hardware units at heights indicated, as follows, unless otherwise indicated or required to comply with governing regulations.

1. Standard Steel Doors and Frames: DHI's "Recommended Locations for Architectural Hardware for Standard Steel Doors and Frames."
2. Custom Steel Doors and Frames: DHI's "Recommended Locations for Builders' Hardware for Custom Steel Doors and Frames."
3. Wood Doors: DHI WDHS.3, "Recommended Locations for Architectural Hardware for Wood Flush Doors."

B. Install each door hardware item to comply with manufacturer's written instructions. Where cutting and fitting are required to install door hardware onto or into surfaces that are later to be painted or finished in another way, coordinate removal, storage, and reinstallation of surface protective trim units with finishing work specified in Division 09 Sections. Do not install surface-mounted items until finishes have been completed on substrates involved.

1. Set units level, plumb, and true to line and location. Adjust and reinforce attachment substrates as necessary for proper installation and operation.
2. Drill and countersink units that are not factory prepared for anchorage fasteners. Space fasteners and anchors according to industry standards.

C. Boxed Power Supplies: Locate power supplies as indicated. Verify location with Architect.

1. Configuration: Provide one power supply for each door opening.
2. Configuration: Provide the least number of power supplies required to adequately serve doors with electrified door hardware.

D. Thresholds: Set thresholds for exterior and acoustical doors in full bed of sealant complying with requirements specified in Division 07 Section "Joint Sealants."

3.4 ADJUSTING

A. Initial Adjustment: Adjust and check each operating item of door hardware and each door to ensure proper operation or function of every unit. Replace units that cannot be adjusted to operate as intended. Adjust door control devices to compensate for final operation of heating and ventilating equipment and to comply with referenced accessibility requirements.

1. Spring Hinges: Adjust to achieve positive latching when door is allowed to close freely from an open position of 30 degrees.
2. Electric Strikes: Adjust horizontal and vertical alignment of keeper to properly engage lock bolt.
3. Door Closers: Unless otherwise required by authorities having jurisdiction, adjust sweep period so that, from an open position of 70 degrees, the door will take at least 3 seconds to move to a point 3 inches (75 mm) from the latch, measured to the leading edge of the door.

B. Occupancy Adjustment: Approximately six months after date of Substantial Completion, Installer's Architectural Hardware Consultant shall examine and readjust, including adjusting

operating forces, each item of door hardware as necessary to ensure function of doors, door hardware, and electrified door hardware.

3.5 CLEANING AND PROTECTION

A. Clean adjacent surfaces soiled by door hardware installation.

B. Clean operating items as necessary to restore proper function and finish.

C. Provide final protection and maintain conditions that ensure that door hardware is without damage or deterioration at time of Substantial Completion.

3.6 DEMONSTRATION

A. Engage a factory-authorized service representative to train Owner's maintenance personnel to adjust, operate, and maintain door hardware and door hardware finishes. Refer to Division 01 Section "Demonstration and Training."

3.7 DOOR HARDWARE SETS

HW SET: AL-01

2	EA	CONTINUOUS HINGE	112HD	313	IVE
1	EA	REMOV. MULLION	L980	600	SAR
1	EA	EXIT DEVICE	16-19-43-GL-MD8810	20D	SAR
1	EA	EXIT DEVICE	16-19-43-GL-MD8813	20D	SAR
1	EA	RIM CYLINDER	34	20D	SAR
3	EA	MTSE CYL, SGT CAM	41	20D	SAR
2	EA	OFFSET DOOR PULL	8190-0	613	IVE
2	EA	SURFACE CLOSER	4041 EDA X MC X 18	690	LCN
2	EA	OVERHEAD STOP	100S-ADJ	313	GLY
1			THRESHOLD AND PERIMETER SEAL BY DOOR MFG		B/O

HW SET: AL-02

2	EA	CONTINUOUS HINGE	112HD	313	IVE
1	EA	REMOV. MULLION	L980	600	SAR
1	EA	EXIT DEVICE	16-19-43-GL-MD8810	20D	SAR
1	EA	EXIT DEVICE	16-19-43-GL-MD8813	20D	SAR
1	EA	RIM CYLINDER	34	20D	SAR
4	EA	MTSE CYL, SGT CAM	41	20D	SAR
2	EA	OFFSET DOOR PULL	8190-0	613	IVE

1	EA	SURFACE CLOSER	4041 EDA X MC X 18	690	LCN
1	EA	AUTO-EQUALIZER	4642 FC	689	LCN
2	EA	OVERHEAD STOP	100S-ADJ	313	GLY
1	EA	KEYSWITCH	653-04	630	SCE
1			RE-USE EXISTING ACTUATORS		
1			THRESHOLD AND PERIMETER SEAL BY DOOR MFG		B/O

KEYSWITCH TO TURN OFF/ON EXTERIOR ACTUATOR.

HW SET: AL-03

2	EA	CONTINUOUS HINGE	112HD	313	IVE
2	EA	PULL/PUSHBAR	9190-0	613	IVE
1	EA	SURFACE CLOSER	4041 EDA X MC X 18	690	LCN
1	EA	AUTO-EQUALIZER	4642 FC	689	LCN
2	EA	OVERHEAD STOP	100S-ADJ	313	GLY
1			RE-USE EXISTING ACTUATORS		
1			THRESHOLD AND PERIMETER SEAL BY DOOR MFG		B/O

HW SET: AL-04

4	EA	CONTINUOUS HINGE	112HD	313	IVE
2	EA	REMOV. MULLION	L980	600	SAR
3	EA	EXIT DEVICE	16-19-43-GL-MD8810	20D	SAR
1	EA	EXIT DEVICE	16-19-43-GL-MD8813	20D	SAR
1	EA	RIM CYLINDER	34	20D	SAR
7	EA	MTSE CYL, SGT CAM	41	20D	SAR
4	EA	OFFSET DOOR PULL	8190-0	613	IVE
3	EA	SURFACE CLOSER	4041 EDA X MC X 18	690	LCN
1	EA	AUTO-EQUALIZER	4642 FC	689	LCN
4	EA	OVERHEAD STOP	100S-ADJ	313	GLY
1	EA	KEYSWITCH	653-04	630	SCE
1			RE-USE EXISTING ACTUATORS		
1			THRESHOLD AND PERIMETER SEAL BY DOOR MFG		B/O

KEYSWITCH TO TURN OFF/ON EXTERIOR ACTUATOR.

HW SET: AL-05

4	EA	CONTINUOUS HINGE	112HD	313	IVE
2	EA	REMOV. MULLION	L980	600	SAR

3	EA	EXIT DEVICE	16-19-43-GL-MD8810	20D	SAR
1	EA	EXIT DEVICE	16-19-43-GL-MD8813	20D	SAR
1	EA	RIM CYLINDER	34	20D	SAR
5	EA	MTSE CYL, SGT CAM	41	20D	SAR
4	EA	OFFSET DOOR PULL	8190-0	613	IVE
4	EA	SURFACE CLOSER	4041 EDA X MC X 18	690	LCN
4	EA	OVERHEAD STOP	100S-ADJ	313	GLY
1			THRESHOLD AND PERIMETER SEAL BY DOOR MFG		B/O

HW SET: AL-06

1	EA	CONTINUOUS HINGE	112HD	313	IVE
1	EA	EXIT DEVICE	16-19-43-GL-MD8813	20D	SAR
1	EA	RIM CYLINDER	34	20D	SAR
1	EA	MTSE CYL, SGT CAM	41	20D	SAR
1	EA	OFFSET DOOR PULL	8190-0	613	IVE
1	EA	SURFACE CLOSER	4041 EDA X MC X 18	690	LCN
1	EA	OVERHEAD STOP	100S-ADJ	313	GLY
1			THRESHOLD AND PERIMETER SEAL BY DOOR MFG		B/O

HW SET: AL-07

2	EA	CONTINUOUS HINGE	112HD	313	IVE
2	EA	EXIT DEVICE	16-19-43-GL-MD8813	20D	SAR
2	EA	RIM CYLINDER	34	20D	SAR
2	EA	MTSE CYL, SGT CAM	41	20D	SAR
2	EA	OFFSET DOOR PULL	8190-0	613	IVE
2	EA	SURFACE CLOSER	4041 EDA X MC X 18	690	LCN
2	EA	OVERHEAD STOP	100S-ADJ	313	GLY
2			THRESHOLD AND PERIMETER SEAL BY DOOR MFG		B/O

HW SET: AL-08

1	EA	CONTINUOUS HINGE	112HD	313	IVE
1	EA	MORTISE THUMBTURN	4066	313	ADA
1	EA	MTSE CYL, SGT CAM	41	20D	SAR
1	EA	DEADLATCH	4530	313	ADA

1	EA	DEADLATCH PADDLE	4590	313	ADA
1	EA	PULL/PUSHBAR	9190-0	613	IVE
1	EA	SURFACE CLOSER	4041 EDA X MC X 18	690	LCN
1	EA	OVERHEAD STOP	100S-ADJ	313	GLY
1			THRESHOLD AND PERIMETER SEAL BY DOOR MFG		B/O

HW SET: AL-09

1	EA	CONTINUOUS HINGE	112HD	313	IVE
1	EA	EXIT DEVICE	16-19-43-GL-MD8813	20D	SAR
1	EA	RIM CYLINDER	34	20D	SAR
1	EA	MTSE CYL, SGT CAM	41	20D	SAR
1	EA	OFFSET DOOR PULL	8190-0	613	IVE
1	EA	AUTO-EQUALIZER	4642 FC	689	LCN
1	EA	OVERHEAD STOP	100S-ADJ	313	GLY
1	EA	KEYSWITCH	653-04	630	SCE
1			RE-USE EXISTING ACTUATORS		
1			THRESHOLD AND PERIMETER SEAL BY DOOR MFG		B/O

KEYSWITCH TO TURN OFF/ON EXTERIOR ACTUATOR.

HW SET: AL-10

1	EA	CONTINUOUS HINGE	112HD	313	IVE
1	EA	EXIT DEVICE	16-19-43-GL-MD8813	20D	SAR
1	EA	RIM CYLINDER	34	20D	SAR
1	EA	MTSE CYL, SGT CAM	41	20D	SAR
1	EA	ELECTRIC STRIKE	ELECTRIC STRIKE	613	TBD
1	EA	OFFSET DOOR PULL	8190-0	613	IVE
1	EA	SURFACE CLOSER	4041 EDA X MC	690	LCN
1	EA	OVERHEAD STOP	100S-ADJ	313	GLY
1			PROX READER BY OTHERS		B/O
1			THRESHOLD AND PERIMETER SEAL BY DOOR MFG		B/O

AFTER HOURS ACCESS BY PROX READER. USER PRESENTS CARD, ELECTRIC STRIKE RELEASES, USER OPENS DOOR.

CODE ANALYSIS

APPLICABLE CODES

	Year		Year
International Building Code	2006	National Electrical Code	2006
International Mechanical Code	2006	Uniform Code for Building Conservation	
International Plumbing Code	2006	ADA Accessibility Guidelines	ICC/ANSI 117.1 1998
International Fire Code	2006		
International Energy Conservation Code	2006		

A. Occupancy and Group: UNLIMITED MALL BUILDING

Change in Use: Yes ____ No ✓ Mixed Occupancy: Yes ✓ No ____
Special Use and Occupancy (e.g. High Rise, Covered Mall): UNLIMITED MALL BUILDING

B. Seismic Design Category: D Design Wind Speed: 90 mph

C. Type of Construction (circle one):

I/A I/B II/A (II/B) III/A III/B IV/HT V/A V/B

D. Fire Resistance Rating Requirements for the Exterior Walls based on the fire separation distance (in hours):

North: ____ South: ____ East: ____ West: ____

E. Mixed Occupancies: ____ Nonseparated Uses: ____

F: Sprinklers:

Required: ✓ Provided: ✓ Type of Sprinkler System: ____

G: Number of Stories: 1 Building Height: 18'

H: Actual Area per Floor (square feet): NO ADDED SQUARE FOOTAGE

I: Tabular Area: UNLIMITED MALL BUILDING

J: Area Modifications:

a) $A_a = A_t + \left[\frac{A_t\ I_f}{100}\right] + \left[\frac{A_t\ I_s}{100}\right]$ $I_f = 100\left[\frac{F}{P} - 0.25\right]\frac{W}{30}$

b) Sum of the Ratio Calculations for Mixed Occupancies:

$\frac{\text{Actual Area}}{\text{Allowable Area}} \leq 1$

c) Total Allowable Area for:
1) One Story: ____
2) Two Story: $A_a(2)$____
3) Three Story: $A_a(3)$____

d) Unlimited Area Building: Yes ✓ No ____ Code Section: 401

K. Fire Resistance Rating Requirements for Building Elements (hours).

Fire-Resistive Requirements:	Type: II-B
Bearing walls - Interior:	0
Exterior Non-Bearing Walls:	0
Structural Frame:	0
Partitions:	1
Shafts:	1 Hr.
Floors - Ceilings:	0
Roofs - Ceilings:	0

L. Design Occupant Load: NO ADDED OCCUPANT - NO ADDED SQUARE FOOTAGE
Exit Width Required: N/A Exit Width Provided: N/A

M. Minimum Number of Required Plumbing Facilities:
a) Water Closets - Required (m) N/A (f) ____ Provided (m) ____ (f) ____
b) Lavatories - Required (m) N/A (f) ____ Provided (m) ____ (f) ____
c) Bath Tubs or Showers: N/A
d) Drinking Fountains: N/A Service Sinks: ____

FOOTNOTES:

1) In case of conflict with the U.S. Department of Justice Federal Registers Parts I through V - ADA Guidelines and specific reference to the International Building Code Accessibility Chapters, the more restrictive requirement shall govern.

2) Additional Code Information shall be provided at the discretion of the Building Official for Complex Buildings. Including, but not limited to:
a) High Rise Requirements.
b) Atriums.
c) Performance Based Criteria.
d) Means or Egress Analysis.
e) Fire Assembly Locator Sheet.
f) Exterior and Interior Accessibility Route.
g) Fire Stopping, Including Tested Design Number.

PROJECT TEAM

OWNER:
DFCM
Mike Ambre
Project Manager
4110 State Office Building
Salt Lake City, UT 84114
phone (801) 209.9104

USER:
UVSC
James L. Michaelis
Director of Facilities
800 West University Parkway
Orem, Utah 84058-5999
phone (801)863-8130

ARCHITECT:
AXIS ARCHITECTS
Pierre O. Langue AIA
352 S. Denver Street
Salt Lake City, Utah 84111
phone (801)355-3003
fax (801)355-0113

SYMBOL LEGEND

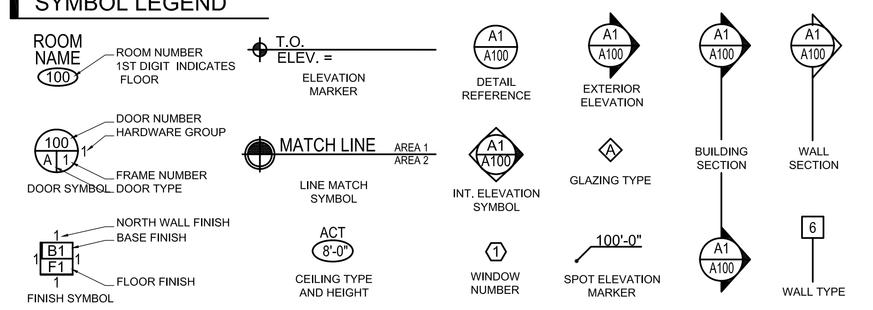

ALTERNATES

BASE BID INCLUDES THE REMOVAL OF EXISTING WINDOWS, FABRICATION AND INSTALLATION OF NEW WINDOWS, (INCLUDING ALL COORDINATION OF EQUIPMENT MOUNTED ON OR PENETRATING THROUGH THE WINDOWS SYSTEMS) IN THE FOLLOWING LOCATIONS:
NORTH VESTIBULE AND ADJACENT WINDOW AT POPE SCIENCE BUILDING;
NORTH DOORWAY ADJACENT TO STAIR AT BROWNING ADMINISTRATION BUILDING;
ALL WINDOWS AND DOORS INDICATED AT SPARKS AUTOMOTIVE BUILDING.

ALTERNATE 1 INCLUDES THE REMOVAL OF EXISTING WINDOWS, FABRICATION AND INSTALLATION OF NEW WINDOWS, (INCLUDING ALL COORDINATION OF EQUIPMENT MOUNTED ON OR PENETRATING THROUGH THE WINDOWS SYSTEMS) IN THE FOLLOWING LOCATIONS:
ALL WINDOWS/DOORS INDICATED ON THE LOWER LEVEL NORTHWEST FACADE OF THE WOODBURY BUSINESS BUILDING.

ALTERNATE 2 INCLUDES THE REMOVAL OF EXISTING WINDOWS, FABRICATION AND INSTALLATION OF NEW WINDOWS, (INCLUDING ALL COORDINATION OF EQUIPMENT MOUNTED ON OR PENETRATING THROUGH THE WINDOWS SYSTEMS) IN THE FOLLOWING LOCATIONS:
ALL WINDOWS ON BOTH NORTH AND SOUTH SIDE OF CONCOURSE BETWEEN WOODBURY ADMINISTRATION BUILDING AND BROWNING ADMINISTRATION BUILDING.

GRAPHIC SYMBOLS

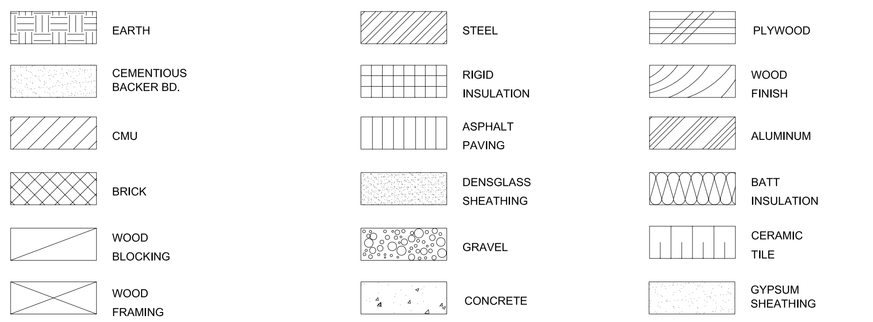

UTAH VALLEY STATE COLLEGE
CAMPUS WINDOW REPLACEMENT
PHASE I

Orem, Utah

2008-05-05

DFCM PROJECT #06066790

DRAWING INDEX

GENERAL
GI101 GENERAL INFORMATION

ARCHITECTURAL
AE101 SPARKS AUTOMOTIVE FLOOR PLANS
AE111 SPARKS AUTOMOTIVE DOOR/WINDOW ELEV.
AE201 POPE SCIENCE AND BROWNING ADMIN
AE301 WOODBURY BUS. PLANS/ELEV - ALTERNATES
AE601 ARCHITECTURAL DETAILS

NOTE: THE SHEETS LISTED ABOVE REPRESENT A FULL SET OF CONSTRUCTION DOCUMENTS AND INCLUDE A DETAIL BOOK AND A PROJECT MANUAL AND SHALL NOT BE SEPERATED. ANY CONTRACTOR, SUBCONTRACTOR, VENDOR OR ANY OTHER PERSON PARTICIPATING IN OR BIDDING ON THIS PROJECT SHALL BE RESPONSIBLE FOR REVIEWING ALL THE CONSTRUCTION DOCUMENTS INCLUDING BUT NOT LIMITED TO DRAWINGS, DETAILS, PROJECT MANUAL, SPECIFICATIONS AND ANY AND ALL ADDENDA ISSUED.

Utah Valley State College
ENGINEERING, FACILITIES PLANNING & CONSTRUCTION DEPARTMENT

State of Utah
Department of Administrative Services
Division of Facilities Construction & Management
4110 State Office Building
Salt Lake City, Utah 84114
Phone: (801) 538 - 3018
Fax: (801) 538 - 3267

APPROVALS

Prime Agency ____ Date ____
DFCM ____ Date ____

APPROVAL DOES NOT RELIEVE A/E OF DESIGN LIABILITY

VICINITY MAP

OVERALL SITE PLAN

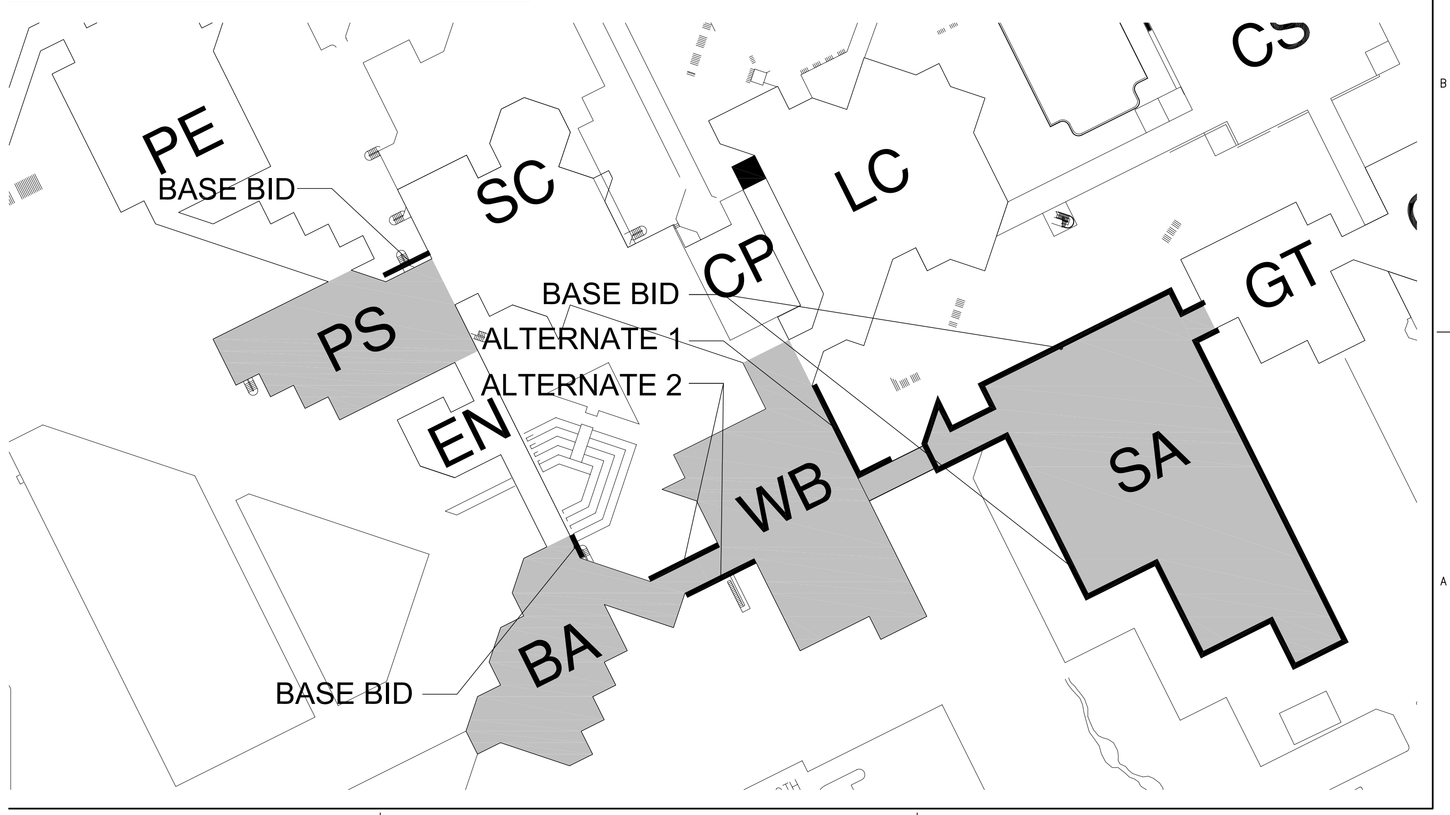

Axis Architects
352 SOUTH DENVER STREET(440 EAST) SALT LAKE CITY UTAH 84111 P 355-3003 F 355-0113

UVSC Window Replacement
PHASE I
Orem, UT
Construction Documents

Revision #	Date
1 ADD. 1 - CHANGE OF SCOPE	

Axis Job # 0701
Owner # 06066790
Date 05-05-2008
Drawn -
Checked -

INFORMATION SHEET

GI101

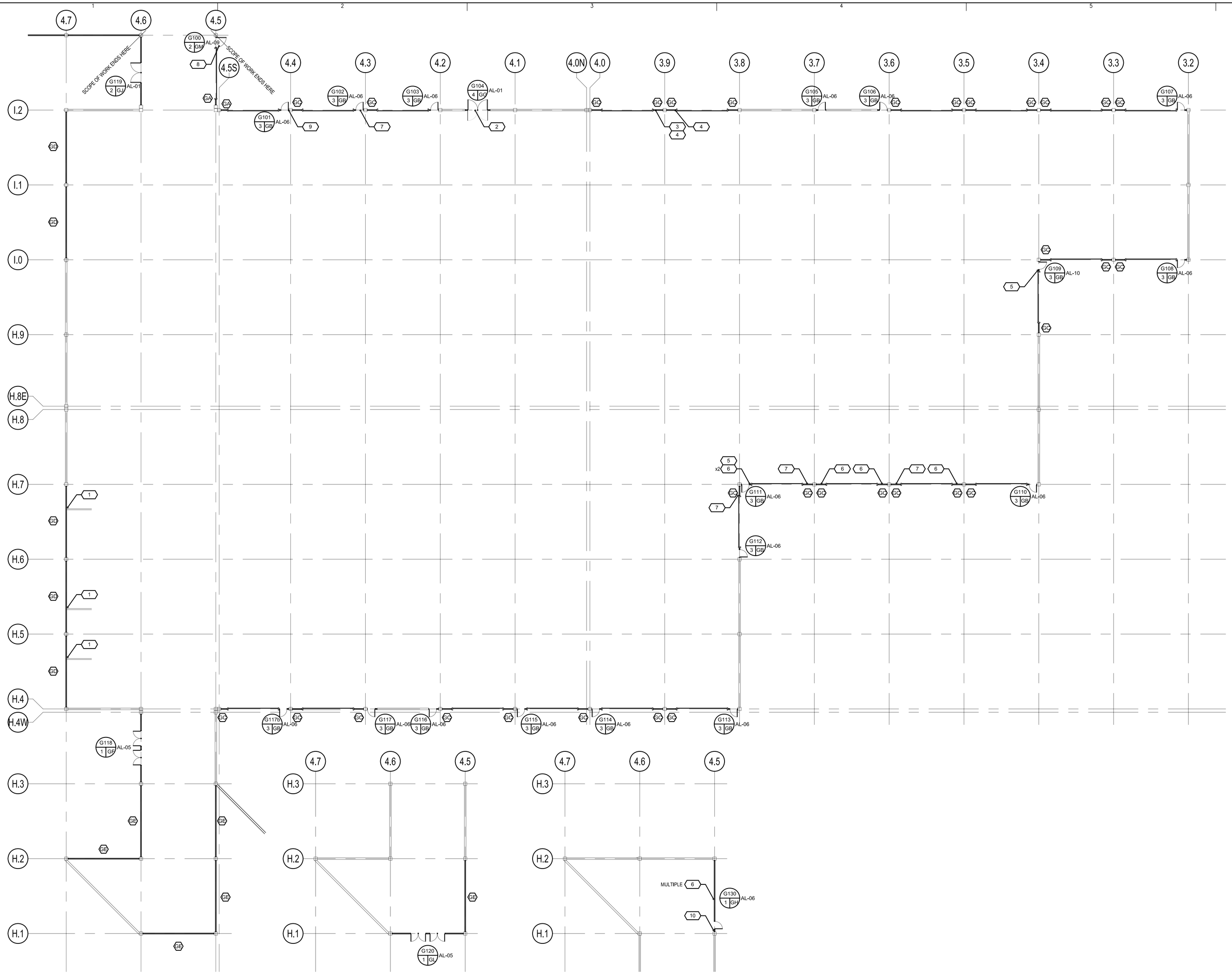

A1 SPARKS AUTOMOTIVE UPPER LEVEL FLOOR PLAN
1/16"=1'-0"

A2 SPARKS AUTOMOTIVE MIDDLE LEVEL FLOOR PLAN
1/16"=1'-0"

A3 SPARKS AUTOMOTIVE LOWER LEVEL FLOOR PLAN
1/16"=1'-0"

GENERAL DEMOLITION NOTES

1. DEMOLITION OF EXISTING WINDOWS IS REQUIRED UNDER THIS CONTRACT. AT EVERY LOCATION SHOWN FOR NEW WINDOWS, EXISTING HOLLOW METAL WINDOWS MUST BE REMOVED.
2. CONTRACTOR TO FIELD VERIFY ALL EXISTING CONDITIONS INCLUDING DIMENSIONS PRIOR TO BID.
3. WHERE EXISTING WINDOWS ARE TO BE REMOVED, MEASURES MUST BE TAKEN TO AVOID DAMAGING OTHER BUILDINGS ELEMENTS. CONTRACTOR IS RESPONSIBLE TO REPAIR OR REIMBURSE OWNER FOR ANY DAMAGE CAUSED.
4. IN CERTAIN AREAS CONDUIT, PLUG MOLD, CABLES, ETC, ARE MOUNTED TO EXISTING WINDOWS. CONTRACTOR IS RESPONSIBLE FOR LOCATING SUCH ELEMENTS. REMOVE FOR INSTALLATION OF NEW WINDOWS AS NECESSARY AND REINSTALL.
5. DISCONNECT ANY EFFECTED UTILITIES PRIOR TO REMOVAL. CONTRACTOR TO COORDINATE DEMOLITION STAGING AREAS WITH OWNER.
6. CONTRACT TO COORDINATE ALL CONSTRUCTION SCHEDULING WITH OWNER PRIOR TO DEMOLITON.

NEW CONSTRUCTION GENERAL NOTES

1. CONTRACTOR TO VERIFY EXISTING CONDITIONS PRIOR TO BID. THIS INCLUDES BUT IS NOT LIMITED TO DIMENSIONS, BUILDING COMPONENTS MOUNTED ON OR PROJECTING THROUGH EXISTING WINDOW SYSTEM SUCH AS BLINDS, ELECTRICAL AND DATA DEVICES/CONDUIT, PLUMBING AND GAS ELEMENTS, FIRE SAFETY DEVICES, MOTORIZED DOOR ACTUATORS, ELECTRONIC ENCODED LOCKING HARDWARE, ETC. CONTRACTOR IS RESPONSIBLE FOR DETACHING SUCH ELEMENTS BEFORE DEMOLITION AND REPLACING AFTER WINDOW INSTALLATION. SOME OF THE ABOVE COMPONENTS HAVE BEEN INDICATED ON THE DRAWINGS AS AN AID TO CONTRACTOR - ADDITIONAL COMPONENTS MAY OCCUR IN OTHER LOCATIONS. IT IS THE CONTRACTOR'S RESPONSIBILITY TO INCLUDE IN THE BID COSTS FOR THE REMOVAL AND REINSTALLATION OF ALL SUCH COMPONENTS WHETHER INDICATED IN THESE DRAWINGS OR NOT. NOT ADDITIONAL FEES WILL BE AWARDED FOR REMOVAL, REINSTALLATION OR COORDINATION PERTAINING TO SUCH COMPONENTS.
2. CONTRACTOR SHALL RECONNECT ALL UTILITIES THAT ARE INTERRUPTED DUE TO CONSTRUCTION. ANY INTERRUPTION OF UTILITY SERVICE MUST BE COORDINATED WITH THE CLIENT PRIOR TO INTERRUPTION.
3. AT ALL LOCATIONS WHERE EXISTING WALLS OR FURRING ABUT GLAZING SYSTEM, SEE DETAILS A1 AND B1 ON AE601. CONTRACTOR SHALL VERIFY WHERE SUCH CONDITIONS EXIST PRIOR TO BID, INCLUDING THOSE LOCATIONS NOT SHOWN ON DRAWINGS.
4. ALL ALUMINUM BREAK METAL TO MATCH FRAMES
5. ALL MULLIONS ARE 2" WIDE UNLESS OTHERWISE NOTED.
6. GENERAL CONTRACTOR TO VERIFY WINDOW HEIGHT ABOVE GRADE. ANY RESULTING SCAFFOLDING OR OTHER ASSOCIATED COSTS TO BE COVERED IN BID.
7. SEE AE601 FOR ALL DETAILS.
8. IN LOCATIONS WHERE A SECTION OF BUILDING MATERIAL IS REQUIRED TO BE REMOVED IN ORDER TO INSTALL A WINDOW OR DOOR, REPLACE WITH MATERIAL MATCHING EXISTING.
9. AT ALL LOCATIONS WHERE PENETRATIONS OCCUR IN FRAME OR METAL PANEL, OPENING ACCOMMODATING PENETRATION IS TO EXCEED SIZE OF PENETRATING ELEMENT BY NO MORE THAN 1/3". SEALANT INTEGRALLY COLORED TO MATCH FRAME TO BE APPLIED TO PENETRATIONS.

COORDINATION NOTES

1. STUD WALL ADJACENT TO FRAME
2. 8'x2' EXHAUST DUCT PENETRATES METAL PANEL
3. JUNCTION BOX AND OTHER ELETRICAL EQUIPMENT MOUNTED ON PANEL
4. ELECTRICAL CONDUIT PENETRATES FRAME
5. ELECTRICAL SECURITY DEVICE MOUNTED ON DOOR
6. ELECTRICAL CONDUIT/DEVICE MOUNTED ON FRAME
7. ROOF DRAIN LINE PENETRATES METAL PANEL
8. ADA ACTUATOR OPERATES THIS DOOR
9. PENETRATION AT METAL PANEL
10. CONDENSATE LINE PENETRATES FRAME

NOTE: THESE ITEMS ARE THE RESPONSIBILITY OF THE CONTRACTOR, AND MUST BE RETURNED TO FUNCTIONING CONDITION AFTER CONSTRUCTION. THESE ITEMS ARE TO BE COVERED IN THE CONTRACTOR'S BID.

Axis Architects
352 SOUTH DENVER STREET(440 EAST) SALT LAKE CITY UTAH 84111 P 355-3003 F 355-0113

UVSC Window Replacement PHASE I

Orem, UT

Construction Documents

Revision #	Date
1 ADD. 1 - CHANGE OF SCOPE	

Axis Job # 0701
Owner # 06066790
Date 05-05-2008
Drawn
Checked

LEVEL 0 FLOOR PLAN
SPARKS AUTOMOTIVE

AE101

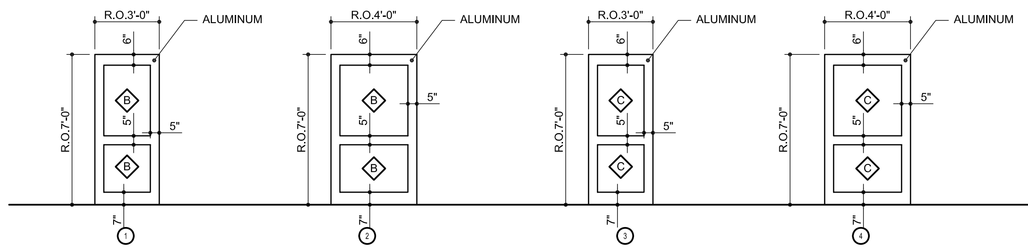

NOTE: SEE PLANS FOR DOOR SWING DIRECTION

E1 DOOR TYPES

1/4"=1'-0"

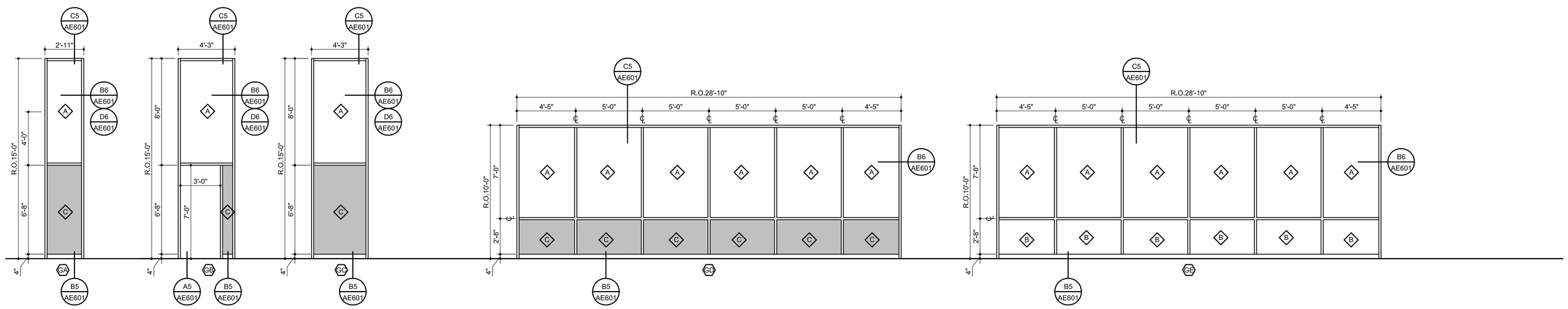

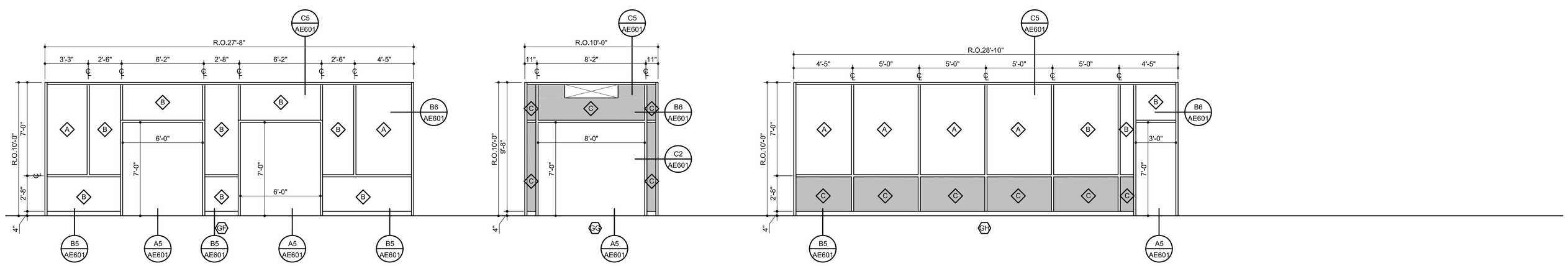

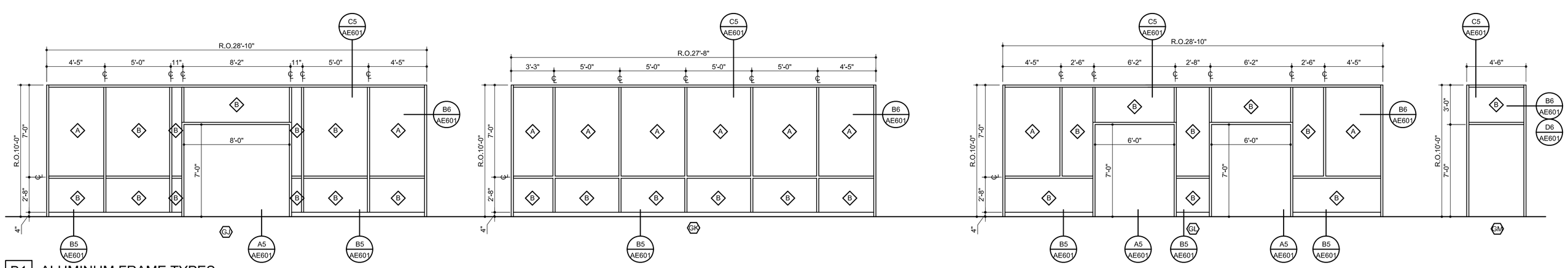

B1 ALUMINUM FRAME TYPES

1/4"=1'-0"

GENERAL DEMOLITION NOTES

1. DEMOLITION OF EXISTING WINDOWS IS REQUIRED UNDER THIS CONTRACT. AT EVERY LOCATION SHOWN FOR NEW WINDOWS, EXISTING HOLLOW METAL WINDOWS MUST BE REMOVED.
2. CONTRACTOR TO FIELD VERIFY ALL EXISTING CONDITIONS INCLUDING DIMENSIONS PRIOR TO BID.
3. WHERE EXISTING WINDOWS ARE TO BE REMOVED, MEASURES MUST BE TAKEN TO AVOID DAMAGING OTHER BUILDINGS ELEMENTS. CONTRACTOR IS RESPONSIBLE TO REPAIR OR REIMBURSE OWNER FOR ANY DAMAGE CAUSED.
4. IN CERTAIN AREAS CONDUIT, PLUG MOLD, CABLES, ETC. ARE MOUNTED TO EXISTING WINDOWS. CONTRACTOR IS RESPONSIBLE FOR LOCATING SUCH ELEMENTS. REMOVE FOR INSTALLATION OF NEW WINDOWS AS NECESSARY AND REINSTALL.
5. DISCONNECT ANY EFFECTED UTILITIES PRIOR TO REMOVAL. CONTRACTOR TO COORDINATE DEMOLITION STAGING AREAS WITH OWNER.
6. CONTRACT TO COORDINATE ALL CONSTRUCTION SCHEDULING WITH OWNER PRIOR TO DEMOLITON.

NEW CONSTRUCTION GENERAL NOTES

1. CONTRACTOR TO VERIFY EXISTING CONDITIONS PRIOR TO BID. THIS INCLUDES BUT IS NOT LIMITED TO DIMENSIONS, BUILDING COMPONENTS MOUNTED ON OR PROJECTING THROUGH EXISTING WINDOW SYSTEM SUCH AS BLINDS, ELECTRICAL AND DATA DEVICES/CONDUIT, PLUMBING AND GAS ELEMENTS, FIRE SAFETY DEVICES, MOTORIZED DOOR ACTUATORS, ELECTRONIC ENCODED LOCKING HARDWARE, ETC. CONTRACTOR IS RESPONSIBLE FOR DETACHING SUCH ELEMENTS BEFORE DEMOLITION AND REPLACING AFTER WINDOW INSTALLATION. SOME OF THE ABOVE COMPONENTS HAVE BEEN INDICATED ON THE DRAWINGS AS AN AID TO CONTRACTOR - ADDITIONAL COMPONENTS MAY OCCUR IN OTHER LOCATIONS. IT IS THE CONTRACTOR'S RESPONSIBILITY TO INCLUDE IN THE BID COSTS FOR THE REMOVAL AND REINSTALLATION OF ALL SUCH COMPONENTS WHETHER INDICATED IN THESE DRAWINGS OR NOT. NOT ADDITIONAL FEES WILL BE AWARDED FOR REMOVAL, REINSTALLATION OR COORDINATION PERTAINING TO SUCH COMPONENTS.
2. CONTRACTOR SHALL RECONNECT ALL UTILITIES THAT ARE INTERRUPTED DUE TO CONSTRUCTION. ANY INTERRUPTION OF UTILITY SERVICE MUST BE COORDINATED WITH THE CLIENT PRIOR TO INTERRUPTION.
3. AT ALL LOCATIONS WHERE EXISTING WALLS OR FURRING ABUT GLAZING SYSTEM, SEE DETAILS A1 AND B1 ON AE601. CONTRACTOR SHALL VERIFY WHERE SUCH CONDITIONS EXIST PRIOR TO BID, INCLUDING THOSE LOCATIONS NOT SHOWN ON DRAWINGS.
4. ALL ALUMINUM BREAK METAL TO MATCH FRAMES
5. ALL MULLIONS ARE 2" WIDE UNLESS OTHERWISE NOTED.
6. GENERAL CONTRACTOR TO VERIFY WINDOW HEIGHT ABOVE GRADE. ANY RESULTING SCAFFOLDING OR OTHER ASSOCIATED COSTS TO BE COVERED IN BID.
7. SEE AE601 FOR ALL DETAILS.
8. IN LOCATIONS WHERE A SECTION OF BUILDING MATERIAL IS REQUIRED TO BE REMOVED IN ORDER TO INSTALL A WINDOW OR DOOR, REPLACE WITH MATERIAL MATCHING EXISTING.
9. AT ALL LOCATIONS WHERE PENETRATIONS OCCUR IN FRAME OR METAL PANEL, OPENING ACCOMMODATING PENETRATION IS TO EXCEED SIZE OF PENETRATING ELEMENT BY NO MORE THAN 1/3". SEALANT INTEGRALLY COLORED TO MATCH FRAME TO BE APPLIED TO PENETRATIONS.

COORDINATION NOTES

1. STUD WALL ADJACENT TO FRAME
2. 8'x2' EXHAUST DUCT PENETRATES METAL PANEL
3. JUNCTION BOX AND OTHER ELETRICAL EQUIPMENT MOUNTED ON PANEL
4. ELECTRICAL CONDUIT PENETRATES FRAME
5. ELECTRICAL SECURITY DEVICE MOUNTED ON DOOR
6. ELECTRICAL CONDUIT/DEVICE MOUNTED ON FRAME
7. ROOF DRAIN LINE PENETRATES METAL PANEL
8. ADA ACTUATOR OPERATES THIS DOOR
9. PENETRATION AT METAL PANEL
10. CONDENSATE LINE PENETRATES FRAME

NOTE: THESE ITEMS ARE THE RESPONSIBILITY OF THE CONTRACTOR, AND MUST BE RETURNED TO FUNCTIONING CONDITION AFTER CONSTRUCTION. THESE ITEMS ARE TO BE COVERED IN THE CONTRACTOR'S BID.

GLAZING SCHEDULE

- A — 1" INSULATED LOW-E GLASS - BRONZE TINT
- B — 1" INSULATED TEMPERED LOW-E GLASS - BRONZE TINT
- C — 1" INSULATED ALUMINUM PANEL - BRONZE ANODIZED
- D — 1" INSULATED CLEAR GLASS - TEMPERED

1. CONTRACTOR TO FIELD VERIFY ALL DIMENSIONS AND ANGLES PRIOR TO FABRICATION.
2. SOME DETAILS MAY BE REVERSED.

Axis Architects
352 SOUTH DENVER STREET(440 EAST) SALT LAKE CITY UTAH 84111 P 355-3003 F 355-0113

UVSC Window Replacement PHASE I

Orem, UT

Construction Documents

Revision #	Date
1	ADD. 1 - CHANGE OF SCOPE

Axis Job # 0701
Owner # 06066790
Date 05-05-2008
Drawn
Checked

SPARKS AUTOMOTIVE
WINDOW ELEVATIONS

AE111

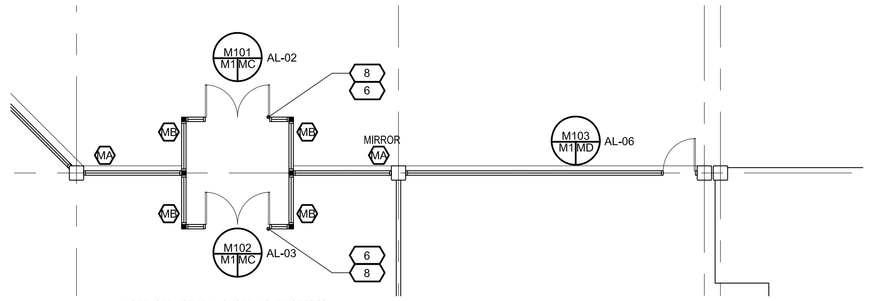

NOTE: STRUCTURAL SYSTEM SUPPORTING VESTIBULE TO REMAIN INTACT.

E4 POPE SCIENCE FLOOR PLAN
1/8"=1'-0"

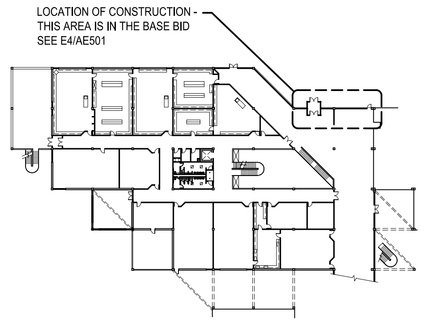

E5 POPE SCIENCE KEY PLAN
1/64"=1'-0"

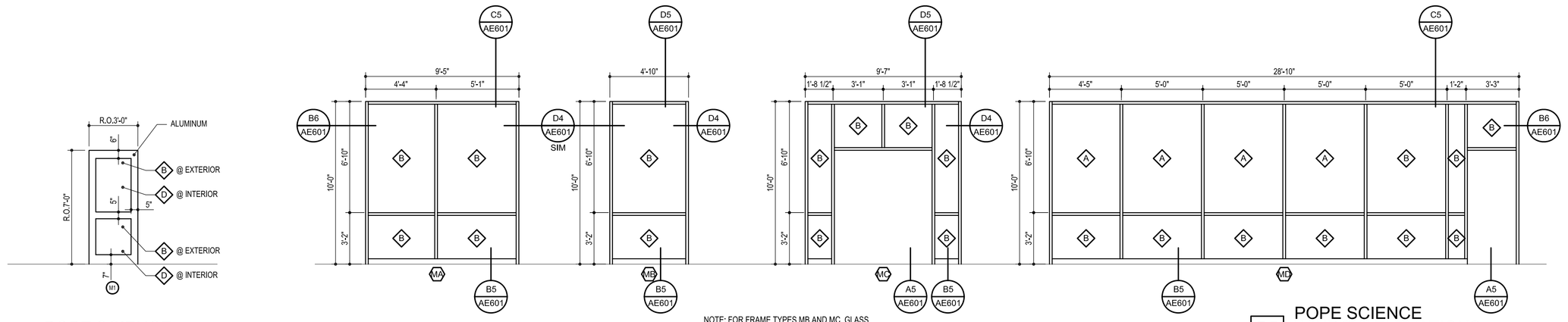

NOTE: FOR FRAME TYPES MB AND MC, GLASS TO BE TYPE "D" AT INTERIOR CONDITIONS

D5 POPE SCIENCE WINDOW ELEVATIONS
1/4"=1'-0"

D2 POPE SCIENCE DOOR TYPE
1/4"=1'-0"

GENERAL DEMOLITION NOTES

1. DEMOLITION OF EXISTING WINDOWS IS REQUIRED UNDER THIS CONTRACT. AT EVERY LOCATION SHOWN FOR NEW WINDOWS, EXISTING HOLLOW METAL WINDOWS MUST BE REMOVED.
2. CONTRACTOR TO FIELD VERIFY ALL EXISTING CONDITIONS INCLUDING DIMENSIONS PRIOR TO BID.
3. WHERE EXISTING WINDOWS ARE TO BE REMOVED, MEASURES MUST BE TAKEN TO AVOID DAMAGING OTHER BUILDINGS ELEMENTS. CONTRACTOR IS RESPONSIBLE TO REPAIR OR REIMBURSE OWNER FOR ANY DAMAGE CAUSED.
4. IN CERTAIN AREAS CONDUIT, PLUG MOLD, CABLES, ETC. ARE MOUNTED TO EXISTING WINDOWS. CONTRACTOR IS RESPONSIBLE FOR LOCATING SUCH ELEMENTS. REMOVE FOR INSTALLATION OF NEW WINDOWS AS NECESSARY AND REINSTALL.
5. DISCONNECT ANY EFFECTED UTILITIES PRIOR TO REMOVAL. CONTRACTOR TO COORDINATE DEMOLITION STAGING AREAS WITH OWNER.
6. CONTRACT TO COORDINATE ALL CONSTRUCTION SCHEDULING WITH OWNER PRIOR TO DEMOLITON.

NEW CONSTRUCTION GENERAL NOTES

1. CONTRACTOR TO VERIFY EXISTING CONDITIONS PRIOR TO BID. THIS INCLUDES BUT IS NOT LIMITED TO DIMENSIONS, BUILDING COMPONENTS MOUNTED ON OR PROJECTING THROUGH EXISTING WINDOW SYSTEM SUCH AS BLINDS, ELECTRICAL AND DATA DEVICES/CONDUIT, PLUMBING AND GAS ELEMENTS, FIRE SAFETY DEVICES, MOTORIZED DOOR ACTUATORS, ELECTRONIC ENCODED LOCKING HARDWARE, ETC. CONTRACTOR IS RESPONSIBLE FOR DETACHING SUCH ELEMENTS BEFORE DEMOLITION AND REPLACING AFTER WINDOW INSTALLATION. SOME OF THE ABOVE COMPONENTS HAVE BEEN INDICATED ON THE DRAWINGS AS AN AID TO CONTRACTOR - ADDITIONAL COMPONENTS MAY OCCUR IN OTHER LOCATIONS. IT IS THE CONTRACTOR'S RESPONSIBILITY TO INCLUDE IN THE BID COSTS FOR THE REMOVAL AND REINSTALLATION OF ALL SUCH COMPONENTS WHETHER INDICATED IN THESE DRAWINGS OR NOT. NOT ADDITIONAL FEES WILL BE AWARDED FOR REMOVAL, REINSTALLATION OR COORDINATION PERTAINING TO SUCH COMPONENTS.
2. CONTRACTOR SHALL RECONNECT ALL UTILITIES THAT ARE INTERRUPTED DUE TO CONSTRUCTION. ANY INTERRUPTION OF UTILITY SERVICE MUST BE COORDINATED WITH THE CLIENT PRIOR TO INTERRUPTION.
3. AT ALL LOCATIONS WHERE EXISTING WALLS OR FURRING ABUT GLAZING SYSTEM, SEE DETAILS A1 AND B1 ON AE601. CONTRACTOR SHALL VERIFY WHERE SUCH CONDITIONS EXIST PRIOR TO BID, INCLUDING THOSE LOCATIONS NOT SHOWN ON DRAWINGS.
4. ALL ALUMINUM BREAK METAL TO MATCH FRAMES
5. ALL MULLIONS ARE 2" WIDE UNLESS OTHERWISE NOTED.
6. GENERAL CONTRACTOR TO VERIFY WINDOW HEIGHT ABOVE GRADE. ANY RESULTING SCAFFOLDING OR OTHER ASSOCIATED COSTS TO BE COVERED IN BID.
7. SEE AE601 FOR ALL DETAILS.
8. IN LOCATIONS WHERE A SECTION OF BUILDING MATERIAL IS REQUIRED TO BE REMOVED IN ORDER TO INSTALL A WINDOW OR DOOR, REPLACE WITH MATERIAL MATCHING EXISTING.
9. AT ALL LOCATIONS WHERE PENETRATIONS OCCUR IN FRAME OR METAL PANEL, OPENING ACCOMMODATING PENETRATION IS TO EXCEED SIZE OF PENETRATING ELEMENT BY NO MORE THAN 1/3". SEALANT INTEGRALLY COLORED TO MATCH FRAME TO BE APPLIED TO PENETRATIONS.

C4 BROWNING ADMINISTRATION FLOOR PLAN
1/8"=1'-0"

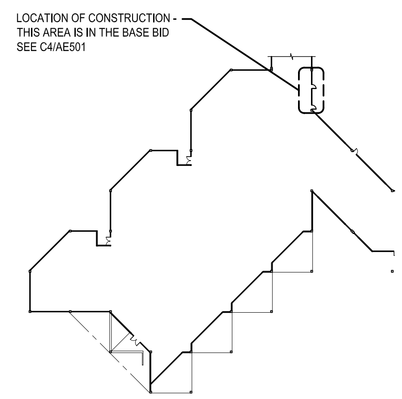

C5 BROWNING ADMINISTRATION KEY PLAN
1/64"=1'-0"

COORDINATION NOTES

1. STUD WALL ADJACENT TO FRAME
2. 8"x2" EXHAUST DUCT PENETRATES METAL PANEL
3. JUNCTION BOX AND OTHER ELETRICAL EQUIPMENT MOUNTED ON PANEL
4. ELECTRICAL CONDUIT PENETRATES FRAME
5. ELECTRICAL SECURITY DEVICE MOUNTED ON DOOR
6. ELECTRICAL CONDUIT/DEVICE MOUNTED ON FRAME
7. ROOF DRAIN LINE PENETRATES METAL PANEL
8. ADA ACTUATOR OPERATES THIS DOOR
9. PENETRATION AT METAL PANEL
10. CONDENSATE LINE PENETRATES FRAME

NOTE: THESE ITEMS ARE THE RESPONSIBILITY OF THE CONTRACTOR, AND MUST BE RETURNED TO FUNCTIONING CONDITION AFTER CONSTRUCTION. THESE ITEMS ARE TO BE COVERED IN THE CONTRACTOR'S BID.

GLAZING SCHEDULE

- A 1" INSULATED LOW-E GLASS - BRONZE TINT
- B 1" INSULATED TEMPERED LOW-E GLASS - BRONZE TINT
- C 1" INSULATED ALUMINUM PANEL - BRONZE ANODIZED
- D 1" INSULATED CLEAR GLASS - TEMPERED

1. CONTRACTOR TO FIELD VERIFY ALL DIMENSIONS AND ANGLES PRIOR TO FABRICATION.
2. SOME DETAILS MAY BE REVERSED.

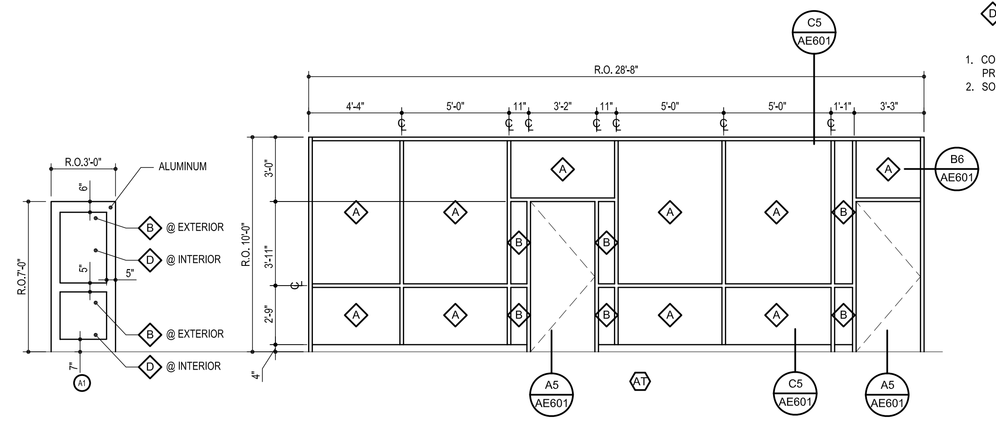

B4 BROWNING ADMINISTRATION DOOR TYPE
1/4"=1'-0"

B5 BROWNING ADMINISTRATION WINDOW ELEVATION
1/4"=1'-0"

Axis Architects
352 SOUTH DENVER STREET(440 EAST) SALT LAKE CITY UTAH 84111 P 355-3003 F 355-0113

UVSC Window Replacement PHASE I

Orem, UT

Construction Documents

Revision #	Date
1 ADD. 1 - CHANGE OF SCOPE	

Axis Job # 0701
Owner # 06066790
Date 05-05-2008
Drawn
Checked

BROWNING ADMINISTRATION
POPE SCIENCE AND
WINDOW REPLACEMENT DRAWINGS

AE201

NOTE: WINDOW REPLACEMENTS SHOWN ON THIS SHEET COMPRISE ALTERNATES 1 AND 2.

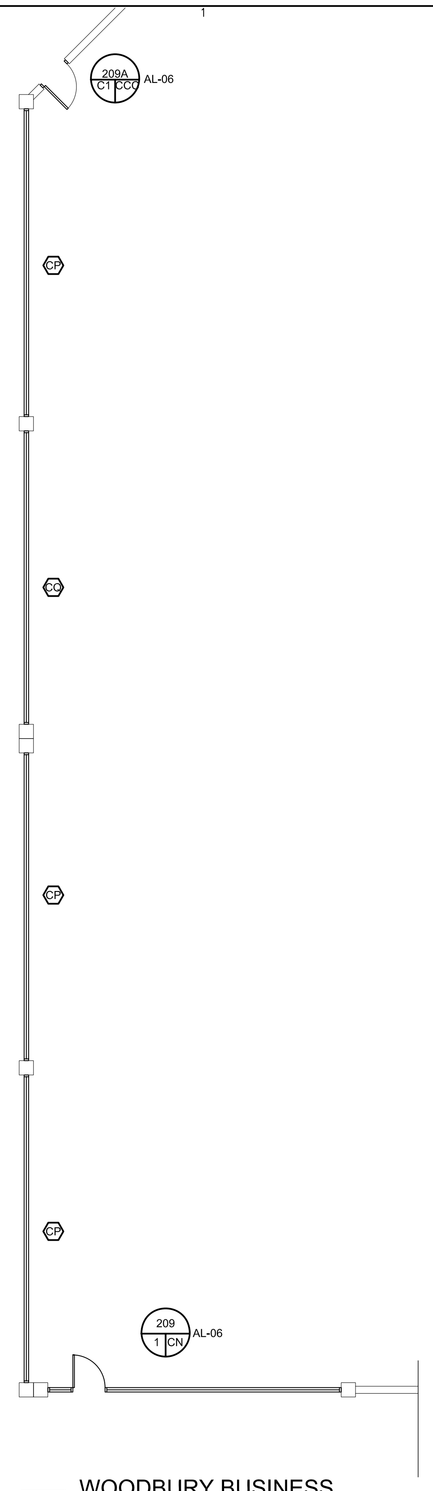

B1 WOODBURY BUSINESS PLAN
1/8"=1'-0"

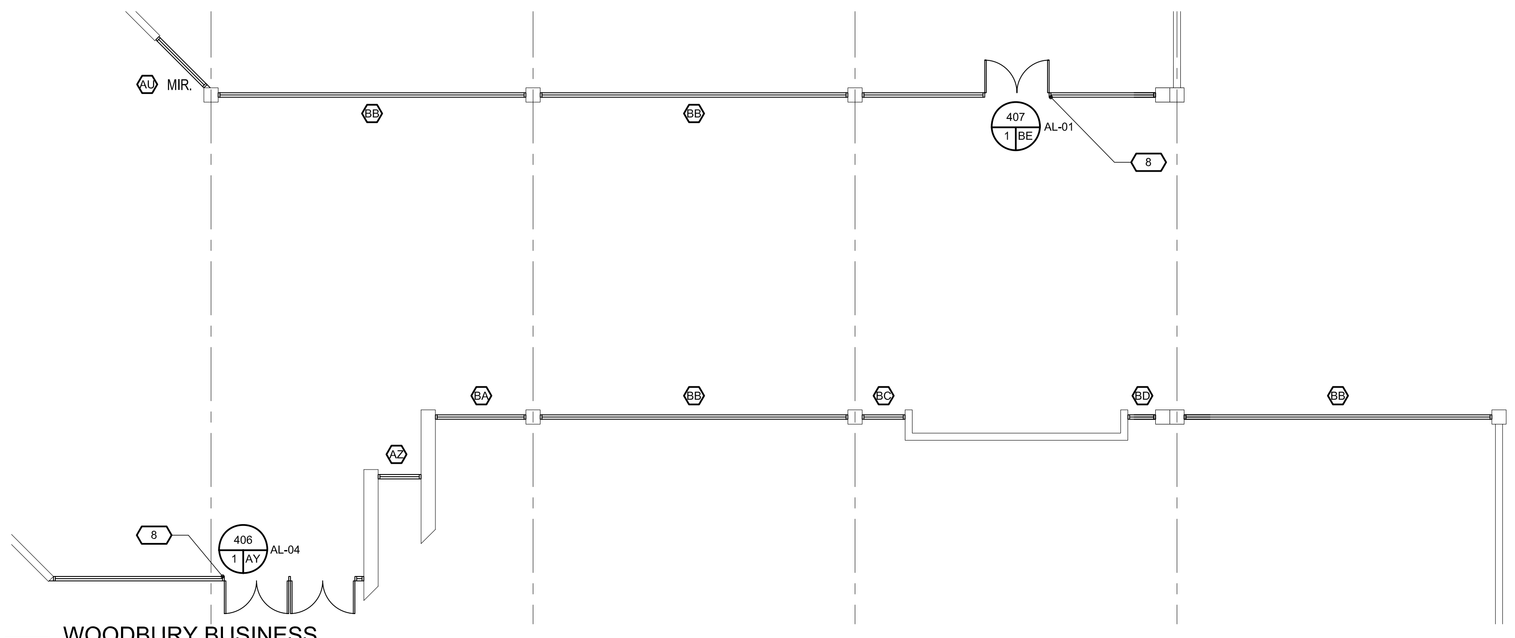

B2 WOODBURY BUSINESS FLOOR PLAN
1/8"=1'-0"

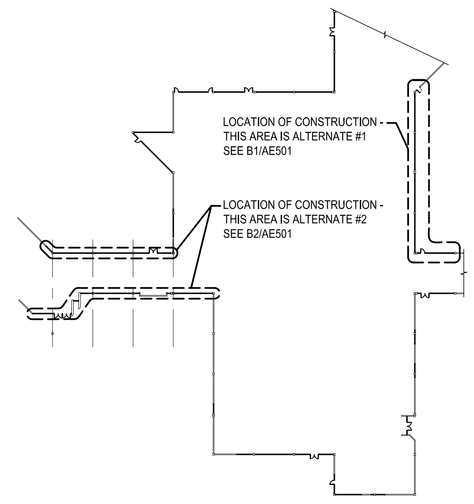

B5 WOODBURY BUSINESS KEY PLAN
1/64"=1'-0"

GENERAL DEMOLITION NOTES

1. DEMOLITION OF EXISTING WINDOWS IS REQUIRED UNDER THIS CONTRACT. AT EVERY LOCATION SHOWN FOR NEW WINDOWS, EXISTING HOLLOW METAL WINDOWS MUST BE REMOVED.
2. CONTRACTOR TO FIELD VERIFY ALL EXISTING CONDITIONS INCLUDING DIMENSIONS PRIOR TO BID.
3. WHERE EXISTING WINDOWS ARE TO BE REMOVED, MEASURES MUST BE TAKEN TO AVOID DAMAGING OTHER BUILDINGS ELEMENTS. CONTRACTOR IS RESPONSIBLE TO REPAIR OR REIMBURSE OWNER FOR ANY DAMAGE CAUSED.
4. IN CERTAIN AREAS CONDUIT, PLUG MOLD, CABLES, ETC. ARE MOUNTED TO EXISTING WINDOWS. CONTRACTOR IS RESPONSIBLE FOR LOCATING SUCH ELEMENTS. REMOVE FOR INSTALLATION OF NEW WINDOWS AS NECESSARY AND REINSTALL.
5. DISCONNECT ANY EFFECTED UTILITIES PRIOR TO REMOVAL. CONTRACTOR TO COORDINATE DEMOLITION STAGING AREAS WITH OWNER.
6. CONTRACT TO COORDINATE ALL CONSTRUCTION SCHEDULING WITH OWNER PRIOR TO DEMOLITON.

NEW CONSTRUCTION GENERAL NOTES

1. CONTRACTOR TO VERIFY EXISTING CONDITIONS PRIOR TO BID. THIS INCLUDES BUT IS NOT LIMITED TO DIMENSIONS, BUILDING COMPONENTS MOUNTED ON OR PROJECTING THROUGH EXISTING WINDOW SYSTEM SUCH AS BLINDS, ELECTRICAL AND DATA DEVICES/CONDUIT, PLUMBING AND GAS ELEMENTS, FIRE SAFETY DEVICES, MOTORIZED DOOR ACTUATORS, ELECTRONIC ENCODED LOCKING HARDWARE, ETC. CONTRACTOR IS RESPONSIBLE FOR DETACHING SUCH ELEMENTS BEFORE DEMOLITION AND REPLACING AFTER WINDOW INSTALLATION. SOME OF THE ABOVE COMPONENTS HAVE BEEN INDICATED ON THE DRAWINGS AS AN AID TO CONTRACTOR - ADDITIONAL COMPONENTS MAY OCCUR IN OTHER LOCATIONS. IT IS THE CONTRACTOR'S RESPONSIBILITY TO INCLUDE IN THE BID COSTS FOR THE REMOVAL AND REINSTALLATION OF ALL SUCH COMPONENTS WHETHER INDICATED IN THESE DRAWINGS OR NOT. NOT ADDITIONAL FEES WILL BE AWARDED FOR REMOVAL, REINSTALLATION OR COORDINATION PERTAINING TO SUCH COMPONENTS.
2. CONTRACTOR SHALL RECONNECT ALL UTILITIES THAT ARE INTERRUPTED DUE TO CONSTRUCTION. ANY INTERRUPTION OF UTILITY SERVICE MUST BE COORDINATED WITH THE CLIENT PRIOR TO INTERRUPTION.
3. AT ALL LOCATIONS WHERE EXISTING WALLS OR FURRING ABUT GLAZING SYSTEM, SEE DETAILS A1 AND B1 ON AE601. CONTRACTOR SHALL VERIFY WHERE SUCH CONDITIONS EXIST PRIOR TO BID, INCLUDING THOSE LOCATIONS NOT SHOWN ON DRAWINGS.
4. ALL ALUMINUM BREAK METAL TO MATCH FRAMES
5. ALL MULLIONS ARE 2" WIDE UNLESS OTHERWISE NOTED.
6. GENERAL CONTRACTOR TO VERIFY WINDOW HEIGHT ABOVE GRADE. ANY RESULTING SCAFFOLDING OR OTHER ASSOCIATED COSTS TO BE COVERED IN BID.
7. SEE AE601 FOR ALL DETAILS.
8. IN LOCATIONS WHERE A SECTION OF BUILDING MATERIAL IS REQUIRED TO BE REMOVED IN ORDER TO INSTALL A WINDOW OR DOOR, REPLACE WITH MATERIAL MATCHING EXISTING.
9. AT ALL LOCATIONS WHERE PENETRATIONS OCCUR IN FRAME OR METAL PANEL, OPENING ACCOMMODATING PENETRATION IS TO EXCEED SIZE OF PENETRATING ELEMENT BY NO MORE THAN 1/3". SEALANT INTEGRALLY COLORED TO MATCH FRAME TO BE APPLIED TO PENETRATIONS.

COORDINATION NOTES

1. STUD WALL ADJACENT TO FRAME
2. 8"x2" EXHAUST DUCT PENETRATES METAL PANEL
3. JUNCTION BOX AND OTHER ELETRICAL EQUIPMENT MOUNTED ON PANEL
4. ELECTRICAL CONDUIT PENETRATES FRAME
5. ELECTRICAL SECURITY DEVICE MOUNTED ON DOOR
6. ELECTRICAL CONDUIT/DEVICE MOUNTED ON FRAME
7. ROOF DRAIN LINE PENETRATES METAL PANEL
8. ADA ACTUATOR OPERATES THIS DOOR
9. PENETRATION AT METAL PANEL
10. CONDENSATE LINE PENETRATES FRAME

NOTE: THESE ITEMS ARE THE RESPONSIBILITY OF THE CONTRACTOR, AND MUST BE RETURNED TO FUNCTIONING CONDITION AFTER CONSTRUCTION. THESE ITEMS ARE TO BE COVERED IN THE CONTRACTOR'S BID.

GLAZING SCHEDULE

- A 1" INSULATED LOW-E GLASS - BRONZE TINT
- B 1" INSULATED TEMPERED LOW-E GLASS - BRONZE TINT
- C 1" INSULATED ALUMINUM PANEL - BRONZE ANODIZED
- D 1" INSULATED CLEAR GLASS - TEMPERED

1. CONTRACTOR TO FIELD VERIFY ALL DIMENSIONS AND ANGLES PRIOR TO FABRICATION.
2. SOME DETAILS MAY BE REVERSED.

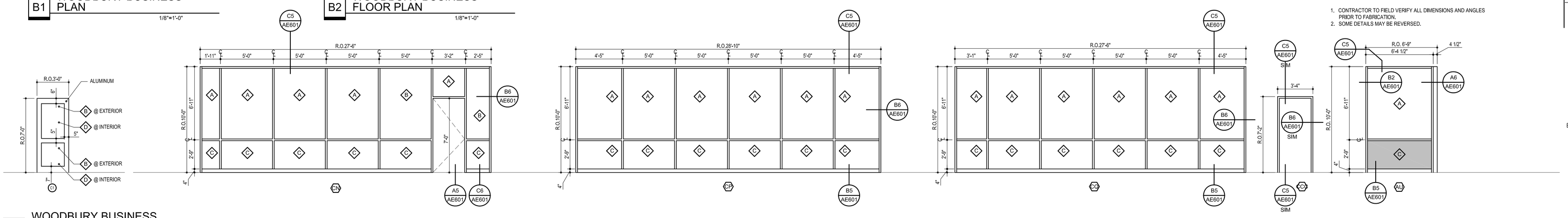

B1 WOODBURY BUSINESS DOOR TYPE
1/8"=1'-0"

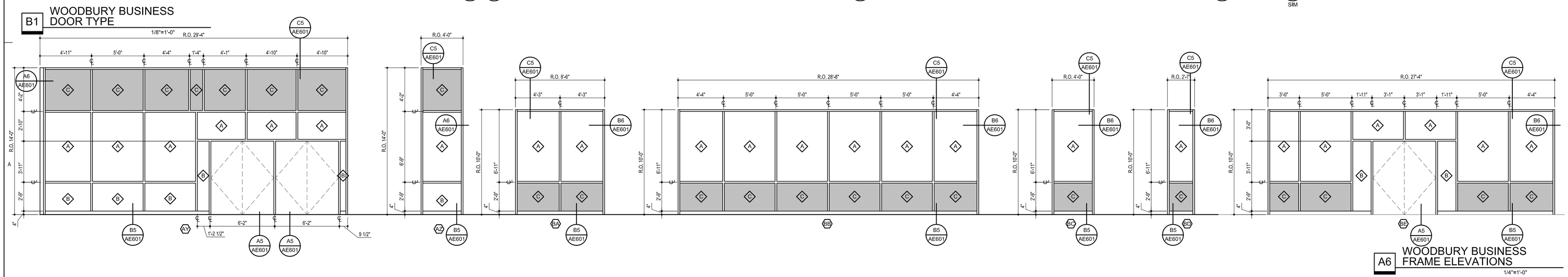

A6 WOODBURY BUSINESS FRAME ELEVATIONS
1/4"=1'-0"

Axis Architects
352 SOUTH DENVER STREET(440 EAST) SALT LAKE CITY UTAH 84111 P 355-3003 F 355-0113

UVSC Window Replacement PHASE I

Orem, UT

Construction Documents

Revision #	Date
1	ADD. 1 - CHANGE OF SCOPE

Axis Job # 0701
Owner # 06066790
Date 05-05-2008
Drawn
Checked

WINDOW REPLACEMENT DRAWINGS
WOODBURY BUSINESS
ALTERNATES 1 AND 2

AE301

NOTE: CONTRACTOR TO PATCH AND REPAIR ALL DAMAGE CAUSED BY DEMOLITION AND/OR NEW CONSTRUCTION.

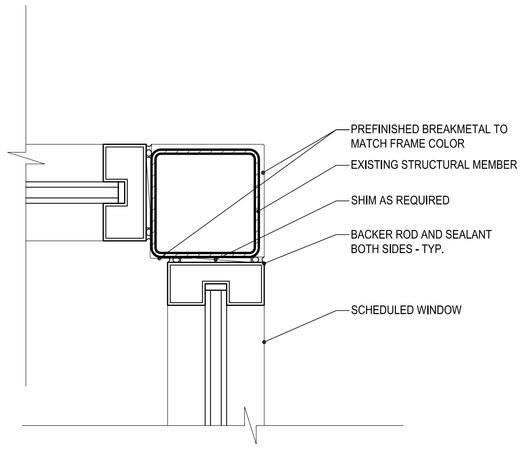

D4 VESTIBULE CORNER
SCALE: 3"=1'-0"

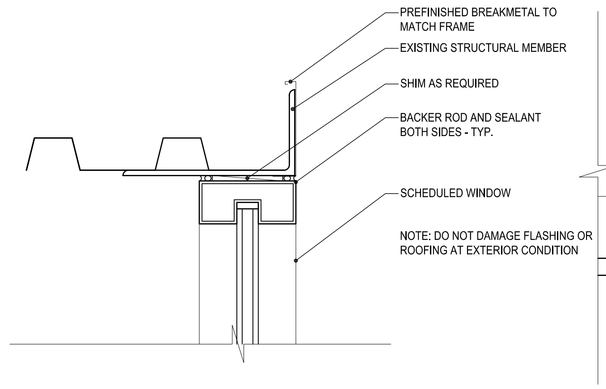

D5 WINDOW HEAD AT VEST.
SCALE:3"=1'-0"

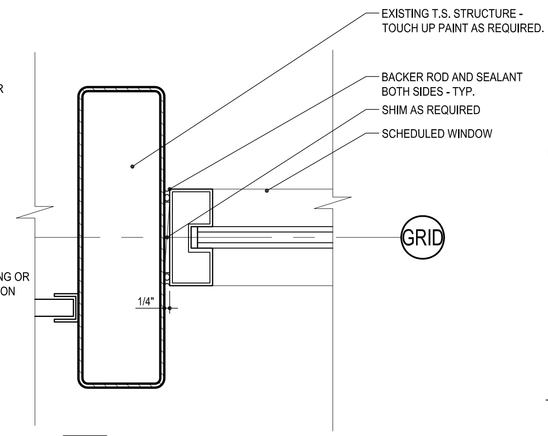

D6 JAMB AT T.S. FRAME
SCALE: 3"=1'-0"

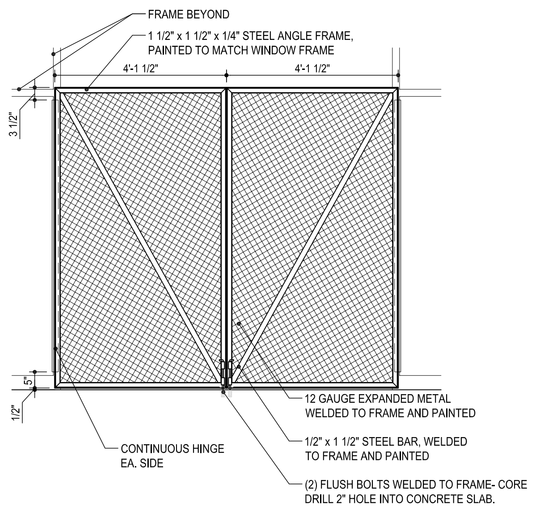

C2 INTAKE LOUVER
SCALE: 1/2"=1'-0"

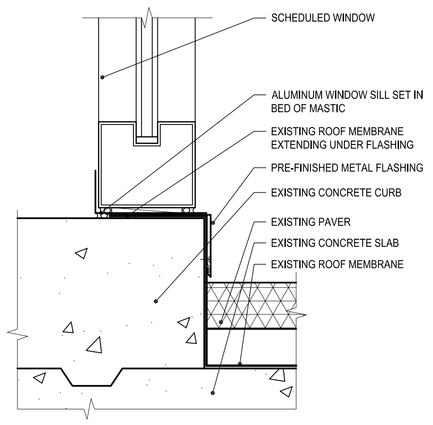

C4 SILL AT PLAZA CURB
SCALE: 3"=1'-0"

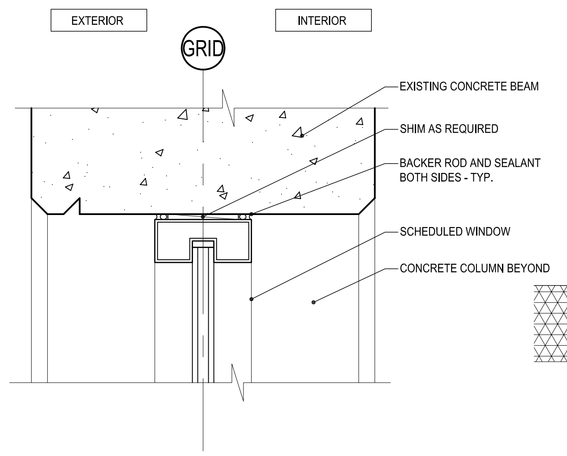

C5 WINDOW HEAD DETAIL
SCALE:3"=1'-0"

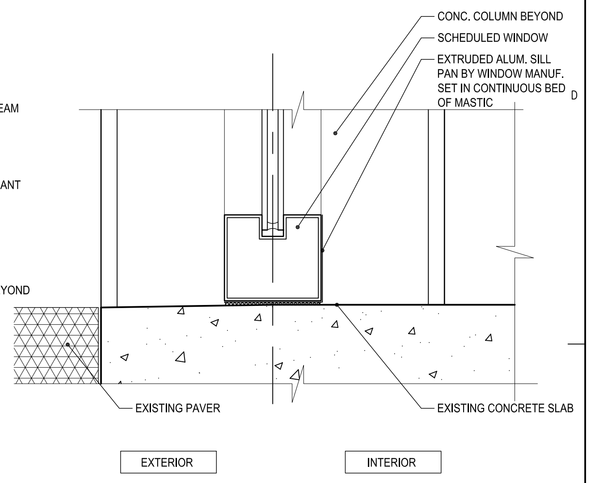

C6 SILL AT PLAZA
SCALE: 3"=1'-0"

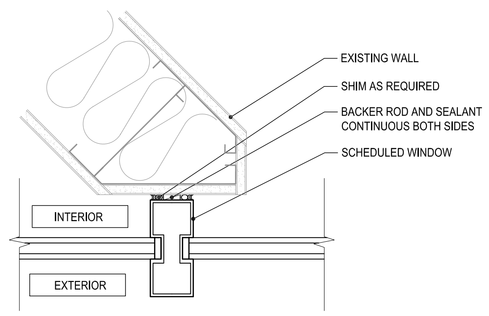

B1 45 DEGREE WALL BEYOND
SCALE: 3"=1'-0"

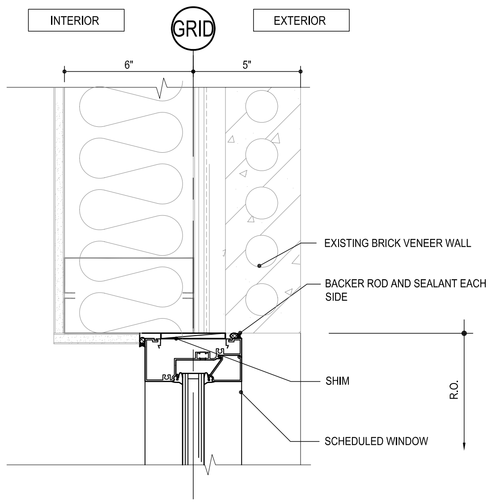

B2 JAMB AT BRICK
SCALE: 3"=1'-0"

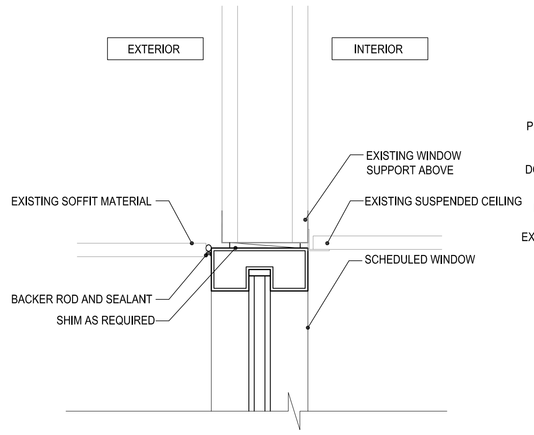

B3 HEAD AT SOFFIT
SCALE:3"=1'-0"

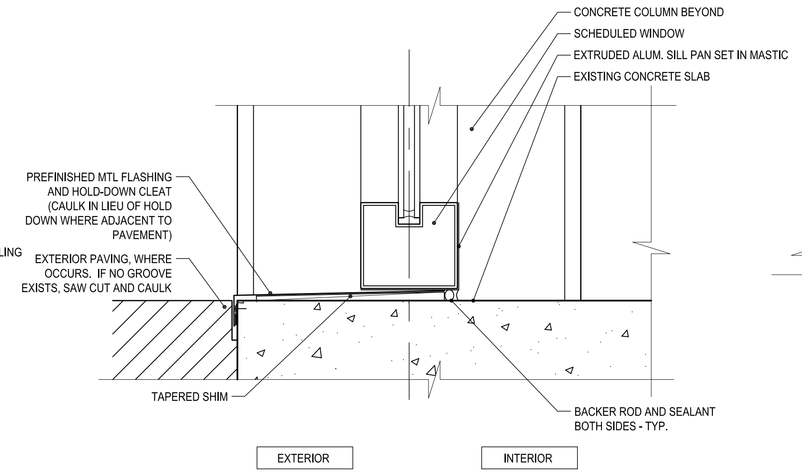

B5 WINDOW SILL DETAIL
SCALE: 3"=1'-0"

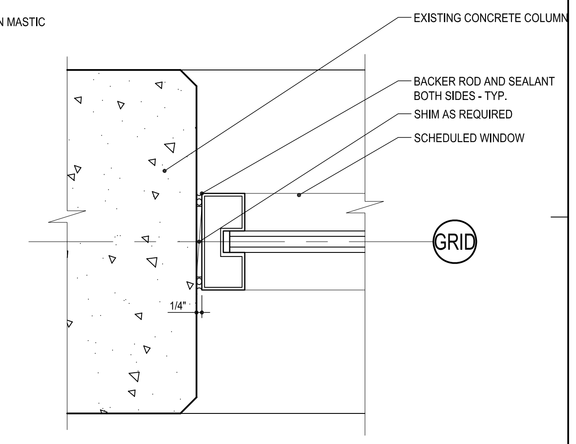

B6 WINDOW JAMB DETAIL
SCALE: 3"=1'-0"

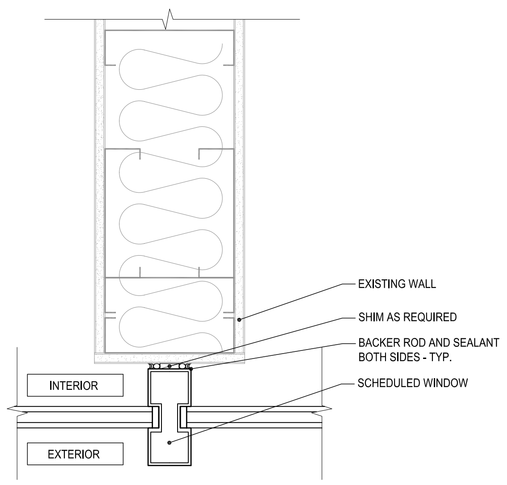

A1 PERP. WALL BEYOND
SCALE: 3"=1'-0"

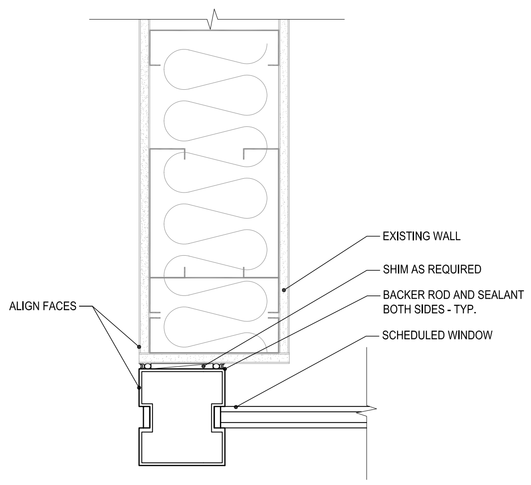

A2 WINDOW AT WALL END
SCALE: 3"=1'-0"

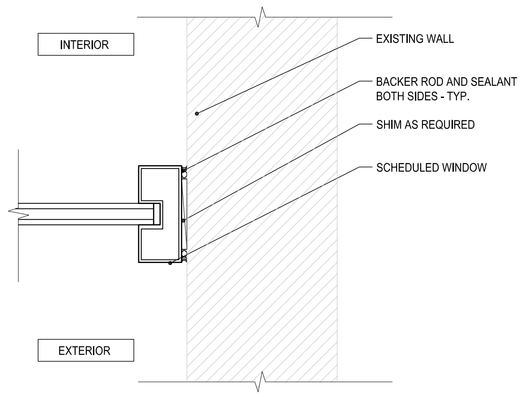

A3 JAMB AT PERP. EXISTING WALL
SCALE:3"=1'-0"

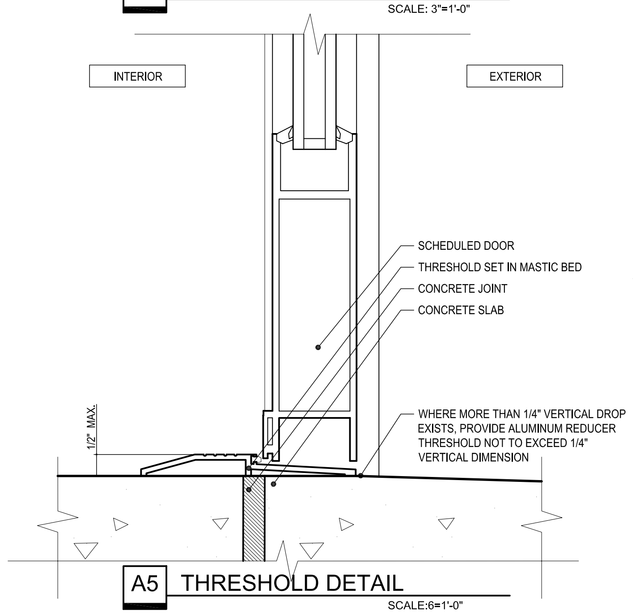

A5 THRESHOLD DETAIL
SCALE:6=1'-0"

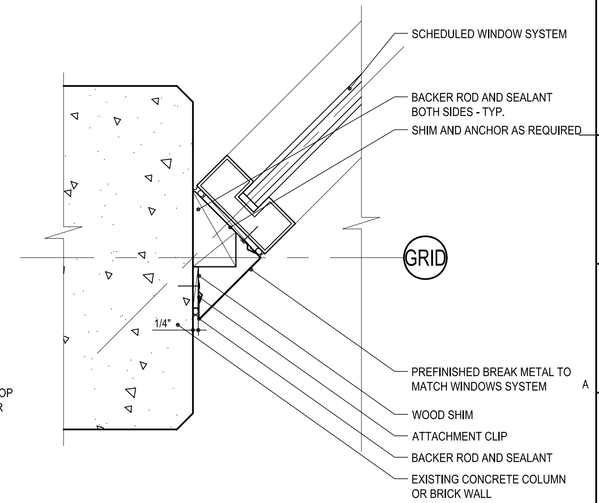

A6 JAMB AT 45 DEGREE
SCALE: 3"=1'-0"

Axis Architects
352 SOUTH DENVER STREET(440 EAST) SALT LAKE CITY UTAH 84111 P 355-3003 F 355-0113

UVSC Window Replacement PHASE I

Orem, UT

Construction Documents

Revision #	Date
1	ADD. 1 - CHANGE OF SCOPE

Axis Job # 0701
Owner # 06066790
Date 05-05-2008
Drawn
Checked

DETAILS

AE601