GUNTHER TRADES 5TH FLOOR HVAC IMPROVEMENTS
UTAH VALLEY UNIVERSITY

OREM, UTAH

MARCH 4, 2010

DFCM PROJECT NO.: 06067790

77 West 200 South, Suite 302
Salt Lake City, UT 84101
Tel 801/328-2982 *Fax* 801/328-2111

Eaton architecture

NONSTRUCTURAL COMPONENT CHECKLIST				
ITEM DESCRIPTION	NOT REQUIRED	ON CONST. DOCUMENTS	DEFERRED SUBMITTAL	COMMENTS
Architectural Components:				
Interior Nonstructural Walls & Partitions			X	
Cantilever Elements (i.e. parapets, etc.)	X			
Exterior Nonstructural Wall Elements	X			
Veneer	X			
Penthouses	X			
Ceilings (i.e. suspended grid or hard-lid)			X	
Cabinets (i.e. storage cabinets, equip, etc.)			X	
Access Floors	X			
Storage Racks	X			
Appendages & Ornamentations	X			
Signs & Billboards	X			
Other:				
Other:				
MEP Components:				
Fire Sprinklers			X	
Mechanical Equipment (i.e. HVAC, fans, air handlers, boilers, furnaces, tanks, chillers, water heaters, heat exchangers, evaporators, engines, turbines, pumps, compressors, MFR equipment, etc.)			X	
Electrical Equipment (i.e. generators, batteries, inverters, transformers, MCC, panel boards, switch gear, cabinets, etc.)			X	
Elevator & Escalator Components	X			
Communication Equipment, Computers, Instrumentation, and Controls	X			
Roof-mounted Chimneys, Stacks, Cooling & Electrical Towers	X			
Lighting Fixtures			X	
Vibration Isolated Components			X	
Piping & Conduit Systems			X	
Ductwork (including in-line components)			X	
Conveyors	X			
Cable Trays	X			
Other:				
Other:				

NOTES:

1. Deferred submittals for seismic restraint of nonstructural components must be submitted to the DFCM Building Official a minimum of two weeks prior to the planned installation in order to allow for plan review and forwarding to inspectors. In the event that the submittal is deficient additional time may become necessary.
2. If seismic restraints of non-structural components are installed prior to receiving DFCM approval they shall not be covered or concealed until receiving both plan review and inspection approval. Further, installers are proceeding at their own risk until plan review and inspection approval occurs.
3. The requirements for seismic restraint of nonstructural components cannot be satisfied by a general reference to Design Manuals. The design professional may utilize these manuals as a basis of their design, but must provide all supporting documentation to ensure that the design conforms to the requirements of ASCE 7-05, Chapter 13.
4. Submittals must include details of the proposed seismic restraint of nonstructural components. These details must show specific information relating to the materials, type, size, and locations of anchorages; materials used for bracing; attachment requirements of bracing to structure and component; and locations of transverse and longitudinal sway bracing and rod stiffeners. Submittals may also require structural calculations, engineering reports, test data, and/or specifications to ensure code compliance.

1

GENERAL NOTES REGARDING DEFERRED SUBMITTALS:

1. ALL DEFERRED SUBMITTALS SHALL BE SUBMITTED BY THE CONTRACTORS TO THE ENGINEER/ARCHITECT OF RECORD 30 DAYS AFTER THE CONSTRUCTION NOTICE TO PROCEED IS ISSUED ON THIS PROJECT.
2. THE ENGINEER/ARCHITECT SHALL REVIEW AND FORWARD THE DEFERRED EQUIPMENT SUBMITTALS TO THE AUTHORITIES HAVING JURISDICTION FOR CODE REVIEW WITH AN ACCOMPANYING LETTER FROM THE ENGINEER/ARCHITECT STATING THAT THE SUBMITTAL DRAWINGS AND CALCULATIONS ARE IN CONFORMANCE WITH THEIR DESIGN. IN THIS CASE, THE AUTHORITIES HAVING JURISDICTION ARE THE STATE OF UTAH DFCM CODE REVIEW OFFICIALS AND THE STATE OF UTAH FIRE MARSHAL'S OFFICE.
3. THE DEFERRED SUBMITTAL SHOP DRAWINGS, DETAILS, AND CALCULATIONS SHALL INCLUDE ALL STRUCTURAL STEEL COMPONENTS BEING ADDED AS SHOWN ON THE STRUCTURAL PLANS AND SHALL BE IN COMPLIANCE WITH PROVISIONS OF ASCE 7-05 AND IBC SECTION 1613.1.
4. THE DEFERRED SUBMITTAL SHOP DRAWINGS, DETAILS, AND CALCULATIONS SHALL INCLUDE SEISMIC RESTRAINTS IN COMPLIANCE WITH IBC SECTION 1613.1 FOR ALL NON-STRUCTURAL COMPONENTS BEING ADDED TO THE BUILDING THAT WILL BE PERMANENTLY ATTACHED TO THE STRUCTURE. THE NON-STRUCTURAL COMPONENTS SHALL INCLUDE BUT NOT LIMITED TO.
   a. CEILING ASSEMBLY COMPONENTS.
   b. MECHANICAL SYSTEM COMPONENTS.
   c. ELECTRICAL SYSTEM COMPONENTS.
   d. PLUMBING SYSTEM COMPONENTS.
   e. DECORATIVE ARCHITECTURAL COMPONENTS.

GENERAL NOTES REGARDING NON-STRUCTURAL COMPONENTS:

1. CONTRACTOR SHALL PROVIDE ATTACHMENT AND SEISMIC ANCHORAGE FOR ALL NEW NON-STRUCTURAL COMPONENTS, OR NON-STRUCTURAL COMPONENTS THAT ARE REMOVED AND REINSTALLED AS LISTED ON THE NON-STURCTURAL COMPONENT CHECKLIST. CONTRACTOR SHALL PROVIDE CALCULATIONS STAMPED BY A PROFESSIONAL ENGINEER FOR THE ATTACHMENT OF ALL NEW OR RE-INSTALED NON-STRUCTURAL COMPONENTS.

- ARCHITECT:

EATON ARCHITECTURE, LLC
77 WEST 200 SOUTH SUITE 302
SALT LAKE CITY, UTAH 84101
TELEPHONE: (801) 328-2982 FACSIMILE: (801) 328-2111

- DFCM PROJECT MANAGER:

MIKE AMBRE
STATE OF UTAH, DIVISION OF FACILITIES CONSTRUCTION & MANAGEMENT
STATE OFFICE BUILDING ROOM 4110
SALT LAKE CITY, UT 84111
TELEPHONE: (801) 209-9104

- UVU FACILITIES MANAGER:

DENNY C. RUCKER
UVU SPACE DEVELOPMENT ENGINEERING
800 WEST UNIVERSITY PARKWAY
OREM, UT 84058
TELEPHONE: (801) 863-8326

- STRUCTURAL ENGINEER:

BRYAN BAGGALEY
STANLEY CONSULTANTS
383 WEST VINE STREET, SUITE 400
SALT LAKE CITY, UT 84123
TELEPHONE: (801) 269-3888

- MECHANICAL ENGINEER:

DANIEL J. ROLLINS
STANLEY CONSULTANTS
383 WEST VINE STREET, SUITE 400
SALT LAKE CITY, UT 84123
TELEPHONE: (801) 269-3888

- ELECTRICAL ENGINEER:

LYLE D. VANCE
STANLEY CONSULTANTS
383 WEST VINE STREET, SUITE 400
SALT LAKE CITY, UT 84123
TELEPHONE: (801) 269-3888

- FIRE PROTECTION:

DANIEL J. ROLLINS
STANLEY CONSULTANTS
383 WEST VINE STREET, SUITE 400
SALT LAKE CITY, UT 84123
TELEPHONE: (801) 269-3888

NORTH

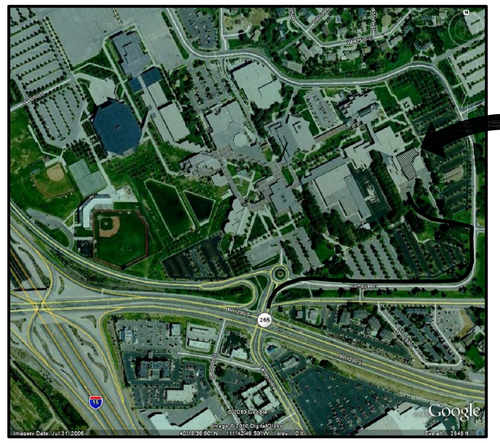

VICINITY MAP
SCALE: N.T.S.

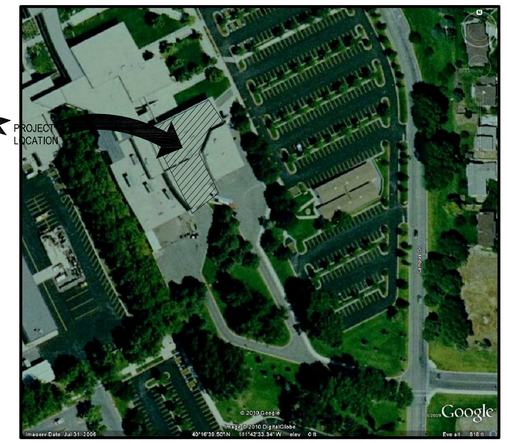

VICINITY MAP
SCALE: N.T.S.

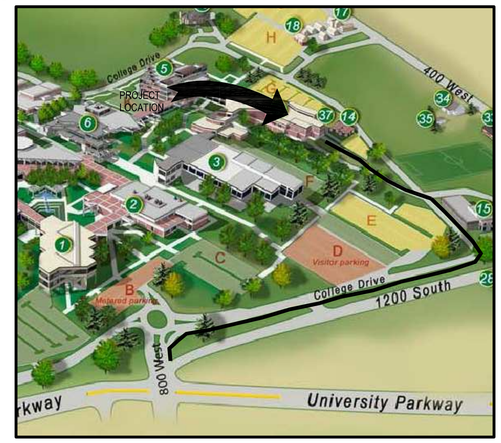

VICINITY MAP
SCALE: N.T.S.

SHEET NO.	DESCRIPTION
GG001	COVER SHEET & SHEET INDEX
	ARCHITECTURAL DEMOLITION PLANS
DA100	5TH FLOOR EXISTING PLAN AREA A (FOR REFERENCE ONLY)
DA101	5TH FLOOR EXISTING PLAN AREA B (FOR REFERENCE ONLY)
DA110	5TH FLOOR DEMOLITION REFLECTED CEILING PLAN AREA A
DA111	5TH FLOOR DEMOLITION REFLECTED CEILING PLAN AREA B
DA121	5TH FLOOR ROOF PLAN AREA B
DA130	6TH FLOOR DEMOLITION ROOF PLAN AREA A
	MECHANICAL DEMOLITION PLANS
DM100	DEMOLITION 5TH FLOOR AREA A MECHANICAL
DM101	DEMOLITION 5TH FLOOR AREA B MECHANICAL
DM121	DEMOLITION 5TH FLOOR AREA B ROOF MECHANICAL
	ARCHITECTURAL PLANS
AP100	5TH FLOOR AREA A PLAN
AP101	5TH FLOOR AREA B PLAN
AP110	5TH FLOOR REFLECTED CEILING PLAN AND DETAILS AREA A
AP111	5TH FLOOR REFLECTED CEILING PLAN AREA B
AP121	5TH FLOOR AREA B ROOF PLAN
AP130	6TH FLOOR AREA A ROOF PLAN
AP201	RM 521 WALL SECTIONS AREA B
	STRUCTURAL PLANS
SG001	STRUCTURAL LEGEND AND GENERAL NOTES
SS121	5TH LEVEL ROOF STRUCTURAL PLAN
SS201	STRUCTURAL DETAILS

SHEET NO.	DESCRIPTION
	MECHANICAL PLANS
MG001	MECHANICAL SYMBOLS LEGEND
MH110	5TH FLOOR AREA A MECHANICAL PLAN
MH111	5TH FLOOR AREA B MECHANICAL PLAN
MH121	5TH FLOOR AREA B ROOF MECHANICAL PLAN
MH130	6TH FLOOR AREA A ROOF MECHANICAL PLAN
MH201	MECHANICAL DETAIL AND SCHEDULES
MH202	MECHANICAL DETAILS
MH203	MECHANICAL DETAILS
MP110	5TH FLOOR AREA A MECHANICAL PIPING PLAN
MP111	5TH FLOOR AREA B MECHANICAL PIPING PLAN
	FIRE PROTECTION PLANS
FP110	5TH FLOOR FIRE PROTECTION PLAN AREA A
FP111	5TH FLOOR FIRE PROTECTION PLAN AREA B
	ELECTRICAL PLANS
EG001	ELECTRICAL SYMBOLS LEGEND AND NOTES
EP110	5TH FLOOR AREA A ELECTRICAL POWER PLAN
EP111	5TH FLOOR AREA B ELECTRICAL POWER PLAN
EP121	5TH FLOOR AREA B ROOF ELECTRICAL PLAN
EP130	6TH FLOOR AREA A ROOF ELECTRICAL PLAN
EP201	ELECTRICAL POWER DETAIL AND SCHEDULE
EL110	5TH FLOOR AREA A LIGHTING PLAN
EL111	5TH FLOOR AREA B LIGHTING PLAN

AT FULL SIZE
0 1 2 3 IN
0 1 2 3 4 5 6 7 8 cm

NO.	REVISIONS	DWN	APVD	APVD	DATE
1	REVISION 1	JK	BE	JK	3/23/10
0	ISSUED FOR BID	JK	BE	JK	3/4/10

Stanley Consultants INC.
383 West Vine Street, Suite 400, Murray City, Utah 84123
www.stanleygroup.com

GUNTHER TRADES 5TH FLOOR HVAC IMPROVEMENTS
UTAH VALLEY UNIVERSITY
OREM, UTAH

COVER SHEET & SHEET INDEX

DESIGNED JK
DRAWN JK
CHECKED BE
APPROVED JK
APPROVED BE
DATE 3/4/10

SCALE:
NO. GG001
REV. 0

© STANLEY CONSULTANTS

CADD E1-R3
PROJECT NO. 220781.01.00

Eaton architecture
77 West 200 South, Suite 302
Salt Lake City, UT 84101
Tel 801/328-2982 Fax 801/328-2111

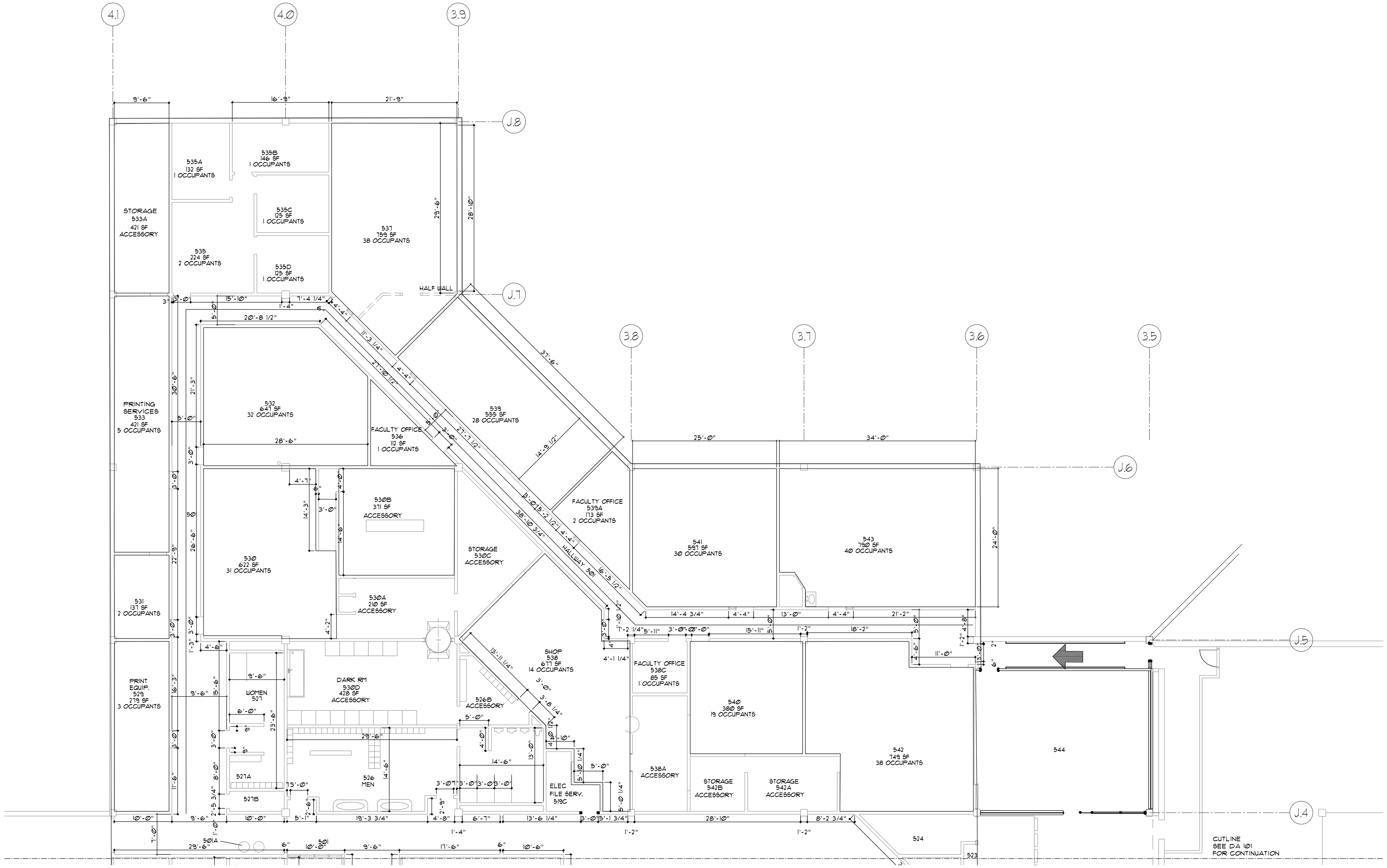

01 DA100 5TH FLOOR EXISTING PLAN AREA A
SCALE: 1/8" = 1'-0"

NORTH

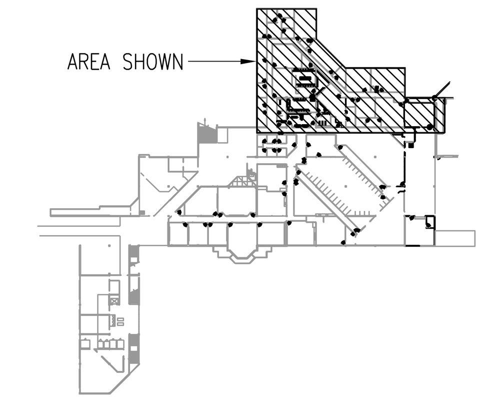

KEY PLAN
SCALE: N.T.S.

NORTH

AT FULL SIZE
0 1 2 3 IN
0 1 2 3 4 5 6 7 8 cm

NO.	REVISIONS	DWN	APVD	APVD	DATE
0	ISSUED FOR BID	JK	BE	JK	3/4/10

Stanley Consultants INC.
383 West Vine Street, Suite 400, Murray City, Utah 84123
www.stanleygroup.com

GUNTHER TRADES 5TH FLOOR HVAC IMPROVEMENTS
UTAH VALLEY UNIVERSITY
OREM, UTAH

5TH FLOOR EXISTING PLAN
AREA A

DESIGNED JK
DRAWN JK
CHECKED BE
APPROVED JK
APPROVED BE
DATE 3/4/10

SCALE:
NO. DA 100
REV. 0

©STANLEY CONSULTANTS

SCI PROJECT NO. 22078.01.00

Eaton architecture
77 West 200 South, Suite 302
Salt Lake City, UT 84101
Tel 801/328-2982 *Fax* 801/328-2111

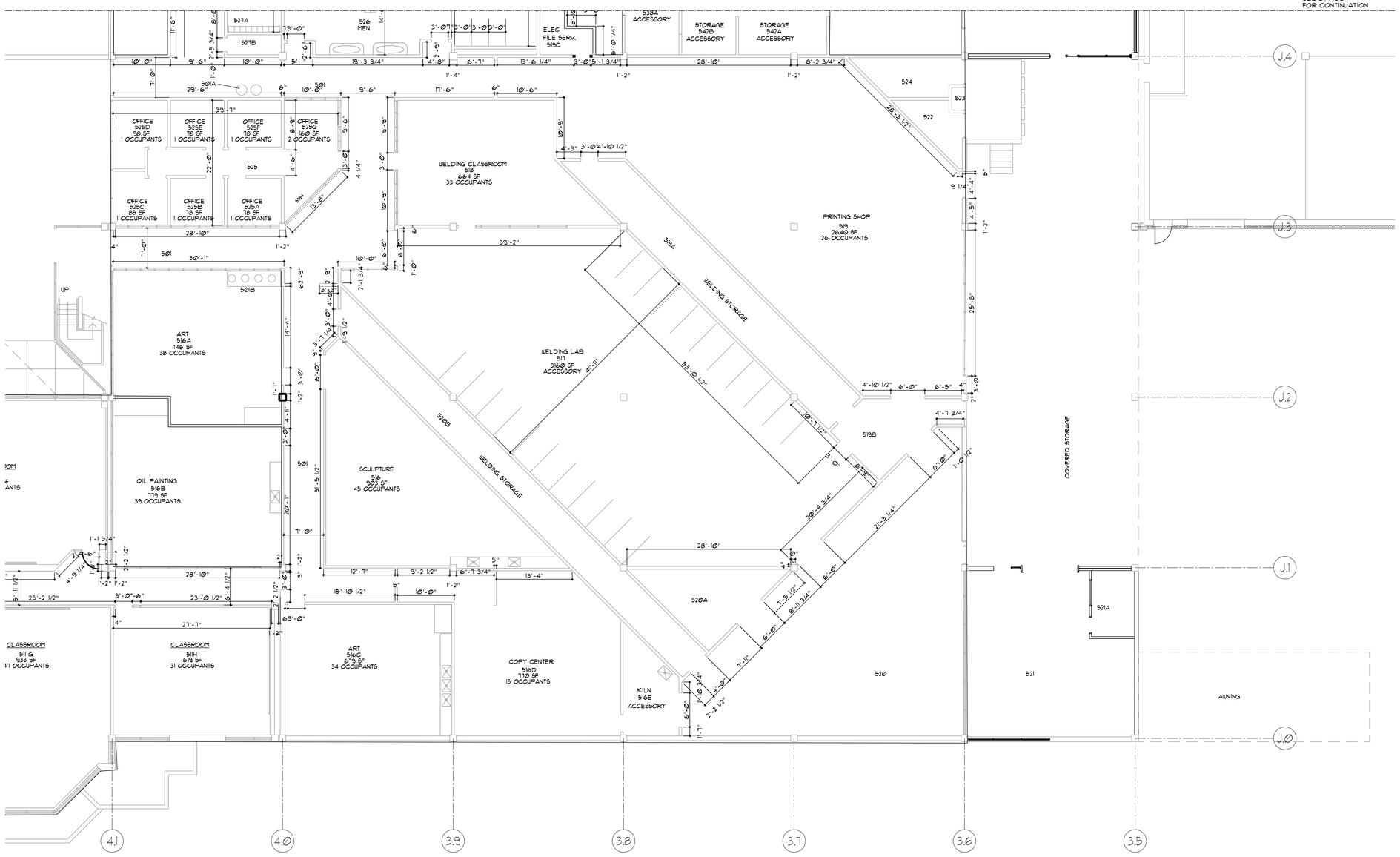

01 DA101 5TH FLOOR EXISTING PLAN AREA B
SCALE: 1/8" = 1'-0"

NORTH

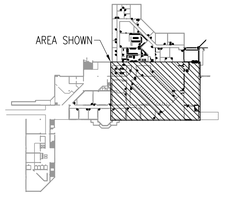

KEY PLAN
SCALE: N.T.S.

NORTH

AT FULL SIZE
0 1 2 3 IN
0 1 2 3 4 5 6 7 8 cm

NO.	REVISIONS	DWN	APVD	APVD	DATE
0	ISSUED FOR BID	JK	BE	JK	3/4/10

Stanley Consultants INC.
383 West Vine Street, Suite 400, Murray City, Utah 84123
www.stanleygroup.com

GUNTHER TRADES 5TH FLOOR HVAC IMPROVEMENTS
UTAH VALLEY UNIVERSITY
OREM, UTAH

5TH FLOOR EXISTING PLAN
AREA B

DESIGNED JK
DRAWN JK
CHECKED BE
APPROVED JK
APPROVED BE
DATE 3/4/10

SCALE:
NO. DA 101
REV. 0

© STANLEY CONSULTANTS

SCI PROJECT NO: 22078.01.00
$$$$$$$$$$$$$$FILENAME$$$$$$$$$$$$$$
CADD E1-83

Eaton architecture
77 West 200 South, Suite 302
Salt Lake City, UT 84101
Tel 801/328-2982 *Fax* 801/328-2111

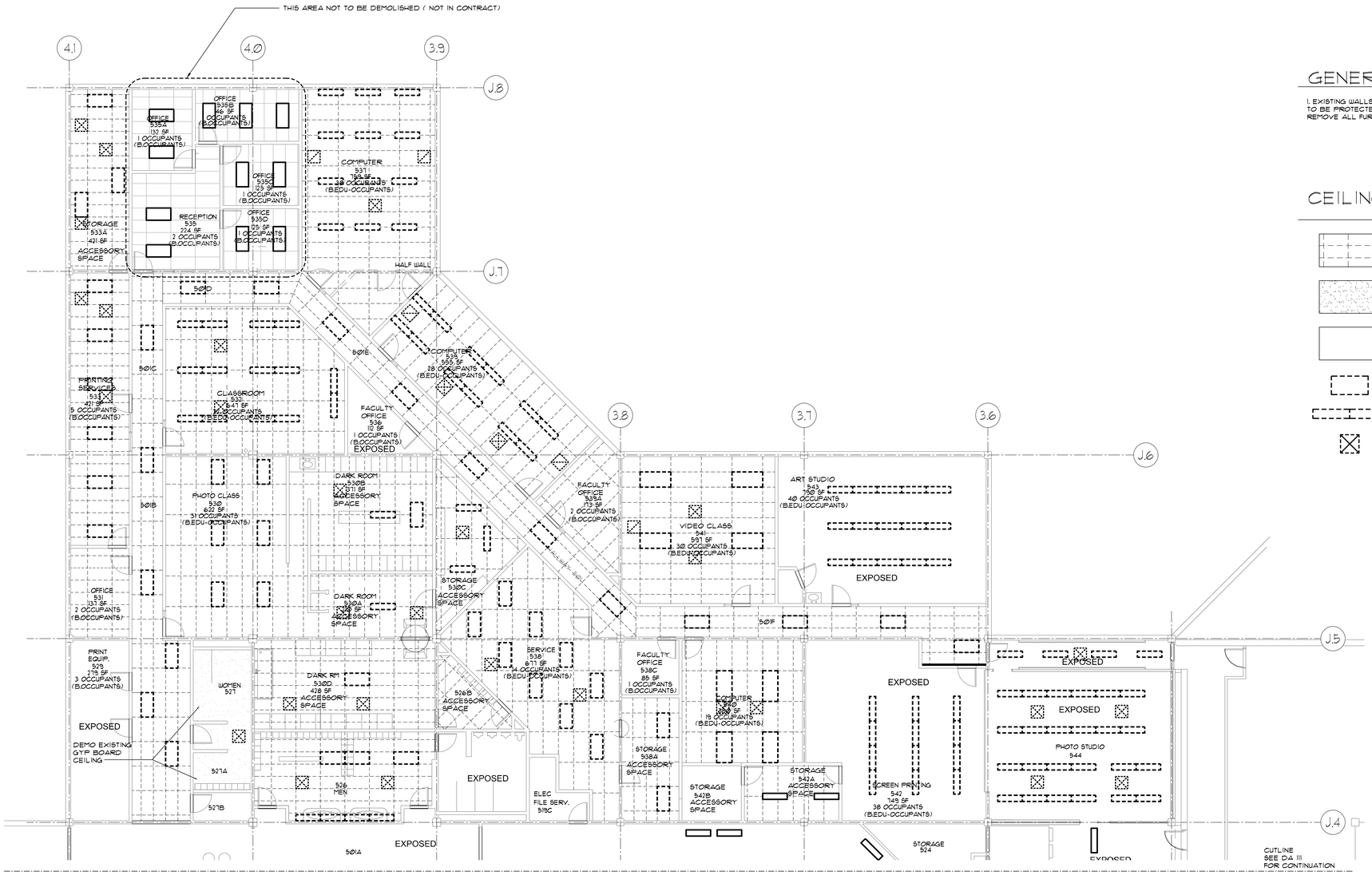

01 A110 5TH FLOOR DEMOLITION REFLECTED CEILING PLAN AREA A
SCALE: 1/8" = 1'-0"

NORTH

GENERAL NOTES:

1. EXISTING WALLS, DOORS, MILLWORK, CASEWORK AND REMAINING EQUIPMENT TO BE PROTECTED DURING CONSTRUCTION TO AVOID DAMAGE. SCHOOL TO REMOVE ALL FURNITURE AND ITEMS FROM ROOM.

CEILING LEGEND

- EXISTING SUSPENDED GRID CEILING AND LAY IN ACOUSTICAL TILE TO REMOVED.
- EXISTING PAINTED GYPSUM BOARD CEILING TO BE DEMOLISHED WHERE INDICATED.
- AREA WITHOUT HATCH REPRESENTS CEILING EXPOSED TO STRUCTURE, MECHANICAL DUCTWORK AND CONDUIT.
- EXISTING LIGHT FIXTURE TO BE REMOVED AND STORED DURING CONSTRUCTIONS FOR REUSE IN SAME ROOM. SEE NEW CEILING PLAN.
- EXISTING SUSPENDED LIGHTING TO BE REMOVED FOR FUTURE USE AS PER ELECTRICAL DRAWINGS.
- EXISTING DIFFUSER TO BE REMOVED AND DEMOLISHED AS PER MECHANICAL PLAN.

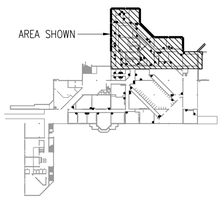

KEY PLAN
SCALE: N.T.S.
NORTH

AT FULL SIZE
0 1 2 3 IN
0 1 2 3 4 5 6 7 8 cm

NO.	REVISIONS	DWN	APVD	APVD	DATE
0	ISSUED FOR BID	JK	BE	JK	3/4/10

Stanley Consultants INC.
383 West Vine Street, Suite 400, Murray City, Utah 84123
www.stanleygroup.com

GUNTHER TRADES 5TH FLOOR HVAC IMPROVEMENTS
UTAH VALLEY UNIVERSITY
OREM, UTAH

5TH FLOOR DEMO REFLECTED CEILING PLAN AREA A

DESIGNED JK
DRAWN JK
CHECKED BE
APPROVED JK
APPROVED BE
DATE 3/4/10

SCALE:
NO. DA 110
REV. 0

SCI PROJECT NO: 22078.01.00

Eaton architecture
77 West 200 South, Suite 302
Salt Lake City, UT 84101
Tel 801/328-2982 *Fax* 801/328-2111

GENERAL NOTES:

1. EXISTING WALLS, DOORS, MILLWORK, CASEWORK AND REMAINING EQUIPMENT TO BE PROTECTED DURING CONSTRUCTION TO AVOID DAMAGE. SCHOOL TO REMOVE ALL FURNITURE AND ITEMS FROM ROOM.

2. HATCHED AREA N.I.C. ALL OTHER AREAS IN CONTRACT. CONTRACTOR TO SEE MECHANICAL AND ARCH. PLANS FOR COORDINATION.

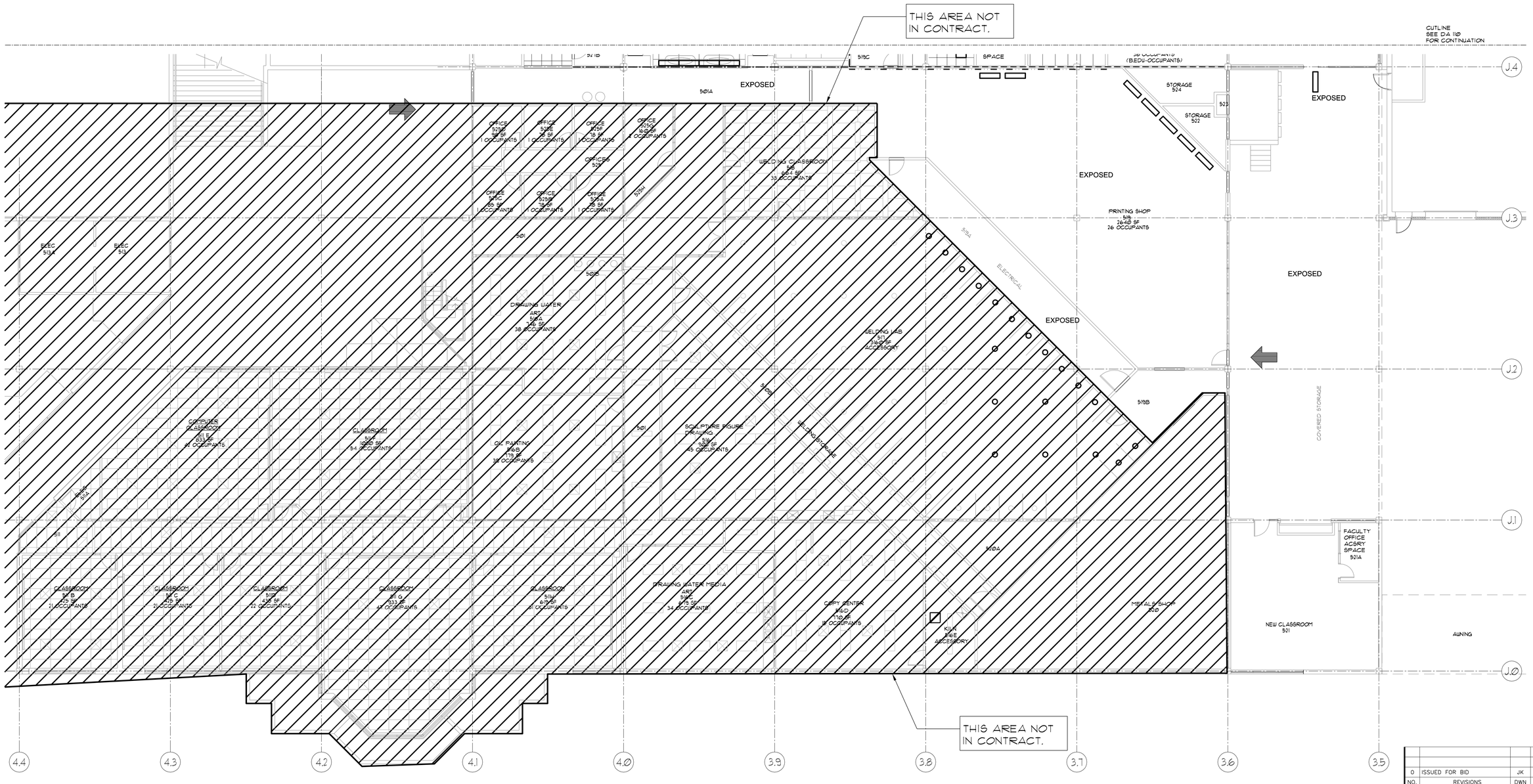

01 / DA111 5TH FLOOR EXISTING REFLECTED CEILING PLAN AREA B
SCALE: 1/8" = 1'-0"

NORTH

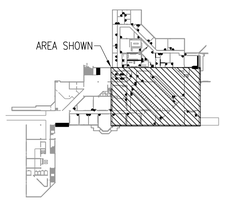

KEY PLAN
SCALE: N.T.S.

NORTH

AT FULL SIZE
0 1 2 3 IN
0 1 2 3 4 5 6 7 8 cm

NO.	REVISIONS	DWN	APVD	APVD	DATE
0	ISSUED FOR BID	JK	BE	JK	3/4/10

Stanley Consultants INC.
383 West Vine Street, Suite 400, Murray City, Utah 84123
www.stanleygroup.com

GUNTHER TRADES 5TH FLOOR HVAC IMPROVEMENTS
UTAH VALLEY UNIVERSITY
OREM, UTAH

5TH FLOOR DEMO REFLECTED CEILING PLAN AREA B

DESIGNED JK
DRAWN JK
CHECKED BE
APPROVED JK
APPROVED BE
DATE 3/4/10

SCALE:
NO. DA 111
REV. 0

13© STANLEY CONSULTANTS

CADD E1-R3
GCI PROJECT NO. 20078.01.00

Eaton architecture
77 West 200 South, Suite 302
Salt Lake City, UT 84101
Tel 801/328-2982 *Fax* 801/328-2111

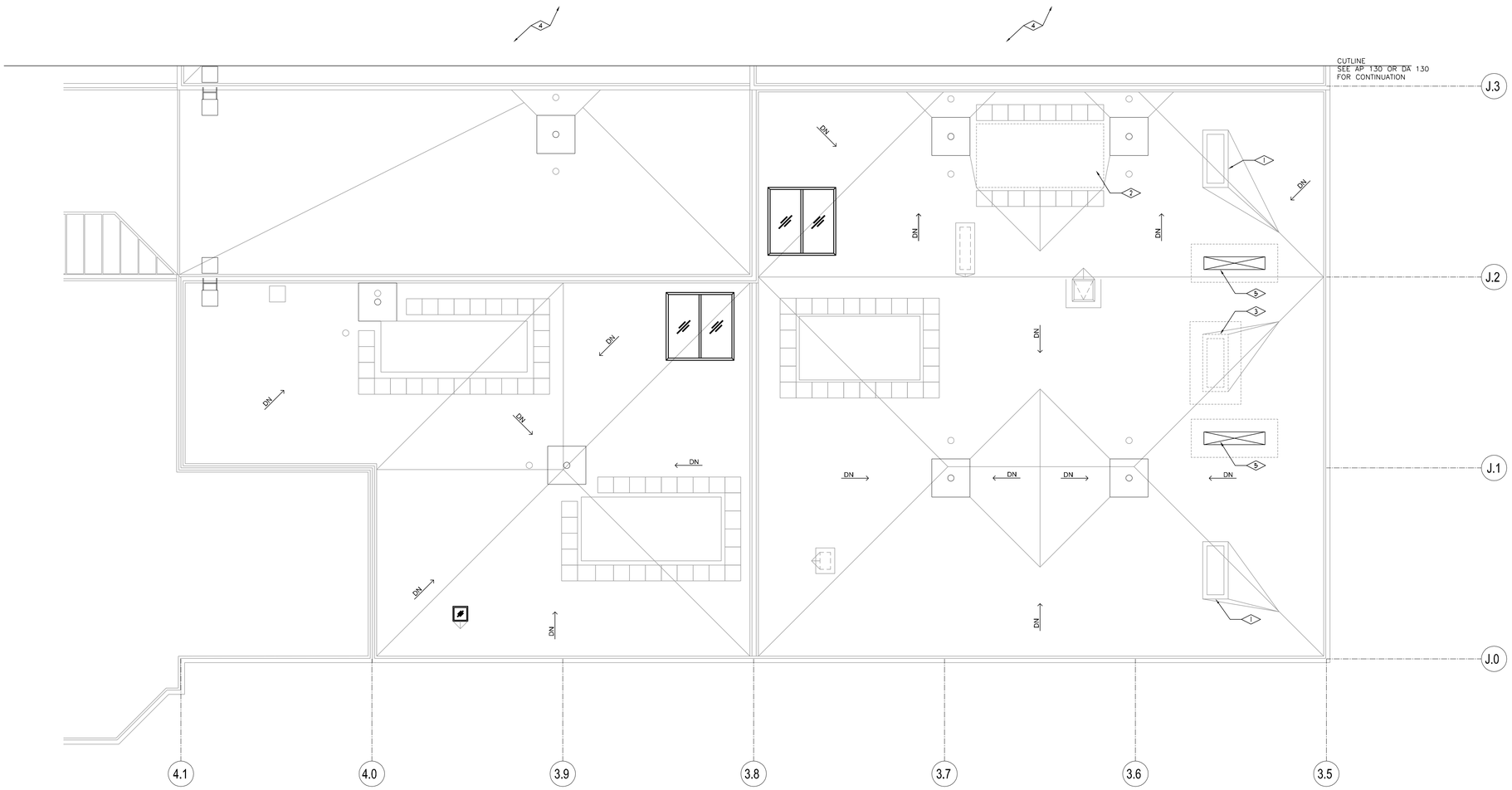

01 A121 5TH FLOOR ROOF PLAN
SCALE: 1/8" = 1'-0"

NORTH

REFERENCE NOTES

1. EXISTING ROOF HOOD TO REMAIN.
2. DEMO EXISTING ROOF FLASHING AND CURB COORDINATE W/ AH-2
3. DEMO EXISTING ROOF HOOD, CURB, AND ROOFING TO A POINT 24" BEYOND THE EXISTING ROOF OPENING. SEE AP-121 FOR ROOF PATCH INSTRUCTIONS.
4. SEE 6TH FLOOR ROOF PLAN FOR CONTINUATION.
5. DEMO EXISTING ROOFING AND DECK IN THIS LOCATION COORDINATE W/ AH-1 ON M-111

GENERAL NOTES

1. CONTRACTOR TO PROTECT EXISTING ROOFING FROM DAMAGE DURING DEMO AND CONSTRUCTION.

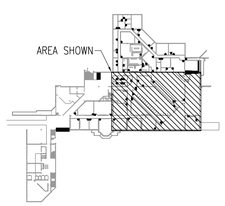

KEY PLAN
SCALE: N.T.S.

NORTH

AT FULL SIZE
0 1 2 3 IN
0 1 2 3 4 5 6 7 8 cm

NO.	REVISIONS	DWN	APVD	APVD	DATE
0	ISSUED FOR BID	JK	BE	JK	3/4/10

Stanley Consultants INC.
383 West Vine Street, Suite 400, Murray City, Utah 84123
www.stanleygroup.com

GUNTHER TRADES 5TH FLOOR HVAC IMPROVEMENTS
UTAH VALLEY UNIVERSITY
OREM, UTAH

5TH FLOOR DEMO ROOF PLAN
AREA B

DESIGNED JK
DRAWN JK
CHECKED BE
APPROVED JK
APPROVED BE
DATE 3/4/10

SCALE:
NO. DA 121
REV. 0

© STANLEY CONSULTANTS

SC PROJECT NO: 22078.01.00
$$$$$$$$$$$$$$$$FILENAME$$$$$$$$$$$$$$$$
CADD E1-E3

Eaton architecture
77 West 200 South, Suite 302
Salt Lake City, UT 84101
Tel 801/328-2982 *Fax* 801/328-2111

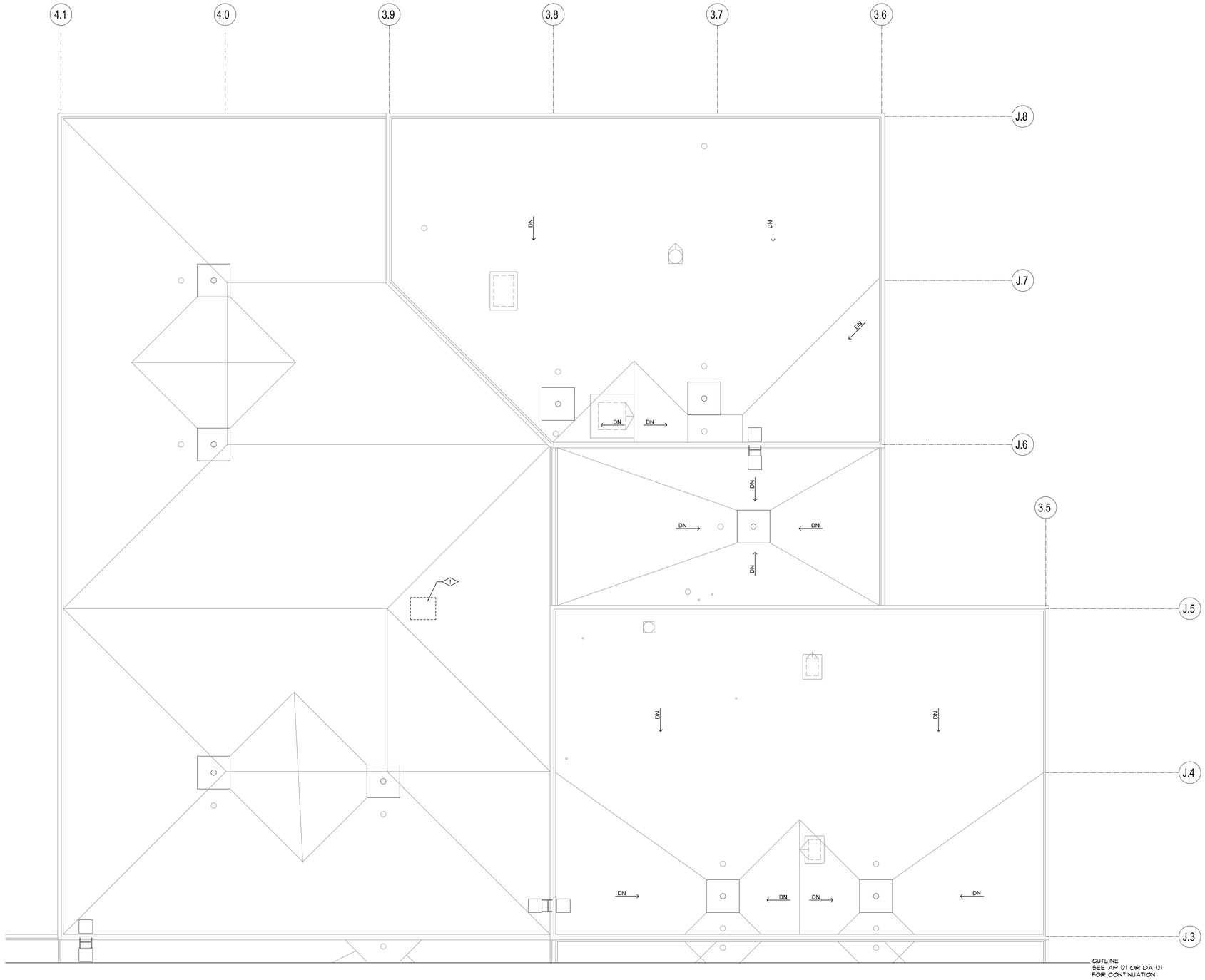

REFERENCE NOTES

1 DEMO EXISTING EF-1. DEMO ROOF CURB. SEE MECHANICAL.

GENERAL NOTES

1. CONTRACTOR TO PROTECT EXISTING ROOFING FROM DAMAGE DURING DEMO AND CONSTRUCTION.

01 DA130 6TH FLOOR DEMOLITION ROOF PLAN
SCALE: 1/8" = 1'-0"

NORTH

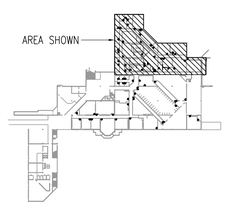

KEY PLAN NORTH
SCALE: N.T.S.

AT FULL SIZE
0 1 2 3 IN
0 1 2 3 4 5 6 7 8 cm

NO.	REVISIONS	DWN	APVD	APVD	DATE
0	ISSUED FOR BID	JK	BE	JK	3/4/10

Stanley Consultants INC.
383 West Vine Street, Suite 400, Murray City, Utah 84123
www.stanleygroup.com

GUNTHER TRADES 5TH FLOOR HVAC IMPROVEMENTS
UTAH VALLEY UNIVERSITY
OREM, UTAH

6TH FLOOR DEMOLITION ROOF PLAN
AREA A

DESIGNED JK
DRAWN JK
CHECKED BE
APPROVED JK
APPROVED BE
DATE 3/4/10

SCALE:
NO. DA 130
REV. 0

SCI PROJECT NO: 22078.01.00

CADD E1-R3

13 © STANLEY CONSULTANTS

KEY NOTES: ◯

1. DEMO ALL EXISTING RETURN AIR DUCTS AND GRILLES, TYPICAL.
2. DEMO VARIABLE AIR VOLUME CONTROL UNIT WITH ELECTRIC REHEAT, TYPICAL.
3. DEMO EXISTING FIRE SMOKE DAMPER IN WALL, AND PATCH WALL TO MATCH EXISTING WALL SURFACE.
4. DEMO EXISTING SUPPLY DUCTS, RETURN DUCTS, DIFFUSERS, AND GRILLES, TYPICAL.
5. DEMO EXISTING AIR FILTRATION UNIT.
6. DEMO EXISTING DUAL DUCT BOX, TYPICAL OF 2. CAP OFF BRANCHES AT MAIN DUCTS. EXISTING MAINS TO REMAIN TO SERVE LEVEL ABOVE.
7. DEMO EXISTING EXHAUST RISER AND EXISTING ROOF EXHAUST FAN.
8. DEMO EXISTING FAN COIL UNIT AND DUCTWORK.
9. DEMO EXISTING EXHAUST DUCTWORK, GRILLES AND INLINE FAN.
10. EXISTING ADMIN. OFFICES' DUCTWORK AND ACCESSORIES TO BE REUSED IN REMODEL.
11. DEMO EXISTING CHILLED OR HOT WATER SUPPLY AND RETURN PIPES.
12. EXISTING DUAL DUCT BOX TO REMAIN TO SERVE ZONE ABOVE.

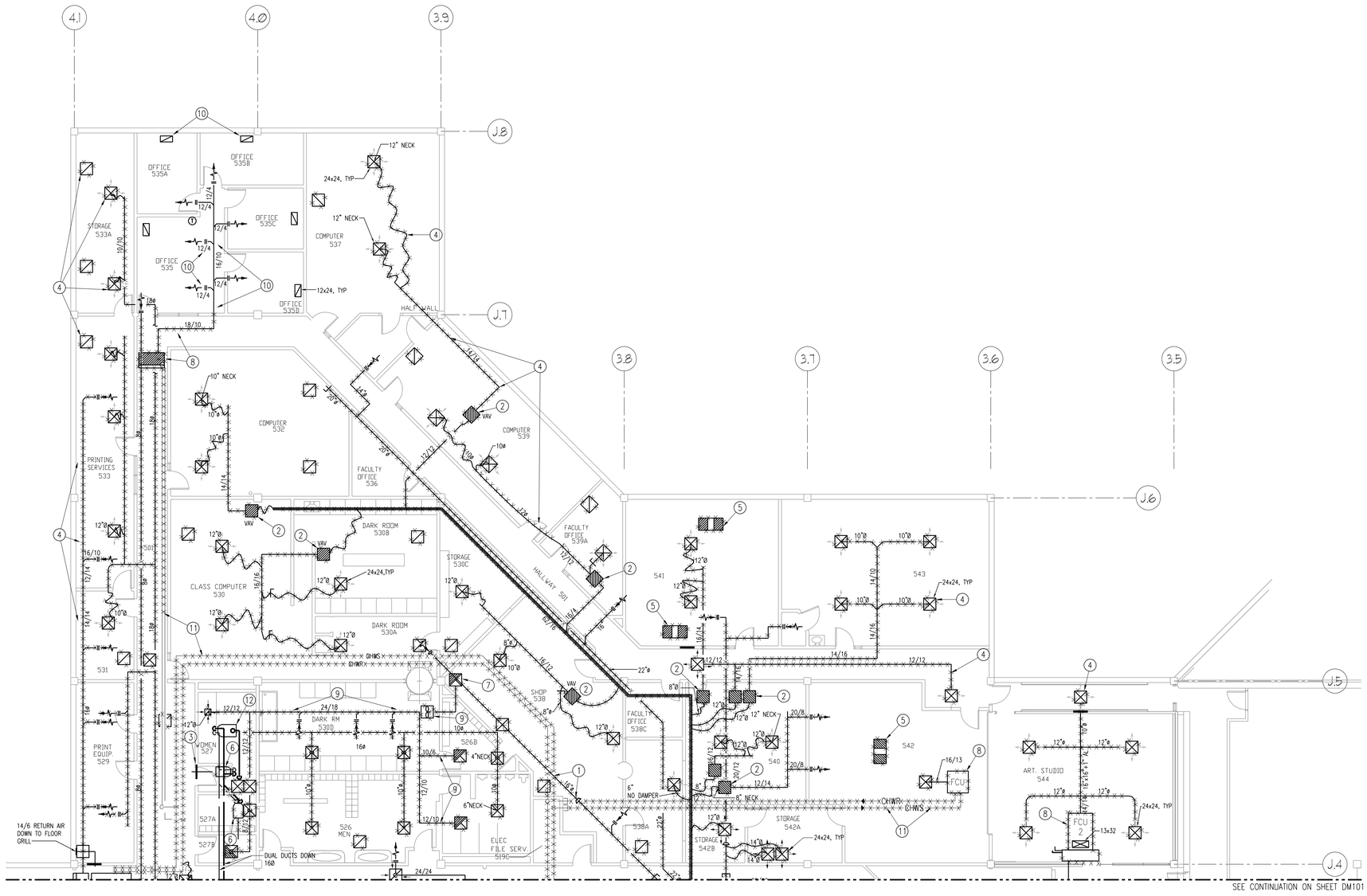

DEMOLITION 5TH FLOOR AREA A MECHANICAL

SCALE: 1/8" = 1'-0"

NORTH

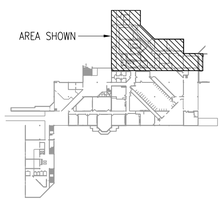

KEY PLAN

SCALE: N.T.S.

NORTH

AT FULL SIZE

0 1 2 3 IN

0 1 2 3 4 5 6 7 8 cm

REGISTERED PROFESSIONAL ENGINEER No. 349630 DANIEL J. ROLLINS STATE OF UTAH

3/23/10

NO.	REVISIONS	DWN	APVD	APVD	DATE
0	ISSUED FOR BID	JK	DR	LV	3/4/10

Stanley Consultants INC.

383 West Vine Street, Suite 400, Murray City, Utah 84123
www.stanleygroup.com

GUNTHER TRADES 5TH FLOOR HVAC IMPROVEMENTS
UTAH VALLEY UNIVERSITY
OREM, UTAH

DEMOLITION
5TH FLOOR AREA A
MECHANICAL

DESIGNED D. ROLLINS
DRAWN J. KIM
CHECKED D. ROLLINS
APPROVED D. ROLLINS
APPROVED L. VANCE
DATE 3/4/10

SCALE: AS NOTED

NO. DM100 REV. 0

CADD: E1-R3

SSSSSSSSSSSSFILENAME

SCI PROJECT NO.

© STANLEY CONSULTANTS

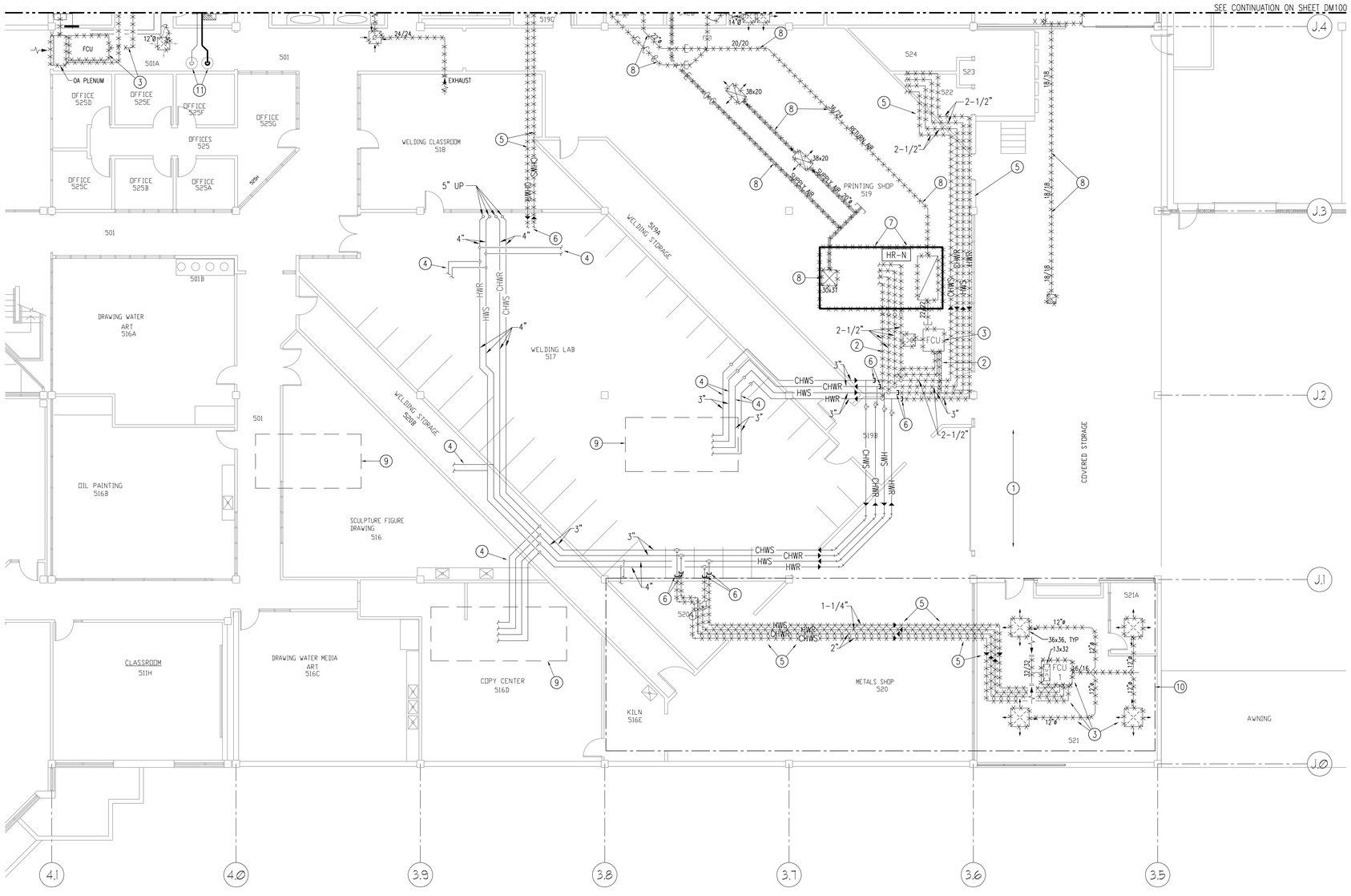

DEMOLITION 5TH FLOOR AREA B MECHANICAL

SCALE: 1/8" = 1'-0"

NORTH

KEY NOTES:

1. REMOVE AND RELOCATE EXISTING SPRINKLER PIPE AND CONDUITS AS NEEDED TO ACCOMMODATE NEW AH-1 DUCTWORK INSTALLATION.
2. DEMO BRANCH LINES BACK TO CHILLED WATER AND HOT WATER MAIN.
3. DEMO EXISTING FAN COIL UNIT, DUCTWORK, AND PIPING.
4. EXISTING CHILLED AND HOT WATER BRANCH LINES TO EXISTING UNIT TO REMAIN.
5. DEMO EXISTING BRANCH LINES BACK TO THE MAINS.
6. CUT OFF AND CAP BRANCH LINES AT THE MAIN LINE POINT OF CONNECTION.
7. DEMO EXISTING HEAT RECOVERY UNIT, [HR-N].
8. DEMO EXISTING DUCTWORK.
9. EXISTING ROOFTOP UNIT TO REMAIN IN SERVICE.
10. ALL DEMO AND REPLACEMENT WORK FOR ROOM 521 SHALL BE AN ADD ALTERNATE.
11. EXISTING DUAL DUCT SUPPLY AIR RISERS TO REMAIN.

REGISTERED PROFESSIONAL ENGINEER
No. 349630
DANIEL J. ROLLINS
STATE OF UTAH
3/23/10

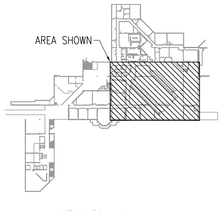

KEY PLAN

SCALE: N.T.S.

NORTH

AT FULL SIZE

0 1 2 3 IN

0 1 2 3 4 5 6 7 8 cm

NO.	REVISIONS	DWN	APVD	APVD	DATE
0	ISSUED FOR BID	JK	DR	LV	3/4/10

Stanley Consultants INC.

383 West Vine Street, Suite 400, Murray City, Utah 84123
www.stanleygroup.com

GUNTHER TRADES 5TH FLOOR HVAC IMPROVEMENTS
UTAH VALLEY UNIVERSITY
OREM, UTAH

DEMOLITION
5TH FLOOR AREA B
MECHANICAL

DESIGNED D. ROLLINS
DRAWN J. KIM
CHECKED D. ROLLINS
APPROVED D. ROLLINS
APPROVED L. VANCE
DATE 3/4/10

SCALE: AS NOTED

NO. DM101 REV. 0

PROJECT NO:

FILENAME:

© STANLEY CONSULTANTS

CADD E1-R3

KEY NOTES: ◯

1. DEMO EXISTING INTAKE HOOD.
2. PATCH AND RE-ROOF THE OPENING TO MATCH EXISTING ROOF MATERIALS AND SEAL IT OFF WEATHER-TIGHT.
3. EXISTING INTAKE HOOD TO REMAIN.
4. DEMO EXISTING AHU: HR-N.

SEE CONTINUATION ON SHEET DM130

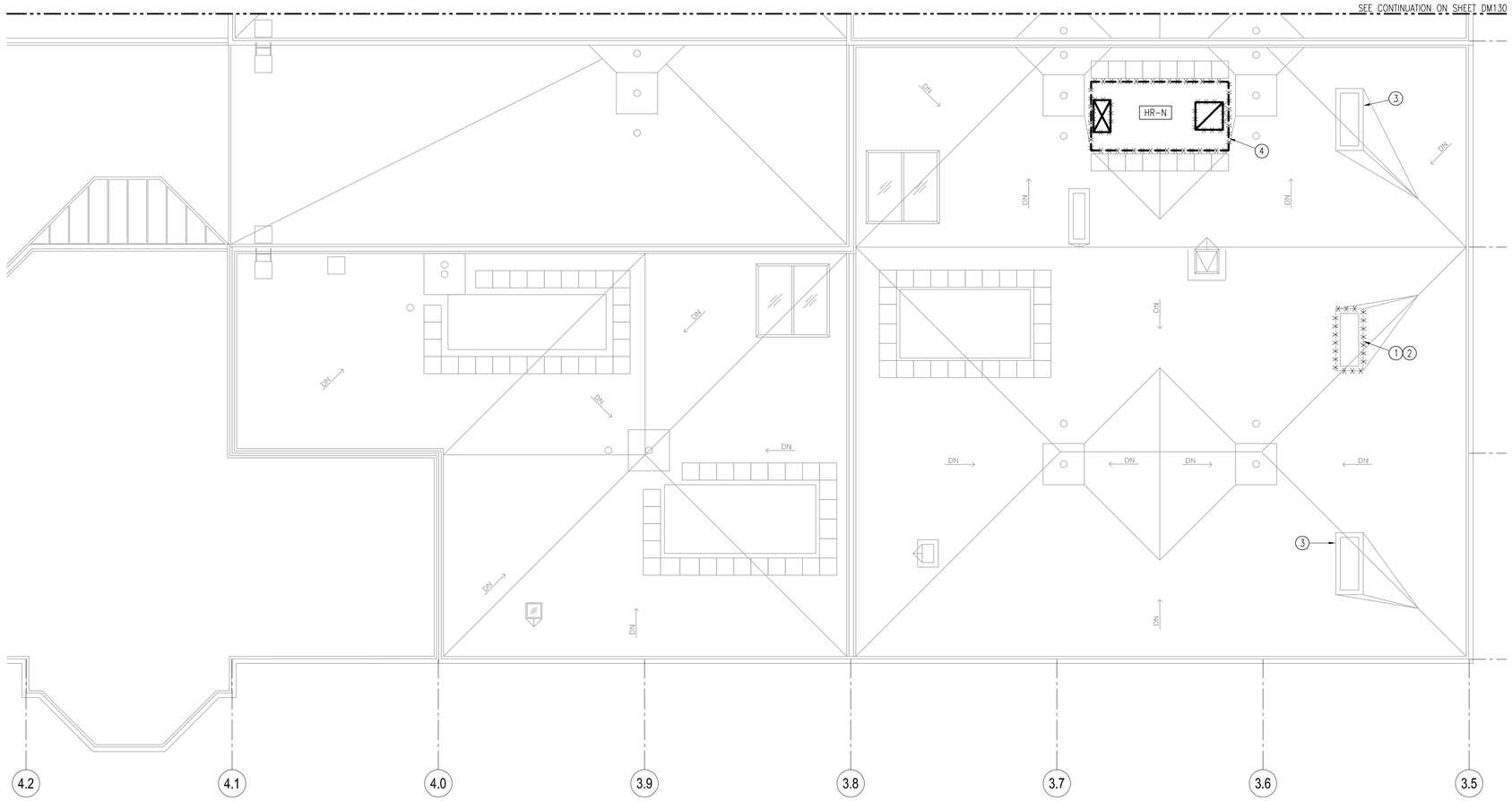

DEMOLITION 5TH FLOOR AREA B ROOF MECHANICAL PLAN

SCALE: 1/8" = 1'-0"

NORTH

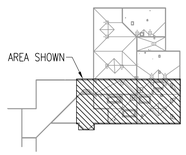

KEY PLAN

SCALE: N.T.S.

NORTH

AT FULL SIZE

0 1 2 3 IN

0 1 2 3 4 5 6 7 8 cm

REGISTERED PROFESSIONAL ENGINEER
No. 349630
DANIEL J. ROLLINS
STATE OF UTAH
3/23/10

NO.	REVISIONS	DWN	APVD	APVD	DATE
0	ISSUED FOR BID	JK	DR	LV	3/4/10

Stanley Consultants INC.

383 West Vine Street, Suite 400, Murray City, Utah 84123
www.stanleygroup.com

GUNTHER TRADES 5TH FLOOR HVAC IMPROVEMENTS
UTAH VALLEY UNIVERSITY
OREM, UTAH

DEMOLITION
5TH FLOOR AREA B
ROOF MECHANICAL PLAN

DESIGNED D. ROLLINS
DRAWN J. KIM
CHECKED D. ROLLINS
APPROVED D. ROLLINS
APPROVED L. VANCE
DATE 3/4/10

SCALE: AS NOTED

NO. DM121 REV. 0

PROJECT NO.

SSSSSSSSSSSSFILENAMESSSSSSSSSSSS

CADD E1-R3

Easton architecture
77 West 200 South, Suite 302
Salt Lake City, UT 84101
Tel 801/328-2982 Fax 801/328-2111

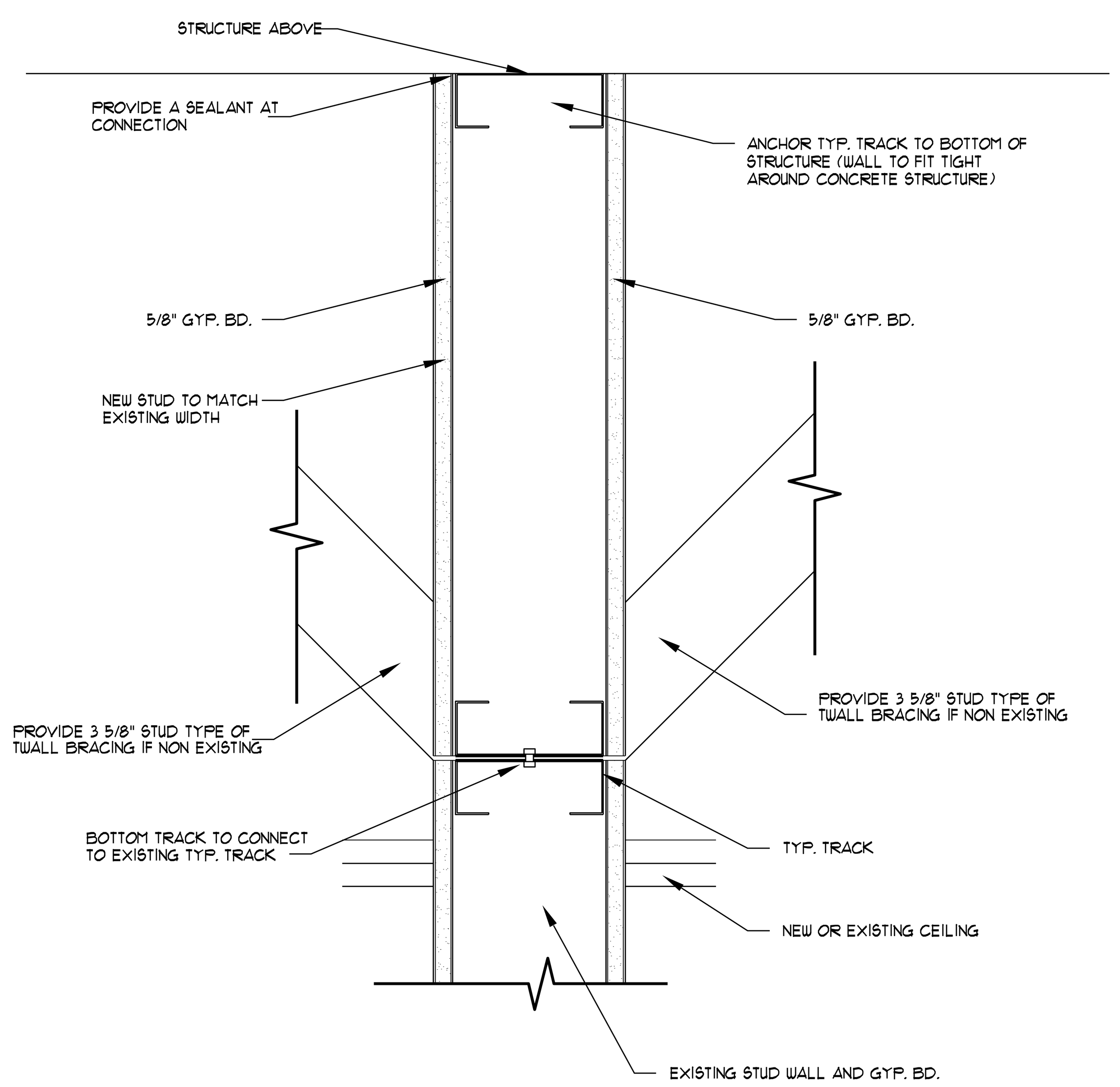

1-100 AP100 TYP. SECTION THRU EXTENDED WALL
SCALE: 3" = 1'-0"

GENERAL NOTES:

1. EXISTING WALLS, DOORS, MILLWORK, CASEWORK AND REMAINING EQUIPMENT TO BE PROTECTED DURING CONSTRUCTION TO AVOID DAMAGE. SCHOOL TO REMOVE ALL FURNITURE AND ITEMS FROM ROOM.

REFERENCE NOTES:

1. EXISTING CEILINGS AND DUCTS AND LIGHTS TO REMAIN IN ADMINISTRATION OFFICES.
2. WALL SHOWN AS — — — TO BE EXTENDED TO DECK ABOVE FOR AIR SEAL -SEE DETAIL ON THIS SHEET.
3. WALL SHOWN AS —— - —— TO BE FULL HEIGHT WALL. HOLES AND DAMAGE TO BE PATCHED AND REPAIRED AS NEEDED.
4. WALL SHOWN AS — · · — · · — TO HAVE EXISTING HOLES PATCHED AND SEALED.
5. PROVIDE NEW PADDLE TYPE REMOTE FOR AUTOMATIC DOOR OPERATOR IN THIS LOCATION AT 44" A.F.F. AND NOT MORE THAN 4" OFF OF WALL FACE. SEE ELECTRICAL FOR WIRING REQUIREMENTS.

△1

CODE ANALYSIS

APPLICABLE CODES

	YEAR		YEAR
INTERNATIONAL BUILDING CODE	2006	NATIONAL ELECTRICAL CODE	2008
INTERNATIONAL MECHANICAL CODE	2006	UNIFORM CODE FOR BUILDING CONSERVATION	N/A
INTERNATIONAL PLUMBING CODE	2006	ADA ACCESSIBILITY GUIDELINES	2005
INTERNATIONAL FIRE CODE	2006		
INTERNATIONAL ENERGY CONSERVATION CODE	2006		

A. OCCUPANCY AND GROUP: B (HIGHER ED) W/ F-1 (CAMPUS PRINTING SHOP)
CHANGE IN USE: YES ____ NO X MIXED OCCUPANCY: YES X NO ____

B. SEISMIC DESIGN CATEGORY: E DESIGN WIND SPEED: 90 MPH

C. TYPE OF CONSTRUCTION(CIRCLE ONE):
I/A I/B II/A (II/B) III/A III/B IV/HT V/A V/B

D. FIRE RESISTANCE RATING. REQUIREMENTS FOR THE EXTERIOR WALLS BASED ON THE FIRE SEPARATION DISTANCE (IN HOURS):
NORTH: 0 SOUTH: 0 EAST: 0 WEST: 0

E. MIXED OCCUPANCIES: N/A NONSEPERATED USES: N/A

F. SPRINKLERS:
REQUIRED: YES PROVIDED: YES TYPE OF SPRINKLER SYSTEM: WET

G. NUMBER OF STORIES: 1 BUILDING HEIGHT: 18'

H. ACTUAL AREA PER FLOOR (SQUARE FEET): 36,668 sq. ft.

I. TABULAR AREA: 23,000 sq.ft. HEIGHT: 55 ft. STORIES: 2

J. TOTAL FLOOR AREA ALLOWED PER STORY W/ AREA MODIFICATIONS: 69,000

K. AREA MODIFICATIONS:

a) $A_a = A_t + \left[\frac{A_t I_f}{100}\right] + \left[\frac{A_t I_s}{100}\right]$ $I_f = 100\left[\frac{F}{P} - 0.25\right]\frac{W}{30}$

$A_a = 23{,}000 + \left[\frac{7{,}000 \times 33\%}{100}\right] + \left[\frac{23{,}000 \times 200\%}{100}\right]$ $I_f = 75\% = 100\left[\frac{245}{331} - 0.25\right]\frac{20}{30}$

L. FIRE RESISTANCE RATING REQUIREMENTS FOR BUILDING ELEMENTS (HOURS).

ELEMENT	Hrs.	ASSEMBLY LISTING	ELEMENT	Hrs.	ASSEMBLY LISTING
EXTERIOR BEARING WALLS	0	CONC.	FLOORS-CEILING FLOORS	0	CONC.
INTERIOR BEARING WALLS	0	CMU	ROOFS-CEILING ROOFS	0	CONC.
EXTERIOR NON-BEARING WALLS	0	N/A	EXTERIOR DOORS AND WINDOWS	0	N/A
STRUCTURAL FRAME	0	CONC	SHAFT ENCLOSURES	0	N/A
PARTITIONS-PERMANENT	0	N/A	FIRE WALLS	0	N/A
FIRE BARRIERS	0	N/A	FIRE PARTITIONS	0	N/A

L. DESIGN OCCUPANT LOAD: 760
EXIT WIDTH REQUIRED: 114" EXIT WIDTH PROVIDED: 252"
EXITS REQUIRED: 3 PROVIDED: 4

M. MINIMUM NUMBER OF REQUIRED PLUMBING FACILITIES: N/A FOR THIS REMODEL

FOOTNOTES:

1) IN CASE OF CONFLICT WITH THE U.S. DEPARTMENT OF JUSTICE FEDERAL REGISTERS PARTS I THROUGH V - ADA GUIDELINES AND SPECIFIC REFERENCE TO THE INTERNATIONAL BUILDING CODE ACCESSIBILITY CHAPTERS, THE MORE RESTRICTIVE REQUIREMENT SHALL GOVERN.

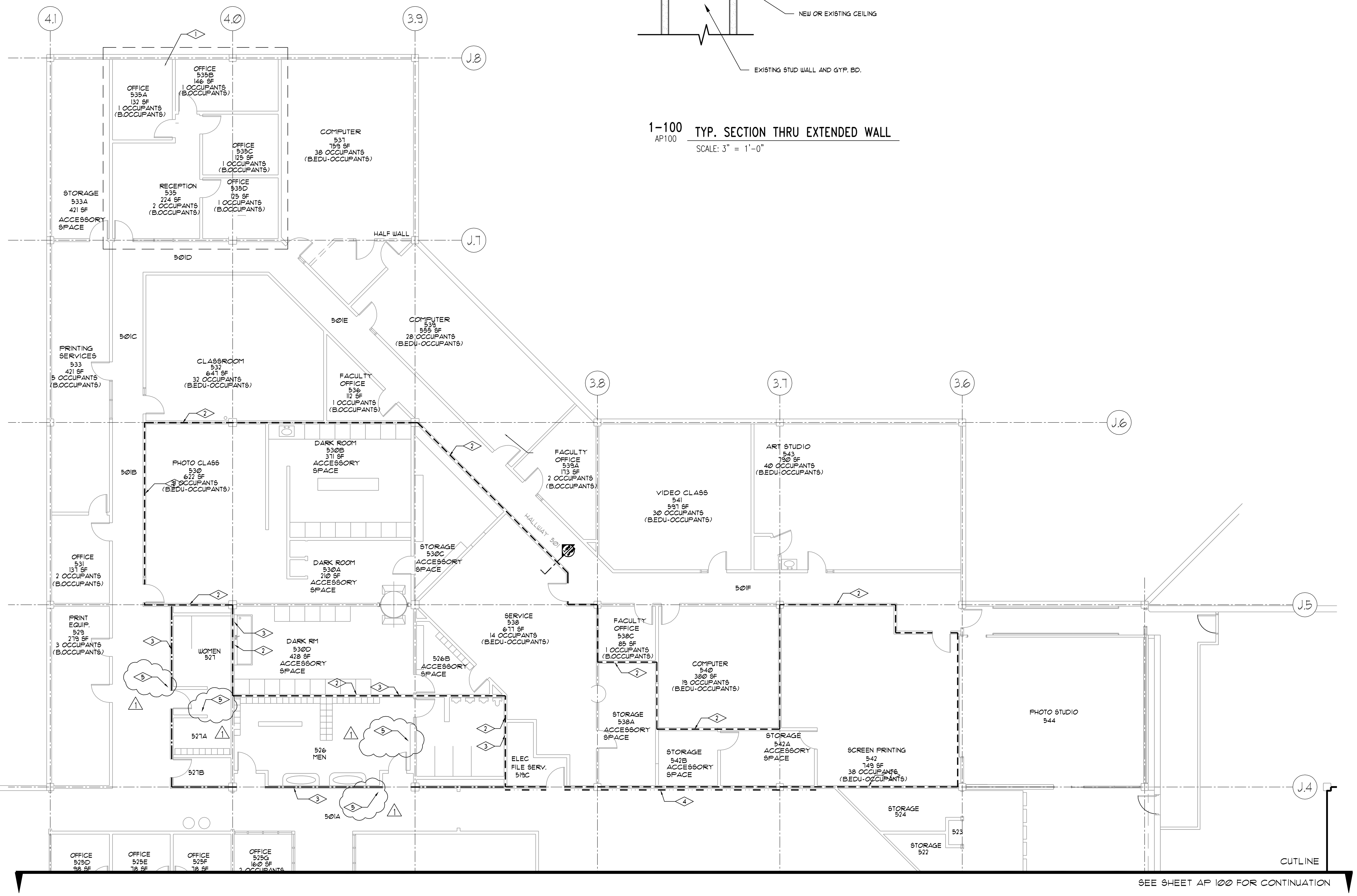

SEE SHEET AP 100 FOR CONTINUATION

01 AP100 FLOOR PLAN
SCALE: 1/8" = 1'-0"

NORTH

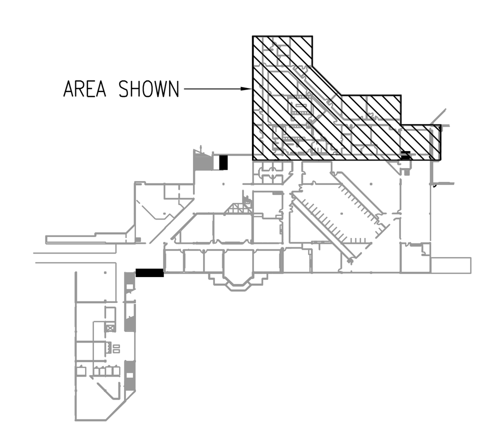

KEY PLAN
SCALE: N.T.S.
NORTH

AT FULL SIZE
0 1 2 3 IN
0 1 2 3 4 5 6 7 8 cm

NO.	REVISIONS	DWN	APVD	APVD	DATE
1	REVISION 1	JK	BE	JK	3/23/10
0	ISSUED FOR BID	JK	BE	JK	3/4/10

Stanley Consultants INC.
383 West Vine Street, Suite 400, Murray City, Utah 84123
www.stanleygroup.com

GUNTHER TRADES 5TH FLOOR HVAC IMPROVEMENTS
UTAH VALLEY UNIVERSITY
OREM, UTAH

5TH FLOOR PLAN AREA A

DESIGNED JK
DRAWN JK
CHECKED BE
APPROVED JK
APPROVED BE
DATE 3/4/10

SCALE:
NO. AP 100
REV. 0

© STANLEY CONSULTANTS

SCI PROJECT NO: 22078.01.00
$$$$$$$$$$$$FILENAME$$$$$$$$$$$$

REFERENCE NOTES:

1. PROVIDE NEW FLOOR TO CEILING INSULATED STUD WALL HERE TO ENCLOSE EXISTING ROLL UP DOOR AND HOUSING. SEE DETAIL ON SHEET AP201
2. WALL SHOWN AS — — — — TO BE EXTENDED TO DECK ABOVE FOR AIR SEAL. -SEE DETAIL ON THIS SHEET.
3. WALL SHOWN AS ——— • ——— IS EXISTING FULL HEIGHT WALL. PATCH AND REPAIR DAMAGE AS NEEDED.
4. WALL SHOWN AS — · · — · · · — TO HAVE EXISTING HOLES PATCHED AND SEALED.
5. ALL WORK WITHIN OUTLINE ASSOCIATED WITH RM 521 SHALL BE BID AS AN ADD ALTERNATE.
6. PROVIDE NEW 3" RIGID INSULATION ON EXISTING CONCRETE WALL ABOVE NEW CEILING. SEE DETAIL ON SHEET AP201
7. EXISTING PADDLE TYPE REMOTE FOR AUTOMATIC DOOR OPERATOR.
8. PROVIDE NEW PADDLE TYPE REMOTE FOR AUTOMATIC DOOR OPERATOR IN THIS LOCATION AT 44" A.F.F. AND NOT MORE THAN 4" OFF OF WALL FACE. SEE ELECTRICAL FOR WIRING REQUIREMENTS.

GENERAL NOTES:

1. EXISTING WALLS, DOORS, MILLWORK, CASEWORK AND REMAINING EQUIPMENT TO BE PROTECTED DURING CONSTRUCTION TO AVOID DAMAGE. SCHOOL TO REMOVE ALL FURNITURE AND ITEMS FROM ROOM.
2. HATCHED AREA N.I.C. ALL OTHER AREAS IN CONTRACT. CONTRACTOR TO SEE MECHANICAL AND ARCH. PLANS FOR COORDINATION.

Eaton architecture
77 West 200 South, Suite 302
Salt Lake City, UT 84101
Tel 801/328-2982 *Fax* 801/328-2111

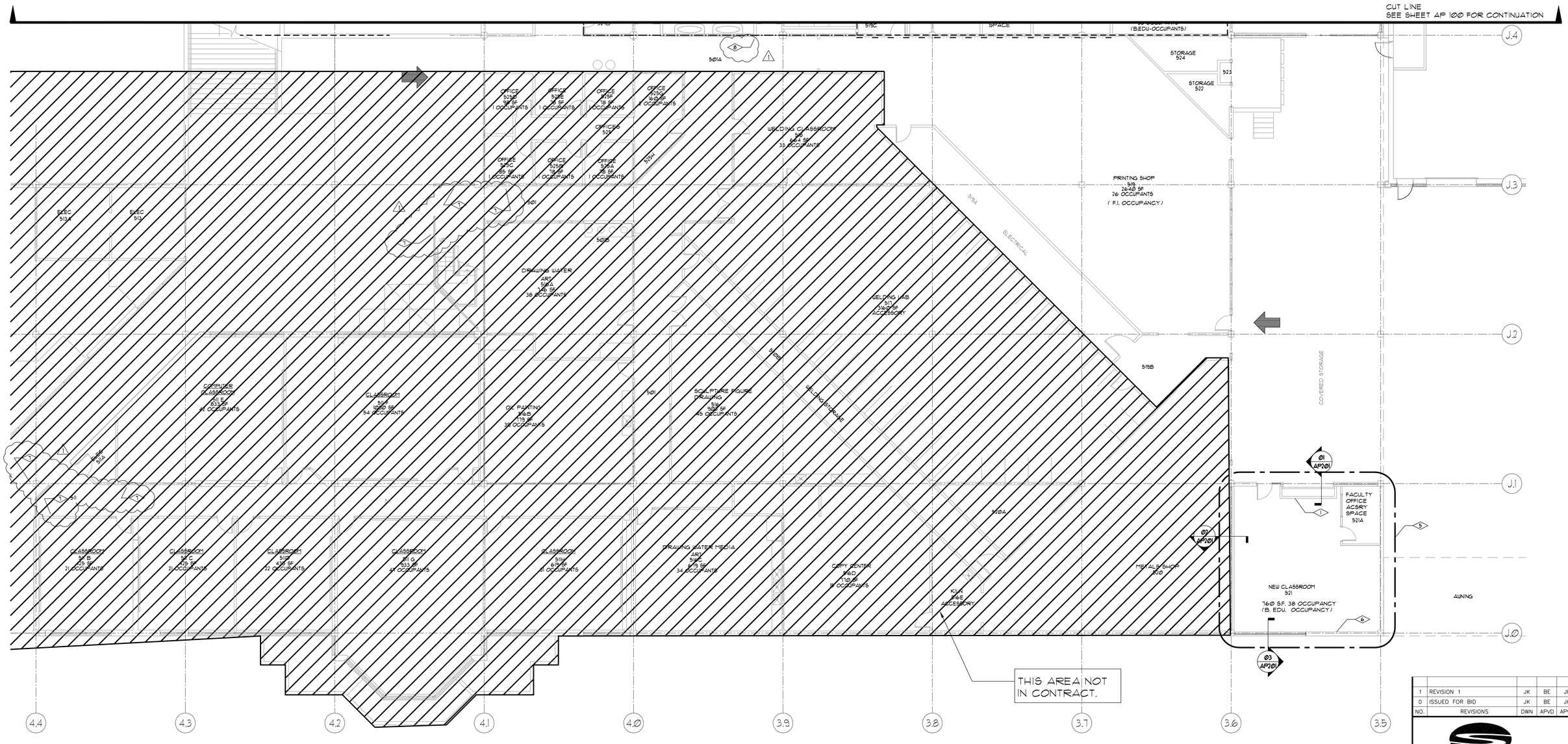

01 AP101 FLOOR PLAN
SCALE: 1/8" = 1'-0"

NORTH

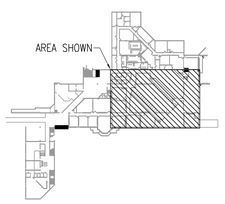

KEY PLAN
SCALE: N.T.S.

NORTH

AT FULL SIZE
0 1 2 3 IN
0 1 2 3 4 5 6 7 8 cm

NO.	REVISIONS	DWN	APVD	APVD	DATE
1	REVISION 1	JK	BE	JK	3/23/10
0	ISSUED FOR BID	JK	BE	JK	3/4/10

Stanley Consultants INC.
383 West Vine Street, Suite 400, Murray City, Utah 84123
www.stanleygroup.com

GUNTHER TRADES 5TH FLOOR HVAC IMPROVEMENTS
UTAH VALLEY UNIVERSITY
OREM, UTAH

5TH FLOOR PLAN
AREA B

DESIGNED JK
DRAWN JK
CHECKED BE
APPROVED JK
APPROVED BE
DATE 3/4/10

SCALE:
NO. AP 101
REV. 0

PROJECT NO. 220378.01.00

13© STANLEY CONSULTANTS

Eaton architecture
77 West 200 South, Suite 302
Salt Lake City, UT 84101
Tel 801/328-2982 Fax 801/328-2111

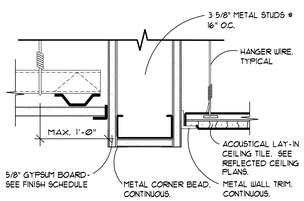

Ø2 A1Ø HEADER DETAIL
SCALE: 3" = 1'-0"

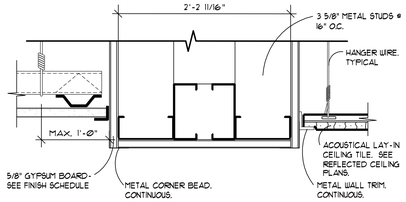

Ø3 A1Ø HEADER DETAIL
SCALE: 3" = 1'-0"

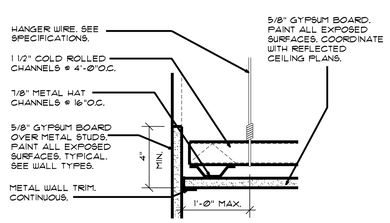

Ø4 A1Ø BULKHEAD DETAIL
SCALE: 3" = 1'-0"

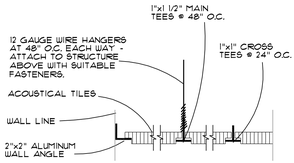

NOTE:
1" WALL ANGLE TO BE USED @ RADIUS WALLS IF ALLOWED BY BUILDING OFFICIAL

Ø5 A1Ø BULKHEAD DETAIL
SCALE: 3" = 1'-0"

GENERAL NOTE:
1. PENETRATIONS BY CONDUITS DUCT AND PIPES OF FIRE RATED WALLS AND FLOORS SHALL BE PROVIDED WITH FIRE STOP MATERIAL THAT IS TESTED BY THE LATEST ASTM E814 TEST.

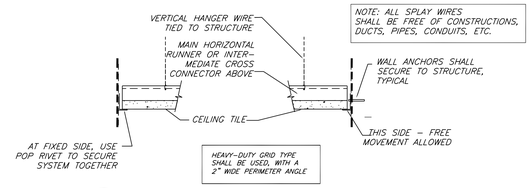

Ø6 A1Ø GYP. BD. CEILING DETAIL
SCALE: 3" = 1'-0"

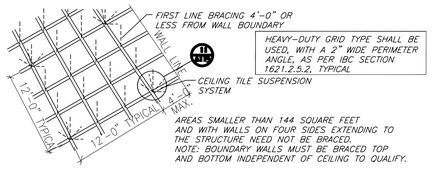

AREAS SMALLER THAN 144 SQUARE FEET AND WITH WALLS ON FOUR SIDES EXTENDING TO THE STRUCTURE NEED NOT BE BRACED.
NOTE: BOUNDARY WALLS MUST BE BRACED TOP AND BOTTOM INDEPENDENT OF CEILING TO QUALIFY.

Ø7 A1Ø SUSPENDED CEILING PANEL SYSTEM
SCALE: 3" = 1'-0"

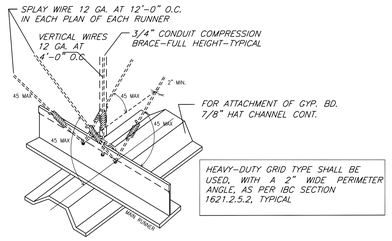

Ø9 A1Ø GYP. BD. CEILING SEISMIC BRACING
SCALE: 3" = 1'-0"

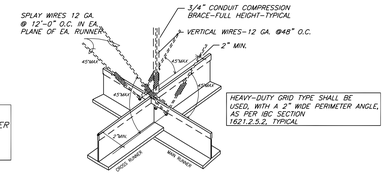

10 A1Ø SEISMIC BRACING DETAIL
SCALE: 3" = 1'-0"

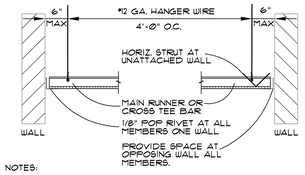

NOTES:
1. ALL SPLAY WIRES TO BE IN LINE WITH ATTACHED COMPONENT.
2. ALL SPLAY WIRES TAUT AND TIED, BOTH ENDS WITH MIN OF THREE TURNS IN 1" OF RUN.
3. COMPLY WITH UBC STANDARD 47-18 & ASTM E-580Ø.
4. CEILING DETAIL NOTES AND DETAILS SHOWN APPLY TO ALL SUSPENDED CEILINGS.
5. REFER TO ABOVE REFERENCE STANDARDS FOR CEILING SUPPORT AT LIGHT FIXTURES, AIR TERMINALS AND OTHER SERVICES.
6. THE CEILING LIGHTS SHALL BE SUSPENDED FROM THE STRUCTURE IN AT LEAST TWO LOCATIONS WITHOUT REGARD TO THE SUSPENDED CEILING GRID.

11 A1Ø TYP. PANEL DETAIL
SCALE: 3" = 1'-0"

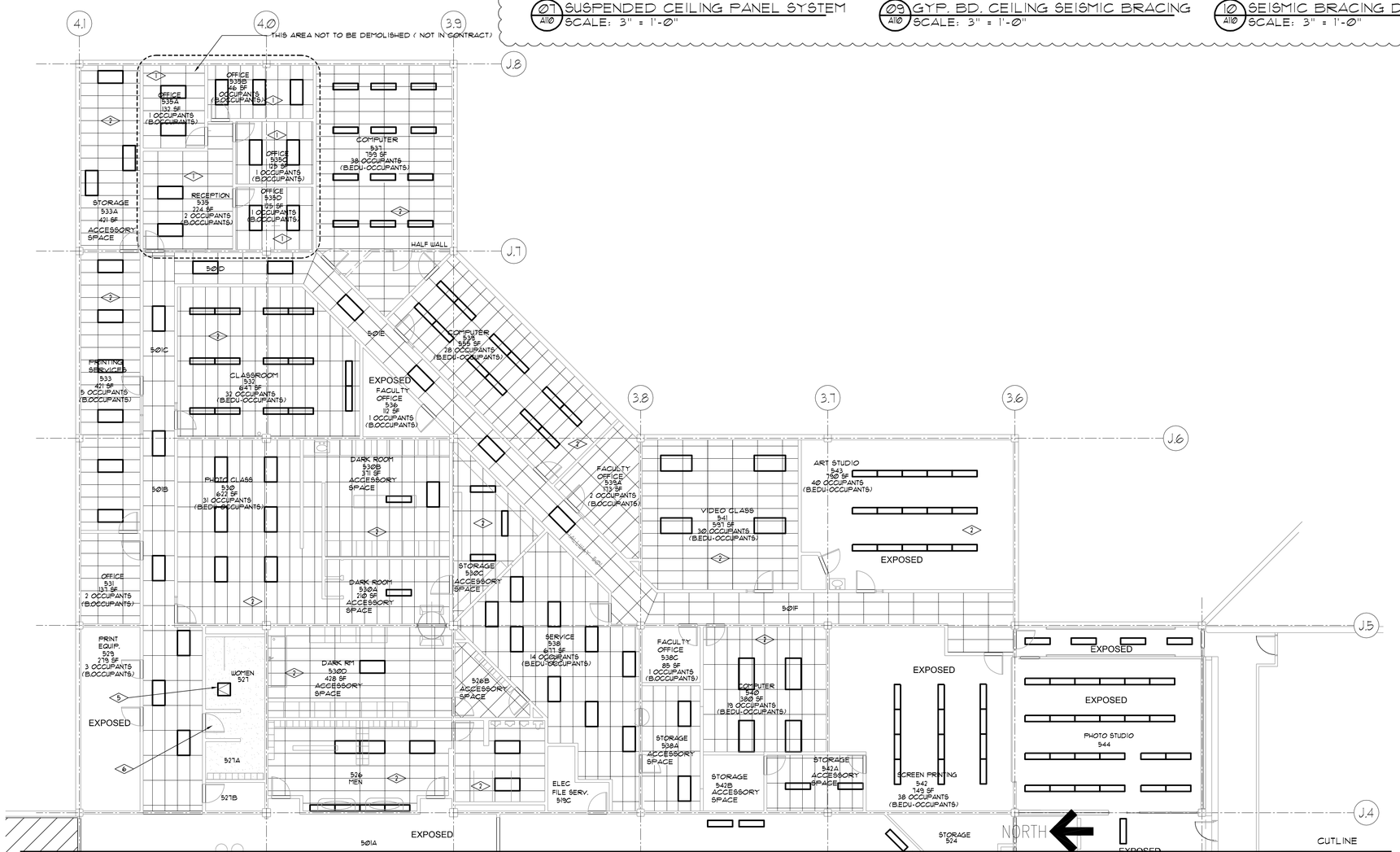

Ø1 A1Ø NEW REFLECTED CEILING PLAN
SCALE: 1/8" = 1'-0"

GENERAL NOTES:

1. EXISTING WALLS, DOORS, MILLWORK, CASEWORK AND REMAINING EQUIPMENT TO BE PROTECTED DURING CONSTRUCTION TO AVOID DAMAGE. SCHOOL TO REMOVE ALL FURNITURE AND ITEMS FROM ROOM.

REFERENCE NOTES:

1. EXISTING CLGS AND DUCTS AND LIGHTS TO REMAIN IN ADMINISTRATION.
2. NEW SUSPEND LAY IN CEILING, LIGHTS, AND DIFFUSER. COORDINATE WITH MECHANICAL AND ELECTRICAL PLANS.
3. WALL SHOWN AS — — — TO BE EXTENDED TO DECK ABOVE FOR AIR SEAL -SEE DETAIL ON THIS SHEET.
4. WALL SHOWN AS — . — . — TO HAVE EXISTING HOLES PATCHED AND SEALED.
5. REINSTALL EXISTING ACCESS HATCH IN APPROPRIATE LOCATION. COORDINATE WITH MECHANICAL.
6. NEW SUSPEND GYP. BD. CEILING, LIGHTS, AND DIFFUSER. COORDINATE WITH MECHANICAL AND ELECTRICAL PLANS.

CEILING LEGEND

- NEW SUSPENDED 2' x 4' GRID CEILING ACOUST. PANEL TYPE, COLOR, AND TEXTURE PER SPECIFICATIONS
- NEW OR REPAIRED PAINTED SUSPENDED GYPSUM BOARD IN THIS AREA.
- REPRESENTS OPEN TO STRUCTURE ABOVE. PAINT ALL EXPOSED AREA AND DUCTWORK AS DIRECTED BY OWNER.
- EXISTING 2'x4' FLUORESCENT FIXTURE TO BE REUSED IN THIS LOCATION WHERE POSSIBLE. SEE ELEC. PLANS.
- EXISTING 1'X4' SURFACE MOUNTED FLUORESCENT LIGHT FIXTURE TO BE REUSED IN THIS LOCATION WHERE POSSIBLE. SEE ELEC. PLANS.
- NEW OR REUSED AIR RETURN GRILL IN THIS LOCATION. SEE MECHANICAL PLANS.
- NEW OR REUSED AIR SUPPLY GRILL IN THIS LOCATION. SEE MECHANICAL PLANS.

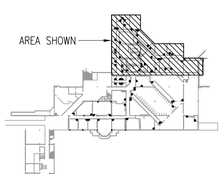

KEY PLAN
SCALE: N.T.S.
NORTH

AT FULL SIZE
0 1 2 3 IN
0 1 2 3 4 5 6 7 8 cm

NO.	REVISIONS	DWN	APVD	APVD	DATE
1	REVISION 1	JK	BE	JK	3/23/10
0	ISSUED FOR BID	JK	BE	JK	3/4/10

Stanley Consultants INC.
383 West Vine Street, Suite 400, Murray City, Utah 84123
www.stanleygroup.com

GUNTHER TRADES 5TH FLOOR HVAC IMPROVEMENTS
UTAH VALLEY UNIVERSITY
OREM, UTAH

5TH FLOOR REFLECTED CEILING PLAN AND DETAILS - AREA A

DESIGNED JK
DRAWN JK
CHECKED BE
APPROVED JK
APPROVED BE
DATE 3/4/10

SCALE:
NO. AP 110
REV. 0

13© STANLEY CONSULTANTS

SCI PROJECT NO: 23078.01.00
CADD E1-R3

CEILING LEGEND

- NEW SUSPENDED 2' x 4' GRID CEILING ACOUST. PANEL TYPE, COLOR, AND TEXTURE PER SPECIFICATIONS
- NEW OR REPAIRED PAINTED SUSPENDED GYPSUM BOARD IN THIS AREA.
- REPRESENTS OPEN TO STRUCTURE ABOVE. PAINT ALL EXPOSED AREA AND DUCTWORK AS DIRECTED BY OWNER.
- EXISTING 2'x4' FLUORESCENT FIXTURE TO BE REUSED IN THIS LOCATION WHERE POSSIBLE. SEE ELEC. PLANS.
- EXISTING 1'x4' SURFACE MOUNTED FLUORESCENT LIGHT FIXTURE TO BE REUSED IN THIS LOCATION WHERE POSSIBLE. SEE ELEC. PLANS.
- NEW OR REUSED AIR RETURN GRILL IN THIS LOCATION. SEE MECHANICAL PLANS.
- NEW OR REUSED AIR SUPPLY GRILL IN THIS LOCATION. SEE MECHANICAL PLANS.

GENERAL NOTES:

1. EXISTING WALLS, DOORS, MILLWORK, CASEWORK AND REMAINING EQUIPMENT TO BE PROTECTED DURING CONSTRUCTION TO AVOID DAMAGE. SCHOOL TO REMOVE ALL FURNITURE AND ITEMS FROM ROOM.
2. HATCHED AREA N.I.C. ALL OTHER AREAS IN CONTRACT. CONTRACTOR TO SEE MECHANICAL AND ARCH. PLANS FOR COORDINATION.

REFERENCE NOTES:

1. EXISTING CLGS AND DUCTS AND LIGHTS TO REMAIN IN ADMINISTRATION.
2. NEW SUSPEND LAY IN CEILING, LIGHTS, AND DIFFUSERS. COORDINATE WITH MECHANICAL AND ELECTRICAL PLANS.
3. WALL SHOWN AS — — — TO BE EXTENDED TO DECK ABOVE FOR AIR SEAL.
4. WALL SHOWN AS — · · — · · — TO HAVE EXISTING HOLES PATCHED AND SEALED.
5. NOT USED.
6. ALL WORK WITHIN OUTLINE ASSOCIATED WITH RM 521 SHALL BE BID AS AN ADD ALTERNATE.

Eaton architecture
77 West 200 South, Suite 302
Salt Lake City, UT 84101
Tel 801/328-2982 *Fax* 801/328-2111

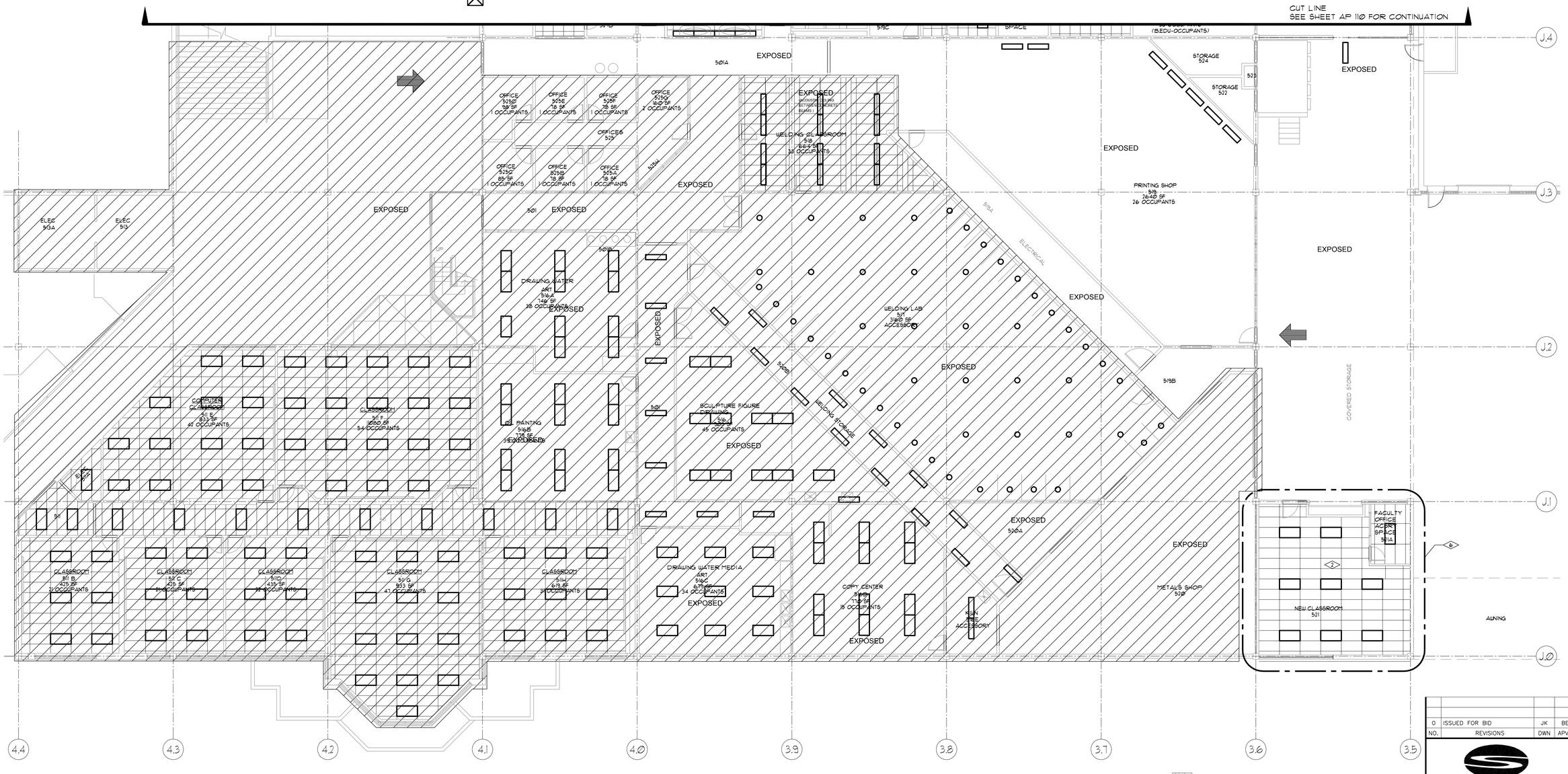

01 NEW REFLECTED CEILING PLAN
A111 SCALE: 1/8" = 1'-0"

NORTH

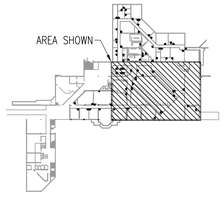

KEY PLAN
SCALE: N.T.S.

NORTH

AT FULL SIZE
0 1 2 3 IN
0 1 2 3 4 5 6 7 8 cm

NO.	REVISIONS	DWN	APVD	APVD	DATE
0	ISSUED FOR BID	JK	BE	JK	3/4/10

Stanley Consultants INC.
383 West Vine Street, Suite 400, Murray City, Utah 84123
www.stanleygroup.com

GUNTHER TRADES 5TH FLOOR HVAC IMPROVEMENTS
UTAH VALLEY UNIVERSITY
OREM, UTAH

5TH FLOOR REFLECTED CEILING PLAN AND DETAILS – AREA B

DESIGNED JK
DRAWN JK
CHECKED BE
APPROVED JK
APPROVED BE
DATE 3/4/10

SCALE:

NO. AP 111 REV. 0

PROJECT NO. 220178.01.00

CADD: E1-83

© STANLEY CONSULTANTS

Eaton architecture
77 West 200 South, Suite 302
Salt Lake City, UT 84101
Tel 801/328-2982 *Fax* 801/328-2111

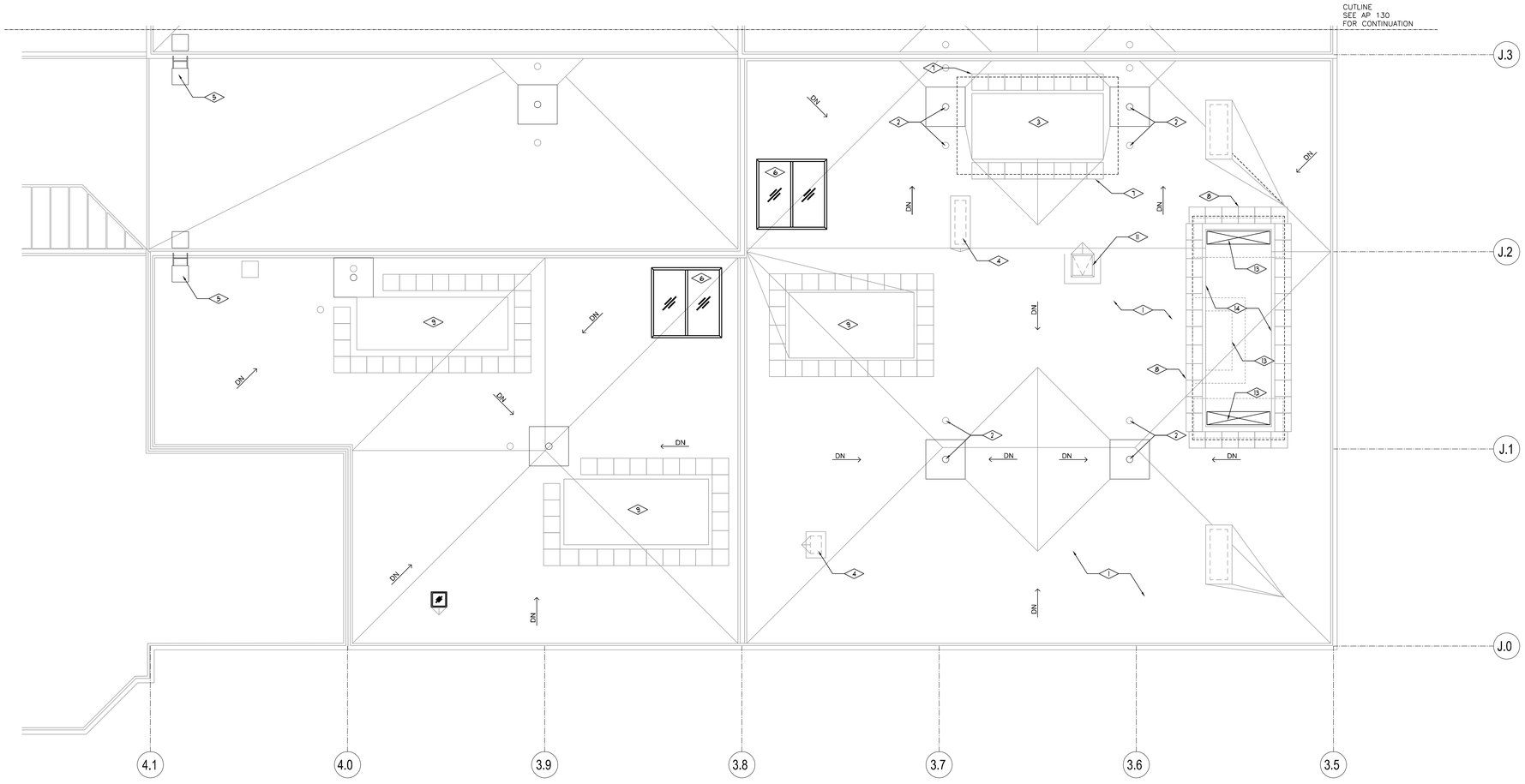

01 A121 5TH FLOOR ROOF PLAN
SCALE: 1/8" = 1'-0"

NORTH

REFERENCE NOTES

1. EXISTING 4-PLY BUILT-UP ROOFING SYSTEM ON RIGID INSULATION.
2. EXISTING PRIMARY AND SECONDARY ROOF DRAIN SYSTEM, TO REMAIN.
3. NEW AHU ON EXISTING PAD AND STRUCTURE, SEE MECHANICAL DRAWINGS.
4. EXISTING MECHANICAL FAN/EXHAUSTER RELIEF AIR VENT, TO REMAIN.
5. EXISTING ROOF-TO-ROOF LADDER, TO REMAIN.
6. EXISTING SKYLIGHT, TO REMAIN.
7. EXISTING 30"X30" WALK PADS AS SHOWN, REMOVE AND STORE ON SITE FOR REUSE.
8. PROVIDE NEW 30"X30" WALK PADS AROUND NEW UNIT AS SHOWN.
9. EXISTING HVAC. UNIT, TO REMAIN.
10. NOT USED
11. EXISTING ROOF HATCH/SCUTTLE,TO REMAIN.
12. NOT USED.
13. PROVIDE RE-ROOFING TO MATCH EXISTING IN AREA 24" BEYOND ROOF OPENING. EXISTING MEMBRANE TO OVERLAP NEW AT TOP OF SLOPE AND NEW TO OVERLAP OLD AT BOTTOM AND SIDES OF SLOPE (OVERLAPPING PATCH TO BE HOT MOPPED)
14. NEW AHU ON ELEVATED PLATFROM WITH FLASHING AT SUPPORTS SEE MECHANICAL.

GENERAL NOTES

1. CONTRACTOR TO PROTECT EXISTING ROOFING FROM DAMAGE DURING DEMO AND CONSTRUCTION.

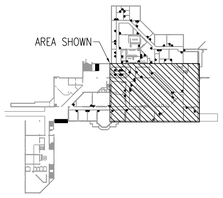

KEY PLAN
SCALE: N.T.S.

NORTH

AT FULL SIZE
0 1 2 3 IN
0 1 2 3 4 5 6 7 8 cm

NO.	REVISIONS	DWN	APVD	APVD	DATE
0	ISSUED FOR BID	JK	BE	JK	3/4/10

Stanley Consultants INC.
383 West Vine Street, Suite 400, Murray City, Utah 84123
www.stanleygroup.com

GUNTHER TRADES 5TH FLOOR HVAC IMPROVEMENTS
UTAH VALLEY UNIVERSITY
OREM, UTAH

5TH FLOOR ROOF PLAN
AREA B

DESIGNED JK
DRAWN JK
CHECKED BE
APPROVED JK
APPROVED BE
DATE 3/4/10

SCALE:
NO. AP 121
REV. 0

13© STANLEY CONSULTANTS

SCI PROJECT NO. 220718.01.00
$$$$$$$$$$$$$$FILENAME$$$$$$$$$$$$$$
CADD E1-R3

Eaton architecture
77 West 200 South, Suite 302
Salt Lake City, UT 84101
Tel 801/328-2982 *Fax* 801/328-2111

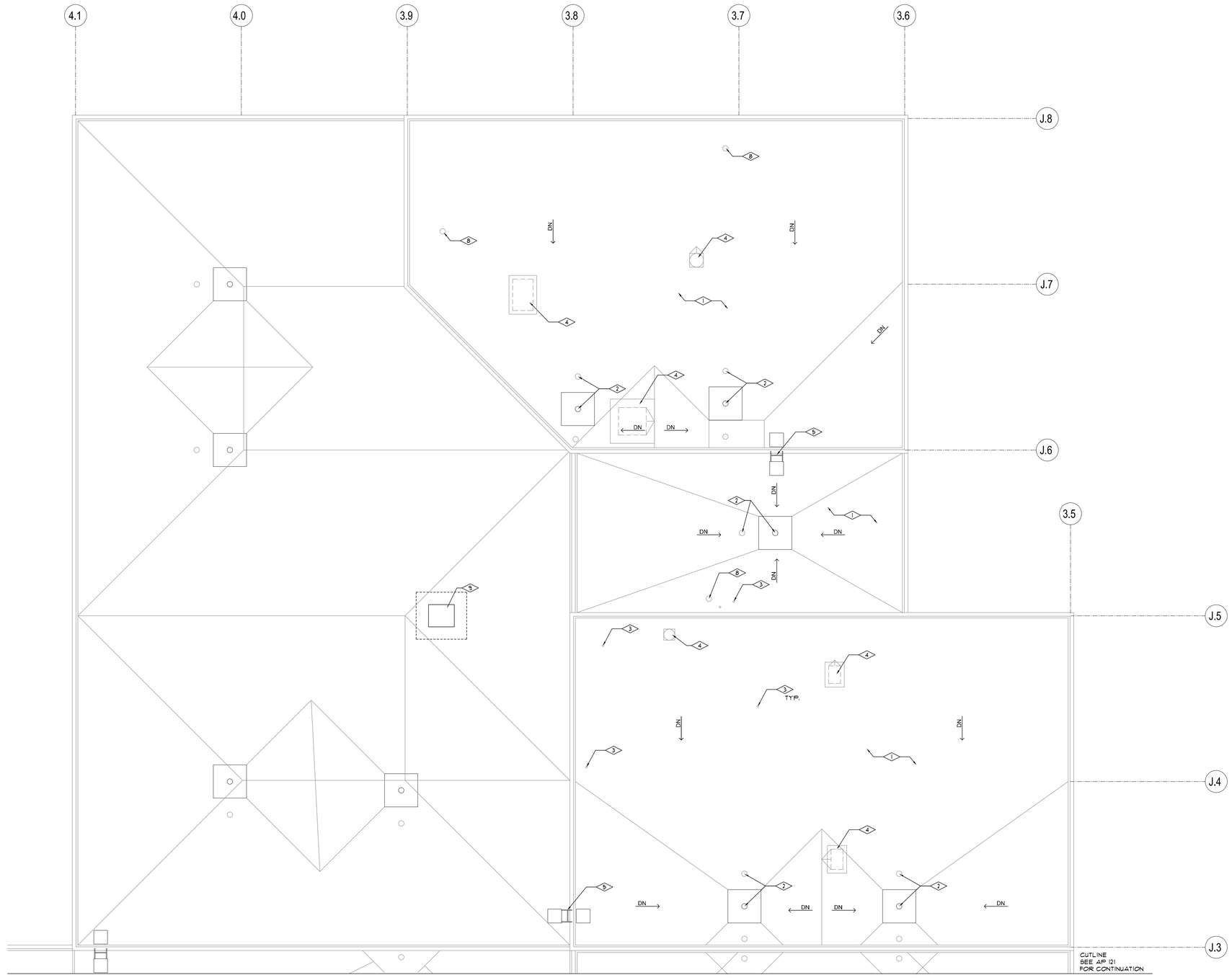

GENERAL NOTES

1. CONTRACTOR TO PROTECT EXISTING ROOFING FROM DAMAGE DURING DEMO AND CONSTRUCTION.

REFERENCE NOTES

1. EXISTING 4-PLY BUILT-UP ROOFING SYSTEM ON RIGID INSULATION.
2. EXISTING PRIMARY AND SECONDARY ROOF DRAIN SYSTEM TO REMAIN.
3. EXISTING PLUMBING VENT PIPE, TO REMAIN.
4. EXISTING MECHANICAL FAN/EXHAUST RELIEF AIR VENT, TO REMAIN.
5. EXISTING ROOF-TO-ROOF LADDER, TO REMAIN.
6. NOT USED.
7. NOT USED.
8. EXISTING SHEET METAL FLUE, TO REMAIN.
9. PROVIDE RE-ROOFING TO MATCH EXISTING IN AREA 24" BEYOND ROOF OPENING. EXISTING MEMBRANE TO OVERLAP NEW AT TOP OF SLOPE AND NEW TO OVERLAP OLD AT BOTTOM AND SIDES OF SLOPE (OVERLAPPING PATCH TO BE HOT MOPPED)

01 / AP130 6TH FLOOR ROOF PLAN
SCALE: 1/8" = 1'-0"

NORTH

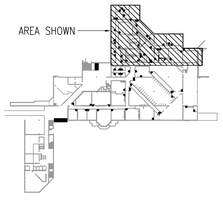

KEY PLAN
SCALE: N.T.S.

NORTH

AT FULL SIZE
0 1 2 3 IN
0 1 2 3 4 5 6 7 8 cm

NO.	REVISIONS	DWN	APVD	APVD	DATE
0	ISSUED FOR BID	JK	BE	JK	3/4/10

Stanley Consultants INC.
383 West Vine Street, Suite 400, Murray City, Utah 84123
www.stanleygroup.com

GUNTHER TRADES 5TH FLOOR HVAC IMPROVEMENTS
UTAH VALLEY UNIVERSITY
OREM, UTAH

6TH FLOOR ROOF PLAN
AREA A

DESIGNED JK
DRAWN JK
CHECKED BE
APPROVED JK
APPROVED BE
DATE 3/4/10

SCALE:
NO. AP 130
REV. 0

© STANLEY CONSULTANTS

SCI PROJECT NO. 22078.01.00
$$$$$$$$$$$$$$FILENAME$$$$$$$$$$$$$$
CADD E1-R3

Easton architecture
77 West 200 South, Suite 302
Salt Lake City, UT 84101
Tel 801/328-2982 *Fax* 801/328-2111

GENERAL NOTES:

1. EXISTING WALLS, DOORS, MILLWORK, CASEWORK AND REMAINING EQUIPMENT TO BE PROTECTED DURING CONSTRUCTION TO AVOID DAMAGE. SCHOOL TO REMOVE ALL FURNITURE AND ITEMS FROM ROOM.

REFERENCE NOTES:

1. PROVIDE NEW SUSPENDED ACOUSTICAL PANEL GRID WITH CODE REQUIRED DIAGONAL BRACING. SEE HVAC AND LIGHTING SHEETS FOR PLACEMENT OF DIFFUSERS AND LIGHTING.
2. PROVIDE NEW 3" RIGID INSULATION BOARD ON CONCRETE WALL ABOVE WINDOWS AND FURRED WALL AREA ABOVE CEILING.
3. PROVIDE NEW R-38 BATT, VAPOR BARRIER FACED INSULATION SUSPENDED BELOW METAL DECK WITH 20 GAUGE WIRES IN 24" GRID ATTACHED TO TRUSSES.
4. PROVIDE 5" METAL STUD WALL WITH 1/2" PAINTED GYP BD, EACH SIDE AND R-19 BATT. ATTACHED WALL TO ROOF DECK AND DIAGONALLY BRACE WALL ABOVE CEILING.
5. PROVIDE FLAT BLACK PAINTED PLYWOOD PANEL ATTACHED TO CLASSROOM SIDE OF ALUMINUM WINDOW FRAMES
6. EXISTING GYP BOARD INTERIOR WALL TO REMAIN.
7. EXISTING OVERHEAD DOOR AND HOUSING TO REMAIN INTACT AND USEABLE.

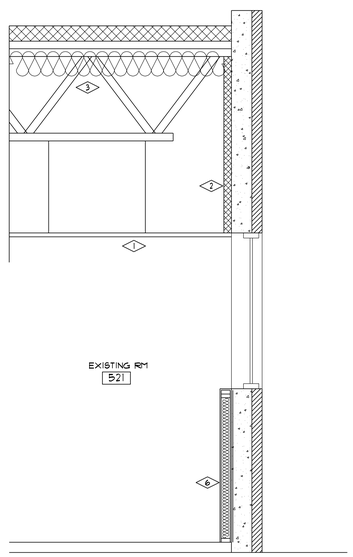

03 / AP101 SECTION THRU EXISTING EXTERIOR WALL
SCALE: 1/2" = 1'-0"

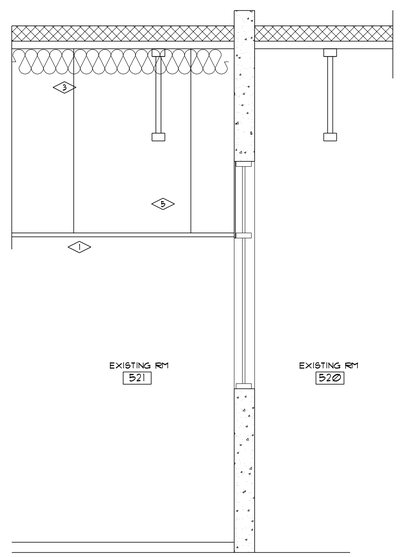

02 / AP101 SECTION THRU EXISTING INTERIOR WALL
SCALE: 1/2" = 1'-0"

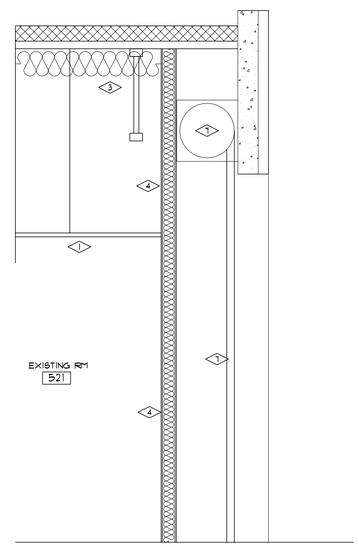

01 / AP101 SECTION THRU TEMPORARY WALL
SCALE: 1/2" = 1'-0"

AT FULL SIZE
0 1 2 3 IN
0 1 2 3 4 5 6 7 8 cm

NO.	REVISIONS	DWN	APVD	APVD	DATE
0	ISSUED FOR BID	JK	BE	JK	3/4/10

Stanley Consultants INC.
383 West Vine Street, Suite 400, Murray City, Utah 84123
www.stanleygroup.com

GUNTHER TRADES 5TH FLOOR HVAC IMPROVEMENTS
UTAH VALLEY UNIVERSITY
OREM, UTAH

RM 521 WALL SECTIONS AREA B

DESIGNED JK
DRAWN JK
CHECKED BE
APPROVED JK
APPROVED BE
DATE 3/4/10

SCALE:
NO. AP 201
REV. 0

13© STANLEY CONSULTANTS

SCI PROJECT NO: 22078.01.00
$$$$$$$$$$$$$$$$FILENAME$$$$$$$$$$$$$$$$
CADD E1-R3

GENERAL NOTES

1. THE CONTRACTOR IS RESPONSIBLE FOR VERIFICATION OF ALL DIMENSIONS AND CONDITIONS ONSITE AS ADDRESSED IN THE STRUCTURAL DOCUMENTS.
2. ANY CONFLICTS OR OMISSIONS OF THE EXISTING STRUCTURE AND THE STRUCTURAL DRAWINGS SHALL BE BROUGHT TO THE ATTENTION OF THE ENGINEER OF RECORD BEFORE WORK IS TO CONTINUE FORWARD.
3. THE CONTRACTOR IS RESPONSIBLE FOR THE SAFETY OF ALL PERSONS WITHIN AND ADJACENT TO THE JOBSITE.
4. ANY AND ALL SITE VISITS/OBSERVATIONS BY THE ENGINEER OF RECORD OR HIS/HER REPRESENTATIVES ARE NOT TO BE INTERPRETED AS SPECIAL INSPECTION OR APPROVAL ON ANY WORK PERFORMED ON THE JOBSITE.
5. PROVIDE SHOP DRAWINGS SUBMITTALS PRIOR TO THE FABRICATION OR ERECTION OF ANY STRUCTURAL COMPONENTS.

STRUCTURAL DESIGN CRITERIA

1. BUILDING CODE: INTERNATIONAL BUILDING CODE (IBC) 2006; PUBLISHED BY INTERNATIONAL CODE COUNCIL, INC.
2. AMERICAN NATIONAL STANDARDS INSTITUTE CODE, ASCE 7-05 MINIMUM DESIGN LOADS FOR BUILDINGS AND OTHER STRUCTURES; PUBLISHED BY AMERICAN NATIONAL STANDARDS INSTITUTE, INC.
3. STEEL DESIGN CODE: SPECIFICATION FOR STRUCTURAL STEEL BUILDINGS, LOAD AND RESISTANCE FACTOR DESIGN (LRFD) 2005; PUBLISHED BY THE AMERICAN INSTITUTE OF STEEL CONSTRUCTION.
4. CONCRETE DESIGN CODE: BUILDING CODE REQUIREMENTS FOR STRUCTURAL CONCRETE, ACI 318-05; PUBLISHED BY AMERICAN CONCRETE INSTITUTE.
5. STRUCTURAL WELDING CODE:AWS D-1.1,PUBLISHED BY AMERICAN WELDING SOCIETY
6. STRUCTURAL STEEL: SEE SPECIFICATION.
7. LIVE LOADS:
   A. UNIFORM LIVE LOAD: 250 PSF
   B. CONCENTRATED LOAD: H20 TRUCK LOADING
8. SPECIAL LOADS:
   SEE PLANS AND DETAILS FOR SPECIFIED INPLACE PERMENANT EQUIPMENT LOADS WHERE APPLICABLE.

FIELD MEASUREMENT NOTES

1. ALL DIMENSIONS OF EXISTING CONSTRUCTION ARE APPROXIMATE; CONTRACTOR SHALL MAKE ALL NECESSARY FIELD MEASUREMENTS OF EXISTING STRUCTURES, BREECHING AND EQUIPMENT TO VERIFY DIMENSIONS SHOWN ON DRAWINGS AND TO PROVIDE DIMENSIONS NOT SHOWN, PRIOR TO FABRICATION. COSTS FOR MODIFICATIONS OF NEW CONSTRUCTION, DUE TO LACK OF CONFIRMATION OF DIMENSIONS BY FIELD MEASUREMENTS SHALL BE BORNE BY CONTRACTOR.
2. CONTRACTOR'S STRUCTURAL STEEL DETAILER SHALL MAKE NECESSARY FIELD MEASUREMENTS OF EXISTING STRUCTURAL STEEL CONNECTIONS TO ENSURE NEW CONNECTION DETAILS SHOWN ON SHOP DRAWINGS ARE COMPATIBLE WITH EXISTING CONNECTIONS AND ARE CONSTRUCTABLE AS DETAILED.

EXISTING CONDITIONS

1. THE CONTRACTOR IS RESPONSIBLE TO PROVIDE ALL MEANS AND METHODS REQUIRED FOR SUFFICIENT SHORING OF THE EXISTING STRUCTURE AS REQUIRED FOR INDIVIDUAL MEMBER MODIFICATIONS OR REPLACEMENT.
2. CONTRACTOR IS TO NOTIFY THE ENGINEER OF RECORD CONCERNING ANY DISCREPENCIES BETWEEN THE STRUCTURAL DOCUMENTS & EXISTING CONDITIONS AT OR ADJACENT TO ANY LOCATION ADDRESSED FOR MODIFICATION WITHIN THESE DOCUMENTS.

EPOXY ANCHORAGE

1. UNLESS NOTED OTHERWISE PROVIDE HILTI 'HIT RE 500 SD' EPOXY FOR ALL POST INSTALLED EPOXY ANCHORS SPECIFIED IN THE STRUCTURAL DOCUMENTS. FOLLOW PREPERATION AND CLEANOUT PROCEEDURES AS SPECIFIED BY HILTI, INC.
2. CONTRACTOR MAY USE AN ALTERNATIVE ANCHORAGE SYSTEM FOR POST INSTALLED ANCHORS UPON APPROVAL OF THE ENGINEER OF RECORD. PROVIDE HARD COPY SUBMITTAL FOR REVIEW OF ALTERNATE SYSTEM BY THE ENGINEER OF RECORD.

STEEL NOTES

1. PROVIDE ALL STEEL SECTIONS SPECIFIED WITHIN THE STRUCTURAL DOCUMENTS PER SECTION SPECIFICATIONS OF AISC AS FOLLOWS UNLESS NOTED OTHERWISE:

WF BEAMS	ASTM A992
WF COLUMNS	ASTM A992
ANGLES	ASTM A36
RECTANGULAR/SQUARE HSS	ASTM 500 GRADE B
CHANNELS	ASTM A36
BASE PLATE	ASTM A36
STIFFENER PLATE	ASTM A36
ANCHOR BOLTS	ASTM A307 GRADE A
BEAM TO BEAM/COLUMN CONNECTION	ASTM A325

2. ELEVATIONS: REFER TO TOP SURFACE OF FLANGE OF MEMBER (AND CENTERLINE OF PIPES) UNLESS SHOWN OTHERWISE.
3. FRAMING MEMBERS NOTED BY DEPTH AND WEIGHT SHALL CONFORM TO THE AISC SPECIFICATION. FRAMING MEMBERS NOTED BY DEPTH ONLY ARE FULLY SIZED ON ANOTHER PLAN OR ELEVATION.
4. MISCELLANEOUS ANCHOR BOLTS, EXPANSION ANCHORS, ANCHOR RODS, AND FASTENERS NOT INDICATED, BUT REQUIRED FOR ANCHORAGE OF EQUIPMENT AND MATERIALS, SHALL BE PROVIDED (AS RECOMMENDED BY MANUFACTURER OF ITEMS). ANCHORAGE WILL BE SUBJECT TO REVIEW BY ENGINEER.
5. CONTRACTOR SHALL FURNISH AND INSTALL MISCELLANEOUS STEEL ITEMS NOT SHOWN BUT NECESSARY FOR COMPLETE CONSTRUCTION OF PROJECT.
6. BOLT HOLES IN BASEPLATES SHALL BE SIZED AS FOLLOWS UNLESS INDICATED OTHERWISE ON DRAWINGS:

DIAMETER OF BOLT	HOLE DIAMETER
5/8"	7/8"
3/4"	1 1/16"
7/8"	1 3/16"
1" TO 2"	BOLT DIA + 1/2"
OVER 2"	BOLT DIA + 1"

7. WELD SYMBOLS SHOWN MAY NOT DISTINGUISH BETWEEN FIELD AND SHOP WELDING. CONTRACTOR SHALL PROVIDE AS MUCH WELDING AS PRACTICAL IN THE SHOP. CONTRACTOR'S SHOP DRAWINGS SHALL SHOW ALL WELDING AND DISTINGUISH BETWEEN FIELD AND SHOP WELDING.
8. WHERE FILLET WELD SIZES ARE NOT NOTED ON DRAWINGS, PROVIDE MINIMUM SIZE IN ACCORDANCE WITH AWS D1.1, 5.14. ALL OTHER TYPE WELDS NOT SIZED ON DRAWINGS SHALL DEVELOP FULL STRENGTH OF MEMBERS ATTACHED.
9. WELDING WILL BE ALLOWED ONLY AT SCHEDULED TIMES AND IN LOCATIONS CONSISTENT WITH OWNER'S PLANT OPERATIONS.
10. PROVIDE ALL CONNECTIONS WITHIN THESE STRUCTURAL DOCUMENTS WITH E70XX ELECTRODES. PERFORM WELDS AS REQUIRED BY AWS SPECIFICATIONS FOR 'SMAW' PROCESS.

STEEL NOTES (CONT)

11. MINIMUM REQUIRED FILLET WELD THICKNESS AS REQUIRED PER BASE MATERIAL THICKNESS (AISC LRFD THIRTEENTH ED):

MATERIAL THICKNESS (IN.)	MIN FILLET WELD (IN.)
UPTO 1/4	1/8
OVER 1/4 TO 1/2	3/16
OVER 1/2 TO 3/4	1/4
OVER 3/4	5/16

DO NOT WELD ANCHORS UNLESS NOTED OTHERWISE.

12. CONNECTIONS
   A. SHOP CONNECTIONS: EITHER WELD OR USE HIGH-STRENGTH BOLTS, UNLESS TYPE IS SPECIFICALLY SHOWN.
   B. FIELD CONNECTIONS: PROVIDE BOLTS FOR ALL FIELD CONNECTIONS EXCEPT WHERE SHOWN OTHERWISE ON THE DRAWINGS.
      1. USE OF HIGH-STRENGTH BOLTS: CONFORM TO "SPECIFICATION FOR STRUCTURAL JOINTS USING ASTM A325 OR A490 BOLTS," AS APPROVED BY RESEARCH COUNCIL ON STRUCTURAL CONNECTIONS OF THE ENGINEERING FOUNDATION, AND PUBLISHED BY AISC.

   NONSHRINK GROUT:
   A. USE "MASTER BUILDERS" MASTERFLOW 928 GROUT, OR EQUAL. MINIMUM STRENGTH 5000 PSI AT 28 DAYS.

   STAINLESS STEEL ANCHOR RODS:
   A. TYPE: THREADED ASTM F593, TYPE 304, F593C OR F593D, ANNEALED ROD ANCHORED IN CONCRETE WITH 2-COMPONENT BLEND INJECTION ADHESIVE.
   B. USE: WHERE INDICATED ON DRAWINGS.
   C. ACCURATELY POSITION ANCHOR RODS TO ASSURE CORRECT VERTICAL AND HORIZONTAL LOCATION TO MATCH STEEL OR EQUIPMENT BOLT PATTERN.
   D. INSTALL IN STRICT ACCORDANCE WITH MANUFACTURER'S DIRECTIONS.
   E. WORK SHALL BE PERFORMED USING MANUFACTURER'S STANDARD EQUIPMENT INCLUDING ADHESIVE CARTRIDGES, DISPENSING GUNS, MIXER TUBES AND EXTENSIONS, BRUSH, AND AIR NOZZLE FOR COMPRESSED AIR CLEANING OF HOLES. CONTRACTOR SHALL POSSESS ALL EQUIPMENT AT SITE PRIOR TO START OF INSTALLATION AND WORKERS SHALL DEMONSTRATE KNOWLEDGE OF PROCEDURE FOR INSTALLING ANCHORS PRIOR TO INSTALLATION.
   F. WHERE HOLES ARE WITHIN 4" OF EDGE OF CONCRETE, HOLE SHALL BE CORE DRILLED.
   G. CONTRACTOR SHALL INSPECT EXISTING CONCRETE AT LOCATIONS OF INSTALLATION OF ANCHOR RODS FOR SOUNDNESS. EVIDENCE OF DETERIORATED OR WEAK CONCRETE DETECTED FROM DRILLING OPERATION OR FROM INSPECTION SHALL BE REPORTED TO ENGINEER.
   H. INSTALLATION INSTRUCTIONS FOR TOP PLATES WITH VERTICAL ANCHOR RODS:
      1. USE TEMPLATE TO MARK HOLES ON CONCRETE. DRILL PILOT HOLE WITH SMALL BIT AND THEN DRILL HOLE TO PROPER SIZE AND DEPTH FOR ROD PER MANUFACTURERS INSTRUCTIONS.
      2. POSITION ASSEMBLY OVER HOLES AND TEMPORARILY SUPPORT. TOP PLATES MAY BE TEMPORARILY SUPPORTED BY USE OF EXPANSION ANCHORS WITH OVERSIZED HOLES IN PLATE FOR HORIZONTAL ADJUSTMENT. INSERT EPOXY CAPSULE IN HOLE AND INSTALL ANCHOR ROD THRU PLATE INTO POSITION.

13. STAINLESS STEEL EXPANSION ANCHORS:
   A. SIZE AND LOCATIONS: AS SHOWN OR REQUIRED FOR EQUIPMENT INSTALLATION.
   B. MANUFACTURER: "KWIK-BOLT III", BY HILTI; OR EQUAL

14. SHOP PAINTING
   A. SURFACE PREPARATION: REMOVE OIL, GREASE, DIRT, RUST, LOOSE MILL SCALE, AND OTHER FOREIGN ELEMENTS BY "COMMERCIAL BLAST CLEANING" IN ACCORDANCE WITH SSPC-SP6.
   B. SHOP PRIMER: APPLY ONE SHOP COAT OF "90-96 TNEMEC-ZINC," BY TNEMEC CO., INC. OR EQUAL; APPLY IN ACCORDANCE WITH MANUFACTURER'S DIRECTIONS INCLUDING RECOMMENDED COVERAGE.
      1. OMIT SHOP PRIME COAT FROM SURFACES SUBJECT TO FIELD WELDING. DO NOT PAINT STAINLESS STEEL SURFACES.
      2. OMIT PAINT FROM CONTACT SURFACES OF SLIP-CRITICAL CONNECTIONS UNLESS PAINT HAS BEEN QUALIFIED BY TEST IN ACCORDANCE WITH "TEST METHOD TO DETERMINE THE SLIP COEFFICIENT FOR COATINGS USED IN BOLTED JOINTS" AS ADOPTED BY THE AISC RESEARCH COUNCIL ON STRUCTURAL CONNECTIONS. MANUFACTURER'S CERTIFICATION SHALL INCLUDE CERTIFIED COPY OF TEST REPORT.
      3. SUPPLY ONE FIELD COAT OF PRIMER TO CLEANED SURFACES OF BOLTS, NEW WELDS, AND ABRASIONS TO SHOP COAT AFTER ERECTION.

15. FIELD PAINTING
   A. PREPARE SURFACES TO BE FINISHED IN CONFORMANCE TO RECOMMENDATIONS OF FINISH MANUFACTURER.
   B. FINISH COAT: APPLY ONE COAT OF "66-HI-BUILD EPOXOLINE" BY TNEMEC CO., INC OR EQUAL. APPLY IN ACCORDANCE WITH MANUFACTURER'S DIRECTIONS INCLUDING RECOMMENDED COVERAGE. COLOR: BJ45-LIGHT GRAY BY TNEMEC CO.

16. SUBMITTALS
   A. SHOP DRAWINGS FOR ALL STEEL FABRICATION.
   B. LIST OF MANUFACTURED MATERIALS PROPOSED, IDENTIFYING MANUFACTURER AND TYPE.

STATEMENT OF SPECIAL INSPECTIONS

1. SPECIAL INSPECTION AS PER IBC SECTION 1704 SHALL BE PROVIDED UNLESS WAIVED BY THE BUILDING OFFICIAL. AN INDEPENDENT AGENCY IS TO BE EMPLOYED BY THE OWNER TO PROVIDE REUIRED INSPECTIONS LISTED BELOW. IT IS THE RESPONSIBILITY OF THE CONTRACTOR TO COORDINATE AND SCHEDULE WITH THE SPECIAL INSPECTOR THROUGH THE CONSTRUCTION PROCESS THE APPROPRIATE TIMES FOR THESE INSPECTIONS TO OCCUR. THE FOLLOWING ARE REQUIRED INSPECTIONS TO BE PROVIDED:
   A. STRUCTURAL STEEL – PER SECTION 1704.3
      1.IDENTIFICATION OF STEEL WITH MILL REPORTS – (PERIODIC)
      2.SAMPLING AND TESTING – (PERIODIC)
   B. WELDING – PER SECTION 1704.3.1
      1.ALL FIELD WELDING – (PERIODIC)
      2.SHOP WELDING MUST BE PERFORMED BY A SHOP WITH AWS CERTIFICATION
   C. STEEL FABRICATION
      1.FABRICATOR MUST SUBMIT CERTIFICATE OF COMPLIANCE
   D. BOLTING
      1.HIGH STRENGTH BOLTED CONNECTION USING A325, AND A307 BOLTS ALL CONDITIONS PROVIDED AS SNUG TIGHT, CONTACT OF ALL PLYS – (PERIODIC)
2. STRUCTURAL OBSERVATIONS:
   A. THE CONTRACTOR IS TO NOTIFY THE ENGINEER A MINIMUM OF 3 DAYS PRIOR TO THE PHASES OF CONSTRUCTION LISTED BELOW TO ALLOW FOR SCHEDULING OF SITE OBSERVATION BY THE ENGINEER OF RECORD.
      1.INITIAL PLACEMENT OF STRUCTURAL STEEL MEMBERS
      2.FINAL PLACEMENT OF STRUCTURAL STEEL MEMBERS

ABBREVIATIONS

AB	ANCHOR BOLT(S)	MAT	MATERIAL
ALT	ALTERNATE	MAX	MAXIMUM
APPROX	APPROXIMATE	MECH	MECHANICAL
		MFR	MANUFACTURER
B-B	BACK TO BACK	MIN	MINIMUM
BL	BASELINE		
BLDG	BUILDING	NIC	NOT IN CONTRACT
BOT	BOTTOM	NTS	NOT TO SCALE
BRG	BEARING		
		OPNG	OPENING
C	CHANNEL	OPP	OPPOSITE
CL	CENTER LINE		
CLR	CLEAR	PL	PLATE
CNTRL	CONTROL	PSF	POUNDS PER SQUARE FOOT
COL	COLUMN	PSI	POUNDS PER SQUARE INCH
CONC	CONCRETE		
CONT	CONTINUOUS	R	RADIUS
CONTR	CONTRACTOR	RECT	RECTANGLE
CONST	CONSTRUCTION	REF	REFERENCE
CTR	CENTER	REINF	REINFORCING
		REQD	REQUIRED
DET	DETAIL	RT	RIGHT
DIA	DIAMETER		
DIST	DISTANCE	SC	SLIP-CRITICAL
DN	DOWN	SHT	SHEET
DWG	DRAWING	SIM	SIMILAR
		SPEC	SPECIFICTION(S)
EA	EACH	SQ	SQUARE
E-E	EDGE TO EDGE	STD	STANDARD
EF	EACH FACE	STIFF	STIFFENER
EJ	EXPANSION JOINT	STL	STEEL
EL	ELEVATION	STRL	STRUCTURAL
EMBED	EMBEDMENT		
EQL	EQUAL	T&B	TOP AND BOTTOM
EQPT	EQUIPMENT	THK	THICK(NESS)
EST	ESTIMATE	TOB	TOP OF BOLT, BEAM
EW	EACH WAY	TOC	TOP OF CONCRETE
EXT	EXTERIOR	TOS	TOP OF STEEL
EXST	EXISTING	TOW	TOP OF WALL
		TYP	TYPICAL
FD	FLOOR DRAIN		
FLR	FLOOR	UNO	UNLESS NOTED OTHERWISE
FT	FOOT, FEET		
		VERT	VERTICAL
GA	GAUGE		
		W/	WITH
HORIZ	HORIZONTAL	WF	WIDE FLANGE
HSS	HOLLOW STRUCTURAL SECTION	WT	WEIGHT
IN	INCH(ES)		
JT	JOINT		
LB	POUND		
LLH	LONG LEG HORIZONTAL		
LLV	LONG LEG VERTICAL		
LT	LEFT		

GENERAL NOTES

1. DIMENSIONS AND/OR ELEVATIONS MARKED THUS (‡) ARE ASSUMED AND SHALL BE VARIED BY THE CONTRACTOR TO SUIT EQUIPMENT FURNISHED. FINAL DIMENSIONS ARE SUBJECT TO THE REVIEW OF THE ENGINEER AND/OR OWNER.
2. DIMENSIONS AND/OR ELEVATIONS MARKED THUS (±) MUST BE VERIFIED IN THE FIELD BY THE CONTRACTOR.
3. FOR PIPE SUPPORT LOCATIONS, SEE MECHANICAL DRAWINGS.

SPECIAL INSPECTION AND TESTING (IBC 1704)

Indicate required Special inspections for project by checking the appropriate boxes:

FABRICATORS (IBC1704.2)

☐ Approved Fabricator	Fabricators Name:
☐ Unapproved Fabricator	Fabricators Name:

In-plant inspections
☐ Steel Construction ☐ Welding ☐ Details

STEEL (IBC1704.3)

Item			Reference/Comments
High Strength Bolting(1704.3.3)	☐ Continuous	☐ Periodic	
WELDING (1704.3.1)			
Details (1704.3.2)			
Complete & partial penetration groove welds	☐ Continuous	☐ Periodic	
Multipass fillet welds	☐ Continuous	☐ Periodic	
Single-pass fillet welds > 5/16"	☐ Continuous	☐ Periodic	
Single-pass fillet welds ≤ 5/16"	☐ Continuous	☐ Periodic	
Floor & roof deck welds	☐ Continuous	☐ Periodic	
REINFORCEMENT STEEL	☐ Continuous		
Verification of weldability	☐ Continuous	☐ Periodic	
Shear wall and shear reinforcement	☐ Continuous	☐ Periodic	
Other reinforcement	☐ Continuous	☐ Periodic	
Steel frame joint details	☐ Continuous	☐ Periodic	

CONCRETE CONSTRUCTION (IBC1704.4)

Item			Reference/Comments
Materials (1704.4.1)	☐ Continuous	☐ Periodic	
Steel placement	☐ Continuous	☐ Periodic	
Steel welding	☐ Continuous	☐ Periodic	
Bolts prior & during placement	☐ Continuous	☐ Periodic	
Use of required design mix	☐ Continuous	☐ Periodic	
Concrete sampling for strength test, slump, air content, and temperature of concrete	☐ Continuous	☐ Periodic	
Concrete & shotcrete placement	☐ Continuous	☐ Periodic	
Curing temperature and techniques	☐ Continuous	☐ Periodic	
Pre-stressed concrete	☐ Continuous	☐ Periodic	
Pre-cast concrete	☐ Continuous	☐ Periodic	
Posttentsioned concrete	☐ Continuous	☐ Periodic	
Form work	☐ Continuous	☐ Periodic	

MASONRY CONSTRUCTION (IBC1704.5)

Item	Reference/Comments
As masonry construction begins:	

PROFESSIONAL STRUCTURAL ENGINEER
No. 295611
BRYAN L. BAGGALEY
STATE OF UTAH
3-23-10

AT FULL SIZE
0 1 2 3 IN
0 1 2 3 4 5 6 7 8 cm

NO.	REVISIONS	DWN	APVD	APVD	DATE
0	ISSUED FOR BID	JK	BB	PB	3/4/10

Stanley Consultants INC.
383 West Vine Street, Suite 400, Murray City, Utah 84123
www.stanleygroup.com

GUNTHER TRADES 5TH FLOOR HVAC IMPROVEMENTS
UTAH VALLEY UNIVERSITY
OREM, UTAH

STRUCTURAL LEGEND AND NOTES

DESIGNED B. BAGGALEY
DRAWN J. KIM
CHECKED B. BAGGALEY
APPROVED P. BLACKHAM
APPROVED
DATE 3/4/10

SCALE: AS NOTED
NO. SG001
REV. 0

© STANLEY CONSULTANTS

$$$$$$$$$$$$$$$$FILENAME$$$$$$$$$$$$$$$$
SCI PROJECT NO:
CADD E1-83

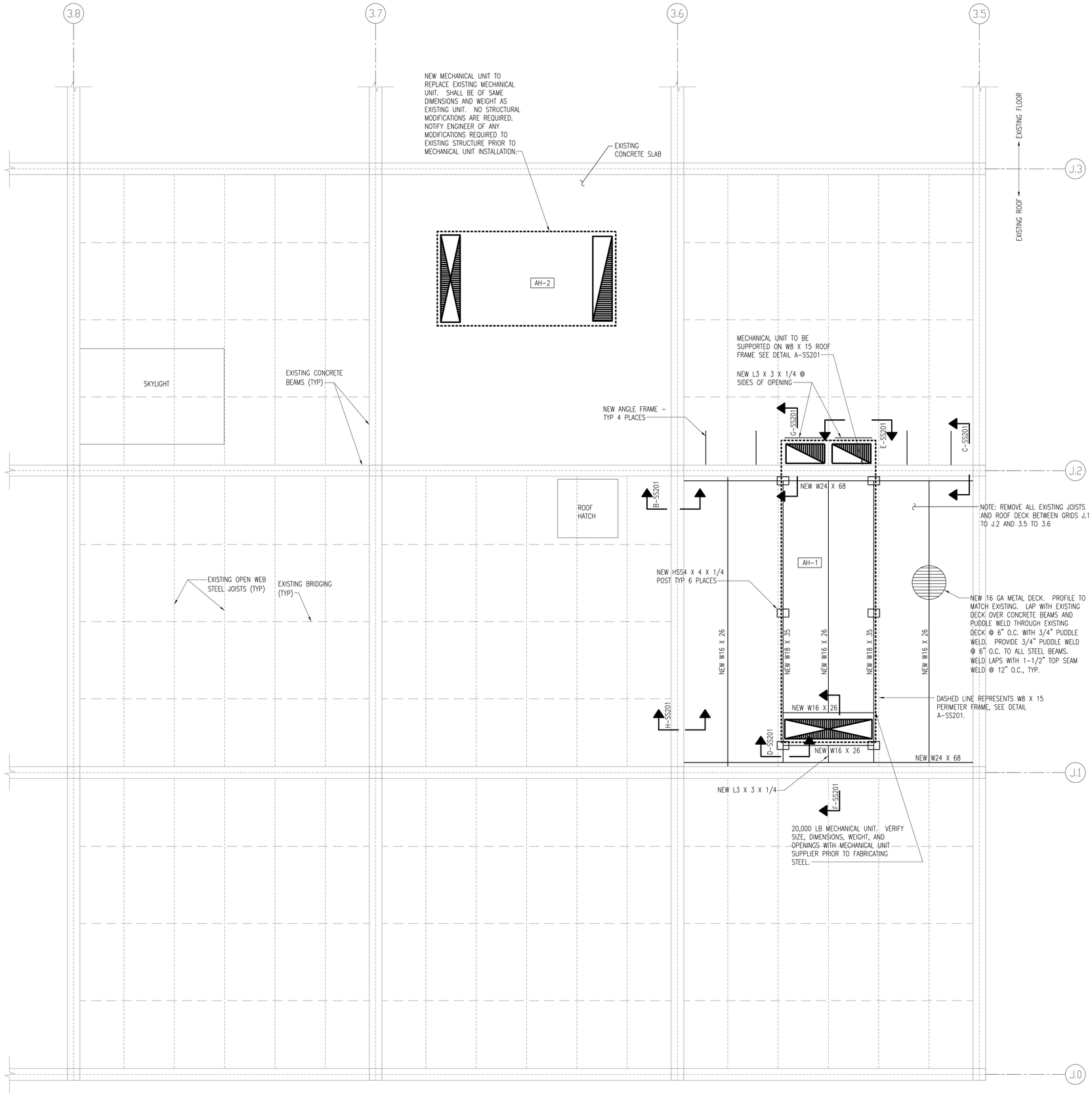

5TH LEVEL ROOF STRUCTURAL PLAN

SCALE: 1/4" = 1'-0"

NORTH

GENERAL NOTES:

1. REMOVE AND REINSTALL FIRE SPRINKLERS AS REQUIRED. MAIN LINE MAY BE PROTECTED IN PLACE AT CONTRACTORS OPTION.
2. REMOVE AND REINSTALL LIGHTING FIXTURES AND CONDUITS.
3. EXISTING LARGE CONDUITS MAY BE EITHER REMOVED AND REPLACED OR SHORE AND PROTECT IN PLACE.
4. REMOVE AND REPLACE/PATCH ROOFING AND INSULATION AS REQUIRED TO MATCH EXISTING.

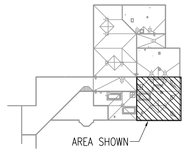

KEY PLAN

SCALE: N.T.S.

NORTH

AT FULL SIZE

0 1 2 3 IN

0 1 2 3 4 5 6 7 8 cm

PROFESSIONAL STRUCTURAL ENGINEER No. 295611 BRYAN L. BAGGALEY STATE OF UTAH

3-23-10

NO.	REVISIONS	DWN	APVD	APVD	DATE
0	ISSUED FOR BID	JK	BB	PB	3/4/10

Stanley Consultants INC.

383 West Vine Street, Suite 400, Murray City, Utah 84123
www.stanleygroup.com

GUNTHER TRADES 5TH FLOOR HVAC IMPROVEMENTS
UTAH VALLEY UNIVERSITY
OREM, UTAH

5TH FLOOR ROOF
STRUCTURAL PLAN

DESIGNED B. BAGGALEY
DRAWN J. KIM
CHECKED B. BAGGALEY
APPROVED P. BLACKHAM
APPROVED
DATE 3/4/10

SCALE: AS NOTED

NO. SS121

REV. 0

© STANLEY CONSULTANTS

CADD: C1-R3

SCI PROJECT NO:

$$$$$$$$$$$$FILENAME$$$$$$$$$$$$

GENERAL NOTES:

1. REMOVE AND REINSTALL FIRE SPRINKLERS AS REQUIRED. MAIN LINE MAY BE PROTECTED IN PLACE AT CONTRACTORS OPTION.
2. REMOVE AND REINSTALL LIGHTING FIXTURES AND CONDUITS.
3. EXISTING LARGE CONDUITS MAY BE EITHER REMOVE AND REPLACED OR SHORE AND PROTECT IN PLACED.
4. REMOVE AND REPLACE/PATCH ROOFING AND INSULATION AS REQUIRED TO MATCH EXISTING.

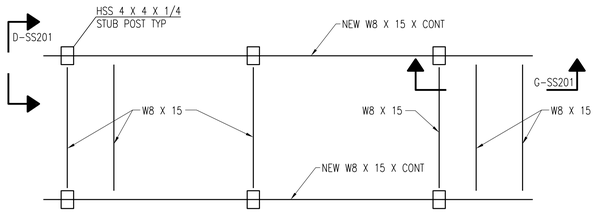

W8 X 15 ROOF FRAME DETAIL A-SS201 / SS121

SCALE: N.T.S.

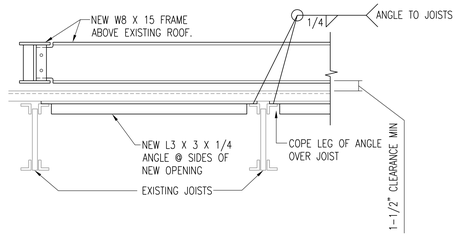

ANGLE SUPPORT @ DECK OPENING E-SS201 / SS121

SCALE: N.T.S.

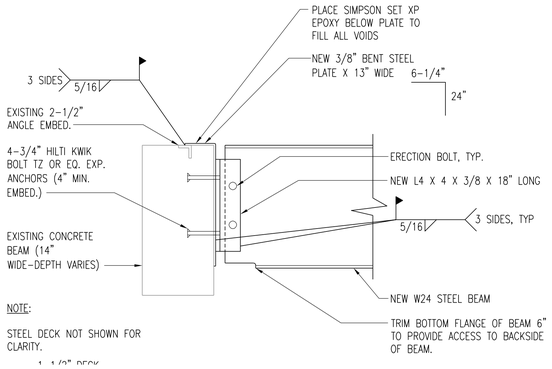

W24 X 68 CONNECTION TO CONCRETE BM DETAIL B-SS201 / SS121

SCALE: N.T.S.

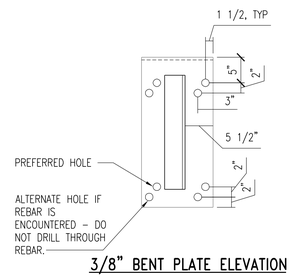

3/8" BENT PLATE ELEVATION

SCALE: N.T.S.

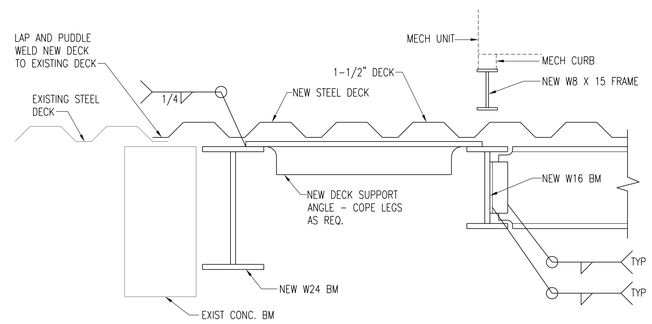

ANGLE SUPPORT @ DECK F-SS201 / SS121

SCALE: N.T.S.

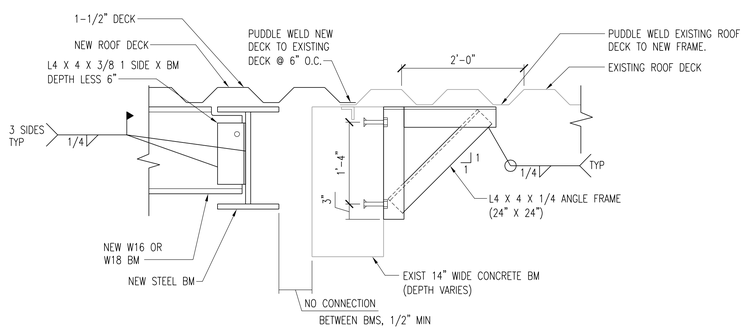

ANGLE FRAME BRACE DETAIL C-SS201 / SS121

SCALE: N.T.S.

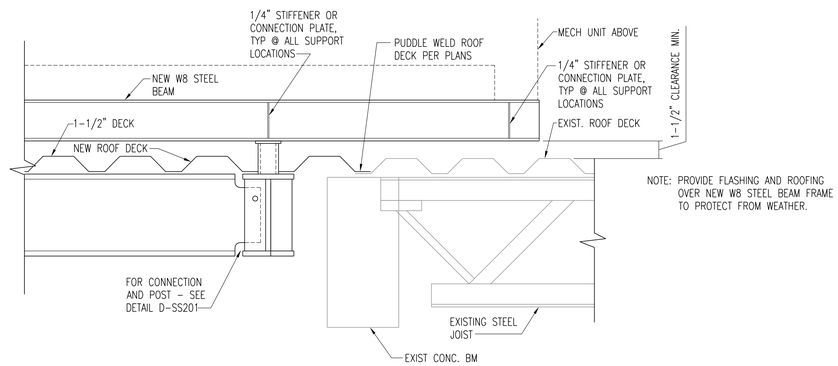

ANGLE SUPPORT @ DECK G-SS201 / SS121

SCALE: N.T.S.

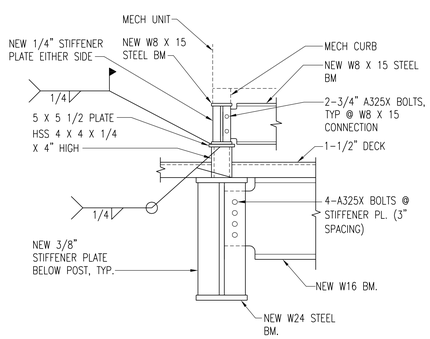

W8 X 15 FRAME POST TO STRUCTURE D-SS201 / SS121, SS201

SCALE: N.T.S.

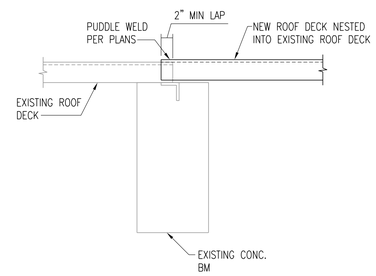

ROOF DECK CONNECTION H-SS201 / SS121

SCALE: N.T.S.

PROFESSIONAL STRUCTURAL ENGINEER
No. 295611
BRYAN L. BAGGALEY
STATE OF UTAH

3-23-10

NO.	REVISIONS	DWN	APVD	APVD	DATE
0	ISSUED FOR BID	JK	BB	PB	3/4/10

Stanley Consultants INC.

383 West Vine Street, Suite 400, Murray City, Utah 84123
www.stanleygroup.com

GUNTHER TRADES 5TH FLOOR HVAC IMPROVEMENTS
UTAH VALLEY UNIVERSITY
OREM, UTAH

STRUCTURAL
DETAILS

DESIGNED B. BAGGALEY
DRAWN J. KIM
CHECKED B. BAGGALEY
APPROVED P. BLACKHAM
APPROVED
DATE 3/4/10

SCALE: AS NOTED

NO. SS201 REV. 0

AT FULL SIZE
0 1 2 3 IN
0 1 2 3 4 5 6 7 8 cm

© STANLEY CONSULTANTS

CADD E1-R3

SCI PROJECT NO.

GENERAL

- NEW WORK
- EXISTING
- FLOW ARROW
- PITCH DOWN IN DIRECTION OF FLOW
- X X X X X X DEMO MECHANICAL COMPONENTS
- HATCHED AREA NOT IN CONTRACT

TIE POINT DESIGNATORS

YYY–TPXX

TIE POINT INTO AN EXISTING SYSTEM
YYY = P&ID DRAWING NUMBER
XX = TIE POINT NUMBER

PLUMBING LINE TYPES

- COLD WATER
- HOT WATER
- DOMESTIC HOT WATER CIRCULATING

VALVES

- GATE
- BALL
- BUTTERFLY
- BALANCING
- F — THREE–WAY (WITH TYP FAIL POSITION)
- F, F — FOUR–WAY (WITH TYP FAIL POSITION)
- CONTROL VALVE ASSEMBLY
- SOLENOID AUTOMATED VALVE
- DPS — DIFFERENTIAL PRESSURE SENSOR/SWITCH
- DPT — DIFFERENTIAL PRESSURE TRANSMITTER

PLUMBING/PIPING FITTINGS

- BLIND FLANGE
- THREADED CAP
- CONCENTRIC REDUCER
- ECCENTRIC REDUCER
- ROOF DRAIN
- FLEX CONNECTION
- 90° BEND PIPE TURN DOWN
- 90° BEND PIPE TURN UP
- 45° BEND
- UNION
- PIPE GUIDE
- CENTRIFUGAL PUMP
- INLINE PUMP

HVAC

- 18 X 14 — DUCT–(INSIDE CLEAR DIMENSIONS) FIRST FIGURE = SIDE SHOWN SECOND FIGURE = SIDE NOT SHOWN
- 12 ø — ROUND DUCT
- 12/12 — FLAT OVAL DUCT
- DIRECTION OF FLOW IN DUCT
- DOUBLE THICKNESS, AIRFOIL TURNING VANES IN ELBOW
- SQUARE ELBOW WITH TURNING VANES
- TEE WITH TURNING VANES
- FLEXIBLE DUCT
- VOLUME DAMPER (MANUAL)
- FLEXIBLE DUCT CONNECTION
- D — INCLINED DROP IN ELEVATION OF DUCT WITH RESPECT TO AIR FLOW
- R — INCLINED RISE IN ELEVATION OF DUCT WITH RESPECT TO AIR FLOW
- M — MOTORIZED DAMPER–PARALLEL OR OPPOSED BLADE–PLAN VIEW
- BACKDRAFT DAMPER–PLAN VIEW
- BACKDRAFT DAMPER–SECTION VIEW
- REHEAT OR PREHEAT COIL IN DUCT
- AD — ACCESS DOOR IN DUCT SIDE OR BOTTOM
- RECTANGULAR RETURN DUCT TURNING DOWN
- RECTANGULAR RETURN DUCT TURNING UP
- RECTANGULAR SUPPLY DUCT TURNING DOWN
- RECTANGULAR SUPPLY DUCT TURNING UP
- RETURN OR EXHAUST DUCT TAP FROM BOTTOM OF DUCT
- RETURN, SUPPLY, OR EXHAUST BRANCH DUCT IN SIDE OF DUCT W/VOLUME DAMPER
- ROUND DUCT TURNING DOWN
- ROUND DUCT TURNING UP
- SPLITTER DAMPER
- CEILING DIFFUSER IDENTIFYING # THROWS
- 18 X 18 / 18 ø — SQUARE TO ROUND TRANSITION
- VOLUME EXTRACTOR
- CD–1 350 CFM — SUPPLY OR VENTILATING DIFFUSER W/CFM AND FIXTURE TYPE SHOWN
- RG–1, EG–1 350 CFM — RETURN OR EXHAUST GRILLE W/CFM AND FIXTURE TYPE SHOWN
- SLOT DIFFUSER
- EXHAUST FAN
- FAN
- INLINE EXHAUST FAN
- SUPPLY/VENTILATING AIR
- RETURN/EXHAUST AIR
- SD — SMOKE DAMPER
- AG# — EQUIPMENT TAG NUMBER
- CFM — CFM VALUE
- X — FIRE DAMPER (NUMBER INDICATES FIRE RATING OTHER THAN 1 HOUR)
- SMOKE DAMPER
- X — FIRE & SMOKE DAMPER (NUMBER INDICATES FIRE RATING OTHER THAN 1 HOUR)
- UNIT HEATER
- H — H = HUMIDISTAT
- T — PNEUMATIC
- T — T = THERMOSTAT
- T — DIGITAL
- RS — REFRIGERANT SENSOR

GENERAL NOTES

ALL SYMBOLS AND ABBREVIATIONS SHOWN ON THIS LEGEND MAY NOT APPEAR ON THIS SET OF DRAWINGS.

REGISTERED PROFESSIONAL ENGINEER No. 349630 DANIEL J. ROLLINS STATE OF UTAH
3/23/10

NO.	REVISIONS	DWN	APVD	APVD	DATE
0	ISSUED FOR BID	JK	DR	LV	3/4/10

Stanley Consultants INC.
383 West Vine Street, Suite 400, Murray City, Utah 84123
www.stanleygroup.com

GUNTHER TRADES 5TH FLOOR HVAC IMPROVEMENTS
UTAH VALLEY UNIVERSITY
OREM, UTAH

MECHANICAL SYMBOLS LEGEND AND NOTES

AT FULL SIZE
0 1 2 3 IN
0 1 2 3 4 5 6 7 8 cm

DESIGNED D. ROLLINS
DRAWN J. KIM
CHECKED D. ROLLINS
APPROVED D. ROLLINS
APPROVED
DATE 3/4/10

SCALE: AS NOTED
NO. MG001
REV. 0

© STANLEY CONSULTANTS

CADD E1-R3
PROJECT NO.
$$$$$$$$$$$$$$FILENAME$$$$$$$$$$$$$$

KEY NOTES: ◯

1. EXISTING DUCTWORK, GRILLES, AND REGISTERS TO REMAIN IN ADMIN. OFFICES.
2. EXISTING SUPPLY MAIN DUAL DUCTS TO REMAIN IN SERVICE FOR LEVEL ABOVE.
3. EXISTING DUAL DUCT TERMINAL BOX TO REMAIN TO SERVE EXISTING ZONE ABOVE.
4. 26/26 EXHAUST RISER UP TO NEW EF-1 ON ROOF. SEE 6TH FLOOR ROOF MECHANICAL PLAN.
5. REUSE EXISTING LOUVER.
6. RETURN AIR MAIN DUCT.
7. OFFSET DUCTWORK AS NEEDED (TYPICAL).
8. REFER TO MH111 FOR LOCATION OF AH-1 TO BE INSTALLED.

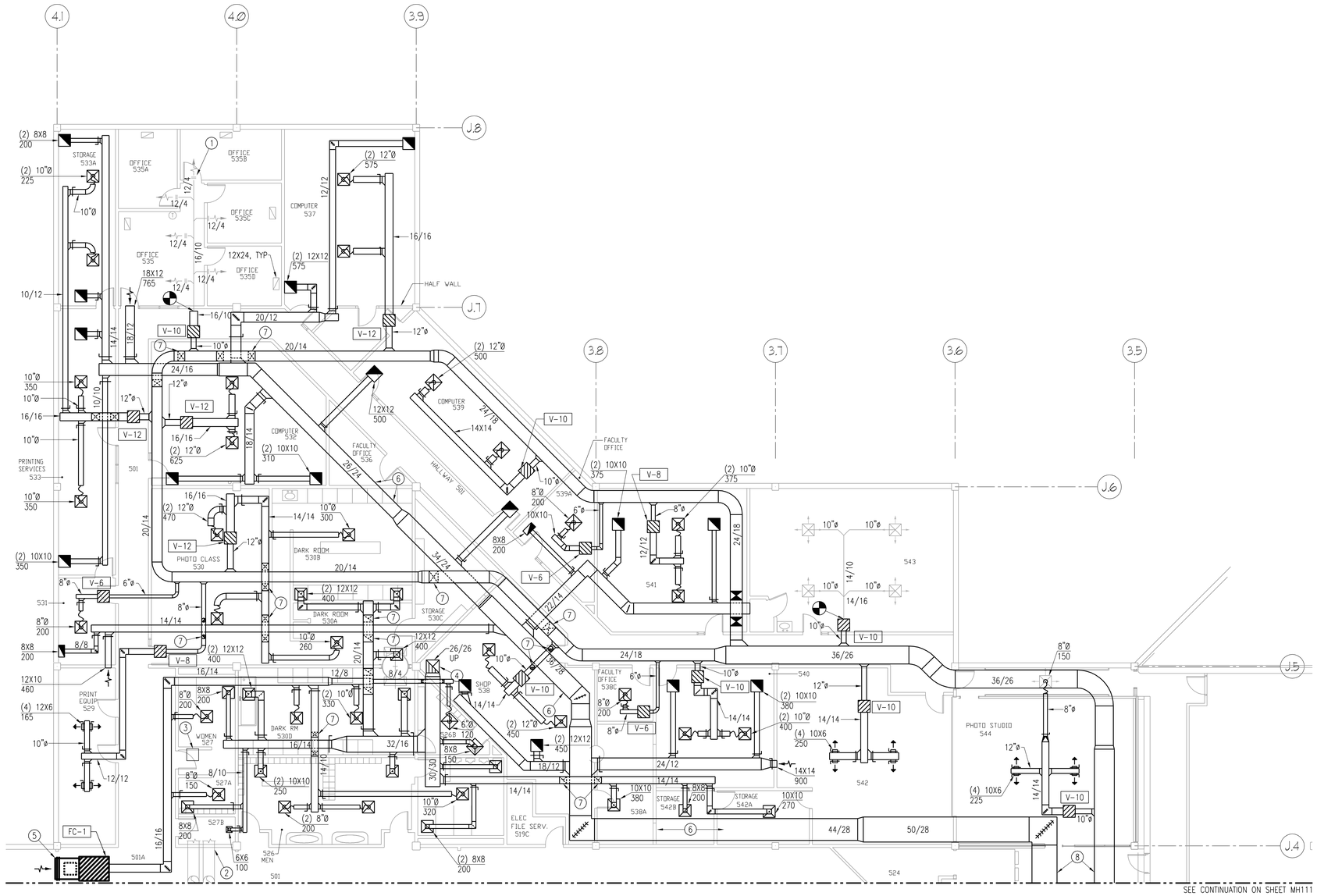

5TH FLOOR AREA A MECHANICAL PLAN

SCALE: 1/8" = 1'-0"

NORTH

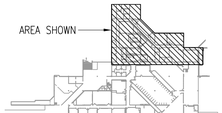

KEY PLAN

SCALE: N.T.S.

NORTH

AT FULL SIZE

0 1 2 3 IN

0 1 2 3 4 5 6 7 8 cm

REGISTERED PROFESSIONAL ENGINEER No. 349630 DANIEL J. ROLLINS STATE OF UTAH

3/23/10

NO.	REVISIONS	DWN	APVD	APVD	DATE
0	ISSUED FOR BID	JK	DR	LV	3/4/10

Stanley Consultants INC.

383 West Vine Street, Suite 400, Murray City, Utah 84123
www.stanleygroup.com

GUNTHER TRADES 5TH FLOOR HVAC IMPROVEMENTS
UTAH VALLEY UNIVERSITY
OREM, UTAH

5TH FLOOR AREA A
MECHANICAL PLAN

DESIGNED D. ROLLINS
DRAWN J. KIM
CHECKED D. ROLLINS
APPROVED D. ROLLINS
APPROVED
DATE 3/4/10

SCALE: AS NOTED

NO. MH110 REV. 0

SCI PROJECT NO.

CADD: E1-B3

© STANLEY CONSULTANTS

KEY NOTES: ○

1. 104/23 SUPPLY AIR UP THRU ROOF.
2. 46/25 RETURN AIR UP THRU ROOF, TYPICAL OF 2.
3. ALL WORK IN ROOM 521 SHALL BE AN ADD ALTERNATE.

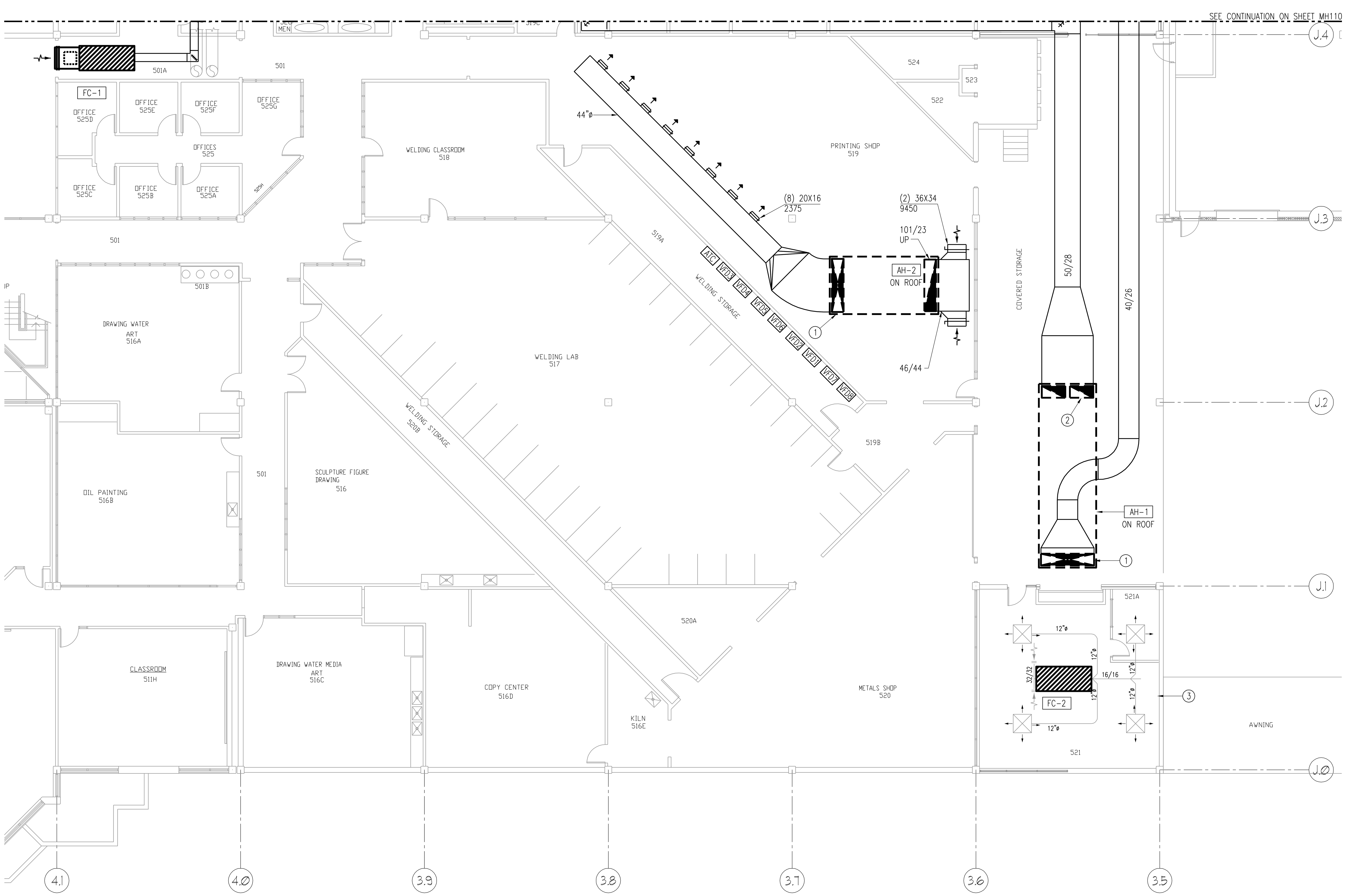

5TH FLOOR AREA B MECHANICAL PLAN

SCALE: 1/8" = 1'-0"

NORTH

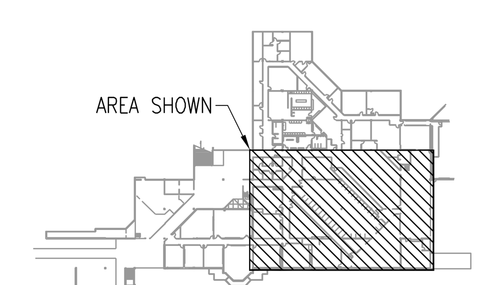

KEY PLAN

SCALE: N.T.S.

NORTH

AT FULL SIZE

0 1 2 3 IN

0 1 2 3 4 5 6 7 8 cm

REGISTERED PROFESSIONAL ENGINEER
No. 349630
DANIEL J. ROLLINS
STATE OF UTAH
3/23/10

NO.	REVISIONS	DWN	APVD	APVD	DATE
0	ISSUED FOR BID	JK	DR	LV	3/4/10

Stanley Consultants INC.

383 West Vine Street, Suite 400, Murray City, Utah 84123
www.stanleygroup.com

GUNTHER TRADES 5TH FLOOR HVAC IMPROVEMENTS
UTAH VALLEY UNIVERSITY
OREM, UTAH

5TH FLOOR AREA B
MECHANICAL PLAN

DESIGNED	D. ROLLINS	SCALE: AS NOTED	
DRAWN	J. KIM	NO.	REV.
CHECKED	D. ROLLINS	MH111	0
APPROVED	D. ROLLINS		
APPROVED			
DATE	3/4/10		

13© STANLEY CONSULTANTS

KEY NOTES: ◯

1. EXISTING ROOF HATCH TO REMAIN.
2. NEW AH-2 HEAT RECOVERY UNIT TO REPLACE EXISTING HR-N.

SEE CONTINUATION ON SHEET MH130

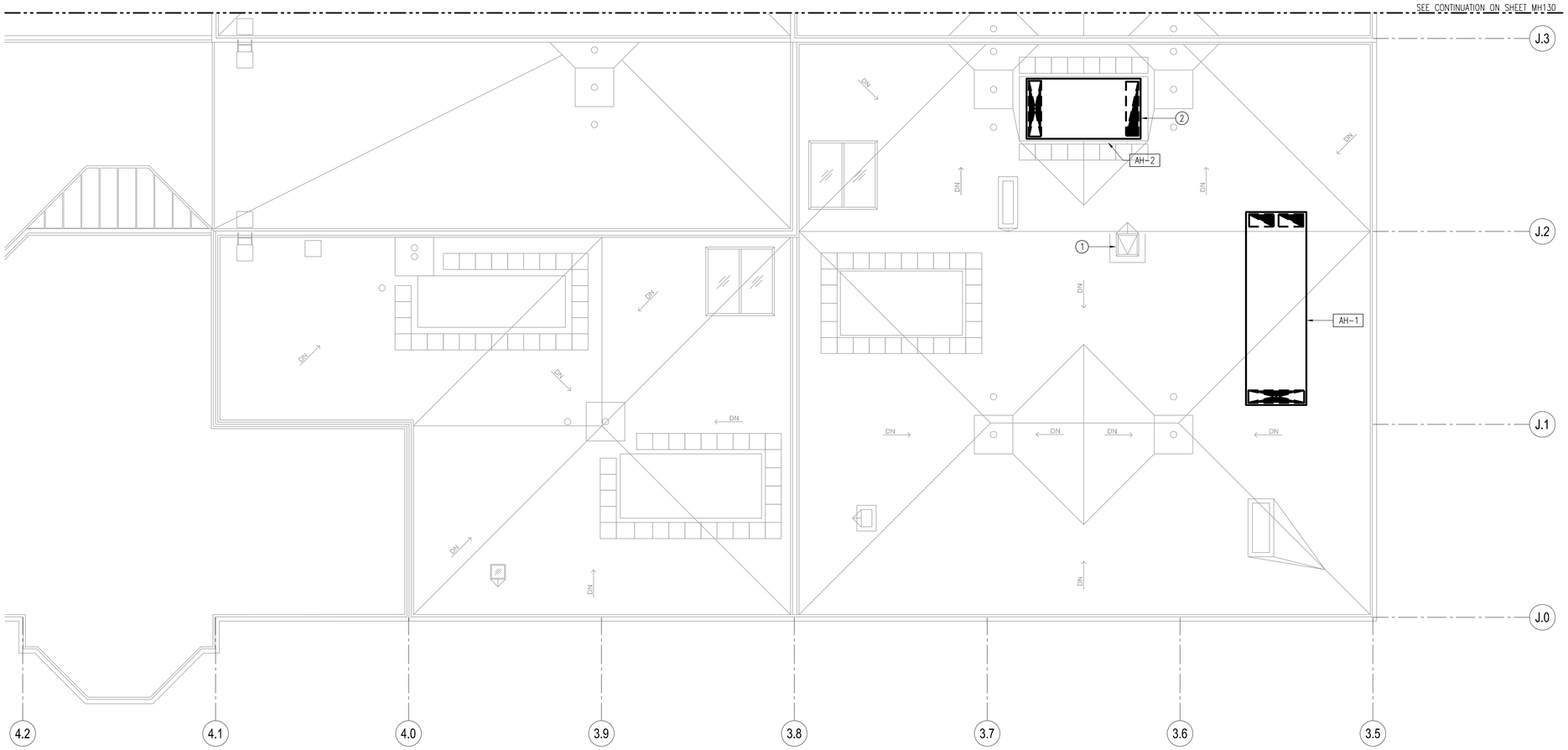

5TH FLOOR AREA B ROOF MECHANICAL PLAN

SCALE: 1/8" = 1'-0"

NORTH

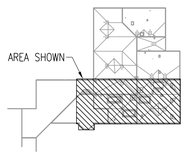

KEY PLAN

SCALE: N.T.S.

NORTH

AT FULL SIZE

0 1 2 3 IN

0 1 2 3 4 5 6 7 8 cm

REGISTERED PROFESSIONAL ENGINEER
No. 349630
DANIEL J. ROLLINS
STATE OF UTAH
3/23/10

NO.	REVISIONS	DWN	APVD	APVD	DATE
0	ISSUED FOR BID	JK	DR	LV	3/4/10

Stanley Consultants INC.

383 West Vine Street, Suite 400, Murray City, Utah 84123
www.stanleygroup.com

GUNTHER TRADES 5TH FLOOR HVAC IMPROVEMENTS
UTAH VALLEY UNIVERSITY
OREM, UTAH

5TH FLOOR AREA B ROOF
MECHANICAL PLAN

DESIGNED D. ROLLINS
DRAWN J. KIM
CHECKED D. ROLLINS
APPROVED D. ROLLINS
APPROVED
DATE 3/4/10

SCALE: AS NOTED

NO. MH121 REV. 0

PROJECT NO.

CADD E1-R3

13 © STANLEY CONSULTANTS

KEY NOTES: ○

1. DEMO EXISTING EXHAUST FAN. REPLACE WITH NEW EF-1 AS LISTED IN SCHEDULE. CONNECT TO 26/26 RISER DUCT THROUGH ROOF.

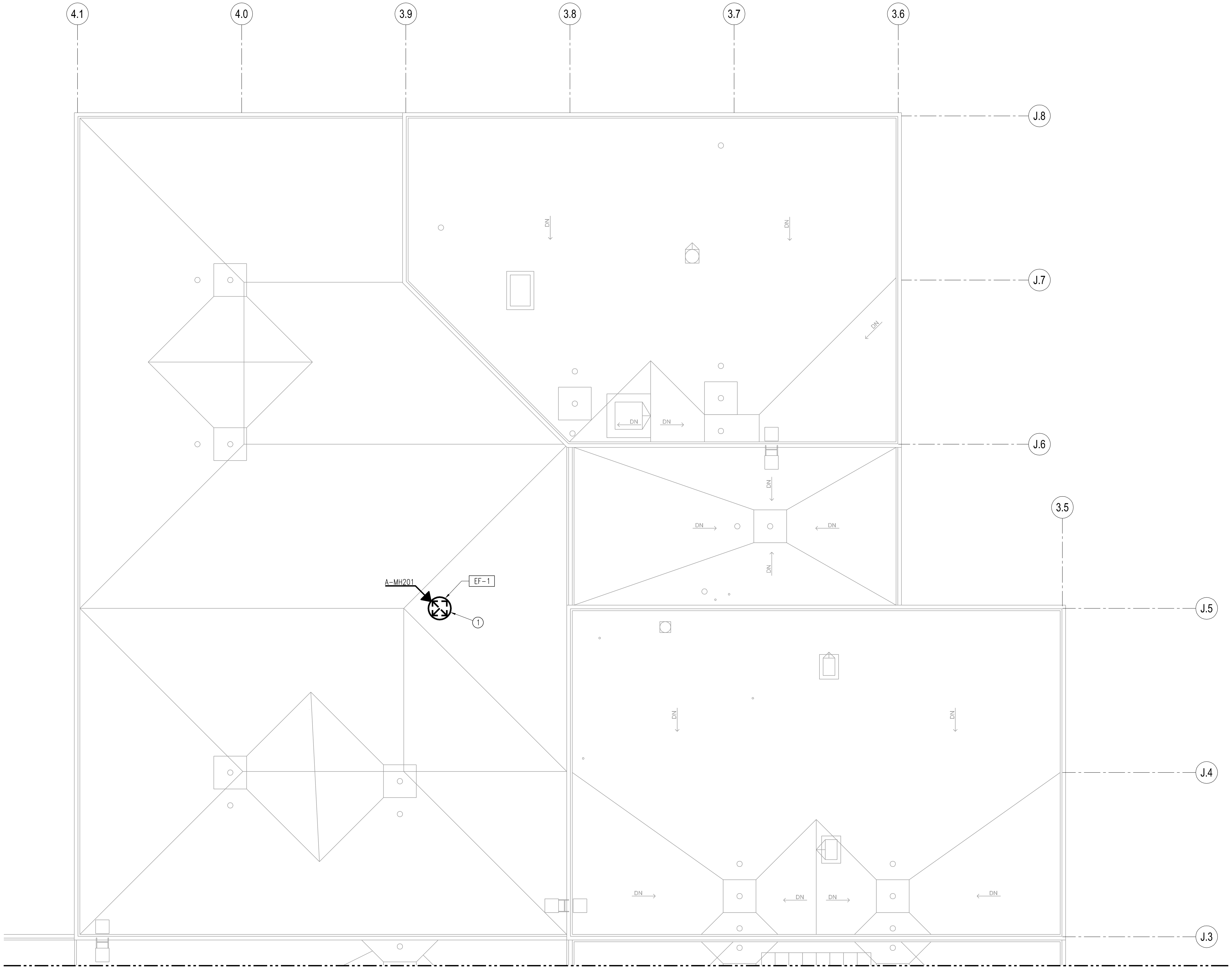

SEE CONTINUATION ON SHEET MH130

6TH FLOOR AREA A ROOF MECHANICAL PLAN

SCALE: 1/8" = 1'-0"

NORTH

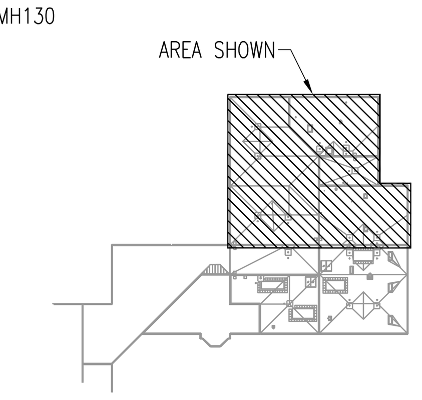

KEY PLAN

SCALE: N.T.S.

NORTH

AT FULL SIZE

0 1 2 3 IN

0 1 2 3 4 5 6 7 8 cm

No. 349630 DANIEL J. ROLLINS REGISTERED PROFESSIONAL ENGINEER STATE OF UTAH 3/23/10

NO.	REVISIONS	DWN	APVD	APVD	DATE
0	ISSUED FOR BID	JK	DR	LV	3/4/10

Stanley Consultants INC.

383 West Vine Street, Suite 400, Murray City, Utah 84123
www.stanleygroup.com

GUNTHER TRADES 5TH FLOOR HVAC IMPROVEMENTS
UTAH VALLEY UNIVERSITY
OREM, UTAH

6TH FLOOR AREA A ROOF MECHANICAL PLAN

DESIGNED D. ROLLINS
DRAWN J. KIM
CHECKED D. ROLLINS
APPROVED D. ROLLINS
APPROVED
DATE 3/4/10

SCALE: AS NOTED

NO. MH130

REV. 0

© STANLEY CONSULTANTS

SCI PROJECT NO:

$$$$$$$$$$$$FILENAME$$$$$$$$$$$$$

CADD E1-R3

AIR HANDLING UNIT SCHEDULE (CUSTOM)

SYMBOL	MANUFACTURER AND MODEL NO.	LOCATION	TOTAL CFM	MIN. O.A. CFM	O.A REQUIREMENT FOR MAX. OCCUPANCY	COOLING									HEATING									FILTERS				ELEC.		COMPRESSORS		SUPPLY FAN						RETURN/RELIEF FAN						APPROX. SIZE (FT.) LxWxH	OPERATING WEIGHT (LBS.)	ACCESSORIES AND REMARKS
						FLUID	GPM	TOTAL (MBH)	SENS. (MBH)	EDB (°F)	EWB (°F)	LDB (°F)	LWB (°F)	MAX. AIR PRESSURE DROP (″Wg)	HEATING CFM	FLUID	GPM	TOTAL (BTUH)	EWT/LWT (°F)	EDB (°F)	LDB (°F)	MAX. AIR PRESSURE DROP (″Wg)	TYPE	ASHRAE EFF. (%)	QTY.	SIZE	VOLT	ø	NO.	RLA TOTAL	DIA.	RPM	BHP	MOTOR ④ H.P.	EXT. S.P. ③ (″Wg.)	CONTROL TYPE	CFM	DIA.	RPM	BHP	MOTOR ④ H.P.	EXT. S.P. ③ (″Wg.)	CONTROL TYPE			
AH-1	HAAKON CUSTOM	STOR. ROOF	30,000	7925	7000	WATER	130	600	560	80	67	55	52	4.5	20,000	30% G	60	540	105/90	58	90	4.5	2" PLEAT	30	16	24x24	480	3	0	NA	40"	1150	32	40	3.5	DP	30,000	40"	875	12	15	1.5	DP	29x9x9	22,000	2, 3, 4, 5, 6, 7, 9, 10

NOTES

1. AT 70% AIRFLOW
2. BASED ON 4500 FT ELEVATION.
3. EXTERNAL S.P. VALUES ARE FOR DUCTWORK ONLY. AHU MANUFACTURER SHALL CALCULATE ALL AHU INTERNAL LOSSES FOR COILS, CASINGS, DAMPERS, FILTERS, SOUND ATTENUATORS, ETC. TO ARRIVE AT THEIR SPECIFIC TOTAL STATIC PRESSURE VALUE.
4. MOTOR H.P. IS MINIMUM ACCEPTABLE. IF LARGER MOTORS ARE REQUIRED, THE AHU MANUFACTURER SHALL COORDINATE INCREASED COSTS WITH THE ELECTRICAL CONTRACTOR. NO CHANGE ORDER WILL BE ALLOWED.
5. COIL FINS/INCH SHALL NOT EXCEED 10.
6. COIL FLUID P.D. SHALL NOT EXCEED 15 FEET FOR COOLING COILS OR 5 FEET FOR HEATING COILS.
7. COIL FACE VELOCITIES SHALL NOT EXCEED 550 FPM.
8. 2 FILTER SECTIONS REQUIRED – SEE PLANS/SECTIONS.
9. DUCT DETECTORS TO BE INSTALLED IN THE RETURN AND SUPPLY AIR PLENUM
10. TO BE EQUIPPED WITH FREEZESTAT

HEAT RECOVERY UNIT SCHEDULE

SYMBOL	MANUFACTURER AND MODEL NO.	LOCATION	OUTSIDE CFM	EXHAUST CFM	SUMMER DESIGN		WINTER DESIGN	EXHAUST		HEAT EXCHANGER				COOLING COIL									HEATING COIL								FILTER TYPE	ELECTRICAL		SUPPLY FAN			RETURN/RELIEF FAN			SIZE	OPERATING WEIGHT (LBS.)	ACCESSORIES AND REMARKS
					EDB (°F)	EWB (°F)	EDB (°F)	DB (°F)	RH (%)	SUMMER LDB (°F)	SUMMER LWB (°F)	WINTER LDB (°F)		FLUID	GPM	TOTAL MBH	SENS. MBH	EDB (°F)	EWB (°F)	LDB (°F)	LWB (°F)	MAXIMUM P.D. (″Wg)	FLUID	GPM	TOTAL MBH ①	EWT/LWT (°F)	EDB (°F)	LDB (°F)	LWB (°F)	MAXIMUM P.D. (″Wg)		VOLT	PHASE	BHP	MOTOR H.P. ④	S.P. (″Wg) ③	BHP	MOTOR H.P. ④	S.P. (″Wg)	L x W x H (FT.)		
AH-2	HAAKON CUSTOM	PRINT SHOP	20,000	20,000	97	62	5	80	35	90	60	45		WATER	72	400	270	90	60	55	50	1.5	30% G	40	150	105/90	40	95	60	1	M8:2" PLEAT	480	3	20	30	1.5	9	15	0.75	18.5x9x10	18,000	2, 3, 4, 5, 6, 7, 8, 9

1. AT 100% AIRFLOW
2. BASED ON 4500 FEET ELEVATION
3. EXTERNAL S.P. VALUES ARE FOR DUCTWORK ONLY. AHU MANUFACTURER SHALL CALCULATE ALL AHU INTERNAL LOSSES FOR COILS, CASINGS, DAMPERS, FILTERS, ETC. TO ARRIVE AT THEIR SPECIFIC TOTAL STATIC PRESSURE VALUE.
4. MOTOR HP IS MAXIMUM ACCEPTABLE.
5. COIL FINS/INCH SHALL NOT EXCEEED 10.
6. COIL FLUID P.D. SHALL NOT EXCEED 15 FEET FOR COOLING COILS OR 5 FEET FOR HEATING COILS.
7. COIL FACE VELOCITIES SHALL NOT EXCEED 550 FPM FOR COOLING COILS.
8. DUCT DETECTORS TO BE INSTALLED IN THE RETURN AND SUPPLY AIR PLENUM
9. TO BE EQUIPPED WITH FREEZESTAT

VAV BOX SCHEDULE

UNIT NO.	MANUFACTURER AND MODEL NO.	INLET SIZE (IN)	AIR							FLUID					COIL		ACCESSORIES AND REMARKS
			COOLING MAXIMUM AIR (5) (CFM)	HEATING MAXIMUM AIR (5) (CFM)	MINIMUM AIR (5) (CFM)	ENTERING AIR TEMP. DB (DEG. F)	LEAVING AIR TEMP. DB (DEG. F)	S.P. LOSS AT MAX CFM (4) (IN H2O)	NC AT 1" H2O (1) S.P.	HEAT LOAD (MBH)	TOTAL FLUID FLOW (GPM)	ENTERING FLUID TEMP (DEG. F)	WORKING FLUID	MAX. FLUID PRESSURE DROP (FT)	MIN. COIL ROWS	PIPE SIZE (IN)	
V-6	TITUS-DESV	6	400	240	80	60	100	0.50	28	9.9	3	105	H. WATER	1.6	4	1"	1,2,3,4,5,6
V-8	TITUS-DESV	8	700	420	145	60	100	0.65	28	17.4	4	105	H. WATER	2.0	4	1"	1,2,3,4,5,6
V-10	TITUS-DESV	10	1100	660	230	60	100	0.65	26	27.3	5	105	H. WATER	2.5	4	1"	1,2,3,4,5,6
V-12	TITUS-DESV	12	1600	960	325	60	100	0.65	26	39.7	7	105	H. WATER	5	4	1-1/2"	1,2,3,4,5,6

1. MAXIMUM DISCHARGE NC AT BOX DIFFERENTIAL PRESSURE BASED ON ARI STANDARD 880-89.
2. COIL HEATING CAPACITY BASED ON HEATING MAXIMUM AIR FLOW (60% OF MAXIMUM COOLING CFM).
3. MINIMUM CFM IS LOWEST CONTROLLABLE CFM SETTING (BASED ON 400 FPM INLET VELOCITY).
4. MAXIMUM STATIC PRESSURE DROP PERMISSIBLE ACROSS BOX AND COIL AT MAXIMUM COOLING CFM.
5. BOX COOLING MAXIMUM IS THE SUM OF DIFFUSERS CFM VALUES AS SHOWN IN THE DRAWINGS. BOX MINIMUM CFM TO BE SET AT 30% OF THIS MAXIMUM. BOX HEATING CFM TO BE SET AT 60% OF THIS SAME MAXIMUM. TYPICAL UNLESS OTHERWISE NOTED.
6. PRESSURE INDEPENDENT TYPE BOX.

FAN COIL UNIT SCHEDULE (FOUR PIPE)

SYMBOL	MANUFACTURER AND MODEL NO.	LOCATION	FAN CFM	O.A. CFM	COOLING REQUIREMENTS WITH 45°F ENTERING WATER TEMP.							HEATING REQUIREMENTS WITH 105°F ENTERING WATER TEMP.					FAN MOTOR				OPERATING WEIGHT (LBS.)	ACCESSORIES AND REMARKS
					MIN. SENS. MBH	MIN. TOTAL MBH	ENT. AIR (°F) Db	Wb	GPM	MAX. LOSS THRU COIL (FT. WATER)	RUN-OUT SIZE	MIN. BTUH	ENT. AIR (°F)	GPM	MAX. LOSS THRU COIL (FT. WATER)	RUN-OUT SIZE	NOM. WATTS	VOLT	PHASE	Hz.		
FC-1	TRANE BCHC 090	CORR 501a	3800	1000	90	99	83	60	27	6	2"	110	50	8	0.5"	1"	NA	208	3	60	400	1
FC-2	TRANE BCHC 090	RM 521	3300	500	60	75	75	58	25	6	2"	70	54	8	0.5"	1"	NA	208	3	60	400	1, 2

1. BASED ON 4500 FT. ELEVATION.
2. ADD ALTERNATE.

EXHAUST FAN SCHEDULE

SYMBOL	MANUFACTURER AND MODEL NO.	AREA SERVED	TYPE	CFM @ ELEV.	TSP	FAN RPM	MOTOR		DAMPER	METHOD OF CONTROL	OPENING SIZE	OPERATING WT (LBS)	ACCESSORIES AND REMARKS
							HP	VOLT/PH					
EF-1	COOK - 270R7B ACRUB	RR, DARK ROOMS, STORAGE	ROOF MOUNTED	6000	4432	627	1.05	208/3	–	–	32/32	260	–
	–	–	–	–	–	–	–	–	–	–	–	–	–

PUMP SCHEDULE

SYMBOL	MANUFACTURER AND MODEL NO.	LOCATION	DUTY	CIRCULATING FLUID				% EFF.	MOD. (1)	SPEED RPM	ELECTRICAL					ACCESSORIES AND REMARKS
				FLUID TYPE	GPM	PUMP HEAD (FT. FLUID)	TEMP. (°F)				MOTOR BHP	MOTOR MHP	VOLT	PHASE	Hz.	
P-1	B & G 80-2.5X2.5X9.5B	WELDING LAB	HEATING	30% PG	206	50	105	57	VFD	1750	4.8	7.5	480	3	60	1
P-2	B & G 80-2.5X2.5X9.5B	WELDING LAB	COOLING	WATER	202	40	105	57	VFD	1750	4.8	7.5	480	3	60	1

1. PROVIDE VFD RATED PUMP MOTOR FOR PUMPS WITH VFD MODULATION.

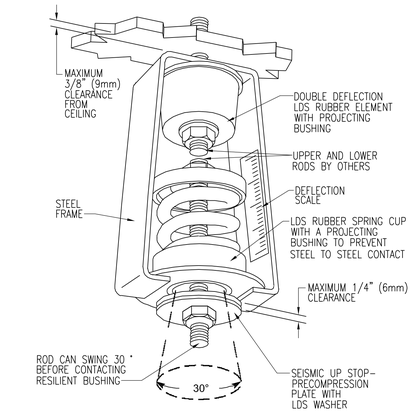

SPRING HANGER DETAIL

SCALE: N.T.S.

1

REGISTERED PROFESSIONAL ENGINEER No. 349630 DANIEL J. ROLLINS STATE OF UTAH
3/23/10

NO.	REVISIONS	DWN	APVD	APVD	DATE
1	REVISION 1	JK	DR	LV	3/23/10
0	ISSUED FOR BID	JK	DR	LV	3/4/10

Stanley Consultants INC.

383 West Vine Street, Suite 400, Murray City, Utah 84123
www.stanleygroup.com

GUNTHER TRADES 5TH FLOOR HVAC IMPROVEMENTS
UTAH VALLEY UNIVERSITY
OREM, UTAH

MECHANICAL SCHEDULES

DESIGNED D. ROLLINS
DRAWN J. KIM
CHECKED D. ROLLINS
APPROVED D. ROLLINS
APPROVED
DATE 3/4/10

SCALE: AS NOTED

NO. MH201 REV. 0

AT FULL SIZE
0 1 2 3 IN
0 1 2 3 4 5 6 7 8 cm

CADD E1-R3

SSSSSSSSSSSSFILENAMESSSSSSSSSSSS

SCI PROJECT NO:

© STANLEY CONSULTANTS

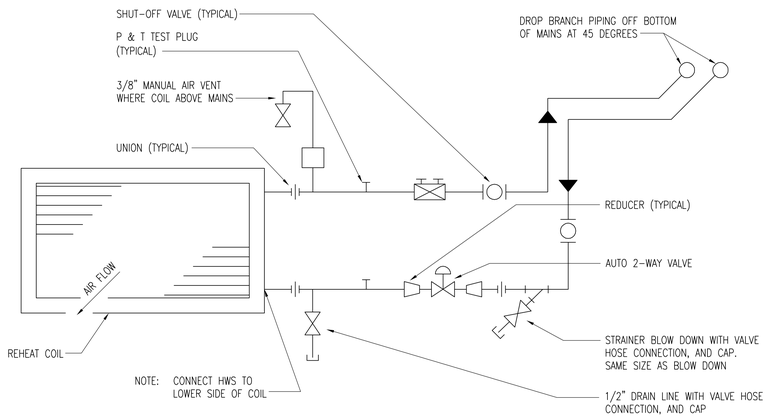

REHEAT COIL WITH 2-WAY VALVE DETAIL

SCALE: N.T.S.

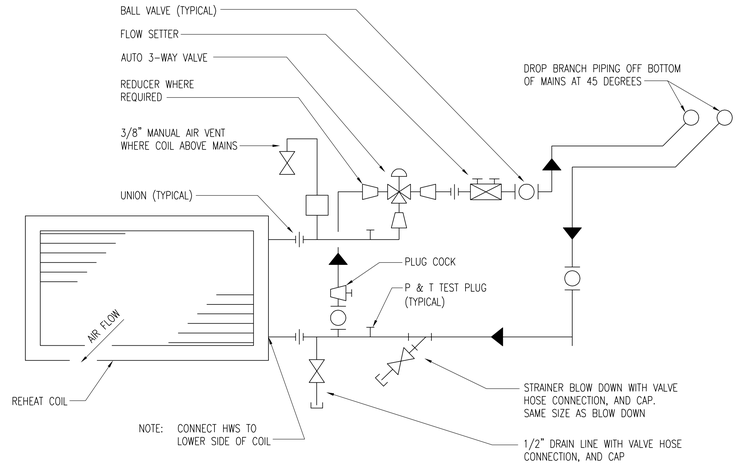

FAN COIL AND REHEAT COIL WITH 3-WAY VALVE DETAIL

SCALE: N.T.S.

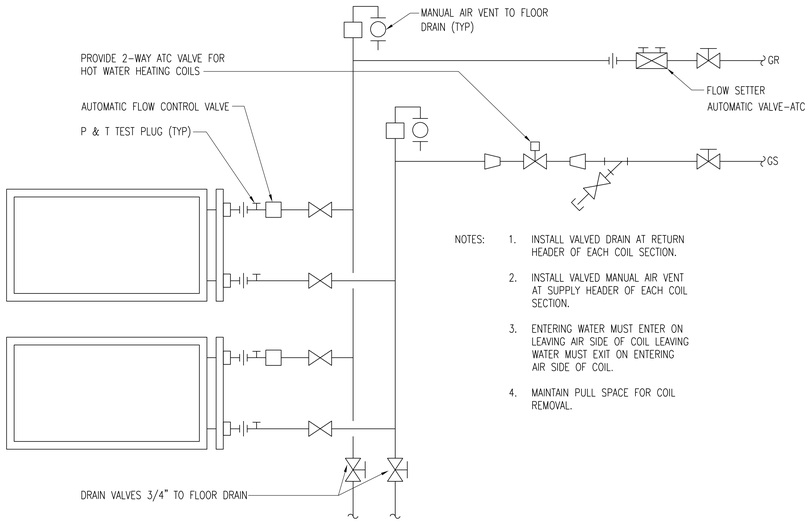

NOTES:

1. INSTALL VALVED DRAIN AT RETURN HEADER OF EACH COIL SECTION.
2. INSTALL VALVED MANUAL AIR VENT AT SUPPLY HEADER OF EACH COIL SECTION.
3. ENTERING WATER MUST ENTER ON LEAVING AIR SIDE OF COIL LEAVING WATER MUST EXIT ON ENTERING AIR SIDE OF COIL.
4. MAINTAIN PULL SPACE FOR COIL REMOVAL.

AIR HANDLER HEATING/COOLING COIL 2-WAY VALVE PIPING SCHEMATIC

SCALE: N.T.S.

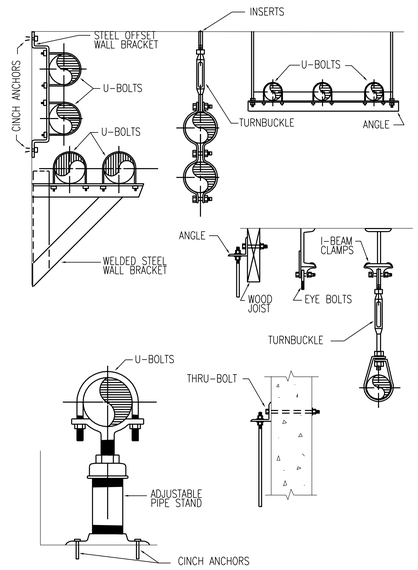

PIPE SUPPORT DETAILS

SCALE: N.T.S.

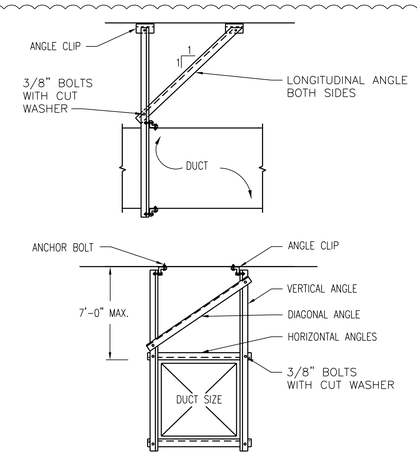

SEISMIC BRACING FOR RECTANGULAR DUCTS

MAX. DUCT DIMENSION	BRACING ANGLES		ANGLE CLIP	CON. ANCHOR OR INSERT
	VERTICAL	ALL OTHERS		
UP TO 60"	4x4x12GA	3x3x16GA	3x3x1/4	1/2"
UP TO 84"	4x4x1/4"	4x4x12GA	4x4x1/2"	5/8"
UP TO 96"	5x3x1/4"	4x4x12GA	4x4x1/2"	5/8"

DUCT SEISMIC RESTRAINT DETAIL C-MH202

MH110, MH111, MH121, MH130

SCALE: NTS

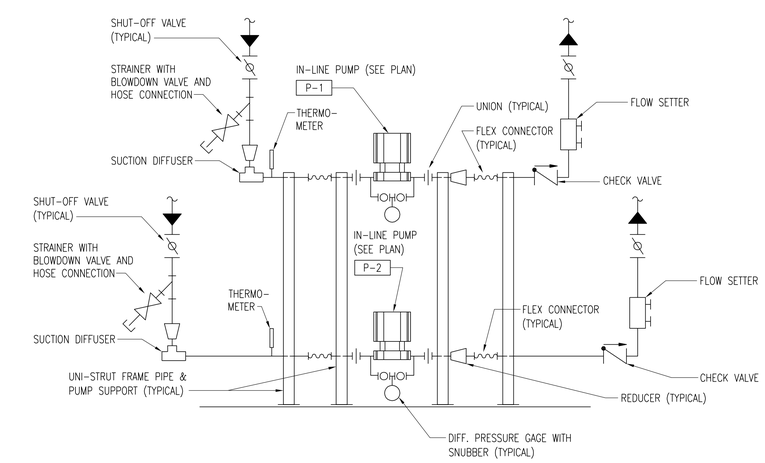

IN-LINE PUMP DETAIL B-MH202

MP111

SCALE: N.T.S.

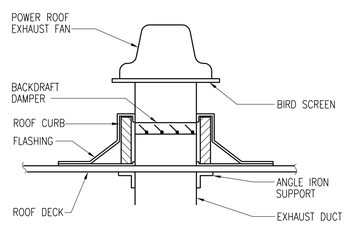

NOTE:
PROVIDE DISCONNECT SWITCH.

ROOF MOUNTED EXHAUST FAN DETAIL A-MH202

MH130

SCALE: N.T.S.

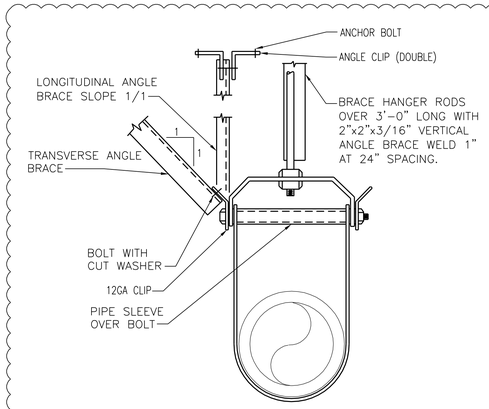

PIPE SIZE	ANGLE BRACE	BOLT TO ANGLE	ANGLE CLIP	ANCHOR BOLT OR INSERT
2-1/2"	2"x2" 16 GA	3/8"	3"x3"x1/4	3/8
3, 4	2-1/2"x2-1/2" 16 GA	3/8"	3"x3"x1/4	1/2"
5, 6	2-1/2"x2-1/2" 16 GA	1/2"	3"x3"x1/2	3/4"
8	3"x3" 16 GA	5/8"	2-5x3x1/2	2- 5/8"
10	3"x3" 12 GA	3/4"	2-5x3x1/2	2- 3/4"

PIPING SEISMIC RESTRAINT DETAIL D-MH202

MP110, MP111

SCALE: NTS

REGISTERED PROFESSIONAL ENGINEER No. 349630 DANIEL J. ROLLINS STATE OF UTAH

3/23/10

NO.	REVISIONS	DWN	APVD	APVD	DATE
1	REVISION 1	JK	DR	LV	3/23/10
0	ISSUED FOR BID	JK	DR	LV	3/4/10

Stanley Consultants INC.

383 West Vine Street, Suite 400, Murray City, Utah 84123
www.stanleygroup.com

GUNTHER TRADES 5TH FLOOR HVAC IMPROVEMENTS
UTAH VALLEY UNIVERSITY
OREM, UTAH

MECHANICAL DETAILS

DESIGNED D. ROLLINS
DRAWN J. KIM
CHECKED D. ROLLINS
APPROVED D. ROLLINS
APPROVED
DATE 3/4/10

SCALE: AS NOTED

NO. MH202 REV. 0

AT FULL SIZE
0 1 2 3 IN
0 1 2 3 4 5 6 7 8 cm

CADD E1-R3

SCI PROJECT NO:

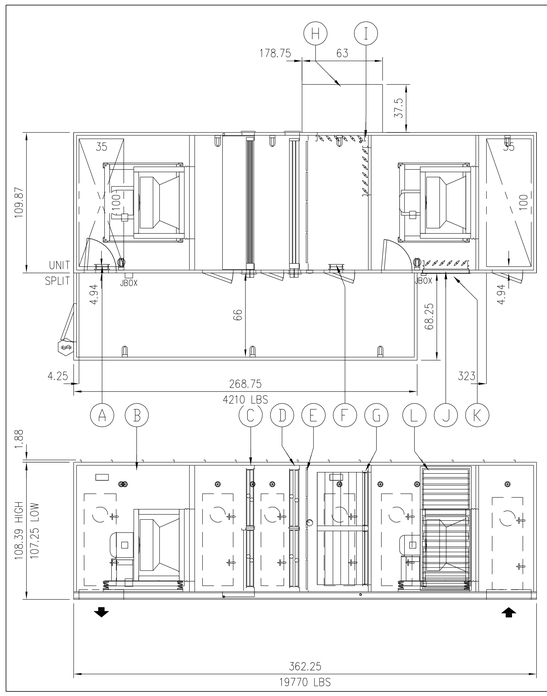

A	CORR VENT DAMPER : PARALLEL BLADES MAKE : T.A. Morrison 1000 SIZE : 12 X 6.8
B	FAN : 40" EPFN SW, 104% Width, Arrangement-4 AIR FLOW : 30000 CFM RPM : 1150 T.S.P. : 5 in wc CLASS : III MOTOR : 40 HP, ODP Prem-Eff, 460/3/60 RPM : 1150 (GROUNDED SHAFT) ISOLATORS : OS DEF : 2 in
C	COOLING COIL, MODEL: 5WL1204B TYPE : 4 ROW SIZES : 2 @ 45 X 96 CONN : RIGHT PULL : LEFT DRAIN : LEFT VEL : 500 FPM
D	HEATING COIL, MODEL: 5MQ0902A TYPE : 2 ROW SIZES : 2 @ 45 X 96 CONN : RIGHT PULL : LEFT VEL : 500 FPM
E	FILTERS : LIFT-OUT UPSTREAM VELOCITY : 469 FPM TYPE : 2" (MERV 8) FARR 30/30 SIZES : 16 @ 24 X 24
F	CORR VENT DAMPER : PARALLEL BLADES MAKE : T.A. Morrison 1000 SIZE : 12 X 6.8
G	RA DAMPER : PARALLEL BLADES MAKE : T.A. Morrison 1000 SIZE : 90 X 39
H	OA HOOD TYPICAL OF 4
I	OA DAMPER : PARALLEL BLADES MAKE : T.A. Morrison 1000 SIZE : 90 X 39
J	EA DAMPER : PARALLEL BLADES MAKE : T.A. Morrison 1000 SIZE : 37 X 94
K	LOUVRE SIZE : 37 X 94 Std Louvre
L	FAN : 40" EPFN SW, 102% Width, Arrangement-4 AIR FLOW : 30000 CFM RPM : 875 T.S.P. : 1.5 in wc CLASS : I MOTOR : 15 HP, ODP Prem-Eff, 460/3/60 RPM : 875 (GROUNDED SHAFT) ISOLATORS : OS DEF : 2 in
	UNIT MOUNTING The unit is designed to be mounted on a roof curb.
	Note : Calculated unit weights are shipping weights and do not reflect operating conditions

AIR HANDLER UNIT, AH-1

SCALE: 1/4" = 1'-0"

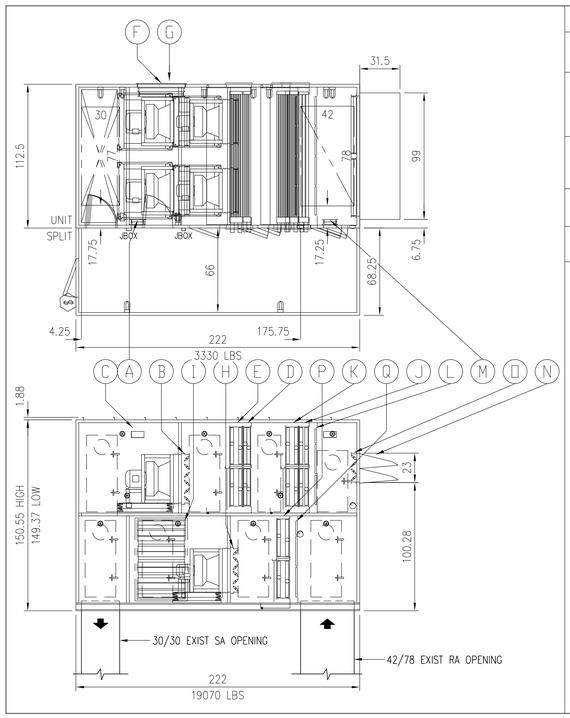

N	OA HOOD TYPICAL OF 2
O	OA DAMPER : OPPOSED BLADES MAKE : T.A. Morrison 1000 SIZE : 96 X 24
P	HEAT RECOVERY COIL TYPE : 6 ROW SIZES : 2 @ 30 X 96 CONN : RIGHT PULL : LEFT DRAIN : LEFT VEL : 500 FPM
Q	FILTERS : LIFT-OUT UPSTREAM VELOCITY : 500 FPM TYPE : 2" (MERV 8) Farr 30/30 SIZES : 8 @ 24 X 24 4 @ 24 X 12
	UNIT MOUNTING The unit is designed to be mounted on a roof curb.
	Note : Calculated unit weights are shipping weights and do not reflect operating conditions

A	CORR VENT DAMPER : PARALLEL BLADES MAKE : T.A. Morrison 1000 SIZE : 12 X 6.8
B	FAN ISOLATION DAMPER : OPPOSED BLADES MAKE : T.A. Morrison 1000 SIZE : 2 @ 40 X 40
C	FAN : 2 @ 27" EPFN SW, 72% Width, Arrangement-4 AIR FLOW : 10000 CFM RPM : 1750 T.S.P. : 4.5 in wc CLASS : II MOTOR : 15 HP, ODP Prem-Eff, 460/3/60 RPM : 1750 (GROUNDED SHAFT) ISOLATORS : OS DEF : 2 in
D	HEATING COIL, MODEL: 5WQ1203B TYPE : 3 ROW SIZES : 2 @ 30 X 96 CONN : RIGHT PULL : LEFT DRAIN : LEFT VEL : 500 FPM
E	COOLING COIL, MODEL: 5WL0806B TYPE : 6 ROW SIZES : 2 @ 30 X 96 CONN : RIGHT PULL : LEFT DRAIN : LEFT VEL : 500 FPM
F	EA DAMPER : PARALLEL BLADES MAKE : T.A. Morrison 1000 SIZE : 38 X 62
G	LOUVRE SIZE : 38 X 62 Std Louvre
H	FAN ISOLATION DAMPER : OPPOSED BLADES MAKE : T.A. Morrison 1000 SIZE : 2 @ 36 X 36
I	FAN : 2 @ 24" EPFN SW, 83% Width, Arrangement-4 AIR FLOW : 10000 CFM RPM : 1750 T.S.P. : 2.75 in wc CLASS : II MOTOR : 7.5 HP, ODP Prem-Eff, 460/3/60 RPM : 1750 (GROUNDED SHAFT) ISOLATORS : OS DEF : 2 in
J	PRE-HEAT COIL, MODEL: 5MH0802A TYPE : 2 ROW SIZES : 2 @ 30 X 96 CONN : RIGHT PULL : LEFT DRAIN : LEFT VEL : 500 FPM
K	HEAT RECOVERY COIL TYPE : 6 ROW SIZES : 2 @ 30 X 96 CONN : RIGHT PULL : LEFT DRAIN : LEFT VEL : 500 FPM
L	FILTERS : LIFT-OUT UPSTREAM VELOCITY : 500 FPM TYPE : 2" (MERV 8) Farr 30/30 SIZES : 8 @ 24 X 24 4 @ 24 X 12
M	CORR VENT DAMPER : PARALLEL BLADES MAKE : T.A. Morrison 1000 SIZE : 12 X 6.8

AIR HANDLER UNIT, AH-2

SCALE: 1/4" = 1'-0"

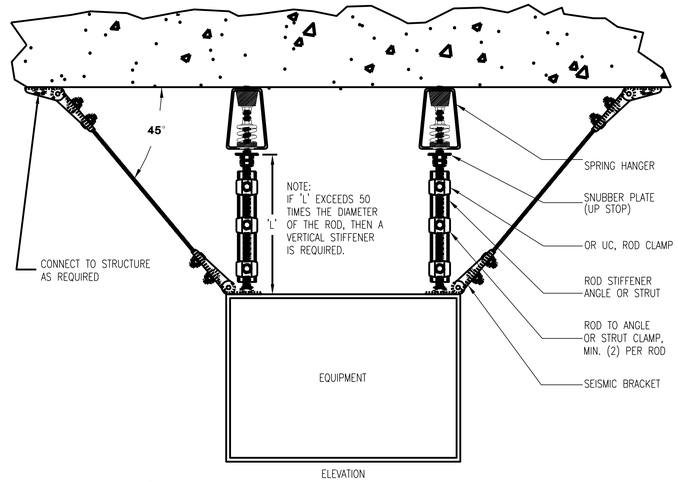

ELEVATION

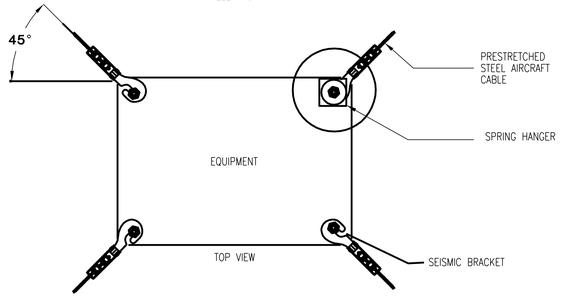

TOP VIEW

FAN COIL SUPPORT & SEISMIC RESTRAINT DETAIL

SCALE: N.T.S.

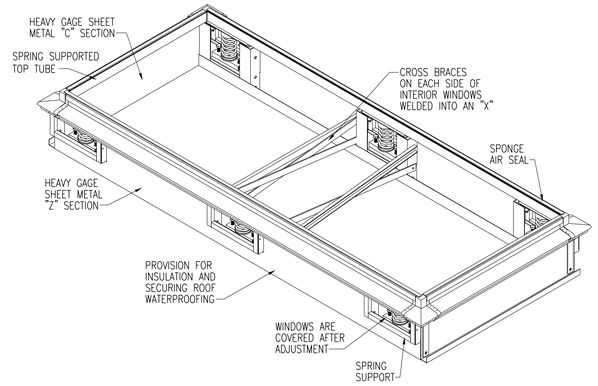

AH1 – CURB SECTION DETAIL

SCALE: N.T.S.

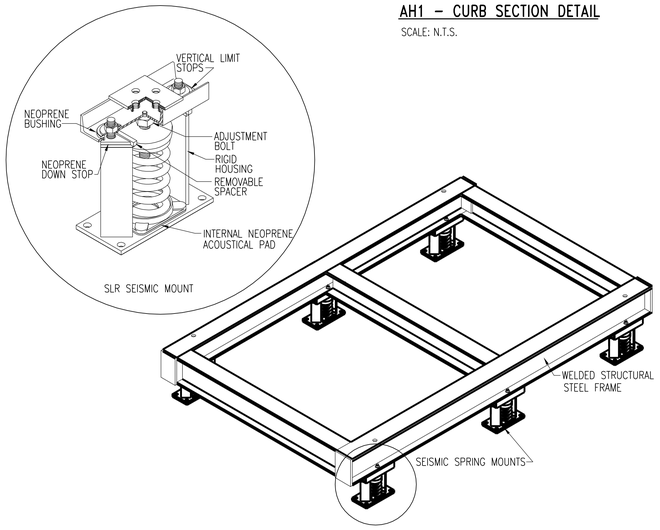

AH1 CURB & SEISMIC RESTRAINT DETAIL

SCALE: N.T.S.

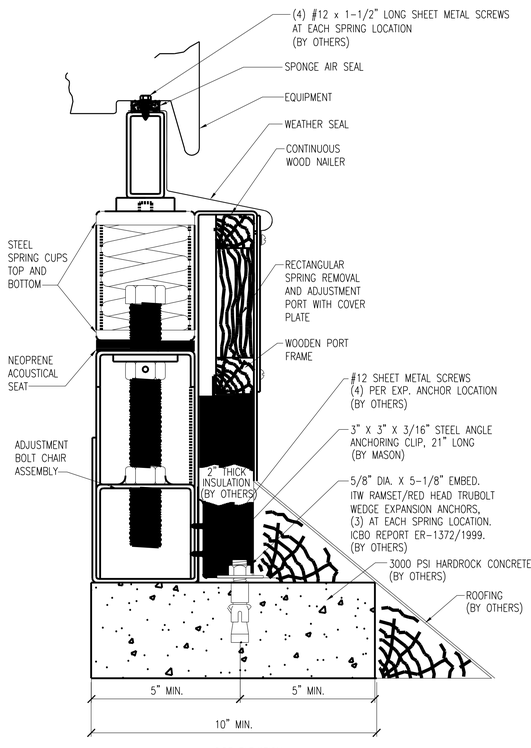

SIDE ELEVATION

AH2 CURB & SEISMIC RESTRAINT DETAIL

SCALE: N.T.S.

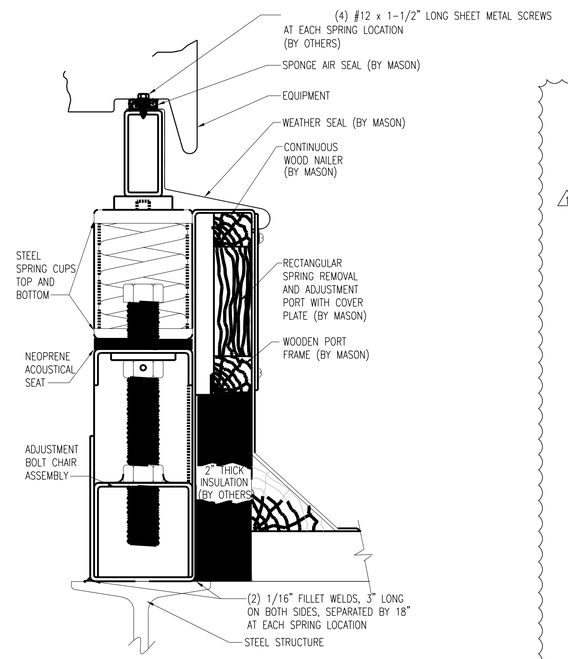

AH2 CURB & SEISMIC RESTRAINT DETAIL

SCALE: N.T.S.

AT FULL SIZE

0 1 2 3 IN

0 1 2 3 4 5 6 7 8 cm

NO.	REVISIONS	DWN	APVD	APVD	DATE
1	REVISION 1	JK	DR	LV	3/23/10
0	ISSUED FOR BID	JK	DR	LV	3/4/10

Stanley Consultants INC.

383 West Vine Street, Suite 400, Murray City, Utah 84123
www.stanleygroup.com

GUNTHER TRADES 5TH FLOOR HVAC IMPROVEMENTS
UTAH VALLEY UNIVERSITY
OREM, UTAH

MECHANICAL DETAILS

DESIGNED D. ROLLINS
DRAWN J. KIM
CHECKED D. ROLLINS
APPROVED D. ROLLINS
APPROVED
DATE 3/4/10

SCALE: AS NOTED
NO. MH203
REV. 0

PROJECT NO:

CADD E1-R3

13© STANLEY CONSULTANTS

KEY NOTES: ◯

1. PROVIDE 3-WAY CONTROL VALVE IN MINIMUM 30% OF HEATING COILS AT END OF HWS MAIN LINE.
2. TYPICAL VAV TERMINAL BOX WITH HW REHEAT COIL.
3. EXTEND EXISTING CONDENSATE DRAIN TO CONNECT TO NEW FC-1.

GENERAL NOTES:

1. OFFSET PIPING AS NEEDED TO AVOID CONFLICTS.
2. INCLUDE AIR VENTS AT ALL HIGH POINTS IN PIPING SYSTEM.

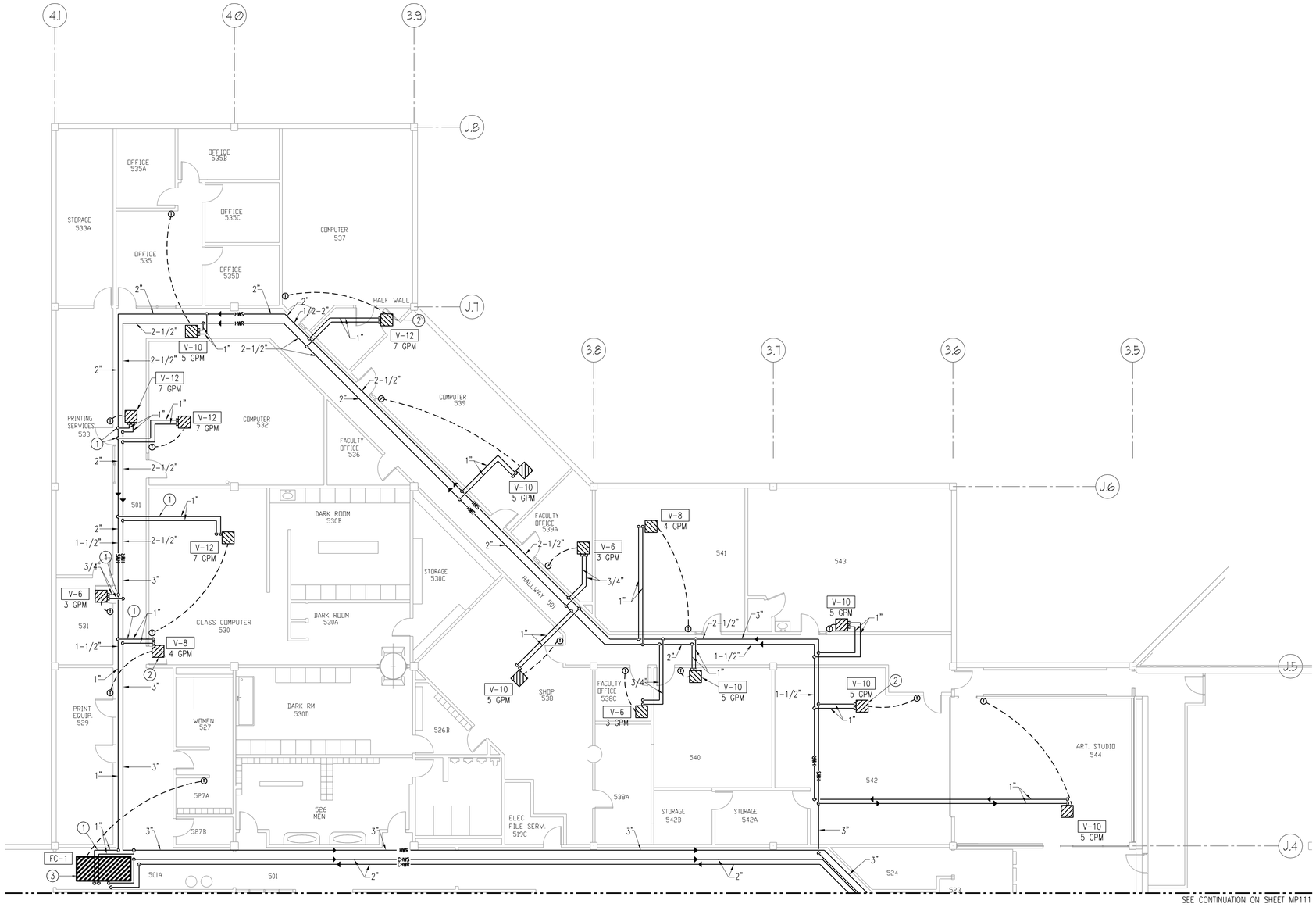

5TH FLOOR AREA A MECHANICAL PIPING PLAN

SCALE: 1/8" = 1'-0"

NORTH

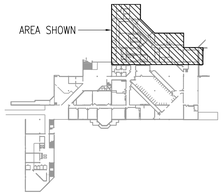

KEY PLAN

SCALE: N.T.S.

NORTH

AT FULL SIZE

0 1 2 3 IN

0 1 2 3 4 5 6 7 8 cm

REGISTERED PROFESSIONAL ENGINEER No. 349630 DANIEL J. ROLLINS STATE OF UTAH

3/23/10

NO.	REVISIONS	DWN	APVD	APVD	DATE
0	ISSUED FOR BID	JK	DR	LV	3/4/10

Stanley Consultants INC.

383 West Vine Street, Suite 400, Murray City, Utah 84123
www.stanleygroup.com

GUNTHER TRADES 5TH FLOOR HVAC IMPROVEMENTS
UTAH VALLEY UNIVERSITY
OREM, UTAH

5TH FLOOR AREA A
MECHANICAL PIPING PLAN

DESIGNED D. ROLLINS
DRAWN J. KIM
CHECKED D. ROLLINS
APPROVED D. ROLLINS
APPROVED
DATE 3/4/10

SCALE: AS NOTED

NO. MP110 REV. 0

PROJECT NO:

FILENAME:

CADD: E1-83

© STANLEY CONSULTANTS

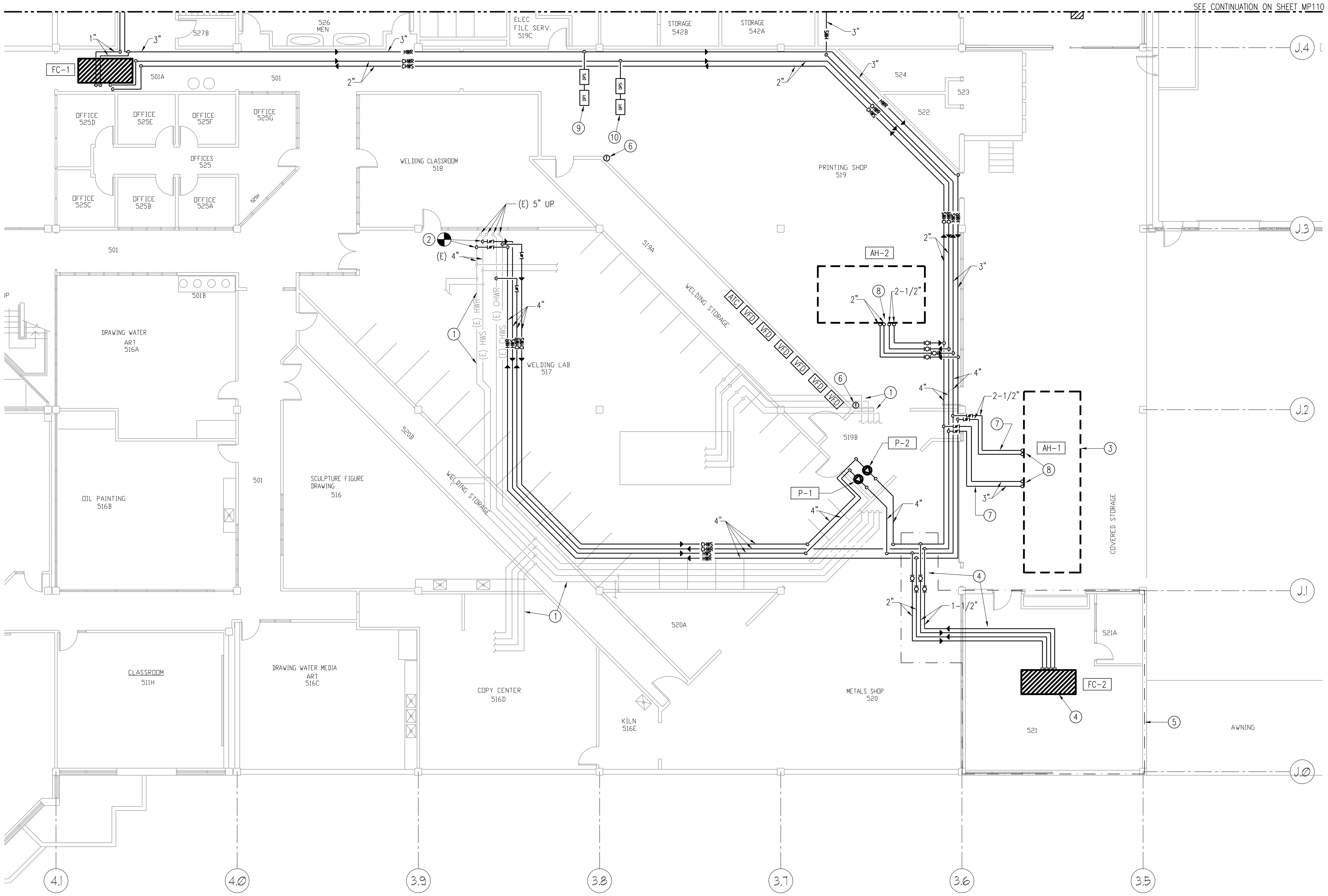

5TH FLOOR AREA B MECHANICAL PLAN

SCALE: 1/8" = 1'-0"

NORTH

KEY NOTES:

1. EXISTING CHW AND HW LINES TO REMAIN.
2. CONNECT ALL NEW 4" CHW AND HW LINES INTO EXISTING 5" MAINS UPSTREAM OF EXISTING 4" REDUCERS, TYPICAL OF 4.
3. AH-1 SHALL BE LOCATED ON ROOF OF COVERED STORAGE.
4. FC-2 IS DEDICATED TO ROOM 521. RECONNECT EXISTING CHW AND HW BRANCH LINES TO NEW FC-2.
5. ALL WORK ASSOCIATED WITH FC-2 AND ROOM 521 SHALL BE AN ADD ALTERNATE.
6. PROVIDE 2 THERMOSTATS FOR PRINT SHOP FOR AVERAGING PURPOSES.
7. OUTDOOR PIPING SHALL BE EQUIPPED WITH HEAT TRACE AS MANUFACTURED BY THERMON OR APPROVED EQUAL. SEE ELECTRICAL DRAWINGS FOR ADDITIONAL INFORMATION.
8. BRANCH LINES UP THROUGH ROOF TO CONNECT TO NEW AH.
9. INSTALL DPS AND DPT AT APPROXIMATELY 2/3 OF TOTAL LENGTH BETWEEN NEW 4" HWS CONNECTION TO NEW 4" HWR CONNECTION AT EXISTING 5" MAINS.
10. INSTALL DPS AND DPT AT APPROXIMATELY 2/3 OF TOTAL LENGTH BETWEEN NEW 4" CHWS CONNECTION TO NEW 4" CHWR CONNECTION AT EXISTING 5" MAINS.

GENERAL NOTES:

1. OFFSET PIPING AS NEEDED TO AVOID CONFLICTS.
2. INCLUDE AIR VENTS AT ALL HIGH POINTS IN PIPING SYSTEM.

REGISTERED PROFESSIONAL ENGINEER No. 349630 DANIEL J. ROLLINS STATE OF UTAH

3/23/10

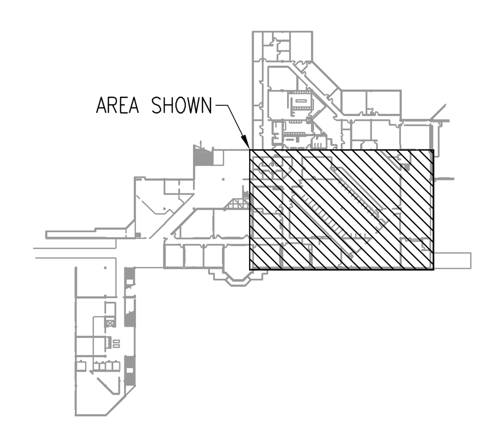

KEY PLAN

SCALE: N.T.S.

NORTH

AT FULL SIZE

0 1 2 3 IN

0 1 2 3 4 5 6 7 8 cm

NO.	REVISIONS	DWN	APVD	APVD	DATE
0	ISSUED FOR BID	JK	DR	LV	3/4/10

Stanley Consultants INC.

383 West Vine Street, Suite 400, Murray City, Utah 84123
www.stanleygroup.com

GUNTHER TRADES 5TH FLOOR HVAC IMPROVEMENTS
UTAH VALLEY UNIVERSITY
OREM, UTAH

5TH FLOOR AREA B
MECHANICAL PIPING PLAN

DESIGNED D. ROLLINS
DRAWN J. KIM
CHECKED D. ROLLINS
APPROVED D. ROLLINS
APPROVED
DATE 3/4/10

SCALE: AS NOTED

NO. MP111 REV. 0

KEY NOTES: ◯

1. RELOCATE OR ADD SPRINKLER HEADS AND PIPING AS NEEDED TO COORDINATE WITH NEW CEILING GRIDS, LIGHTS, DUCTS, AND PIPES, TYPICAL.
2. EXISTING SPRINKLER EQUIPMENT TO REMAIN IN ADMIN OFFICES.

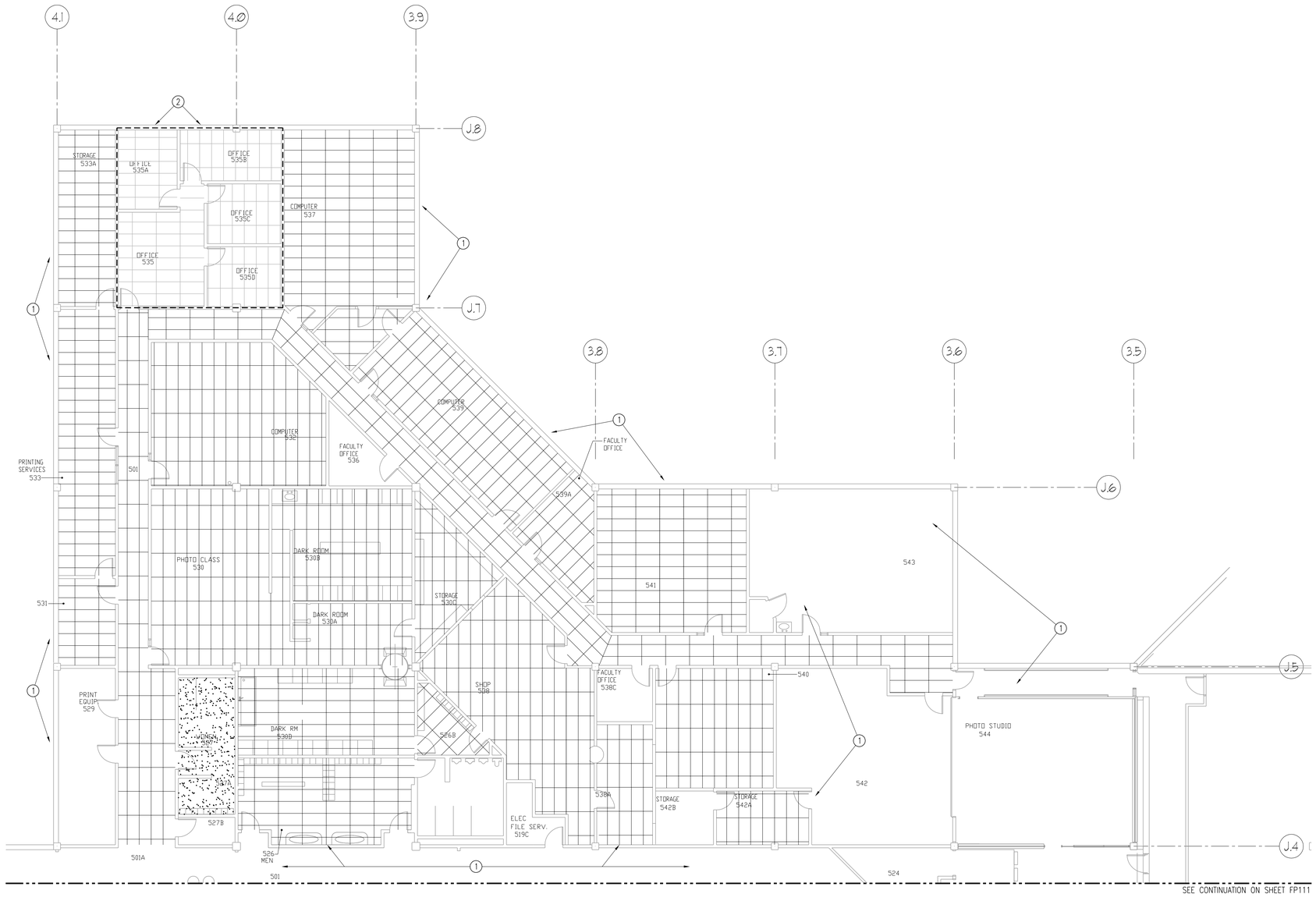

5TH FLOOR AREA A FIRE PROTECTION PLAN

SCALE: 1/8" = 1'-0"

NORTH

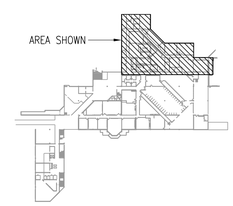

KEY PLAN

SCALE: N.T.S.

NORTH

AT FULL SIZE

0 1 2 3 IN

0 1 2 3 4 5 6 7 8 cm

REGISTERED PROFESSIONAL ENGINEER No. 349630 DANIEL J. ROLLINS STATE OF UTAH

3/23/10

NO.	REVISIONS	DWN	APVD	APVD	DATE
0	ISSUED FOR BID	JK	DR	LV	3/4/10

Stanley Consultants INC.

383 West Vine Street, Suite 400, Murray City, Utah 84123
www.stanleygroup.com

GUNTHER TRADES 5TH FLOOR HVAC IMPROVEMENTS
UTAH VALLEY UNIVERSITY
OREM, UTAH

5TH FLOOR AREA A
FIRE PROTECTION PLAN

DESIGNED D. ROLLINS
DRAWN J. KIM
CHECKED D. ROLLINS
APPROVED D. ROLLINS
APPROVED
DATE 3/4/10

SCALE: AS NOTED

NO. FP110 REV. 0

PROJECT NO:

FILENAME

CADD E1-R2

© STANLEY CONSULTANTS

KEY NOTES: ◯

1. RELOCATE OR ADD SPRINKLER HEADS AND PIPING AS NEEDED TO COORDINATE WITH NEW CEILING GRIDS, LIGHTS, DUCTS, AND PIPES, TYPICAL.
2. ROOM 521 SPRINKLER REMODEL SHALL BE AN ADD ALTERNATE.
3. NOT IN CONTRACT.

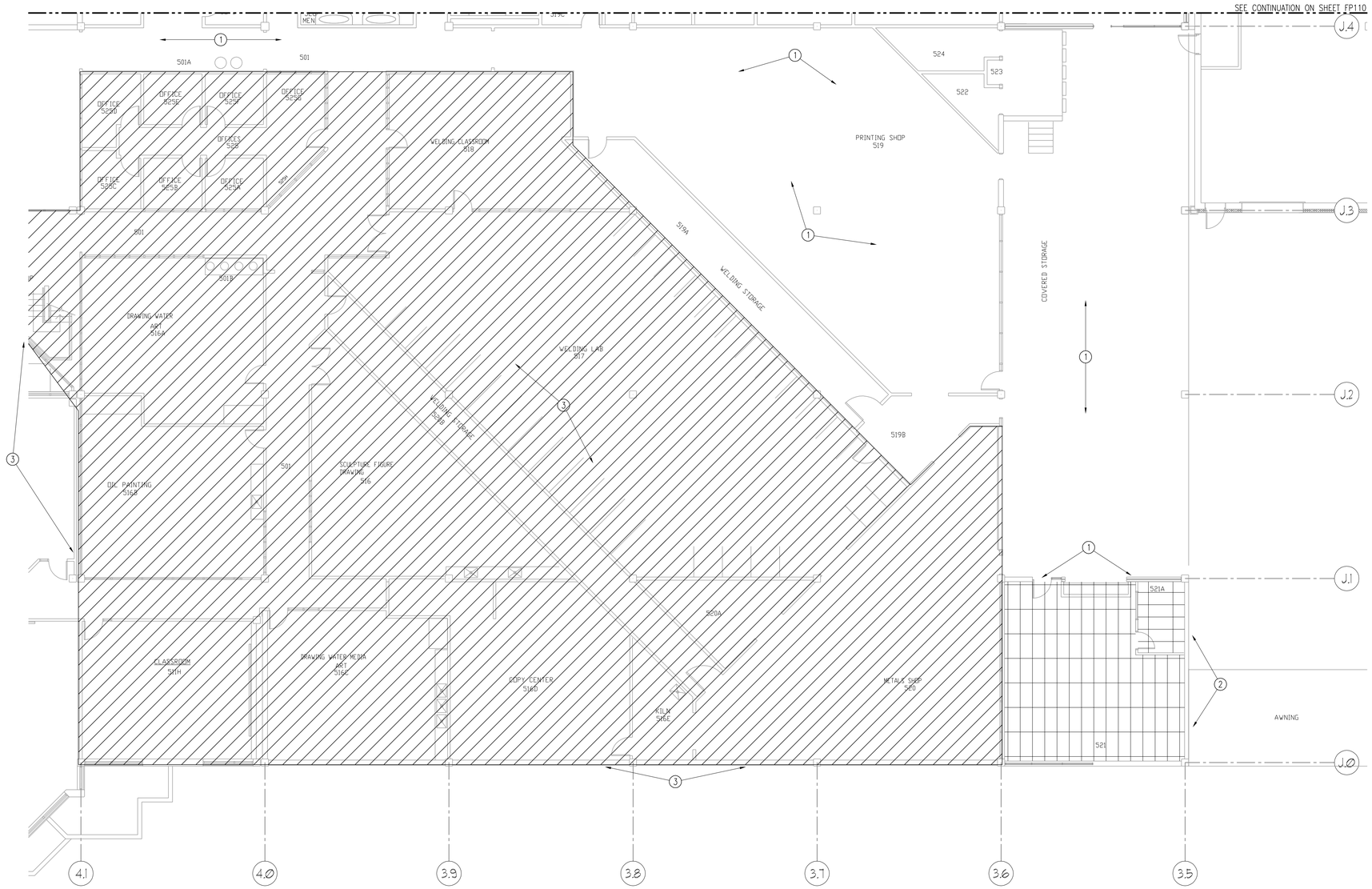

5TH FLOOR AREA B FIRE PROTECTION PLAN

SCALE: 1/8" = 1'-0"

NORTH

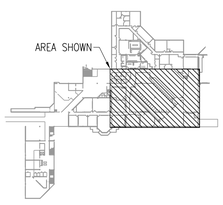

KEY PLAN

SCALE: N.T.S.

NORTH

AT FULL SIZE

0 1 2 3 IN

0 1 2 3 4 5 6 7 8 cm

REGISTERED PROFESSIONAL ENGINEER
No. 349630
DANIEL J. ROLLINS
STATE OF UTAH
3/23/10

NO.	REVISIONS	DWN	APVD	APVD	DATE
0	ISSUED FOR BID	JK	DR	LV	3/4/10

Stanley Consultants INC.

383 West Vine Street, Suite 400, Murray City, Utah 84123
www.stanleygroup.com

GUNTHER TRADES 5TH FLOOR HVAC IMPROVEMENTS
UTAH VALLEY UNIVERSITY
OREM, UTAH

5TH FLOOR AREA B
FIRE PROTECTION PLAN

DESIGNED D. ROLLINS
DRAWN J. KIM
CHECKED D. ROLLINS
APPROVED D. ROLLINS
APPROVED
DATE 3/4/10

SCALE: AS NOTED

NO. FP111 REV. 0

© STANLEY CONSULTANTS

LCADD E1-R3

SCI PROJECT NO.

FILENAME

ONE-LINE AND THREE LINE DIAGRAMS

KVA,CLG
HV-LV
Z
POWER TRANSFORMER

AMP
*
LOW VOLTAGE CIRCUIT BREAKER, DRAWOUT:
E.O. = ELECTRICALLY OPERATED
G = GROUND
I = INSTANTANEOUS
IA = INSTANTANEOUS AMPS
LT = LONG TIME
M.O. = MANUALLY OPERATED
ST = SHORT TIME
S = SENSOR RATING

A
MOLDED CASE CIRCUIT BREAKER

MINIATURE CIRCUIT BREAKER

AMP
FUSE
FUSED CUT-OUT SWITCH

AMP
AMP
FUSED DISCONNECT SWITCH

GROUND

DELTA

WYE

SOLID GROUNDED WYE

WELDING OUTLET:
*: SEE RECEPTACLE OPTIONS IN POWER SECTION

AMP
FUSE

BATTERY

CONTACT N.O. (NORMALLY OPEN)

CONTACT N.C. (NORMALLY CLOSED)

AMP
NON-FUSED DISCONNECT SWITCH

AF
AT
SIZE
*
COMBINATION CIRCUIT BREAKER WITH STARTER:
FVNR = FULL VOLTAGE NON-REVERSING
FVR = FULL VOLTAGE REVERSING
2S = TWO SPEED
1W = ONE WINDING
2W = TWO WINDING
C = CONTACTOR
SFT = SOFT START

AMP
FUSE
SIZE
*
COMBINATION FUSED DISC SW WITH STARTER:
FVNR = FULL VOLTAGE NON-REVERSING
FVR = FULL VOLTAGE REVERSING
2S = TWO SPEED
1W = ONE WINDING
2W = TWO WINDING
C = CONTACTOR

PANELBOARD

TRANSFER SWITCH (AUTOMATIC OR MANUAL)

CONVERTER OR VFD
* = ~ = AC
~ = DC

HP
MOTOR

KW
KVA
PF
Z
GEN
GENERATOR

*
LOCAL CONTROL:
CP = CONTROL PANEL
HTR = HEATER
SKD = SKID MOUNTED LOAD
VFD = VARIABLE FREQUENCY DRIVE

LINE TYPE (DIAGRAMS AND SCHEMATICS)

BUS
POWER CIRCUIT
ELECTRICAL ENCLOSURE

RACEWAY

CONDUIT

CONDUIT STUB WITH CAP

CONDUIT:
DUCTBANK
EMBEDDED
EXPOSED
UNDERGROUND DIRECT BURIAL

J
JUNCTION BOX

POWER

FUSED DISCONNECT SWITCH

COMBINATION DISCONNECT WITH STARTER

PANELBOARD, 480Y/277V OR 480V

PANELBOARD, 208Y/120V OR 120/240V

*
DUPLEX RECEPTACLE

* RECEPTACLE OPTIONS, IF REQ'D:
GFI = GROUND FAULT INTERRUPTING
IG = ISOLATED GROUND
S = SWITCH AND OUTLET
WP = WEATHERPROOF
XP = EXPLOSIONPROOF

XFR
TRANSFER SWITCH (AUTOMATIC OR MANUAL)

M
MOTOR

FIRE ALARM

* X
* =
FSD = FIRE/SMOKE DAMPER
F = MANUAL PULL STATION
FD = FIRE DAMPER
SD = SMOKE DAMPER
M = MAGNETIC DOOR HOLDER
RT = REMOTE TEST STATION & PILOT LIGHT
V = VISUAL
I = INDIVIDUAL ADDRESSABLE MODULE
WHERE X:
C – CONTROL TYPE
M – MONITOR TYPE
S – SUPERVISORY

LIGHTING

(SEE NOTE 3)

X
FLUORESCENT, RECESSED

X
FLUORESCENT, SURFACE MOUNTED

X
FLUORESCENT, SURFACE MOUNTED STRIP

X
EMERGENCY FLUORESCENT, RECESSED

X
EMERGENCY FLUORESCENT, SURFACE MOUNTED

X
EMERGENCY FLUORESCENT, SURFACE MOUNTED STRIP

X
HID/INCANDESCENT, CEILING MOUNTED

X
HID/INCANDESCENT, WALL MOUNTED

ELECTRICAL DEVICE MOUNTING HEIGHT

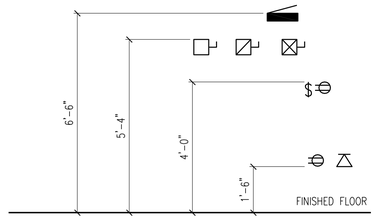

GENERAL NOTES

1. ALL SYMBOLS AND ABBREVIATIONS SHOWN ON THIS LEGEND MAY NOT APPEAR ON THIS SET OF DRAWINGS.
2. X ON FIXTURE SYMBOL DENOTES FIXTURE TYPE DESIGNATION. SEE FIXTURE SCHEDULE.
3. USE DIRECTIONAL ARROW ON EXIT SIGNS AS REQUIRED.

REGISTERED PROFESSIONAL ENGINEER
NO. 334187
LYLE D. VANCE
STATE OF UTAH
3/23/10

NO.	REVISIONS	DWN	APVD	APVD	DATE
0	ISSUED FOR BID	JK	DR	LV	3/4/10

Stanley Consultants INC.
383 West Vine Street, Suite 400, Murray City, Utah 84123
www.stanleygroup.com

GUNTHER TRADES 5TH FLOOR HVAC IMPROVEMENTS
UTAH VALLEY UNIVERSITY
OREM, UTAH

ELECTRICAL SYMBOLS
LEGEND AND NOTES

AT FULL SIZE
0 1 2 3 IN
0 1 2 3 4 5 6 7 8 cm

DESIGNED L. VANCE
DRAWN J. KIM
CHECKED L. VANCE
APPROVED L. VANCE
APPROVED
DATE 3/4/10

SCALE: AS NOTED
NO. EG001
REV. 0

© STANLEY CONSULTANTS

CADD: E1-R3
$$$$$$$$$$FILENAME$$$$$$$$$$
SCI PROJECT NO.

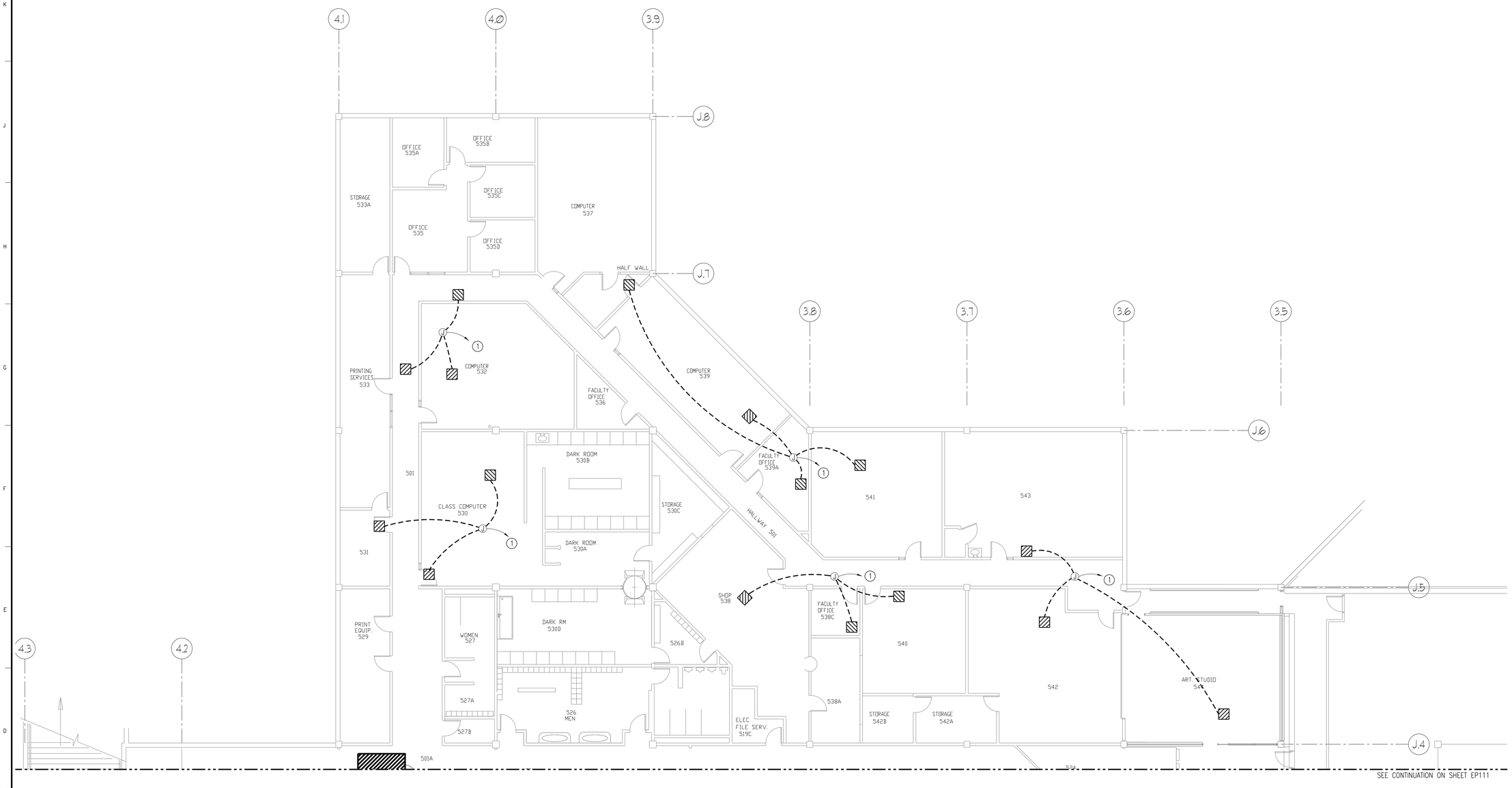

SEE CONTINUATION ON SHEET EP111

KEY NOTES:

1. PROVIDE AND INSTALL J-BOX, 2 #12 THHN CONDUCTORS AND 1 #12 GND IN MINIMUM 1/2"C AND CONNECT TO THE NEAREST AVAILABLE 120V PANEL WITH SPACE AVAILABLE. PROVIDE NEW 20A BREAKER IF NO SPARES ARE AVAILABLE.

5TH FLOOR AREA A ELECTRICAL POWER PLAN

SCALE: 1/8" = 1'-0"

NORTH

REGISTERED PROFESSIONAL ENGINEER
NO. 334187
LYLE D. VANCE
STATE OF UTAH
3/23/10

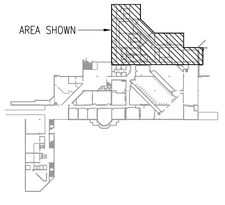

KEY PLAN

SCALE: N.T.S.

NORTH

AT FULL SIZE

0 1 2 3 IN

0 1 2 3 4 5 6 7 8 cm

NO.	REVISIONS	DWN	APVD	APVD	DATE
0	ISSUED FOR BID	JK	DR	LV	3/4/10

Stanley Consultants INC.

383 West Vine Street, Suite 400, Murray City, Utah 84123
www.stanleygroup.com

GUNTHER TRADES 5TH FLOOR HVAC IMPROVEMENTS
UTAH VALLEY UNIVERSITY
OREM, UTAH

5TH FLOOR AREA A
ELECTRICAL POWER PLAN

DESIGNED L. VANCE
DRAWN J. KIM
CHECKED L. VANCE
APPROVED L. VANCE
APPROVED
DATE 3/4/10

SCALE: AS NOTED

NO. EP110 REV. 0

CADD: E1-B3

SCI PROJECT NO:

FILENAME:

© STANLEY CONSULTANTS

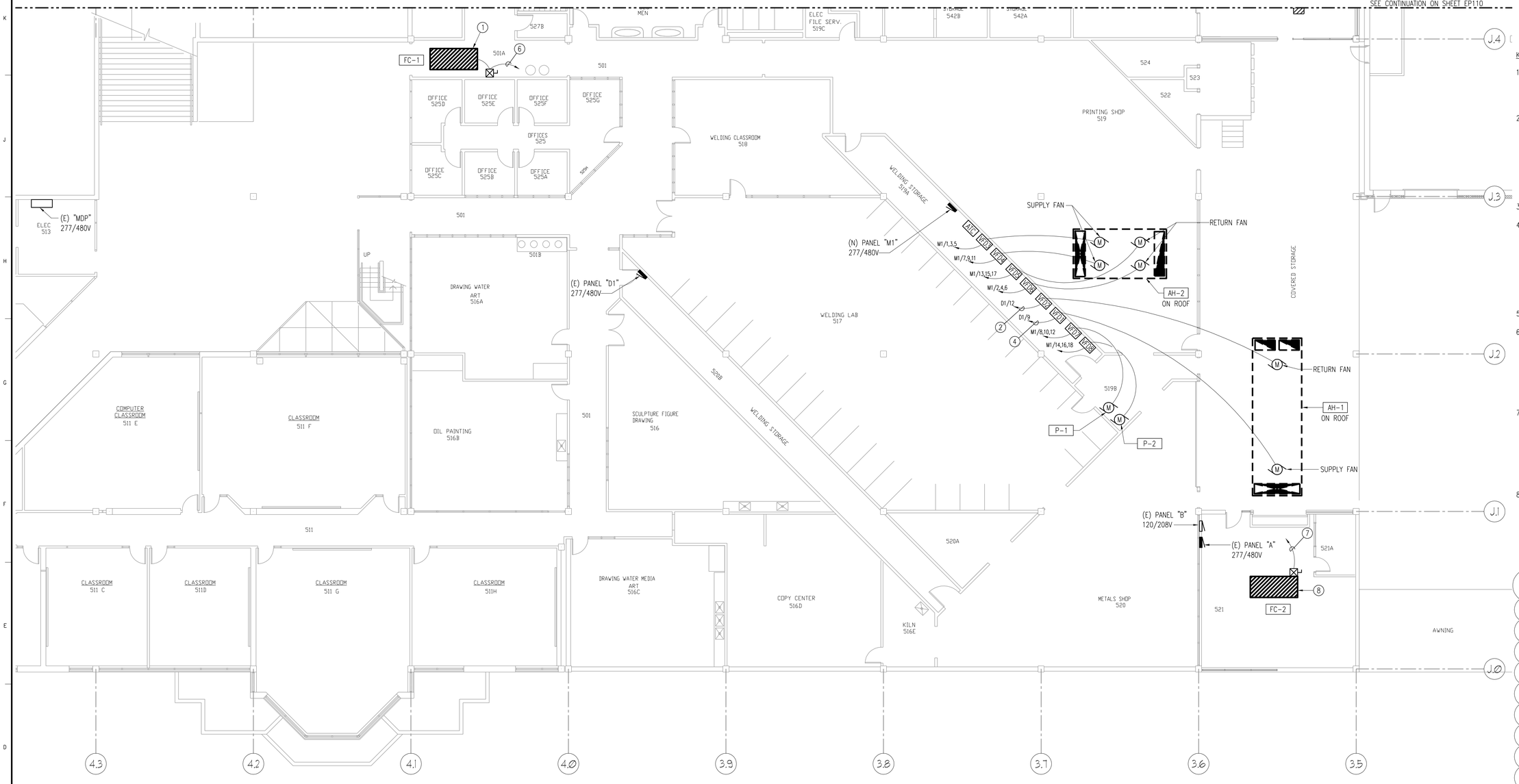

5TH FLOOR AREA B ELECTRICAL POWER PLAN

SCALE: 1/8" = 1'-0"

NORTH

GENERAL NOTES:

1. PROVIDE AND INSTALL NEW CIRCUIT BREAKERS AS NECESSARY. NEW CIRCUIT BREAKERS ARE TO EXACTLY MATCH EXISTING CIRCUIT BREAKER'S MANUFACTURER AND AIC RATING.

KEY NOTES:

1. INSTALL A DUCT DETECTOR IN THE RETURN AIR DUCT OF FAN COIL UNIT (FC-1). UNIT SHALL SHUT DOWN ON ALARM VIA THE ATC CONTROL PANEL. SEE FIRE ALARM NOTES. 1
2. TIE VFD TO THE EXISTING PANEL "D1." PROVIDE AND INSTALL A 30A/3P CIRCUIT BREAKER IN PANEL "D1". PROVIDE AND INSTALL CONDUIT, CONDUCTOR, J-BOX, ETC FOR A COMPLETE INSTALLATION. CONDUCTOR AND CONDUIT SIZE SHALL BE AS INDICATED IN MECHANICAL EQUIPMENT SCHEDULE ON DRAWING EP201. MAKE ALL NECESSARY MODIFICATIONS TO MAINTAIN CIRCUIT INTEGRITY. COORDINATE EXACT LOCATION OF VFD WITH OWNER PRIOR TO ROUGH-IN.
3. NOT USED.
4. TIE VFD TO THE EXISTING PANEL "D1." PROVIDE AND INSTALL A 80A/3P CIRCUIT BREAKER IN PANEL "D1". PROVIDE AND INSTALL CONDUIT, CONDUCTOR, J-BOX, ETC FOR A COMPLETE INSTALLATION. CONDUCTOR AND CONDUIT SIZE SHALL BE AS INDICATED IN MECHANICAL EQUIPMENT SCHEDULE ON DRAWING EP201. MAKE ALL NECESSARY MODIFICATIONS TO MAINTAIN CIRCUIT INTEGRITY. COORDINATE EXACT LOCATION OF VFD WITH OWNER PRIOR TO ROUGH-IN.
5. NOT USED.
6. TIE FAN COIL UNIT (FC-1) TO NEAREST 20A/3P CIRCUIT BREAKER IN AN EXISTING 120/208V PANEL WITH AVAILABLE CAPACITY. PROVIDE AND INSTALL CONDUIT, CONDUCTOR, J-BOX, ETC FOR A COMPLETE INSTALLATION. CONDUCTOR AND CONDUIT SIZE SHALL BE AS INDICATED IN MECHANICAL EQUIPMENT SCHEDULE ON DRAWING EP201. MAKE ALL NECESSARY MODIFICATIONS TO MAINTAIN CIRCUIT INTEGRITY.
7. UNDER ADD ALTERNATE #1, TIE FAN COIL UNIT (FC-2) TO A 20A/3P CIRCUIT BREAKER IN THE EXISTING PANEL "B". PROVIDE AND INSTALL CONDUIT, CONDUCTOR, J-BOX, ETC FOR A COMPLETE INSTALLATION. CONDUCTOR AND CONDUIT SIZE SHALL BE AS INDICATED IN MECHANICAL EQUIPMENT SCHEDULE ON DRAWING EP201. MAKE ALL NECESSARY MODIFICATIONS TO MAINTAIN CIRCUIT INTEGRITY.
8. UNDER ADD ALTERNATE #1, INSTALL A DUCT DETECTOR IN THE RETURN AIR DUCTS OF FAN COIL UNIT (FC-2). UNIT SHALL SHUT DOWN UPON ALARM VIA THE ATC CONTROL PANELS. SEE FIRE ALARM NOTES. 1

FIRE ALARM NOTES:

1. ALL MODIFICATIONS TO THE FIRE ALARM SYSTEM SHALL BE COMPLETED BY AN INSTALLER CERTIFIED IN INSTALLATION OF SMOKE DETECTION AND FIRE ALARM SYSTEMS.
2. CONTRACTOR WORKING ON THE FIRE ALARM SYSTEM SHALL HAVE A MINIMUM OF 5 YEARS OF DOCUMENTED FIRE ALARM INSTALLATION EXPERIENCE.
3. CONTRACTOR SHALL INTEGRATE NEW DUCT DETECTORS INTO THE EXISTING FIRE ALARM SYSTEM AND PROVIDE MODIFICATIONS TO THE SYSTEM TO AUTOMATICALLY SHUT DOWN THE INDICATED AIR HANDLING UNIT IN AN ALARM CONDITION. CONTRACTOR SHALL PROVIDE TESTING AND PROGRAMMING FOR A COMPLETE AND WORKABLE SYSTEM IN ACCORDANCE WITH THE REQUIREMENTS OF APPLICABLE CODES AND THE UVU FIRE MARSHAL.
4. CONTRACTOR SHALL PROVIDE DOCUMENTATION OF THE SYSTEM MODIFICATIONS.

1

REGISTERED PROFESSIONAL ENGINEER
NO. 334187
LYLE D. VANCE
STATE OF UTAH
3/23/10

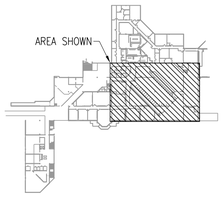

KEY PLAN

SCALE: N.T.S.

NORTH

AT FULL SIZE

0 1 2 3 IN

0 1 2 3 4 5 6 7 8 cm

NO.	REVISIONS	DWN	APVD	APVD	DATE
1	ADD FIRE ALARM NOTES	JK	DR	LV	3/17/10
0	ISSUED FOR BID	JK	DR	LV	3/4/10

Stanley Consultants INC.

383 West Vine Street, Suite 400, Murray City, Utah 84123
www.stanleygroup.com

GUNTHER TRADES 5TH FLOOR HVAC IMPROVEMENTS
UTAH VALLEY UNIVERSITY
OREM, UTAH

5TH FLOOR AREA B
ELECTRICAL POWER PLAN

DESIGNED L. VANCE
DRAWN J. KIM
CHECKED L. VANCE
APPROVED L. VANCE
APPROVED
DATE 3/4/10

SCALE: AS NOTED

NO. EP111 REV. 0

PROJECT NO.

SSSSSSSSSSSSFILENAMESSSSSSSSSSSS

LCADD E1-R3

© STANLEY CONSULTANTS

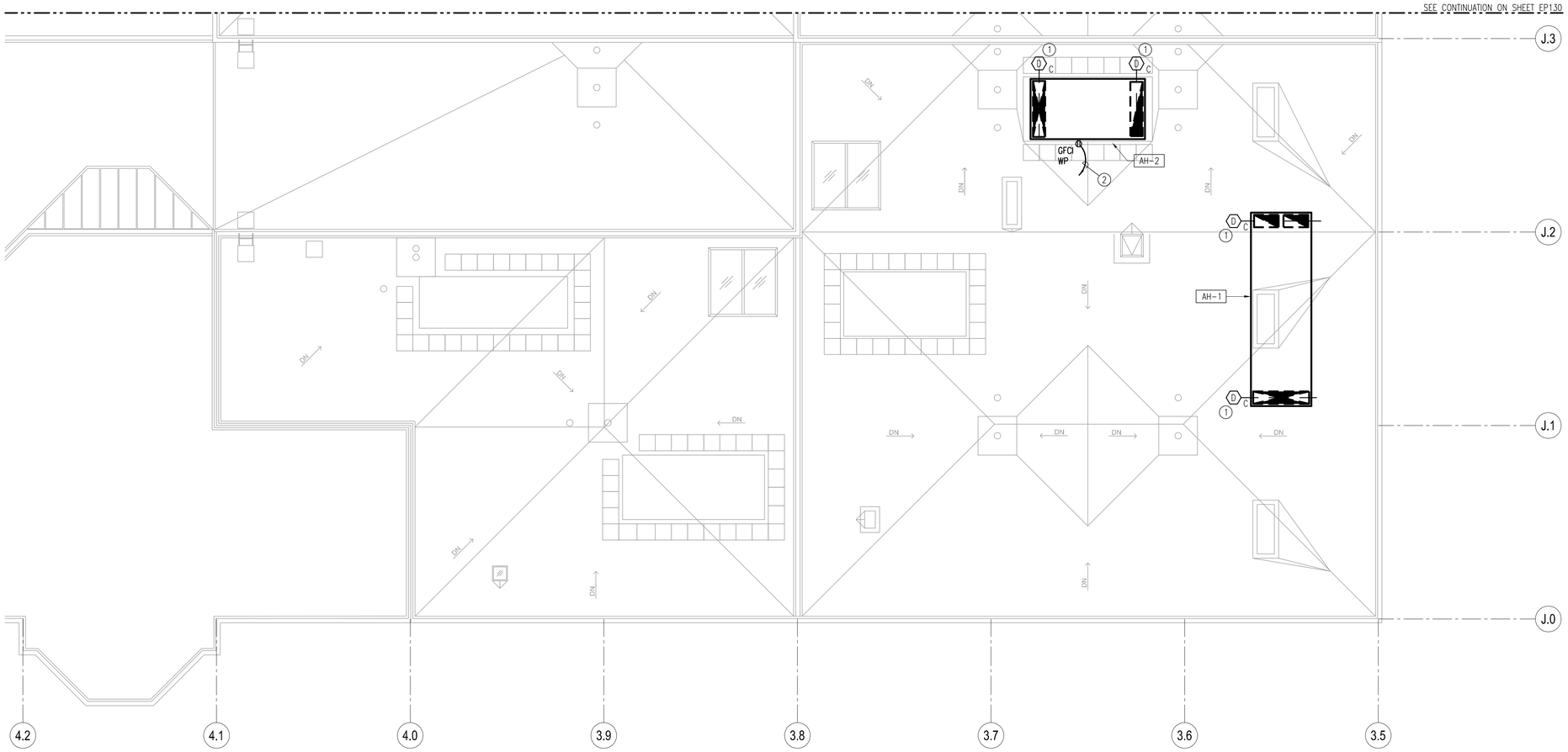

5TH FLOOR AREA B ROOF ELECTRICAL PLAN

SCALE: 1/8" = 1'-0"

NORTH

KEY NOTES:

1. INSTALL DUCT DETECTORS IN THE RETURN AND SUPPLY DUCTS OF THE AIR HANDLING UNIT. UNIT SHALL SHUT DOWN UPON ALARM VIA THE ATC CONTROL PANEL. SEE FIRE ALARM NOTES. 1
2. TIE HOMERUN TO NEAREST 120V/1P/20A CIRCUIT BREAKER WITH AVAILABLE CAPACITY. PROVIDE CONDUIT, CONDUCTORS, J-BOX, ETC. AS NECESSARY FOR A COMPLETE INSTALLATION.

FIRE ALARM NOTES:

1. ALL MODIFICATIONS TO THE FIRE ALARM SYSTEM SHALL BE COMPLETED BY AN INSTALLER CERTIFIED IN INSTALLATION OF SMOKE DETECTION AND FIRE ALARM SYSTEMS.
2. CONTRACTOR WORKING ON THE FIRE ALARM SYSTEM SHALL HAVE A MINIMUM OF 5 YEARS OF DOCUMENTED FIRE ALARM INSTALLATION EXPERIENCE.
3. CONTRACTOR SHALL INTEGRATE NEW DUCT DETECTORS INTO THE EXISTING FIRE ALARM SYSTEM AND PROVIDE MODIFICATIONS TO THE SYSTEM TO AUTOMATICALLY SHUT DOWN THE INDICATED AIR HANDLING UNIT IN AN ALARM CONDITION. CONTRACTOR SHALL PROVIDE TESTING AND PROGRAMMING FOR A COMPLETE AND WORKABLE SYSTEM IN ACCORDANCE WITH THE REQUIREMENTS OF APPLICABLE CODES AND THE UVU FIRE MARSHAL.
4. CONTRACTOR SHALL PROVIDE DOCUMENTATION OF THE SYSTEM MODIFICATIONS.

REGISTERED PROFESSIONAL ENGINEER
No. 334187
LYLE D. VANCE
STATE OF UTAH
3/23/10

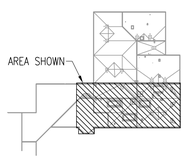

KEY PLAN

SCALE: N.T.S.

NORTH

AT FULL SIZE

0 1 2 3 IN

0 1 2 3 4 5 6 7 8 cm

NO.	REVISIONS	DWN	APVD	APVD	DATE
1	ADD FIRE ALARM NOTES	JK	DR	LV	3/17/10
0	ISSUED FOR BID	JK	DR	LV	3/4/10

Stanley Consultants INC.

383 West Vine Street, Suite 400, Murray City, Utah 84123
www.stanleygroup.com

GUNTHER TRADES 5TH FLOOR HVAC IMPROVEMENTS
UTAH VALLEY UNIVERSITY
OREM, UTAH

5TH FLOOR AREA B ROOF ELECTRICAL PLAN

DESIGNED L. VANCE
DRAWN J. KIM
CHECKED L. VANCE
APPROVED L. VANCE
APPROVED
DATE 3/4/10

SCALE: AS NOTED

NO. EP121

REV. 0

© STANLEY CONSULTANTS

CADD E1-R3

SCI PROJECT NO.

$$$$$$$$$$$$FILCMAN$$$$$$$$$$$$

KEY NOTES: ◯

1. TIE EXHAUST FAN TO NEAREST 208V/20A/3P EXISTING CIRCUIT BREAKER IN AN EXISTING PANEL. PROVIDE AND INSTALL CONDUIT, CONDUCTORS, J-BOXES, ETC. AS NECESSARY FOR A COMPLETE INSTALLATION. INSTALL NEW CIRCUIT BREAKER AS NEEDED. NEW CIRCUIT BREAKER TO EXACTLY MATCH EXISTING CIRCUIT BREAKER'S MANUFACTURER AND AIC RATING.

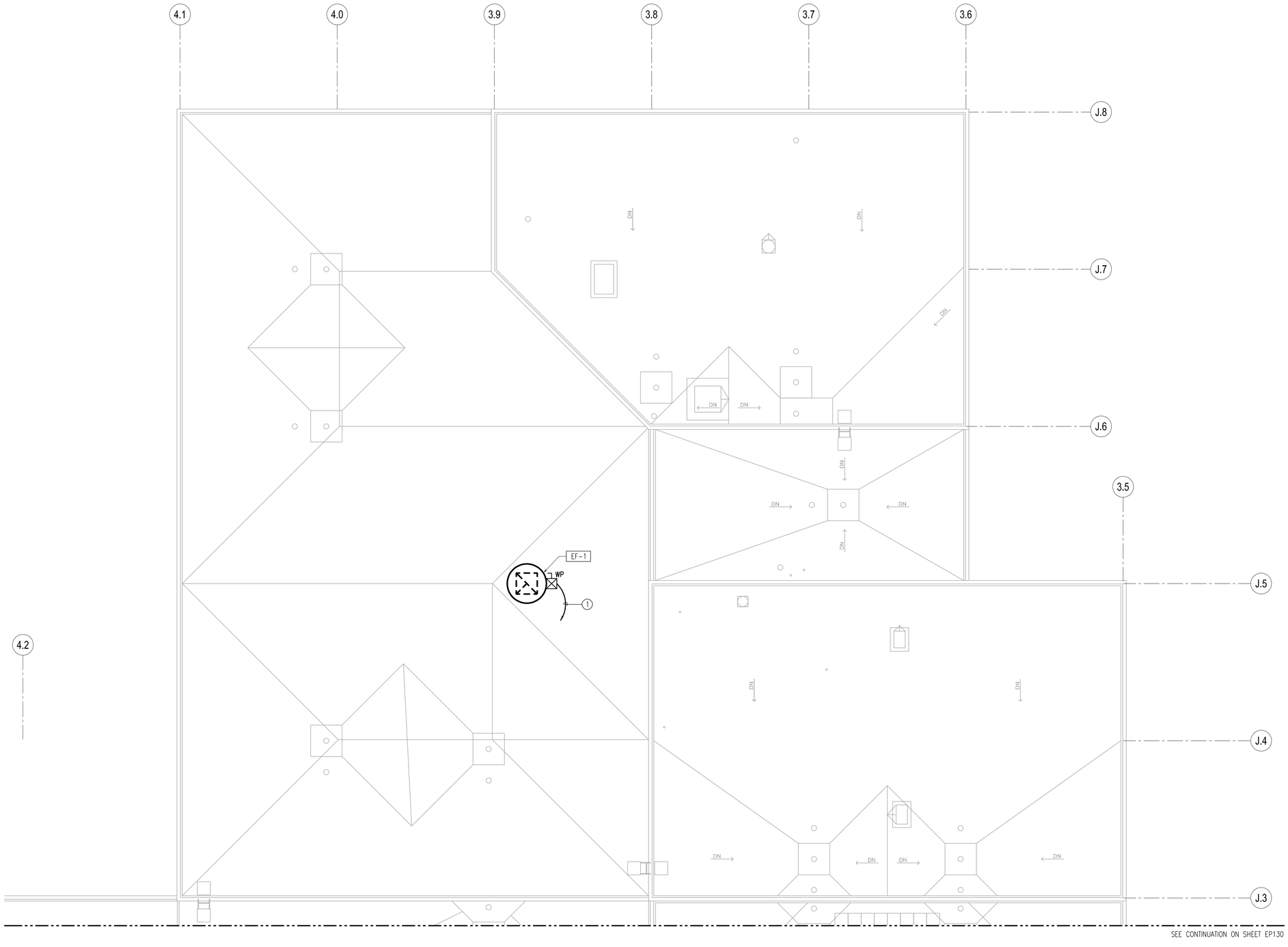

6TH FLOOR AREA A ROOF ELECTRICAL PLAN

SCALE: 1/8" = 1'-0"

NORTH

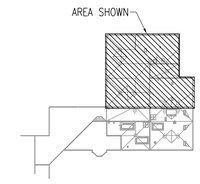

KEY PLAN

SCALE: N.T.S.

NORTH

AT FULL SIZE

0 1 2 3 IN

0 1 2 3 4 5 6 7 8 cm

REGISTERED PROFESSIONAL ENGINEER
NO. 334187
LYLE D. VANCE
STATE OF UTAH
3/23/10

NO.	REVISIONS	DWN	APVD	APVD	DATE
0	ISSUED FOR BID	JK	DR	LV	3/4/10

Stanley Consultants INC.

383 West Vine Street, Suite 400, Murray City, Utah 84123
www.stanleygroup.com

GUNTHER TRADES 5TH FLOOR HVAC IMPROVEMENTS
UTAH VALLEY UNIVERSITY
OREM, UTAH

6TH FLOOR AREA A ROOF
ELECTRICAL PLAN

DESIGNED L. VANCE
DRAWN J. KIM
CHECKED L. VANCE
APPROVED L. VANCE
APPROVED
DATE 3/4/10

SCALE: AS NOTED

NO. EP130 REV. 0

SCI PROJECT NO:

FILENAME:

CADD E1-83

© STANLEY CONSULTANTS

MECHANICAL EQUIPMENT SCHEDULE										
NAME OF MECHANICAL EQUIPMENT		AIR HANDLER UNIT - SUPPLY FAN	AIR HANDLER UNIT - RETURN FAN	AIR HANDLER UNIT - SUPPLY FAN	AIR HANDLER UNIT - RETURN FAN	FAN COIL UNIT	ADD ALTERNATE #1: FAN COIL UNIT	EXHAUST FAN	HOT WATER CIRC. PUMP	CHILLED WATER CIRC. PUMP
MOTOR DATA	EQUIPMENT NO.	AH-1	AH-1	AH-2	AH-2	FC-1	FC-2	EF-1	P1	P2
	RATING/WATTS	40 HP	15 HP	(2) 15 HP	(2)7-1/2 HP	2 HP	1-1/2HP	1 HP	7-1/2 HP	7-1/2 HP
	VOLTAGE	480	480	480	480	208	208	208	480	480
	PHASE	3	3	3	3	3	3	3	3	3
	AMPS	52	21	21	11	7.8	6.9	4.2	11	11
	WIRE SIZE	3 #4	3 #10	3 #10	3 #12	3 #12	3 #12	3 #12	3 #12	3 #12
	GROUND WIRE	1 #8	1 #10	1 #10	1 #12	1 #12	1 #12	1 #12	1 #12	1 #12
	CONDUIT SIZE	1-1/2"	3/4"	3/4"	3/4"	3/4"	3/4"	3/4"	3/4"	3/4"
	FUSE DISC. SW.	--	--	--	--	20	20	20	--	--
	TYPE RKI FUSES	--	--	--	--	10	10	10	--	--
	NON-FUSE SW.	--	--	--	--	--	--	--	--	--
	CAPACITOR (KVAR)	--	--	--	--	--	--	--	--	--
	NOTES	1,2	1,2	1,2	1,2	2,3	2,3	3	1	1

NOTES:

1. UNIT FURNISHED WITH VFD (BY DIVISION 25).
2. PROVIDE DUCT DETECTORS AS SHOWN ON SHEETS EP121 AND EP111
3. PROVIDE COMBINATION STARTER AND DISCONNECT (HOA) W/ (2) N.O. AND N.C. CONTACTS.

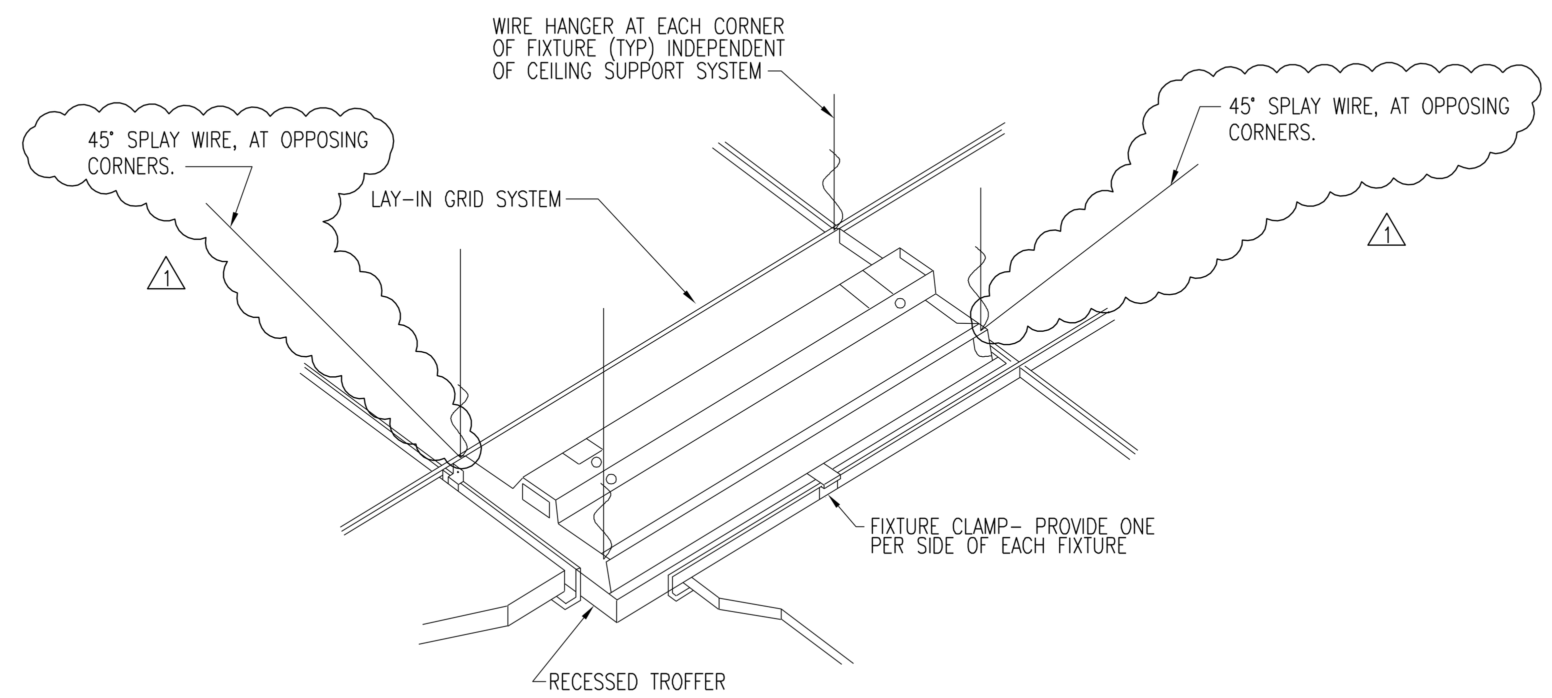

TYPICAL RECESSED FIXTURE MOUNTING DETAIL

SCALE: N.T.S.

KEY NOTES:

1. REPLACE EXISTING BREAKER AND PROVIDE AND INSTALL NEW CABLE AND CONDUIT TO NEW EQUIPMENT. RE-USE EXISTING CONDUIT IF AVAILABLE AND IN SERVICEABLE CONDITION.
2. PROVIDE AND INSTALL A NEW PANEL AS INDICATED.
3. SEE SPEC 26 05 00 (2.03G) FOR VFD CABLE REQUIREMENTS.

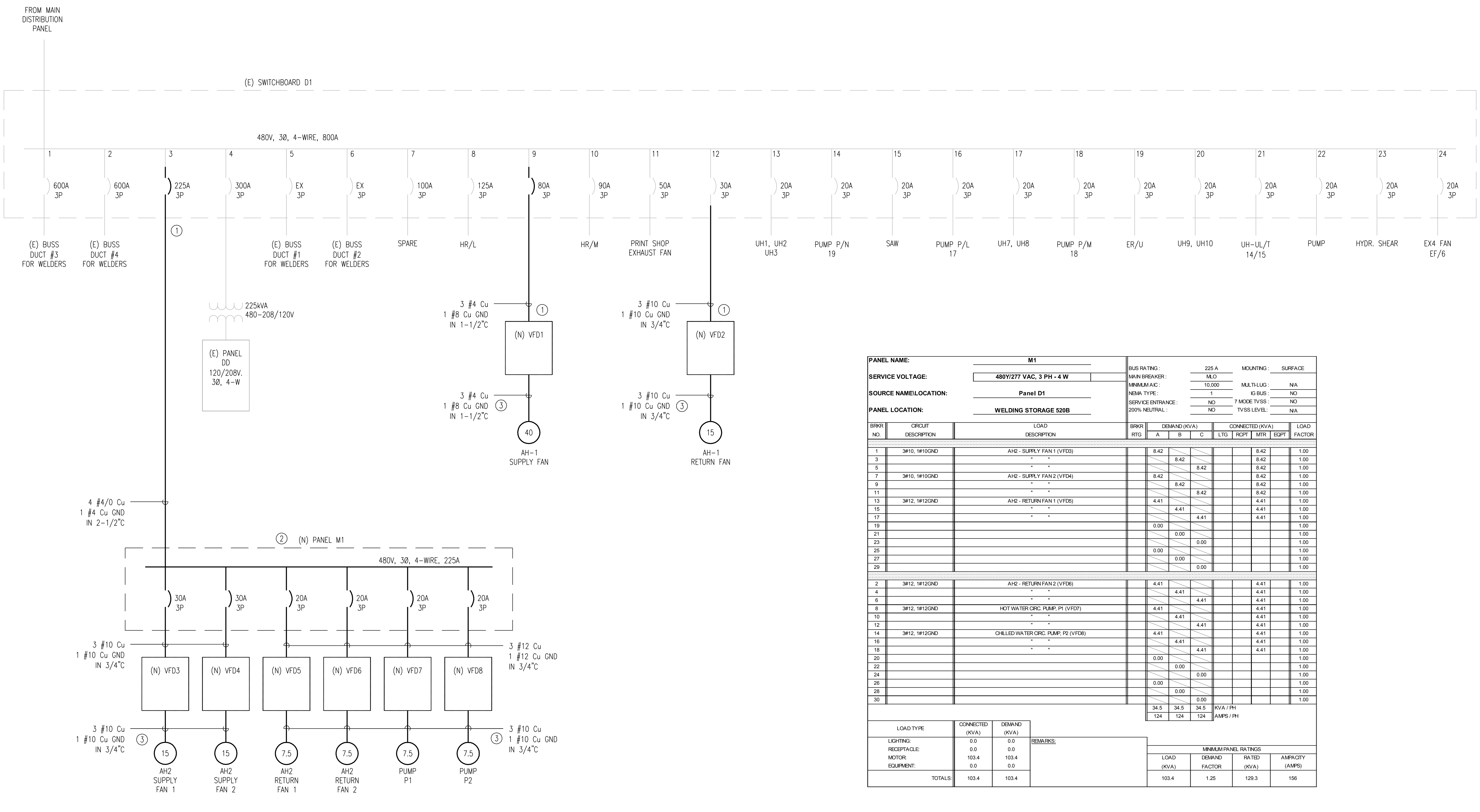

PANEL NAME:	M1	BUS RATING :	225 A	MOUNTING :	SURFACE
SERVICE VOLTAGE:	480Y/277 VAC, 3 PH - 4 W	MAIN BREAKER :	MLO		
		MINIMUM AIC :	10,000	MULTI-LUG :	N/A
SOURCE NAME\LOCATION:	Panel D1	NEMA TYPE :	1	IG BUS :	NO
		SERVICE ENTRANCE :	NO	7 MODE TVSS :	NO
PANEL LOCATION:	WELDING STORAGE 520B	200% NEUTRAL :	NO	TVSS LEVEL:	N/A

BRKR NO.	CIRCUIT DESCRIPTION	LOAD DESCRIPTION	BRKR RTG	DEMAND (KVA) A	DEMAND (KVA) B	DEMAND (KVA) C	CONNECTED (KVA) LTG	CONNECTED (KVA) RCPT	CONNECTED (KVA) MTR	CONNECTED (KVA) EQPT	LOAD FACTOR
1	3#10, 1#10GND	AH2 - SUPPLY FAN 1 (VFD3)		8.42					8.42		1.00
3		" "			8.42				8.42		1.00
5		" "				8.42			8.42		1.00
7	3#10, 1#10GND	AH2 - SUPPLY FAN 2 (VFD4)		8.42					8.42		1.00
9		" "			8.42				8.42		1.00
11		" "				8.42			8.42		1.00
13	3#12, 1#12GND	AH2 - RETURN FAN 1 (VFD5)		4.41					4.41		1.00
15		" "			4.41				4.41		1.00
17		" "				4.41			4.41		1.00
19				0.00							1.00
21					0.00						1.00
23						0.00					1.00
25				0.00							1.00
27					0.00						1.00
29						0.00					1.00
2	3#12, 1#12GND	AH2 - RETURN FAN 2 (VFD6)		4.41					4.41		1.00
4		" "			4.41				4.41		1.00
6		" "				4.41			4.41		1.00
8	3#12, 1#12GND	HOT WATER CIRC. PUMP, P1 (VFD7)		4.41					4.41		1.00
10		" "			4.41				4.41		1.00
12		" "				4.41			4.41		1.00
14	3#12, 1#12GND	CHILLED WATER CIRC. PUMP, P2 (VFD8)		4.41					4.41		1.00
16		" "			4.41				4.41		1.00
18		" "				4.41			4.41		1.00
20				0.00							1.00
22					0.00						1.00
24						0.00					1.00
26				0.00							1.00
28					0.00						1.00
30						0.00					1.00
				34.5	34.5	34.5	KVA / PH				
				124	124	124	AMPS / PH				

LOAD TYPE	CONNECTED (KVA)	DEMAND (KVA)
LIGHTING:	0.0	0.0
RECEPTACLE:	0.0	0.0
MOTOR:	103.4	103.4
EQUIPMENT:	0.0	0.0
TOTALS:	103.4	103.4

REMARKS:

MINIMUM PANEL RATINGS			
LOAD (KVA)	DEMAND FACTOR	RATED (KVA)	AMPACITY (AMPS)
103.4	1.25	129.3	156

REGISTERED PROFESSIONAL ENGINEER
No. 334187
LYLE D. VANCE
STATE OF UTAH
3/23/10

NO.	REVISIONS	DWN	APVD	APVD	DATE
1	REVISION 1	JK	DR	LV	3/23/10
0	ISSUED FOR BID	JK	DR	LV	3/4/10

Stanley Consultants INC.

383 West Vine Street, Suite 400, Murray City, Utah 84123
www.stanleygroup.com

GUNTHER TRADES 5TH FLOOR HVAC IMPROVEMENTS
UTAH VALLEY UNIVERSITY
OREM, UTAH

ELECTRICAL POWER DETAILS AND SCHEDULES

DESIGNED L. VANCE
DRAWN J. KIM
CHECKED L. VANCE
APPROVED L. VANCE
APPROVED
DATE 3/4/10

SCALE: AS NOTED

NO. EP201 REV. 0

AT FULL SIZE
0 1 2 3 IN
0 1 2 3 4 5 6 7 8 cm

© STANLEY CONSULTANTS

SCI PROJECT NO:
$$$$$$$$$$$$$$$FILENAME$$$$$$$$$$$$$$$

CADD E1-R3

KEY NOTES: ○

1. RE-INSTALL EXISTING LIGHT FIXTURES IN NEW LAY-IN CEILING AS SHOWN. TIE FIXTURES TO EXISTING CIRCUIT AND SWITCH LEG IN CORRESPONDING ROOM AND AREA. MAKE ALL NECESSARY MODIFICATIONS TO PROVIDE A COMPLETE AND OPERABLE LIGHTING SYSTEM.
2. RE-INSTALL EXISTING EXIT SIGNS IN NEW LAY-IN CEILING AS SHOWN. TIE EXIT SIGNS TO EXISTING UNSWITCHED LIGHTING CIRCUIT OR EMERGENCY LIGHTING CIRCUIT AS NECESSARY. MAKE ALL NECESSARY MODIFICATIONS FOR A COMPLETE INSTALLATION. PROVIDE NEW EXIT SIGNS AS NECESSARY. NEW EXIT SIGNS TO EXACTLY MATCH EXISTING EXIT SIGNS.

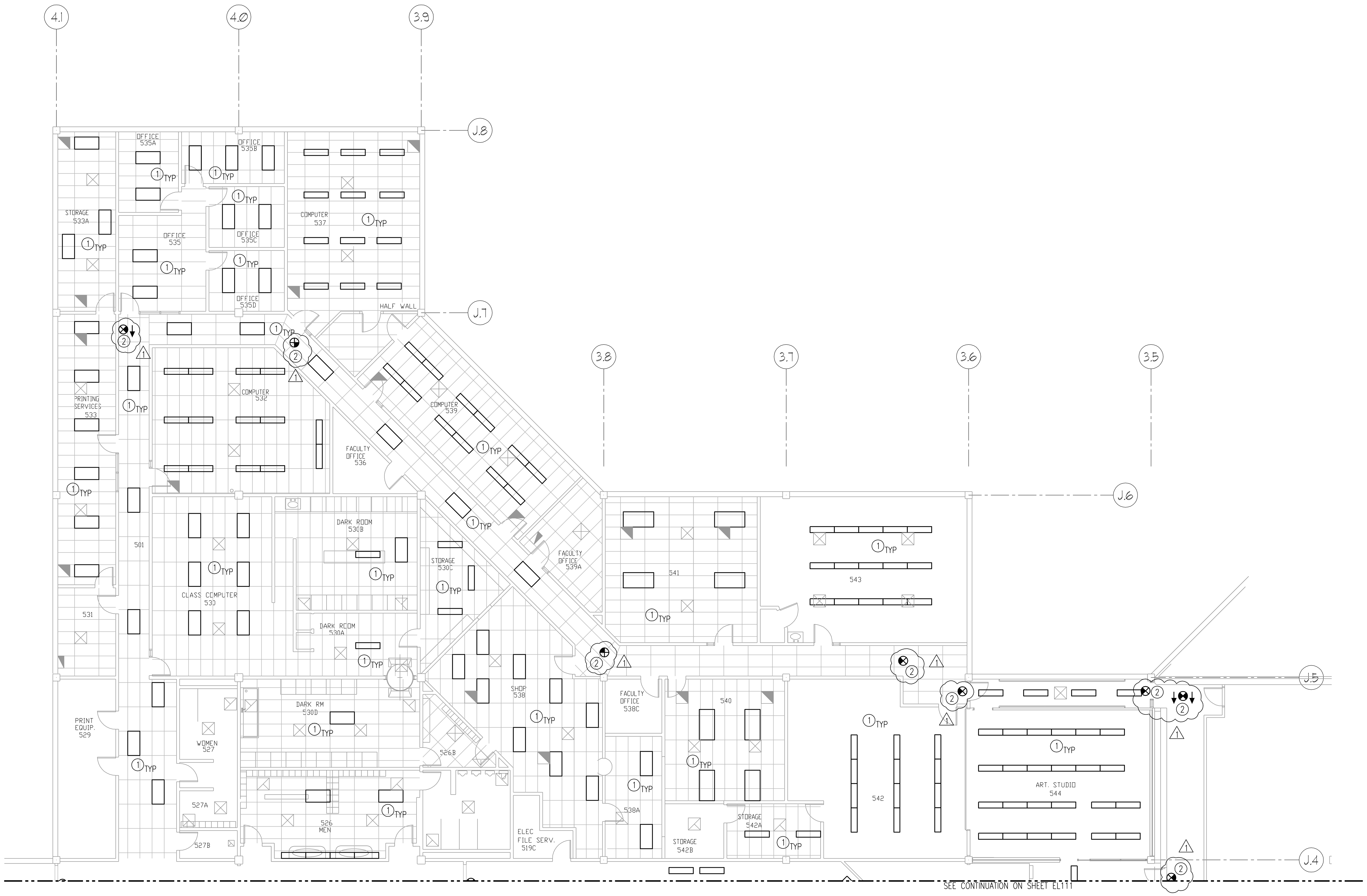

5TH FLOOR AREA A ELECTRICAL LIGHTING PLAN

SCALE: 1/8" = 1'-0"

NORTH

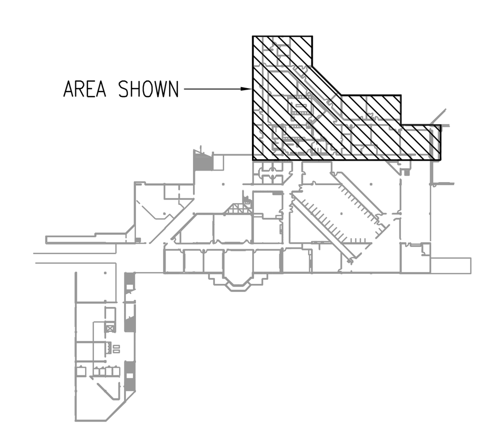

KEY PLAN

SCALE: N.T.S.

NORTH

AT FULL SIZE

0 1 2 3 IN

0 1 2 3 4 5 6 7 8 cm

NO.	REVISIONS	DWN	APVD	APVD	DATE
1	REVISION 1	JK	DR	LV	3/23/10
0	ISSUED FOR BID	JK	DR	LV	3/4/10

Stanley Consultants INC.

383 West Vine Street, Suite 400, Murray City, Utah 84123
www.stanleygroup.com

GUNTHER TRADES 5TH FLOOR HVAC IMPROVEMENTS
UTAH VALLEY UNIVERSITY
OREM, UTAH

5TH FLOOR AREA A
LIGHTING PLAN

DESIGNED L. VANCE
DRAWN J. KIM
CHECKED L. VANCE
APPROVED L. VANCE
APPROVED
DATE 3/4/10

SCALE: AS NOTED

NO. EL110

REV. 0

13© STANLEY CONSULTANTS

REGISTERED PROFESSIONAL ENGINEER NO. 334187 LYLE D. VANCE STATE OF UTAH 3/23/10

KEY NOTES:

1. EXISTING LIGHTING FIXTURE TO REMAIN. RELOCATE FIXTURES AS NECESSARY TO ACCOMMODATE THE INSTALLATION OF NEW DUCT WORK IN THIS AREA.

2. PROVIDE AND INSTALL NEW LIGHT FIXTURES IN NEW LAY-IN CEILING AS SHOWN. TIE FIXTURES TO EXISTING CIRCUIT AND SWITCH LEG. MAKE ALL NECESSARY MODIFICATIONS TO PROVIDE A COMPLETE AND OPERABLE LIGHTING SYSTEM. LIGHTING FIXTURES SHALL BE RECESSED 2'X4', 3-TUBE, T8 FIXTURES. ALL WORK ASSOCIATED WITH ROOM 521 IS AN ADD ALTERNATE.

3. RE-INSTALL EXISTING EXIT SIGNS IN NEW LAY-IN CEILING AS SHOWN. TIE EXIT SIGNS TO EXISTING UNSWITCHED LIGHTING CIRCUIT OR EMERGENCY LIGHTING CIRCUIT AS NECESSARY. MAKE ALL NECESSARY MODIFICATIONS FOR A COMPLETE INSTALLATION. PROVIDE NEW EXIT SIGNS AS NECESSARY. NEW EXIT SIGNS TO EXACTLY MATCH EXISTING EXIT SIGNS.

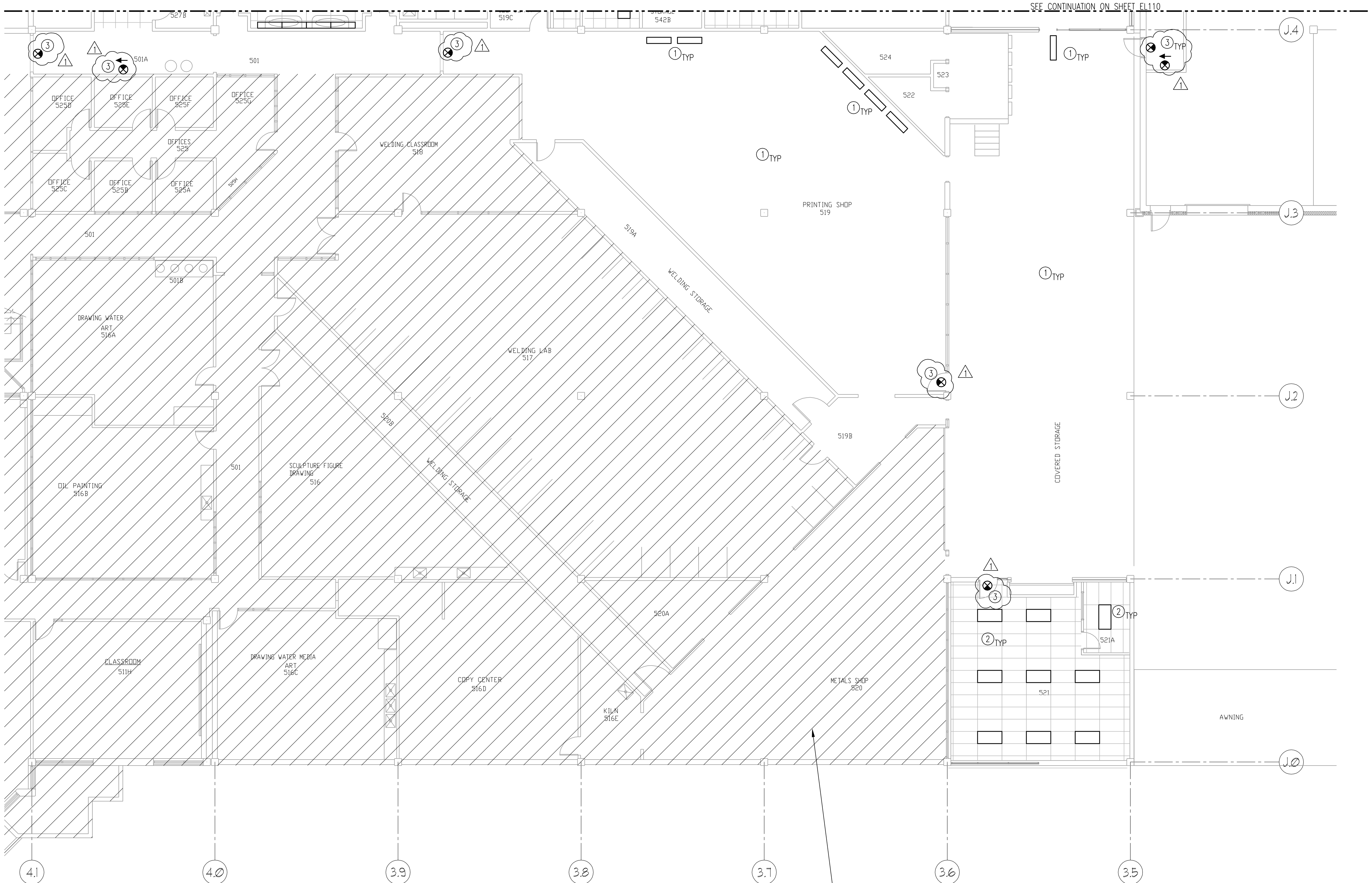

5TH FLOOR AREA B ELECTRICAL LIGHTING PLAN

NORTH

SCALE: 1/8" = 1'-0"

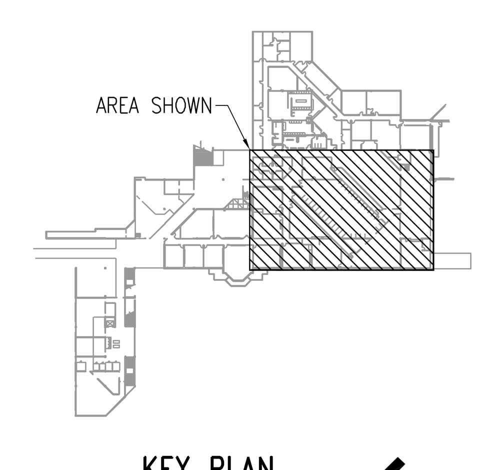

KEY PLAN

SCALE: N.T.S.

NORTH

AT FULL SIZE

0 1 2 3 IN

0 1 2 3 4 5 6 7 8 cm

LYLE D. VANCE
STATE OF UTAH
3/23/10

NO.	REVISIONS	DWN	APVD	APVD	DATE
1	REVISION 1	JK	DR	LV	3/23/10
0	ISSUED FOR BID	JK	DR	LV	3/4/10

Stanley Consultants INC.

383 West Vine Street, Suite 400, Murray City, Utah 84123
www.stanleygroup.com

GUNTHER TRADES 5TH FLOOR HVAC IMPROVEMENTS
UTAH VALLEY UNIVERSITY
OREM, UTAH

5TH FLOOR AREA B LIGHTING PLAN

DESIGNED L. VANCE
DRAWN J. KIM
CHECKED L. VANCE
APPROVED L. VANCE
APPROVED
DATE 3/4/10

SCALE: AS NOTED

NO. EL111

REV. 0

© STANLEY CONSULTANTS

SCI PROJECT NO: