State of Utah

JON M. HUNTSMAN, JR.
*Governor*

GARY R. HERBERT
*Lieutenant Governor*

Department of Administrative Services
KIMBERLY K. HOOD
*Executive Director*

Division of Facilities Construction and Management
DAVID G. BUXTON
*Director*

# ADDENDUM # 3

Date: September 14, 2007

From: Matthias Mueller, Project Manager, DFCM

Reference: Department of Alcoholic Beverage Control New Riverton Liquor Store – DFCM Project No. 05053030
Kimball Junction Liquor Store Remodel & Addition – DFCM Project No. 06234030
Redwood Road Liquor Store Remodel & Expansion – DFCM Project No. 06233030

Subject: Addendum # 3

Pages

| | |
|---|---|
| Addendum Cover | 1 page |
| Schedule Changes | 1 page |
| Notes and Drawings from Architect | 11 pages |
| Total | 13 pages |

***Note: This Addendum shall be included as part of the Contract Documents. Items in this Addendum apply to all drawings and specification sections whether referenced or not involving the portion of the work added, deleted, modified, or otherwise addressed in the Addendum.***

3.1 SCHEDULE CHANGES – There are changes to the Project Schedule. This addendum reflects changes to the ***Addendum Deadline***

3.2 Architect Clarifications

| | | |
|---|---|---|
| | STATE OF UTAH - DEPARTMENT OF ADMINISTRATIVE SERVICES<br>**Division of Facilities Construction and Management** | **DFCM** |

# PROJECT SCHEDULE - REVISED
# PER ADDENDUM NO. 3 ISSUED SEPTEMBER 14, 2007

**PROJECT NAME:** **NEW RIVERTON STORE, REDWOOD ROAD STORE REMODEL AND EXPANSION**
**KIMBALL JUNCTION STORE REMODEL AND EXPANSION**
**DEPARTMENT OF ALCOHOLIC BEVERAGE CONTROL**
**RIVERTON, WEST VALLEY CITY, AND PARK CITY, UTAH**

**DFCM PROJECT #NOS:** **05053030, 06233030, AND 06234030**

| Event | Day | Date | Time | Place |
|---|---|---|---|---|
| Request for Proposals and Construction Documents Available | Tuesday | July 31, 2007 | 4:00 PM | DFCM<br>4110 State Office Bldg<br>SLC, UT and DFCM web site* |
| **Mandatory** Pre-Proposal Meeting | Monday | August 13, 2007 | 9:00 AM | ABC Offices<br>1625 South 900 West<br>SLC, UT |
| Last Day to Submit Questions prior to Short-Listing | Friday | August 17, 2007 | 4:00 PM | Matthias Mueller - DFCM<br>E-mail mmueller@utah.com<br>Fax (801)-538-3267 |
| Statements of Qualifications Management Plans, References, Termination/ Debarment Certifications Due | Friday | August 24, 2007 | 2:00 PM | DFCM<br>4110 State Office Bldg<br>SLC, UT |
| Short-Listing by Selection Committee (if applicable) | Wednesday | August 29, 2007 | | |
| Last Day to Submit Questions | Tuesday | September 11, 2007 | 2:00 PM | Matthias Mueller - DFCM<br>E-mail mmueller@utah.com<br>Fax (801)-538-3267 |
| **Addendum Deadline (exception for bid delays)** | **Friday** | **September 14, 2007** | **4:00 PM** | **DFCM web site *** |
| Short-Listed Contractors Turn in Cost Proposals | Thursday | September 20, 2007 | 2:00 PM | DFCM<br>4110 State Office Bldg<br>SLC, UT |
| Subcontractor List Due | Friday | September 21, 2007 | 2:00 PM | DFCM<br>4110 State Office Bldg<br>SLC, UT<br>Fax (801) 538-3677 |
| Turn in Cost Reduction Proposals | Monday | September 24, 2007 | 2:00 PM | DFCM<br>4110 State Office Bldg<br>SLC, UT |
| Short-Listed Contractor Interviews | Wednesday | September 26, 2007 | TBD | ABC Offices<br>1625 South 900 West<br>SLC, UT |
| Announcement | Thursday | September 27, 2007 | 4:00 PM | DFCM web site * |
| Substantial Completion Date | Wednesday | April 30, 2008 | | |

* DFCM's web site address is **http://dfcm.utah.gov**.

Department of Alcoholic Beverage Control
New Riverton Liquor Store
Kimball Junction Liquor Store Remodel & Addition
Redwood Road Liquor Store Remodel & Addition
Addendum A03

**Addendum No. A03**

**Issued Friday, September 14, 2007**

**PROJECTS**
**Department of Alcoholic Beverage Control**
**New Riverton Liquor Store - DFCM Project No. 05053030**
**Kimball Junction Liquor Store Remodel & Addition - DFCM Project No. 06234030**
**Redwood Road Liquor Store Remodel & Addition - DFCM Project No. 06233030**

**ARCHITECT**
**Frank N. Murdock Jr. Architect & Associates**
**975 East 100 South**
**Salt Lake City, Utah 84102**
**(801) 532-4441**

The original Contract Documents issued for the above noted projects are amended as noted in this Addendum. It shall be the sole responsibility of the bidder to appropriately disseminate this data to all concerned, prior to the assigned bid time and date.

Receipt of this Addendum shall be acknowledged by inserting its number and date in the appropriate space provided on the bid form. This Addendum consists of two (2) 8 1/2" x 11" sheets, five (5) 30" x 42" revised drawings (Redwood Road A101r, A102r, A103r, A301r and A601r) and revised Specification Section 11160.

***CLARIFICATIONS & REQUIREMENTS:***

1. Specification Section 09300, 1..1, A., 2., refers to 18" x 18" wall tile and Section 09300, 1..3, b., 1., refers to 4-1/4 inches by 4-1/4 inches wall tile. All wall tiles shall be 12" x 12". Specification Section 09300, 1..4, A., 1., states that all wall tiles shall be full mud set. All wall tiles shall be thinset.

2. Riverton Liquor Store - the door schedule (Sheet A601) for Riverton lists the overhead sectional door (Door No. 4) as 7'-0" wide by 12'-0" high. The correct door dimension is 7'-4" wide by 8'-0" high.

3. Kimball Junction Liquor Store - the reflected ceiling plan shows the existing ceiling at 10'-6". The new ceiling tiles in the existing part of the building will be installed in the existing grid at the existing ceiling height.

***SPECIFICATIONS:***

1. Specification Section 11160 has been revised and is attached.

***AN ELECTRICAL ADDENDUM IS ATTACHED***

p
SECTION 11160 - LOADING DOCK EQUIPMENT

## PART 1 GENERAL

### 1.1 SUMMARY

A. Section Includes:
   1. Dock (scissor) lift, electro-hydraulic (Kimball Junction and Redwood Road ABC Stores).
   2. Dock seal.
   3. Power-operated hydraulic dock leveler (Riverton ABC Store).

B. Related Documents: The Contract Documents, as defined in Section 01010 - Summary of Work, apply to the Work of this Section. Additional requirements and information necessary to complete the Work of this Section may be found in other Documents.

### 1.2 REFERENCES

A. American National Standards Institute (ANSI):
   1. ANSI MH14.1 - Industrial Loading Dockboards (Ramps).

### 1.3 SUBMITTALS

A. Section 01330 - Submittal Procedures: Procedures for submittals.

   1. Product Data:
      a. Lifts: Indicate materials and finish, installation details, roughing-in measurements, and operation of unit.
      b. Dock seals: Indicate unit dimensions, method of anchorage, and details of construction.

   2. Shop Drawings: Indicate required opening dimensions, tolerances of opening dimensions, placement dimensions, and perimeter conditions of construction.

   3. Assurance/Control Submittals:
      a. Test Reports: Report from approved Independent Testing Agency indicating compliance of Dock Lift with requirements of ANSI MH14.1.
      b. Certificates: Manufacturer's certificate that Products meet or exceed specified requirements.
      c. Qualification Documentation: Submit documentation of experience indicating compliance with specified qualification requirements.

### 1.4 QUALITY ASSURANCE

A. Dock (scissor) lift: Conform to requirements of ANSI MH14.1.

B. Dock Levelers: Conform to requirements of ANSI MH14.1.

C. Qualifications:
   1. Manufacturer: Company specializing in manufacturing Products specified with minimum 5 years documented experience.

2. Installer: Company specializing in performing the Work of this Section with minimum 5 years documented experience.

1.5 DELIVERY, STORAGE, AND HANDLING

A. Section 01600 - Product Requirements: Transport, handle, store, and protect Products.

PART 2 PRODUCTS

2.1 ELECTRO-HYDRAULIC DOCK (SCISSOR) LIFTS

A. Manufacturers: Subject to compliance with project requirements, manufacturer's offering Products which may be incorporated in the Work include the following:
1. Blue Giant Corporation, Pell City, AL (800) 872-2583.
2. Kelley Company Incorporated, Milwaukee, WI (800) 558-6960.
3. Pentalift Equipment Corporation, Buffalo, NY (519) 763-3625.
4. Rite-Hite Corporation, Milwaukee, WI (800) 456-0600.
5. Advance Lifts, 701 Kirk Road, St. Charles, IL 60174 (800) 843-3625.
6. Section 01600 - Product Requirements: Product options and substitutions. Substitutions: Permitted.

B. Models:
1. Blue Giant: LoMaster ED Series
2. Kelley: KHDL710-12
3. Pentalift: HED 710
4. Rite-Hite:
5. Advance: 3250

C. Description:
1. Operation: Electro-hydraulic, minimum 5 h.p.
2. Deck Length: 10’-0" (**with additional 30” split bridge plate or lip**).
3. Deck Width: 7'-0".
4. Operating Range: 55-60 inches above ground level to max. 15 inches lowered height.
5. Capacity: 8,000 pounds (minimum).
6. Wall mounted motor control unit with emergency stop button.
7. Fully insulated deck with brush weather seal.
8. Maintenance strut.
9. Warranty: 10 year parts and labor.
10. **Dock (scissor) lift supplier to verify and ensure that the operating voltage and other electrical features of the lift is compatible with the voltage and other electrical systems shown for the lift on the architectural and electrical drawings.**

2.4 DOCK DOOR SEALS

A. Fixed-head pads with adjustable head curtains and beveled side pad Dock Door Seals: provide at each dock space. Fabricate units of compressable polyurethane, covered with a fabric and 4” exposure plates. The dock seals shall have compression vents, drain holes and be secured, and ready to receive Work.

2.5 POWER-OPERATED HYDRAULIC DOCK LEVELER

A. Manufacturers: Subject to compliance with project requirements, manufacturer's offering Products which may be incorporated in the Work include the following:
   1. Blue Giant Corporation, Pell City, AL (800) 872-2583.
   2. Kelley Company Incorporated, Milwaukee, WI (800) 558-6960.
   3. Pentalift Equipment Corporation, Buffalo, NY (519) 763-3625.
   4. Rite-Hite Corporation, Milwaukee, WI (800) 456-0600.
   5. Section 01600 - Product Requirements: Product options and substitutions. Substitutions: Permitted.

B. Models:
   1. Blue Giant: A 6810
   2. Kelley
   3. Pentalift: HD 610
   4. Rite-Hite: HD 1600

C. Description:
   1. Operation: Electro-hydraulic.
   2. Deck Length: 9 - 0" (with additional 16" to 18" lip).
   3. Deck Width: 6' - 0".
   4. Operating Range: 12 inches above to 10 inches below dock level.
   5. Capacity: 20,000 pounds (minimum).
   6. Wall mounted motor control unit with emergency stop button.
   7. Fully insulated deck with brush weather seal.
   11. Telescoping toe guards.
   12. Electrical interlock so that leveler will not operate until dock door is in the open position.
   13. Maintenance strut.
   14. **Dock leveler supplier to verify and ensure that the operating voltage and other electrical features of the leveler is compatible with the voltage and other electrical systems shown for the leveler on the architectural and electrical drawings.**

PART 3 EXECUTION

3.1 EXAMINATION

A. Section 01700 - Execution Requirements: Verification of existing conditions before starting work.

B. Verification of Conditions: Verify that field measurements, surfaces, substrates and conditions are as required, and ready to receive Work.

C. Report in writing to the Architect any prevailing conditions that will adversely affect satisfactory execution of the Work of this Section. Do not proceed with Work until unsatisfactory conditions have been corrected.

D. By beginning Work, Contractor accepts conditions and assumes responsibility for correcting unsuitable conditions encountered at no additional cost to the owner.

3.2 INSTALLATION

A. Install dock seal in accordance with manufacturer's instructions.

B. Install dock (leveler) lift unit or scissor lift in prepared openings in accordance with manufacturer's instructions.

C. Set square and level.

D. Anchor units securely, flush with dock. Weld back of leveling dock to pit frame. Touch-up weld with primer.

3.3 ADJUSTING

A. Adjust installed unit for smooth and balanced operation.

END OF SECTION

ELECTRICAL ADDENDUM
RIVERTON, KIMBALL JCT & REDWOOD ROAD LIQUOR STORES

DRAWINGS

SHEET E100 Riverton

Item #1 Lighting Fixture Schedule: Fixture type F1 # to be FLPLS-4-T8-2-SCBA-E-120-1CA36-C with two lamps & 65 watts. Fixture type F # to be FLPLS-8-T8-2-SCBA-E-120-1CA36-C with four lamps & 95 watts. Fixture type F10 # to be L652P track & L1731P Fixture with 75W Par 30 lamp

SHEET E201 Riverton

Item # 1 Delete notes #5 & 6 and all conduit wire and references to the Intercom system.

PRODUCT APPROVALS

LIST OF APPROVAL ITEMS

The following items, trade names, products and manufactures are approved for bidding. Approval does not relieve the bidder from satisfying the intent of the requirements of the drawings, specifications, and addenda in every respect. Failure to conform to the design quality and standards specified, established and required may result in later disapproval. If equipment must be disapproved after bidding, supplier shall supply specified equipment at no extra cost to the owner.

Items are listed generally and specific model number, etc. shall be as submitted. Items submitted but not approved either did not satisfy the requirements, or showed insufficient data, or arrived after the 8 day deadline established for the submittal process.

Riverton:

| | | | |
|---|---|---|---|
| F1,2 | Daybrite | Lite Control | PMC Aluminum |
| F3,4,5,7,8 | Daybrite | Columbia | LSI |
| F6 | Omega | Prescolite | Infinity |
| F9 | Gardco | AAL | LSI |
| F10 | Capri | LSI | Prescolite |
| EM EMC | Hubbell | | |
| EX1&2 | McPhilben | Dual Lite | Exitronics |
| SF1 | Gardco | LSI | |
| Lighting Controls | Hubbell, Lutron | | |

Kimball Jct;

| | | | |
|---|---|---|---|
| A,AE,B,BE,C,D,F, | Daybrite | LSI | Columbia |
| B.BE | Lite Control | | |
| E | McPhilben | Lightguard | Dual Lite |
| G | Omega | Williams | Columbia |
| H | Capri | LSI | Prescolite |
| X1 | McPhilben | Exitronics | Dual Lite |
| OA | Gardco | LSI | Kim |
| OB | Capri | Infinity | Prescolite |
| OE | McPhilben | Exitronics | Luminaire |

Redwood Road

| | | | |
|---|---|---|---|
| A,AE,C,D,F | Daybrite | LSI | Columbia |
| E | McPhilben | Lightguard | Hubbell |
| G | Omega | Williams | Prescolite |
| X1 | McPhilben | Exitronics | Dual Lite |
| OA | Gardco | LSI | Kim |

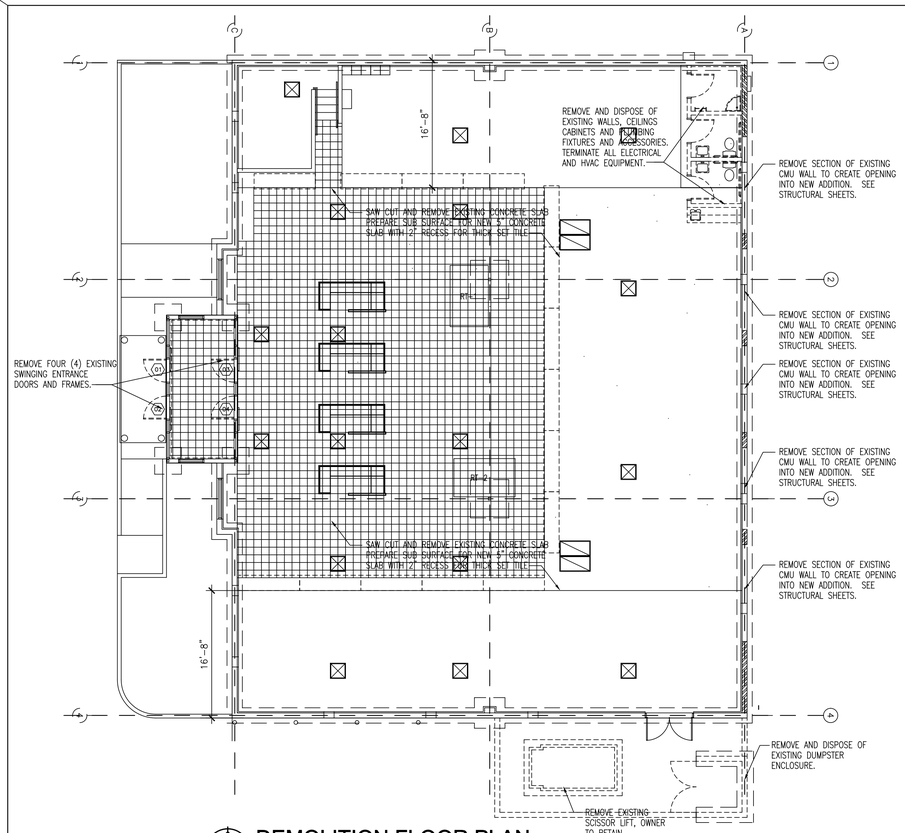


## DEMOLITION FLOOR PLAN

SCALE: 1/8" = 1'-0"

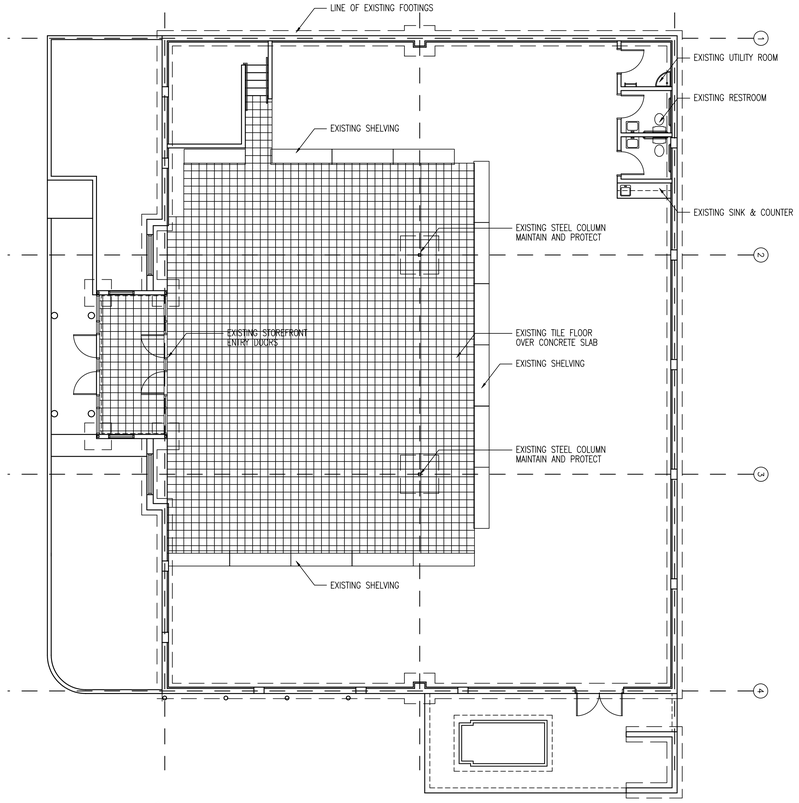


## EXISTING FLOOR PLAN

SCALE: 1/8" = 1'-0"

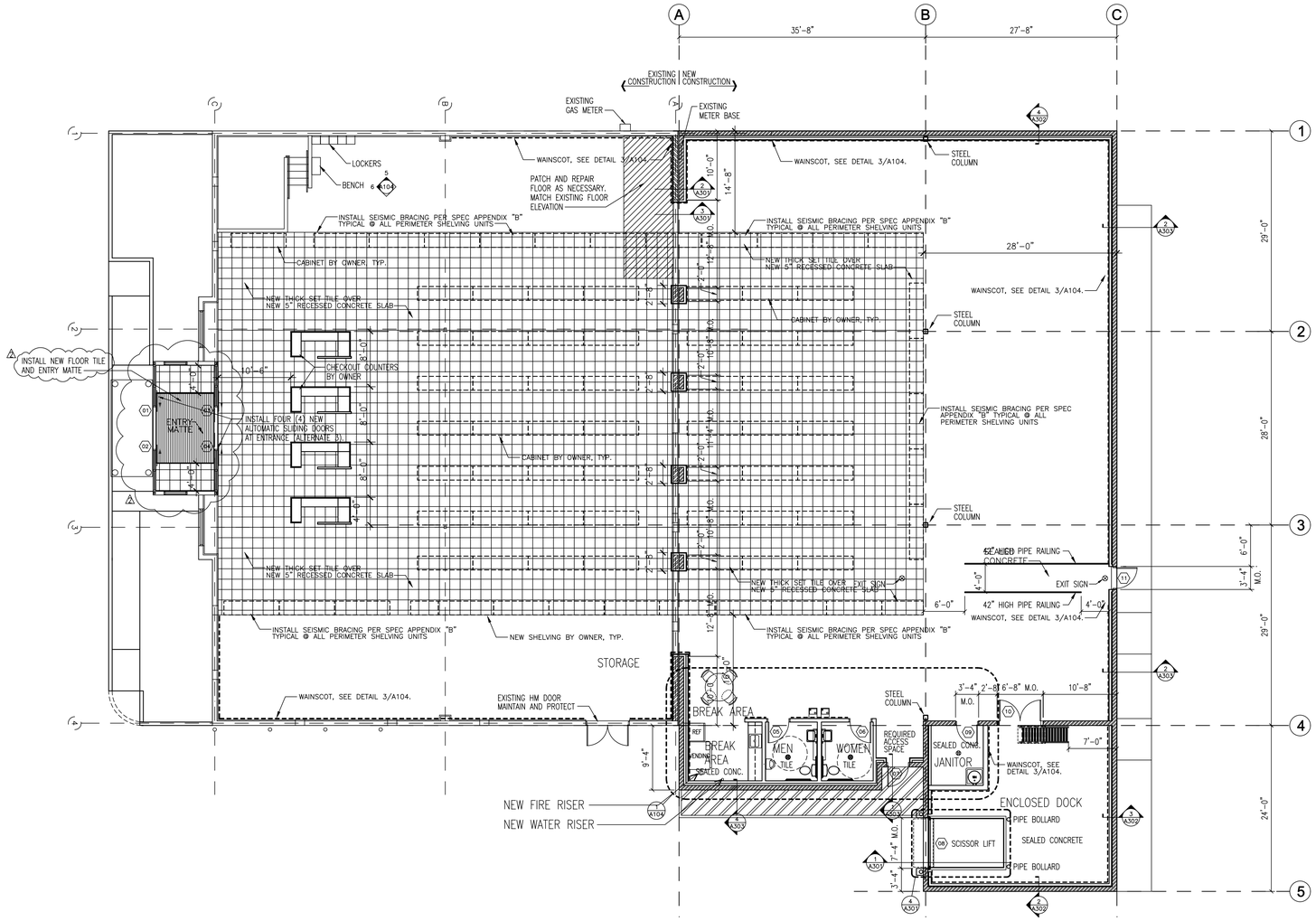


## FLOOR PLAN

SCALE: 1/8" = 1'-0"

## NOTES

1. PROVIDE SIGNAGE ABOVE ENTRY DOORS STATING "THESE DOORS TO REMAIN UNLOCKED DURING BUSINESS HOURS".
2. PROVIDE SIGNAGE DESIGNATING "PUBLIC RESTROOMS" AT LOCATION TO BE DETERMINED BY ARCHITECT.
3. CONTRACTOR TO PROVIDE AND INSTALL 25 L.F. OF CHAIR RAIL (INPRO CORP., NORTHERN HARDWOODS CR2 OR EQUAL) IN LOCATIONS AND AT HEIGHTS TO BE DETERMINED BY THE ARCHITECT.

# REDWOOD ROAD ABC STORE - REMODEL AND EXPANSION

DEPARTMENT OF ALCOHOLIC BEVERAGE CONTROL
3381 SOUTH REDWOOD ROAD, WEST VALLEY CITY, UTAH

FRANK N MURDOCK JR ■ Architect & Associates
975 East 100 South Suite 100, Salt Lake City, Utah 84102 TEL: (801) 532-4441 FAX (801) 532-4220

FLOOR PLANS

| REVISION # | DATE: | |
|---|---|---|
| 1 | 8/31/07 | SHEET REPLACED |
| 2 | 9/13/07 | NOTES ADDED |

DFCM PROJECT NO.:
06233030
CONST DOC
FILE NAME: ABCR-A101
PLOT SCALE: 1:96
DRAWN BY: STAFF
CHECKED BY: FNM
DATE: JUNE 2007

A
101r

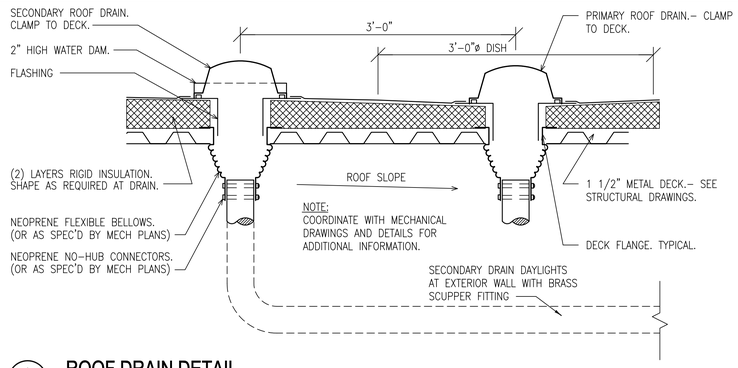


8 / A103 **ROOF DRAIN DETAIL**
SCALE: NOT TO SCALE

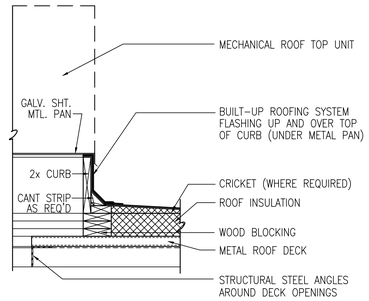


3 / A103 **ROOF CURB DETAIL**
SCALE 1" = 1' - 0"

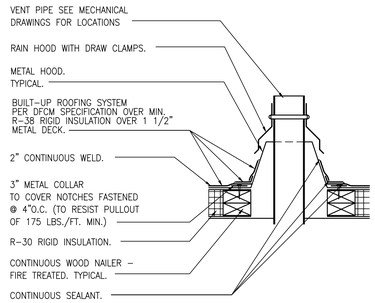


2 / A103 **VENT PIPE DETAIL**
SCALE 3" = 1' - 0"

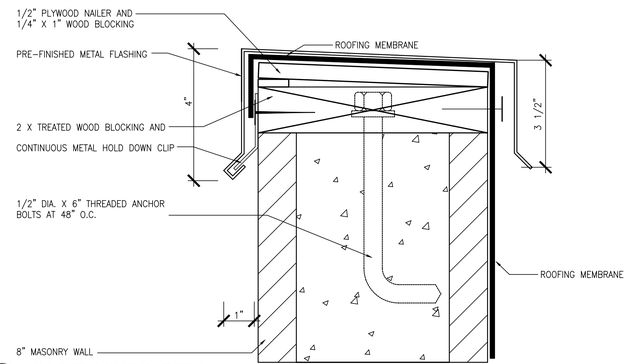


1 / A103 **CAP FLASHING DETAIL**
SCALE 1/2" = 1' - 0"

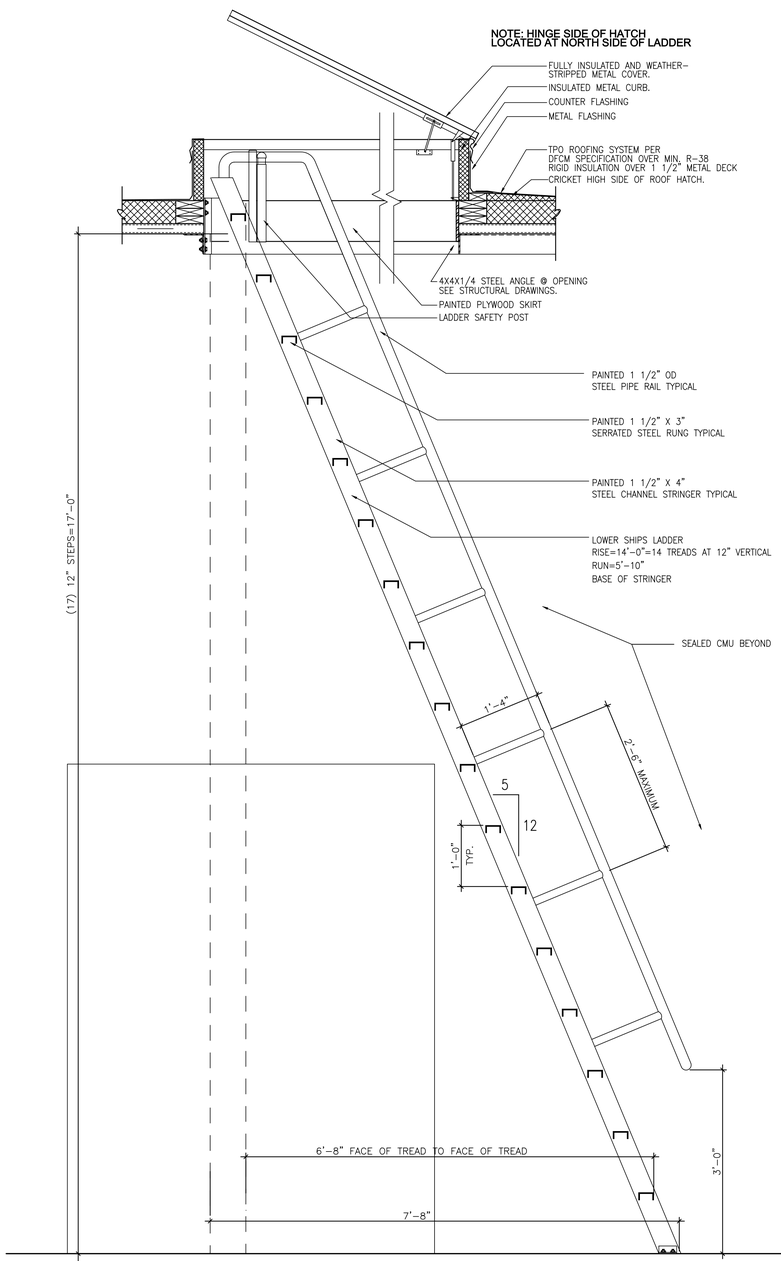


4 / A103 **ROOF HATCH DETAIL / SHIPS LADDER**
SCALE: 3/4" = 1'-0"
0 3" 6" 12" 24"

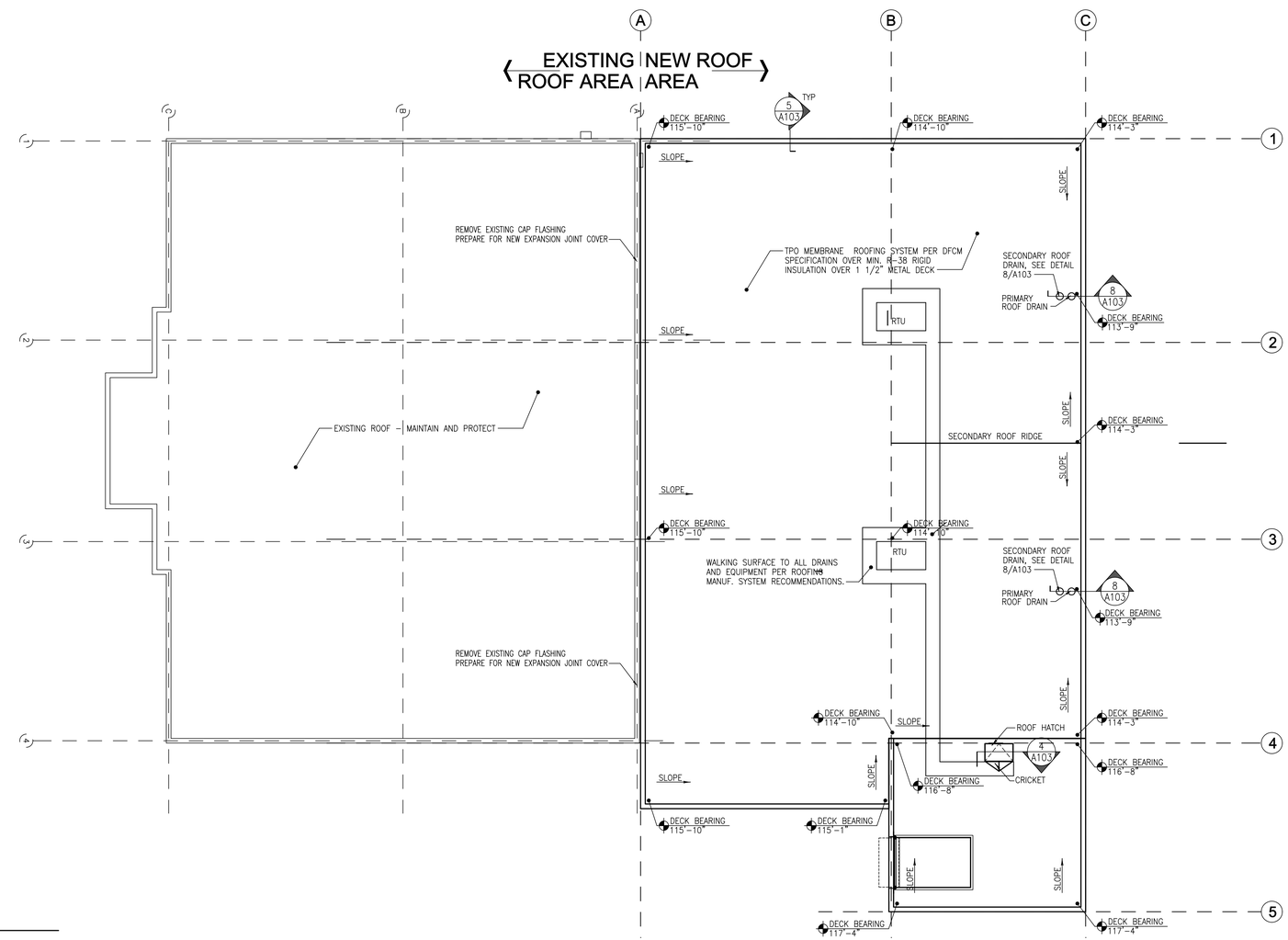


**ROOF PLAN**
SCALE: 1/8" = 1'-0"
0 2' 4' 8' 16'

# REDWOOD ROAD ABC STORE - REMODEL AND EXPANSION

DEPARTMENT OF ALCOHOLIC BEVERAGE CONTROL
3381 SOUTH REDWOOD ROAD, WEST VALLEY CITY, UTAH

FRANK N MURDOCK JR ■ Architect & Associates
975 East 100 South Suite 100, Salt Lake City, Utah 84102 TEL: (801) 532-4441 FAX (801) 532-4220

ROOF PLAN AND DETAILS

| REVISION # | DATE: |
|---|---|
| 1 | 9-14-07 |

DFCM PROJECT NO.:
06233030
CONST DOC
FILE NAME: ABCR-A103
PLOT SCALE: 1:96
DRAWN BY: STAFF
CHECKED BY: FNM
DATE: MAY 2007

A
103r

## REFLECTED CEILING PLAN LEGEND

- 4' WALL MOUNTED LIGHTING FIXTURE
- 2' SURFACE MOUNTED LIGHTING FIXTURE
- SECURITY LIGHT
- 2' X 4' FLUORESCENT LIGHTING FIXTURE
- RECESSED LIGHTING FIXTURE
- 8' SUSPENDED LIGHTING FIXTURE
- UNIT HEATER
- TRACK LIGHT
- 8' SUSPENDED INDIRECT LIGHTING FIXTURE
- WALL MOUNTED LIGHTING FIXTURE
- 2'X4' SUSPENDED ACOUSTICAL CEILING PROVIDE SEISMIC BRACING – SEE 1/A102
- METAL SOFFIT PANEL
- RETURN REGISTER
- SUPPLY DIFFUSER
- EXHAUST FAN
- GYPSUM BOARD SOFFIT
- E.S. — PAINTED EXPOSED STRUCTURE HEIGHT MAY VARY
- MSP — METAL SOFFIT PANEL
- AC — 2'X2' SUSPENDED ACOUSTICAL CEILING
- GB — GYPSUM BOARD CEILING
- SUSPGB — SUSPENDED GYPSUM BOARD CEILING
- PMSP — EXTERIOR GYPSUM SOFFET BOARD CEILING UNDER PREFINISHED METAL SOFFET PANEL
- SSS — SYNTHETIC STUCCO SOFFET
- 0'-0" — CEILING OR SOFFIT HEIGHT (HEIGHT MEASURED FROM FINISHED FLOOR ELEV.: 0'-0")

NOTE: CEILING TO INSTALLED PER SECTION 1621 OT THE 2006 IBC OR BRACED PER 1997 UBC STANDARDS, SECTION 25-2.

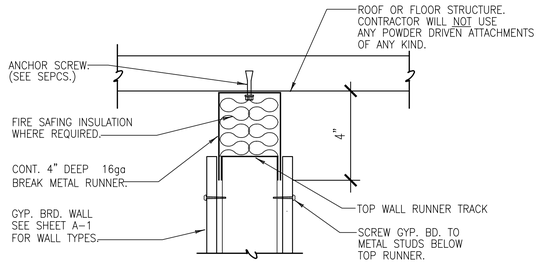


4 / A102 **SLIP JOINT DETAIL**
SCALE: NOT TO SCALE

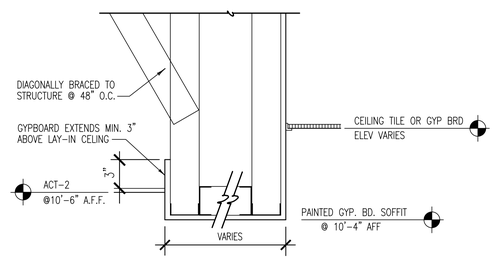


3 / A102 **CEILING DROP DETAIL**
SCALE: NOT TO SCALE

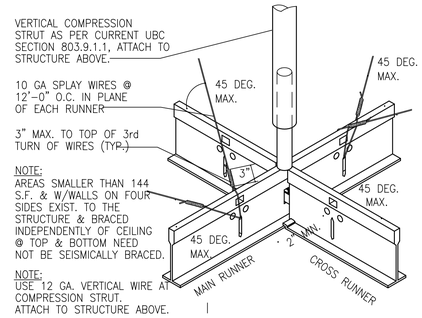


2 / A102 **SEISMIC BRACING DETAIL**
SCALE: NOT TO SCALE

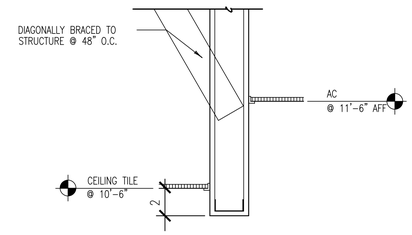


1 / A102 **CEILING DROP DETAIL**
SCALE: NOT TO SCALE

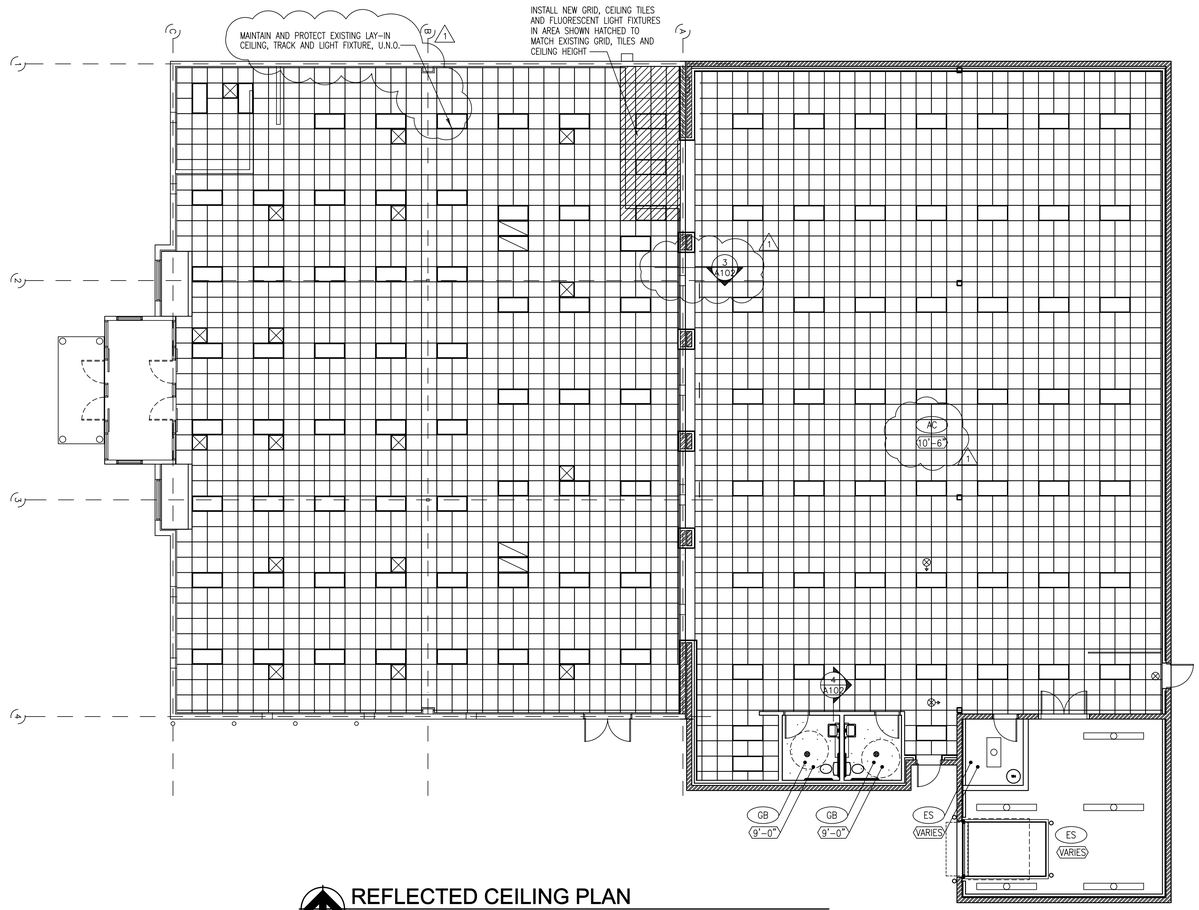


**REFLECTED CEILING PLAN**
SCALE: 1/8" = 1'-0"
0 2 4 8 16'

# REDWOOD ROAD ABC STORE - REMODEL AND EXPANSION

DEPARTMENT OF ALCOHOLIC BEVERAGE CONTROL
3381 SOUTH REDWOOD ROAD, WEST VALLEY CITY, UTAH

REFLECTED CEILING PLANS


FRANK N MURDOCK JR ■ Architect & Associates
975 East 100 South Suite 100, Salt Lake City, Utah 84102 TEL: (801) 532-4441 FAX (801) 532-4220


| REVISION # | DATE: |
|---|---|
| 1 | 9-14-07 |

DFCM PROJECT NO.:
06233030
CONST DOC
FILE NAME: ABCR-A102
PLOT SCALE: 1:96
DRAWN BY: STAFF
CHECKED BY: FNM
DATE: JUNE 2007

A
102r

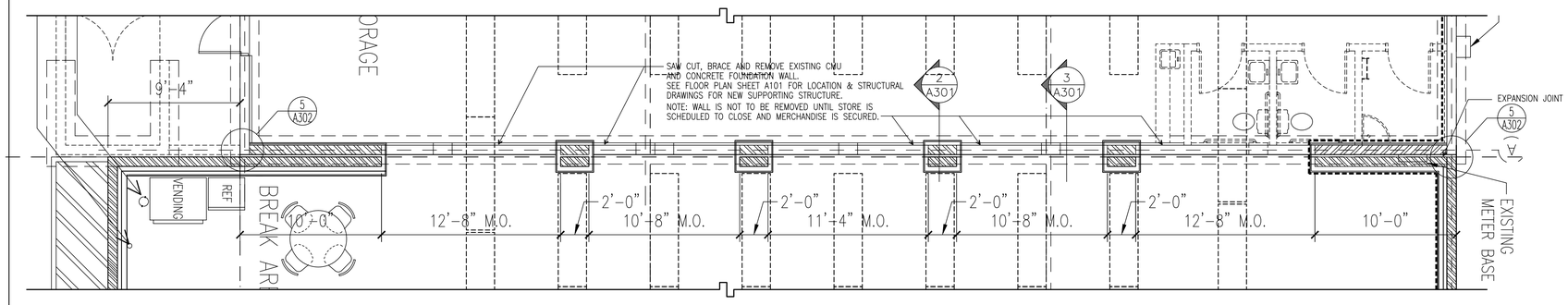


4 A301 **FLOOR PLAN @ EXPANSION WALL**

SCALE: 3/4" = 1'-0"

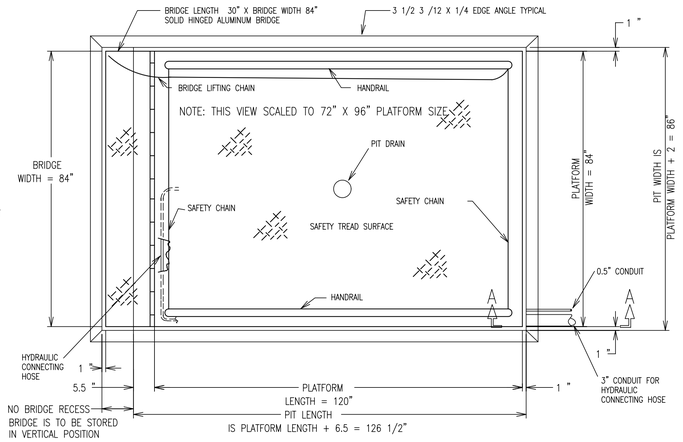


4 A301 **SCISSOR LIFT PLAN**

SCALE: 3/4" = 1'-0"

0 2' 4' 8' 16'

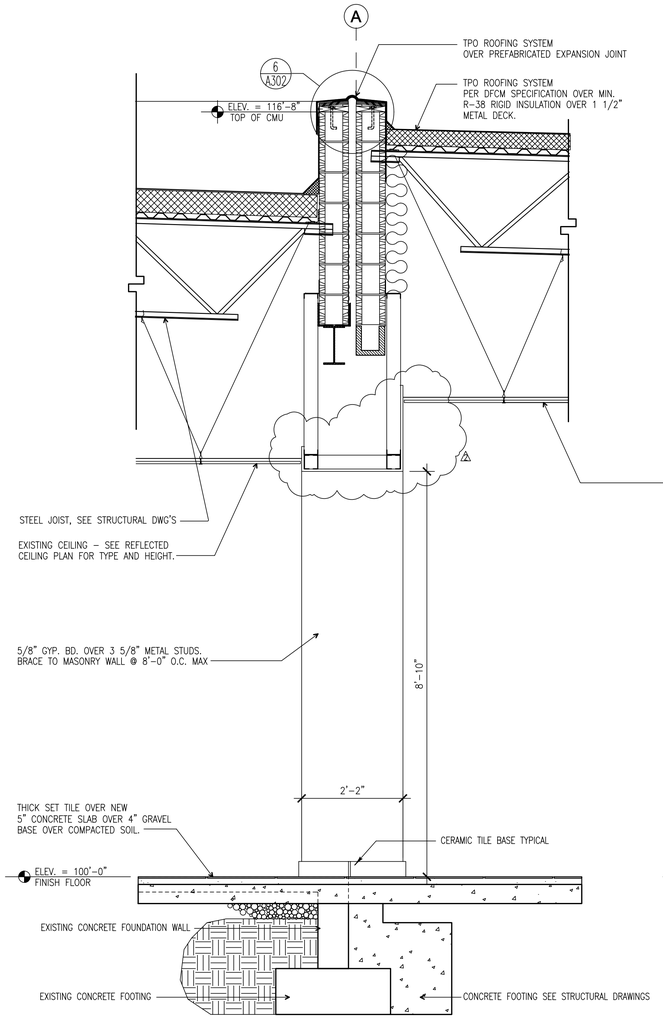


3 A301 **WALL SECTION @ EXPANSION JOINT**

SCALE: 3/4" = 1'-0"

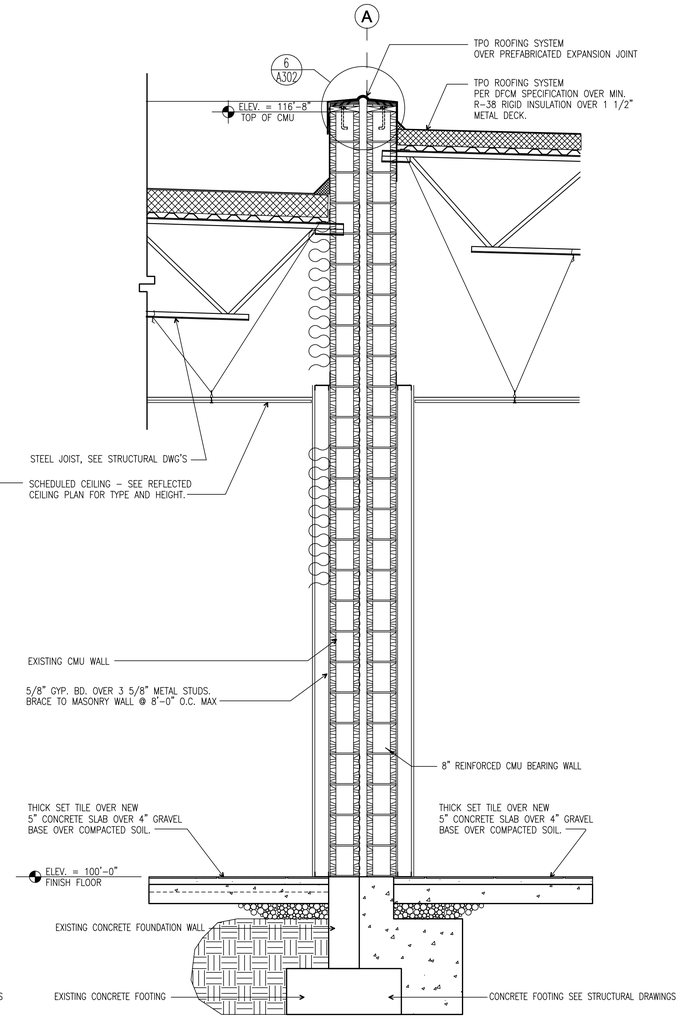


2 A301 **WALL SECTION @ EXPANSION JOINT**

SCALE: 3/4" = 1'-0"

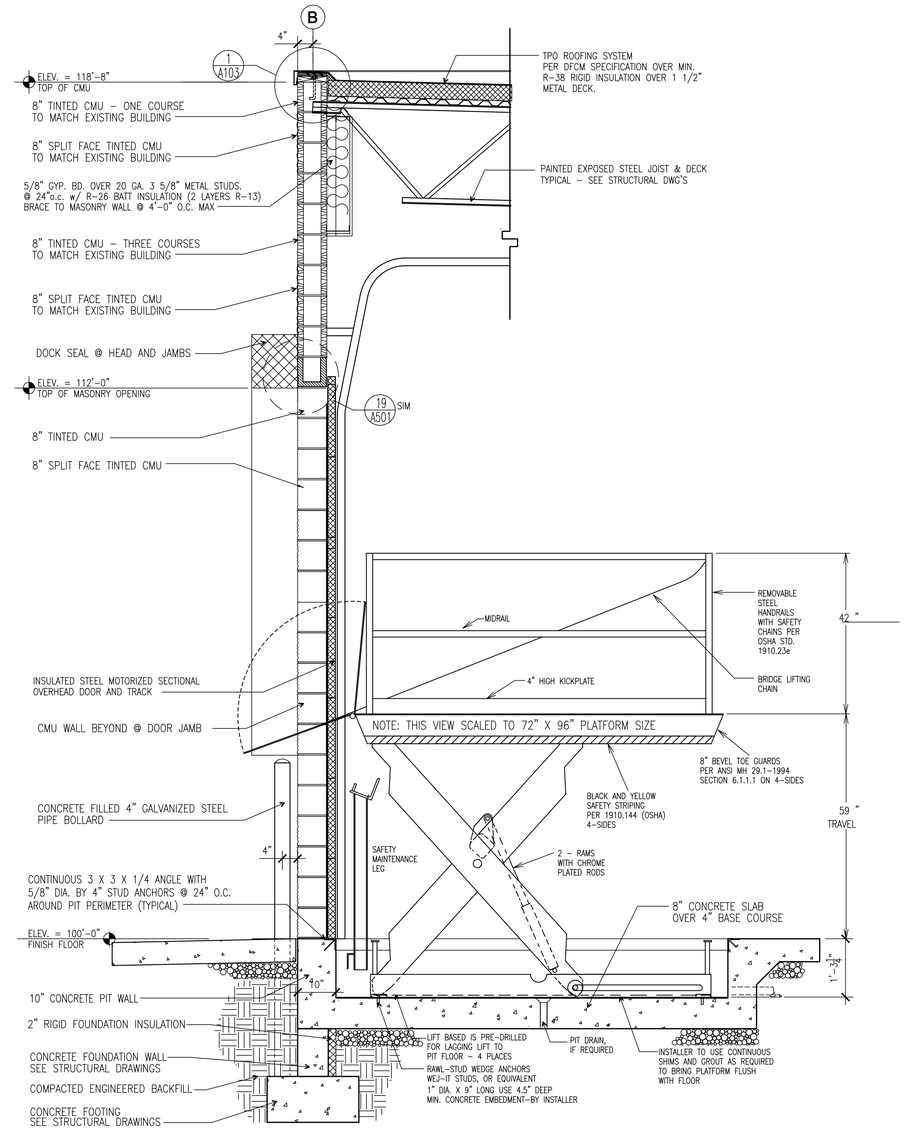


1 A301 **WALL SECTION @ SCISSOR LIFT**

SCALE: 3/4" = 1'-0"

# REDWOOD ROAD ABC - REMODEL AND EXPANSION

DEPARTMENT OF ALCOHOLIC BEVERAGE CONTROL
3381 SOUTH REDWOOD ROAD, WEST VALLEY CITY, UTAH

FRANK N MURDOCK JR ■ Architect & Associates
975 East 100 South Suite 100, Salt Lake City, Utah 84102 TEL (801) 532-4441 FAX (801) 532-4220

WALL SECTIONS AND DETAILS

| REVISION # | DATE: |
|---|---|
| 1 | 8/31/07 SHEET REPLACED |
| 2 | 9/13/07 NOTES ADDED |

DFCM PROJECT NO.:
06233030
CONSTR DOC
FILE NAME: ABCR-A301r
PLOT SCALE: 1:16
DRAWN BY: STAFF
CHECKED BY: FNM
DATE: AUG 2007

A
301r

## FINISH SCHEDULE

| ROOM | FLOOR | WALL | BASE | CEILING | HEIGHT | REMARKS |
|---|---|---|---|---|---|---|
| ENTRY VESTIBULES | THICKSET TILE/ENTRY MAT | PNTD GYP BD | CERAMIC TILE | PNTD GYP BD | 14'-0" | |
| SALES AREA | THICKSET TILE | PNTD GYP BD | CERAMIC TILE | 2 X 4 ACOUSTICAL | 10'-4" | |
| STOREROOM | SEALED CONCRETE | PNTD GYP BD | VINYL | 2 X 4 ACOUSTICAL | 10'-4" | |
| OFFICE | VCT | PNTD GYP BD | VINYL | 2 X 4 ACOUSTICAL | 11'-6" | RAISED PLATFORM |
| STORAGE | SEALED CONCRETE | PNTD GYP BD | VINYL | 2 X 4 ACOUSTICAL | 11'-6" | |
| JANITOR'S ROOM | SEALED CONCRETE | PNTD GYP BD | VINYL | 2 X 4 ACOUSTICAL | 11'-6" | TILE TWO WALLS AT FLOOR SINK, SEE ELEV. |
| WOMEN'S TOILET | THICKSET TILE | TILE | TILE | PNTD GYP BD | 8'-0" | WALL TILE FLOOR TO CEILING |
| MEN'S TOILET | THICKSET TILE | TILE | TILE | PNTD GYP BD | 8'-0" | WALL TILE FLOOR TO CEILING |
| LUNCH COUNTER | SEALED CONCRETE | PNTD GYP BD | VINYL | 2X4 ACOUSTICAL | 10'-4" | SEE INTERIOR ELEVATIONS FOR CABINETRY |
| ENCLOSED DOCK | SEALED CONCRETE | PNTD GYP BD | VINYL | EXPOSED STRUCTURE | VARIES | |
| | | | | | | |
| | | | | | | |

## GLASS TYPES

A — 1" THICK "LOW E" INSULATING GLASS: 1/4" TINTED FLOAT GLASS EXTERIOR AND 1/4" CLEAR FLOAT GLASS INTERIOR WITH 1/2" AIR SPACE.

ACT — 1" THICK "LOW E" INSULATING GLASS: 1/4" CLEAR FLOAT TEMPERED GLASS EXTERIOR AND 1/4" CLEAR FLOAT TEMPERED GLASS INTERIOR WITH 1/2" AIR SPACE.

P — 1/8" POLYCARBONATE AT IMPACT DOORS AND OVERHEAD DOORS (PROVIDED AND INSTALLED BY DOOR MANUFACTURER).

S — SECURITY GLASS "LOW E": 1" THICK INSULATING GLASS: 1/4 TINTED FLOAT GLASS EXTERIOR, AND 5/16" SECURITY-LAMINATED SHEETS OF GLASS WITH INNER LAYER OF .075" VINYL OR POLYCARBONATE @ INTERIOR WITH 7/16" AIRSPACE BETWEEN INTERIOR AND EXTERIOR GLASS.

ST — SECURITY GLASS "LOW E": 1" THICK INSULATING GLASS: 1/4 TINTED FLOAT TEMPERED GLASS EXTERIOR, AND 5/16" SECURITY-LAMINATED SHEETS OF GLASS WITH INNER LAYER OF .075" VINYL OR POLYCARBONATE @ INTERIOR WITH 7/16" AIRSPACE BETWEEN INTERIOR AND EXTERIOR GLASS.

SCT — SECURITY GLASS "LOW E": 1" THICK INSULATING GLASS: 1/4 CLEAR FLOAT TEMPERED GLASS EXTERIOR, AND 5/16" SECURITY-LAMINATED SHEETS OF GLASS WITH INNER LAYER OF .075" VINYL OR POLYCARBONATE @ INTERIOR WITH 7/16" AIRSPACE BETWEEN INTERIOR AND EXTERIOR GLASS.

## FRAME TYPES

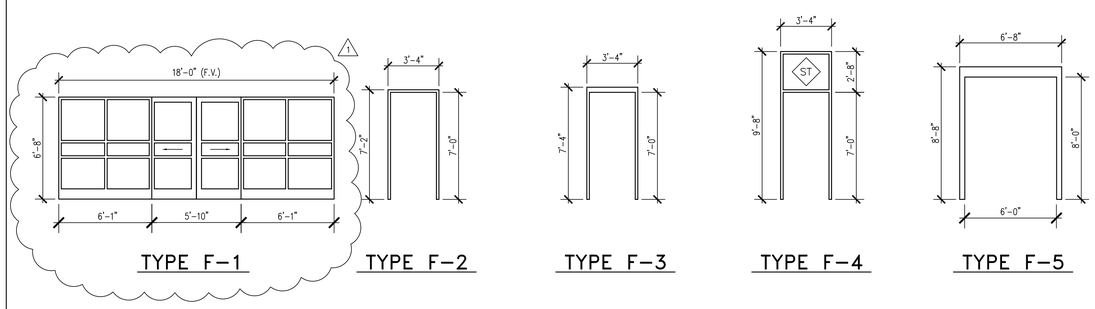


## DOOR TYPES

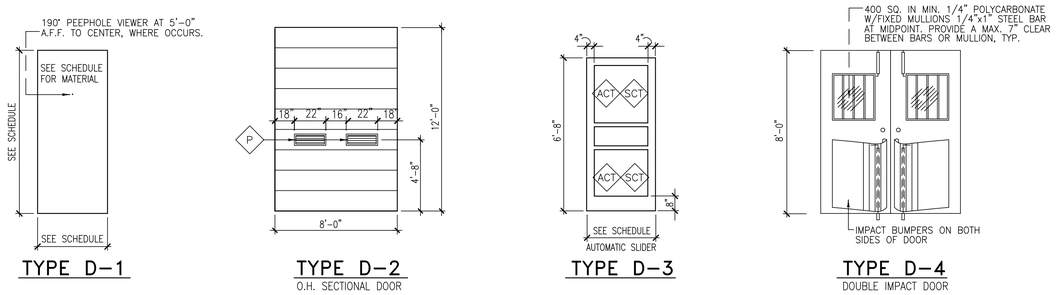


## DOOR SCHEDULE

| | SIZE | | | DOOR | | | FRAME | | | DETAIL REFERENCE | | | HDW. | |
|---|---|---|---|---|---|---|---|---|---|---|---|---|---|---|
| NO. | WIDTH | HEIGHT | THICK. | TYPE | MATERIAL | FINISH | TYPE | MATERIAL | FINISH | HEAD | JAMB | THRESH. | | REMARKS |
| 1 | 3'-0" | 6'-8" | --- | D-3 | ALUM | FF | F-1 | ALUM | FF | 24/A501 | 9/A501 | 1/A501 | 1 | AUTOMATIC SLIDER W/SENSOR ACTIVATION |
| 2 | 3'-0" | 6'-8" | --- | D-3 | ALUM | FF | F-1 | ALUM | FF | 24/A501 | 8/A501 | 1/A501 | 2 | AUTOMATIC SLIDER W/SENSOR ACTIVATION |
| 3 | 3'-0" | 6'-8" | --- | D-3 | ALUM | FF | F-1 | ALUM | FF | 24/A501 | 8/A501 | 1/A501 | 1 | AUTOMATIC SLIDER W/SENSOR ACTIVATION |
| 4 | 3'-0" | 6'-8" | --- | D-3 | ALUM | FF | F-1 | ALUM | FF | 24/A501 | 9/A501 | 1/A501 | 2 | AUTOMATIC SLIDER W/SENSOR ACTIVATION |
| 5 | 3'-0" | 7'-0" | 1 3/4" | D-1 | SCW | STAIN | F-2 | HM | PAINTED | 20/A501 | 20/A501 | 5/A501 | 5 | |
| 6 | 3'-0" | 7'-0" | 1 3/4" | D-1 | SCW | STAIN | F-2 | HM | PAINTED | 20/A501 | 20/A501 | 5/A501 | 5 | |
| 7 | 3'-0" | 7'-0" | 1 3/4" | D-1 | HOL. MTL. | PAINTED | F-4 | HM | PAINTED | 20/A501 | 20/A501 | 5/A501 | 4 | PROVIDE WITH PEEPHOLE |
| 8 | 7'-0" | 12'-0" | --- | D-2 | SEE SPECS | FF | --- | STEEL | PAINTED | 19/A501 | 19/A501 | 1/A502 | 8 | INSULATED OVERHEAD SECTIONAL DOOR |
| 9 | 3'-0" | 7'-0" | 1 3/4" | D-1 | HM | PAINTED | F-3 | HM | PAINTED | 25/A501 | 17/A501 | 4/A501 | 7 | |
| 10 | PR 3'-0" | 8'-0" | --- | D-4 | IMPACT | FF | F-5 | HM | PAINTED | 18/A501 | 18/A501(SIM) | -- | | |
| 11 | 3'-0" | 7'-0" | 1 3/4" | D-1 | HOL. MTL. | PAINTED | F-4 | HM | PAINTED | 20/A501 | 20/A501 | 5/A501 | 4 | PROVIDE WITH PEEPHOLE |
| | | | | | | | | | | | | | | |
| | | | | | | | | | | | | | | |

# REDWOOD ROAD ABC - REMODEL AND EXPANSION

DEPARTMENT OF ALCOHOLIC BEVERAGE CONTROL
3381 SOUTH REDWOOD ROAD, WEST VALLEY CITY, UTAH

DOOR, WINDOW AND FINISH SCHEDULES

FRANK N MURDOCK JR ■ Architect & Associates
975 East 100 South Suite 100, Salt Lake City, Utah 84102 TEL: (801) 532-4441 FAX (801) 532-4220

REVISION # DATE:
1 9-14-07

DFCM PROJECT NO.:
06233030
CONSTR. DOC.
FILE NAME: ABCR-A601
PLOT SCALE: 1:48
DRAWN BY: STAFF
CHECKED BY: FNM
DATE: MAY 2007

A
601r