UTAH STATE VETERANS NURSING HOME

CHAPEL / MULTI-PURPOSE ROOM ADDITION

700 FOOTHILL BOULEVARD, SALT LAKE CITY, UTAH

UTAH D.F.C.M.

PROJECT #06237480

CONSTRUCTION DOCUMENTS
JULY 10, 2007

Eaton architecture
77 West 200 South, Suite 302
Salt Lake City, UT 84101
Tel 801/328-2982 *Fax* 801/328-2111

DESIGN TEAM

STATE OF UTAH — BARRY JAN EATON — 751 — LICENSED ARCHITECT

- ARCHITECT:

  EATON ARCHITECTURE, LLC
  77 WEST 200 SOUTH SUITE 302
  SALT LAKE CITY, UTAH 84101
  TELEPHONE: (801) 328-2982
  FACSIMILE: (801) 328-2111

- STRUCTURAL ENGINEER:

  SHEN ENGINEERS, INC
  3335 SOUTH 900 EAST, SUITE 250
  SALT LAKE CITY, UTAH 84106
  TELEPHONE: (801) 466-2625
  FACSIMILE: (801) 466-2656

- MECHANICAL ENGINEER:

  VAN BOERUM & FRANK ASSOCIATES, INC.
  330 SOUTH 300 EAST
  SALT LAKE CITY, UTAH 84111
  TELEPHONE: (801) 530-3148
  FACSIMILE: (801) 530-3150

- ELECTRICAL ENGINEER:

  ENVISION ENGINEERING
  244 WEST 300 NORTH, #100
  SALT LAKE CITY, UTAH 84103
  TELEPHONE: (801) 534-1130
  FACSIMILE: (801) 534-1080

- COST ESTIMATOR:

  CONSTRUCTION CONTROL CORPORATION
  460 SOUTH 400 EAST
  SALT LAKE CITY, UTAH 84111
  TELEPHONE: (801) 578-1201
  FACSIMILE: (801) 578-1068

LIST OF DRAWINGS:

ARCHITECTURAL

AS101	ARCHITECTURAL SITE PLAN
A101	MAIN LEVEL FLOOR PLAN
A102	BASEMENT FLOOR PLAN
A103	MAIN LEVEL REFLECTED CEILING PLAN
A104	ROOF PLAN
A105	ENLARGED PLANS AND INTERIOR ELEVATIONS
A106	ENLARGED STAIR PLAN AND SECTION
A201	EXTERIOR ELEVATIONS
A301	BUILDING SECTIONS
A302	WALL SECTIONS
A501	DOOR/FRAME SCHEDULE, TYPES AND DETAILS
A601	WINDOW TYPES AND DETAILS AND FINISH SCHEDULE

STRUCTURAL

S101	GENERAL STRUCTURAL NOTES
S102	STRUCTURAL DETAILS
S103	STRUCTURAL DETAILS
S201	FOOTING AND FOUNDATION PLAN
S202	ROOR AND FLOOR FRAMING PLANS
S301	FOOTING AND FOUNDATION DETAILS
S302	STRUCTURAL DETAILS
S401	STRUCTURAL DETAILS

MECHANICAL

C101	MECHANICAL SITE PLAN
C501	MECHANICAL PIPING PROFILE AND DETAILS
C502	MECHANICAL PIPING DETAILS
M001	MECHANICAL LEGEND
M101	MAIN LEVEL AND BASEMENT MECHANICAL PLAN
M102	ROOF LEVEL MECHANICAL PLAN
M103	MAIN LEVEL AND BSMT. MECHANICAL PIPING PLAN
M601	MECHANICAL SCHEDULES

PLUMBING

P101	MAIN LEVEL AND BASEMENT PLUMBING PLAN
P601	PLUMBING SCHEDULES AND DETAILS

ELECTRICAL

EG001	ELECTRICAL SYMBOL SCHEDULE
ED101	MAIN LEVEL ELECTRICAL DEMOLITION PLAN
EL101	MAIN LEVEL LIGHTING PLAN
EL102	BASEMENT LEVEL LIGHTING PLAN
EL601	LIGHT FIXTURE SCHEDULE
EP101	MAIN LEVEL POWER PLAN
EP102	BASEMENT LEVEL POWER PLAN
EP103	ROOF POWER PLAN
EP701	ONE-LINE DIAGRAM
EP702	EQUIPMENT AND PANELBOARD SCHEDULES

CODE ANALYSIS

APPLICABLE CODES

	YEAR		YEAR
INTERNATIONAL BUILDING CODE	2006	NATIONAL ELECTRICAL CODE	
INTERNATIONAL MECHANICAL CODE		UNIFORM CODE FOR BUILDING CONSERVATION	
INTERNATIONAL PLUMBING CODE			
INTERNATIONAL FIRE CODE		ADA ACCESSIBILITY GUIDELINES	
INTERNATIONAL ENERGY CONSERVATION CODE			

A. OCCUPANCY AND GROUP: A-3/ I-2

CHANGE IN USE: YES ___ NO X MIXED OCCUPANCY: YES X NO ___
SPECIAL USE AND OCCUPANCY (E.G. HIGH RISE, COVERED MALL): ___

B. SEISMIC DESIGN CATEGORY: E DESIGN WIND SPEED: 90 MPH

C. TYPE OF CONSTRUCTION (CIRCLE ONE):

I/A I/B II/A (II/B) III/A III/B IV/HT V/A V/B

D. FIRE RESISTANCE RATING. REQUIREMENTS FOR THE EXTERIOR WALLS BASED ON THE FIRE SEPARATION DISTANCE (IN HOURS):

NORTH: N/A SOUTH: NONE EAST: NONE WEST: NONE

E. MIXED OCCUPANCIES: A-3/ I-2 NONSEPERATED USES: ___

F. SPRINKLERS:

REQUIRED: YES PROVIDED: YES TYPE OF SPRINKLER SYSTEM: WET

G. NUMBER OF STORIES: 1 W/BSMT. BUILDING HEIGHT: 18'-0"

H. ACTUAL AREA PER FLOOR (SQUARE FEET): MAIN FL.= 28,025 S.F. BSMT. FL.= 22,023 S.F.

I. TABULAR AREA: 50,000 S.F.

J. AREA MODIFICATIONS:

a) $A_a = A_t + \left[\frac{A_t I_f}{100}\right] + \left[\frac{A_t I_s}{100}\right]$ $I_f = 100\left[\frac{F}{P} - 0.25\right]\frac{W}{30}$

b) SUM OF THE RATIO CALCULATIONS FOR MIXED OCCUPANCIES:

$\frac{\text{ACTUAL AREA}}{\text{ALLOWABLE AREA}} \leq 1$

c) TOTAL ALLOWABLE AREA FOR:

1) ONE STORY: 9,500 S.F.
2. TWO STORY: Aa(2) ___
3. THREE STORY: Aa(3) ___

d) UNLIMITED AREA BUILDING: YES___ NO X CODE SECTION: ___

K. FIRE RESISTANCE RATING REQUIREMENTS FOR BUILDING ELEMENTS (HOURS).

ELEMENT	Hrs.	ASSEMBLY LISTING	ELEMENT	Hrs.	ASSEMBLY LISTING
EXTERIOR BEARING WALLS	0		FLOORS-CEILING FLOORS	1	
INTERIOR WALLS	0		ROOFS-CEILING ROOFS	0	
EXTERIOR NON-BEARING WALLS	0		EXTERIOR DOORS AND WINDOWS	0	
STRUCTURAL FRAME	0		SHAFT ENCLOSURES	0	
PARTITIONS-PERMANENT	0		FIRE WALLS	0	
FIRE BARRIERS	0		FIRE PARTITIONS	1	UL#U419
			SMOKE PARTITIONS	1	UL#U419

L. DESIGN OCCUPANT LOAD: CHAPEL= 271, OVERFLOW= 18, BSMT.= 0, TOTAL= 289

EXIT WIDTH REQUIRED: 60" EXIT WIDTH PROVIDED: 72"+ 48"= 120"

M. MINIMUM NUMBER OF REQUIRED PLUMBING FACILITIES:

a) WATER CLOSETS-REQUIRED(M) 1 (F) 2 PROVIDED(M) 1 (F) 1
b) LAVATORIES - REQUIRED(M) 1 (F) 1 PROVIDED(M) 1 (F) 1
c) BATH TUBS OR SHOWERS 0
d) DRINKING FOUNTAINS 1 SERVICE SINKS 1

FOOTNOTES:

1) IN CASE OF CONFLICT WITH THE U.S. DEPARTMENT OF JUSTICE FEDERAL REGISTERS PARTS I THROUGH V - ADA GUIDELINES AND SPECIFIC REFERENCE TO THE INTERNATIONAL BUILDING CODE ACCESSIBILITY CHAPTERS, THE MORE RESTRICTIVE REQUIREMENT SHALL GOVERN.

2) ADDITIONAL CODEINFORMATION SHALL BE PROVIDED AT THE DISCRETION OF THE BUILDING OFFICIAL FOR COMPLEX BUILDINGS. INCLUDING, BUT NOT LIMITED TO:

a) HIGH RISE REQUIREMENTS.
b) ATRIUMS.
c) PERFORMANCE BASED CRITERIA.
d) MEANS OR EGRESS ANALYSIS.
e) FIRE ASSEMBLY LOCATOR SHEET.
f) EXTERIOR AND INTERIOR ACCESSIBILITY ROUTE.
g) FIRE STOPPING, INCLUDING TESTED DESIGN NUMBER.

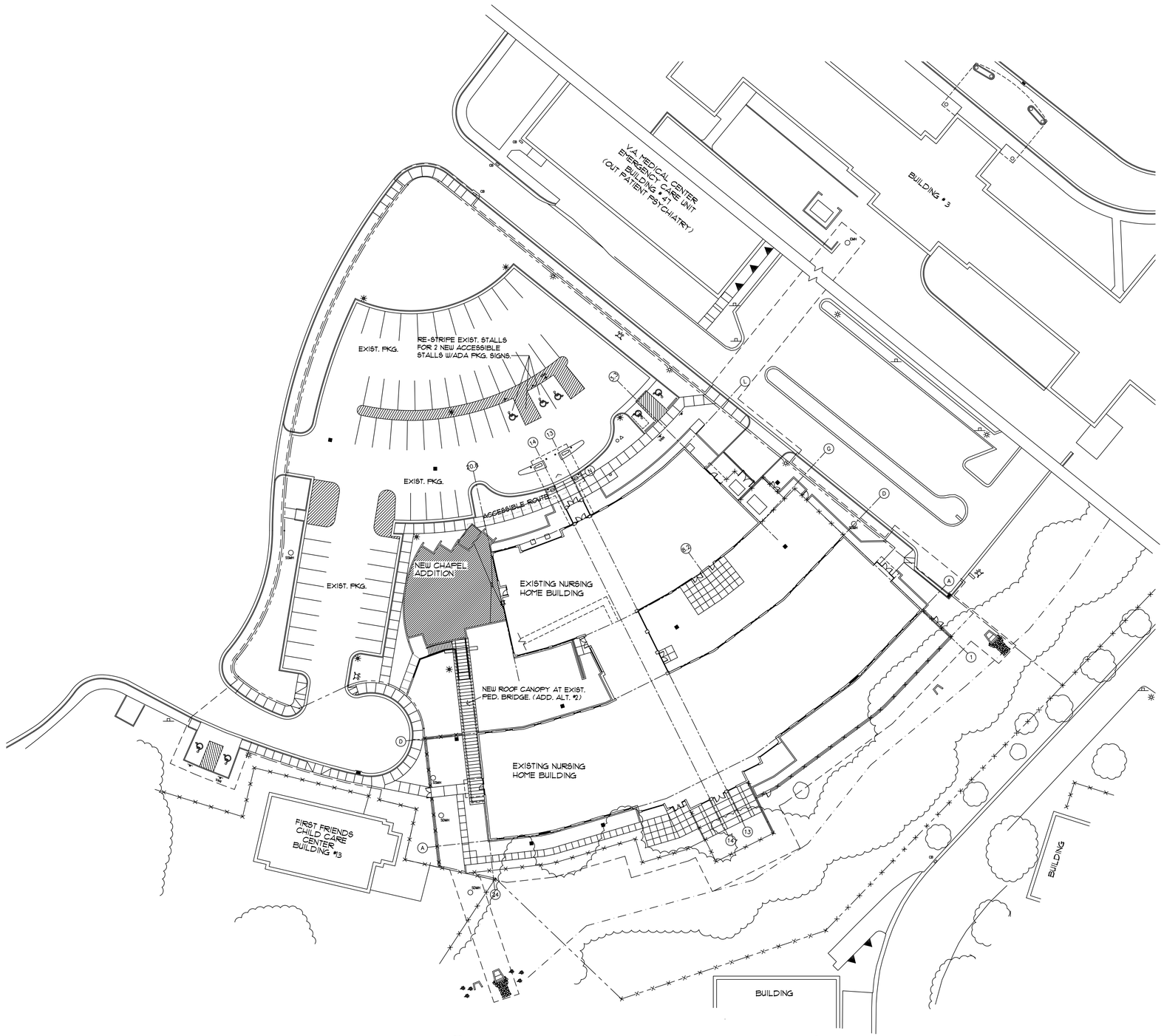

Ø1 SITE PLAN
AS101 SCALE: 1/32" = 1'-Ø"

Eaton architecture
77 West 200 South, Suite 302
Salt Lake City, UT 84101
Tel 801/328-2982 Fax 801/328-2111

CONSULTANTS

STATE OF UTAH
ROBERT JAN EATON
751
LICENSED ARCHITECT

UTAH STATE VETERAN'S NURSING HOME

CHAPEL / MULTIPURPOSE ROOM ADDITION
700 FOOTHILL BOULEVARD, SALT LAKE CITY, UTAH 84113

OWNER
UTAH D.F.C.M.

MARK	DATE	DESCRIPTION
	03-07-07	

PROJECT NUMBER: 2006-32
DRAWING FILE:
DRAWN BY:
CHECKED BY:

COPYRIGHT 2003 EATON ARCHITECTURE, LLC

SHEET TITLE

ARCHITECTURAL SITE PLAN
AND ROOF PLAN

AS101

OF

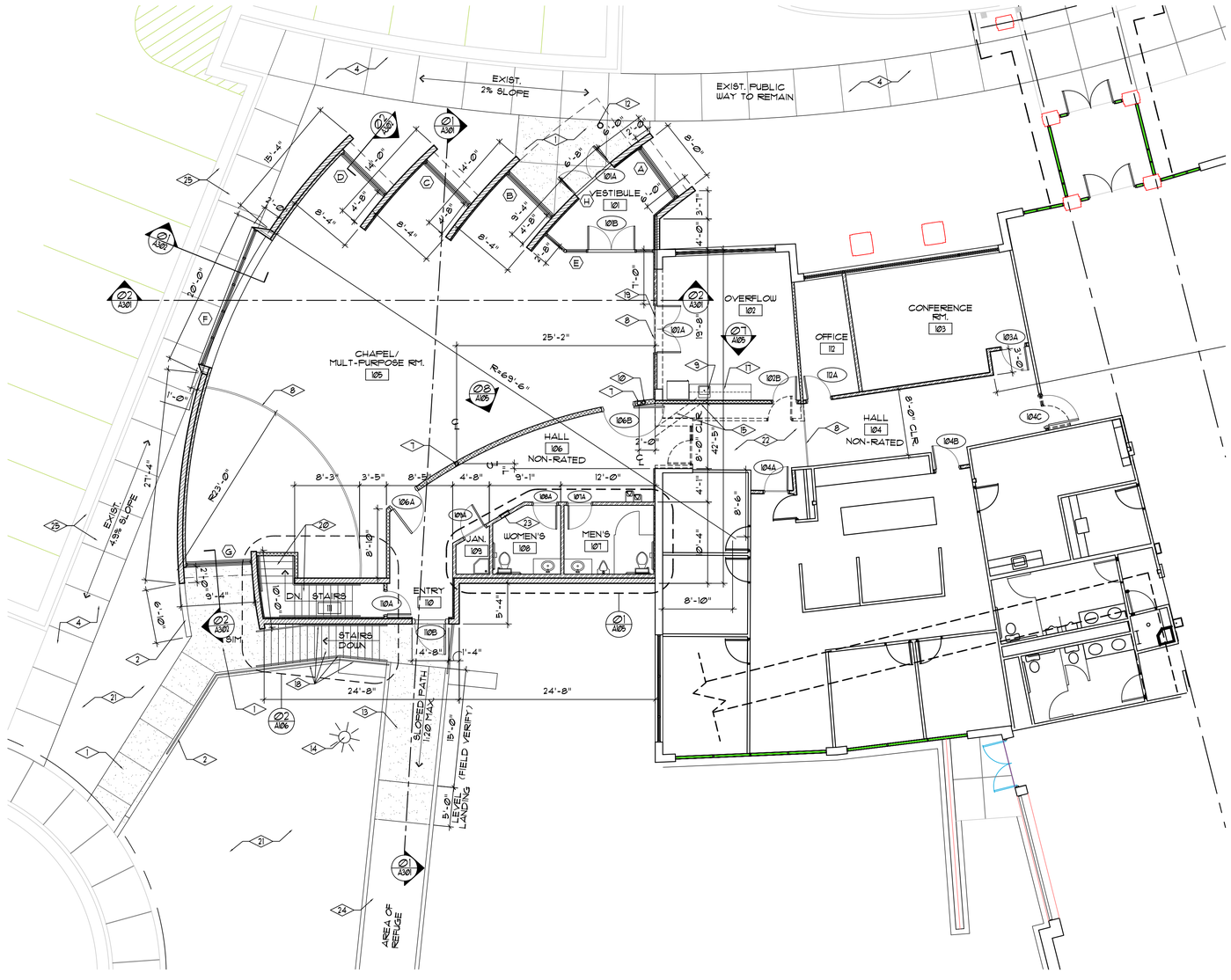

01 A101 FLOOR PLAN
SCALE: 1/8" = 1'-0"

REFERENCE NOTES

1. NEW 4" CONC. SLAB ON 4" GRANULAR BASE W/2% MAX. SLOPE AT EXIT DISCHARGE LANDINGS.
2. NEW SLOPED REINF. CONC. RETAINING WALL AND FTG. SEE STRUCT. SHEETS.
3. NEW REINF. CONC. RETAINING WALLS, RAMP, AND LANDING W/ PAINTED MTL. PIPE RAILINGS.
4. EXIST. ACCESSIBLE CONC. PAVED PUBLIC WAY TO REMAIN.
5. EXIST. CONC. CURB, AND GUTTER TO REMAIN.
6. NEW CONC. ACCESSIBLE CURB RAMP.
7. NEW STRUCT. STEEL COLUMN. SEE STRUCT. SHEETS.
8. FLOORING TRANSITION STRIP.
9. BUILT-IN CUSTOM PLAST LAM. COUNTER & CABINETS W/ SINK. SEE PLUMB. SHEETS.
10. NEW PRIMARY ROOF DRAIN. SEE PLUMB. SHEETS.
11. NOT USED
12. PAINTED STRUCT. STEEL 6" PIPE COLUMN. SEE STRUCT. SHEETS.
13. NEW CONC. SLAB RAMP/LANDING ON EXIST. CONC. BRIDGE.
14. EXIST. LIGHT POLE AND BASE TO REMAIN.
15. SAW-CUT BREAK-OUT AND REMOVE EXIST. CONC. SLAB, AND TRENCH FOR NEW UNDERSLAB PLUMBING. INSTALL NEW 4" CONC. SLAB ON 4" GRANULAR BASE TO INFILL FLUSH W/ ADJAC. SLAB.
16. NEW REFRIG. UNIT W/ICE-MAKER BY OWNER. (N.I.C.).
17. PLAST. LAM. COUNTER, BASE AND UPPER CABINETS W/SINK. SEE PLUMB. SHEETS.
18. REINF. CONC. STAIRS, LANDING AND RETAINING WALL W/PAINTED STEEL PIPE GUARD RAILS AND HANDRAILS.
19. SAW-CUT, DEMO. AND REMOVE EXIST. MASONRY AND FRAMED WALL BELOW GLAZING SYSTEM FOR FLUSH FLOOR TRANSITION. DEMO/REMOVE GLAZING SYSTEM. HEADER TO REMAIN.
20. REINF. CONC. STAIRS AND LANDINGS W/PAINTED STEEL PIPE HANDRAILS.
21. EXIST. LANDSCAPING TO REMAIN. MODIFY EXIST. IRRIG. SYSTEM AS REQUIRED.
22. DEMO. AND REMOVE EXIST. CARPET FLOORING.
23. FIRE EXTINGUISHER AND CABINET.
24. EXIST. BRIDGE WALK-WAY W/GUARDRAILS TO REMAIN.
25. EXIST. CONC. CURB/GUTTER AND SIDEWALK TO REMAIN. REPLACE SECTIONS DAMAGED FROM CONSTRUCTION ACTIVITY.

SYMBOL LEGEND

- EXIST. WALL TO REMAIN.
- EXIST. WALL/ITEM TO BE DEMOLISHED AND REMOVED.
- NEW MTL. STUD FRAMED WALL W/ PAINTED GYP. BD. @ EA. SIDE.
- 8" ATLAS BRICK STRUCTURAL WALL SYSTEM.
- 8" ATLAS BRICK STRUCTURAL WALL SYSTEM W/3-5/8" MTL. STUD FURRING W/R-11 BATT INSUL. W/PAINTED 5/8" GYP. BD. TO 6" ABOVE CEILING.
- 8" ATLAS BRICK STRUCTURAL WALL SYSTEM W/1-1/2" MTL. "Z" FURRING W/RIGID INSUL. W/PAINTED 5/8" GYP. BD. TO 6" ABOVE CEILING.
- 1 HR. FIRE RATED MTL. STUD FRAMED WALL W/5/8" TYPE "X" PAINTED GYP. BD. AT EACH SIDE INSTALLED PER UL# U419 OR U465. EXTEND FRAMING AND GYP. BD. TO ROOF DECK.
- NEW CONC. PAVED AREA.

Eaton architecture
77 West 200 South, Suite 302
Salt Lake City, UT 84101
Tel 801/328-2982 Fax 801/328-2111

CONSULTANTS

STATE OF UTAH
ROBERT JAN EATON
751
LICENSED ARCHITECT

UTAH STATE VETERAN'S NURSING HOME

CHAPEL / MULTIPURPOSE ROOM ADDITION
700 FOOTHILL BOULEVARD, SALT LAKE CITY, UTAH 84113

OWNER
UTAH D.F.C.M.

MARK	DATE	DESCRIPTION
	06-13-07	

PROJECT NUMBER: 2006-32
DRAWING FILE:
DRAWN BY:
CHECKED BY:

COPYRIGHT 2003 EATON ARCHITECTURE, LLC

SHEET TITLE

MAIN LEVEL
FLOOR PLAN

A101

OF

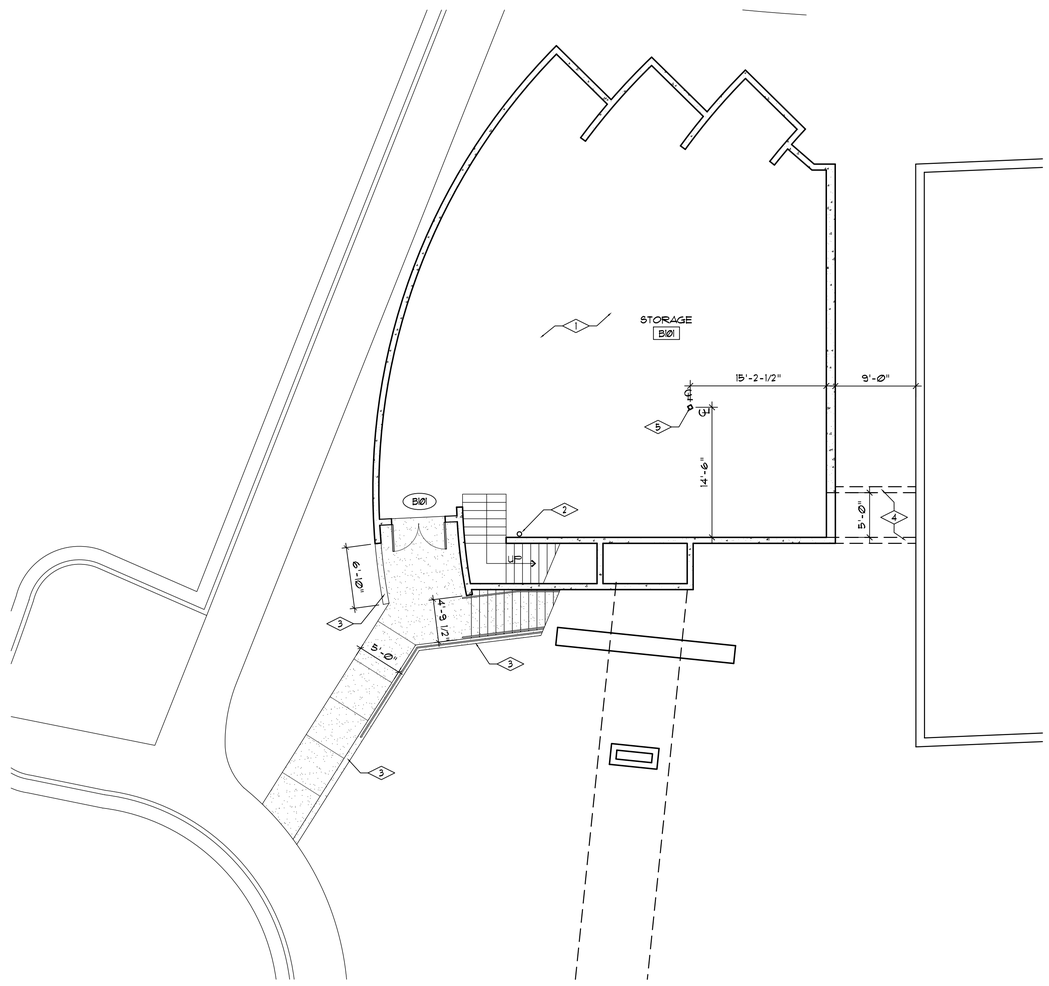

01 A102 BASEMENT PLAN
SCALE: 1/8" = 1'-0"

NORTH

REFERENCE NOTES

1. 4" CONC. FLOOR SLAB ON 4" GRANULAR BASE.
2. UL LISTED FIRE EXTINGUISHER
3. REINF. CONC. RETAINING WALL AND FTG. SEE STRUCT. SHEETS.
4. REINF. CONC. FTG. AND FDTN. WALL FOR PLUMBING TUNNEL. SEE STRUCT./PLUMB. SHEETS.
5. STRUCT. STEEL COLUMN. SEE STRUCT. SHEETS.

SYMBOL LEGEND

EXIST. WALL TO REMAIN.

NEW REINF. CONC. FDTN. WALL.

Eaton architecture
77 West 200 South, Suite 302
Salt Lake City, UT 84101
Tel 801/328-2982 Fax 801/328-2111

CONSULTANTS

STATE OF UTAH
ROBERT JAN EATON
751
LICENSED ARCHITECT

UTAH STATE VETERAN'S NURSING HOME

CHAPEL / MULTIPURPOSE ROOM ADDITION
700 FOOTHILL BOULEVARD, SALT LAKE CITY, UTAH, 84113

OWNER
UTAH D.F.C.M.

MARK	DATE	DESCRIPTION
	03-07-07	

PROJECT NUMBER: 2006-32
DRAWING FILE:
DRAWN BY:
CHECKED BY:

COPYRIGHT 2003 EATON ARCHITECTURE, LLC

SHEET TITLE

BASEMENT
FLOOR PLAN

A102

OF

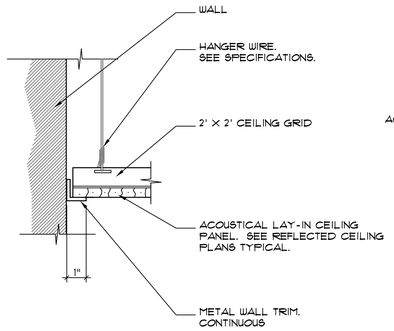

Ø5 A103 CEILING EDGE DETAIL
SCALE: 3" = 1'-Ø"

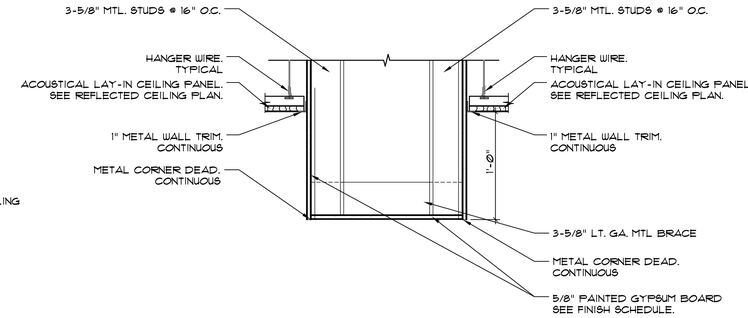

Ø4 A103 SOFFIT DETAIL
SCALE: 1-1/2" = 1'-Ø"

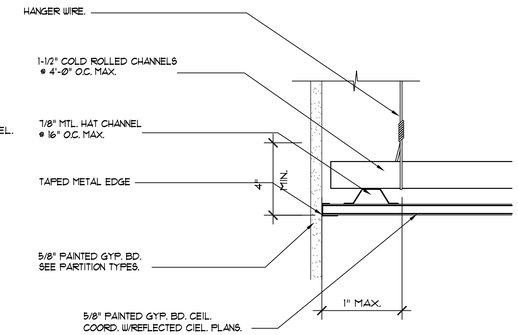

Ø3 A103 CEILING EDGE DETAIL
SCALE: 3" = 1'-Ø"

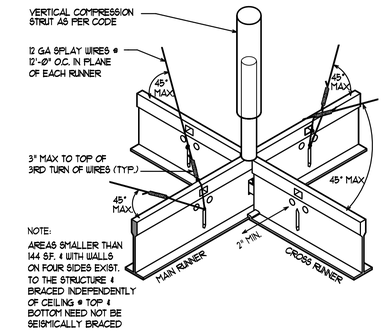

Ø2 A103 TYP. SUSP. CEIL. SEISMIC DET.
SCALE: 3" = 1'-Ø"

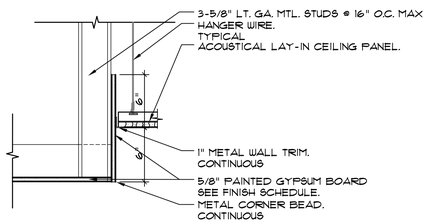

Ø5 A103 CEILING SOFFIT DETAIL
SCALE: 1½" = 1'-Ø"

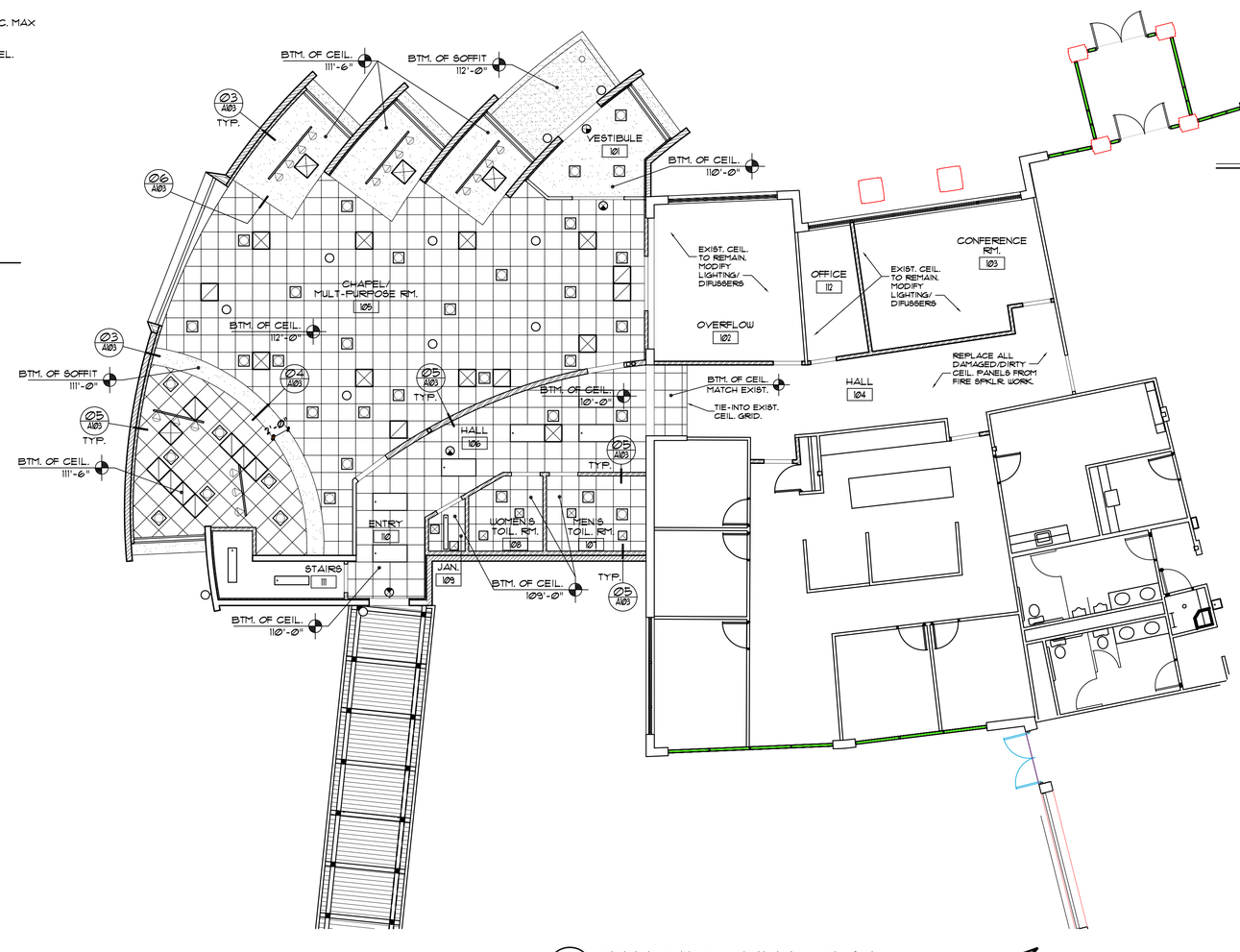

Ø1 A103 REFLECTED CEILING PLAN
SCALE: 1/8" = 1'-Ø"

CEILING SYMBOL LEGEND

- SUSPENDED 2' X 2' GRID CEILING. ACOUST. PANEL TYPE. COL TEXTURE PER SPECIFICATIONS.
- PAINTED WHITE, SUSPENDED GYP. BD. CEIL. SYSTEM. FINISH/ TE PER ARCH.
- HARD-COAT SYNTH. STUCCO SYSTEM ON GREEN BOARD COLO ARCH.
- PENDANT OR SURFACE MOUNTED LIGHT FIXTURE. SEE ELECTR SHEETS.
- RECESSED CAN LIGHT FIXTURE.
- WALL MOUNTED LIGHT FIXTURE. SEE ELECTRICAL SHEETS.
- 2'x4' LAY-IN FLUORESCENT PARA-LOUVER LIGHT FIXTURE. SE SHEETS.

Eaton architecture
77 West 200 South, Suite 302
Salt Lake City, UT 84101
Tel 801/328-2982 Fax 801/328-2111

CONSULTANTS

STATE OF UTAH
ROBERT JAN EATON
751
LICENSED ARCHITECT

UTAH STATE VETERAN'S NURSING HOME

CHAPEL / MULTIPURPOSE ROOM ADDITION
700 FOOTHILL BOULEVARD, SALT LAKE CITY, UTAH, 84113

OWNER
UTAH D.F.C.M.

MARK	DATE	DESCRIPTION
	03-07-07	

PROJECT NUMBER: 2006-32
DRAWING FILE:
DRAWN BY:
CHECKED BY:

COPYRIGHT 2003 EATON ARCHITECTURE, LLC

SHEET TITLE

MAIN
REFLECTED CEILING PLAN

A103

OF

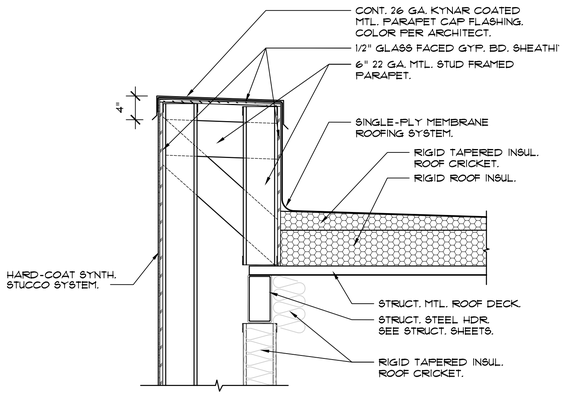

Ø5 A1Ø4 ROOF PARAPET DETAIL
SCALE: 1" = 1'-Ø"

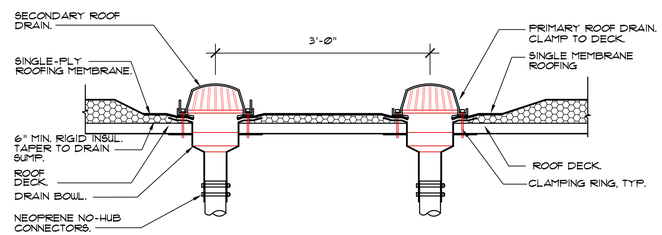

Ø4 A1Ø4 ROOF DRAIN DETAIL
SCALE: 1" = 1'-Ø"

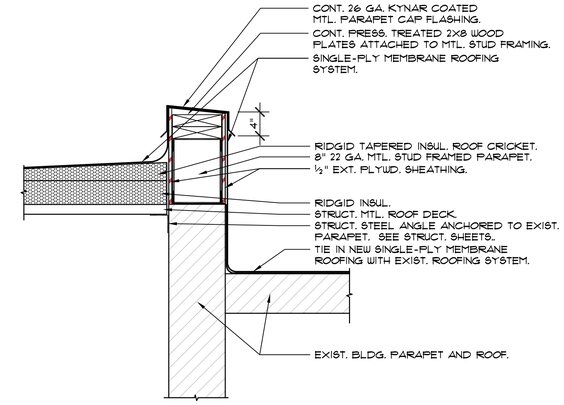

Ø3 A1Ø4 ROOF PARAPET DETAIL
SCALE: 1" = 1'-Ø"

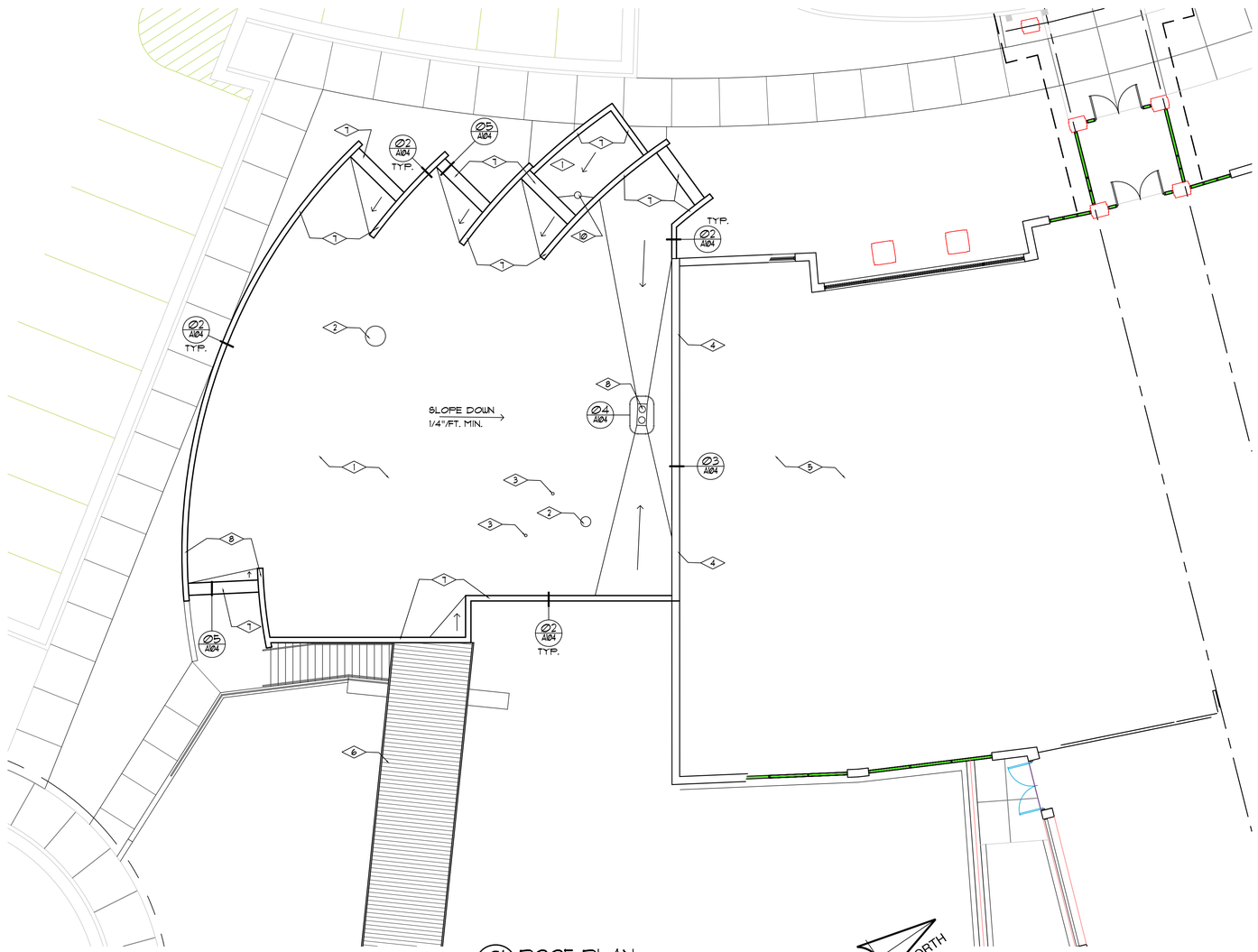

Ø1 A1Ø4 ROOF PLAN
SCALE: 1/8" = 1'-Ø"

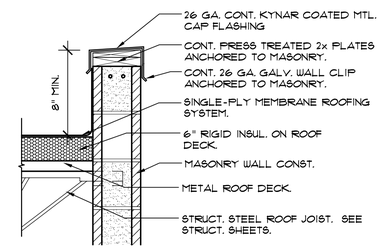

Ø2 A1Ø4 ROOF PARAPET DETAIL
SCALE: 1" = 1'-Ø"

REFERENCE NOTES

1. SINGLE-PLY MEMBRANE ROOFING ON 6" RIGID INSUL.
2. ROOF TOP EXHAUST FAN UNIT. INSTLAL FLASHING PER ROOFING MFG. RECOMMENDATIONS. SEE MECH. SHEETS.
3. PIPE VENT. INSTALL FLASHING PER ROOF MFG. RECOMMENDATIONS. SEE PLUMBING SHEETS.
4. NEW MTL. STUD FRAMED BUILT-UP PARAPET W/CONT. KYNAR COATED 26 GA. MTL. CAP FLASHING.
5. EXIST. ROOF TO REMAIN.
6. KYNAR COATED CORRUG. MTL. ROOF CANOPY. (ADD. ALT. #2).
7. CONT. KYNAR COATED 26 GA. MTL. CAP FLASHING.
8. PRIMARY AND SECONDARY ROOF DRAINS. INSTALL FLASHINGS PER ROOFING MFG. RECOMMENDATIONS. SEE PLUMBING SHEETS.
9. ROOF CRICKET SLOPED TO DRAIN FORMED WITH BUILT-UP RIGID INSUL.
10. PRIMARY ROOF DRAIN. INSTALL FLASHINGS PER ROOFING MFG. RECOMMENDATIONS. SEE PLUMBING SHEETS.

Eaton architecture
77 West 200 South, Suite 302
Salt Lake City, UT 84101
Tel 801/328-2982 Fax 801/328-2111

CONSULTANTS

STATE OF UTAH
ROBERT JAN EATON
751
LICENSED ARCHITECT

UTAH STATE VETERAN'S NURSING HOME

CHAPEL / MULTIPURPOSE ROOM ADDITION
700 FOOTHILL BOULEVARD, SALT LAKE CITY, UTAH, 84113

OWNER
UTAH D.F.C.M.

MARK	DATE	DESCRIPTION
	03-07-07	

PROJECT NUMBER: PLAN
DRAWING FILE:
DRAWN BY:
CHECKED BY:

COPYRIGHT 2003 EATON ARCHITECTURE, LLC

SHEET TITLE

ROOF PLAN

A104

OF

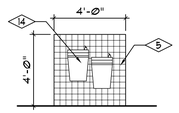

09 A105 INTERIOR ELEVATION
SCALE: 1/4" = 1'-0"

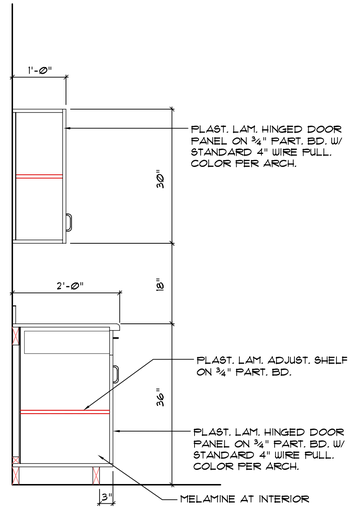

08 A105 CASEWORK SECTION
SCALE: 3/4" = 1'-0"

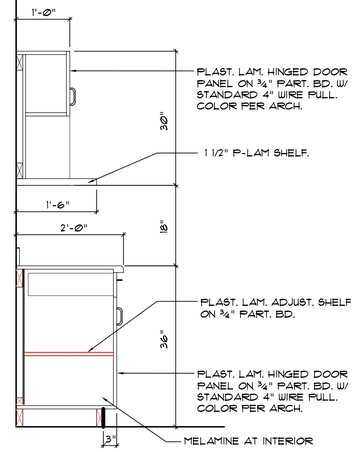

07 A105 CASEWORK SECTION
SCALE: 3/4" = 1'-0"

REFERENCE NOTES

1. 1½" O.D. STAINLESS STEEL WALL MOUNTED GRAB BAR. INSTALL SOLID WOOD BLOCKING @ WALLS
2. DOOR AND FRAME, AS SCHEDULED.
3. STAINLESS STEEL FRAMED MIRROR. INSTALL PLYWD. BACKING AT UPPER PORTION FOR FLUSH MOUNTING PAINT EXPOSED EDGES BLACK.
4. ACCESSIBLE WALL-HUNG LAVATORY W/INSULATED SUPPLY & DRAIN LINES. SEE PLUMBING SHEETS.
5. CERAMIC WALL TILE WAINSCOT AS SCHEDULED.
6. PAINTED GYPSUM BOARD WALL.
7. STAINED SEALED CONC. FLOOR.
8. FLOOR DRAIN. SEE PLUMBING SHEETS. PROVIDE DEPRESSED AREA AROUND DRAIN.
9. INSTALL FIRE TREATED SOLID WOOD BLOCKING FOR WALL MOUNTING.
10. WALL MOUNTED TOILET TISSUE DISPENSER.
11. WALL MOUNTED FEMININE NAPKIN RECEPTACLE.
12. FLOOR MOUNTED ACCESSIBLE TOILET FXTR. SEE PLUMB. SHEETS.
13. SELF CLOSING TOILET COMPARTMENT DOOR WITH HANDLE FOR GRASPING AT TOILET SIDE OF DOOR PER 2003 ANSI 117, 604.8.3.
14. HIGH/LOW ACCESSIBLE WATER COOLERS. SEE PLUMBING SHEETS.
15. PROVIDE OPENING IN BACK PANEL FOR ELEC. RECEPTACLE. COORD. LOCATION OF OPENING.
16. REFRIGERATOR UNIT BY OWNER. (N.I.C.)
17. P-LAM. CABINETS/ DRAWERS W/ STANDARD 4" WIRE PULLS AND P-LAM. ADJUSTABLE SHELVES.
18. P-LAM. COUNTER W/ 4" BACK SPLASH AT WALLS.
19. P-LAM. SHELF UNITS W/ P-LAM. ADJUST. SHELVES AND HDWR.
20. SET-IN COUNTER SINK. SEE PLUMB. SHEETS.
21. FIRE EXTINGUISHER AND CABINET.
22. NOT USED.
23. NOT USED.
24. PLAST. LAM. PANEL.
25. FLOOR MOP SINK. SEE PLUMB. SHEETS.

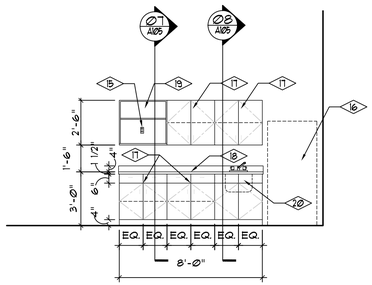

06 A105 CASEWORK ELEVATION
SCALE: 1/4" = 1'-0"

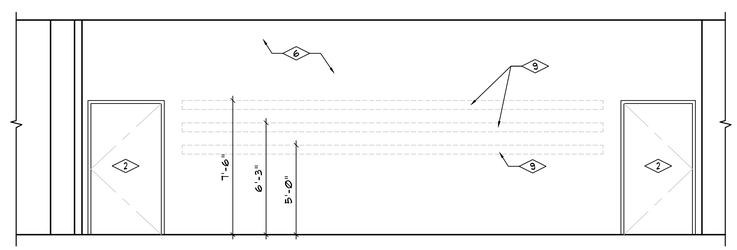

05 A105 INTERIOR ELEVATION
SCALE: 1/4" = 1'-0"

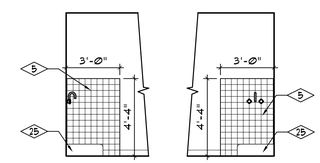

EAST ELEV. NORTH ELEV.

04 A105 JANITOR ROOM ELEVS.
SCALE: 1/4" = 1'-0"

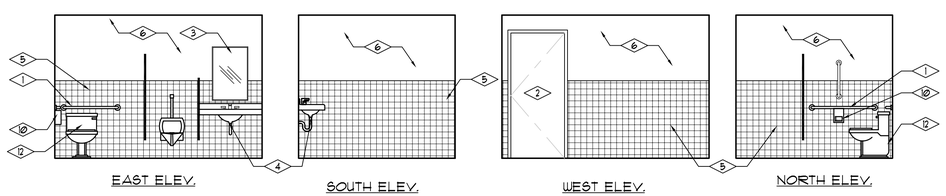

EAST ELEV. SOUTH ELEV. WEST ELEV. NORTH ELEV.

03 A105 MEN'S TOILET ROOM ELEVS.
SCALE: 1/4" = 1'-0"

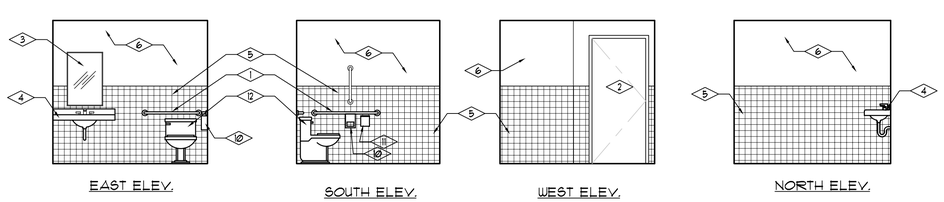

EAST ELEV. SOUTH ELEV. WEST ELEV. NORTH ELEV.

02 A105 WOMEN'S TOILET ROOM ELEVS.
SCALE: 1/4" = 1'-0"

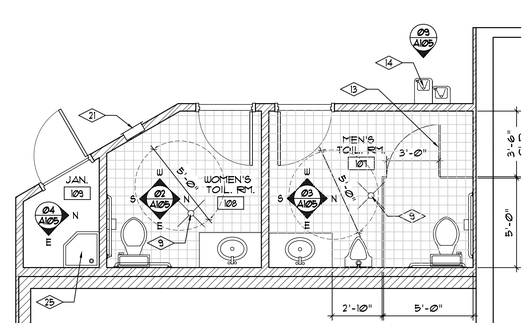

01 A105 ENLARGED PLAN
SCALE: 1/4" = 1'-0"

FIXTURE MOUNTING DATA

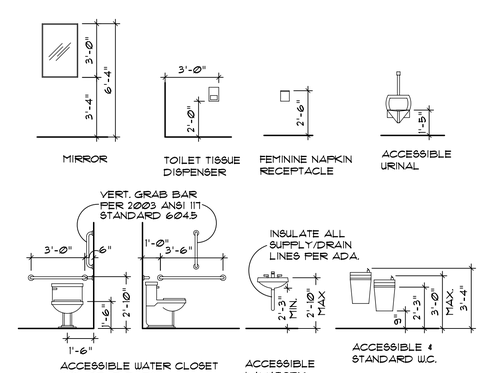

Eaton Architecture
77 West 200 South, Suite 302
Salt Lake City, UT 84101
Tel 801/328-2982 Fax 801/328-2111

CONSULTANTS

STATE OF UTAH
ROBERT JAN EATON
751
LICENSED ARCHITECT

UTAH STATE VETERAN'S NURSING HOME

CHAPEL/MULTIPURPOSE ROOM ADDITION
700 FOOTHILL BOULEVARD, SALT LAKE CITY, UTAH, 84113

OWNER
UTAH STATE

MARK	DATE	DESCRIPTION
	03-09-07	

PROJECT NUMBER: 2006-32
DRAWING FILE:
DRAWN BY:
CHECKED BY:

COPYRIGHT 2003 EATON ARCHITECTURE, LLC

SHEET TITLE

ENLARGED PLANS
AND INTERIOR ELEVATIONS

A105

OF

REFERENCE NOTES

1. REINF. CONC. STAIRS. SEE STRUCT. SHEETS.
2. REINF. CONC. FTG./FDT. WALL. SEE STRUCT. SHEETS.
3. 4" CONC. SLAB ON 4" GRANULAR BASE. (ADD ALT. #1)
4. 8" REINF. CONCRETE SLOPING RETAINING WALL. SEE STRUCT. SHEETS.
5. 1-½" DIA. PAINTED STEEL PIPE GUARDRAILS W/ ½" DIA. STEEL ROD BALUSTERS AT 4" O.C. MAX.
6. PAINTED 1-½" DIA HANDRAILS, WALL MOUNTED.
7. PAINTED 1-½" DIA. HANDRAIL, RETURN AND WELD TO GUARDRAIL.
8. WELD END CLOSED AND RETURN BACK TO WALL.
9. EXISTING BRIDGE ASSOCIATED RETAINING WALL TO REMAIN.

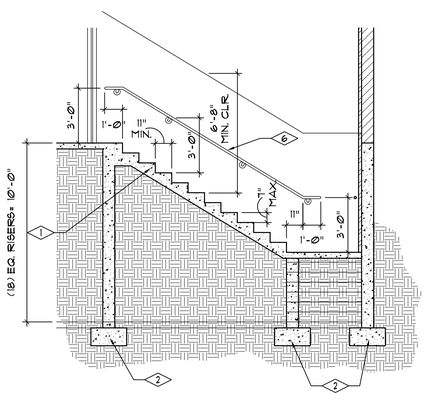

Ø3 A105 STAIR SECTION
SCALE: 1/4" = 1'-0"

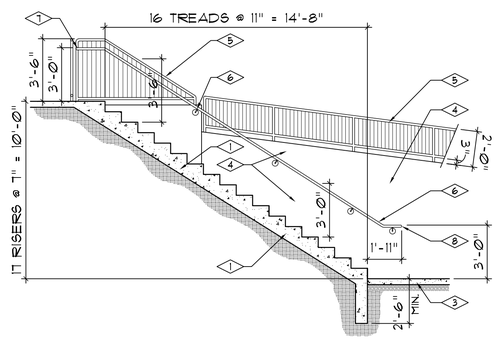

Ø2 A106 ENLARGED STAIR PLAN
SCALE: 1/4" = 1'-0"

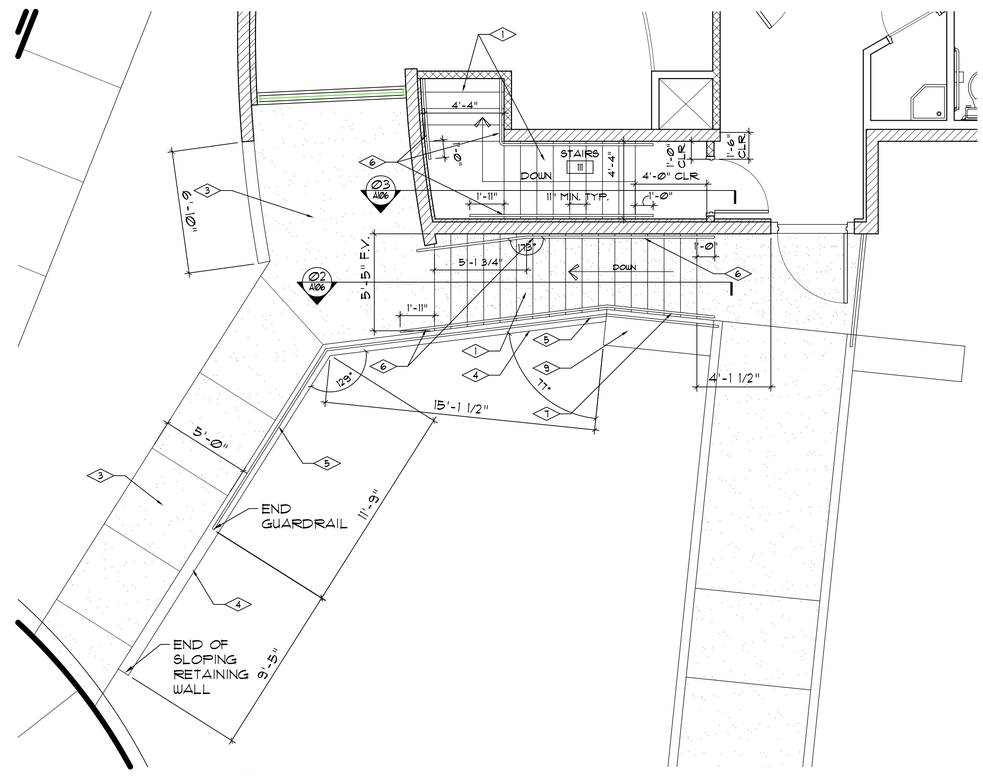

Ø1 A106 ENLARGED STAIR AND RAMP PLAN (ADD. ALT. #1)
SCALE: 1/4" = 1'-0"

Eaton architecture
77 West 200 South, Suite 302
Salt Lake City, UT 84101
Tel 801/328-2982 Fax 801/328-2111

CONSULTANTS

STATE OF UTAH
ROBERT JAN EATON
751
LICENSED ARCHITECT

UTAH STATE VETERAN'S NURSING HOME

MULTIPURPOSE ROOM ADDITION
700 FOOTHILL BOULEVARD, SALT LAKE CITY, UTAH, 84113

OWNER
UTAH STATE

MARK	DATE	DESCRIPTION
	03-09-07	

PROJECT NUMBER: 2006-32
DRAWING FILE:
DRAWN BY:
CHECKED BY:

COPYRIGHT 2003 EATON ARCHITECTURE, LLC

SHEET TITLE

ENLARGED PLANS
AND INTERIOR ELEVATIONS

A106

OF

REFERENCE NOTES

1. CONT. KYNAR COATED MTL. CAP FLASHING.
2. ATLAS BRICK TO MATCH COLOR OF EXIST. ADJAC. BLDG.
3. SYNTH. HARD COAT STUCCO.
4. ANOD. ALUM. FRAME AND INSUL. GLAZING STORE FRONT SYSTEM.
5. ANOD. ALUM. CLADDING AT WINDOW PROJECTION.
6. NEW PAINTED STEEL FRAME AND KYNAR COATED CORRUG. MTL. ROOF/ FASCIA CANOPY. (ADD. ALT. #2.)
7. EXIST. IBC 2006 COMPLIANT GUARD RAIL SYSTEM TO REMAIN.
8. NEW REINF. CONC. STAIRS W/PAINTED STEEL PIPE GUARD RAILS/HANDRAILS.
9. DOOR AS SCHEDULED.
10. ANOD. ALUM. LOUVER. SEE MECH. SHEETS.

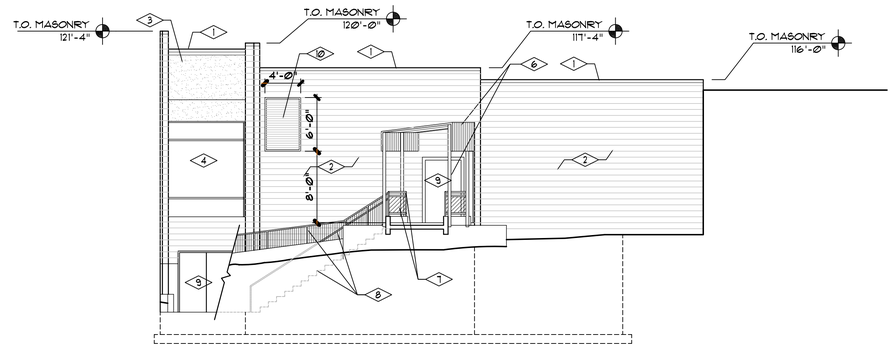

03/A201 EAST ELEVATION
SCALE: 1/8" = 1'-0"

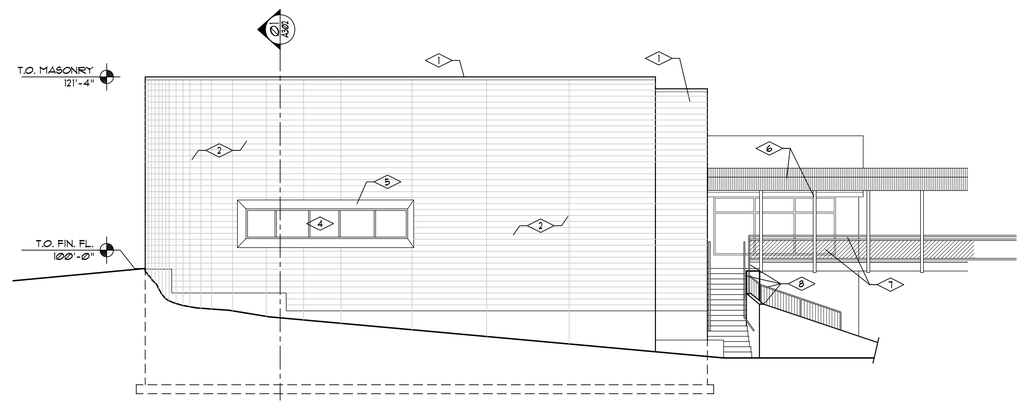

02/A201 WEST ELEVATION
SCALE: 1/8" = 1'-0"

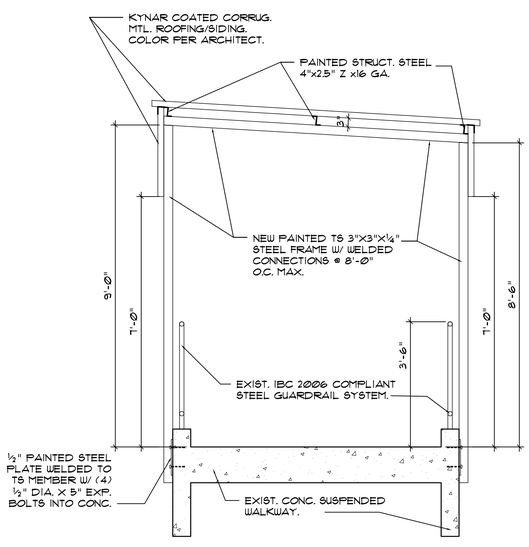

04/A201 CANOPY SECTION (ADD ALT. #2)
SCALE: 1/2" = 1'-0"

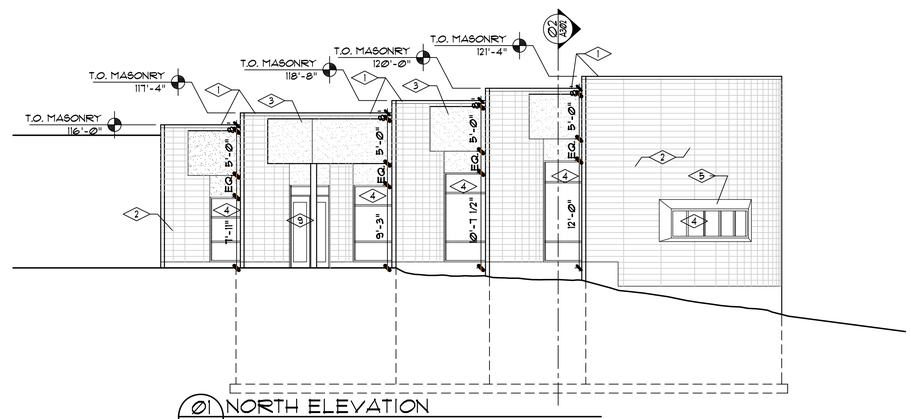

01/A201 NORTH ELEVATION
SCALE: 1/8" = 1'-0"

Eaton Architecture
77 West 200 South, Suite 302
Salt Lake City, UT 84101
Tel 801/328-2982 Fax 801/328-2111

CONSULTANTS

STATE OF UTAH ROBERT JAN EATON 751 LICENSED ARCHITECT

UTAH STATE VETERAN'S NURSING HOME

CHAPEL/MULTIPURPOSE ROOM ADDITION
700 FOOTHILL BOULEVARD, SALT LAKE CITY, UTAH, 84113

OWNER
UTAH D.F.C.M.

MARK	DATE	DESCRIPTION
	03-09-07	

PROJECT NUMBER: 2006-32
DRAWING FILE:
DRAWN BY:
CHECKED BY:

COPYRIGHT 2003 EATON ARCHITECTURE, LLC

SHEET TITLE

EXTERIOR ELEVATIONS

A201

OF

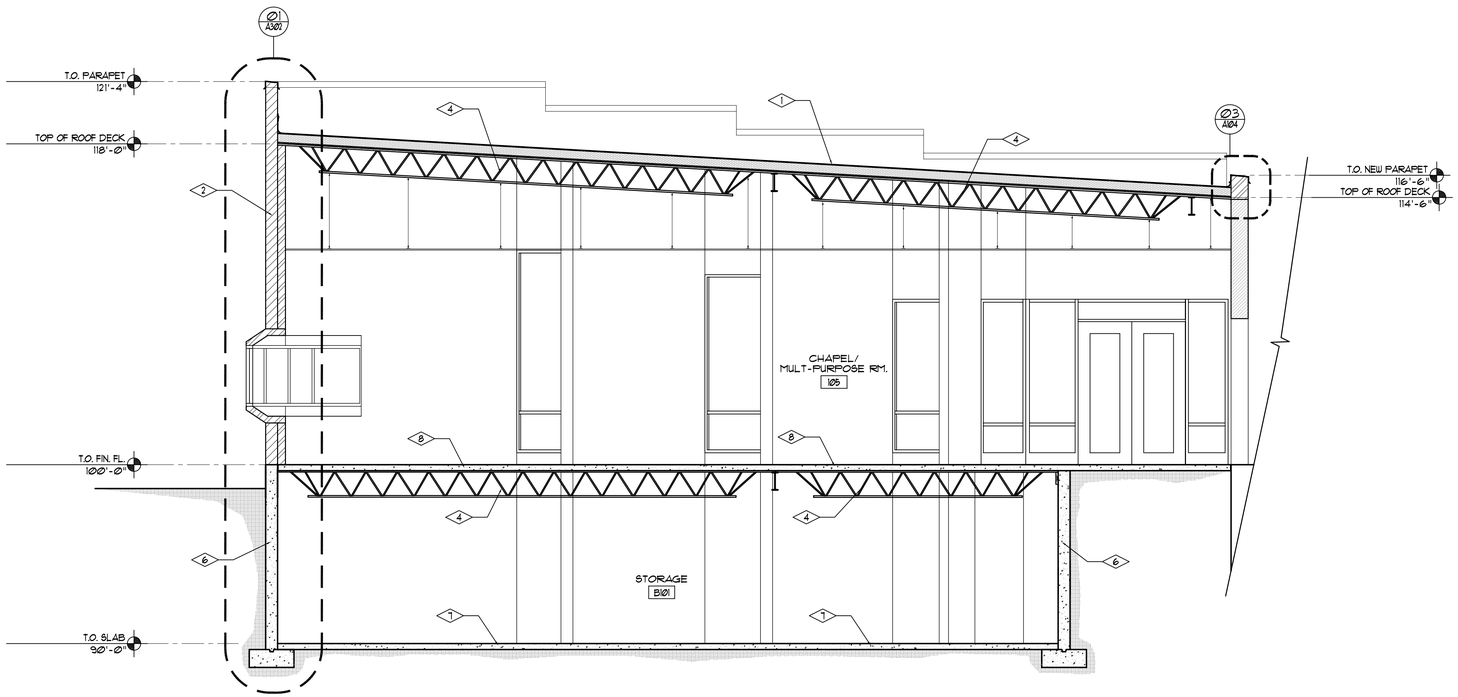

Ø2 A301 BUILDING SECTION
SCALE: 1/4" = 1'-Ø"

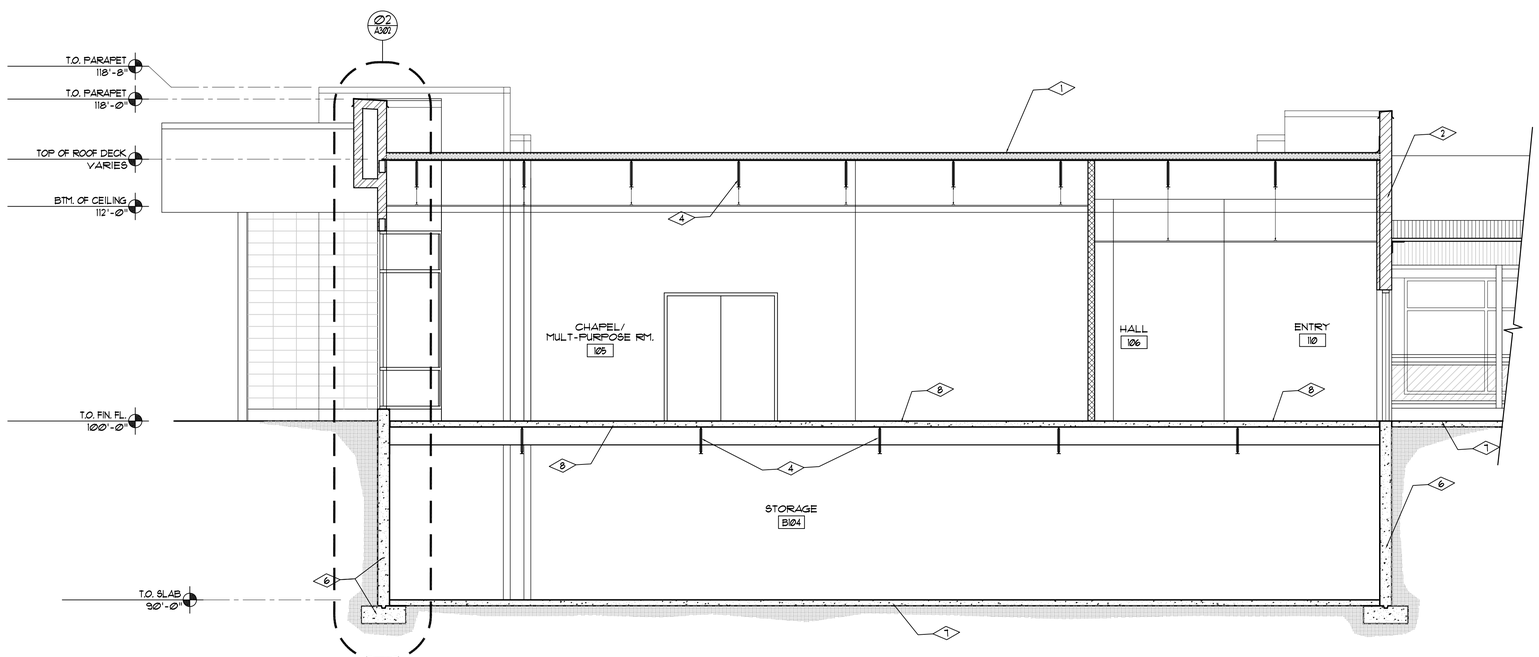

Ø1 A301 BUILDING SECTION
SCALE: 1/4" = 1'-Ø"

REFERENCE NOTES

1. SINGLE-PLY MEMBRANE ROOF SYSTEM ON 6" RIGID INSUL. ON STRUCT. MTL ROOF DECK.
2. ATLAS BRICK STRUCT. BEARING WALL SYSTEM.
3. MTL. STUD FRAMED WALL W/ R-19 BATT INSUL.
4. STRUCT. STEEL JOIST.
5. STRUCT. STEEL COLUMN.
6. CONT. REINF CONC. FDTN. WALL & FTG. SEE STRUCT. SHEETS.
7. 4" CONC. SLAB ON 4" GRANULAR BASE.
8. 1 HOUR FIRE RATED APPROVED UL LISTED STRUCT. STEEL AND CONCRETE FLOOR DECK ASSEMBLY. INSTALL AN APPROVED THROUGH PENETRATION FIRE STOP SYSTEM PER UL 1479 AT ALL FLOOR PENETRATIONS.

SYMBOL LEGEND

- EXIST. WALL TO REMAIN.
- NEW MTL. STUD FRAMED WALL W/ PAINTED GYP. BD. @ EA. SIDE.
- 8" ATLAS BRICK STRUCTURAL WALL SYSTEM.
- 1 HR. FIRE RATED MTL. STUD FRAMED WALL W/5/8" TYPE "X" PAINTED GYP. BD. AT EACH SIDE INSTALLED PER UL# U419 OR U465. EXTEND FRAMING AND GYP. BD. TO ROOF DECK.

Eaton Architecture
77 West 200 South, Suite 302
Salt Lake City, UT 84101
Tel 801/328-2982 Fax 801/328-2111

CONSULTANTS

STATE OF UTAH
ROBERT JAN EATON
751
LICENSED ARCHITECT

UTAH STATE VETERAN'S NURSING HOME

CHAPEL / MULTIPURPOSE ROOM ADDITION
700 FOOTHILL BOULEVARD, SALT LAKE CITY, UTAH, 84113

OWNER
UTAH D.F.C.M.

MARK	DATE	DESCRIPTION
	03-09-07	

PROJECT NUMBER: 2006-32
DRAWING FILE:
DRAWN BY:
CHECKED BY:

COPYRIGHT 2003 EATON ARCHITECTURE, LLC

SHEET TITLE

BUILDING SECTIONS

A301

OF

REFERENCE NOTES

1. CONT. KYNAR COATED 26 GA. METAL CAP FLASHING. COLOR PER ARCH.
2. CONT. DBL. PRESS. TREATED 2x8 WOOD PLATES ANCHORED TO MASONRY, W/1/2" DIA. A.B.'S AT 24" O.C. MAX.
3. SINBLE-PLY MEMBRANE ROOFING ON 6" RIGID INSUL. ON METAL ROOF DECK.
4. STRUCT. STEEL ROOF JOIST. SEE STRUCT. SHEETS.
5. REINF. ATLAS BRICK STRUCT. WALL SYSTEM. SEE STRUCT. SHEETS. COLOR PER ARCH.
6. ACOUSTICAL PANEL SUSPENDED CEILING SYSTEM.
7. 3-5/8" METAL STUD FURRING W/R-11 BATT INSUL. W/5/8" PAINTED GYP. BD.
8. CONT. GALV. 26 GA. MTL. FLASHING.
9. CLEAR ANOD. ALUM. SHEET METAL WRAP AT WINDOW PROJECTION.
10. CONT. CLEAR ANOD. ALUM. FLASHING W/DRIP EDGE.
11. CLEAR ANOD. ALUM. STORE FRONT SYSTEM AND GLAZING.
12. WALL BASE AS SCHEDULED.
13. FLOORING AS SCHEDULED.
14. STRUCT. CONC. AND METAL FLOOR DECK.
15. STRUCT. STEEL FLOOR JOIST. SEE STRUCT. SHEETS.
16. CONT. 8" REINF. CONC. FDTN. WALL. SEE STRUCT. SHEETS.
17. CONT. REINF. CONC. FOOTING ON UNDISTURBED SOILS. SEE STRUCT. SHEETS.
18. 4" CONC. SLAB ON 4" GRANULAR BASE ON COMPACTED SOILS. SEE STRUCT. SHEETS.
19. 6" MTL. STUD FRAMED SOFFIT/FASCIA.
20. STRUCT. TUBE STEEL HEADER. SEE STRUCT. SHEETS.
21. 6" METAL WALL STUD FRAMING AT 16" O.C. MAX. W/R-19 BATT INSUL.
22. GLASS FACED GYP. BD. EXT. SHEATHING ON MTL. STUD FRAMING.
23. HARD COAT SYNTH. STUCCO SYSTEM ON SHEATHING. COLOR PER ARCH.
24. CONT. 1-1/2" REVEAL AT TOP OF FDTN. WALL.

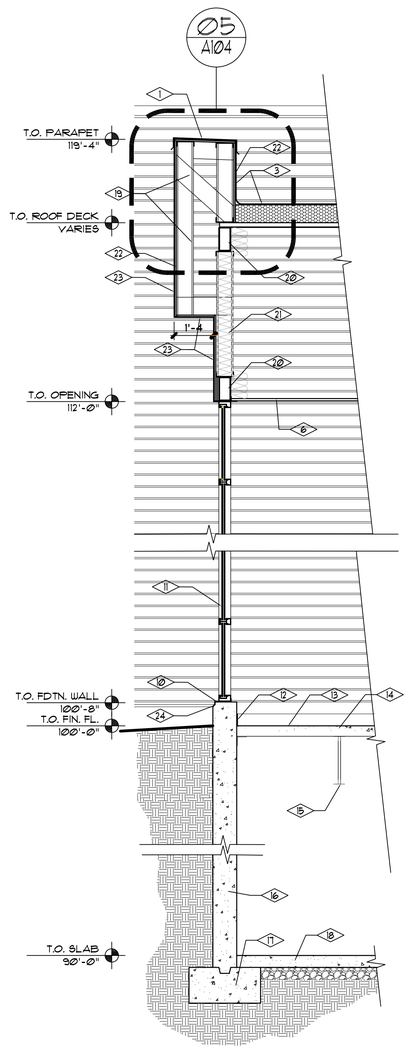

Ø1 A302 WALL SECTION
SCALE: 1/2" = 1'-Ø"

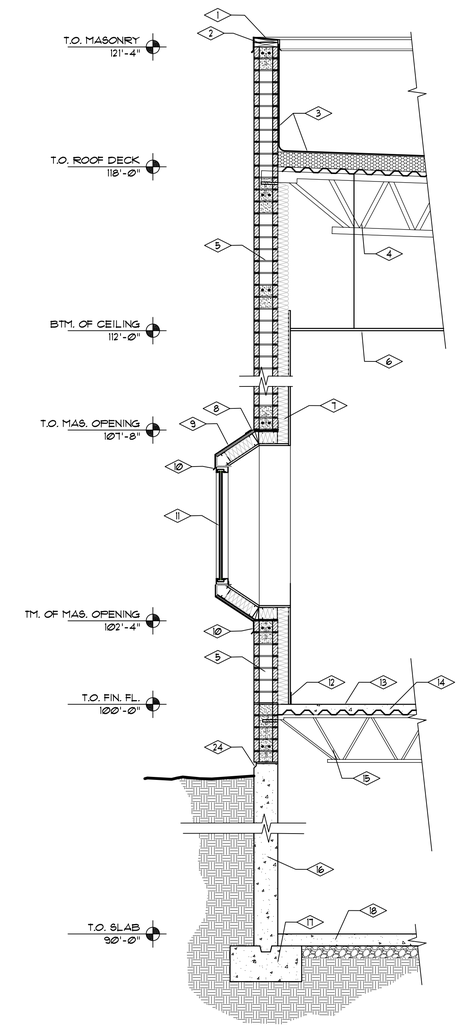

Ø1 A302 WALL SECTION
SCALE: 1/2" = 1'-Ø"

Eaton Architecture
77 West 200 South, Suite 302
Salt Lake City, UT 84101
Tel 801/328-2982 Fax 801/328-2111

CONSULTANTS

STATE OF UTAH
ROBERT JAN EATON
751
LICENSED ARCHITECT

UTAH STATE VETERAN'S NURSING HOME

CHAPEL/MULTIPURPOSE ROOM ADDITION
700 FOOTHILL BOULEVARD, SALT LAKE CITY, UTAH, 84113

OWNER
UTAH D.F.C.M.

MARK	DATE	DESCRIPTION
	03-03-07	

PROJECT NUMBER: 2006-32
DRAWING FILE:
DRAWN BY:
CHECKED BY:

COPYRIGHT 2003 EATON ARCHITECTURE, LLC

SHEET TITLE

WALL SECTIONS

A302

OF

DOOR AND FRAME SCHEDULE

DOOR NUMBER	LOCATION	DOORS: DOOR SIZE WIDTH	DOORS: DOOR SIZE HEIGHT	DOORS: DOOR SIZE THICKNESS	SINGLE/PAIR	TYPE	MAT'L E WOOD	MAT'L M METAL	MAT'L A ALUM.	FRAMES: TYPE	FRAMES: MAT'L M METAL	FRAMES: MAT'L ALUM.	FRAMES: DEPTH OUTSIDE DIMENSION	DETAILS (ALL DOOR DETAILS CAN BE FOUND ON SHEET A501. V.R.S = VINYL REDUCER STRIP): HEAD	DETAILS: JAMB	DETAILS: THRESHOLD	DOOR RATING LABLE	HARDWARE GROUP	NOTES	KICKPLATE	DOOR NUMBER
101A	VESTIBULE	3'-0"	8'-0"	1 3/4"	P	D			A			A	4-1/2"			06		SEE SCHEDULE IN SPECIFICATIONS	SEE WINDOW TYPES		101A
101B	VESTIBULE	3'-0"	8'-0"	1 3/4"	P	D			A			A	4-1/2"	04	04	06			SEE WINDOW TYPES		101B
102A	OVERFLOW	3'-0"	7'-0"	1 3/4"	P	B	E			02	M		5-3/4"	05	05	V.R.S.					102A
102B	OVERFLOW	3'-0"	7'-0"	1 3/4"	S	C	E			01	M		5-3/4"	05	05		1 HR.				102B
103A	CONFERENCE RM.	3'-0"	7'-0"	1 3/4"	S	B	E			01	M		5-3/4"	05	05						103B
104A	HALL	3'-0"	7'-0"	1 3/4"	S	C	E			01	M		5-3/4"	05	05	V.R.S.					104A
104B	HALL	3'-0"	7'-0"	1 3/4"	S	C	E			01	M		5-3/4"	05	05						104B
104C	HALL	3'-0"	7'-0"	1 3/4"	S	C	E			01	M		5-3/4"	05	05	V.R.S.					104C
106A	HALL	3'-0"	7'-0"	1 3/4"	S	B	E			01	M		8-1/4"	05	05		1 HR.				106A
106B	HALL	3'-0"	7'-0"	1 3/4"	S	B	E			01	M		8-1/4"	05	05		1 HR.				106B
107A	MEN'S TOILET RM.	3'-0"	7'-0"	1 3/4"	S	C	E			01	M		5-3/4"	05	05	03					107A
108A	WOMEN'S TOILET RM.	3'-0"	7'-0"	1 3/4"	S	C	E			01	M		5-3/4"	05	05	03					108A
109A	JAN.	3'-0"	7'-0"	1 3/4"	S	C	E			01	M		5-3/4"	05	05	V.R.S.					109A
110A	ENTRY	3'-0"	7'-0"	1 3/4"	S	C	E			01	M		5-3/4"	05	05	V.R.S.	1 HR.				110A
110B	ENTRY	3'-0"	7'-0"	1 3/4"	S	A		M		01	M		9"	08	08	10	1 HR.		INSULATED		110B
112A	OFFICE	3'-0"	7'-0"	1 3/4"	S	C	E			01	M		5-3/4"	05	05						112A
B101	STORAGE	3'-0"	7'-0"	1 3/4"	P	A		M		02	M		7"	11	11	10			INSULATED		B101

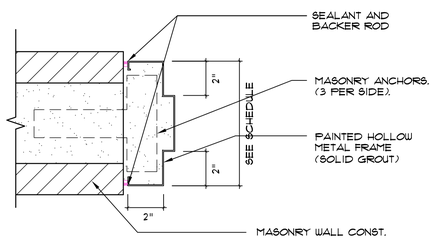

11 A501 JAMB DETAIL
SCALE: 3" = 1'-0"

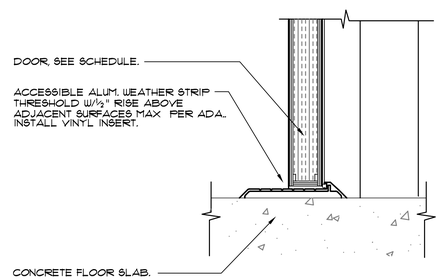

10 A501 THRESHOLD DETAIL
SCALE: 3" = 1'-0"

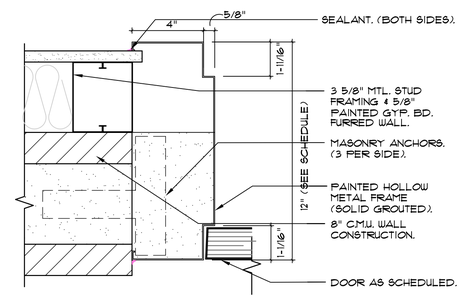

09 A501 DOOR HEAD DETAIL
SCALE: 3" = 1'-0"

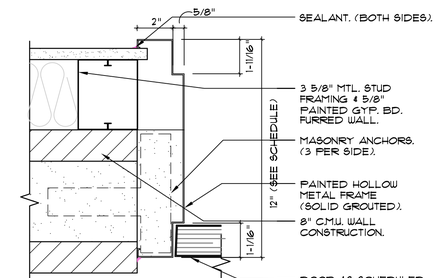

08 A501 DOOR JAMB DETAIL
SCALE: 3" = 1'-0"

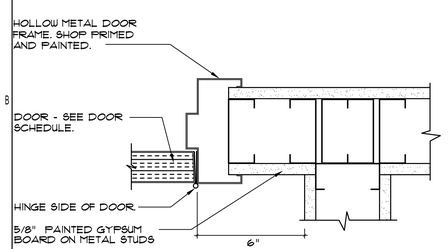

07 A501 TYP. DOOR INSTALLATION OFFSET
SCALE: 3" = 1'-0"

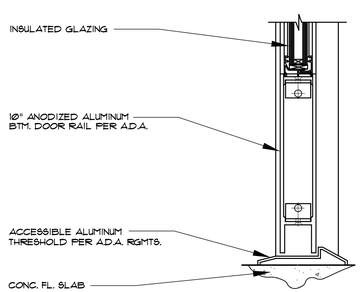

06 A501 STOREFRONT THRESHOLD DETAIL
SCALE: 3" = 1'-0"

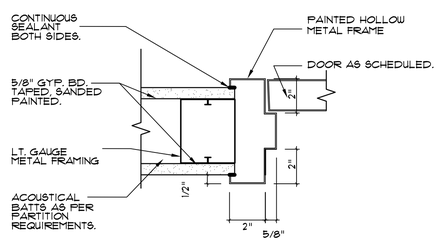

05 A501 DOOR HEAD/JAMB DETAIL
SCALE: 3" = 1'-0"

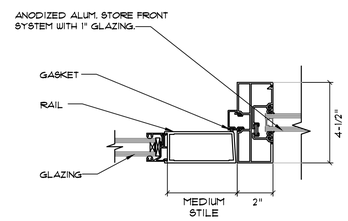

04 A501 DOOR HEAD/JAMB DETAIL
SCALE: 3" = 1'-0"

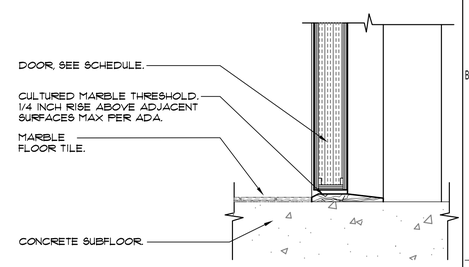

03 A501 THRESHOLD DETAIL
SCALE: 3" = 1'-0"

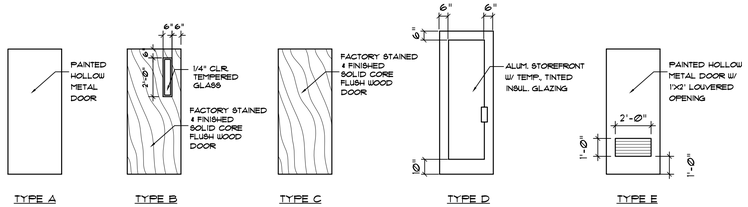

02 A501 DOOR TYPES
SCALE: 1/4" = 1'-0"

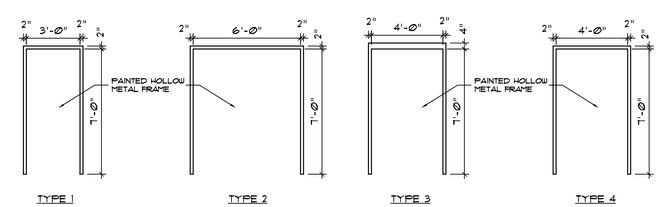

01 A501 FRAME TYPES
SCALE: 1/4" = 1'-0"

Eaton Architecture
77 West 200 South, Suite 302
Salt Lake City, UT 84101
Tel 801/328-2982 Fax 801/328-2111

CONSULTANTS

STATE OF UTAH ROBERT JAN EATON 751 LICENSED ARCHITECT

UTAH STATE VETERAN'S NURSING HOME
CAHPEL/MULTIPURPOSE ROOM ADDITION
700 FOOTHILL BOULEVARD, SALT LAKE CITY, UTAH, 84113

OWNER
UTAH STATE

MARK	DATE	DESCRIPTION
	03-09-07	

PROJECT NUMBER: 2006-32
DRAWING FILE:
DRAWN BY:
CHECKED BY:

COPYRIGHT 2003 EATON ARCHITECTURE, LLC

SHEET TITLE
DOOR/FRAME SCHEDULE, TYPES & DETAILS

A501
OF

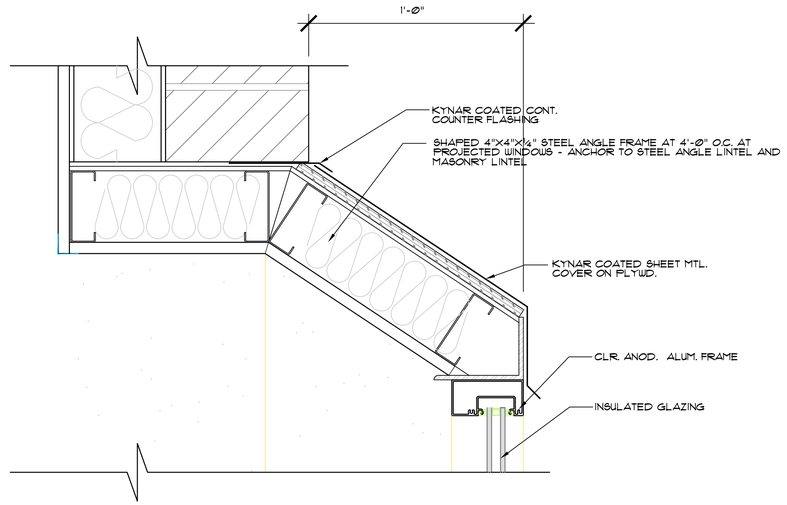

06 A601 WINDOW HEAD/JAMB DETAIL
SCALE: 3" = 1'-0"

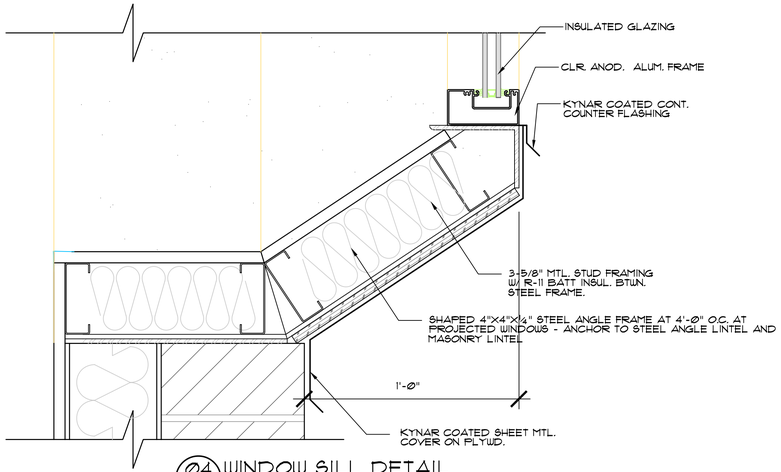

04 A601 WINDOW SILL DETAIL
SCALE: 3" = 1'-0"

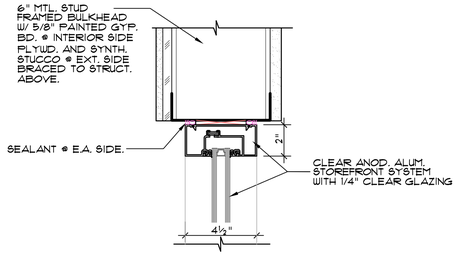

05 A1.05 EXTERIOR WINDOW HEAD/JAMB DETAIL
SCALE: 3" = 1'-0"

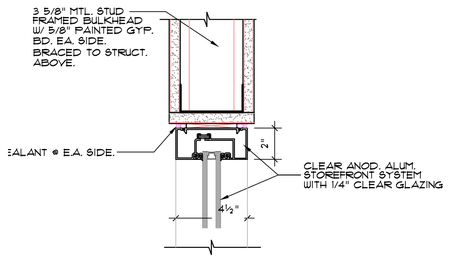

03 A601 INTERIOR WINDOW HEAD/JAMB DETAIL
SCALE: 3" = 1'-0"

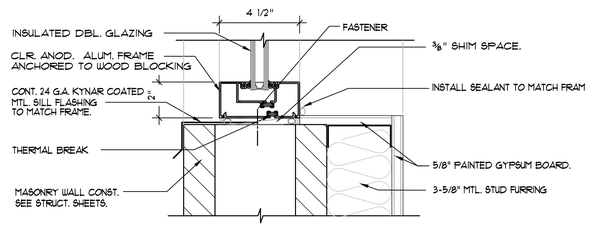

02 A601 WINDOW SILL DETAIL (JAMB/HEAD SIM.)
SCALE: 3" = 1'-0"

GLAZING TYPES

- A ¼" DBL. PANED, INSUL., TINTED GLAZING.
- B ¼" DBL. PANED, INSUL., TINTED, TEMPERED GLAZING.
- C ¼" DBL. PANED, INSUL., CLR. GLAZING.
- D ¼" DBL. PANED, INSUL., CLR. TEMPERED GLAZING.

FINISH SCHEDULE

NO	ROOM NAME	FLOOR/BASE									NORTH WALL							SOUTH WALL							WEST WALL							EAST WALL							CEILING		
		2x2 CERAMIC TILE - THIN-SET	CARPET TILE FLOORING	VCT. FLOORING	ENTRY MAT CORAL BRUSH	4" COVED RUBBER WALL BASE	COVED TILE BASE	SEALED CONC. FLOOR	EXIST. CARPET FLOORING	RUBBER STAIR SKIRTS	GYPSUM BOARD, PAINTED	CERAMIC WALL TILE	ALUM. FRAME STORE FRONT GLAZING	BUILT-IN CASEWORK	EXPOSED SEALED MASONRY	EXIST. FINISHES TO REMAIN	EXPOSED CONC.	GYPSUM BOARD, PAINTED	CERAMIC WALL TILE	ALUM. FRAME STORE FRONT GLAZING	BUILT-IN CASEWORK	EXPOSED SEALED MASONRY	EXIST. FINISHES TO REMAIN	EXPOSED CONC.	GYPSUM BOARD, PAINTED	CERAMIC WALL TILE	ALUM. FRAME STORE FRONT GLAZING	BUILT-IN CASEWORK	EXPOSED SEALED MASONRY	EXIST. FINISHES TO REMAIN	EXPOSED CONC.	GYPSUM BOARD, PAINTED	CERAMIC WALL TILE	ALUM. FRAME STORE FRONT GLAZING	BUILT-IN CASEWORK	EXPOSED SEALED MASONRY	EXIST. FINISHES TO REMAIN	EXPOSED CONC.	PAINTED GYP. BD.	EXPOSED STRUCT./DECK	SUSP. GRID / PANEL CEILING
		1	2	3	4	5	6	7	8	9	1	2	3	4	5	6	7	1	2	3	4	5	6	7	1	2	3	4	5	6	7	1	2	3	4	5	6	7	1	2	3
101	VESTIBULE				4	5							3							3					1							1									3
102	OVERFLOW			3		5					1							1							1		3					1			4						3
103	CONFERENCE ROOM					5			8		1							1							1		3					1									3
104	HALL		2			5			8		1														1							1					6				3
105	CHAPEL/M.P. RM.		2			5					1							1		3					1		3		5			1		3					1		3
106	HALL		2			5					1							1							1							1									3
107	MEN'S TOIL. RM.	1					6				1	2						1	2						1	2						1	2								3
108	WOMEN'S TOIL. RM.	1					6				1	2						1	2						1	2						1	2								3
109	JANITOR			3		5					1	2						1							1							1	2								3
110	ENTRY		2			5					1							1														1									3
111	STAIRS					5		7		9	1							1							1							1								2	
112	OFFICE					5			8		1							1							1		3					1									3
B101	STORAGE					5		7									7						7								7									2	

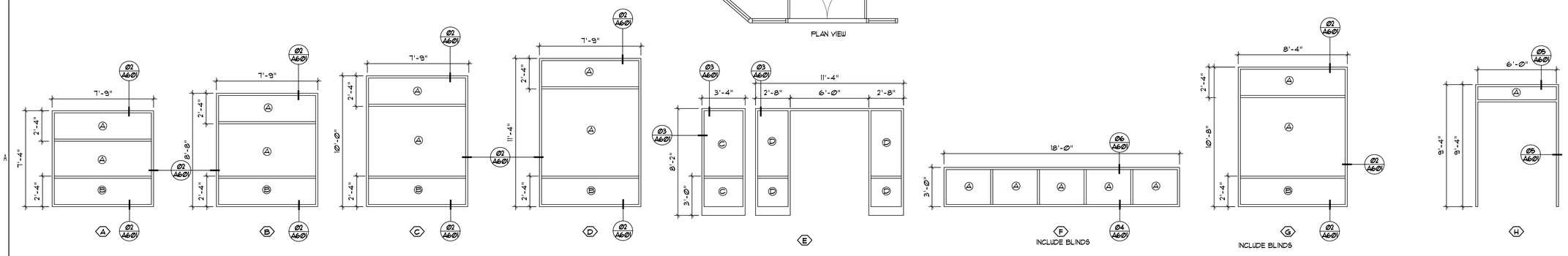

01 A601 WINDOW TYPES
SCALE: 1/4" = 1'-0"

Eaton Architecture
77 West 200 South, Suite 302
Salt Lake City, UT 84101
Tel 801/328-2982 Fax 801/328-2111

CONSULTANTS

UTAH STATE VETERAN'S NURSING HOME

CHAPEL/MULTIPURPOSE ROOM ADDITION
700 FOOTHILL BOULEVARD, SALT LAKE CITY, UTAH, 84113

OWNER
UTAH STATE

MARK	DATE	DESCRIPTION
	03-07-07	

PROJECT NUMBER: 2006-32
DRAWING FILE:
DRAWN BY:
CHECKED BY:

COPYRIGHT 2003 EATON ARCHITECTURE, LLC

SHEET TITLE

WINDOW TYPES AND DETAILS AND FINISH SCHEDULE

A601

OF

GENERAL STRUCTURAL NOTES:

I. GENERAL:

A. THE STRUCTURAL DRAWINGS SHOW THE COMPLETED PROJECT. DETAILS, SECTIONS, AND NOTES SHOWN ON THE DRAWINGS SHALL BE TYPICAL AND APPLY TO SIMILAR SITUATIONS ELSEWHERE UNLESS NOTED OR SHOWN OTHERWISE.
B. REFER TO THE SPECIFICATIONS FOR INFORMATION NOT COVERED BY THESE NOTES OR STRUCTURAL DRAWINGS. WHERE THE STRUCTURAL NOTES, DRAWINGS OR SPECIFICATIONS DISAGREE, THE CONTRACTOR MAY REQUEST A CLARIFICATION. OTHERWISE THE MORE STRINGENT REQUIREMENTS SHALL CONTROL.
C. CONTRACTOR SHALL COMPARE ALL DIMENSIONS AND CONDITIONS ON CONTRACT DOCUMENTS AND AT THE SITE. ANY OMISSION OR CONFLICT SHALL BE BROUGHT TO THE ATTENTION OF THE ARCHITECT/ENGINEER. IN CASE OF ANY CONFLICT FOLLOW THE MOST STRINGENT REQUIREMENT AS DIRECTED BY ARCHITECT/ENGINEER.
D. SEE THE ARCHITECTURAL DRAWINGS FOR DOORS, WINDOWS, NON-BEARING INTERIOR AND EXTERIOR WALLS, RECESSES, DEPRESSIONS, ETC.
E. THE CONTRACTOR SHALL BE RESPONSIBLE FOR SAFETY AND PROTECTION IN AND AROUND THE JOB SITE AND ADJACENT PROPERTIES
F. CONTRACTOR SHALL PROVIDE ADEQUATE TEMPORARY BRACING FOR ALL PORTIONS OF THE BUILDING UNTIL THE ENTIRE STRUCTURE OF THE BUILDING IS COMPLETE.
G. OBSERVATION VISITS TO THE SITE BY STRUCTURAL ENGINEER'S FIELD REPRESENTATIVES SHALL NOT BE CONSTRUED AS INSPECTION OR APPROVAL OF CONSTRUCTION.
H. ANY ENGINEERING DESIGN PROVIDED BY OTHERS AND SUBMITTED FOR REVIEW SHALL BEAR THE SEAL AND SIGNATURE OF A STRUCTURAL ENGINEER REGISTERED IN UTAH.

II. DESIGN CRITERIA:

A. BUILDING CODE: 2003 INTERNATIONAL BUILDING CODE (IBC) W/ AMENDMENTS
B. LOADINGS:

1. ROOF SNOW LOAD = 30 PSF +DRIFTING & W/ IMPORTANT FACTOR PER IBC
2. BASIC WIND LOAD - 90 MPH ZONE - EXPOSURE C
3. SEISMIC DESIGN CATEGORY: E.

C. FOUNDATION:

1. NO SOILS INVESTIGATION REPORT PROVIDED
2. ALL EXTERIOR FOOTINGS ARE TO BE FOUNDED AT NOT LESS THAN 30" BELOW LOWEST ADJACENT FINISH FLOOR OR FINISH GRADE ONTO THE UNDISTURBED OR PROPERLY PLACED AND COMPACTED STRUCTURAL FILL AND BE DESIGNED USING AN ALLOWABLE BEARING CAPACITY OF UP TO 1500 PSF. INTERIOR FOOTINGS ARE TO BE FOUNDED AT NOT LESS THAN 8" BELOW LOWEST ADJACENT FINISH FLOOR OR FINISH GRADE.
3. ALL FOOTING EXCAVATIONS ARE TO BE REVIEWED BY A QUALIFIED GEO-TECHNICAL REPRESENTATIVE WHO IS FAMILIAR WITH THE PROPOSED JOB SITE, TO VERIFY THE SUITABILITY OF THE DESIGN BEARING PRESSURE USED.

D. FUTURE EXPANSION: THIS PROJECT IS NOT DESIGNED FOR FUTURE EXPANSION.

III. CONCRETE:

A. ALL MATERIALS SHALL COMPLY WITH ACI 318 AND ACI 347 PUBLICATIONS AND APPLICABLE ASTM PUBLICATIONS.
B. CONCRETE MATERIAL PROPERTIES: 28-DAY COMPRESSIVE STRENGTHS ARE TO BE 3000 PSI TYPICAL UNLESS NOTED OTHERWISE. DESIGN BASED ON 2500 PSI. CONCRETE SLAB ON GRADE TO BE 4000 PSI.
C. CAST IN PLACE CONCRETE:

1. SPACING OF CONSTRUCTION JOINTS OR CONTROL JOINTS IN WALLS EXPOSED TO VIEW SHALL NOT EXCEED 40 FEET UNLESS SPECIFICALLY NOTED OTHERWISE ON THE DRAWINGS.
2. PROVIDE A 3/4" CHAMFER ON ALL EXPOSED CORNERS OF CONCRETE UNLESS NOTED OTHERWISE.
3. PROVIDE CLASS B LAP SPLICES FOR ALL REINFORCING UNLESS NOTED OTHERWISE.
4. PROVIDE ISOLATION JOINTS AROUND ALL COLUMNS AT ALL EXPOSED SLAB ON GRADE AREAS.

IV. REINFORCING STEEL:

A. ALL BARS #4 AND LARGER TO BE ASTM A 615, GRADE 60. ALL #2 AND #3 BARS TO BE ASTM A 615, GRADE 40. DETAILED, FABRICATED AND ERECTED IN ACCORDANCE WITH ACI-318, LATEST ADOPTION.
B. ALL REINFORCING STEEL SHALL BE BENT, DETAILED AND CHAIRED AS PER "ACI MANUAL OF STANDARD PRACTICE FOR DETAILING REINFORCING CONCRETE STRUCTURES".
C. WELDED WIRE FABRIC TO BE IN ACCORDANCE WITH ASTM A 185.
D. ALL BARS INDICATED ON THE PLANS TO BE WELDED SHALL CONFORM TO ASTM A706 (GRADE 60).
E. CONCRETE COVER REQUIREMENTS FOR DEFORMED BAR REINFORCING STEEL SHALL COMPLY WITH ACI 318, "BUILDING CODE REQUIREMENTS FOR REINFORCING CONCRETE".

1. CAST-IN-PLACE CONCRETE:

a) CONCRETE CAST AGAINST AND PERMANENTLY EXPOSED TO EARTH: 3"
b) FORMED CONCRETE EXPOSED TO EARTH OR WEATHER:

#6 BARS AND LARGER: 2"
#5 BARS AND SMALLER: 1-1/2"

c) CONCRETE NOT EXPOSED TO WEATHER OR IN CONTACT WITH GROUND:
SLABS, WALLS JOISTS: #11 BARS OR SMALLER: 3/4"
BEAMS, COLUMNS: PRIMARY REINFORCING, TIES, STIRRUPS, SPIRALS: 1-1/2"

F. DETAILING: SUBMIT PLACING DRAWINGS PER ACI DETAILING MANUAL, ACI SP-66. FABRICATE ONLY AFTER REVIEW AND APPROVAL. REINFORCING BARS SHALL NOT BE WELDED UNLESS SPECIFICALLY SHOWN ON DRAWINGS.

1. LAP SPLICE LENGTHS SHALL BE AS FOLLOWS:
30 BAR DIAMETER FOR #3 AND #4 BARS
40 BAR DIAMETER FOR #5 THROUGH #8 BARS
DO NOT SPLICE STIRRUPS AND TIES
DO NOT SPLICE VERTICAL BARS IN RETAINING WALLS UNLESS SPECIFICALLY SHOWN.

V. MASONRY:

A. GENERAL:

1. LIGHTWEIGHT HOLLOW CONCRETE MASONRY UNIT TO BE ASTM C 90, GRADE N-1 AND HAVE A MINIMUM UNIT STRENGTH OF 2800 PSI AND f'm OF 2000 PSI. MORTAR TO BE TYPE "S". GROUT FILL TO BE 2000 PSI AT 28 DAYS.
2. MASONRY DESIGN IS BASED ON VALUES WITH LEVEL 2 INSPECTION PER ACI 530-99.
3. SEE CONCRETE FOR REQUIREMENTS FOR REINFORCING.

B. MASONRY REINFORCING:

1. MINIMUM REINFORCING OF CONCRETE MASONRY UNIT WALLS:
ALL MASONRY WALLS SHALL BE REINFORCING AS FOLLOWS, UNLESS SHOWN OTHERWISE ON THE DRAWINGS

8" C.M.U. WALLS — #5 VERTICAL AT 32" O.C.; #5 HORIZONTAL AT 48" O.C.
10" C.M.U. WALLS — #5 VERTICAL AT 24" O.C.; #6 HORIZONTAL AT 48" O.C.

2. C.M.U. WALLS ARE TO HAVE #5 VERTICALS AT ALL CORNERS, ENDS, JAMBS, INTERSECTIONS AND BOTH SIDES OF CONTROL JOINTS, TYPICAL UNLESS NOTED OTHERWISE.
3. ADDITIONAL VERTICAL REINFORCING SHOWN ON PLAN IS IN LIEU OF TYPICAL REINFORCING. PLACE ONE BAR PER CELL IN SOLID GROUT. EXTEND BARS A MINIMUM OF 30 BAR DIAMETERS BEYOND THE ROOF LEVEL ABOVE.
4. BUILDING WALLS ARE TO HAVE 2 #5 BARS CONTINUOUS IN A MINIMUM 8" DEEP BOND BEAM AT ALL ROOF LEVELS UNLESS NOTED OTHERWISE.
5. BUILDING WALLS ARE TO HAVE 1 #5 BAR CONTINUOUS IN A MINIMUM 8" DEEP BOND BEAM AT THE TOP OF ALL PARAPETS UNLESS NOTED OTHERWISE.
6. PROVIDE A MINIMUM OF 2 #5 BARS X (THE WIDTH OF THE OPENING PLUS 4'-0") IN A MINIMUM 8" DEEP BOND BEAM BELOW ALL WINDOW AND MECHANICAL OPENINGS UNLESS NOTED OTHERWISE.

C. MASONRY LINTELS:

1. ALL REINFORCING IS TO EXTEND A MINIMUM OF 2'-0" BEYOND THE JAMB AND TO BE GROUTED SOLID FOR THE ENTIRE DEPTH INDICATED.
2. ALL CONCRETE MASONRY UNITS USED IN THE LENGTH ARE TO BE "OPEN-END" TYPE, TO INSURE FULLY GROUTED HEAD JOINTS.
3. ALL LINTELS ARE TO BE PROPERLY SHORED FOR THEIR WEIGHT PLUS ANY CONSTRUCTION LOADS AND LATERALLY BRACED TO PREVENT ANY LATERAL MOVEMENT FOR A MINIMUM OF 7 DAYS AFTER GROUTING, UNLESS NOTED OTHERWISE.

D. MASONRY GROUTING PROCEDURES:

1. GROUTED MASONRY SHALL BE CONSTRUCTED IN SUCH A MANNER THAT ALL ELEMENTS OF THE MASONRY ACT TOGETHER AS A STRUCTURAL ELEMENT.
2. PRIOR TO GROUTING, THE GROUT SPACE SHALL BE CLEANED SO THAT ALL SPACES TO BE FILLED WITH GROUT DO NOT CONTAIN MORTAR PROJECTIONS GREATER THAN 1/2", MORTAR DROPPINGS OR OTHER FOREIGN MATERIAL.
3. GROUT MATERIALS AND WATER CONTENT SHALL BE CONTROLLED TO PROVIDE ADEQUATE FLUIDITY FOR PLACEMENT, WITHOUT SEGREGATION OF THE CONSTITUENTS AND SHALL BE MIXED THOROUGHLY. SEGREGATION OF THE GROUT MATERIALS AND DAMAGE TO THE MASONRY SHALL BE AVOIDED DURING THE GROUTING PROCESS.
4. THE GROUTING OF ANY SECTION OF WALL SHALL BE COMPLETED IN ONE DAY WITH NO INTERRUPTIONS GREATER THAN ONE HOUR.
5. BETWEEN GROUT POURS, A HORIZONTAL CONSTRUCTION JOINT SHALL BE FORMED BY STOPPING ALL WYTHES AT THE SAME ELEVATION AND WITH THE GROUT STOPPING A MINIMUM OF 1 1/2 INCHES BELOW A MORTAR JOINT, EXCEPT AT THE TOP OF THE WALL. WHERE BOND BEAMS OCCUR, STOP GROUT POUR A MINIMUM OF 1/2 INCH BELOW THE TOP OF THE MASONRY.
6. ALL CELLS AND SPACES CONTAINING REINFORCING BARS SHALL BE FILLED WITH GROUT. GROUT SHALL BE PLACED SO THAT ALL SPACES TO BE GROUTED DO NOT CONTAIN VOIDS.
7. GROUT SHALL BE CONSOLIDATED BY MECHANICAL VIBRATION DURING PLACING BEFORE LOSS OF PLASTICITY IN A MANNER TO FILL THE GROUT SPACE. GROUT POURS GREATER THAN 12 INCHES SHALL BE RECONSOLIDATED BY MECHANICAL VIBRATION TO MINIMIZE VOIDS DUE TO WATER LOSS. GROUT POURS 12 INCHES OR LESS IN HEIGHT SHALL BE MECHANICALLY VIBRATED, OR PUDDLED.
8. WHERE GROUT POURS EXCEED 5 FEET, CLEANOUTS SHALL BE PROVIDED IN THE BOTTOM COURSE AT EVERY VERTICAL BAR LOCATION BUT SHALL NOT BE SPACED MORE THAN 32 INCHES ON CENTER FOR SOLID GROUTED MASONRY. GROUT SHALL BE PLACED IN A CONTINUOUS POUR NOT TO EXCEED 16 FEET IN HEIGHT, AND IN GROUT LIFTS NOT TO EXCEED 6 FEET.
9. REINFORCING SHALL BE CONTINUOUS THE FULL HEIGHT OF THE GROUT POUR PLUS ANY REQUIRED LAP ABOVE. REINFORCEMENT SHALL BE SECURED AGAINST DISPLACE MENT PRIOR TO GROUTING BY WIRE POSITIONERS OR OTHER SUITABLE DEVICES AT INTERVALS NOT TO EXCEED 200 BAR DIAMETERS NOR 10 FEET.
10. TOLERANCE FOR THE PLACEMENT OF STEEL IN WALLS AND FLEXURAL ELEMENTS SHALL BE PLUS OR MINUS 1/2 INCH FOR "D" EQUAL TO 8 INCHES OR LESS, PLUS OR MINUS ONE INCH FOR "D" EQUAL TO 24 INCHES OR LESS BUT GREATER THAN 8 INCHES, AND PLUS OR MINUS 1 1/4 INCH FOR "D" GREATER THAN 24 INCHES.

VI. STRUCTURAL AND MISCELLANEOUS STEEL:

A. MATERIAL PROPERTIES:

1. ALL SHAPES, PLATES, ANGLES, AND CHANNELS TO BE ASTM A-36 UNLESS NOTED OTHERWISE.
2. ALL WF SHAPES WEIGHING 84 POUNDS PER LINEAR FOOT OR LESS TO BE ASTM A 572, GRADE 50. ALL WF SHAPES WEIGHING MORE THAN 84 POUNDS PER LINEAR FOOT TO BE ASTM A 572, GRADE 36.
3. SQUARE OR RECTANGULAR TUBES TO BE ASTM A 500, GRADE B, F_y = 46 KSI.
4. ALL STEEL TO BE DETAILED, FABRICATED AND ERECTED IN ACCORDANCE WITH A.I.S.C. SPECIFICATIONS, LATEST ADOPTION.

B. WELDING:

1. FOR STRUCTURAL STEEL TO BE IN ACCORDANCE WITH A.W.S. REQUIREMENTS FOR E70XX ELECTRODES. E60XX MAY BE USED FOR WELDING STEEL FLOOR AND ROOF DECKS.
2. MINIMUM WELDS: ALL INTERSECTING STEEL SHAPES THAT ARE NOT BOLTED SHALL BE CONNECTED BY A FILLET WELD ALL AROUND, UNLESS NOTED OTHERWISE. FILLET WELD SIZES THAT ARE NOT SHOWN SHALL BE 1/16" LESS THAN THE THINNEST OF THE CONNECTED PARTS FOR THICKNESS 1/4" AND LARGER. FILLET WELDS ON PLATES LESS THAN 1/4" SHALL BE OF THE SAME SIZE AS THE THINNEST OF THE CONNECTED PART.

C. BOLTS:

1. ALL BOLTS TO BE 3/4" DIAMETER ASTM A 325-N UNLESS NOTED OTHERWISE. A325N BOLTS SHALL BE USED IN CONNECTIONS FOR SIMPLE SPAN FRAMING AND BEAMS TO BEARING PLATE CONNECTIONS. TIGHTEN BOLTS TO SNUG TIGHT CONDITION
2. BOLTS, NUTS AND WASHERS SHALL NOT BE REUSED.
3. ANCHOR BOLTS SHALL BE ASTM A 307 OR A 36.
4. EXPANSION BOLTS ARE 3/4" DIAMETER RAMSET "DYNABOLTS" INSTALLED IN ACCORDANCE WITH ICBO #1372. MINIMUM EMBEDMENT TO BE 3 1/2" IN CONCRETE AND 5" IN SOLID GROUTED MASONRY. ALL CONCRETE OR MASONRY SHALL BE AT ITS SPECIFIED DESIGN STRENGTH AT THE TIME OF INSTALLATION.

D. STEEL JOISTS:

1. TO BE STANDARD "K" SERIES ALL IN ACCORDANCE WITH S.J.I. SPECIFICATIONS AND U.B.C. STANDARD 27-4.
2. THE STEEL JOIST SUPPLIER SHALL BE RESPONSIBLE FOR THE DESIGN OF ALL PARALLEL CHORD AND DOUBLE PITCHED TOP CHORD STEEL JOISTS AND GIRDERS. JOISTS OR GIRDERS WITH SLOPES GREATER THAN 1/2" PER FOOT SHALL BE DESIGNED TO MEET OR EXCEED THE LOAD CAPACITIES, LISTED IN THE SJI LOAD TABLES, OF THE JOIST OR GIRDER SIZES INDICATED ON THE FRAMING PLAN, AS IF THE JOISTS OR GIRDERS WERE INSTALLED LEVEL.
3. PROVIDE SPECIAL BEARING ENDS TO ACCOMMODATE SLOPES FROM SLOPED JOISTS, SLOPED GIRDERS OR SLOPED BEARING CONDITIONS.
4. CAMBER, ALL JOISTS SHALL BE CAMBERED AS SPECIFIED IN THE SJI SPECIFICATIONS, UNLESS NOTED OTHERWISE.
5. PROVIDE BRIDGING AS REQUIRED BY JOIST MANUFACTURER, REGULATIONS AND SJI SPECIFICATIONS.
6. MECHANICAL UNIT WEIGHTS SHOWN ON PLANS ARE NOT INCLUDED IN JOIST DESIGNATIONS AND ARE TO BE ADDED TO THE JOIST DESIGNS.
7. SHOP DRAWINGS FOR ALL JOISTS AND GIRDERS SHALL BE SUBMITTED FOR REVIEW.

E. METAL ROOF AND FLOOR DECK:

1. METAL ROOF DECK SHALL COMPLY WITH THE LATEST REQUIREMENTS OF THE STEEL DECK INSTITUTE. SUBMIT ICBO REPORT WITH LOAD AND LATERAL SHEAR CAPACITIES WITH SHOP DRAWINGS.
2. METAL ROOF DECK SHALL BE GALVANIZED AND OF THE TYPE AND GAUGES CALLED FOR ON THE DRAWINGS, MANUFACTURED AND ERECTED PER S.D.I. AND IN ACCORDANCE WITH ICBO #2078.
3. ALL METAL DECK IS TO BE WELDED WITH E6022 ELECTRODES UNLESS OTHER ELECTRODES ARE SPECIFICALLY APPROVED BY THIS ENGINEER.

F. LIGHT GAUGE METAL FRAMING:

1. MATERIALS:

a) ALL FRAMING MEMBERS SHALL BE OF THE TYPE AND SIZE AS SHOWN ON THE DRAWINGS AND SPECIFI CATIONS AND SHALL BE MANUFACTURED BY A MEMBER OF THE METAL STUD MANUFACTURER'S ASSOCIATION OR PRE-APPROVED EQUAL.
b) ALL 12, 14 AND 16 GAUGE ITEMS SHALL BE FORMED FROM STEEL MEETING THE MINIMUM REQUIREMENTS OF ASTM A 570, GRADE 50.
c) ALL 18 AND 20 GAUGE ITEMS SHALL BE FORMED FROM STEEL MEETING THE MINIMUM REQUIREMENTS OF ASTM A 570, GRADE 33.
d) ALL 50 KSI MATERIAL TO BE TAGGED TO REFLECT ASTM NUMBER AND GRADE.
e) ALL STRUCTURAL COMPONENTS SHALL BE GIVEN A COAT OF RUST RESISTING PAINT. FIELD ABRASIONS AND WELDS SHALL BE TOUCHED UP IN THE FIELD AFTER ERECTION.

VII. SPECIAL INSPECTION: SPECIAL INSPECTION IS REQUIRED IN ACCORDANCE WITH IBC SECTION 1701.

A. ALL CONCRETE MASONRY UNITS AND REINFORCING.
B. FIELD WELDING.

Eaton architecture
77 West 200 South, Suite 302
Salt Lake City, UT 84101
Tel 801/328-2982 Fax 801/328-2111

CONSULTANTS

Shen Engineers, Inc.
Structural/Seismic Consultants
3335 South 900 East, Suite 250
Salt Lake City, UT 84106
Telephone 801 466-2625
Facsimile 801 466-2656
E-mail: sheneng@msn.com

LICENSED PROFESSIONAL ENGINEER
No. 260129
HUA SHEN
STATE OF UTAH

UTAH STATE VETERAN'S NURSING HOME
MULTI-PURPOSE ROOM ADDITION
SALT LAKE CITY, UTAH

OWNER
UTAH STATE

MARK	DATE	DESCRIPTION
	01/07	

PROJECT NUMBER: SE06322
DRAWING FILE:
DRAWN BY: HS
CHECKED BY: YX

COPYRIGHT 2003 EATON ARCHITECTURE, LLC

SHEET TITLE

S-101

OF

Drawing: C:\R13\COM\PROTOS\D12.DWG (RJG)

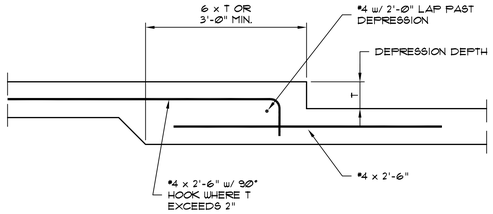

10 TYP. DEPRESSED SLAB ON GRADE

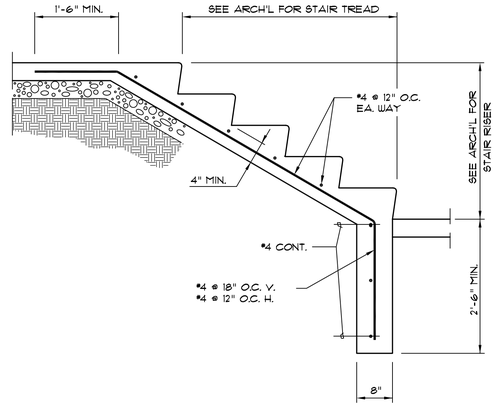

7 CONCRETE STAIR ON GRADE

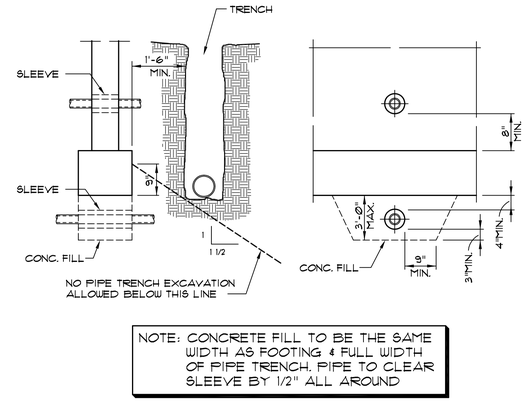

NOTE: CONCRETE FILL TO BE THE SAME WIDTH AS FOOTING & FULL WIDTH OF PIPE TRENCH. PIPE TO CLEAR SLEEVE BY 1/2" ALL AROUND

4 PIPES AT CONCRETE FOOTING

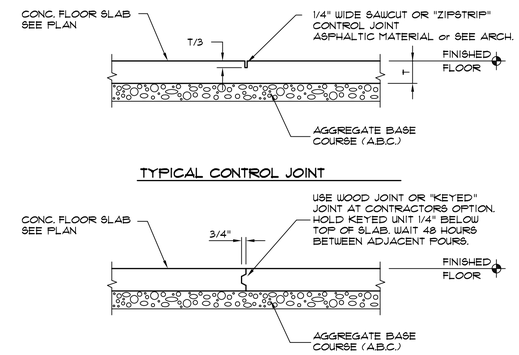

1 TYPICAL CONCRETE FLOOR JOINTS

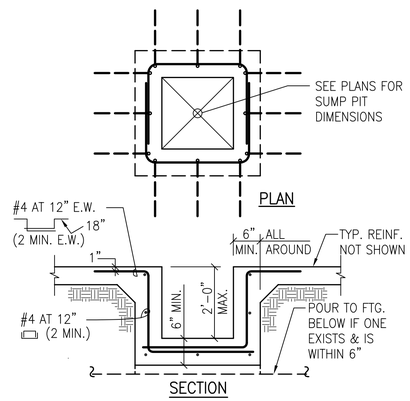

11 TYPICAL SUMP PIT DETAIL

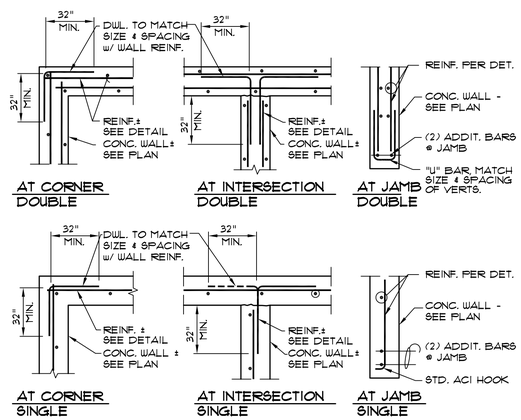

8 TYPICAL CONC. WALL REINF.

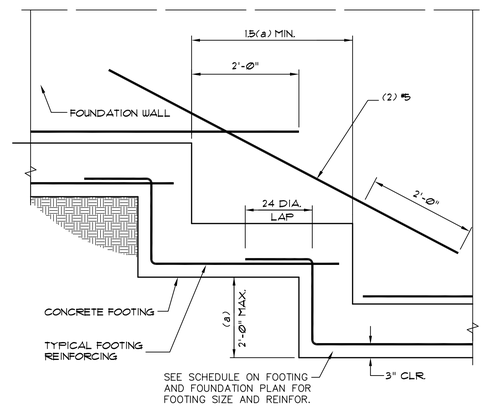

NOTE: REINFORCING MAY BE CONTINUOUS

5 TYPICAL STEPPED FOOTING

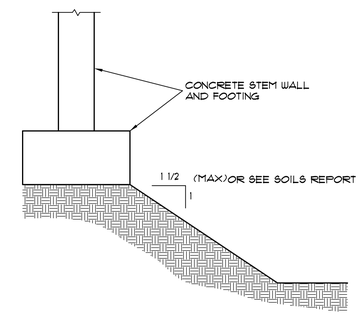

NOTE: TYPICAL FOR ALL EXCAVATION ADJACENT TO ALL WALL OR COLUMN FOOTINGS

2 EXCAVATION ADJACENT TO FOOTING

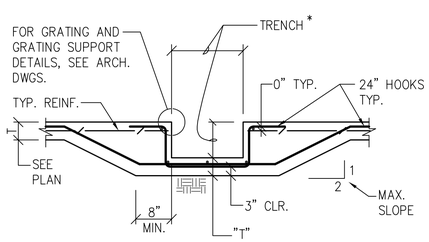

* FOR TRENCH LOCATIONS AND SIZE SEE PLANS AND/OR APPLICABLE ARCH., MECH. AND ELEC. DWGS.

12 TYPICAL TRENCH AT SLAB ON GRADE

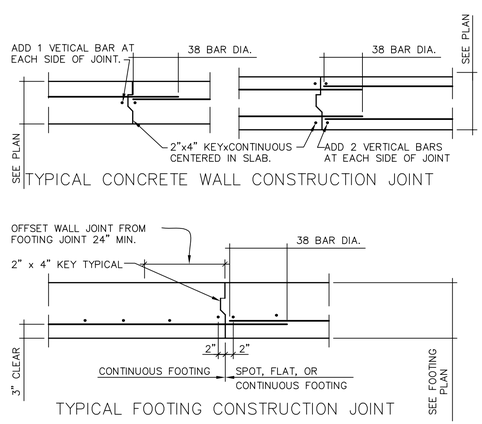

9 TYP. FTG. & WALL CONSTRUCTION JOINT

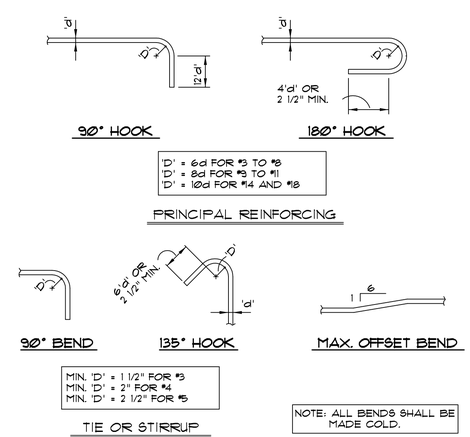

6 TYPICAL REINFORCING BAR BENDS

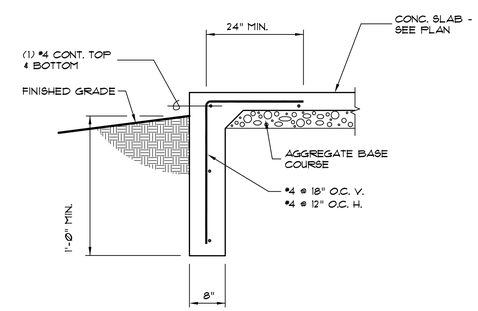

3 TYPICAL TURNDOWN FOOTING

Eaton Architecture
77 West 200 South, Suite 302
Salt Lake City, UT 84101
Tel 801/328-2982 Fax 801/328-2111

CONSULTANTS

Shen Engineers, Inc.
Structural/Seismic Consultants
3335 South 900 East, Suite 250
Salt Lake City, UT 84106
Telephone 801 466-2625
Facsimile 801 466-2656
E-mail: shenang@msn.com

LICENSED PROFESSIONAL ENGINEER No. 260129 HUA SHEN STATE OF UTAH

UTAH STATE VETERAN'S NURSING HOME

MULTI-PURPOSE ROOM ADDITION

SALT LAKE CITY, UTAH

OWNER: UTAH STATE

MARK	DATE	DESCRIPTION
	01/07	

PROJECT NUMBER: SE06322
DRAWING FILE:
DRAWN BY: HS
CHECKED BY: YX

COPYRIGHT 2003 EATON ARCHITECTURE, LLC

SHEET TITLE

S-102

OF

AutoCAD Version: 13_c4
April 08, 1998 3:28:37 p.m.
Drawing: C:\ATCOM\PROJECS\0212.DWG (R.G)

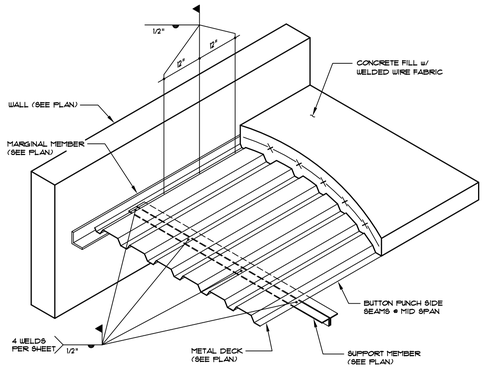

10 METAL FLOOR DECK WELDING PATTERN

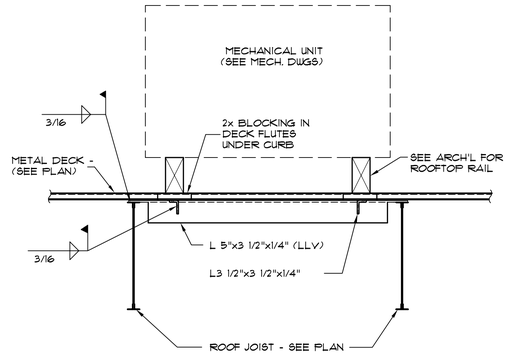

7 TYPICAL MECHANICAL UNIT SUPPORT

ALL REINFORCING TO EXTEND A MINIMUM OF 2'-0" BEYOND JAMBS AND BE GROUTED SOLID FOR DEPTH "D".

ALL CONCRETE MASONRY UNITS USED IN LENGTH OF LINTEL TO BE "OPEN-END" TYPE, TO INSURE FULLY GROUTED HEAD JOINTS.

ALL LINTELS TO BE PROPERLY SHORED DURING GROUTING AND REMAIN IN PLACE FOR A MINIMUM OF 7 DAYS FOLLOWING GROUTING.

ALL GROUT TO BE MINIMUM OF 2000 PSI AT 28 DAYS.

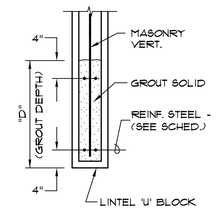

4 MASONRY LINTEL SCHEDULE

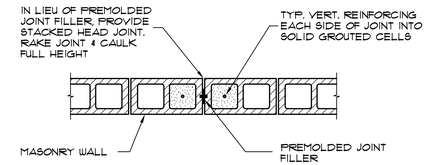

NOTES:

1. ALL HORIZONTAL JOINT REINFORCING DISCONTINUES AT JOINT. ALL BOND BEAM REINFORCING CONTINUES THRU JOINT.
2. SEE ARCHITECTURAL DRAWINGS FOR CONTROL JOINTS LOCATE AT 30'-0" O.C. MAXIMUM BUT NOT LESS THAN 2'-0" FROM BEARING PLATE OR JAMB OF AN OPENING SUBMIT FOR REVIEW PRIOR TO CONSTRUCTION

1 TYPICAL MASONRY WALL CONRTOL JOINT

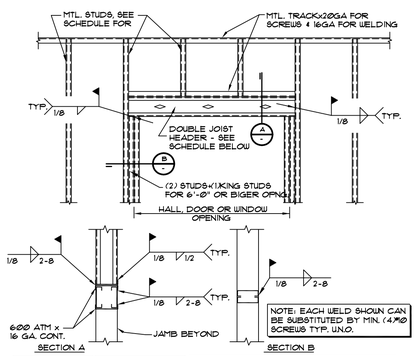

NOTE: EACH WELD SHOWN CAN BE SUBSTITUTED BY MIN. (4)#10 SCREWS TYP. U.N.O.

OPENING	HEADER REQ'D.
1'-5" TO 3'-4"	(2) 600 EUC 18 GA.
3'-5" TO 5'-0"	(2) 800 EUC 18 GA.
5'-1" TO 7'-0"	(2) 1000 EUC 18 GA.
7'-1" TO 8'-4"	(2) 1000 EUC 16 GA.
8'-5" TO 10'-6"	(2) 1000 EUC 16 GA.

INTERIOR NON-BEARING METAL STUD WALL SCHEDULE

STUDS	SPACING	ALLOWABLE WALL HEIGHT
3 1/2" x 20 GA.	16" O.C.	16'-0"
4" x 20 GA.	16" O.C.	17'-9"
6" x 20 GA.	16" O.C.	24'-7"
6" x 18 GA.	16" O.C.	26'-7"

11 TYPICAL METAL STUD HEADER SCHEDULE

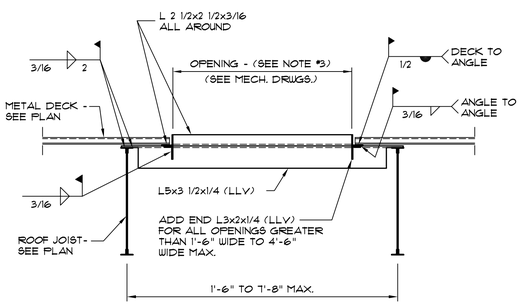

NOTES:

1. TYPICAL FOR ALL OPENINGS IN ROOF WITH GREATER THAN 12" DIMENSION.
2. METAL DECK SUPPLIER TO FURNISH ALL SUMP PANS AND REINFORCING PLATES FOR OPENINGS UP TO 12".
3. MISCELLANEOUS STEEL CONTRACTOR TO VERIFY WITH ALL TRADES, FOR NUMBER AND LOCATION OF FRAMED OPENINGS REQUIRED.

8 TYPICAL FRAMING @ ROOF OPENING

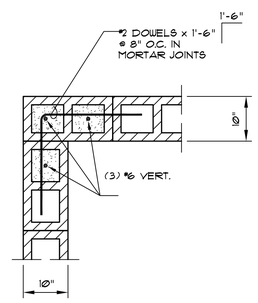

5 TYP. MASONRY PIER @ CORNER OF WALL

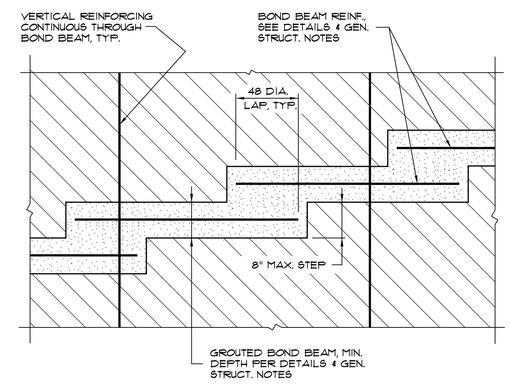

2 TYPICAL STEPPED BOND BEAM

NOTE:

FOR 6" STUD USE 2 1/2"x16 GA W/1/2" FLANGE HORIZONTAL BRIDGING.

FOR 3 5/8" OR 4" STUD USE 1 1/2"x16 GA W/ 1/2" FLANGE HORIZONTAL BRIDGING.

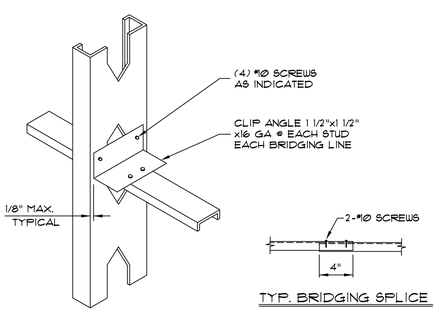

12 TYPICAL METAL WALL STUD BRIDGING

MIN. REQUIRED SHEAR CAPACITY FOR DECKS AND CONNECTIONS
1. 1 1/2" HSB-36 20GA. DECK - V = 840 PLF

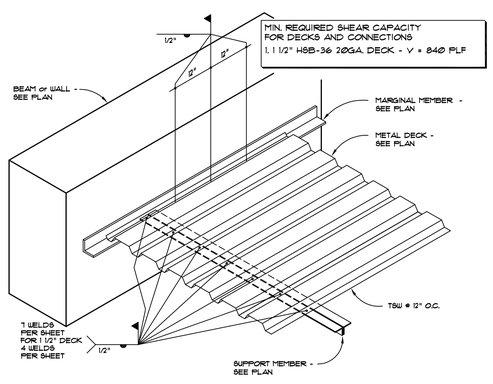

9 METAL ROOF DECK WELDING PATTERN

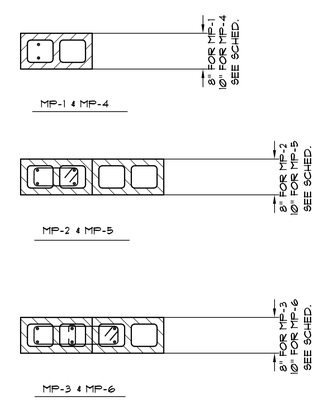

6 MASONRY PIER CONFIGURATION

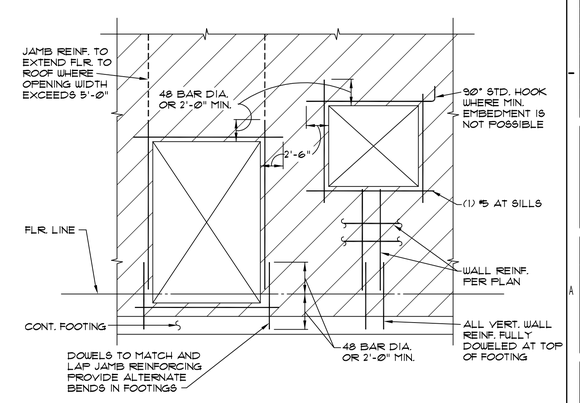

3 TYPICAL MASONRY WALL CONSTRUCTION

Eaton Architecture
77 West 200 South, Suite 302
Salt Lake City, UT 84101
Tel 801/328-2982 Fax 801/328-2111

CONSULTANTS

Shen Engineers, Inc.
Structural/Seismic Consultants
3335 South 900 East, Suite 250
Salt Lake City, UT 84106
Telephone 801 466-2625
Facsimile 801 466-2656
E-mail: shendng@msn.com

LICENSED PROFESSIONAL ENGINEER No. 260129 HUA SHEN STATE OF UTAH

UTAH STATE VETERAN'S NURSING HOME

MULTI-PURPOSE ROOM ADDITION

SALT LAKE CITY, UTAH

OWNER: UTAH STATE

MARK	DATE	DESCRIPTION
	01/07	

PROJECT NUMBER: SE06022
DRAWING FILE:
DRAWN BY: BS
CHECKED BY: MS

COPYRIGHT 2003 EATON ARCHITECTURE, LLC

SHEET TITLE

S-103

OF

AutoCAD Version: 13_c4
April 08, 1998, 3:28:37 p.m.
Drawing: Q:\13\12061\DWG\12-12.DWG (R.G)

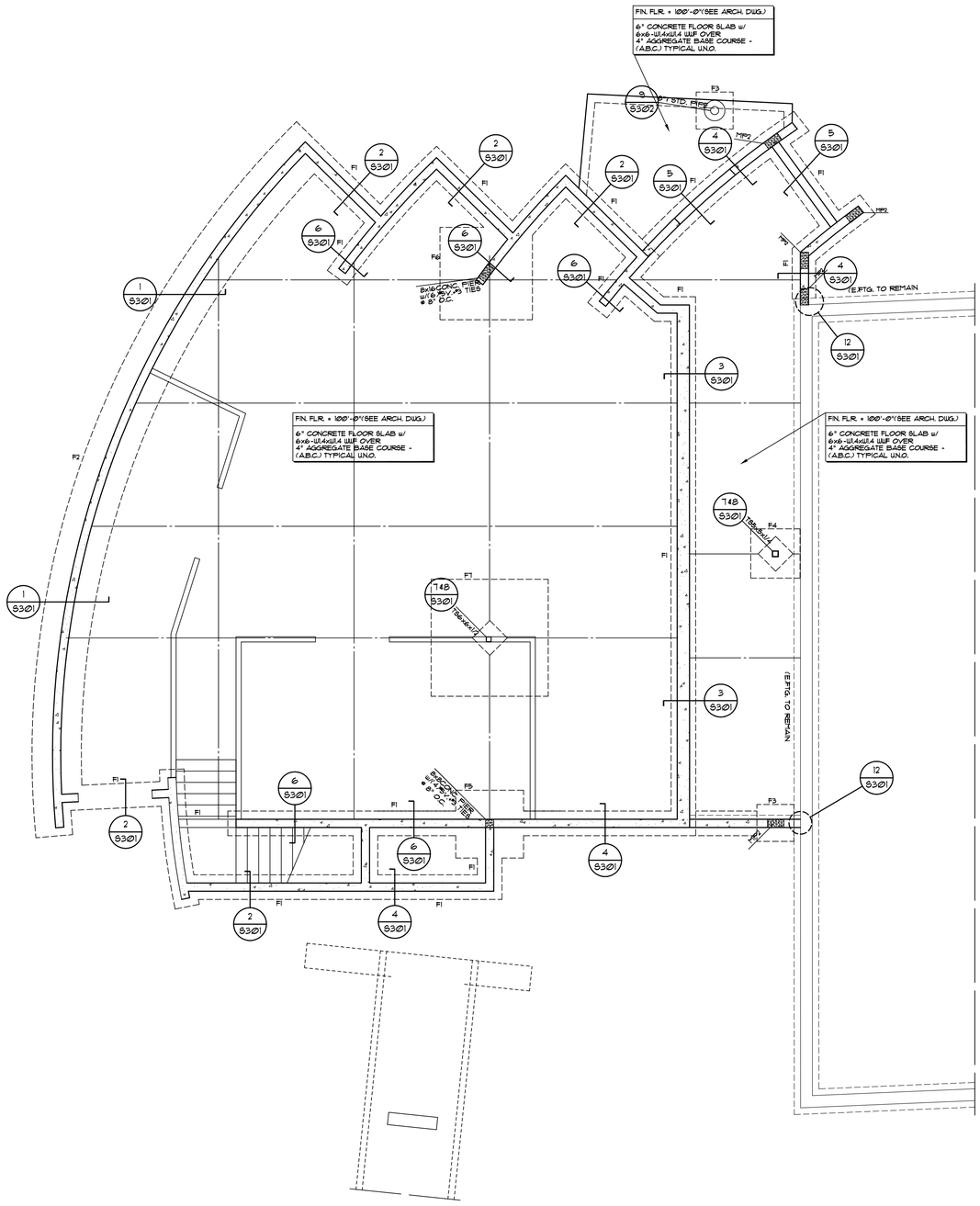

FOOTING & FOUNDATION PLAN
SCALE 3/16" = 1'-0"

FOUNDATION PLAN NOTES:

1. SEE SHEET S11, S12, AND S13 FOR:
   A. GENERAL STRUCTURAL NOTES
   B. TYPICAL EXCAVATION ADJACENT TO FOOTING
   C. TYPICAL SLAB JOINT DETAILS
   D. TYPICAL STEPPED FOOTING
   E. TYPICAL MASONRY CONTROL JOINT
2. MP1 - DENOTES CMU PIER MARK - SEE SCHED. THIS SHEET.
3. F1 - DENOTES FOOTING MARK - SEE SCHED. THIS SHEET.
4. K.C.J. - DENOTES KEYED CONSTR. JOINT - SEE DETAIL 1/S12.
5. C.J. - DENOTES CONTROL JOINT - SEE DETAIL 1/S12.
6. W.J. - DENOTES MASONRY WALL FULL HEIGHT CONTROL JOINT. SEE DETAIL 1/S13
7. CONTRACTOR TO VERIFY ALL DIMENSIONS AND ELEVATIONS WITH ARCHITECTURAL DRAWINGS PRIOR TO CONSTRUCTION. SEE ARCHITECTURAL FOR ALL DIMENSIONS. SLAB SLOPES & DEPRESSIONS NOT NOTED.
8. ALL SLABS ON GRADE ARE TO BE JOINTED AT NO MORE THAN 8'-0" EACH WAY USING JOINTS AS PER DETAIL 5/S12. IN ADDITION, NO SECTION OF CONCRETE SHALL HAVE AN ASPECT RATIO OF GREATER THAN 1 1/2:1. PROVIDE (2) #4 x 4'-0" MID-HEIGHT SLAB BARS ADJACENT TO ALL DISCONTINUOUS JOINT LOCATIONS. ALL COLUMN ISOLATION JOINT CORNERS TO BE INTERSECTED BY A SLAB JOINT OR REINFORCED WITH SLAB BARS PER ABOVE. SUBMIT COMPLETE JOINT LAYOUT PLAN TO THE ARCHITECT FOR PRIOR REVIEW.

MASONRY PIER SCHEDULE

MARK	SIZE	REINF.	TIES	BRG. PL.	MIN. BRG. PL SIZE FOR BM/GIRDER
MP-1	8" x 8"	(2) #5	NONE	BP-1	1/2"x7"x7" PL. w/ (1) 3/4"Ø H.S. x5"
MP-2	8" x 16"	(4) #5	#2 @ 8" O.C.	BP-2	1/2"x7"x14" PL. w/ (2) 3/4"Ø H.S. x5"
MP-3	8" x 24"	(6) #5	#2 @ 8" O.C.	BP-3	3/4"x7"x22" PL. w/ (3) 3/4"Ø H.S. x5"

NOTE: SEE DETAIL FOR CMU PIER REINFORCEMENT CONFIGURATION TYPICAL.
MP1 IS TO BE APPLIED @ EA. END OF OPENINGS MIN. TYP. U.N.O.

MASONRY WALL SCHEDULE

LEVEL II SPECIAL INSPECTION ON CMU TYP.
F'm=2000 PSI

MARK	WALL THICKNESS	VERT. REINF	HORIZ. REINF.	BOND BM. @ ROOF LVL	REMARKS
MW	8"	#5 @ 24" O.C.	#5 @ 48" O.C.	8"x16" MIN. w/ (4)#5 HORIZ.	GROUT CELLS W/REBARS. TYP. FOR 8" CMU WALLS U.N.O.

1. TERMINATE HORIZ. REBARS AT WALL JOINTS TYP.
2. CONTINUE HORIZ. REBARS FOR BOND BEAM AT WALL JOINTS TYP.
3. SOLID GROUT ALL CELLS FOR WALLS UNDER FINISHED GRADE TYP.

CONCRETE BEAM SCHEDULE

MARK	SIZE	BOTTOM REINF.	TOP REINF.	TIES	REMARKS
CB-1	8"x12"	(2) #5	(2) #5	#3 @ 10" O.C.	

FOOTING SCHEDULE

BASED ON SOIL BEARING = 1500 PSF
ARCH/CONTRACTOR VERIFY IT

MARK	SIZE	REINFORCING	REMARKS
F1	2'-6" x CONT. x 12"	(3) #4 CONT.	
F2	4'-0" x CONT. x 12"	(3) #4 CONT.	
F3	3'-0" SQ. x 12"	(3) #5 EW.	
F4	4'-0" SQ. x 12"	(4) #5 EW.	
F5	5'-6" SQ. x 12"	(5) #6 EW.	
F6	6'-6" SQ. x 14"	(6) #6 EW.	
F7	9'-6" SQ. x 18"	(9) #7 EW. T&B	

Eaton Architecture
77 West 200 South, Suite 302
Salt Lake City, UT 84101
Tel 801/328-2982 Fax 801/328-2111

CONSULTANTS

Shen Engineers, Inc.
Structural/Seismic Consultants
3335 South 900 East, Suite 250
Salt Lake City, UT 84106
Telephone 801 466-2625
Facsimile 801 466-2656
E-mail: shenengi@msn.com

LICENSED PROFESSIONAL ENGINEER
No. 260129
HUA SHEN
STATE OF UTAH

UTAH STATE VETERAN'S NURSING HOME

MULTI-PURPOSE ROOM ADDITION
SALT LAKE CITY, UTAH

OWNER
UTAH STATE

MARK	DATE	DESCRIPTION
	06/15/07	
	01/07	

PROJECT NUMBER: SE06322
DRAWING FILE:
DRAWN BY: HS
CHECKED BY: YX

COPYRIGHT 2003 EATON ARCHITECTURE, LLC

SHEET TITLE

S-201

OF

AutoCAD Version: 13_c4
April 105, 1998, 3:28:37 p.m.
Drawing: C:\AUTOCAD\R12\DWG\12-12.DWG (R9.0)

MASONRY PIER SCHEDULE

MARK	SIZE	REINF.	TIES	BRG. PL.	MIN. BRG. PL. SIZE FOR BM/GIRDER
MP-1	8" x 8"	(2) #5	NONE	BP-1	1/2"x1"x1" PL. w/ (1) 3/4"ø H.B. x5"
MP-2	8" x 16"	(4) #5	#2 @ 8" O.C.	BP-2	1/2"x1"x14" PL. w/ (2) 3/4"ø H.B. x5"
MP-3	8" x 24"	(6) #5	#2 @ 8" O.C.	BP-3	3/4"x1"x22" PL. w/ (3) 3/4"ø H.B. x5"

NOTE: SEE DETAIL FOR CMU PIER REINFORCEMENT CONFIGURATION TYPICAL.
MP1 IS TO BE APPLIED @ EA. END OF OPENINGS MIN. TYP. U.N.O.

TYPICAL ROOF DECK:
1. 1 1/2" DEEP 20 GA. MTL. DECK TYPE HSB-36 BY VERCO OR APPROVED EQUAL, WITH GALV. FINISH.
2. END LAP 2" MINIMUM AT SUPPORTS
3. FASTEN DECK TO EACH SUPPORT WITH 5/8" DIAMETER PUDDLE WELDS, WITH 7 WELDS PER SHEET.
4. FASTEN DECK TO SUPPORTS PARALLEL TO DECK SPAN WITH 5/8" DIAMETER PUDDLE WELDS @ 12" O.C.
5. FASTEN SIDE LAPS BY 1 1/2" LONG TOP SEAM WELD AT 12" O.C.

MARK	SIZE OF LINTEL	REINFORCING	MIN. END BRG.	REMARKS
ML-1	8"x8"	(2)#5	MP-1	
ML-2	8"x16"	(2)#5 T&B	MP-1	
ML-3	8"x24"	(4)#5 T&B	MP-2	
ML-4	8"x48"	(4)#5 T&B	MP-2	

MASONRY WALL SCHEDULE

LEVEL II SPECIAL INSPECTION ON CMU TYP. F'm=2000 PSI

MARK	WALL THICKNESS	VERT. REINF.	HORIZ. REINF.	BOND BM. @ ROOF LVL.	REMARKS
MW	8"	#5 @ 24" O.C.	#5 @ 48" O.C.	8"x16" MIN. w/ (4)#5 HORIZ.	GROUT CELLS w/REBARS. TYP. FOR 8" CMU WALLS U.N.O.

1. TERMINATE HORIZ. REBARS AT WALL JOINTS TYP.
2. CONTINUE HORIZ. REBARS FOR BOND BEAM AT WALL JOINTS TYP.
3. SOLID GROUT ALL CELLS FOR WALLS UNDER FINISHED GRADE TYP.

TYPICAL COMP. FLOOR DECK:
1. 6 1/2" OVERALL DEPTH OF NORMAL WEIGHT (145 PCF) CONCRETE.
2. SHORING IS REQUIRED FOR 12'-0" SPAN. NO SHORING IS REQUIRED FOR 10'-0" OR LESS SPAN
3. 3" DEEP 18 GA. "W3" FORMLOK MTL. DECK BY VERCO OR APPROVED EQUAL, WITH GALV. FINISH.
4. END LAP 2" MINIMUM AT SUPPORTS
5. FASTEN DECK TO EACH SUPPORT WITH 5/8" DIAMETER PUDDLE WELDS, WITH 7 WELDS PER SHEET.
6. FASTEN DECK TO SUPPORTS PARALLEL TO DECK SPAN WITH 5/8" DIAMETER PUDDLE WELDS @ 12" O.C.
7. FASTEN SIDE LAPS BY 1 1/2" LONG TOP SEAM WELD AT 24" O.C.
8. #4 @ 18" O.C. EA. WAY IN CONC. SLAB.

FLOOR FRAMING PLAN NOTES:
1. SEE SHEET S11 AND S13 FOR:
   A. GENERAL STRUCTURAL NOTES
   B. TYPICAL ROOF METAL DECK WELDING PATTERN
   C. TYPICAL ROOF OPENING DETAIL
   D. MECH. UNIT SUPPORT DETAILS
   E. MASONRY LINTEL SCHEDULE
2. J. B. + ROOF JOIST BEARING ELEVATION.
3. PROVIDE JOIST BRIDGING PER S.J.I.
4. ESTABLISH AND VERIFY ALL OPENINGS & INSERTS FOR MECHANICAL, ELECTRICAL & PLUMBING WITH THE APPROPRIATE TRADES, DRAWINGS AND SUBCONTRACTORS PRIOR TO CONSTRUCTION.
5. JOIST & JOIST GIRDER DESIGNATIONS DO NOT INCLUDE MECHANICAL WEIGHTS. DESIGN JOISTS & JOIST GIRDERS @ MECH. UNITS TO SUPPORT WEIGHTS INDICATED @ ANY POINT WITHIN 5 FEET EITHER WAY ALONG THE SPAN.
6. JOIST MANUF. TO ADJUST ALL JOIST SIZES AND DESIGN STRESSES AS REQUIRED BASED ON THE SPECIFIC UL RATING NOTED ON THE ARCHITECTURAL DRAWINGS.
8. HANGING CEILING, DUCTWORK OR OTHER ITEMS FROM THE FLOOR METAL DECK IS NOT ALLOWED.

SEE S13/S401 FOR STEEL BEAM TO CMU WALL CONNECTION TYP.

THE 8" CMU WALLS CALLED OUT ON THIS PROJECT CAN BE SUBSTITUTED BY SAME STRENGTH 8" ATLAS BRICK TYP. U.N.O.

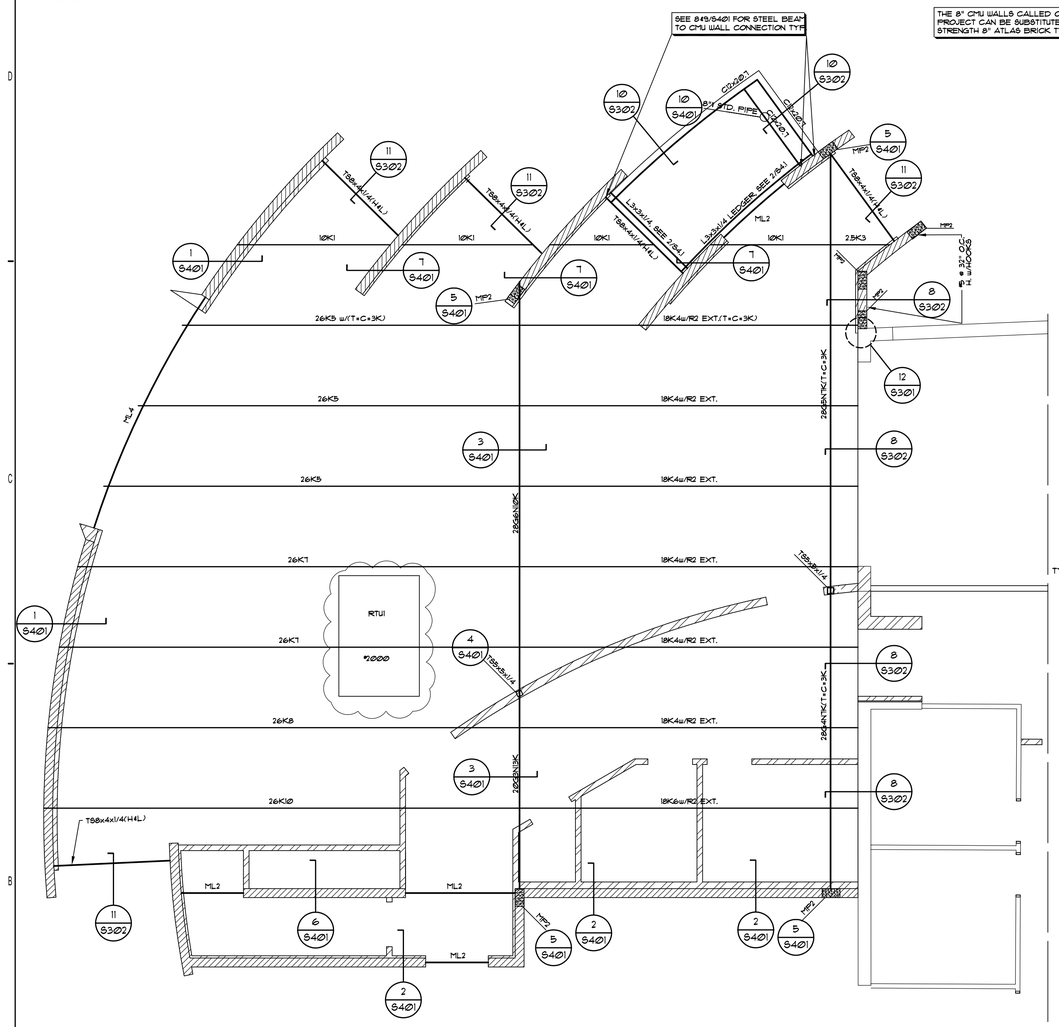

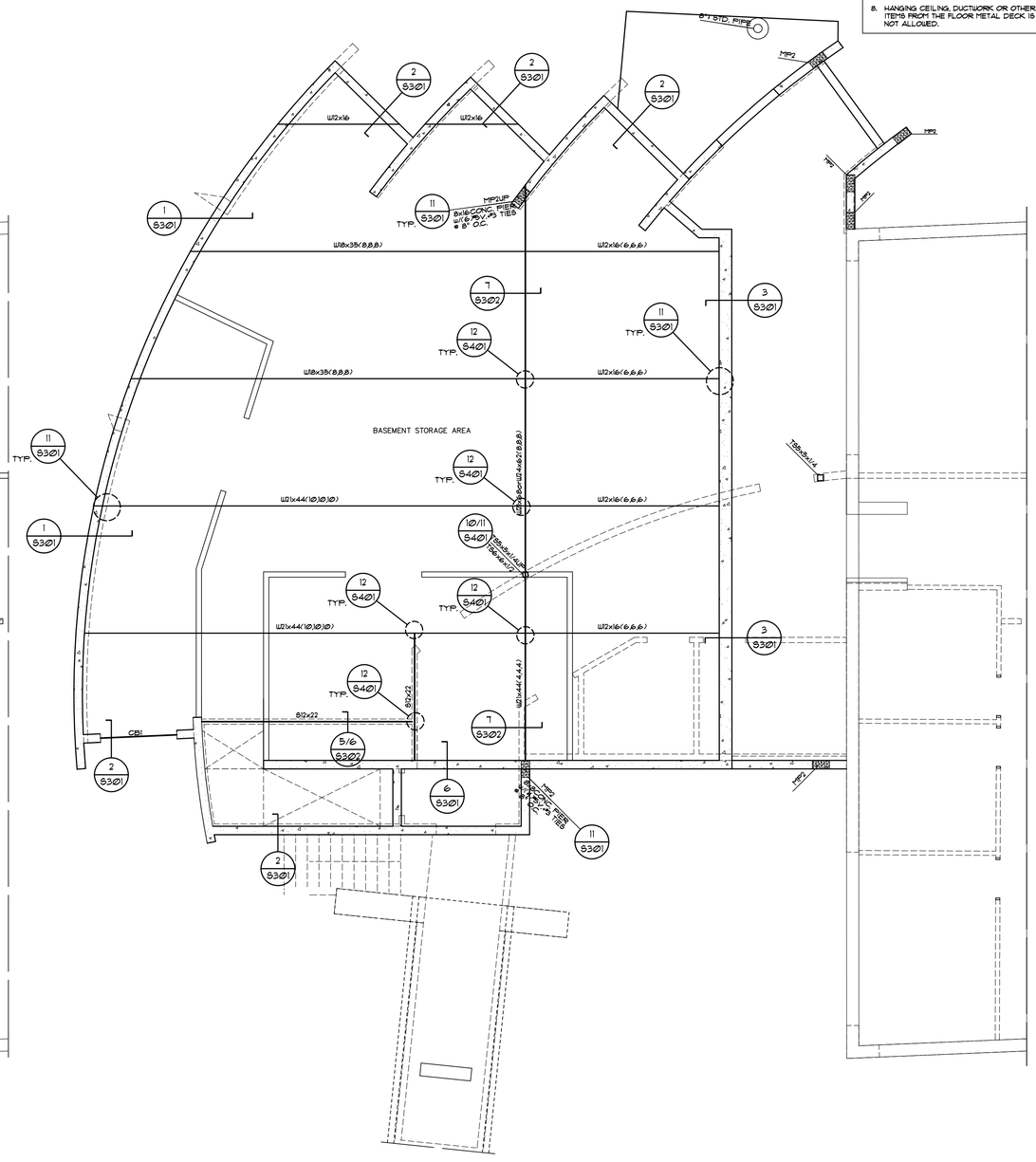

ICC EVALUATION REPORT NUMBERS:
ROOF DECK AND FLOOR DECK: ER-2078P
ROOF K-JOISTS: ER-3415

ROOF FRAMING PLAN NOTES:
1. SEE SHEET S11 AND S13 FOR:
   A. GENERAL STRUCTURAL NOTES
   B. TYPICAL ROOF METAL DECK WELDING PATTERN
   C. TYPICAL ROOF OPENING DETAIL
   D. MECH. UNIT SUPPORT DETAILS
   E. MASONRY LINTEL SCHEDULE
2. J. B. + ROOF JOIST BEARING ELEVATION.
3. PROVIDE JOIST BRIDGING PER S.J.I.
4. ESTABLISH AND VERIFY ALL OPENINGS & INSERTS FOR MECHANICAL, ELECTRICAL & PLUMBING WITH THE APPROPRIATE TRADES, DRAWINGS AND SUBCONTRACTORS PRIOR TO CONSTRUCTION.
5. JOIST & JOIST GIRDER DESIGNATIONS DO NOT INCLUDE MECHANICAL WEIGHTS. DESIGN JOISTS & JOIST GIRDERS @ MECH. UNITS TO SUPPORT WEIGHTS INDICATED @ ANY POINT WITHIN 5 FEET EITHER WAY ALONG THE SPAN.
6. JOIST MANUF. TO ADJUST ALL JOIST SIZES AND DESIGN STRESSES AS REQUIRED BASED ON THE SPECIFIC UL RATING NOTED ON THE ARCHITECTURAL DRAWINGS.
8. HANGING CEILING, DUCTWORK OR OTHER ITEMS FROM THE ROOF METAL DECK IS NOT ALLOWED.
9. 3000# — DENOTES MECH. UNIT APPROX. LOCATION AND MAXIMUM WEIGHT. COORDINATE WITH MECH. DWG's. PROVIDE SUPPORT AND OPENING FRAMES PER DETAILS ON S-4T. S13.
10. ☒ — DENOTES OPENING IN ROOF DECK. COORDINATED SIZE & LOCATION w/ MECH. DRAWINGS. PROVIDE OPENING FRAMES PER DETAILS ON SHEET S13.

ROOF FRAMING PLAN
SCALE 3/16" = 1'-0"

FLOOR FRAMING PLAN
SCALE 3/16" = 1'-0"

SEE DETAILS ON S402 FOR GENERAL DETAILS OF COMPOSITE BEAM/FLOOR TYP.

NOTE: ALL FLOOR JOISTS SHALL BE CARRIED BY BP2'S BEARING PLATES TYP. UNO.

SEE FLOOR RECESS FROM ARCH. DRAWINGS. SEE DETAIL S/S11 FOR RECESS DETAIL FOR SUSPENDED SLAB. MAX. RECESS OF FLOOR IS 1 1/2"

Eaton Architecture
77 West 200 South, Suite 302
Salt Lake City, UT 84101
Tel 801/328-2982 Fax 801/328-2111

CONSULTANTS

Shen Engineers, Inc.
Structural/Seismic Consultants
3335 South 900 East, Suite 250
Salt Lake City, UT 84106
Telephone 801 466-2625
Facsimile 801 466-2656
E-mail: shenengr@msn.com

LICENSED PROFESSIONAL ENGINEER
No. 260129
HUA SHEN
STATE OF UTAH

UTAH STATE VETERAN'S NURSING HOME
MULTI-PURPOSE ROOM ADDITION
SALT LAKE CITY, UTAH

OWNER
UTAH STATE

MARK	DATE	DESCRIPTION
	06/15/07	
	01/07	

PROJECT NUMBER: SE06322
DRAWING FILE:
DRAWN BY: HS
CHECKED BY: YX

COPYRIGHT 2003 EATON ARCHITECTURE, LLC

SHEET TITLE

S-202

OF

AutoCAD Version: 13_c4
April 06, 1998 3:28:37 p.m.
Drawing: G:\07\12068\PROTOS\12128.DWG (R.6)

TYPICAL CONCRETE RETAINING WALL SCHEDULE										
MARK	HT (max.)	FE	HL	WT	TL	FT	A	B	C	D
W1	16'-0"	2'-6"	6'-8"	14"	6'-8"	17"	#7 @ 5"	#4 @ 16"	#7 @ 6"	#4 @ 12"
W2	14'-0"	2'-6"	5'-2"	14"	6'-8"	14"	#6 @ 5"	#4 @ 16"	#6 @ 8"	#4 @ 12"
W3	12'-0"	2'-6"	4'-0"	12"	5'-0"	12"	#6 @ 7"	#4 @ 16"	#6 @ 10"	#4 @ 12"
W4	10'-0"	2'-6"	3'-6"	12"	4'-0"	12"	#6 @ 10"	#4 @ 16"	#5 @ 10"	#4 @ 12"

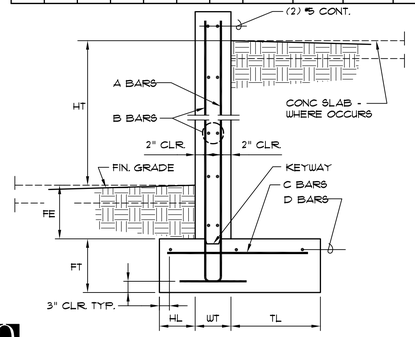

10 FREE-STANDING RETAINING WALL

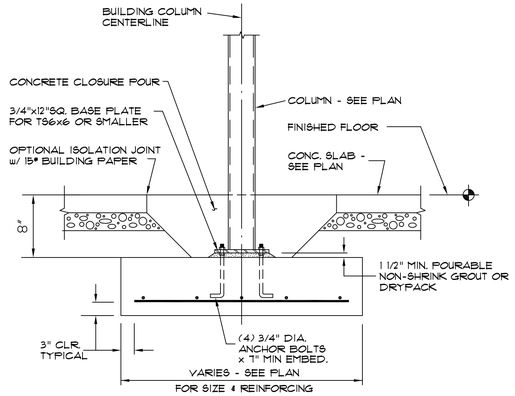

7

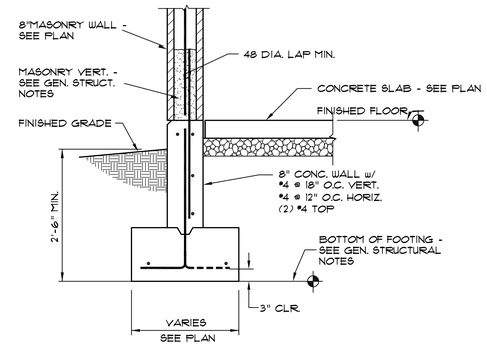

4

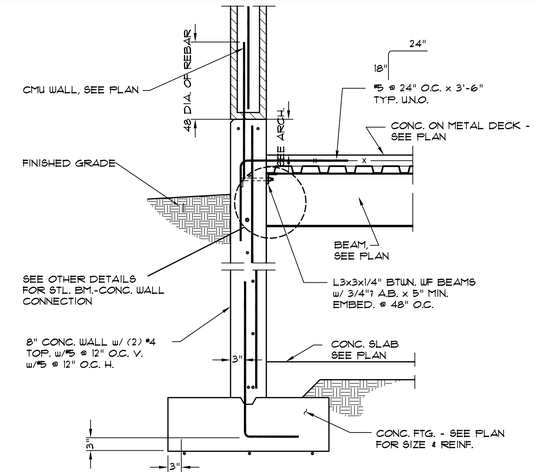

1

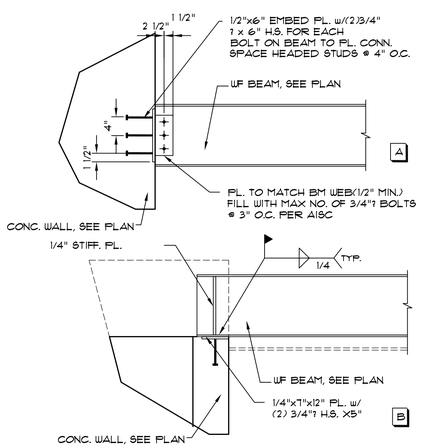

11 EMBEDED PL. FOR STL. BEAM

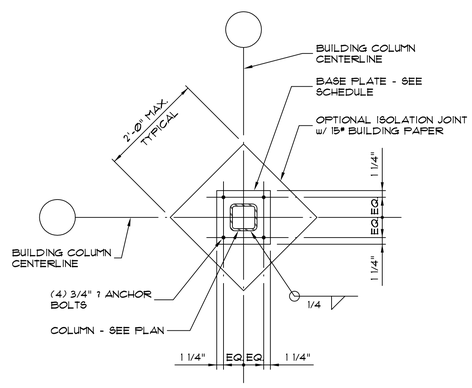

8

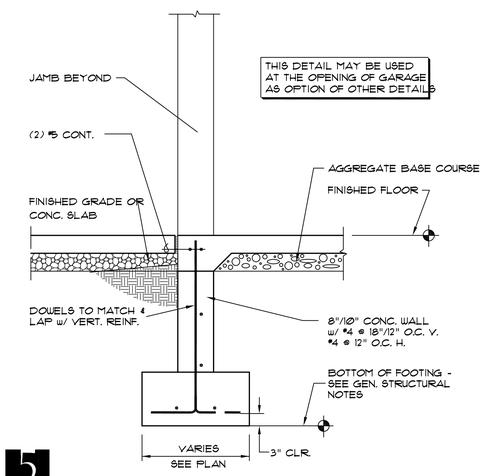

5

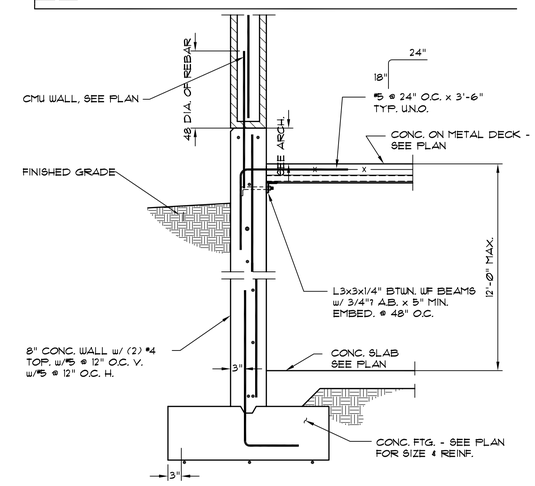

2

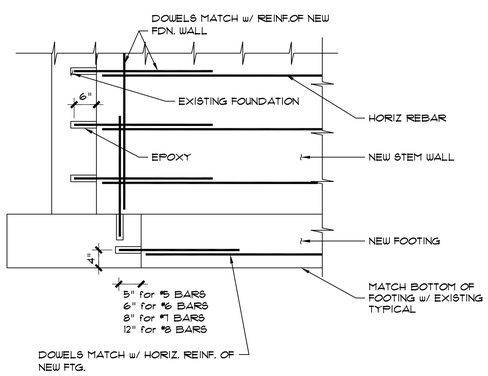

12 TYPICAL NEW FTG. TO EXIST. FTG. CONN.

TYPICAL CONCRETE RETAINING WALL SCHEDULE										
MARK	HT (max.)	FE	HL	WT	TL	FT	A	B	C	D
W1	8'-0"	2'-6"	2'-8"	10"	3'-6"	12"	#5 @ 10"	#4 @ 12"	#5 @ 10"	#4 @ 12"
W2	6'-0"	2'-6"	2'-4"	8"	2'-6"	12"	#5 @ 12"	#4 @ 12"	#5 @ 12"	#4 @ 12"
W3	4'-0"	2'-6"	1'-4"	8"	2'-0"	12"	#5 @ 12"	#4 @ 12"	#5 @ 12"	#4 @ 12"
W4	2'-0"	2'-6"	1'-0"	8"	1'-0"	12"	#5 @ 12"	#4 @ 12"	#5 @ 12"	#4 @ 12"

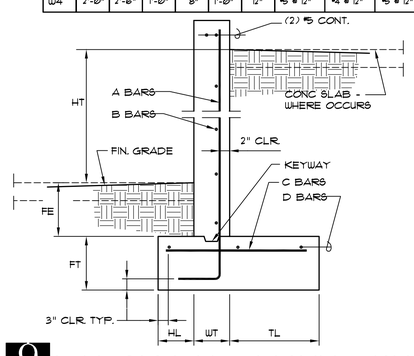

9 FREE-STANDING RETAINING WALL

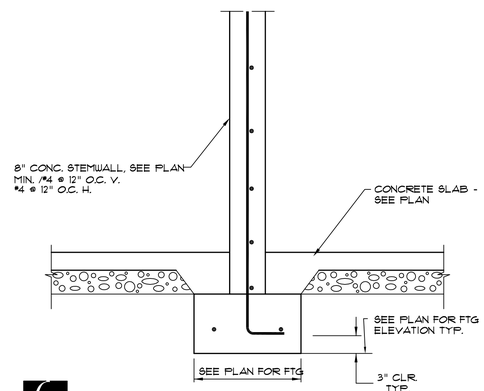

6

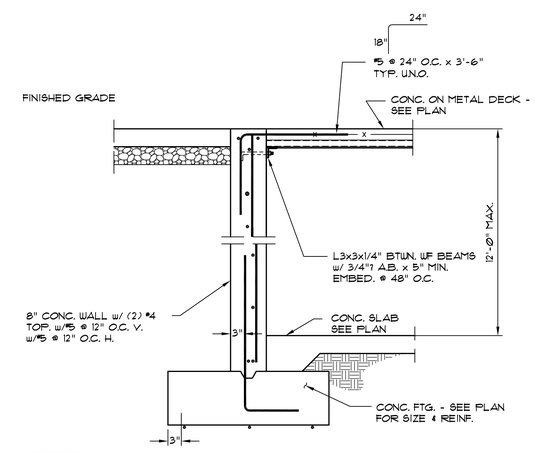

3

Eaton Architecture
77 West 200 South, Suite 302
Salt Lake City, UT 84101
Tel 801/328-2982 Fax 801/328-2111

CONSULTANTS

Shen Engineers, Inc.
Structural/Seismic Consultants
3335 South 900 East, Suite 250
Salt Lake City, UT 84106
Telephone 801 466-2625
Facsimile 801 466-2656
E-mail: shenang@msn.com

LICENSED PROFESSIONAL ENGINEER No. 260129 HUA SHEN STATE OF UTAH

UTAH STATE VETERAN'S NURSING HOME

MULTI-PURPOSE ROOM ADDITION

SALT LAKE CITY, UTAH

OWNER: UTAH STATE

MARK	DATE	DESCRIPTION
	01/07	

PROJECT NUMBER:	SE06322
DRAWING FILE:	
DRAWN BY:	HS
CHECKED BY:	YX

COPYRIGHT 2003 EATON ARCHITECTURE, LLC

SHEET TITLE

S-301

OF

AutoCAD Version: 13_c4
April 08, 1998 3:26:37 p.m.
Drawing: J:\01-JOBS\PROJ\S1012.DWG (R45)

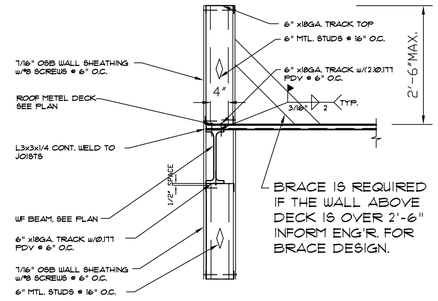

10

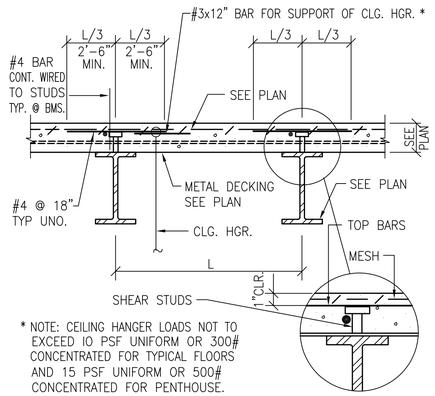

7 DECKING PERPENDICULAR TO BEAM

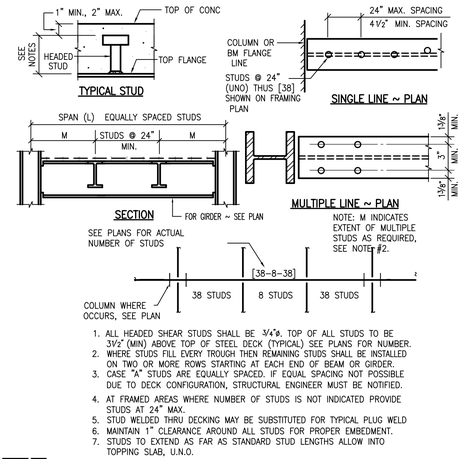

1. ALL HEADED SHEAR STUDS SHALL BE 3/4"ø. TOP OF ALL STUDS TO BE 3 1/2" (MIN) ABOVE TOP OF STEEL DECK (TYPICAL) SEE PLANS FOR NUMBER.
2. WHERE STUDS FILL EVERY TROUGH THEN REMAINING STUDS SHALL BE INSTALLED ON TWO OR MORE ROWS STARTING AT EACH END OF BEAM OR GIRDER.
3. CASE "A" STUDS ARE EQUALLY SPACED. IF EQUAL SPACING NOT POSSIBLE DUE TO DECK CONFIGURATION, STRUCTURAL ENGINEER MUST BE NOTIFIED.
4. AT FRAMED AREAS WHERE NUMBER OF STUDS IS NOT INDICATED PROVIDE STUDS AT 24" MAX.
5. STUD WELDED THRU DECKING MAY BE SUBSTITUTED FOR TYPICAL PLUG WELD
6. MAINTAIN 1" CLEARANCE AROUND ALL STUDS FOR PROPER EMBEDMENT.
7. STUDS TO EXTEND AS FAR AS STANDARD STUD LENGTHS ALLOW INTO TOPPING SLAB, U.N.O.

4 TYPICAL WELDED STUD LAYOUTS

NOTE:
SEE STEEL DECK WELDING SCHEDULE, NOTES AND OTHER DETAILS.

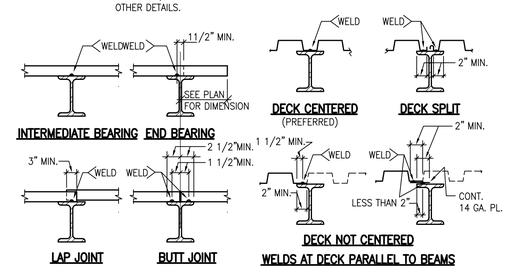

1 TYPICAL STEEL DECK TO BEAM WELD

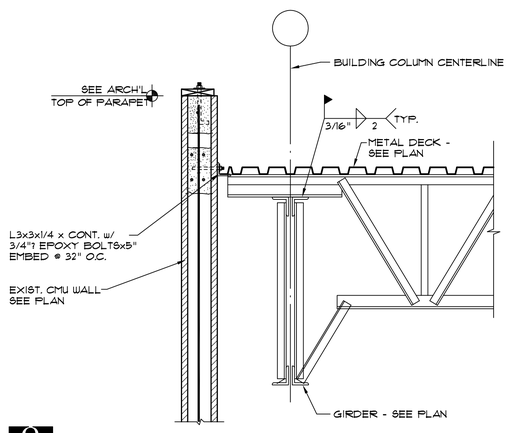

8

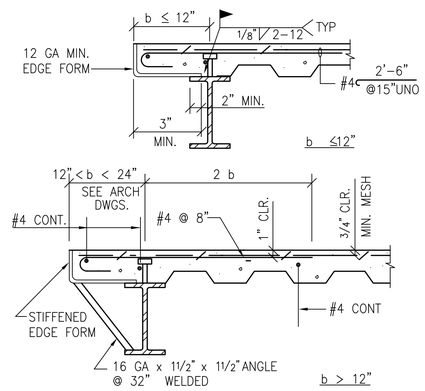

5 TYPICAL DECK PARALLEL FOR OVERHANG

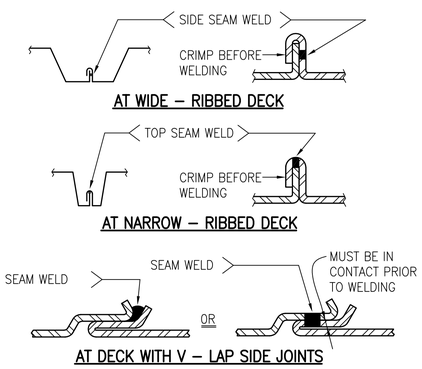

2 STEEL DECK SIDE SEAM WELD DETAIL

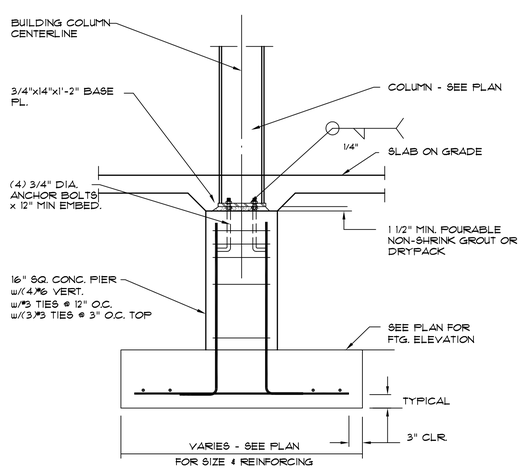

9

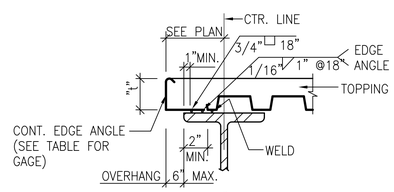

THIS DETAIL IS FOR 6" OR LESS OVERHANG.

EDGE ANGLE THICKNESS (GAGE)					
"t"	OVERHANG				
	2"	3"	4"	5"	6"
5"	18	18	16	14	12
5 1/2"	18	16	14	14	12
6"	16	16	14	12	12
6 1/2"	16	14	14	12	12
7"	14	14	12	12	12
7 1/2"	14	12	12	12	10

6 EDGE OF DECK PARALLEL TO BEAM

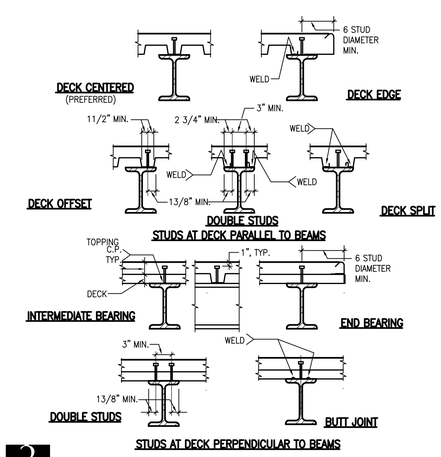

3 TYPICAL SHEAR STUD DETAILS

Eaton Architecture
77 West 200 South, Suite 302
Salt Lake City, UT 84101
Tel 801/328-2982 Fax 801/328-2111

CONSULTANTS
Shen Engineers, Inc.
Structural/Seismic Consultants
3335 South 900 East, Suite 250
Salt Lake City, UT 84106
Telephone 801 466-2625
Facsimile 801 466-2656
E-mail: shengng@msn.com

LICENSED PROFESSIONAL ENGINEER No. 260129 HUA SHEN STATE OF UTAH

UTAH STATE VETERAN'S NURSING HOME

MULTI-PURPOSE ROOM ADDITION

SALT LAKE CITY, UTAH

OWNER
UTAH STATE

MARK	DATE	DESCRIPTION
	01/07	

PROJECT NUMBER: SE06022
DRAWING FILE:
DRAWN BY: BS
CHECKED BY: MS

COPYRIGHT 2003 EATON ARCHITECTURE, LLC

SHEET TITLE

S-302

OF

AutoCAD Version: 13_c4
April 08, 1998, 3:28:37 p.m.
Drawing: C:\13_CAD\PROJ\01\S-302.DWG (RAS)

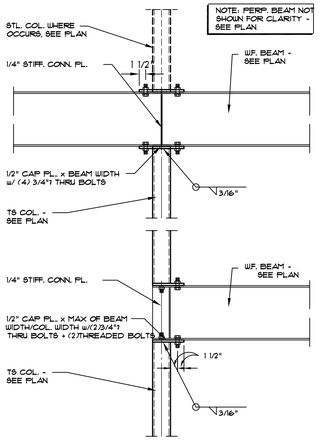

10

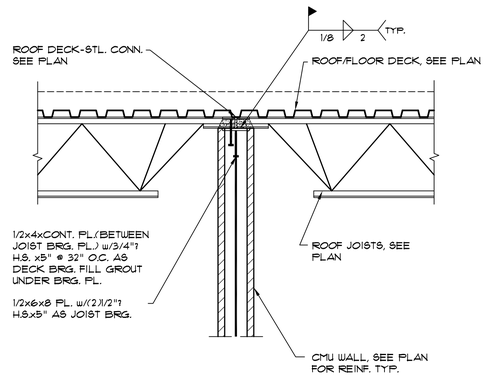

7

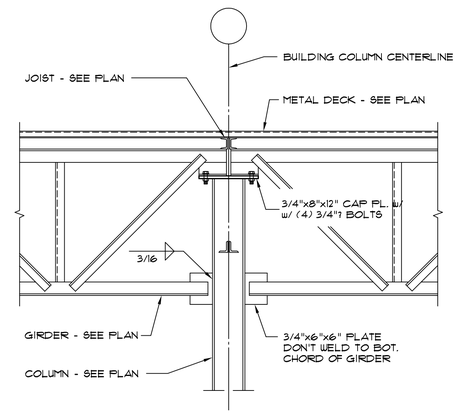

4

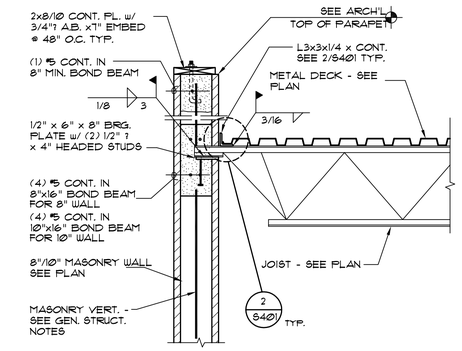

1

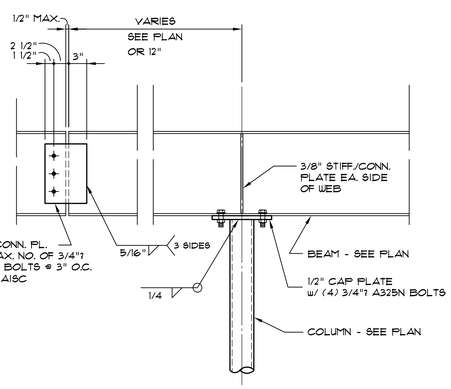

11

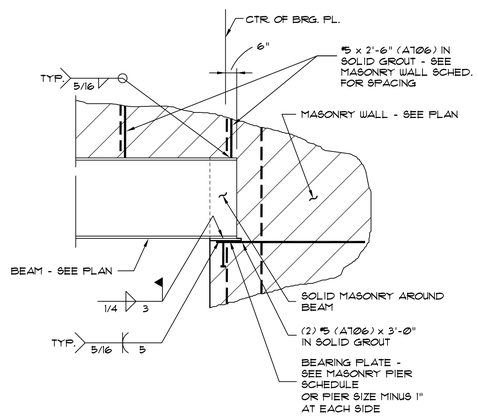

8 STL. BM.-MASONRY PIER CONN. TYP.

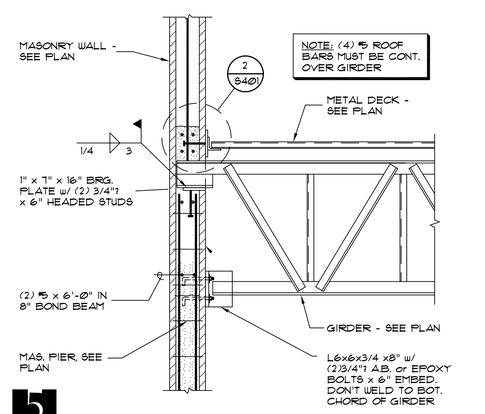

5

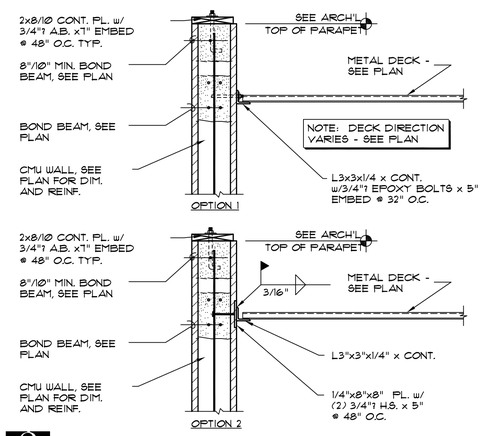

2 ROOF DIAPHRAGM-WALL CONN. TYP.

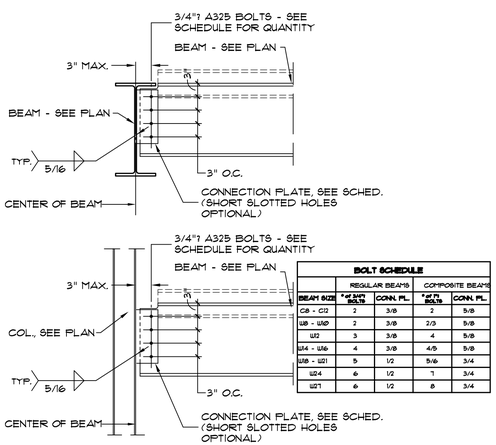

BOLT SCHEDULE

	REGULAR BEAM'S		COMPOSITE BEAM'S	
BEAM SIZE	# of 3/4"ø BOLTS	CONN. PL.	# of 7/8"ø BOLTS	CONN. PL.
C8 - C12	2	3/8	2	5/8
W8 - W10	2	3/8	2/3	5/8
W12	3	3/8	4	5/8
W14 - W16	4	3/8	4/5	5/8
W18 - W21	5	1/2	5/6	3/4
W24	6	1/2	7	3/4
W27	6	1/2	8	3/4

12 TYPICAL STEEL BEAM - BEAM CONN.

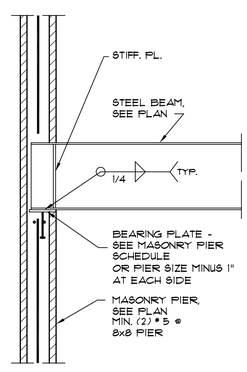

9

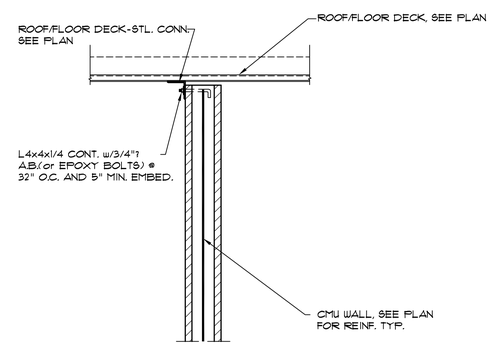

6

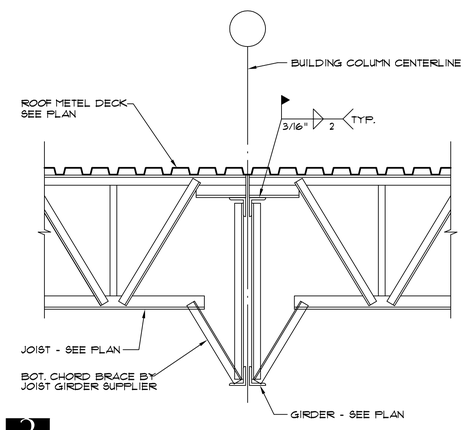

3

Eaton Architecture
77 West 200 South, Suite 302
Salt Lake City, UT 84101
Tel 801/328-2982 Fax 801/328-2111

CONSULTANTS

Shen Engineers, Inc.
Structural/Seismic Consultants
3335 South 900 East, Suite 250
Salt Lake City, UT 84106
Telephone 801 466-2625
Facsimile 801 466-2656
E-mail: shendng@msn.com

LICENSED PROFESSIONAL ENGINEER
No. 260129
HUA SHEN
STATE OF UTAH

UTAH STATE VETERAN'S NURSING HOME

MULTI-PURPOSE ROOM ADDITION

SALT LAKE CITY, UTAH

OWNER
UTAH STATE

MARK	DATE	DESCRIPTION
	01/07	

PROJECT NUMBER: SE06322
DRAWING FILE:
DRAWN BY: HS
CHECKED BY: YX

COPYRIGHT 2003 EATON ARCHITECTURE, LLC

SHEET TITLE

S-401

OF

AutoCAD Version: 13_c4
April 08, 1996, 3:28:37 p.m.
Drawing: J:\13-CAD\PROJ\03\S12.DWG (R.00)

KEYED NOTES

1. NEW 1 1/4" CW PIPING. VERIFY EXACT LOCATION AND REQUIREMENTS IN FIELD.
2. CONNECT NEW 3/4" CW LINE TO EXISTING LINE. REMOVE EXISTING HOSE BIBB.
3. 4" OVERFLOW DRAIN PIPING DOWN TO SPLASH BLOCK. SEE DETAIL C4/P601.
4. 4" WASTE PIPING DOWN THRU FLOOR.
5. SAWCUT EXISTING SLAB TO ROUTE NEW 2" WASTE PIPING BELOW FLOOR. PATCH TO MATCH EXISTING.
6. SLEEVE ROOF DRAIN AND WASTE PIPING THROUGH WALL. COORDINATE ROUTING, SLOPE, AND ELEVATION OF PIPING WITH CHILLED WATER SUPPLY AND RETURN AND SOFT WATER PIPING.
7. NEW 3/4" 120° HOT WATER SUPPLY AND RETURN PIPING. VERIFY EXACT LOCATION AND REQUIREMENTS IN FIELD.
8. TEMPERED WATER MIXING VALVE. MOUNT AT ACCESSIBLE LOCATION UNDER SINK. SEE SPECIFICATIONS.
9. CONNECT TO NEAREST EXISTING FIRE SPRINKLER MAIN IN EAST–WEST CORRIDOR OF EXISTING BLDG.. FIELD VERIFY LOCATION.
10. TO FIRE SPRINKLERS IN NEW ADDITION.
11. FLOW CONTROL VALVE. SET TO GPM SHOWN.

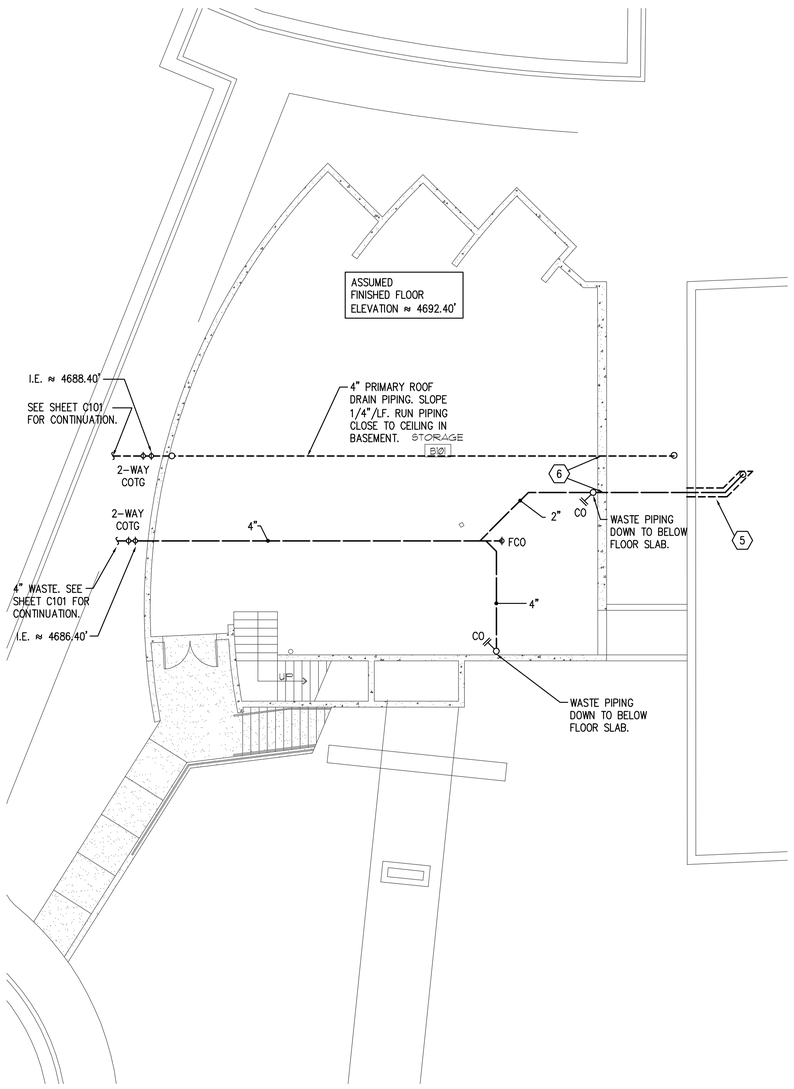

1 P101 BASEMENT PLUMBING PLAN
SCALE: 1/8" = 1'-0"

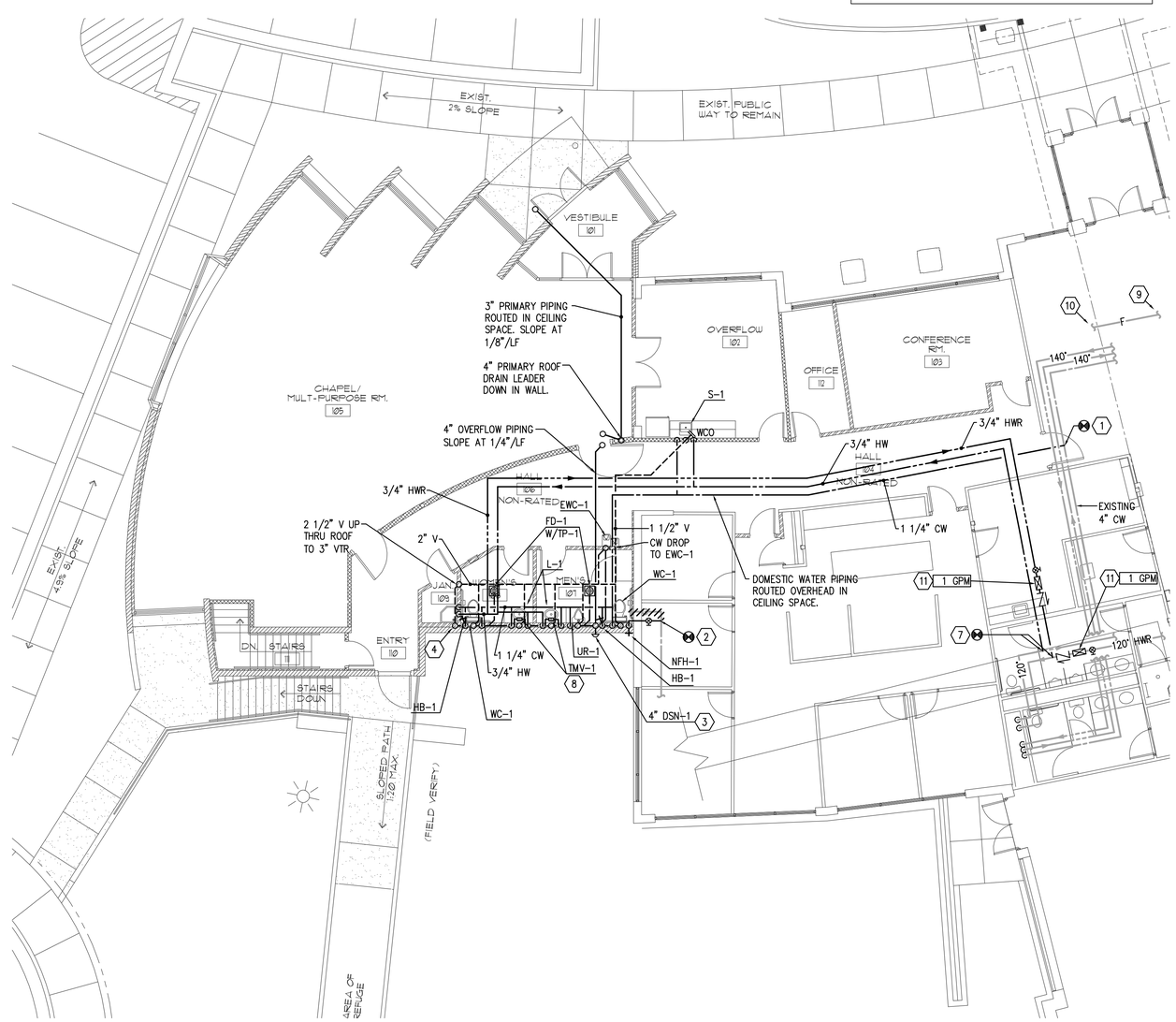

2 P101 MAIN LEVEL PLUMBING PLAN
SCALE: 1/8" = 1'-0"

Eaton Architecture
77 West 200 South, Suite 302
Salt Lake City, UT 84101
Tel 801/328-2982 Fax 801/328-2111

CONSULTANTS

VAN BOERUM & FRANK ASSOCIATES INC.
CONSULTING ENGINEERS
WWW.VBFA.COM
330 South 300 East
Salt Lake City, UT 84111
801.530.3148 T
801.530.3150 F
Project No. 6488

LICENSED PROFESSIONAL ENGINEER
No. 4537
JOHN D. FRANK
STATE OF UTAH

UTAH STATE VETERAN'S NURSING HOME

MULTIPURPOSE ROOM ADDITION

OWNER
UTAH STATE

MARK	DATE	DESCRIPTION
	06-15-07	

PROJECT NUMBER: 2006-32
DRAWING FILE:
DRAWN BY:
CHECKED BY:

COPYRIGHT 2003 EATON ARCHITECTURE, LLC

SHEET TITLE

MAIN LEVEL AND BASEMENT PLUMBING PLAN

P101

OF

Click Here & Upgrade Expanded Features Unlimited Pages
PDF Complete

PLUMBING FIXTURE SCHEDULE

ID	FIXTURE	CW (IN)	HW (IN)	W (IN)	V (IN)	NOTES
DSN-1	DOWN SPOUT NOZZLE	-.-	-.-	-.-	-.-	SEE PLANS FOR SIZE
DSP-1	GARBAGE DISPOSER	-.-	-.-	1 1/2	1 1/2	120 V/60 Hz/1 Ph. SEE SPECIFICATION FOR S-1.
UR-1	URINAL	3/4	-.-	2	2	WALL HUNG, FLUSH VALVE, ADA
FD-1	FLOOR DRAIN	-.-	-.-	2	2	RESTROOM
FD-2	FLOOR DRAIN			3	2	MECHANICAL ROOM
HB-1	HOSE BIB	3/4	-.-	-.-	-.-	-.-
L-1	LAVATORY	1/2	1/2	1 1/2	1 1/2	COUNTER MOUNTED, OVAL
NFH-1	NON FREEZE WALL HYDRANT	3/4	-.-	-.-	-.-	-.-
RD-1	ROOF DRAIN	-.-	-.-	-.-	-.-	SEE PLANS FOR SIZE
RDO-1	ROOF DRAIN OVERFLOW	-.-	-.-	-.-	-.-	SEE PLANS FOR SIZE
REF-1	REFRIGERATOR CONNECTION	1/2	-.-	-.-	-.-	-.-
S-1	SINK	1/2	1/2	2	1 1/2	COUNTER MOUNTED, SINGLE COMPARTMENT
SS-1	SERVICE SINK	3/4	3/4	3	2	-.-
TP-1	TRAP PRIMER	1/2	-.-	-.-	-.-	-.-
WC-1	WATER CLOSET	1	-.-	4	2	FLOOR MOUNTED, FLUSH TANK, ADA
EWC-1	ELECTRIC WATER COOLER	1/2	-.-	1 1/2	1 1/2	
TMV-1	THERMOSTATIC MIXING VALVE	1/2	1/2	-.-	-.-	SEE PLAN FOR PIPE SIZING

1. ALL UNDER GROUND WASTE AND VENT SHALL BE 2" OR GREATER PER DRAWINGS.

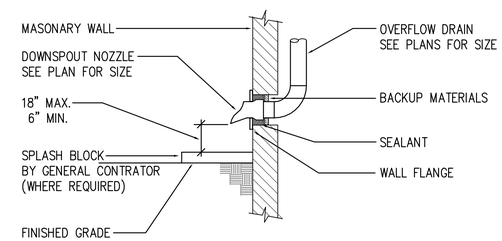

C5 / P601 DOWNSPOUT NOZZLE DETAIL
NO SCALE

Eaton architecture
77 West 200 South, Suite 302
Salt Lake City, UT 84101
Tel 801/328-2982 Fax 801/328-2111

CONSULTANTS

VAN BOERUM & FRANK ASSOCIATES INC.
CONSULTING ENGINEERS
WWW.VBFA.COM
330 South 300 East
Salt Lake City, UT 84111
801.530.3148 T
801.530.3150 F
Project No. 6488

LICENSED PROFESSIONAL ENGINEER
No. 4537
JOHN D. FRANK
STATE OF UTAH

UTAH STATE VETERAN'S NURSING HOME

MULTIPURPOSE ROOM ADDITION

OWNER
UTAH STATE

MARK	DATE	DESCRIPTION
	06-15-07	

PROJECT NUMBER: 2006-32
DRAWING FILE:
DRAWN BY:
CHECKED BY:

COPYRIGHT 2003 EATON ARCHITECTURE, LLC

SHEET TITLE

PLUMBING SCHEDULES AND DETAILS

P601

OF

Click Here & Upgrade Expanded Features Unlimited Pages
PDF Complete

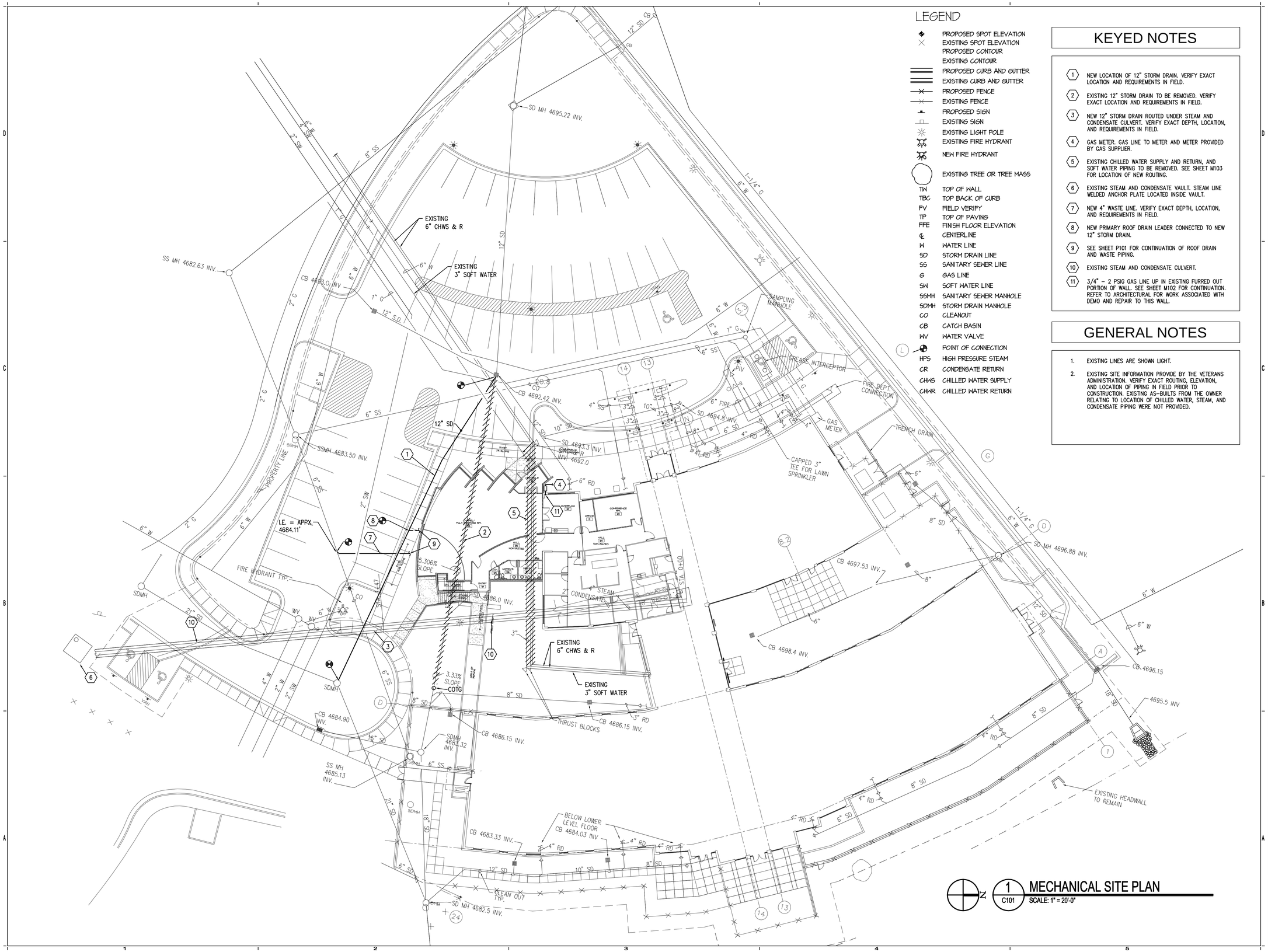

LEGEND

- PROPOSED SPOT ELEVATION
- EXISTING SPOT ELEVATION
- PROPOSED CONTOUR
- EXISTING CONTOUR
- PROPOSED CURB AND GUTTER
- EXISTING CURB AND GUTTER
- PROPOSED FENCE
- EXISTING FENCE
- PROPOSED SIGN
- EXISTING SIGN
- EXISTING LIGHT POLE
- EXISTING FIRE HYDRANT
- NEW FIRE HYDRANT
- EXISTING TREE OR TREE MASS
- TW TOP OF WALL
- TBC TOP BACK OF CURB
- FV FIELD VERIFY
- TP TOP OF PAVING
- FFE FINISH FLOOR ELEVATION
- ℄ CENTERLINE
- W WATER LINE
- SD STORM DRAIN LINE
- SS SANITARY SEWER LINE
- G GAS LINE
- SW SOFT WATER LINE
- SSMH SANITARY SEWER MANHOLE
- SDMH STORM DRAIN MANHOLE
- CO CLEANOUT
- CB CATCH BASIN
- WV WATER VALVE
- POINT OF CONNECTION
- HPS HIGH PRESSURE STEAM
- CR CONDENSATE RETURN
- CHWS CHILLED WATER SUPPLY
- CHWR CHILLED WATER RETURN

KEYED NOTES

1. NEW LOCATION OF 12" STORM DRAIN. VERIFY EXACT LOCATION AND REQUIREMENTS IN FIELD.
2. EXISTING 12" STORM DRAIN TO BE REMOVED. VERIFY EXACT LOCATION AND REQUIREMENTS IN FIELD.
3. NEW 12" STORM DRAIN ROUTED UNDER STEAM AND CONDENSATE CULVERT. VERIFY EXACT DEPTH, LOCATION, AND REQUIREMENTS IN FIELD.
4. GAS METER. GAS LINE TO METER AND METER PROVIDED BY GAS SUPPLIER.
5. EXISTING CHILLED WATER SUPPLY AND RETURN, AND SOFT WATER PIPING TO BE REMOVED. SEE SHEET M103 FOR LOCATION OF NEW ROUTING.
6. EXISTING STEAM AND CONDENSATE VAULT. STEAM LINE WELDED ANCHOR PLATE LOCATED INSIDE VAULT.
7. NEW 4" WASTE LINE. VERIFY EXACT DEPTH, LOCATION, AND REQUIREMENTS IN FIELD.
8. NEW PRIMARY ROOF DRAIN LEADER CONNECTED TO NEW 12" STORM DRAIN.
9. SEE SHEET P101 FOR CONTINUATION OF ROOF DRAIN AND WASTE PIPING.
10. EXISTING STEAM AND CONDENSATE CULVERT.
11. 3/4" – 2 PSIG GAS LINE UP IN EXISTING FURRED OUT PORTION OF WALL. SEE SHEET M102 FOR CONTINUATION. REFER TO ARCHITECTURAL FOR WORK ASSOCIATED WITH DEMO AND REPAIR TO THIS WALL.

GENERAL NOTES

1. EXISTING LINES ARE SHOWN LIGHT.
2. EXISTING SITE INFORMATION PROVIDE BY THE VETERANS ADMINISTRATION. VERIFY EXACT ROUTING, ELEVATION, AND LOCATION OF PIPING IN FIELD PRIOR TO CONSTRUCTION. EXISTING AS-BUILTS FROM THE OWNER RELATING TO LOCATION OF CHILLED WATER, STEAM, AND CONDENSATE PIPING WERE NOT PROVIDED.

1 C101 **MECHANICAL SITE PLAN**
SCALE: 1" = 20'-0"

Eaton Architecture
77 West 200 South, Suite 302
Salt Lake City, UT 84101
Tel 801/328-2982 Fax 801/328-2111

CONSULTANTS

VAN BOERUM & FRANK ASSOCIATES INC.
CONSULTING ENGINEERS
WWW.VBFA.COM
330 South 300 East
Salt Lake City, UT 84111
801.530.3148 T
801.530.3150 F
Project No. 6488

LICENSED PROFESSIONAL ENGINEER
No. 4537
JOHN D. FRANK
STATE OF UTAH

UTAH STATE VETERAN'S NURSING HOME

MULTIPURPOSE ROOM ADDITION

OWNER
UTAH STATE

MARK	DATE	DESCRIPTION
	06-15-07	

PROJECT NUMBER: 2006-32
DRAWING FILE:
DRAWN BY:
CHECKED BY:

COPYRIGHT 2003 EATON ARCHITECTURE, LLC

SHEET TITLE

MECHANICAL SITE PLAN

C101

OF

Click Here & Upgrade Expanded Features Unlimited Pages
PDF Complete

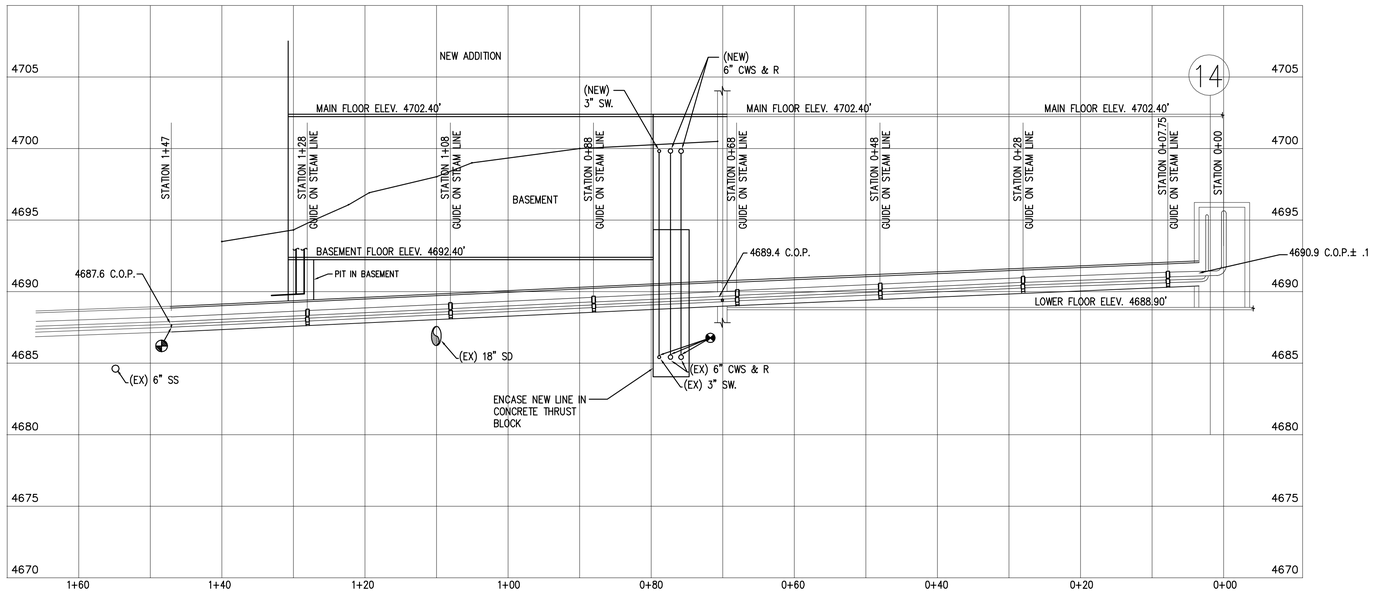

NOTE:
1. THIS PROFILE SHOWS THE GUIDES ON STEAM LINE ONLY. THE CONDENSATE IS SIMILAR (BEHIND & UNDER) SEE GENERAL NOTES FOR SPACING OF PIPING SUPPORTS AND GUIDES.

STEAM LINE PROFILE (4 / C501)
VERT: 1"=5'-0"
HORIZ: 1"=10'-0"

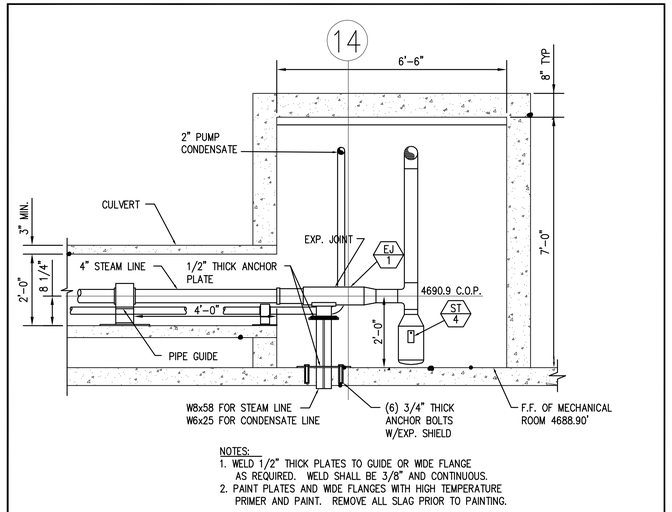

NOTES:
1. WELD 1/2" THICK PLATES TO GUIDE OR WIDE FLANGE AS REQUIRED. WELD SHALL BE 3/8" AND CONTINUOUS.
2. PAINT PLATES AND WIDE FLANGES WITH HIGH TEMPERATURE PRIMER AND PAINT. REMOVE ALL SLAG PRIOR TO PAINTING.

EXISTING ENLARGED TUNNEL / CULVERT SECTION (1 / C501)
SCALE: 1/2" = 1'-0"
(FOR REFERENCE ONLY)

GENERAL NOTES

1. COORDINATE THE ELEVATION OF PIPING GUIDES AND ANCHORS WITH ROLLERS FOR A COMPLETE AND FUNCTIONAL INSTALLATION. ROLLERS WILL PROBABLY DICTATE THE HEIGHT OF PIPING WITH RESPECT TO THE TUNNEL FLOOR.
2. PAINT EACH STEEL PLATE WITH 1 COAT OF PRIMER AND 2 COATS OF HIGH TEMPERATURE PRIMER AND PAINT. REMOVE ALL WELDING SLAG BEFORE PAINTING.
3. ALL WELDS SHALL BE 3/8" AND CONTINUOUS
4. ALL HARDWARE TO BE MANUFACTURED AS INDICATED OR EQUAL BY B-LINE OR UNISTRUT.
5. SEE SPECIFICATIONS FOR OTHER REQUIREMENTS ON EXCAVATION AND BACKFILLING.

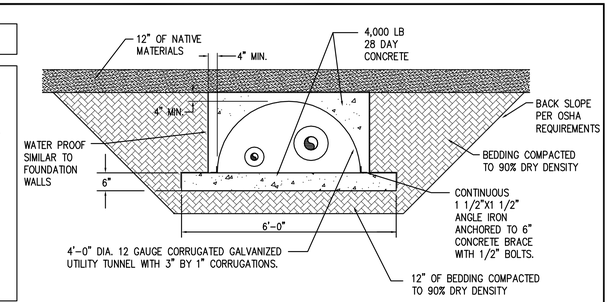

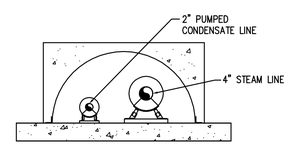

1. USE GRINNELL FIG. 161 SHIELDS ON 2" CONDENSATE LINE.
2. USE GRINNELL FIG. 164 SHIELDS ON 4" STEAM LINE.
3. USE C-728 H ROLLERS BY SUPERSTRUT ON STEAM LINE AND C-728 ON CONDENSATE LINE
4. USE FRAMING CHANNELS (SERIES 1000), FITTING AND BRACKETS (SERIES 200) & HARDWARE (SERIES 100) BY SUPERSTRUT OR OTHER MEANS TO SUPPORT OR ANCHOR ROLLERS TO CONCRETE FLOOR.
5. ANCHOR FRAMING CHANNELS TO CONCRETE FLOOR.

PIPING SUPPORT DETAIL (3 / C501)
SCALE: NONE

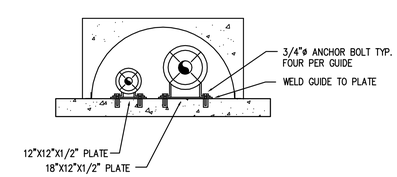

1. USE NUMBER 3 AND 6 FIG. 155 GUIDES BY GRINNELL ON 2" CONDENSATE AND 4" STEAM LINES RESPECTIVELY.
2. PROVIDE SPACER BETWEEN GUIDE AND PLATE IF REQUIRED.
3. WELD SPACER TO 1/2" PLATE AND TO GUIDE.

GUIDE DETAIL (2 / C501)
SCALE: NONE

EXISTING UTILITY TUNNEL CULVERT DETAIL
(FOR REFERENCE ONLY)

Eaton Architecture
77 West 200 South, Suite 302
Salt Lake City, UT 84101
Tel 801/328-2982 Fax 801/328-2111

CONSULTANTS
VAN BOERUM & FRANK ASSOCIATES INC.
CONSULTING ENGINEERS
WWW.VBFA.COM
330 South 300 East
Salt Lake City, UT 84111
801.530.3148 T
801.530.3150 F
Project No. 6488

LICENSED PROFESSIONAL ENGINEER
No. 4537
JOHN D. FRANK
STATE OF UTAH

UTAH STATE VETERAN'S NURSING HOME
MULTIPURPOSE ROOM ADDITION

OWNER
UTAH STATE

MARK	DATE	DESCRIPTION
	06-15-07	

PROJECT NUMBER: 2006-32
DRAWING FILE:
DRAWN BY:
CHECKED BY:

COPYRIGHT 2003 EATON ARCHITECTURE, LLC

SHEET TITLE
MECHANICAL PIPING PROFILE AND DETAILS

C501
OF

Click Here & Upgrade Expanded Features Unlimited Pages
PDF Complete

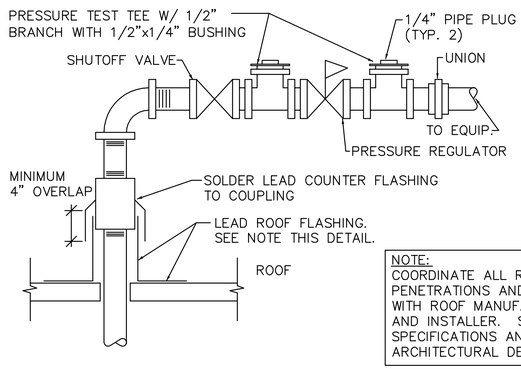

NOTE: SEE ROOFTOP UNIT SCHEDULE, SHEET M601 FOR INDIVIDUAL GAS CONNECTION SIZES TO EACH ROOFTOP UNIT.

NOTE:
COORDINATE ALL ROOF PENETRATIONS AND FLASHINGS WITH ROOF MANUFACTURER AND INSTALLER. SEE ROOFING SPECIFICATIONS AND ARCHITECTURAL DETAILS.

D2 / C502 GAS PIPE ROOF PENETRATION
NO SCALE

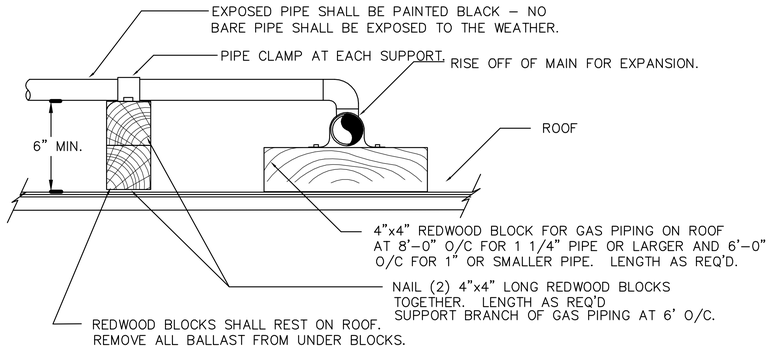

D3 / C502 GAS PIPING ON ROOF DETAIL
NO SCALE

TRENCH BACK FILL & ROAD SURFACE RESTORATION

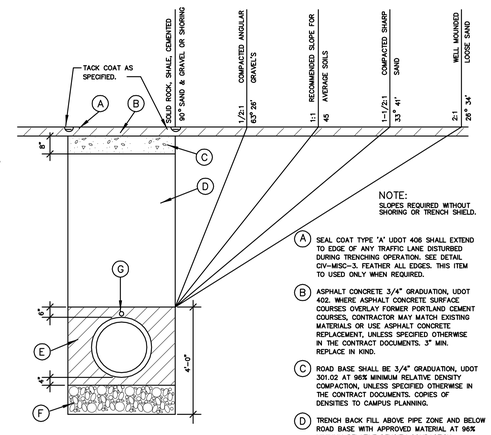

NOTE:
SLOPES REQUIRED WITHOUT SHORING OR TRENCH SHIELD.

(A) SEAL COAT TYPE 'A' UDOT 406 SHALL EXTEND TO EDGE OF ANY TRAFFIC LANE DISTURBED DURING TRENCHING OPERATION. SEE DETAIL CV-MISC-3. FEATHER ALL EDGES. THIS ITEM TO USED ONLY WHEN REQUIRED.

(B) ASPHALT CONCRETE 3/4" GRADUATION, UDOT 402. WHERE ASPHALT CONCRETE SURFACE COURSES OVERLAY FORMER PORTLAND CEMENT COURSES, CONTRACTOR MAY MATCH EXISTING MATERIALS OR USE ASPHALT CONCRETE REPLACEMENT, UNLESS SPECIFIED OTHERWISE IN THE CONTRACT DOCUMENTS. 3" MIN. REPLACE IN KIND.

(C) ROAD BASE SHALL BE 3/4" GRADUATION, UDOT 301.02 AT 96% MINIMUM RELATIVE DENSITY COMPACTION, UNLESS SPECIFIED OTHERWISE IN THE CONTRACT DOCUMENTS. COPIES OF DENSITIES TO CAMPUS PLANNING.

(D) TRENCH BACK FILL ABOVE PIPE ZONE AND BELOW ROAD BASE WITH APPROVED MATERIAL AT 96% MINIMUM RELATIVE DENSITY COMPACTION. COPIES OF DENSITIES TO CAMPUS PLANNING.

(E) PIPE ZONE SHALL BE BACK FILLED WITH FILL SAND AT 96% MINIMUM RELATIVE DENSITY COMPACTION. FORM TO PROVIDE SUPPORT ALONG ENTIRE BARREL OF PIPE (BOTTOM 1/4"). PLACE AND COMPACT REMAINDER OF PIPE ZONE MATERIAL IN 6" LIFTS, SO THAT NO VOIDS EXIST AROUND PIPE.

(F) TRENCH STABILIZATION MATERIAL SHALL BE 2" MINUS SEWER ROCK. DEPTH AS REQUIRED.

(G) INSTALL MAGNETIC MARKERS TAPED TO TOP OF PIPE AT 50' MAXIMUM SPACING AND AT EVERY BEND. FOR PVC WATER MAINS. SEE SPEC. SEC. 02810.

ALL TRENCHES SHALL BE SLOPED PER OSHA REQUIREMENTS, AND/OR GENERAL SAFETY ORDERS OF THE UTAH INDUSTRIAL COMMISSION.

UDOT SHALL MEAN THE 1979 REVISION OF THE STATE OF UTAH STANDARD SPECIFICATION FOR ROAD AND BRIDGE CONSTRUCTION, AND ADDENDUMS.

C4 / C502 TRENCH BACK FILL & ROAD SURFACE RESTORATION
NO SCALE

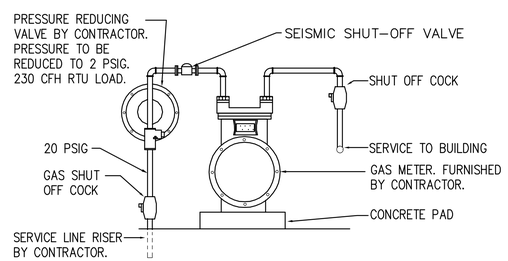

C2 / C502 GAS METER DETAIL
NO SCALE

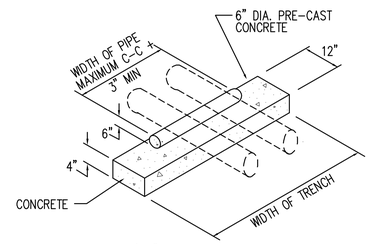

NOTE: SPACE AT MINIMUM OF 25'–0" O.C.

C3 / C502 PIPE SUPPORT
NO SCALE

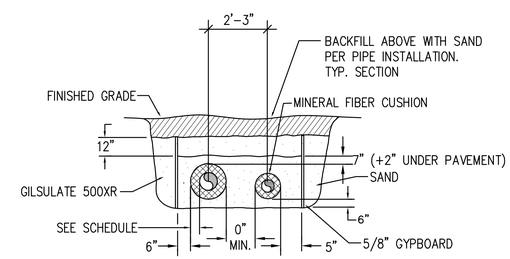

B3 / C502 PIPING SECTION – AT EXPANSION
NO SCALE

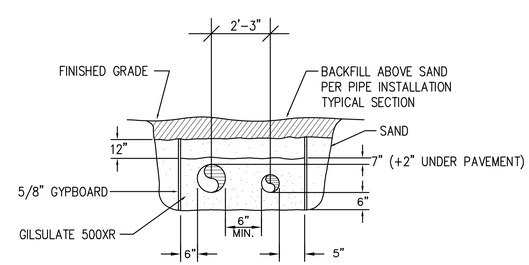

A3 / C502 PIPING SECTION
NO SCALE

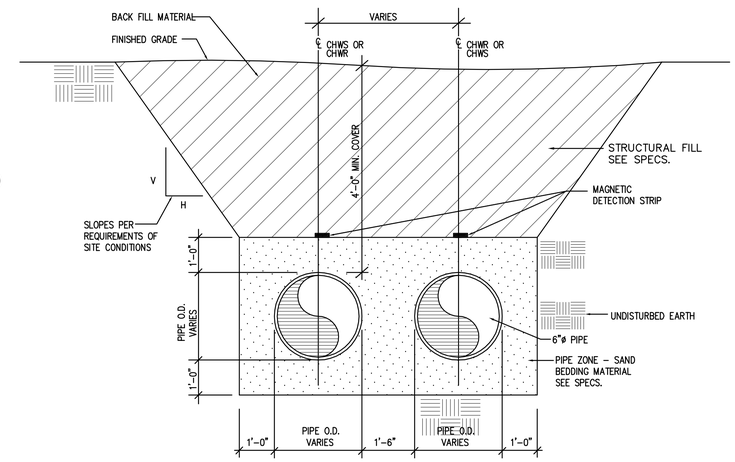

A4 / C502 TYPICAL TRENCH SECTION – CHILLED WATER
NO SCALE

Eaton Architecture
77 West 200 South, Suite 302
Salt Lake City, UT 84101
Tel 801/328-2982 Fax 801/328-2111

CONSULTANTS
VAN BOERUM & FRANK ASSOCIATES INC.
CONSULTING ENGINEERS
WWW.VBFA.COM
330 South 300 East 801.530.3148 T
Salt Lake City, UT 84111 801.530.3150 F
Project No. 6488

LICENSED PROFESSIONAL ENGINEER
No. 4537
JOHN D. FRANK
STATE OF UTAH

UTAH STATE VETERAN'S NURSING HOME
MULTIPURPOSE ROOM ADDITION

OWNER
UTAH STATE

MARK	DATE	DESCRIPTION
	06-15-07	

PROJECT NUMBER: 2006-32
DRAWING FILE:
DRAWN BY:
CHECKED BY:

COPYRIGHT 2003 EATON ARCHITECTURE, LLC

SHEET TITLE
MECHANICAL PIPING DETAILS

C502
OF

Click Here & Upgrade Expanded Features Unlimited Pages
PDF Complete

LEGEND OF MECHANICAL SYMBOLS AND ABBREVIATIONS

MECHANICAL

- POSITIVE PRESSURE DUCT – RISE
- POSITIVE PRESSURE DUCT – DROP
- NEGATIVE PRESSURE DUCT – RISE
- NEGATIVE PRESSURE DUCT – DROP
- ROUND DUCT – RISE
- ROUND DUCT – DROP
- UNDER FLOOR DUCT
- TURNING VANES
- FRESH AIR LOUVER
- RELIEF AIR OR EXHAUST AIR LOUVER
- 12X12 / 200 — CEILING SUPPLY DIFFUSER
- 22X22 / 200 — CEILING RETURN REGISTER
- 12X12 / 200 — CEILING EXHAUST REGISTER, (BALANCE TO MATCH SUPPLY IF RETURN CFM IS NOT SHOWN)
- 24X10 / 200 — SIDEWALL SUPPLY REGISTER
- 24X10 / 200 — SIDEWALL EXHAUST OR RETURN REGISTER
- 12X12 / 200 — CEILING SUPPLY DIFFUSER WITH FLEXIBLE DUCT
- 12X12 / 200 — CEILING AIR GRILLE WITH FLEXIBLE DUCT

  (TOP FIGURES INDICATE NECK SIZE. BOTTOM FIGURE INDICATES CFM.)
- CEILING RETURN AIR GRILE W/ SOUND BOOT
- 3–1" SLOTS @ 48" 400 — LINEAR DIFFUSER WITH PLENUM AND FLEXIBLE DUCT CONNECTION. NO. OF SLOTS & SIZE OF SLOT ON TOP, ACTIVE LENGTH AND CFM ON BOTTOM
- FLEXIBLE DUCT CONNECTION
- FLEXIBLE DUCT
- FAN
- 12/8 FO — FLAT OVAL DUCT WITH NET INSIDE DIMENSIONS SHOWN IN INCHES.
- 12/8 — RECTANGULAR DUCT WITH NET INSIDE DIMENSIONS SHOWN IN INCHES.
- 12ø — ROUND DUCT WITH NET INSIDE DIMENSIONS SHOWN IN INCHES.
- UP — INCLINED RISE
- DN — INCLINED DROP

  (WITH RESPECT TO AIR FLOW 15° NOMINAL INCLINE WITH RADIUS TURNS=DEPTH OF DUCT.)
- W R — R/W=1. ROUND DUCT SIMILAR TO RECTANGULAR
- 12/12 8/8 — RECTANGULAR TO RECTANGULAR OR ROUND TO ROUND DUCT TRANSFORMATION MAXIMUM 15° INCLUDED ANGLE EXCEPT WHERE SHOWN OTHERWISE.
- 12/12 12ø — RECTANGULAR TO ROUND DUCT TRANSFORMATION
- R — BRANCH DUCT SPLIT WITH 6" WIDTH AND MIN. R=WIDTH OF BRANCH DUCT DOWNSTREAM. ELBOW TURNING VANE OPTIONAL.
- 150 150 450 — TAP ENTRY AREA EQUALS 150% OF BRANCH AREA
- 12ø 12/12 — HIGH EFFICIENCY FITTING
- MANUAL VOLUME DAMPER
- FD — FIRE DAMPER IN DUCT, W/ ACCESS PANEL REQD.
- FSD — COMBINATION FIRE/SMOKE DAMPER W/ ACCESS PANEL
- SD — SMOKE DAMPER W/ ACCESS PANEL
- BDD — BACK DRAFT DAMPER
- ATC OR — ATC DAMPER
- AD — ACCESS PANEL IN DUCT OR PLENUM
- AU — HEATING OR COOLING COIL IN DUCT
- SINGLE DUCT AIR TERMINAL BOX VARIABLE OR CONSTANT VOLUME. MIN. 1-1/2 TERMINAL INLET SIZE STRAIGHT DUCT AT TERMINAL INLET.
- 4–WAY BLOW PATTERN
- 3–WAY BLOW PATTERN
- 2–WAY BLOW PATTERN
- 2–WAY BLOW PATTERN
- 1–WAY BLOW PATTERN
- SD — DUCT SMOKE DETECTOR
- UNIT HEATER

PLUMBING

- FLOOR SINK
- FLOOR DRAIN
- FCO / COTG — FLOOR CLEAN–OUT OR CLEAN–OUT TO GRADE
- ROOF DRAIN
- DOWNSPOUT NOZZLE
- ARROW INDICATES DIRECTION OF FLOW IN PIPE
- CHECK VALVE
- PRESSURE REDUCING, EXTERNAL PRESSURE VALVE
- PRESSURE REDUCING, SELF CONTAINED VALVE
- ATC VALVE – 2 WAY
- ATC VALVE – 3 WAY
- SOLENOID VALVE
- GATE VALVE
- GATE VALVE – NON RISING STEM
- GLOBE VALVE
- TEMPERATURE AND PRESSURE TEST PORT
- PS — PRESSURE SWITCH
- GAS COCK
- 0.0 GPM — CALIBRATED BALANCING VALVE WITH GPM INDICATED
- RPBP — REDUCED PRESSURE BACKFLOW PREVENTOR W/ DRAIN PAN
- BRANCH – BOTTOM CONNECTION
- BRANCH – TOP CONNECTION
- BRANCH – SIDE CONNECTION
- RISE OR DROP
- RISER – DOWN (ELBOW)
- RISER – DOWN (ELBOW)
- VTR — VENT THRU ROOF
- WATER HAMMER ARRESTOR
- INLINE PUMP
- INLINE PUMP
- CLEAN–OUT
- RELIEF VALVE
- ANGLE VALVE
- FLOW METER
- UNION
- BALANCING COCK
- SHUT–OFF COCK FOR USE WITH PRESSURE GAUGE
- FLEXIBLE EXPANSION JOINT
- LAVT — THERMOMETER – TEMP RANGE AS INDICATED
- PRESSURE GAUGE WITH SHUT–OFF COCK
- PRESSURE GAUGE WITH PIGTAIL
- LATERAL STRAINER WITH BLOW–OFF VALVE, PROVIDE HOSE END WITH CAP WHERE DISCHARGE IS NOT PIPED TO DRAIN
- BALL VALVE (PIPE SIZES 2" AND SMALLER) BUTTERFLY VALVE (PIPE SIZES 2-1/2" AND LARGER)
- MOTOR OPERATED BUTTERFLY VALVE
- VALVE IN RISE
- AIR VENT–MANUAL
- AIR VENT–AUTO
- FLOW SWITCH
- REDUCER
- CONCENTRIC REDUCER
- ECCENTRIC REDUCER

PLUMBING CONT.

- HOSE BIBB
- PIPE CAP
- S — SWITCH
- S — SENSOR
- T — THERMOSTAT
- TN — NIGHT THERMOSTAT
- FILL PORT
- DRAIN PAN AND P–TRAP
- (NAME) — FIXTURE FROM LEVEL ABOVE
- GPM LB/HR — FLOW METER ORIFICE
- FLANGE
- 90° ELBOW
- 45° ELBOW
- F&T — STEAM TRAP, F&T=FLOAT & THERMOSTATIC B=BUCKET, T=THERMOSTATIC
- DN — LEADER INDICATES DOWNWARD SLOPE
- DEMOLITION
- ALIGNMENT GUIDE
- ANCHOR
- LUBRICATED PLUG COCK

SYMBOLS

- P–1 — PLUMBING FIXTURES
- POINT OF CONNECTION
- A / M–101 — SECTION TAG – TOP FIGURE IS SECTION NO. BOTTOM FIGURE IS SHEET NO.
- A / M101 — DETAIL TAG – TOP FIGURE IS DETAIL NO. BOTTOM FIGURE IS SHEET NO.
- EF / 1 — EQUIPMENT IDENTIFICATION
- 1 — KEYED NOTE IDENTIFICATION

FIRE

- HOSE VALVE
- NRS GATE VALVE WITH SUPERVISION
- FLOW SWITCH
- FIRE RISER
- SPRINKLER HEAD
- F — FIRE SPRINKLER WATER

LINETYPES

- AV — ACID VENT
- AW — ACID WASTE
- BBD — BOILER BLOW DOWN
- BF — BOILER FEED WATER
- B — BRINE
- CO2 — CARBON DIOXIDE
- CA — COMPRESSED AIR
- CF — CHEMICAL FEED
- CHWS — CHILLED WATER SUPPLY
- CHWR — CHILLED WATER RETURN
- CS — CONDENSER WATER SUPPLY
- CR — CONDENSER WATER RETURN
- DOMESTIC COLD WATER (DCW)
- DOMESTIC HOT WATER (DHW)
- DOMESTIC HOT WATER RETURN (DHWR)
- DI — DEIONIZED WATER SUPPLY
- DIR — DEIONIZED WATER RETURN
- E(NAME) — EXISTING PIPING
- (NAME) — EXISTING PIPING TO BE REMOVED
- GHR — GLYCOL HEAT RECOVERY PIPING
- G(NAME) — GLYCOL PIPING SOLUTION
- FOR — FUEL OIL RETURN
- FOS — FUEL OIL SUPPLY
- FOV — FUEL OIL VENT
- G — NATURAL GAS
- HG — HOT GAS
- HFR — HELICOPTER FUEL RETURN
- HFS — HELICOPTER FUEL SUPPLY
- HP(NAME) — HIGH PRESSURE DOMESTIC WATER
- HPC — HIGH PRESSURE CONDENSATE
- HPS — HIGH PRESSURE STEAM
- HWR — HEATING HOT WATER RETURN
- HWS — HEATING HOT WATER SUPPLY
- IA — INSTRUMENT AIR
- IA 120 — INSTRUMENT AIR AT PRESSURE INDICATED
- LA — LAB AIR
- LV — LAB VACUUM
- LPC — LOW PRESSURE CONDENSATE
- LPG — LIQUIFIED PETROLEUM GAS
- LPS — LOW PRESSURE STEAM
- MA — MEDICAL AIR
- MA 120 — MEDICAL AIR AT PRESSURE INDICATED
- MPC — MEDIUM PRESSURE CONDENSATE
- MPS — MEDIUM PRESSURE STEAM
- MUW — MAKE UP WATER
- MV — MEDICAL VACUUM
- N — NITROGEN
- N2O — NITROUS OXIDE
- OX — MEDICAL OXYGEN
- OX 120 — MEDICAL OXYGEN AT PRESSURE INDICATED
- PUMPED CONDENSATE

LINETYPES CONT.

- RO — REVERSE OSMOSIS WATER SUPPLY
- ROR — REVERSE OSMOSIS WATER RETURN
- RD — ROOF DRAIN
- RDO — ROOF DRAIN OVERFLOW
- RL — REFRIGERANT LIQUID
- RS — REFRIGERANT SUCTION
- SEWER (BELOW GRADE)
- SEWER (ABOVE GRADE)
- SW — SOFT DOMESTIC WATER (SW)
- V — VACUUM
- VENT (SEWER)

Eaton Architecture
77 West 200 South, Suite 302
Salt Lake City, UT 84101
Tel 801/328-2982 Fax 801/328-2111

CONSULTANTS

VAN BOERUM & FRANK ASSOCIATES INC.
WWW.VBFA.COM CONSULTING ENGINEERS
330 South 300 East 801.530.3148 T
Salt Lake City, UT 84111 801.530.3150 F
Project No. 6488

LICENSED PROFESSIONAL ENGINEER No. 4537 JOHN D. FRANK STATE OF UTAH

UTAH STATE VETERAN'S NURSING HOME

MULTIPURPOSE ROOM ADDITION

OWNER: UTAH STATE

MARK	DATE	DESCRIPTION
	06-15-07	

PROJECT NUMBER: 2006-32
DRAWING FILE:
DRAWN BY:
CHECKED BY:

COPYRIGHT 2003 EATON ARCHITECTURE, LLC

SHEET TITLE

MECHANICAL LEGEND

M001

OF

Click Here & Upgrade Expanded Features Unlimited Pages
PDF Complete

KEYED NOTES

1. 12/12 EXHAUST DUCT UP THRU ROOF TO EXHAUST FAN. SEE DETAIL C1/M602.
2. SUPPLY AND RETURN DUCTS UP THRU ROOF. FULL SIZE OF UNIT CONNECTIONS TO ROOF MOUNTED HVAC UNIT.
3. NOT USED.
4. NOT USED.
5. 22"X22" RETURN AIR GRILLE.
6. ROUTE DUCTWORK AS HIGH AS POSSIBLE TO UNDERSIDE OF STRUCTURAL BEAMS.
7. REBALANCE EXISTING VAV BOX SUPPLIED DIFFUSERS TO PROVIDE A TOTAL OF 1100 CFM BALANCED EVENLY BETWEEN THE TWO EXISTING SUPPLY DIFFUSERS IN THE NEW CONFERENCE ROOM AND ONE IN NEW OFFICE.
8. NEW 22"X22" RETURN AIR REGISTER. BALANCE BOTH RETURNS TO BE 10% LESS THAN SUPPLY CFM.
9. RELOCATE EXISTING RETURN/SUPPLY DIFFUSERS AS REQUIRED IF THERE ARE CONFLICTS WITH THE NEW WALL AND CEILING GRID MODIFICATIONS.
10. 36/12 RELIEF PLENUM OPEN ON TWO SIDES TO PLENUM SPACE. 26/26 DUCT UP TO RELIEF FAN ON ROOF. SEE SHEET M102.
11. 22"X22" RELIEF AIR GRILLE.

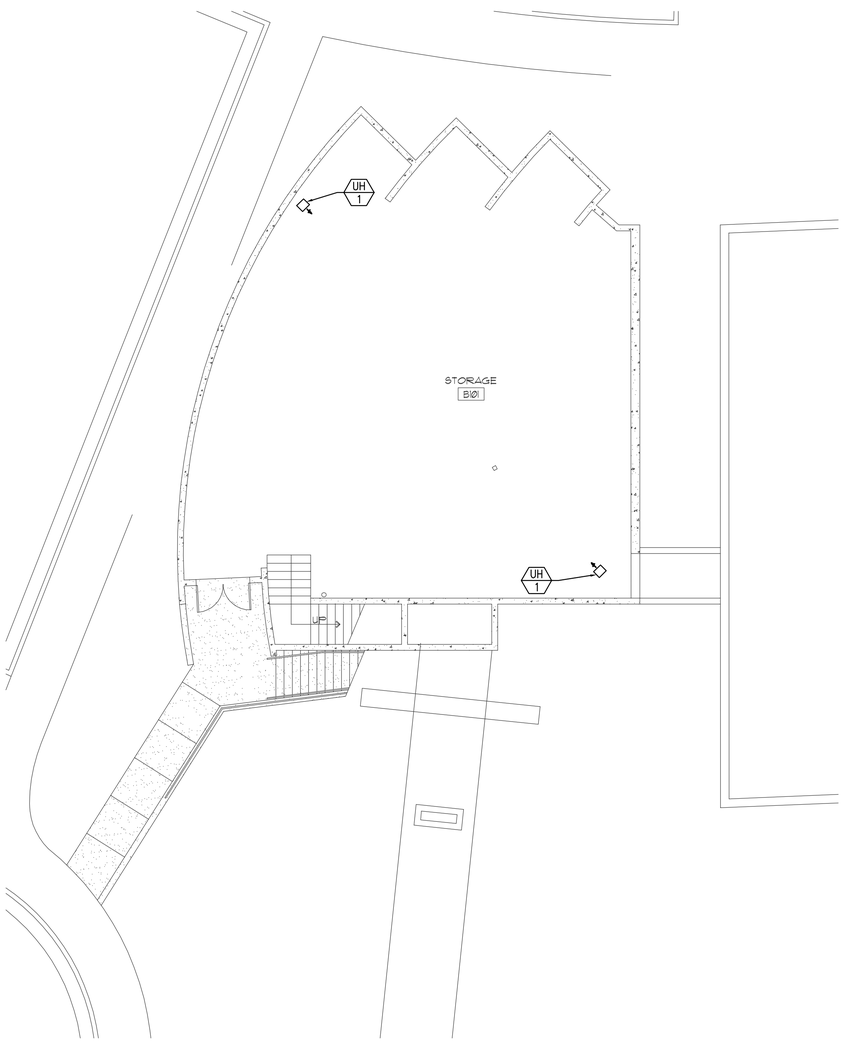

1 M101 BASEMENT MECHANICAL PLAN
SCALE: 1/8" = 1'-0"

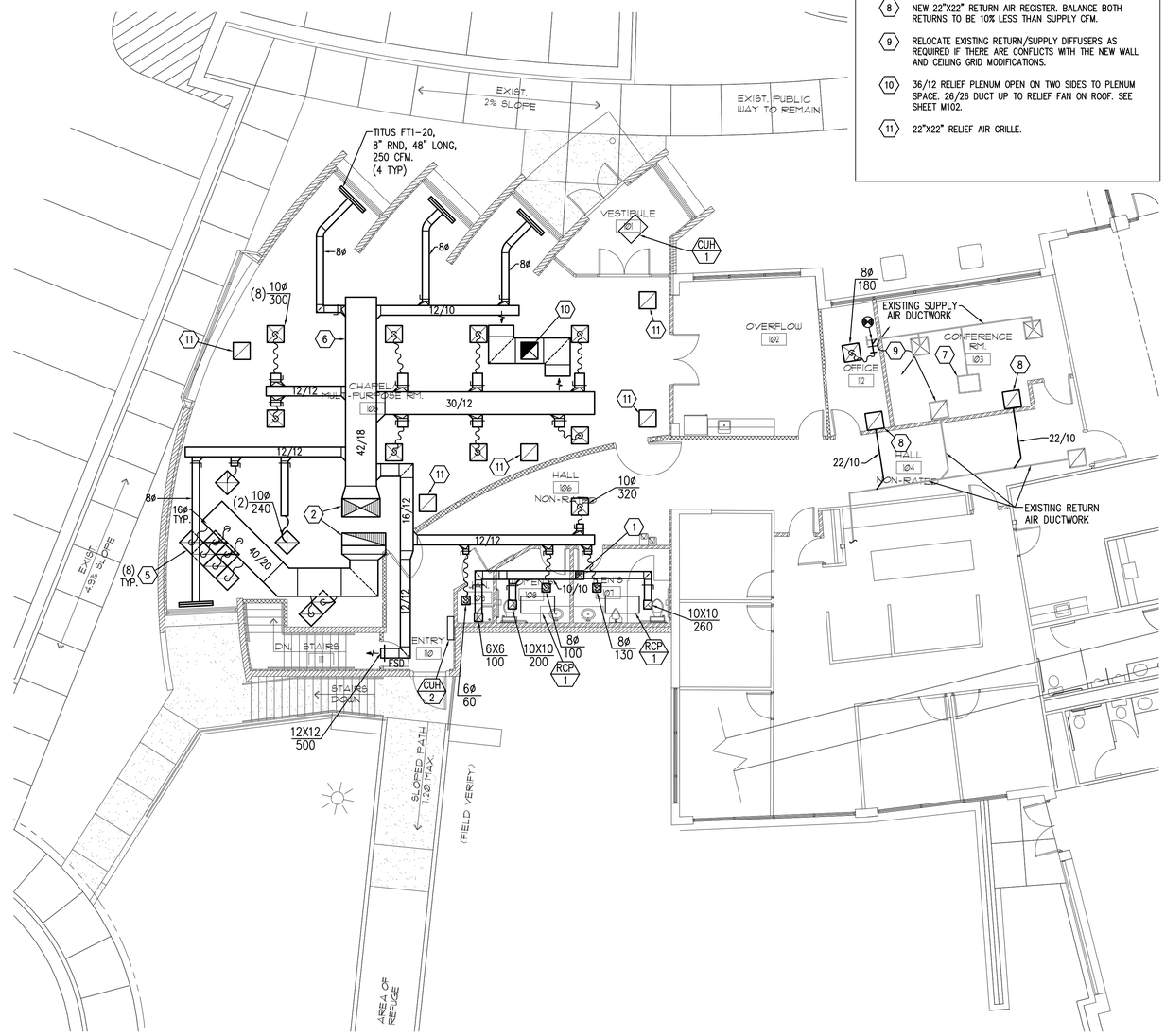

2 M101 MAIN LEVEL MECHANICAL PLAN
SCALE: 1/8" = 1'-0"

Eaton Architecture
77 West 200 South, Suite 302
Salt Lake City, UT 84101
Tel 801/328-2982 Fax 801/328-2111

CONSULTANTS

VAN BOERUM & FRANK ASSOCIATES INC.
CONSULTING ENGINEERS
WWW.VBFA.COM
330 South 300 East
Salt Lake City, UT 84111
801.530.3148 T
801.530.3150 F
Project No. 6488

LICENSED PROFESSIONAL ENGINEER
No. 4537
JOHN D. FRANK
STATE OF UTAH

UTAH STATE VETERAN'S NURSING HOME

MULTIPURPOSE ROOM ADDITION

OWNER
UTAH STATE

MARK	DATE	DESCRIPTION
	06-15-07	

PROJECT NUMBER: 2006-32
DRAWING FILE:
DRAWN BY:
CHECKED BY:

COPYRIGHT 2003 EATON ARCHITECTURE, LLC

SHEET TITLE

MAIN LEVEL AND BASEMENT MECHANICAL PLAN

M101

OF

Click Here & Upgrade Expanded Features Unlimited Pages
PDF Complete

KEYED NOTES

1. 26/26 DUCT DOWN THRU ROOF INTO PLENUM DUCT. SEE DETAIL B1/M601.
2. 2 PSIG GAS LINE TO RTU. PROVIDE 4 OUNCE GAS PRESSURE REGULATOR AND SHUT-OFF VALVE ON ROOF. SEE DETAIL ON SHEET C502.
3. GAS PIPING ON ROOF. SEE SUPPORT DETAIL ON SHEET C502.

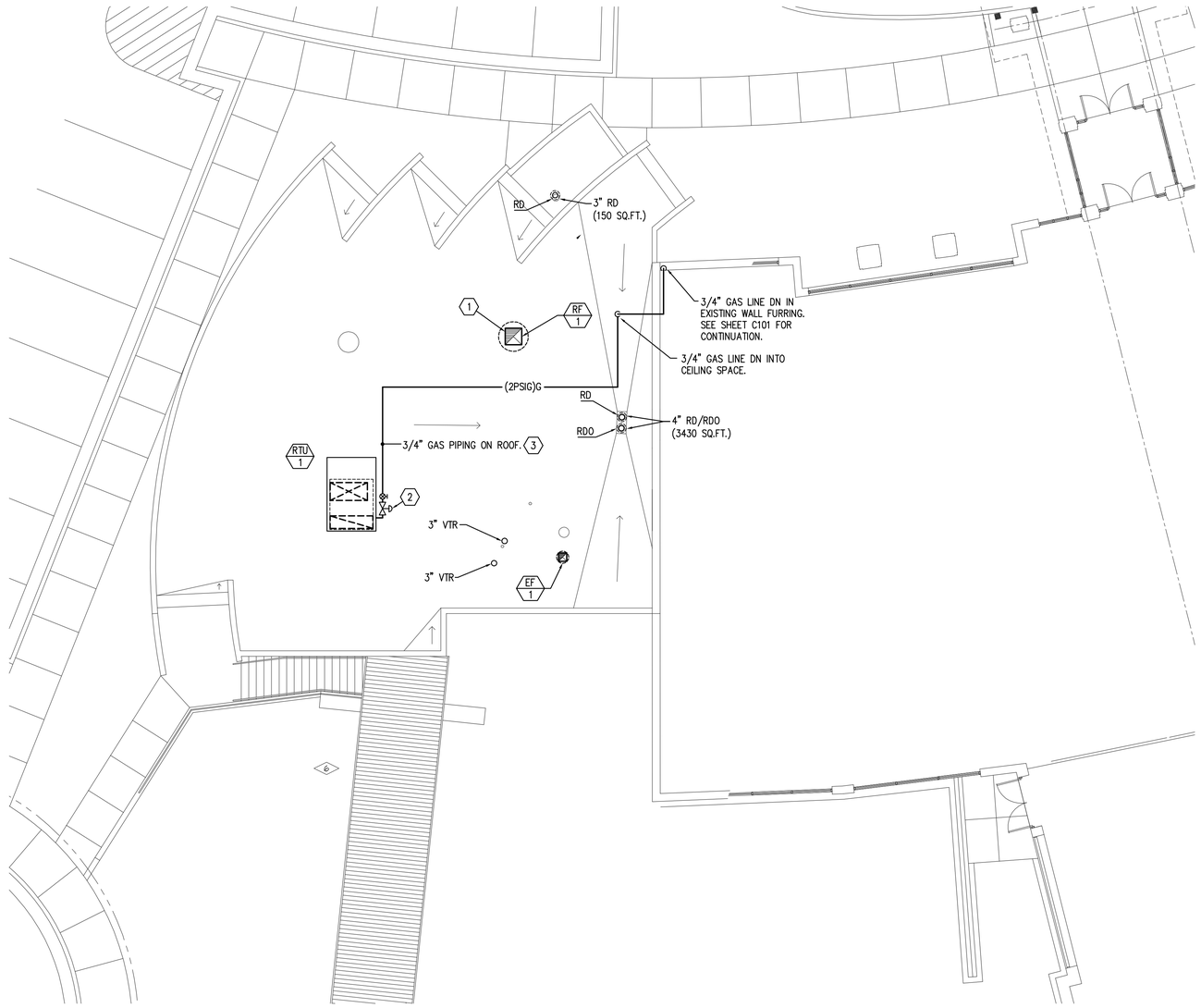

N

1 / M102 **ROOF LEVEL MECHANICAL PLAN**

SCALE: 1/8" = 1'-0"

Eaton Architecture
77 West 200 South, Suite 302
Salt Lake City, UT 84101
Tel 801/328-2982 Fax 801/328-2111

CONSULTANTS

VAN BOERUM & FRANK ASSOCIATES INC.
WWW.VBFA.COM CONSULTING ENGINEERS
330 South 300 East
Salt Lake City, UT 84111
801.530.3148 T
801.530.3150 F
Project No. 6488

LICENSED PROFESSIONAL ENGINEER
No. 4537
JOHN D. FRANK
STATE OF UTAH

UTAH STATE VETERAN'S NURSING HOME

MULTIPURPOSE ROOM ADDITION

OWNER
UTAH STATE

MARK	DATE	DESCRIPTION
	06-15-07	

PROJECT NUMBER: 2006-32
DRAWING FILE:
DRAWN BY:
CHECKED BY:

COPYRIGHT 2003 EATON ARCHITECTURE, LLC

SHEET TITLE

ROOF LEVEL MECHANICAL PLAN

M102

OF

Click Here & Upgrade Expanded Features Unlimited Pages
PDF Complete

KEYED NOTES

1. NEW THRUST BLOCK AT ELBOW.
2. PROVIDE FLANGE CONNECTION ON DUCTILE IRON PIPE EXTEND DUCTILE IRON PIPE 5'-0" OUTSIDE BUILDING. PROVIDE DRESSER COUPLING AND TRANSITION PIPE TO PVC.
3. EXISTING CHILLED WATER SUPPLY AND RETURN AND SOFT WATER PIPING. VERIFY EXACT LOCATION.
4. NEW CHILLED WATER SUPPLY AND RETURN PIPING AND SOFT WATER PIPING. ROUTE PIPING AS HIGH AS POSSIBLE IN BASEMENT.
5. NEW UNDERGROUND CHILLED WATER SUPPLY AND RETURN PIPING AND SOFT WATER PIPING. COORDINATE ROUTING WITH EXISTING UTILITIES.
6. SLOPE LINE DOWN AND CONNECT AT EXISTING.
7. 1" CONDENSATE DRAIN DOWN ON WALL TO SERVICE SINK.

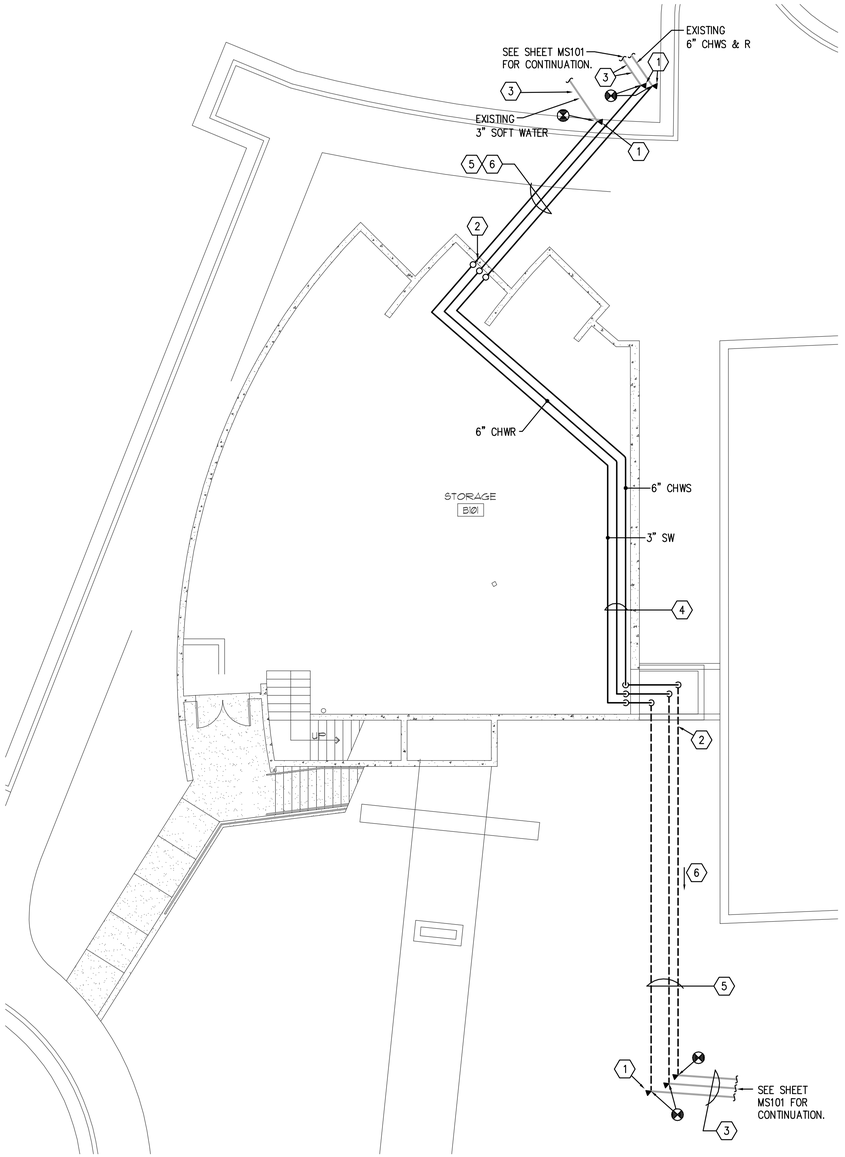

1 M103 BASEMENT MECHANICAL PIPING PLAN
SCALE: 1/8" = 1'-0"

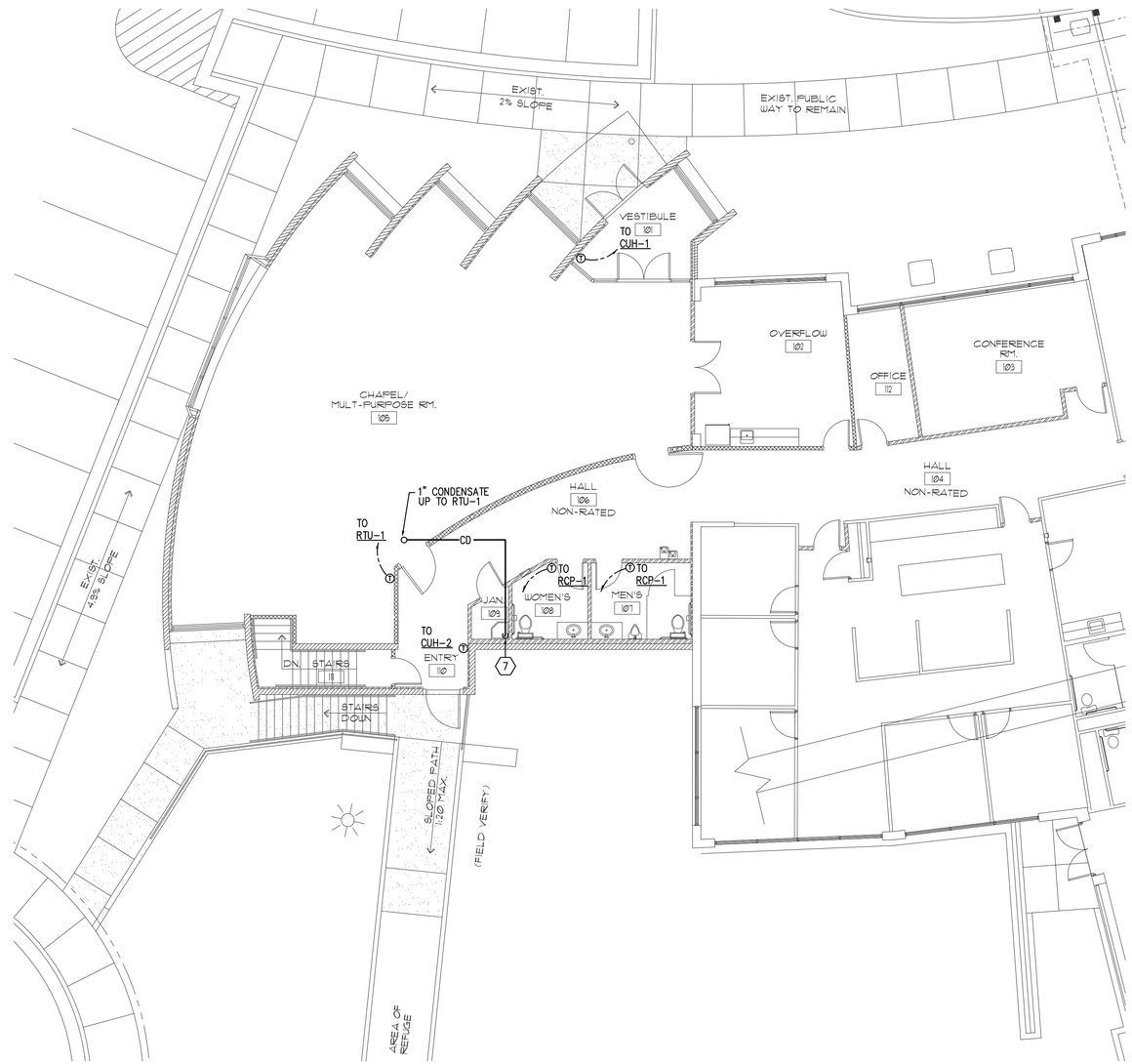

2 M103 MAIN LEVEL MECHANICAL PIPING PLAN
SCALE: 1/8" = 1'-0"

Eaton Architecture
77 West 200 South, Suite 302
Salt Lake City, UT 84101
Tel 801/328-2982 Fax 801/328-2111

CONSULTANTS

VAN BOERUM & FRANK ASSOCIATES INC.
CONSULTING ENGINEERS
WWW.VBFA.COM
330 South 300 East
Salt Lake City, UT 84111
801.530.3148 T
801.530.3150 F
Project No. 6488

LICENSED PROFESSIONAL ENGINEER
No. 4537
JOHN D. FRANK
STATE OF UTAH

UTAH STATE VETERAN'S NURSING HOME

MULTIPURPOSE ROOM ADDITION

OWNER
UTAH STATE

MARK	DATE	DESCRIPTION
	06-15-07	

PROJECT NUMBER: 2006-32
DRAWING FILE:
DRAWN BY:
CHECKED BY:

COPYRIGHT 2003 EATON ARCHITECTURE, LLC

SHEET TITLE

MAIN LEVEL AND BASEMENT MECHANICAL PIPING PLAN

M103

OF

Click Here & Upgrade Expanded Features Unlimited Pages
PDF Complete

ROOFTOP UNIT SCHEDULE

ID	MANUFACTURER	MODEL NO.	SUPPLY CFM	MIN. OSA CFM	SUPPLY ESP (IN W.G.)	RELIEF CFM	RELIEF ESP (IN W.G.)	COOLING CAPACITY E.A.T. DB/WB (F)	COOLING CAPACITY L.A.T. DB/WB (F)	COOLING CAPACITY TOTAL MBH	COOLING CAPACITY SENSIBLE MBH	NAT. GAS HEATING CAPACITY (2 STAGE) MBH INPUT	NAT. GAS HEATING CAPACITY (2 STAGE) MBH OUTPUT	ELECTRICAL DATA EAT DB (F)	ELECTRICAL DATA EVAPORATOR FAN FLA	ELECTRICAL DATA CONDENSER FAN FLA	ELECTRICAL DATA COMPR RLA	ELECTRICAL DATA COMB AIR FAN FLA	ELECTRICAL DATA V/PH	ELECTRICAL DATA TOTAL MCA	ELECTRICAL DATA UNIT MOCP	OPERATING WEIGHT (LBS)	SEER/EER @ ARI	OVERALL SIZE, LXWXH (IN)	COMMENTS
RTU-1	TRANE	YFD150E3HA	5000	1400	0.75	5000	0.25	78/60	55/-	143	140	205	176	56	10.6	(2) 3.2	(2) 22.4	0.5	208/3	63	80	2000	-/10.2	106/70/50	1,2,3,4,5

(1) CAPACITIES LISTED ARE AT 4,500' ALTITUDE
(2) COOLING CAPACITIES ARE BASED ON 97 DEG. F. AMBIENT TEMP/ 75 DEG.F. RETURN AIR TEMPERATURE.
(3) PROVIDE UNIT WITH MOTOR STARTERS AND DISCONNECTS FACTORY INSTALLED AND PREWIRED, CONFIGURED FOR SINGLE POINT POWER CONNNECTION.
(4) UNIT SHALL INCLUDE 2" MERV 7 FILTERS, SS DRAINPANS, COLORED WIRING DIAGRAMS.
(5) PROVIDE UNIT WITH HOT GAS BYPASS, LOW AMBIENT COOLING KIT, ECONOMIZER AND MODULATING OUTSIDE AIR/RETURN AIR DAMPERS AND UNPOWERED 120V CONVENIENCE OUTLET.

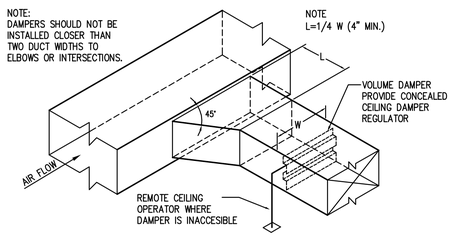

D1 / M601 BRANCH DUCT TAKE-OFF & DAMPER DETAIL
NO SCALE

EXHAUST FAN SCHEDULE

ID	MANUFACTURER AND MODEL NUMBER	LOCATION	TYPE	AIR MAXIMUM AIRFLOW RATE (CFM)	AIR EXTERNAL STATIC PRESSURE (IN. WATER)	FAN SPEED (RPM)	FAN SONES AT E.S.P.	ELECTRICAL MOTOR SIZE (HP)	ELECTRICAL FLA (A)	ELECTRICAL MOTOR SPEED (RPM)	ELECTRICAL VOLT/PH/HZ	BAROMETRIC DAMPER	WEIGHT (LBS)	NOTES
EF-1	GREENHECK GB-091-4	ROOFTOP	EXHAUST	560	0.5	1282	7.9	1/4	5.8	1725	115/60/1	YES	60	1,2
RF-1	GREENHECK GB-240-10	ROOFTOP	RELIEF	4900	0.6	736	13.3	1	4.8	1725	208/60/3	NO	160	3

1. PROVIDE FACTORY MOUNTED ROOF CURB.
2. FAN TO BE CONTROLLED BY TIME CLOCK. COORDINATE WITH ELECTRICAL.
3. MODULATING OPPOSED BLADE DAMPER.

ELECTRIC HEATING SCHEDULE

ID	MANUFACTURER AND MODEL NUMBER	LOCATION	TYPE	CFM (HI/LOW)	WATTS (LF)	AMPS (HI/LOW)	VOLT/PH/HZ	QUANTITY	PHYSICAL LENGTH/ WIDTH/ HEIGHT (IN)	PHYSICAL WEIGHT	NOTES
RCP-1	MARKEL CP805	RESTROOMS	RADIANT CEILING PANEL	-	500	2.4	208	2	48" x 24" x 1"	20	1
UH-1	MARKEL F1FUH10CA1	BASEMENT STORAGE	HORIZONTAL DISCHARGE	575	10 KW	48.1	208/1/60	2	11" x 20" x 13"	50	2
CUH-1	MARKEL 63-33D05	VESTIBULE	CABINET	250/230	5 KW	17.6/9.2	208/3/60	1	33" x 9" x 25"	100	3
CUH-2	MARKEL 63-33D05	ENTRY	CABINET	250/230	5 KW	17.6/9.2	208/3/60	1	33" x 9" x 25"	100	4

1. UNITS TO BE MOUNTED PER MANUFACTURERS RECOMMENDATIONS. PROVIDE WITH THERMOSTAT. COORDINATE WITH ELECTRICAL.
2. UNIT TO BE MOUNTED WITH 1/4" THREADED ROD FROM STRUCTURE. MOUNT APPX. 7'-6" A.F.F.. PROVIDE WITH 24V REMOTE THERMOSTAT AND HEAT PURGE FAN DELAY SWITCH.
3. UNIT TO BE FULLY RECESSED IN CEIILING CAVITY. VERIFY MOUNTING WITH ARCHITECT. PROVIDE WITH 2-SPEED MOTOR, DISPOSABLE FILTER, AND REMOTE THERMOSTAT.
4. UNIT TO BE WALL MOUNTED. VERIFY MOUNTING WITH ARCHITECT. PROVIDE WITH 2-SPEED MOTOR, DISPOSABLE FILTER, AND REMOTE THERMOSTAT.

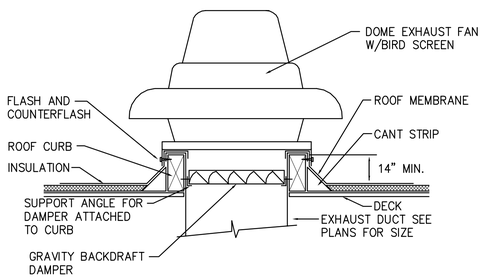

C1 / M601 EXHAUST FAN DETAIL
NO SCALE

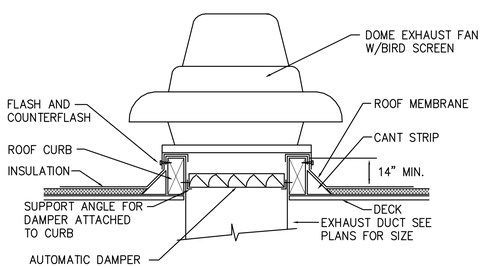

B1 / M601 RELIEF FAN DETAIL
NO SCALE

Eaton Architecture
77 West 200 South, Suite 302
Salt Lake City, UT 84101
Tel 801/328-2982 Fax 801/328-2111

CONSULTANTS

VAN BOERUM & FRANK ASSOCIATES INC.
WWW.VBFA.COM CONSULTING ENGINEERS
330 South 300 East 801.530.3148 T
Salt Lake City, UT 84111 801.530.3150 F
Project No. 6488

LICENSED PROFESSIONAL ENGINEER No. 4537 JOHN D. FRANK STATE OF UTAH

UTAH STATE VETERAN'S NURSING HOME
MULTIPURPOSE ROOM ADDITION

OWNER: UTAH STATE

MARK	DATE	DESCRIPTION
	06-15-07	

PROJECT NUMBER: 2006-32
DRAWING FILE:
DRAWN BY:
CHECKED BY:

COPYRIGHT 2003 EATON ARCHITECTURE, LLC

SHEET TITLE

MECHANICAL SCHEDULES & DETAILS

M601

OF

Click Here & Upgrade Expanded Features Unlimited Pages
PDF Complete

WIRING DEVICE SYMBOLS

SYMBOL	DESCRIPTION	MOUNTING	REMARKS
$	SINGLE-POLE TOGGLE SWITCH	+48"	
$a	SINGLE-POLE TOGGLE SWITCH	+48"	SUBSCRIPT KEYS SWITCH TO FIXTURES CONTROLLED.
$2	DOUBLE-POLE TOGGLE SWITCH	+48"	
$3	THREE-WAY TOGGLE SWITCH	+48"	
$4	FOUR-WAY TOGGLE SWITCH	+48"	
$K	KEY-OPERATED SINGLE-POLE TOGGLE SWITCH	+48"	
$P	SINGLE-POLE TOGGLE SWITCH WITH PILOT LIGHT	+48"	
$DIM	DIMMER SWITCH	+48"	RATE DIMMER SWITCH FOR MAXIMUM POSSIBLE WATTAGE
$TIM	TIMER SWITCH	+48"	
$$	(2) SINGLE-POLE TOGGLE SWITCH	+48"	DUAL LEVEL SWITCH OUTBOARD LAMPS SEPARATELY FROM INBOARD LAMPS.
$a LV	LOW VOLTAGE MOMENTARY CONTACT SWITCH	+48"	
$3PM	3-POSITION MOMENTARY CONTACT SWITCH	+48"	REFER TO DETAIL UP-ON; CENTER-NEUTRAL; DOWN-OFF
$3PN	3-POSITION MAINTAINED CONTACT SWITCH	+48"	UP-ON; CENTER-OFF; DOWN-ON
OCM	OCCUPANCY SENSOR	AS NOTED	CEILING MOUNTED WITH SUBSCRIPT 'C'; WALL-MOUNTED WITH SUBSCRIPT 'W'
	SPLIT-WIRED DUPLEX RECEPTACLE	+18"	
	SIMPLEX RECEPTACLE	+18"	
	DUPLEX RECEPTACLE	+18"	
	FOURPLEX RECEPTACLE	+18"	
	125/250V RECEPTACLE	+18"	RANGE -- NEMA 14-50R DRYER -- NEMA 14-30R
	GROUND FAULT CIRCUIT INTERRUPTER DUPLEX RECEPTACLE	+18"	
	GROUND FAULT CIRCUIT INTERRUPTER FOURPLEX RECEPTACLE	+18"	
	EMERGENCY DUPLEX RECEPTACLE	+18"	
	EMERGENCY FOURPLEX RECEPTACLE	+18"	
	MULTI-OUTLET ASSEMBLY	4" ABOVE BACKSPLASH	
	PONER / TELEPHONE POLE	FLOOR/CEILING	
	CORD DROP WITH DUPLEX RECEPTACLE	+18"	REFER TO DETAIL
(5-20R)	SPECIAL PURPOSE OUTLET	+18"	SUBSCRIPT IN PARENTHESIS INDICATES NEMA CONFIGURATION IF SHOWN. REFER TO DRAWINGS AND/OR EQUIPMENT SCHEDULES. CONFIRM EXACT CONFIGURATION WITH OWNER PRIOR TO INSTALLATION.

GEAR AND CONTROL SYMBOLS

SYMBOL	DESCRIPTION	MOUNTING	REMARKS
$T	MANUAL STARTER WITH THERMAL OVERLOAD(S)	AT EQUIPMENT	
	ELEGTRIC MOTOR		
	NON-FUSED DISCONNECT SWITCH	+60"	
	FUSED DISCONNECT SWITCH	+60"	
	CIRCUIT BREAKER AND ENCLOSURE	+60"	
	MAGNETIC STARTER	+60"	
	COMBINATION MAGNETIC STARTER / NON-FUSED DISCONNECT	+60"	
	COMBINATION MAGNETIC STARTER / FUSED DISCONNECT	+60"	
	COMB. MAGNETIC STARTER / MOTOR CIRCUIT PROTECTOR (MCP)	+60"	
VFD	COMB. VARIABLE FREQUENCY DRIVE / MOTOR CIRCUIT PROTECTOR (MCP)	FLOOR OR WALL AS SPECIFIED	TOP AT +72" IF WALL MOUNTED
RVS	REDUCED VOLTAGE STARTER	FLOOR OR WALL AS SPECIFIED	TOP AT +72" IF WALL MOUNTED
	LOAD CENTER (SURFACE-MOUNTED)	TOP AT +72"	14"W X 3"D
	LOAD CENTER (FLUSH-MOUNTED)	TOP AT +72"	14"W X 3"D
	LIGHTING AND APPLIANCE PANELBOARD (SURFACE-MOUNTED)	TOP AT +72"	20"W X 6"D
	LIGHTING AND APPLIANCE PANELBOARD (FLUSH-MOUNTED)	TOP AT +72"	20"W X 6"D
	PONER DISTRIBUTION PANELBOARD	WALL	THESE SYMBOLS ARE GENERAL IN NATURE AND MAY VARY IN SIZE AND SHAPE TO SUIT APPLICATION. CROSS HATCHING INDICATES "MAIN PANELBOARD OR SWITCHBOARD" NAME IS INDICATED IN SEMI-QUOTES (I.E. "L2A", "MDP")
	SWITCHBOARD	FLOOR	
	METER BASE	TOP AT +72"	
	OPEN - STOP - CLOSE SWITCH	+60"	FURNISH SWITCH UNLESS FURNISHED BY ANOTHER DIVISION. INSTALL AND CONNECT COMPLETE. REFER TO RELATED SPECIFICATION SECTIONS.
T	HVAC THERMOSTAT	+60"	PROVIDED BY DIVISION 23000 U.N.O.
	HAND - OFF - AUTO SWITCH	+60"	
GFI	GROUND FAULT PROTECTION		

SOUND SYSTEM SYMBOLS

SYMBOL	DESCRIPTION	MOUNTING	REMARKS
	RECESSED SPEAKER	CEILING	IF SHOWN, SUBSCRIPT INDICATES TYPE.
	SURFACE-MOUNTED SPEAKER	CEILING	
	WALL-MOUNTED SPEAKER	+90"	
SM	SENSING MICROPHONE	CEILING	
V	VOLUME CONTROL SWITCH	+48"	
	SOUND SYSTEM EQUIPMENT CABINET	+72" TO TOP OF CABINET	
M	MICROPHONE OUTLET	+18"	SUBSCRIPT "F" INDICATES TO MOUNT OUTLET IN FLOOR BOX
PANEL NAME	SOUND SYSTEM CABINET (WALL MOUNT)	TOP AT 72"	

SIGNAL BELL SYMBOLS

SYMBOL	DESCRIPTION	MOUNTING	REMARKS
B	BELL/CHIME	+90"	
	BUZZER	+90"	
	SIGNAL BELL PUSH BUTTON	+48"	

LIGHTING SYMBOLS

1. LIGHT FIXTURE SYMBOLS ARE GENERAL IN NATURE AND MAY BE SHOWN ON THE DRAWINGS IN VARIOUS SIZES AND SHAPES. REFER TO THE LIGHT FIXTURE SCHEDULE FOR SPECIFICATION INFORMATION.
2. ARROWS INDICATE AIMING DIRECTION.

SYMBOL	DESCRIPTION	MOUNTING	REMARKS
	ARM-MOUNTED SINGLE-HEAD LIGHT FIXTURE AND POLE	AS SPECIFIED OR DETAILED	
	ARM-MOUNTED DOUBLE-HEAD LIGHT FIXTURE AND POLE	AS SPECIFIED OR DETAILED	
	POST-TOP SINGLE-HEAD, LIGHT FIXTURE AND POLE	AS SPECIFIED OR DETAILED	
	WALL-MOUNTED FIXTURE	AS SPECIFIED OR DETAILED	REFER TO ARCHITECTURAL EXTERIOR ELEVATIONS FOR MOUNTING HEIGHT
	LIGHT BOLLARD	AS SPECIFIED OR DETAILED	
	FLOOD LIGHT	AS SPECIFIED OR DETAILED	
	RECESSED WALL FIXTURE OR STEP LIGHT	AS SPECIFIED OR DETAILED	REFER TO ARCHITECTURAL EXTERIOR ELEVATIONS FOR MOUNTING HEIGHT
	FLUORESCENT LIGHT FIXTURES	AS SPECIFIED OR DETAILED	
	PARABOLIC - LOUVERED LIGHT FIXTURES	AS SPECIFIED OR DETAILED	
	RECESSED INDIRECT FLUORESCENT LIGHT FIXTURES	AS SPECIFIED OR DETAILED	
	WALL-MOUNTED LINEAR FLUORESCENT LIGHT FIXTURE	AS SPECIFIED OR DETAILED	
	FLUORESCENT LINEAR WALL WASHER	AS SPECIFIED OR DETAILED	
	RECESSED DOWN LIGHT	AS SPECIFIED OR DETAILED	
	RECESSED WALL-WASHER OR DIRECTIONAL DOWNLIGHT	AS SPECIFIED OR DETAILED	IF SHOWN, ARROW INDICATES AIMING DIRECTION
	SURFACE OR PENDANT-MOUNTED LIGHT FIXTURE	AS SPECIFIED OR DETAILED	
	WALL-MOUNTED LIGHT FIXTURE	AS SPECIFIED OR DETAILED	REFER TO ARCHITECTURAL EXTERIOR ELEVATIONS FOR MOUNTING HEIGHT
	TRACK OR MONO-POINT LIGHT FIXTURE	AS SPECIFIED OR DETAILED	IF SHOWN, ARROW INDICATES AIMING DIRECTION
	WALL SCONCE	AS SPECIFIED OR DETAILED	
	FLUORESCENT EGRESS LIGHT FIXTURE	AS SPECIFIED OR DETAILED	THIS IS AN EXAMPLE OF AN EGRESS LIGHT FIXTURE. EGRESS LIGHT FIXTURES ARE HALF-SHADED DIAGONALLY.
	FLUORESCENT EMERGENCY (NON-EGRESS) LIGHT FIXTURE	AS SPECIFIED OR DETAILED	THIS IN AN EXAMPLE OF AN EMERGENCY (NON-EGRESS) LIGHT FIXTURE. EMERGENCY FIXTURES ARE FULLY-SHADED.
	CEILING MOUNTED EXIT SIGN	CEILING	DARKENED PORTION OF SIGN INDICATES FACE(S); ARROW(S) INDICATE CHEVRON DIRECTION(S)
	WALL-MOUNTED EXIT SIGN	WALL ABOVE DOOR	
	WALL-MOUNTED EXIT SIGN W/ EMERGENCY LIGHT FIXTURE	WALL ABOVE DOOR	
TC	TIME CLOCK		
	EMERGENCY LIGHT FIXTURE	AS NOTED	
P	ELEGTRIC PHOTOCELL	N/A	MOUNT ON ROOF FACING NORTH SKY
XX	LIGHT FIXTURE CALLOUT (LETTER DENOTES FIXTURE TYPE)		

FIRE ALARM SYMBOLS

SYMBOL	DESCRIPTION	MOUNTING	REMARKS
BDT	BEAM DETECTOR - TRANSMITTER	4" BELOW CEILING TO TOP OF DETECTOR	
BDR	BEAM DETECTOR - RECEIVER	4" BELOW CEILING TO TOP OF DETECTOR	
EOL	END OF LINE DEVICE	PER MANIFACTURER RECOMMENDATIONS	
T	TAMPER SWITCH	AT VALVE	
FI	WATER FLOW INDICATOR	ON FIRE RISER	
FSD	FIRE/SMOKE DAMPER	TOP AT 72"	
H	HEAT DETECTOR	CEILING	
S	SMOKE DETECTOR	CEILING	
S D	DUCT SMOKE DETECTOR	SIDE OF DUCT	
F	FIRE ALARM MANUAL STATION	+48"	
Z	CONTROL MODULE	AT DEVICE(S) TO BE CONTROLLED	
I	MONITOR MODULE	AT DEVICE(S) TO MONITOR	
R	FAN SHUTDOWN RELAY	AT FAN CONTROL PANEL	
D	MAGNETIC DOOR HOLDER	COORDINATE WITH DOOR INSTALLER	COORDINATE WITH DOOR INSTALLER; SUBSCRIPT "F" INDICATES TO MOUNT AT FLOOR LEVEL
WF	WATER FLOOD INDICATOR	FLOOR	
H	AUDIO HORN	MOUNT AT LESSOR OF EITHER 80" AFF OR 6" BELOW CEILING.	SUBSCRIPT "WP" INDICATES THAT A WEATHER PROOF BACK BOX IS REQ. SUBSCRIPT "C" INDICATES CEILING MOUNTING. NUMERIC SUBSCRIPT INDICATES CANDELLA RATING OF STROBE (I.E. - 15, 75, 110)
M	MINI AUDIO HORN		
S	FIRE ALARM VISUAL STROBE		
S	FIRE ALARM AUDIO/VISUAL HORN/STROBE		
S	MINI AUDIO/VISUAL HORN/STROBE		
S	FIRE ALARM AUDIO SPEAKER		
S	FIRE ALARM AUDIO/VISUAL SPEAKER/STROBE		
	FIRE PROTECTION SPRINKLER RISER BELL	+90"	FURNISHED BY FIRE PROTECTION CONTRACTOR AND INSTALLED AND CONNECTED BY DIV. 16000

ELECTRICAL SYMBOL SCHEDULE GENERAL NOTES

1. MOUNT ALL OUTLETS, DEVICES, AND EQUIPMENT AT HEIGHTS INDICATED BELOW, UNLESS NOTED OTHERWISE ON THE DRAWINGS. UNLESS NOTED OTHERWISE, HEIGHTS ARE GIVEN FROM FINISHED FLOOR TO CENTER OF OUTLET BOX.
2. WHERE OUTLETS, DEVICES, AND EQUIPMENT ARE NOTED BY THE SUBSCRIPTS "A", MOUNT AT 4" ABOVE COUNTER. IF COUNTER HAS A BACK SPLASH, MOUNT AT 4" ABOVE BACK SPLASH. REFER TO ARCHITECTURAL INTERIOR ELEVATIONS AND COORDINATE WITH CASEWORK SUPPLIER.
3. WHERE OUTLETS, DEVICES AND EQUIPMENT ARE NOTED BY THE SUBSCRIPT "A", MOUNT AT 4" ABOVE COUNTER. IF COUNTER HAS A BACK SPLASH, MOUNT AT 4" ABOVE BACK SPLASH. REFER TO ARCHITECTURAL INTERIOR ELEVATIONS AND COORDINATE WITH CASEWORK SUPPLIER.
4. NOT ALL ELECTRICAL SYMBOLS MAY BE USED.

GENERAL SYMBOLS

SYMBOL	DESCRIPTION	REMARKS
XX	KEYED NOTE	
1 E-1	DETAIL REFERENCE	TOP NUMBER INDICATES DETAIL NUMBER; BOTTOM LETTER-NUMBER INDICATES DRAWING SHEET WHERE DETAIL IS SHOWN; WHERE NOT SPECIFICALLY REFERENCED, DETAIL IS GENERAL IN NATURE AND SHALL APPLY WHERE APPLICABLE.
2 E-2	ELEVATION REFERENCE	TOP NUMBER INDICATES ELEVATION NUMBER; BOTTOM LETTER-NUMBER INDICATES WHERE ELEVATION IS SHOWN.
3 E-3	SECTION REFERENCE	TOP NUMBER INDICATES SECTION NUMBER; BOTTOM LETTER NUMBER INDICATES WHERE SECTION IS SHOWN.
100	ARCHITECTURAL ROOM NUMBER	
AHU 1	EQUIPMENT NAME / NUMBER	TOP NUMBER ABBREVIATES EQUIPMENT NAME OR TYPE; BOTTOM NUMBER INDICATES EQUIPMENT NUMBER. REFER TO EQUIPMENT SCHEDULE.
1	REVISION NUMBER	USED TO DENOTE CHANGES EITHER ISSUED BY ADDENDUM OR DURING CONSTRUCTION AND TO DENOTE RECORD DRAWING CHANGES.
	BREAKLINE	USED TO BREAK DRAWINGS.

BRANCH CIRCUITING SYMBOLS

	1 CIRCUIT, 2 WIRE BRANCH CIRCUIT HOME RUN TO PANEL	ARROWS: NUMBER OF ARROWS INDICATES NUMBER OF CIRCUITS REQUIRED. SHORT CROSS LINES: NUMBER OF SHORT CROSS LINES INDICATES NUMBER OF PHASE, TRAVELER, AND/OR SWITCHED CONDUCTORS REQUIRED IF GREATER THAN 1 (ONE). LONG CROSS LINES: NUMBER OF LONG CROSS LINES INDICATES NUMBER OF NEUTRAL CONDUCTORS REQUIRED FOR MULTI-WIRE HOME RUNS. EQUIPMENT GROUND AND ISOLATED GROUND CONDUCTORS: EQUIPMENT GROUND AND ISOLATED GROUND CONDUCTORS ARE NOT SHOWN, BUT ARE REQUIRED AS NOTED ON THE DRAWINGS OR IN THE SPECIFICATIONS.
	2 CIRCUIT, 3 WIRE BRANCH CIRCUIT HOME RUN TO PANEL	
	3 CIRCUIT, 4 WIRE BRANCH CIRCUIT HOME RUN TO PANEL	
	MULTIPLE WIRE BRANCH CIRCUITING BETWEEN FIXTURES, SWITCHES, DEVICES, ETC.	
	BRANCH CIRCUITING (U.N.O.) TURNED UP OR TOWARDS OBSERVER.	
	BRANCH CIRCUITING (U.N.O.) TURNE	

IBOL

PANEL NAME	ELECTRONIC SYSTEM PANELBOARD (SURFACE MOUNT)	TOP AT 72"	ELEGTRONIC SYSTEMS MAY INCLUDE BUT ARE NOT SPECIFICALLY LIMITED TO, TELEPHONE, DATA, TELEVISION, LIGHTING CONTROL, CLOCKS, FIRE ALARM, ACCESS CONTROL, SECURITY, CCTV, SOUND SYSTEM, NURSE CALL, OR INTERCOM.
PANEL NAME	ELEGTRONIC SYSTEM PANELBOARD (FLUSH MOUNT)	TOP AT 72"	
	ELECTRONIC SYSTEM TERMINAL BOARD	TOP AT 72"	

TELEPHONE / DATA SYMBOLS

SYMBOL	DESCRIPTION	MOUNTING	REMARKS
	TELEPHONE OUTLET	+18"	
	DATA OUTLET	+18"	
	COMBINATION TELEPHONE/DATA OUTLET	+18"	

ELECTRICAL SHEET INDEX

E0001	SYMBOL SCHEDULE
ED101	MAIN LEVEL ELECTRICAL DEMOLITION PLAN
EL101	MAIN LEVEL LIGHTING PLAN
EL102	BASEMENT LEVEL LIGHTING PLAN
EL601	LIGHT FIXTURE SCHEDULE
EP101	MAIN LEVEL POWER PLAN
EP102	BASEMENT LEVEL POWER PLAN
EP103	ROOF POWER PLAN
EP701	ONE-LINE DIAGRAM
EP702	EQUIPMENT & PANELBOARD SCHEDULES

ABBREVIATION SCHEDULE

NOTE: NOT ALL ABBREVIATIONS MAY BE USED.

A	ABOVE COUNTER	ISO	ISOLATED
A	AMP OR AMPS	KVA	KILO VOLT AMPERES
ADJ	ADJACENT	KW	KILOWATTS
AFF	ABOVE FINISHED FLOOR	LFMC	LIQUID-TIGHT METAL CONDUIT
AHJ	AUTHORITY HAVING JURISDICTION	LFNC	LIQUID-TIGHT NONMETAL CONDUIT
AL	ALUMINUM	MCA	MINIMUM CIRCUIT AMPS
C	CONDUIT	MLO	MAIN LUGS ONLY
CB	CIRCUIT BREAKER	N.C.	NORMALLY CLOSED
CKT	CIRCUIT	N.I.C.	NOT IN CONTRACT
C.O.'S	CONVENIENCE OUTLETS	N.L.	NIGHT LIGHT
CU	COPPER	N.O.	NORMALLY OPEN
EA	EACH	O.C.	ON CENTER(S)
ELEC	ELECTRICAL	OCP	OVER CURRENT PROTECTION
EM	EMERGENCY	QTY	QUANTITY
EMT	ELEGTRIC METALLIC TUBING	R	REMOVE
ENT	ELEGTRIC NONMETALLIC TUBING	REQ.	REQUIREMENTS
EQUIP	EQUIPMENT	RMC	RIGID METAL CONDUIT
EWC	ELEGTRIC WATER COOLER	RNC	RIGID NONMETALLIC CONDUIT
E, EX	EXISTING	RR	REMOVE AND RELOCATE
EXP	EXPLOSION PROOF	SS	SURGE SUPPRESSION
FA	FIRE ALARM	SCP	SECURITY CONTROL PANEL
FACP	FIRE ALARM CONTROL PANEL	TR	TAMPER RESISTANT
FLA	FULL LOAD AMPS	TYP	TYPICAL
FMC	FLEXIBLE METAL CONDUIT	TVSS	TRANSIENT VOLTAGE SURGE SUPPRESSOR
FOB	FREIGHT ON BOARD	UF	UNDER FLOOR
GND	GROUND CONDUCTOR	UG	UNDERGROUND
HOA	HAND-OFF-AUTO	U.N.O.	UNLESS NOTED OTHERWISE
HP	HORSE POWER	W/	WITH
IG	ISOLATED GROUND	WP	WEATHER PROOF
IMC	INTERMEDIATE METAL CONDUIT	XFMR	TRANSFORMER
INS	INSULATED		

GENERAL PROJECT NOTES:

1. DIVISION 26000 CONTRACTOR
2. C , AT THEIR DISCRETION WITH THE ELEGTRICAL ENGINEER AND REVIEW THE DRAWINGS AND SPECIFICATIONS. THE MEETING SHALL BE A MAXIMUM OF ONE HOUR AND SHALL TAKE PLACE AT THE ENGINEER'S OFFICE.
3. THE FOLLOWING ITEMS ARE SOME OF THE REQUIREMENTS THAT ARE LISTED IN THE SPECIFICATIONS, THESE ITEMS DO NOT REPRESENT ALL ITEMS AND THE CONTRACTOR IS RESPONSIBLE FOR MEETING ALL REQUIREMENTS OF THE SPECIFICATIONS:
   A. INSULATED THROAT CONNECTORS OR PLASTIC BUSHINGS SHALL BE UTILIZED FOR ALL CONDUIT SIZES USED ON THIS PROJECT.
   B. A #10 AWG NEUTRAL CONDUCTOR WILL BE PROVIDED FOR ALL FLUORESCENT LIGHTING CIRCUITS.
   C. THE CONTRACTOR IS RESPONSIBLE FOR UPSIZING CONDUCTORS FOR VOLTAGE DROP PER THE NEC REGARDLESS OF WHETHER IT IS SHOWN ON THE PLANS OR NOT.
   D. THE CONTRACTOR SHALL LABEL ALL ELEGTRICAL EQUIPMENT AS IT IS CALLED OUT IN THE SPECIFICATIONS.
   E. THE CONTRACTOR SHALL PROVIDE SEISMIC SUPPORT AND BRACING FOR ALL ELEGTRICAL EQUIPMENT AS REQUIRED BY LOCAL AND NATIONAL CODE.
4. THE CONTRACTOR SHALL FOLLOW THE PANELBOARD SCHEDULES AS INDICATED IN THE DRAWINGS. EACH CIRCUIT BREAKER HAS BEEN ASSIGNED A SPECIFIC AREA OF THE BUILDING. NO DEVIATION WILL BE ALLOWED WITHOUT THE APPROVAL FROM THE ELEGTRICAL ENGINEER.
5. THE CONTRACTOR SHALL INSTALL PROPER WIRE SIZE AS CALLED OUT ON THE PANELBOARD SCHEDULES. HOWEVER, THE CONTRACTOR IS RESPONSIBLE TO ENSURE THE WIRE IS LARGE ENOUGH FOR VOLTAGE DROP.
6. THE CONTRACTOR SHALL VERIFY ALL MECHANICAL OVERPROTECTION DEVICES FOR THE ACTUAL MECHANICAL EQUIPMENT SUPPLIED ON THE JOB, PRIOR TO RELEASE OF ANY ELEGTRICAL DISTRIBUTION EQUIPMENT. CONTACT THE ELEGTRICAL ENGINEER WITH ANY DISCREPANGIES.
7. THE CONTRACTOR SHALL VISIT THE SITE BEFORE SUBMITTING THE BID, AND SHALL EXAMINE ALL PHYSICAL CONDITIONS WHICH MAY BE MATERIAL TO THE PERFORMANCE OF HIS WORK. NO EXTRA PAYMENTS WILL BE ALLOWED TO THE CONTRACTOR AS A RESULT OF EXTRA WORK MADE NECESSARY BY HIS FAILURE TO DO SO. ANY CASE OF DISCREPANCY OR LACK OF CLARITY SHALL BE PROMPTLY IDENTIFIED TO THE OWNER'S REPRESENTATIVE AND THE ENGINEER FOR CLARIFICATION.
8. THE CONTRACTOR SHALL MAKE SURE THAT ALL BRANCH CIRCUITS THAT ARE AFFECTED BY THIS PROJECT ARE NOT OVERLOADED. PROVIDE ADDITIONAL BRANCH CIRCUITS FROM ELEGTRICAL PANELS AS NECESSARY TO COMPLY WITH THE BRANCH CIRCUIT LOADING REQUIREMENTS. PROVIDE ALL MATERIAL AND LABOR AS NECESSARY FOR A COMPETE AND OPERATING SYSTEM.
9. PROVIDE UPDATED, TYPED PANELBOARD SCHEDULE(S) TO REFLECT ALL THE CHANGES MADE INCLUDING EXISTING LOADS. THE EXISTING LOADS SHALL BE NAMED THE SAME AS LISTED ON THE EXISTING PANELBOARD SCHEDULE.

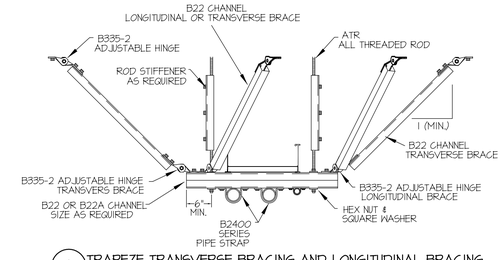

1 TRAPEZE TRANSVERSE BRACING AND LONGITUDINAL BRACING
SCALE: NONE

Eaton Architecture
77 West 200 South, Suite 302
Salt Lake City, UT 84101
Tel 801/328-2982 Fax 801/328-2111

CONSULTANTS

Electrical Engineering & Lighting Design by:
ENVISION ENGINEERING
Direction. Then Velocity.
244 West 300 North, Suite 100
Salt Lake City, Utah 84103
801.534.1130 ph 801.534.1080 fax

REGISTERED PROFESSIONAL ENGINEER
DAVID P. WHITTON
No.264397
STATE OF UTAH

UTAH STATE VETERAN'S NURSING HOME

CHAPEL / MULTIPURPOSE ROOM ADDITION
700 FOOTHILL BOULEVARD, SALT LAKE CITY, UTAH 84113

OWNER
UTAH D.F.C.M.

MARK	DATE	DESCRIPTION
	06-15-07	REBID SET

PROJECT NUMBER:	2006-195
DRAWN BY:	BRT
DESIGNED BY:	RVV
CHECKED BY:	DPW

COPYRIGHT 2003 EATON ARCHITECTURE, LLC

SHEET TITLE

SYMBOL SCHEDULE

EG001

OF

01 EL101 ELECTRICAL DEMOLITION PLAN
SCALE: 1/8" = 1'-0"

NORTH

KEYED NOTES:

1. REMOVE GFCI OUTLET & RELOCATE AND CIRCUIT AS INDICATED ON SHEET EP101. PROVIDE NON-GFCI DUPLEX OUTLET.
2. REMOVE AND REPLACE DEVICES INTERFERING WITH CONSTRUCTION AS MAY BE REQUIRED.
3. EXISTING LIGHT FIXTURES IN THIS AREA ARE TO BE RE-USED USE EXISTING CIRCUIT.

GENERAL NOTES:

1. DEVICE LOCATIONS & CIRCUITS SHOWN ARE FROM THE AS-BUILT DRAWINGS. CONTRACTOR TO FIELD VERIFY EXACT CIRCUITING & DEVICE LOCATIONS PRIOR TO BID.

GENERAL DEMOLITION NOTES:

1. UNLESS SPECIFICALLY NOTED OTHERWISE, REMOVE ALL ELECTRICAL ITEMS SHOWN IN DARK & DASHED LINES. LIGHT & SOLID LINES ARE TO REMAIN. DEMOLITION ITEMS ARE SHOWN TO GIVE A BASIC DESCRIPTION OF THE EXTENT OF DEMOLITION WORK, BUT MAY NOT BE INCLUSIVE. PROVIDE DEMOLITION WORK IN ACCORDANCE WITH THE FOLLOWING REQUIREMENTS:

   A. DISCONNECT AND REMOVE ANY/ALL FIXTURES, DEVICES, EQUIPMENT, ETC. REQUIRED FOR PROPER COMPLETION OF THE WORK WHETHER SHOWN OR NOT.

   B. RELOCATE, REWIRE, AND/OR RECONNECT ANY/ALL FIXTURES, DEVICES, EQUIPMENT, ETC. THAT FOR ANY REASON OBSTRUCTS CONSTRUCTION.

   C. LEAVE ALL EXITING FIXTURES, DEVICES, EQUIPMENT, ETC. IN PORTIONS OF THE BUILDING NOT BEING REMODELED, IN WORKING CONDITION. RESTORE ALL INTERRUPTED BRANCH CIRCUITS, FEEDERS,ETC.

   D. REMOVE AND DISPOSE OF ALL RACEWAYS, CONDUCTORS, BOXES, DEVICES, EQUIPMENT, ETC. THAT ARE NOT TO BE REUSED. TERMINATE AT ACCESSABLE JUNCTION BOX BY PROVIDING PROPER KNOCK-OUT CLOSURE, TAPE CONDUCTORS, LABEL AS "SPARE" WITH CIRCUIT NO., ZONE NO, OR OTHER CHARACTERISTIC IDENTIFYING SOURCE.

   E. EXISTING RACEWAYS MAY BE REUSED, IF IN PLACE, WHERE POSSIBLE, AND WHERE IN COMPLIANCE WITH THE SPECIFICATIONS AND THE INTENT OF THE CONTRACT DOCUMENTS. UPGRADE AND OR PROVIDE NEW CONDUIT SUPPORTS WHERE NECESSARY FOR ALL RACEWAYS BEING REUSED. INSURE INTEGRITY OF EXISTING RACEWAYS BEFORE REUSE.

   F. CONCEAL ALL RACEWAY AND WIRING IN EXISTING WALLS, CEILINGS, FLOORS, ETC. THE USE OF WIREMOLD IS PERMITTED ONLY WHERE SPECIFICALLY NOTED ON DRAWING.

   G. DO NOT PENETRATE STRUCTURAL ELEMENTS OF FLOORS, WALLS, CEILINGS, ROOFS, ETC.

   H. COORDINATE WITH OWNER WHAT EQUIPMENT SHOULD BE DISPOSED OF AND WHAT EQUIPMENT IS TO BE RETURNED TO OWNER.

   I. COMPLETELY REMOVE ALL TELEPHONE OR DATA CABLES WHICH ARE TO BE REMOVED BACK TO SOURCE OR AS DIRECTED BY OWNER.

Eaton architecture
77 West 200 South, Suite 302
Salt Lake City, UT 84101
Tel 801/328-2982 *Fax* 801/328-2111

CONSULTANTS

Electrical Engineering & Lighting Design by:
ENVISION ENGINEERING
Direction. Then Velocity.
244 West 300 North, Suite 100
Salt Lake City, Utah 84103
801.534.1130 ph 801.534.1080 fax

REGISTERED PROFESSIONAL ENGINEER
DAVID P. WHITTON
No.264397
STATE OF UTAH

UTAH STATE VETERAN'S NURSING HOME

CHAPEL / MULTIPURPOSE ROOM ADDITION
700 FOOTHILL BOULEVARD, SALT LAKE CITY, UTAH 84113

OWNER
UTAH D.F.C.M.

MARK	DATE	DESCRIPTION
	06-15-07	REBID SET

PROJECT NUMBER:	2006-195
DRAWN BY:	BRT
DESIGNED BY:	RVV
CHECKED BY:	DPW

COPYRIGHT 2003 EATON ARCHITECTURE, LLC

SHEET TITLE

MAIN LEVEL
ELECTRICAL DEMOLITION PLAN

ED101

OF

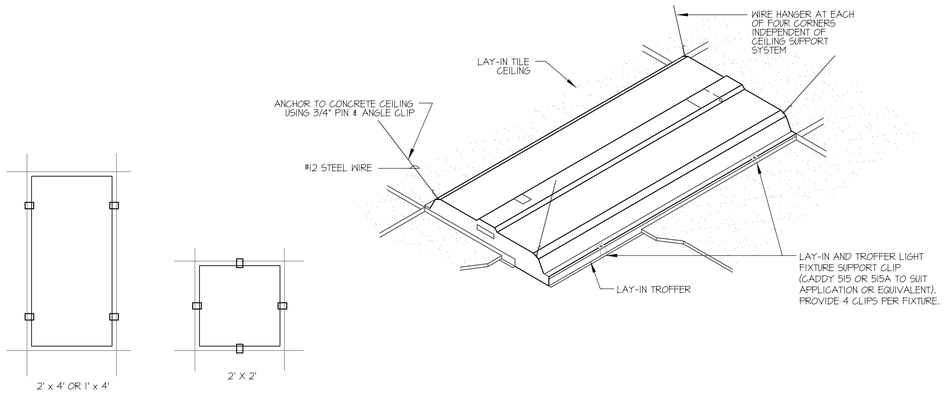

1 LIGHT FIXTURE SUPPORT DETAIL
SCALE: NONE

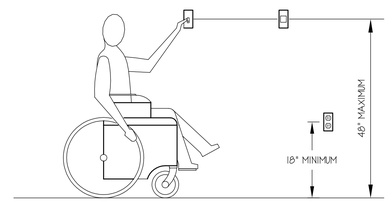

4 ADA ELEVATION DETAIL
SCALE: NONE

KEYED NOTES:

1. EXISTING DEVICES IN NEW LOCATION, USE EXISTING CIRCUIT. EXTEND BRANCH CIRCUITING AS REQUIRED FOR A COMPLETE SYSTEM.
2. RELOCATED EXISTING FIXTURES, UTILIZE EXISTING CIRCUIT AND CEILING GRID. EXTEND BRANCH CIRCUITING AS REQUIRED FOR A COMPLETE SYSTEM.
3. PROVIDE 2 POWER PACKS, ONE FOR NORMAL POWER AND ONE FOR EMERGENCY POWER.
4. APPROXIMATE SITE LIGHTING ROUTE TO 'LCI' FROM AS-BUILT DRAWINGS. CONTRACTOR TO PREVENT LOSS OF SITE LIGHTING DURING CONSTRUCTION.

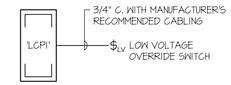

5 LIGHTING CONTROL RISER DIAGRAM
SCALE: NONE

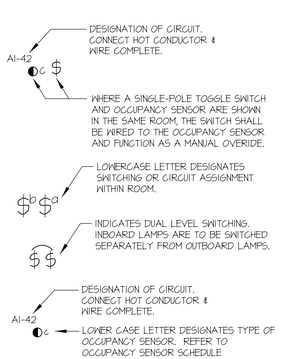

2 TYPICAL SWITCHING CONVENTIONS
SCALE: NONE

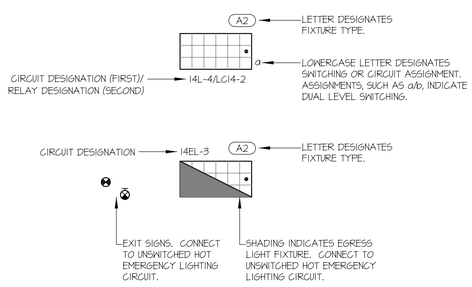

3 TYPICAL LIGHT FIXTURE CONVENTION
SCALE: NONE

01 LIGHTING PLAN
EL101 SCALE: 1/8" = 1'-0"

NORTH

Eaton Architecture
77 West 200 South, Suite 302
Salt Lake City, UT 84101
Tel 801/328-2982 Fax 801/328-2111

CONSULTANTS

Electrical Engineering & Lighting Design by:
ENVISION ENGINEERING
Direction. Then Velocity.
244 West 300 North, Suite 100
Salt Lake City, Utah 84103
801.534.1130 ph 801.534.1080 fax

REGISTERED PROFESSIONAL ENGINEER
DAVID P. WHITTON
No.264397
STATE OF UTAH

UTAH STATE VETERAN'S NURSING HOME

CHAPEL / MULTIPURPOSE ROOM ADDITION
700 FOOTHILL BOULEVARD, SALT LAKE CITY, UTAH 84113

OWNER
UTAH D.F.C.M.

MARK	DATE	DESCRIPTION
	06-15-07	REBID SET

PROJECT NUMBER:	2006-195
DRAWN BY:	BRT
DESIGNED BY:	RVV
CHECKED BY:	DPW

COPYRIGHT 2003 EATON ARCHITECTURE, LLC

SHEET TITLE

MAIN LEVEL
LIGHTING PLAN

EL101

OF

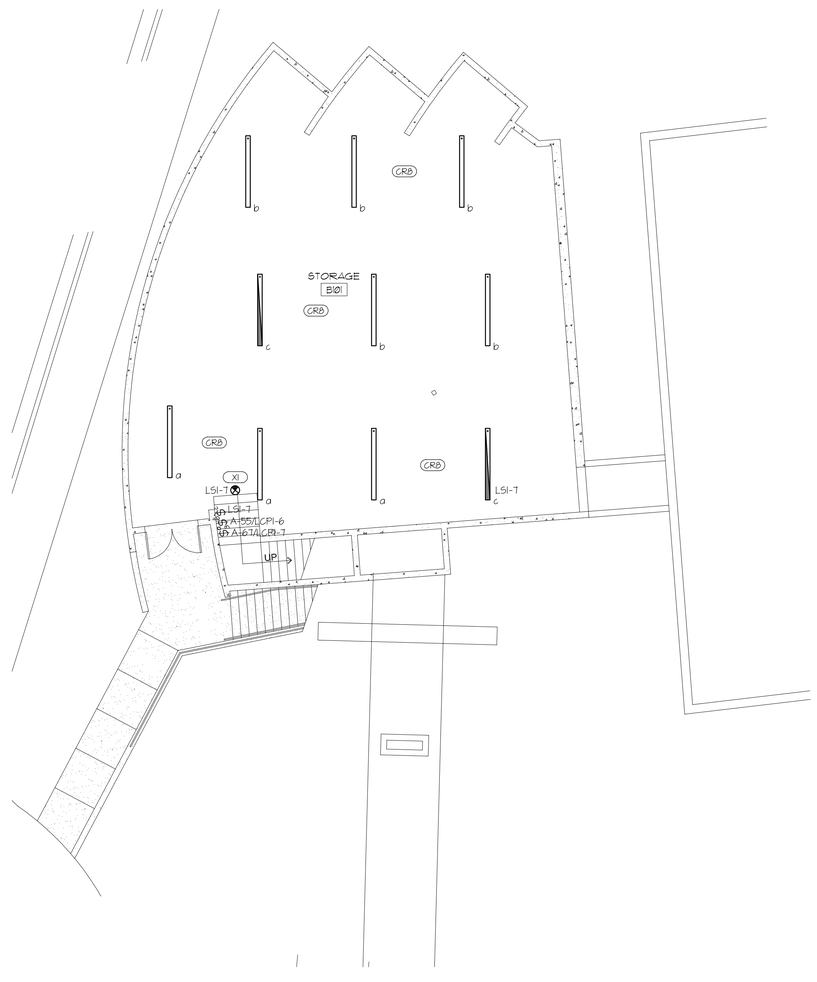

01 / EL102 BASEMENT LIGHTING PLAN
SCALE: 1/8" = 1'-0"

NORTH

Eaton architecture
77 West 200 South, Suite 302
Salt Lake City, UT 84101
Tel 801/328-2982 *Fax* 801/328-2111

CONSULTANTS

Electrical Engineering & Lighting Design by:

ENVISION ENGINEERING
Direction. Then Velocity.
244 West 300 North, Suite 100
Salt Lake City, Utah 84103
801.534.1130 ph 801.534.1080 fax

REGISTERED PROFESSIONAL ENGINEER
DAVID P. WHITTON
No.264397
STATE OF UTAH

UTAH STATE VETERAN'S NURSING HOME

CHAPEL / MULTIPURPOSE ROOM ADDITION
700 FOOTHILL BOULEVARD, SALT LAKE CITY, UTAH 84113

OWNER
UTAH D.F.C.M.

MARK	DATE	DESCRIPTION
	06-15-07	REBID SET

PROJECT NUMBER:	2006-195
DRAWN BY:	BRT
DESIGNED BY:	RVV
CHECKED BY:	DPW

COPYRIGHT 2003 EATON ARCHITECTURE, LLC

SHEET TITLE

BASEMENT LEVEL
LIGHTING PLAN

EL102

OF

LIGHT FIXTURE SCHEDULE

TYPE	MANUFACTURER	SERIES	DESCRIPTION	VOLTAGE	LOAD (VA)	MOUNTING	LAMPS					REMARKS
							NUMBER	TYPE	WATTS	COLOR (KELVIN)	CRI	
AW1	DAYBRITE	WL1	WALL LIGHT UL LISTED FOR WET LOCATIONS DISTRIBUTION STYLE: WALL PHOTOCELL	120	190	DIRECT-DOWN	1	HIGH PRESSURE SODIUM VERTICAL ORIENTATION ONLY COATED LAMP FOR REDUCED GLARE TCLP COMPLIANT	150	2200	22	
AW2	DAYBRITE	WL1	WALL LIGHT UL LISTED FOR WET LOCATIONS DISTRIBUTION STYLE: WALL PHOTOCELL	120	84	DIRECT-DOWN	2	TRIPLE TUBE COMPACT FLURESCENT VERTICAL ORIENTATION ONLY COATED LAMP FOR REDUCED GLARE TCLP COMPLIANT	42	2700	82	
CR8	COLUMBIA METALUX LSI LITHONIA	CSR IC F20 TAF10	HEAVY-DUTY INDUSTRIAL LENGTH: 8' ELECTRONIC BALLAST(S): QTY:1; THD: <10%	120	128	CHAIN	4	48" LINEAR T8 FLUORESCENT TCLP COMPLIANT	32	3500	86	
DF	GOTHAM PORTFOLIO	AFV C6042	OPEN REFLECTOR COMPACT FLUORSECENT DOWNLIGHT APPERATURE: 6" REFLECTOR TYPE: CLEAR REFLECTOR FINISH: SPECULAR LOW IRID. MAXIMUM RECESS DEPTH: 11" ELECTRONIC BALLAST: <10% THD	120	42	RECESSED	1	TRIPLE TUBE COMPACT FLURESCENT TCLP COMPLIANT	42	3500	82	
DN1	PRESCOLITE CAPRI PORTFOLIO GOTHAM	LVH4/LV5 LVM6 HA3MR DLV	OPEN REFLECTOR INCANDESCENT DOWNLIGHT APERTURE: 4" PINHOLE ADJUSTABLE WITH BLACK MILLIGROVE BAFFLE AND MATTE WHITE TRIM RING MAXIMUM RECESS DEPTH: 6"	120	75	RECESSED	1	MR16 TCLP COMPLIANT	75	2800	100	
GA2	LITHONIA METALUX	26T8 26G8	GENERAL PURPOSE SPECIFICATION PREMIUM TROFFER DIMENSIONS: 2W X 4'L X 3-3/16"D 2W X 4'L X 3-11/16"D DOOR FRAME: REGRESSED WHITE ALUMINUM DIFFUSER TYPE: .125" THICK #12 PATTERN ACRYLIC .187" THICK ACRI-TUFF ELECTRONIC BALLAST(S): QTY: 1; THD: <10%	120	64	LAY-IN GRID	2	48" LINEAR T8 FLUORESCENT TCLP COMPLIANT	32	3500	86	
PF	EVERGREEN	MET-S	DECORATIVE PENDANT 10"WX23"D	120	128	PENDANT	4	TRIPLE TUBE COMPACT FLURESCENT TCLP COMPLIANT	32	3500	82	
SW4	LITHONIA METALUX	LB W6	LOW-PROFILE WRAPAROUND DIMENSIONS: 10"W X 4'L X 3"D NUMBER OF LAMPS IN CROSS SECTION: 2 ELECTRONIC BALLAST(S): QTY: 1; THD: <10%	120	64	SURFACE	2	48" LINEAR T8 FLUORESCENT TCLP COMPLIANT	32	3500	86	
T1	LITHONIA HALO	LT L650 SERIES	ONE CIRCUIT TRACK LENGTH: (REFER TO LIGHTING PLAN) COLOR: WHITE PROVIDE ALL ACCESSORIES AS REQUIRED FOR A COMPLETE SYSTEM	120	75 VA / FT	SURFACE	N/A	N/A	N/A	N/A	N/A	
TH	LITHONIA HALO	LTC LT131	TRACK HEAD INCANDESCENT LINE VOLTAGE GIMBAL RING DIMENSIONS: 4" APERATURE, 4-7/8" LONG, 8" HIGH COLOR: WHITE	120	75	TRACK	1	PAR30 HALOGEN FLOOD TCLP COMPLIANT	75	3000	100	
WB4	METALUX DAY-BRITE	CD BC	WALL-MOUNTED FLUORESCENT FIXTURE DIMENSIONS: 1'-5/8"W X 49"L X 3.5"D NUMBER OF LAMPS IN CROSS SECTION: 2 ELECTRONIC BALLAST(S): QTY: 1; THD: <10%	120	64	WALL ABOVE MIRROR	2	48" LINEAR T8 FLUORESCENT TCLP COMPLIANT	32	3500	86	
X1	LITHONIA SURELITE	LQM LPX	LED POLYCARBONATE EXIT SIGN OPERATION: AC ONLY EMERGENCY FACE TYPE: STENCIL HOUSING COLOR: WHITE NUMBER OF FACES: 1 LETTER COLOR: GREEN	120	10	UNIVERSAL	1	LAMP INCLUDED TCLP COMPLIANT	4	N/A	N/A	

LIGHT FIXTURE ABBREVIATION SCHEDULE

NOTE: NOT ALL ABBREVIATIONS WILL NECESSARILY BE USED.

A.F.F.	ABOVE FINISHED FLOOR
WALL@CLG.	WALL MOUNT AT CORNER OF WALL AND CEILING
CCBA	CUSTOM PAINTED COLOR AS SELECTED BY THE ARCHITECT
SCBA	STANDARD PAINTED COLOR AS SELECTED BY THE ARCHITECT
CFBA	CUSTOM FINISH AS SELECTED BY THE ARCHITECT
SFBA	STANDARD FINISH AS SELECTED BY THE ARCHITECT
MOD	MODIFY STANDARD LIGHT FIXTURE AS INDICATED

LIGHT FIXTURE GENERAL NOTES

1. REFER TO THE ARCHITECTURAL REFLECTED CEILING PLANS FOR LOCATIONS OF LIGHT FIXTURES. BRING ALL DISCREPANCIES OF LOCATIONS AND QUANTITIES TO THE ATTENTION OF THE ARCHITECT AND ELECTRICAL ENGINEER PRIOR TO BIDDING.
2. REFER TO ARCHITECTURAL ELEVATIONS FOR MOUNTING HEIGHTS AND LOCATIONS OF LIGHT FIXTURES. BRING ALL DISCREPANCIES TO THE ATTENTION OF THE ARCHITECT PRIOR TO BIDDING.
3. REFER TO THE SPECIFICATIONS FOR OTHER LIGHT FIXTURE, BALLAST, AND LAMP REQUIREMENTS AND ACCEPTABLE MANUFACTURERS.
4. REFER TO ARCHITECTURAL DRAWINGS FOR LOUVER REQUIREMENTS (IF ANY).
5. CONFIRM AVAILABLE MOUNTING DEPTHS OF ALL LIGHT FIXTURES AND COMPARE WITH DEPTHS SHOWN ON SHOP DRAWING. BRING ALL POTENTIAL CONFLICT AREAS TO THE ATTENTION OF THE ARCHITECT AND ELECTRICAL ENGINEER PRIOR TO RELEASE.

BIDDING REQUIREMENTS

1. BID ONLY PRODUCTS THAT ARE SPECIFIED OR APPROVED BY ADDENDUM.
2. PACKAGING OF LIGHT FIXTURES WITH OTHER SYSTEMS IS NOT ALLOWED.
3. WHEN ONLY ONE PRODUCT IS APPROVED FOR BIDDING, THE PRICE FOR THAT ITEM SHALL BE BROKEN OUT SEPARATELY WHEN SUBMITTING PRICING TO VARIOUS DISTRIBUTORS AND/OR CONTRACTORS.
4. WHEN A CONTRADICTION EXISTS BETWEEN A SPECIFIC MODEL NUMBER AND THE DESCRIPTION, THE DESCRIPTION SHALL GOVERN.

LIGHT FIXTURE PRIOR APPROVAL REQUIREMENTS

1. PRIOR APPROVAL IS REQUIRED BEFORE BIDDING THIS PROJECT.
2. PRIOR APPROVALS SHALL BE SUBMITTED TO THE ELECTRICAL ENGINEER'S OFFICE AT LEAST (8) EIGHT WORKING DAYS BEFORE THE BID. PRIOR APPROVALS RECEIVED AFTER THIS TIME PERIOD SHALL BE REJECTED.
3. PRIOR APPROVALS SHALL BE SIGNED BY A PRINCIPAL OF THE SUBMITTING ORGANIZATION STATING THAT THEY HAVE PREPARED AND/OR REVIEWED THE SUBMITTAL AND THAT THE PRODUCTS PROPOSED ARE EQUIVALENT TO THOSE SPECIFIED. ANY EXCEPTIONS SHALL BE SO NOTED.
4. ITEMS THAT ARE SUBMITTED AND HAVE BEEN APPROVED WILL BE LISTED IN THE ADDENDUM(S). VERBAL APPROVAL WILL NOT BE GIVEN ON ANY ITEM.
5. IT IS NOT THE RESPONSIBILITY OF THE ELECTRICAL ENGINEER TO NOTIFY THE SUBMITTING PARTY OF ERRORS IN THE SUBMITTAL. NOTIFICATION OF ERRORS BY THE ELECTRICAL ENGINEER PRIOR TO ISSUANCE OF THE ADDENDUM(S) MAY NOT BE GIVEN.
6. PRIOR APPROVALS SHALL CONSIST OF TWO SETS OF CUT SHEETS DESCRIBING THE PRODUCTS BEING SUBMITTED AS EQUIVALENTS. FAXES ARE NOT ACCEPTABLE. ALL SPECIFICATION INFORMATION SHALL BE CLEARLY MARKED, WITH NON-APPLICABLE INFORMATION CROSSED OUT. COMPLETE PHOTOMETRIC DATA SHALL BE PROVIDED. PRODUCTS WITHOUT PHOTOMETRIC DATA WILL BE NOT BE APPROVED.

Eaton Architecture
77 West 200 South, Suite 302
Salt Lake City, UT 84101
Tel 801/328-2982 Fax 801/328-2111

CONSULTANTS

Electrical Engineering & Lighting Design by:
ENVISION ENGINEERING
Direction. Then Velocity.
244 West 300 North, Suite 100
Salt Lake City, Utah 84103
801.534.1130 ph 801.534.1080 fax

REGISTERED PROFESSIONAL ENGINEER
DAVID P. WHITTON
No.264397
STATE OF UTAH

UTAH STATE VETERAN'S NURSING HOME
CHAPEL / MULTIPURPOSE ROOM ADDITION
700 FOOTHILL BOULEVARD, SALT LAKE CITY, UTAH 84113

OWNER
UTAH D.F.C.M.

MARK	DATE	DESCRIPTION
	06-15-07	REBID SET

PROJECT NUMBER:	2006-195
DRAWN BY:	BRT
DESIGNED BY:	RVV
CHECKED BY:	DPW

COPYRIGHT 2003 EATON ARCHITECTURE, LLC

SHEET TITLE

LIGHT FIXTURE SCHEDULE

EL601

OF

FIRE ALARM SYSTEM NOTES:

1. PROVIDE FIRE ALARM SYSTEM DEVICES TO MATCH EXISTING INSTALLED.
2. CONFIRM ALL WIRING REQUIREMENTS WITH FIRE ALARM SYSTEM SUPPLIER AND PROVIDE IN ACCORDANCE THEREWITH.
3. THE SYSTEM SHALL BE PROGRAMMED SO THAT IF ANY INITIATION DEVICE IS ACTUATED, AN ALARM SIGNAL WHICH IS AUDIBLE WILL BE ACTIVATED.
4. WIRING SHALL BE CONTINUOS FROM ONE DEVICE TO ANOTHER. NO SPLICING IS ALLOWED.
5. PROVIDE NEW UPDATED FIRE ALARM MAP OF THE FLOOR SHOWING THE NEW DEVICES AS WELL AS THE EXISTING DEVICES.
6. ALL FIRE ALARM CABLING SHALL BE RAN IN CONDUIT. MINIMUM CONDUIT SIZE SHALL BE 3/4". CONTRACTOR SHALL SPRAY PAINT ALL JUNCTION BOXES ASSOCIATED WITH THE FIRE ALARM SYSTEM "FIRE ENGINE RED".
7. THE FIRE ALARM SYSTEM SUPPLIER SHALL PROVIDE A COMPUTER DRAFTED PLAN OF THE FIRE ALARM SYSTEM USING FLOOR PLANS PROVIDED BY THE ENGINEER. COMPLETE RISER & WIRING DIAGRAMS SHALL BE INCLUDED.
8. ALL NOTIFICATION DEVICE CIRCUIT VOLTAGE DROP CALCULATIONS SHALL BE DONE IN COMPLIANCE WITH NFPA 72 2002 SECTION 4.4.4.1. THE FIRE ALARM SYSTEM SUPPLIER TO DETERMINE THE AMOUNT NOTIFICATION DEVICE CIRCUITS THAT ARE REQUIRED BASED ON THE NUMBER OF NOTIFICATION DEVICES SHOWN ON THE DRAWINGS.
9. THE FIRE ALARM SYSTEM SUPPLIER SHALL SUBMIT THE FIRE ALARM INSTALLATION DRAWINGS AND SUBMITTAL TO THE LOCAL AUTHORITY HAVING JURISDICTION FOR APPROVAL PRIOR TO THE ROUGH-IN OF THE SYSTEM.
10. VERIFY AND COMPLY WITH ALL LOCAL AND NATIONAL CODES.
11. FIRE ALARM SYSTEM SUPPLIER TO PROVIDE A COPY OF PROGRAMMING CODES AND OPERATION MANUALS IN A SLEEVED BINDER ATTACHED TO THE FIRE ALARM CONTROL PANEL.

NOTE:

ALL FIRE ALARM EQUIPMENT AND OR DEVICES SHOWN LIGHT ARE EXISTING TO REMAIN. ALL FIRE ALARM EQUIPMENT AND OR DEVICES SHOWN DARK ARE NEW.

FIRE ALARM SYSTEM GENERAL NOTES:

1. ALL CABLING THAT IS NOT RAN IN CONDUIT ABOVE THE ACCESSIBLE CEILING SPACE SHALL BE PLENUM RATED AND COMPLY WITH I.M.C. SECTION 602.2.2.
2. PROVIDE 2 HR. RATED CABLE FOR ALL EMERGENCY SYSTEMS PER NEC 760.31-F AND NFPA 2002 6.9.4.

KEYED NOTES:

1. CONNECT NEW SPEAKER STROBE TO NEW NAC PANEL TO MATCH EXISTING DEVICES.
2. PROVIDE NEW FIRE ALARM TRANSPONDER PANEL. CONNECT TO EXISTING FIRE ALARM PANEL. REFER TO THE RISER DIAGRAM FOR ADDITIONAL INFORMATION.
3. RELOCATED EXISTING FIRE ALARM DEVICE.
4. NEW DUPLEX OUTLET IN EXISTING LOCATION.
5. CONDUIT FOR NEW PANEL 'CH' BELOW.
6. APPROXIMATE ROUTE SHOWN TO MDP IN ELEC ROOM 025. CONTRACTOR TO VERIFY EXACT LOCATION PRIOR TO BID.
7. EXTEND CONDUIT TO EXISTING MECHANICAL ROOM BELOW. REFER TO SHEET EP102 FOR CONTINUATION AND MORE INFORMATION.
8. ADA ACCESS PUSHBUTTON, MOUNT ON PEDESTAL. REFER TO ARCHITECTURAL PLANS FOR MORE INFORMATION.
9. PUSHBUTTON. COORDINATE LOCATION AND INSTALLATION WITH WITH DOOR INSTALLER.
10. INTERCEPT EXISTING FIRE ALARM INITIATION DEVICE LOOP AT THIS EXISTING DEVICE. EXTEND OUT TO PICK UP NEW DEVICES.

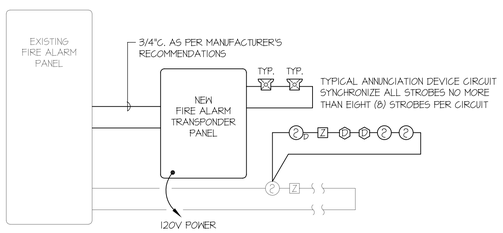

Ø2 EP101 FIRE ALARM RISER
SCALE NONE

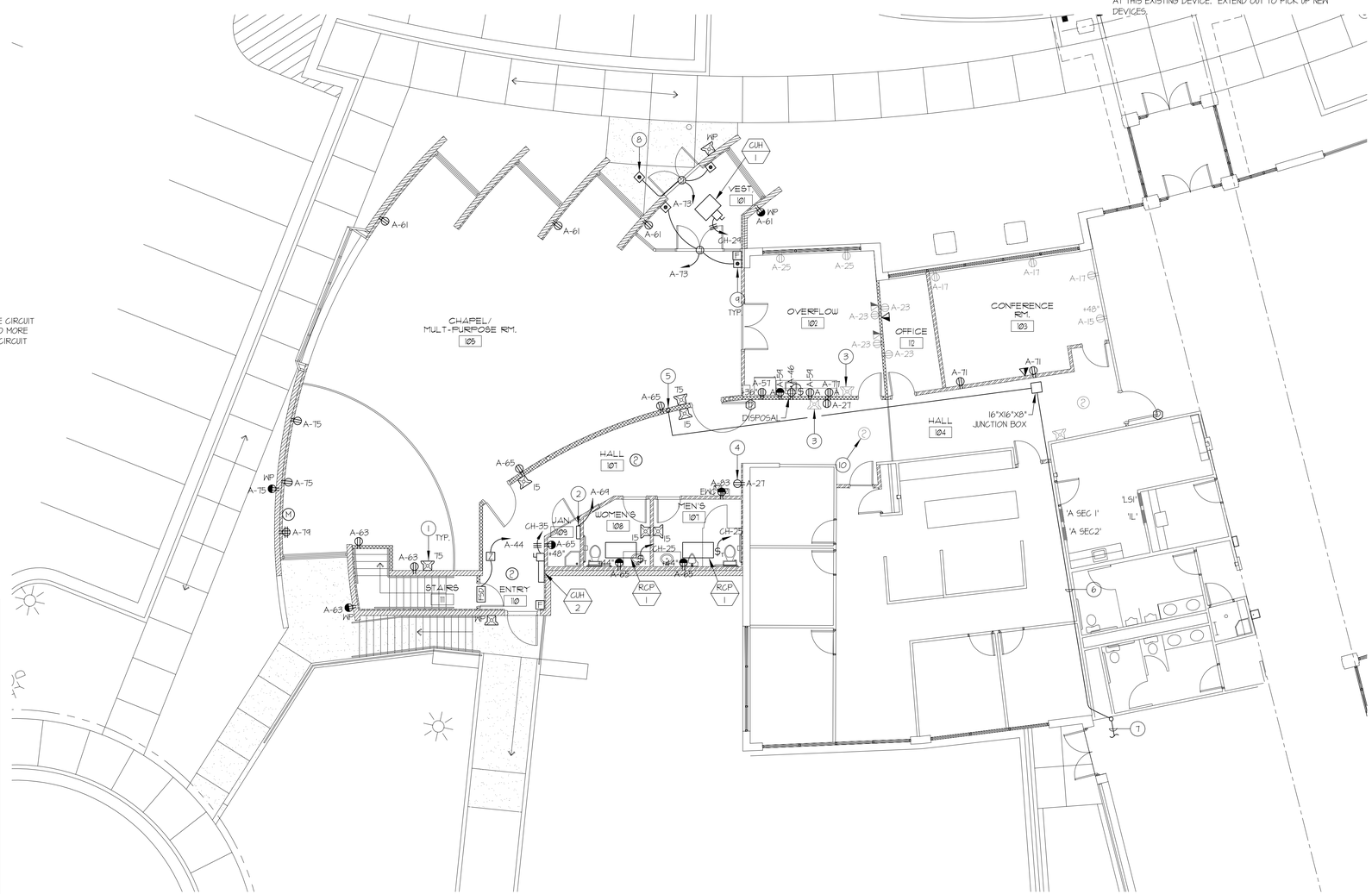

Ø1 EP101 POWER PLAN
SCALE: 1/8" = 1'-Ø"

▽ PROVIDE 4"x4"x2-1/8" DEEP JUNCTION BOX WITH SINGLE GANG PLASTER RING AND EXTEND 3/4" CONDUIT WITH NYLON PULL ROPE TO ACCESSIBLE CEILING. TEMINATE CONDUIT IN CEILING SPACE WITH A NYLON BUSHING. CABLE TO BE PROVIDED BY OWNER.

A1-40 — DESIGNATION OF CIRCUIT. WIRE COMPLETE.

A1-40/16 — ISOLATED GROUND CIRCUIT.

1 TYPICAL OUTLET CONVENTION
SCALE: NONE

Eaton Architecture
77 West 200 South, Suite 302
Salt Lake City, UT 84101
Tel 801/328-2982 Fax 801/328-2111

CONSULTANTS

Electrical Engineering & Lighting Design by:
ENVISION ENGINEERING
Direction. Then Velocity.
244 West 300 North, Suite 100
Salt Lake City, Utah 84103
801.534.1130 ph 801.534.1080 fax

REGISTERED PROFESSIONAL ENGINEER
DAVID P. WHITTON
No.264397
STATE OF UTAH

UTAH STATE VETERAN'S NURSING HOME

CHAPEL / MULTIPURPOSE ROOM ADDITION
700 FOOTHILL BOULEVARD, SALT LAKE CITY, UTAH 84113

OWNER
UTAH D.F.C.M.

MARK	DATE	DESCRIPTION
	06-15-07	REBID SET

PROJECT NUMBER:	2006-195
DRAWN BY:	BRT
DESIGNED BY:	RVV
CHECKED BY:	DPW

COPYRIGHT 2003 EATON ARCHITECTURE, LLC

SHEET TITLE

MAIN LEVEL
POWER PLAN

EP101

OF

KEYED NOTES:

1. NOT USED.
2. REFER TO SHEET EP103 FOR MORE INFORMATION.
3. STUB CONDUIT TO ACCESSIBLE CEILING SPACE.
4. EXTEND CONDUIT INTO ROOM 107 ABOVE.
5. NOT USED.
6. EXTENDED FROM ABOVE. REFER TO SHEET EP101 FOR CONTINUATION.
7. APPROXIMATE ROUTE SHOWN TO MDP IN ELEC ROOM 025. CONTRACTOR TO VERIFY EXACT LOCATION AND ROUTING PRIOR TO BID.

01 / EP001 BASEMENT POWER PLAN
SCALE: 1/8" = 1'-0"

NORTH

Eaton Architecture
77 West 200 South, Suite 302
Salt Lake City, UT 84101
Tel 801/328-2982 *Fax* 801/328-2111

CONSULTANTS

Electrical Engineering & Lighting Design by:
ENVISION ENGINEERING
Direction. Then Velocity.
244 West 300 North, Suite 100
Salt Lake City, Utah 84103
801.534.1130 ph 801.534.1080 fax

REGISTERED PROFESSIONAL ENGINEER
DAVID P. WHITTON
No.264397
STATE OF UTAH

UTAH STATE VETERAN'S NURSING HOME

CHAPEL / MULTIPURPOSE ROOM ADDITION
700 FOOTHILL BOULEVARD, SALT LAKE CITY, UTAH 84113

OWNER
UTAH D.F.C.M.

MARK	DATE	DESCRIPTION
	06-15-07	REBID SET

PROJECT NUMBER:	2006-195
DRAWN BY:	BRT
DESIGNED BY:	RVV
CHECKED BY:	DPW

COPYRIGHT 2003 EATON ARCHITECTURE, LLC

SHEET TITLE

BASEMENT LEVEL
POWER PLAN

EP102

OF

KEYED NOTES:

1. REFER TO SHEET EP102 FOR MORE INFORMATION.

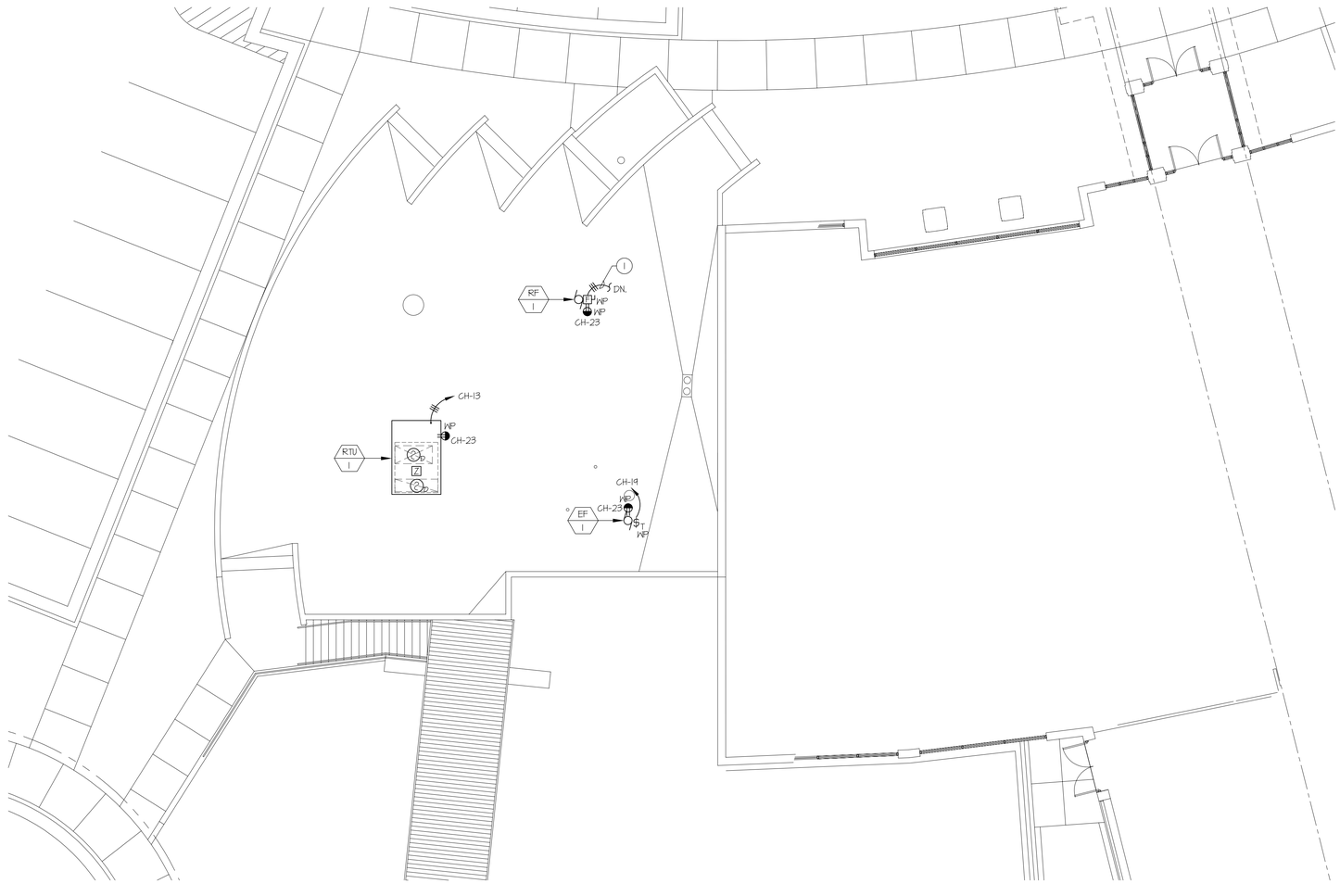

01 EP103 ROOF POWER PLAN
SCALE: 1/8" = 1'-0"

NORTH

Eaton architecture
77 West 200 South, Suite 302
Salt Lake City, UT 84101
Tel 801/328-2982 *Fax* 801/328-2111

CONSULTANTS

Electrical Engineering & Lighting Design by:

ENVISION ENGINEERING
Direction. Then Velocity.
244 West 300 North, Suite 100
Salt Lake City, Utah 84103
801.534.1130 ph 801.534.1080 fax

REGISTERED PROFESSIONAL ENGINEER
DAVID P. WHITTON
No.264397
STATE OF UTAH

UTAH STATE VETERAN'S NURSING HOME

CHAPEL / MULTIPURPOSE ROOM ADDITION
700 FOOTHILL BOULEVARD, SALT LAKE CITY, UTAH 84113

OWNER
UTAH D.F.C.M.

MARK	DATE	DESCRIPTION
	06-15-07	REBID SET

PROJECT NUMBER:	2006-195
DRAWN BY:	BRT
DESIGNED BY:	RVV
CHECKED BY:	DPW

COPYRIGHT 2003 EATON ARCHITECTURE, LLC

SHEET TITLE

ROOF POWER PLAN

EP103

OF

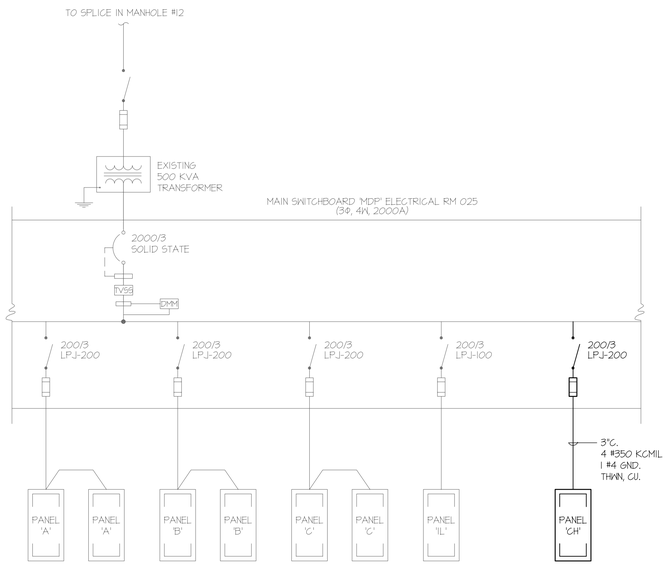

KEY:

- EXISTING TO REMAIN
- DEMOLITION
- NEW

1 EXISTING ONE-LINE DIAGRAM
SCALE: NONE

LIGHTING AND APPLIANCE PANELBOARD SCHEDULE

PANEL NAME: CH TYPE: NQOD CIRCUIT BREAKERS: [X] BOLT ON [ ] PLUG ON 120 / 208 VOLTAGE 3 PH 4 W

[X] ENGRAVED NAME TAGS BUS MATERIAL: [X] ALUM BUS [ ] CU BUS GROUND: [X] GROUND BUS [ ] ISOL GND BUS NEUTRAL: [X] 100% [ ] 200% LUGS: [X] MAIN [ ] SUB-FEED [ ] FEED-THROUGH MAIN BREAKER: [X] AMPS 200

BUS AMPS: 225

BRANCH BREAKERS

NOTES	ITEM	AMP	POLE	WIRE SIZE	CIR. NO.	LEFT PHASE LOAD A	LEFT PHASE LOAD B	LEFT PHASE LOAD C	RIGHT PHASE LOAD A	RIGHT PHASE LOAD B	RIGHT PHASE LOAD C	CIR. NO.	AMP	POLE	WIRE SIZE	ITEM	NOTES
5	UH-1	60	2	8	1	4990			1080			2	20	1	12	CO'S	
	-	-	-	-	3		4990			4990		4	60	2	8	UH-2	
	SPARE	20	1		5						4990	6	-	-		-	
5	RF-1	20	3	10	7	315						8	20	1		SPARE	
	-	-	-	-	9		315					10	20	1		SPARE	
	-	-	-	-	11			315				12	20	1		SPARE	
	RTU-1	80	3	4	13	7565						14	20	1		SPARE	
	-	-	-	-	15		7565					16	20	1		SPACE	
	-	-	-	-	17			7565				18	20	1		SPACE	
	EF-1	20	1	12	19	700						20	20	1		SPACE	
	SPARE	20	1		21							22	20	1		SPACE	
	CO'S	20	1	12	23			540				24	20	1		SPACE	
	RCP-1 & RCP-2	20	2	12	25	500						26	20	1		SPACE	
	-	-	-	-	27		500					28	20	1		SPACE	
	CUH-1	30	3	10	29			2160				30	20	1		SPACE	
	-	-	-	-	31	2160						32	20	1		SPACE	
	-	-	-	-	33		2160					34	20	1		SPACE	
	CUH-2	30	3	10	35			2160				36	20	1		SPACE	
	-	-	-	-	37	2160						38	20	1		SPACE	
	-	-	-	-	39		2160					40	20	1		SPACE	
	SPARE	20	1		41							42	20	1		SPACE	
						18340	17640	12740	1080	4990	4990						
						19470	22680	17730	TOTAL								
						162	189	148	AMPS / PHASE								

FRONT: [X] STANDARD [ ] HINGED [ ] DOOR-IN-DOOR

MOUNTING: [ ] FLUSH [X] SURFACE [ ] SURFACE W/ SKIRT ABOVE [ ] SURFACE W/ SKIRT BELOW

TVSS: [X] NONE [ ] CATEGORY "C" [ ] CATEGORY "B" [ ] CATEGORY "A"

NEMA RATING: [X] NEMA 1 [ ] NEMA 3R [ ] NEMA 4X [ ] NEMA 12 [ ] STAINLESS STEEL

TOTAL CONNECTED LOAD: 54880

SHORT CIRCUIT RATING: [ ] SERIES - RATED [X] FULLY - RATED

10,000 AMPS RMS SYM

REFER TO ONE-LINE DIAGRAM FOR FEEDER , CONDUIT AND CONDUCTOR SIZES

ONE-LINE SYMBOLS

SYMBOL	DESCRIPTION	SYMBOL	DESCRIPTION
PANEL 'A'	LIGHTING AND APPLIANCE PANEL BOARD		FUSE CUT OUT
PANEL 'A'	LOAD CENTER		DRAWOUT CIRCUIT BREAKER
	CIRCUIT BREAKER		
	CIRCUIT BREAKER & ENCLOSURE		MEDIUM VOLTAGE DRAWOUT CIRCUIT BREAKER
	FUSED SWITCH		THERMAL OVERLOAD
		G	RELAY/COIL
	MOTOR		NORMALLY CLOSED CONTACT
TVSS	TRANSIENT VOLTAGE SURGE SUPPRESSOR		NORMALLY OPEN CONTACT
	DISCONNECT SWITCH	K	KEY INTERLOCK
	FUSED DISCONNECT SWITCH		COMBINATION FUSIBLE STARTER WITH THERMAL OVERLOAD
M	METER		
	CT TRANSFORMER		COMBINATION MCP STARTER WITH THERMAL OVERLOAD
	GROUNDING ELECTRODE & CONDUCTOR		
	AUTOMATIC TRANSFER SWITCH		
G	GENERATOR		ELECTRONIC CIRCUIT BREAKER
	GUTTER		
	TRANSFORMER	GFP	ELECTRONIC CIRCUIT BREAKER WITH GROUND FAULT PROTECTION
	POWER FACTOR CORRECTION CAPACITOR & ENCLOSURE	G	SHUNT TRIP CIRCUIT BREAKER
		PF	PHASE FAILURE RELAY
	CT CABINET PER UTILITIES REQUIREMENTS		MUSHROOM PUSH BUTTON
	PULLING SECTION PER UTILITIES REQUIREMENTS		
			ISOLATION BYPASS AUTOMATIC TRANSFER SWITCH

PANELBOARD SCHEDULE NOTES:
1. PROVIDE CLASS A GROUND FAULT INTERRUPTER TYPE CIRCUIT BREAKER.
2. PROVIDE ARC FAULT CIRCUIT INTERRUPTER TYPE CIRCUIT BREAKER.
3. PROVIDE 30 MILLIAMPERE EQUIPMENT GROUND FAULT PROTECTOR TYPE CIRCUIT BREAKER.
4. PROVIDE SHUNT-TRIP TYPE CIRCUIT BREAKER WITH 120V COIL.
5. PROVIDE HACR RATED CIRCUIT BREAKER.
6. PROVIDE HANDLE CLAMP FOR HOLDING CIRCUIT BREAKER IN THE "ON" OR "OFF" POSITION.
7. PROVIDE SWITCHING RATED CIRCUIT BREAKER.
8. PROVIDE NEW CIRCUIT BREAKER IN EXISTING PANELBOARD (WHERE PANEL IS INDICATED AS EXISTING) OF SAME MANUFACTURER AND A.I.C. RATING AS EXISTING.
9. EXISTING LOAD.

Eaton Architecture
77 West 200 South, Suite 302
Salt Lake City, UT 84101
Tel 801/328-2982 Fax 801/328-2111

CONSULTANTS

Electrical Engineering & Lighting Design by:
ENVISION ENGINEERING
Direction. Then Velocity.
244 West 300 North, Suite 100
Salt Lake City, Utah 84103
801.534.1130 ph 801.534.1080 fax

REGISTERED PROFESSIONAL ENGINEER
DAVID P. WHITTON
No.264397
STATE OF UTAH

UTAH STATE VETERAN'S NURSING HOME

CHAPEL / MULTIPURPOSE ROOM ADDITION
700 FOOTHILL BOULEVARD, SALT LAKE CITY, UTAH 84113

OWNER
UTAH D.F.C.M.

MARK	DATE	DESCRIPTION
	06-15-07	REBID SET

PROJECT NUMBER:	2006-195
DRAWN BY:	BRT
DESIGNED BY:	RVV
CHECKED BY:	DPW

COPYRIGHT 2003 EATON ARCHITECTURE, LLC

SHEET TITLE

ONE-LINE DIAGRAM

EP701

OF

LIGHTING RELAY PANEL SCHEDULE

Panel Address:
Panel Name: LCP1
Location: JANITORS CLOSET
Transformer Voltage: 120
Mounting: SURFACE
NEMA Type: 1

Relay	Circuit	Load Controlled	Switch/OS	Channel A	B	C	D	E	F	G	H
1	A-43	CHAPEL LIGHTS		X							
2	A-47	CHAPEL LIGHTS		X							
3	A-49	CHAPEL LIGHTS		X							
4	A-51	CHAPEL LIGHTS		X							
5	A-53	HALL AND RR LTS			X						
6	A-55	BSMT STORAGE LTS		X							
7	A-67	BSMT MECH AREA LTS		X							
8											
9											
10											
11											
12											

Channel	LOAD Description	PROGRAM REQUIREMENTS
A	TIMED ON/OFF	
B	TIMED ON/OFF	
C		
D		
E		
F		
G		
H		

GENERAL NOTES:
1. PROGRAM SYSTEM TO MEET REQUIREMENTS OF 2003 IECC.
2. CONFIRM SWITCHING SCHEME WITH THE OWNER PRIOR TO PROGRAMMING THE SYSTEM.

EQUIPMENT SCHEDULE

UNIT NAME	DESCRIPTION	LOAD	TYPE	VOLTAGE	PHASE	AMPERAGE	CONDUIT SIZE	WIRES NO.	WIRES SIZE	STARTER / DISCONNECT/ CONNECTION AT UNIT NOTE	STARTER SIZE	OCP SIZE	OCP POLES	DISCONNECT SIZE	DISCONNECT POLES	REMARKS
CUH-1	CABINET UNIT HEATER	5	KW	208	3	18	3/4"	3	10	9A	-	-	-	30	3	
CUH-2	CABINET UNIT HEATER	5	KW	208	3	18	3/4"	3	10	9A	-	-	-	30	3	
EF-1	EXHAUST FAN	1/4	HP	120	1	5.8	3/4"	2	12	2A	-	-	-	1HP	1	
RTU-1	ROOF TOP UNIT	63	MCA	208	3	63	3/4"	3	4	10B	-	-	-	-	-	
RF-1	RELIEF FAN	1	HP	208	3	4.8	3/4"	3	12	17A/10A	NEMA SIZE 0	20	3	30	3	
RCP	RADIANT CEILING PANEL	2.4	AMPS	208	1	2.4	3/4"	2	12	2A	-	-	-	1HP	2	
UH-1	UNIT HEATER	10	KW	208	1	48	3/4	2	8	4A &9A	NEMA SIZE 2	60	2	60	2	
UH-2	UNIT HEATER	10	KW	208	1	48	3/4	2	8	4A &9A	NEMA SIZE 2	60	2	60	2	

STARTER / DISCONNECT NOTES:

1. MANUAL STARTER WITH THERMAL OVERLOAD
2. MANUAL STARTER WITH THERMAL OVERLOAD PROTECTION & LOW VOLTAGE RELAY / CONTACTOR FOR ATC CONTROL
3. COMBINATION MAGNETIC STARTER / FUSED DISCONNECT
4. COMBINATION MAGNETIC STARTER / MOTOR CIRCUIT PROTECTOR (MCP)
5. COMBINATION VARIABLE FREQUENCY DRIVE / MOTOR CIRCUIT PROTECTOR (MCP)
6. REDUCED VOLTAGE STARTER
7. COMBINATION TWO-SPEED STARTER / FUSED DISCONNECT
8. COMBINATION TWO-SPEED STARTER / MOTOR CIRCUIT PROTECTOR (MCP)
9. NON-FUSED DISCONNECT SWITCH
10. FUSED DISCONNECT SWITCH
11. BREAKER AND ENCLOSURE
12. DIRECT CONNECTION
13. DUPLEX RECEPTACLE OUTLET
14. SPECIAL PURPOSE OUTLET
15. SHUNT-TRIP BREAKER AND ENCLOSURE
16. TOGGLE SWITCH
17. MAGNETIC STARTER

INSTALLATION NOTES:

A. FURNISHED, INSTALLED, & CONNECTED UNDER DIVISION 16.
B. FURNISHED & INSTALLED UNDER ANOTHER DIVISION REQUIRING CONNECTIONS UNDER DIVISION 16.
C. FURNISHED UNDER ANOTHER DIVISION BUT INSTALLED AND CONNECTED UNDER DIVISION 16.
D. FURNISHED, INSTALLED, & CONNECTED UNDER ANOTHER DIVISION
E. FURNISHED BY OWNER, INSTALLED & CONNECTED BY DIVISION 16

LIGHTING AND APPLIANCE PANELBOARD SCHEDULE

PANEL NAME: L51 TYPE: EXISTING CIRCUIT BREAKERS: [X] BOLT ON [ ] PLUG ON 120 / 208 VOLTAGE 3 PH 4 W

[X] ENGRAVED NAME TAGS BUS MATERIAL: [ ] ALUM BUS [ ] CU BUS GROUND: [ ] GROUND BUS [ ] ISOL GND BUS NEUTRAL: [ ] 100% [ ] 200% LUGS: [ ] MAIN [X] SUB-FEED [ ] FEED-THROUGH MAIN BREAKER: [ ] AMPS ____ BUS AMPS: 225

BRANCH BREAKERS

NOTES	ITEM	AMP	POLE	WIRE SIZE	CIR. NO.	LEFT PHASE LOAD A	B	C	RIGHT PHASE LOAD A	B	C	CIR. NO.	AMP	POLE	WIRE SIZE	ITEM	NOTES
	EXISTING LOAD				1							2				SPACE	
	EXISTING LOAD				3							4				SPACE	
	EXISTING LOAD				5							6				SPACE	
	CHAPEL LTS	20	1	12	7	900						8				SPACE	
	SPARE				9							10				SPACE	
	SPARE				11							12				SPACE	
	SPARE				13							14				SPACE	
	SPARE				15							16				SPACE	
	SPARE				17							18				SPACE	
	SPARE				19							20				SPACE	
	SPARE				21							22				SPACE	
	SPARE				23							24				SPACE	
	SPARE				25							26				SPACE	
	SPARE				27							28				SPACE	
	SPARE				29							30				SPACE	
						900	0	0	0	0	0						
						900	0	0	TOTAL								
						8	0	0	AMPS / PHASE								

FRONT: [X] STANDARD [ ] HINGED [ ] DOOR-IN-DOOR

MOUNTING: [ ] FLUSH [X] SURFACE [ ] SURFACE W/ SKIRT ABOVE [ ] SURFACE W/ SKIRT BELOW

TVSS: [X] NONE [ ] CATEGORY "C" [ ] CATEGORY "B" [ ] CATEGORY "A"

NEMA RATING: [X] NEMA 1 [ ] NEMA 3R [ ] NEMA 4X [ ] NEMA 12 [ ] STAINLESS STEEL

TOTAL CONNECTED LOAD: 900

SHORT CIRCUIT RATING: [ ] SERIES - RATED [ ] FULLY - RATED

10,000 AMPS RMS SYM

REFER TO ONE-LINE DIAGRAM FOR FEEDER , CONDUIT AND CONDUCTOR SIZES

LIGHTING AND APPLIANCE PANELBOARD SCHEDULE

PANEL NAME: A (SECTION 2) TYPE: EXISTING CIRCUIT BREAKERS: [X] BOLT ON [ ] PLUG ON 120 / 208 VOLTAGE 3 PH 4 W

[X] ENGRAVED NAME TAGS BUS MATERIAL: [ ] ALUM BUS [ ] CU BUS GROUND: [ ] GROUND BUS [ ] ISOL GND BUS NEUTRAL: [ ] 100% [ ] 200% LUGS: [ ] MAIN [X] SUB-FEED [ ] FEED-THROUGH MAIN BREAKER: [ ] AMPS ____ BUS AMPS: 225

BRANCH BREAKERS

NOTES	ITEM	AMP	POLE	WIRE SIZE	CIR. NO.	LEFT PHASE LOAD A	B	C	RIGHT PHASE LOAD A	B	C	CIR. NO.	AMP	POLE	WIRE SIZE	ITEM	NOTES
8	CHAPEL LTS	20	1	10	43	1316			800			44	20	1	12	FIRE SMOKE DAMPERS	8
9	GO'S COURTYARD	20	1	10	45					1800		46	25	1	10	DISPOSAL	
8	CHAPEL LTS	20	1	10	47			1200				48	20	1		SPACE	
8	CHAPEL LTS	20	1	10	49	1200						50	20	1		SPACE	
8	CHAPEL LTS	20	1	10	51		1314					52	20	1		SPACE	
8	HALL AND RR LTS	20	1	10	53			714				54	20	1		SPACE	
8	BSMT STORAGE LTS	20	1	10	55	768						56	20	1		SPACE	
1, 8	REFRIGERATOR	20	1	10	57		1200					58	20	1		SPACE	
8	GO'S OVERFLOW	20	1	10	59			360				60	20	1		SPACE	
8	GO'S CHAPEL	20	1	10	61	720						62	20	1		SPACE	
8	GO'S CHAPEL	20	1	10	63		900					64	20	1		SPACE	
8	GO'S CHAPEL	20	1	10	65			900				66	20	1		SPACE	
8	BSMT MECH AREA LTS	20	1	10	67	832						68	20	1		SPACE	
8	NAC PANEL	20	1	10	69		500					70	20	1		SPACE	
8	CONFERENCE ROOM GO'S	20	1	10	71			360				72	20	1		SPACE	
8	AUTOMATIC DOORS	20	1	10	73	500						74	20	1		SPACE	
8	GO'S CHAPEL	20	1	10	75		540					76	20	1		SPACE	
8	MICROWAVE GO	20	1	10	77			1500				78	20	1		SPACE	
8	FOURPLEX GO	20	1	10	79	360						80	20	1		SPACE	
8	LCP1	20	1	10	81		500					82	20	1		SPACE	
8	WATER COOLER	20	1	12	83			1200				84	20	1		SPACE	
						5696	4454	6244	800	1800	0						
						6496	6754	6244	TOTAL								
						54	56	52	AMPS / PHASE								

FRONT: [X] STANDARD [ ] HINGED [ ] DOOR-IN-DOOR

MOUNTING: [X] FLUSH [ ] SURFACE [ ] SURFACE W/ SKIRT ABOVE [ ] SURFACE W/ SKIRT BELOW

TVSS: [ ] NONE [X] CATEGORY "C" [ ] CATEGORY "B" [ ] CATEGORY "A"

NEMA RATING: [X] NEMA 1 [ ] NEMA 3R [ ] NEMA 4X [ ] NEMA 12 [ ] STAINLESS STEEL

TOTAL CONNECTED LOAD: 19,544

SHORT CIRCUIT RATING: [ ] SERIES - RATED [ ] FULLY - RATED

10,000 AMPS RMS SYM

REFER TO ONE-LINE DIAGRAM FOR FEEDER , CONDUIT AND CONDUCTOR SIZES

PANELBOARD SCHEDULE NOTES:
1. PROVIDE CLASS A GROUND FAULT INTERRUPTER TYPE CIRCUIT BREAKER.
2. PROVIDE ARC FAULT CIRCUIT INTERRUPTER TYPE CIRCUIT BREAKER.
3. PROVIDE 30 MILLIAMPERE EQUIPMENT GROUND FAULT PROTECTOR TYPE CIRCUIT BREAKER.
4. PROVIDE SHUNT-TRIP TYPE CIRCUIT BREAKER WITH 120V COIL.
5. PROVIDE HACR RATED CIRCUIT BREAKER.
6. PROVIDE HANDLE CLAMP FOR HOLDING CIRCUIT BREAKER IN THE "ON" OR "OFF" POSITION.
7. PROVIDE SWITCHING RATED CIRCUIT BREAKER.
8. PROVIDE NEW CIRCUIT BREAKER IN EXISTING PANELBOARD (WHERE PANEL IS INDICATED AS EXISTING) OF SAME MANUFACTURER AND A.I.C. RATING AS EXISTING.
9. EXISTING LOAD.

Eaton architecture
77 West 200 South, Suite 302
Salt Lake City, UT 84101
Tel 801/328-2982 Fax 801/328-2111

CONSULTANTS

Electrical Engineering & Lighting Design by:
ENVISION ENGINEERING
Direction. Then Velocity.
244 West 300 North, Suite 100
Salt Lake City, Utah 84103
801.534.1130 ph 801.534.1080 fax

REGISTERED PROFESSIONAL ENGINEER
DAVID P. WHITTON
No.264397
STATE OF UTAH

UTAH STATE VETERAN'S NURSING HOME

CHAPEL / MULTIPURPOSE ROOM ADDITION
700 FOOTHILL BOULEVARD, SALT LAKE CITY, UTAH 84113

OWNER
UTAH D.F.C.M.

MARK	DATE	DESCRIPTION
	06-15-07	REBID SET

PROJECT NUMBER: 2006-195
DRAWN BY: BRT
DESIGNED BY: RVV
CHECKED BY: DPW

COPYRIGHT 2003 EATON ARCHITECTURE, LLC

SHEET TITLE

EQUIPMENT & PANELBOARD SCHEDULES

EP702

OF