ajc architects

703 east 1700 south
salt lake city, utah 84105
ph: 801.466.8818
fx: 801.466.4411
ajc@ajcarchitects.com

P A Y E T T E

285 Summer Street
Boston, MA 84105
ph: (617) 895-1114
Contact: Kriss Petterson

0818

DEC. 9, 2008

DESDEV

VOLUME 1
OF 2 VOLUMES

# LIFE SCIENCES RESEARCH CENTER
# UTAH STATE UNIVERSITY
# USTAR BUILDING #2

350 EAST GRAND AVE.
LOGAN, UTAH

**OWNER** — DIVISION OF FACILITIES CONSTRUCTION & MANAGEMENT
4110 State Office Building
Salt Lake City, Utah 84114
Phone: (801) 538-3018
Fax: (801) 538-3267
Contact: Dave McKay

**CIVIL** — STANTEC
3995 South 700 East Suite 300
Salt Lake City UT 84107
PH#: (801) 261-0090
FAX: (801) 266-1671
CONTACT: Dave Barrett

**LANDSCAPE** — LANDMARK DESIGN
2834 Highland Drive
Salt Lake City, Utah 84106
PH#: (801) 474-3300
FAX: (801) 474-3303
CONTACT: Jan Striefel

**STRUCTURAL** — REAVELEY ENGINEERS
675 East 500 South, Suite 400
Salt Lake City, Utah 84105
PH#: (801) 486-3883
FAX: (801) 485-0911
CONTACT: Jeff Miller

**FOOD SERVICES** — MILLER & JEDRZIEWSKI
395 East 3900 South
South Salt Lake, Utah 84107
Phone: (801) 363-6229
Contact: Ric Jedrziewski

**MECHANICAL PLUMBING** — VAN BOERUM & FRANK ASSOCIATES INC.
40 West Cache Valley Blvd
Logan, Utah
Phone: (435) 752-5081
Contact: Neil Spencer

**ELECTRICAL** — ENVISION ENGINEERING
244 West 300 North, #100
Salt Lake City, Utah 84103
PH#: (801) 534-1130
FAX: (801) 534-1080
CONTACT: Dave Whitton

## DRAWING INDEX:


| | |
|---|---|
| GENERAL | |
| VOLUME 1-COVER SHEET | GI001 |
| CODE SUMMARY & SITE REFERENCE PLAN | GI002* |
| ADA REQUIREMENTS | GI003* |
| CODE SUMMARY | GI004* |
| LEVEL 1 CODE REFERENCE PLAN | GI005 |
| LEVEL 2 CODE REFERENCE PLAN | GI006 |
| LEVEL 3 CODE REFERENCE PLAN | GI007 |
| LEVEL 4 CODE REFERENCE PLAN | GI008 |
| BUILDING RENDERING | GI009 |
| SURVEY | 1 OF 2* |
| 600 EAST WATER LINE SURVEY | 2 OF 2* |
| CIVIL | |
| DEMOLITION PLAN | CU100* |
| SITE UTILITY PLAN | CU101* |
| 600 EAST WATER LINE | CU102* |
| EROSION CONTROL PLAN | CG200* |
| SITE GRADING PLAN | CG201* |
| SITE GRADING PLAN | CG202* |
| CONSTRUCTION DETAILS | CD501* |
| LANDSCAPE | |
| PLANTING PLAN | LP101 |
| PLANTING PLAN | LP102 |
| LANDSCAPE DETAILS | LP501 |
| IRRIGATION PLAN | LI 101 |
| IRRIGATION PLAN | LI 102 |
| IRRIGATION DETAILS | LI 501 |
| SLEEVING PLAN | SL101 |
| STRUCTURAL | |
| GENERAL STRUCTURAL NOTES | SE100 ** |
| GENERAL STRUCTURAL NOTES | SE101 ** |
| GENERAL STRUCTURAL NOTES & DRAWING INDEX | SE102 ** |
| OVERALL FOOTING & FOUNDATION PLAN | SB101 ** |
| PARTIAL FOOTING & FOUNDATION PLAN - AREA A | SB101A ** |
| PARTIAL MAT FOOTING REINFORCING PLAN - AREA A -BOTTOM | SB101A-B** |
| PARTIAL MAT FOOTING REINFORCING PLAN - AREA A - TOP | SB101A-T ** |
| PARTIAL FOOTING & FOUNDATION PLAN - AREA B | SB101B ** |
| PARTIAL MAT FOOTING REINFORCING PLAN - AREA B -BOTTOM | SB101B-B ** |
| PARTIAL MAT FOOTING REINFORCING PLAN - AREA B - TOP PARTIAL FOOTING & | SB101B-T ** |
| FOUNDATION PLAN - AREA C | SB101C ** |
| PARTIAL MAT FOOTING REINFORCING PLAN - AREA C -BOTTOM | SB101C-B ** |
| PARTIAL MAT FOOTING REINFORCING PLAN - AREA C - TOP | SB101C-T ** |
| TYPICAL FOOTING & FOUNDATION DETAILS | SB501 ** |
| TYPICAL FOOTING & FOUNDATION DETAILS | SB502 ** |
| TYPICAL FOOTING & FOUNDATION DETAILS | SB503 ** |
| TYPICAL FOOTING & FOUNDATION DETAILS | SB504 ** |
| TYPICAL FOOTING & FOUNDATION DETAILS | SB505 ** |
| TYPICAL FOOTING & FOUNDATION DETAILS | SB506 ** |
| TYPICAL FOOTING & FOUNDATION DETAILS | SB507 ** |
| TYPICAL FOOTING & FOUNDATION DETAILS | SB508 ** |
| TYPICAL FOOTING & FOUNDATION DETAILS | SB509 ** |
| STRUCTURAL SCHEDULES | SB601 ** |
| STRUCTURAL SCHEDULES | SB602 ** |
| OVERALL LEVEL 2 FLOOR FRAMING PLAN | SF102 ** |
| PARTIAL LEVEL 2 FLOOR FRAMING PLAN AREA A | SF102A ** |
| PARTIAL LEVEL 2 FLOOR FRAMING PLAN AREA B | SF102B ** |
| PARTIAL LEVEL 2 FLOOR FRAMING PLAN AREA C | SF102C ** |
| OVERALL LEVEL 3 FLOOR FRAMING PLAN | SF103 ** |
| PARTIAL LEVEL 3 FLOOR FRAMING PLAN AREA A | SF103A ** |
| PARTIAL LEVEL 3 FLOOR FRAMING PLAN AREA B | SF103B ** |
| PARTIAL LEVEL 3 FLOOR FRAMING PLAN AREA C | SF103C ** |
| OVERALL PENTHOUSE FLOOR / ROOF FRAMING PLAN | SF104 ** |
| PARTIAL PENTHOUSE FLOOR FRAMING PLAN - AREA A | SF104A ** |
| PARTIAL PENTHOUSE FLOOR FRAMING PLAN - AREA B | SF104B ** |
| PARTIAL ROOF FRAMING PLAN - AREA C | SF104C ** |
| OVERALL PENTHOUSE ROOF FRAMING PLAN | SF105 ** |
| PARTIAL PARAPET FRAMING PLAN - AREA A | SF105A ** |
| PARTIAL PENTHOUSE ROOF FRAMING PLAN - AREA B | SF105B ** |
| BRACED FRAME ELEVATIONS (SLRS) | SF201** |
| BRACED FRAME ELEVATIONS (SLRS) | SF202 ** |
| BRACED FRAME ELEVATIONS (SLRS) | SF203 ** |
| BRACED FRAME CONNECTION SCHEDULE & DETAILS (SLRS) BRACED FRAME | SF211 ** |
| CONNECTION DETAILS (SLRS) | SF212 ** |
| BRACED CONNECTION FRAME DETAILS (SLRS) | SF213 ** |
| BRACED FRAME CONNECTION DETAILS (SLRS) | SF214 ** |
| BRACED FRAME CONNECTION DETAILS (SLRS) | SF215 ** |
| LEVEL 3 CEILING FRAMING PLAN - NORTH | SF401 ** |
| LEVEL 3 CEILING FRAMING PLAN - CENTER | SF402 ** |
| LEVEL 3 CEILING FRAMING PLAN - SOUTH | SF403 ** |
| TYPICAL FLOOR FRAMING DETAILS | SF501 ** |
| TYPICAL FLOOR FRAMING DETAILS | SF502 ** |
| TYPICAL FLOOR FRAMING DETAILS | SF503 ** |
| TYPICAL FLOOR FRAMING DETAILS | SF504 ** |
| TYPICAL FLOOR FRAMING DETAILS | SF505 ** |
| TYPICAL ROOF FRAMING DETAILS | SF511 ** |
| TYPICAL ROOF FRAMING DETAILS | SF512 ** |
| TYPICAL ROOF FRAMING DETAILS | SF513 ** |
| STEEL COLUMN SCHEDULE | SF601 ** |
| STRUCTURAL STEEL SCHEDULES & DETAILS | SF602 ** |
| STRUCTURAL STEEL SCHEDULES & DETAILS | SF603 ** |


INDEX NOTES

| | |
|---|---|
| SINGLE ASTERISK= INDICATES SHEET WAS PART OF BID PACKAGE #1 AND IS INCLUDED HEREWITH WITH ALL CURRENT ADDENDA OR OTHER MODIFICATIONS | * |
| DOUBLE ASTERISK= INDICATES SHEET SIMULTANEOUSLY PUBLISHED IN THE BID PACKAGE #2 REVIEW SET | ** |

THIS IS A (2) TWO VOLUME DRAWING SET. SEE VOLUME 2 FOR FOOD SERVICE, MECHANICAL, PLUMBING AND ELECTRICAL DRAWINGS


| | |
|---|---|
| ARCHITECTURAL | |
| GENERAL NOTES, LEGENDS, ABBREVIATIONS | AE001* |
| WALL TYPES | AE002 |
| WALL TYPES | AE003 |
| DEMO SITE PLAN | AS101* |
| SITE PLAN | AS102 |
| LEVEL 1 REFERENCE PLAN | AE101 |
| LEVEL 1 FLOOR PLAN - 1A | AE101A |
| LEVEL 1 FLOOR PLAN - 1B | AE101B |
| LEVEL 1 FLOOR PLAN - 1C | AE101C |
| LEVEL 2 REFERENCE PLAN | AE102 |
| LEVEL 2 FLOOR PLAN - 2A | AE102A |
| LEVEL 2 FLOOR PLAN - 2B | AE102B |
| LEVEL 2 FLOOR PLAN - 2C | AE102C |
| LEVEL 3 REFERENCE PLAN | AE103 |
| LEVEL 3 FLOOR PLAN - 3A | AE103A |
| LEVEL 3 FLOOR PLAN - 3B | AE103B |
| LEVEL 3 FLOOR PLAN - 3C | AE103C |
| PENTHOUSE PLAN - 4B | AE104B |
| EQUIPMENT PLATFORM PLAN - 4C | AE104C |
| LEVEL 1 FINISH PLAN - 1A | AE105A |
| LEVEL 1 FINISH PLAN - 1B | AE105B |
| LEVEL 1 FINISH PLAN - 1C | AE105C |
| LEVEL 2 FINISH PLAN - 2A | AE106A |
| LEVEL 2 FINISH PLAN - 2B | AE106B |
| LEVEL 2 FINISH PLAN - 2C | AE106C |
| LEVEL 3 FINISH PLAN - 3A | AE107A |
| LEVEL 3 FINISH PLAN - 3B | AE107B |
| LEVEL 3 FINISH PLAN - 3C | AE107C |
| PENTHOUSE FINISH PLAN - 4B | AE108B |
| EQUIPMENT PLATFORM FINISH PLAN - 4C | AE108C |
| LEVEL 1 CEILING PLAN - 1A | AE109A |
| LEVEL 1 CEILING PLAN - 1B | AE109B |
| LEVEL 1 CEILING PLAN - 1C | AE109C |
| LEVEL 2 CEILING PLAN - 2A | AE110A |
| LEVEL 2 CEILING PLAN - 2B | AE110B |
| LEVEL 2 CEILING PLAN - 2C | AE110C |
| LEVEL 3 CEILING PLAN - 3A | AE111A |
| LEVEL 3 CEILING PLAN - 3B | AE111B |
| LEVEL 3 CEILING PLAN - 3C | AE111C |
| PENTHOUSE CEILING PLAN - 4B | AE112B |
| EQUIPMENT PLATFORM CEILING PLAN - 4C | AE112C |
| ROOF PLAN - 5A | AE113A |
| ROOF PLAN - 5B | AE113B |
| ROOF PLAN - 5C | AE113C |
| EXTERIOR ELEVATIONS | AE201 |
| EXTERIOR ELEVATIONS | AE202 |
| EXTERIOR ELEVATIONS | AE203 |
| EXTERIOR ELEVATIONS | AE204 |
| BUILDING SECTIONS | AE301 |
| BUILDING SECTIONS | AE302 |
| BUILDING SECTIONS | AE303 |
| BUILDING SECTIONS | AE304 |
| WALL SECTIONS | AE305 |
| WALL SECTIONS | AE306 |
| WALL SECTIONS | AE307 |
| ENLARGED PLANS | AE401 |
| ENLARGED PLANS | AE402 |
| ENLARGED PLANS | AE403 |
| ENLARGED PLANS | AE404 |
| ENLARGED PLANS | AE405 |
| INTERIOR ELEVATIONS | AE406 |
| INTERIOR ELEVATIONS | AE407 |
| INTERIOR ELEVATIONS | AE408 |
| INTERIOR ELEVATIONS | AE409 |
| INTERIOR ELEVATIONS | AE410 |
| INTERIOR ELEVATIONS | AE411 |
| INTERIOR ELEVATIONS | AE412 |
| INTERIOR ELEVATIONS | AE413 |
| INTERIOR ELEVATIONS | AE414 |
| INTERIOR ELEVATIONS | AE415 |
| INTERIOR ELEVATIONS | AE416 |
| DETAILS | AE501 |
| DETAILS | AE502 |
| DETAILS | AE503 |
| DOOR SCHEDULE | AE601 |
| DOOR SCHEDULE, DOOR TYPES, FRAME TYPES | AE602 |
| WINDOW FRAME TYPES | AE603 |
| WINDOW FRAME TYPES | AE604 |
| WINDOW FRAME TYPES | AE605 |
| FINISH LEGEND | AE606 |
| LABORATORY | |
| ABBREVIATIONS, SYMBOLS, DRAWING LIST | QL101 |
| REFERENCE FLOOR PLAN - LEVEL 1 | QL201 |
| REFERENCE FLOOR PLAN - LEVEL 2 | QL202 |
| REFERENCE FLOOR PLAN - LEVEL 3 | QL203 |
| ENLARGED LAB FIT-OUT PLAN - LEVEL 1 | QL401 |
| ENLARGED LAB FIT-OUT PLAN - LEVEL 1 | QL402 |
| ENLARGED LAB FIT-OUT PLAN - LEVEL 1 | QL403 |
| ENLARGED LAB FIT-OUT PLAN - LEVEL 2 | QL404 |
| ENLARGED LAB FIT-OUT PLAN - LEVEL 2 | QL405 |
| ENLARGED LAB FIT-OUT PLAN - LEVEL 2 | QL406 |
| ENLARGED LAB FIT-OUT PLAN - LEVEL 2 | QL407 |
| ENLARGED LAB FIT-OUT PLAN - LEVEL 3 | QL408 |
| ENLARGED LAB FIT-OUT PLAN - LEVEL 3 | QL409 |
| ENLARGED LAB FIT-OUT PLAN - LEVEL 3 | QL410 |
| ENLARGED LAB FIT-OUT PLAN - LEVEL 3 | QL411 |
| INTERIOR LAB FIT-OUT ELEVATIONS | QL501 |
| INTERIOR LAB FIT-OUT ELEVATIONS | QL502 |
| INTERIOR LAB FIT-OUT ELEVATIONS | QL503 |
| INTERIOR LAB FIT-OUT ELEVATIONS | QL504 |
| INTERIOR LAB FIT-OUT ELEVATIONS | QL505 |
| INTERIOR LAB FIT-OUT ELEVATIONS | QL506 |
| INTERIOR LAB FIT-OUT ELEVATIONS | QL507 |
| INTERIOR LAB FIT-OUT ELEVATIONS | QL508 |
| INTERIOR LAB FIT-OUT ELEVATIONS | QL509 |
| BIOCONTAIMENT FIT-OUT DETAILS | QL901 |
| CASEWORK MENU INTERIOR LAB FIT-OUT | QL905 |
| LAB BENCH DETAILS INTERIOR LAB FIT-OUT | QL910 |
| LAB BENCH DETAILS INTERIOR LAB FIT-OUT | QL911 |
| LAB BENCH DETAILS INTERIOR LAB FIT-OUT | QL912 |
| LAB BENCH DETAILS INTERIOR LAB FIT-OUT | QL913 |
| LAB BENCH DETAILS INTERIOR LAB FIT-OUT | QL914 |
| LAB BENCH DETAILS INTERIOR LAB FIT-OUT | QL915 |
| FUME HOOD DETAILS | QL916 |


ARCHITECT 0818

ajc architects

703 east 1700 south
salt lake city, utah 84105
ph: 801.466.8818
fx: 801.466.4411
www.ajcarchitects.com

P A Y E T T E

285 Summer Street
Boston, MA 02210-1522
www.payette.com

OWNER INFORMATION

**State of Utah**
Department of Administrative Services

Division of Facilities
Construction & Management
4110 State Office Building
Salt Lake City, Utah 84114
Phone: (801) 538 - 3018
Fax: (801) 538 - 3267

Internet: http://www.dfcm.utah.gov

PROJECT DESCRIPTION

LIFE SCIENCES
RESEARCH CENTER
UTAH STATE UNIVERSITY

USTAR BUILDING #2
350 EAST GRAND AVE.
LOGAN, UTAH

SHEET NAME:

COVER SHEET

REVISIONS

| MARK | DATE | DESCRIPTION |
|---|---|---|

ISSUE DATA

| | |
|---|---|
| ISSUE DATE: | DEC. 9, 2008 |
| ISSUE TYPE: | DESDEV |
| DRAWN BY: | J. NIELSEN |
| CHECKED BY: | J. JONES |
| CAD FILE NAME: | |
| DFCM PROJECT # | 06292770 |
| STATE PROPERTY # | - |
| COPYRIGHT: | STATE OF UTAH |

SHEET NUMBER:

# GI001
VOLUME 1

P:\0800\0818 USTAR at USU\03DESDEV\01GENERAL\0818GI001_VOL1.dwg, 12/6/2008 4:26:47 PM, jnielsen

## SPECIAL INSPECTION AND TESTING (IBC 1704)

Indicate required Special inspections for project by checking the appropriate boxes:

FABRICATORS (IBC1704.2)

| | |
|---|---|
| ☐ Approved Fabricator | Fabricators Name: |
| ☐ Unapproved Fabricator | Fabricators Name: |

In-plant inspections
☒ Steel Construction ☒ Welding ☒ Details

STEEL (IBC1704.3)

| Item | | | Reference/Comments |
|---|---|---|---|
| High Strength Bolting (1704.3.3) | ☐ Continuous | ☒ Periodic | |
| WELDING (1704.3.1) | | | |
| Details (1704.3.2) | | | |
| Complete & partial penetration groove welds | ☒ Continuous | ☐ Periodic | |
| Multipass fillet welds | ☒ Continuous | ☐ Periodic | |
| Single-pass fillet welds > 5/16" | ☒ Continuous | ☐ Periodic | |
| Single-pass fillet welds ≤ 5/16" | ☐ Continuous | ☒ Periodic | |
| Floor & roof deck welds | ☐ Continuous | ☒ Periodic | |
| REINFORCEMENT STEEL | ☒ Continuous | | |
| Verification of weldability | ☐ Continuous | ☒ Periodic | |
| Shear reinforcement | ☒ Continuous | ☐ Periodic | Includes Stirrups in Mat Foundation |
| Other reinforcement | ☐ Continuous | ☒ Periodic | |
| Steel frame joint details | ☐ Continuous | ☒ Periodic | |
| Non-shrink grouting of Baseplates | ☒ Continuous | ☐ Periodic | |

CONCRETE CONSTRUCTION (IBC1704.4)

| Item | | | Reference/Comments |
|---|---|---|---|
| Materials (1704.4.1) | ☒ Continuous | ☐ Periodic | |
| Steel placement | ☐ Continuous | ☒ Periodic | |
| Steel welding | ☐ Continuous | ☐ Periodic | Refer to AWS D1.4 & ACI 318 Section 3.5.2 |
| Bolts prior & during placement | ☒ Continuous | ☐ Periodic | |
| Use of required design mix | ☐ Continuous | ☒ Periodic | |
| Concrete sampling for strength test, slump, air content, and temperature of concrete | ☒ Continuous | ☐ Periodic | |
| Concrete & shotcrete placement | ☒ Continuous | ☐ Periodic | |
| Curing temperature and techniques | ☐ Continuous | ☒ Periodic | |
| Form work | ☐ Continuous | ☒ Periodic | |

MASONRY CONSTRUCTION (IBC1704.5)

| Item | | | Reference/Comments |
|---|---|---|---|
| As masonry construction begins: | | | |
| Site prepared mortar | ☐ Continuous | ☒ Periodic | |
| Construction of mortar joints | ☐ Continuous | ☒ Periodic | |



| | | | |
|---|---|---|---|
| Location of reinforcement, connectors | ☐ Continuous | ☒ Periodic | |
| Inspection program verify: | | | |
| Size and location of structural elements | ☐ Continuous | ☒ Periodic | |
| Type, size and location of anchors | ☐ Continuous | ☒ Periodic | |
| Size, grade and type of reinforcement | ☐ Continuous | ☒ Periodic | |
| Welding of reinforcement | ☒ Continuous | ☐ Periodic | |
| Cold and hot weather protection | ☐ Continuous | ☒ Periodic | |
| Prior to grouting verify | | | |
| Clean grout space | ☐ Continuous | ☒ Periodic | |
| Placement of reinforcement | ☐ Continuous | ☒ Periodic | |
| Grout mix | ☐ Continuous | ☒ Periodic | |
| Mortar joints | ☐ Continuous | ☒ Periodic | |
| Grout placement | ☒ Continuous | ☐ Periodic | |
| Grout and mortar specimens and prisms | ☒ Continuous | ☐ Periodic | |
| Construction and submittal compliance verification | ☐ Continuous | ☒ Periodic | |
| Engineered masonry – Cat. I-III 1708.1.1 | ☒ Continuous | ☐ Periodic | |
| Structural steel (1708.4) | ☐ Continuous | ☒ Periodic | |
| Qualification of mechanical & electrical equipment (1708.5) | ☐ Continuous | ☐ Periodic | |
| Testing for seismic resistance is | ☐ Continuous | ☒ Periodic | |

SOILS CONSTRUCTION (IBC1704.7)

| Item | | | Reference/Comments |
|---|---|---|---|
| Site preparation | ☐ Continuous | ☒ Periodic | |
| Structural fill material | ☒ Continuous | ☐ Periodic | |
| Structural fill lift thickness | ☒ Continuous | ☐ Periodic | |
| Structural fill soil densities | ☒ Continuous | ☐ Periodic | |
| Backfill soils materials | ☒ Continuous | ☐ Periodic | |
| Backfill soil densities | ☒ Continuous | ☐ Periodic | |
| Fill material under side walks and parking | ☐ Continuous | ☒ Periodic | |
| Fill soil densities under side walks and parking | ☐ Continuous | ☒ Periodic | |

SPRAYED FIRE-RESISTANT MATERIALS (IBC1704.10)

| Item | | | Reference/Comments |
|---|---|---|---|
| Structural member surface conditions | ☒ Continuous | ☐ Periodic | |
| Material application | ☒ Continuous | ☐ Periodic | |
| Material thickness | ☒ Continuous | ☐ Periodic | |
| Material density | ☒ Continuous | ☐ Periodic | |
| Bonding strength | ☒ Continuous | ☐ Periodic | |

MASTIC AND INTUMESCENT FIRE-RESISTANT COATINGS (IBC1704.11)



| Item | | | Reference/Comments |
|---|---|---|---|
| Material and installation | ☐ Continuous | ☒ Periodic | |

ALTERNITIVE CONSTRUCTION METHODS OR MATERIALS (IBC1704.13)

| Item | | Reference/Comments |
|---|---|---|
| Material and installation | As determined by the building official | |

EPOXY (IBC1704.13)

| Item | | | Reference/Comments |
|---|---|---|---|
| Material and installation | ☒ Continuous | ☐ Periodic | |

SMOKE CONTROL (IBC1704.14)

| Item | | | Reference/Comments |
|---|---|---|---|
| Material | ☐ Continuous | ☒ Periodic | |
| Installation | ☐ Continuous | ☒ Periodic | |

Special inspection for seismic resistance (IBC1707)

| Item | | | Reference/Comments |
|---|---|---|---|
| Structural Steel (1707.2) | ☒ Continuous | ☐ Periodic | Floor & roof deck welding and fillet welds smaller than 5/16" are periodic. |
| Structural Wood (1707.3) | ☐ Continuous | ☒ Periodic | Not required for nailing of sheathing that is greater than 4" on center. |
| Cold-formed steel framing (1707.4) | ☐ Continuous | ☒ Periodic | |
| Storage racks & access floors (1707.6) | ☐ Continuous | ☒ Periodic | |
| Architectural components (1707.7) | ☐ Continuous | ☒ Periodic | Not required for interior nonbearing walls weighing 15 psf or less. |
| Mechanical & electrical items (1707.8) | ☐ Continuous | ☒ Periodic | |
| Designated systems verification (1707.9) | ☐ Continuous | ☒ Periodic | |

Inspection of seismic resistance are not required per IBC 1705.3 ☐

Special Inspectors Shall:

- Be approved by the Building Official prior to performing any duties;
- Provide proof of licensure as a special inspector by the State of Utah for each type of inspection;
- Inspection reports are to meet the requirements of IBC 1704.1.2 and DFCM standards;
- Inspection reports are to be submitted to the code consultant, architect, DFCM project manager, and the State of Utah Building Official within 48 hrs. of inspections;
- A final inspection report shall be submitted following completion of the project documenting the types of special inspections performed and a statement indicating that the structure is in compliance with the drawings, specifications and applicable codes. IBC 1704.1.2

ADA PARKING REQUIREMENTS:
SECTION 4.1.2.5a where 101-150 stalls (5) shall be accessible.
SECTION 4.1.2.5b One in Eight accesible stalls shall be van accessible.

DEFERRED SUBMITTALS:

| SUBMITTAL | APPROX. SUBMITTAL DATE. |
|---|---|
| FIRE SPRINKLER | AUGUST 2009 |

ADDITIONAL SUBMITTALS TO BE LISTED IN BID PACKAGE 3.



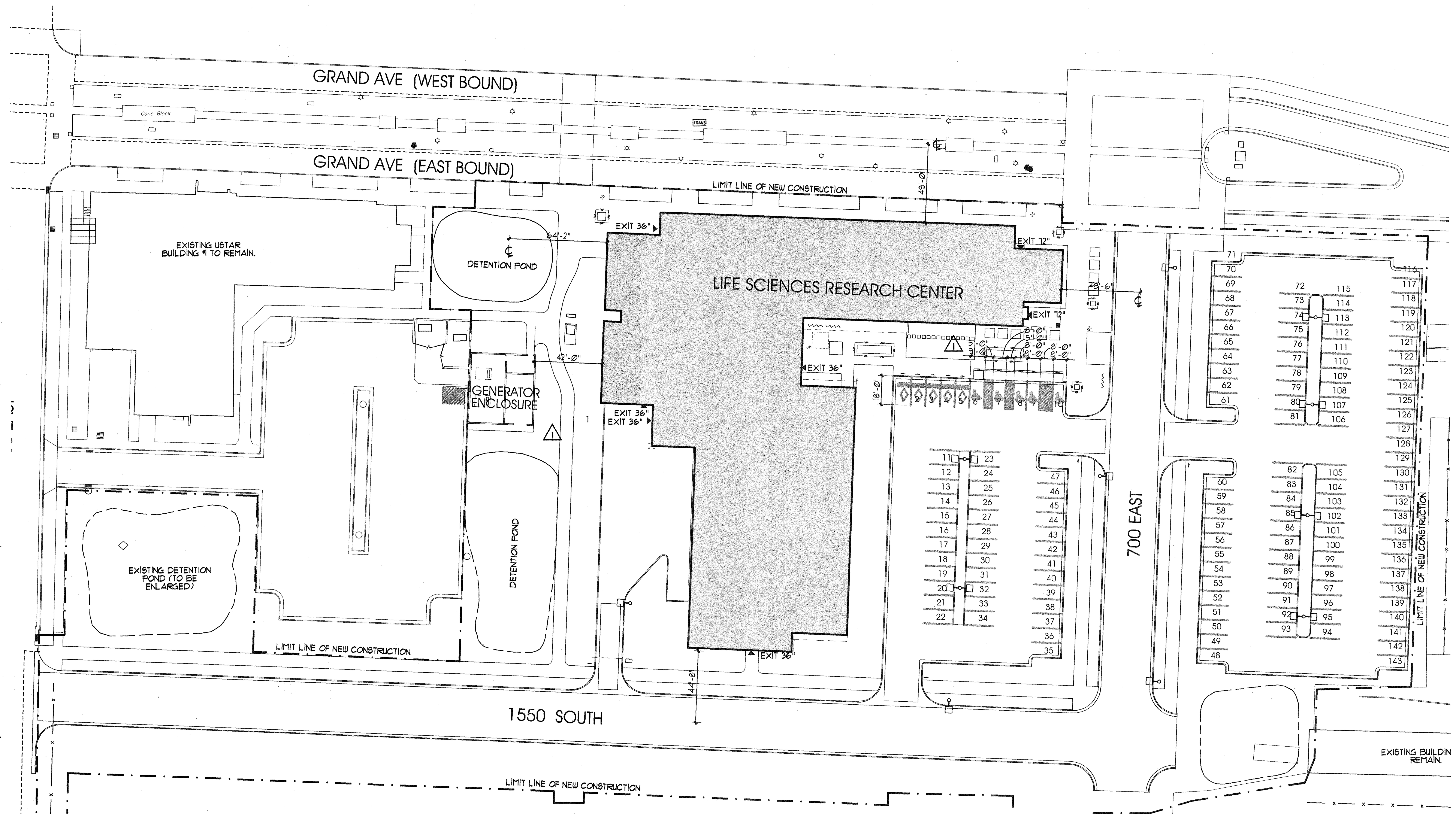


NOTE:
ALL WORK SHOWN WITHIN THE "LIMIT LINE OF NEW CONSTRUCTION" IS NEW U.N.O.)

SITE PLAN A4/GI002
SCALE: 1" = 40'-0"

# CODE ANALYSIS

## APPLICABLE CODES

| | Year | | Year |
|---|---|---|---|
| International Building Code | 2006 | National Electrical Code | 2005 |
| International Mechanical Code | 2006 | Uniform Code for Building Conservation | 2006 |
| International Fuel Gas Code | 2006 | ADA Accessibility Guildelines | 1998 |
| International Plumbing Code | 2006 | ANSI A117.1 | 2003 |
| International Fire Code | 2006 | | |
| International Energy Conservation Code | 2006 | | |

A. Occupancy and Group: B

Change in Use: Yes ______ No X Mixed Occupancy: Yes ______ No X
Special Use and Occupancy (e.g. High Rise, Covered Mall): NA

B. Seismic Design Category: D Design Wind Speed: 90 mph exp B

C. Type of Construction (circle one):

I/A I/B II/A **(II/B circled)** III/A III/B IV/HT V/A V/B

D. Fire Resistance Rating Requirements for the Exterior Walls based on the fire separation distance (in hours):

North: 0 South: 0 East: 0 West: 0

E. Mixed Occupancies: NONE Nonseparated Uses: ______ All uses comply w/ Incidental Use Areas or Accessory Occupancies. Nonseparated occupancies per 508.3.2 is not required.

F: Sprinklers:

Required: ______ Provided: X

Type of Sprinkler System (IBC 903.3.1): NFPA 13

G: Number of Stories: 4 Building Height: 55 FT

H: Actual Area per Floor (square feet): L1= 38,518, L2= 33,297, L3= 33,297, Penthouse = 5,645

I: Tabular Area: (table 503): 23,000

J: Area Modifications:

a) $86{,}250 \left\{ 23{,}000 + \left[ 23{,}000 \times .75 \right] + \left[ 23{,}000 \times 2 \right] \right\} \quad .75 = \left[ \frac{1219}{1219} - 0.25 \right] 30 / 30$

b) Sum of the Ratio Calculations for Mixed Occupancies:

$\frac{\text{Actual Area}}{\text{Allowable Area}} \leq 1$

c) Total Allowable Area for:
1) One Story: 86,250
2) Two Story: 172,500
3) Three Story: 258,750

d) Unlimited Area Building: Yes ______ No X Code Section: ______

K. Fire Resistance Rating Requirements for Building Elements (hours).

| Element | Hours | Assembly Listing | Element | Hours | Assembly Listing |
|---|---|---|---|---|---|
| Exterior Bearing Walls | 0 | | Floors - Ceiling Floors | 0 | |
| Interior Bearing Walls | 0 | | Roofs - Ceiling Roofs | 0 | |
| Exterior Non-Bearing Walls | 0 | | Exterior Doors and Windows | 0 | |
| Structural Frame | 0 | | Shaft Enclosures | 1 | |
| Partitions - Permanent | 0 | | Fire Walls | 1 | |
| Fire Barriers | 1 | | Fire Partitions | 1 | |
| | | | Smoke Partitions | | |

L. Design Occupant Load: 958

Exit Width Required: 143" Exit Width Provided: 252"

M. Minimum Number of Required Plumbing Facilities:

a) Water Closets - Required (m) 13 (f) 13 Provided (m) 13 (f) 13
b) Urinals - Required (m) ______ (f) ______ Provided (m) ______ (f) ______
c) Lavatories - Required (m) 10 (f) 10 Provided (m) 10 (f) 10
d) Bath Tubs or Showers: 2
e) Drinking Fountains: 20 Service Sinks: 6

FOOTNOTES:

1) In case of conflict with the U.S. Department of Justice Federal Registers Parts through V - ADA Guidelines and specific reference to the International Building Code Accessibility Chapters, the more restrictive requirement shall govern.

2) Additional Code Information shall be provided at the discretion of the Building Official for Complex Buildings. Including, but not limited to:
   a) High Rise Requirements.
   b) Atriums.
   c) Performance Based Criteria.
   d) Means or Egress Analysis.
   e) Fire Assembly Locator Sheet.
   f) Exterior and Interior Accessibility Route.
   g) Fire Stopping, Including Tested Design Number.


ARCHITECT 0818

ajc architects
703 east 1700 south
salt lake city, utah 84105
ph: 801.466.8818
fx: 801.466.4411
www.ajcarchitects.com

PAYETTE
285 Summer Street
Boston, MA 02210-1522
www.payette.com



OWNER INFORMATION
State of Utah
Department of Administrative Services
Division of Facilities Construction & Management
4110 State Office Building
Salt Lake City, Utah 84114
Phone: (801) 538 - 3018
Fax: (801) 538 - 3267
Internet: http://www.dfcm.utah.gov


PROJECT DESCRIPTION

LIFE SCIENCES RESEARCH CENTER
UTAH STATE UNIVERSITY

USTAR BUILDING #2
350 EAST GRAND AVE.
LOGAN, UTAH

SHEET NAME:
CODE SUMMARY

REVISIONS

| MARK | DATE | DESCRIPTION |
|---|---|---|

ISSUE DATA

| | |
|---|---|
| ISSUE DATE: | DEC. 9, 2008 |
| ISSUE TYPE: | DESDEV |
| DRAWN BY: | J. NIELSEN |
| CHECKED BY: | J. JONES |
| CAD FILE NAME: | |
| DFCM PROJECT # | 06292770 |
| STATE PROPERTY # | - |
| COPYRIGHT: | STATE OF UTAH |

SHEET NUMBER:
GI002

P:\0800\0818 USTAR at USU\03DESDEV\01GENERAL\0818GI002.dwg, 12/7/2008 5:02:11 PM, jnielsen

# CODE REQUIREMENTS FOR ACCESSIBLE FIXTURES:

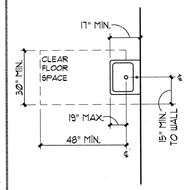

LAVATORY PLAN VIEW
SEE ADAAG-FIG. 32

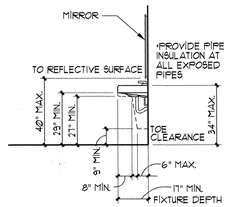

LAVATORY SIDE VIEW
DASHED LINE INDICATES DIMENSIONAL CLEARANCE OF UNDER FIXTURE ENCLOSURE, IF REQUIRED.
SEE ADAAG-FIG. 31

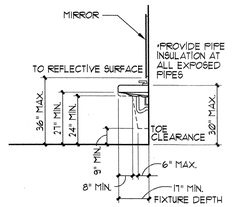

CHILDREN'S LAVATORY SIDE VIEW
DASHED LINE INDICATES DIMENSIONAL CLEARANCE OF UNDER FIXTURE ENCLOSURE, IF REQUIRED.

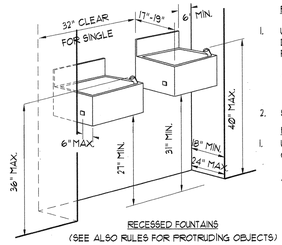

RECESSED FOUNTAINS
(SEE ALSO RULES FOR PROTRUDING OBJECTS)

RECESSED FOUNTAINS:

1. WITHIN ALCOVES MINIMUM 63" WIDE, MINIMUM 18" DEEP WHEN DOUBLE DRINKING FOUNTAINS ARE REQUIRED AND 32" MIN. CLR. WHEN A SINGLE FOUNTAIN IS PERMITTED.
   A. CONTRACTOR SHALL COORDINATE WITH SIZE OF WATER FOUNTAIN TO BE USED AND SIZE ALCOVE ACCORDINGLY COMPLYING WITH REQUIREMENTS AND RECOMMENDATIONS AND COORDINATING WITH THE ARCHITECT.
2. SEE TYPICAL ACCESSIBILITY NOTES SHEET SECTIONS "R" & "U".

PROJECTED FOUNTAINS

1. WARNING FOR THE VISION IMPAIRED AT A PROJECTED DRINKING FOUNTAIN CAN BE PROVIDED BY EITHER OF THE FOLLOWING MEANS:
   A. THE SURFACE OF THE FLOOR OR GROUND AT THE DRINKING FOUNTAIN CAN BE OF CONTRASTING COLOR WITH A TEXTURE THAT CONTRASTS IN RESILIENCY WITH THE ADJACENT FINISHED FLOOR MATERIAL, SO THAT IT CAN BE SENSED BY A CANE, WITH THE TEXTURE EXTENDING FROM THE WALL TO ONE FOOT BEYOND THE FRONT EDGE OF THE DRINKING FOUNTAIN AND ONE FOOT BEYOND EACH SIDE OF THE FOUNTAIN. OR
   B. INSTALL WING WALLS ON EACH SIDE OF THE DRINKING FOUNTAIN TO PROJECT OUT FROM THE MAIN WALL AT LEAST AS FAR AS THE DRINKING FOUNTAIN AND TO WITHIN 6" OF THE PATH OF TRAVEL FLOOR FINISH. THERE MUST BE 32" CLEAR BETWEEN THE WING WALLS, OR

NOTE:

ILLUSTRATIONS SHOWN HERE ARE FOR DIMENSIONAL ACCESSIBILITY PURPOSES ONLY. A SECOND DRINKING FOUNTAIN SHOULD BE PROVIDED AT A MOUNTING HEIGHT SUITABLE TO PERSONS WITH LIMITED PHYSICAL BENDING ABILITY, ADJACENT TO THE ACCESSIBLE FOUNTAIN, MAINTAINING MINIMUM CLEARANCES NOTED AND AS REQUIRED. PROVIDE TEXTURED AREA OF CONTRASTING COLOR TO IDENTIFY WATER FOUNTAIN LOCATION AS NOTED. WHEN FOUNTAIN IS AT AN INTERIOR LOCATION, THE TEXTURED AREA SHALL ALSO BE OF DIFFERENT RESILIENCY THAN THAT OF THE ADJACENT FLOOR SURFACE FINISH. SEE TYPICAL ACCESSIBILITY NOTES SHEET FOR ADDITIONAL REQUIREMENTS.

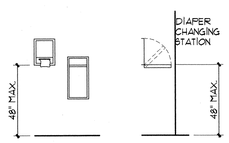

CONTROLS & OPERATING MECHANISMS
FORWARD REACH
SEE ADAAG-FIG. A8

URINAL
FRONT VIEW
SEE ADAAG SEC. 4.18.2

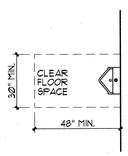

URINAL
PLAN VIEW
SEE ADAAG SEC. 4.18.3

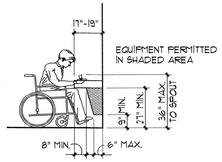

DRINKING FOUNTAIN
SEE ADAAG-FIG. 27

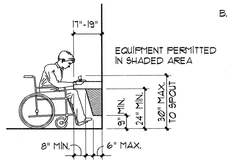

CHILDREN'S DRINKING FOUNTAIN

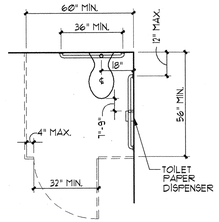

WHEEL CHAIR ACCESSIBLE
TOILET STALL
PLAN VIEW
SEE ADAAG-FIG. 30

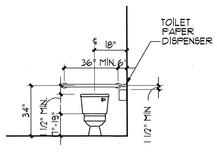

WATER CLOSET
FRONT VIEW
SEE ADAAG-FIG. 29

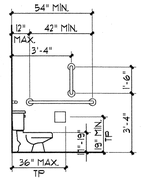

WATER CLOSET
SIDE VIEW
SEE ADAAG-FIG. 29

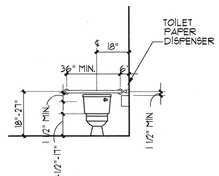

CHILDREN'S WATER CLOSET
FRONT VIEW

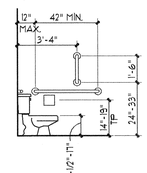

CHILDREN'S WATER CLOSET
SIDE VIEW

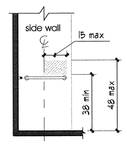

WHEEL CHAIR ACCESSIBLE
SHOWER STALL
CONTROL WALL ELEV VIEW

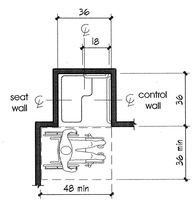

Note: inside finished dimensions measured at the center points of opposing sides

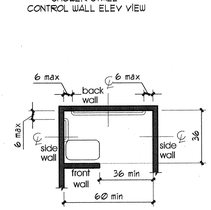

Note: inside finished dimensions measured at the center points of opposing sides

WHEEL CHAIR ACCESSIBLE
SHOWER STALL
PLAN VIEW

UNLESS NOTED AS "MIN." OR "MAX." DIMENSIONS SHOWN ARE ABSOLUTE. DIMENSIONS SHOWN HERE SHALL GOVERN THE INSTALLATION OF ALL ACCESSIBLE FIXTURES AND ACCESSORIES, UNLESS MORE SPECIFIC DIMENSIONS ARE SHOWN ELSEWHERE IN THE CONTRACT DOCUMENTS THAT ARE WITHIN THE PERMISSIBLE LIMITS SHOWN HERE.

MOUNTING HEIGHTS OF RESTROOM FIXTURES AND ACCESSORIES. PROVIDE BACKING AT ALL WALL MOUNTED FIXTURES AND EQUIPMENT.

STATE OF UTAH ENHANCED ACCESSIBILITY REQUIREMENTS:

1. POWERED DOOR OPENERS FOR THE PRIMARY ENTRANCE DESIGNATED FOR USE BY PEOPLE WITH DISABILITIES.
2. POWERED DOOR OPENERS FOR ONE UNI-SEX RESTROOM OR FOR ONE MALE AND ONE FEMALE RESTROOM IN THE BUILDING UNLESS RESTROOMS WITH A DOOR- LESS ENTRY ARE PROVIDED.

# PROTRUDING OBJECTS:

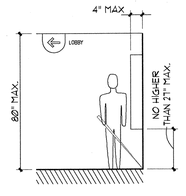


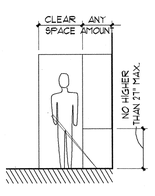


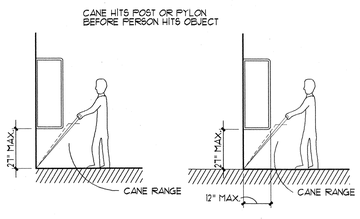


# THRESHOLD / LEVEL CHANGES:

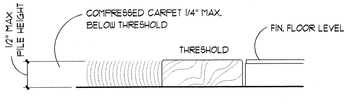

TRANSITION BETWEEN FLOOR FINISHES

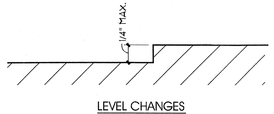

LEVEL CHANGES

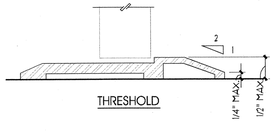

THRESHOLD

NOTES:

1. 1/2" MAXIMUM TOTAL HEIGHT WITH 1/4" MAXIMUM VERTICAL CHANGE AT EDGE.
2. 1:2 SLOPED BEVEL REQUIRED IF LEVEL CHANGE IS OVER 1/4" VERTICAL LEVEL CHANGE.
3. 1/4" MAXIMUM VERTICAL LEVEL CHANGE.

# GENERAL NOTES:

1. REFER TO DOOR HARDWARE SPECIFICATIONS FOR DOOR HARDWARE ADA REQUIREMENTS AND STANDARDS.
2. REFER TO ELECTRICAL DRAWINGS FOR ELECTRICAL DEVICES ADA MOUNTING HEIGHT REQUIREMENTS.
3. REFER TO SITE PLAN FOR ACCESSIBLE ROUTE REQUIREMENTS AND DETAIL REFERENCES. (NOT APPLICABLE TO ALL PROJECTS)
4. PROVIDE INSULATED SAFETY PIPE WRAP AT ALL EXPOSED PIPING AT ALL ACCESSIBLE LAVATORIES.

# REACH REQUIREMENTS:

HIGH FORWARD REACH LIMIT

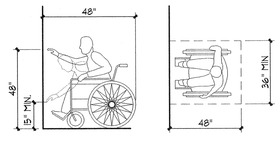


MAXIMUM SIDE REACH OVER AN OBSTRUCTION

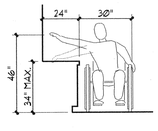


MAXIMUM FORWARD REACH OVER AN OBSTRUCTION

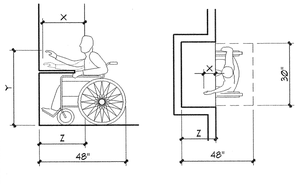


CLEAR FLOOR SPACE
PARALLEL APPROACH

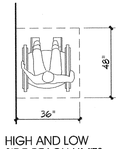


HIGH AND LOW SIDE REACH LIMITS

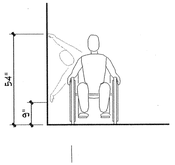


NOTES:

1. X SHALL BE < 25 INCHES; Z SHALL BE > X.
2. WHEN X < 20 INCHES, THEN Y SHALL BE 48 INCHES MAXIMUM.
3. WHEN X IS 20 TO 25 INCHES, THEN Y SHALL BE 44 INCHES MAXIMUM.

# SIGNS / PICTOGRAMS:

INTERNATIONAL ACCESSIBILITY SYMBOL

RAISED

PROPORTIONS
INTERNATIONAL SIGN OF ACCESSIBILITY

INTERNATIONAL TDD SYMBOL

INTERNATIONAL SYMBOL OF ACCESS FOR HEARING IMPAIRED

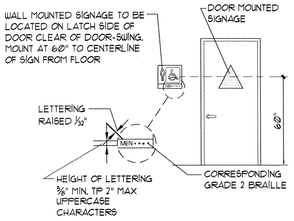

RESTROOM DOOR SIGNAGE

LETTERS AND NUMBERS:

1. LETTERS AND NUMBERS ON SIGNS SHALL BE RAISED 1/32" MINIMUM AND SHALL BE SANS-SERIF UPPERCASE CHARACTERS ACCOMPANIED BY GRADE 2 BRAILLE. (SEC. 1117B.5.6.1)
2. RAISED CHARACTERS OR SYMBOLS SHALL BE A MINIMUM OF 5/8" HIGH. (SEC. 1117B5.6.2)
3. PICTORIAL SYMBOL SIGNS (PICTOGRAMS) SHALL BE ACCOMPANIED BY THE EQUIVALENT VERBAL DESCRIPTION PLACED DIRECTLY BELOW THE PICTOGRAM. THE BORDER DIMENSION OF THE PICTOGRAM SHALL BE A MINIMUM OF 6" IN HEIGHT. (SEC. 1117B.5.6.3)
4. LETTERS AND NUMBERS ON SIGNS SHALL HAVE A WIDTH-TO-HEIGHT RATIO OF BETWEEN 3:5 AND 1:1 AND A STROKE WIDTH-TO-HEIGHT RATIO BETWEEN 1:5 AND 1:10. (SEC. 1117B.5.3.)
5. CHARACTERS AND SYMBOLS SHALL CONTRAST WITH THEIR BACKGROUND, EITHER LIGHT CHARACTERS ON A DARK BACKGROUND OR DARK CHARACTERS ON A LIGHT BACKGROUND. (SEC. 1117B.5.5.)
6. CHARACTERS AND NUMBERS ON SIGNS SHALL BE SIZED ACCORDING TO THE VIEWING DISTANCE FROM WHICH THEY ARE TO BE READ. THE MINIMUM HEIGHT IS MEASURED USING AN UPPER CASE X. LOWER CASE CHARACTERS ARE PERMITTED. FOR SIGNS SUSPENDED OR PROJECTED ABOVE THE FINISH FLOOR IN COMPLIANCE WITH SECTION 1121B, THE MINIMUM CHARACTER HEIGHT SHALL BE 3". (SEC. 1117B.5.4.)
7. CONTRACTED GRADE 2 BRAILLE SHALL BE USED WHEREVER BRAILLE SYMBOLS ARE SPECIFICALLY REQUIRED IN OTHER PORTIONS OF THESE REGULATIONS. DOTS SHALL BE 1/10" ON CENTERS IN EACH CELL WITH 2/10" SPACE BETWEEN CELLS. DOTS SHALL BE RAISED A MINIMUM OF 1/40" ABOVE THE BACKGROUND. (SEC. 1117B.5.2.)

SIGN LOCATIONS:

8. ALL BUILDING ENTRANCES THAT ARE ACCESSIBLE TO AND USABLE BY PERSONS WITH DISABILITIES AND AT EVERY MAJOR JUNCTION ALONG OR LEADING TO AN ACCESSIBLE ROUTE OF TRAVEL SHALL BE IDENTIFIED WITH A SIGN DISPLAYING THE INTERNATIONAL SYMBOL OF ACCESSIBILITY AND WITH ADDITIONAL DIRECTIONAL SIGNS, AS REQUIRED, TO BE VISIBLE TO PERSONS ALONG APPROACHING PEDESTRIAN WAYS. (SEC. 1117B.5.1 & 1121B.3.)
9. WHEN PERMANENT IDENTIFICATION IS PROVIDED FOR ROOMS AND SPACES, RAISED LETTERS SHALL BE PROVIDED AND SHALL BE ACCOMPANIED BY BRAILLE IN CONFORMANCE WITH SECTION 1117B.5.6. SIGNS SHALL BE INSTALLED ON THE WALL ADJACENT TO THE LATCH OUTSIDE OF THE DOOR, WHERE THERE IS NO WALL SPACE ON THE LATCH SIDE, INCLUDING AT LEAF DOORS. SIGNS SHALL BE PLACE ON THE NEAREST ADJACENT WALL, PREFERABLY ON THE RIGHT. MOUNTING HEIGHT SHALL BE 60" ABOVE THE FINISH FLOOR TO THE CENTERLINE OF THE SIGN. MOUNTING LOCATION SHALL BE DETERMINED SO THAT THE PERSON MAY APPROACH WITHIN 3" OF THE SIGNAGE WITHOUT ENCOUNTERING PROTRUDING OBJECTS OR STANDING WITHIN THE SWING OF A DOOR. (SEC. 1117B.5.9.)
10. ADDITIONAL DIRECTIONAL SIGNS ALONG ACCESSIBLE PATH OF TRAVEL ARE REQUIRED.
11. BUILDINGS REMODELED TO PROVIDE ACCESSIBLE SANITARY FACILITIES FOR PUBLIC USE SHALL HAVE INFORMATION POSTED IN THE LOBBY AS PART OF THE BUILDING DIRECTORY.

INTERNATIONAL SYMBOL OF ACCESSIBILITY:

12. STANDARD USED TO IDENTIFY ACCESSIBLE FACILITIES.
13. WHITE FIGURE ON BLUE BACKGROUND, COLOR # 15090 ON FEDERAL STANDARD # 595A.
14. WHEN ENFORCING AGENCY DETERMINES, IF APPROPRIATE, SPECIAL DESIGNS AND COLORS MAY BE APPROVED.

BRAILLE:

15. USE CONTRASTED GRADE 2 BRAILLE. DOTS TO BE 0.1 INCH ON CENTER IN EACH CELL.
16. 0.2 INCH SPACE BETWEEN CELLS.
17. DOTS RAISED MINIMUM 0.025 INCH ABOVE BACKGROUND.
18. SEE 4/T-4 FOR MORE INFO.

# DOOR CLEAR SPACE REQUIREMENTS:

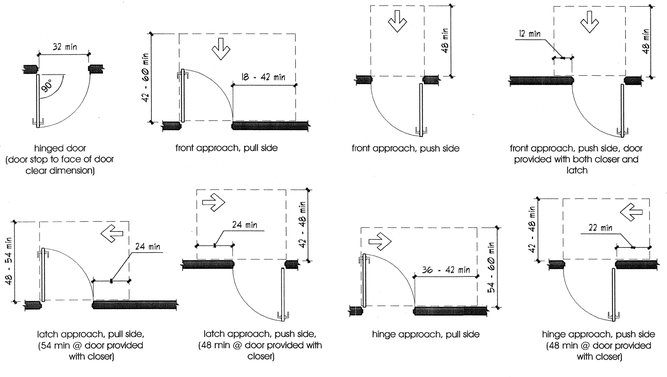


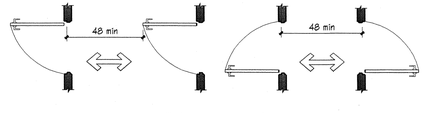

vestibule (corridor) clearances


ARCHITECT 0818

ajc architects

703 east 1700 south
salt lake city, utah 84105
ph: 801.466.8818
fx: 801.466.4411
www.ajcarchitects.com

PAYETTE

285 Summer Street
Boston, MA 02210-1522
www.payette.com


OWNER INFORMATION

State of Utah
Department of Administrative Services

Division of Facilities Construction & Management
4110 State Office Building
Salt Lake City, Utah 84114
Phone: (801) 538 - 3018
Fax: (801) 538 - 3267

Internet: http://www.dfcm.utah.gov

PROJECT DESCRIPTION

LIFE SCIENCES RESEARCH CENTER
UTAH STATE UNIVERSITY

USTAR BUILDING #2
350 EAST GRAND AVE.
LOGAN, UTAH

SHEET NAME:

ADA REQUIREMENTS

REVISIONS

| MARK | DATE | DESCRIPTION |
|---|---|---|

ISSUE DATA

| | |
|---|---|
| ISSUE DATE: | DEC. 9, 2008 |
| ISSUE TYPE: | DESDEV |
| DRAWN BY: | J. NIELSEN |
| CHECKED BY: | J. JONES |
| CAD FILE NAME: | 0818GI003.DWG |
| DFCM PROJECT # | 06292770 |
| STATE PROPERTY # | - |
| COPYRIGHT: | STATE OF UTAH |

SHEET NUMBER:

GI003

P:\0800\0818 ISTAR #1\ISSUES\DESDEV\GI\0818GI003.dwg, 12/7/2008 5:03:55 PM, pmbern

# CODE SUMMARY CONTINUED

| | | |
|---|---|---|
| STAIRS, RAMPS AND GUARDS | 48" CLEAR MIN BETWEEN HANDRAIL NOT REQUIRED | SECTION 1007.3 EXCEPT 3 |
| | WIDTH SHALL NOT BE LESS THAN 44 INCHES | SECTION 1009.1 |
| | STAIR RISER SHALL 7 INCHES MAX & 4 INCHES MIN. STAIR TREAD SHALL BE 11 INCHES MIN. | SECTION 1009.3 |
| | MAX STAIR MAY RISE BETWEEN LANDINGS = 12' | SECTION 1009.6 |
| | HANDRAIL REQUIRED EACH SIDE | |
| | HANDRAIL HEIGHT FROM NOSING SHALL NOT BE LESS THAN 34" AND NOT MORE THAN 38" | |
| | HANDRAIL MUST RETURN TO WALL, GUARD WALKING SURFACE, MUST BE CONTINUOUS TO NEXT RUN OF STAIRS OR MUST EXTEND 12 INCHES BEYOND THE RISER AND STOP A DISTANCE OF ONE TREAD BEYOND THE BOTTOM OF THE STAIR RISER. | SECTION 1012.5 |
| | STAIRWAY TO ROOF NOT REQUIRED | SECTION 1009.11 |
| | INT. EXIT STAIRWAY TO HAVE A 1 HR ENCLOSED RATING | SECTION 1020.1 |
| AREA OF REFUGE | NOT REQUIRED | SECTION 1007.6 |
| GUARDS | GUARDS NOT BE LESS 42 INCHES | SECTION 1013 |
| | BALUSTERS OR ORNAMENTAL PATTERN SHALL NOT LET A 4 INCH SPHERE PASS UP TO 34 INCHES. FROM 34 INCHES TO 42 INCHES AN 8 INCH SPHERE CAN NOT PASS THROUGH. A 6 INCH SPHERE CAN NOT PASS THROUGH THE TRIANGLE FORMED BY THE RISER AND TREAD | |
| ACCESSIBLE | ACCESSIBLE ROUTE FROM PARKING | SECTION 1104 |
| | 60% OF ENTRANCES MUST BE ACCESSIBLE | SECTION 1105 |
| | ACCESSIBLE PARKING | SECTION 1106 |
| | VAN ACCESSIBLE PARKING | SECTION 1106.5 |
| | UNISEX TOILET NOT REQUIRED | SECTION 1109.2.1 & 1109.2.1.4 |
| | WHEELCHAIR ACCESSIBLE WATER CLOSET | SECTION 1109.2.2 |
| | ACCESSIBLE SINK | SECTION 1109.3 |
| | ACCESSIBLE ELECTRIC WATER COOLERS | 1109.5 |
| | REQUIRED ACCESSIBLE ELEMENTS SHALL BE IDENTIFIED USING THE INTERNATIONAL SYMBOL OF ACCESSIBILITY | |
| PLUMBING FIXTURES | SEE SHEETS GI004 - GI009 | TABLE 2902.1 |
| INTERIOR FINISHES | (SPRINKLERED BUILDINGS) M OCC.<br>EXIT ENCLOSURES AND EXIT PASSAGEWAYS = CLASS 'B'<br>CORRIDORS = CLASS 'C'<br>ROOMS AND ENCLOSED SPACES = CLASS 'C' | TABLE 803.5 |
| AUTOMATIC FIRE SPRINKLER SYSTEM | NOT REQUIRED<br>FIRE EXTINGUISHERS | IBC CHAPTER 9 & NFPA 13<br>NFPA CHAPTER 10 |
| ROOF COVERING FIRE CLASSIFICATION | II-B = MIN 'C' COVER FIRE CLASSIFICATION | IBC TABLE 1505.1 |

# EXPANDED CODE SUMMARY

| APPLICABLE CODES | | | |
|---|---|---|---|
| INTERNATIONAL BUILDING CODE | 2006 | ADAAG | 1998 |
| INTERNATIONAL FIRE CODE | 2006 | ANSI | A-117.1 2003 |
| INTERNATIONAL MECHANICAL CODE | 2006 | INTERNATIONAL ENERGY CONSERVATION CODE | 2006 |
| INTERNATIONAL PLUMBING CODE | 2006 | ASHRAE 90.1 | 2004 |
| NATIONAL ELECTRIC CODE | 2005 | ASHRAE INDOOR AIR QUALITY | 62-2004 |

| ITEM | VALUE | REFERENCE |
|---|---|---|
| OCCUPANCY CLASSIFICATION | B | CHAPTER 3 |
| ACCESSORY ASSEMBLY AREAS HAVING A FLOOR AREA LESS THAN 750 SQ.. FT. ARE NOT CONSIDERED SEPARATE OCCUPANCIES. | COMPLIES | SECTION 508.3.1 EXCEPT. 1 |
| BUILDING OR PORTION THEREOF THAT CONTAINS HEALTH HAZARDS IN SMALL DOSE SHALL NOT BE CLASSIFIED IN GROUP H | COMPLIES | SECTION 307.1 EXCEPT. 1 |
| TYPE OF CONSTRUCTION | II-B | CHAPTER 6 |
| BUILDING AREA AND HEIGHT FOR 'B' OCCUPANCY | HEIGHT= 55FT<br>STORIES= 4<br>AREA= 23,000 | TABLE 503 |
| INCREASE FOR AUTOMATIC SPRINKLER | HEIGHT= 75 FT<br>STORIES= 5<br>AREA= 200% | SECTION 504.2<br>SECTION 504.2<br>SECTION 506.3 |
| INCREASE DUE TO FRONTAGE | AREA= 75% | SECTION 506.2 |
| | SEE GI002 ITEM J FOR TOTAL AREA MODIFICATIONS | |
| ACTUAL AREAS | LEVEL 1 39,169<br>LEVEL 2 33,724<br>LEVEL 3 28,537<br>LEVEL 4 (INTERSTITIAL) 11,030<br>PENTHOUSE 16,797<br>TOTAL 129,257 | |
| FIRE RESISTIVE REQUIREMENTS | ELEMENT — RATING IN HOURS | TABLE 601 |
| | STRUCTURAL FRAME 0<br>EXT. BEARING WALLS 2<br>INT. BEARING WALLS 0<br>INT NON BEARING 0<br>FLOOR CONSTRUCTION 0<br>ROOF CONSTRUCTION 0 | |
| CORRIDOR | 0 | TABLE 1017.1 |
| SHAFT ENCLOSURES (FIRE BARRIER) | COMPLIES<br>1 HR SHAFT | SECTION 706.3.9<br>SECTION 707 |
| ELEVATOR SHAFT | 1HR | SECTION 707.4 |
| ELEVATOR LOBBY | NOT REQUIRED | SECTION 707.14.1.4 |
| OCCUPANCY SEPARATION (S-2 TO B) | 1 HR | TABLE 601 |
| CONTROL AREAS (FIRST LEVEL) | 1 HR | TABLE 414.2.2 |
| DOOR IN EXIT ENCLOSURE | 60 MIN | TABLE 715.4 |
| INTERIOR WALL & CEILING FINISHES | EXIT ENCLOSURES CLASS B<br>ROOMS CLASS C | TABLE 803.5 |
| AUTOMATIC SPRINKLER SYSTEMS | NOT REQUIRED, BUT PROVIDED | SECTION 903 |
| OCCUPANCY LOAD FACTORS | SEE SHEETS GI005 - GI009 | TABLE 1004.1.1 |
| EGRESS WIDTH PER PERSON SERVED | | TABLE 1005.1 |
| | STAIRWAYS = .20 INCHES/OCCUPANT | |
| | OTHER = .15 INCHES/OCCUPANT | |
| ELEVATOR | ELEVATOR NOT REQUIRED FOR EGRESS | SECTION 1007.2.1 |
| | ELEVATOR LOBBY NOT REQUIRED FOR THREE STORIES | SECTION 707.14 |
| CORRIDORS AND DOORS | MIN CORRIDOR WIDTH = 44 INCHES | SECTION 1017.2 |
| | MIN DOOR WIDTH = 32 INCHES CLEAR<br>MAX DOOR LEAF = 48 INCHES | SECTION 1008.1.1 |
| | DEAD END CORRIDORS = 50' MAX | SECTION 1017.3.2 |
| | CORRIDOR CEILING MAY BE USED AS A RETURN PLENUM | SECTION 1017.4.1 |
| | ALL FINISHES TO MEET 25/50 SMOKE FLAME PER ASTM E 84 | IMC SECTION 601.2.1<br>IMC SECTION 602.2.1 |
| NUMBER OF EXITS | 'B' OCCUPANCY GREAT THAN 49 = 2 EXITS<br>MIN # OF EXITS PER STORY = 2 | TABLE 1015.1 |
| TRAVEL DISTANCE | 'B' OCCUPANCY (SPRINKLED) = 300' | SECTION 1016.1 |
| COMMON PATH OF EGRESS TRAVEL | SHALL NOT BE MORE THAN 100' | SECTION 1014.3 EXCEPT 2 |
| EXIT SEPARATION | 1/3 THE DIAGONAL DIMENSION OF BUILDING AREA | SECTION 1015.2.1 EXCEPT 2 |


ARCHITECT 0818

ajc architects
703 east 1700 south
salt lake city, utah 84105
ph: 801.466.8818
fx: 801.466.4411
www.ajcarchitects.com

PAYETTE
285 Summer Street
Boston, MA 02210-1522
www.payette.com



OWNER INFORMATION

State of Utah
Department of Administrative Services
Division of Facilities
Construction & Management
4110 State Office Building
Salt Lake City, Utah 84114
Phone: (801) 538 - 3018
Fax: (801) 538 - 3267
Internet: http://www.dfcm.utah.gov


PROJECT DESCRIPTION

LIFE SCIENCES RESEARCH CENTER
UTAH STATE UNIVERSITY

USTAR BUILDING #2
350 EAST GRAND AVE.
LOGAN, UTAH

SHEET NAME:

CODE SUMMARY

REVISIONS

MARK DATE DESCRIPTION


ISSUE DATA

ISSUE DATE: DEC. 9, 2008
ISSUE TYPE: DESDEV
DRAWN BY: J. NIELSEN
CHECKED BY: J. JONES
CAD FILE NAME:
DFCM PROJECT # 06292770
STATE PROPERTY # -



COPYRIGHT: STATE OF UTAH


SHEET NUMBER:

GI004

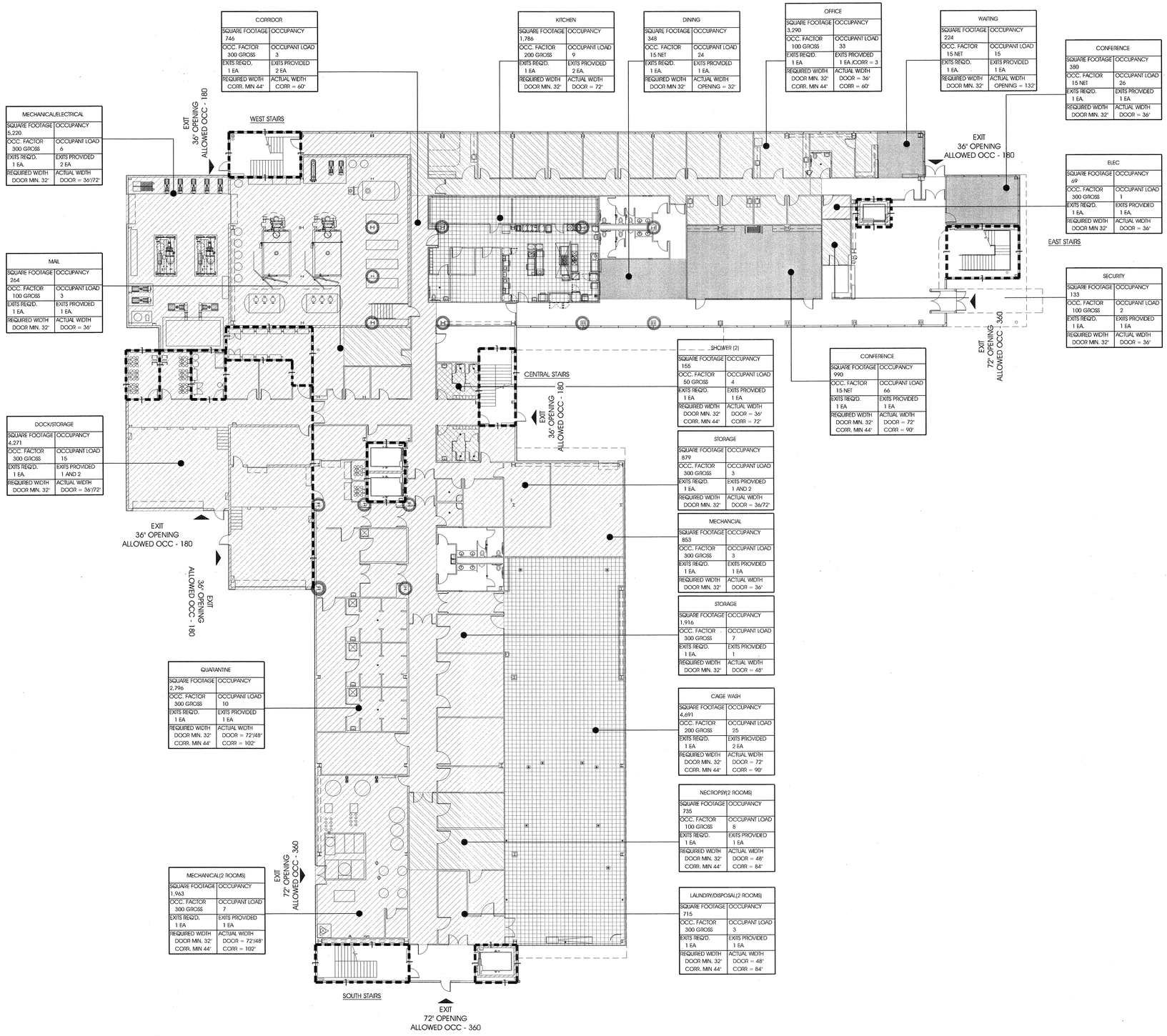


LEVEL 1 CODE REFERNCE PLAN (A4 / GI005)
SCALE: 1/16" = 1'-0"

# MAIN LEVEL OCCUPANCY

## MAIN LEVEL OCCUPANCY

| | |
|---|---|
| MECHANICAL/ELEC | 6 |
| DOCK/STORAGE | 15 |
| MAIL | 3 |
| QUARANTINE | 10 |
| MECHANICAL | 7 |
| LAUNDRY/DISPOSAL | 3 |
| NECROPSY | 8 |
| CAGEWASH | 25 |
| STORAGE | 7 |
| STORAGE | 3 |
| MECHANICAL | 3 |
| CORRIDOR | 3 |
| SHOWER | 6 |
| KITCHEN | 9 |
| DINING | 24 |
| OFFICE | 33 |
| CONFERENCE | 66 |
| SECURITY | 2 |
| ELECTRICAL | 1 |
| WAITING | 15 |
| CONFERENCE | 26 |
| TOTAL: | 270 OCCUPANTS |

## LEGEND

DOUBLE DIAGONAL HATCH INDICATES OCCUPANT LOAD OF 1/100 SF GROSS

SOLID HATCH INDICATES OCCUPANCY LOAD OF 1/ 15 SF NET.

DIAGONAL HATCH INDICATES OCCUPANCY LOAD OF 1/ 300 SF GROSS.

CROSS HATCH INDICATES OCCUPANCY LOAD OF 1/50 SF GROSS

CHECKERED HATCH INDICATES OCCUPANCY LOAD OF 1/200 SF GROSS

1 HR RATED WALLS

1 HR RATED SPRAY APPLIED FIRE PROOFING AT COL. ALL OTHER STRUCTURAL MEMBERS HAVE Ø HR RATING.

## REST ROOM TABULATION

| | WATER CLOSET 1/25;1/50 (270/2 = 135 OCC.) | | LAVATORIES 1/40;1/80 (270/2 = 135 OCC.) | | DRINKING FOUNTAINS 1/100 (270/100 = 3) | SERV. SINK 1 (REQ = 1) |
|---|---|---|---|---|---|---|
| | M | F | M | F | | |
| REQUIRED | 4 | 4 | 3 | 3 | REQ. = 6 | REQ. = 1 |
| ACTUAL | 5 | 5 | 4 | 4 | ACT. = 4 | ACT. = 2 |
| UNI-SEX | 2 | | 2 | | | |

## STAIR TABULATION

MAIN LEVEL IS AT GRADE LEVEL


ARCHITECT 0818

ajc architects

703 east 1700 south
salt lake city, utah 84105
ph: 801.466.8818
fx: 801.466.4411
www.ajcarchitects.com

PAYETTE

285 Summer Street
Boston, MA 02210-1522
www.payette.com


OWNER INFORMATION

State of Utah
Department of Administrative Services


Division of Facilities Construction & Management
4110 State Office Building
Salt Lake City, Utah 84114
Phone: (801) 538 - 3018
Fax: (801) 538 - 3267

Internet: http://www.dfcm.utah.gov


PROJECT DESCRIPTION

# LIFE SCIENCES RESEARCH CENTER
UTAH STATE UNIVERSITY

USTAR BUILDING #2
350 EAST GRAND AVE.
LOGAN, UTAH

SHEET NAME:

LEVEL 1
CODE REFERENCE
PLAN

REVISIONS

| MARK | DATE | DESCRIPTION |
|---|---|---|

ISSUE DATA

| | |
|---|---|
| ISSUE DATE: | DEC. 9, 2008 |
| ISSUE TYPE: | DESDEV |
| DRAWN BY: | J. NIELSEN |
| CHECKED BY: | J. JONES |
| CAD FILE NAME: | 0818GI005 |
| DFCM PROJECT # | 06292770 |
| STATE PROPERTY # | - |
| COPYRIGHT: | STATE OF UTAH |

SHEET NUMBER:

GI005

P:\0809\0818 USTAR ph1\ISSUES\DESDEV\01\GI\0818GI005.dwg, 12/5/2008 1:11:18 PM, jmeilsen

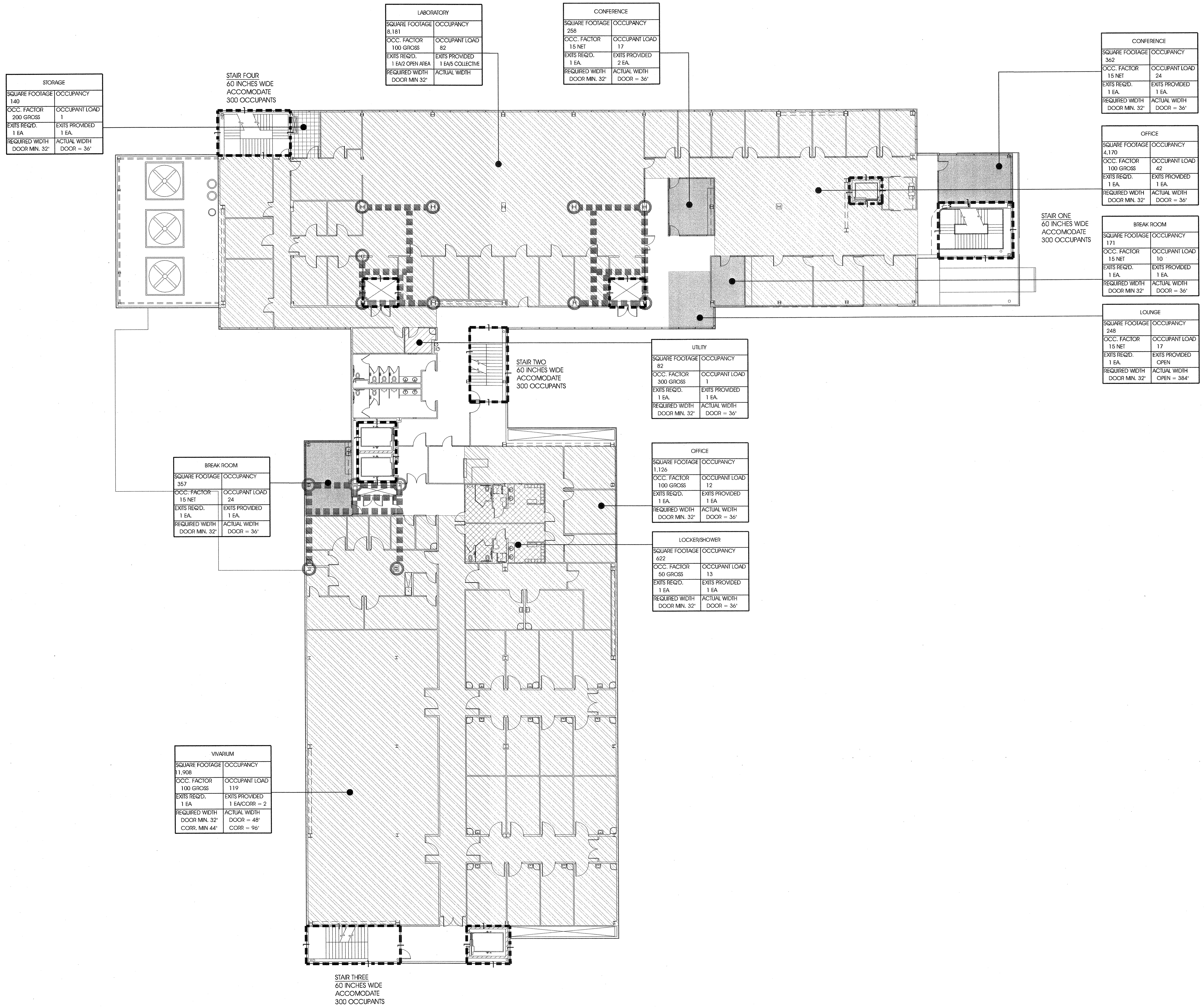


LEVEL 2 CODE REFERENCE PLAN
SCALE: 1/16" = 1'-0"   A4 / GI006

# SECOND LEVEL OCCUPANCY

## SECOND LEVEL OCCUPANCY

| | |
|---|---|
| VIVARIUM | 119 |
| OFFICE | 12 |
| UTILITY | 1 |
| LOUNGE | 17 |
| BREAK ROOM | 10 |
| OFFICE | 42 |
| CONFERENCE | 24 |
| CONFERENCE | 17 |
| LABORATORY | 82 |
| STORAGE | 1 |
| BREAK ROOM | 24 |
| LOCKER/SHOWER | 13 |
| TOTAL: | 362 OCCIPANTS |

# LEGEND

- DOUBLE DIAGONAL HATCH INDICATES OCCUPANY LOAD OF 1/ 100 SF GROSS
- SOLID HATCH INDICATES OCCUPANCY LOAD OF 1/15 SF NET.
- DIAGONAL HATCH INDICATES OCCUPANCY LOAD OF 1/300 SF GROSS.
- CROSS HATCH INDICATES OCCUPANCY LOAD OF 1/50 SF GROSS
- CHECKERED HATCH INDICATES OCCUPANCY LOAD OF 1/200 SF GROSS
- 1 HR RATED WALLS
- 1 HR RATED SPRAY APPLIED FIRE PROOFING AT COL. ALL OTHER STRUCTURAL MEMBERS HAVE 0 HR RATING UNO.
- 1 HR RATED SPRAY APPLIED FIRE PROOFING AT FLOOR BEAM. COORD. W/ STRUCTURAL PLANS.

# REST ROOM TABULATION

| | WATER CLOSET | | LAVATORIES | | DRINKING FOUNTAINS | SERV. SINK |
|---|---|---|---|---|---|---|
| | 1/25;1/50 | | 1/40;1/80 | | 1/100 | 1 |
| | 362/2 = 181 OCC. | | 362/2 = 181 OCC. | | 362/100 = 4 | REQ = 1 |
| | M | F | M | F | | |
| REQUIRED | 5 | 5 | 4 | 4 | REQ. = 8 | REQ. = 1 |
| ACTUAL | 6 | 6 | 4 | 4 | ACT. = 2 | ACT. = 2 |

# STAIR TABULATION

362 OCCUPANCY

4 STAIR EXITS

362/4 = 90.5 OCC./STAIR

WIDTH

90.5 x 0.2 = 18.1 INCHES REQ.
MIN REQUIRED WIDTH FOR STAIRS = 48 INCHES
ACTUAL WIDTH PER STAIR = 60 INCHES
DOOR TO STAIR = 36 INCES

ARCHITECT 0818

ajc architects
703 east 1700 south
salt lake city, utah 84105
ph: 801.466.8818
fx: 801.466.4411
www.ajcarchitects.com

PAYETTE
285 Summer Street
Boston, MA 02210-1522
www.payette.com

OWNER INFORMATION
State of Utah
Department of Administrative Services
Division of Facilities Construction & Management
DFCM
4110 State Office Building
Salt Lake City, Utah 84114
Phone: (801) 538 - 3018
Fax: (801) 538 - 3267
Internet: http://www.dfcm.utah.gov

PROJECT DESCRIPTION

LIFE SCIENCES RESEARCH CENTER
UTAH STATE UNIVERSITY

USTAR BUILDING #2
350 EAST GRAND AVE.
LOGAN, UTAH

SHEET NAME:
LEVEL 2
CODE REFERENCE
PLAN

REVISIONS
MARK DATE DESCRIPTION

ISSUE DATA

| | |
|---|---|
| ISSUE DATE: | DEC. 9, 2008 |
| ISSUE TYPE: | DESDEV |
| DRAWN BY: | J. NIELSEN |
| CHECKED BY: | J. JONES |
| CAD FILE NAME: | 0818GI006 |
| DFCM PROJECT # | 06292770 |
| STATE PROPERTY # | - |
| COPYRIGHT: | STATE OF UTAH |

SHEET NUMBER:
GI006

P:\0800\0818 USTAR at USU\03DESDEV\01GENERAL\0818GI006.dwg, 12/6/2008 1:13:11 PM, jnielsen

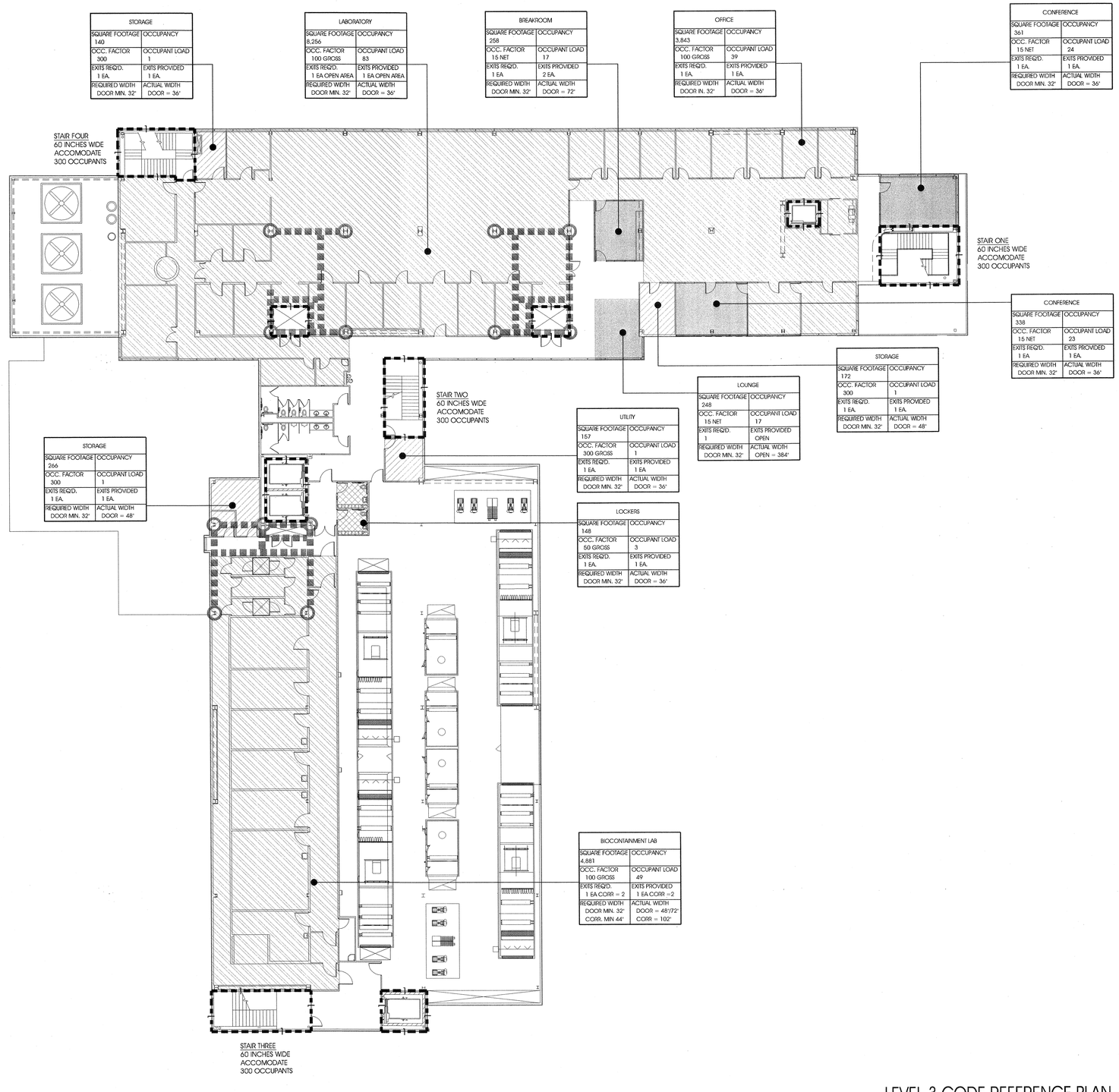


LEVEL 3 CODE REFERENCE PLAN
SCALE: 1/16" = 1'-0"
A4 / GI007

# THIRD LEVEL OCCUPANCY

## THIRD LEVEL OCCUPANCY

| | |
|---|---|
| BIOCONTAINMENT LAB | 49 |
| LOCKERS | 3 |
| UTILITY | 1 |
| LOUNGE | 17 |
| BREAK ROOM | 12 |
| CONFERENCE | 24 |
| OFFICE | 42 |
| CONFERENCE | 23 |
| LABORATORY | 83 |
| STORAGE | 1 |
| STORAGE | 1 |
| STORAGE | 1 |
| TOTAL | 257 OCCUPANTS |

## LEGEND

DOUBLE DIAGONAL HATCH INDICATES OCCUPANT LOAD OF 1/100 SF GROSS

SOLID HATCH INDICATES OCCUPANCY LOAD OF 1/15 SF NET.

DIAGONAL HATCH INDICATES OCCUPANCY LOAD OF 1/300 SF GROSS.

CROSS HATCH INDICATES OCCUPANCY LOAD OF 1/50 SF GROSS

1 HR RATED WALLS

1 HR RATED SPRAY ON FIRE PROOFING AT COLS. ALL OTHER STRUCTURAL MEMBERS HAVE A RATING OF Ø HR U.N.O.

1 HR RATED SPRAY ON FIRE PROOFING AT FLOOR BEAMS

## REST ROOM TABULATION

| | WATER CLOSET 1/25;1/50 (257/2 = 128.5 OCC.) | | LAVATORIES 1/40;1/80 (257/2 = 128.5 OCC.) | | DRINKING FOUNTAINS 1/100 (257/100 = 3) | SERV. SINK 1 (REQ = 1) |
|---|---|---|---|---|---|---|
| | M | F | M | F | | |
| REQUIRED | 4 | 4 | 3 | 3 | REQ. = 3 | |
| ACTUAL | 4 | 4 | 2 | 2 | ACT. = 2 | ACT. = 2 |

## STAIR TABULATION

257 OCCUPANCY

4 STAIR EXITS

257/4 = 64.25 OCC./STAIR

WIDTH

64.25 x 0.2 = 12.85 INCHES REQ.
MIN REQUIRED WIDTH FOR STAIRS = 48 INCHES
ACTUAL WIDTH PER STAIR = 60 INCHES
DOOR TO STAIR = 36 INCES


ARCHITECT 0818

ajc architects

703 east 1700 south
salt lake city, utah 84105
ph: 801.466.8818
fx: 801.466.4411
www.ajcarchitects.com

PAYETTE

285 Summer Street
Boston, MA 02210-1522
www.payette.com


OWNER INFORMATION

State of Utah
Department of Administrative Services

Division of Facilities Construction & Management
4110 State Office Building
Salt Lake City, Utah 84114
Phone: (801) 538 - 3018
Fax: (801) 538 - 3267

Internet: http://www.dfcm.utah.gov

PROJECT DESCRIPTION

LIFE SCIENCES RESEARCH CENTER
UTAH STATE UNIVERSITY

USTAR BUILDING #2
350 EAST GRAND AVE.
LOGAN, UTAH

SHEET NAME:

LEVEL 3
CODE REFERENCE
PLAN

REVISIONS

| MARK | DATE | DESCRIPTION |
|---|---|---|

ISSUE DATA

| | |
|---|---|
| ISSUE DATE: | DEC. 9, 2008 |
| ISSUE TYPE: | DESDEV |
| DRAWN BY: | J. NIELSEN |
| CHECKED BY: | J. JONES |
| CAD FILE NAME: | 0818GI007 |
| DFCM PROJECT # | 06292770 |
| STATE PROPERTY # | - |
| COPYRIGHT: | STATE OF UTAH |

SHEET NUMBER:

GI007

P:\0800\0818 USTAR UT USU\DESIGN\ARCH\GRAPHICS\0818GI007.dwg, 12/9/2008 11:06:46 PM, jnielsen

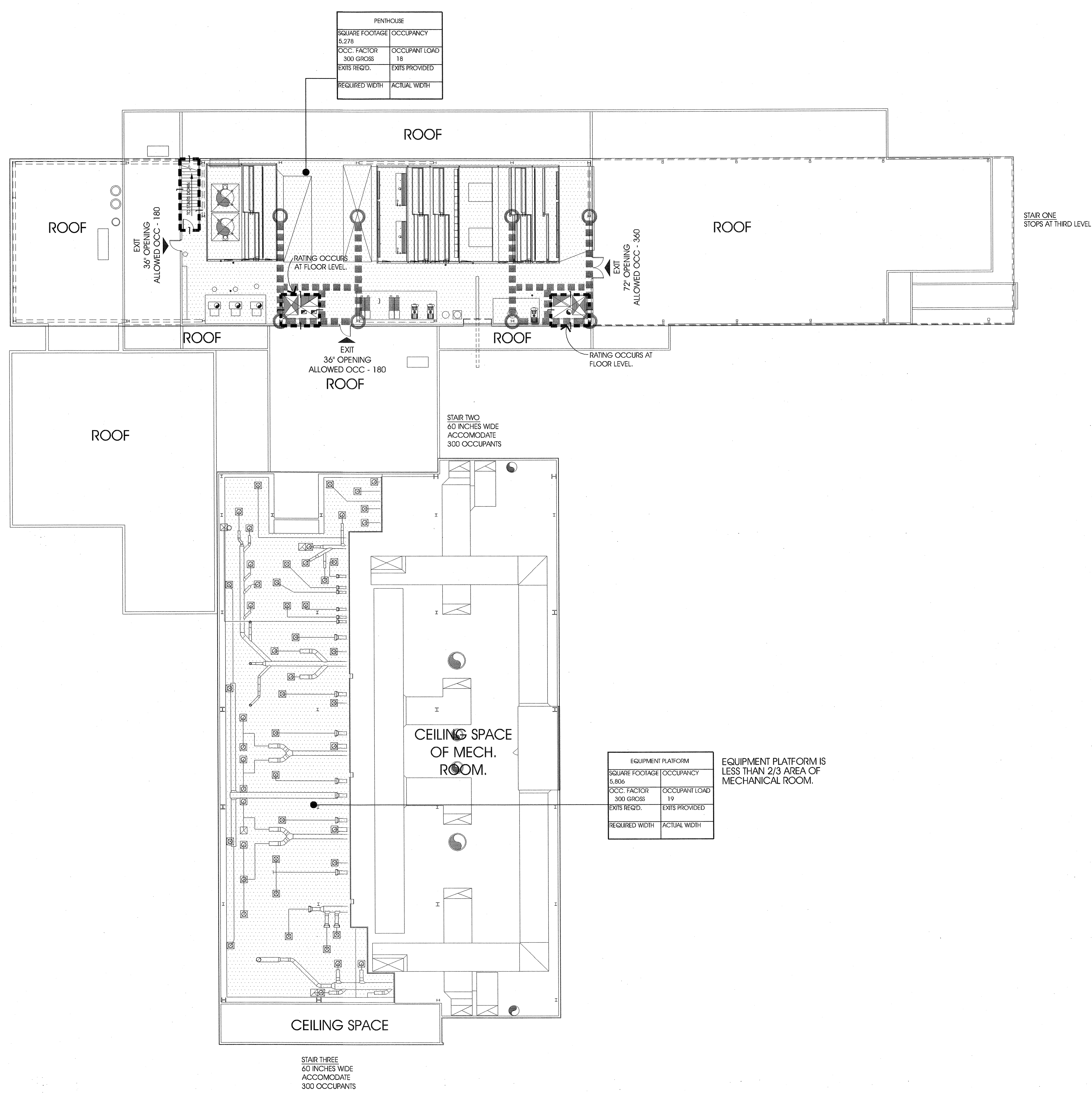


| PENTHOUSE | |
|---|---|
| SQUARE FOOTAGE 5,278 | OCCUPANCY |
| OCC. FACTOR 300 GROSS | OCCUPANT LOAD 18 |
| EXITS REQ'D. | EXITS PROVIDED |
| REQUIRED WIDTH | ACTUAL WIDTH |

| EQUIPMENT PLATFORM | |
|---|---|
| SQUARE FOOTAGE 5,806 | OCCUPANCY |
| OCC. FACTOR 300 GROSS | OCCUPANT LOAD 19 |
| EXITS REQ'D. | EXITS PROVIDED |
| REQUIRED WIDTH | ACTUAL WIDTH |

LEVEL 4 CODE REFERENCE PLAN
SCALE: 1/16" = 1'-0"
A4 / GI008

## FOURTH LEVEL OCCUPANCY

### MAIN LEVEL OCCUPANCY

| | |
|---|---|
| EQUIPMENT PLATFORM | 19 |
| TOTAL: | 19 OCCUPANTS |

## LEGEND

- DOT HATCH INDICATES OCCUPANCY LOAD OF 1/300 SF GROSS.
- 1 HR RATED WALLS
- 1 HR RATED SPRAY ON FIRE PROOFING AT COLS. ALL OTHER STRUCTURAL MEMBERS HAVE A RATING OF Ø HR U.N.O.
- 1 HR RATED SPRAY ON FIRE PROOFING AT FLOOR BEAMS

## STAIR TABULATION

19 OCCUPANCY

2 STAIR EXITS

19/2 = 9.5 OCC./STAIR

WIDTH

9.5 x 0.2 = 1.9 INCHES REQ.
MIN REQUIRED WIDTH FOR STAIRS = 48 INCHES
ACTUAL WIDTH PER STAIR = 60 INCHES
DOOR TO STAIR = 36 INCES

ARCHITECT 0818
ajc architects
703 east 1700 south
salt lake city, utah 84105
ph: 801.466.8818
fx: 801.466.4411
www.ajcarchitects.com

PAYETTE
285 Summer Street
Boston, MA 02210-1522
www.payette.com

OWNER INFORMATION
State of Utah
Department of Administrative Services
Division of Facilities Construction & Management
4110 State Office Building
Salt Lake City, Utah 84114
Phone: (801) 538 - 3018
Fax: (801) 538 - 3267
Internet: http://www.dfcm.utah.gov

PROJECT DESCRIPTION

LIFE SCIENCES RESEARCH CENTER
UTAH STATE UNIVERSITY

USTAR BUILDING #2
350 EAST GRAND AVE.
LOGAN, UTAH

SHEET NAME:

LEVEL 4 CODE REFERENCE PLAN

REVISIONS

| MARK | DATE | DESCRIPTION |
|---|---|---|

ISSUE DATA

| | |
|---|---|
| ISSUE DATE: | DEC. 9, 2008 |
| ISSUE TYPE: | DESDEV |
| DRAWN BY: | J. NIELSEN |
| CHECKED BY: | J. JONES |
| CAD FILE NAME: | 00818GI008 |
| DFCM PROJECT # | 06292770 |
| STATE PROPERTY # | - |
| COPYRIGHT: | STATE OF UTAH |

SHEET NUMBER:

# GI008

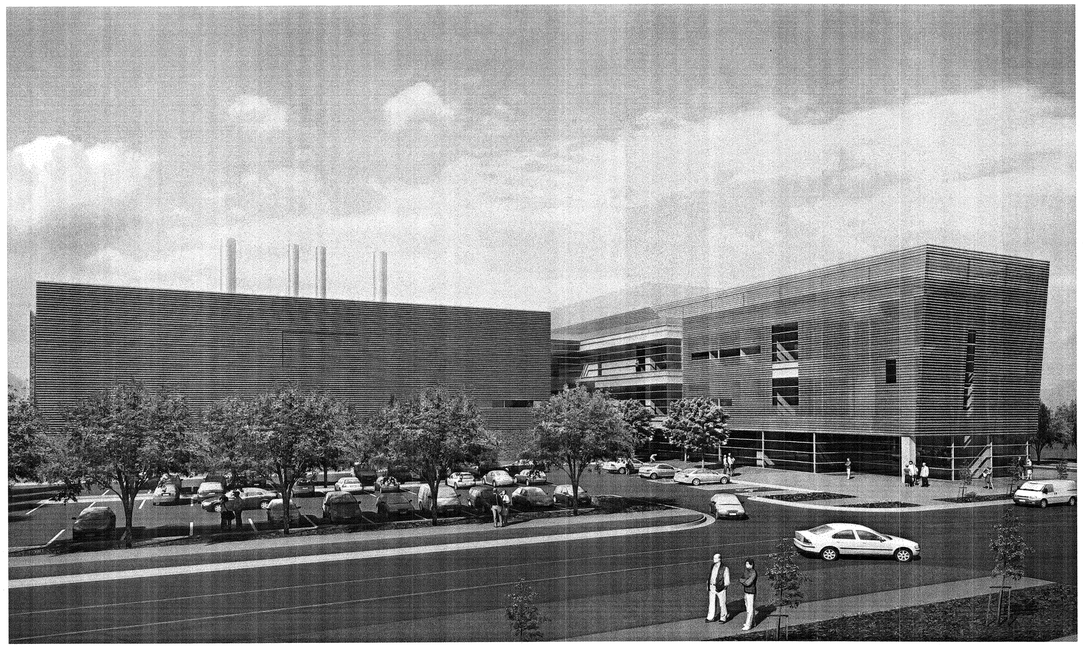

VIEW LOOKING FROM THE SOUTHEAST C5 GI009

VIEW LOOKING FROM THE NORTHEAST A5 GI009


ARCHITECT 0818

ajc architects

703 east 1700 south
salt lake city, utah 84105
ph: 801.466.8818
fx: 801.466.4411
www.ajcarchitects.com

PAYETTE

285 Summer Street
Boston, MA 02210-1522
www.payette.com


OWNER INFORMATION

**State of Utah**
Department of Administrative Services


Division of Facilities
Construction & Management
4110 State Office Building
Salt Lake City, Utah 84114
Phone: (801) 538 - 3018
Fax: (801) 538 - 3267

Internet: http://www.dfcm.utah.gov


PROJECT DESCRIPTION

# LIFE SCIENCES RESEARCH CENTER
## UTAH STATE UNIVERSITY

USTAR BUILDING #2
350 EAST GRAND AVE.
LOGAN, UTAH

SHEET NAME:

PERSPECTIVE RENDERINGS

REVISIONS

| MARK | DATE | DESCRIPTION |
|---|---|---|

ISSUE DATA

| | |
|---|---|
| ISSUE DATE: | DEC. 9, 2008 |
| ISSUE TYPE: | DESDEV |
| DRAWN BY: | J. NIELSEN |
| CHECKED BY: | J. JONES |
| CAD FILE NAME: | |
| DFCM PROJECT # | 06292770 |
| STATE PROPERTY # | - |
| COPYRIGHT: | STATE OF UTAH |

SHEET NUMBER:

GI009

N:\2007\07-3-244 USU ALTA\drawings\07-3-244.dwg, SHEET 1, 9/2/2008 3:42:37 PM, 1:63.5683

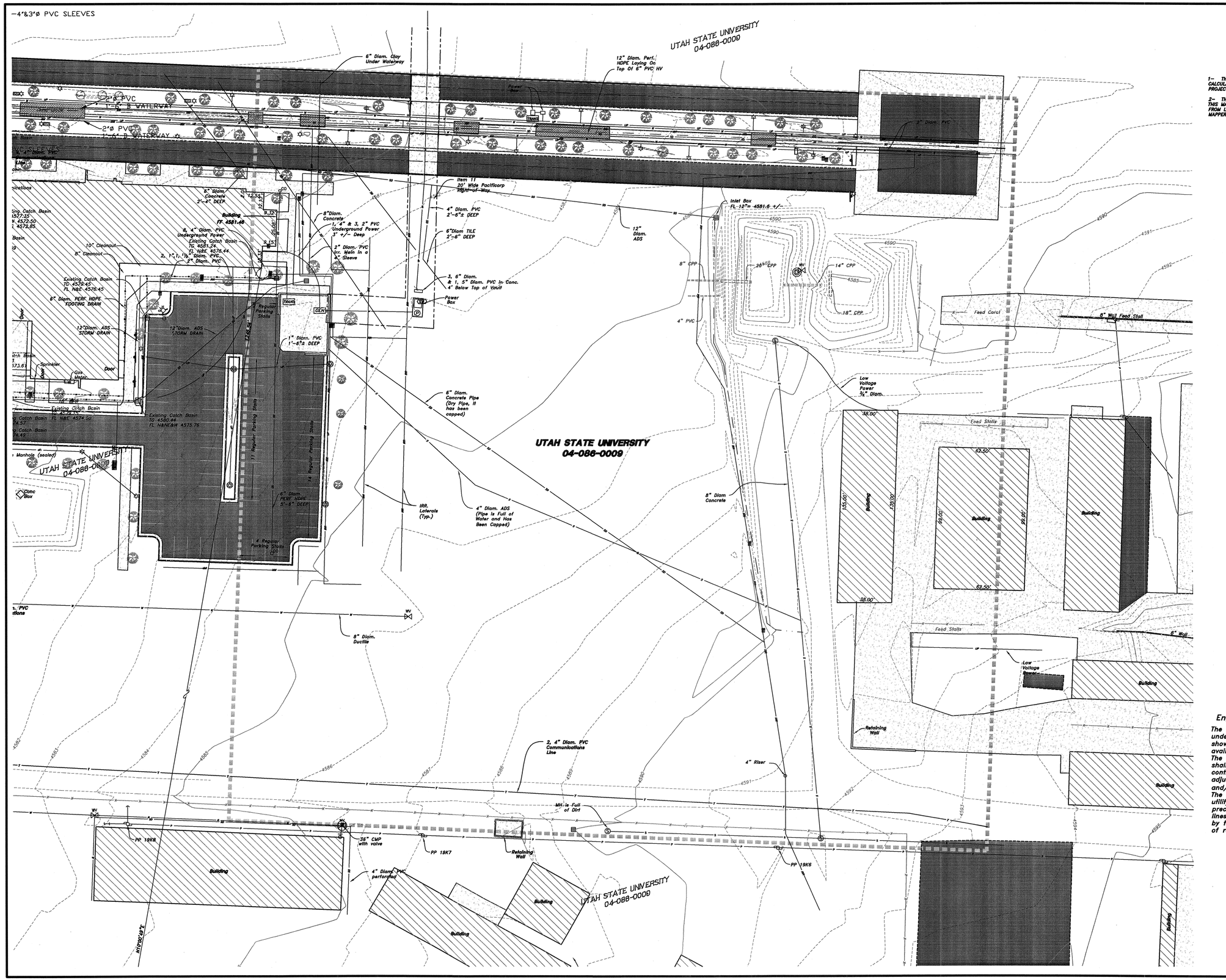


NOTES:

1– THE VERTICAL DATUM OF THIS MAP IS NAVD 88. IT WAS CALCULATED USING LOGAN GIS MONUMENTATION FOUND NEAR THE PROJECT.

2– THE MAJORITY OF THE UNDERGROUND UTILITIES SHOWN ON THIS MAP WERE REFRENCED FROM USU UTILITY MAPS RECEIVED FROM LARRY DAINKLEY– ENGINEERING TECHNICIAN AND ULTILITIES MAPPER OF USU.

## LEGEND:

- FLOW LINE
- CONCRETE
- EDGE OF PAVEMENT
- DITCH
- EXISTING FENCE
- EXISTING WATER LINE
- BUILDING LINE
- EXISTING SANITARY SEWER
- EASEMENT LINE
- EXISTING STORM DRAIN
- PAINT STRIPING
- EXISTING 1' CONTOUR
- EXISTING 5' CONTOUR
- PROJECT AREA LINE
- EXISTING IRRIGATION LINE
- UNDERGROUND POWER
- BURIED PIPE
- CROWN OF ROAD
- UNDERGROUND COMMUNICATION
- POWER LINE
- CLEANOUT
- SEWER MANHOLE
- STORM DRAIN MANHOLE
- LIGHT POLE
- TREE
- WATER VALVE
- FIRE HYDRANT
- LIGHT POLE WITH BASE
- IRRIGATION CONTROL BOX
- INLET BOX
- STREET SIGN
- POWER POLE
- CURB AND GUTTER
- SURVEY MONUMENT
- SHADE CONCRETE
- SHADE ASPHALT
- SHADE BUILDING
- SHADE DECORATIVE BRICK

| No. | Date | By | Revision |
|---|---|---|---|
| | | | |

HANSEN & ASSOCIATES, INC.
Consulting Engineers and Land Surveyors
538 North Main, Brigham City, Utah 84302 (435) 723-3491
67 East 100 North, Logan, Utah 84321 (435) 752-4272
Brigham City (435) 723-7663 Logan (435) 752-8197
Ogden (801) 399-4905

Drawn By: JES Date: NOV 2007
Designed By:
Checked By:
Approved By:
Scale: 1" = 30'
Drawing File: 07-3-244.dwg
JOB NUMBER: 07-3-244

TOPOGRAPHIC SURVEY FOR

# USU

LOGAN, CACHE COUNTY, UTAH
A PART OF THE NORTHEAST QUARTER OF SECTION 14, TOWNSHIP 9 NORTH, RANGE 2 WEST, S.L.B.& M.

SHEET 1 OF 2 SHEETS

N:\2007\07-3-244 USU ALTA\drawings\07-3-244.dwg, SHEET 2, 9/2/2008 3:42:58 PM, 1:63.5683

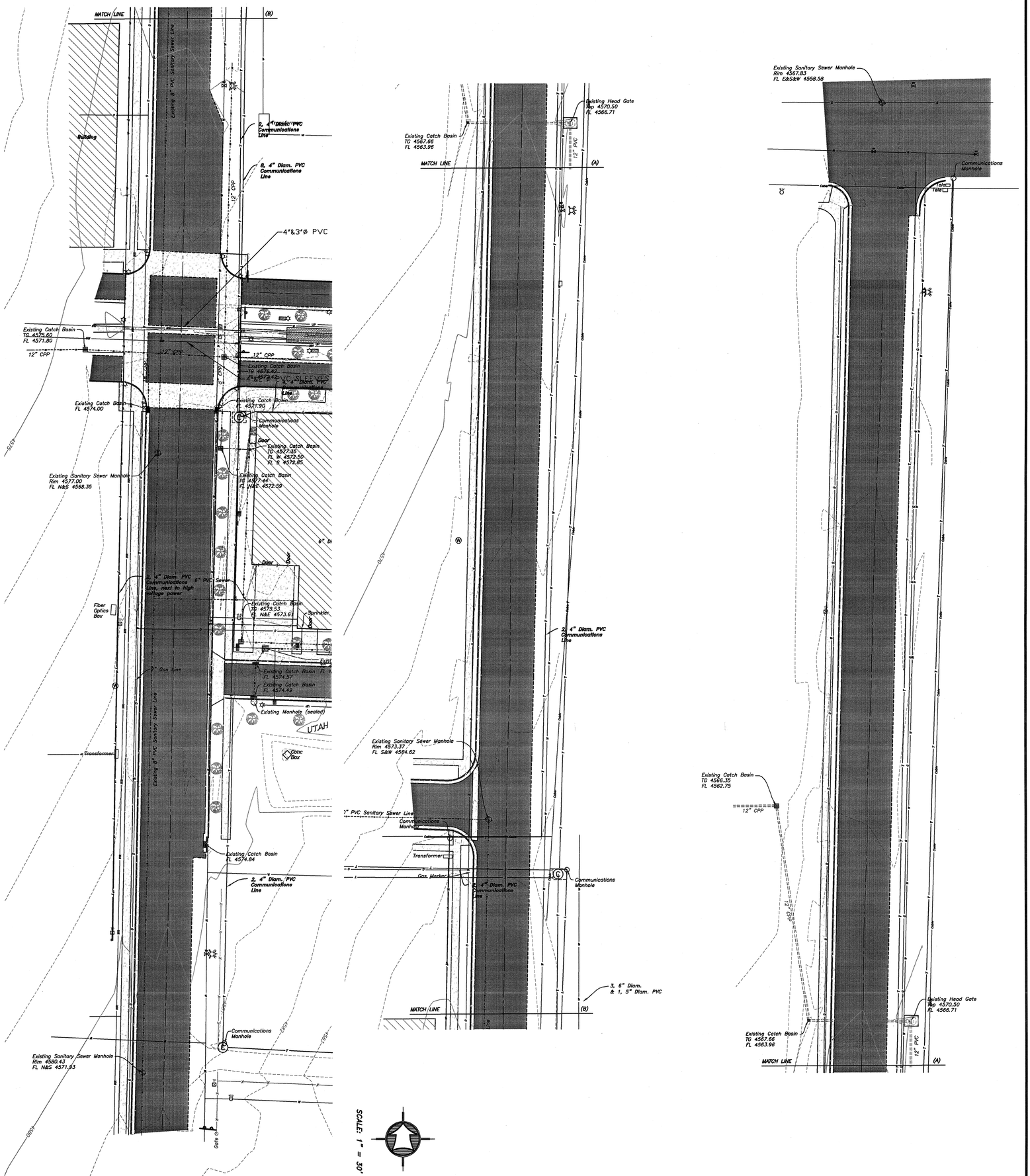


SCALE: 1" = 30'

NOTES:
1. THE VERTICAL DATUM OF THIS MAP IS NAVD 88. IT WAS ESTABLISHED USING LOGAN GO MONUMENTATION FOUND NEAR THE PROJECT.
2. THE MAJORITY OF THE UNDERGROUND UTILITIES SHOWN ON THIS MAP WERE SURVEYED BY HANSEN & ASSOCIATES FROM PLANT DUNLOP ENGINEERING TECHNICIAN AND ELECTRICAL MAPPER OF USU.

LEGEND:

- FLOW LINE
- TOP OF BANK/EDGE OF PAVEMENT
- DITCH
- EXISTING FENCE
- EXISTING BUILDING LINE
- EASEMENT LINE/PLANT SEWER
- EXISTING STORM DRAIN
- EXISTING 5' CONTOUR
- EXISTING 1' CONTOUR
- EXISTING IRRIGATION LINE
- UNDERGROUND POWER
- BOULDERS
- CROWN OF ROAD
- UNDERGROUND COMMUNICATION
- POWER LINE
- CLEANOUT
- SEWER MANHOLE
- STORM MANHOLE
- LIGHT POLE
- TREE
- WATER VALVE
- FIRE HYDRANT
- IRRIGATION CONTROL BOX
- INLET BOX
- STREET SIGN
- POWER POLE
- CURB AND GUTTER
- SURVEY MONUMENT
- SHADE CONCRETE
- SHADE ASPHALT
- SHADE BUILDING
- SHADE DECORATIVE BRICK

## Engineer's Notice To Contractors

The existence and location of any underground utility pipes or structures shown on these plans were obtained from available information provided by others. The accuracy and completeness thereof shall be confirmed in the field by the contractor, so that any necessary adjustment can be made in alignment and/or grade of the proposed improvement. The contractor is required to contact the utility companies and take due precautionary measure to protect any utility lines shown, and any other lines obtained by the contractor's research that are not of record or not shown on these plans.

TOPOGRAPHIC SURVEY FOR

**USU**

LOGAN, CACHE COUNTY, UTAH
A PART OF THE NORHTEAST QUARTER OF SECTION 14, TOWNSHIP 9 NORTH, RANGE 2 WEST, S.L.B.& M.

SHEET 2 OF 2 SHEETS

Drawn By: JES Date: NOV 2007
Designed By:
Checked By:
Approved By:
Scale: A" = 30'
Drawing File: 07-3-244.dwg
JOB NUMBER: 07-3-244


HANSEN & ASSOCIATES, INC.
Consulting Engineers and Land Surveyors
538 North Main, Brigham City, Utah 84302 (435) 723-3491 (435) 723-7663
67 East 100 North, Logan, Utah 84321 (435) 752-9197 (435) 752-8272
Brigham City Ogden (801) 399-4905
Logan


| No. | Date | By | Revision |
|---|---|---|---|

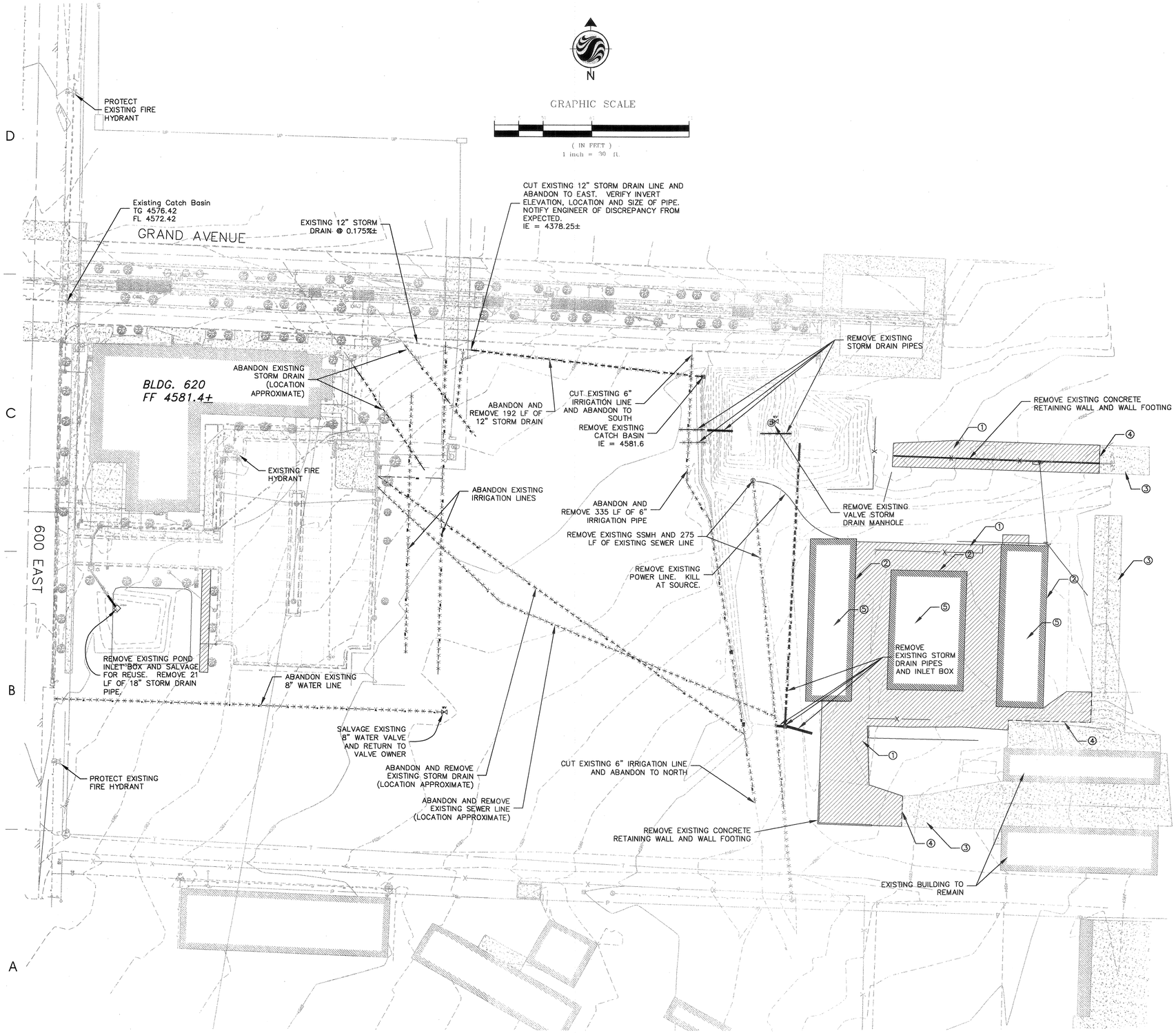


## KEYED NOTES:

FOR SHEET CU100 ONLY.

KEYED NOTES:
1. REMOVED EXISTING CONCRETE PAD
2. REMOVE EXISTING BUILDING AND BUILDING FOUNDATION
3. EXISTING CONCRETE PAD TO REMAIN
4. SAWCUT EXISTING CONCRETE PAD
5. REMOVE EXISTING HAY STORAGE (BY OWNER)

SEE ARCHITECTURAL DEMOLITION PLAN FOR ADDITIONAL/COMPLETE DEMOLITION SCOPE.


ARCHITECT 0818

ajc architects

703 east 1700 south
salt lake city, utah 84105
ph: 801.466.8818
fx: 801.466.4411
www.ajcarchitects.com

P A Y E T T E

285 Summer Street
Boston, MA 02210-1522
www.payette.com

Stantec

Stantec Consulting
3995 South 700 East, Suite 300
Salt Lake City UT U.S.A.
84107
Tel. 801.261.0090
Fax. 801.266.1671
www.stantec.com

OWNER INFORMATION

State of Utah
Department of Administrative Services

Division of Facilities Construction & Management
4110 State Office Building
Salt Lake City, Utah 84114
Phone: (801) 538 - 3018
Fax: (801) 538 - 3267

Internet: http://www.dfcm.utah.gov


PROJECT DESCRIPTION

LIFE SCIENCES RESEARCH CENTER
UTAH STATE UNIV.

USTAR BUILDING #2
LOGAN, UTAH

SHEET NAME:

DEMOLITION PLAN

REVISIONS

| MARK | DATE | DESCRIPTION |
|---|---|---|
| | | 12-09-08 B.P. #2 REVIEW |

ISSUE DATA

| | |
|---|---|
| ISSUE DATE: | SEPTEMBER 2008 |
| ISSUE TYPE: | BID PACKAGE 1 |
| DRAWN BY: | CB |
| CHECKED BY: | KAE |
| CAD FILE NAME: | |
| DFCM PROJECT # | 06292770 |
| STATE PROPERTY # | - |
| COPYRIGHT: | STATE OF UTAH |

REGISTERED PROFESSIONAL ENGINEER
No. 3089828
DAVID BARRETT
(CIVIL)
STATE OF UTAH

SHEET NUMBER:

CU100

V:\52863\active\186302019\design\drawing\sheets\2008-10-10\02019CU100.dwg Oct10,2008 - 11:49am

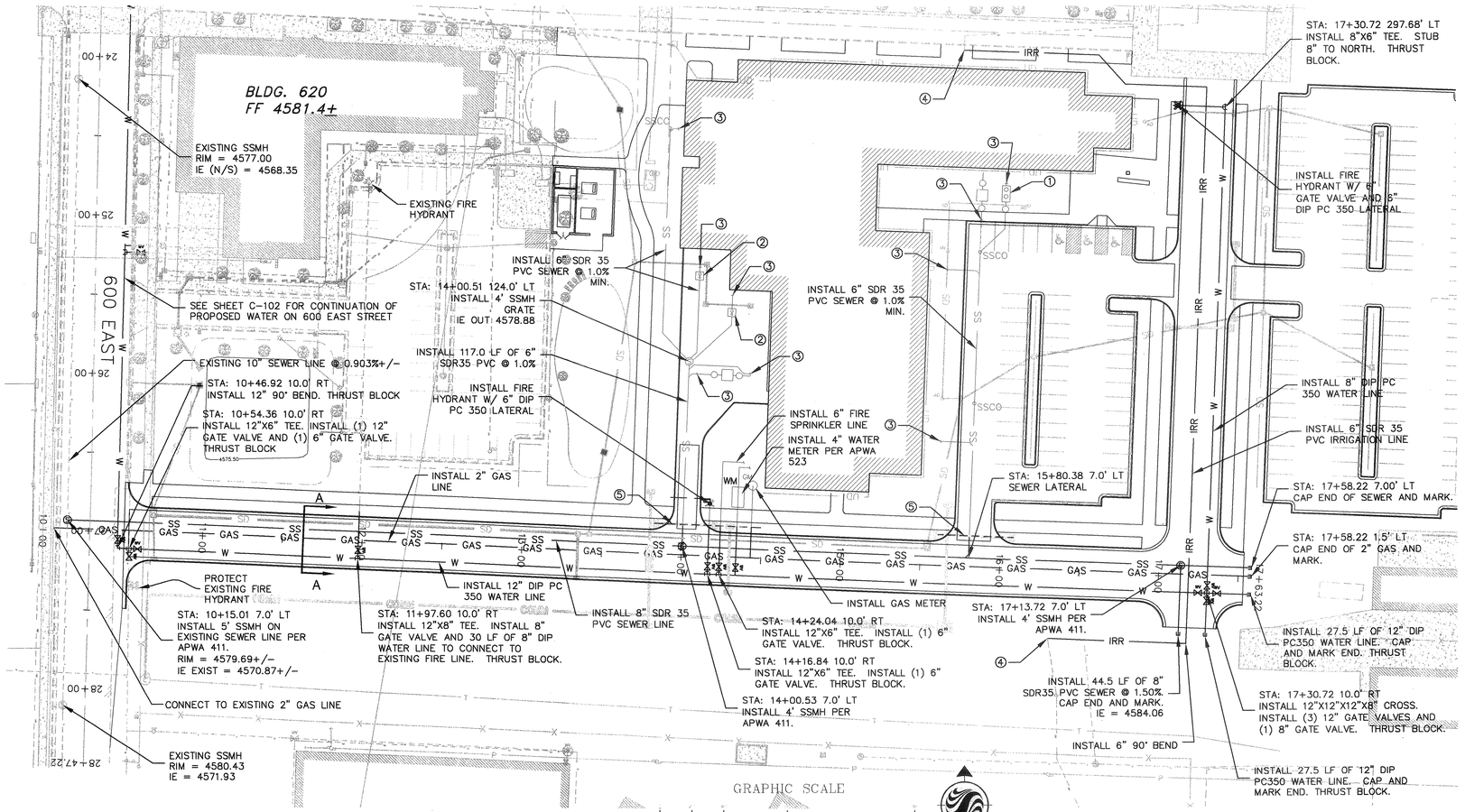


GRAPHIC SCALE

( IN FEET )
1 inch = 40 ft. HORIZONTAL
1 inch = 4 ft. VERTICAL

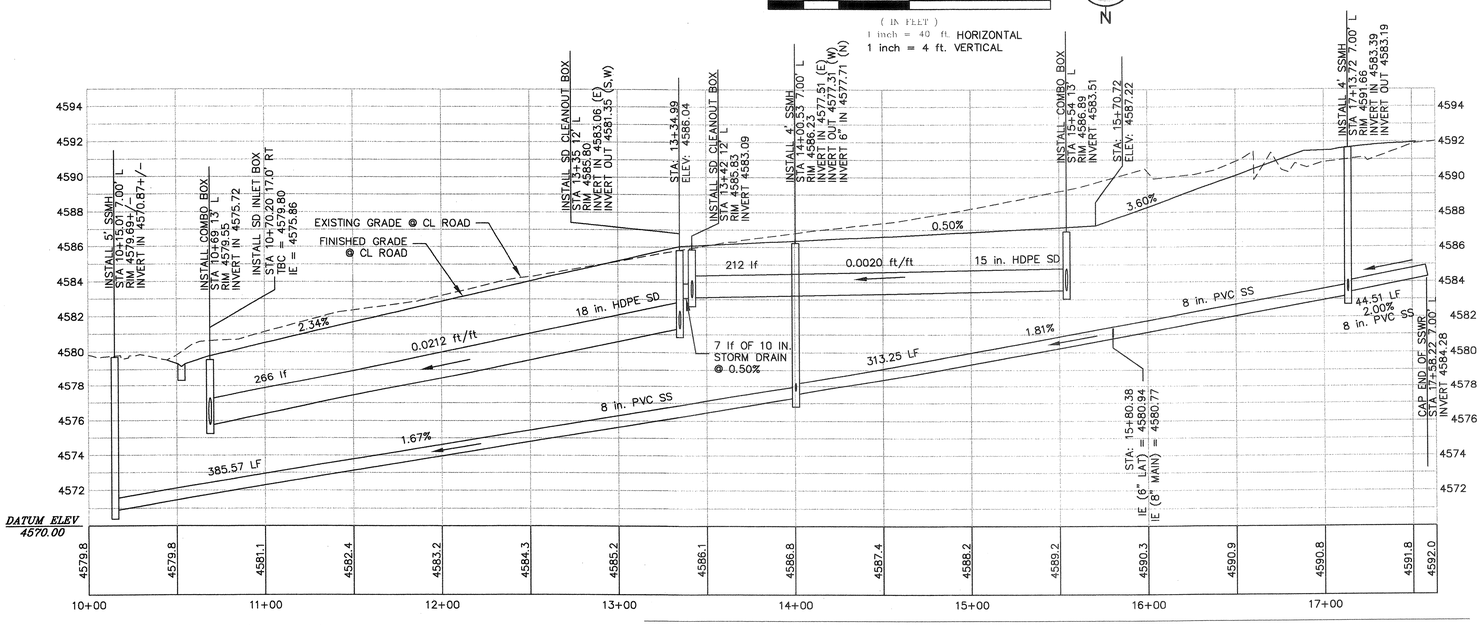


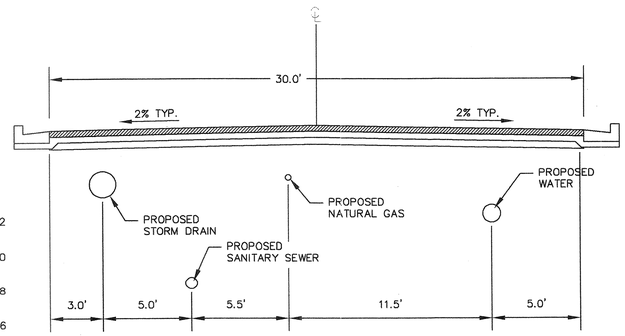


SECTION A–A
SCALE: NONE

CONSTRUCTION NOTES:

1. THE UNDERGROUND UTILITIES SHOWN HEREON HAVE BEEN LOCATED FROM FIELD SURVEY INFORMATION AND UTILITY MAPS PROVIDED BY THE UTAH STATE UNIVERSITY. THE SURVEYOR MAKES NO GUARANTEES THAT THE UNDERGROUND UTILITIES SHOWN COMPRISE ALL SUCH UTILITIES IN THE AREA, EITHER IN SERVICE OR ABANDONED; THE SURVEYOR FURTHER DOES NOT WARRANT THAT THE UNDERGROUND UTILITIES SHOWN ARE IN THE EXACT LOCATION INDICATED ALTHOUGH HE DOES CERTIFY THAT THEY ARE LOCATED AS ACCURATELY AS POSSIBLE FROM INFORMATION AVAILABLE.
2. CALL BLUESTAKES AND CAMPUS FACILITIES 48 HOURS BEFORE STARTING CONSTRUCTION FOR MARKING LOCATIONS OF UNDERGROUND UTILITIES.
3. POTHOLE ALL CROSSING UTILITIES PRIOR TO CONSTRUCTION TO VERIFY LOCATION, DEPTH AND CLEARANCE TO NEW UTILITIES.
4. VERIFY ALL BUILDING UTILITY LATERAL LOCATIONS AND ELEVATIONS WITH BUILDING PLUMBING PLANS PRIOR TO CONSTRUCTION.
5. THIS PLAN IS NOT INTENDED TO BE USED FOR BUILDING CONSTRUCTION, LAYOUT OR STAKING. SEE PLAN BY OTHERS FOR THIS INFORMATION.
6. ALL CONSTRUCTION SHALL COMPLY WITH THE UTAH STATE UNIVERSITY FACILITIES, DESIGN STANDARDS AND DETAILS AND THE LATEST VERSION OF THE DFCM STANDARDS.
7. OBTAIN PERMIT FROM USU FACILITIES, CONSTRUCTION PROJECT MANAGER AND NORTH LOGAN CITY PUBLIC UTILITIES PRIOR TO ANY CONSTRUCTION.
8. PROVIDE THRUST BLOCKS ON ALL WATER MAIN LINES.

LEGEND

| | |
|---|---|
| PROPOSED STORM DRAIN | SD |
| PROPOSED WATER | W |
| PROPOSED GAS | GAS — GAS |
| PROPOSED SEWER | SS |
| PROPOSED FOUNDATION UNDER-DRAIN | UD |
| PROPOSED IRRIGATION | IRR |
| EXISTING GAS LINE | G |
| EXISTING SEWER LINE | S |
| EXISTING WATER LINE | W |
| EXISTING TELECOM LINE | T |

## KEYED NOTES:

KEYED NOTES:
① INSTALL GREASE TRAP PER APWA 441 AND 4' DIA. SAMPLING MANHOLE.
② INSTALL SAND/OIL SEPARATOR AMCOR 660SA OR APPROVED EQUAL.
③ SEE BUILDING PLUMBING PLANS FOR CONTINUATION.
④ CONNECT TO EXISTING 6" IRRIGATION. INSTALL 6" 90° BEND.
⑤ TEMPORARILY STUB AND CAP SEWER, WATER AND GAS LATERALS 4' NORTH OF NEW CURB AND GUTTER. SEWER WATER AND GAS UTILITIES NORTH OF THIS LINE ARE SHOWN FOR REFERENCE ONLY AND ARE NOT TO BE INCLUDED IN THIS BID PACKAGE.

REGISTERED PROFESSIONAL ENGINEER
No. 3089828
DAVID. BARRETT
(CIVIL)
STATE OF UTAH


ARCHITECT 0818
ajc architects
703 east 1700 south
salt lake city, utah 84105
ph: 801.466.8818
fx: 801.466.4411
www.ajcarchitects.com

PAYETTE
285 Summer Street
Boston, MA 02210-1522
www.payette.com

Stantec
Stantec Consulting
3995 South 700 East, Suite 300
Salt Lake City UT U.S.A.
84107
Tel. 801.261.0090
Fax. 801.266.1671
www.stantec.com


OWNER INFORMATION
State of Utah
Department of Administrative Services
Division of Facilities Construction & Management
4110 State Office Building
Salt Lake City, Utah 84114
Phone: (801) 538 - 3018
Fax: (801) 538 - 3267
Internet: http://www.dfcm.utah.gov

PROJECT DESCRIPTION
LIFE SCIENCES RESEARCH CENTER
UTAH STATE UNIV.

USTAR BUILDING #2
LOGAN, UTAH

SHEET NAME:
SITE UTILITY PLAN

REVISIONS

| MARK | DATE | DESCRIPTION |
|---|---|---|
| | | 12-09-08 B.P. #2 REVIEW |

ISSUE DATA

| | |
|---|---|
| ISSUE DATE: | SEPTEMBER 2008 |
| ISSUE TYPE: | BID PACKAGE 1 |
| DRAWN BY: | CB |
| CHECKED BY: | KAE |
| CAD FILE NAME: | |
| DFCM PROJECT # | 06292770 |
| STATE PROPERTY # | - |
| COPYRIGHT: | STATE OF UTAH |

SHEET NUMBER:
CU101

V:\52863\active\186302019\design\drawing\sheets\2008-10-10\02019CU101.dwg Oct10,2008 - 11:51am

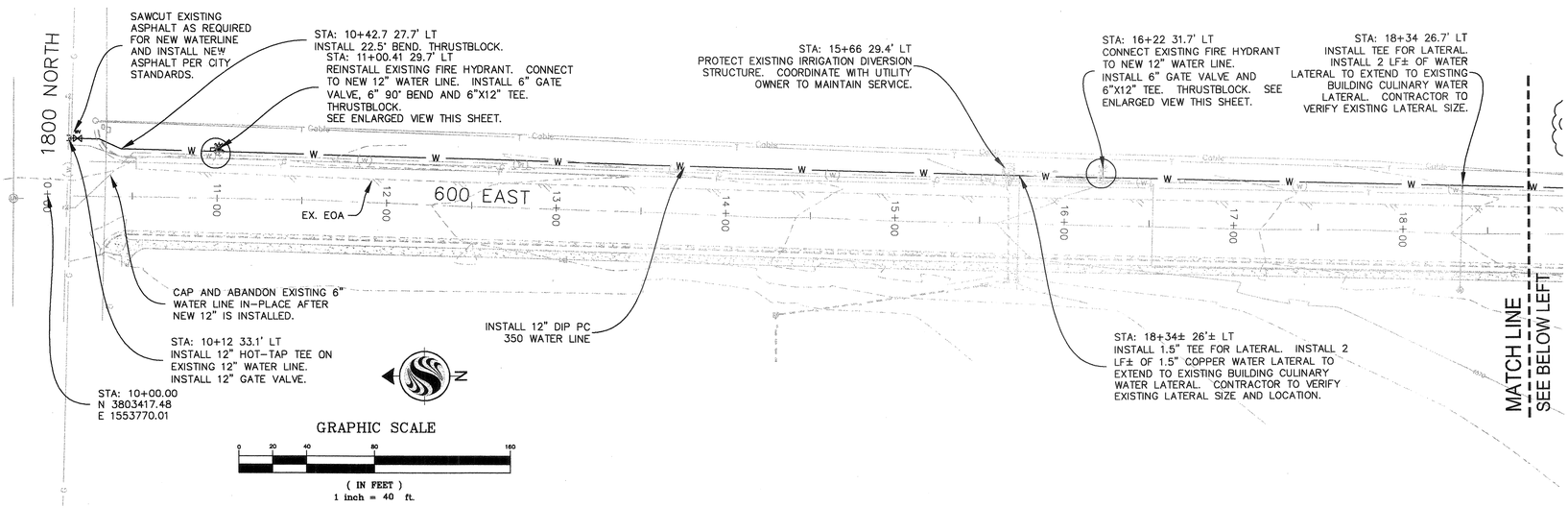


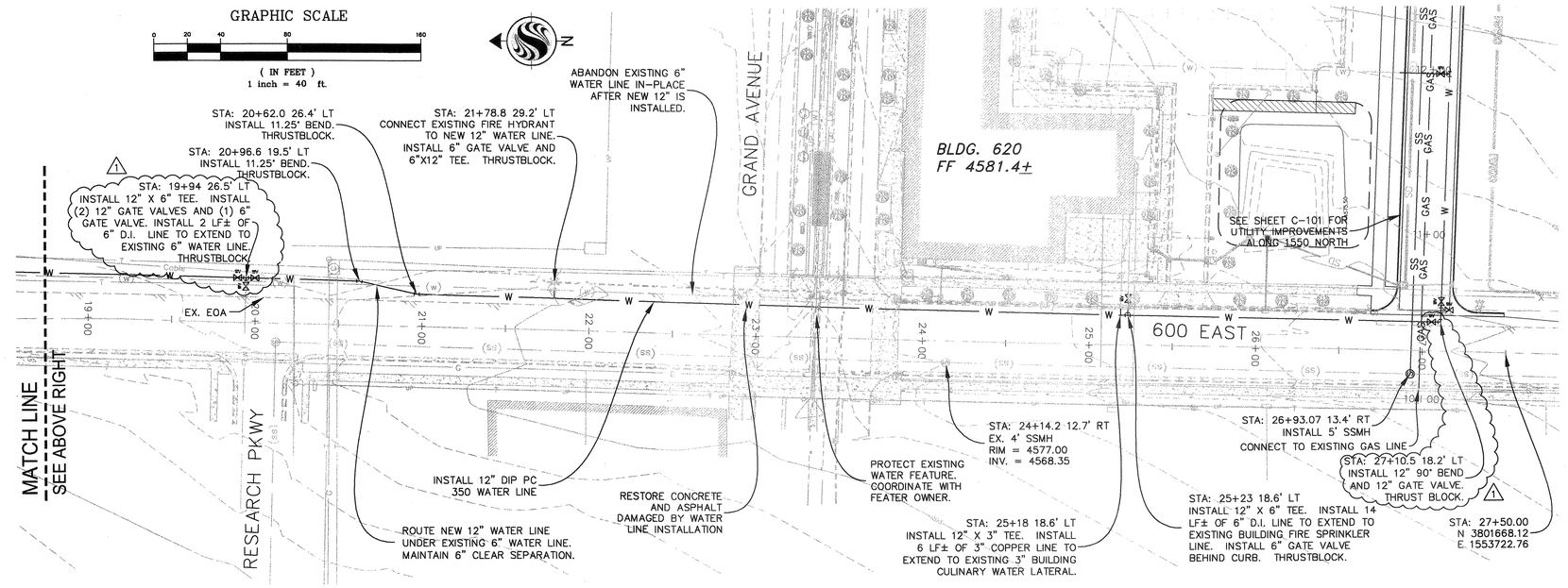


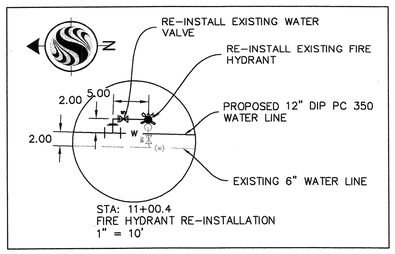


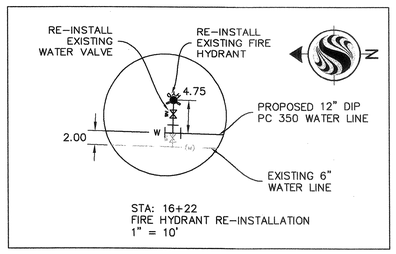


V:\52863\active\186302019\design\drawing\sheets\2008-10-10\02019CU102.dwg Oct10,2008 - 11:51am

CONSTRUCTION NOTES:
1. CONTRACTOR TO INSTALL TEMPORARY THRUST BLOCKS ON EXISTING 6" WATER LINE WHERE EXISTING THRUST BLOCKS ARE REMOVED FOR NEW 12" WATER LINE.

LEGEND:

| LEGEND | |
|---|---|
| PROPOSED STORM DRAIN | SD |
| PROPOSED WATER | W |
| PROPOSED GAS | GAS |
| PROPOSED SEWER | SS |
| PROPOSED FOUNDATION UNDER-DRAIN | UD |
| PROPOSED IRRIGATION | IRR |
| EXISTING GAS LINE | G |
| EXISTING SEWER LINE | (SS) |
| EXISTING WATER LINE | (W) |
| EXISTING TELECOM LINE | T |


ARCHITECT 0818

ajc architects
703 east 1700 south
salt lake city, utah 84105
ph: 801.466.8818
fx: 801.466.4411
www.ajcarchitects.com

PAYETTE
285 Summer Street
Boston, MA 02210-1522
www.payette.com

Stantec
Stantec Consulting
3995 South 700 East, Suite 300
Salt Lake City UT U.S.A.
84107
Tel. 801.261.0090
Fax. 801.266.1671
www.stantec.com


OWNER INFORMATION

State of Utah
Department of Administrative Services
Division of Facilities Construction & Management
4110 State Office Building
Salt Lake City, Utah 84114
Phone: (801) 538 - 3018
Fax: (801) 538 - 3267
Internet: http://www.dfcm.utah.gov

PROJECT DESCRIPTION

LIFE SCIENCES RESEARCH CENTER
UTAH STATE UNIV.

USTAR BUILDING #2
LOGAN, UTAH

SHEET NAME:

600 EAST WATER LINE

REVISIONS

| MARK | DATE | DESCRIPTION |
|---|---|---|
| 1 | 2008/10/08, | REVISION 1 |
| | 12-09-08 | B.P. #2 REVIEW |

ISSUE DATA

| | |
|---|---|
| ISSUE DATE: | SEPTEMBER 2008 |
| ISSUE TYPE: | BID PACKAGE 1 |
| DRAWN BY: | CB |
| CHECKED BY: | KAE |
| CAD FILE NAME: | |
| DFCM PROJECT # | 06292770 |
| STATE PROPERTY # | - |
| COPYRIGHT: | STATE OF UTAH |

REGISTERED PROFESSIONAL ENGINEER
No. 3089828
DAVID. BARRETT
(CIVIL)
STATE OF UTAH

SHEET NUMBER:

CU102

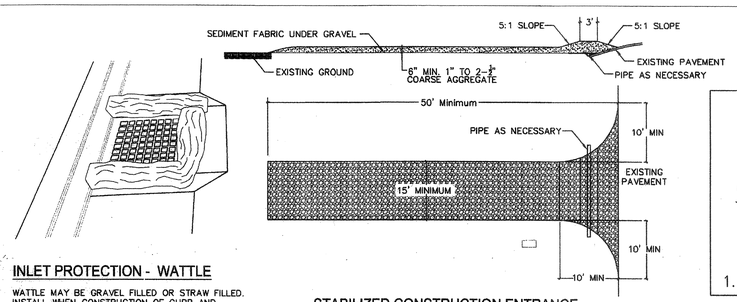


## INLET PROTECTION - WATTLE

WATTLE MAY BE GRAVEL FILLED OR STRAW FILLED. INSTALL WHEN CONSTRUCTION OF CURB AND GUTTER AND ROADWAYS IS COMPLETE.

## STABILIZED CONSTRUCTION ENTRANCE

STABILIZED CONSTRUCTION ENTRANCE SHALL BE MAINTAINED UNTIL SUCH TIME PARK IS DEVELOPED.

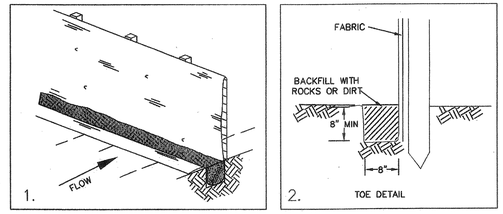


## SILT FENCE

SILT FENCE MAY BE INSTALLED FOR PERIMETER CONTROL. A MINIMUM 20-FOOT VEGETATED BUFFER MAY ALSO BE SUBSTITUTED FOR PERIMETER CONTROL (PRESERVATION OF EXISTING VEGETATION).

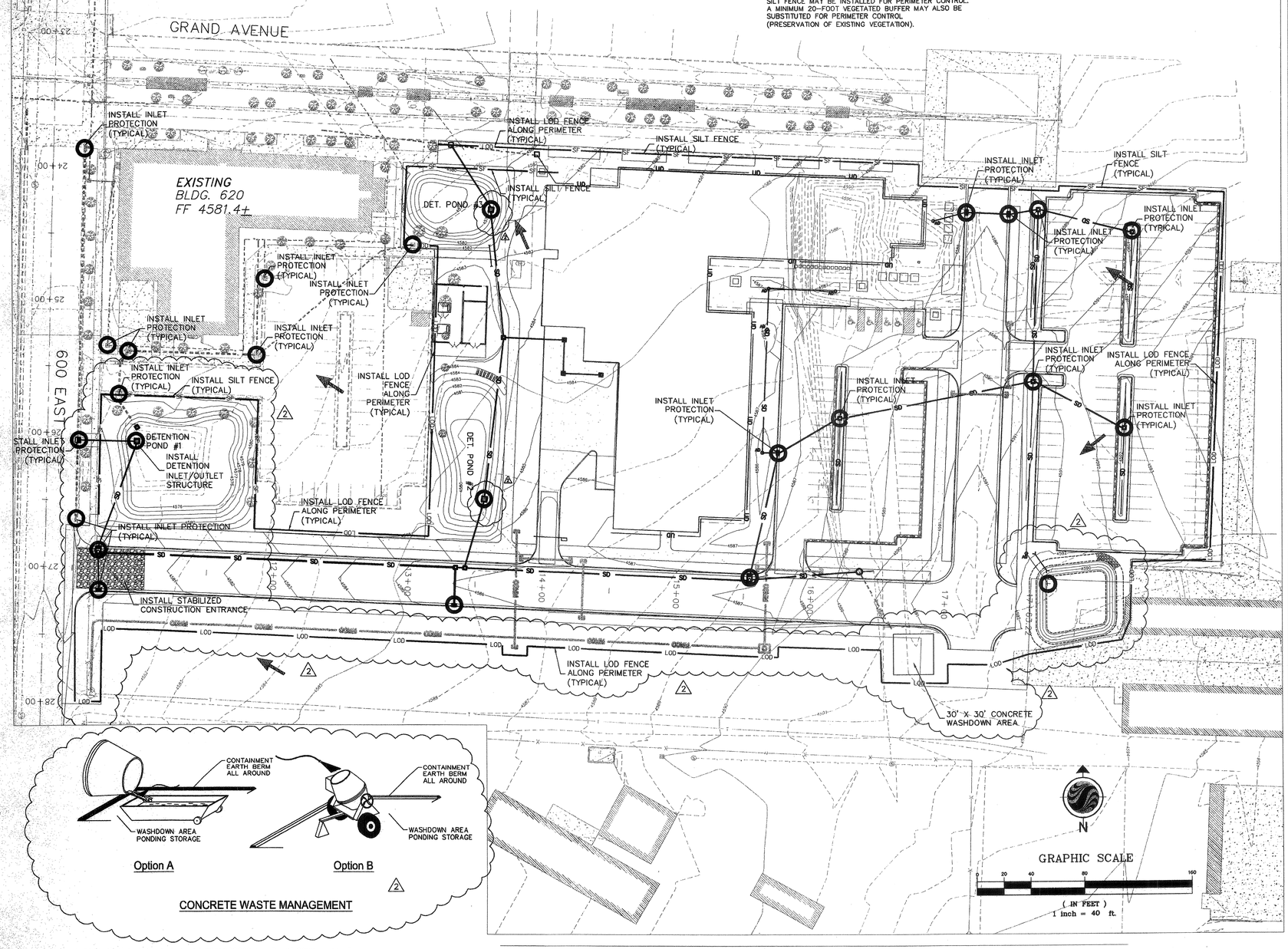





## CONCRETE WASTE MANAGEMENT

V:\52863\active\186302019\design\drawing\sheets\02019CG200.dwg Dec03,2008 - 11:33am

# GENERAL NOTES AND LEGEND:

FOR SHEET CG200 ONLY.

- EXISTING GROUND CONTOUR (4570)
- FINISH GRADE CONTOUR (4570)
- RCP CL III STORM DRAIN (SEE PLAN FOR SIZE)
- EXIST. STORM DRAIN
- SD CURB INLETS & SD MANHOLE & SD COMBO BOX
- DIRECTION OF FLOW
- SILT FENCE (SF)
- INLET PROTECTION
- STABILIZED CONSTRUCTION ENTRANCE
- LIMITS OF DISTURBANCE (LOD)

EROSION CONTROL NOTES:

1. CONTROLLING SEDIMENT TRANSPORT AND PREVENTING AND/OR CORRECTING PROBLEMS ASSOCIATED WITH EROSION AND RUNOFF PROCESSES THAT COULD OCCUR BOTH DURING AND AFTER PROJECT CONSTRUCTION WILL BE CLOSELY MONITORED. PERIODIC MAINTENANCE AND INSPECTION OF SEDIMENT CONTROL DEVICES WILL BE SCHEDULED. PARTICULAR ATTENTION SHALL BE GIVEN TO EXISTING DRAINAGE PATTERNS THAT RUN THROUGH DISTURBED AREAS AND OVER EXTREME SLOPES. THESE PATTERNS WILL BE IDENTIFIED TO ISOLATE PROBLEM AREAS WHERE WATER WILL CONCENTRATE. PROVISIONS SHALL BE MADE TO CHANNEL RUNOFF AWAY FROM NEW OR EXISTING IMPROVEMENTS TO PREVENT UNDERMINING AND GENERAL SITE EROSION. THESE PROVISIONS SHALL BE STABILIZED AND SHALL REMAIN IN PLACE UNTIL THE PERMANENT STORM DRAINAGE FACILITIES ARE INSTALLED AND FUNCTIONAL.
2. EROSION CONTROL – A STORMWATER POLLUTION PREVENTION PLAN (SWPPP) HAS BEEN PREPARED IN ACCORDANCE WITH THE UTAH POLLUTANT DISCHARGE ELIMINATION SYSTEM (UPDES) PERMIT FOR CONSTRUCTION, OUTLINING HOW EROSION AND SILTATION WILL BE CONTROLLED. A NOTICE OF INTENT (NOI) HAS BEEN SUBMITTED TO OBTAIN THE UPDES CONSTRUCTION PERMIT. A COPY OF THE PLAN MUST BE ON SITE AT ALL TIMES. THE CONTRACTOR SHALL BE RESPONSIBLE FOR IMPLEMENTING THE PLAN AND INSTALLING AND MAINTAINING THE EROSION CONTROL FACILITIES WITH EACH PHASE OF WORK. SHOULD SILT LEAVE THE SITE OR EROSION OCCURS, IT WILL BE THE CONTRACTOR'S RESPONSIBILITY TO TAKE CORRECTIVE ACTION AND REPAIR ANY DAMAGE CAUSED BY THE SILT OR EROSION IMMEDIATELY. ALL COSTS ASSOCIATED WITH THE MODIFICATION AND APPROVAL OF THE PLAN WILL BE THE RESPONSIBILITY OF THE CONTRACTOR.
3. BEFORE CONSTRUCTION BEGINS, THE LIMITS OF DISTURBANCE (LOD) BOUNDARY SHALL BE FLAGGED ON SITE AND APPROVED BY THE ENGINEER. UNDER NO CIRCUMSTANCES SHALL SITE DISTURBANCE OCCUR OUTSIDE THE DESIGNATED AREAS AT ANY TIME DURING CONSTRUCTION.
4. EXCAVATION AND EMBANKMENT OPERATIONS SHALL PROCEED IN SUCH A MANNER SO THAT FINISHING OF SLOPES, INCLUDING REVEGETATION SHALL BE ACCOMPLISHED AS SOON AS POSSIBLE AFTER ROUGH GRADING. ALL SLOPES 2:1 OR FLATTER SHALL BE SCARIFIED WITH HEAVY EQUIPMENT, LEAVING TRACKS PERPENDICULAR TO THE SLOPE.
5. CUT SLOPES SHALL BE 1:1 MAXIMUM AND FILL SLOPES 2:1 MAXIMUM UNLESS ROCK IS ENCOUNTERED. CUT SLOPES IN ROCK MAY BE STEEPENED, DEPENDING UPON GEOTECHNICAL CONSIDERATIONS. THE TOPS OF ALL CUT SLOPES IN SOIL SHALL BE ROUNDED FOR A HORIZONTAL DISTANCE OF THREE (3) FEET BEYOND THE CATCH POINT. SLOPE ROUNDING SHALL OCCUR AS THE SLOPE IS BEING BROUGHT DOWN. THE OVERALL SHAPE, HEIGHT AND GRADE OF ANY CUT AND/OR FILL SLOPE SHALL BE DEVELOPED IN CONCERT WITH THE EXISTING NATURAL CONTOURS, SCALE AND VEGETATION OF NATURAL TERRAIN.
6. STABILIZATION PRACTICES MAY INCLUDE, BUT NOT BE LIMITED TO, TEMPORARY SEEDING, PERMANENT SEEDING, MULCHING, GEOTEXTILES, SOD STABILIZATION, VEGETATIVE BUFFER STRIPS, PROTECTION OF TREES, PRESERVATION OF NATURAL VEGETATION AND OTHER APPROPRIATE MEASURES. USE OF IMPERVIOUS SURFACES FOR STABILIZATION SHALL BE AVOIDED. EXCEPT AS PROVIDED BELOW, STABILIZATION MEASURES SHALL BE INITIATED AS SOON AS POSSIBLE IN DISTURBED PORTIONS OF THE SITE WHERE CONSTRUCTION ACTIVITIES HAVE PERMANENTLY CEASED, BUT IN NO CASE MORE THAN 14 DAYS AFTER THE CONSTRUCTION ACTIVITY IN THAT PORTION OF THE SITE HAS TEMPORARILY OR PERMANENTLY CEASED.
   A. WHERE DEEP SNOW OR FROZEN GROUND CONDITIONS PRECLUDE THE INITIATION OF STABILIZATION MEASURES BY THE 14TH DAY AFTER CONSTRUCTION ACTIVITY PERMANENTLY CEASES, STABILIZATION MEASURES SHALL BE INITIATED AS SOON AS POSSIBLE
   B. WHERE CONSTRUCTION ACTIVITY ON A PORTION OF THE SITE IS TEMPORARILY CEASED, AND EARTH DISTURBING WILL RESUME WITHIN 21 WORKING DAYS, TEMPORARY STABILIZATION MEASURES NEED NOT BE INITIATED ON THAT PORTION OF THE SITE.
7. SPECIFICALLY OUTLINED DISTURBED AREAS, BOTH ON AND OFF-SITE SHALL BE REVEGETATED. THESE AREAS SHALL INCLUDE, BUT NOT BE LIMITED TO, ALL UNSURFACED AREAS WITHIN THE FLAGGED LOD, STAGING AND STORAGE AREAS, MATERIAL WASTE AREAS, UNDERGROUND UTILITY CONSTRUCTION AREAS, BENCHED AREAS, INCLUDE RETAINING WALL BENCHES, AND TEMPORARY OR EXISTING ACCESS ROADS USED FOR CONSTRUCTION ACTIVITIES. CUT AND FILL SLOPES OVER 3:1 REQUIRE THE PLACEMENT OF EROSION CONTROL/REVEGETATION MATTING. SLOPES LESS THAN 3:1 MAY BE SPRAYED WITH TACKIFIER. ROCK CUTS STEEPER THAN 1:1 WILL NOT BE REVEGETATED.
8. SEDIMENT TRAPS MUST OUTLET ONTO STABILIZED (PREFERABLY UNDISTURBED) GROUND OR LEFT TO PERCOLATE INTO THE GROUND.
9. CONTROLLED OUTLETS SHALL DIRECT COLLECTED RUNOFF THROUGH SILT FENCES OR STRAW BALES
10. TYPICAL FUGITIVE DUST SHALL BE CONTROLLED BY WATERING AND/OR CHEMICAL STABILIZATION, PROVIDING VEGETATIVE OR SYNTHETIC COVER AND WIND BREAKS ARE CONSISTENT WITH THE UTAH STATE DIVISION OF AIR QUALITY STANDARDS.
11. ANY SEDIMENT TRACKED OFF-SITE SHALL BE REMOVED PRIOR TO THE END OF THE WORK SHIFT OR PRIOR TO SUNSET, WHICHEVER COMES FIRST.
12. CONTRACTOR MAY ADJUST THE LOCATIONS OF THE CONSTRUCTION FENCE, CONSTRUCTION TRAILERS, AND CONSTRUCTION MATERIALS RECEIVING ANY STORAGE AREAS, AS NEEDED TO ACCOMPLISH THE CONSTRUCTION. ALL CHANGES SHALL BE NOTATED ON THE EROSION CONTROL PLAN.
13. CONTRACTOR SHALL CONDUCT PERIODIC INSPECTIONS OF THE EROSION CONTROL MEASURES, AS REQUIRED AND NOTATED IN THE SWPPP. THE CONTRACTOR WILL MAINTAIN A LOG ON-SITE OF ALL INSPECTIONS WITH THE SWPPP.

STAMP NOT VALID UNLESS SIGNED.

ARCHITECT 0818
ajc architects
703 east 1700 south
salt lake city, utah 84105
ph: 801.466.8818
fx: 801.466.4411
www.ajcarchitects.com

PAYETTE
285 Summer Street
Boston, MA 02210-1522
www.payette.com

Stantec
Stantec Consulting
3995 South 700 East, Suite 300
Salt Lake City UT U.S.A. 84107
Tel. 801.261.0090
Fax. 801.266.1671
www.stantec.com

OWNER INFORMATION

State of Utah
Department of Administrative Services
Division of Facilities Construction & Management
4110 State Office Building
Salt Lake City, Utah 84114
Phone: (801) 538 - 3018
Fax: (801) 538 - 3267
Internet: http://www.dfcm.utah.gov

PROJECT DESCRIPTION

LIFE SCIENCES RESEARCH CENTER
UTAH STATE UNIV.

USTAR BUILDING #2
LOGAN, UTAH

SHEET NAME:
EROSION CONTROL PLAN

REVISIONS

| MARK | DATE | DESCRIPTION |
|---|---|---|
| 2 | 2008/11/26 | REVISION 2 |
| | 12-09-08 | B.P. #2 REVIEW |

ISSUE DATA

| | |
|---|---|
| ISSUE DATE: | SEPTEMBER 2008 |
| ISSUE TYPE: | BID PACKAGE 1 |
| DRAWN BY: | CB |
| CHECKED BY: | KAE |
| CAD FILE NAME: | |
| DFCM PROJECT # | 06292770 |
| STATE PROPERTY # | - |
| COPYRIGHT: | STATE OF UTAH |

SHEET NUMBER:
CG200

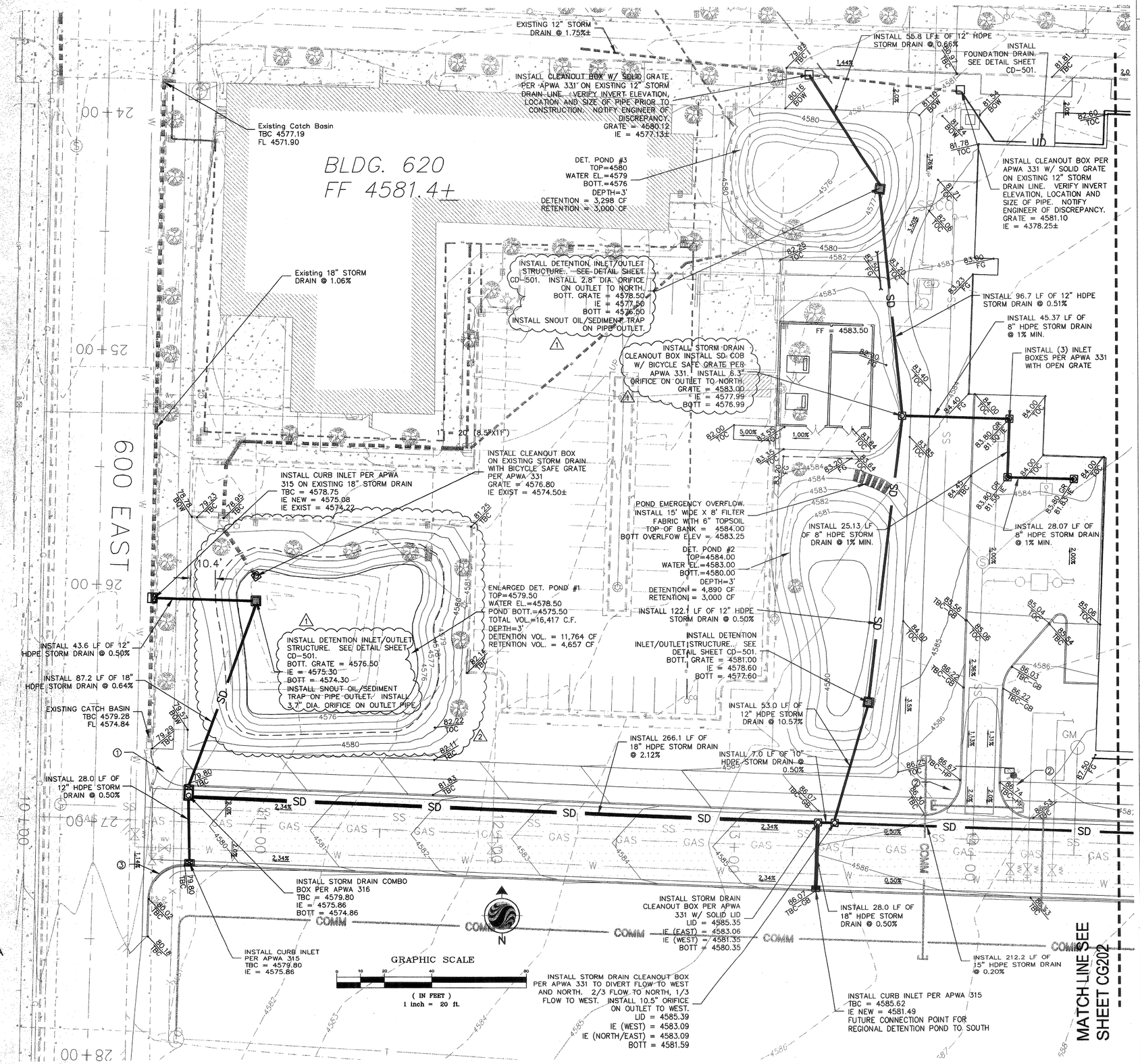


# GRADING AND DRAINAGE NOTES:

GRADING AND DRAINAGE NOTES

1. CONTRACTOR TO GRADE SITE ACCORDING TO THESE PLANS. ALL STORM DRAIN IMPROVEMENTS WITHIN NORTH LOGAN CITY RIGHT OF WAY TO COMPLY WITH NORTH LOGAN CITY STANDARDS AND SPECIFICATIONS AS APPROVED HEREIN.
2. CONTRACTOR RESPONSIBLE FOR DAMAGE AND DEBRIS TO ADJACENT STREETS WHEN EQUIPMENT IS TRAVELING THOSE STREETS.
3. CONTRACTOR SHALL SECURE AN EXCAVATION PERMIT FROM NORTH LOGAN CITY PUBLIC WORKS DEPARTMENT PRIOR TO PERFORMING ANY WORK IN THE NORTH LOGAN CITY RIGHT-OF-WAY.
4. THE CONTRACTOR AT ALL TIMES DURING THE COURSE OF THE PROJECT SHALL COMPLY WITH THE REGULATIONS AND REQUIREMENTS OF THE GENERAL PERMIT FOR STORM WATER DISCHARGES FROM CONSTRUCTION ACTIVITIES THAT ARE CLASSIFIED AS "ASSOCIATED WITH INDUSTRIAL ACTIVITY". CONTRACTOR SHALL BE RESPONSIBLE FOR IMPLEMENTING THE STORM WATER POLLUTION PREVENTION PLAN PROVIDED BY THE ENGINEER AS REQUIRED BY THE PERMIT.
5. CONTRACTOR SHALL PROVIDE DUST CONTROL DURING THE COURSE OF CONSTRUCTION. DUST ABATEMENT SHALL MEET STATE AND COUNTY REQUIREMENTS.
6. ALL REINFORCED CONCRETE PIPE TO BE CLASS III, OR ENGINEER APPROVED. JOINTS SHALL BE THERMAL MOLDED 20 PSI SEWER TIGHT JOINT
7. ALL GRADING SHALL CONFORM TO CHAP. A33 OF UBC AND CONDITIONS.
8. CUT AND FILL SLOPE SHALL NOT EXCEED A MAXIMUM SLOPE OF 2.0:1 WITHOUT WRITTEN APPROVAL OF THE DESIGN ENGINEER AND CONCURRENCE OF THE NORTH LOGAN CITY ENGINEER.
9. ALL GRADING SHALL BE DONE UNDER THE SUPERVISION OF A QUALIFIED SOILS ENGINEER. TESTING WILL BE PERFORMED BY THE OWNER WHO SHALL CERTIFY THAT ALL FILL HAS BEEN PLACED IN ACCORDANCE WITH THE PROVISIONS IN CHAPTER A33 OF UBC.
10. COMPACTION TEST REPORTS SHALL BE MADE AVAILABLE TO THE NORTH LOGAN CITY INSPECTOR WITHIN 24 HOURS OF A REQUEST.
11. FINAL REPORTS AS SPECIFIED IN PARAGRAPHS 3318.1(1) AND 3318.1(2) OF UBC SHALL BE SUBMITTED TO THE NORTH LOGAN CITY INSPECTOR WITHIN TEN (10) DAYS AFTER COMPLETION OF GRADING.
12. THE CONTRACTOR SHALL NOTIFY THE GEOTECHNICAL ENGINEER AND OWNER OF ANY CONDITIONS ENCOUNTERED IN WHICH BURIED CONSTRUCTION DEBRIS OR MAN MADE MATERIALS ARE ENCOUNTERED DURING SITE EXCAVATION AND GRADING. THE CONTRACTOR SHALL REMOVE AND DISPOSE OF ALL OFFSITE UNACCEPTABLE MATERIALS AND SOILS AS DETERMINED BY THE OWNERS REPRESENTATIVE. CONTRACTOR SHALL REFER TO THE GEOTECHNICAL REPORT FOR RECOMMENDATIONS WHEN UNSUITABLE SOIL CONDITIONS ARE ENCOUNTERED.
13. CONTRACTOR SHALL BE RESPONSIBLE FOR FLAGGING AND PUBLIC SAFETY ON ALL ADJACENT STREETS AND CONSTRUCTION SITE.
14. CONTRACTOR SHALL BE RESPONSIBLE FOR OSHA SAFETY STANDARDS.
15. CONTRACTOR SHALL BE RESPONSIBLE FOR ALL UTILITIES KNOWN OR UNKNOWN.
16. CONTRACTOR SHALL ATTEND ALL PRECONSTRUCTION CONFERENCES.
17. CONTRACTOR SHALL BE RESPONSIBLE FOR PRESERVATION OF ALL CONSTRUCTION STAKES.
18. CONTRACTOR TO NOTIFY ENGINEER IF CONFLICT EXISTS. CONTRACTOR TO POT HOLE ALL UTILITIES PRIOR TO CONSTRUCTION.
19. ALL PUBLIC IMPROVEMENTS WITHIN NORTH LOGAN CITY'S JURISDICTION SHALL BE CONSTRUCTED ACCORDING TO THE NORTH LOGAN CITY STANDARD SPECIFICATIONS AND DETAILS FOR MUNICIPAL CONSTRUCTION (LATEST EDITION).
20. DUST, MUD AND EROSION SHALL BE CONTROLLED BY WHATEVER MEANS NECESSARY, AND THE ROADWAY SHALL BE KEPT FREE OF MUD AND DEBRIS AT ALL TIMES.
21. NOTIFY NORTH LOGAN CITY PUBLIC WORKS INSPECTION DEPARTMENT 48 HOURS PRIOR TO BEGINNING CONSTRUCTION OF ANY ROADWAYS OR PUBLIC IMPROVEMENTS. ALL INSPECTIONS MUST BE DONE PRIOR TO OR CONCURRENT WITH CONSTRUCTION. FAILURE TO MAKE THIS NOTIFICATION MAY RESULT IN THE UNCOVERING AND/ OR REMOVAL OF ALL CONSTRUCTION DONE WITHOUT NOTIFICATION AT THE DISCRETION OF THE CITY ENGINEER.
22. PROVIDE A PROCTOR TEST FOR ROADBASE MATERIAL WHEN DELIVERED OR PLACED ON SITE.

# LEGEND:

LEGEND

| | |
|---|---|
| PROPOSED STORM DRAIN | SD |
| PROPOSED WATER | W |
| PROPOSED GAS | GAS |
| PROPOSED SEWER | SS |
| PROPOSED FOUNDATION UNDER-DRAIN | UD |
| PROPOSED IRRIGATION | IRR |
| STANDARD CURB AND GUTTER | |
| REVERSE PAN CURB AND GUTTER DETAIL | |

# KEYED NOTES:

KEYED NOTES:

① INSTALL SIDEWALK RAMP AT CORNER PER APWA 235 DRAWING 2 OF 3. INSTALL TRUNCATED DOME DETECTION SURFACE.
② INSTALL SIDEWALK RAMP AT CORNER PER APWA 235 DRAWING 1 OF 3. INSTALL TRUNCATED DOME DETECTION SURFACE.
③ REMOVE HIGH BACK CURB WALL WHERE FUTURE RAMP WILL BE CONSTRUCTED.

REGISTERED PROFESSIONAL ENGINEER — 6069828 — DAVID. BARRETT (CIVIL) — STATE OF UTAH — 12/3/08

STAMP NOT VALID UNLESS SIGNED.


ARCHITECT 0818

ajc architects

703 east 1700 south
salt lake city, utah 84105
ph: 801.466.8818
fx: 801.466.4411
www.ajcarchitects.com

PAYETTE

285 Summer Street
Boston, MA 02210-1522
www.payette.com

Stantec

Stantec Consulting
3995 South 700 East, Suite 300
Salt Lake City UT U.S.A.
84107
Tel. 801.261.0090
Fax. 801.266.1671
www.stantec.com


OWNER INFORMATION

State of Utah
Department of Administrative Services

Division of Facilities Construction & Management
4110 State Office Building
Salt Lake City, Utah 84114
Phone: (801) 538 - 3018
Fax: (801) 538 - 3267

Internet: http://www.dfcm.utah.gov

PROJECT DESCRIPTION

LIFE SCIENCES RESEARCH CENTER
UTAH STATE UNIV.

USTAR BUILDING #2
LOGAN, UTAH

SHEET NAME:

SITE GRADING PLAN

REVISIONS

| MARK | DATE | DESCRIPTION |
|---|---|---|
| 1 | 2008/10/08 | REVISION 1 |
| 2 | 2008/11/26 | REVISION 2 |
| | 12-09-08 | B.P. #2 REVIEW |

ISSUE DATA

| | |
|---|---|
| ISSUE DATE: | SEPTEMBER 2008 |
| ISSUE TYPE: | BID PACKAGE 1 |
| DRAWN BY: | CB |
| CHECKED BY: | KAE |
| CAD FILE NAME: | |
| DFCM PROJECT # | 06292770 |
| STATE PROPERTY # | - |
| COPYRIGHT: | STATE OF UTAH |

SHEET NUMBER:

CG201

V:\52863\active\186302019\design\drawing\sheets\02019CG201.dwg Dec03,2008 - 11:33am

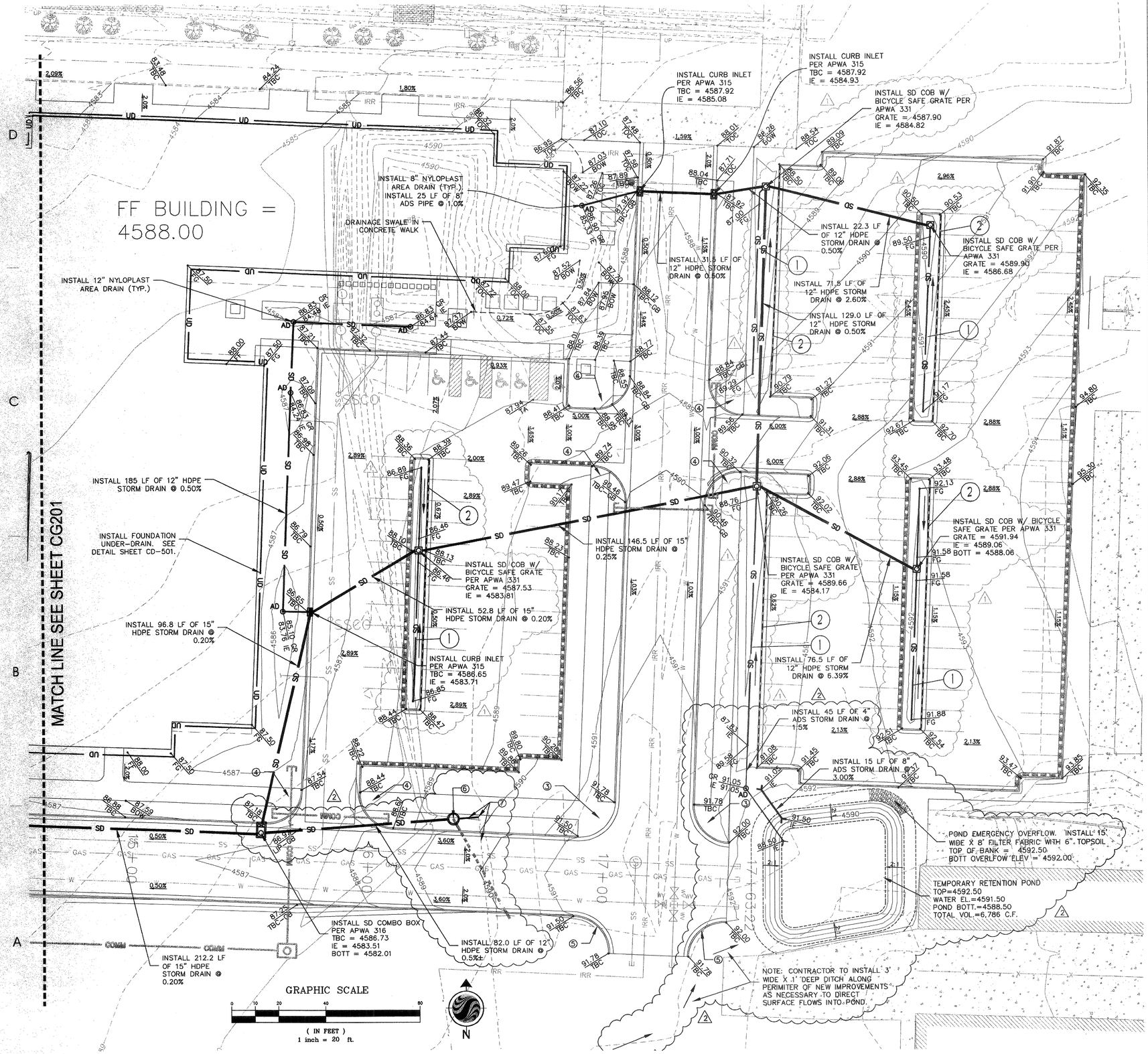


## LEGEND:

LEGEND

| | |
|---|---|
| PROPOSED STORM DRAIN | SD |
| PROPOSED WATER | W |
| PROPOSED GAS | GAS GAS GAS |
| PROPOSED SEWER | SS |
| PROPOSED FOUNDATION UNDER-DRAIN | UD |
| PROPOSED IRRIGATION | IRR |
| STANDARD CURB AND GUTTER | |
| REVERSE PAN CURB AND GUTTER DETAIL | |

## KEYED NOTES:

KEYED NOTES:

1. INSTALL BIO-SWALE IN PLANTER ISLAND. SEE DETAIL SHEET CD-501.
2. INSTALL MODIFIED CURB AND GUTTER. SEE BIO-SWALE DETAIL SHEET CD-501.
3. SIDEWALK RAMP AT CORNER PER APWA 235 DRAWING 2 OF 3. INSTALL TRUNCATED DOME DETECTION SURFACE.
4. INSTALL SIDEWALK RAMP AT CORNER PER APWA 235 DRAWING 1 OF 3. INSTALL TRUNCATED DOME DETECTION SURFACE.
5. REMOVE HIGH BACK CURB WALL WHERE FUTURE RAMP WILL BE CONSTRUCTED.
6. INSTALL 4' DIA PERFORATED MANHOLE SUMP PER AMCOR MH190 WITH 12" THICK RING OF 2" SEWER ROCK OUTSIDE OF MANHOLE. PLACE 12" THICK SEWER ROCK AT BOTTOM OF OPEN MANHOLE SECTION. WRAP OUSIDE OF SEWER ROCK WITH FILTER FABRIC.
   MANHOLE RIM = 4589.67
   IE = 4583.92±
7. INSTALL 10 LF± OF 8" ADS STORM DRAIN PIPE AND CONNECT TO EXISTING DRAIN LINE. POUR CONCRETE COLLAR AROUND CONNECTION TO FORM WATER TIGHT SEAL. EXISTING DRAIN LINE TO SOUTH TO BE MAINTAINED. REMOVE EXISTING DRAIN TO NORTH.


ARCHITECT 0818

ajc architects

703 east 1700 south
salt lake city, utah 84105
ph: 801.466.8818
fx: 801.466.4411
www.ajcarchitects.com

PAYETTE

285 Summer Street
Boston, MA 02210-1522
www.payette.com

Stantec

Stantec Consulting
3995 South 700 East, Suite 300
Salt Lake City UT U.S.A.
84107
Tel. 801.261.0090
Fax. 801.266.1671
www.stantec.com


OWNER INFORMATION

State of Utah
Department of Administrative Services

Division of Facilities Construction & Management
4110 State Office Building
Salt Lake City, Utah 84114
Phone: (801) 538 - 3018
Fax: (801) 538 - 3267

Internet: http://www.dfcm.utah.gov

PROJECT DESCRIPTION

LIFE SCIENCES RESEARCH CENTER
UTAH STATE UNIV.

USTAR BUILDING #2
LOGAN, UTAH

SHEET NAME:

SITE GRADING PLAN

REVISIONS

| MARK | DATE | DESCRIPTION |
|---|---|---|
| 1 | 2008/10/08, | REVISION 1 |
| 2 | 2008/11/26, | REVISION 2 |
| | 12-09-08 B.P. #2 REVIEW | |

ISSUE DATA

| | |
|---|---|
| ISSUE DATE: | SEPTEMBER 2008 |
| ISSUE TYPE: | BID PACKAGE 1 |
| DRAWN BY: | CB |
| CHECKED BY: | KAE |
| CAD FILE NAME: | |
| DFCM PROJECT # | 06292770 |
| STATE PROPERTY # | - |
| COPYRIGHT: | STATE OF UTAH |

SHEET NUMBER:

CG202

REGISTERED PROFESSIONAL ENGINEER No. 3089828 DAVID. BARRETT (CIVIL) STATE OF UTAH

STAMP NOT VALID UNLESS SIGNED.

V:\52863\active\186302019\design\drawing\sheets\02019CG202.dwg Dec03,2008 - 11:33am

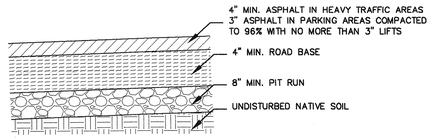


PAVEMENT SECTION
NOT TO SCALE (1)

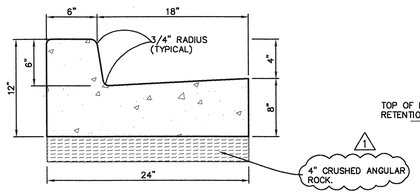


CURB AND GUTTER DETAIL
NOT TO SCALE (2)

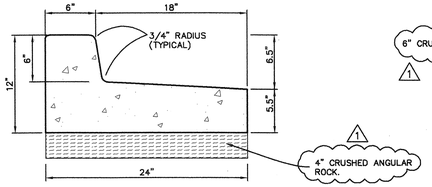


REVERSE PAN CURB AND GUTTER DETAIL
NOT TO SCALE (3)

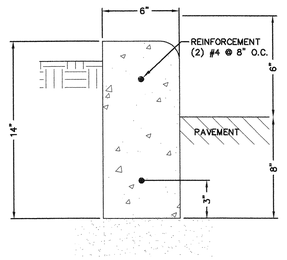


APWA TYPE P CURB WALL
NOT TO SCALE (4)

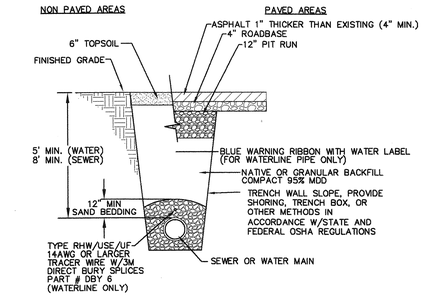


UTILITY TRENCH DETAIL
NOT TO SCALE (5)

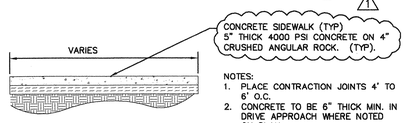


NOTES:
1. PLACE CONTRACTION JOINTS 4' TO 6' O.C.
2. CONCRETE TO BE 6" THICK MIN. IN DRIVE APPROACH WHERE NOTED ON PLAN

SIDEWALK DETAIL
NOT TO SCALE (6)

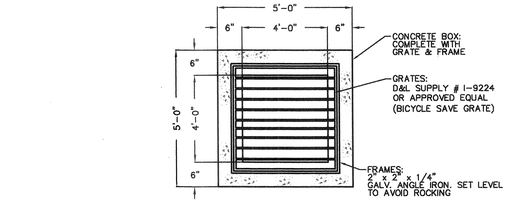


PLAN
NTS

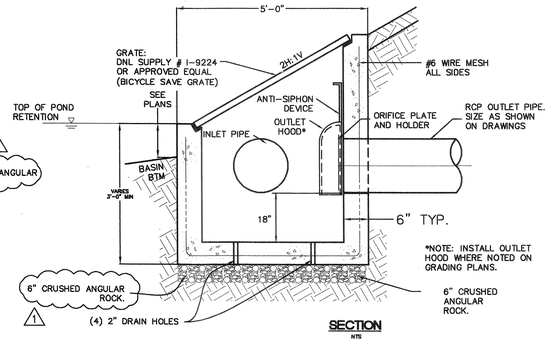


SECTION
NTS

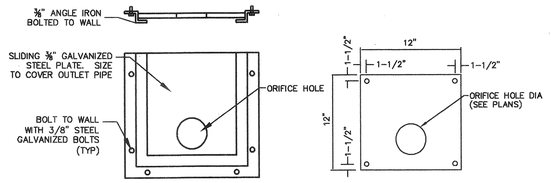


ORIFICE PLATE HOLDER
(NTS)

ORIFICE RESTRICTOR PLATE
(NTS)

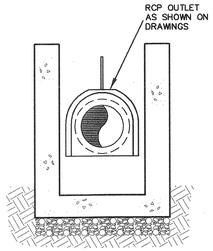


SECTION - HOOD
NTS

OUTLET HOOD NOTES:
1. INSTALL DRAIN OUTLET HOOD AT ALL DESIGNATED LOCATIONS.
2. OUTLET HOOD SHALL BE SIZED TO PROVIDE A MINIMUM OPENING AREA OF 120% OF THE OUTLET PIPE DIAMETER.
3. OUTLET HOOD SHALL BE PROVIDED WITH AN ANTI-SIPHON DEVICE.
4. OUTLET HOOD ATTACHMENT SHALL BE STAINLESS STEEL EXPANSION ANCHORS W/ ANTI-SEIZE PROVIDED ON ALL BOLT/NUT CONNECTIONS.
5. OUTLET HOOD SHALL BE "SNOUT" OIL-WATER-DEBRIS SEPARATOR AS MFR'D BY BEST MANAGEMENT PRODUCTS, INC., OR APPROVED EQUAL.

DETENTION INLET/OUTLET STRUCTURE
NOT TO SCALE (7)

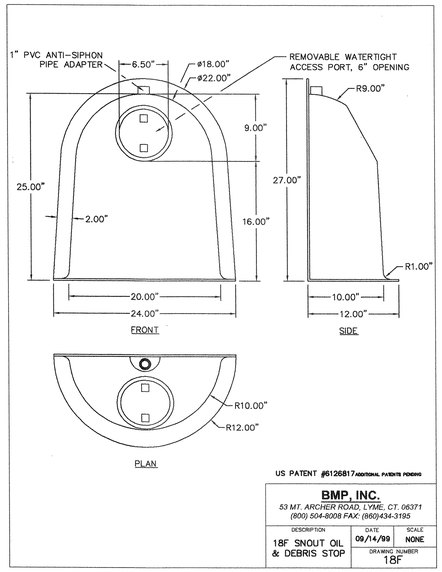


US PATENT #6126817 ADDITIONAL PATENTS PENDING

**BMP, INC.**
53 MT. ARCHER ROAD, LYME, CT. 06371
(800) 504-8008 FAX: (860)434-3195

| DESCRIPTION | DATE | SCALE |
|---|---|---|
| 18F SNOUT OIL & DEBRIS STOP | 09/14/99 | NONE |
| | DRAWING NUMBER | 18F |

OUTLET HOOD
NOT TO SCALE (8)

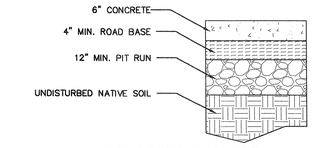


CONCRETE PAD DETAIL
NOT TO SCALE (9)

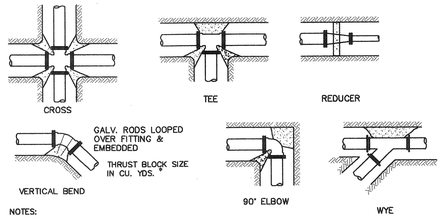


NOTES:
1. CONCRETE THRUST BLOCKING TO BE POURED AGAINST UNDISTURBED EARTH OR STRUCTURAL BACKFILL APPROVED BY ENGINEER.
2. KEEP CONCRETE CLEAR OF JOINT AND ACCESSORIES.
3. REQUIRED BEARING AREAS AT FITTINGS SHALL BE AS REQUIRED IN NOTE 7 TO CONFORM TO TEST PRESSURE(S) AND ALLOWABLE SOIL BEARING STRESS(ES) STATED IN THE SPECIFICATIONS.
4. BEARING AREAS AND SPECIAL BLOCKING DETAILS SHOWN ON PLANS TAKE PRECEDENCE OVER BEARING AREAS AND BLOCKING DETAILS SHOWN ON THIS TYPICAL DETAIL.
5. ALL BURIED PIPING EXCEPT FLANGED, SCREWED, SOCKET WELD PVC OR WELDED STEEL PIPE SPECIFIED TO BE PRESSURE TESTED SHALL BE PROVIDED WITH CONCRETE THRUST BLOCKS AT ALL DIRECTION CHANGES UNLESS OTHERWISE NOTED.
6. THRUST BLOCKS SHALL NOT BE LOCATED OR SIZED TO ENCASE ADJACENT PIPES OR FITTINGS.
7. BEARING ARES ARE BASED ON TEST PRESSURE OF 150 P.S.I. AND AN ALLOWABLE SOIL BEARING STRESS OF 2000 POUNDS PER SQUARE FOOT. TO COMPUTE BEARING AREAS FOR DIFFERENT TEST PRESSURES AND SOIL BEARING STRESSES USE THE FOLLOWING EQUATION:

BEARING AREA = (TEST PRESSURE/150) X (2000/SOIL BEARING STRESS) X (TABLE VALUE)

MINIMUM BEARING AREA IN SQUARE FEET

| FITTING SIZE | TEE,WYE PLUG OR CAP | 90° BEND PLUGGED CROSS | TEE PLUGGED ON RUN A1 | TEE PLUGGED ON RUN A2 | 45° BEND | 22 1/2° BEND | 11 1/4° BEND | 45° VERT BEND * (CU. YDS) |
|---|---|---|---|---|---|---|---|---|
| 4" | 1.4 | 1.9 | 1.9 | 1.4 | 1.0 | 1.0 | 1.0 | 1.0 |
| 6" | 2.8 | 4.0 | 4.0 | 2.8 | 2.1 | 1.1 | 1.0 | 2.1 |
| 8" | 4.8 | 6.8 | 6.8 | 4.8 | 3.7 | 1.9 | 1.0 | 3.6 |
| 10" | 7.3 | 10.3 | 10.3 | 7.3 | 5.6 | 2.8 | 1.4 | 5.5 |

VALUES LISTED ARE FOR 150 PSI TEST PRESSURE & 2000 PSF SOIL BEARING STRESS

TYPICAL THRUST BLOCKING
NOT TO SCALE (10)

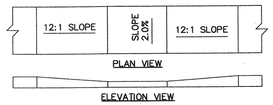


ACCESSIBLE RAMP DETAIL
NOT TO SCALE (11)

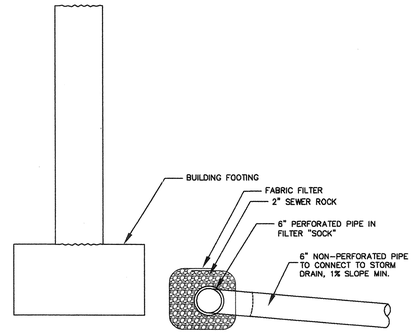


FOUNDATION DRAIN
NOT TO SCALE (12)

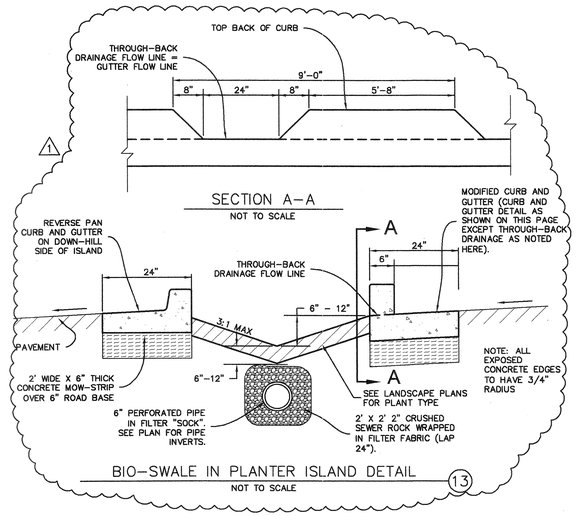


BIO-SWALE IN PLANTER ISLAND DETAIL
NOT TO SCALE (13)

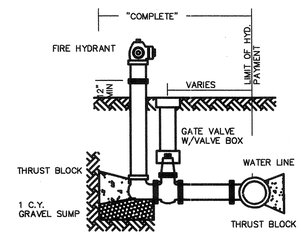


"COMPLETE" FOR PAYMENT INCLUDES TEES, VALVE, SUMP, THRUST BLOCK, VALVE BOX, STEM AND FIRE HYDRANT.

TYPICAL FIRE HYDRANT INSTALLATION
NTS

REGISTERED PROFESSIONAL ENGINEER
No. 3089828
DAVID. BARRETT (CIVIL)
STATE OF UTAH

V:\52863\active\186302019\design\drawing\sheets\2008-10-10\02019CD501.dwg Oct10,2008 - 11:52am


ARCHITECT 0818

ajc architects

703 east 1700 south
salt lake city, utah 84105
ph: 801.466.8818
fx: 801.466.4411
www.ajcarchitects.com

P A Y E T T E

285 Summer Street
Boston, MA 02210-1522
www.payette.com

Stantec

Stantec Consulting
3995 South 700 East, Suite 300
Salt Lake City UT U.S.A.
84107
Tel. 801.261.0090
Fax. 801.266.1671
www.stantec.com


OWNER INFORMATION

State of Utah
Department of Administrative Services

Division of Facilities Construction & Management
4110 State Office Building
Salt Lake City, Utah 84114
Phone: (801) 538 - 3018
Fax: (801) 538 - 3267

Internet: http://www.dfcm.utah.gov

PROJECT DESCRIPTION

LIFE SCIENCES RESEARCH CENTER
UTAH STATE UNIV.

USTAR BUILDING #2
LOGAN, UTAH

SHEET NAME:

CONSTRUCTION DETAILS

REVISIONS

| MARK | DATE | DESCRIPTION |
|---|---|---|
| 1 | 2008/10/08, | REVISION 1 |
| | 12-09-08 | B.P. #2 REVIEW |

ISSUE DATA

| | |
|---|---|
| ISSUE DATE: | SEPTEMBER 2008 |
| ISSUE TYPE: | BID PACKAGE 1 |
| DRAWN BY: | CB |
| CHECKED BY: | KAE |
| CAD FILE NAME: | |
| DFCM PROJECT # | 06292770 |
| STATE PROPERTY # | - |
| COPYRIGHT: | STATE OF UTAH |

SHEET NUMBER:

CD501

## PLANT SCHEDULE

| TREES | QTY | BOTANICAL | COMMON |
|---|---|---|---|
| AG | 25 | Acer grandidentatum | Bigtooth Maple |
| AGAB | 9 | Amelanchier x grandiflora `Autumn Brilliance` | `Autumn Brilliance` Serviceberry |
| CF | 18 | Carpinus betulus `Franz Fontaine` | Franz Fontaine Hornbeam |
| CK | 23 | Cladrastis kentukea | American Yellowwood |
| GS | 13 | Gleditsia triacanthos `Shademaster` TM | Shademaster Locust |
| GD | 18 | Gymnocladus dioica | Kentucky Coffeetree |
| MA | 12 | Maackia amurensis | Amur Maackia |
| MG | 6 | Malus x `Golden Raindrops` | Crab Apple |
| MS | 9 | Malus x `Spring Snow` | Spring Snow Crab Apple |
| PE | 3 | Picea englemanii | Englemann Spruce |
| QB | 6 | Quercus bicolor | Swamp White Oak |

| SHRUBS | QTY | BOTANICAL | COMMON |
|---|---|---|---|
| AIT | 10 | Alnus incana tenuifolia | Thinleaf Alder |
| AA | 31 | Amelanchier alnifolia | Serviceberry |
| AM | 44 | Aronia melanocarpa | Chokeberry |
| CSI | 45 | Cornus stolonifera `Isanti` | Isanti Dogwood |
| CL | 6 | Cotoneaster lucidus | Peking Cotoneaster |
| FA | 32 | Forsythia x `Arnold Dwarf` | Arnold Dwarf Forsythia |
| JD | 36 | Juniperus communis depressa `Blueberry Delight` | Blueberry Delight Juniper |
| LC | 4 | Lonicera xylosteum `Claveyi` | Clavey`s Dwarf Honeysuckle |
| MR | 33 | Mahonia repens | Creeping Mahonia |
| PM | 10 | Philadelphus x `Minnesota Snowflake Nana` | Minnesota Snowflake Mockorange |
| PN | 9 | Physocarpus opulifolius `Summer Wine` | Summer Wine Ninebark |
| PT | 4 | Pinus mugo mugo `Tyrolean` | Dwarf Mugo |
| PM2 | 6 | Pinus mugo mugo pumilio | Natural Form Dwarf Mugho Pine |
| PB | 18 | Prunus besseyi | Sand Cherry |
| PB2 | 212 | Prunus besseyi `Pawnee Buttes` | Pawnee Buttes Sand Cherry |
| PV | 7 | Prunus virginiana | Chokecherry |
| RA | 205 | Rhus aromatica `Gro-Low` | Gro-Low Fragrant Sumac |
| RG | 4 | Ribes alpinum `Green Mound` | Green Mound Alpine Currant |
| RB | 64 | Rosa Meidiland series `Bonica` | Bonica Meidiland Rose |
| RF | 24 | Rosa Meidiland series `Fire` | Fire Meidiland Rose |
| SB | 18 | Spiraea x bumalda `Anthony Waterer` | Anthony Waterer Spirea |
| SC | 15 | Symphoricarpos x chenaultii `Hancock` | Hancock Coralberry |

| ANNUALS/PERENNIALS | QTY | BOTANICAL | COMMON |
|---|---|---|---|
| HD | 21 | Hemerocallis x `Double Talk` | Daylily |
| HP | 32 | Hemerocallis x `Pandora`s Box` | Daylily |
| LH | 102 | Lavandula angustifolia `Hidcote` | Hidcote Lavender |

| GRASSES | QTY | BOTANICAL | COMMON |
|---|---|---|---|
| CA | 12 | Calamagrostis acutifolia `Karl Foerster` | Foerster`s Reed Grass |
| HS | 36 | Helictotrichon sempervirens | Blue Oat Grass |
| PPS | 30 | Panicum virgatum `Prairie Sky` | Prairie Sky Switch Grass |
| SS | 238 | Schizachyrium scoparium | Little Bluestem Grass |

| VINES | QTY | BOTANICAL | COMMON |
|---|---|---|---|
| CR | 2 | Campsis radicans | Trumpetvine |
| CRF | 1 | Campsis radicans `Flava` | Trumpet Vine |
| CRM | 1 | Campsis radicans `Minnesota Red` | Minnesota Red Trumpet Creeper |
| CJ | 7 | Clematis x jackmanii | Jackman Clematis |
| LB | 8 | Lonicera brownii `Dropmore Scarlet` | Dropmore Scarlet Honeysuckle |
| LJ | 2 | Lonicera japonica `Halliana` | Halls Honeysuckle Flowering Vine |
| LP | 8 | Lonicera periclymenum `Harlequin` | Harlequin Honeysuckle |
| LG | 8 | Lonicera x heckrottii `Gold Flame` | Gold FLame Honeysuckle |

PERENNIAL MIXES

PM A--PERENNIAL MIX A

| | |
|---|---|
| Gaillardia grandiflora 'Mandarin' | Mandarin Blanket Flower |
| Penstemon digitalis 'Husker's Red' | Husker's Red Penstemon |
| Penstemon strictus | Rocky Mountain Penstemon |
| Schizachyrium scoparium | Little Bluestem |

PM B--PERENNIAL MIX B

| | |
|---|---|
| Geranium viscosissimum | Wild Geranium |
| Hemerocallis 'Double Talk' | Double Talk Daylily |
| Oenothera missouriensis 'Ozark Sundrops' | Ozark Sundrops Evening Primrose |
| Penstemon palmeri | Palmer's Penstemon |

DECORATIVE GRASS MIX

GRA MIX

| | |
|---|---|
| Schizachyrium scoparium | Little Blue Stem |
| Helictotrichon sempervirens | Blue Oat Grass |

OTHER MATERIALS:

- Kentucky Bluegrass
- Crushed Stone
- Cobble

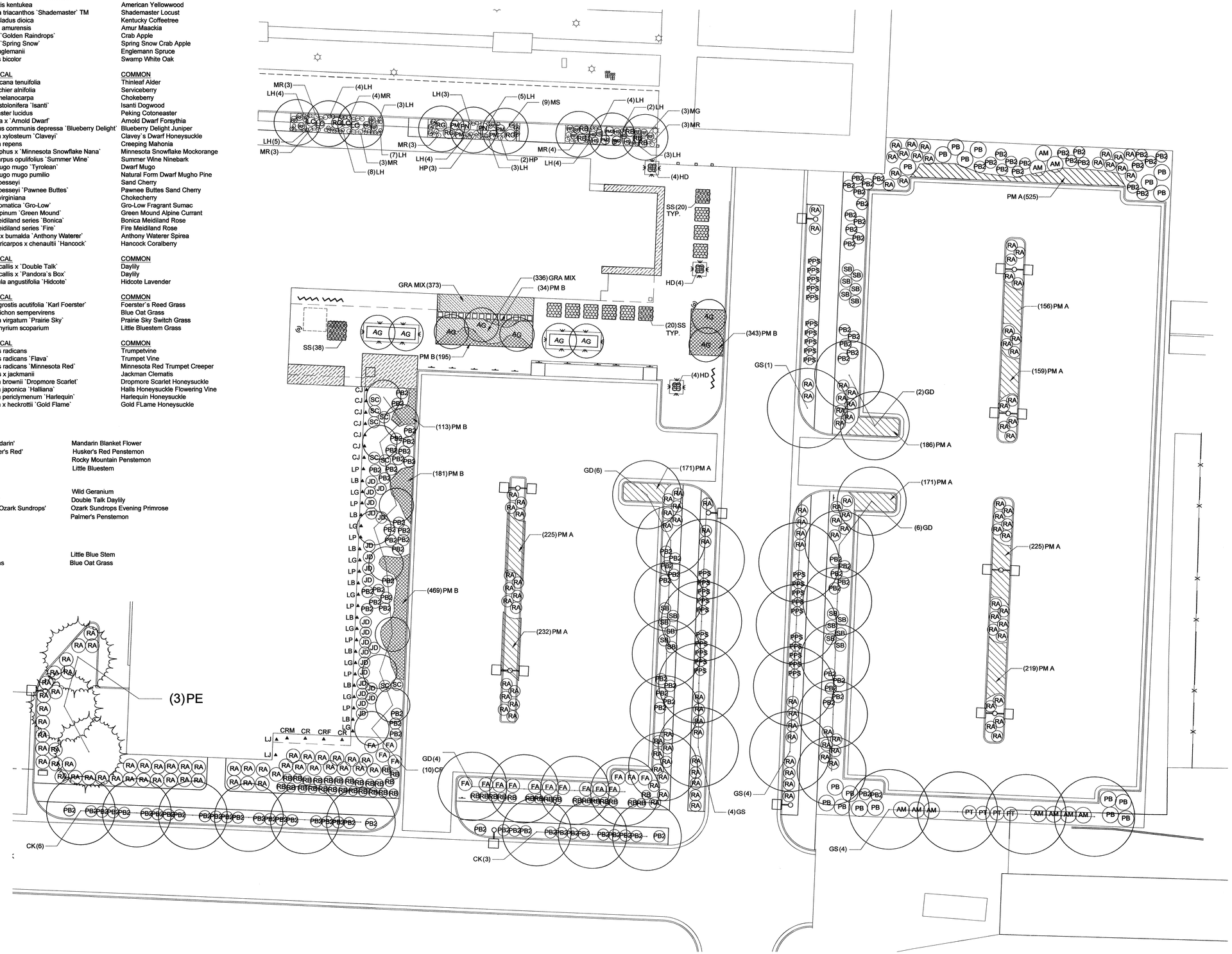



ARCHITECT 0818

ajc architects

703 east 1700 south
salt lake city, utah 84105
ph: 801.466.8818
fx: 801.466.4411
www.ajcarchitects.com

PAYETTE

285 Summer Street
Boston, MA 02210-1522
www.payette.com

LANDMARK DESIGN
INCORPORATED
*LANDSCAPE ARCHITECTURE AND LAND PLANNING*

*2834 Highland Drive*
*Salt Lake City*
*Utah 84106*
*(801) 474-3300*
*Fax (801) 474-3303*


OWNER INFORMATION

**State of Utah**
Department of Administrative Services

Division of Facilities
Construction & Management
4110 State Office Building
Salt Lake City, Utah 84114
Phone: (801) 538 - 3018
Fax: (801) 538 - 3267

Internet: http://www.dfcm.utah.gov

PROJECT DESCRIPTION

# LIFE SCIENCES RESEARCH CENTER UTAH STATE UNIV.

USTAR BUILDING #2
LOGAN, UTAH

SHEET NAME:

LANDSCAPE PLAN

REVISIONS

| MARK | DATE | DESCRIPTION |
|---|---|---|

ISSUE DATA

| | |
|---|---|
| ISSUE DATE: | DEC. 9, 2008 |
| ISSUE TYPE: | DESDEV |
| DRAWN BY: | JH |
| CHECKED BY: | JS |
| CAD FILE NAME: | LP101 |
| DFCM PROJECT # | 06292770 |
| STATE PROPERTY # | - |
| COPYRIGHT: | STATE OF UTAH |

SHEET NUMBER:

# LP101

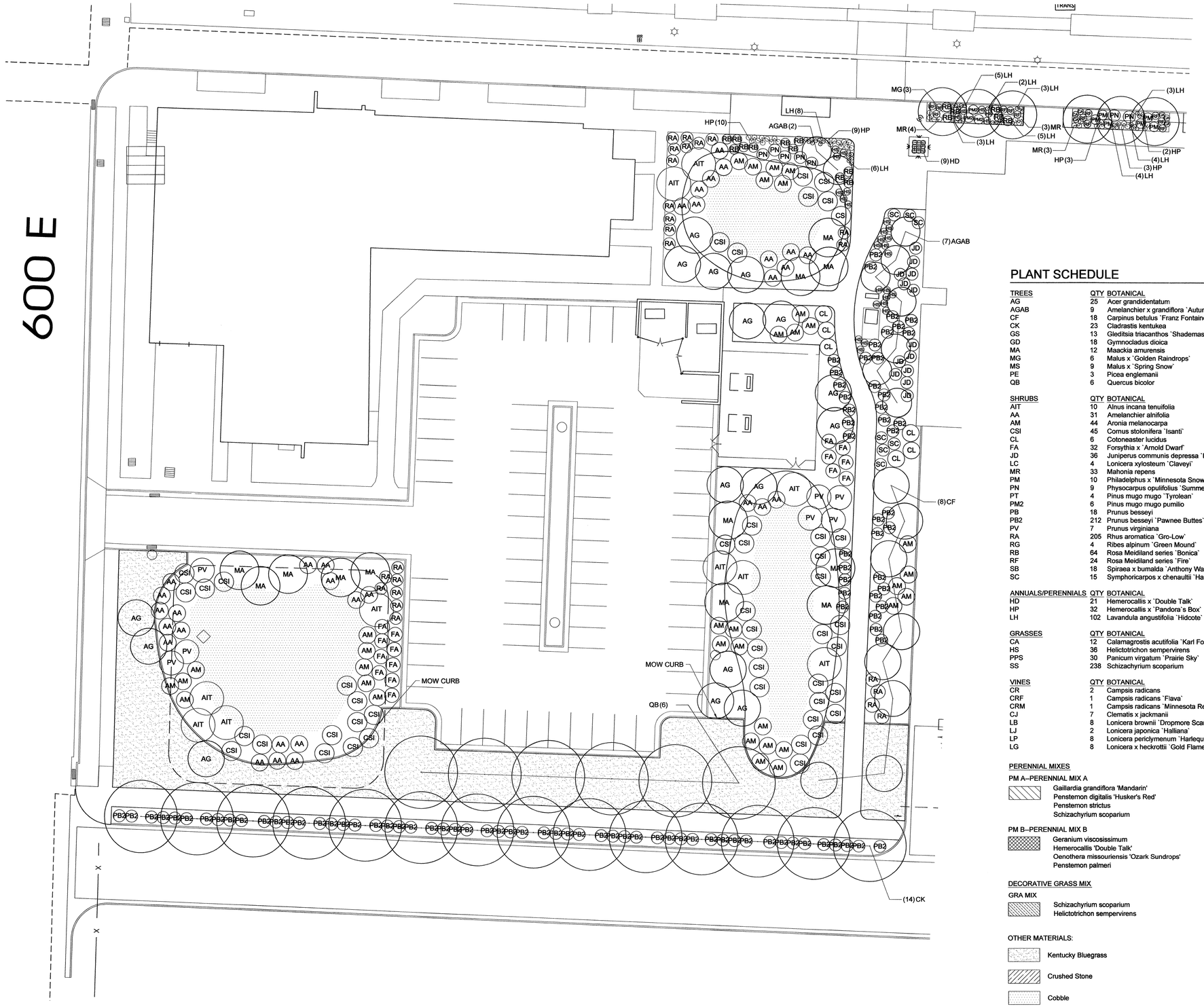


## PLANT SCHEDULE

| TREES | QTY | BOTANICAL | COMMON |
|---|---|---|---|
| AG | 25 | Acer grandidentatum | Bigtooth Maple |
| AGAB | 9 | Amelanchier x grandiflora `Autumn Brilliance` | `Autumn Brilliance` Serviceberry |
| CF | 18 | Carpinus betulus `Franz Fontaine` | Franz Fontaine Hornbeam |
| CK | 23 | Cladrastis kentukea | American Yellowwood |
| GS | 13 | Gleditsia triacanthos `Shademaster` TM | Shademaster Locust |
| GD | 18 | Gymnocladus dioica | Kentucky Coffeetree |
| MA | 12 | Maackia amurensis | Amur Maackia |
| MG | 6 | Malus x `Golden Raindrops` | Crab Apple |
| MS | 9 | Malus x `Spring Snow` | Spring Snow Crab Apple |
| PE | 3 | Picea englemanii | Englemann Spruce |
| QB | 6 | Quercus bicolor | Swamp White Oak |

| SHRUBS | QTY | BOTANICAL | COMMON |
|---|---|---|---|
| AIT | 10 | Alnus incana tenuifolia | Thinleaf Alder |
| AA | 31 | Amelanchier alnifolia | Serviceberry |
| AM | 44 | Aronia melanocarpa | Chokeberry |
| CSI | 45 | Cornus stolonifera `Isanti` | Isanti Dogwood |
| CL | 6 | Cotoneaster lucidus | Peking Cotoneaster |
| FA | 32 | Forsythia x `Arnold Dwarf` | Arnold Dwarf Forsythia |
| JD | 36 | Juniperus communis depressa `Blueberry Delight` | Blueberry Delight Juniper |
| LC | 4 | Lonicera xylosteum `Claveyi` | Clavey`s Dwarf Honeysuckle |
| MR | 33 | Mahonia repens | Creeping Mahonia |
| PM | 10 | Philadelphus x `Minnesota Snowflake Nana` | Minnesota Snowflake Mockorange |
| PN | 9 | Physocarpus opulifolius `Summer Wine` | Summer Wine Ninebark |
| PT | 4 | Pinus mugo mugo `Tyrolean` | Dwarf Mugo |
| PM2 | 6 | Pinus mugo mugo pumilio | Natural Form Dwarf Mugho Pine |
| PB | 18 | Prunus besseyi | Sand Cherry |
| PB2 | 212 | Prunus besseyi `Pawnee Buttes` | Pawnee Buttes Sand Cherry |
| PV | 7 | Prunus virginiana | Chokecherry |
| RA | 205 | Rhus aromatica `Gro-Low` | Gro-Low Fragrant Sumac |
| RG | 4 | Ribes alpinum `Green Mound` | Green Mound Alpine Currant |
| RB | 64 | Rosa Meidiland series `Bonica` | Bonica Meidiland Rose |
| RF | 24 | Rosa Meidiland series `Fire` | Fire Meidiland Rose |
| SB | 18 | Spiraea x bumalda `Anthony Waterer` | Anthony Waterer Spirea |
| SC | 15 | Symphoricarpos x chenaultii `Hancock` | Hancock Coralberry |

| ANNUALS/PERENNIALS | QTY | BOTANICAL | COMMON |
|---|---|---|---|
| HD | 21 | Hemerocallis x `Double Talk` | Daylily |
| HP | 32 | Hemerocallis x `Pandora`s Box` | Daylily |
| LH | 102 | Lavandula angustifolia `Hidcote` | Hidcote Lavender |

| GRASSES | QTY | BOTANICAL | COMMON |
|---|---|---|---|
| CA | 12 | Calamagrostis acutifolia `Karl Foerster` | Foerster`s Reed Grass |
| HS | 36 | Helictotrichon sempervirens | Blue Oat Grass |
| PPS | 30 | Panicum virgatum `Prairie Sky` | Prairie Sky Switch Grass |
| SS | 238 | Schizachyrium scoparium | Little Bluestem Grass |

| VINES | QTY | BOTANICAL | COMMON |
|---|---|---|---|
| CR | 2 | Campsis radicans | Trumpetvine |
| CRF | 1 | Campsis radicans `Flava` | Trumpet Vine |
| CRM | 1 | Campsis radicans `Minnesota Red` | Minnesota Red Trumpet Creeper |
| CJ | 7 | Clematis x jackmanii | Jackman Clematis |
| LB | 8 | Lonicera brownii `Dropmore Scarlet` | Dropmore Scarlet Honeysuckle |
| LJ | 2 | Lonicera japonica `Halliana` | Halls Honeysuckle Flowering Vine |
| LP | 8 | Lonicera periclymenum `Harlequin` | Harlequin Honeysuckle |
| LG | 8 | Lonicera x heckrottii `Gold Flame` | Gold FLame Honeysuckle |

PERENNIAL MIXES

PM A--PERENNIAL MIX A

| | |
|---|---|
| Gaillardia grandiflora 'Mandarin' | Mandarin Blanket Flower |
| Penstemon digitalis 'Husker's Red' | Husker's Red Penstemon |
| Penstemon strictus | Rocky Mountain Penstemon |
| Schizachyrium scoparium | Little Bluestem |

PM B--PERENNIAL MIX B

| | |
|---|---|
| Geranium viscosissimum | Wild Geranium |
| Hemerocallis 'Double Talk' | Double Talk Daylily |
| Oenothera missouriensis 'Ozark Sundrops' | Ozark Sundrops Evening Primrose |
| Penstemon palmeri | Palmer's Penstemon |

DECORATIVE GRASS MIX

GRA MIX

| | |
|---|---|
| Schizachyrium scoparium | Little Blue Stem |
| Helictotrichon sempervirens | Blue Oat Grass |

OTHER MATERIALS:

- Kentucky Bluegrass
- Crushed Stone
- Cobble


ARCHITECT 0818

ajc architects

703 east 1700 south
salt lake city, utah 84105
ph: 801.466.8818
fx: 801.466.4411
www.ajcarchitects.com

P A Y E T T E

285 Summer Street
Boston, MA 02210-1522
www.payette.com

LANDMARK DESIGN
INCORPORATED
*LANDSCAPE ARCHITECTURE AND LAND PLANNING*

*2834 Highland Drive*
*Salt Lake City*
*Utah 84106*
*(801) 474-3300*
*Fax (801) 474-3303*


OWNER INFORMATION

**State of Utah**
Department of Administrative Services

Division of Facilities Construction & Management
4110 State Office Building
Salt Lake City, Utah 84114
Phone: (801) 538 - 3018
Fax: (801) 538 - 3267

Internet: http://www.dfcm.utah.gov

PROJECT DESCRIPTION

LIFE SCIENCES
RESEARCH CENTER
UTAH STATE UNIV.

USTAR BUILDING #2
LOGAN, UTAH

SHEET NAME:

LANDSCAPE PLAN

REVISIONS

| MARK | DATE | DESCRIPTION |
|---|---|---|

ISSUE DATA

| | |
|---|---|
| ISSUE DATE: | DEC. 9, 2008 |
| ISSUE TYPE: | DESDEV |
| DRAWN BY: | JH |
| CHECKED BY: | JS |
| CAD FILE NAME: | LP101 |
| DFCM PROJECT # | 06292770 |
| STATE PROPERTY # | - |
| COPYRIGHT: | STATE OF UTAH |

SHEET NUMBER:

LP102

MIX EXISTING EXCAVATED SOIL WITH TOPSOIL FOR BACKFILL AT THE FOLLOWING RATES:

5 GALLON 0.5 CU FT AMENDMENT
1 GALLON 0.25 CU FT AMENDMENT
4" POT 0.25 CU FT AMENDMENT

SOAK TOPSOIL AND ALLOW TO PERCOLATE PRIOR TO PLANTING. SET PLANT AT SAME RELATIONSHIP TO FINISH GRADE AS IN CONTAINER.

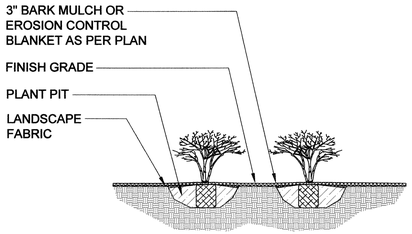


## 1 SHRUB PLANTING

32 9333.01-01

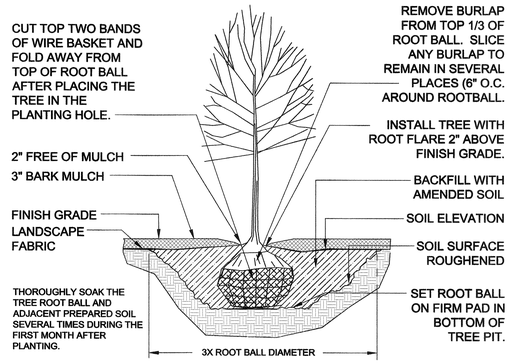


STAKING TREES
1. STAKING IS NOT GENERALLY REQUIRED FOR ALL TREE PLANTING. IF CONDITIONS ARE PRESENT WHERE THE CONTRACTOR DEEMS IT NECESSARY TO STAKE TREES TO ENSURE VIABILITY THROUGH THE GUARANTEE PERIOD, THE CONTRACTOR MAY STAKE THE TREES AT NO ADDITIONAL COST TO THE OWNER.
2. ANY STAKING WILL BE IN ACCORDANCE WITH CURRENT HORTICULTURE PRACTICE. STAKING OF TREES WILL BE WITH WOODEN STAKES PLACED OUTSIDE OF THE ROOT BALL

## 2 DECIDUOUS TREE PLANTING

32 9343.01-01

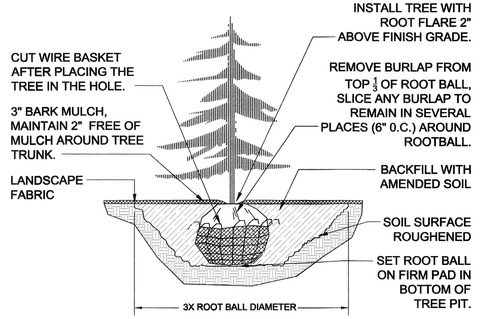


NOTE:
1. STAKING IS NOT GENERALLY REQUIRED. FOR ALL TREE PLANTING, IF CONDITIONS ARE PRESENT WHERE THE CONTRACTOR DEEMS IT NECESSARY TO STAKE TREES IN ORDER TO ENSURE VIABILITY THORUGH THE GUARANTEE PERIOD, THE CONTRACTOR MAY STAKE THE TREES AT NO ADDITIONAL COST TO THE OWNER.
2. STAKING WILL BE IN ACCORDANCE WITH CURRANT HORTICULTURE PRACTICE. STAKING OF TREES WILL BE WITH WOODEN STAKES PLACED OUTSIDE OF THE ROOT BALL.

## 3 EVERGREEN TREE PLANTING

32 9343.01-02


ARCHITECT 0818

ajc architects

703 east 1700 south
salt lake city, utah 84105
ph: 801.466.8818
fx: 801.466.4411
www.ajcarchitects.com

PAYETTE

285 Summer Street
Boston, MA 02210-1522
www.payette.com

LANDMARK DESIGN
INCORPORATED
*LANDSCAPE ARCHITECTURE AND LAND PLANNING*

*2834 Highland Drive*
*Salt Lake City*
*Utah 84106*
*(801) 474-3300*
*Fax (801) 474-3303*

OWNER INFORMATION

**State of Utah**
Department of Administrative Services

Division of Facilities Construction & Management
4110 State Office Building
Salt Lake City, Utah 84114
Phone: (801) 538 - 3018
Fax: (801) 538 - 3267

Internet: http://www.dfcm.utah.gov


PROJECT DESCRIPTION

LIFE SCIENCES
RESEARCH CENTER
UTAH STATE UNIV.

USTAR BUILDING #2
LOGAN, UTAH

SHEET NAME:

LANDSCAPE DETAILS

REVISIONS

| MARK | DATE | DESCRIPTION |
|---|---|---|

ISSUE DATA

| | |
|---|---|
| ISSUE DATE: | DEC. 9, 2008 |
| ISSUE TYPE: | DESDEV |
| DRAWN BY: | JH |
| CHECKED BY: | JS |
| CAD FILE NAME: | LP101 |
| DFCM PROJECT # | 06292770 |
| STATE PROPERTY # | - |
| COPYRIGHT: | STATE OF UTAH |

SHEET NUMBER:

LP501

INFORMATION NEEDED:

1 - POC
- -VERIFY LOCATION AND SOURCE SIZE
- -PSI

2 - NEW CONTROLLER LOCATION AND ELECTRICAL CONNECTION

3 - TYPE OF IRRIGATION (DFCM / USU STANDARDS)
- -POINT SOURCE DRIP EMITTER ON ¼" DRIPLINE.
- -DRIP TUBING WITH INLINE EMITTERS
- -BUBBLERS
- -SPRAYS

NOTE: ALL IRRIGATION ZONES TO BE FORMED ACCORDING TO WATER NEEDS OF PLANT SPECIES. PLANT SPECIES WITH LIKE WATER NEEDS ARE GROUPED TOGETHER. TURF GRASS IS HYDRA ZONE 3. ALL SHRUBS AND PERENNIALS ARE INCLUDED IN HYDRA ZONE 2. ALL TREES ARE PART OF HYDRA ZONE 2 AND WILL HAVE IRRIGATION ZONES SEPARATE FROM OTHER PLANTINGS.

## IRRIGATION SCHEDULE

| SYMBOL | MANUFACTURER/MODEL/DESCRIPTION |
|---|---|
| | Area to Receive Dripline<br>Netafim TLCV4-18-18<br>Landscape Dripperline with 0.4gph emitters at 18" o.c. with check valve, pressure compensation, 14.7psi min. to 50psi max. Dripperline laterals spaced at 18" apart, with emitters offset for triangular pattern. |

| SYMBOL | MANUFACTURER/MODEL/DESCRIPTION |
|---|---|
| ——— | Irrigation Lateral Line: PVC Schedule 40<br>Only lateral transition pipe sizes 1" and above are indicated on the plan, with all others being 3/4" in size. |
| — — — — | Irrigation Mainline: PVC Schedule 40 |
| #• #<br>#" | Valve Callout<br>Valve Number<br>Valve Flow<br>Valve Size |

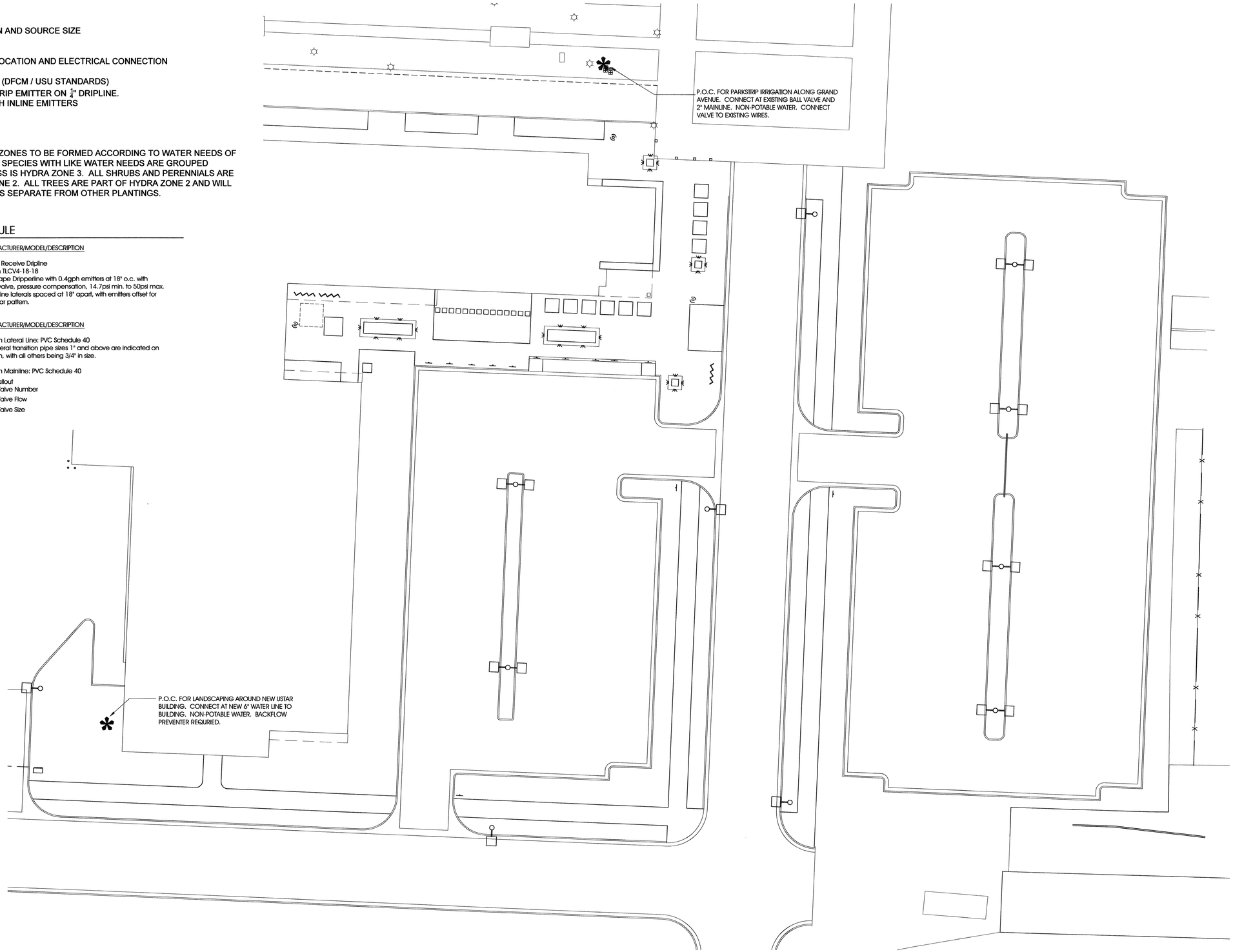



ARCHITECT 0818

ajc architects

703 east 1700 south
salt lake city, utah 84105
ph: 801.466.8818
fx: 801.466.4411
www.ajcarchitects.com

PAYETTE

285 Summer Street
Boston, MA 02210-1522
www.payette.com

LANDMARK DESIGN
INCORPORATED
*LANDSCAPE ARCHITECTURE AND LAND PLANNING*

*2834 Highland Drive*
*Salt Lake City*
*Utah 84106*
*(801) 474-3300*
*Fax (801) 474-3303*


OWNER INFORMATION

**State of Utah**
Department of Administrative Services

Division of Facilities
Construction & Management
4110 State Office Building
Salt Lake City, Utah 84114
Phone: (801) 538 - 3018
Fax: (801) 538 - 3267

Internet: http://www.dfcm.utah.gov

PROJECT DESCRIPTION

LIFE SCIENCES
RESEARCH CENTER
UTAH STATE UNIV.

USTAR BUILDING #2
LOGAN, UTAH

SHEET NAME:

IRRIGATION PLAN

REVISIONS

| MARK | DATE | DESCRIPTION |
|---|---|---|

ISSUE DATA

| | |
|---|---|
| ISSUE DATE: | DEC. 9, 2008 |
| ISSUE TYPE: | DESDEV |
| DRAWN BY: | JH |
| CHECKED BY: | JS |
| CAD FILE NAME: | LI101 |
| DFCM PROJECT # | 06292770 |
| STATE PROPERTY # | - |
| COPYRIGHT: | STATE OF UTAH |

SHEET NUMBER:

LI101

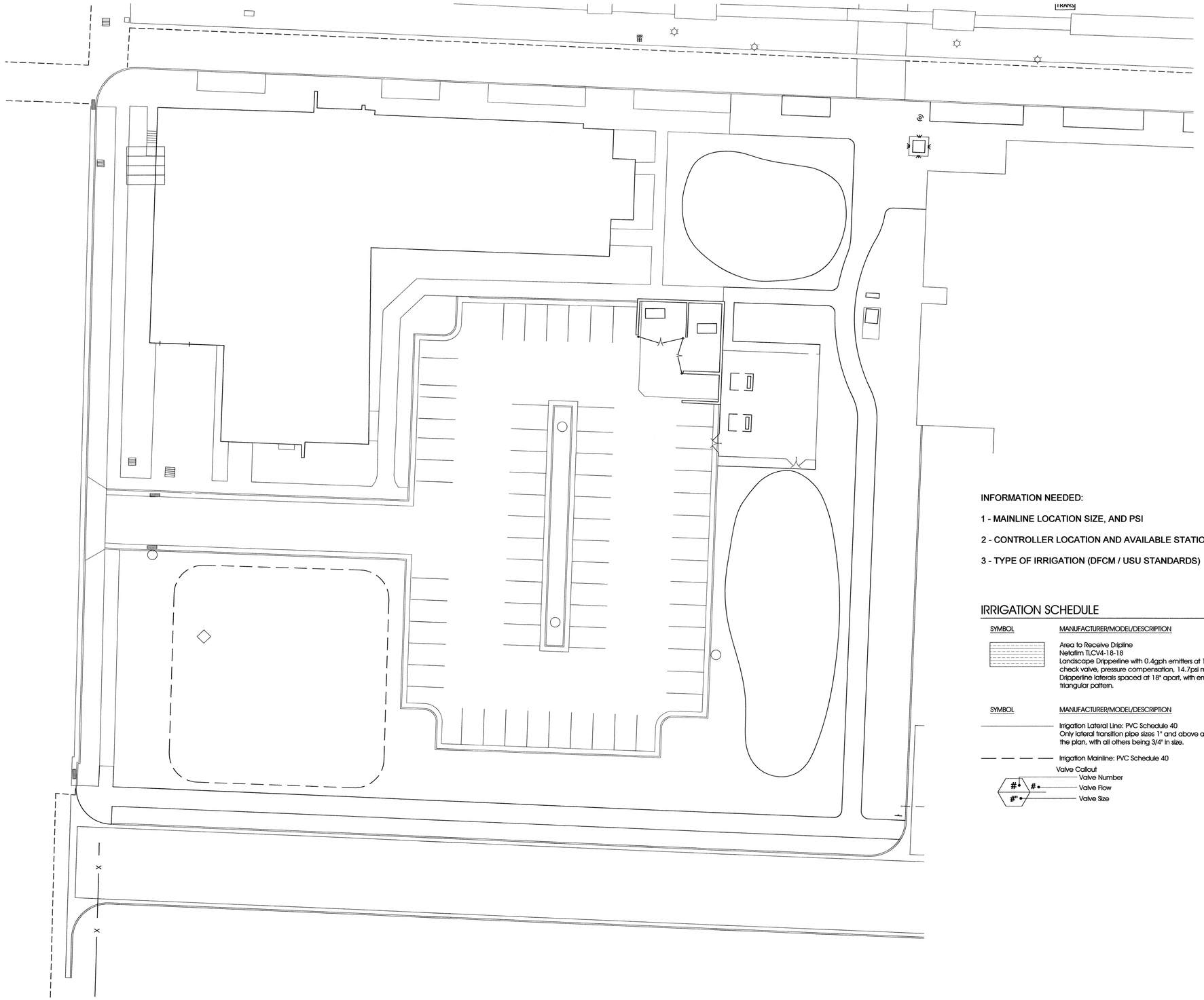

INFORMATION NEEDED:

1 - MAINLINE LOCATION SIZE, AND PSI

2 - CONTROLLER LOCATION AND AVAILABLE STATIONS

3 - TYPE OF IRRIGATION (DFCM / USU STANDARDS)

## IRRIGATION SCHEDULE

| SYMBOL | MANUFACTURER/MODEL/DESCRIPTION |
|---|---|
| | Area to Receive Dripline<br>Netafilm TLCV4-18-18<br>Landscape Dripperline with 0.4gph emitters at 18" o.c. with check valve, pressure compensation, 14.7psi min. to 50psi max. Dripperline laterals spaced at 18" apart, with emitters offset for triangular pattern. |

| SYMBOL | MANUFACTURER/MODEL/DESCRIPTION |
|---|---|
| | Irrigation Lateral Line: PVC Schedule 40<br>Only lateral transition pipe sizes 1" and above are indicated on the plan, with all others being 3/4" in size. |
| | Irrigation Mainline: PVC Schedule 40 |

Valve Callout
- #• — Valve Number
- #• — Valve Flow
- #" • — Valve Size


ARCHITECT 0818

ajc architects

703 east 1700 south
salt lake city, utah 84105
ph: 801.466.8818
fx: 801.466.4411
www.ajcarchitects.com

PAYETTE

285 Summer Street
Boston, MA 02210-1522
www.payette.com

LANDMARK DESIGN
INCORPORATED
*LANDSCAPE ARCHITECTURE AND LAND PLANNING*

*2834 Highland Drive*
*Salt Lake City*
*Utah 84106*
*(801) 474-3300*
*Fax (801) 474-3303*

OWNER INFORMATION

**State of Utah**
Department of Administrative Services

Division of Facilities
Construction & Management
4110 State Office Building
Salt Lake City, Utah 84114
Phone: (801) 538 - 3018
Fax: (801) 538 - 3267

Internet: http://www.dfcm.utah.gov


PROJECT DESCRIPTION

LIFE SCIENCES
RESEARCH CENTER
UTAH STATE UNIV.

USTAR BUILDING #2
LOGAN, UTAH

SHEET NAME:

IRRIGATION PLAN

REVISIONS

| MARK | DATE | DESCRIPTION |
|---|---|---|

ISSUE DATA

| | |
|---|---|
| ISSUE DATE: | DEC. 9, 2008 |
| ISSUE TYPE: | DESDEV |
| DRAWN BY: | JH |
| CHECKED BY: | JS |
| CAD FILE NAME: | LI101 |
| DFCM PROJECT # | 06292770 |
| STATE PROPERTY # | - |
| COPYRIGHT: | STATE OF UTAH |

SHEET NUMBER:

LI102

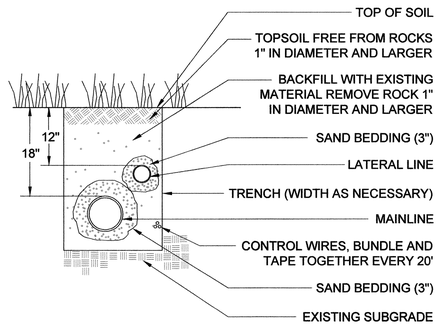


TIE A LOOSE 20" LOOP IN ALL WIRING AT CHANGES OF DIRECTION GREATER THAN 30 DEGREES. UNTIE ALL LOOPS AFTER CONNECTIONS HAVE BEEN MADE.

## 1 TYPICAL TRENCHING

LDI-32 8409.76-12

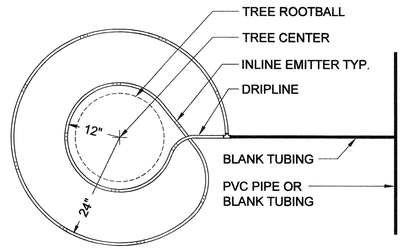


NOTES:
1. LENGTH OF DRIPLINE IS 19.5' PER TREE.
2. VERIFY THAT THERE ARE 13 INLINE EMITTERS ON DRIPLINE BEFORE PLACING AROUND TREE.
3. STAKE TUBING AS DETAILED.

## 2 DRIP TUBING (TREE)

32 8413.56-02

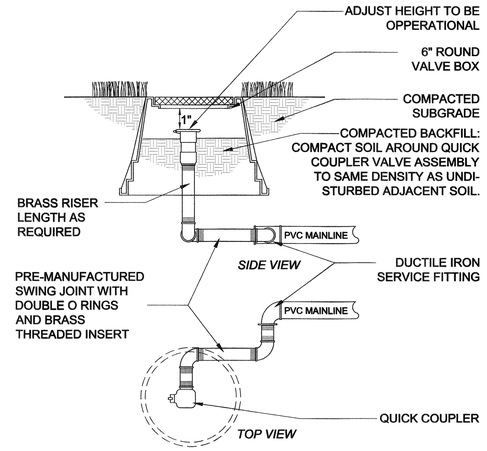


## 3 QUICK COUPLER

LDI-32 8406.43-05

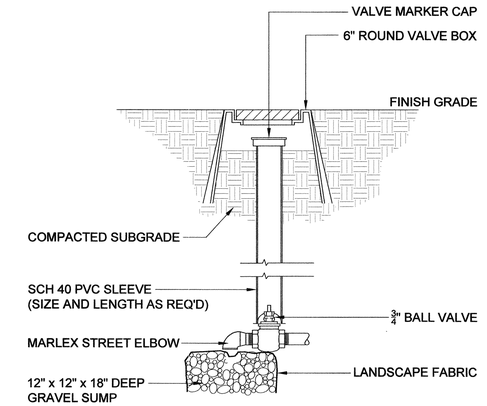


## 4 MANUAL DRAIN VALVE

32 8409.86-01

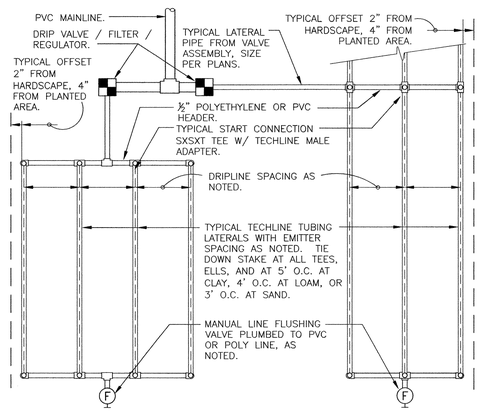


**TECHLINE CV MAXIMUM LENGTH OF SINGLE LATERAL (FEET)**

| DRIPPER SPACING | | 12" | | | | 18" | | | | 24" | |
|---|---|---|---|---|---|---|---|---|---|---|---|
| DRIPPER FLOW RATE (GPH) | | 0.26 | 0.4 | 0.6 | 0.9 | 0.26 | 0.4 | 0.6 | 0.9 | 0.6 | 0.9 |
| INLET PRESSURE (PSI) | 15 | 127 | 109 | 86 | 65 | 177 | 151 | 120 | 91 | 152 | 116 |
| | 25 | 427 | 325 | 256 | 194 | 604 | 459 | 361 | 274 | 458 | 348 |
| | 35 | 539 | 409 | 322 | 244 | 763 | 579 | 456 | 346 | 580 | 440 |
| | 45 | 618 | 469 | 369 | 280 | 877 | 664 | 523 | 397 | 666 | 506 |

**TECHLINE CV FLOW PER 100 FEET**

| DRIPPER SPACING | 0.26 GPH DRIPPER | | 0.4 GPH DRIPPER | | 0.6 GPH DRIPPER | | 0.9 GPH DRIPPER | |
|---|---|---|---|---|---|---|---|---|
| | GPH | GPM | GPH | GPM | GPH | GPM | GPH | GPM |
| 12" | 26.40 | 0.44 | 40.00 | 0.67 | 61.00 | 1.02 | 92.00 | 1.53 |
| 18" | 17.58 | 0.29 | 26.67 | 0.44 | 41.00 | 0.68 | 61.00 | 1.02 |
| 24" | N/A | N/A | N/A | N/A | 31.00 | 0.51 | 46.00 | 0.77 |

WATER SOURCE: DRIP VALVE OR LATERAL FROM VALVE.
TYPICAL SUPPLY HEADER.
TYPICAL TECHLINE DRIPPER LINE TUBING.
TYPICAL PVC OR POLY SUPPLY OR EXHAUST HEADER.
MANUAL LINE FLUSING VALVE PLUMBED TO PVC OR POLY.

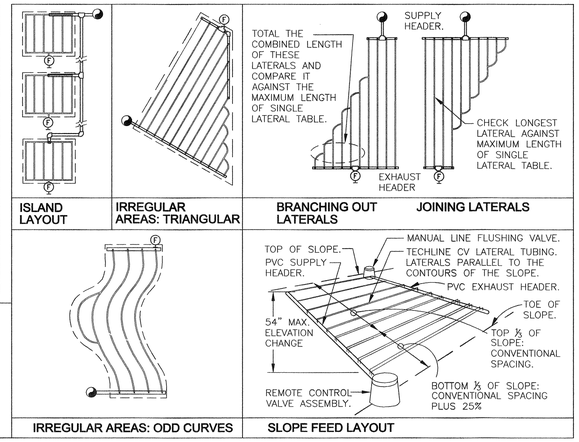


## 5 TYPICAL NETAFIM TECHLINE CV REQUIREMENTS

3" = 1'-0"

32 8413.56-10

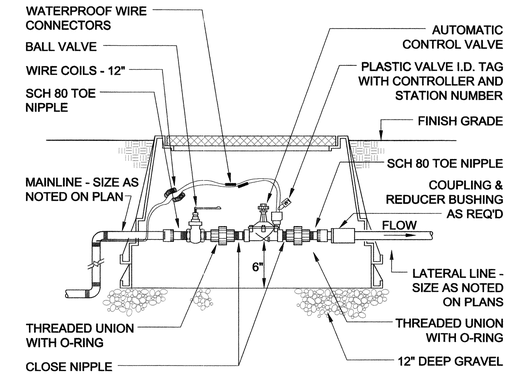


## 6 AUTOMATIC CONTROL VALVE

LDI-32 8406.13-06

**SLEEVE SIZE CHART**

| PIPE SIZE | MIN. SLEEVE SIZE |
|---|---|
| 3/4" | 1 1/2" |
| 1" | 2" |
| 1 1/4" | 2 1/2" |
| 1 1/2" | 3" |
| 2" | 4" |

*WHEN MULTIPLE PIPES OCCUR IN ONE TRENCH, ADD REQUIRED SLEEVE SIZES TOGETHER FOR 1 SLEEVE SIZE.

*WIRES SHALL BE IN SEPARATE CONDUIT AS PER CHART BELOW.

**WIRE CONDUIT SIZES**

| NUMBER OF WIRES | MIN. CONDUIT SIZE |
|---|---|
| 1 - 4 | 3/4" |
| 5 - 7 | 1" |
| 8 - 11 | 1 1/2" |
| 12 - 22 | 2" |
| 23 - 31 | 2 1/2" |
| 32 - 36 | 3" |

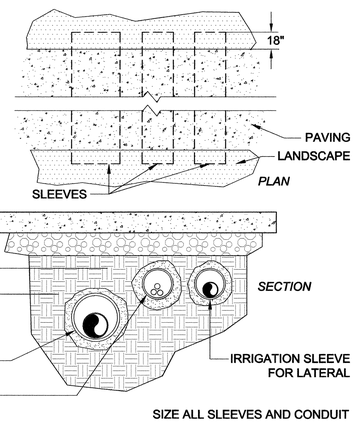


SIZE ALL SLEEVES AND CONDUIT ACCORDING TO PROVIDED SIZING CHARTS UNLESS OTHERWISE NOTED.

## 7 TYPICAL SLEEVING

32 8409.76-08

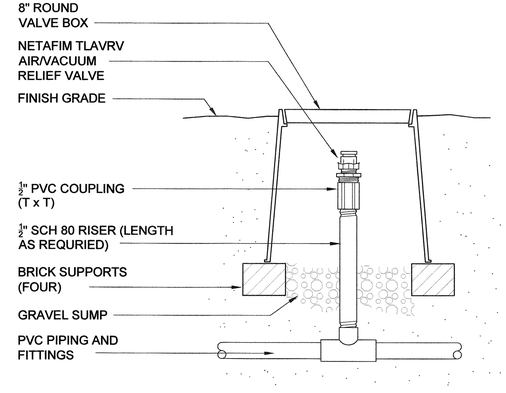


## 8 AIR/VACUUM RELIEF VALVE

LDI-32 8413.53-04

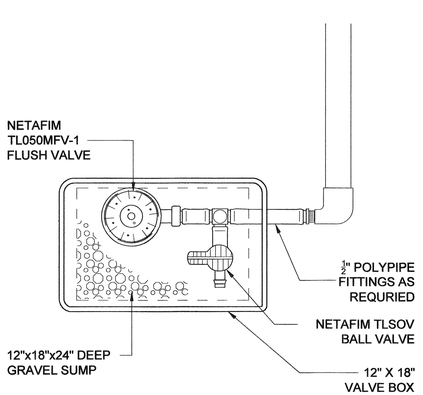


## 9 EMITTER LINE FLUSH VALVE

LDI-32 8413.49-08

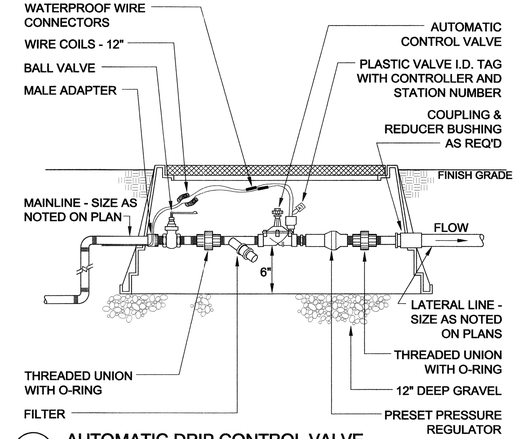


## 10 AUTOMATIC DRIP CONTROL VALVE

LDI-32 8413.76-04


ARCHITECT 0818

ajc architects

703 east 1700 south
salt lake city, utah 84105
ph: 801.466.8818
fx: 801.466.4411
www.ajcarchitects.com

PAYETTE

285 Summer Street
Boston, MA 02210-1522
www.payette.com

LANDMARK DESIGN INCORPORATED
LANDSCAPE ARCHITECTURE AND LAND PLANNING
2834 Highland Drive
Salt Lake City
Utah 84106
(801) 474-3300
Fax (801) 474-3303


OWNER INFORMATION

**State of Utah**
Department of Administrative Services

Division of Facilities Construction & Management
4110 State Office Building
Salt Lake City, Utah 84114
Phone: (801) 538 - 3018
Fax: (801) 538 - 3267

Internet: http://www.dfcm.utah.gov

PROJECT DESCRIPTION

LIFE SCIENCES RESEARCH CENTER
UTAH STATE UNIV.

USTAR BUILDING #2
LOGAN, UTAH

SHEET NAME:

IRRIGATION DETAILS

REVISIONS

| MARK | DATE | DESCRIPTION |
|---|---|---|

ISSUE DATA

| | |
|---|---|
| ISSUE DATE: | DEC. 9, 2008 |
| ISSUE TYPE: | DESDEV |
| DRAWN BY: | JH |
| CHECKED BY: | JS |
| CAD FILE NAME: | LI101 |
| DFCM PROJECT # | 06292770 |
| STATE PROPERTY # | - |
| COPYRIGHT: | STATE OF UTAH |

SHEET NUMBER:

LI501

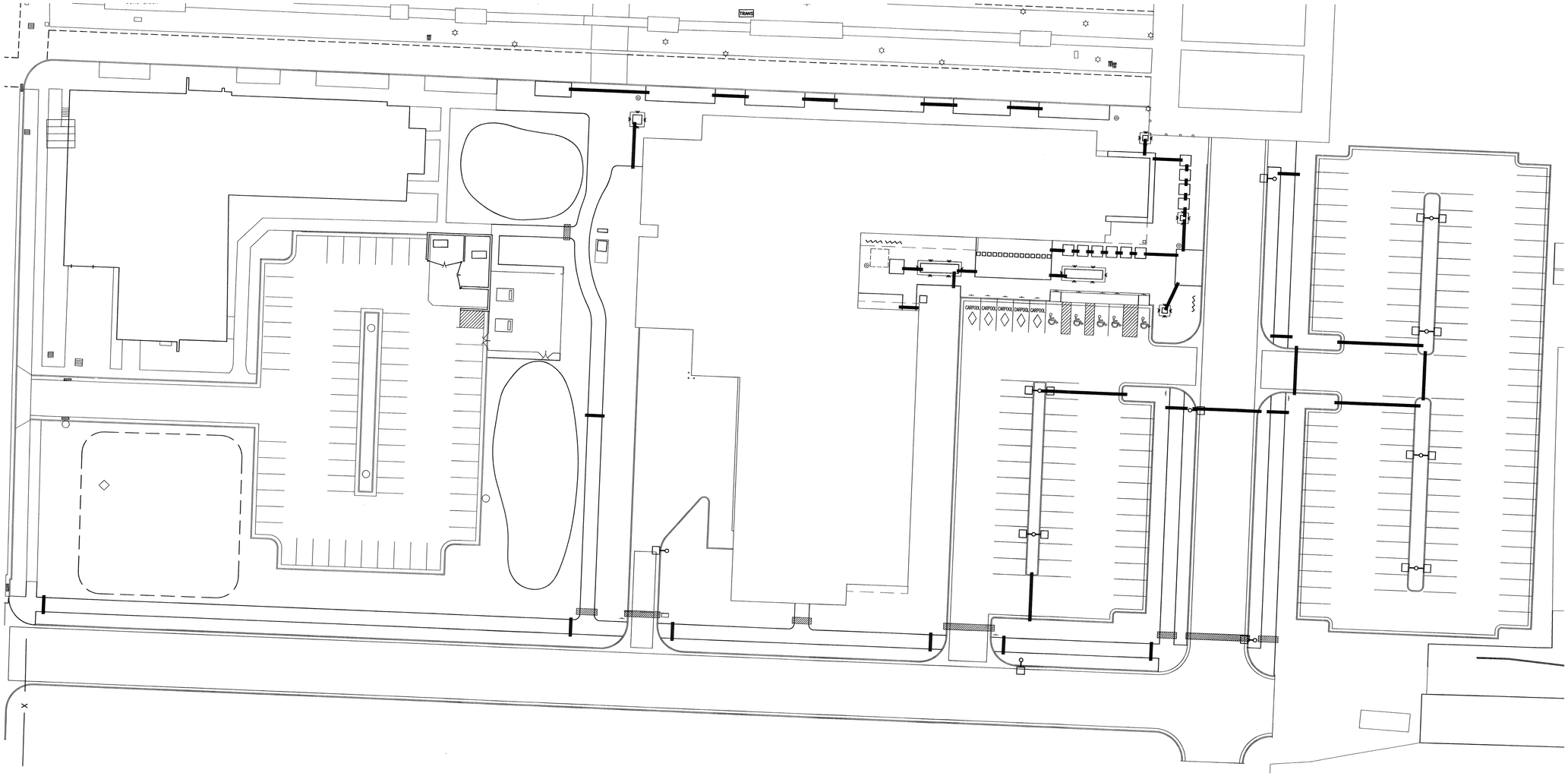


0 15 30 45
1" = 30'

NORTH

SLEEVE SIZE CHART

| PIPE SIZE | MIN. SLEEVE SIZE |
|---|---|
| 3/4" | 1 1/2" |
| 1" | 2" |
| 1 1/4" | 2 1/2" |
| 1 1/2" | 3" |
| 2" | 4" |

*WHEN MULTIPLE PIPES OCCUR IN ONE TRENCH, ADD REQUIRED SLEEVE SIZES TOGETHER FOR 1 SLEEVE SIZE.

*WIRES SHALL BE IN SEPARATE CONDUIT AS PER CHART BELOW.

WIRE CONDUIT SIZES

| NUMBER OF WIRES | MIN. CONDUIT SIZE |
|---|---|
| 1 - 4 | 3/4" |
| 5 - 7 | 1" |
| 8 - 11 | 1 1/2" |
| 12 - 22 | 2" |
| 23 - 31 | 2 1/2" |
| 32 - 36 | 3" |

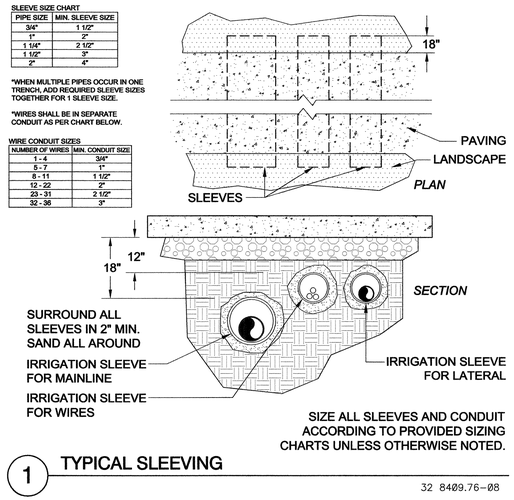


SIZE ALL SLEEVES AND CONDUIT ACCORDING TO PROVIDED SIZING CHARTS UNLESS OTHERWISE NOTED.

1 TYPICAL SLEEVING

32 8409.76-08

SLEEVING LEGEND

1 - 4" PVC SCH 40 SLEEVE

3 SLEEVES
1 - 2" PVC SCH 40 SLEEVE
1 - 4" PVC SCH 40 SLEEVE
1 - 6" PVC SCH 40 SLEEVE

ARCHITECT 0818

ajc architects

703 east 1700 south
salt lake city, utah 84105
ph: 801.466.8818
fx: 801.466.4411
www.ajcarchitects.com

PAYETTE

285 Summer Street
Boston, MA 02210-1522
www.payette.com

LANDMARK DESIGN
INCORPORATED
*LANDSCAPE ARCHITECTURE AND LAND PLANNING*

*2834 Highland Drive*
*Salt Lake City*
*Utah 84106*
*(801) 474-3300*
*Fax (801) 474-3303*

OWNER INFORMATION

**State of Utah**
Department of Administrative Services

Division of Facilities
Construction & Management
4110 State Office Building
Salt Lake City, Utah 84114
Phone: (801) 538 - 3018
Fax: (801) 538 - 3267

Internet: http://www.dfcm.utah.gov

PROJECT DESCRIPTION

LIFE SCIENCES
RESEARCH CENTER
UTAH STATE UNIV.

USTAR BUILDING #2
LOGAN, UTAH

SHEET NAME:

SLEEVING PLAN

REVISIONS

| MARK | DATE | DESCRIPTION |
|---|---|---|

ISSUE DATA

| | |
|---|---|
| ISSUE DATE: | DEC. 9, 2008 |
| ISSUE TYPE: | DESDEV |
| DRAWN BY: | JH |
| CHECKED BY: | JS |
| CAD FILE NAME: | SL101 |
| DFCM PROJECT # | 06292770 |
| STATE PROPERTY # | - |
| COPYRIGHT: | STATE OF UTAH |

SHEET NUMBER:

SL 101

## I. Design Criteria

A. Governing Building Code: 2006 International Building Code (IBC)

B. Floor Live Loading:
1. Office: ..... 80 psf Live Load + 15 psf Partition Load
2. Exit Facilities & Corridors: ..... 100 psf Live Load
3. Mechanical Rooms: ..... 125 psf Live Load or actual weights, if larger
4. Mezzanine: ..... 100 psf Live Load
5. Labs & Vivarium: ..... 125 psf Live Load

C. Roof Live Loading:
1. Roof Live Load: ..... 20 psf
2. Roof Snow Load: ..... 35 psf + Drift per IBC
   a. Ground Snow Load, $P_g$: ..... 50 psf
   b. Snow Exposure Factor, $C_e$: ..... 1.0
   c. Importance Factor, $I_S$: ..... 1.0
   d. Thermal Factor, $C_t$: ..... 1.0

D. Earthquake:
1. Occupancy Category: ..... II
2. Seismic Design Category ..... D
3. Spectral Response Accelerations:
   $S_S$ = 0.90 g $S_{DS}$ = 0.68 g
   $S_1$ = 0.32 g $S_{D1}$ = 0.37 g
4. Soil Site Class: ..... D
   $F_a$ = 1.14 $F_v$ = 1.77
5. Basic Seismic-Force-Resisting System (SLRS): ..... Special Concentric Braced Frames
   R = 6.0 $C_d$ = 5.0 $\Omega_0$ = 2.0
6. Basic Seismic-Force-Resisting System (Dock): ..... Special Reinforced Masonry Shear Walls
   R= 5.0 Cd = 3.5 $\Omega_0$ = 2.5
7. Importance Factor, $I_E$: ..... 1.0
8. Design Base Shear, Static: ..... 1085 kips
9. Design Base Shear, Modal Response: ..... 922 kips
10. Design Base Shear (Loading Dock): ..... 60 kips
11. Main Building Story Drift, Δ: ..... 1.6 in
12. Analysis Procedure: ..... Modal Response Spectrum Analysis
13. Analysis Procedure (Loading Dock): ..... Equivalent Lateral Force Procedure

E. Wind:
1. Basic Wind Speed (3-second gust): ..... 90 mph
2. Importance Factor, $I_W$: ..... 1.0
3. Exposure: ..... C
4. Internal Pressure Coefficient, $GC_{pi}$: ..... 0.18
5. Topographic Factor, $K_{zt}$: ..... 1.0

F. Foundation:
1. Subsurface Conditions:
   Soils report and log of borings was obtained by the Owner for the Engineer's use in the design of the foundation, and is not a part of the Contract Documents. This report and log of borings is available for the Contractor's information, but is not a warranty of the subsurface conditions. The Contractor may use the report at his own risk.
2. Soils Report by AMEC, dated February 1, 2008.
3. Net Average Allowable Soil Bearing Pressure: ..... 650 psf, on 6 inches of granular fill
4. Modulus of Subgrade Reaction: ..... 51 pci
5. Lateral Soil Pressure Fluid Equivalent Density.
   a. Active: ..... 35 pcf (retaining walls)
   b. At Rest: ..... 55 pcf (rigid foundation walls)
   c. Passive: ..... 300 pcf
   d. Increase for Active Seismic: ..... 15 pcf
   e. Increase for At Rest Seismic: ..... 30 pcf
6. Coefficient of Friction: ..... 0.35

G. Classification for Fire Rated Construction:
1. For the purpose of determining fire-resistive assemblies, open-web steel framing members shall be considered unrestrained. All other steel floor and roof framing members shall be considered restrained.
2. Diagonal members in vertical braced frames shall be considered as secondary members for fire proofing protection.

## II. Earthwork

A. Near surface fills: The depth of this material may be several feet thick. Do not place any footing on this material. Remove all fill material from below footings, including the upper 12 inches of underlying soils and replace it with compacted structural fill. Any foundation elements from prior structures should be removed entirely. Remove all soft spots under footings and replace with compacted structural fill. See details for fill width requirements below footings.

B. Proof rolling: The natural undisturbed soil below pavement areas shall be proof rolled prior to placing concrete. Remove all soft spots and replace with compacted structural fill.

C. Slabs on grade shall be placed upon a minimum of 4" of granular fill over native soils or compacted structural fill above footings.

D. All footings shall be established upon a minimum of 6" of free-draining granular fill.

E. The site soils are predominately fine-grained. Disturbed and soft fine-grained soils created by construction traffic and water are unsuitable for support of foundations and pavement and shall be removed & replaced with granular structural fill.

F. Fill Requirements: All fill shall be compacted to 95 percent of the maximum laboratory density as determined by ASTM D1557 unless noted otherwise. Fills shall be placed in lifts that are appropriate for the type of compaction equipment being used, and not more than 12 inches thick. The lift thickness shall be at least twice the maximum particle size in the fill being used. All fill shall be tested (See Specifications and the Quality Assurance section of the GSN).
1. All compacted structural fill material below footings shall be a well-graded granular material with a maximum size less than 4 inches, with not more than 30 percent passing a No. 200 sieve, with not more than 60 percent passing a No. 10 sieve, with a liquid limit of 35, and a plasticity index of 15.
2. The upper 4" of fill below slab on grade shall be a granular fill material with a maximum size less than 2 inches, with not more than 5 percent passing a No. 200 sieve and with not more than 25 percent passing a No. 10 sieve
3. The 6 inches of free-draining granular fill directly under footings shall be a free-draining granular material such as 1-inch to ¾-inch crushed rock, with not more than 2 percent passing a No. 200 sieve and with not more than 5 percent passing a No. 10 sieve. The base course shall be installed in a single lift and compacted until well keyed.

## III. Concrete

A. Materials shall comply with the Standards specified in American Concrete Institute (ACI) 318-05, "Building Code Requirements for Structural Concrete."
1. Compressive strengths of concrete at 28 days shall be as follows:
   a. Spread and Continuous Footings: ..... 3000 psi
   b. Mat Footings: ..... 4000 psi
   c. Interior Slabs on Grade: ..... 3000 psi
   d. Walls and Piers: ..... 4000 psi
   e. All other Site Cast Concrete: ..... 4000 psi
2. Concrete Density (Maximum Air Dry Weight):
   a. Normal weight concrete shall be approximately 145 to 155 pounds per cubic foot.
3. Reinforcement steel:
   a. ASTM A615 Grade 60, fy = 60,000 psi min. unless noted otherwise.
4. Admixtures:
   a. Air-entraining admixtures, comply with ASTM C 260 (when used).
      (1) When air content of a trowel finished floor slab exceeds 3%, there is an increased risk for delaminations and blistering to occur. When this situation is present, the contractor shall pay special attention to the finishing procedures to help minimize such risks. Refer to ACI 302.1R-96 "Guide for Concrete Floor and Slab Construction" for proper finishing guidelines.
   b. Calcium chloride shall not be added to the concrete mix.
5. Only one grade or type of concrete shall be poured on the site at any given time.

B. Formwork shall comply with ACI Standards Publication 347 and the project specifications. The contractor shall be responsible for the design, detailing, care, placement and removal of the formwork and shores.

C. Concrete cover requirements for deformed bar reinforcing steel shall comply with ACI 318, "Building Code Requirements for Structural Concrete".

| 1. Cast-in-place Concrete: | Clear Cover |
|---|---|
| a. Cast against and permanently exposed to earth: | 3" |
| b. Formed concrete exposed to earth or weather: | |
| #6 thru #18 bars | 2" |
| #5 and smaller bars | 1 1/2" |
| c. Concrete not exposed to weather or in contact with ground: | |
| Slabs, Walls, Joists; #11 bars and smaller | 3/4" |
| Beams, Columns: Primary Reinf., Ties, Stirrups, Spirals | 1 1/2" |

D. Construction Joints and Control Joints:
1. Provide a continuous 2 X 4 keyway or a surface intentionally roughened to a full amplitude of approximately ¼" in all wall footings, unless noted otherwise. Adjust the keyway as necessary to provide for proper bar placement.
2. All horizontal and vertical construction joints shall have a continuous 2 X 4 keyway along the joint or joints shall be intentionally roughened to a full amplitude of approximately ¼", unless noted otherwise.
3. Provide reinforcement dowels to match the member reinforcement across the joint unless noted otherwise.
4. Construction joints in suspended concrete pours shall be made at the center of spans.
5. Slabs on grade shall have construction or control joints spaced not to exceed 30 times the slab thickness in any direction, unless noted otherwise. All discontinuous control or construction joints shall be reinforced with 2 - #4 x 48". See structural details. Construction joints shall not exceed a distance of 125'-0" o.c. in any direction.
6. Control joints shall be installed in slabs on grade so the length to width ratio of the slab is no more than 1.25:1. Control joints shall be completed within 12 hours of concrete placement. Control joints may be installed by:
   a. Saw cut a depth of 1/4 the thickness of the slab
   b. Tooled joints a depth of 1/4 the thickness of the slab
7. Control joints in visually exposed walls, unless noted otherwise: (Joints shall line up with masonry and architectural joints, see drawings.)
   a. Vertical control joints at 10'-0" on center.
   b. Reinforcing shall be continuous through control and construction joints, unless noted otherwise.
   c. Control joints in concrete foundation walls shall line up with masonry control joints.
8. Control joints shall be installed in suspended slabs over steel decking by sawcutting along all interior grid lines, unless noted otherwise. Joints centered above the purlins shall be ¾" deep and shall have #4 X 5'-0" at 16" o.c. reinforcing, placed perpendicular (and centered) to the purlin. Joints centered above the girders shall be ¾" deep and shall have #4 X 10'-0" at 16" o.c. reinforcing placed perpendicular (and centered) to the girder. The #4 bar reinforcing centered above the grid lines may be omitted at areas of suspended slab that already contains continuous reinforcement. Reinforcing shall be placed 1" below the top of the slab as a minimum.

E. Detailing: All reinforcing shall be detailed, bolstered & supported to comply with ACI 315, "Details and Detailing of Concrete Reinforcement" and the Concrete Reinforcing Steel Institute (CRSI) recommendations. Reinforcing bars shall not be welded unless specifically shown on drawings.
1. Lap splice lengths shall be detailed to comply with the "Reinforcing Bar Lap Splice Schedule" contained within the contract drawings. Splices may be made with mechanical splices capable of 125% tension capacity of the bar being spliced. Mechanical splices shall be the positive connecting type coupler. They shall be covered by a current ICC Code Evaluation Report. Use "Cadweld" splice sleeves with ferrous filler, "Lenton" taper threaded rebar splices, "Bar-Lock" lockshear bolt coupling sleeves, or approved equivalent. If mechanical splices are used, splices or couplers on adjacent bars shall be staggered a minimum of 24" apart along the longitudinal axis of the reinforcing bars.
2. All embedments and dowels shall be securely tied to formwork or to adjacent reinforcing prior to the placement of concrete.
3. Use chairs or other support devices recommended by the CRSI to support and tie reinforcement bars prior to placing concrete. Provide corner bars at intersecting wall corners using the same bar size and spacing as the horizontal wall reinforcing. Unless noted otherwise, corner bar lap lengths shall conform with reinforcing bar lap splice lengths as noted above.
4. All vertical reinforcing shall be doweled to footings, or to the structure below. Dowels shall be the same size and at the same spacing as the vertical reinforcing scheduled (or detailed) for the element above. Lap splice lengths shall comply as noted above or as shown in the drawings. Dowels extending into footings shall terminate with a 90 degree standard ACI hook and shall extend to within 4" of the bottom of the footing. Footing dowels (#8 bars and smaller) with hooks need not extend more than 20" into footings.
5. Lap horizontal bar splices as noted above or as shown in the drawings. Horizontal wall reinforcing shall be continuous through construction and control joints. Splices in horizontal reinforcement shall be staggered, so the splice laps will not overlap.
6. Wall Openings 8" to 36" wide: Place 2- #5 bars (or 1 - #7 bar in 10" walls and thinner) around all openings 8" or larger in any direction, and extend the reinforcing bars a minimum of 24" beyond the corner of the openings, unless noted otherwise. Where 24" is not available, extend bars as far beyond the opening as possible and terminate them with a 90 degree standard ACI hook.
7. Provide 2-#5 X 4'-0" diagonal bars (or 1 - #7 x 4'-0" bar in 10" walls and thinner) at the corners of all openings. Diagonal bars shall be centered on the corner of the opening. All recesses in concrete walls that interrupt reinforcing steel shall be reinforced the same as an opening.
8. Contractor shall coordinate placement of all openings, curbs, dowels, sleeves, conduits, bolts, inserts and other embedded items prior to concrete placement.
9. Column cross-ties shall have a 135 degree hook at one end and a 90 degree hook at the other. The hooks shall engage the vertical column reinforcement. The 135 degree hooks of consecutive cross-ties engaging the same vertical bars shall engage alternate vertical bars.
10. All reinforcement shall be bent cold, and shall be bent only once at the same location. All reinforcement shall be shop bent, unless otherwise permitted by the engineer.
11. Mat footing bottom reinforcement in the north/south direction shall be laid first, with east/west bar laid upon it, typical. Mat footing top reinforcement in the north/south direction shall be laid first, with east/west bar laid upon it, typical.

F. Minimum Reinforcing: Wall reinforcing shall be as follows, unless noted otherwise:

| Wall Thickness | Horizontal Reinf. | Vertical Reinf. |
|---|---|---|
| 6" | #4 @ 13" o.c. | #4 @ 18" o.c. |
| 8" | #5 @ 15" o.c. | #4 @ 16" o.c. |
| 10" | #5 @ 12" o.c. | #4 @ 13" o.c. |
| 12" | #4 @ 13" o.c. Each Face | #4 @ 18" o.c. Each Face |
| Others | 0.25% of Wall Area | 0.15% of Wall Area |

Place steel in the center of the wall (except in walls thicker than 10" and where shown otherwise). Walls thicker than 10" shall have two curtains of reinforcing (placed near each face of the wall), unless otherwise shown on the structural drawings. Spacing shall not exceed three times the wall thickness nor 18". In addition to the above reinforcing, 2 - #5 (or 1 - #7 in 10" walls and thinner) x continuous horizontal bars shall be placed at the bottom of the wall (near the footing) and at each floor level, at the roof level and at the top of wall.

G. No aluminum conduit or product containing aluminum or any other material injurious to concrete shall be embedded in concrete.

H. Unless otherwise noted, all interior slabs on grade shall be 5" thick.

## IV. Masonry

A. Materials, unless noted otherwise:
1. Concrete Masonry Units: ASTM C 90, Lightweight, minimum unit strength of 1900 psi average or better. (f'm = 1500 psi)
2. Mortar: Use Type "S" according to IBC Section 2103.8, and tested according to ASTM C270. Admixtures shall not be added to the mortar mix. (1800 psi minimum compressive strength).
3. Grout: Conform to IBC Table 2103.12 or ASTM C476. Proportioned according to IBC Section 2103.12 and tested according to ASTM C1019. Grout shall attain a minimum compressive strength equal to or greater than f'm but shall not be less than 2000 psi at 28 days.
4. Reinforcing: Grade 60 reinforcing steel shall comply with ASTM A615. Wire joint reinforcing shall comply with ASTM A951.
5. Deformed Bar Anchors (DBA): All DBAs shall comply with ASTM A496.
6. Anchor Bolts (AB): ASTM A307 with ASTM A563 heavy hex nuts and hardened washers, Grade A, unless noted otherwise.
7. Headed Stud Anchors (HSA): Manufacture all HSAs in conformance with ASTM A108 with dimensions complying with AISC specifications.

B. Construction Requirements:
1. Mortar Joints: Joints shall be "concave", "V-joint" or "weathered raked" for structural members unless noted otherwise on architectural drawings.
2. Masonry walls, beams and columns shall be constructed with running bond, unless noted otherwise.
3. Grouting Requirements: Comply with IBC Section 2104 and ACI 530.1/ASCE 6/TMS 602. Grout shall be mechanically consolidated and mechanically reconsolidated according to ACI 530.1/ASCE 6/TMS 602 Section 3.5 E.
4. Reinforcing Bars shall not be welded unless specifically shown on drawings. In such cases, use only AWS standards. Do not substitute reinforcing bars for DBAs or HSAs.
5. Control Joints: Spacing shall not exceed 40'-0". See architectural drawings for locations.
6. Grout all beam and joist pockets solid after installation of beams and joists.

C. Detailing Requirements:
1. Standards: Reinforcing detailing shall comply with American Concrete Institute (ACI) Standard 315, "Details and Detailing of Concrete Reinforcement."
2. Reinforcement Protection (cover):
   a. Joint reinforcement shall have not less than 5/8" mortar coverage from the exposed face.
   b. Other reinforcement shall have a minimum coverage of one bar diameter over all the bars, but not less than 3/4". When masonry is exposed to soil, minimum coverage shall be 1.5".
3. Vertical steel reinforcement shall be placed and secured against displacement prior to grouting by wire positioners or other suitable devices: at intervals not exceeding 112 bar diameters, at the grout lift heights, or at bar splice locations, whichever is less. Vertical reinforcing shall be located at the center of the wall, unless noted otherwise.
4. Lap Splice Lengths: Lap all masonry reinforcing bars per the "Masonry Reinforcing Bar Lap Splice Schedule." Joint reinforcement shall lap a minimum of 6".
5. Corner Bars: Horizontal reinforcement shall be continuous at all corners and at intersecting walls. Provide corner bars with the required lap splice length.
6. Dowels: All vertical reinforcing shall be doweled to the foundation wall, footing (structure below) and to the structure above with the same size dowel, spacing (and in the same core) as the vertical wall reinforcing unless noted otherwise.
7. Wall Openings 24" wide and wider: Provide reinforced masonry lintels per Masonry Lintel Schedule over the top of, and 2 - #5 bars, in grouted spaces, on all sides and adjacent to every unscheduled opening, unless noted otherwise. Bars for all openings shall extend a minimum of 48 bar diameters beyond the corners of the opening. Vertical bars shall extend from floor level below to the floor , or roof, level above. Where a 48 bar diameter extension is not possible, extend bars as far beyond the opening as possible and terminate them with a 90 degree standard ACI hook.
8. Horizontal wall reinforcing shall be continuous through joining concrete walls, masonry walls, columns, and pilasters. Provide a key between the wall and the column or pilaster. Horizontal wall reinforcing shall be placed inside the column vertical reinforcing.
9. Anchor bolts and headed stud anchors shall be set in a grouted cell. Anchor bolts and headed stud anchors shall have 1" grout surrounding the shank at its penetration. Grout shall be flush with the face or top of the masonry.
10. All masonry column ties shall terminate with 135 degree hooks plus a 6 bar diameter extension (4" minimum).
11. The exposed face of all embed plates shall be set flush with the face of masonry wall or column.

D. Minimum Reinforcing:
All masonry walls shall be reinforced as follows, unless shown otherwise on the drawings. Reinforcing shall be placed in grouted cells.

| Wall Thickness | Horizontal Reinf. | Vertical Reinf. |
|---|---|---|
| 6" | #4 @ 48" o.c. | #5 @ 32" o.c. |
| 8" | #5 @ 48" o.c. | #5 @ 32" o.c. |

NOTE TO BID PACKAGE #2.

BID PACKAGE #2 IS FOR FOOTING & FOUNDATION WORK ONLY. ALL OTHER STRUCTURAL STEEL DRAWINGS ARE INCLUDED FOR REFERENCE ONLY.


ARCHITECT 0818

ajc architects

703 east 1700 south
salt lake city, utah 84105
ph: 801.466.8818
fx: 801.466.4411
www.ajcarchitects.com

P A Y E T T E

285 Summer Street
Boston, MA 02210-1522
www.payette.com

REAVELEY
ENGINEERS + ASSOCIATES
Consulting Structural Engineers
P: 801.486.3883
F: 801.485.0911
675 E.500 S, Suite 400
Salt Lake City, Utah 84102
www.reaveley.com


OWNER INFORMATION

State of Utah
Department of Administrative Services

Division of Facilities Construction & Management
4110 State Office Building
Salt Lake City, Utah 84114
Phone: (801) 538 - 3018
Fax: (801) 538 - 3267

Internet: http://www.dfcm.utah.gov

PROJECT DESCRIPTION

# LIFE SCIENCES RESEARCH CENTER UTAH STATE UNIVERSITY

USTAR BUILDING #2
LOGAN, UTAH

SHEET NAME:

## GENERAL STRUCTURAL NOTES

REVISIONS

| MARK | DATE | DESCRIPTION |
|---|---|---|

ISSUE DATA

| | |
|---|---|
| ISSUE DATE: | DEC. 9, 2008 |
| ISSUE TYPE: | B.P. #2 REVIEW |
| DRAWN BY: | R. HARRIS |
| CHECKED BY: | J. MILLER / C.PRICE |
| CAD FILE NAME: | |
| DFCM PROJECT # | 06292770 |
| STATE PROPERTY # | - |
| COPYRIGHT: | STATE OF UTAH |

SHEET NUMBER:

# SE100

## V. Structural Steel

A. Material:
1. W-Shapes: ASTM A992, ($F_y$ = 50 ksi), except as noted otherwise.
2. All Other Shapes and Plates: ASTM A36 (Fy = 36 ksi), except as noted otherwise.
3. Rectangular and Square Hollow Structural Sections (HSS): ASTM A500, Grade B (Fy = 46 ksi).
4. Steel Pipe: ASTM A53, Grade B (Fy = 35 ksi).
5. Deformed Bar Anchors (DBA): ASTM A496.
6. Headed Stud Anchors (HSA): ASTM A108, with dimensions complying with AISC specifications.
7. Anchor Rods: ASTM F1554, Grade 36 with ASTM A563 heavy hex nuts and ASTM F436 hardened washers, unless noted otherwise.
8. All steel shapes and plates which are a part of the seismic load resisting system shall have Charpy V-Notch absorbed energy of 20 ft-lbs. or greater at 70 degrees Fahrenheit, tested in the alternate core location as described in ASTM A6 Supplementary Requirement S30, as indicated below:
   a. Shapes: Group 3 (with flanges 1.1/2" or thicker), Groups 4 and 5.
   b. Test Frequency: Each heat.

B. Fabrication and construction shall comply with the following Codes and Standards:
1. American Institute of Steel Construction (AISC) 360-05, "Specification for Structural Steel Buildings," dated March 9, 2005.
2. AISC 341-05, "Seismic Provisions for Structural Steel Buildings" dated March 9, 2005, including Supplement No. 1, dated November 16, 2005.
3. AISC 303-05, "Code of Standard Practice for Steel Buildings and Bridges" excluding the following: Section 3.3 (last sentence of first paragraph), Section 4.4, Section 4.4.1, Section 4.4.2, Section 4.5, and Section 7.13.3.
   a. The architectural drawings are the prime contract drawings. Consultants' drawings by other disciplines are supplementary to the architectural drawings. The structural drawings shall be used in conjunction with the architectural drawings. Detailing and shop drawing production for structural elements will require information (including dimensions) contained in architectural, structural, and/or other consultants' drawings. Refer to VI. Special Instructions, notes VI.B and VI.C.
4. AISC/RCSC 2004, "Specification for Structural Joints Using ASTM A325 or A490 Bolts"
5. American Welding Society (AWS) D1.1-04, "Structural Welding Code – Steel" (specific items do not apply when they conflict with the AISC requirements).
6. Steel Joist Institute (SJI) 1994, "Standard Specification, Load Tables and Weight Tables for Steel Joists and Joist Girders," and "Recommended Code of Standard Practice."
7. American Iron and Steel Institute (AISI) 2001, "North American Specification for the Design of Cold-Formed Steel Structural Members" including the 2004 Supplement.

C. Structural shapes and plates shall be fabricated from newly rolled (milled) one-piece sections without splices, unless specifically noted otherwise on the structural drawings. Connections for structural steel shall comply with the structural drawings, unless written approval is given by the structural engineer.

D. Welding:
1. Certification of Welders: All shop and field welding shall be executed by AWS certified welders who have been specifically certified for the type of work to be performed. Certification shall be considered current if dated within the past 12 months. Welders will be considered certified if they have been certified under AWS and their work records are current within every six-month period thereafter as required by AWS. Certification and records must comply with AWS Standards. Certification and appropriate records must be provided to the architect prior to beginning work.
2. Electrodes: E-70 XX or as noted otherwise. E60 XX may be used for welding steel floor and roof decks.
3. Minimum Welds: All intersecting steel shapes that are not bolted shall be connected by a fillet weld all around, unless noted otherwise. Fillet weld sizes that are not shown shall be 1/16" less than the thinnest of the connected parts for thicknesses 1/4" and larger. Fillet welds on plates less than 1/4" shall be of the same size as the thinnest of the connected parts.
4. Reinforcing Bars: Do not weld rebar except as specifically detailed in the drawings. In such cases, use only AWS standards. Do not substitute reinforcing bars for deformed bar anchors (DBAs), machine bolts, or headed stud anchors (HSAs).
5. Bolts: Do not apply any welds, including "tack" welds to bolts, including anchor bolts, except as specifically detailed in the drawings.
6. It is recommended the steel erection contractor and steel fabricator contact the Quality Assurance Agency prior to beginning any of the above welds. A program of joint preparation and welding procedures should be worked out between the two parties before the welding is started so that correct welds will be made from the beginning.
7. Headed Stud Anchor (HSA) welding and Deformed Bar Anchor (DBA) welding shall conform to the manufacturer's specifications. Welding shall comply with AWS D1.1 Section 7.6 through 7.8 and Annex IX.
8. Braced Frame welding: lengths shown for fillet welds for brace-to-gusset, gusset-to-baseplate, and column-to-gusset connections are minimums, intended for establishing gusset plate dimensions. Weld entire contact length at these joints, typical.

E. Bolted Connections:
1. Use ASTM A325 Type 1 bolts for steel to steel connections, as noted herein or as noted on the drawings as "A325N". A325 bolts shall be used in connections for simple span framing and beam (or girder) to bearing plate connections. Threads may be in the shear plane (type "N"). Tighten bolts to a snug tight condition. A snug tight condition is usually attained by a few impacts of an impact wrench or the full effort of a man using an ordinary spud wrench. Bolts shall be tightened until all plies of the joint are in firm contact.
2. Use ASTM A325 Type 1 bolts for all steel to steel connections subject to vibrations as noted "A325SC", unless noted otherwise. Threads may be in the shear plane (type "N"). Tighten bolts by the turn of the nut, calibrated wrench, or direct tension indicator method. Alternate fastener designs as defined by AISC shall be submitted to the engineer for review and acceptability prior to installation.
3. Provide hardened washers beneath the turned element of all bolts or nuts. Provide hardened beveled washers, to compensate for the lack of parallelism, where the outer face of the bolted parts has a slope greater than one in twenty with respect to the plane normal to the bolt axis. Hardened washers or plates installed over oversized holes or slotted holes shall be at least 5/16" thick and shall conform to ASTM F436. Plates or bars installed at slotted holes shall have a size sufficient to completely cover the slot after installation.
4. Where a steel to steel beam connection is not detailed in the drawings, provide a standard AISC framed connection with the capacity to support one half of the total uniform load capacity of the given shape for the span and for the steel specified.
5. Bolts, nuts and washers shall not be reused.

F. Beam Web Stiffener Plates:
Provide full-height web stiffener plates to each side of all beams above all bearing points. Stiffener plates shall be the thickness noted below unless noted otherwise and shall be welded on both sides of the stiffener plate with fillet welds (noted below) all around.

| Beam Web stiffener thickness | For beams with flange widths between | Weld Size |
|---|---|---|
| 1/4 inch thick | Greater than 0" and less than 8 1/4" | 3/16" |
| 3/8 inch thick | Greater than 8 1/4" and less than 12 1/4" | 1/4" |
| 1/2 inch thick | Greater than 12 1/4" and less than 16 1/2" | 5/16" |
| 5/8 inch thick | Greater than 16 1/2" and less than 20 3/4" | 3/8" |

G. Composite Beams
1. Composite beams are indicated on the framing plans with the suffix ( ). The number inside the brackets indicates number of studs for this beam. Beams shall have the studs spaced uniformly over the entire beam length.
2. Beams which have more than one number inside the symbol ( , , ), such as (W, X, Y, Z), shall have "W" number of studs spaced evenly over the first "section of beam", "X" number of studs spaced evenly over the second "section of beam", "Y" number of studs spaced evenly over the third "section of beam", and "Z" number of studs spaced evenly over the fourth "section of beam". A "section of beam" is defined as that portion of beam located between the column and the nearest intersecting framing member or that portion of beam located between two adjacent intersecting framing members.
3. All headed stud type shear connectors shall be in conformance with ASTM A108. Dimensions shall comply with AWS. Use 3/4" diameter studs. Headed studs shall extend 2" minimum above the top of the steel deck after welding. Headed studs shall be applied through the metal deck to the top flange of the steel section, or welded directly to the steel section.
4. The minimum center-to-center spacing of stud connectors shall be six (6) diameters along the longitudinal axis of the supporting composite beam and four (4) diameters transverse to the longitudinal axis of the supporting composite beam. The maximum center to center spacing shall not exceed 32".
5. C= 0.00" on the plans denotes precamber dimension (upward) in inches.

H. Open Web Steel Joists and Girders:
1. The steel joist supplier shall be responsible for the design of all open web steel joists and girders. Joists or girders with slopes greater than 1/2 inch per foot shall be designed to meet or exceed the load capacities, listed in the SJI load tables, of the joist or girder sizes indicated on the framing plan, as if the joists or girders were installed level.
2. Open web joists and girders shall be designed with deflection limits of L/240 for total load and L/360 for live load, where L is the joist span.
3. Where uplift loads due to wind are indicated, rows of bottom chord bridging shall be provided at the first bottom chord panel points per SJI Specifications. This is in addition to the bridging shown on the framing plans.
4. Provide special bearing ends to accommodate slopes from sloped joists, sloped girders or sloped bearing conditions.
5. Camber: All joists shall be cambered as specified in the SJI specifications, unless noted otherwise.
6. Field Modifications: Do not modify any joist or girder, including holes through the top and bottom chords, without the written consent and direction from the manufacturer.
7. Shop Drawings and Design Calculations: Shop drawings for all joists and girders used in the project shall be submitted for review. Prior to the fabrication of joists and girders, the open web steel joist and girder manufacturer shall prepare complete joist and girder calculations under the direct supervision of a professional engineer licensed in the State of Utah. Calculations shall be submitted for review for joists and girders designated as SPECIAL or SP and for all joists or girders with axial loads or additional concentrated loads (as noted on the drawings). Submitted calculations shall bear the seal of a professional engineer licensed in the State of Utah.
8. Stabilizer Plates: Provide steel joist and joist girder stabilizer plates as indicated. Stabilizer plates shall be 6" x 6" with a 13/16" diameter hole with 1 1/2" minimum edge distance, and shall extend 3" minimum below the bottom chord of the joist or girder. Plate thickness shall be equal to the chord gap minus 1/4", or 3/4", whichever is less.
9. Verify size, weight, location and configuration of all roof top equipment with architect and mechanical engineer. Provide steel frames for support of roof top equipment as indicated on structural details in the structural drawings. Coordinate openings with the mechanical and general contractor.
10. All concentrated loads greater than 100 pounds supported by open web steel joists and girders shall be located within 6 inches of joist or girder panel points or the joist or girder shall be reinforced with an additional web member. Refer to the "TYPICAL DETAIL AT ADDITIONAL CONCENTRATED POINT LOAD" in the structural drawings.
11. Concentrated point loads, single or multiple, totaling 100 pounds or less can be located at any point along the top or bottom chord of an open web steel joist or girder between adjacent panel points without meeting the requirements above. A limit of four concentrated 100# maximum point loads per joist or girder will be permitted on spans of 12' or greater, one concentrated 100# max. load on spans less than 12', unless specifically noted otherwise on the structural drawings.
12. Joist bridging shall never be used to support hanging loads.
13. Bracing of miscellaneous items (mechanical, electrical, plumbing, etc.) to the bottom chord of joists or girders will not be allowed in any instance. All lateral braces must connect to the top flange/top chord of the framing member above unless noted otherwise on the structural drawings.

I. Steel Floor Deck:
1. Steel floor deck shall comply with the latest requirements of the Steel Deck Institute (SDI). Submit ICC Code Evaluation Report with load and lateral shear capacities with shop drawings.
2. Steel floor deck shall be 3" deep X 20 gauge minimum phosphatized/painted composite (deck shall be galvanized (G60) when used above or below mechanical equipment rooms), type "W" deck with interlocking side seams with the following properties:

| | 20 Gauge | 18 Gauge |
|---|---|---|
| Minimum S ($in^3$/ft) = | 0.534 | 0.767 |
| Minimum I ($in^4$/ft) = | 0.896 | 1.203 |

Painted deck shall be coated with special paint to receive sprayed-on fire proofing, where required.
3. A 4 1/2" thick (7 1/2" overall) normal weight concrete (f'c = 3,000 psi @ 28 days unless noted otherwise) slab shall be poured over the steel deck. Reinforce slab as per plan. Reinforcement shall be placed 1" below the top of the slab unless noted otherwise.
4. 18 Gauge steel deck with 4 1/2" thick (7 1/2" overall) normal weight concrete slab shall have a minimum diaphragm shear capacity of 2840 lbs/ft. for a 11'-6" deck span.
5. 20 Gauge steel deck with 3" thick (6" overall) normal weight concrete slab shall have a minimum diaphragm shear capacity of 2100 lbs/ft. for a 11'-0" deck span.
6. Weld deck to supporting framing members with 3/4" diameter puddle welds at the following spacing (Closer spacings may be used to develop minimum shear requirements.):
   a. 12" o.c. to supports perpendicular to deck corrugations (4 welds per 36" wide sheet).
   b. 12" o.c. to all supports parallel to deck corrugations.
   c. Stud welds may take the place of puddle welds where studs are welded through the deck to the top flange of beams.
   d. All welded surfaces shall be dry before welding deck or studs to supports.
7. Attach interlocking seams with 3/16" button punch at 18" o.c. or 1 1/2" top seam weld at 36" o.c. between adjacent pieces of deck. Crimp seams before button punching or welding interlocking seams. Closer spacings may be used to develop minimum shear requirements.
8. All deck shall be 3-span continuous minimum where possible. In areas where 3-span conditions are not possible, deck spanning more than 10'-6" for a two span condition with 7 1/2" total thickness shall be increased to 16 gauge. Deck spanning more than 9'-6" for a single span condition with 7 1/2" total thickness shall be increased to 16 gauge, but in no case shall a single span condition exceed 10'-6".
9. Deck shall have a minimum bearing length of 2".

J. Steel Roof Deck:
1. Steel roof deck shall comply with the latest requirements of the Steel Deck Institute (SDI). Submit ICC Code Evaluation Report with load and lateral shear capacities with shop drawings.
2. Steel roof deck shall be 1 1/2" deep X 20 Gauge minimum galvanized (G60), type "B" wide rib deck with interlocking side seams with the following properties:

| | 20 Gauge | 18 Gauge |
|---|---|---|
| Minimum S ($in^3$/ft)= | 0.234 | 0.322 |
| Minimum I ($in^4$/ft)= | 0.213 | 0.296 |

Painted roof deck shall be coated with special paint to receive sprayed-on fire proofing, where required.
3. Minimum allowable deck diaphragm shear values shall be 890 lbs/ft. for a 6'-0" deck span.
4. Weld steel roof deck to supporting framing members with 3/4" diameter puddle welds at the following spacings (Closer spacings may be used to develop minimum shear requirements.):
   a. 6" o.c. to all supports perpendicular to deck corrugations (7 welds per 36" sheet).
   b. 6" o.c. to the following supports parallel to deck corrugations: All perimeter supports, all concrete or masonry walls, all joists or joist girders with a "T/C" designation, and all steel beams which are on a grid line with braced frames or moment frames.
   c. 12" o.c. to all other supports parallel to deck corrugations.
   d. All welded surfaces shall be dry before welding deck to supports.
5. Attach interlocking seams with 1 1/2" long top seam welds at 12" o.c. minimum between adjacent pieces of decking. Crimp side seams before welding. Closer spacings may be used to develop minimum shear requirements.
6. Alternate means of deck attachment and fastening using screws, pins or other mechanical fastening methods are permitted with approval of the engineer. The contractor shall submit the proposed attachment system and the code evaluation report demonstrating the system has the strength to meet the required deck shears specified above (in item 3) and on the plans. The flexibility factor of the proposed deck attachment system shall be equal to or less than the flexibility factor for the specified welded deck attachment system. If the alternate attachment method is approved, it is the responsibility of the contractor to ensure that the deck type and profile is compatible with the fastening system being used.
7. Provide a 2" minimum bearing and a 4-inch lap at the splice points of all pieces of deck.
8. All deck shall be 3-span continuous minimum where possible. The contractor shall provide 18 gauge steel roof deck for one or two span conditions where the span is greater than or equal to 6'-6".
9. Steel roof deck shall not be used to support loads from plumbing, HVAC ducts, light fixtures, architectural elements or equipment of any kind, unless specifically noted otherwise. Lightweight suspended acoustical ceilings with a total weight per wire not exceeding 50# may be hung from the steel roof deck. The hangers should be staggered to distribute the load over multiple deck flutes.

K. Cold-Formed Steel
1. Light Gauge Steel Framing:
   a. Where steel framing size designators are used in the drawings, they follow the convention established by the Steel Stud Manufacturers' Association (SSMA) and the North American Steel Framing Alliance (NASFA). Framing members provided shall comply with the designations according to this convention.
   b. All load bearing stud (and/or) joist framing members along with all runner, bridging, and end track shall be of the designation shown on the plans. All studs with base metal thickness of 54 mil and 68 mil, and joists with base metal thickness of 54 mil, 68 mil and 97 mil, shall be formed from steel meeting the requirements of ASTM A570 except that the steel shall have a 50,000 psi yield stress. All track and end closures with base metal thickness of 54 mil and 68 mil, bridging with base metal thickness of 54 mil, and studs and track with base metal thickness of 43 mil and 33 mil, shall be formed from steel with a minimum yield of 33,000 psi. All components shall be galvanized.
   c. Follow all manufacturers' recommendations for the use of these products.
   d. Unless noted otherwise, all welded connections shall be done using 1/8" AWS type 6013 or 7014 rod with a welding heat of 60-110 amperes depending on the gauge of material and the fit of the parts. Wire tying of framing components shall not be permitted.
   e. All interior non-bearing steel stud walls that extend above the ceiling but do not attach to the floor or roof diaphragm (above) shall have diagonal braces at 45 degrees (+/-). The KL/r ratio of the brace shall not exceed 200 and shall not be spaced further apart than 10'-0". Connect diagonal braces to the top of the steel stud walls and to the underside of the top flange of the steel beams, open web joists or girders, etc. with 1/8" fillet welds all around. Diagonal angle braces may be connected to 8" x 8" x 1/4" steel plates which shall be anchored to the floor or roof deck which have concrete fill above with 2- 3/8" dia. expansion anchors for each plate. Connect angle to plate with a 1/4" fillet weld all around. Connect diagonal braces to roof decking which does not have concrete fill above per the non-bearing wall brace connection details shown on the structural drawings. Diagonal braces may be constructed from cold-formed light gauge steel studs but must conform to the kl/r ratio of less than 200 requirement. When diagonal brace lengths exceed 10'-0" (+/-), cold-formed box sections made from two 600S137-54 steel studs will likely be required.

O. Metal Bar Grating:
1. Metal bar grating shall comply with the most recent requirements of the National Association of Architectural Metals Manufacturers, Metal Bar Grating Division (NAAMM MBG). Products shall conform to the latest edition of the Metal Bar Grating Manual, ANSI/NAAMM MBG 531, or the Heavy Duty Metal Bar Grating Manual, ANSI/NAAMM MBG 532, as appropriate.
2. Materials: Unless noted otherwise, metal bar grating of the following types shall conform with the following standards:
   a. Steel: ASTM A569 (allowable fiber unit stress F = 18,000 psi)
   b. Stainless Steel: ASTM A167, alloys 304/316 (allowable fiber unit stress F = 20,000 psi)
   c. Aluminum: ASTM B221, alloys 6063-T6/6061-T6 (allowable fiber unit stress F = 12,000 psi)
3. Metal bar grating shall be provided with mill finish, unless otherwise noted.
4. Unless noted otherwise, provide W-19-4 (1.1/2" x 3/16") Steel grating in locations where metal bar grating is specified.
5. All metal bar grating shall be firmly and positively anchored to supporting members. Unless noted otherwise, weld grating to supporting members with 3/16" fillet welds, 3/4" long. Locate welds at each end of bearing bars approximately 6 in from each side of grating panel. At intermediate supports in panel, locate one weld at middle of panel.

## VI. Special Instructions

A. The project specifications are not superseded by the General Structural Notes but are intended to be complementary to them. Consult the specifications for additional requirements in each section. Notes and specific details on the drawings shall take precedence over General Structural Notes and typical details.

B. The architectural drawings are the prime contract drawings. Consultant drawings by other disciplines are supplementary to the architectural drawings. All omissions or conflicts, including dimensions, between the various elements of the consultants' drawings and/or specifications shall be brought to the attention of the Architect before proceeding with any work involved. In case of conflict, follow the most stringent requirement as directed by the Architect without additional cost to the owner. Any work done by the contractor after discovery of such discrepancy shall be done at the contractor's risk.

C. The structural drawings shall be used in conjunction with the architectural drawings. Primary structural elements and overall structural layout are indicated within the structural plans and details. Some secondary elements, architectural layouts, alcoves, elevations, slopes, depressions, curbs, mechanical equipment and electrical equipment, are not indicated within the structural drawings. Detailing and shop drawing production for structural elements will require information (including dimensions) contained in the architectural, structural and/or other consultants' drawings.

D. Shoring and Bracing Requirements:
1. Floor and Roof Structures -- The General Contractor is responsible for the method and sequence of all structural erection. He shall provide temporary shoring and bracing as his method of erection requires to provide adequate vertical and lateral support. Shoring and bracing shall remain in place as the chosen method requires until all permanent members are in place and all final connections are completed, including all roof and floor attachments. The building shall not be considered stable until all connections are complete.
2. Foundation walls must be braced until the complete floor or roof systems is completed. Do not backfill until floor or roof systems are in place.
3. Walls above grade shall be braced until the structural system is complete. Walls shall not be considered to be self supporting.

E. All expansion joints (E.J.) shown in the structural drawings shall be considered seismic separation joints, unless noted otherwise.

F. Submittals: A copy of all shop drawings that have been submitted for review must be kept at the construction site for reference. These drawings must bear the appropriate review stamps. The shop drawing review shall not relieve the contractor of the responsibility of completing the project according to the contract documents. The general contractor shall review and mark all shop drawings prior to submitting them to the Architect for his review. Shop Drawings made from reproductions of (these) contract drawings will be rejected.

G. Project Coordination: It shall be the responsibility of the general contractor to coordinate with all trades any and all items that are to be integrated into the structural system. Openings or penetrations through, or attachments to the structural system that are not indicated on these drawings shall be the responsibility of the general contractor and shall be coordinated with the Architect/Engineers. The order of construction is the responsibility of the general contractor. It is the contractor's obligation to provide all items necessary for his chosen procedure.

H. Contractor shall field verify all dimensions, and conditions. If the contract drawings do not represent actual conditions, contractor shall notify architect/engineer prior to fabrication or construction within that area.

I. Notice of Copyright: The structural drawings, plans, schedules, notes and details are hereby copyrighted by Reaveley Engineers and Associates, Inc., All Rights reserved. Submission or distribution of documents to meet official regulatory requirements or for similar purposes in connection with the project is not to be construed as publication in derogation of Reaveley Engineers & Associates, Inc.'s reserved rights. The documents defining the structure are instruments of service prepared by Reaveley Engineers and Associates, Inc. for one use only. Furthermore, these documents shall not be reproduced, or copied, in whole or in part by the contractor or his subcontractors for preparation of shop drawings or other submittals.

NOTE TO BID PACKAGE #2.

BID PACKAGE #2 IS FOR FOOTING & FOUNDATION WORK ONLY. ALL OTHER STRUCTURAL STEEL DRAWINGS ARE INCLUDED FOR REFERENCE ONLY.


ARCHITECT 0818

ajc architects

703 east 1700 south
salt lake city, utah 84105
ph: 801.466.8818
fx: 801.466.4411
www.ajcarchitects.com

P A Y E T T E

285 Summer Street
Boston, MA 02210-1522
www.payette.com

REAVELEY
ENGINEERS + ASSOCIATES
Consulting Structural Engineers

P: 801.486.3883
F: 801.485.0911

675 E. 500 S. Suite 400
Salt Lake City, Utah 84102
www.reaveley.com


OWNER INFORMATION

State of Utah
Department of Administrative Services

Division of Facilities
Construction & Management
4110 State Office Building
Salt Lake City, Utah 84114
Phone: (801) 538 - 3018
Fax: (801) 538 - 3267

Internet: http://www.dfcm.utah.gov

PROJECT DESCRIPTION

# LIFE SCIENCES RESEARCH CENTER
# UTAH STATE UNIVERSITY

USTAR BUILDING #2
LOGAN, UTAH

SHEET NAME:

## GENERAL STRUCTURAL NOTES

REVISIONS

| MARK | DATE | DESCRIPTION |
|---|---|---|

ISSUE DATA

| | |
|---|---|
| ISSUE DATE: | DEC. 9, 2008 |
| ISSUE TYPE: | B.P. #2 REVIEW |
| DRAWN BY: | R. HARRIS |
| CHECKED BY: | J. MILLER / C.PRICE |
| CAD FILE NAME: | |
| DFCM PROJECT # | 06292770 |
| STATE PROPERTY # | - |
| COPYRIGHT: | STATE OF UTAH |

SHEET NUMBER:

# SE101

## VII. Quality Assurance

A. Quality Assurance Agency Requirements:
1. The owner shall engage a qualified Quality Assurance Agency (QAA) to provide all special inspection and quality assurance testing for the project. All quality assurance personnel assigned to the project shall demonstrate competence, to the satisfaction of the building official, for inspection of the particular type of construction or operation requiring special inspection.
2. Prior to construction, the QAA shall prepare a written Quality Assurance Implementation Plan (QAIP) for the project. The QAIP shall include a list of personnel assigned to the project including management personnel, inspection procedures and frequency, proposed testing methods and frequency of testing, and reporting procedures. The QAIP shall also outline methods of documenting deficiencies and reporting corrections. A copy of the QAIP shall be given to the contractor for review and coordination with subcontractors.
3. Prior to construction, the QAA shall submit the following information to the Architect and Engineer of Record for approval:
   a. A copy of the Quality Assurance Implementation Plan for the project.
   b. A copy of the appropriate certification and training records for each individual performing inspections or testing.
   c. A list of the testing equipment designated for the project and recent calibration records for the equipment.
   d. Sample inspection and testing reports and the distribution list for the reports.
4. The special inspector shall inspect the work per Chapter 17 of the IBC for conformance with the contract documents. The special inspector shall send reports to the owner, building official, architect, engineer, and contractor. All discrepancies shall be brought to the immediate attention of the contractor for correction. The QAA shall submit a final signed report stating that the special inspection work was, to the best of their knowledge, in conformance with the plans, specifications and applicable workmanship provisions of the IBC.

B. Seismic Force Resisting Systems
1. Elements that are a part of the Main Seismic Force Resisting System for the structure may require increased quality assurance inspection and testing. The Main Seismic Force Resisting system for the structure includes the following elements:
   a. Masonry walls.
   b. Steel braces, columns and beams that are part of a steel braced frame.
   c. Footings and foundation systems that directly support columns and braces referenced above.
   d. Roof decking.
   e. Floor decking and/or slab systems.
   f. All elements labeled as "drag struts" or "chords."
   g. Connections between the elements referenced above.

C. Special Inspection: Special Inspection shall be provided for the following elements per IBC sections 1704 and 1707:
1. Concrete and elements embedded in concrete shall be special inspected prior to and during placement of concrete. Special inspection of concrete shall include the following:
   a. Reinforcing steel size and placement.
   b. Surface preparation at cold joints including placement of keyways.
   c. Bolt and embed size, configuration and placement.
   d. Concrete shall receive continuous special inspection during placement, and periodic inspection after placement to ensure proper curing and weather protection procedures.
2. Structural steel fabrication and erection shall be special inspected, including the following:
   a. High strength bolts per IBC 1704.3.3 and IBC section 2209.
   b. Fillet welds smaller than 5/16" per AWS D1.1.
   c. Fillet welds larger than 5/16", multiple pass welds, and all groove welds shall receive continuous special inspection during weld placement per AWS D1.1.
   d. Welding of reinforcing steel shall receive continuous special inspection during weld placement per AWS D1.1.
   e. Welding of Headed Stud Anchors (HSA) and Deformed Bar Anchors (DBA) shall be inspected to comply with AWS D1.1 Section 7.6 through 7.8 and Annex IX.
   f. Welding or fastening of floor or roof deck per AWS D1.3. or per the code evaluation report for the fastening method.
   g. Welding of braces to gussets and gussets to frames, as well as braced frame column splices shall have continuous special inspection to comply with the requirements of Appendix W of AISC 341-05 in addition to AWS D1.1 requirements.
   h. Installation of non-shrink grout under braced frame base plates shall receive continuous special inspection.
3. Structural Masonry: Special inspection shall be provided, as follows:
   a. As masonry construction begins, and periodically during construction, verify the following are in compliance:
      (1) Proportions of site-mixed mortar and grout.
      (2) Placement of masonry units and construction of mortar joints.
      (3) Locations of reinforcement, connectors and embeds.
      (4) Protection of masonry during cold or hot weather.
   b. Prior to grouting, verify the following are in compliance:
      (1) Grout space.
      (2) Size and location of structural elements.
      (3) Grade, size and placement of reinforcement, connectors and embeds.
      (4) Construction of all mortar joints.
   c. Continuous inspection is required during placement of grout and during preparation of grout specimens, mortar specimens, and/or prisms for testing.
4. Post-installed anchors, including but not limited to expansion anchors, adhesive anchors and rebar dowels, and low velocity fasteners, shall receive special inspection per the code evaluation reports for the anchors.
   a. Continuous special inspection is required during the installation of all adhesive anchors and rebar dowels. Special inspector shall verify the following:
      (1) Anchor size and steel grade.
      (2) Hole diameter, location, and type of drill bit.
      (3) Cleanliness of hole and anchor.
      (4) Adhesive application.
      (5) Anchor embedment.

D. Structural Testing: The following materials shall be tested per IBC sections 1704 and 1708. The owner reserves the right to test any and all materials using any appropriate non-destructive procedure. Any items found to be deficient shall be corrected and retested at no additional cost to the owner.
1. Earthwork: All compacted structural fill shall be tested to verify soil gradation, lift thickness, and compaction requirements. See the specifications and earthwork section of the GSN for testing frequency and acceptability criteria.
2. Concrete Strength Verification and Testing. All concrete shall be tested to verify strength, slump, unit weight, air content, and temperature. See the specifications for testing criteria, testing frequency and acceptability criteria.
3. Masonry Strength Verification:
   a. Masonry strength, f'm shall be verified using the "Unit Strength Method" per IBC Section 2105.2.2.1 and as follows: Prior to construction, the masonry units and grout shall be tested for compressive strength. Certificates of compliance with strength requirements of the masonry units and grout shall be submitted by the masonry and grout suppliers. Proportions of materials in mortar and grout delivered to the site shall be verified.
   b. The contractor has the option of using the "Masonry Prism Test Method" per IBC Section 2105.2.2.2, in lieu of the "Unit Strength Method."
4. Welded connections shall be tested for compliance according to IBC Table 1704.3, AWS D1.1 and the contract specifications and plans. As a minimum, the testing shall include the following:
   a. All complete penetration groove welds shall be tested 100 percent either by ultrasonic testing or by radiography.
   b. Partial penetration groove welds shall be tested either by ultrasonic testing or radiography. A minimum of 50% of these welds shall be tested.
   c. Base metal thicker than 1 1/2", when subjected to through thickness weld shrinkage strains, shall be ultrasonically inspected for discontinuities directly behind such welds and three inches above and below the weld after joint assembly completion.
   d. Any material discontinuities shall be accepted or rejected on the basis of the defect rating in accordance with the testing in AWS D1.1 Chapter 6, excluding Sections 6.1 through and including 6.6. All deficient welds shall be corrected and retested at no additional cost to the owner.
5. Post-installed anchors, including but not limited to expansion anchors, adhesive anchors, and low velocity fasteners, shall be tested per the code evaluation reports for the anchors.

E. Structural Observations by the Engineer of Record.
1. The Engineer of Record may perform structural observations at critical phases of the project. Copies of the engineer's report will be distributed to the architect, contractor, owner, and QAA.
2. Observation visits to the site by the Engineer's field representatives shall not be construed as inspection or approval of construction.
3. Notification of Engineer: The contractor shall notify the engineer twenty-four hours prior to:
   a. Placing concrete in any footing.
   b. Closing any wall forms.
   c. Placing concrete in any column or suspended slab.
   d. Grouting any masonry.
   e. Completing the welding of major sections of steel decking.
   f. Completing the nailing of any plywood wall or deck.

F. Contractor Responsibility: The contractor shall prepare and submit a written statement of responsibility to the building official and the owner prior to commencement of work on the project. As a minimum the statement shall contain the following information:
1. Acknowledgement of the quality assurance requirements for the structure.
2. Acknowledgement of receipt of the Quality Assurance Implementation Plan (QAIP) from the testing agency.
3. Acknowledgement that control will be exercised to obtain conformance to the Contract Documents and the QAIP.
4. Quality control procedures within the contractors organization, methods and frequency of reporting, and distribution of the reports.
5. Identification and qualifications of the person(s) responsible for quality control and their position(s) in the organization.

### Drawing Index


| Sheet No. | Sheet Name |
|---|---|
| SE100 | GENERAL STRUCTURAL NOTES |
| SE101 | GENERAL STRUCTURAL NOTES |
| SE102 | GENERAL STRUCTURAL NOTES & DRAWING INDEX |
| SB101 | OVERALL FOOTING & FOUNDATION PLAN |
| SB101A | PARTIAL FOOTING & FOUNDATION PLAN - AREA A |
| SB101A-B | PARTIAL MAT FOOTING REINFORCING PLAN - AREA A - BOTTOM |
| SB101A-T | PARTIAL MAT FOOTING REINFORCING PLAN - AREA A - TOP |
| SB101B | PARTIAL FOOTING & FOUNDATION PLAN - AREA B |
| SB101B-B | PARTIAL MAT FOOTING REINFORCING PLAN - AREA B - BOTTOM |
| SB101B-T | PARTIAL MAT FOOTING REINFORCING PLAN - AREA B - TOP |
| SB101C | PARTIAL FOOTING & FOUNDATION PLAN - AREA C |
| SB101C-B | PARTIAL MAT FOOTING REINFORCING PLAN - AREA C - BOTTOM |
| SB101C-T | PARTIAL MAT FOOTING REINFORCING PLAN - AREA C - TOP |
| SB501 | TYPICAL FOOTING & FOUNDATION DETAILS |
| SB502 | TYPICAL FOOTING & FOUNDATION DETAILS |
| SB503 | TYPICAL FOOTING & FOUNDATION DETAILS |
| SB504 | TYPICAL FOOTING & FOUNDATION DETAILS |
| SB505 | TYPICAL FOOTING & FOUNDATION DETAILS |
| SB506 | TYPICAL FOOTING & FOUNDATION DETAILS |
| SB507 | TYPICAL FOOTING & FOUNDATION DETAILS |
| SB508 | TYPICAL FOOTING & FOUNDATION DETAILS |
| SB509 | TYPICAL FOOTING & FOUNDATION DETAILS |
| SB601 | STRUCTURAL SCHEDULES |
| SB602 | STRUCTURAL SCHEDULES |
| SF102 | OVERALL LEVEL 2 FLOOR FRAMING PLAN |
| SF102A | PARTIAL LEVEL 2 FLOOR FRAMING PLAN AREA A |
| SF102B | PARTIAL LEVEL 2 FLOOR FRAMING PLAN AREA B |
| SF102C | PARTIAL LEVEL 2 FLOOR FRAMING PLAN AREA C |
| SF103 | OVERALL LEVEL 3 FLOOR FRAMING PLAN |
| SF103A | PARTIAL LEVEL 3 FLOOR FRAMING PLAN AREA A |
| SF103B | PARTIAL LEVEL 3 FLOOR FRAMING PLAN AREA B |
| SF103C | PARTIAL LEVEL 3 FLOOR FRAMING PLAN AREA C |
| SF104 | OVERALL PENTHOUSE FLOOR / ROOF FRAMING PLAN |
| SF104A | PARTIAL PENTHOUSE FLOOR FRAMING PLAN - AREA A |
| SF104B | PARTIAL PENTHOUSE FLOOR FRAMING PLAN - AREA B |
| SF104C | PARTIAL ROOF FRAMING PLAN - AREA C |
| SF105 | OVERALL PENTHOUSE ROOF FRAMING PLAN |
| SF105A | PARTIAL PARAPET FRAMING PLAN - AREA A |
| SF105B | PARTIAL PENTHOUSE ROOF FRAMING PLAN - AREA B |
| SF201 | BRACED FRAME ELEVATIONS (SLRS) |
| SF202 | BRACED FRAME ELEVATIONS (SLRS) |
| SF203 | BRACED FRAME ELEVATIONS (SLRS) |
| SF211 | BRACED FRAME CONNECTION SCHEDULE & DETAILS (SLRS) |
| SF212 | BRACED FRAME CONNECTION DETAILS (SLRS) |
| SF213 | BRACED CONNECTION FRAME DETAILS (SLRS) |
| SF214 | BRACED FRAME CONNECTION DETAILS (SLRS) |
| SF215 | BRACED FRAME CONNECTION DETAILS (SLRS) |
| SF401 | LEVEL 3 CEILING FRAMING PLAN - NORTH |
| SF402 | LEVEL 3 CEILING FRAMING PLAN - CENTER |
| SF403 | LEVEL 3 CEILING FRAMING PLAN - SOUTH |
| SF501 | TYPICAL FLOOR FRAMING DETAILS |
| SF502 | TYPICAL FLOOR FRAMING DETAILS |
| SF503 | TYPICAL FLOOR FRAMING DETAILS |
| SF504 | TYPICAL FLOOR FRAMING DETAILS |
| SF505 | TYPICAL FLOOR FRAMING DETAILS |
| SF511 | TYPICAL ROOF FRAMING DETAILS |
| SF512 | TYPICAL ROOF FRAMING DETAILS |
| SF513 | TYPICAL ROOF FRAMING DETAILS |
| SF601 | STEEL COLUMN SCHEDULE |
| SF602 | STRUCTURAL STEEL SCHEDULES & DETAILS |
| SF603 | STRUCTURAL STEEL SCHEDULES & DETAILS |


NOTE TO BID PACKAGE #2.

BID PACKAGE #2 IS FOR FOOTING & FOUNDATION WORK ONLY. ALL OTHER STRUCTURAL STEEL DRAWINGS ARE INCLUDED FOR REFERENCE ONLY.


ARCHITECT 0818

ajc architects

703 east 1700 south
salt lake city, utah 84105
ph: 801.466.8818
fx: 801.466.4411
www.ajcarchitects.com

PAYETTE

285 Summer Street
Boston, MA 02210-1522
www.payette.com

REAVELEY
ENGINEERS + ASSOCIATES
Consulting Structural Engineers

P: 801.486.3883
F: 801.485.0911

675 E. 500 S. Suite 400
Salt Lake City, Utah 84102
www.reaveley.com


OWNER INFORMATION

State of Utah
Department of Administrative Services

Division of Facilities
Construction & Management
4110 State Office Building
Salt Lake City, Utah 84114
Phone: (801) 538 - 3018
Fax: (801) 538 - 3267

Internet: http://www.dfcm.utah.gov

PROJECT DESCRIPTION

LIFE SCIENCES
RESEARCH CENTER
UTAH STATE UNIVERSITY

USTAR BUILDING #2
LOGAN, UTAH

SHEET NAME:

GENERAL
STRUCTURAL NOTES
& DRAWING INDEX

REVISIONS

| MARK | DATE | DESCRIPTION |
|---|---|---|

ISSUE DATA

| | |
|---|---|
| ISSUE DATE: | DEC. 9, 2008 |
| ISSUE TYPE: | B.P. #2 REVIEW |
| DRAWN BY: | R. HARRIS |
| CHECKED BY: | J. MILLER / C.PRICE |
| CAD FILE NAME: | |
| DFCM PROJECT # | 06292770 |
| STATE PROPERTY # | - |
| COPYRIGHT: | STATE OF UTAH |

SHEET NUMBER:

SE102

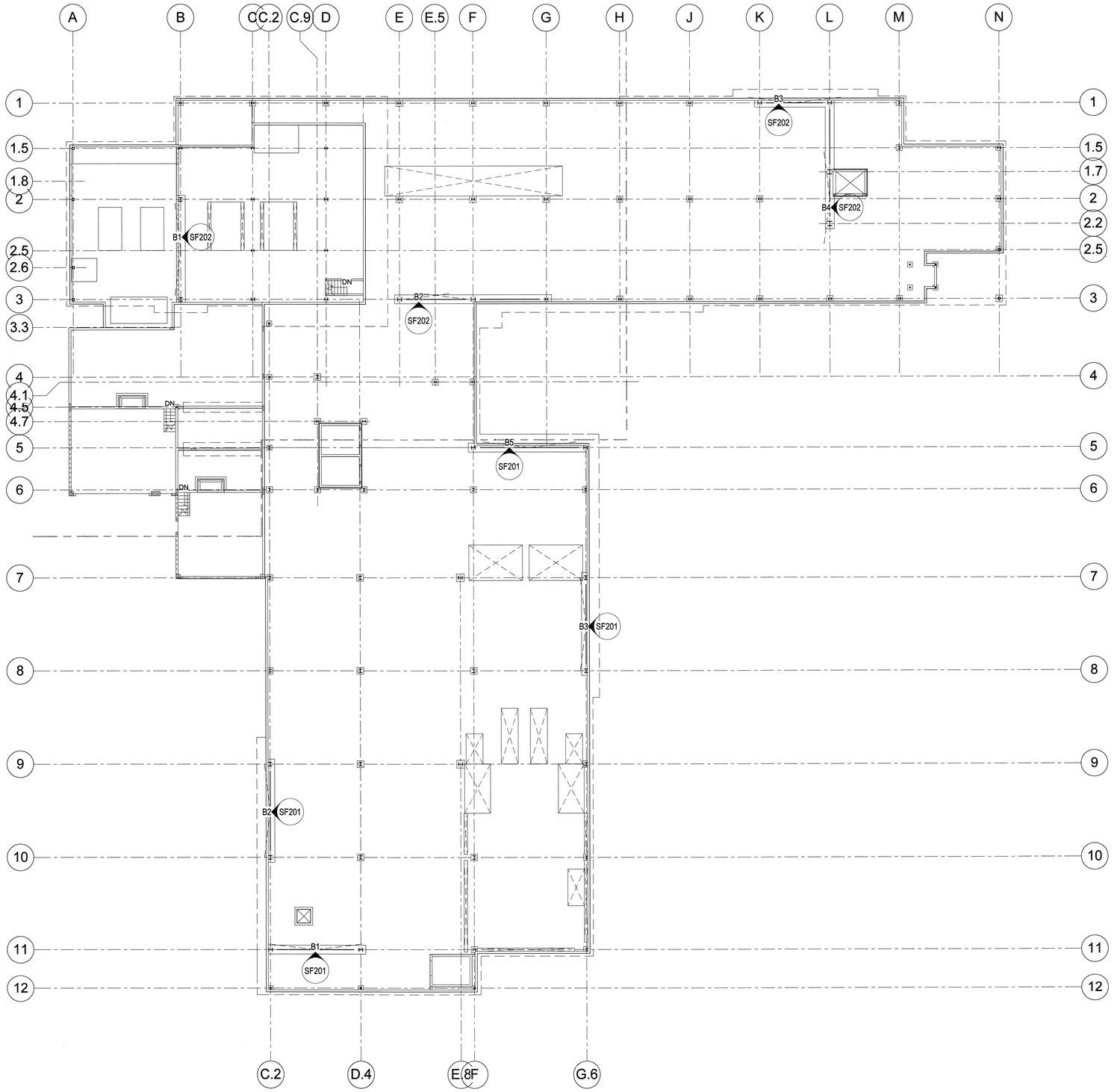


A1 SB101 OVERALL FOOTING & FOUNDATION PLAN - LEVEL 1

SCALE: 1/16" = 1'-0"

NOTE TO BID PACKAGE #2.

BID PACKAGE #2 IS FOR FOOTING & FOUNDATION WORK ONLY. ALL OTHER STRUCTURAL STEEL DRAWINGS ARE INCLUDED FOR REFERENCE ONLY.

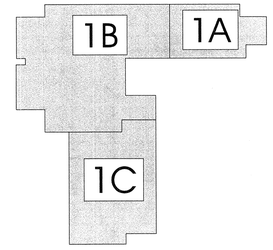


Key Plan

ARCHITECT 0818

ajc architects

703 east 1700 south
salt lake city, utah 84105
ph: 801.466.8818
fx: 801.466.4411
www.ajcarchitects.com

PAYETTE

285 Summer Street
Boston, MA 02210-1522
www.payette.com

REAVELEY
ENGINEERS + ASSOCIATES
Consulting Structural Engineers

P: 801.486.3883
F: 801.485.0911

675 E. 500 S. Suite 400
Salt Lake City, Utah 84102
www.reaveley.com

OWNER INFORMATION

State of Utah
Department of Administrative Services

Division of Facilities Construction & Management
4110 State Office Building
Salt Lake City, Utah 84114
Phone: (801) 538 - 3018
Fax: (801) 538 - 3267

Internet: http://www.dfcm.utah.gov

PROJECT DESCRIPTION

LIFE SCIENCES RESEARCH CENTER
UTAH STATE UNIVERSITY

USTAR BUILDING #2
LOGAN, UTAH

SHEET NAME:

OVERALL FOOTING & FOUNDATION PLAN

REVISIONS

| MARK | DATE | DESCRIPTION |
|---|---|---|

ISSUE DATA

| | |
|---|---|
| ISSUE DATE: | DEC. 9, 2008 |
| ISSUE TYPE: | B.P. #2 REVIEW |
| DRAWN BY: | R. HARRIS |
| CHECKED BY: | J. MILLER / C.PRICE |
| CAD FILE NAME: | |
| DFCM PROJECT # | 06292770 |
| STATE PROPERTY # | - |
| COPYRIGHT: | STATE OF UTAH |

SHEET NUMBER:

SB101

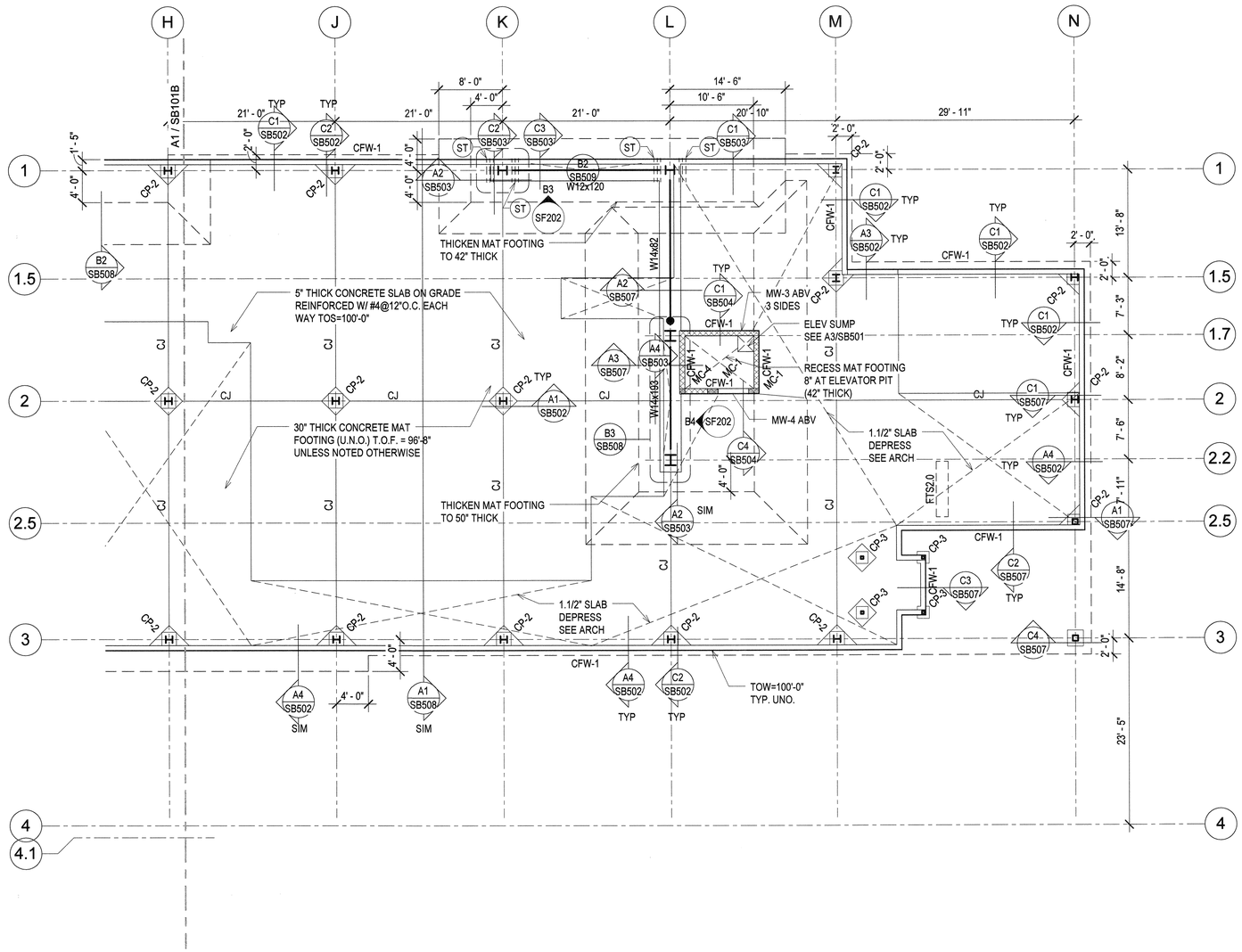


A1 / SB101A **PARTIAL FOOTING & FOUNDATION PLAN - LEVEL 1 - AREA A**

SCALE: 1/8" = 1'-0"

## FOOTING & FOUNDATION PLAN LEGEND

LEG-FOOTING

- FOOTING STEP
- FOOTING - CONTINUOUS
- FOOTING - THICKENED SLAB
- FOOTING - SQUARE FOOTING - RECTANGULAR FOOTING - MAT FOOTING
- CONCRETE WALL, CONCRETE FOUNDATION WALL, OR CONCRETE RETAINING WALL
- CONCRETE FOUNDATION WALL - RECESSED
- CONCRETE PIER IN CONCRETE WALL. TOP OF PIER RECESSED 8" BELOW SLAB. TYP U.N.O.
- CONCRETE COLUMN
- CONCRETE JAMB COLUMN POURED MONOLITHIC WITH CONCRETE WALL
- MASONRY WALL
- MASONRY WALL - RECESSED
- MASONRY COLUMN IN MASONRY WALL
- STEEL COLUMN - TUBE
- STEEL COLUMN - WIDE FLANGE
- STEEL COLUMN - PIPE
- STEEL BRACED FRAME - ABOVE
- SLAB BLOCK-OUT AT COLUMN
- CJ — SLAB CONTROL/ CONSTRUCTION JOINT
- SPECIAL SLAB AREA
- 0" — CHANGE IN ELEVATION
- RECESSED/ DEPRESSED SLAB
- OPENING

## FOOTING & FOUNDATION PLAN NOTES

NOTE-FOOTING

1. SEE ARCHITECTURAL, CIVIL AND LANDSCAPE DRAWINGS FOR EXTERIOR CONCRETE WORK AT DOORS, SIDEWALKS ETC.
2. SEE ARCHITECTURAL DRAWINGS AND FINISH SCHEDULE FOR SLAB AREAS TO RECEIVE FLOOR TILE.
3. SEE ARCHITECTURAL DRAWINGS FOR SLAB DEPRESSIONS AND SLOPES TO DRAINS, ETC.
4. SEE ARCHITECTURAL, CIVIL AND LANDSCAPE DRAWINGS FOR ADDITIONAL EXTERIOR CONCRETE RETAINING AND / OR SITE WALLS NOT SHOWN ON THE STRUCTURAL DRAWINGS.
5. SEE C1/SBSB501 FOR TYPICAL CONCRETE FOOTING STEP DETAIL.
6. SEE C2/SB501 FOR TYPICAL REINFORCEMENT AT WALL CORNERS AND INTERSECTIONS.
7. SEE C3/SB501 FOR TYPICAL DETAIL AT SLAB JOINTS IN CONCRETE SLABS ON GRADE.
8. SEE C4/SB501 FOR TYPICAL DETAIL AT DEPRESSED CONCRETE SLABS ON GRADE.
9. SEE A1/SB501 FOR REINFORCEMENT AT DISCONTINUOUS CONSTRUCTION / CONTROL JOINTS IN CONCRETE SLAB ON GRADE.
10. (ST) INDICATES SHEAR REINFORCING SEE C4/SB508

NOTE TO BID PACKAGE #2.

BID PACKAGE #2 IS FOR FOOTING & FOUNDATION WORK ONLY. ALL OTHER STRUCTURAL STEEL DRAWINGS ARE INCLUDED FOR REFERENCE ONLY.

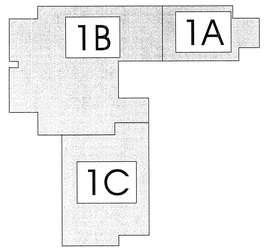


Key Plan

ARCHITECT 0818

ajc architects

703 east 1700 south
salt lake city, utah 84105
ph: 801.466.8818
fx: 801.466.4411
www.ajcarchitects.com

PAYETTE

285 Summer Street
Boston, MA 02210-1522
www.payette.com

REAVELEY
ENGINEERS + ASSOCIATES
Consulting Structural Engineers

P: 801.486.3883
F: 801.485.0911

675 E. 500 S. Suite 400
Salt Lake City, Utah 84102
www.reaveley.com

OWNER INFORMATION

State of Utah
Department of Administrative Services

Division of Facilities Construction & Management
4110 State Office Building
Salt Lake City, Utah 84114
Phone: (801) 538 - 3018
Fax: (801) 538 - 3267

Internet: http://www.dfcm.utah.gov

PROJECT DESCRIPTION

# LIFE SCIENCES RESEARCH CENTER
## UTAH STATE UNIVERSITY

USTAR BUILDING #2
LOGAN, UTAH

SHEET NAME:

PARTIAL FOOTING & FOUNDATION PLAN - AREA A

REVISIONS

| MARK | DATE | DESCRIPTION |
|---|---|---|

ISSUE DATA

| | |
|---|---|
| ISSUE DATE: | DEC. 9, 2008 |
| ISSUE TYPE: | B.P. #2 REVIEW |
| DRAWN BY: | R. HARRIS |
| CHECKED BY: | J. MILLER / C.PRICE |
| CAD FILE NAME: | |
| DFCM PROJECT # | 06292770 |
| STATE PROPERTY # | - |
| COPYRIGHT: | STATE OF UTAH |

SHEET NUMBER:

SB101A

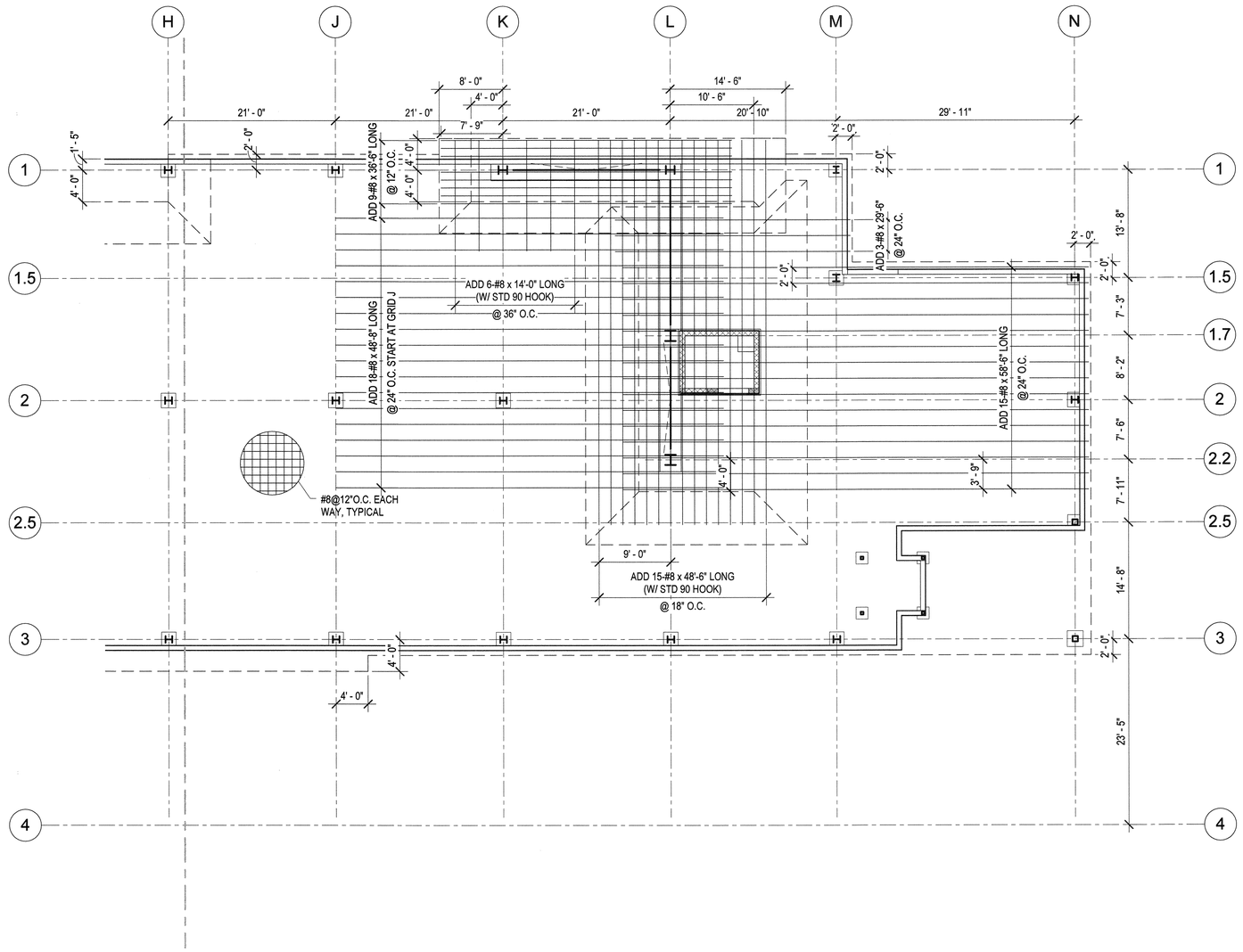


A1 / SB101A-B PARTIAL MAT FOOTING PLAN - BOTTOM - AREA A

SCALE: 1/8" = 1'-0"

NOTE TO BID PACKAGE #2.

BID PACKAGE #2 IS FOR FOOTING & FOUNDATION WORK ONLY. ALL OTHER STRUCTURAL STEEL DRAWINGS ARE INCLUDED FOR REFERENCE ONLY.


ARCHITECT 0818

ajc architects

703 east 1700 south
salt lake city, utah 84105
ph: 801.466.8818
fx: 801.466.4411
www.ajcarchitects.com

P A Y E T T E

285 Summer Street
Boston, MA 02210-1522
www.payette.com

REAVELEY
ENGINEERS + ASSOCIATES
Consulting Structural Engineers

P: 801.486.3883
F: 801.485.0911

675 E. 500 S. Suite 400
Salt Lake City, Utah 84102
www.reaveley.com


OWNER INFORMATION

State of Utah
Department of Administrative Services

Division of Facilities Construction & Management
4110 State Office Building
Salt Lake City, Utah 84114
Phone: (801) 538 - 3018
Fax: (801) 538 - 3267

Internet: http://www.dfcm.utah.gov

PROJECT DESCRIPTION

# LIFE SCIENCES RESEARCH CENTER
## UTAH STATE UNIVERSITY

USTAR BUILDING #2
LOGAN, UTAH

SHEET NAME:

PARTIAL MAT FOOTING REINFORCING PLAN - AREA A - BOTTOM

REVISIONS

| MARK | DATE | DESCRIPTION |
|---|---|---|

ISSUE DATA

| | |
|---|---|
| ISSUE DATE: | DEC. 9, 2008 |
| ISSUE TYPE: | B.P. #2 REVIEW |
| DRAWN BY: | R. HARRIS |
| CHECKED BY: | J. MILLER / C.PRICE |
| CAD FILE NAME: | |
| DFCM PROJECT # | 06292770 |
| STATE PROPERTY # | - |
| COPYRIGHT: | STATE OF UTAH |

SHEET NUMBER:

SB101A-B

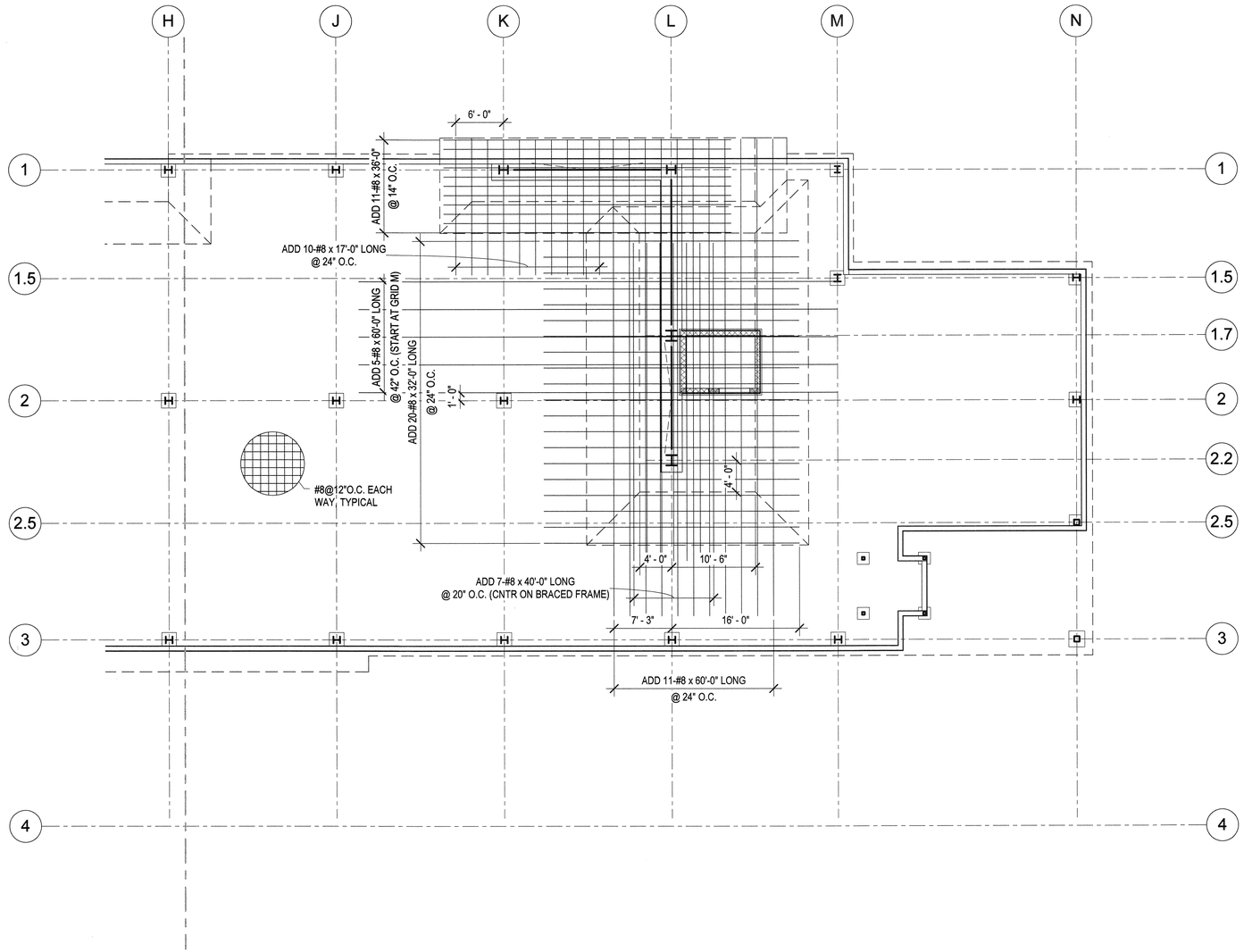


A1 / SB101A-T PARTIAL MAT FOOTING PLAN - TOP - AREA A

SCALE: 1/8" = 1'-0"

NOTE TO BID PACKAGE #2.

BID PACKAGE #2 IS FOR FOOTING & FOUNDATION WORK ONLY. ALL OTHER STRUCTURAL STEEL DRAWINGS ARE INCLUDED FOR REFERENCE ONLY.


ARCHITECT 0818

ajc architects

703 east 1700 south
salt lake city, utah 84105
ph: 801.466.8818
fx: 801.466.4411
www.ajcarchitects.com

P A Y E T T E

285 Summer Street
Boston, MA 02210-1522
www.payette.com

REAVELEY
ENGINEERS + ASSOCIATES
Consulting Structural Engineers

P: 801.486.3883
F: 801.485.0911

675 E. 500 S. Suite 400
Salt Lake City, Utah 84102
www.reaveley.com


OWNER INFORMATION

State of Utah
Department of Administrative Services

Division of Facilities Construction & Management
4110 State Office Building
Salt Lake City, Utah 84114
Phone: (801) 538 - 3018
Fax: (801) 538 - 3267

Internet: http://www.dfcm.utah.gov

PROJECT DESCRIPTION

# LIFE SCIENCES RESEARCH CENTER
## UTAH STATE UNIVERSITY

USTAR BUILDING #2
LOGAN, UTAH

SHEET NAME:

## PARTIAL MAT FOOTING REINFORCING PLAN - AREA A - TOP

REVISIONS

| MARK | DATE | DESCRIPTION |
|---|---|---|

ISSUE DATA

| | |
|---|---|
| ISSUE DATE: | DEC. 9, 2008 |
| ISSUE TYPE: | B.P. #2 REVIEW |
| DRAWN BY: | R. HARRIS |
| CHECKED BY: | J. MILLER / C.PRICE |
| CAD FILE NAME: | |
| DFCM PROJECT # | 06292770 |
| STATE PROPERTY # | - |
| COPYRIGHT: | STATE OF UTAH |

SHEET NUMBER:

# SB101A-T

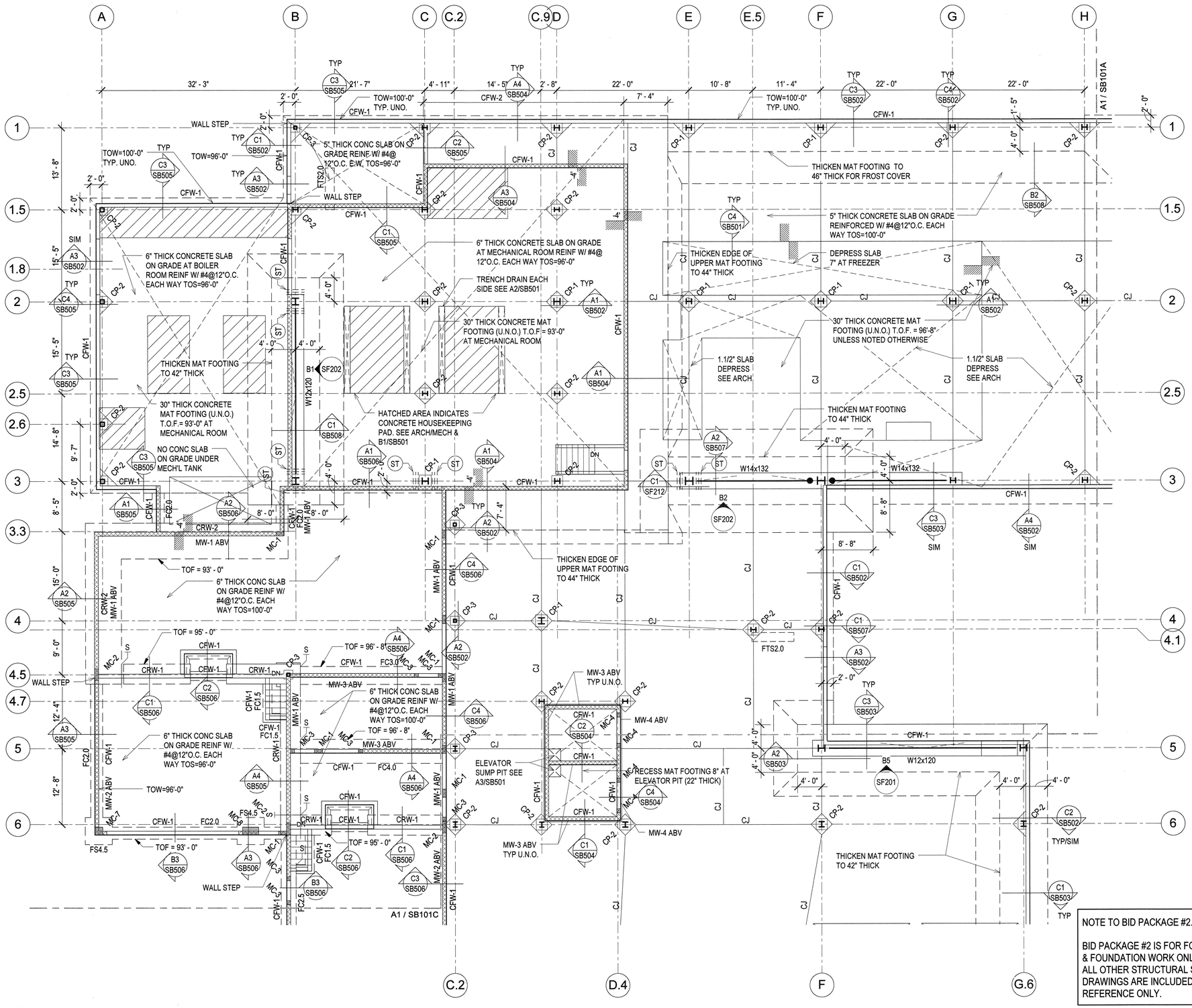


## FOOTING & FOUNDATION PLAN LEGEND

LEG-FOOTING

- FOOTING STEP
- FOOTING - CONTINUOUS
- FOOTING - THICKENED SLAB
- FOOTING - SQUARE FOOTING - RECTANGULAR FOOTING - MAT FOOTING
- CONCRETE WALL, CONCRETE FOUNDATION WALL, OR CONCRETE RETAINING WALL
- CONCRETE FOUNDATION WALL - RECESSED
- CONCRETE PIER IN CONCRETE WALL. TOP OF PIER RECESSED 8" BELOW SLAB. TYP U.N.O.
- CONCRETE COLUMN
- CONCRETE JAMB COLUMN POURED MONOLITHIC WITH CONCRETE WALL
- MASONRY WALL
- MASONRY WALL - RECESSED
- MASONRY COLUMN IN MASONRY WALL
- STEEL COLUMN - TUBE
- STEEL COLUMN - WIDE FLANGE
- STEEL COLUMN - PIPE
- STEEL BRACED FRAME - ABOVE
- SLAB BLOCK-OUT AT COLUMN
- CJ — SLAB CONTROL/ CONSTRUCTION JOINT
- SPECIAL SLAB AREA
- 0" — CHANGE IN ELEVATION
- RECESSED/ DEPRESSED SLAB
- OPENING

## FOOTING & FOUNDATION PLAN NOTES

NOTE-FOOTING

1. SEE ARCHITECTURAL, CIVIL AND LANDSCAPE DRAWINGS FOR EXTERIOR CONCRETE WORK AT DOORS, SIDEWALKS ETC.
2. SEE ARCHITECTURAL DRAWINGS AND FINISH SCHEDULE FOR SLAB AREAS TO RECEIVE FLOOR TILE.
3. SEE ARCHITECTURAL DRAWINGS FOR SLAB DEPRESSIONS AND SLOPES TO DRAINS, ETC.
4. SEE ARCHITECTURAL, CIVIL AND LANDSCAPE DRAWINGS FOR ADDITIONAL EXTERIOR CONCRETE RETAINING AND / OR SITE WALLS NOT SHOWN ON THE STRUCTURAL DRAWINGS.
5. SEE C1/SBSB501 FOR TYPICAL CONCRETE FOOTING STEP DETAIL.
6. SEE C2/SB501 FOR TYPICAL REINFORCEMENT AT WALL CORNERS AND INTERSECTIONS.
7. SEE C3/SB501 FOR TYPICAL DETAIL AT SLAB JOINTS IN CONCRETE SLABS ON GRADE.
8. SEE C4/SB501 FOR TYPICAL DETAIL AT DEPRESSED CONCRETE SLABS ON GRADE.
9. SEE A1/SB501 FOR REINFORCEMENT AT DISCONTINUOUS CONSTRUCTION / CONTROL JOINTS IN CONCRETE SLAB ON GRADE.
10. (ST) INDICATES SHEAR REINFORCING SEE C4/SB508

NOTE TO BID PACKAGE #2.

BID PACKAGE #2 IS FOR FOOTING & FOUNDATION WORK ONLY. ALL OTHER STRUCTURAL STEEL DRAWINGS ARE INCLUDED FOR REFERENCE ONLY.

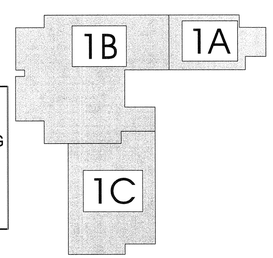


Key Plan

A1 / SB101B PARTIAL FOOTING & FOUNDATION PLAN - LEVEL 1 - AREA B

SCALE: 1/8" = 1'-0"

ARCHITECT 0818

ajc architects

703 east 1700 south
salt lake city, utah 84105
ph: 801.466.8818
fx: 801.466.4411
www.ajcarchitects.com

PAYETTE

285 Summer Street
Boston, MA 02210-1522
www.payette.com

REAVELEY
ENGINEERS + ASSOCIATES
Consulting Structural Engineers

P: 801.486.3883
F: 801.485.0911

675 E. 500 S. Suite 400
Salt Lake City, Utah 84102
www.reaveley.com

OWNER INFORMATION

State of Utah
Department of Administrative Services

Division of Facilities Construction & Management
4110 State Office Building
Salt Lake City, Utah 84114
Phone: (801) 538 - 3018
Fax: (801) 538 - 3267

Internet: http://www.dfcm.utah.gov

PROJECT DESCRIPTION

# LIFE SCIENCES RESEARCH CENTER
UTAH STATE UNIVERSITY

USTAR BUILDING #2
LOGAN, UTAH

SHEET NAME:

PARTIAL FOOTING & FOUNDATION PLAN - AREA B

REVISIONS

| MARK | DATE | DESCRIPTION |
|---|---|---|

ISSUE DATA

| | |
|---|---|
| ISSUE DATE: | DEC. 9, 2008 |
| ISSUE TYPE: | B.P. #2 REVIEW |
| DRAWN BY: | R. HARRIS |
| CHECKED BY: | J. MILLER / C.PRICE |
| CAD FILE NAME: | |
| DFCM PROJECT # | 06292770 |
| STATE PROPERTY # | - |
| COPYRIGHT: | STATE OF UTAH |

SHEET NUMBER:

SB101B

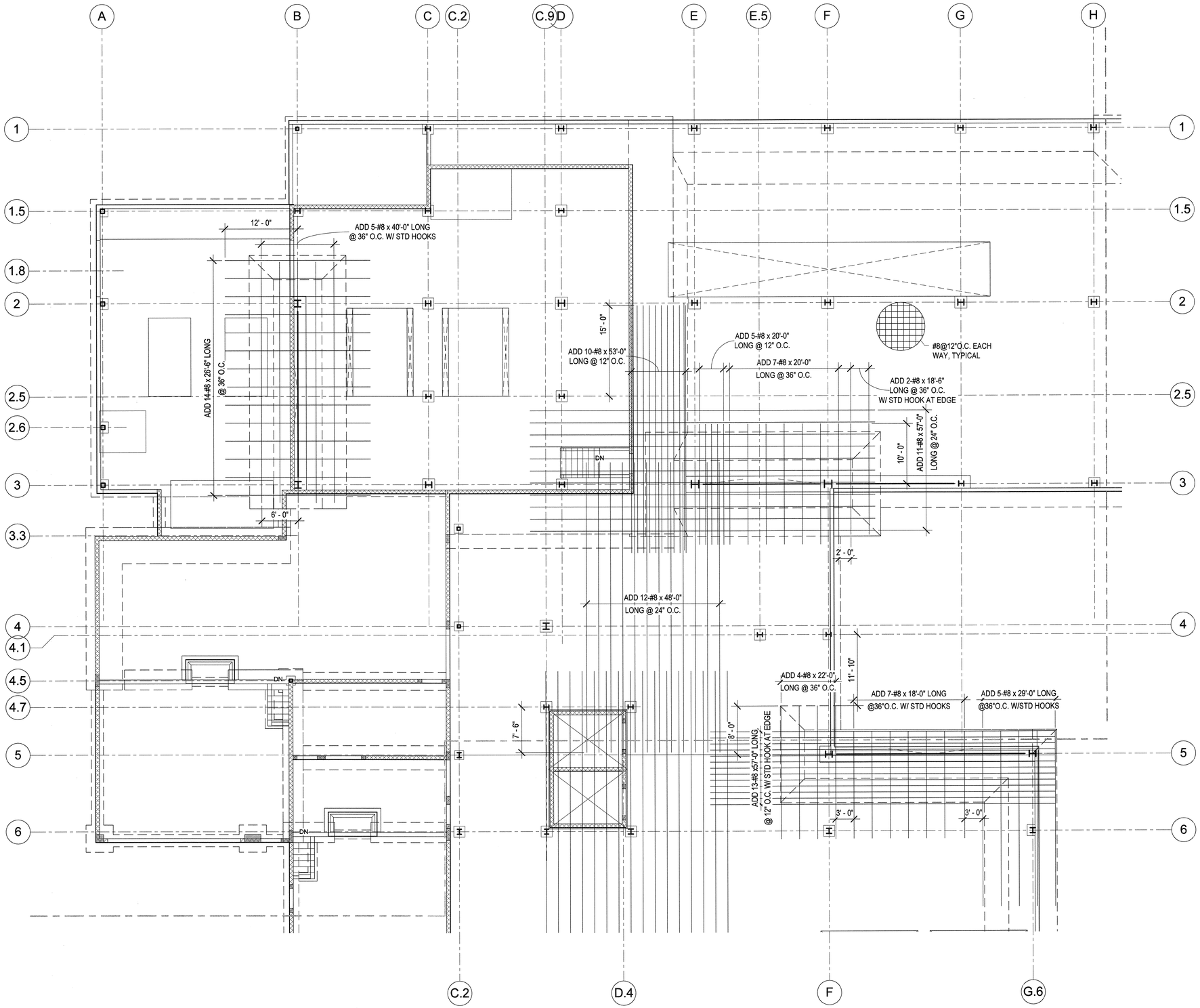


A1 / SB101B-B PARTIAL MAT FOOTING PLAN - BOTTOM - AREA B

SCALE: 1/8" = 1'-0"

NOTE TO BID PACKAGE #2.

BID PACKAGE #2 IS FOR FOOTING & FOUNDATION WORK ONLY. ALL OTHER STRUCTURAL STEEL DRAWINGS ARE INCLUDED FOR REFERENCE ONLY.


ARCHITECT 0818

ajc architects

703 east 1700 south
salt lake city, utah 84105
ph: 801.466.8818
fx: 801.466.4411
www.ajcarchitects.com

PAYETTE

285 Summer Street
Boston, MA 02210-1522
www.payette.com

REAVELEY
ENGINEERS + ASSOCIATES
Consulting Structural Engineers

P: 801.486.3883
F: 801.485.0911

675 E. 500 S. Suite 400
Salt Lake City, Utah 84102
www.reaveley.com


OWNER INFORMATION

State of Utah
Department of Administrative Services

Division of Facilities
Construction & Management
4110 State Office Building
Salt Lake City, Utah 84114
Phone: (801) 538 - 3018
Fax: (801) 538 - 3267

Internet: http://www.dfcm.utah.gov

PROJECT DESCRIPTION

# LIFE SCIENCES RESEARCH CENTER
## UTAH STATE UNIVERSITY

USTAR BUILDING #2
LOGAN, UTAH

SHEET NAME:

PARTIAL MAT FOOTING REINFORCING PLAN - AREA B - BOTTOM

REVISIONS

| MARK | DATE | DESCRIPTION |
|---|---|---|

ISSUE DATA

| | |
|---|---|
| ISSUE DATE: | DEC. 9, 2008 |
| ISSUE TYPE: | B.P. #2 REVIEW |
| DRAWN BY: | R. HARRIS |
| CHECKED BY: | J. MILLER / C.PRICE |
| CAD FILE NAME: | |
| DFCM PROJECT # | 06292770 |
| STATE PROPERTY # | - |
| COPYRIGHT: | STATE OF UTAH |

SHEET NUMBER:

SB101B-B

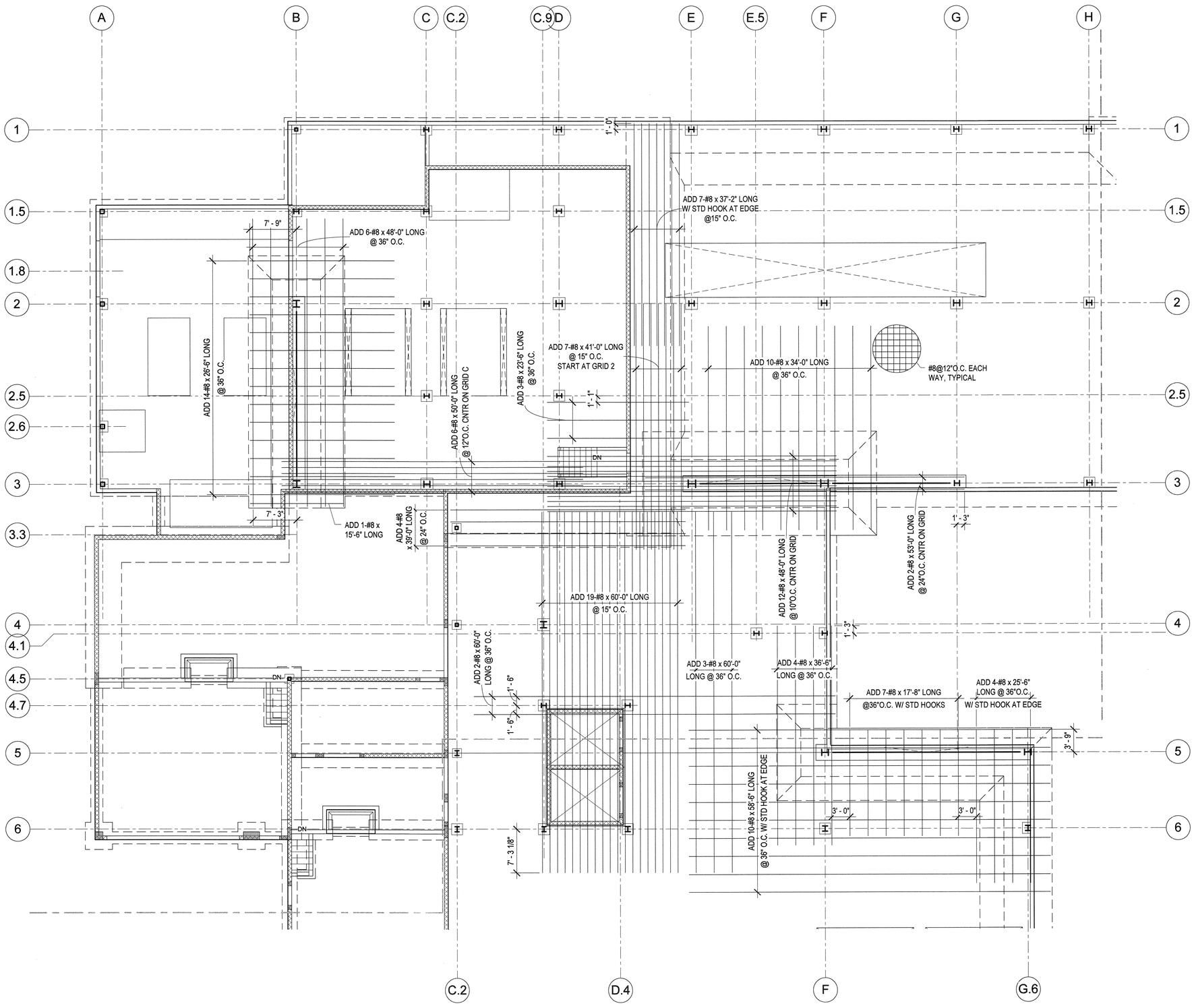


A1 / SB101B-T PARTIAL MAT FOOTING PLAN - TOP - AREA B

SCALE: 1/8" = 1'-0"

NOTE TO BID PACKAGE #2.

BID PACKAGE #2 IS FOR FOOTING & FOUNDATION WORK ONLY. ALL OTHER STRUCTURAL STEEL DRAWINGS ARE INCLUDED FOR REFERENCE ONLY.


ARCHITECT 0818

ajc architects

703 east 1700 south
salt lake city, utah 84105
ph: 801.466.8818
fx: 801.466.4411
www.ajcarchitects.com

P A Y E T T E

285 Summer Street
Boston, MA 02210-1522
www.payette.com

REAVELEY
ENGINEERS + ASSOCIATES
Consulting Structural Engineers

P: 801.486.3883
F: 801.485.0911

675 E. 500 S. Suite 400
Salt Lake City, Utah 84102
www.reaveley.com


OWNER INFORMATION

State of Utah
Department of Administrative Services

Division of Facilities Construction & Management
4110 State Office Building
Salt Lake City, Utah 84114
Phone: (801) 538 - 3018
Fax: (801) 538 - 3267

Internet: http://www.dfcm.utah.gov

PROJECT DESCRIPTION

# LIFE SCIENCES RESEARCH CENTER
UTAH STATE UNIVERSITY

USTAR BUILDING #2
LOGAN, UTAH

SHEET NAME:

PARTIAL MAT FOOTING REINFORCING PLAN - AREA B - TOP

REVISIONS

| MARK | DATE | DESCRIPTION |
|---|---|---|

ISSUE DATA

| | |
|---|---|
| ISSUE DATE: | DEC. 9, 2008 |
| ISSUE TYPE: | B.P. #2 REVIEW |
| DRAWN BY: | R. HARRIS |
| CHECKED BY: | J. MILLER / C.PRICE |
| CAD FILE NAME: | |
| DFCM PROJECT # | 06292770 |
| STATE PROPERTY # | - |
| COPYRIGHT: | STATE OF UTAH |

SHEET NUMBER:

SB101B-T

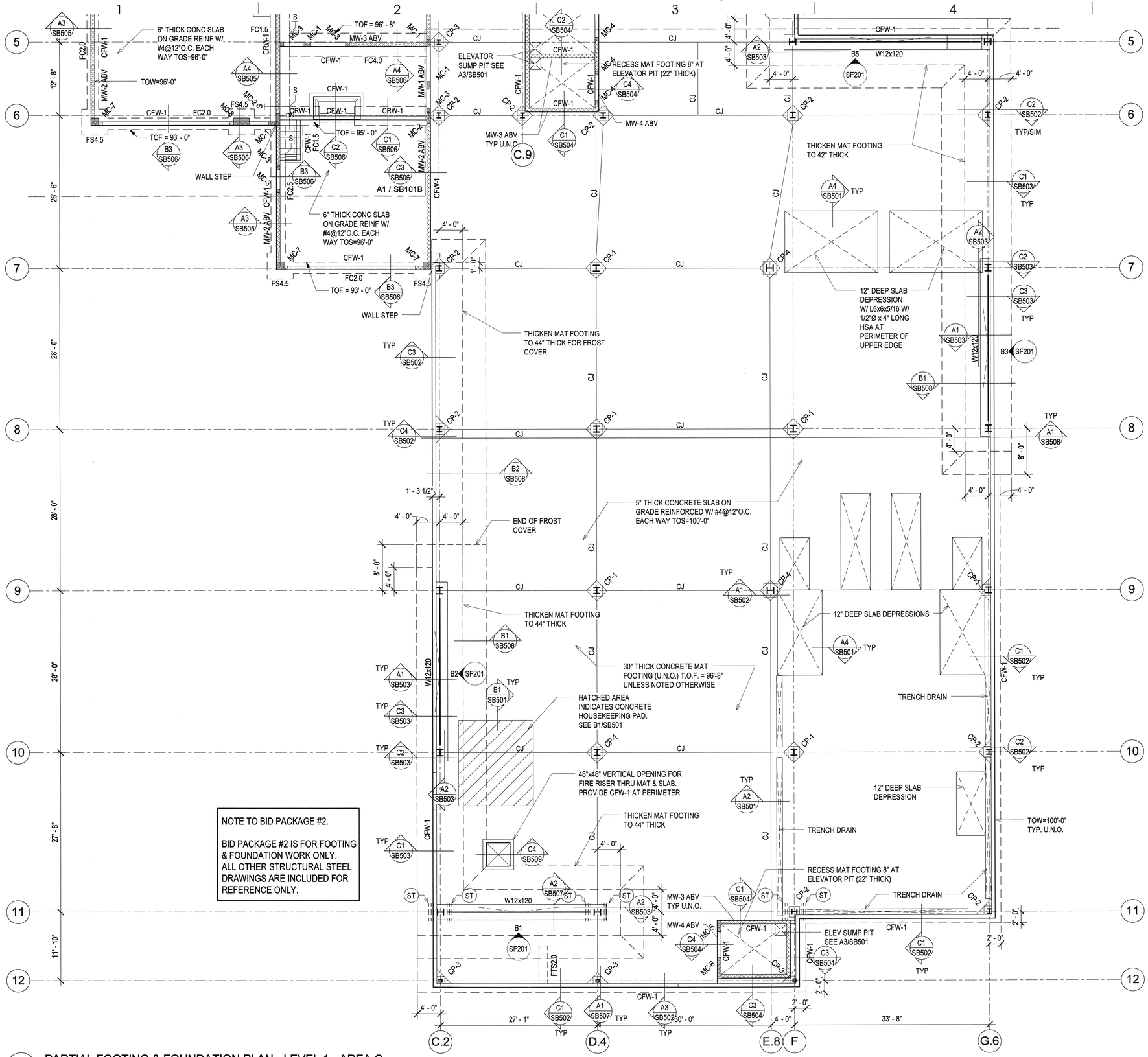


NOTE TO BID PACKAGE #2.

BID PACKAGE #2 IS FOR FOOTING & FOUNDATION WORK ONLY. ALL OTHER STRUCTURAL STEEL DRAWINGS ARE INCLUDED FOR REFERENCE ONLY.

A1 SB101C — PARTIAL FOOTING & FOUNDATION PLAN - LEVEL 1 - AREA C

SCALE: 1/8" = 1'-0"

## FOOTING & FOUNDATION PLAN LEGEND

- FOOTING STEP
- FOOTING - CONTINUOUS
- FOOTING - THICKENED SLAB
- FOOTING - SQUARE FOOTING - RECTANGULAR FOOTING - MAT FOOTING
- CONCRETE WALL, CONCRETE FOUNDATION WALL, OR CONCRETE RETAINING WALL
- CONCRETE FOUNDATION WALL - RECESSED
- CONCRETE PIER IN CONCRETE WALL. TOP OF PIER RECESSED 8" BELOW SLAB. TYP U.N.O.
- CONCRETE COLUMN
- CONCRETE JAMB COLUMN POURED MONOLITHIC WITH CONCRETE WALL
- MASONRY WALL
- MASONRY WALL - RECESSED
- MASONRY COLUMN IN MASONRY WALL
- STEEL COLUMN - TUBE
- STEEL COLUMN - WIDE FLANGE
- STEEL COLUMN - PIPE
- STEEL BRACED FRAME - ABOVE
- SLAB BLOCK-OUT AT COLUMN
- CJ — SLAB CONTROL/ CONSTRUCTION JOINT
- SPECIAL SLAB AREA
- 0" — CHANGE IN ELEVATION
- RECESSED/ DEPRESSED SLAB
- OPENING

## FOOTING & FOUNDATION PLAN NOTES

1. SEE ARCHITECTURAL, CIVIL AND LANDSCAPE DRAWINGS FOR EXTERIOR CONCRETE WORK AT DOORS, SIDEWALKS ETC.
2. SEE ARCHITECTURAL DRAWINGS AND FINISH SCHEDULE FOR SLAB AREAS TO RECEIVE FLOOR TILE.
3. SEE ARCHITECTURAL DRAWINGS FOR SLAB DEPRESSIONS AND SLOPES TO DRAINS, ETC.
4. SEE ARCHITECTURAL, CIVIL AND LANDSCAPE DRAWINGS FOR ADDITIONAL EXTERIOR CONCRETE RETAINING AND / OR SITE WALLS NOT SHOWN ON THE STRUCTURAL DRAWINGS.
5. SEE C1/SBSB501 FOR TYPICAL CONCRETE FOOTING STEP DETAIL.
6. SEE C2/SB501 FOR TYPICAL REINFORCEMENT AT WALL CORNERS AND INTERSECTIONS.
7. SEE C3/SB501 FOR TYPICAL DETAIL AT SLAB JOINTS IN CONCRETE SLABS ON GRADE.
8. SEE C4/SB501 FOR TYPICAL DETAIL AT DEPRESSED CONCRETE SLABS ON GRADE.
9. SEE A1/SB501 FOR REINFORCEMENT AT DISCONTINUOUS CONSTRUCTION / CONTROL JOINTS IN CONCRETE SLAB ON GRADE.
10. (ST) INDICATES SHEAR REINFORCING SEE C4/SB508

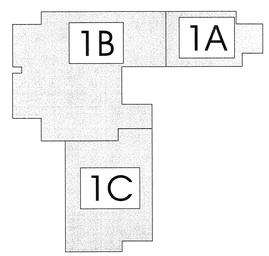


Key Plan

ARCHITECT 0818

ajc architects

703 east 1700 south
salt lake city, utah 84105
ph: 801.466.8818
fx: 801.466.4411
www.ajcarchitects.com

PAYETTE

285 Summer Street
Boston, MA 02210-1522
www.payette.com

REAVELEY
ENGINEERS + ASSOCIATES
Consulting Structural Engineers
P: 801.486.3883
F: 801.485.0911
675 E. 500 S. Suite 400
Salt Lake City, Utah 84102
www.reaveley.com

OWNER INFORMATION

State of Utah
Department of Administrative Services

Division of Facilities Construction & Management
4110 State Office Building
Salt Lake City, Utah 84114
Phone: (801) 538 - 3018
Fax: (801) 538 - 3267

Internet: http://www.dfcm.utah.gov

PROJECT DESCRIPTION

# LIFE SCIENCES RESEARCH CENTER
## UTAH STATE UNIVERSITY

USTAR BUILDING #2
LOGAN, UTAH

SHEET NAME:

PARTIAL FOOTING & FOUNDATION PLAN - AREA C

REVISIONS

| MARK | DATE | DESCRIPTION |
|---|---|---|

ISSUE DATA

| | |
|---|---|
| ISSUE DATE: | DEC. 9, 2008 |
| ISSUE TYPE: | B.P. #2 REVIEW |
| DRAWN BY: | R. HARRIS |
| CHECKED BY: | J. MILLER / C.PRICE |
| CAD FILE NAME: | |
| DFCM PROJECT # | 06292770 |
| STATE PROPERTY # | - |
| COPYRIGHT: | STATE OF UTAH |

SHEET NUMBER:

SB101C

A1 SB101C-B PARTIAL MAT FOOTING PLAN - BOTTOM - AREA C

SCALE: 1/8" = 1'-0"

NOTE TO BID PACKAGE #2.

BID PACKAGE #2 IS FOR FOOTING & FOUNDATION WORK ONLY. ALL OTHER STRUCTURAL STEEL DRAWINGS ARE INCLUDED FOR REFERENCE ONLY.


ARCHITECT 0818

ajc architects

703 east 1700 south
salt lake city, utah 84105
ph: 801.466.8818
fx: 801.466.4411
www.ajcarchitects.com

PAYETTE

285 Summer Street
Boston, MA 02210-1522
www.payette.com

REAVELEY
ENGINEERS + ASSOCIATES
Consulting Structural Engineers

P: 801.486.3883
F: 801.485.0911

675 E. 500 S. Suite 400
Salt Lake City, Utah 84102
www.reaveley.com


OWNER INFORMATION

State of Utah
Department of Administrative Services

Division of Facilities
Construction & Management
4110 State Office Building
Salt Lake City, Utah 84114
Phone: (801) 538 - 3018
Fax: (801) 538 - 3267

Internet: http://www.dfcm.utah.gov

PROJECT DESCRIPTION

# LIFE SCIENCES RESEARCH CENTER
UTAH STATE UNIVERSITY

USTAR BUILDING #2
LOGAN, UTAH

SHEET NAME:

PARTIAL MAT FOOTING REINFORCING PLAN - AREA C - BOTTOM

REVISIONS

| MARK | DATE | DESCRIPTION |
|---|---|---|

ISSUE DATA

| | |
|---|---|
| ISSUE DATE: | DEC. 9, 2008 |
| ISSUE TYPE: | B.P. #2 REVIEW |
| DRAWN BY: | R. HARRIS |
| CHECKED BY: | J. MILLER / C.PRICE |
| CAD FILE NAME: | |
| DFCM PROJECT # | 06292770 |
| STATE PROPERTY # | - |
| COPYRIGHT: | STATE OF UTAH |

SHEET NUMBER:

SB101C-B

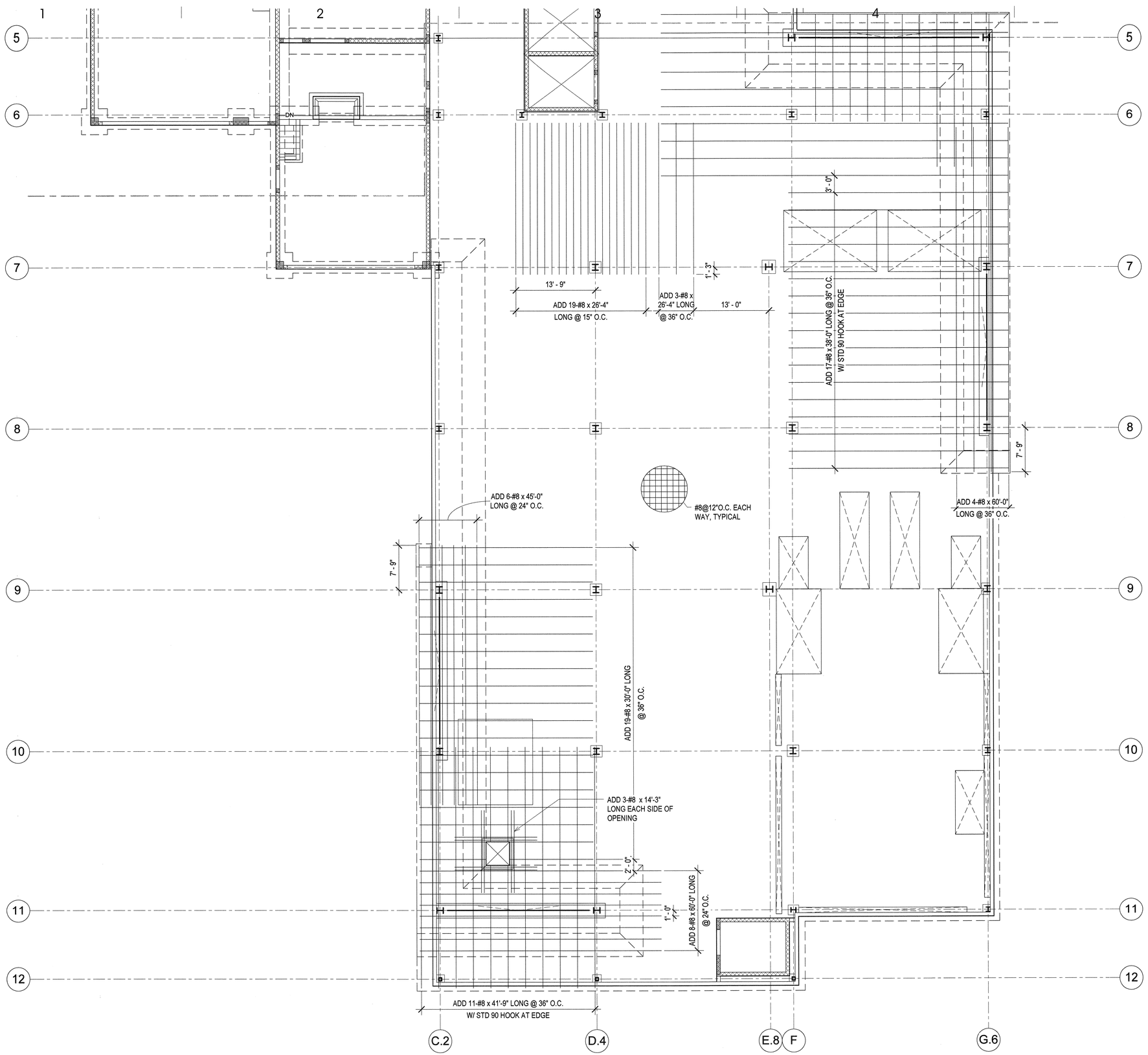


A1 PARTIAL MAT FOOTING PLAN - TOP - AREA C

SB101C-T SCALE: 1/8" = 1'-0"

NOTE TO BID PACKAGE #2.

BID PACKAGE #2 IS FOR FOOTING & FOUNDATION WORK ONLY. ALL OTHER STRUCTURAL STEEL DRAWINGS ARE INCLUDED FOR REFERENCE ONLY.


ARCHITECT 0818

ajc architects

703 east 1700 south
salt lake city, utah 84105
ph: 801.466.8818
fx: 801.466.4411
www.ajcarchitects.com

PAYETTE

285 Summer Street
Boston, MA 02210-1522
www.payette.com

REAVELEY
ENGINEERS + ASSOCIATES
Consulting Structural Engineers

P: 801.486.3883
F: 801.485.0911

675 E. 500 S. Suite 400
Salt Lake City, Utah 84102
www.reaveley.com


OWNER INFORMATION

State of Utah
Department of Administrative Services

Division of Facilities
Construction & Management
4110 State Office Building
Salt Lake City, Utah 84114
Phone: (801) 538 - 3018
Fax: (801) 538 - 3267

Internet: http://www.dfcm.utah.gov

PROJECT DESCRIPTION

# LIFE SCIENCES RESEARCH CENTER
UTAH STATE UNIVERSITY

USTAR BUILDING #2
LOGAN, UTAH

SHEET NAME:

PARTIAL MAT FOOTING REINFORCING PLAN - AREA C - TOP

REVISIONS

| MARK | DATE | DESCRIPTION |
|---|---|---|

ISSUE DATA

| | |
|---|---|
| ISSUE DATE: | DEC. 9, 2008 |
| ISSUE TYPE: | B.P. #2 REVIEW |
| DRAWN BY: | R. HARRIS |
| CHECKED BY: | J. MILLER / C.PRICE |
| CAD FILE NAME: | |
| DFCM PROJECT # | 06292770 |
| STATE PROPERTY # | - |
| COPYRIGHT: | STATE OF UTAH |

SHEET NUMBER:

SB101C-T

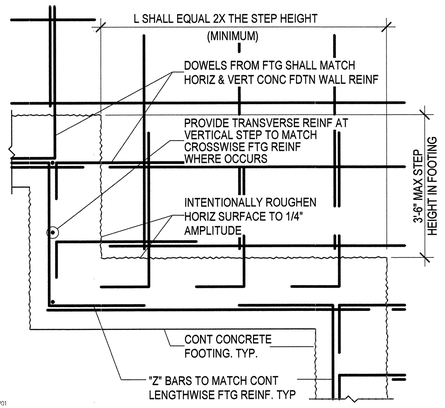


C1 SB501 TYPICAL STEP FOOTING DETAIL

NO SCALE

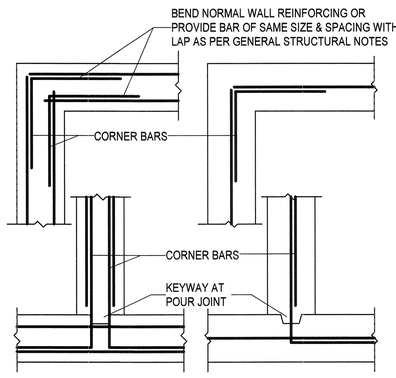


C2 SB501 PLAN VIEW - TYPICAL WALL CORNERS & INTERSECTION

NO SCALE

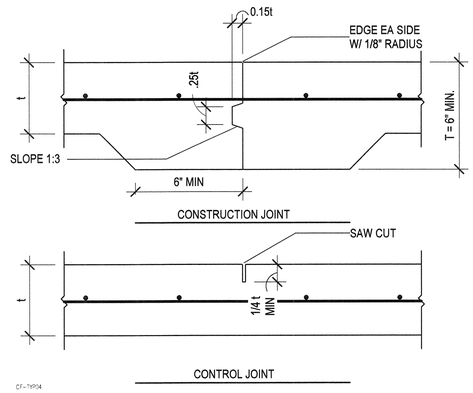


C3 SB501 TYPICAL SLAB JOINTS

NO SCALE

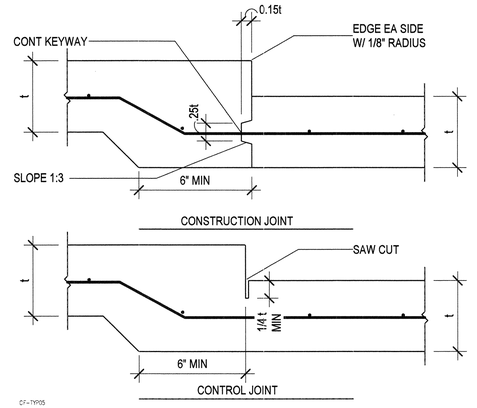


C4 SB501 TYP SLAB JOINTS AT DEPRESSED SLAB

NO SCALE

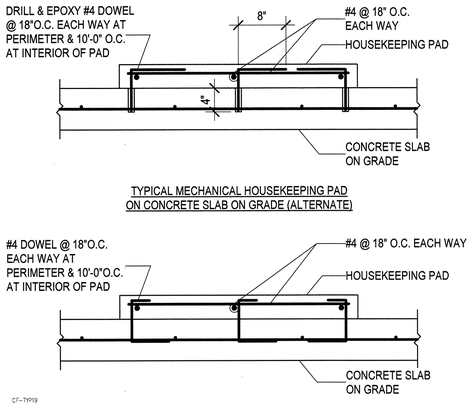


TYPICAL MECHANICAL HOUSEKEEPING PAD
ON CONCRETE SLAB ON GRADE (ALTERNATE)




B1 SB501 TYP MECHANICAL HOUSEKEEPING PAD ON CONCRETE SLAB ON GRADE

NO SCALE

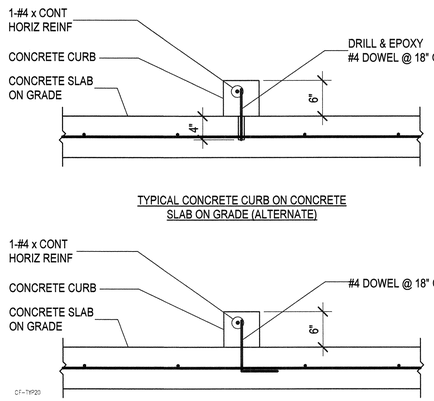


TYPICAL CONCRETE CURB ON CONCRETE
SLAB ON GRADE (ALTERNATE)




B2 SB501 TYPICAL CONCRETE CURB ON CONCRETE SLAB ON GRADE

NO SCALE

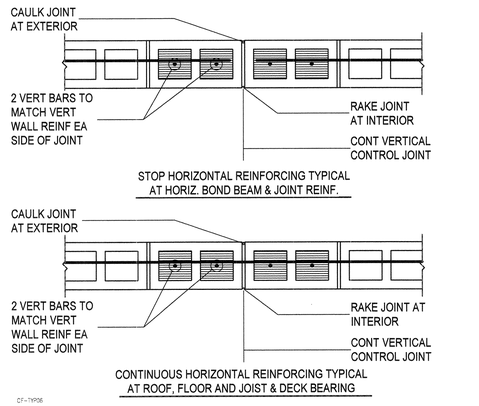


B3 SB501 TYPICAL CONTROL JOINTS IN 8" MASONRY WALLS

NO SCALE

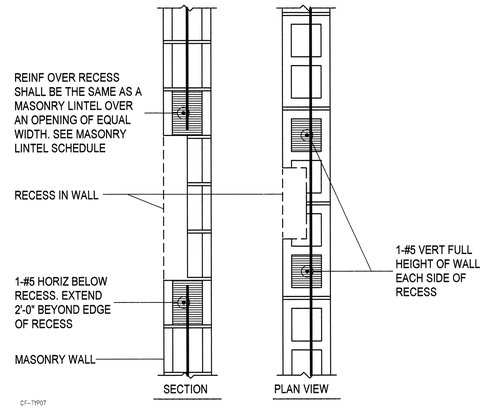


B4 SB501 TYPICAL RECESS IN 8" MASONRY WALL

NO SCALE

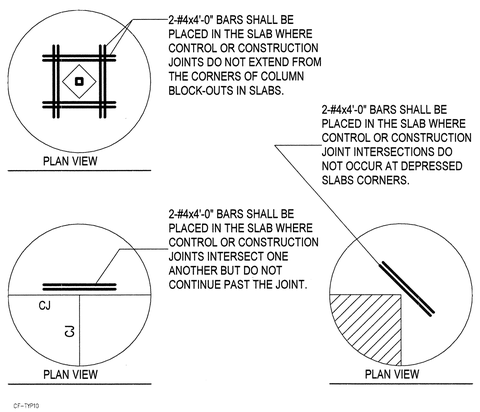


A1 SB501 TYPICAL SLAB REINF AT DISCONTINUOUS SLAB JOINTS

NO SCALE

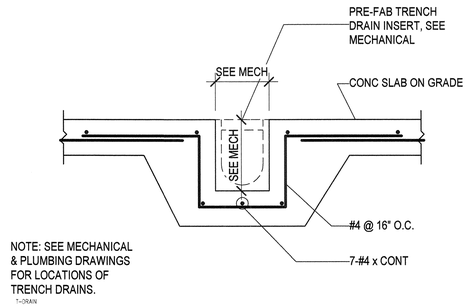


A2 SB501 TYPICAL TRENCH DRAIN IN CONCRETE SLAB ON GRADE

NO SCALE

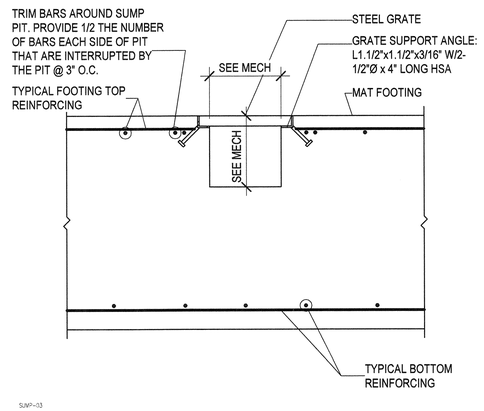


A3 SB501 TYPICAL SUMP PIT IN CONCRETE MAT FOOTING

NO SCALE

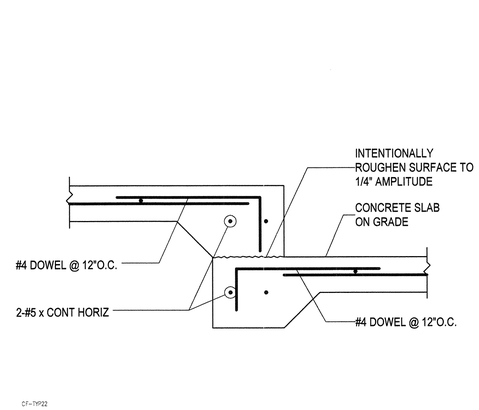


A4 SB501 TYPICAL 12" STEP IN CONCRETE SLAB ON GRADE

NO SCALE

ARCHITECT 0818

ajc architects

703 east 1700 south
salt lake city, utah 84105
ph: 801.466.8818
fx: 801.466.4411
www.ajcarchitects.com

PAYETTE

285 Summer Street
Boston, MA 02210-1522
www.payette.com

REAVELEY
ENGINEERS + ASSOCIATES
Consulting Structural Engineers
P: 801.486.3883
F: 801.485.0911
675 E. 500 S. Suite 400
Salt Lake City, Utah 84102
www.reaveley.com

OWNER INFORMATION

State of Utah
Department of Administrative Services
Division of Facilities Construction & Management
4110 State Office Building
Salt Lake City, Utah 84114
Phone: (801) 538 - 3018
Fax: (801) 538 - 3267
Internet: http://www.dfcm.utah.gov

PROJECT DESCRIPTION

LIFE SCIENCES RESEARCH CENTER
UTAH STATE UNIVERSITY

USTAR BUILDING #2
LOGAN, UTAH

SHEET NAME:

TYPICAL FOOTING & FOUNDATION DETAILS

REVISIONS

| MARK | DATE | DESCRIPTION |
|---|---|---|

ISSUE DATA

| | |
|---|---|
| ISSUE DATE: | DEC. 9, 2008 |
| ISSUE TYPE: | B.P. #2 REVIEW |
| DRAWN BY: | R. HARRIS |
| CHECKED BY: | J. MILLER / C.PRICE |
| CAD FILE NAME: | |
| DFCM PROJECT # | 06292770 |
| STATE PROPERTY # | - |
| COPYRIGHT: | STATE OF UTAH |

SHEET NUMBER:

SB501

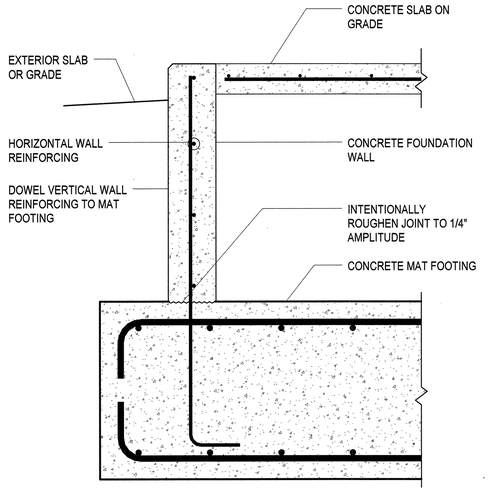


C1 / SB502 — TYPICAL CONCRETE FOUNDATION WALL ON CONCRETE MAT FOOTING

NO SCALE

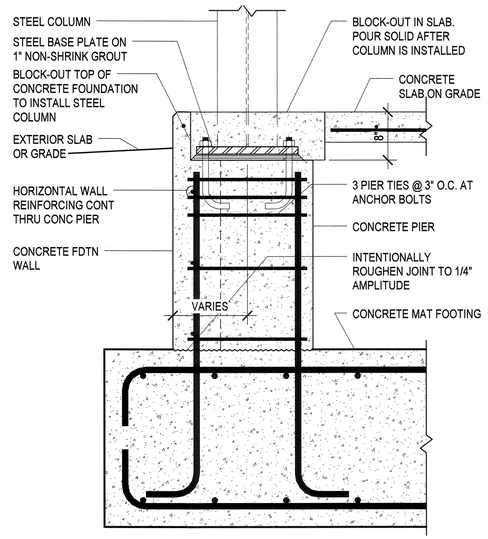


C2 / SB502 — TYPICAL STEEL COLUMN ON CONC. PIER AT MAT FOOTING

NO SCALE

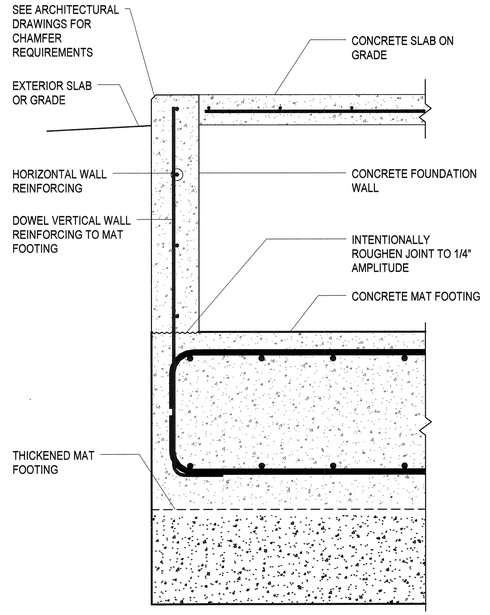


C3 / SB502 — TYPICAL CONCRETE FOUNDATION WALL ON CONCRETE MAT FOOTING

NO SCALE

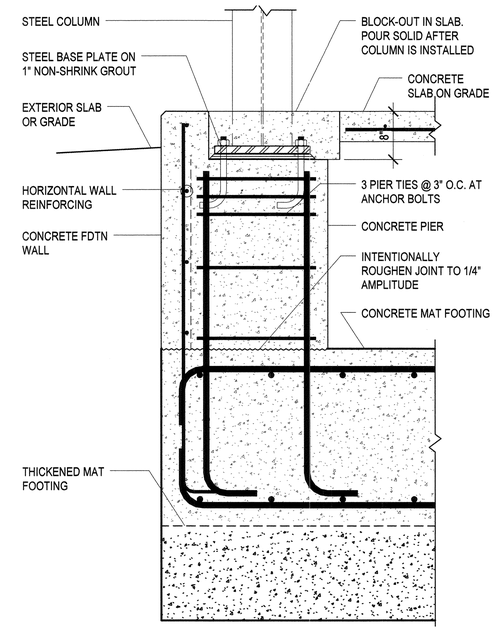


C4 / SB502 — TYPICAL STEEL COLUMN ON CONC. PIER AT MAT FOOTING

NO SCALE

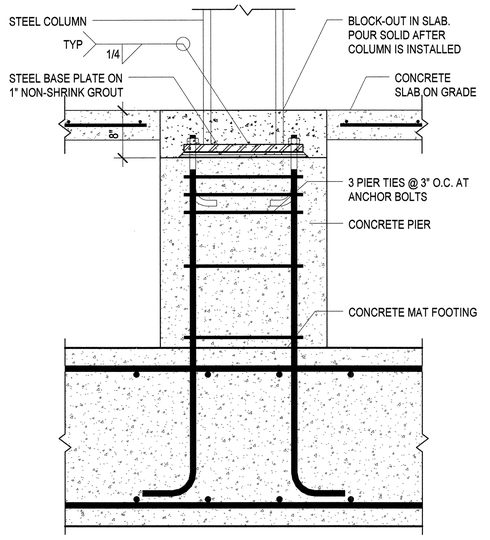


A1 / SB502 — TYPICAL STEEL COLUMN ON CONCRETE PIER AT MAT FOOTING

NO SCALE

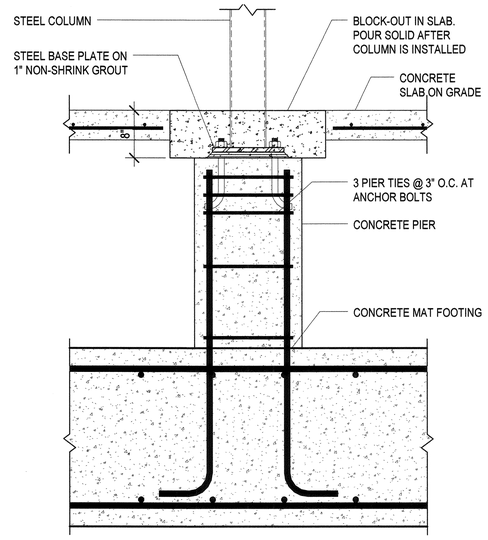


A2 / SB502 — TYPICAL STEEL COLUMN ON CONC. PIER AT MAT FOOTING

NO SCALE

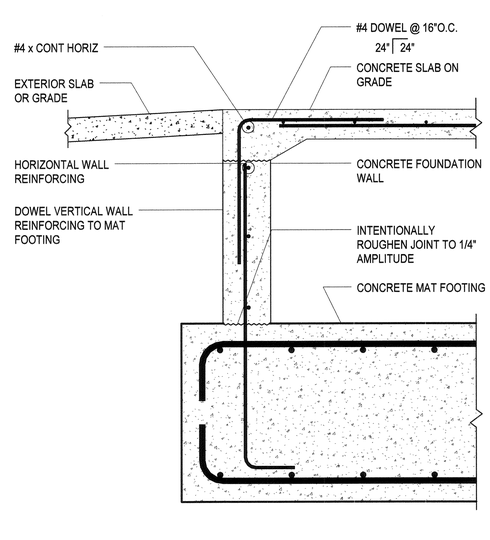


A3 / SB502 — TYPICAL CONCRETE FOUNDATION WALL AT DOOR OPENING

NO SCALE

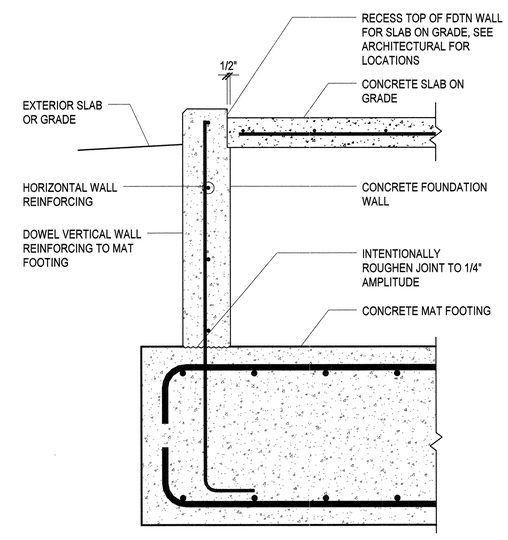


A4 / SB502 — CONCRETE FOUNDATION WALL ON MAT FOOTING W/ SLAB RECESS

NO SCALE

NOTE TO BID PACKAGE #2.

BID PACKAGE #2 IS FOR FOOTING & FOUNDATION WORK ONLY. ALL OTHER STRUCTURAL STEEL DRAWINGS ARE INCLUDED FOR REFERENCE ONLY.


ARCHITECT 0818

ajc architects

703 east 1700 south
salt lake city, utah 84105
ph: 801.466.8818
fx: 801.466.4411
www.ajcarchitects.com

PAYETTE

285 Summer Street
Boston, MA 02210-1522
www.payette.com

REAVELEY
ENGINEERS + ASSOCIATES
Consulting Structural Engineers
P: 801.486.3883
F: 801.485.0911
675 E. 500 S. Suite 400
Salt Lake City, Utah 84102
www.reaveley.com

OWNER INFORMATION

State of Utah
Department of Administrative Services

Division of Facilities Construction & Management
4110 State Office Building
Salt Lake City, Utah 84114
Phone: (801) 538 - 3018
Fax: (801) 538 - 3267

Internet: http://www.dfcm.utah.gov


PROJECT DESCRIPTION

LIFE SCIENCES RESEARCH CENTER
UTAH STATE UNIVERSITY

USTAR BUILDING #2
LOGAN, UTAH

SHEET NAME:

TYPICAL FOOTING & FOUNDATION DETAILS

REVISIONS

| MARK | DATE | DESCRIPTION |
|---|---|---|

ISSUE DATA

| | |
|---|---|
| ISSUE DATE: | DEC. 9, 2008 |
| ISSUE TYPE: | B.P. #2 REVIEW |
| DRAWN BY: | R. HARRIS |
| CHECKED BY: | J. MILLER / C.PRICE |
| CAD FILE NAME: | |
| DFCM PROJECT # | 06292770 |
| STATE PROPERTY # | - |
| COPYRIGHT: | STATE OF UTAH |

SHEET NUMBER:

SB502

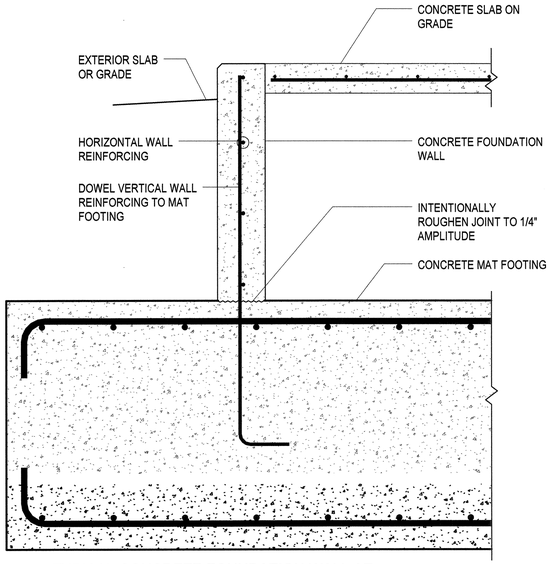


C1 / SB503 — TYPICAL CONCRETE FOUNDATION WALL AT THICKENED MAT FOOTING

NO SCALE

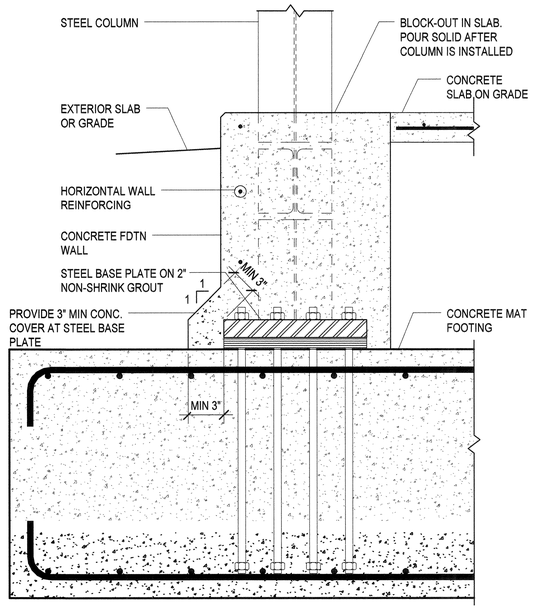


C2 / SB503 — TYPICAL BRACED FRAME STEEL COLUMN ON CONCRETE MAT FOOTING

NO SCALE

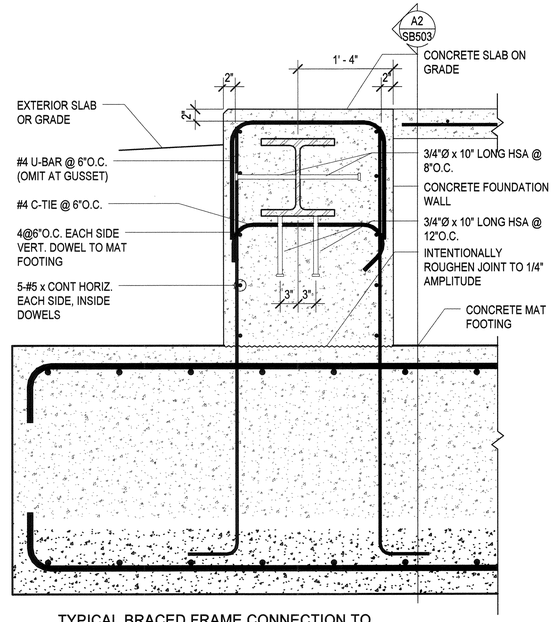


C3 / SB503 — TYPICAL BRACED FRAME CONNECTION TO CONCRETE MAT FOOTING

NO SCALE

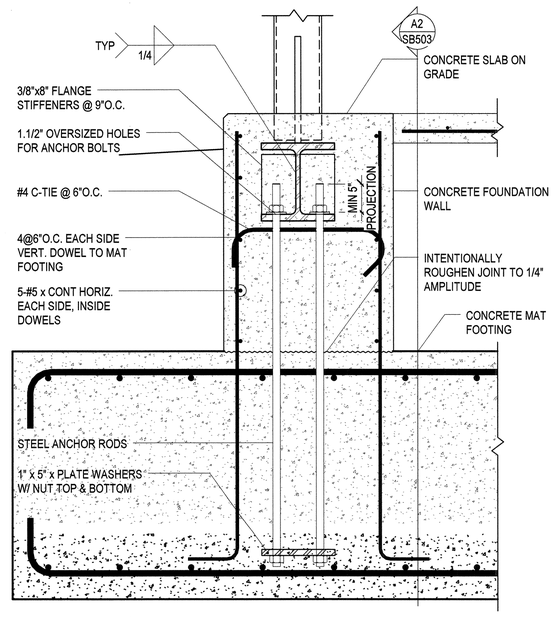


A1 / SB503 — TYPICAL BRACED FRAME CONNECTION TO CONCRETE MAT FOOTING

NO SCALE

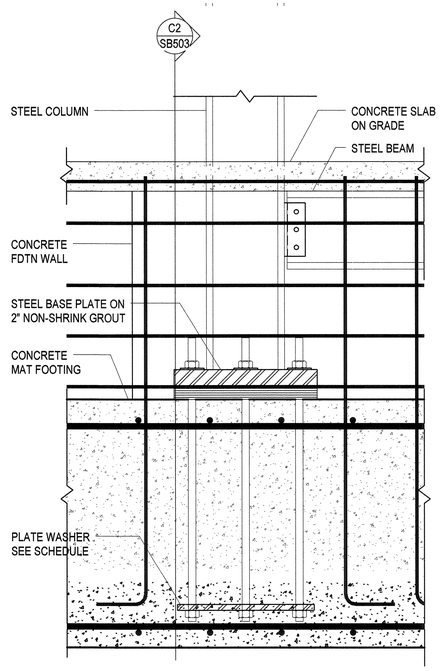


A2 / SB503 — TYPICAL BRACED FRAME CONNECTION TO CONCRETE MAT FOOTING

NO SCALE

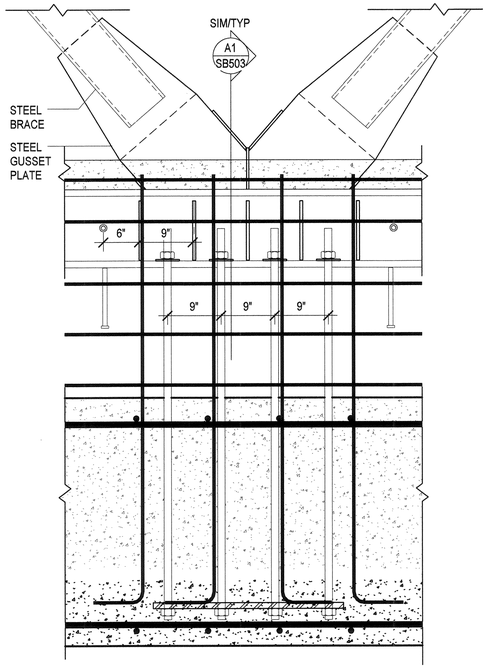


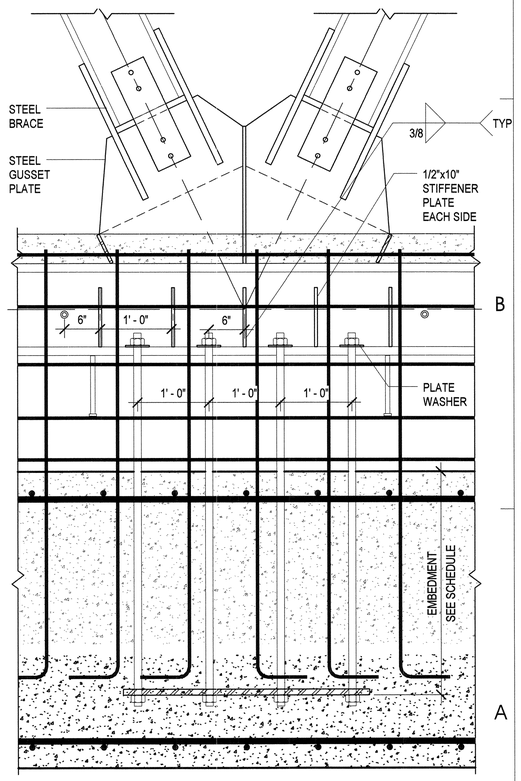


A4 / SB503 — STEEL BRACE CONNECTION AT MAT FOOTING

NO SCALE

NOTE TO BID PACKAGE #2.

BID PACKAGE #2 IS FOR FOOTING & FOUNDATION WORK ONLY. ALL OTHER STRUCTURAL STEEL DRAWINGS ARE INCLUDED FOR REFERENCE ONLY.


ARCHITECT 0818

ajc architects

703 east 1700 south
salt lake city, utah 84105
ph: 801.466.8818
fx: 801.466.4411
www.ajcarchitects.com

PAYETTE

285 Summer Street
Boston, MA 02210-1522
www.payette.com

REAVELEY
ENGINEERS + ASSOCIATES
Consulting Structural Engineers

P: 801.486.3883
F: 801.485.0911

675 E. 500 S. Suite 400
Salt Lake City, Utah 84102
www.reaveley.com


OWNER INFORMATION

State of Utah
Department of Administrative Services

DFCM

Division of Facilities Construction & Management
4110 State Office Building
Salt Lake City, Utah 84114
Phone: (801) 538 - 3018
Fax: (801) 538 - 3267

Internet: http://www.dfcm.utah.gov

PROJECT DESCRIPTION

# LIFE SCIENCES RESEARCH CENTER
UTAH STATE UNIVERSITY

USTAR BUILDING #2
LOGAN, UTAH

SHEET NAME:

## TYPICAL FOOTING & FOUNDATION DETAILS

REVISIONS

| MARK | DATE | DESCRIPTION |
|---|---|---|

ISSUE DATA

| | |
|---|---|
| ISSUE DATE: | DEC. 9, 2008 |
| ISSUE TYPE: | B.P. #2 REVIEW |
| DRAWN BY: | R. HARRIS |
| CHECKED BY: | J. MILLER / C.PRICE |
| CAD FILE NAME: | |
| DFCM PROJECT # | 06292770 |
| STATE PROPERTY # | - |
| COPYRIGHT: | STATE OF UTAH |

SHEET NUMBER:

# SB503

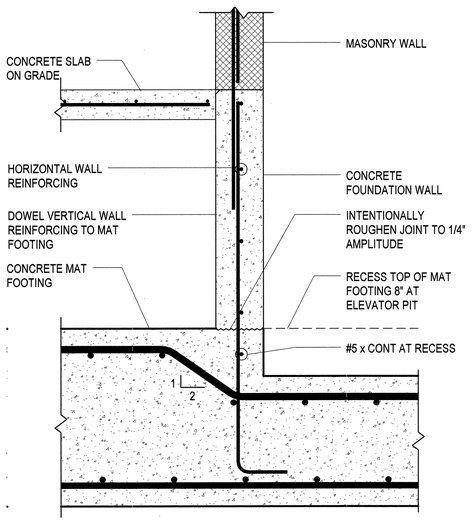


C1 / SB504 — TYPICAL ELAVATOR PIT DETAIL
NO SCALE

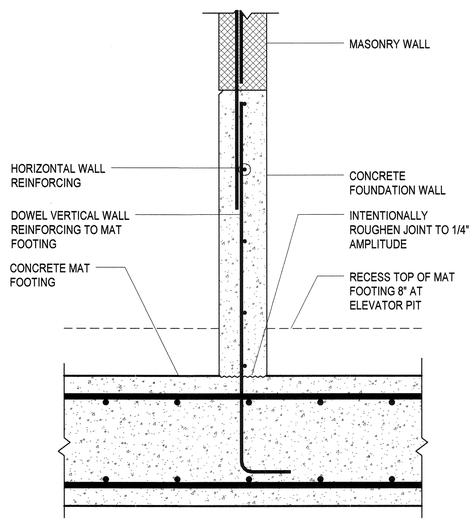


C2 / SB504 — TYPICAL ELEVATOR PIT DETAIL
NO SCALE

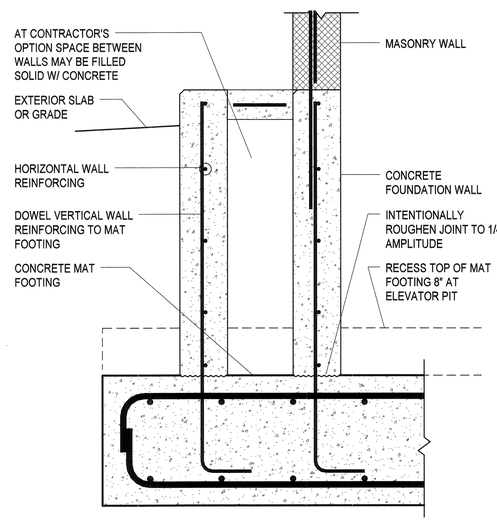


C3 / SB504 — ELEVATOR PIT DETAIL
NO SCALE

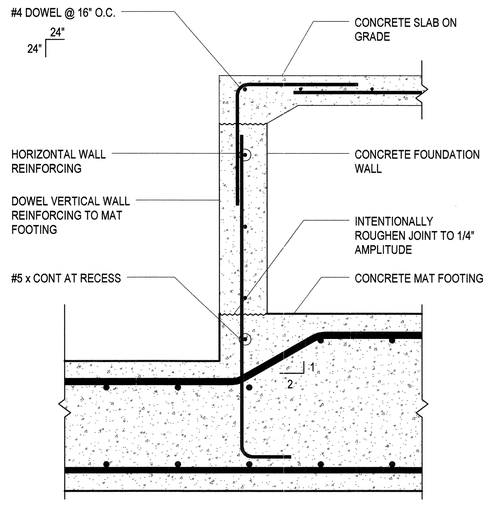


C4 / SB504 — CONCRETE FOUNDATION WALL AT ELEVATOR DOOR OPENING
NO SCALE

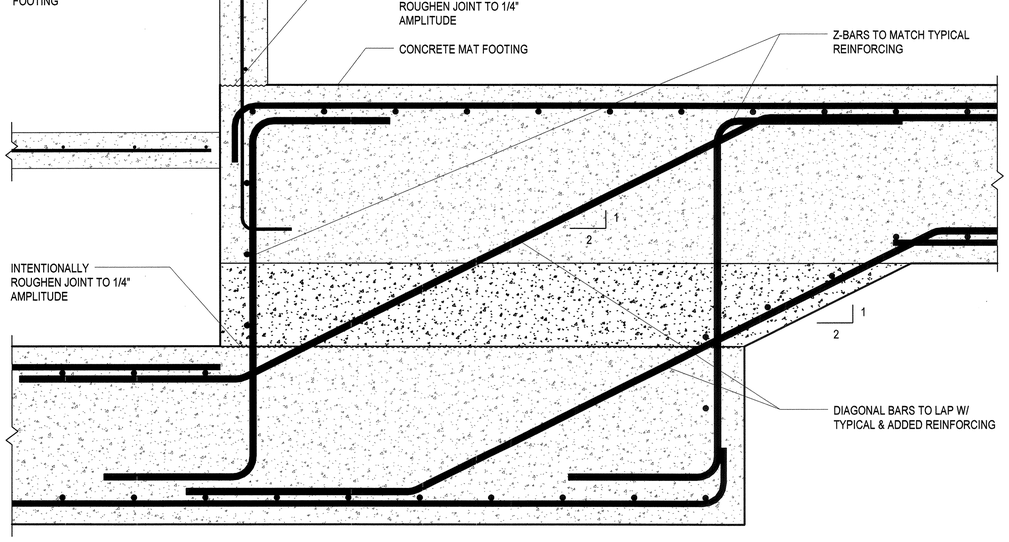


A1 / SB504 — MAT FOOTING STEP AT MECHANICAL ROOM
NO SCALE

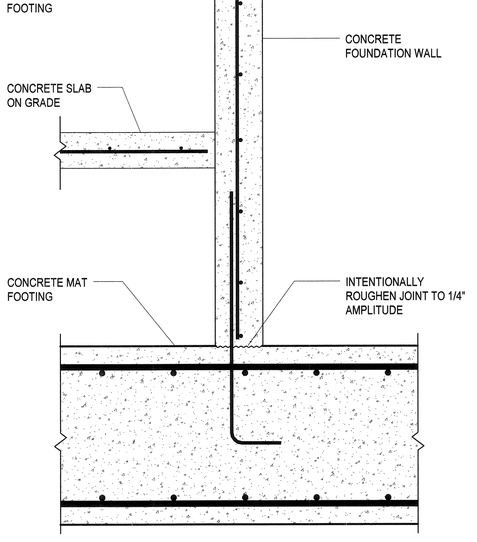


A3 / SB504 — CONCRETE FOUNDATION WALL AT MECHANICAL ROOM
NO SCALE

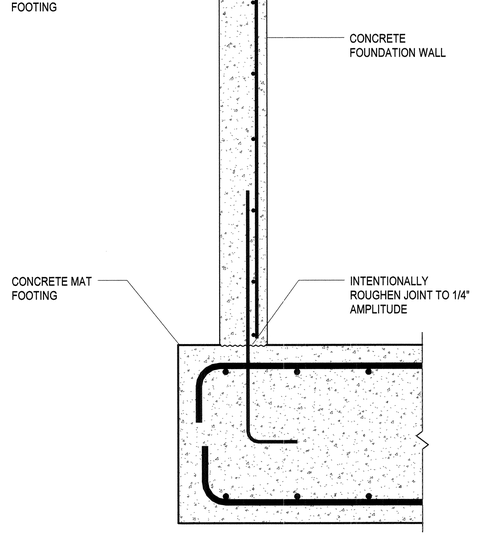


A4 / SB504 — CONCRETE FOUNDATION WALL AT MAT FOOTING
NO SCALE

ARCHITECT 0818
ajc architects
703 east 1700 south
salt lake city, utah 84105
ph: 801.466.8818
fx: 801.466.4411
www.ajcarchitects.com

PAYETTE
285 Summer Street
Boston, MA 02210-1522
www.payette.com

REAVELEY
ENGINEERS + ASSOCIATES
Consulting Structural Engineers
P: 801.486.3883
F: 801.485.0911
675 E. 500 S. Suite 400
Salt Lake City, Utah 84102
www.reaveley.com

OWNER INFORMATION
State of Utah
Department of Administrative Services
Division of Facilities Construction & Management
4110 State Office Building
Salt Lake City, Utah 84114
Phone: (801) 538 - 3018
Fax: (801) 538 - 3267
Internet: http://www.dfcm.utah.gov

PROJECT DESCRIPTION
LIFE SCIENCES RESEARCH CENTER
UTAH STATE UNIVERSITY

USTAR BUILDING #2
LOGAN, UTAH

SHEET NAME:
TYPICAL FOOTING & FOUNDATION DETAILS

REVISIONS

| MARK | DATE | DESCRIPTION |
|---|---|---|

ISSUE DATA

| | |
|---|---|
| ISSUE DATE: | DEC. 9, 2008 |
| ISSUE TYPE: | B.P. #2 REVIEW |
| DRAWN BY: | R. HARRIS |
| CHECKED BY: | J. MILLER / C.PRICE |
| CAD FILE NAME: | |
| DFCM PROJECT # | 06292770 |
| STATE PROPERTY # | - |
| COPYRIGHT: | STATE OF UTAH |

SHEET NUMBER:
SB504

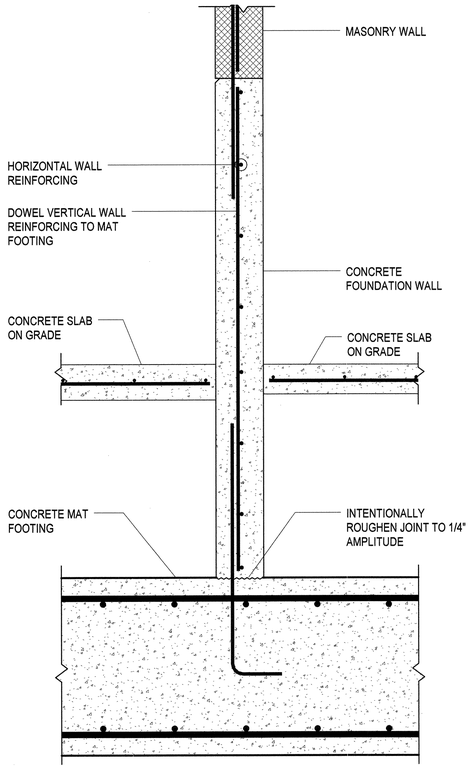


C1 SB505 CONCRETE FOUNDATION WALL AT MAT FOOTING
NO SCALE

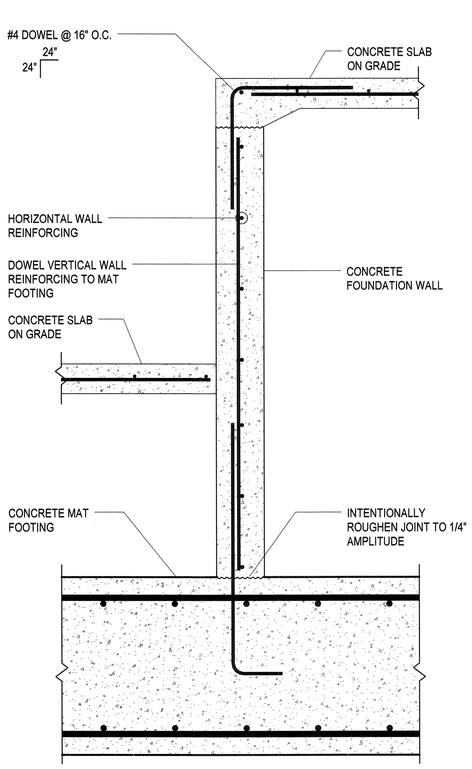


C2 SB505 CONCRETE FOUNDATION WALL AT MAT FOOTING
NO SCALE

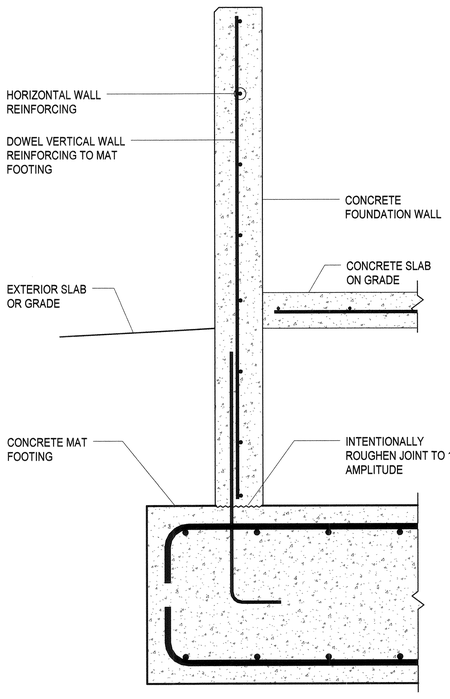


C3 SB505 CONCRETE FOUNDATION WALL AT MECHANICAL ROOM
NO SCALE

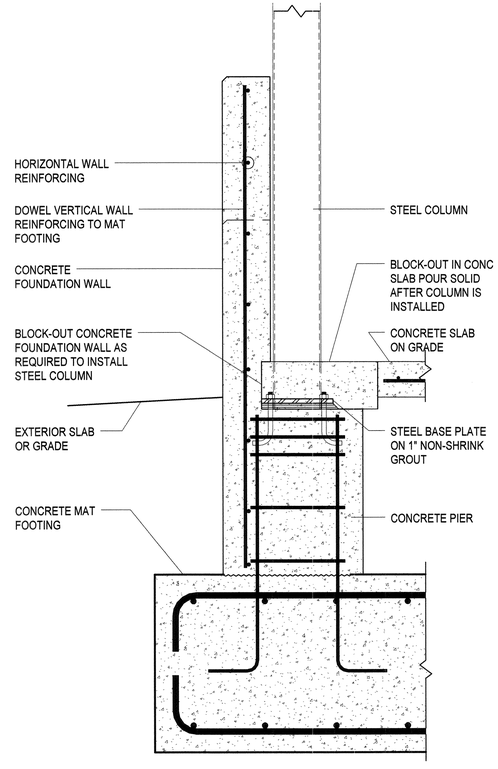


C4 SB505 CONCRETE FOUNDATION WALL W/ CONCRETE PIER AT MECHANICAL ROOM
NO SCALE

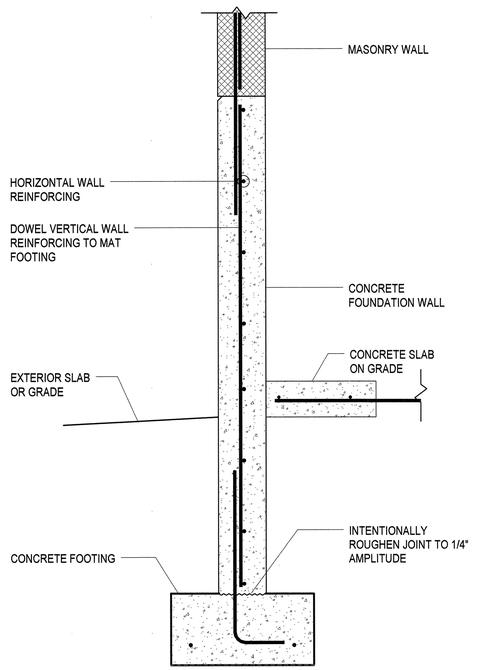


A1 SB505 CONCRETE FOUNDATION WALL AT MECHANICAL ROOM
NO SCALE

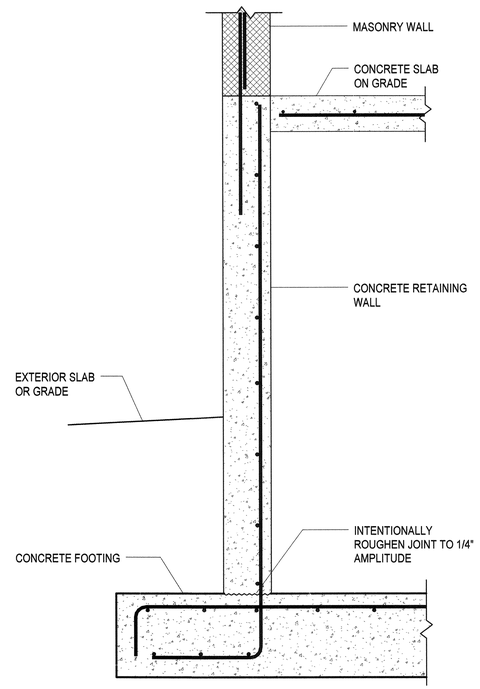


A2 SB505 TYPICAL CONCRETE FOUNDATION WALL AT DOCK
NO SCALE

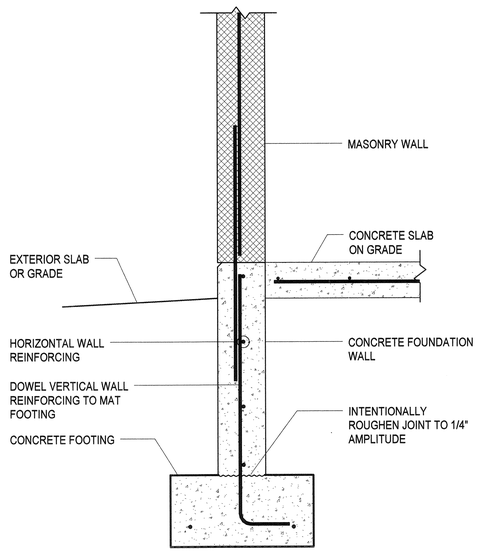


A3 SB505 TYPICAL CONCRETE FOUNDATION WALL AT DOCK W/ MASONRY ABOVE
NO SCALE

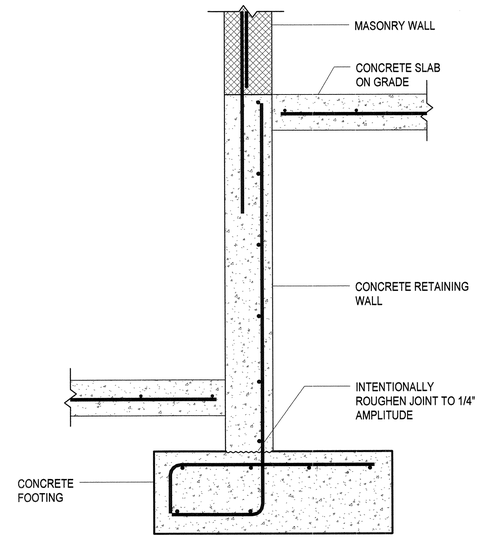


A4 SB505 TYPICAL CONCRETE FOUNDATION WALL AT DOCK
NO SCALE

ARCHITECT 0818
ajc architects
703 east 1700 south
salt lake city, utah 84105
ph: 801.466.8818
fx: 801.466.4411
www.ajcarchitects.com

PAYETTE
285 Summer Street
Boston, MA 02210-1522
www.payette.com

REAVELEY
ENGINEERS + ASSOCIATES
Consulting Structural Engineers
P: 801.486.3883
F: 801.485.0911
675 E. 500 S. Suite 400
Salt Lake City, Utah 84102
www.reaveley.com

OWNER INFORMATION
State of Utah
Department of Administrative Services
Division of Facilities Construction & Management
4110 State Office Building
Salt Lake City, Utah 84114
Phone: (801) 538 - 3018
Fax: (801) 538 - 3267
Internet: http://www.dfcm.utah.gov

PROJECT DESCRIPTION
LIFE SCIENCES RESEARCH CENTER
UTAH STATE UNIVERSITY

USTAR BUILDING #2
LOGAN, UTAH

SHEET NAME:
TYPICAL FOOTING & FOUNDATION DETAILS

REVISIONS

| MARK | DATE | DESCRIPTION |
|---|---|---|

ISSUE DATA

| | |
|---|---|
| ISSUE DATE: | DEC. 9, 2008 |
| ISSUE TYPE: | B.P. #2 REVIEW |
| DRAWN BY: | R. HARRIS |
| CHECKED BY: | J. MILLER / C.PRICE |
| CAD FILE NAME: | |
| DFCM PROJECT # | 06292770 |
| STATE PROPERTY # | - |
| COPYRIGHT: | STATE OF UTAH |

SHEET NUMBER:
SB505

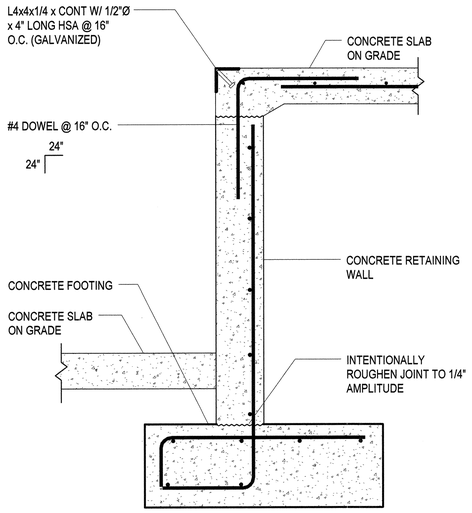


C1 SB506 TYPICAL CONCRETE FOUNDATION WALL AT DOCK

NO SCALE

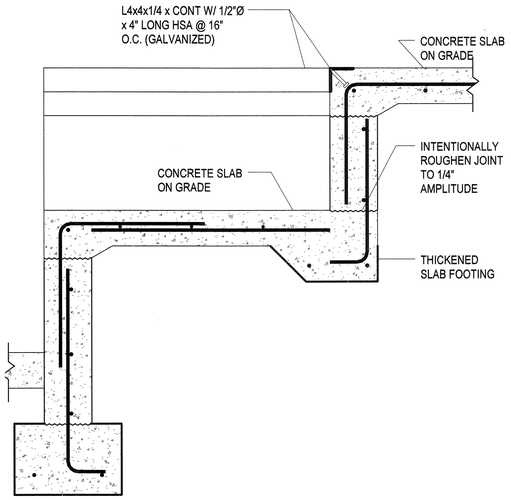


C2 SB506 TYPICAL DOCK LEVELER PIT DETAIL

NO SCALE

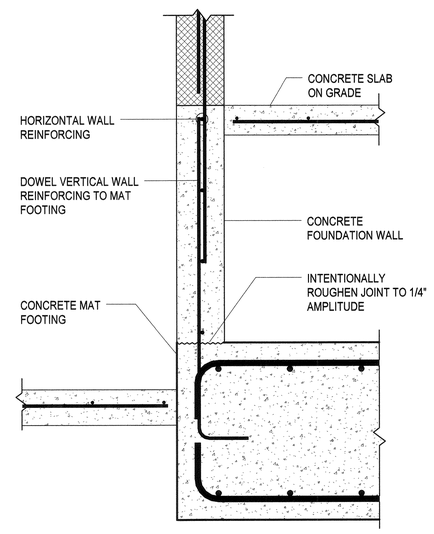


C3 SB506 BUILDING MAT FOOTING AT DOCK SLAB

NO SCALE

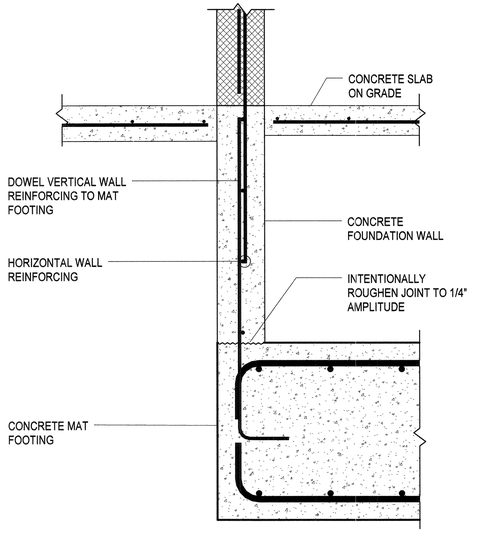


C4 SB506 BUILDING MAT FOOTING AT DOCK SLAB

NO SCALE

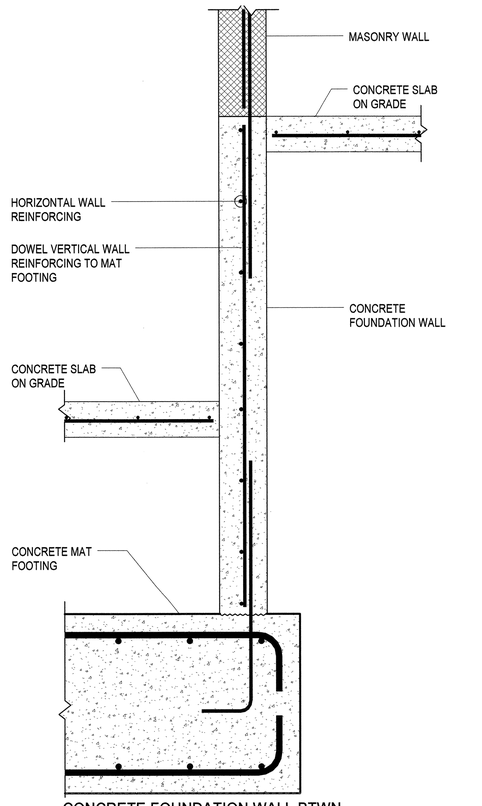


A1 SB506 CONCRETE FOUNDATION WALL BTWN MECHANICAL ROOM AND DOCK

NO SCALE

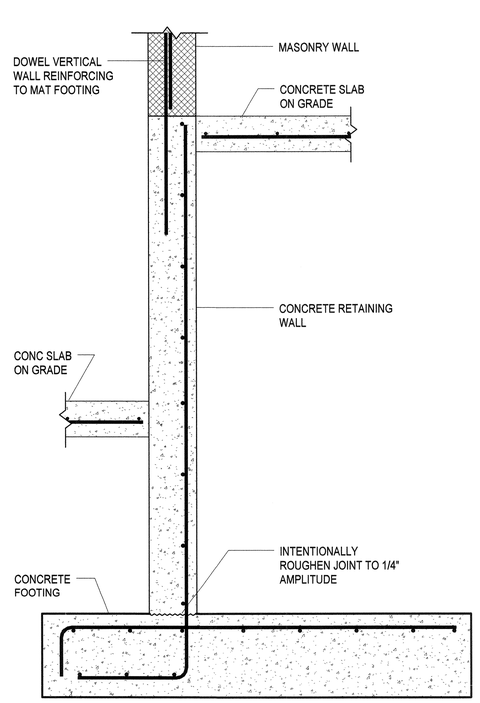


A2 SB506 TYPICAL MASONRY WALL ON CONCRETE RETAINING WALL

NO SCALE

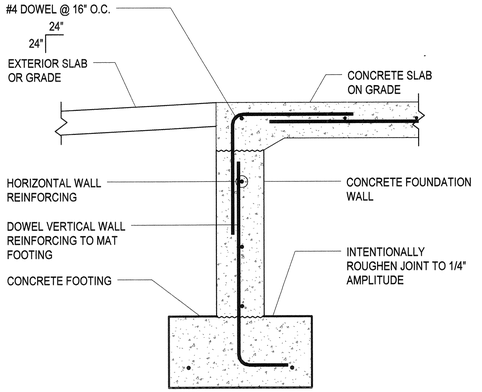


B3 SB506 TYPICAL CONCRETE FOUNDATION WALL AT FOOTING AT DOOR OPENING

NO SCALE

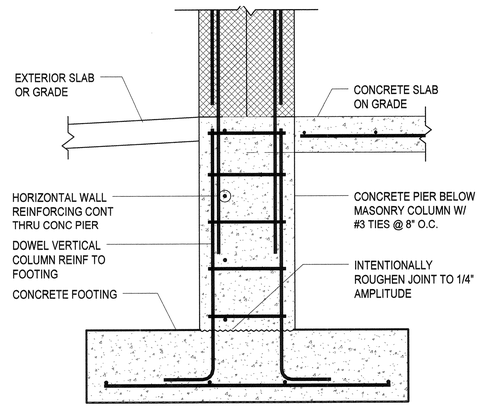


A3 SB506 TYPICAL MASONRY COLUMN ON CONCRETE PIER

NO SCALE

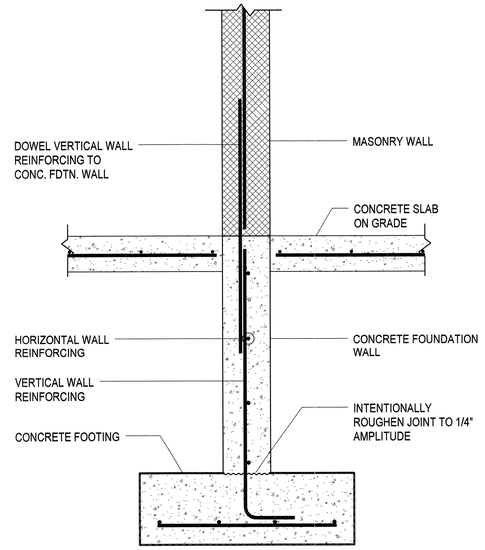


A4 SB506 TYPICAL MASONRY WALL ON CONCRETE FOUNDATION WALL

NO SCALE

NOTE TO BID PACKAGE #2.

BID PACKAGE #2 IS FOR FOOTING & FOUNDATION WORK ONLY. ALL OTHER STRUCTURAL STEEL DRAWINGS ARE INCLUDED FOR REFERENCE ONLY.


ARCHITECT 0818

ajc architects

703 east 1700 south
salt lake city, utah 84105
ph: 801.466.8818
fx: 801.466.4411
www.ajcarchitects.com

PAYETTE

285 Summer Street
Boston, MA 02210-1522
www.payette.com

REAVELEY
ENGINEERS + ASSOCIATES
Consulting Structural Engineers
P: 801.486.3883
F: 801.485.0911
675 E. 500 S. Suite 400
Salt Lake City, Utah 84102
www.reaveley.com


OWNER INFORMATION

State of Utah
Department of Administrative Services

Division of Facilities
Construction & Management
4110 State Office Building
Salt Lake City, Utah 84114
Phone: (801) 538 - 3018
Fax: (801) 538 - 3267

Internet: http://www.dfcm.utah.gov

PROJECT DESCRIPTION

LIFE SCIENCES
RESEARCH CENTER
UTAH STATE UNIVERSITY

USTAR BUILDING #2
LOGAN, UTAH

SHEET NAME:

TYPICAL FOOTING & FOUNDATION DETAILS

REVISIONS

| MARK | DATE | DESCRIPTION |
|---|---|---|

ISSUE DATA

| | |
|---|---|
| ISSUE DATE: | DEC. 9, 2008 |
| ISSUE TYPE: | B.P. #2 REVIEW |
| DRAWN BY: | R. HARRIS |
| CHECKED BY: | J. MILLER / C.PRICE |
| CAD FILE NAME: | |
| DFCM PROJECT # | 06292770 |
| STATE PROPERTY # | - |
| COPYRIGHT: | STATE OF UTAH |

SHEET NUMBER:

SB506

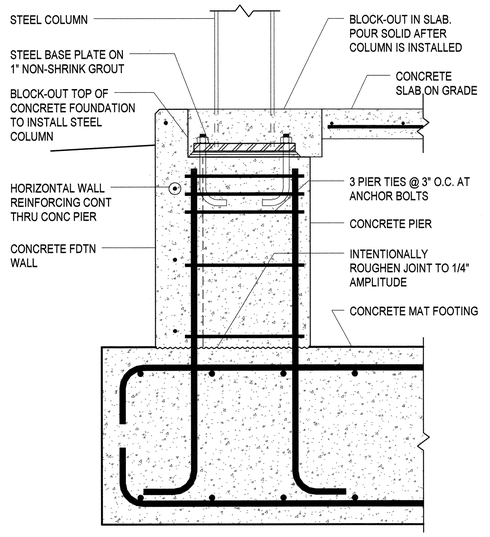


C1 / SB507 — TYPICAL STEEL COLUMN ON CONC. PIER AT MAT FOOTING

NO SCALE

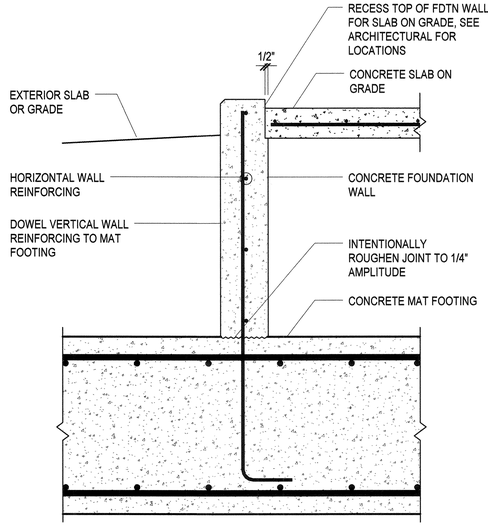


C2 / SB507 — TYPICAL CONCRETE FOUNDATION WALL ON CONCRETE MAT FOOTING

NO SCALE

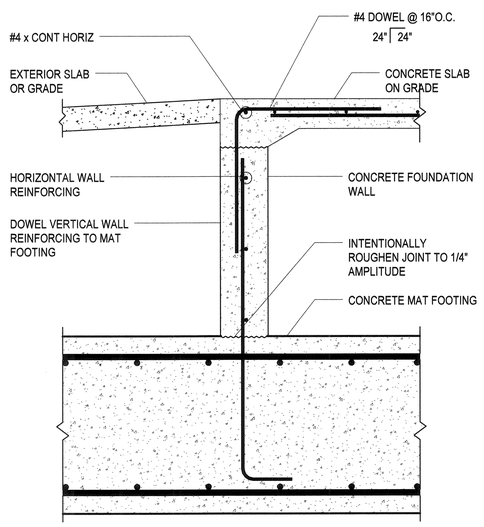


C3 / SB507 — TYPICAL CONCRETE FOUNDATION WALL AT DOOR OPENING

NO SCALE

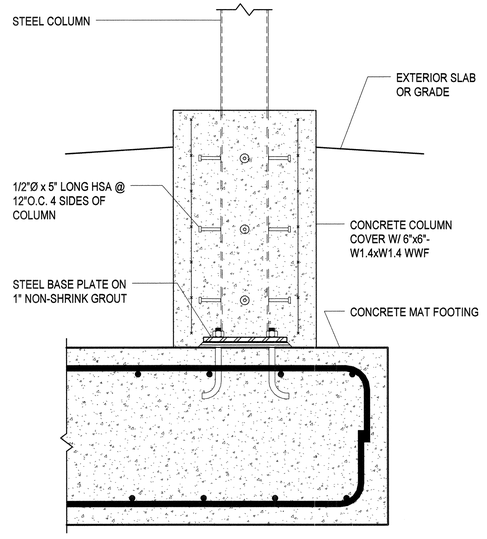


C4 / SB507 — TYPICAL STEEL COLUMN ON CONCRETE PIER

NO SCALE




A1 / SB507 — TYPICAL STEEL TUBE COLUMN ON CONCRETE PIER

NO SCALE




A2 / SB507 — TYPICAL BRACED FRAME BEAM AT CONCRETE WALL

NO SCALE




A3 / SB507 — TYPICAL BRACED FRAME BEAM AT CONCRETE WALL

NO SCALE

NOTE TO BID PACKAGE #2.

BID PACKAGE #2 IS FOR FOOTING & FOUNDATION WORK ONLY. ALL OTHER STRUCTURAL STEEL DRAWINGS ARE INCLUDED FOR REFERENCE ONLY.


ARCHITECT 0818

ajc architects

703 east 1700 south
salt lake city, utah 84105
ph: 801.466.8818
fx: 801.466.4411
www.ajcarchitects.com

PAYETTE

285 Summer Street
Boston, MA 02210-1522
www.payette.com

REAVELEY
ENGINEERS + ASSOCIATES
Consulting Structural Engineers

P: 801.486.3883
F: 801.485.0911

675 E. 500 S. Suite 400
Salt Lake City, Utah 84102
www.reaveley.com


OWNER INFORMATION

State of Utah
Department of Administrative Services

Division of Facilities Construction & Management
4110 State Office Building
Salt Lake City, Utah 84114
Phone: (801) 538 - 3018
Fax: (801) 538 - 3267

Internet: http://www.dfcm.utah.gov

PROJECT DESCRIPTION

# LIFE SCIENCES RESEARCH CENTER
## UTAH STATE UNIVERSITY

USTAR BUILDING #2
LOGAN, UTAH

SHEET NAME:

## TYPICAL FOOTING & FOUNDATION DETAILS

REVISIONS

| MARK | DATE | DESCRIPTION |
|---|---|---|

ISSUE DATA

| | |
|---|---|
| ISSUE DATE: | DEC. 9, 2008 |
| ISSUE TYPE: | B.P. #2 REVIEW |
| DRAWN BY: | R. HARRIS |
| CHECKED BY: | J. MILLER / C.PRICE |
| CAD FILE NAME: | |
| DFCM PROJECT # | 06292770 |
| STATE PROPERTY # | - |
| COPYRIGHT: | STATE OF UTAH |

SHEET NUMBER:

# SB507

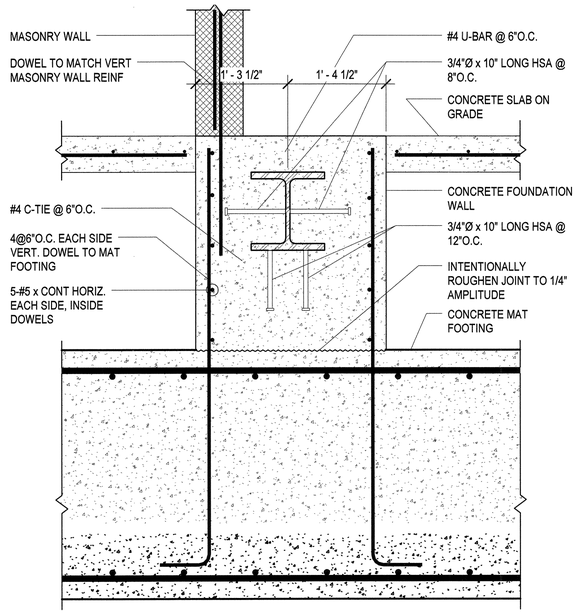


C1 / SB508 TYPICAL BRACED FRAME BEAM AT CONCRETE WALL
NO SCALE

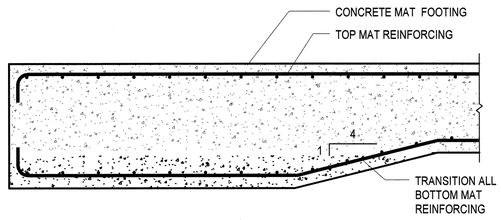


B1 / SB508 TYPICAL MAT FOOTING THICKNESS TRANSITION
NO SCALE

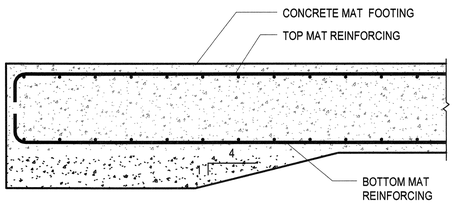


B2 / SB508 TYPICAL MAT FOOTING THICKNESS TRANSITION FOR FROST COVER
NO SCALE

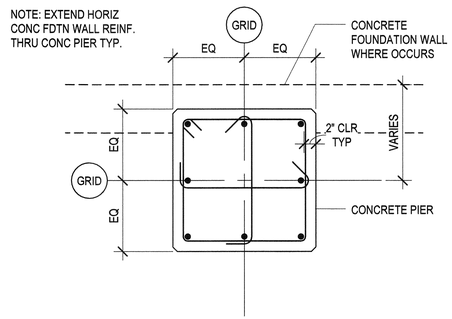


C2 / SB508 TYPICAL CONCRETE PIER DETAIL
NO SCALE

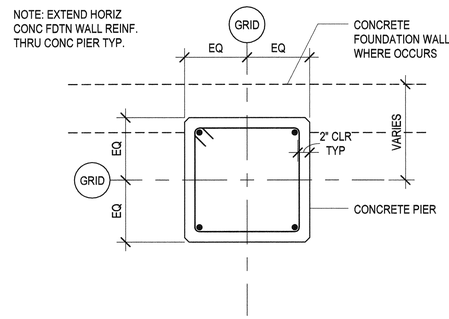


C3 / SB508 TYPICAL CONCRETE PIER DETAIL
NO SCALE

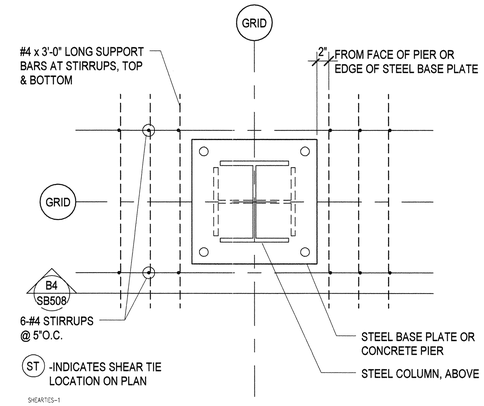


C4 / SB508 TYPICAL MAT FOOTING SHEAR REINFORCING
NO SCALE

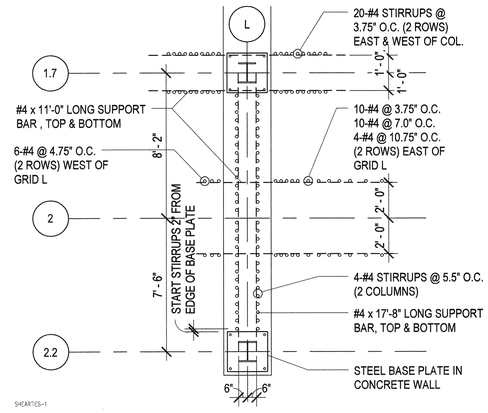


B3 / SB508 MAT FOOTING SHEAR REINFORCING AT GRID L
NO SCALE

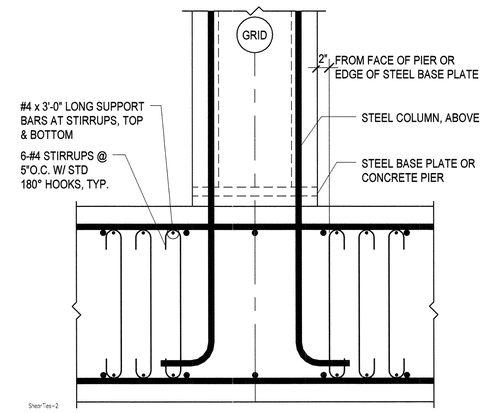


B4 / SB508 TYPICAL MAT FOOTING SHEAR REINFORCING
NO SCALE

NOTE TO BID PACKAGE #2.

BID PACKAGE #2 IS FOR FOOTING & FOUNDATION WORK ONLY. ALL OTHER STRUCTURAL STEEL DRAWINGS ARE INCLUDED FOR REFERENCE ONLY.

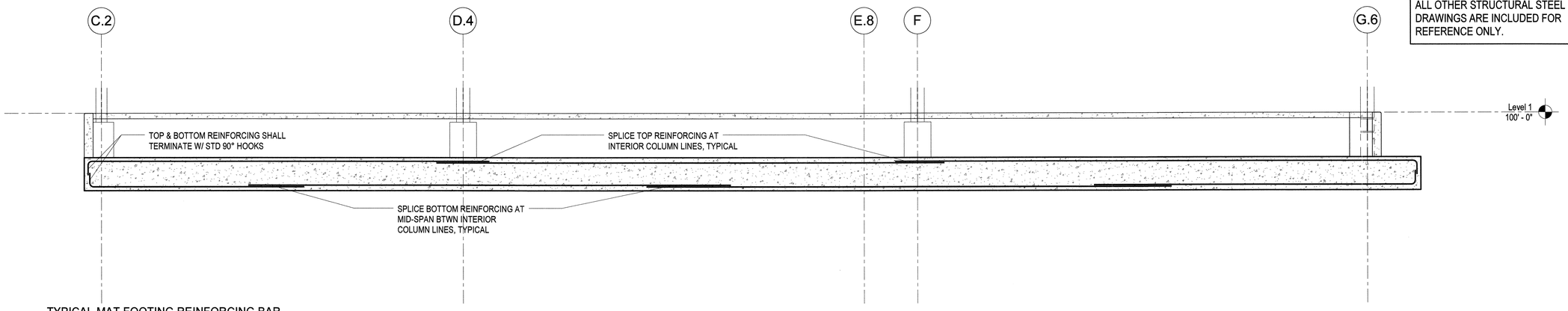


A1 / SB508 TYPICAL MAT FOOTING REINFORCING BAR SPLICE DIAGRAM
NO SCALE


ARCHITECT 0818

ajc architects

703 east 1700 south
salt lake city, utah 84105
ph: 801.466.8818
fx: 801.466.4411
www.ajcarchitects.com

PAYETTE

285 Summer Street
Boston, MA 02210-1522
www.payette.com

REAVELEY
ENGINEERS + ASSOCIATES
Consulting Structural Engineers
P: 801.486.3883
F: 801.485.0911
675 E. 500 S. Suite 400
Salt Lake City, Utah 84102
www.reaveley.com


OWNER INFORMATION

State of Utah
Department of Administrative Services

Division of Facilities Construction & Management
4110 State Office Building
Salt Lake City, Utah 84114
Phone: (801) 538 - 3018
Fax: (801) 538 - 3267

Internet: http://www.dfcm.utah.gov

PROJECT DESCRIPTION

LIFE SCIENCES RESEARCH CENTER
UTAH STATE UNIVERSITY

USTAR BUILDING #2
LOGAN, UTAH

SHEET NAME:

TYPICAL FOOTING & FOUNDATION DETAILS

REVISIONS

| MARK | DATE | DESCRIPTION |
|---|---|---|

ISSUE DATA

| | |
|---|---|
| ISSUE DATE: | DEC. 9, 2008 |
| ISSUE TYPE: | B.P. #2 REVIEW |
| DRAWN BY: | R. HARRIS |
| CHECKED BY: | J. MILLER / C.PRICE |
| CAD FILE NAME: | |
| DFCM PROJECT # | 06292770 |
| STATE PROPERTY # | - |
| COPYRIGHT: | STATE OF UTAH |

SHEET NUMBER:

SB508

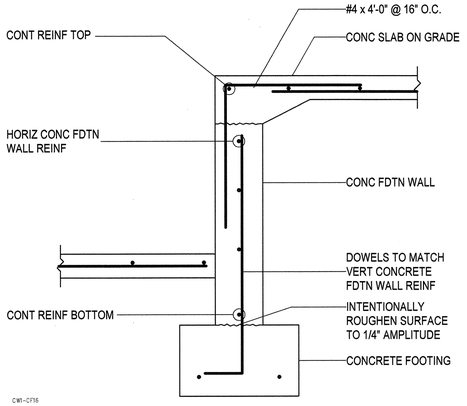


C1 / SB509 — TYP CONCRETE SLAB TO FOUNDATION WALL AT DOOR OPENING

NO SCALE

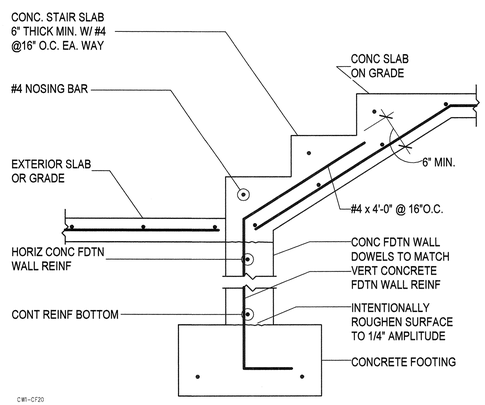


C2 / SB509 — TYP CONCRETE STAIR SLAB ON GRADE TO CONC FOUNDATION WALL

NO SCALE

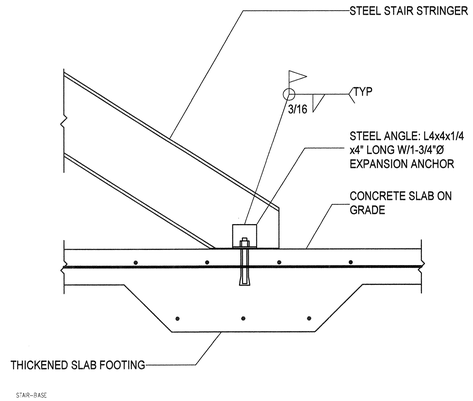


C3 / SB509 — TYPICAL STAIR STRINGER CONNECTION TO CONC SLAB ON GRADE

NO SCALE

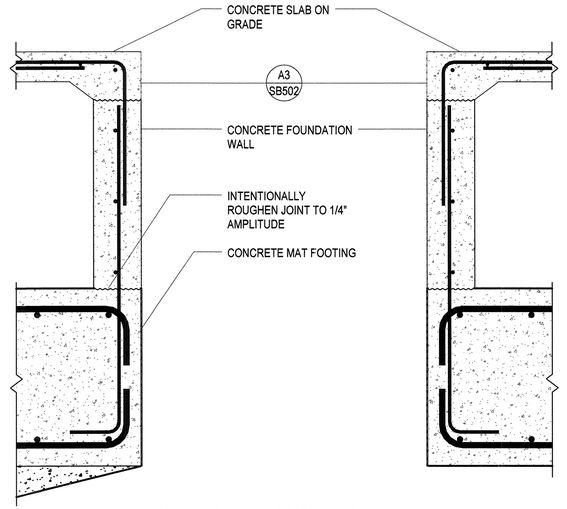


C4 / SB509 — FIRE RISER OPENING THRU CONCRETE MAT FOOTING

NO SCALE

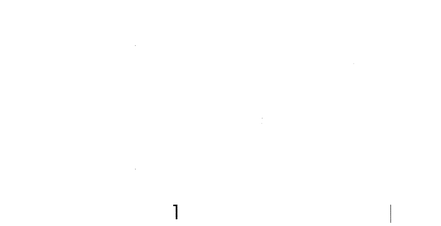


B1 / SB509 — TYPICAL CONSTRUCTION JOINT IN CONCRETE MAT FOOTING

NO SCALE




B2 / SB509 — TYPICAL THICKENED CONCRETE FOUNDATION WALL AT BRACED FRAME - PLAN VEW AT END

NO SCALE

NOTE TO BID PACKAGE #2.

BID PACKAGE #2 IS FOR FOOTING & FOUNDATION WORK ONLY. ALL OTHER STRUCTURAL STEEL DRAWINGS ARE INCLUDED FOR REFERENCE ONLY.

ARCHITECT 0818

ajc architects

703 east 1700 south
salt lake city, utah 84105
ph: 801.466.8818
fx: 801.466.4411
www.ajcarchitects.com

PAYETTE

285 Summer Street
Boston, MA 02210-1522
www.payette.com

REAVELEY
ENGINEERS + ASSOCIATES
Consulting Structural Engineers
P: 801.486.3883
F: 801.485.0911
675 E. 500 S. Suite 400
Salt Lake City, Utah 84102
www.reaveley.com

OWNER INFORMATION

State of Utah
Department of Administrative Services

Division of Facilities Construction & Management
4110 State Office Building
Salt Lake City, Utah 84114
Phone: (801) 538 - 3018
Fax: (801) 538 - 3267

Internet: http://www.dfcm.utah.gov

PROJECT DESCRIPTION

LIFE SCIENCES RESEARCH CENTER
UTAH STATE UNIVERSITY

USTAR BUILDING #2
LOGAN, UTAH

SHEET NAME:

TYPICAL FOOTING & FOUNDATION DETAILS

REVISIONS

| MARK | DATE | DESCRIPTION |
|---|---|---|

ISSUE DATA

| | |
|---|---|
| ISSUE DATE: | DEC. 9, 2008 |
| ISSUE TYPE: | B.P. #2 REVIEW |
| DRAWN BY: | R. HARRIS |
| CHECKED BY: | J. MILLER / C.PRICE |
| CAD FILE NAME: | |
| DFCM PROJECT # | 06292770 |
| STATE PROPERTY # | - |
| COPYRIGHT: | STATE OF UTAH |

SHEET NUMBER:

SB509

## CONCRETE PIER SCHEDULE

CP-1

| MARK | SIZE | REINFORCING | | REMARKS |
|---|---|---|---|---|
| | | VERTICAL | TIES | |
| CP-1 | 24"x24" | 8- #8 | #4@16"O.C. | C2/SB508 |
| CP-2 | 22"x22" | 8- #7 | #4@14"O.C. | C2/SB508 |
| CP-3 | 18"x18" | 4-#9 | #4@16"O.C. | C3/SB508 |
| CP-4 | 28"x28" | 8- #9 | #4@12"O.C. | C2/SB508 |
| | | | | |
| | | | | |
| | | | | |
| | | | | |

## CONCRETE FOUNDATION WALL SCHEDULE

CFW-1

| MARK | THICK | HORIZONTAL REINFORCING | VERTICAL REINFORCING | TOP & BOTTOM HORIZONTAL BARS | PLACEMENT |
|---|---|---|---|---|---|
| CFW-1 | 8" | #5@15" O.C. | #4@16" O.C. | 1- #5 | TYPE A |
| CFW-2 | 8" | #5@15" O.C. I.F. | #4@16" O.C. I.F. | 1- #5 | TYPE B |
| | | | | | |
| | | | | | |
| | | | | | |
| | | | | | |
| | | | | | |
| | | | | | |

PLACEMENT TYPE

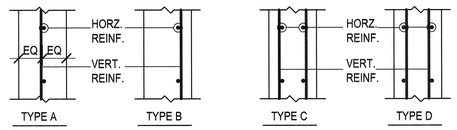


E.F. = EACH FACE
O.F. = OUTSIDE FACE
I.F. = INSIDE FACE (AGAINST SOIL)
3L = THREE LAYERS

## CONCRETE REINFORCING BAR LAP SPLICE SCHEDULE

RS;S-1

| BAR SIZE Fy = 60 KSI | TENSION BARS | | | | | | | | | | | | | | COMP. BARS |
|---|---|---|---|---|---|---|---|---|---|---|---|---|---|---|---|
| | f'c = 3000 PSI | | | | f'c = 4000 PSI | | | | f'c = 5000 PSI | | | | f'c = 6000 PSI | | | | f'c = ALL |
| | REGULAR CLASS | | TOP CLASS | | REGULAR CLASS | | TOP CLASS | | REGULAR CLASS | | TOP CLASS | | REGULAR CLASS | | TOP CLASS | | |
| | A | B | A | B | A | B | A | B | A | B | A | B | A | B | A | B | |
| #3 | 17" | 22" | 22" | 28" | 15" | 19" | 19" | 25" | 13" | 17" | 17" | 22" | 12" | 16" | 16" | 20" | 12" |
| #4 | 22" | 29" | 29" | 38" | 19" | 25" | 25" | 33" | 17" | 23" | 23" | 29" | 16" | 21" | 21" | 27" | 15" |
| #5 | 28" | 36" | 36" | 47" | 24" | 31" | 31" | 41" | 22" | 28" | 28" | 36" | 20" | 26" | 26" | 33" | 19" |
| #6 | 33" | 43" | 43" | 56" | 29" | 37" | 37" | 49" | 26" | 34" | 34" | 44" | 24" | 31" | 31" | 40" | 23" |
| #7 | 48" | 63" | 63" | 81" | 42" | 54" | 54" | 71" | 38" | 49" | 49" | 63" | 34" | 45" | 45" | 58" | 27" |
| #8 | 55" | 72" | 72" | 93" | 48" | 62" | 62" | 81" | 43" | 56" | 56" | 72" | 39" | 51" | 51" | 66" | 30" |
| #9 | 62" | 81" | 81" | 105" | 54" | 70" | 70" | 91" | 48" | 63" | 63" | 81" | 44" | 57" | 57" | 74" | 34" |
| #10 | 70" | 91" | 91" | 118" | 61" | 79" | 79" | 102" | 54" | 71" | 71" | 92" | 50" | 64" | 64" | 84" | 39" |
| #11 | 78" | 101" | 101" | 131" | 67" | 87" | 87" | 114" | 60" | 78" | 78" | 102" | 55" | 71" | 71" | 93" | 43" |

NOTES: THESE NOTES SHALL BE USED FOR ALL SPLICES, UNLESS NOTED OTHERWISE ON DRAWINGS.

1. TOP BARS ARE HORIZONTAL BARS, SPLICED SO THAT 12" OR MORE OF FRESH CONCRETE IS CAST IN THE MEMBER BELOW THE REINFORCING BAR.
2. CLASS A SPLICES MAY BE USED ONLY WHEN 50% OR LESS OF THE BARS ARE SPLICED WITHIN THE LAP SPLICE LENGTH.
3. CLASS B SPLICES SHALL BE USED FOR ALL SPLICES IN SLABS, BEAMS, JOISTS, WALLS, MOMENT RESISTING COLUMNS, AND JAMB COLUMNS, UNLESS THEY MEET THE REQUIREMENTS OF NOTE #2 ABOVE.
4. TIES AND STIRRUPS SHALL NOT BE SPLICED.
5. A. FOR BUNDLED BARS OF THREE OR LESS, LAP SPLICE LENGTHS SHALL BE MULTIPLIED BY 1.2.
   B. FOR BUNDLED BARS OF FOUR OR MORE, LAP LENGTHS SHALL BE MULTIPLIED BY 1.33.
   C. INDIVIDUAL BAR SPLICES WITHIN A BUNDLE SHALL NOT OVERLAP. ENTIRE BUNDLES SHALL NOT BE LAP SPLICED.
6. FOR ALL LIGHTWEIGHT CONCRETE, LAP LENGTHS SHALL BE MULTIPLIED BY 1.3.
7. FOR ALL EPOXY COATED BARS WITH COVER LESS THAN 3 BAR DIAMETERS OF CLEAR SPACING LESS THAN 6 BAR DIAMETERS THE LAP SPLICE LENGTHS SHALL BE MULTIPLIED BY 1.5. FOR ALL OTHER EPOXY BARS THE SPLICE LENGTHS SHALL BE MULTIPLIED BY 1.2
8. THE BAR LAP SPLICE LENGTHS SHALL BE MULTIPLIED BY 1.5 WHEN EITHER OF THE FOLLOWING IS TRUE:
   A. CLEAR SPACING OF BARS BEING DEVELOPED IS LESS THAN ONE BAR DIAMETER, CLEAR COVER IS LESS THAN ONE BAR DIAMETER AND STIRRUPS OR TIES ALONG THE LENGTH OF THE SPLICE ARE LESS THAN THE CODE MINIMUM.
   B. CLEAR SPACING OF BARS BEING DEVELOPED IS LESS THAN 2 BAR DIAMETERS AND CLEAR COVER IS LESS THAN ONE BAR DIAMETER.

AS PER ACI 318-02

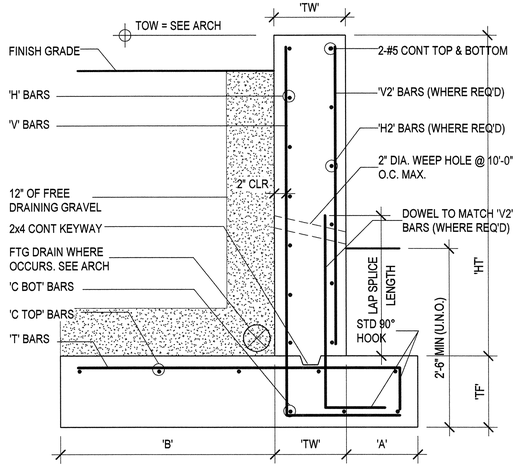


## CONCRETE RETAINING WALL SCHEDULE

CRW-VAR07

| MARK | 'HT' | 'A' | 'B' | 'TW' | 'TF' | 'V' BARS | | 'H' BARS | | 'V2' BARS | | 'H2' BARS | | 'T' BARS | | 'C TOP' BARS | | 'C BOT' BARS | |
|---|---|---|---|---|---|---|---|---|---|---|---|---|---|---|---|---|---|---|---|
| | | | | | | SIZE | SPACE | SIZE | SPACE | SIZE | SPACE | SIZE | SPACE | SIZE | SPACE | SIZE | SPACE | SIZE | SPACE |
| CRW-1 | 5'-0" | 1'-0" | 1'-8" | 0'-8" | 1'-2" | #4 | 7" * | #4 | 12" | - | - | - | - | #4 | 7" | 4-#5 | 12" | 2-#5 | 14" |
| CRW-2 | 7'-0" | 1'-6" | 3'-10" | 0'-8" | 1'-4" | #5 | 10" | #4 | 12" | - | - | - | - | #5 | 10" | 8-#5 | 9.4" | 3-#5 | 10" |
| | | | | | | | | | | | | | | | | | | | |
| | | | | | | | | | | | | | | | | | | | |
| | | | | | | | | | | | | | | | | | | | |
| | | | | | | | | | | | | | | | | | | | |
| | | | | | | | | | | | | | | | | | | | |
| | | | | | | | | | | | | | | | | | | | |

NOTES:
1. 'V' BARS SHALL NOT BE SPLICED BELOW MID-HEIGHT OF WALL
2. FOR WALLS WITH 'HT' OF 9'-0" & GREATER. ONE HALF OF THE 'V' BARS CAN BE DISCONTIUED FROM MID-HEIGHT TO TOP OF WALL.
* DENOTES THAT 1/2 OF 'V' BARS MAT BE TERMINATED AT HALF HEIGHT OF WALL.

A1 / SB601 TYPICAL CONCRETE RETAINING WALL SCHEDULE AND DETAIL

NO SCALE

## CONCRETE FOOTING SCHEDULE

CF-BLANK

| MARK | WIDTH | LENGTH | THICK | CROSSWISE REINFORCING | | | | LENGTHWISE REINFORCING | | | | REMARKS |
|---|---|---|---|---|---|---|---|---|---|---|---|---|
| | | | | NO. | SIZE | LENGTH | SPACE | NO. | SIZE | LENGTH | SPACE | |
| FTS1.5 | 1'-6" | CONT | 12" | -- | NONE | REQ'D | -- | 3 | #4 | CONT | 6" | |
| FTS2.0 | 2'-0" | CONT | 12" | -- | NONE | REQ'D | -- | 3 | #4 | CONT | 9" | |
| | | | | | | | | | | | | |
| FC1.5 | 1'-6" | CONT | 12" | -- | NONE | REQ'D | -- | 3 | #4 | CONT | 6" | |
| FC2.0 | 2'-0" | CONT | 12" | -- | NONE | REQ'D | -- | 3 | #4 | CONT | 9" | |
| FC2.5 | 2'-6" | CONT | 12" | -- | #5 | 2'-0" | 14" | 3 | #5 | CONT | 12" | |
| FC3.0 | 3'-0" | CONT | 12" | -- | #5 | 2'-6" | 14" | 3 | #5 | CONT | 15" | |
| FC4.0 | 4'-0" | CONT | 12" | -- | #5 | 3'-6" | 14" | 4 | #5 | CONT | 14" | |
| | | | | | | | | | | | | |
| FS4.5 | 4'-6" | 4'-6" | 12" | 6 | #4 | 4'-0" | 9.6" | 6 | #4 | 4'-0" | 9.6" | |
| | | | | | | | | | | | | |
| | | | | | | | | | | | | |
| | | | | | | | | | | | | |
| | | | | | | | | | | | | |
| | | | | | | | | | | | | |

NOTES:
1. PLACE ALL FOOTING REINFORCING IN BOTTOM OF FOOTING WITH 3" CLEAR CONCRETE COVER UNLESS NOTED OTHERWISE.
2. TOP REINFORCING, WHERE SPECIFIED, SHALL BE PLACED IN THE TOP OF THE FOOTING WITH 2" CLEAR CONCRETE COVER.
3. SPOT FOOTINGS SHALL BE CENTERED UNDER COLUMNS AND CONTINUOUS FOOTINGS SHALL BE CENTERED UNDER WALLS, UNLESS NOTED OTHERWISE.
4. ALL FOOTINGS SHALL BE FORMED. FOOTINGS SHALL NOT BE EARTH FORMED OR OVERSIZED WITHOUT WRITTEN PERMISSION FROM THE STRUCTURAL ENGINEER.

NOTE TO BID PACKAGE #2.

BID PACKAGE #2 IS FOR FOOTING & FOUNDATION WORK ONLY. ALL OTHER STRUCTURAL STEEL DRAWINGS ARE INCLUDED FOR REFERENCE ONLY.


ARCHITECT 0818

ajc architects
703 east 1700 south
salt lake city, utah 84105
ph: 801.466.8818
fx: 801.466.4411
www.ajcarchitects.com

PAYETTE
285 Summer Street
Boston, MA 02210-1522
www.payette.com

REAVELEY
ENGINEERS + ASSOCIATES
Consulting Structural Engineers
P: 801.486.3883
F: 801.485.0911
675 E. 500 S. Suite 400
Salt Lake City, Utah 84102
www.reaveley.com


OWNER INFORMATION

State of Utah
Department of Administrative Services
Division of Facilities Construction & Management
4110 State Office Building
Salt Lake City, Utah 84114
Phone: (801) 538 - 3018
Fax: (801) 538 - 3267
Internet: http://www.dfcm.utah.gov

PROJECT DESCRIPTION

LIFE SCIENCES RESEARCH CENTER
UTAH STATE UNIVERSITY

USTAR BUILDING #2
LOGAN, UTAH

SHEET NAME:

STRUCTURAL SCHEDULES

REVISIONS

| MARK | DATE | DESCRIPTION |
|---|---|---|

ISSUE DATA

| | |
|---|---|
| ISSUE DATE: | DEC. 9, 2008 |
| ISSUE TYPE: | B.P. #2 REVIEW |
| DRAWN BY: | R. HARRIS |
| CHECKED BY: | J. MILLER / C.PRICE |
| CAD FILE NAME: | |
| DFCM PROJECT # | 06292770 |
| STATE PROPERTY # | - |
| COPYRIGHT: | STATE OF UTAH |

SHEET NUMBER:

SB601

# MASONRY LINTEL SCHEDULE

ML-1

| MARK | LINTEL DEPTH | LINTEL WIDTH | MASONRY TYPE | LINTEL HORIZONTAL | LINTEL STIRRUPS | MAXIMUM SPAN | REMARKS |
|---|---|---|---|---|---|---|---|
| ML-1 | 8" | 6",8",10" OR 12" | BRICK OR CMU | 1- #7 CONT. | ----- | 3'-4" | |
| ML-2 | 16" | 6",8",10" OR 12" | BRICK OR CMU | 1- #7 CONT. TOP & BOT. | #3 @ 8" O.C. | 5'-4" | |
| ML-3 | 24" | 6",8",10" OR 12" | BRICK OR CMU | 1- #7 CONT. TOP & BOT. | #3 @ 8" O.C. | 8'-0" | |
| ML-4 | 32" | 6",8",10" OR 12" | BRICK OR CMU | 1- #7 CONT. TOP & BOT. | #3 @ 8" O.C. | 10'-0" | |
| ML-5 | 56" | 8" | CMU | 1- #8 CONT. TOP & BOT. | #3 @ 16" O.C. | 22'-0" | |
| | | | | | | | |
| | | | | | | | |
| | | | | | | | |

NOTES:

1. MASONRY LINTELS ML-1 THROUGH ML-4 SHALL BE USED OVER OPENINGS IN MASONRY WALLS WHEN A SPECIFIC MASONRY LINTEL IS NOT OTHERWISE SPECIFIED. THE MASONRY LINTEL TO BE USED SHALL BE DETERMINED BY THE MAXIMUM SPAN AS SPECIFIED IN THIS SCHEDULE. WHEN A SPECIFIC MASONRY LINTEL IS CALLED OUT ON THE PLAN, THE MAXIMUM SPAN AS NOTED IN THIS SCHEDULE SHALL NOT APPLY

2. MASONRY LINTELS ML-1 THROUGH ML-4 SHALL NOT BE LOCATED BELOW ANY FLOOR, OR ROOF BEAM, OR GIRDER, OR ANY OTHER CONCENTRATED LOAD UNLESS SHOWN SPECIFICALLY ON THE PLAN SHEET. JOISTS SHALL NOT BEAR ON ANY LINTEL LESS THAN 16" DEEP.

3. FOR MASONRY LINTELS NOT SHOWN ON THE DRAWINGS THAT CARRY ANY FLOOR, OR ROOF BEAM, OR GIRDER, OR ANY OTHER CONCENTRATED LOAD, OR THAT SPAN GREATER THAN 10'-0" CONSULT THE STRUCTURAL ENGINEER.

4. EXTEND ALL HORIZONTAL REINFORCING 48 BAR DIAMETERS BEYOND THE EDGE OF THE OPENING. IF HORIZONTAL REINFORCING CANNOT BE EXTENDED 48 BAR DIAMETERS BEYOND THE EDGE OF THE OPENING, PROVIDE 90 DEGREE STANDARD HOOK.

5. GROUT MASONRY LINTELS MONOLITHICALLY WITH THE SUPPORT WALL OR COLUMN AT EACH END.

6. SPLICE TOP BARS AT MIDSPAN OF LINTEL ONLY.

7. SPLICE BOTTOM BARS OVER SUPPORTS ONLY.

8. FOR WALL ABOVE LINTEL, DOWEL VERTICAL REINFORCING INTO FULL DEPTH OF THE LINTEL OR 48 BAR DIAMETERS, WHICHEVER IS LESS.

9. HORIZONTAL WALL REINFORCING SHALL CONTINUE THROUGH MASONRY LINTELS. WHERE BOTH HORIZONTAL WALL REINFORCING AND LINTEL REINFORCING WOULD OCCUR IN THE SAME COURSE, THE LARGER BARS ARE TO REPLACE THE SMALLER BARS.

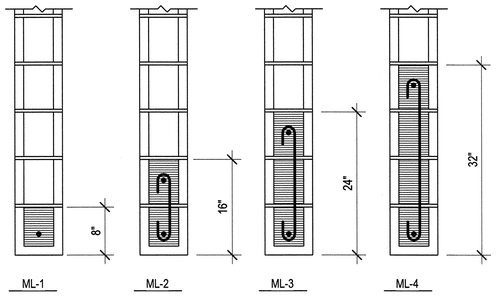


ML-DET

A1 / SB602 TYPICAL MASONRY LINTEL DETAILS

NO SCALE

# MASONRY COLUMN SCHEDULE

MC-1

| MARK | SIZE | REINFORCING VERTICAL | REINFORCING TIES | REMARKS |
|---|---|---|---|---|
| MC-1 | 8" x 16" | 4- #5 | NONE | SEE B3/SB602 |
| MC-2 | 8" x 24" | 4- #4 | NONE | SEE B3/SB602 |
| MC-3 | 8" x 8" | 2- #4 | NONE | SEE B3/SB602 |
| MC-4 | 8" x 8" | 2- #5 | NONE | SEE B3/SB602 |
| MC-5 | 8" x 24" | 3- #5 | #3@8" O.C. | SEE B3/SB602 |
| MC-6 | 8" x 40" | 5- #4 | #3@8" O.C. | SEE B3/SB602 |
| MC-7 | 16" x 16" | 4- #5 | #3@8" O.C. | SEE B3/SB602 |
| MC-8 | 16" x 32" | 8- #5 | #3@8" O.C. | SEE B3/SB602 |

NOTES:

1. THE CENTERLINE OF VERTICAL BARS SHALL BE LOCATED 2.1/2" FROM THE FACE OF THE MASONRY. HORIZONTAL BARS SHALL BE LOCATED TO THE INSIDE OF THE VERTICAL BARS.
2. UNLESS NOTED OTHERWISE, VERTICAL REINFORCING AND TIES SHALL EXTEND FULL HEIGHT OF THE WALL.
3. MASONRY COLUMN VERTICAL BARS OR DOWELS IN CONCRETE FOUNDATION WALLS SHALL BE TIED WITH #3 TIES @ 8" O.C.

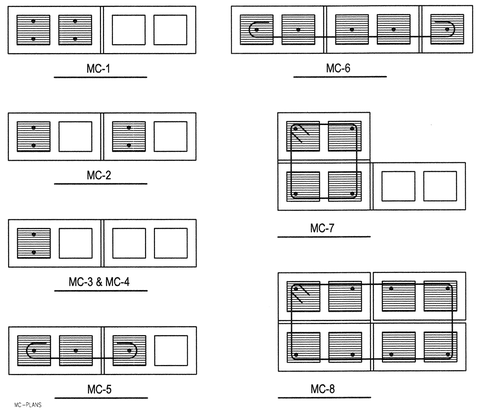


MC-PLANS

B3 / SB602 TYPICAL MASONRY COLUMN DIAGRAMS

NO SCALE

# MASONRY WALL SCHEDULE

MW-1

| MARK | THICK | MATERIALS | REINFORCING VERTICAL | REINFORCING HORIZONTAL | REINFORCING JOINTS | NOTES |
|---|---|---|---|---|---|---|
| MW-1 | 8" | CMU | #5@32" O.C. | #5@48" O.C. | N/A | - |
| MW-2 | 8" | CMU | #5@24" O.C. | #5@48" O.C. | N/A | |
| MW-3 | 8" | CMU | #5@32" O.C. | #5@32" O.C. | N/A | SOLID GROUT |
| MW-4 | 8" | CMU | #5@16" O.C. | #5@16" O.C. | N/A | SOLID GROUT |

NOTES:

1. PROVIDE SCHEDULED VERTICAL REINFORCING BARS AT ALL CORNERS, ENDS OF WALLS, AND SPACED AS SCHEDULED, UNLESS NOTED OTHERWISE.

2. HORIZONTAL REINFORCING BARS SHALL BE CONTINUOUS AT ALL CORNERS AND AT INTERSECTING WALLS. PROVIDE CORNER BARS WITH THE REQUIRED LAP SPLICE LENGTH.

3. TERMINATE ALL HORIZONTAL REINFORCING BARS AT ENDS OF WALLS AND EDGES OF OPENINGS WITH A STANDARD HOOK AROUND VERTICAL REINFORCING BARS.

4. SEE PLANS, DETAILS AND GENERAL STRUCTURAL NOTES FOR ADDITIONAL REINFORCING REQUIREMENTS.

5. GROUT SOLID ALL CELLS BELOW GRADE, CELLS CONTAINING EMBEDS (HSA'S, DBA'S, ANCHOR BOLTS, ETC.), AND CELLS CONTAINING REINFORCING. CONSOLIDATE GROUT AS PER THE GENERAL STRUCTURAL NOTES.

6. HORIZONTAL WALL REINFORCING SHALL BE PLACED INSIDE THE VERTICALS OF MASONRY COLUMNS.

7. HORIZONTAL WALL REINFORCING SHALL CONTINUE THROUGH MASONRY LINTELS. WHERE BOTH HORIZONTAL WALL REINFORCING AND LINTEL REINFORCING OCCUR IN THE SAME COURSE, THE LARGER BARS ARE TO REPLACE THE SMALLER BARS.

# MASONRY REINFORCING BAR LAP SPLICE SCHEDULE

| BAR SIZE | f'm = 1500 psi 6" CMU CLASS A | 8" CMU CLASS A | 8" CMU CLASS B | 10" CMU CLASS A | 10" CMU CLASS B | 12" CMU CLASS A | 12" CMU CLASS B | f'm = 2500 psi 6" ATLAS CLASS A | 8" ATLAS CLASS A | 8" ATLAS CLASS B |
|---|---|---|---|---|---|---|---|---|---|---|
| #3 | 19" | 19" | 19" | 19" | 19" | 19" | 19" | 15" | 15" | 15" |
| #4 | 25" | 25" | 30" | 25" | 28" | 25" | 28" | 20" | 20" | 24" |
| #5 | 35" | 31" | 49" | 31" | 45" | 31" | 45" | 31" | 24" | 40" |
| #6 | 81" | 57" | ** | 53" | 92" | 53" | 92" | 64" | 45" | 87" |
| #7 | - | 79" | ** | 61" | ** | 61" | ** | - | 63" | ** |
| #8 | - | ** | ** | 87" | ** | 75" | ** | - | 89" | ** |
| #9 | - | - | - | ** | ** | 90" | ** | - | - | - |
| | | | | | | | | | | |

NOTES:

1. CLASS A SPLICES MAY BE USED WHEN ONLY ONE BAR IS CONTINUOUS IN THE MASONRY CELL OR COURSE.
2. CLASS B SPLICES SHALL BE USED WHEN TWO BARS ARE CONTINUOUS IN THE MASONRY CELL OR COURSE.
3. ** INDICATES THAT A LAP SPLICE IS NOT ALLOWED AND MECHANICAL BAR COUPLERS ARE REQUIRED FOR THE BAR SPLICES.
4. WHERE VERTICAL BARS HAVE A REQUIRED LAP SPLICE GREATER THAN THE HEIGHT OF THE GROUT POUR, THE BAR SPLICE SHALL BE MADE WITH A MECHANICAL BAR COUPLER. WHERE THE HEIGHT OF THE GROUT POUR EXCEEDS 60 INCHES, HIGH LIFT GROUTING PROCEDURES SHALL BE FOLLOWED.
5. WHERE MECHANICAL BAR COUPLERS ARE USED, THE CONNECTOR SHALL DEVELOP 125% OF THE SPECIFIED YIELD STRENGTH OF THE BAR IN TENSION AND COMPRESSION.

MRBLS-1500

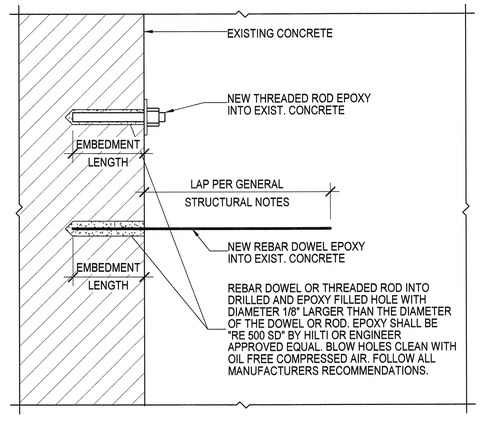


EP-DUEL

A3 / SB602 EPOXY ANCHORING SCHEDULE WITH DETAIL

NO SCALE

## EPOXY ANCHORING SCHEDULE

| REBAR DOWEL SIZE | THREADED ROD DIAMETER | EMBEDMENT LENGTH |
|---|---|---|
| #3 | 3/8" | 4.1/2" |
| #4 | 1/2" | 6.1/2" |
| #5 | 5/8" | 7.1/2" |
| #6 | 3/4" | 10" |
| #7 | 7/8" | 12" |
| #8 | 1" | 13" |
| #9 | 1.1/8" | 14" |
| #10 | 1.1/4" | 15" |
| #11 | 1.3/8" | 16" |
| | | |

NOTES:

1. EMBEDMENT LENGTHS SPECIFIED ON PLANS OR DETAILS TAKE PRECEDENCE OVER EMBEDMENT LENGTHS IN THIS SCHEDULE.
2. EMBEDMENT LENGTHS SHALL BE ADJUSTED WHEN EXISTING CONCRETE IS OF EQUAL OR LESS THICKNESS THAN SCHEDULE REQUIRES. IN THESE CASES THE EMBEDMENT LENGTH SHALL BE THE CONCRETE THICKNESS MINUS THE CLEAR COVER REQUIREMENTS, SEE GSN.
3. CONTINUOUS SPECIAL INSPECTION REQUIRED DURING INSTALLATION FOR ALL DOWELS AND THREADED RODS.

NOTE TO BID PACKAGE #2.

BID PACKAGE #2 IS FOR FOOTING & FOUNDATION WORK ONLY. ALL OTHER STRUCTURAL STEEL DRAWINGS ARE INCLUDED FOR REFERENCE ONLY.


ARCHITECT 0818

ajc architects

703 east 1700 south
salt lake city, utah 84105
ph: 801.466.8818
fx: 801.466.4411
www.ajcarchitects.com

PAYETTE

285 Summer Street
Boston, MA 02210-1522
www.payette.com

REAVELEY
ENGINEERS + ASSOCIATES
Consulting Structural Engineers

P: 801.486.3883
F: 801.485.0911

675 E. 500 S. Suite 400
Salt Lake City, Utah 84102
www.reaveley.com


OWNER INFORMATION

State of Utah
Department of Administrative Services

Division of Facilities Construction & Management
4110 State Office Building
Salt Lake City, Utah 84114
Phone: (801) 538 - 3018
Fax: (801) 538 - 3267

Internet: http://www.dfcm.utah.gov

PROJECT DESCRIPTION

LIFE SCIENCES RESEARCH CENTER
UTAH STATE UNIVERSITY

USTAR BUILDING #2
LOGAN, UTAH

SHEET NAME:

STRUCTURAL SCHEDULES

REVISIONS

| MARK | DATE | DESCRIPTION |
|---|---|---|

ISSUE DATA

| | |
|---|---|
| ISSUE DATE: | DEC. 9, 2008 |
| ISSUE TYPE: | B.P. #2 REVIEW |
| DRAWN BY: | R. HARRIS |
| CHECKED BY: | J. MILLER / C.PRICE |
| CAD FILE NAME: | |
| DFCM PROJECT # | 06292770 |
| STATE PROPERTY # | - |
| COPYRIGHT: | STATE OF UTAH |

SHEET NUMBER:

SB602

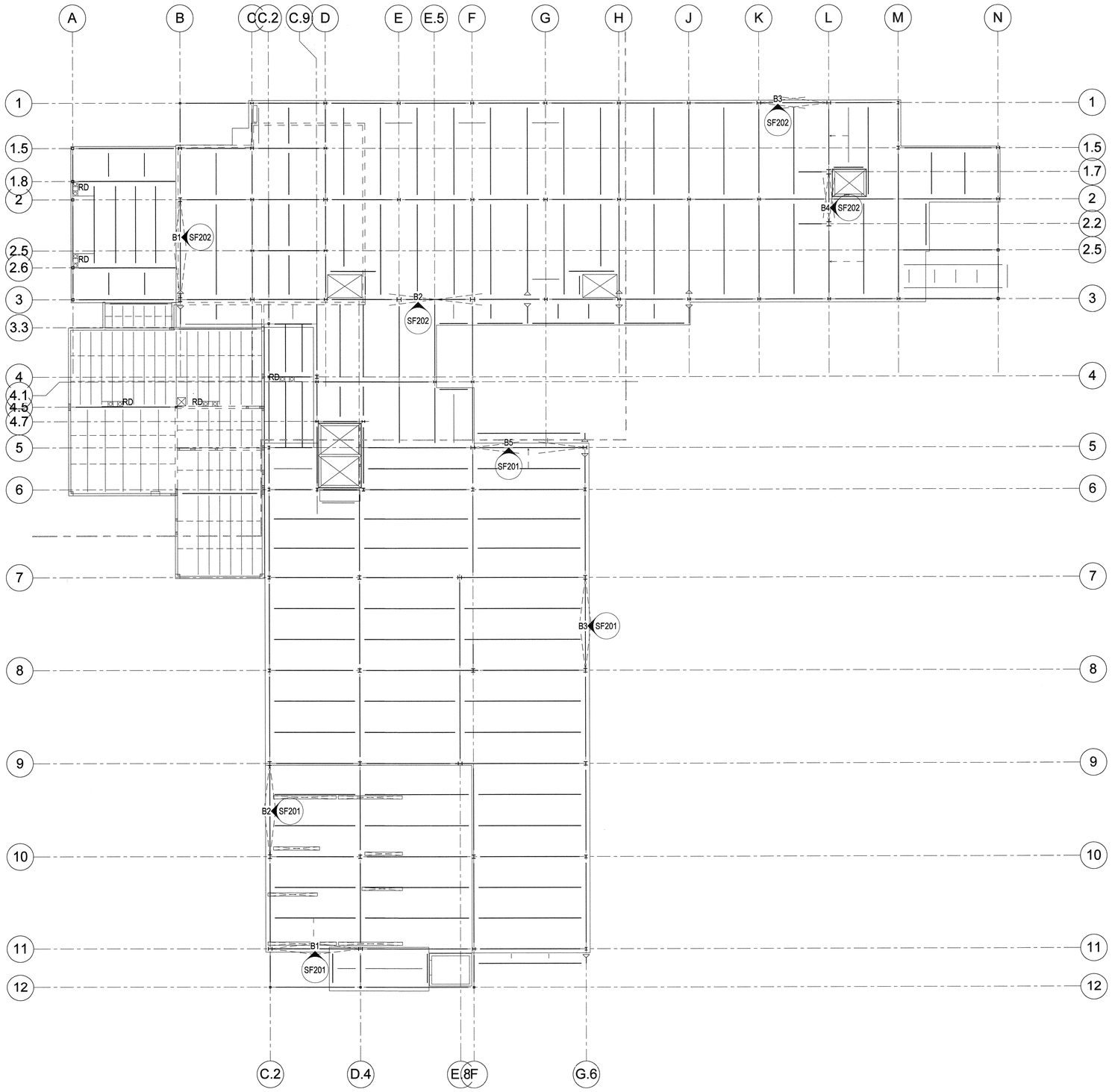


A1 / SF102 OVERALL LEVEL 2 FLOOR FRAMING PLAN

SCALE: 1/16" = 1'-0"

NOTE TO BID PACKAGE #2.

BID PACKAGE #2 IS FOR FOOTING & FOUNDATION WORK ONLY. ALL OTHER STRUCTURAL STEEL DRAWINGS ARE INCLUDED FOR REFERENCE ONLY.

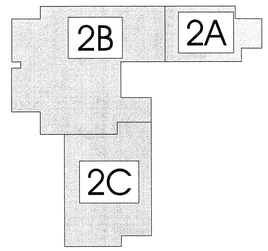


Key Plan

ARCHITECT 0818

ajc architects

703 east 1700 south
salt lake city, utah 84105
ph: 801.466.8818
fx: 801.466.4411
www.ajcarchitects.com

P A Y E T T E

285 Summer Street
Boston, MA 02210-1522
www.payette.com

REAVELEY
ENGINEERS + ASSOCIATES
Consulting Structural Engineers

P: 801.486.3883
F: 801.485.0911

675 E. 500 S. Suite 400
Salt Lake City, Utah 84102
www.reaveley.com

OWNER INFORMATION

State of Utah
Department of Administrative Services

Division of Facilities Construction & Management
4110 State Office Building
Salt Lake City, Utah 84114
Phone: (801) 538 - 3018
Fax: (801) 538 - 3267

Internet: http://www.dfcm.utah.gov

PROJECT DESCRIPTION

LIFE SCIENCES RESEARCH CENTER
UTAH STATE UNIVERSITY

USTAR BUILDING #2
LOGAN, UTAH

SHEET NAME:

OVERALL LEVEL 2 FLOOR FRAMING PLAN

REVISIONS

| MARK | DATE | DESCRIPTION |
|---|---|---|

ISSUE DATA

| | |
|---|---|
| ISSUE DATE: | DEC. 9, 2008 |
| ISSUE TYPE: | B.P. #2 REVIEW |
| DRAWN BY: | R. HARRIS |
| CHECKED BY: | J. MILLER / C.PRICE |
| CAD FILE NAME: | |
| DFCM PROJECT # | 06292770 |
| STATE PROPERTY # | - |
| COPYRIGHT: | STATE OF UTAH |

SHEET NUMBER:

SF102

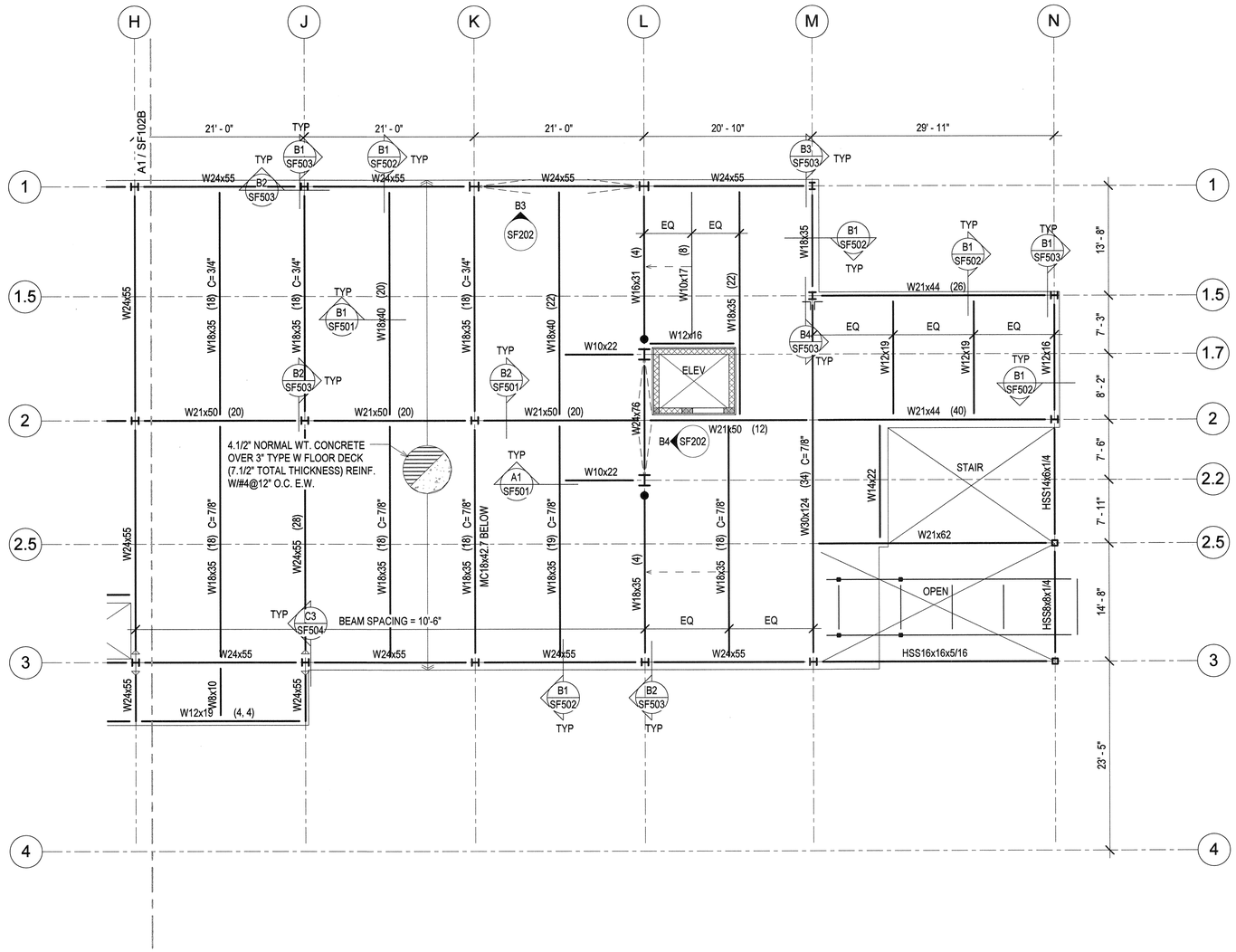


A1 / SF102A **PARTIAL LEVEL 2 FLOOR FRAMING PLAN - AREA A**

SCALE: 1/8" = 1'-0"

## FLOOR FRAMING PLAN LEGEND

LEG=FLOOR

- CONCRETE WALL
- CONCRETE LINTEL IN CONCRETE WALL
- CONCRETE COLUMN IN CONCRETE WALL
- CONCRETE COLUMN
- CONCRETE JAMB COLUMN POURED MONOLITHIC WITH CONCRETE WALL
- MASONRY WALL
- MASONRY LINTEL IN MASONRY WALL
- MASONRY COLUMN IN MASONRY WALL
- STEEL COLUMN - TUBE
- STEEL COLUMN - WIDE FLANGE
- STEEL COLUMN - PIPE
- STEEL BRACED FRAME
- MOMENT CONNECTION
- COLLECTOR CONNECTION SEE B1/SF603
- COLLECTOR/CHORD CONNECTION AT BEAMS PARALLEL TO MARK. SEE B1/SF603
- DOUBLE SHEAR CONNECTION SEE A1/SF602
- STEEL BEAM OR GIRDER
- STEEL JOIST OR PURLIN
- CROSS BRIDGING
- HORIZONTAL BRIDGING
- STEEL STUD WALL - STRUCTURAL
- STEEL HEADER IN STEEL STUD WALL
- 0" CHANGE IN ELEVATION
- CONCRETE ON METAL DECK
- ROOF DECK
- SPECIAL DECK AREA
- OPENING
- RECESSED/DEPRESSED SLAB ON METAL DECK

## FLOOR FRAMING PLAN NOTES

NOTE=T_FLOOR

1. SEE GENERAL STRUCTURAL NOTE (III.D.8) AND DETAILS A2 & A3/SF501 FOR CONTROL JOINTS IN SUSPENDED SLABS OVER STEEL DECK.

2. SEE DETAILS C1 & C2/SF501 FOR MISCELLANEOUS FLOOR OPENINGS.

3. SEE GENERAL STRUCTURAL NOTE (V.J.7) FOR STEEL DECK REQUIREMENTS WHERE 3-SPAN CONDITIONS ARE NOT POSSIBLE.

4. PROVIDE 6" LONG H.S.A (AT 7.1/2" SLABS) & 5" LONG H.S.A. (AT 6" SLABS) ON COMPOSITE BEAMS IN THE AREAS OF 1" SLAB RECESSES.

NOTE TO BID PACKAGE #2.

BID PACKAGE #2 IS FOR FOOTING & FOUNDATION WORK ONLY. ALL OTHER STRUCTURAL STEEL DRAWINGS ARE INCLUDED FOR REFERENCE ONLY.

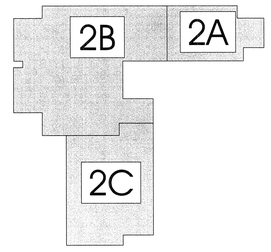


Key Plan

ARCHITECT 0818

ajc architects

703 east 1700 south
salt lake city, utah 84105
ph: 801.466.8818
fx: 801.466.4411
www.ajcarchitects.com

P A Y E T T E

285 Summer Street
Boston, MA 02210-1522
www.payette.com

REAVELEY
ENGINEERS + ASSOCIATES
Consulting Structural Engineers

P: 801.486.3883
F: 801.485.0911

675 E. 500 S. Suite 400
Salt Lake City, Utah 84102
www.reaveley.com

OWNER INFORMATION

State of Utah
Department of Administrative Services

Division of Facilities Construction & Management
4110 State Office Building
Salt Lake City, Utah 84114
Phone: (801) 538 - 3018
Fax: (801) 538 - 3267

Internet: http://www.dfcm.utah.gov

PROJECT DESCRIPTION

# LIFE SCIENCES RESEARCH CENTER
## UTAH STATE UNIVERSITY

USTAR BUILDING #2
LOGAN, UTAH

SHEET NAME:

PARTIAL LEVEL 2 FLOOR FRAMING PLAN AREA A

REVISIONS

| MARK | DATE | DESCRIPTION |
|---|---|---|

ISSUE DATA

| | |
|---|---|
| ISSUE DATE: | DEC. 9, 2008 |
| ISSUE TYPE: | B.P. #2 REVIEW |
| DRAWN BY: | R. HARRIS |
| CHECKED BY: | J. MILLER / C.PRICE |
| CAD FILE NAME: | |
| DFCM PROJECT # | 06292770 |
| STATE PROPERTY # | - |
| COPYRIGHT: | STATE OF UTAH |

SHEET NUMBER:

SF102A

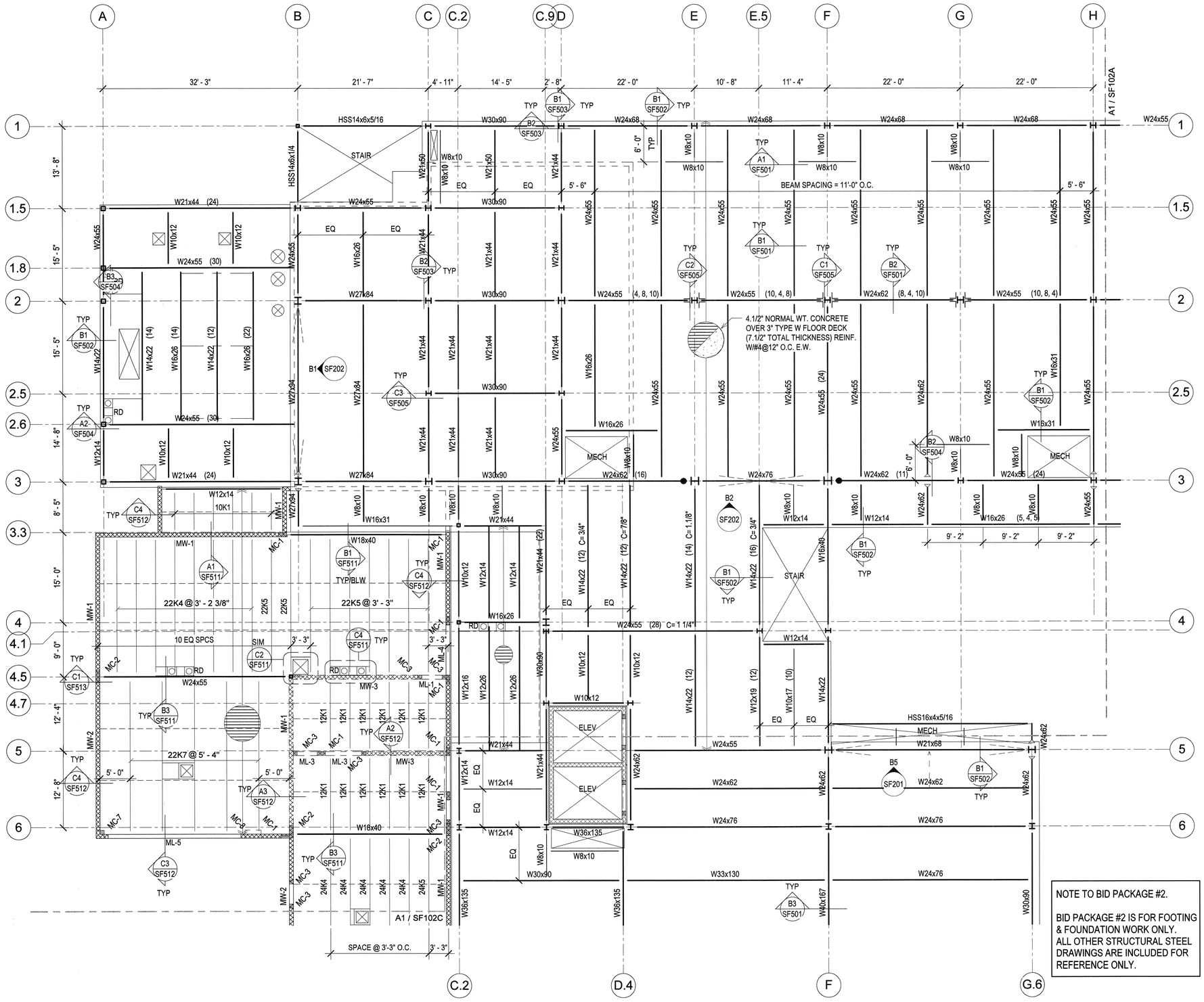


## FLOOR FRAMING PLAN LEGEND

LEG-FLOOR

- CONCRETE WALL
- CONCRETE LINTEL IN CONCRETE WALL
- CONCRETE COLUMN IN CONCRETE WALL
- CONCRETE COLUMN
- CONCRETE JAMB COLUMN POURED MONOLITHIC WITH CONCRETE WALL
- MASONRY WALL
- MASONRY LINTEL IN MASONRY WALL
- MASONRY COLUMN IN MASONRY WALL
- STEEL COLUMN - TUBE
- STEEL COLUMN - WIDE FLANGE
- STEEL COLUMN - PIPE
- STEEL BRACED FRAME
- MOMENT CONNECTION
- COLLECTOR CONNECTION SEE B1/SF603
- COLLECTOR/CHORD CONNECTION AT BEAMS PARALLEL TO MARK. SEE B1/SF603
- DOUBLE SHEAR CONNECTION SEE A1/SF602
- STEEL BEAM OR GIRDER
- STEEL JOIST OR PURLIN
- CROSS BRIDGING
- HORIZONTAL BRIDGING
- STEEL STUD WALL - STRUCTURAL
- STEEL HEADER IN STEEL STUD WALL
- 0" CHANGE IN ELEVATION
- CONCRETE ON METAL DECK
- ROOF DECK
- SPECIAL DECK AREA
- OPENING
- RECESSED/DEPRESSED SLAB ON METAL DECK

## FLOOR FRAMING PLAN NOTES

NOTE-FLOOR

1. SEE GENERAL STRUCTURAL NOTE (III.D.8) AND DETAILS A2 & A3/SF501 FOR CONTROL JOINTS IN SUSPENDED SLABS OVER STEEL DECK.
2. SEE DETAILS C1 & C2/SF501 FOR MISCELLANEOUS FLOOR OPENINGS.
3. SEE GENERAL STRUCTURAL NOTE (V.J.7) FOR STEEL DECK REQUIREMENTS WHERE 3-SPAN CONDITIONS ARE NOT POSSIBLE.
4. PROVIDE 6" LONG H.S.A (AT 7.1/2" SLABS) & 5" LONG H.S.A. (AT 6" SLABS) ON COMPOSITE BEAMS IN THE AREAS OF 1" SLAB RECESSES.

NOTE TO BID PACKAGE #2.

BID PACKAGE #2 IS FOR FOOTING & FOUNDATION WORK ONLY. ALL OTHER STRUCTURAL STEEL DRAWINGS ARE INCLUDED FOR REFERENCE ONLY.

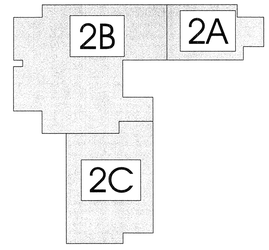


Key Plan

A1 / SF102B PARTIAL LEVEL 2 FLOOR FRAMING PLAN - AREA B

SCALE: 1/8" = 1'-0"

ARCHITECT 0818

ajc architects

703 east 1700 south
salt lake city, utah 84105
ph: 801.466.8818
fx: 801.466.4411
www.ajcarchitects.com

PAYETTE

285 Summer Street
Boston, MA 02210-1522
www.payette.com

REAVELEY
ENGINEERS + ASSOCIATES
Consulting Structural Engineers

P: 801.486.3883
F: 801.485.0911

675 E. 500 S. Suite 400
Salt Lake City, Utah 84102
www.reaveley.com

OWNER INFORMATION

State of Utah
Department of Administrative Services

Division of Facilities Construction & Management
4110 State Office Building
Salt Lake City, Utah 84114
Phone: (801) 538 - 3018
Fax: (801) 538 - 3267

Internet: http://www.dfcm.utah.gov

PROJECT DESCRIPTION

LIFE SCIENCES RESEARCH CENTER
UTAH STATE UNIVERSITY

USTAR BUILDING #2
LOGAN, UTAH

SHEET NAME:

PARTIAL LEVEL 2 FLOOR FRAMING PLAN AREA B

REVISIONS

| MARK | DATE | DESCRIPTION |
|---|---|---|

ISSUE DATA

| | |
|---|---|
| ISSUE DATE: | DEC. 9, 2008 |
| ISSUE TYPE: | B.P. #2 REVIEW |
| DRAWN BY: | R. HARRIS |
| CHECKED BY: | J. MILLER / C.PRICE |
| CAD FILE NAME: | |
| DFCM PROJECT # | 06292770 |
| STATE PROPERTY # | - |
| COPYRIGHT: | STATE OF UTAH |

SHEET NUMBER:

SF102B

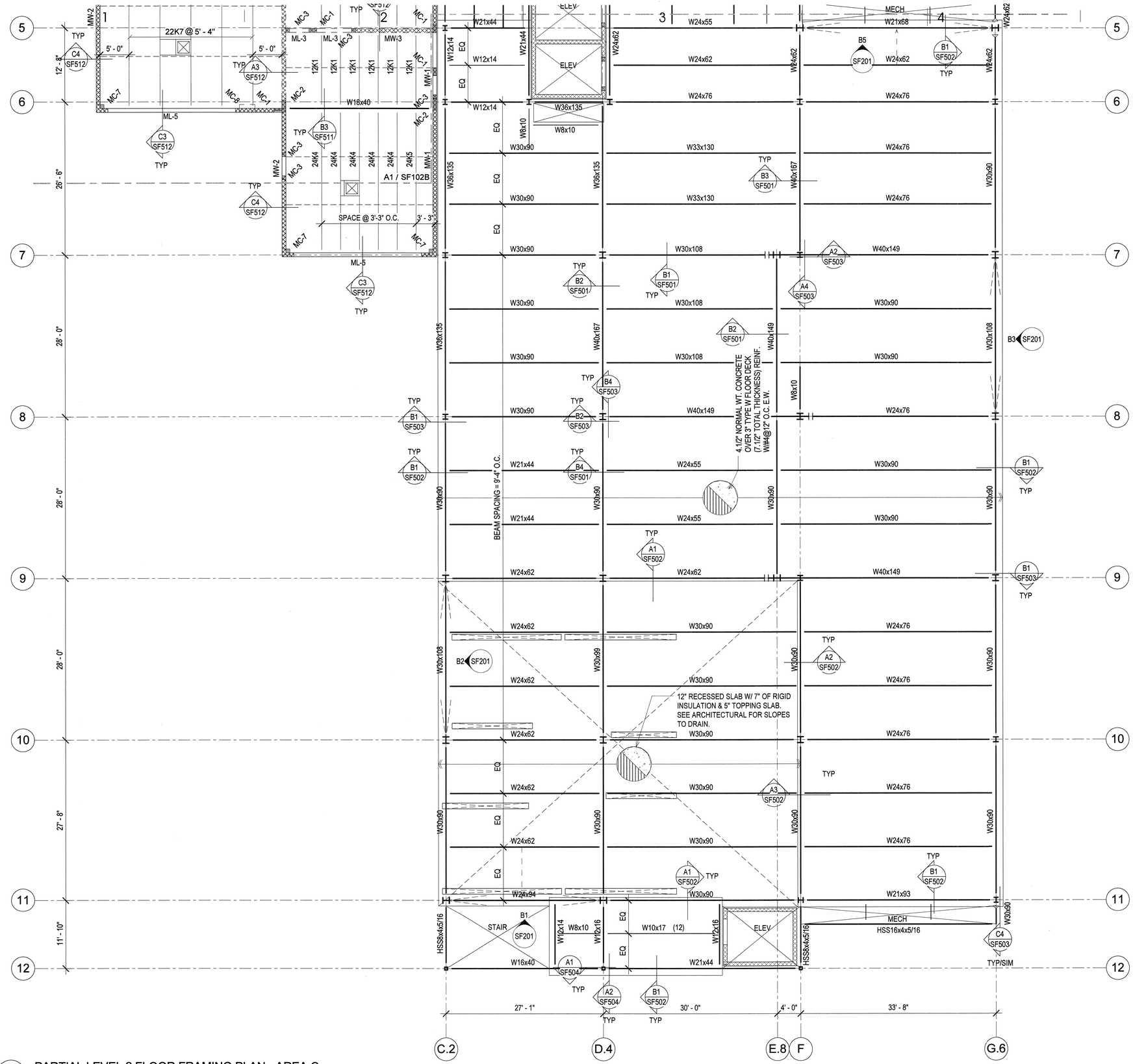


A1 SF102C PARTIAL LEVEL 2 FLOOR FRAMING PLAN - AREA C

SCALE: 1/8" = 1'-0"

## FLOOR FRAMING PLAN LEGEND

LEG-FLOOR

- CONCRETE WALL
- CONCRETE LINTEL IN CONCRETE WALL
- CONCRETE COLUMN IN CONCRETE WALL
- CONCRETE COLUMN
- CONCRETE JAMB COLUMN POURED MONOLITHIC WITH CONCRETE WALL
- MASONRY WALL
- MASONRY LINTEL IN MASONRY WALL
- MASONRY COLUMN IN MASONRY WALL
- STEEL COLUMN - TUBE
- STEEL COLUMN - WIDE FLANGE
- STEEL COLUMN - PIPE
- STEEL BRACED FRAME
- MOMENT CONNECTION
- COLLECTOR CONNECTION SEE B1/SF603
- COLLECTOR/CHORD CONNECTION AT BEAMS PARALLEL TO MARK. SEE B1/SF603
- DOUBLE SHEAR CONNECTION SEE A1/SF602
- STEEL BEAM OR GIRDER
- STEEL JOIST OR PURLIN
- CROSS BRIDGING
- HORIZONTAL BRIDGING
- STEEL STUD WALL - STRUCTURAL
- STEEL HEADER IN STEEL STUD WALL
- 0' CHANGE IN ELEVATION
- CONCRETE ON METAL DECK
- ROOF DECK
- SPECIAL DECK AREA
- OPENING
- RECESSED/DEPRESSED SLAB ON METAL DECK

## FLOOR FRAMING PLAN NOTES

NOTE-FLOOR

1. SEE GENERAL STRUCTURAL NOTE (III.D.8) AND DETAILS A2 & A3/SF501 FOR CONTROL JOINTS IN SUSPENDED SLABS OVER STEEL DECK.
2. SEE DETAILS C1 & C2/SF501 FOR MISCELLANEOUS FLOOR OPENINGS.
3. SEE GENERAL STRUCTURAL NOTE (V.J.7) FOR STEEL DECK REQUIREMENTS WHERE 3-SPAN CONDITIONS ARE NOT POSSIBLE.
4. PROVIDE 6" LONG H.S.A (AT 7.1/2" SLABS) & 5" LONG H.S.A. (AT 6" SLABS) ON COMPOSITE BEAMS IN THE AREAS OF 1" SLAB RECESSES.

NOTE TO BID PACKAGE #2.

BID PACKAGE #2 IS FOR FOOTING & FOUNDATION WORK ONLY. ALL OTHER STRUCTURAL STEEL DRAWINGS ARE INCLUDED FOR REFERENCE ONLY.

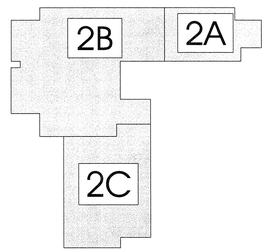


Key Plan

ARCHITECT 0818

ajc architects

703 east 1700 south
salt lake city, utah 84105
ph: 801.466.8818
fx: 801.466.4411
www.ajcarchitects.com

PAYETTE

285 Summer Street
Boston, MA 02210-1522
www.payette.com

REAVELEY
ENGINEERS + ASSOCIATES
Consulting Structural Engineers

P:801.486.3883
F:801.485.0911

675 E.500 S. Suite 400
Salt Lake City, Utah 84102
www.reaveley.com

OWNER INFORMATION

State of Utah
Department of Administrative Services

Division of Facilities Construction & Management
4110 State Office Building
Salt Lake City, Utah 84114
Phone: (801) 538 - 3018
Fax: (801) 538 - 3267

Internet: http://www.dfcm.utah.gov

PROJECT DESCRIPTION

# LIFE SCIENCES RESEARCH CENTER
UTAH STATE UNIVERSITY

USTAR BUILDING #2
LOGAN, UTAH

SHEET NAME:

PARTIAL LEVEL 2 FLOOR FRAMING PLAN AREA C

REVISIONS

| MARK | DATE | DESCRIPTION |
|---|---|---|

ISSUE DATA

| | |
|---|---|
| ISSUE DATE: | DEC. 9, 2008 |
| ISSUE TYPE: | B.P. #2 REVIEW |
| DRAWN BY: | R. HARRIS |
| CHECKED BY: | J. MILLER / C.PRICE |
| CAD FILE NAME: | |
| DFCM PROJECT # | 06292770 |
| STATE PROPERTY # | - |
| COPYRIGHT: | STATE OF UTAH |

SHEET NUMBER:

SF102C

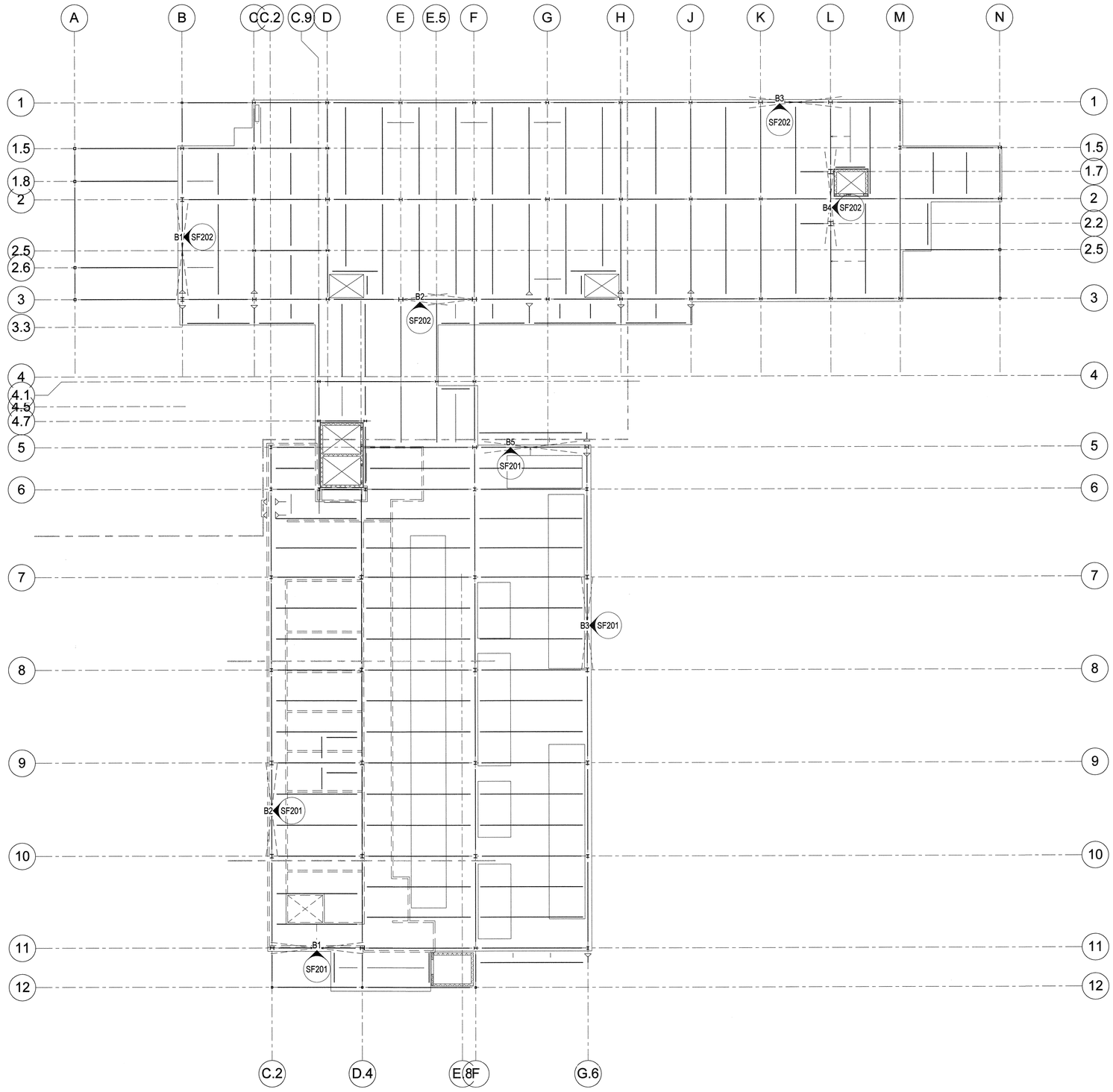


A1 / SF103 OVERALL LEVEL 3 FLOOR FRAMING PLAN

SCALE: 1/16" = 1'-0"

NOTE TO BID PACKAGE #2.

BID PACKAGE #2 IS FOR FOOTING & FOUNDATION WORK ONLY. ALL OTHER STRUCTURAL STEEL DRAWINGS ARE INCLUDED FOR REFERENCE ONLY.

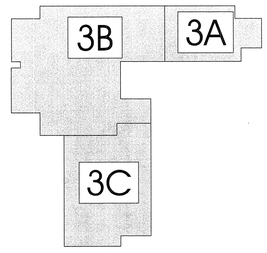


Key Plan

ARCHITECT 0818

ajc architects
703 east 1700 south
salt lake city, utah 84105
ph: 801.466.8818
fx: 801.466.4411
www.ajcarchitects.com

P A Y E T T E
285 Summer Street
Boston, MA 02210-1522
www.payette.com

REAVELEY
ENGINEERS + ASSOCIATES
Consulting Structural Engineers
P: 801.486.3883
F: 801.485.0911
675 E. 500 S. Suite 400
Salt Lake City, Utah 84102
www.reaveley.com

OWNER INFORMATION

State of Utah
Department of Administrative Services
Division of Facilities Construction & Management
4110 State Office Building
Salt Lake City, Utah 84114
Phone: (801) 538 - 3018
Fax: (801) 538 - 3267
Internet: http://www.dfcm.utah.gov

PROJECT DESCRIPTION

LIFE SCIENCES RESEARCH CENTER
UTAH STATE UNIVERSITY

USTAR BUILDING #2
LOGAN, UTAH

SHEET NAME:

OVERALL LEVEL 3 FLOOR FRAMING PLAN

REVISIONS

| MARK | DATE | DESCRIPTION |
|---|---|---|

ISSUE DATA

| | |
|---|---|
| ISSUE DATE: | DEC. 9, 2008 |
| ISSUE TYPE: | B.P. #2 REVIEW |
| DRAWN BY: | R. HARRIS |
| CHECKED BY: | J. MILLER / C.PRICE |
| CAD FILE NAME: | |
| DFCM PROJECT # | 06292770 |
| STATE PROPERTY # | - |
| COPYRIGHT: | STATE OF UTAH |

SHEET NUMBER:

SF103

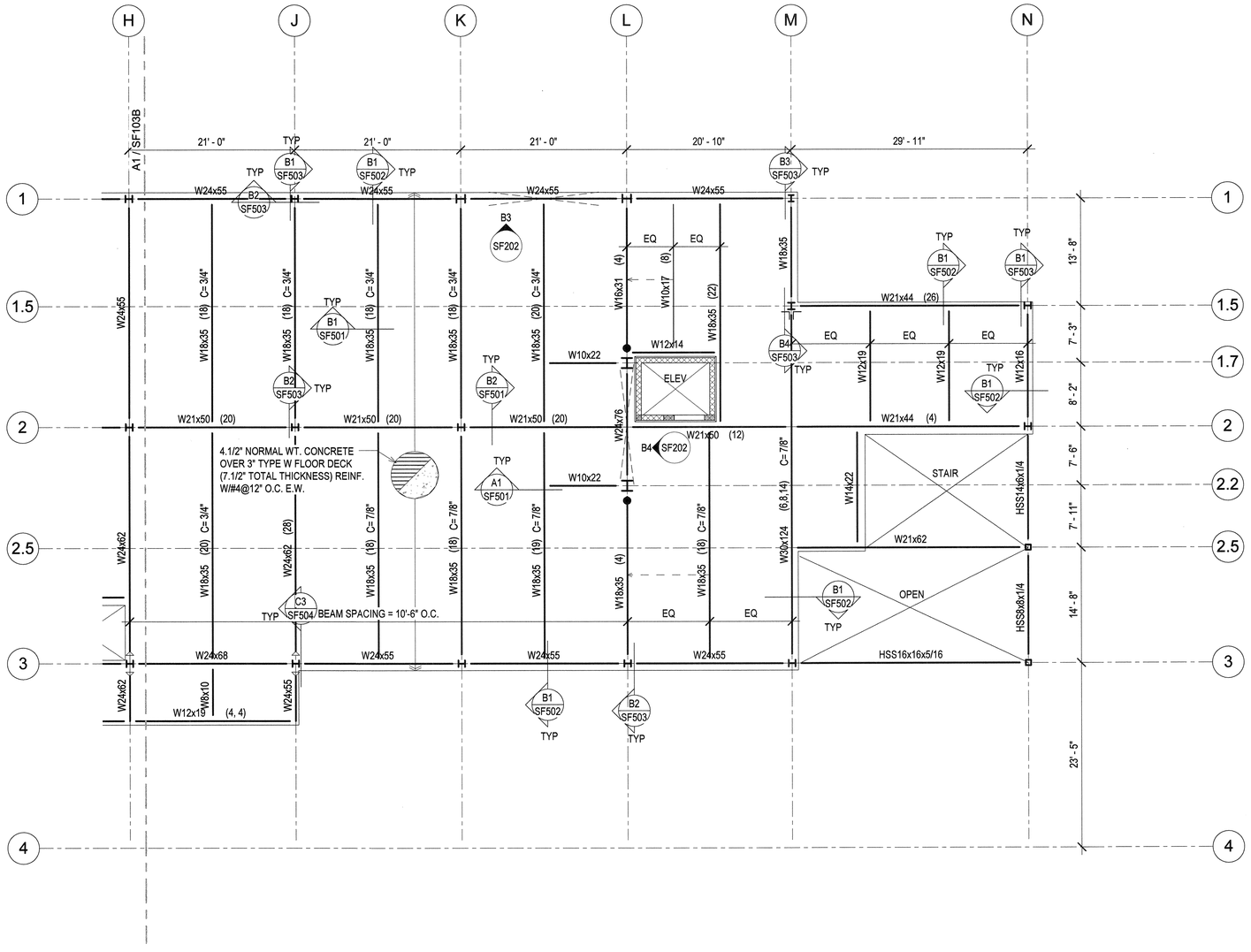


A1 / SF103A — PARTIAL LEVEL 3 FLOOR FRAMING PLAN - AREA A

SCALE: 1/8" = 1'-0"

## FLOOR FRAMING PLAN LEGEND

LEG-FLOOR

- CONCRETE WALL
- CONCRETE LINTEL IN CONCRETE WALL
- CONCRETE COLUMN IN CONCRETE WALL
- CONCRETE COLUMN
- CONCRETE JAMB COLUMN POURED MONOLITHIC WITH CONCRETE WALL
- MASONRY WALL
- MASONRY LINTEL IN MASONRY WALL
- MASONRY COLUMN IN MASONRY WALL
- STEEL COLUMN - TUBE
- STEEL COLUMN - WIDE FLANGE
- STEEL COLUMN - PIPE
- STEEL BRACED FRAME
- MOMENT CONNECTION
- COLLECTOR CONNECTION SEE B1/SF603
- COLLECTOR/CHORD CONNECTION AT BEAMS PARALLEL TO MARK. SEE B1/SF603
- DOUBLE SHEAR CONNECTION SEE A1/SF602
- STEEL BEAM OR GIRDER
- STEEL JOIST OR PURLIN
- CROSS BRIDGING
- HORIZONTAL BRIDGING
- STEEL STUD WALL - STRUCTURAL
- STEEL HEADER IN STEEL STUD WALL
- CHANGE IN ELEVATION
- CONCRETE ON METAL DECK
- ROOF DECK
- SPECIAL DECK AREA
- OPENING
- RECESSED/DEPRESSED SLAB ON METAL DECK

## FLOOR FRAMING PLAN NOTES

NOTE-FLOOR

1. SEE GENERAL STRUCTURAL NOTE (III.D.8) AND DETAILS A2 & A3/SF501 FOR CONTROL JOINTS IN SUSPENDED SLABS OVER STEEL DECK.
2. SEE DETAILS C1 & C2/SF501 FOR MISCELLANEOUS FLOOR OPENINGS.
3. SEE GENERAL STRUCTURAL NOTE (V.J.7) FOR STEEL DECK REQUIREMENTS WHERE 3-SPAN CONDITIONS ARE NOT POSSIBLE.
4. PROVIDE 6" LONG H.S.A (AT 7.1/2" SLABS) & 5" LONG H.S.A. (AT 6" SLABS) ON COMPOSITE BEAMS IN THE AREAS OF 1" SLAB RECESSES.

NOTE TO BID PACKAGE #2.

BID PACKAGE #2 IS FOR FOOTING & FOUNDATION WORK ONLY. ALL OTHER STRUCTURAL STEEL DRAWINGS ARE INCLUDED FOR REFERENCE ONLY.

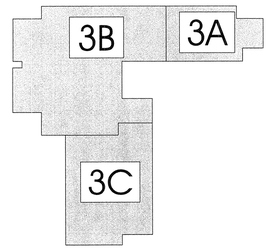


Key Plan

ARCHITECT 0818

ajc architects

703 east 1700 south
salt lake city, utah 84105
ph: 801.466.8818
fx: 801.466.4411
www.ajcarchitects.com

PAYETTE

285 Summer Street
Boston, MA 02210-1522
www.payette.com

REAVELEY
ENGINEERS + ASSOCIATES
Consulting Structural Engineers

F: 801.486.3883
F: 801.485.0911

675 E. 500 S. Suite 400
Salt Lake City, Utah 84102
www.reaveley.com

OWNER INFORMATION

State of Utah
Department of Administrative Services

Division of Facilities Construction & Management
4110 State Office Building
Salt Lake City, Utah 84114
Phone: (801) 538 - 3018
Fax: (801) 538 - 3267

Internet: http://www.dfcm.utah.gov

PROJECT DESCRIPTION

# LIFE SCIENCES RESEARCH CENTER
## UTAH STATE UNIVERSITY

USTAR BUILDING #2
LOGAN, UTAH

SHEET NAME:

PARTIAL LEVEL 3 FLOOR FRAMING PLAN AREA A

REVISIONS

| MARK | DATE | DESCRIPTION |
|---|---|---|

ISSUE DATA

| | |
|---|---|
| ISSUE DATE: | DEC. 9, 2008 |
| ISSUE TYPE: | B.P. #2 REVIEW |
| DRAWN BY: | R. HARRIS |
| CHECKED BY: | J. MILLER / C.PRICE |
| CAD FILE NAME: | |
| DFCM PROJECT # | 06292770 |
| STATE PROPERTY # | - |
| COPYRIGHT: | STATE OF UTAH |

SHEET NUMBER:

SF103A

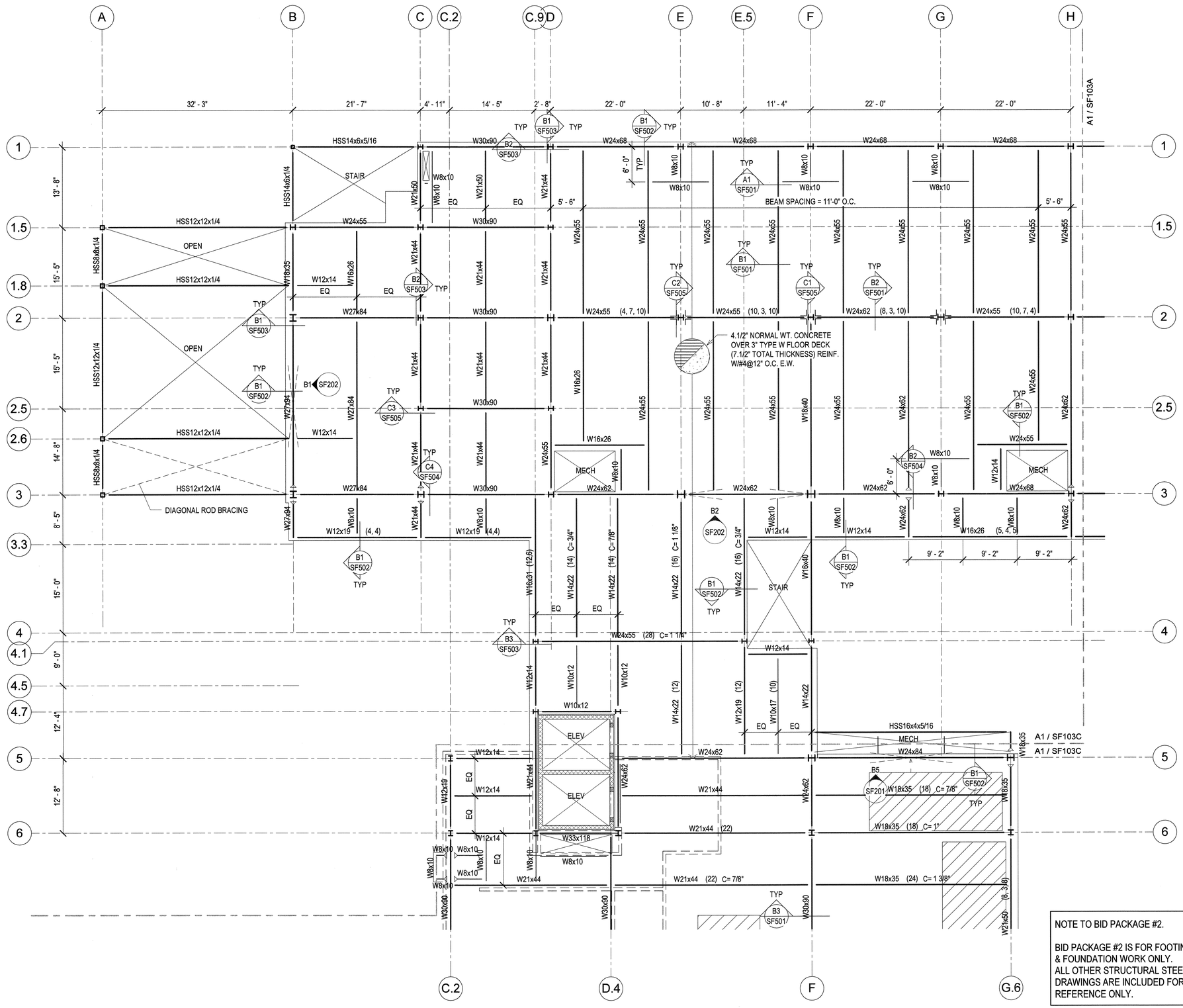


A1 / SF103B PARTIAL LEVEL 3 FLOOR FRAMING PLAN - AREA B

SCALE: 1/8" = 1'-0"

## FLOOR FRAMING PLAN LEGEND

LEG-FLOOR

- CONCRETE WALL
- CONCRETE LINTEL IN CONCRETE WALL
- CONCRETE COLUMN IN CONCRETE WALL
- CONCRETE COLUMN
- CONCRETE JAMB COLUMN POURED MONOLITHIC WITH CONCRETE WALL
- MASONRY WALL
- MASONRY LINTEL IN MASONRY WALL
- MASONRY COLUMN IN MASONRY WALL
- STEEL COLUMN - TUBE
- STEEL COLUMN - WIDE FLANGE
- STEEL COLUMN - PIPE
- STEEL BRACED FRAME
- MOMENT CONNECTION
- COLLECTOR CONNECTION SEE B1/SF603
- COLLECTOR/CHORD CONNECTION AT BEAMS PARALLEL TO MARK. SEE B1/SF603
- DOUBLE SHEAR CONNECTION SEE A1/SF602
- STEEL BEAM OR GIRDER
- STEEL JOIST OR PURLIN
- CROSS BRIDGING
- HORIZONTAL BRIDGING
- STEEL STUD WALL - STRUCTURAL
- STEEL HEADER IN STEEL STUD WALL
- 0" CHANGE IN ELEVATION
- CONCRETE ON METAL DECK
- ROOF DECK
- SPECIAL DECK AREA
- OPENING
- RECESSED/DEPRESSED SLAB ON METAL DECK

## FLOOR FRAMING PLAN NOTES

NOTE-FLOOR

1. SEE GENERAL STRUCTURAL NOTE (III.D.8) AND DETAILS A2 & A3/SF501 FOR CONTROL JOINTS IN SUSPENDED SLABS OVER STEEL DECK.
2. SEE DETAILS C1 & C2/SF501 FOR MISCELLANEOUS FLOOR OPENINGS.
3. SEE GENERAL STRUCTURAL NOTE (V.J.7) FOR STEEL DECK REQUIREMENTS WHERE 3-SPAN CONDITIONS ARE NOT POSSIBLE.
4. PROVIDE 6" LONG H.S.A (AT 7.1/2" SLABS) & 5" LONG H.S.A. (AT 6" SLABS) ON COMPOSITE BEAMS IN THE AREAS OF 1" SLAB RECESSES.

NOTE TO BID PACKAGE #2.

BID PACKAGE #2 IS FOR FOOTING & FOUNDATION WORK ONLY. ALL OTHER STRUCTURAL STEEL DRAWINGS ARE INCLUDED FOR REFERENCE ONLY.

Key Plan

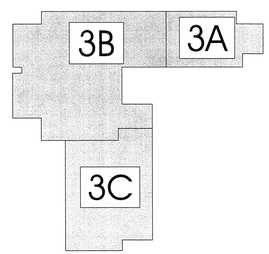


ARCHITECT 0818

ajc architects

703 east 1700 south
salt lake city, utah 84105
ph: 801.466.8818
fx: 801.466.4411
www.ajcarchitects.com

PAYETTE

285 Summer Street
Boston, MA 02210-1522
www.payette.com

REAVELEY
ENGINEERS + ASSOCIATES
Consulting Structural Engineers

P: 801.486.3883
F: 801.485.0911

675 E.500 S. Suite 400
Salt Lake City, Utah 84102
www.reaveley.com

OWNER INFORMATION

State of Utah
Department of Administrative Services

Division of Facilities Construction & Management
4110 State Office Building
Salt Lake City, Utah 84114
Phone: (801) 538 - 3018
Fax: (801) 538 - 3267

Internet: http://www.dfcm.utah.gov

PROJECT DESCRIPTION

LIFE SCIENCES RESEARCH CENTER
UTAH STATE UNIVERSITY

USTAR BUILDING #2
LOGAN, UTAH

SHEET NAME:

PARTIAL LEVEL 3 FLOOR FRAMING PLAN AREA B

REVISIONS

| MARK | DATE | DESCRIPTION |
|---|---|---|

ISSUE DATA

| | |
|---|---|
| ISSUE DATE: | DEC. 9, 2008 |
| ISSUE TYPE: | B.P. #2 REVIEW |
| DRAWN BY: | R. HARRIS |
| CHECKED BY: | J. MILLER / C.PRICE |
| CAD FILE NAME: | |
| DFCM PROJECT # | 06292770 |
| STATE PROPERTY # | - |
| COPYRIGHT: | STATE OF UTAH |

SHEET NUMBER:

SF103B

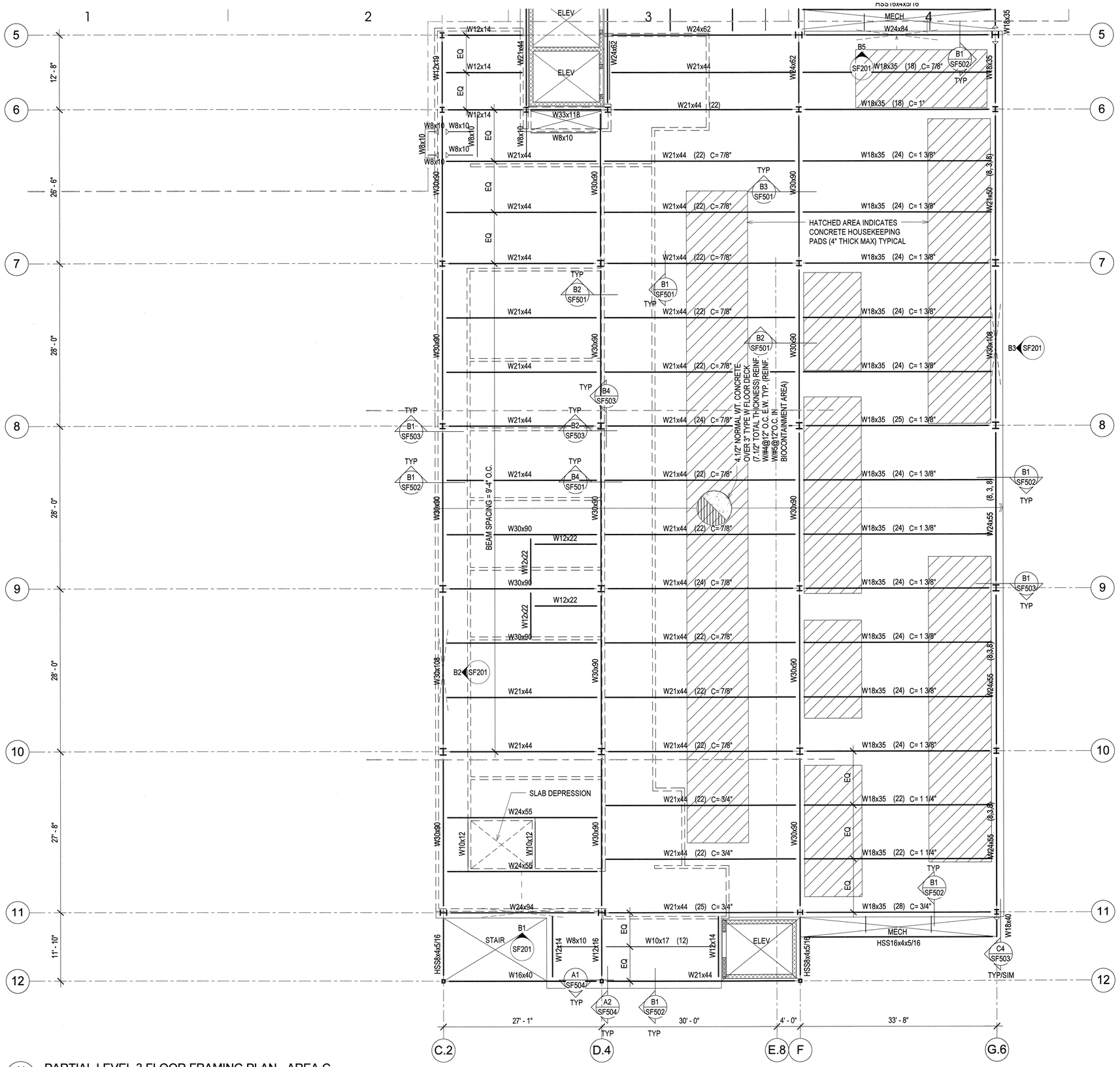


A1 / SF103C PARTIAL LEVEL 3 FLOOR FRAMING PLAN - AREA C

SCALE: 1/8" = 1'-0"

## FLOOR FRAMING PLAN LEGEND

- CONCRETE WALL
- CONCRETE LINTEL IN CONCRETE WALL
- CONCRETE COLUMN IN CONCRETE WALL
- CONCRETE COLUMN
- CONCRETE JAMB COLUMN POURED MONOLITHIC WITH CONCRETE WALL
- MASONRY WALL
- MASONRY LINTEL IN MASONRY WALL
- MASONRY COLUMN IN MASONRY WALL
- STEEL COLUMN - TUBE
- STEEL COLUMN - WIDE FLANGE
- STEEL COLUMN - PIPE
- STEEL BRACED FRAME
- MOMENT CONNECTION
- COLLECTOR CONNECTION SEE B1/SF603
- COLLECTOR/CHORD CONNECTION AT BEAMS PARALLEL TO MARK. SEE B1/SF603
- DOUBLE SHEAR CONNECTION SEE A1/SF602
- STEEL BEAM OR GIRDER
- STEEL JOIST OR PURLIN
- CROSS BRIDGING
- HORIZONTAL BRIDGING
- STEEL STUD WALL - STRUCTURAL
- STEEL HEADER IN STEEL STUD WALL
- 0" CHANGE IN ELEVATION
- CONCRETE ON METAL DECK
- ROOF DECK
- SPECIAL DECK AREA
- OPENING
- RECESSED/DEPRESSED SLAB ON METAL DECK

## FLOOR FRAMING PLAN NOTES

1. SEE GENERAL STRUCTURAL NOTE (III.D.8) AND DETAILS A2 & A3/SF501 FOR CONTROL JOINTS IN SUSPENDED SLABS OVER STEEL DECK.
2. SEE DETAILS C1 & C2/SF501 FOR MISCELLANEOUS FLOOR OPENINGS.
3. SEE GENERAL STRUCTURAL NOTE (V.J.7) FOR STEEL DECK REQUIREMENTS WHERE 3-SPAN CONDITIONS ARE NOT POSSIBLE.
4. PROVIDE 6" LONG H.S.A (AT 7.1/2" SLABS) & 5" LONG H.S.A. (AT 6" SLABS) ON COMPOSITE BEAMS IN THE AREAS OF 1" SLAB RECESSES.

NOTE TO BID PACKAGE #2.

BID PACKAGE #2 IS FOR FOOTING & FOUNDATION WORK ONLY. ALL OTHER STRUCTURAL STEEL DRAWINGS ARE INCLUDED FOR REFERENCE ONLY.

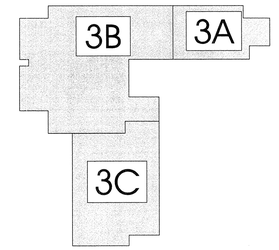


Key Plan

ARCHITECT 0818

ajc architects

703 east 1700 south
salt lake city, utah 84105
ph: 801.466.8818
fx: 801.466.4411
www.ajcarchitects.com

PAYETTE

285 Summer Street
Boston, MA 02210-1522
www.payette.com

REAVELEY
ENGINEERS + ASSOCIATES
Consulting Structural Engineers
P: 801.486.3883
F: 801.485.0911
675 E.500 S. Suite 400
Salt Lake City, Utah 84102
www.reaveley.com

OWNER INFORMATION

State of Utah
Department of Administrative Services
Division of Facilities Construction & Management
4110 State Office Building
Salt Lake City, Utah 84114
Phone: (801) 538 - 3018
Fax: (801) 538 - 3267
Internet: http://www.dfcm.utah.gov

PROJECT DESCRIPTION

# LIFE SCIENCES RESEARCH CENTER
UTAH STATE UNIVERSITY

USTAR BUILDING #2
LOGAN, UTAH

SHEET NAME:

PARTIAL LEVEL 3 FLOOR FRAMING PLAN AREA C

REVISIONS

| MARK | DATE | DESCRIPTION |
|---|---|---|

ISSUE DATA

| | |
|---|---|
| ISSUE DATE: | DEC. 9, 2008 |
| ISSUE TYPE: | B.P. #2 REVIEW |
| DRAWN BY: | R. HARRIS |
| CHECKED BY: | J. MILLER / C.PRICE |
| CAD FILE NAME: | |
| DFCM PROJECT # | 06292770 |
| STATE PROPERTY # | - |
| COPYRIGHT: | STATE OF UTAH |

SHEET NUMBER:

SF103C

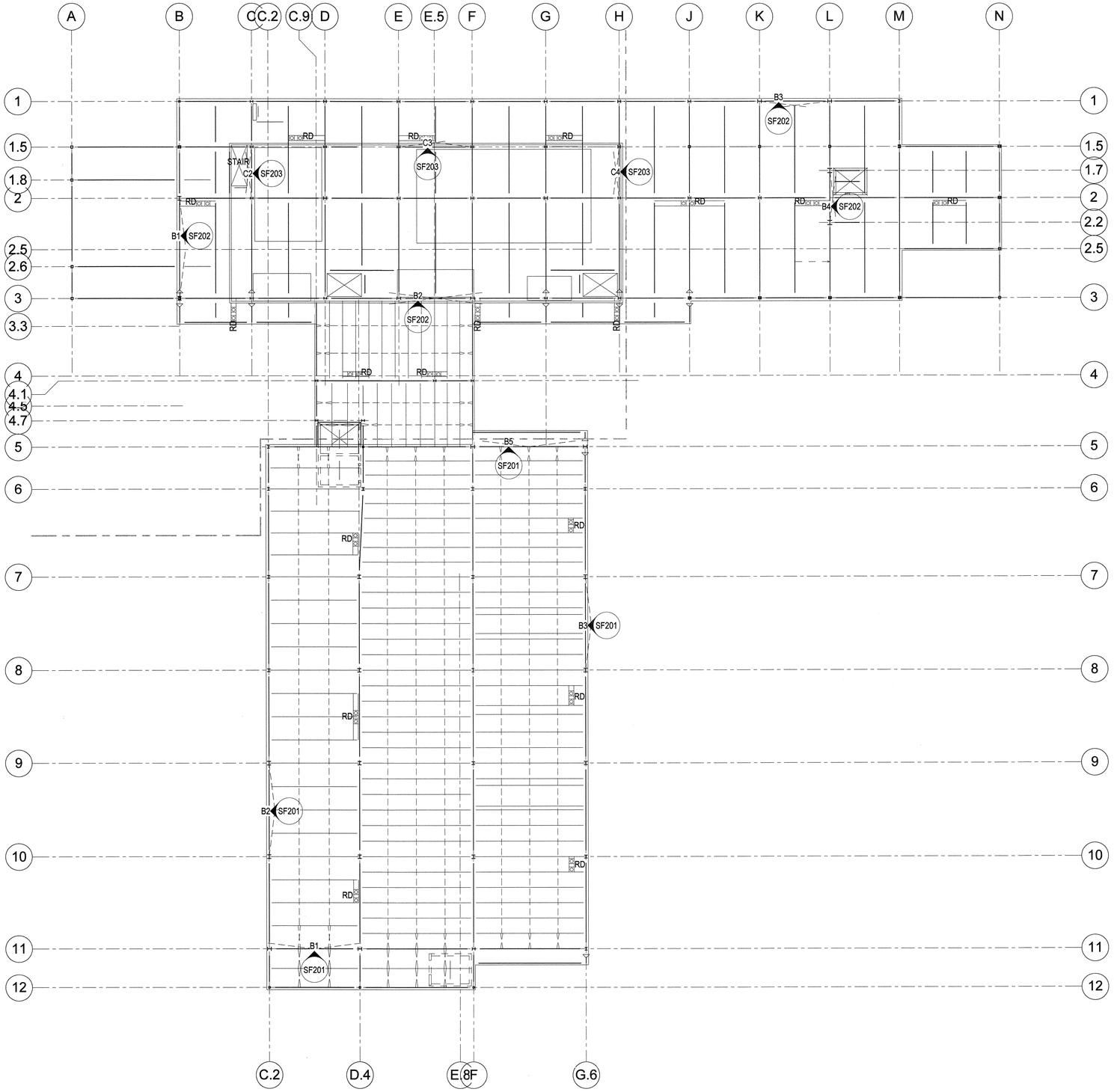


A1 / SF104 OVERALL PENTHOUSE FLOOR/ROOF FRAMING PLAN

SCALE: 1/16" = 1'-0"

NOTE TO BID PACKAGE #2.

BID PACKAGE #2 IS FOR FOOTING & FOUNDATION WORK ONLY. ALL OTHER STRUCTURAL STEEL DRAWINGS ARE INCLUDED FOR REFERENCE ONLY.

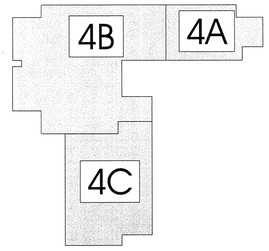


Key Plan

ARCHITECT 0818

ajc architects

703 east 1700 south
salt lake city, utah 84105
ph: 801.466.8818
fx: 801.466.4411
www.ajcarchitects.com

PAYETTE

285 Summer Street
Boston, MA 02210-1522
www.payette.com

REAVELEY
ENGINEERS + ASSOCIATES
Consulting Structural Engineers

P: 801.486.3883
F: 801.485.0911

675 E. 500 S. Suite 400
Salt Lake City, Utah 84102
www.reaveley.com

OWNER INFORMATION

State of Utah
Department of Administrative Services

Division of Facilities Construction & Management
4110 State Office Building
Salt Lake City, Utah 84114
Phone: (801) 538 - 3018
Fax: (801) 538 - 3267

Internet: http://www.dfcm.utah.gov

PROJECT DESCRIPTION

LIFE SCIENCES RESEARCH CENTER
UTAH STATE UNIVERSITY

USTAR BUILDING #2
LOGAN, UTAH

SHEET NAME:

OVERALL PENTHOUSE FLOOR / ROOF FRAMING PLAN

REVISIONS

| MARK | DATE | DESCRIPTION |
|---|---|---|

ISSUE DATA

| | |
|---|---|
| ISSUE DATE: | DEC. 9, 2008 |
| ISSUE TYPE: | B.P. #2 REVIEW |
| DRAWN BY: | R. HARRIS |
| CHECKED BY: | J. MILLER / C.PRICE |
| CAD FILE NAME: | |
| DFCM PROJECT # | 06292770 |
| STATE PROPERTY # | - |
| COPYRIGHT: | STATE OF UTAH |

SHEET NUMBER:

SF104

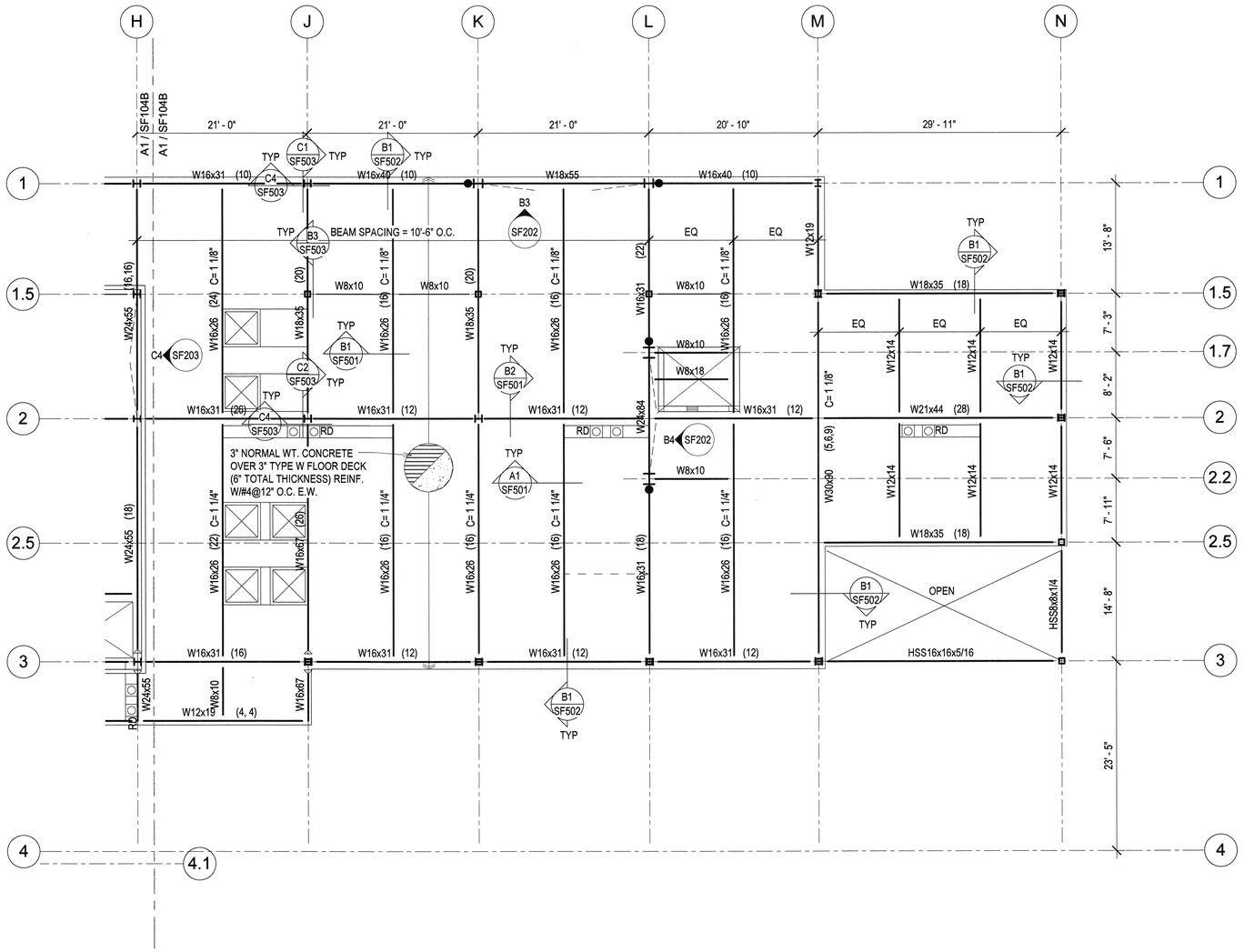


A1 / SF104A **PARTIAL PENTHOUSE FLOOR FRAMING PLAN - AREA A**

SCALE: 1/8" = 1'-0"

## FLOOR FRAMING PLAN LEGEND

LEG-FLOOR

- CONCRETE WALL
- CONCRETE LINTEL IN CONCRETE WALL
- CONCRETE COLUMN IN CONCRETE WALL
- CONCRETE COLUMN
- CONCRETE JAMB COLUMN POURED MONOLITHIC WITH CONCRETE WALL
- MASONRY WALL
- MASONRY LINTEL IN MASONRY WALL
- MASONRY COLUMN IN MASONRY WALL
- STEEL COLUMN - TUBE
- STEEL COLUMN - WIDE FLANGE
- STEEL COLUMN - PIPE
- STEEL BRACED FRAME
- MOMENT CONNECTION
- COLLECTOR CONNECTION SEE B1/SF603
- COLLECTOR/CHORD CONNECTION AT BEAMS PARALLEL TO MARK. SEE B1/SF603
- DOUBLE SHEAR CONNECTION SEE A1/SF602
- STEEL BEAM OR GIRDER
- STEEL JOIST OR PURLIN
- CROSS BRIDGING
- HORIZONTAL BRIDGING
- STEEL STUD WALL - STRUCTURAL
- STEEL HEADER IN STEEL STUD WALL
- 0" CHANGE IN ELEVATION
- CONCRETE ON METAL DECK — ROOF DECK
- SPECIAL DECK AREA — OPENING
- RECESSED/DEPRESSED SLAB ON METAL DECK

## FLOOR FRAMING PLAN NOTES

NOTE-FLOOR

1. SEE GENERAL STRUCTURAL NOTE (III.D.8) AND DETAILS A2 & A3/SF501 FOR CONTROL JOINTS IN SUSPENDED SLABS OVER STEEL DECK.

2. SEE DETAILS C1 & C2/SF501 FOR MISCELLANEOUS FLOOR OPENINGS.

3. SEE GENERAL STRUCTURAL NOTE (V.J.7) FOR STEEL DECK REQUIREMENTS WHERE 3-SPAN CONDITIONS ARE NOT POSSIBLE.

4. PROVIDE 6" LONG H.S.A (AT 7.1/2" SLABS) & 5" LONG H.S.A. (AT 6" SLABS) ON COMPOSITE BEAMS IN THE AREAS OF 1" SLAB RECESSES.

NOTE TO BID PACKAGE #2.

BID PACKAGE #2 IS FOR FOOTING & FOUNDATION WORK ONLY. ALL OTHER STRUCTURAL STEEL DRAWINGS ARE INCLUDED FOR REFERENCE ONLY.

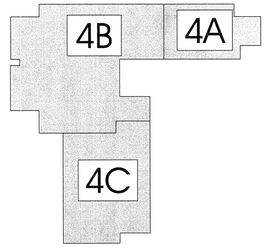


Key Plan

ARCHITECT 0818

ajc architects

703 east 1700 south
salt lake city, utah 84105
ph: 801.466.8818
fx: 801.466.4411
www.ajcarchitects.com

PAYETTE

285 Summer Street
Boston, MA 02210-1522
www.payette.com

REAVELEY
ENGINEERS + ASSOCIATES
Consulting Structural Engineers

P: 801.486.3883
F: 801.485.0911

675 E. 500 S. Suite 400
Salt Lake City, Utah 84102
www.reaveley.com

OWNER INFORMATION

State of Utah
Department of Administrative Services

Division of Facilities Construction & Management
4110 State Office Building
Salt Lake City, Utah 84114
Phone: (801) 538 - 3018
Fax: (801) 538 - 3267

Internet: http://www.dfcm.utah.gov

PROJECT DESCRIPTION

# LIFE SCIENCES RESEARCH CENTER
UTAH STATE UNIVERSITY

USTAR BUILDING #2
LOGAN, UTAH

SHEET NAME:

PARTIAL PENTHOUSE FLOOR FRAMING PLAN - AREA A

REVISIONS

| MARK | DATE | DESCRIPTION |
|---|---|---|

ISSUE DATA

| | |
|---|---|
| ISSUE DATE: | DEC. 9, 2008 |
| ISSUE TYPE: | B.P. #2 REVIEW |
| DRAWN BY: | R. HARRIS |
| CHECKED BY: | J. MILLER / C.PRICE |
| CAD FILE NAME: | |
| DFCM PROJECT # | 06292770 |
| STATE PROPERTY # | - |
| COPYRIGHT: | STATE OF UTAH |

SHEET NUMBER:

SF104A

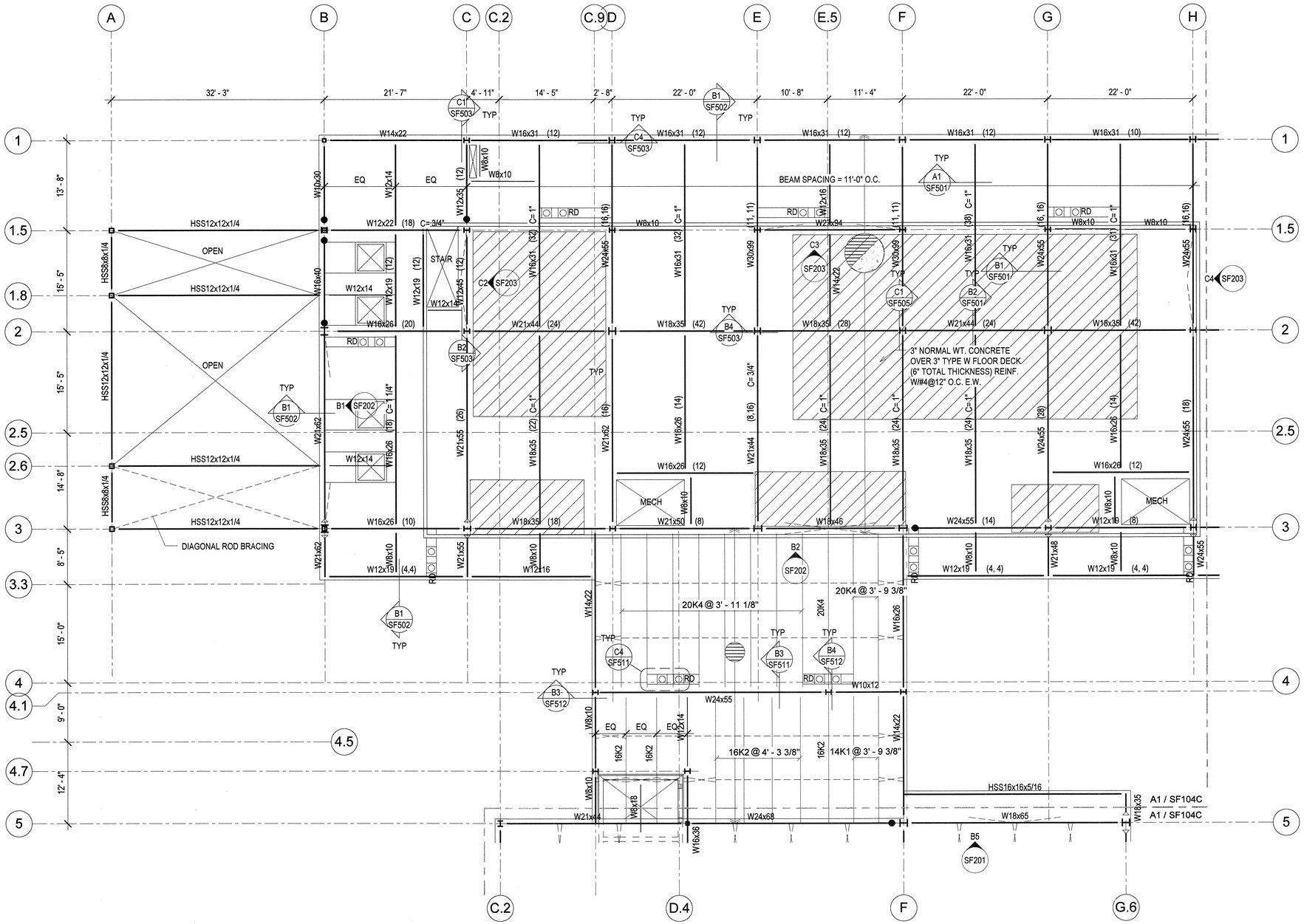


A1 / SF104B PARTIAL PENTHOUSE FLOOR FRAMING PLAN - AREA B

SCALE: 1/8" = 1'-0"

## FLOOR FRAMING PLAN LEGEND

LEG=FLOOR

- CONCRETE WALL
- CONCRETE LINTEL IN CONCRETE WALL
- CONCRETE COLUMN IN CONCRETE WALL
- CONCRETE COLUMN
- CONCRETE JAMB COLUMN POURED MONOLITHIC WITH CONCRETE WALL
- MASONRY WALL
- MASONRY LINTEL IN MASONRY WALL
- MASONRY COLUMN IN MASONRY WALL
- STEEL COLUMN - TUBE
- STEEL COLUMN - WIDE FLANGE
- STEEL COLUMN - PIPE
- STEEL BRACED FRAME
- MOMENT CONNECTION
- COLLECTOR CONNECTION SEE B1/SF603
- COLLECTOR/CHORD CONNECTION AT BEAMS PARALLEL TO MARK. SEE B1/SF603
- DOUBLE SHEAR CONNECTION SEE A1/SF602
- STEEL BEAM OR GIRDER
- STEEL JOIST OR PURLIN
- CROSS BRIDGING
- HORIZONTAL BRIDGING
- STEEL STUD WALL - STRUCTURAL
- STEEL HEADER IN STEEL STUD WALL
- 0" CHANGE IN ELEVATION
- CONCRETE ON METAL DECK
- ROOF DECK
- SPECIAL DECK AREA
- OPENING
- RECESSED/DEPRESSED SLAB ON METAL DECK

## FLOOR FRAMING PLAN NOTES

NOTE=FLOOR

1. SEE GENERAL STRUCTURAL NOTE (III.D.8) AND DETAILS A2 & A3/SF501 FOR CONTROL JOINTS IN SUSPENDED SLABS OVER STEEL DECK.
2. SEE DETAILS C1 & C2/SF501 FOR MISCELLANEOUS FLOOR OPENINGS.
3. SEE GENERAL STRUCTURAL NOTE (V.J.7) FOR STEEL DECK REQUIREMENTS WHERE 3-SPAN CONDITIONS ARE NOT POSSIBLE.
4. PROVIDE 6" LONG H.S.A (AT 7.1/2" SLABS) & 5" LONG H.S.A. (AT 6" SLABS) ON COMPOSITE BEAMS IN THE AREAS OF 1" SLAB RECESSES.

NOTE TO BID PACKAGE #2.

BID PACKAGE #2 IS FOR FOOTING & FOUNDATION WORK ONLY. ALL OTHER STRUCTURAL STEEL DRAWINGS ARE INCLUDED FOR REFERENCE ONLY.

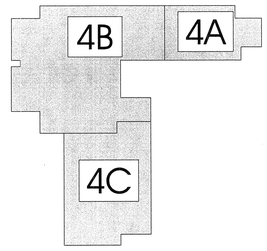


Key Plan

ARCHITECT 0818

ajc architects

703 east 1700 south
salt lake city, utah 84105
ph: 801.466.8818
fx: 801.466.4411
www.ajcarchitects.com

P A Y E T T E

285 Summer Street
Boston, MA 02210-1522
www.payette.com

REAVELEY
ENGINEERS + ASSOCIATES
Consulting Structural Engineers

P: 801.486.3883
F: 801.485.0911

675 E. 500 S. Suite 400
Salt Lake City, Utah 84102
www.reaveley.com

OWNER INFORMATION

State of Utah
Department of Administrative Services

Division of Facilities Construction & Management
4110 State Office Building
Salt Lake City, Utah 84114
Phone: (801) 538 - 3018
Fax: (801) 538 - 3267

Internet: http://www.dfcm.utah.gov

PROJECT DESCRIPTION

LIFE SCIENCES RESEARCH CENTER
UTAH STATE UNIVERSITY

USTAR BUILDING #2
LOGAN, UTAH

SHEET NAME:

PARTIAL PENTHOUSE FLOOR FRAMING PLAN - AREA B

REVISIONS

| MARK | DATE | DESCRIPTION |
|---|---|---|

ISSUE DATA

| | |
|---|---|
| ISSUE DATE: | DEC. 9, 2008 |
| ISSUE TYPE: | B.P. #2 REVIEW |
| DRAWN BY: | R. HARRIS |
| CHECKED BY: | J. MILLER / C.PRICE |
| CAD FILE NAME: | |
| DFCM PROJECT # | 06292770 |
| STATE PROPERTY # | - |
| COPYRIGHT: | STATE OF UTAH |

SHEET NUMBER:

SF104B

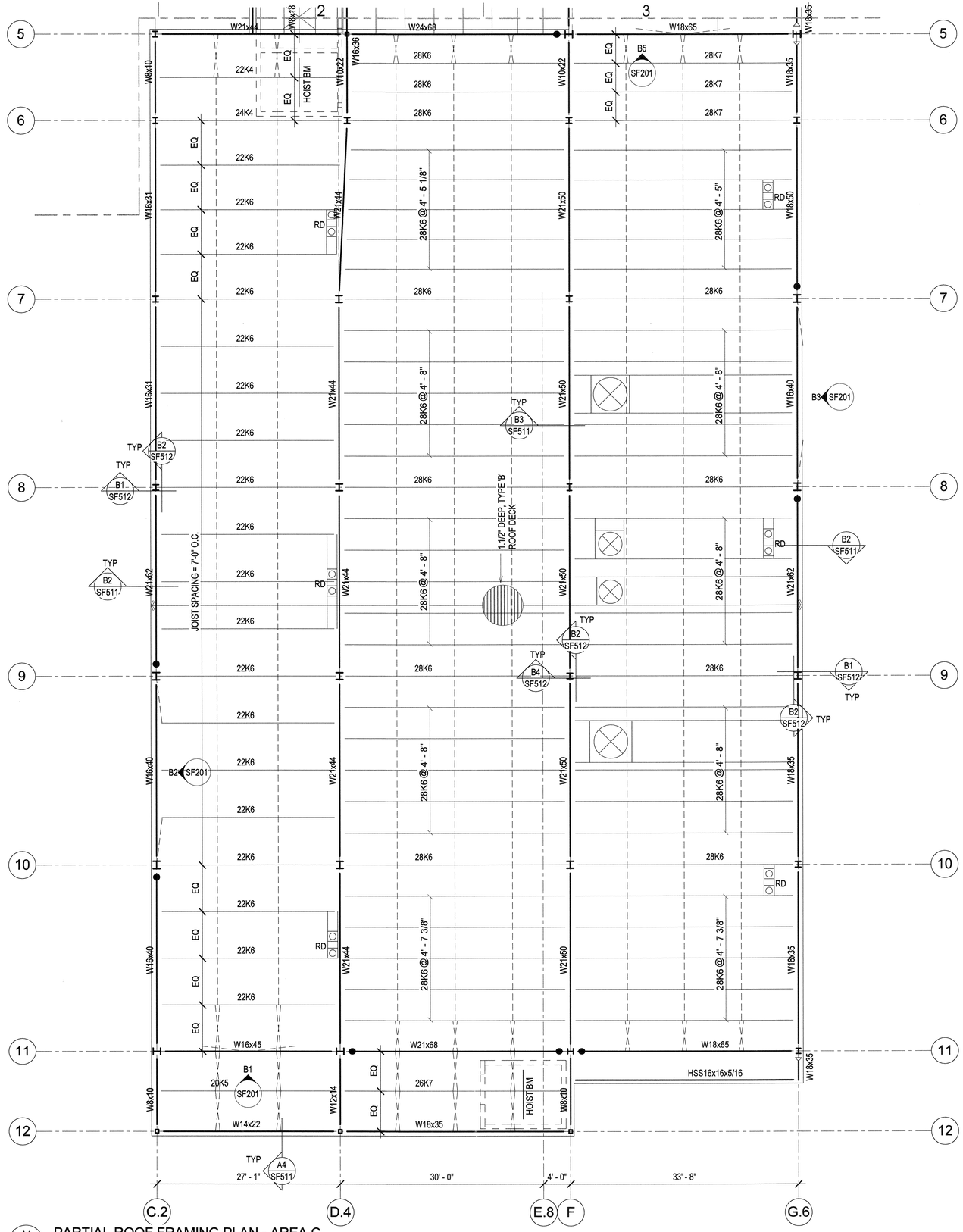


A1 / SF104C PARTIAL ROOF FRAMING PLAN - AREA C

SCALE: 1/8" = 1'-0"

## ROOF FRAMING PLAN NOTES

1. VERIFY SIZE, WEIGHT, LOCATION AND CONFIGURATION OF ALL ROOF TOP EQUIPMENT WITH ARCHITECT AND MECHANICAL ENGINEER. PROVIDE STEEL FRAMES FOR SUPPORT OF ROOF TOP EQUIPMENT AS INDICATED IN DETAIL __/SF___ COORDINATE OPENINGS WITH MECHANICAL AND ELECTRICAL AND GENERAL CONTRACTORS.

2. ALL ROOF OPENINGS SHALL BE FRAMED AS INDICATED IN DETAIL C2/SF511. FOR ROUND OPENINGS WHICH ARE LESS THAN 12" DIA. SEE DETAIL C3/SF511.

3. SEE ARCHITECTURAL FOR ROOF SLOPES AND DRAINS. SEE C4/SF511 FOR ROOF DRAIN OPENING FRAME.

4. OPEN WEB STEEL JOISTS AND JOIST GIRDERS SHALL BE DESIGNED BY THE MANUFACTURER TO SUPPORT THE MECHANICAL AND LATERAL LOADS SHOWN ON THE ROOF FRAMING PLANS IN ADDITION TO THE UNIFORM AND POINT LOADS SHOWN.

5. ±#.#K ADD - INDICATES ADDITIONAL UPLIFT / DOWNWARD FORCE ON STEEL JOIST IN ADDITION TO REGULAR LOADS.

6. T/C=##K - INDICATES ADDITIONAL TOP CHORD AXIAL FORCE ON STEEL JOIST OR GIRDER IN ADDITION TO REGULAR LOADS. THIS FORCE IS A SEISMIC LRFD LOAD THAT SHALL BE CONSIDERED IN BOTH TENSION AND COMPRESSION; INCLUDES APPLICABLE OVERSTRENGTH FACTORS FROM IBC SECTION 1613 AND ASCE 7 SECTION 12.10. STEEL JOISTS AND GIRDERS WITH T/C FORCE SHALL BE DESIGNED AS COLLECTOR ELEMENTS PER IBC SECTION 1613 AND ASCE 7 SECTION 12.10 WITH STRENGTH TO RESIST APPLICABLE LOAD COMBINATIONS OF IBC SECTION 1605.4 AND ASCE 7 SECTION 12.4.

7. ALL LOADS SUPPORTED BY OPEN WEB STEEL JOISTS AND GIRDERS SHALL BE LOCATED WITHIN 6" OF JOIST OR GIRDER PANEL POINT OR THE JOIST OR GIRDER SHALL BE REINFORCED PER DETAIL C1/SF511.

8. SEE DETAIL A1/SF511 FOR SUPPORT OF HANGING MECHANICAL UNITS.

9. HORIZONTAL AND CROSS BRIDGING SHALL BE SIZED AND SUPPLIED BY THE JOIST MANUFACTURER. CONNECT TO WALLS AS INDICATED IN DETAILS.

10. WHERE SKYLIGHTS OR MECHANICAL UNITS INTERRUPT HORIZONTAL BRIDGING PROVIDE CROSS BRIDGING AT JOIST SPACES ON EACH SIDE. TYPICAL.

## ROOF FRAMING PLAN LEGEND

- CONCRETE WALL
- CONCRETE LINTEL IN CONCRETE WALL
- CONCRETE COLUMN IN CONCRETE WALL
- CONCRETE COLUMN
- CONCRETE JAMB COLUMN POURED MONOLITHIC WITH CONCRETE WALL
- MASONRY WALL
- MASONRY LINTEL IN MASONRY WALL
- MASONRY COLUMN IN MASONRY WALL
- STEEL COLUMN - TUBE
- STEEL COLUMN - WIDE FLANGE
- STEEL COLUMN - PIPE
- STEEL BRACED FRAME
- MOMENT CONNECTION
- COLLECTOR CONNECTION SEE B1/SF603
- COLLECTOR/CHORD CONNECTION AT BEAMS PARALLEL TO MARK. SEE B1/SF603
- DOUBLE SHEAR CONNECTION SEE A1/SF602
- STEEL BEAM OR GIRDER
- STEEL JOIST OR PURLIN
- CROSS BRIDGING
- HORIZONTAL BRIDGING
- STEEL STUD WALL - STRUCTURAL
- STEEL HEADER IN STEEL STUD WALL
- 0" CHANGE IN ELEVATION
- CONCRETE ON METAL DECK
- ROOF DECK
- SPECIAL DECK AREA
- OPENING
- RECESSED/DEPRESSED SLAB ON METAL DECK

NOTE TO BID PACKAGE #2.

BID PACKAGE #2 IS FOR FOOTING & FOUNDATION WORK ONLY. ALL OTHER STRUCTURAL STEEL DRAWINGS ARE INCLUDED FOR REFERENCE ONLY.

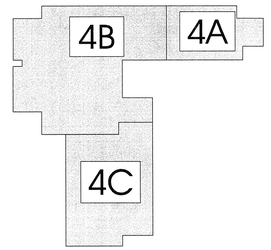


Key Plan

ARCHITECT 0818

ajc architects

703 east 1700 south
salt lake city, utah 84105
ph: 801.466.8818
fx: 801.466.4411
www.ajcarchitects.com

PAYETTE

285 Summer Street
Boston, MA 02210-1522
www.payette.com

REAVELEY
ENGINEERS + ASSOCIATES
Consulting Structural Engineers

P: 801.486.3883
F: 801.485.0911

675 E. 500 S. Suite 400
Salt Lake City, Utah 84102
www.reaveley.com

OWNER INFORMATION

State of Utah
Department of Administrative Services

Division of Facilities Construction & Management
4110 State Office Building
Salt Lake City, Utah 84114
Phone: (801) 538 - 3018
Fax: (801) 538 - 3267

Internet: http://www.dfcm.utah.gov

PROJECT DESCRIPTION

LIFE SCIENCES RESEARCH CENTER
UTAH STATE UNIVERSITY

USTAR BUILDING #2
LOGAN, UTAH

SHEET NAME:

PARTIAL ROOF FRAMING PLAN - AREA C

REVISIONS

| MARK | DATE | DESCRIPTION |
|---|---|---|

ISSUE DATA

| | |
|---|---|
| ISSUE DATE: | DEC. 9, 2008 |
| ISSUE TYPE: | B.P. #2 REVIEW |
| DRAWN BY: | R. HARRIS |
| CHECKED BY: | J. MILLER / C.PRICE |
| CAD FILE NAME: | |
| DFCM PROJECT # | 06292770 |
| STATE PROPERTY # | - |
| COPYRIGHT: | STATE OF UTAH |

SHEET NUMBER:

SF104C

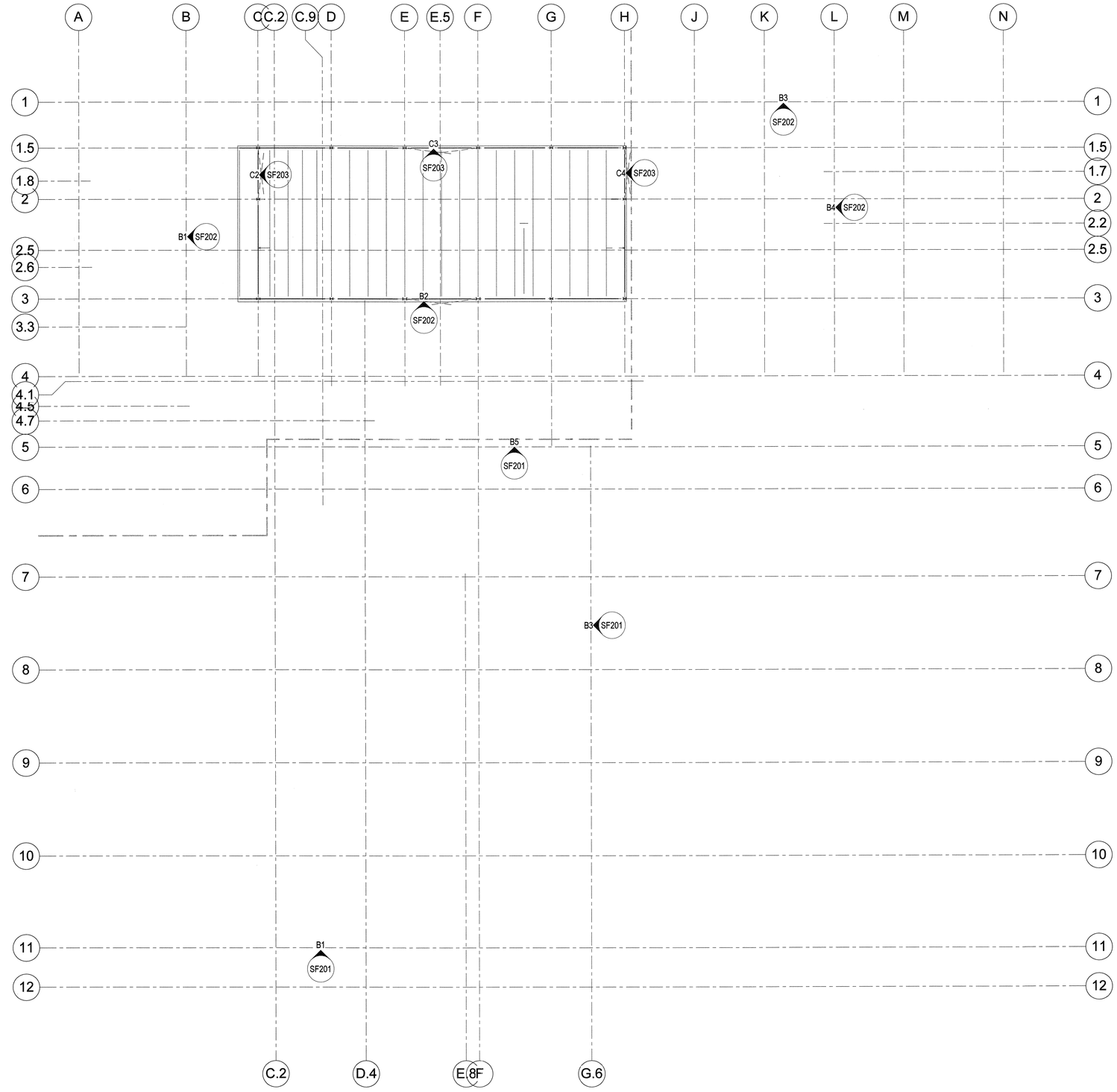


A1 / SF105 OVERALL PENTHOUSE ROOF FRAMING PLAN

SCALE: 1/16" = 1'-0"

NOTE TO BID PACKAGE #2.

BID PACKAGE #2 IS FOR FOOTING & FOUNDATION WORK ONLY. ALL OTHER STRUCTURAL STEEL DRAWINGS ARE INCLUDED FOR REFERENCE ONLY.

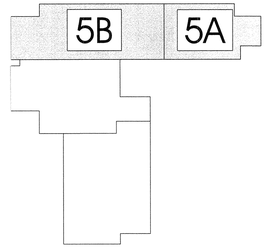


Key Plan

ARCHITECT 0818

ajc architects

703 east 1700 south
salt lake city, utah 84105
ph: 801.466.8818
fx: 801.466.4411
www.ajcarchitects.com

PAYETTE

285 Summer Street
Boston, MA 02210-1522
www.payette.com

REAVELEY
ENGINEERS + ASSOCIATES
Consulting Structural Engineers

P: 801.486.3883
F: 801.485.0911

675 E. 500 S. Suite 400
Salt Lake City, Utah 84102
www.reaveley.com

OWNER INFORMATION

State of Utah
Department of Administrative Services

Division of Facilities
Construction & Management
4110 State Office Building
Salt Lake City, Utah 84114
Phone: (801) 538 - 3018
Fax: (801) 538 - 3267

Internet: http://www.dfcm.utah.gov

PROJECT DESCRIPTION

LIFE SCIENCES
RESEARCH CENTER
UTAH STATE UNIVERSITY

USTAR BUILDING #2
LOGAN, UTAH

SHEET NAME:

OVERALL
PENTHOUSE ROOF
FRAMING PLAN

REVISIONS

| MARK | DATE | DESCRIPTION |
|---|---|---|

ISSUE DATA

| | |
|---|---|
| ISSUE DATE: | DEC. 9, 2008 |
| ISSUE TYPE: | B.P. #2 REVIEW |
| DRAWN BY: | R. HARRIS |
| CHECKED BY: | J. MILLER / C.PRICE |
| CAD FILE NAME: | |
| DFCM PROJECT # | 06292770 |
| STATE PROPERTY # | - |
| COPYRIGHT: | STATE OF UTAH |

SHEET NUMBER:

SF105

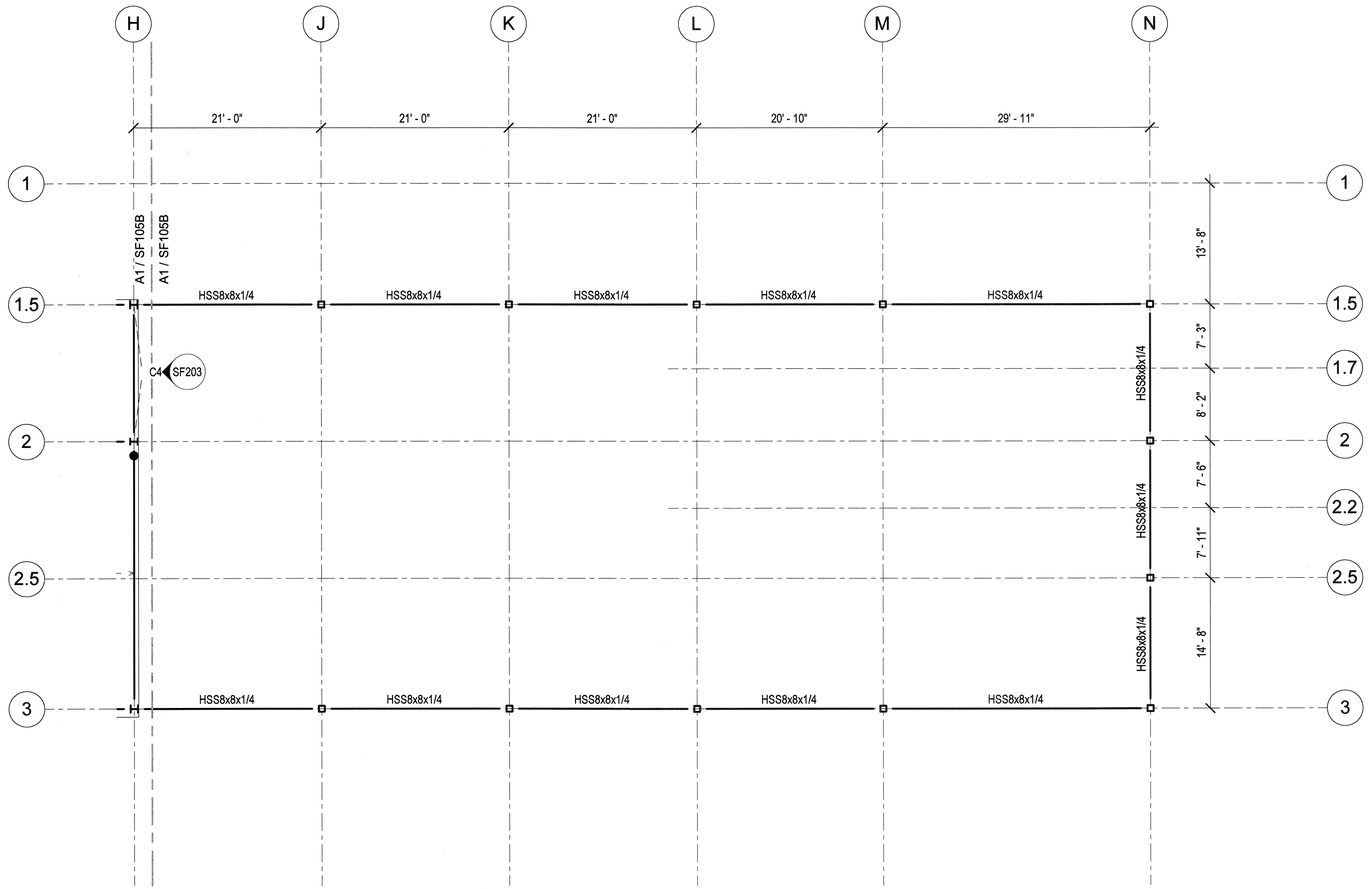


B1 / SF105A PARTIAL PARAPET FRAMING PLAN - AREA A

SCALE: 1/8" = 1'-0"

## ROOF FRAMING PLAN NOTES

1. VERIFY SIZE, WEIGHT, LOCATION AND CONFIGURATION OF ALL ROOF TOP EQUIPMENT WITH ARCHITECT AND MECHANICAL ENGINEER. PROVIDE STEEL FRAMES FOR SUPPORT OF ROOF TOP EQUIPMENT AS INDICATED IN DETAIL __/SF___ COORDINATE OPENINGS WITH MECHANICAL AND ELECTRICAL AND GENERAL CONTRACTORS.

2. ALL ROOF OPENINGS SHALL BE FRAMED AS INDICATED IN DETAIL C2/SF511. FOR ROUND OPENINGS WHICH ARE LESS THAN 12" DIA. SEE DETAIL C3/SF511.

3. SEE ARCHITECTURAL FOR ROOF SLOPES AND DRAINS. SEE C4/SF511 FOR ROOF DRAIN OPENING FRAME.

4. OPEN WEB STEEL JOISTS AND JOIST GIRDERS SHALL BE DESIGNED BY THE MANUFACTURER TO SUPPORT THE MECHANICAL AND LATERAL LOADS SHOWN ON THE ROOF FRAMING PLANS IN ADDITION TO THE UNIFORM AND POINT LOADS SHOWN.

5. ±#.#K ADD - INDICATES ADDITIONAL UPLIFT / DOWNWARD FORCE ON STEEL JOIST IN ADDITION TO REGULAR LOADS.

6. T/C=###K - INDICATES ADDITIONAL TOP CHORD AXIAL FORCE ON STEEL JOIST OR GIRDER IN ADDITION TO REGULAR LOADS. THIS FORCE IS A SEISMIC LRFD LOAD THAT SHALL BE CONSIDERED IN BOTH TENSION AND COMPRESSION; INCLUDES APPLICABLE OVERSTRENGTH FACTORS FROM IBC SECTION 1613 AND ASCE 7 SECTION 12.10. STEEL JOISTS AND GIRDERS WITH T/C FORCE SHALL BE DESIGNED AS COLLECTOR ELEMENTS PER IBC SECTION 1613 AND ASCE 7 SECTION 12.10 WITH STRENGTH TO RESIST APPLICABLE LOAD COMBINATIONS OF IBC SECTION 1605.4 AND ASCE 7 SECTION 12.4.

7. ALL LOADS SUPPORTED BY OPEN WEB STEEL JOISTS AND GIRDERS SHALL BE LOCATED WITHIN 6" OF JOIST OR GIRDER PANEL POINT OR THE JOIST OR GIRDER SHALL BE REINFORCED PER DETAIL C1/SF511.

8. SEE DETAIL A1/SF511 FOR SUPPORT OF HANGING MECHANICAL UNITS.

9. HORIZONTAL AND CROSS BRIDGING SHALL BE SIZED AND SUPPLIED BY THE JOIST MANUFACTURER. CONNECT TO WALLS AS INDICATED IN DETAILS.

10. WHERE SKYLIGHTS OR MECHANICAL UNITS INTERRUPT HORIZONTAL BRIDGING PROVIDE CROSS BRIDGING AT JOIST SPACES ON EACH SIDE. TYPICAL.

## ROOF FRAMING PLAN LEGEND

- CONCRETE WALL
- CONCRETE LINTEL IN CONCRETE WALL
- CONCRETE COLUMN IN CONCRETE WALL
- CONCRETE COLUMN
- CONCRETE JAMB COLUMN POURED MONOLITHIC WITH CONCRETE WALL
- MASONRY WALL
- MASONRY LINTEL IN MASONRY WALL
- MASONRY COLUMN IN MASONRY WALL
- STEEL COLUMN - TUBE
- STEEL COLUMN - WIDE FLANGE
- STEEL COLUMN - PIPE
- STEEL BRACED FRAME
- MOMENT CONNECTION
- COLLECTOR CONNECTION SEE B1/SF603
- COLLECTOR/CHORD CONNECTION AT BEAMS PARALLEL TO MARK. SEE B1/SF603
- DOUBLE SHEAR CONNECTION SEE A1/SF602
- STEEL BEAM OR GIRDER
- STEEL JOIST OR PURLIN
- CROSS BRIDGING
- HORIZONTAL BRIDGING
- STEEL STUD WALL - STRUCTURAL
- STEEL HEADER IN STEEL STUD WALL
- 0" CHANGE IN ELEVATION
- CONCRETE ON METAL DECK
- ROOF DECK
- SPECIAL DECK AREA
- OPENING
- RECESSED/DEPRESSED SLAB ON METAL DECK

NOTE TO BID PACKAGE #2.

BID PACKAGE #2 IS FOR FOOTING & FOUNDATION WORK ONLY. ALL OTHER STRUCTURAL STEEL DRAWINGS ARE INCLUDED FOR REFERENCE ONLY.

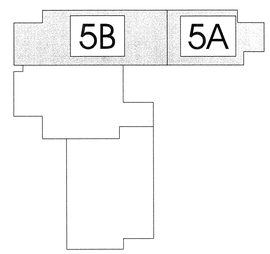


Key Plan

ARCHITECT 0818

ajc architects

703 east 1700 south
salt lake city, utah 84105
ph: 801.466.8818
fx: 801.466.4411
www.ajcarchitects.com

PAYETTE

285 Summer Street
Boston, MA 02210-1522
www.payette.com

REAVELEY
ENGINEERS + ASSOCIATES
Consulting Structural Engineers
P:801.486.3883
F:801.485.0911
675 E.500 S. Suite 400
Salt Lake City, Utah 84102
www.reaveley.com

OWNER INFORMATION

State of Utah
Department of Administrative Services

Division of Facilities Construction & Management
4110 State Office Building
Salt Lake City, Utah 84114
Phone: (801) 538 - 3018
Fax: (801) 538 - 3267

Internet: http://www.dfcm.utah.gov

PROJECT DESCRIPTION

# LIFE SCIENCES RESEARCH CENTER
UTAH STATE UNIVERSITY

USTAR BUILDING #2
LOGAN, UTAH

SHEET NAME:

PARTIAL PARAPET FRAMING PLAN - AREA A

REVISIONS

| MARK | DATE | DESCRIPTION |
|---|---|---|

ISSUE DATA

| | |
|---|---|
| ISSUE DATE: | DEC. 9, 2008 |
| ISSUE TYPE: | B.P. #2 REVIEW |
| DRAWN BY: | R. HARRIS |
| CHECKED BY: | J. MILLER / C.PRICE |
| CAD FILE NAME: | |
| DFCM PROJECT # | 06292770 |
| STATE PROPERTY # | - |
| COPYRIGHT: | STATE OF UTAH |

SHEET NUMBER:

SF105A

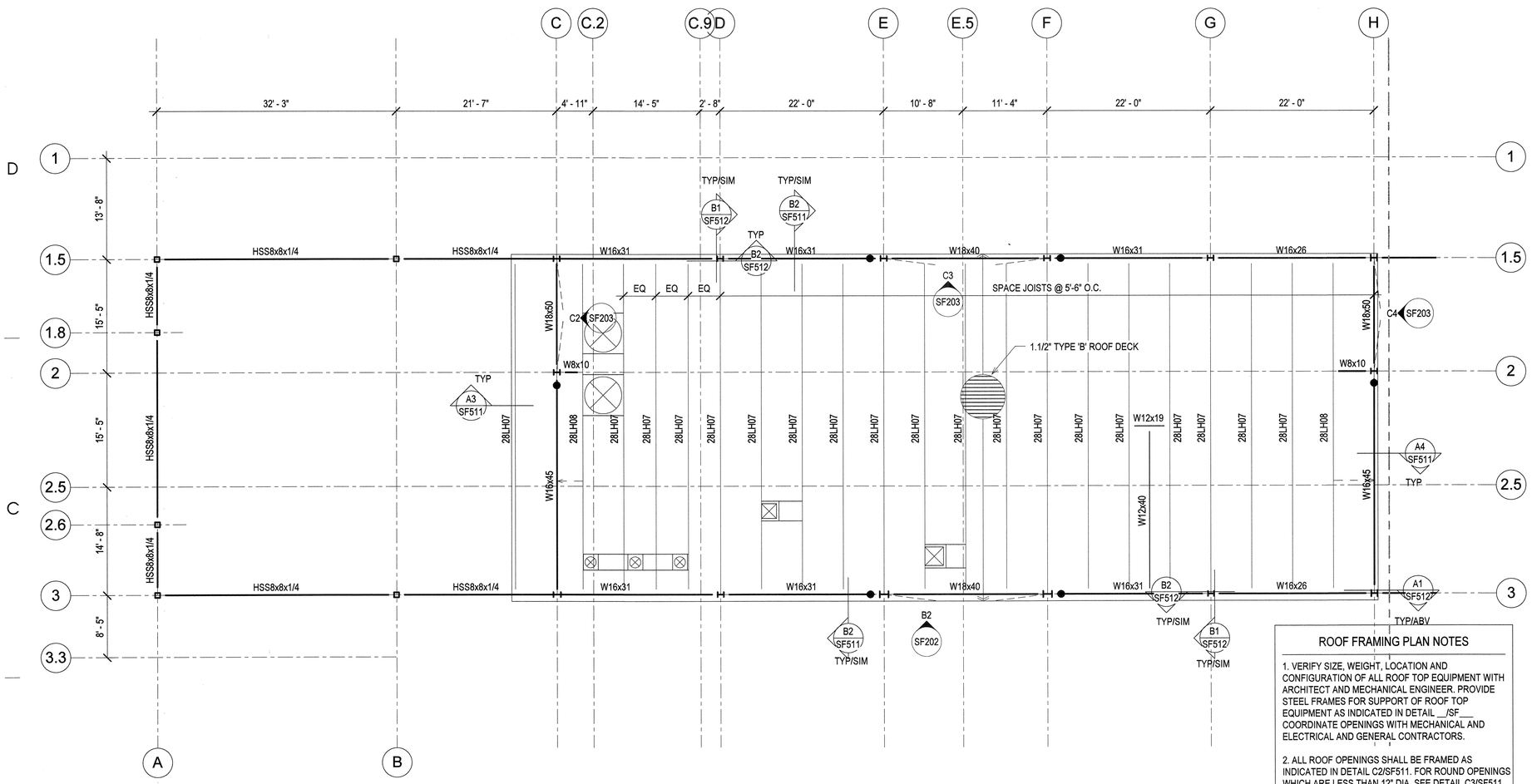


A1 SF105B PENTHOUSE ROOF FRAMING PLAN - AREA B

SCALE: 1/8" = 1'-0"

## ROOF FRAMING PLAN NOTES

1. VERIFY SIZE, WEIGHT, LOCATION AND CONFIGURATION OF ALL ROOF TOP EQUIPMENT WITH ARCHITECT AND MECHANICAL ENGINEER. PROVIDE STEEL FRAMES FOR SUPPORT OF ROOF TOP EQUIPMENT AS INDICATED IN DETAIL __/SF__. COORDINATE OPENINGS WITH MECHANICAL AND ELECTRICAL AND GENERAL CONTRACTORS.

2. ALL ROOF OPENINGS SHALL BE FRAMED AS INDICATED IN DETAIL C2/SF511. FOR ROUND OPENINGS WHICH ARE LESS THAN 12" DIA. SEE DETAIL C3/SF511.

3. SEE ARCHITECTURAL FOR ROOF SLOPES AND DRAINS. SEE C4/SF511 FOR ROOF DRAIN OPENING FRAME.

4. OPEN WEB STEEL JOISTS AND JOIST GIRDERS SHALL BE DESIGNED BY THE MANUFACTURER TO SUPPORT THE MECHANICAL AND LATERAL LOADS SHOWN ON THE ROOF FRAMING PLANS IN ADDITION TO THE UNIFORM AND POINT LOADS SHOWN.

5. ±#.#K ADD - INDICATES ADDITIONAL UPLIFT / DOWNWARD FORCE ON STEEL JOIST IN ADDITION TO REGULAR LOADS.

6. T/C=##K - INDICATES ADDITIONAL TOP CHORD AXIAL FORCE ON STEEL JOIST OR GIRDER IN ADDITION TO REGULAR LOADS. THIS FORCE IS A SEISMIC LRFD LOAD THAT SHALL BE CONSIDERED IN BOTH TENSION AND COMPRESSION; INCLUDES APPLICABLE OVERSTRENGTH FACTORS FROM IBC SECTION 1613 AND ASCE 7 SECTION 12.10. STEEL JOISTS AND GIRDERS WITH T/C FORCE SHALL BE DESIGNED AS COLLECTOR ELEMENTS PER IBC SECTION 1613 AND ASCE 7 SECTION 12.10 WITH STRENGTH TO RESIST APPLICABLE LOAD COMBINATIONS OF IBC SECTION 1605.4 AND ASCE 7 SECTION 12.4.

7. ALL LOADS SUPPORTED BY OPEN WEB STEEL JOISTS AND GIRDERS SHALL BE LOCATED WITHIN 6" OF JOIST OR GIRDER PANEL POINT OR THE JOIST OR GIRDER SHALL BE REINFORCED PER DETAIL C1/SF511.

8. SEE DETAIL A1/SF511 FOR SUPPORT OF HANGING MECHANICAL UNITS.

9. HORIZONTAL AND CROSS BRIDGING SHALL BE SIZED AND SUPPLIED BY THE JOIST MANUFACTURER. CONNECT TO WALLS AS INDICATED IN DETAILS.

10. WHERE SKYLIGHTS OR MECHANICAL UNITS INTERRUPT HORIZONTAL BRIDGING PROVIDE CROSS BRIDGING AT JOIST SPACES ON EACH SIDE. TYPICAL.

NOTE TO BID PACKAGE #2.

BID PACKAGE #2 IS FOR FOOTING & FOUNDATION WORK ONLY. ALL OTHER STRUCTURAL STEEL DRAWINGS ARE INCLUDED FOR REFERENCE ONLY.

## ROOF FRAMING PLAN LEGEND

- CONCRETE WALL
- CONCRETE LINTEL IN CONCRETE WALL
- CONCRETE COLUMN IN CONCRETE WALL
- CONCRETE COLUMN
- CONCRETE JAMB COLUMN POURED MONOLITHIC WITH CONCRETE WALL
- MASONRY WALL
- MASONRY LINTEL IN MASONRY WALL
- MASONRY COLUMN IN MASONRY WALL
- STEEL COLUMN - TUBE
- STEEL COLUMN - WIDE FLANGE
- STEEL COLUMN - PIPE
- STEEL BRACED FRAME
- MOMENT CONNECTION
- COLLECTOR CONNECTION SEE B1/SF603
- COLLECTOR/CHORD CONNECTION AT BEAMS PARALLEL TO MARK. SEE B1/SF603
- DOUBLE SHEAR CONNECTION SEE A1/SF602
- STEEL BEAM OR GIRDER
- STEEL JOIST OR PURLIN
- CROSS BRIDGING
- HORIZONTAL BRIDGING
- STEEL STUD WALL - STRUCTURAL
- STEEL HEADER IN STEEL STUD WALL
- CHANGE IN ELEVATION
- CONCRETE ON METAL DECK
- ROOF DECK
- SPECIAL DECK AREA
- OPENING
- RECESSED/DEPRESSED SLAB ON METAL DECK

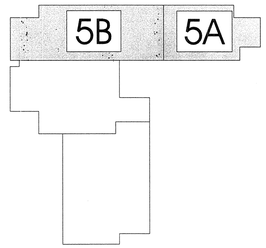


Key Plan

ARCHITECT 0818

ajc architects

703 east 1700 south
salt lake city, utah 84105
ph: 801.466.8818
fx: 801.466.4411
www.ajcarchitects.com

PAYETTE

285 Summer Street
Boston, MA 02210-1522
www.payette.com

REAVELEY
ENGINEERS + ASSOCIATES
Consulting Structural Engineers

P: 801.486.3883
F: 801.485.0911

675 E. 500 S. Suite 400
Salt Lake City, Utah 84102
www.reaveley.com

OWNER INFORMATION

State of Utah
Department of Administrative Services

Division of Facilities Construction & Management
4110 State Office Building
Salt Lake City, Utah 84114
Phone: (801) 538 - 3018
Fax: (801) 538 - 3267

Internet: http://www.dfcm.utah.gov

PROJECT DESCRIPTION

LIFE SCIENCES RESEARCH CENTER
UTAH STATE UNIVERSITY

USTAR BUILDING #2
LOGAN, UTAH

SHEET NAME:

PARTIAL PENTHOUSE ROOF FRAMING PLAN - AREA B

REVISIONS

| MARK | DATE | DESCRIPTION |
|---|---|---|

ISSUE DATA

| | |
|---|---|
| ISSUE DATE: | DEC. 9, 2008 |
| ISSUE TYPE: | B.P. #2 REVIEW |
| DRAWN BY: | R. HARRIS |
| CHECKED BY: | J. MILLER / C.PRICE |
| CAD FILE NAME: | |
| DFCM PROJECT # | 06292770 |
| STATE PROPERTY # | - |
| COPYRIGHT: | STATE OF UTAH |

SHEET NUMBER:

SF105B

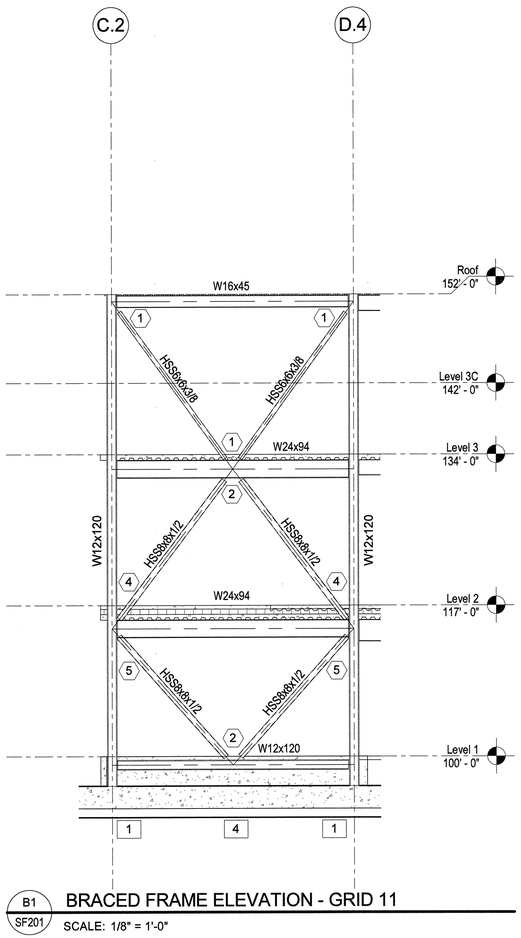


B1 / SF201 BRACED FRAME ELEVATION - GRID 11

SCALE: 1/8" = 1'-0"

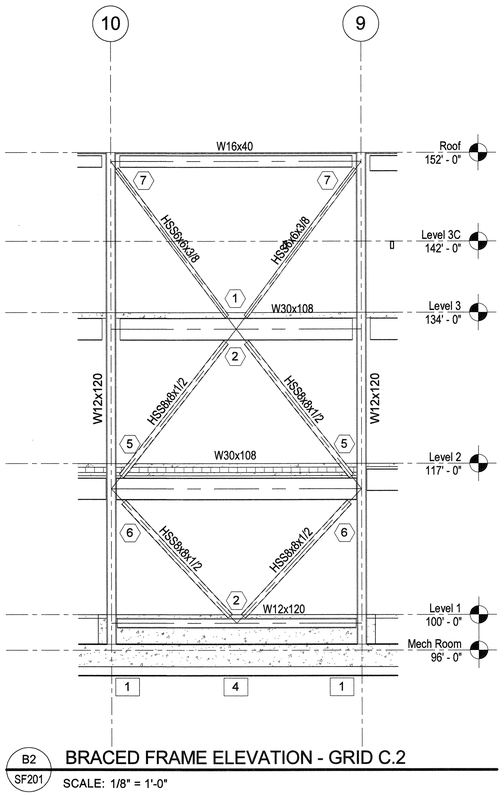


B2 / SF201 BRACED FRAME ELEVATION - GRID C.2

SCALE: 1/8" = 1'-0"

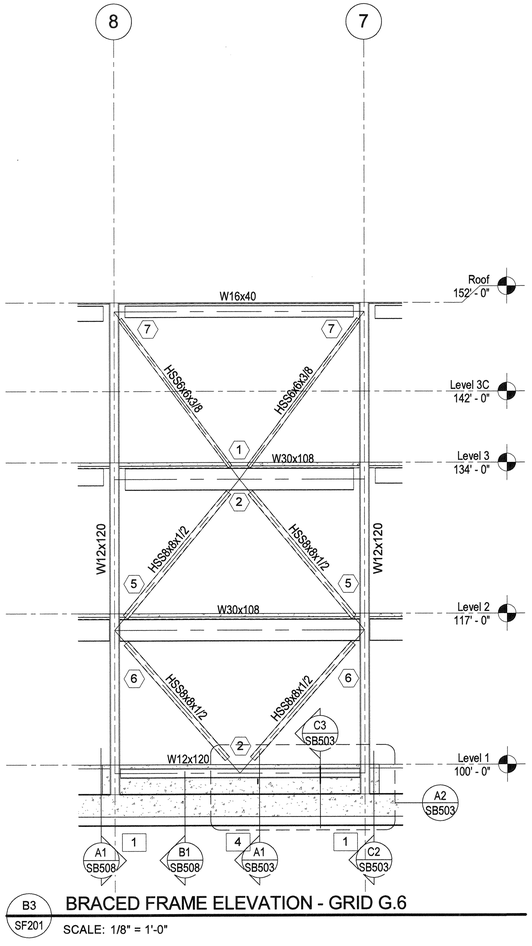


B3 / SF201 BRACED FRAME ELEVATION - GRID G.6

SCALE: 1/8" = 1'-0"

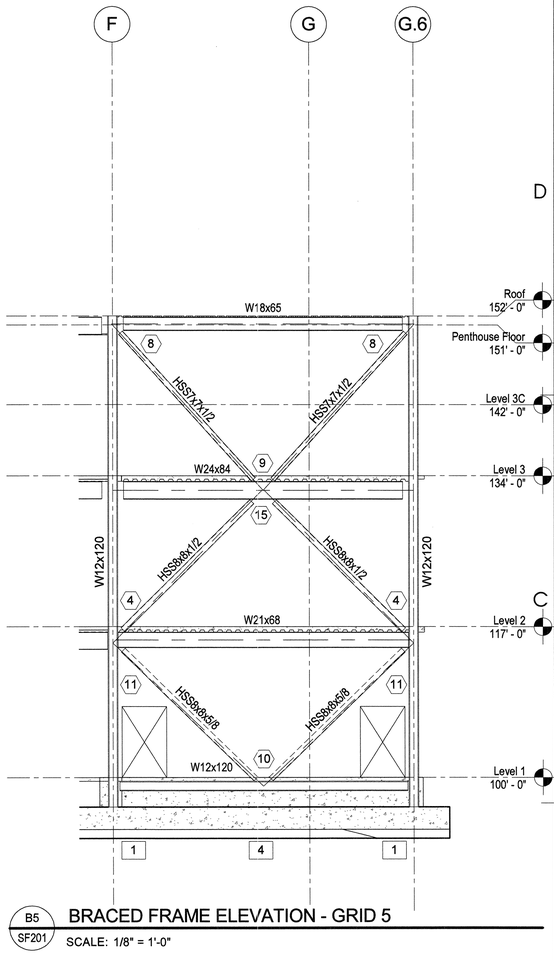


B5 / SF201 BRACED FRAME ELEVATION - GRID 5

SCALE: 1/8" = 1'-0"

NOTE TO BID PACKAGE #2.

BID PACKAGE #2 IS FOR FOOTING & FOUNDATION WORK ONLY. ALL OTHER STRUCTURAL STEEL DRAWINGS ARE INCLUDED FOR REFERENCE ONLY.

**BRACED FRAME ELEVATION NOTES AND LEGEND** NOTE-BRACE

1. ALL W-SHAPED BRACED FRAME MEMBERS SHALL BE ASTM A992 (Fy = 50KSI) STEEL, U.N.O.

2. ALL HSS-SHAPED BRACED FRAME MEMBERS SHALL BE ASTM A500 GRADE B (Fy = 46KSI) STEEL, U.N.O.

3. ADD 3/4" DIA. x 6" LONG HEADED STUD ANCHOR AT 12" O.C. TO ALL BRACED FRAME HORIZONTAL FRAMING MEMBERS (BEAMS) EXCEPT ROOF BEAMS (USE 5" LONG HSA'S @ 6" TOTAL THICKNESS CONC).

4. (#) INDICATES BRACED FRAME CONNECTION MARK. SEE C1/SF211 FOR BRACED FRAME CONNECTION SCHEDULE FOR TUBE BRACES & C1/SF214 FOR WIDE FLANGE BRACES.

5. [#] INDICATES BASE PLATE MARK. SEE C3/SF211

6. VERIFY ALL DATUM ELEVATIONS W/ ARCHITECTURAL DRAWINGS.


ARCHITECT 0818

ajc architects

703 east 1700 south
salt lake city, utah 84105
ph: 801.466.8818
fx: 801.466.4411
www.ajcarchitects.com

P A Y E T T E

285 Summer Street
Boston, MA 02210-1522
www.payette.com

REAVELEY
ENGINEERS + ASSOCIATES
Consulting Structural Engineers

P: 801.486.3883
F: 801.485.0911

675 E. 500 S. Suite 400
Salt Lake City, Utah 84102
www.reaveley.com


OWNER INFORMATION

State of Utah
Department of Administrative Services

Division of Facilities Construction & Management
4110 State Office Building
Salt Lake City, Utah 84114
Phone: (801) 538 - 3018
Fax: (801) 538 - 3267

Internet: http://www.dfcm.utah.gov

PROJECT DESCRIPTION

# LIFE SCIENCES RESEARCH CENTER
## UTAH STATE UNIVERSITY

USTAR BUILDING #2
LOGAN, UTAH

SHEET NAME:

BRACED FRAME ELEVATIONS (SLRS)

REVISIONS

| MARK | DATE | DESCRIPTION |
|---|---|---|

ISSUE DATA

| | |
|---|---|
| ISSUE DATE: | DEC. 9, 2008 |
| ISSUE TYPE: | B.P. #2 REVIEW |
| DRAWN BY: | R. HARRIS |
| CHECKED BY: | J. MILLER / C.PRICE |
| CAD FILE NAME: | |
| DFCM PROJECT # | 06292770 |
| STATE PROPERTY # | - |
| COPYRIGHT: | STATE OF UTAH |

SHEET NUMBER:

SF201

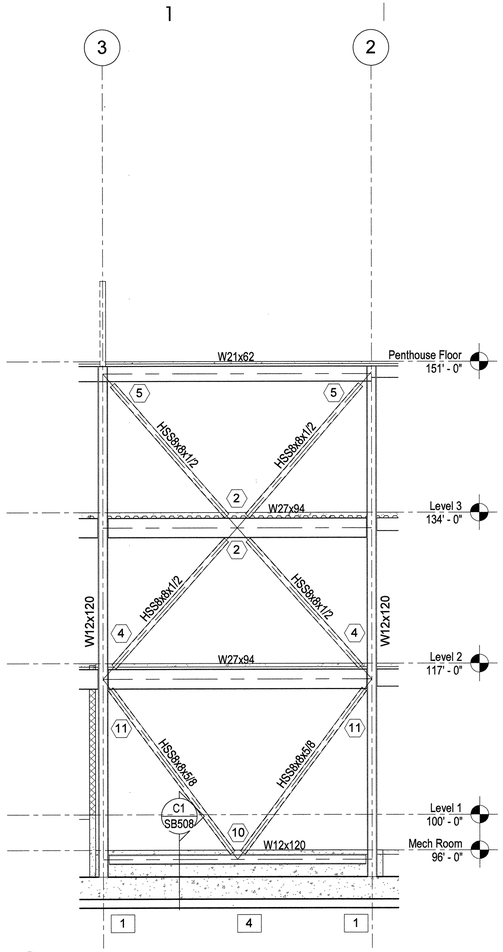


B1 SF202 BRACED FRAME ELEVATION - GRID B

SCALE: 1/8" = 1'-0"

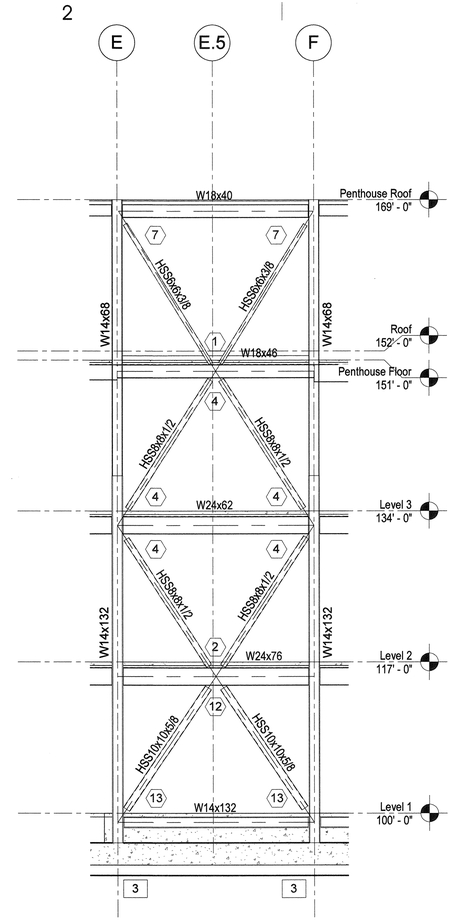


B2 SF202 BRACED FRAME ELEVATION - GRID 3

SCALE: 1/8" = 1'-0"

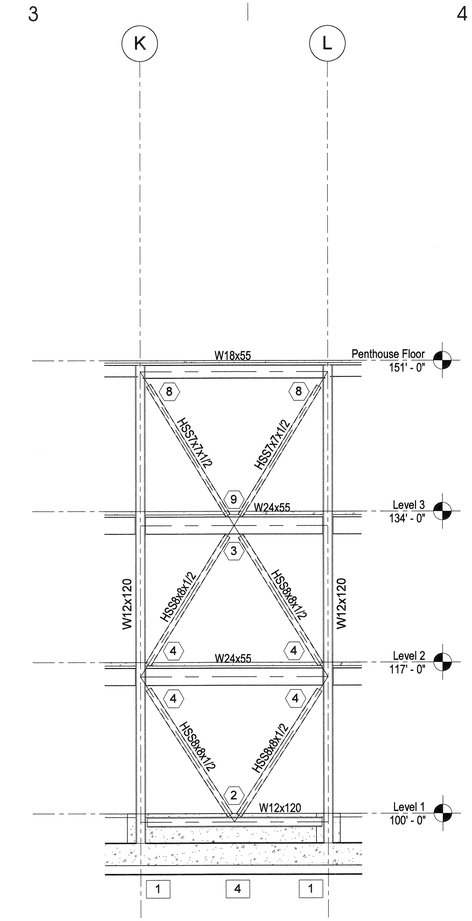


B3 SF202 BRACED FRAME ELEVATION - GRID 1

SCALE: 1/8" = 1'-0"

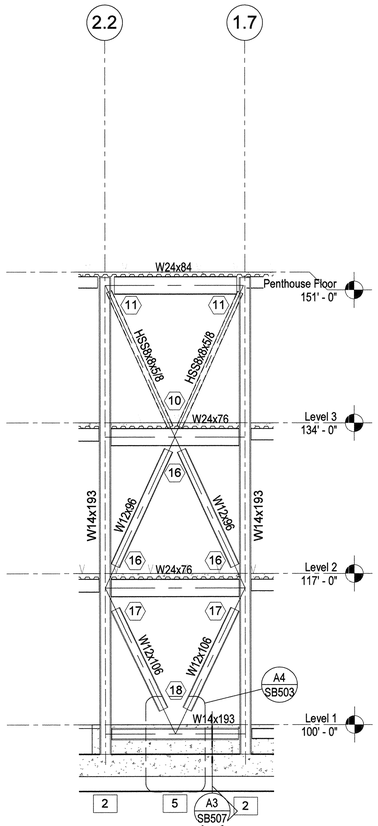


B4 SF202 BRACED FRAME ELEVATION - GRID L

SCALE: 1/8" = 1'-0"

NOTE TO BID PACKAGE #2.

BID PACKAGE #2 IS FOR FOOTING & FOUNDATION WORK ONLY. ALL OTHER STRUCTURAL STEEL DRAWINGS ARE INCLUDED FOR REFERENCE ONLY.

BRACED FRAME ELEVATION NOTES AND LEGEND

NOTE-BRACE

1. ALL W-SHAPED BRACED FRAME MEMBERS SHALL BE ASTM A992 (Fy = 50KSI) STEEL, U.N.O.

2. ALL HSS-SHAPED BRACED FRAME MEMBERS SHALL BE ASTM A500 GRADE B (Fy = 46KSI) STEEL, U.N.O.

3. ADD 3/4" DIA. x 6" LONG HEADED STUD ANCHOR AT 12" O.C. TO ALL BRACED FRAME HORIZONTAL FRAMING MEMBERS (BEAMS) EXCEPT ROOF BEAMS (USE 5" LONG HSA'S @ 6" TOTAL THICKNESS CONC).

4. (#) INDICATES BRACED FRAME CONNECTION MARK. SEE C1/SF211 FOR BRACED FRAME CONNECTION SCHEDULE FOR TUBE BRACES & C1/SF214 FOR WIDE FLANGE BRACES.

5. [#] INDICATES BASE PLATE MARK. SEE C3/SF211

6. VERIFY ALL DATUM ELEVATIONS W/ ARCHITECTURAL DRAWINGS.


ARCHITECT 0818

ajc architects

703 east 1700 south
salt lake city, utah 84105
ph: 801.466.8818
fx: 801.466.4411
www.ajcarchitects.com

PAYETTE

285 Summer Street
Boston, MA 02210-1522
www.payette.com

REAVELEY
ENGINEERS + ASSOCIATES
Consulting Structural Engineers
P: 801.486.3883
F: 801.485.0911
675 E. 500 S. Suite 400
Salt Lake City, Utah 84102
www.reaveley.com


OWNER INFORMATION

State of Utah
Department of Administrative Services

Division of Facilities Construction & Management
4110 State Office Building
Salt Lake City, Utah 84114
Phone: (801) 538 - 3018
Fax: (801) 538 - 3267

Internet: http://www.dfcm.utah.gov

PROJECT DESCRIPTION

# LIFE SCIENCES RESEARCH CENTER
## UTAH STATE UNIVERSITY

USTAR BUILDING #2
LOGAN, UTAH

SHEET NAME:

## BRACED FRAME ELEVATIONS (SLRS)

REVISIONS

| MARK | DATE | DESCRIPTION |
|---|---|---|

ISSUE DATA

| | |
|---|---|
| ISSUE DATE: | DEC. 9, 2008 |
| ISSUE TYPE: | B.P. #2 REVIEW |
| DRAWN BY: | R. HARRIS |
| CHECKED BY: | J. MILLER / C.PRICE |
| CAD FILE NAME: | |
| DFCM PROJECT # | 06292770 |
| STATE PROPERTY # | - |
| COPYRIGHT: | STATE OF UTAH |

SHEET NUMBER:

# SF202

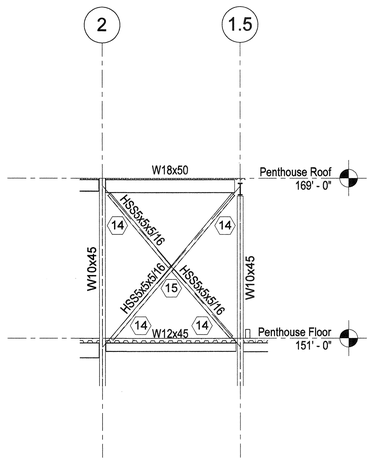


C2 / SF203 BRACED FRAME ELEVATION - GRID C

SCALE: 1/8" = 1'-0"

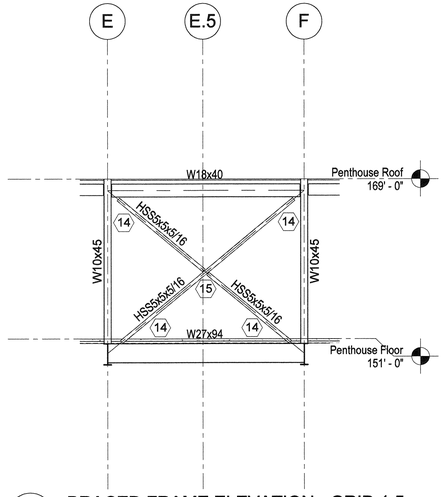


C3 / SF203 BRACED FRAME ELEVATION - GRID 1.5

SCALE: 1/8" = 1'-0"

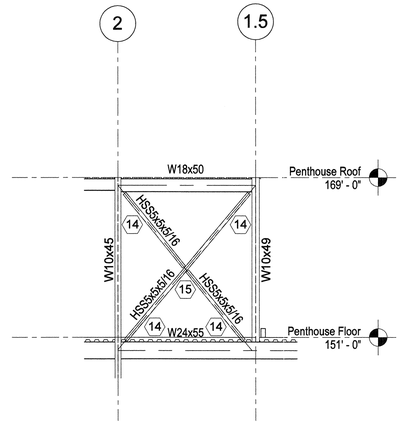


C4 / SF203 BRACED FRAME ELEVATION - GRID H

SCALE: 1/8" = 1'-0"

NOTE TO BID PACKAGE #2.

BID PACKAGE #2 IS FOR FOOTING & FOUNDATION WORK ONLY. ALL OTHER STRUCTURAL STEEL DRAWINGS ARE INCLUDED FOR REFERENCE ONLY.

**BRACED FRAME ELEVATION NOTES AND LEGEND** NOTE-BRACE

1. ALL W-SHAPED BRACED FRAME MEMBERS SHALL BE ASTM A992 (Fy = 50KSI) STEEL, U.N.O.

2. ALL HSS-SHAPED BRACED FRAME MEMBERS SHALL BE ASTM A500 GRADE B (Fy = 46KSI) STEEL, U.N.O.

3. ADD 3/4" DIA. x 6" LONG HEADED STUD ANCHOR AT 12" O.C. TO ALL BRACED FRAME HORIZONTAL FRAMING MEMBERS (BEAMS) EXCEPT ROOF BEAMS (USE 5" LONG HSA'S @ 6" TOTAL THICKNESS CONC).

4. ⟨#⟩ INDICATES BRACED FRAME CONNECTION MARK. SEE C1/SF211 FOR BRACED FRAME CONNECTION SCHEDULE FOR TUBE BRACES & C1/SF214 FOR WIDE FLANGE BRACES.

5. [#] INDICATES BASE PLATE MARK. SEE C3/SF211

6. VERIFY ALL DATUM ELEVATIONS W/ ARCHITECTURAL DRAWINGS.


ARCHITECT 0818

ajc architects

703 east 1700 south
salt lake city, utah 84105
ph: 801.466.8818
fx: 801.466.4411
www.ajcarchitects.com

P A Y E T T E

285 Summer Street
Boston, MA 02210-1522
www.payette.com

REAVELEY
ENGINEERS + ASSOCIATES
Consulting Structural Engineers

P: 801.486.3883
F: 801.485.0911

675 E. 500 S. Suite 400
Salt Lake City, Utah 84102
www.reaveley.com


OWNER INFORMATION

State of Utah
Department of Administrative Services

Division of Facilities Construction & Management
4110 State Office Building
Salt Lake City, Utah 84114
Phone: (801) 538 - 3018
Fax: (801) 538 - 3267

Internet: http://www.dfcm.utah.gov

PROJECT DESCRIPTION

LIFE SCIENCES RESEARCH CENTER
UTAH STATE UNIVERSITY

USTAR BUILDING #2
LOGAN, UTAH

SHEET NAME:

BRACED FRAME ELEVATIONS (SLRS)

REVISIONS

| MARK | DATE | DESCRIPTION |
|---|---|---|

ISSUE DATA

| | |
|---|---|
| ISSUE DATE: | DEC. 9, 2008 |
| ISSUE TYPE: | B.P. #2 REVIEW |
| DRAWN BY: | R. HARRIS |
| CHECKED BY: | J. MILLER / C.PRICE |
| CAD FILE NAME: | |
| DFCM PROJECT # | 06292770 |
| STATE PROPERTY # | - |
| COPYRIGHT: | STATE OF UTAH |

SHEET NUMBER:

SF203

## SPECIAL CONCENTRICALLY BRACED FRAME CONNECTION SCHEDULE - TUBE BRACES

| MARK | WELDING CRITERIA | | | | | GUSSET PLATE | | COVER PLATE | | | NOTES |
|---|---|---|---|---|---|---|---|---|---|---|---|
| | T1 WELD THICKNESS | T2 WELD THICKNESS | T3 WELD THICKNESS | T4 WELD THICKNESS | L1 WELD LENGTH | GUSSET PLATE THICKNESS (tg) | GUSSET PLATE WIDTH | COVER PLATE SIZE | T5 WELD THICKNESS | L5 WELD LENGTH | |
| 1 | 7/16" | 5/8" | 1/2" | 1/2" | 13" | 1" | 18" | 4" x 1/2" | 7/16" | 5.1/2" | |
| 2 | 5/8" | - | - | 13/16" | 17" | 1.1/4" | 17" | 6" x 5/8" | 9/16" | 7.1/2" | |
| 3 | 5/8" | - | - | 3/4" | 17" | 1.1/4" | 20" | 6" x 5/8" | 9/16" | 7.1/2" | |
| 4 | 5/8" | 13/16" | 3/4" | 5/8" | 17" | 1.1/4" | 24" | 6" x 5/8" | 9/16" | 7.1/2" | |
| 5 | 5/8" | 9/16" | 11/16" | - | 17" | 1.1/4" | 28" | 6" x 5/8" | 9/16" | 7.1/2" | |
| 6 | 5/8" | 9/16" | 11/16" | - | 17" | 1.1/4" | 30" | 6" x 5/8" | 9/16" | 7.1/2" | |
| 7 | 7/16" | 11/16" | 7/16" | - | 13" | 1" | 20" | 4" x 1/2" | 7/16" | 5.1/2" | |
| 8 | 9/16" | 5/8" | 9/16" | - | 15" | 1" | 28" | 5" x 5/8" | 9/16" | 6.1/2" | |
| 9 | 9/16" | - | - | 11/16" | 15" | 1" | 18" | 5" x 5/8" | 9/16" | 6.1/2" | |
| 10 | 3/4" | - | - | 11/16" | 17" | 1.1/2" | 18" | 5.1/2" x 7/8" | 9/16" | 11" | |
| 11 | 3/4" | 1" | 13/16" | - | 17" | 1.1/2" | 27" | 5.1/2" x 7/8" | 9/16" | 11" | |
| 12 | 3/4" | - | - | 3/4" | 21" | 1.1/4" | 26" | 7.1/2" x 3/4" | 9/16" | 12.1/2" | |
| 13 | 3/4" | 11/16" | 5/8" | - | 21" | 1.1/4" | 34" | 7.1/2" x 3/4" | 9/16" | 12.1/2" | |
| 14 | 3/8" | 3/8" | 1/2" | - | 11" | 3/4" | 18" | 3.1/2" x 3/8" | 5/16" | 5.1/2" | |
| 15 | 3/8" | - | - | - | 11" | 3/4" | 10" | 3.1/2" x 3/8" | 5/16" | 5.1/2" | |

NOTES:
1. ALL GUSSET PLATES SHALL BE A572 GRADE 50 STEEL.
2. ALL COVER PLATES SHALL BE A572 GRADE 50 STEEL, SEE B4/SF211 FOR DETAIL.
3. AT CONTRACTOR'S OPTION, FILLET WELDS MAY BE REPLACED WITH FULL-PENETRATION GROOVE WELDS FOR T2, T3 & T4 WELDS.

SP-CON-HSS-01

C1 / SF211 SPECIAL CONCENTRICALLY BRACED FRAME CONNECTION SCHEDULE - TUBE BRACES
NO SCALE

## BRACED FRAME BASE PLATE & ANCHOR BOLT SCHEDULE

| MARK | BASE PLATE | | | | | ANCHOR BOLTS | | | | NOTES |
|---|---|---|---|---|---|---|---|---|---|---|
| | N1 LENGTH | N2 LENGTH | B WIDTH | THICKNESS | C DISTANCE | NUMBER | SIZE | EMBED DEPTH | GRADE | |
| 1 | 24" | -- | 24" | 3" | -- | 10 | 1.1/4"Ø | 35" | F1554 GR.105 | |
| 2 | 27" | -- | 27" | 3.3/4" | -- | 10 | 1.3/4"Ø | 41" | F1554 GR.105 | 11" MIN A.B. PROJECTION |
| 3 | 27" | -- | 27" | 3.3/4" | -- | 12 | 1.3/4"Ø | 35" | F1554 GR.105 | 11" MIN A.B. PROJECTION A4/SF212 |
| 4 | -- | -- | -- | -- | -- | 8 | 1.1/4"Ø | 35" | F1554 GR.105 | |
| 5 | -- | -- | -- | -- | -- | 8 | 1.3/4"Ø | 41" | F1554 GR.105 | |

NOTES:
1. ALL BASE PLATES SHALL BE A36 STEEL.
2. ANCHOR BOLTS SHALL HAVE 10" PROJECTION ABOVE TOP OF CONCRETE, TYPICAL U.N.O.
3. ANCHOR BOLT HOLES SHALL BE 1.1/2" LARGER THAN THE ANCHOR BOLT DIAMETER, TYPICAL. PROVIDE 4"x3/4"x4" A36 PLATE WASHERS OVER ALL HOLES & WELD TO THE BASE PLATE W/ 1/4" FILLET ALL AROUND.

SP-CON-HSS-02

C3 / SF211 BRACED FRAME BASE PLATE & ANCHOR BOLT SCHEDULE
NO SCALE

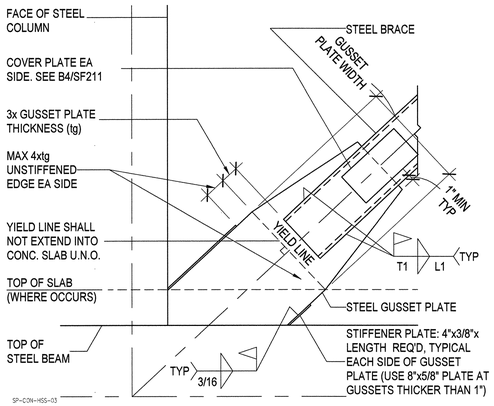


B1 / SF211 TYPICAL GUSSET PLATE CONNECTION AT STEEL BEAM
NO SCALE

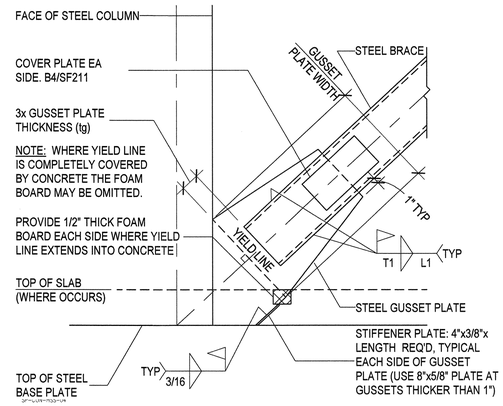


B2 / SF211 TYPICAL STEEL GUSSET PLATE CONNECTION AT STEEL BASE PLATE
NO SCALE

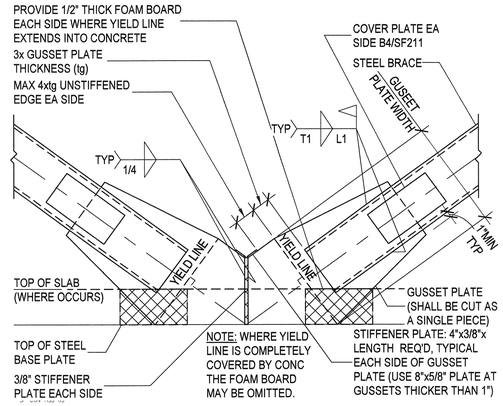


B3 / SF211 TYPICAL STEEL GUSSET PLATE CONNECTION AT STEEL BASE PLATE
NO SCALE

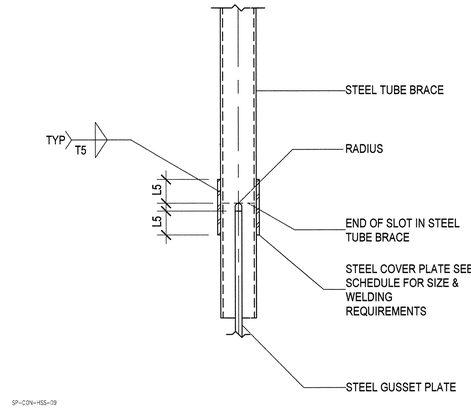


B4 / SF211 TYPICAL STEEL TUBE BRACE COVER PLATE
NO SCALE

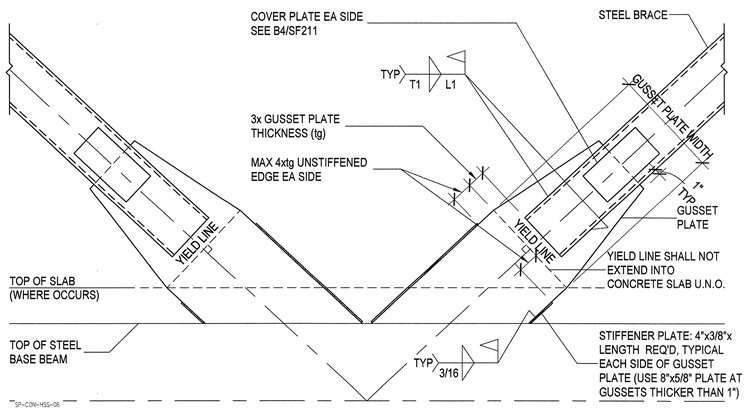


A1 / SF211 TYPICAL STEEL GUSSET PLATE CONNECTION AT STEEL BEAM
NO SCALE

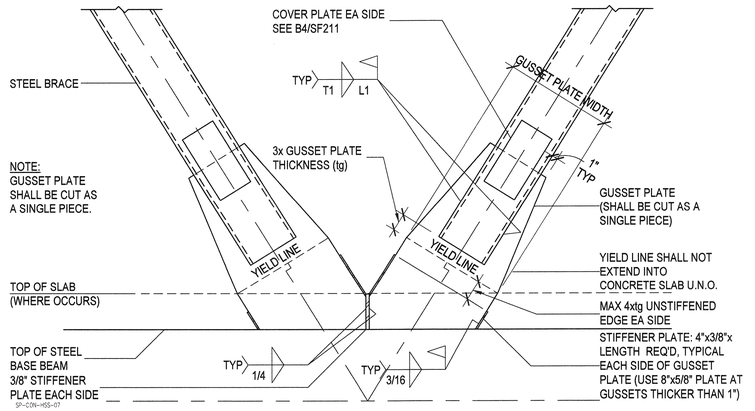


A3 / SF211 TYPICAL STEEL GUSSET PLATE CONNECTION AT STEEL BEAM
NO SCALE

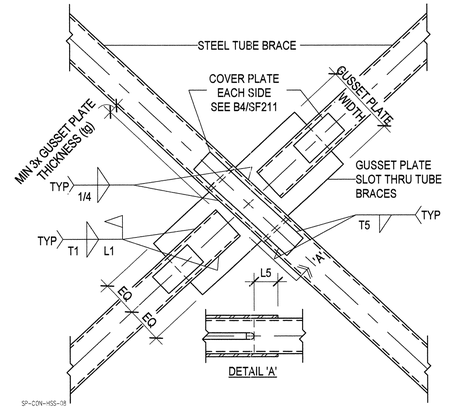


A4 / SF211 TYPICAL BRACED FRAME DETAIL
NO SCALE


ARCHITECT 0818

ajc architects

703 east 1700 south
salt lake city, utah 84105
ph: 801.466.8818
fx: 801.466.4411
www.ajcarchitects.com

P A Y E T T E

285 Summer Street
Boston, MA 02210-1522
www.payette.com

REAVELEY
ENGINEERS + ASSOCIATES
Consulting Structural Engineers
P: 801.486.3883
F: 801.485.0911
675 E. 500 S. Suite 400
Salt Lake City, Utah 84102
www.reaveley.com

OWNER INFORMATION
State of Utah
Department of Administrative Services
Division of Facilities Construction & Management
4110 State Office Building
Salt Lake City, Utah 84114
Phone: (801) 538 - 3018
Fax: (801) 538 - 3267
Internet: http://www.dfcm.utah.gov


PROJECT DESCRIPTION

LIFE SCIENCES RESEARCH CENTER
UTAH STATE UNIVERSITY

USTAR BUILDING #2
LOGAN, UTAH

SHEET NAME:

BRACED FRAME CONNECTION SCHEDULE & DETAILS (SLRS)

REVISIONS

| MARK | DATE | DESCRIPTION |
|---|---|---|

ISSUE DATA

| | |
|---|---|
| ISSUE DATE: | DEC. 9, 2008 |
| ISSUE TYPE: | B.P. #2 REVIEW |
| DRAWN BY: | R. HARRIS |
| CHECKED BY: | J. MILLER / C.PRICE |
| CAD FILE NAME: | |
| DFCM PROJECT # | 06292770 |
| STATE PROPERTY # | - |
| COPYRIGHT: | STATE OF UTAH |

SHEET NUMBER:

SF211

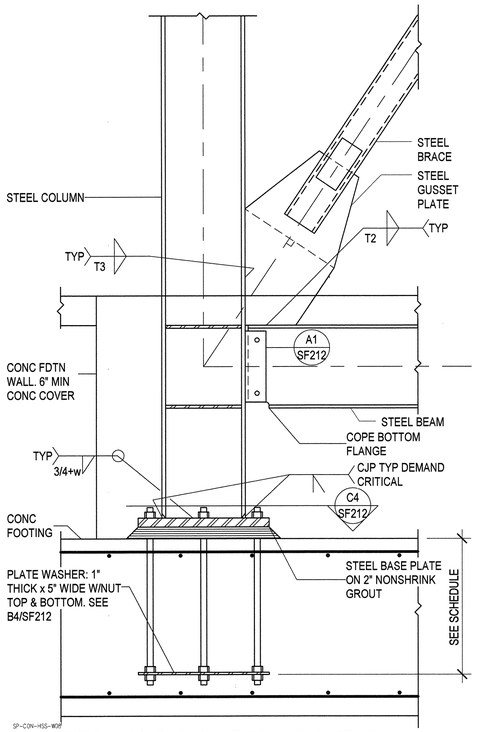


C1 / SF212 TYPICAL BRACED FRAME COLUMN BASE AT CONCRETE FOOTING

NO SCALE

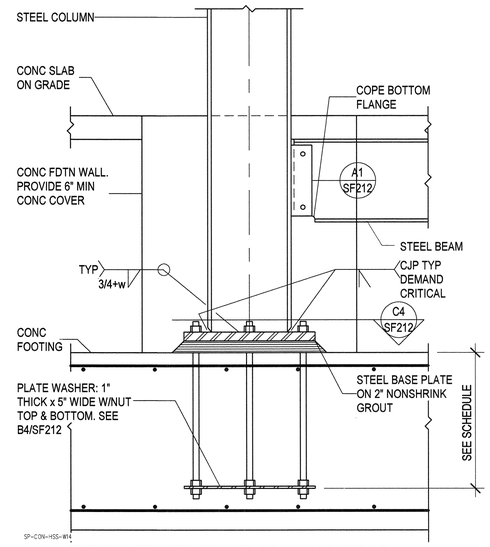


C2 / SF212 TYPICAL BRACED FRAME COLUMN BASE AT CONCRETE FOOTING

NO SCALE

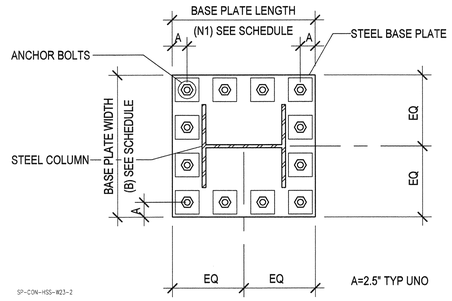


C3 / SF212 TYPICAL BRACED FRAME COLUMN BASE PLATE (PLAN VIEW)

NO SCALE

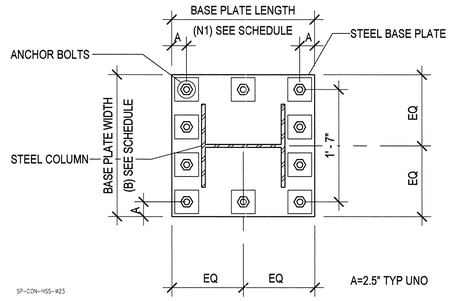


C4 / SF212 TYPICAL BRACED FRAME COLUMN BASE PLATE (PLAN VIEW)

NO SCALE

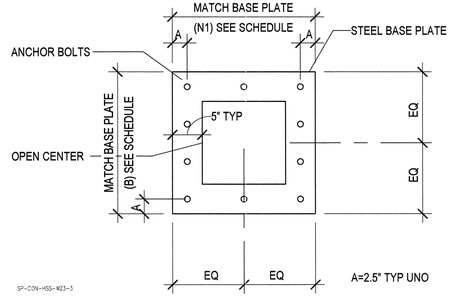


B4 / SF212 TYPICAL BRACED FRAME COLUMN ANCHOR BOLT PLATE WASHER

NO SCALE

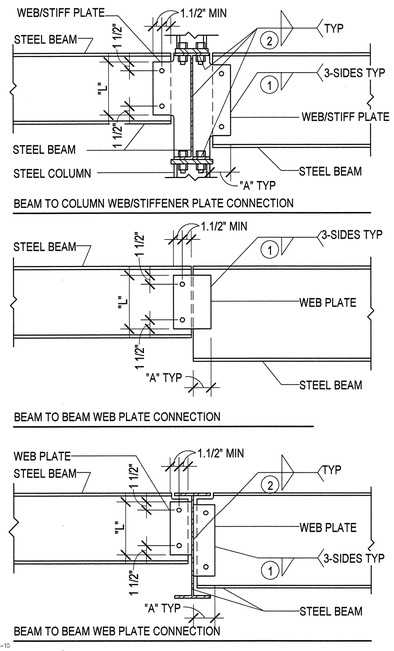


A1 / SF212 TYPICAL COLLECTOR/CHORD CONNECTION DETAILS AND SCHEDULE

SCALE: 1" = 1'-0"

| COLLECTOR/CHORD CONNECTION SCHEDULE | | | | |
|---|---|---|---|---|
| MAXIMUM BEAM SIZE IN EACH BEAM DEPTH GROUP | WEB PLATE | | | CONNECTION |
| | LENGTH "L" | WIDTH "A" | THICKNESS | # BOLTS |
| W10 | 7" | 4" | 3/8" | 2 |
| W12 | 9" | 4" | 3/8" | 2 |
| W16 | 13" | 4" | 3/8" | 2 |
| W18 | 15" | 4" | 3/8" | 2 |
| W21 | 18" | 4" | 1/2" | 2 |
| W24 | 20" | 4" | 1/2" | 2 |
| W27 | 23" | 4" | 1/2" | 2 |
| W30 | 26" | 4" | 1/2" | 3 |
| | | | | |

NOTES:

1. FILLET WELDS ONE SIDE SHALL EQUAL THE PLATE THICKNESS MINUS 1/16" (1/4" MIN.)
2. FILLET WELDS TWO SIDES SHALL BE 3/4 THE PLATE THICKNESS (1/4" MIN.) EACH SIDE
3. BOLT EDGE DISTANCE SHALL BE 1.1/2" MIN. AT ALL EDGES. BOLT SPACING SHALL BE 3" MIN.
4. THICKNESS EQUALS BEAM FLANGE THICKNESS OF BEAM FRAMING INTO COLUMN WEB. (3/8" MIN.)
5. ERECTION BOLT SHALL BE 7/8"Ø A325N BOLTS.

NOTE TO BID PACKAGE #2.

BID PACKAGE #2 IS FOR FOOTING & FOUNDATION WORK ONLY. ALL OTHER STRUCTURAL STEEL DRAWINGS ARE INCLUDED FOR REFERENCE ONLY.

ARCHITECT 0818

ajc architects

703 east 1700 south
salt lake city, utah 84105
ph: 801.466.8818
fx: 801.466.4411
www.ajcarchitects.com

PAYETTE

285 Summer Street
Boston, MA 02210-1522
www.payette.com

REAVELEY
ENGINEERS + ASSOCIATES
Consulting Structural Engineers
P: 801.486.3883
F: 801.485.0911
675 E. 500 S. Suite 400
Salt Lake City, Utah 84102
www.reaveley.com

OWNER INFORMATION

State of Utah
Department of Administrative Services

Division of Facilities Construction & Management
4110 State Office Building
Salt Lake City, Utah 84114
Phone: (801) 538 - 3018
Fax: (801) 538 - 3267

Internet: http://www.dfcm.utah.gov

PROJECT DESCRIPTION

LIFE SCIENCES RESEARCH CENTER
UTAH STATE UNIVERSITY

USTAR BUILDING #2
LOGAN, UTAH

SHEET NAME:

BRACED FRAME CONNECTION DETAILS (SLRS)

REVISIONS

| MARK | DATE | DESCRIPTION |
|---|---|---|

ISSUE DATA

| | |
|---|---|
| ISSUE DATE: | DEC. 9, 2008 |
| ISSUE TYPE: | B.P. #2 REVIEW |
| DRAWN BY: | R. HARRIS |
| CHECKED BY: | J. MILLER / C.PRICE |
| CAD FILE NAME: | |
| DFCM PROJECT # | 06292770 |
| STATE PROPERTY # | - |
| COPYRIGHT: | STATE OF UTAH |

SHEET NUMBER:

SF212

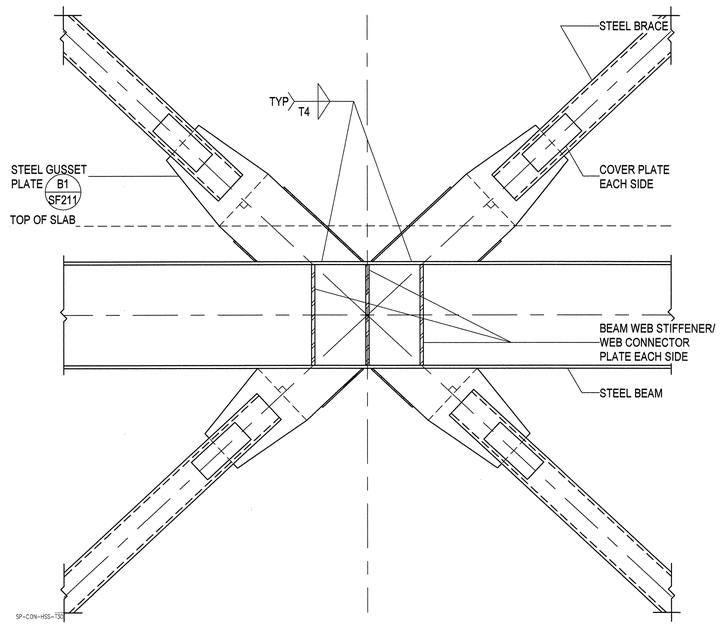


C1 / SF213 TYPICAL BRACED FRAME DETAIL
NO SCALE

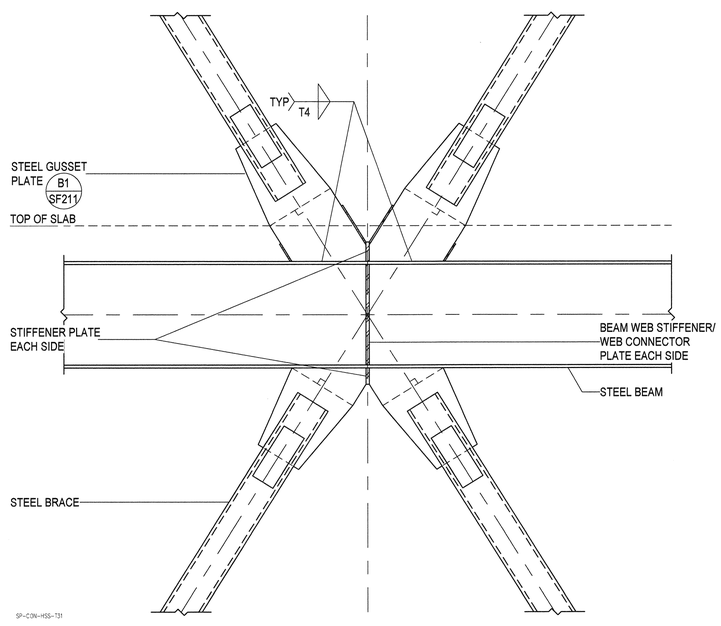


C2 / SF213 TYPICAL BRACED FRAME DETAIL
NO SCALE

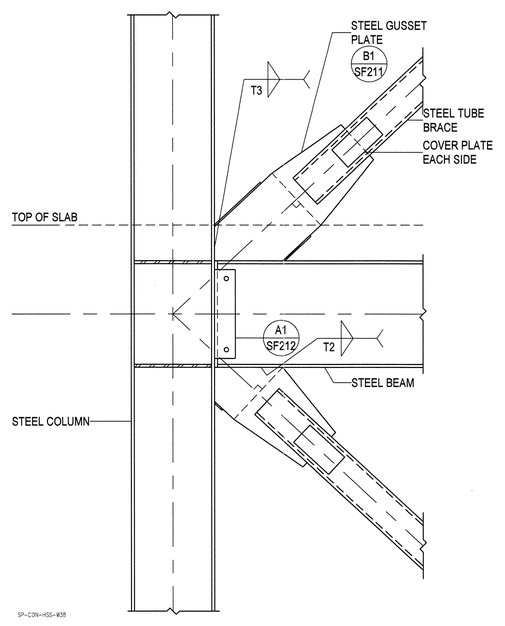


C4 / SF213 TYPICAL BRACED FRAME DETAIL
NO SCALE

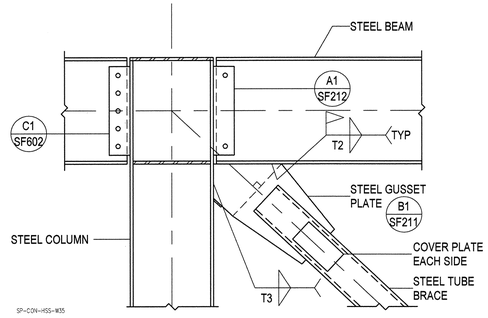


B1 / SF213 TYPICAL BRACED FRAME DETAIL
NO SCALE

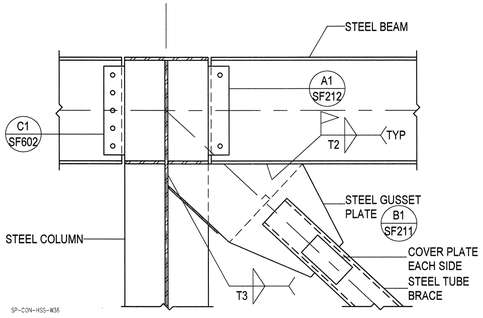


B2 / SF213 TYPICAL BRACED FRAME DETAIL
NO SCALE

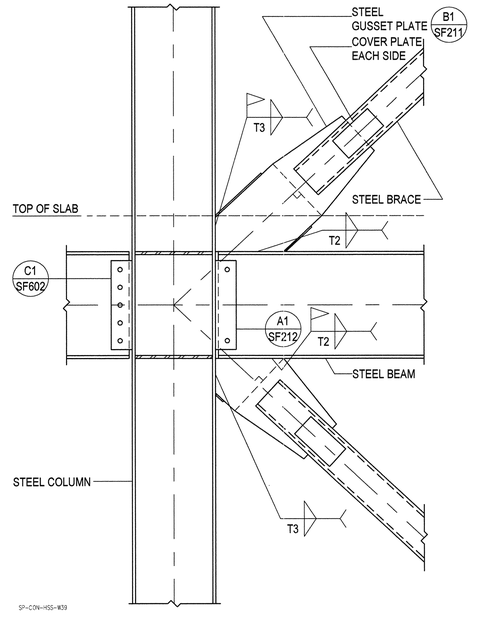


A4 / SF213 TYPICAL BRACED FRAME DETAIL
NO SCALE

NOTE TO BID PACKAGE #2.

BID PACKAGE #2 IS FOR FOOTING & FOUNDATION WORK ONLY. ALL OTHER STRUCTURAL STEEL DRAWINGS ARE INCLUDED FOR REFERENCE ONLY.


ARCHITECT 0818

ajc architects
703 east 1700 south
salt lake city, utah 84105
ph: 801.466.8818
fx: 801.466.4411
www.ajcarchitects.com

P A Y E T T E
285 Summer Street
Boston, MA 02210-1522
www.payette.com

REAVELEY
ENGINEERS + ASSOCIATES
Consulting Structural Engineers
P: 801.486.3883
F: 801.485.0911
675 E. 500 S. Suite 400
Salt Lake City, Utah 84102
www.reaveley.com


OWNER INFORMATION

State of Utah
Department of Administrative Services
Division of Facilities Construction & Management
4110 State Office Building
Salt Lake City, Utah 84114
Phone: (801) 538 - 3018
Fax: (801) 538 - 3267
Internet: http://www.dfcm.utah.gov

PROJECT DESCRIPTION

LIFE SCIENCES RESEARCH CENTER
UTAH STATE UNIVERSITY

USTAR BUILDING #2
LOGAN, UTAH

SHEET NAME:

BRACED CONNECTION FRAME DETAILS (SLRS)

REVISIONS

| MARK | DATE | DESCRIPTION |
|---|---|---|

ISSUE DATA

| | |
|---|---|
| ISSUE DATE: | DEC. 9, 2008 |
| ISSUE TYPE: | B.P. #2 REVIEW |
| DRAWN BY: | R. HARRIS |
| CHECKED BY: | J. MILLER / C.PRICE |
| CAD FILE NAME: | |
| DFCM PROJECT # | 06292770 |
| STATE PROPERTY # | - |
| COPYRIGHT: | STATE OF UTAH |

SHEET NUMBER:

SF213

# SPECIAL CONCENTRIC BRACED FRAME CONNECTION SCHEDULE

| MARK | BRACE FLANGE CONNECTION PLATES | | | | | | | | BRACE WEB PLATE | | | | GUSSET PLATE | | | | |
|---|---|---|---|---|---|---|---|---|---|---|---|---|---|---|---|---|---|
| | TOP PLATE | | BOTTOM PLATE | | FLANGE PLATE WELDS | | | | | | | | | | | | |
| | PLATE THICKNESS | PLATE WIDTH | PLATE THICKNESS | PLATE WIDTH | T1 WELD THICKNESS | L1 WELD LENGTH | T2 WELD THICKNESS | L2 WELD LENGTH | PLATE THICKNESS | PLATE WIDTH | T3 WELD THICKNESS | L3 WELD LENGTH | PLATE (tg) THICKNESS | GUSSET PL WIDTH | T4 WELD THICKNESS | T5 WELD THICKNESS | T6 WELD THICKNESS |
| 16 | 1.1/4" | 10" | 7/8" | 14.1/4" | 13/16" | 19" | 5/8" | 14" | 7/8" | 7.3/4" | 9/16" | 12" | 1.1/2" | 26" | 13/16" | 11/16" | 13/16" |
| 17 | 1.1/4" | 10" | 7/8" | 14.1/4" | 13/16" | 19" | 3/4" | 14" | 7/8" | 7.3/4" | 9/16" | 12" | 1.3/4" | 35" | 1" | 7/16" | - |
| 18 | 1.1/4" | 10" | 7/8" | 14.1/4" | 13/16" | 19" | 3/4" | 14" | 7/8" | 7.3/4" | 9/16" | 12" | 1.3/4" | 27" | - | - | 15/16" |
| | | | | | | | | | | | | | | | | | |

NOTES:
1. ALL WELD LENGTHS SHOW ONE MINIMUM WELD LENGTH EACH SIDE AS SHOWN ON THE BRACED FRAME CONNECTION DETAILS. WHERE BRACE LENGTH/GUSSET PLATE DIMENSIONS ARE GREATER THAN THE MINIMUM WELD LENGTH REQUIRED, WELD SHALL BE CONTINUOUS FULL LENGTH OF BRACE/GUSSET PLATE.

2. ALL FLANGE PLATES, WEB PLATES, GUSSET PLATES AND BASE PLATES SHALL BE A572 GRADE 50.

3. AT CONTRACTOR'S OPTION, FILLET WELDS MAY BE REPLACED WITH FULL-PENETRATION GROOVE WELDS FOR T2, T3 & T4 WELDS.

SP-CON-WF2-01

C1 / SF214 SPECIAL CONCENTRIC STEEL BRACED FRAME CONNECTION SCHEDULE

NO SCALE

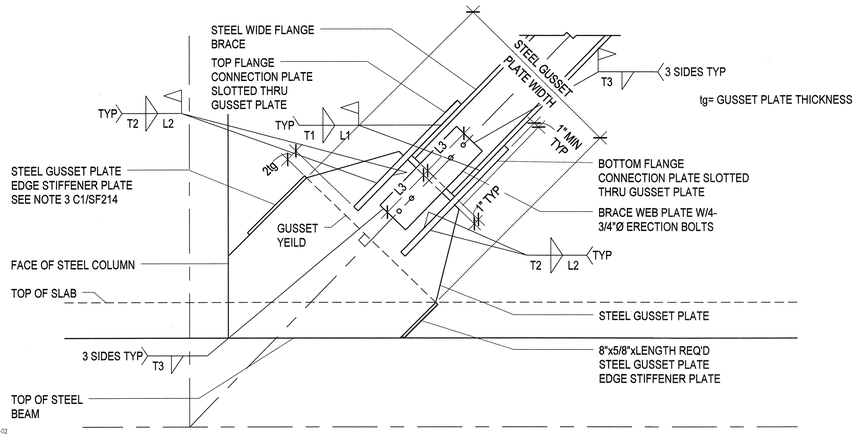


SP-CON-WF2-02

B1 / SF214 TYPICAL SPECIAL CONCENTRIC STEEL BRACED FRAME CONNECTION

NO SCALE

NOTE TO BID PACKAGE #2.

BID PACKAGE #2 IS FOR FOOTING & FOUNDATION WORK ONLY. ALL OTHER STRUCTURAL STEEL DRAWINGS ARE INCLUDED FOR REFERENCE ONLY.

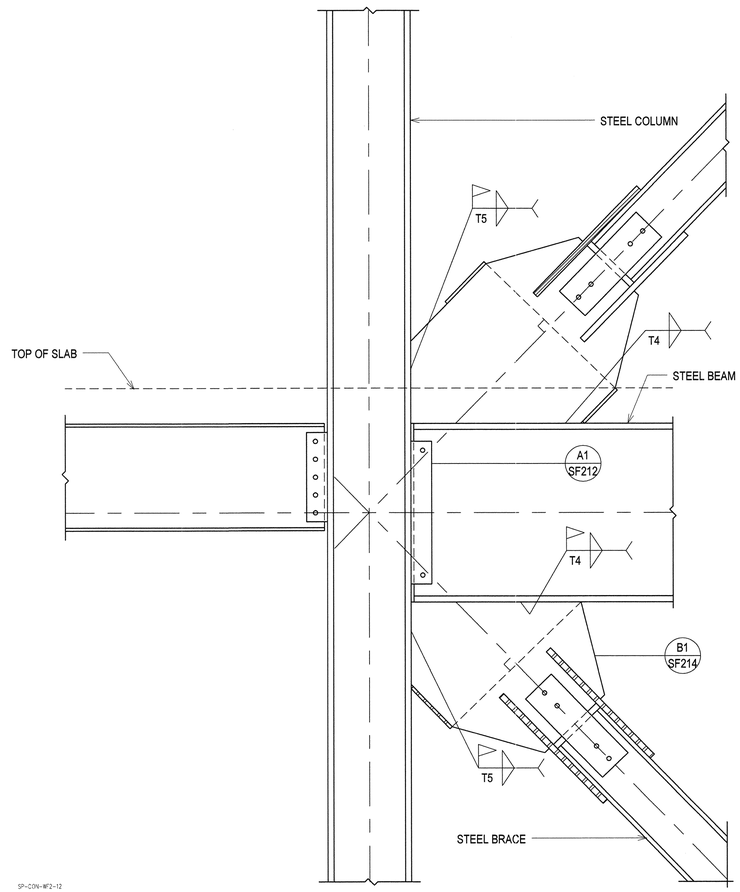


SP-CON-WF2-12

A4 / SF214 TYPICAL SPECIAL CONCENTRIC BRACED FRAME CONNECTION DETAIL

SCALE: 1" = 1'-0"


ARCHITECT 0818

ajc architects

703 east 1700 south
salt lake city, utah 84105
ph: 801.466.8818
fx: 801.466.4411
www.ajcarchitects.com

P A Y E T T E

285 Summer Street
Boston, MA 02210-1522
www.payette.com

REAVELEY
ENGINEERS + ASSOCIATES
Consulting Structural Engineers
P: 801.486.3883
F: 801.485.0911
675 E. 500 S. Suite 400
Salt Lake City, Utah 84102
www.reaveley.com


OWNER INFORMATION

State of Utah
Department of Administrative Services

Division of Facilities Construction & Management
4110 State Office Building
Salt Lake City, Utah 84114
Phone: (801) 538 - 3018
Fax: (801) 538 - 3267

Internet: http://www.dfcm.utah.gov

PROJECT DESCRIPTION

LIFE SCIENCES RESEARCH CENTER
UTAH STATE UNIVERSITY

USTAR BUILDING #2
LOGAN, UTAH

SHEET NAME:

BRACED FRAME CONNECTION DETAILS (SLRS)

REVISIONS

| MARK | DATE | DESCRIPTION |
|---|---|---|

ISSUE DATA

| | |
|---|---|
| ISSUE DATE: | DEC. 9, 2008 |
| ISSUE TYPE: | B.P. #2 REVIEW |
| DRAWN BY: | R. HARRIS |
| CHECKED BY: | J. MILLER / C.PRICE |
| CAD FILE NAME: | |
| DFCM PROJECT # | 06292770 |
| STATE PROPERTY # | - |
| COPYRIGHT: | STATE OF UTAH |

SHEET NUMBER:

SF214

NOTES:
1. AT CONTRACTOR'S OPTION, BRACING ANGLES MAY BE ATTACHED TO GUSSET PLATES WITH TWO A325 BOLTS EACH END IN LIEU OF WELDING.

2. SEE TYPICAL SLAB EDGE DETAILS AT COMPOSITE BEAMS FOR SLAB EDGE ANGLE AND KICKER REQUIREMENTS.

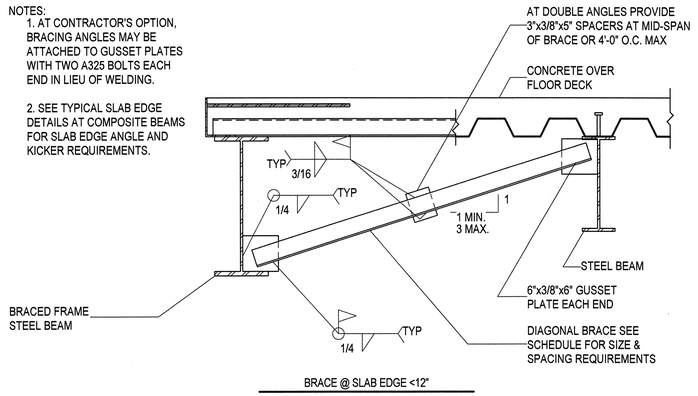


BRACE @ SLAB EDGE <12"

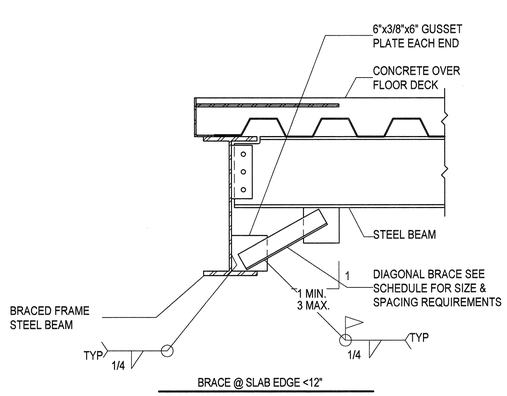


BRACE @ SLAB EDGE <12"

FRAMEBRACE

C1 / SF215 TYPICAL BRACED FRAME BEAM BRACE DETAILS AT FLOOR

NO SCALE

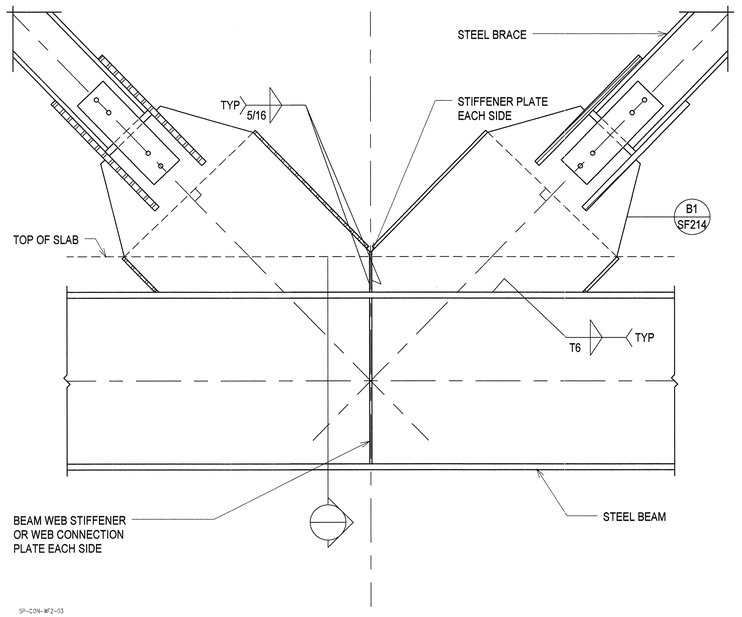


SP-CON-MF2-03

C4 / SF215 TYPICAL SPECIAL CONCENTRIC BRACED FRAME CONNECTION DETAIL

NO SCALE

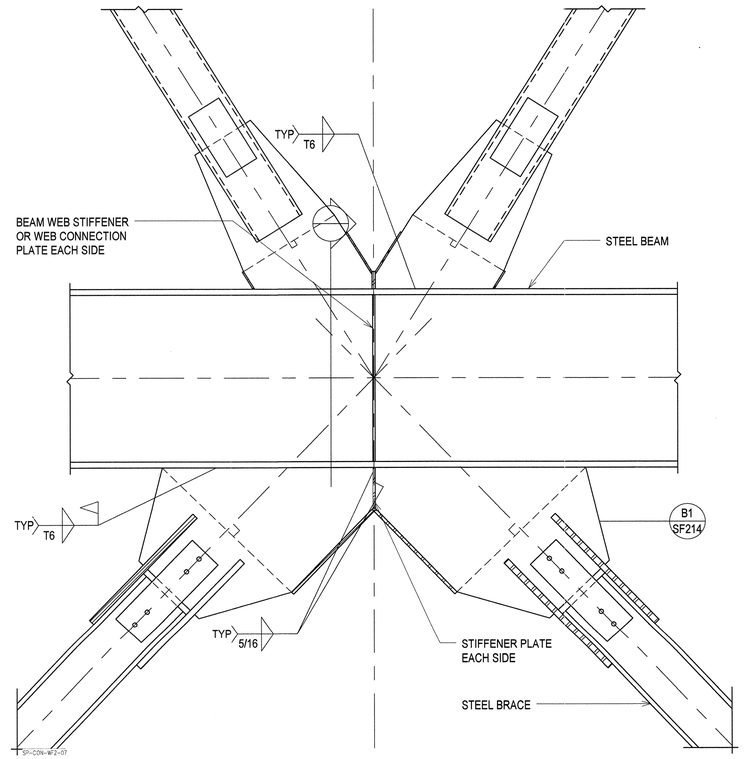


SP-CON-MF2-07

A4 / SF215 TYPICAL SPECIAL CONCENTRIC BRACED FRAME CONNECTION DETAIL

SCALE: 1" = 1'-0"

NOTE TO BID PACKAGE #2.

BID PACKAGE #2 IS FOR FOOTING & FOUNDATION WORK ONLY. ALL OTHER STRUCTURAL STEEL DRAWINGS ARE INCLUDED FOR REFERENCE ONLY.


ARCHITECT 0818

ajc architects

703 east 1700 south
salt lake city, utah 84105
ph: 801.466.8818
fx: 801.466.4411
www.ajcarchitects.com

PAYETTE

285 Summer Street
Boston, MA 02210-1522
www.payette.com

REAVELEY
ENGINEERS + ASSOCIATES
Consulting Structural Engineers

P: 801.486.3883
F: 801.485.0911

675 E. 500 S. Suite 400
Salt Lake City, Utah 84102
www.reaveley.com


OWNER INFORMATION

State of Utah
Department of Administrative Services

Division of Facilities Construction & Management
4110 State Office Building
Salt Lake City, Utah 84114
Phone: (801) 538 - 3018
Fax: (801) 538 - 3267

Internet: http://www.dfcm.utah.gov

PROJECT DESCRIPTION

LIFE SCIENCES RESEARCH CENTER
UTAH STATE UNIVERSITY

USTAR BUILDING #2
LOGAN, UTAH

SHEET NAME:

BRACED FRAME CONNECTION DETAILS (SLRS)

REVISIONS

| MARK | DATE | DESCRIPTION |
|---|---|---|

ISSUE DATA

| | |
|---|---|
| ISSUE DATE: | DEC. 9, 2008 |
| ISSUE TYPE: | B.P. #2 REVIEW |
| DRAWN BY: | R. HARRIS |
| CHECKED BY: | J. MILLER / C.PRICE |
| CAD FILE NAME: | |
| DFCM PROJECT # | 06292770 |
| STATE PROPERTY # | - |
| COPYRIGHT: | STATE OF UTAH |

SHEET NUMBER:

SF215

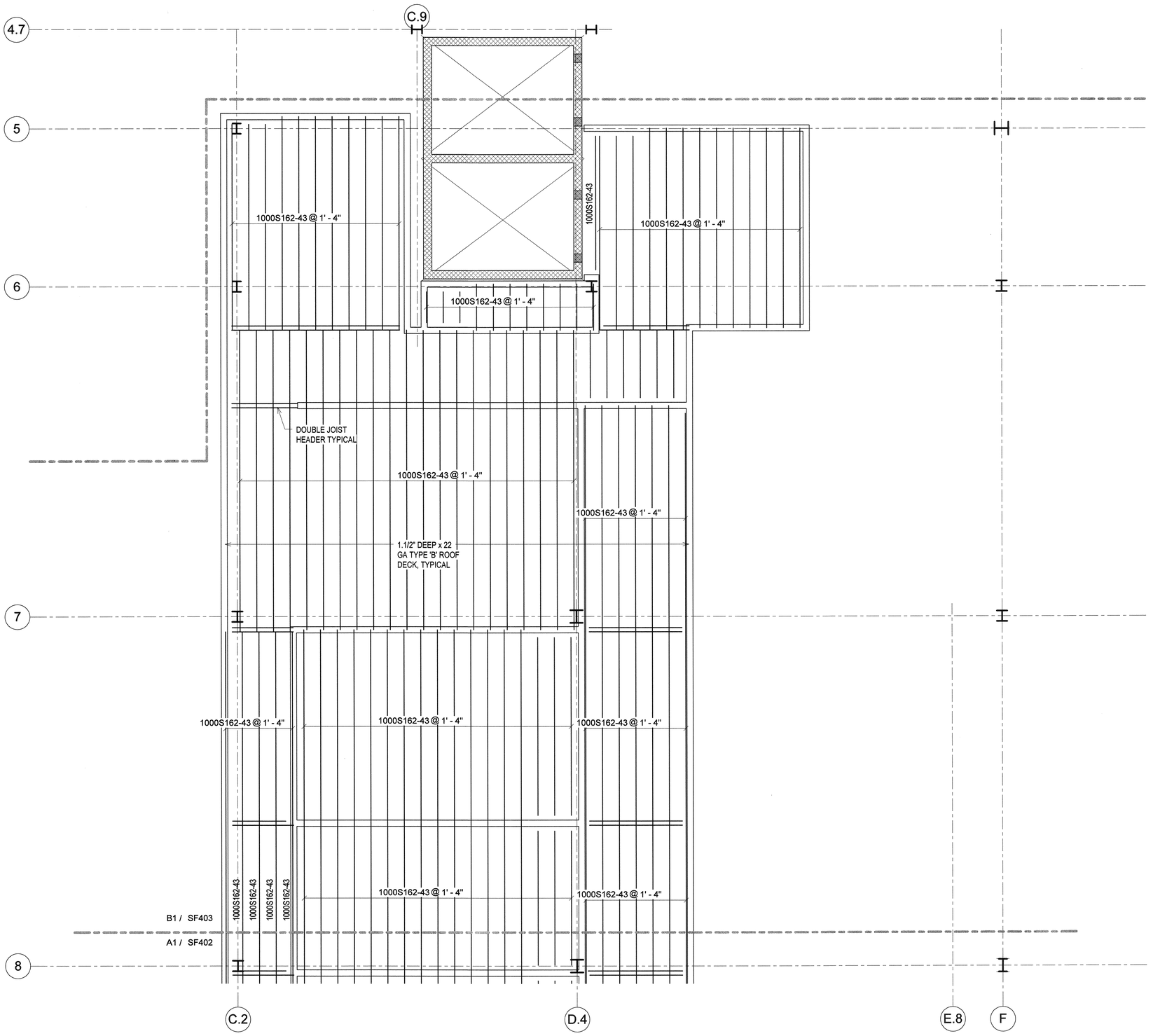


A1 / SF401 LEVEL 3 CEILING FRAMING PLAN - NORTH

SCALE: 1/4" = 1'-0"

NOTE TO BID PACKAGE #2.

BID PACKAGE #2 IS FOR FOOTING & FOUNDATION WORK ONLY. ALL OTHER STRUCTURAL STEEL DRAWINGS ARE INCLUDED FOR REFERENCE ONLY.


ARCHITECT 0818

ajc architects

703 east 1700 south
salt lake city, utah 84105
ph: 801.466.8818
fx: 801.466.4411
www.ajcarchitects.com

P A Y E T T E

285 Summer Street
Boston, MA 02210-1522
www.payette.com

REAVELEY
ENGINEERS + ASSOCIATES
Consulting Structural Engineers

P: 801.486.3883
F: 801.485.0911

675 E. 500 S. Suite 400
Salt Lake City, Utah 84102
www.reaveley.com


OWNER INFORMATION

State of Utah
Department of Administrative Services

Division of Facilities
Construction & Management
4110 State Office Building
Salt Lake City, Utah 84114
Phone: (801) 538 - 3018
Fax: (801) 538 - 3267

Internet: http://www.dfcm.utah.gov

PROJECT DESCRIPTION

# LIFE SCIENCES RESEARCH CENTER
## UTAH STATE UNIVERSITY

USTAR BUILDING #2
LOGAN, UTAH

SHEET NAME:

LEVEL 3 CEILING FRAMING PLAN - NORTH

REVISIONS

| MARK | DATE | DESCRIPTION |
|---|---|---|

ISSUE DATA

| | |
|---|---|
| ISSUE DATE: | DEC. 9, 2008 |
| ISSUE TYPE: | B.P. #2 REVIEW |
| DRAWN BY: | R. HARRIS |
| CHECKED BY: | J. MILLER / C.PRICE |
| CAD FILE NAME: | |
| DFCM PROJECT # | 06292770 |
| STATE PROPERTY # | - |
| COPYRIGHT: | STATE OF UTAH |

SHEET NUMBER:

SF401

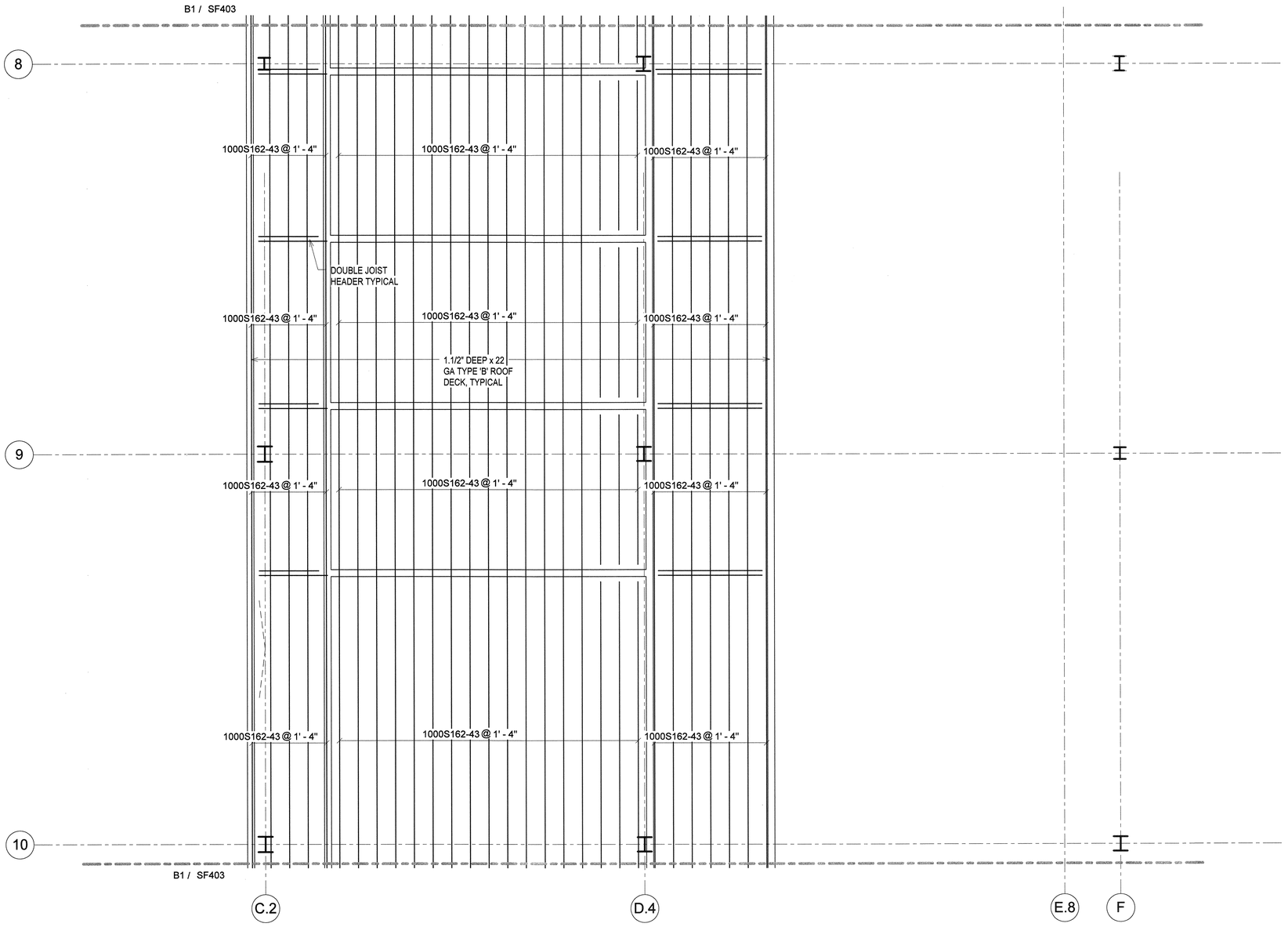


A1 / SF402 LEVEL 3 CEILING FRAMING PLAN - CENTER

SCALE: 1/4" = 1'-0"

NOTE TO BID PACKAGE #2.

BID PACKAGE #2 IS FOR FOOTING & FOUNDATION WORK ONLY. ALL OTHER STRUCTURAL STEEL DRAWINGS ARE INCLUDED FOR REFERENCE ONLY.


ARCHITECT 0818

ajc architects

703 east 1700 south
salt lake city, utah 84105
ph: 801.466.8818
fx: 801.466.4411
www.ajcarchitects.com

PAYETTE

285 Summer Street
Boston, MA 02210-1522
www.payette.com

REAVELEY
ENGINEERS + ASSOCIATES
Consulting Structural Engineers

P: 801.486.3883
F: 801.485.0911

675 E. 500 S. Suite 400
Salt Lake City, Utah 84102
www.reaveley.com


OWNER INFORMATION

State of Utah
Department of Administrative Services

Division of Facilities Construction & Management
4110 State Office Building
Salt Lake City, Utah 84114
Phone: (801) 538 - 3018
Fax: (801) 538 - 3267

Internet: http://www.dfcm.utah.gov

PROJECT DESCRIPTION

LIFE SCIENCES RESEARCH CENTER
UTAH STATE UNIVERSITY

USTAR BUILDING #2
LOGAN, UTAH

SHEET NAME:

LEVEL 3 CEILING FRAMING PLAN - CENTER

REVISIONS

| MARK | DATE | DESCRIPTION |
|---|---|---|

ISSUE DATA

| | |
|---|---|
| ISSUE DATE: | DEC. 9, 2008 |
| ISSUE TYPE: | B.P. #2 REVIEW |
| DRAWN BY: | R. HARRIS |
| CHECKED BY: | J. MILLER / C.PRICE |
| CAD FILE NAME: | |
| DFCM PROJECT # | 06292770 |
| STATE PROPERTY # | - |
| COPYRIGHT: | STATE OF UTAH |

SHEET NUMBER:

SF402

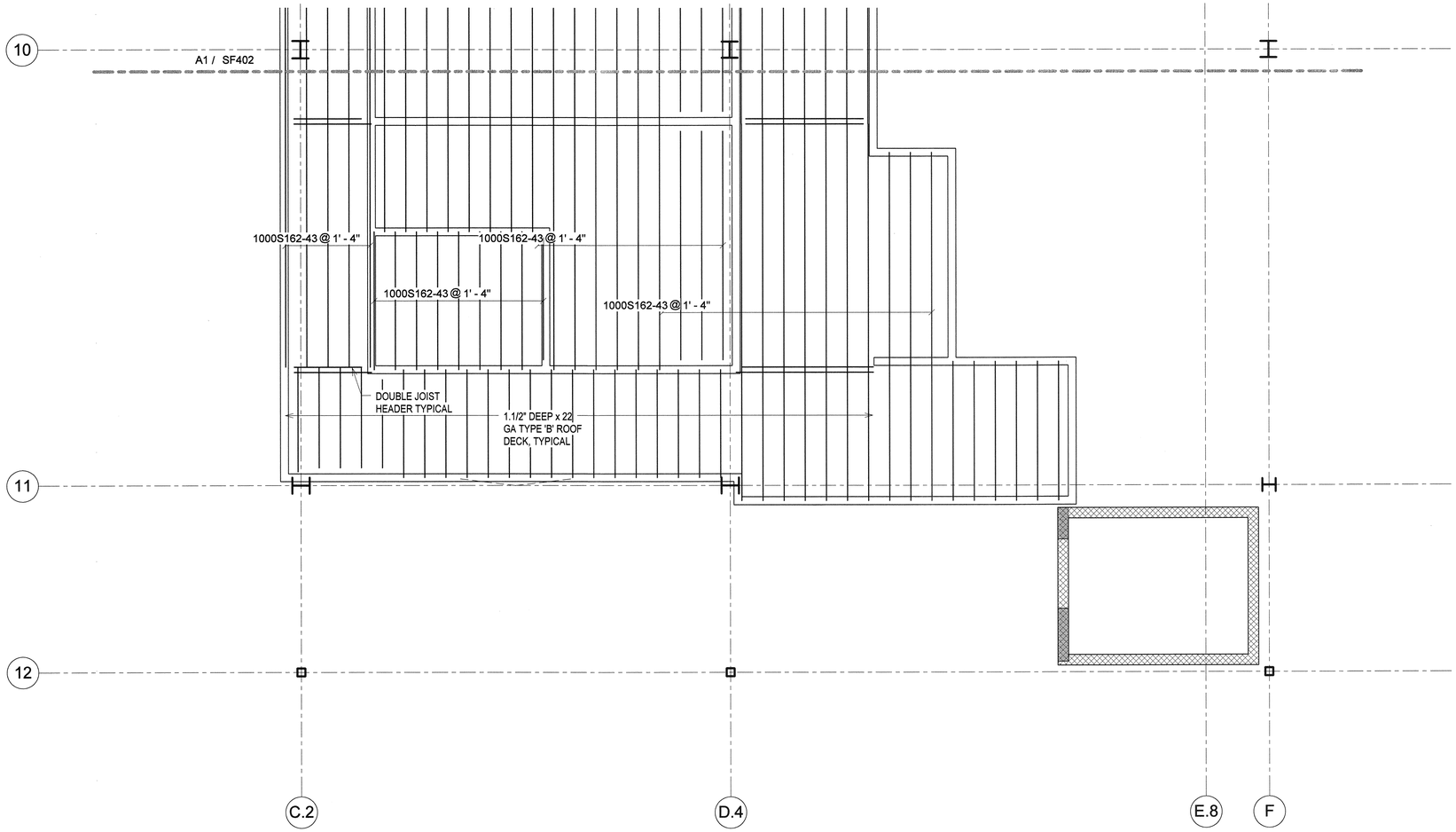


B1 / SF403 LEVEL 3 CEILING FRAMING PLAN - SOUTH

SCALE: 1/4" = 1'-0"

NOTE TO BID PACKAGE #2.

BID PACKAGE #2 IS FOR FOOTING & FOUNDATION WORK ONLY. ALL OTHER STRUCTURAL STEEL DRAWINGS ARE INCLUDED FOR REFERENCE ONLY.


ARCHITECT 0818

ajc architects

703 east 1700 south
salt lake city, utah 84105
ph: 801.466.8818
fx: 801.466.4411
www.ajcarchitects.com

P A Y E T T E

285 Summer Street
Boston, MA 02210-1522
www.payette.com

REAVELEY
ENGINEERS + ASSOCIATES
Consulting Structural Engineers

P: 801.486.3883
F: 801.485.0911

675 E. 500 S. Suite 400
Salt Lake City, Utah 84102
www.reaveley.com


OWNER INFORMATION

State of Utah
Department of Administrative Services

Division of Facilities
Construction & Management
4110 State Office Building
Salt Lake City, Utah 84114
Phone: (801) 538 - 3018
Fax: (801) 538 - 3267

Internet: http://www.dfcm.utah.gov

PROJECT DESCRIPTION

# LIFE SCIENCES RESEARCH CENTER
## UTAH STATE UNIVERSITY

USTAR BUILDING #2
LOGAN, UTAH

SHEET NAME:

LEVEL 3 CEILING FRAMING PLAN - SOUTH

REVISIONS

| MARK | DATE | DESCRIPTION |
|---|---|---|

ISSUE DATA

| | |
|---|---|
| ISSUE DATE: | DEC. 9, 2008 |
| ISSUE TYPE: | B.P. #2 REVIEW |
| DRAWN BY: | R. HARRIS |
| CHECKED BY: | J. MILLER / C.PRICE |
| CAD FILE NAME: | |
| DFCM PROJECT # | 06292770 |
| STATE PROPERTY # | - |
| COPYRIGHT: | STATE OF UTAH |

SHEET NUMBER:

SF403

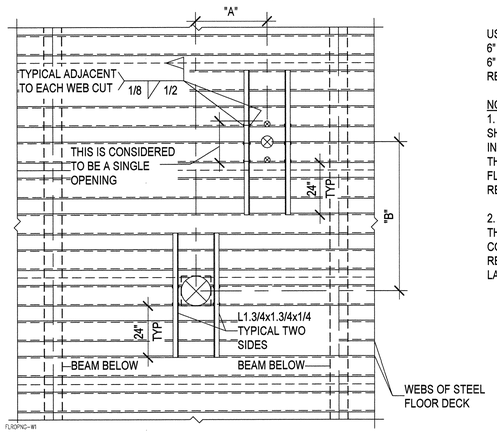


USE THIS DETAIL FOR HOLES LARGER THAN 6" CUTTING 1 TO 3 ADJACENT WEBS. HOLES 6" IN DIAMETER OR LESS NEED NO REINFORCING.

NOTES:
1. PRIOR TO CONCRETE POUR, OPENINGS SHOULD BE BLOCKED OUT AND LEFT INTACT. AFTER THE CONCRETE HAS CURED, THE BLOCKOUT CAN BE REMOVED AND THE FLOOR DECK IN THE AREA OF THE HOLE REMOVED.

2. IF DIMENSIONS "A" AND "B" ARE LESS THAN 32" THE OPENING GROUP MUST BE CONSIDERED AS A SINGLE HOLE, AND REINFORCED AS REQUIRED FOR THE LARGER OPENING. SEE DETAIL __/S___.

C1 / SF501 — TYPICAL MISCELLANEOUS FLOOR OPENING REINFORCING DETAIL FOR TYPE 'W' DECK

NO SCALE

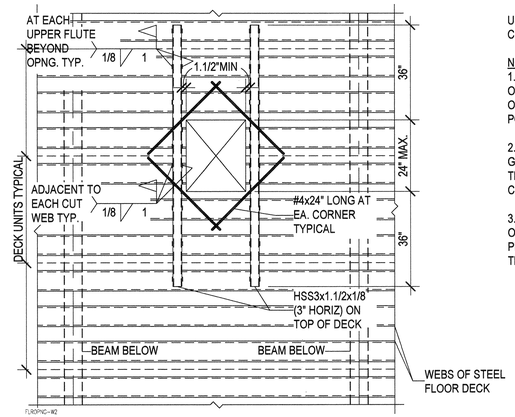


USE THIS DETAIL FOR LARGER HOLES CUTTING 3 TO 4 ADJACENT WEBS.

NOTES:
1. IF THE OPENING OR GROUP OF OPENINGS OCCURS IN ONE DECK UNIT THE OPENING OR OPENING GROUP MAY BE CUT PRIOR TO POURING CONCRETE.

2. IF, AS SHOWN, THE OPENING OR OPENING GROUP CUTS THROUGH TWO DECK UNITS, THE DECKING SHALL NOT BE CUT UNTIL CONCRETE HAS BEEN PLACED AND CURED.

3. WHEN THE MAXIMUM DIMENSION OF AN OPENING OR OPENING GROUP EXCEEDS 24", PROVIDE W8x10 HEADER BEAMS BELOW THE DECK AT ALL SIDES.

C2 / SF501 — TYPICAL MISCELLANEOUS FLOOR OPENING REINFORCING DETAIL FOR TYPE 'W' DECK

NO SCALE

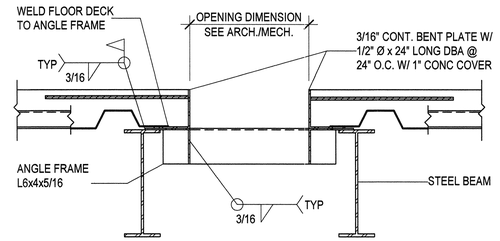


S91FLR09

C4 / SF501 — TYPICAL FLOOR OPENING W/ ANGLE FRAME

NO SCALE

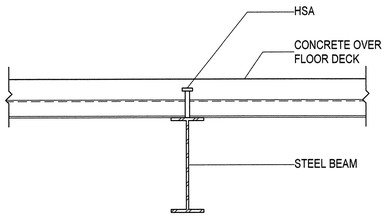


S91FLR01

B1 / SF501 — TYPICAL COMPOSITE STEEL BEAM

NO SCALE

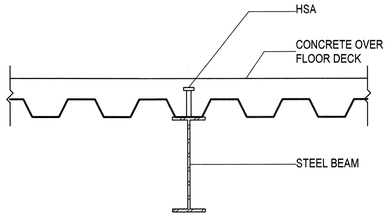


S91FLR02

B2 / SF501 — TYPICAL COMPOSITE STEEL BEAM

NO SCALE

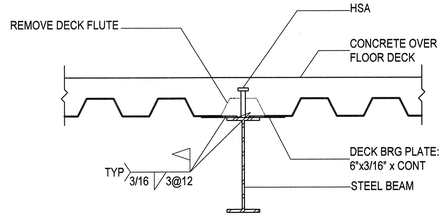


NOTE: THIS DETAIL SHALL APPLY WHEREVER THE DECK FLUTE INTERFERES WITH THE PROPER INSTALLATION OF THE HEADED STUD ANCHOR.

S91FLR03

B3 / SF501 — TYPICAL ALTERNATE DECK BEARING AT COMPOSITE STEEL BEAM

NO SCALE

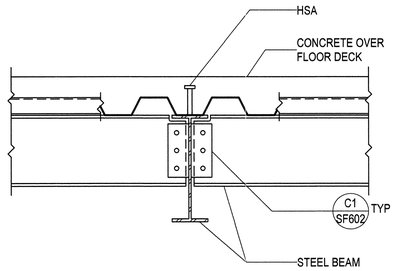


S91FLR04

B4 / SF501 — TYPICAL COMPOSITE STEEL BEAM W/ STEEL BEAM TWO SIDES

NO SCALE

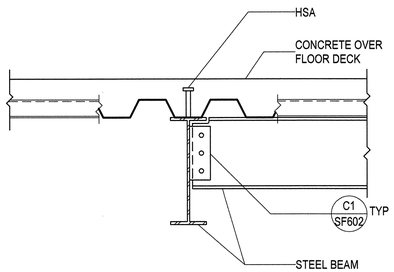


S91FLR05

A1 / SF501 — TYPICAL COMPOSITE STEEL BEAM W/ STEEL BEAM ONE SIDE

NO SCALE

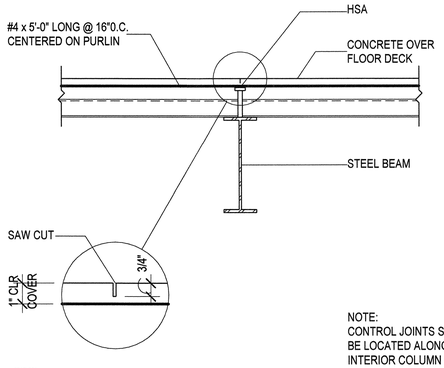


NOTE:
CONTROL JOINTS SHALL BE LOCATED ALONG ALL INTERIOR COLUMN LINES.

S91FLR21

A2 / SF501 — TYPICAL COMPOSITE DECK CONTROL JOINT AT STEEL PURLIN

NO SCALE

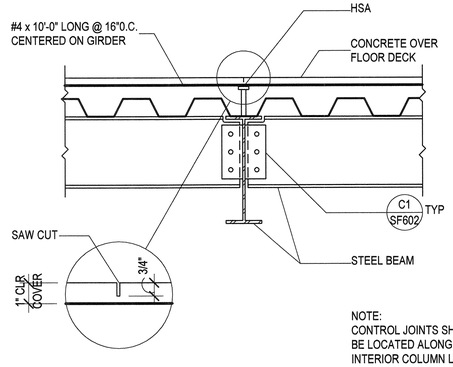


NOTE:
CONTROL JOINTS SHALL BE LOCATED ALONG ALL INTERIOR COLUMN LINES.

S91FLR22

A3 / SF501 — TYPICAL COMPOSITE DECK CONTROL JOINT AT STEEL GIRDER

NO SCALE

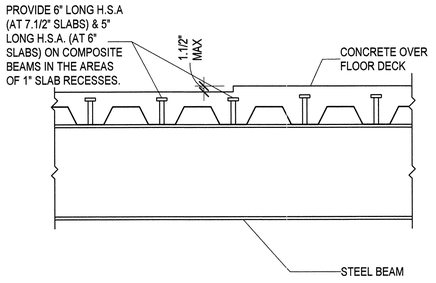


S91FLR26

A4 / SF501 — TYPICAL COMPOSITE STEEL BEAM AT SLAB RECESS

NO SCALE

ARCHITECT 0818

ajc architects

703 east 1700 south
salt lake city, utah 84105
ph: 801.466.8818
fx: 801.466.4411
www.ajcarchitects.com

PAYETTE

285 Summer Street
Boston, MA 02210-1522
www.payette.com

REAVELEY
ENGINEERS + ASSOCIATES
Consulting Structural Engineers

P: 801.486.3883
F: 801.485.0911

675 E. 500 S. Suite 400
Salt Lake City, Utah 84102
www.reaveley.com

OWNER INFORMATION

State of Utah
Department of Administrative Services

Division of Facilities Construction & Management
4110 State Office Building
Salt Lake City, Utah 84114
Phone: (801) 538 - 3018
Fax: (801) 538 - 3267

Internet: http://www.dfcm.utah.gov

PROJECT DESCRIPTION

LIFE SCIENCES RESEARCH CENTER
UTAH STATE UNIVERSITY

USTAR BUILDING #2
LOGAN, UTAH

SHEET NAME:

TYPICAL FLOOR FRAMING DETAILS

REVISIONS

| MARK | DATE | DESCRIPTION |
|---|---|---|

ISSUE DATA

| | |
|---|---|
| ISSUE DATE: | DEC. 9, 2008 |
| ISSUE TYPE: | B.P. #2 REVIEW |
| DRAWN BY: | R. HARRIS |
| CHECKED BY: | J. MILLER / C.PRICE |
| CAD FILE NAME: | |
| DFCM PROJECT # | 06292770 |
| STATE PROPERTY # | - |
| COPYRIGHT: | STATE OF UTAH |

SHEET NUMBER:

SF501

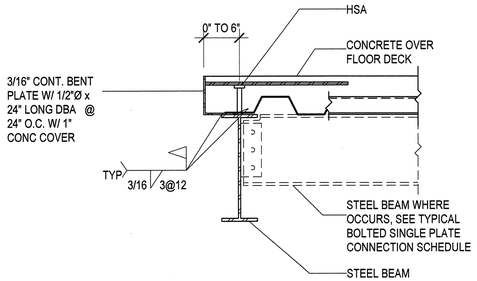


SLAB EDGE FOR 0" UP TO 6"

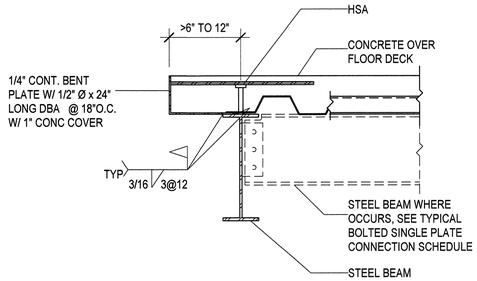


SLAB EDGE FOR >6" UP TO 12"

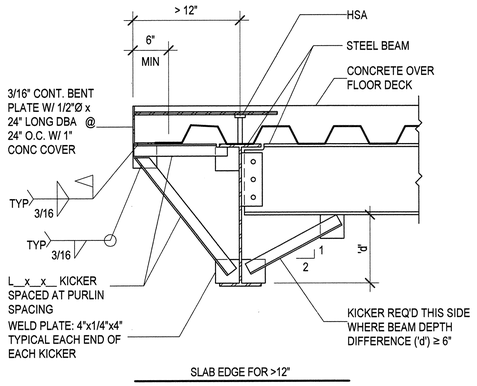


SLAB EDGE FOR >12"

SLABEDGE

B1 / SF502 — TYPICAL SLAB EDGE DETAILS AT COMPOSITE BEAMS

NO SCALE

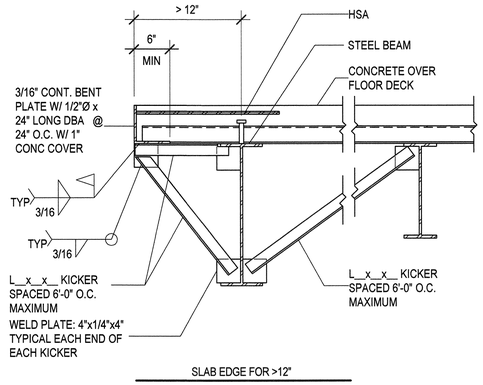


SLAB EDGE FOR >12"

S91FLR24

B3 / SF502 — TYPICAL HEADED STUD ANCHOR PLACEMENT PATTERN FOR COMPOSITE STEEL BEAMS

NO SCALE

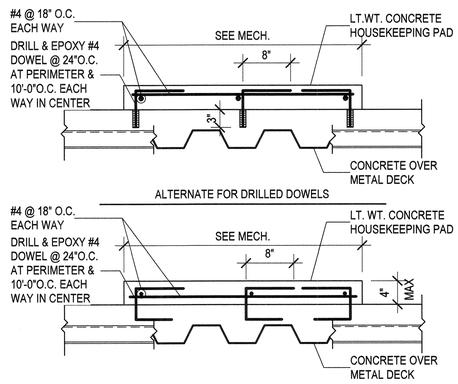


S91FLR23

C3 / SF502 — TYPICAL MECHANICAL HOUSEKEEPING PAD OVER COMPOSITE FLOOR DECK

NO SCALE

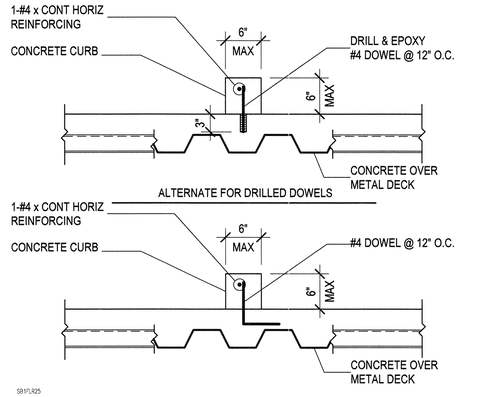


S91FLR25

C4 / SF502 — TYPICAL CONCRETE CURB ON COMPOSITE FLOOR DECK

NO SCALE

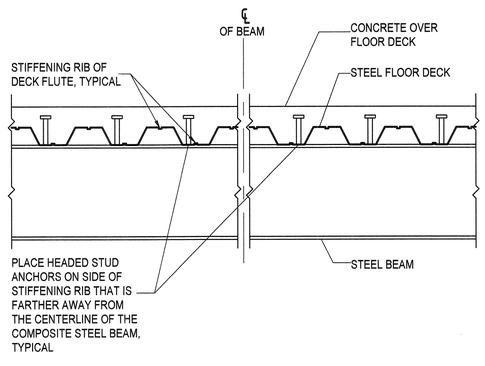


S91FLR27

B4 / SF502 — TYPICAL CONDUIT PLACEMENT IN COMPOSITE DECK

NO SCALE

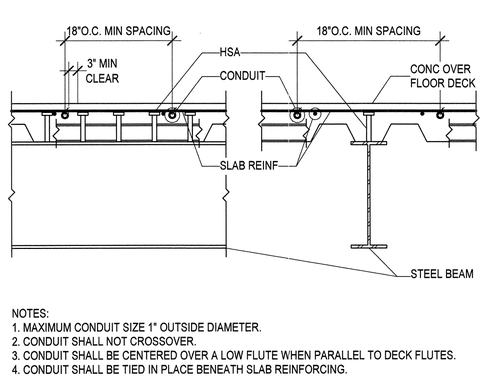


NOTES:
1. MAXIMUM CONDUIT SIZE 1" OUTSIDE DIAMETER.
2. CONDUIT SHALL NOT CROSSOVER.
3. CONDUIT SHALL BE CENTERED OVER A LOW FLUTE WHEN PARALLEL TO DECK FLUTES.
4. CONDUIT SHALL BE TIED IN PLACE BENEATH SLAB REINFORCING.
5. CONDUIT SHALL HAVE 3/4" MINIMUM CONCRETE COVER.

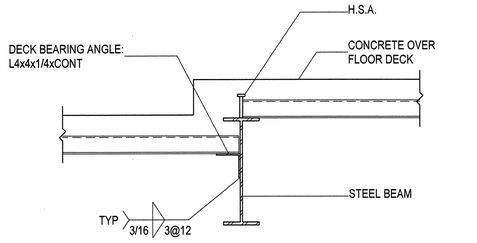


S91FLR16

A1 / SF502 — TYPICAL COMPOSITE STEEL BEAM AT STEPPED SLAB

NO SCALE

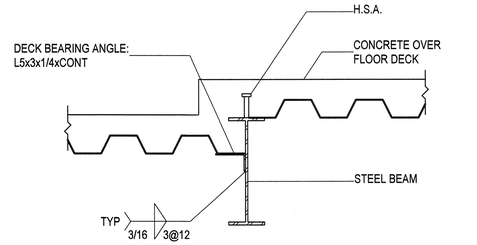


S91FLR17

A2 / SF502 — TYPICAL COMPOSITE STEEL BEAM AT STEPPED SLAB

NO SCALE

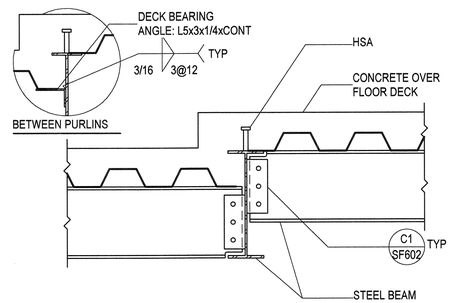


S91FLR18

A3 / SF502 — TYPICAL COMPOSITE STEEL PURLIN TO STEEL BEAM AT STEPPED SLAB

NO SCALE

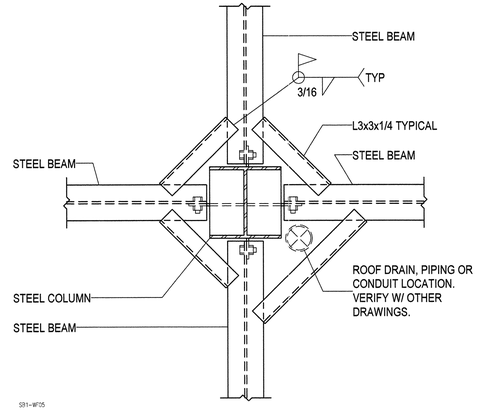


S91-WF05

A4 / SF502 — TYPICAL DECK BEARING AT STEEL COLUMN

NO SCALE

ARCHITECT 0818

ajc architects

703 east 1700 south
salt lake city, utah 84105
ph: 801.466.8818
fx: 801.466.4411
www.ajcarchitects.com

PAYETTE

285 Summer Street
Boston, MA 02210-1522
www.payette.com

REAVELEY
ENGINEERS + ASSOCIATES
Consulting Structural Engineers
P: 801.486.3883
F: 801.485.0911
675 E. 500 S. Suite 400
Salt Lake City, Utah 84102
www.reaveley.com

OWNER INFORMATION

State of Utah
Department of Administrative Services

Division of Facilities Construction & Management
4110 State Office Building
Salt Lake City, Utah 84114
Phone: (801) 538 - 3018
Fax: (801) 538 - 3267

Internet: http://www.dfcm.utah.gov

PROJECT DESCRIPTION

# LIFE SCIENCES RESEARCH CENTER
UTAH STATE UNIVERSITY

USTAR BUILDING #2
LOGAN, UTAH

SHEET NAME:

## TYPICAL FLOOR FRAMING DETAILS

REVISIONS

| MARK | DATE | DESCRIPTION |
|---|---|---|

ISSUE DATA

| | |
|---|---|
| ISSUE DATE: | DEC. 9, 2008 |
| ISSUE TYPE: | B.P. #2 REVIEW |
| DRAWN BY: | R. HARRIS |
| CHECKED BY: | J. MILLER / C.PRICE |
| CAD FILE NAME: | |
| DFCM PROJECT # | 06292770 |
| STATE PROPERTY # | - |
| COPYRIGHT: | STATE OF UTAH |

SHEET NUMBER:

# SF502

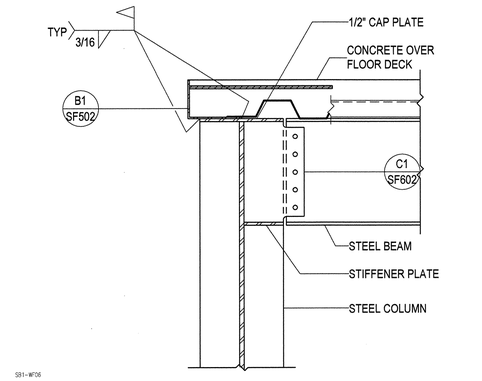


SB1-WF06

C1 SF503 — TYPICAL BOLTED FLOOR BEAM CONNECTION TO COLUMN WEB - ONE SIDE

NO SCALE

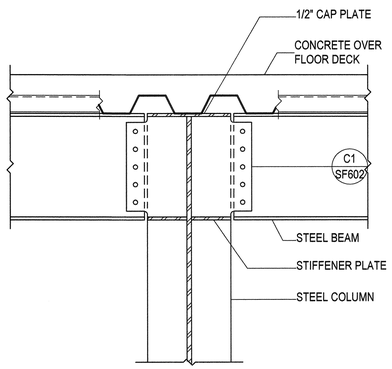


SB1-WF07

C2 SF503 — TYPICAL BOLTED FLOOR BEAM CONNECTION TO COLUMN WEB - TWO SIDES

NO SCALE

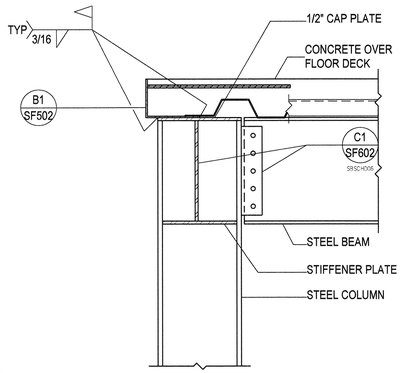


SB1-WF08

C3 SF503 — TYPICAL BOLTED FLOOR BEAM CONNECTION TO COLUMN FLANGE - ONE SIDE

NO SCALE

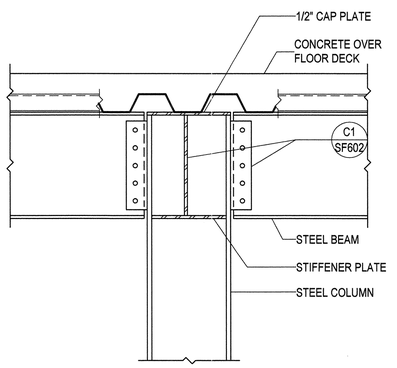


SB1-WF09

C4 SF503 — TYPICAL BOLTED FLOOR BEAM CONNECTION TO COLUMN FLANGE - TWO SIDES

NO SCALE

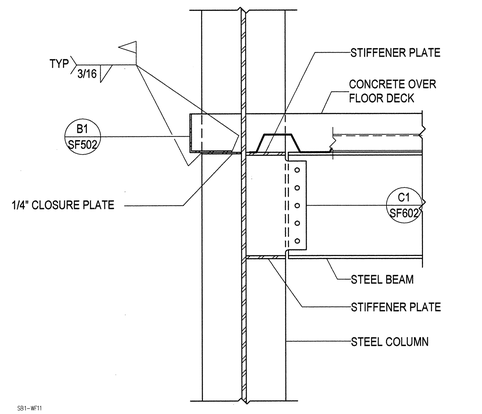


SB1-WF11

B1 SF503 — TYPICAL BOLTED FLOOR BEAM CONNECTION TO COLUMN WEB - ONE SIDE

NO SCALE

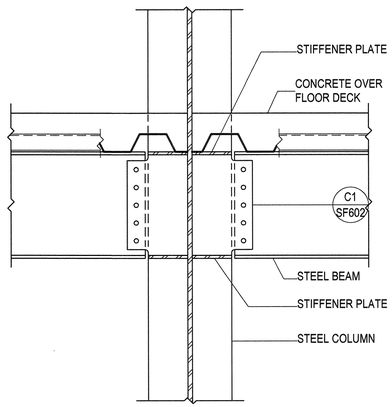


SB1-WF12

B2 SF503 — TYPICAL BOLTED FLOOR BEAM CONNECTION TO COLUMN WEB - TWO SIDES

NO SCALE

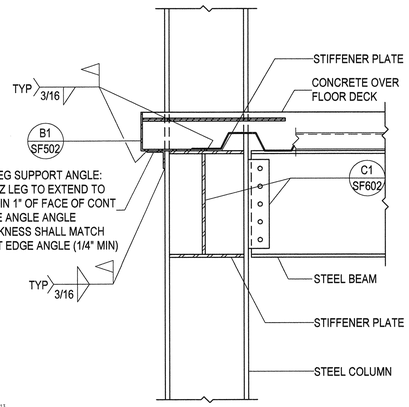


SB1-WF13

B3 SF503 — TYPICAL BOLTED FLOOR BEAM CONNECTION TO COLUMN FLANGE - ONE SIDE

NO SCALE

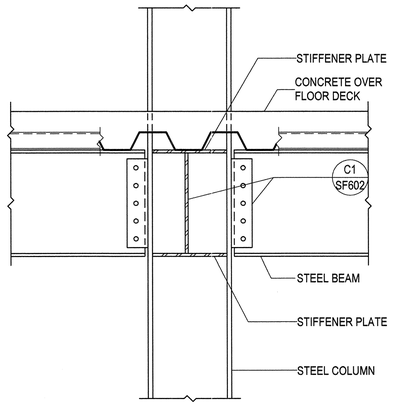


SB1-WF14

B4 SF503 — TYPICAL BOLTED FLOOR BEAM CONNECTION TO COLUMN FLANGE - TWO SIDES

NO SCALE

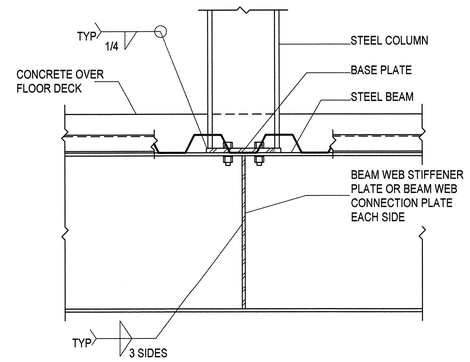


SB1-WF15

A1 SF503 — TYPICAL WIDE FLANGE STEEL COLUMN BEARING AT STEEL TRANSFER BEAM

NO SCALE

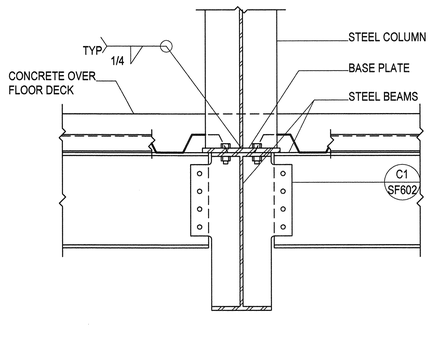


SB1-WF16

A2 SF503 — TYPICAL WIDE FLANGE STEEL COLUMN BEARING AT STEEL TRANSFER BEAM

NO SCALE

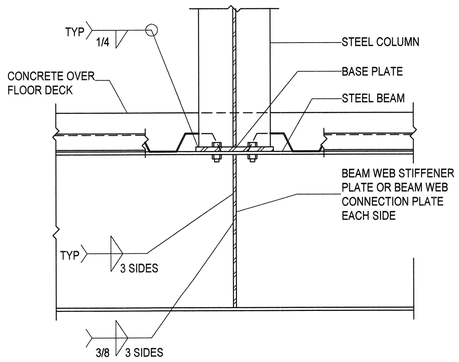


SB1-WF17

A3 SF503 — TYPICAL WIDE FLANGE STEEL COLUMN BEARING AT STEEL TRANSFER BEAM

NO SCALE

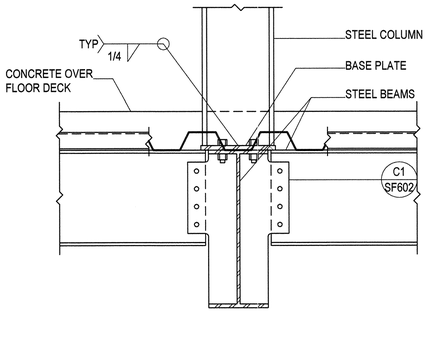


SB1-WF18

A4 SF503 — TYPICAL WIDE FLANGE STEEL COLUMN BEARING AT STEEL TRANSFER BEAM

NO SCALE

ARCHITECT 0818

ajc architects

703 east 1700 south
salt lake city, utah 84105
ph: 801.466.8818
fx: 801.466.4411
www.ajcarchitects.com

PAYETTE

285 Summer Street
Boston, MA 02210-1522
www.payette.com

REAVELEY
ENGINEERS + ASSOCIATES
Consulting Structural Engineers

P: 801.486.3883
F: 801.485.0911

675 E. 500 S. Suite 400
Salt Lake City, Utah 84102
www.reaveley.com

OWNER INFORMATION

State of Utah
Department of Administrative Services

Division of Facilities Construction & Management
4110 State Office Building
Salt Lake City, Utah 84114
Phone: (801) 538 - 3018
Fax: (801) 538 - 3267

Internet: http://www.dfcm.utah.gov

PROJECT DESCRIPTION

# LIFE SCIENCES RESEARCH CENTER
UTAH STATE UNIVERSITY

USTAR BUILDING #2
LOGAN, UTAH

SHEET NAME:

## TYPICAL FLOOR FRAMING DETAILS

REVISIONS

| MARK | DATE | DESCRIPTION |
|---|---|---|

ISSUE DATA

| | |
|---|---|
| ISSUE DATE: | DEC. 9, 2008 |
| ISSUE TYPE: | B.P. #2 REVIEW |
| DRAWN BY: | R. HARRIS |
| CHECKED BY: | J. MILLER / C.PRICE |
| CAD FILE NAME: | |
| DFCM PROJECT # | 06292770 |
| STATE PROPERTY # | - |
| COPYRIGHT: | STATE OF UTAH |

SHEET NUMBER:

# SF503

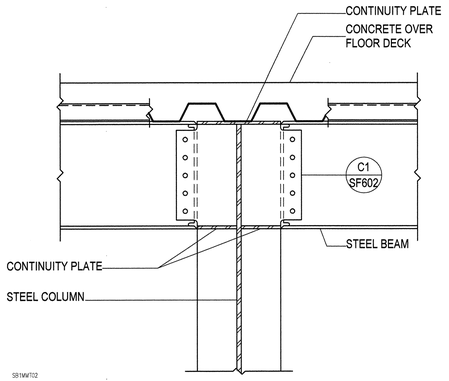


C1 SF504 — TYPICAL STEEL BEAM TO COLUMN MOMENT CONNECTION

NO SCALE

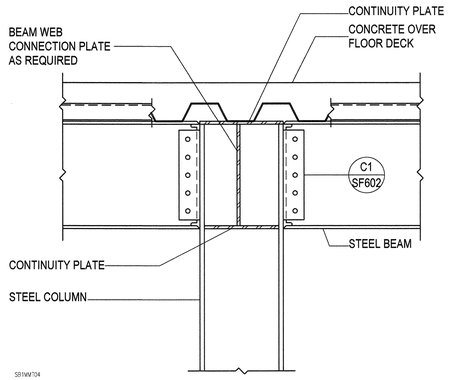


C2 SF504 — TYPICAL STEEL BEAM TO COLUMN MOMENT CONNECTION

NO SCALE

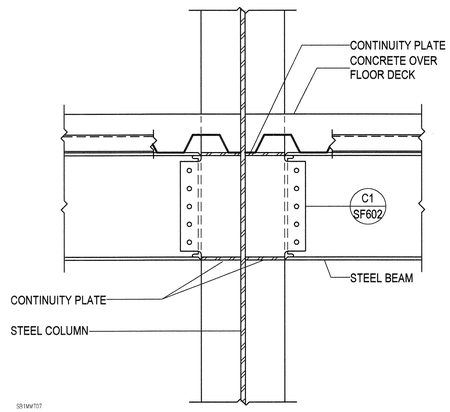


C3 SF504 — TYPICAL STEEL BEAM TO COLUMN MOMENT CONNECTION

NO SCALE

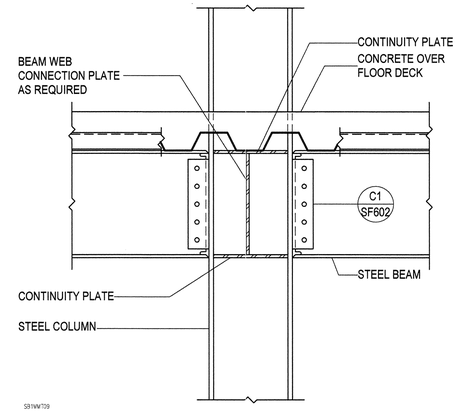


C4 SF504 — TYPICAL STEEL BEAM TO COLUMN MOMENT CONNECTION

NO SCALE

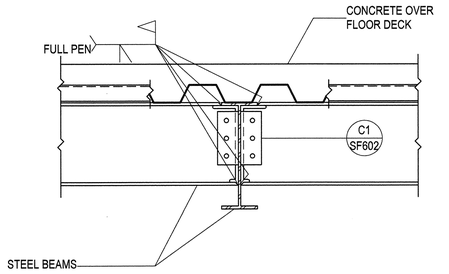


B1 SF504 — TYPICAL STEEL BEAM TO BEAM MOMENT CONNECTION

NO SCALE

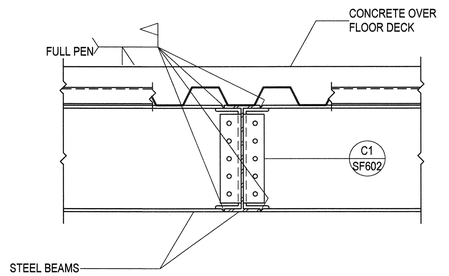


B2 SF504 — TYPICAL STEEL BEAM TO BEAM MOMENT CONNECTION

NO SCALE

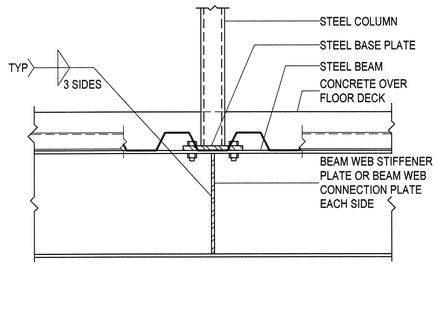


B3 SF504 — STEEL BEAM W/ STEEL COLUMN ABOVE

NO SCALE

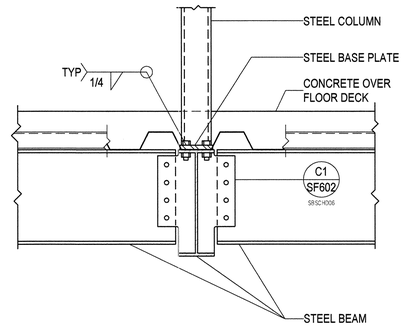


B4 SF504 — STEEL BEAM W/ STEEL COLUMN ABOVE

SCALE: 1" = 1'-0"

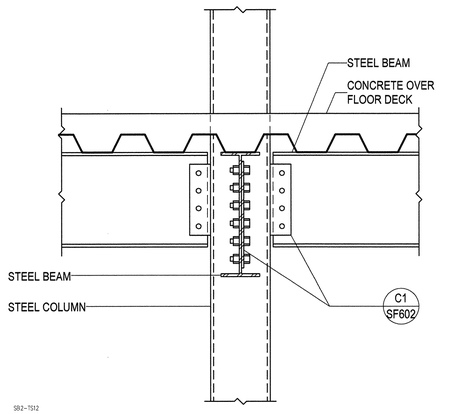


A1 SF504 — TYPICAL BOLTED CONNECTION TO STEEL COLUMN - BEAM TWO SIDES

NO SCALE

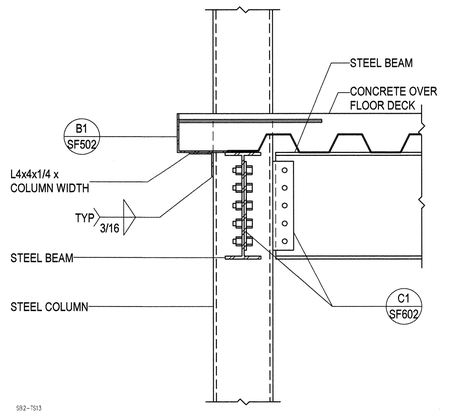


A2 SF504 — TYPICAL BOLTED CONNECTION TO STEEL COLUMN - BEAM ONE SIDE

NO SCALE

NOTE TO BID PACKAGE #2.

BID PACKAGE #2 IS FOR FOOTING & FOUNDATION WORK ONLY. ALL OTHER STRUCTURAL STEEL DRAWINGS ARE INCLUDED FOR REFERENCE ONLY.


ARCHITECT 0818

ajc architects

703 east 1700 south
salt lake city, utah 84105
ph: 801.466.8818
fx: 801.466.4411
www.ajcarchitects.com

PAYETTE

285 Summer Street
Boston, MA 02210-1522
www.payette.com

REAVELEY
ENGINEERS + ASSOCIATES
Consulting Structural Engineers

P: 801.486.3883
F: 801.485.0911

675 E. 500 S. Suite 400
Salt Lake City, Utah 84102
www.reaveley.com


OWNER INFORMATION

State of Utah
Department of Administrative Services

Division of Facilities Construction & Management
4110 State Office Building
Salt Lake City, Utah 84114
Phone: (801) 538 - 3018
Fax: (801) 538 - 3267

Internet: http://www.dfcm.utah.gov

PROJECT DESCRIPTION

LIFE SCIENCES RESEARCH CENTER
UTAH STATE UNIVERSITY

USTAR BUILDING #2
LOGAN, UTAH

SHEET NAME:

TYPICAL FLOOR FRAMING DETAILS

REVISIONS

| MARK | DATE | DESCRIPTION |
|---|---|---|

ISSUE DATA

| | |
|---|---|
| ISSUE DATE: | DEC. 9, 2008 |
| ISSUE TYPE: | B.P. #2 REVIEW |
| DRAWN BY: | R. HARRIS |
| CHECKED BY: | J. MILLER / C.PRICE |
| CAD FILE NAME: | |
| DFCM PROJECT # | 06292770 |
| STATE PROPERTY # | - |
| COPYRIGHT: | STATE OF UTAH |

SHEET NUMBER:

SF504

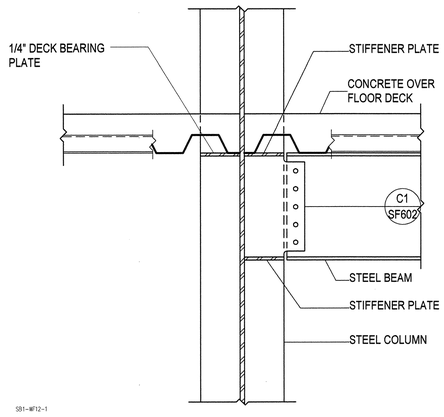


C1 / SF505 TYPICAL BOLTED FLOOR BEAM CONNECTION TO COLUMN WEB - ONE SIDE

NO SCALE

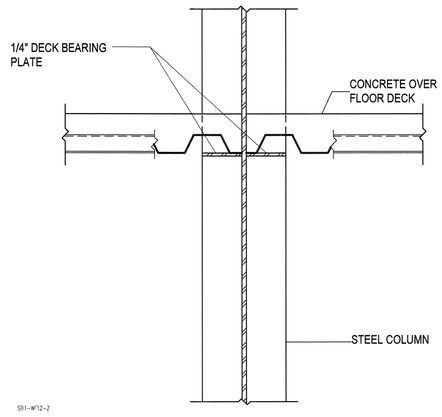


C2 / SF505 TYPICAL DECK SUPPORT AT STEEL COLUMN

NO SCALE

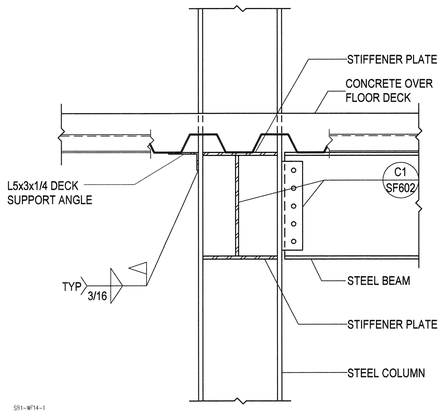


C3 / SF505 TYPICAL BOLTED FLOOR BEAM CONNECTION TO COLUMN FLANGE - ONE SIDE

NO SCALE

NOTE TO BID PACKAGE #2.

BID PACKAGE #2 IS FOR FOOTING & FOUNDATION WORK ONLY. ALL OTHER STRUCTURAL STEEL DRAWINGS ARE INCLUDED FOR REFERENCE ONLY.


ARCHITECT 0818

ajc architects

703 east 1700 south
salt lake city, utah 84105
ph: 801.466.8818
fx: 801.466.4411
www.ajcarchitects.com

P A Y E T T E

285 Summer Street
Boston, MA 02210-1522
www.payette.com

REAVELEY
ENGINEERS + ASSOCIATES
Consulting Structural Engineers

P: 801.486.3883
F: 801.485.0911

675 E. 500 S. Suite 400
Salt Lake City, Utah 84102
www.reaveley.com


OWNER INFORMATION

State of Utah
Department of Administrative Services

Division of Facilities Construction & Management
4110 State Office Building
Salt Lake City, Utah 84114
Phone: (801) 538 - 3018
Fax: (801) 538 - 3267

Internet: http://www.dfcm.utah.gov

PROJECT DESCRIPTION

# LIFE SCIENCES RESEARCH CENTER
## UTAH STATE UNIVERSITY

USTAR BUILDING #2
LOGAN, UTAH

SHEET NAME:

## TYPICAL FLOOR FRAMING DETAILS

REVISIONS

| MARK | DATE | DESCRIPTION |
|---|---|---|

ISSUE DATA

| | |
|---|---|
| ISSUE DATE: | DEC. 9, 2008 |
| ISSUE TYPE: | B.P. #2 REVIEW |
| DRAWN BY: | R. HARRIS |
| CHECKED BY: | J. MILLER / C.PRICE |
| CAD FILE NAME: | |
| DFCM PROJECT # | 06292770 |
| STATE PROPERTY # | - |
| COPYRIGHT: | STATE OF UTAH |

SHEET NUMBER:

SF505

NOTE: WHEN CONCENTRATED LOADS (GREATER THAN 100#) ON OPEN WEB JOISTS OR GIRDERS ARE LOCATED MORE THAN 6 INCHES FROM THE PANEL WORKPOINTS AT EITHER THE TOP OR BOTTOM CHORD ADDITIONAL DIAGONAL WEB MEMBERS SHALL BE FURNISHED AND INSTALLED AT THE LOCATION OF THE CONCENTRATED LOAD BY THE CONTRACTOR. CONCENTRATED POINT LOADS, SINGLE OR MULTIPLE, TOTALING 100# OR LESS CAN BE LOCATED AT ANY POINT ALONG THE TOP OR BOTTOM CHORD OF AN OPEN WEB JOIST OR GIRDER BETWEEN ADJACENT PANEL POINTS WITHOUT MEETING THESE REQUIREMENTS. A LIMIT OF FOUR CONCENTRATED 100# MAX. POINT LOADS PER JOIST OR GIRDER WILL BE PERMITTED ON SPANS OF 12' & GREATER, ONE CONCENTRATED 100# MAX. LOAD ON SPANS LESS THAN 12', UNLESS SPECIFICALLY NOTED OTHERWISE ON THE DRAWINGS. JOIST BRIDGING SHALL NEVER BE USED TO SUPPORT HANGING LOADS.

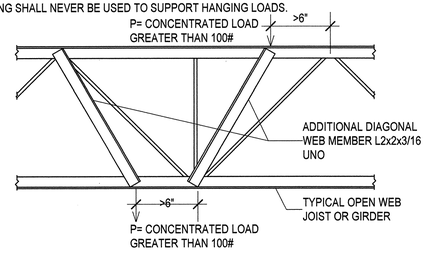


C1 / SF511 — TYPICAL DETAIL AT ADDITIONAL CONCENTRATED POINT LOAD
NO SCALE

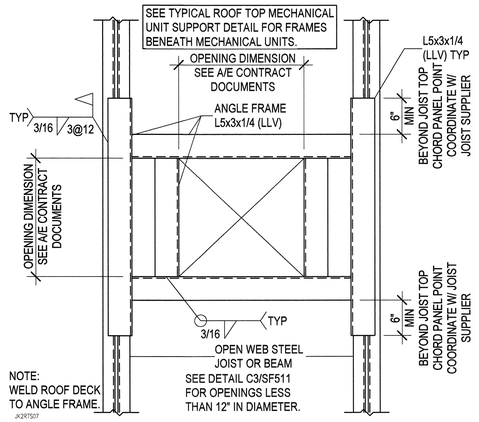


C2 / SF511 — TYPICAL ROOF OPENING DETAIL (PLAN VIEW)
NO SCALE

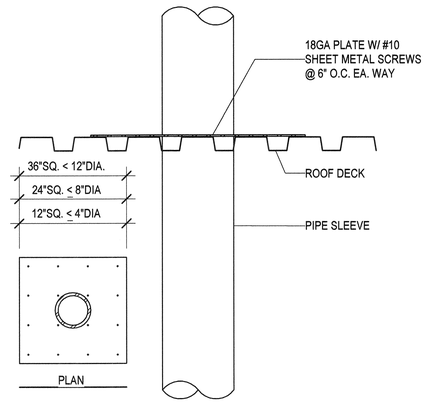


C3 / SF511 — TYPICAL PIPE SLEEVE HOLE THRU ROOF DECK
NO SCALE

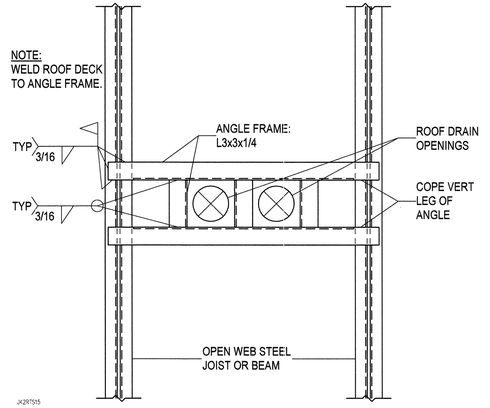


C4 / SF511 — TYPICAL ROOF DRAIN OPENING (PLAN VIEW)
NO SCALE

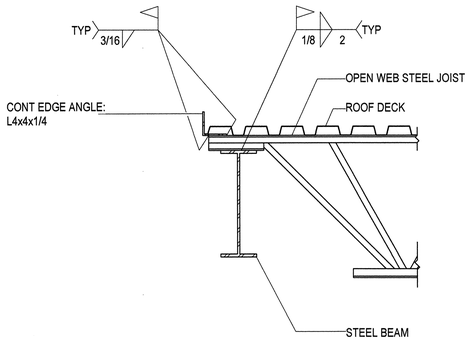


B1 / SF511 — TYPICAL JOIST BEARING AT STEEL BEAM
NO SCALE

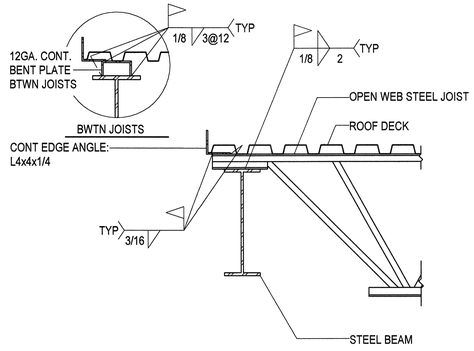


B2 / SF511 — TYP JOIST BEARING AT STEEL BEAM W/ CHORD TIE/DRAG STRUT
NO SCALE

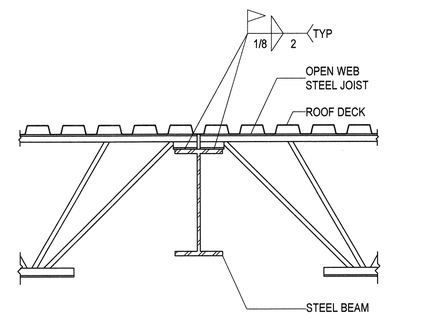


B3 / SF511 — TYPICAL JOIST BEARING AT STEEL BEAM
NO SCALE

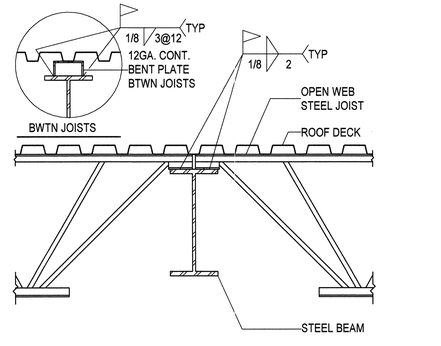


B4 / SF511 — TYP JOIST BEARING AT STEEL BEAM W/ CHORD TIE/DRAG STRUT
NO SCALE

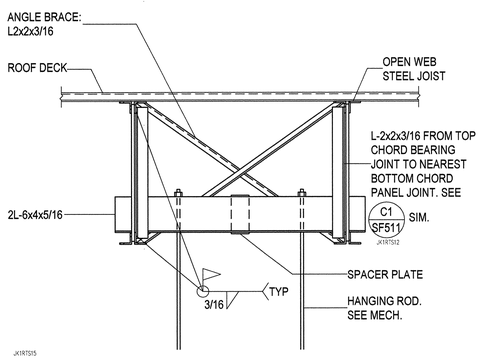


A1 / SF511 — TYPICAL HANGING MECHANICAL UNIT SUPPORT DETAIL
NO SCALE

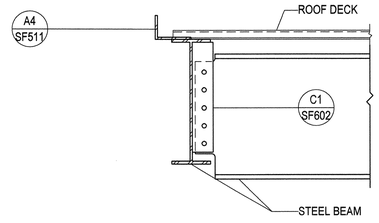


A2 / SF511 — TYPICAL STEEL BEAM TO BEAM CONNECTION AT ROOF EDGE
NO SCALE

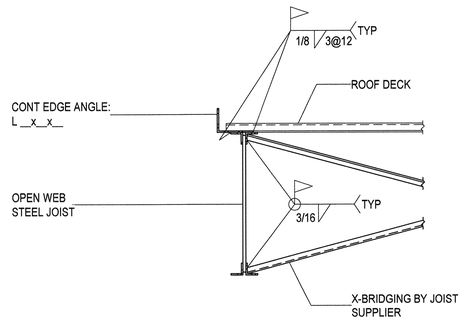


A3 / SF511 — TYPICAL EDGE JOIST W/ BRIDGING
NO SCALE

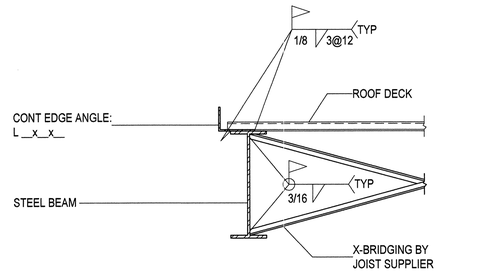


A4 / SF511 — TYPICAL EDGE BEAM WITH BRIDGING
NO SCALE


ARCHITECT 0818

ajc architects

703 east 1700 south
salt lake city, utah 84105
ph: 801.466.8818
fx: 801.466.4411
www.ajcarchitects.com

P A Y E T T E

285 Summer Street
Boston, MA 02210-1522
www.payette.com

REAVELEY
ENGINEERS + ASSOCIATES
Consulting Structural Engineers

P: 801.486.3883
F: 801.485.0911

675 E. 500 S. Suite 400
Salt Lake City, Utah 84102
www.reaveley.com


OWNER INFORMATION

State of Utah
Department of Administrative Services

Division of Facilities
Construction & Management
4110 State Office Building
Salt Lake City, Utah 84114
Phone: (801) 538 - 3018
Fax: (801) 538 - 3267

Internet: http://www.dfcm.utah.gov

PROJECT DESCRIPTION

LIFE SCIENCES
RESEARCH CENTER
UTAH STATE UNIVERSITY

USTAR BUILDING #2
LOGAN, UTAH

SHEET NAME:

TYPICAL ROOF
FRAMING DETAILS

REVISIONS

| MARK | DATE | DESCRIPTION |
|---|---|---|

ISSUE DATA

| | |
|---|---|
| ISSUE DATE: | DEC. 9, 2008 |
| ISSUE TYPE: | B.P. #2 REVIEW |
| DRAWN BY: | R. HARRIS |
| CHECKED BY: | J. MILLER / C.PRICE |
| CAD FILE NAME: | |
| DFCM PROJECT # | 06292770 |
| STATE PROPERTY # | - |
| COPYRIGHT: | STATE OF UTAH |

SHEET NUMBER:

SF511

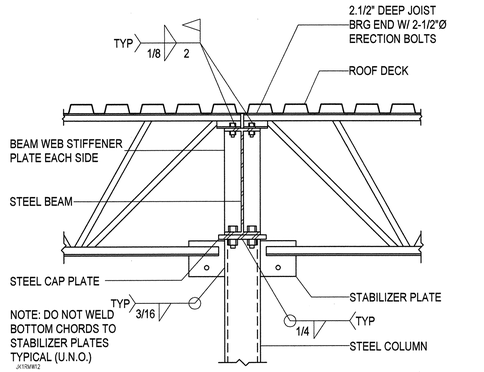


C1 / SF512 — TYPICAL JOIST & STEEL BEAM BEARING AT STEEL COLUMN

NO SCALE

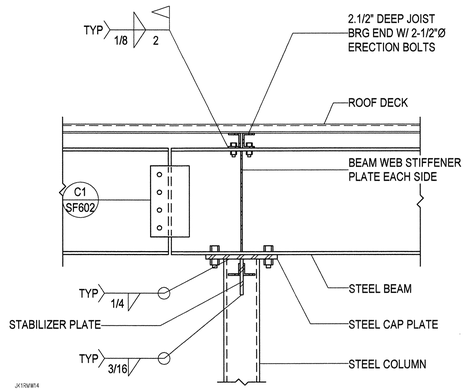


C2 / SF512 — TYPICAL JOIST & STEEL BEAM BEARING AT STEEL COLUMN

NO SCALE

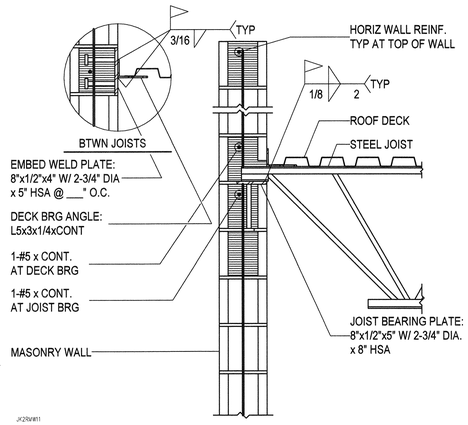


C3 / SF512 — TYPICAL JOIST/DECK BEARING AT MASONRY WALL

NO SCALE

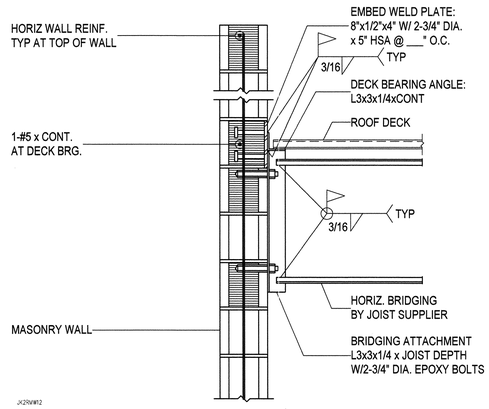


C4 / SF512 — TYP DECK BEARING AT MASONRY WALL WITH BRIDGING ATTACHMENT

NO SCALE

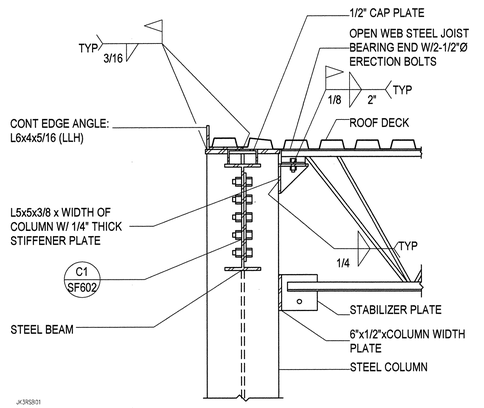


B1 / SF512 — TYPICAL OPEN WEB STEEL JOIST BEARING AT STEEL COLUMN FLANGE

NO SCALE

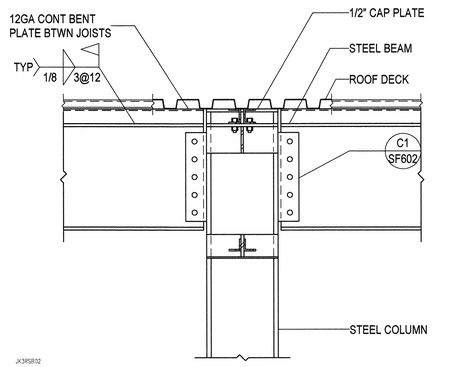


B2 / SF512 — TYPICAL BOLTED ROOF BEAM BEARING AT COLUMN FLANGE - TWO SIDES

NO SCALE

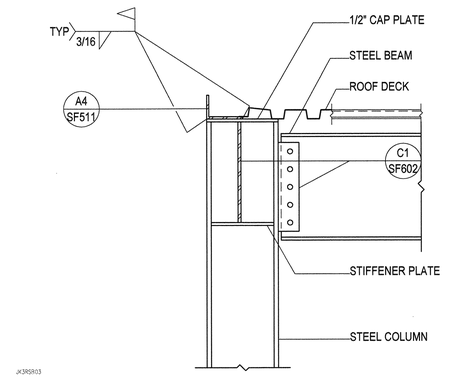


B3 / SF512 — TYPICAL BOLTED ROOF BEAM BEARING AT COLUMN FLANGE - ONE SIDE

NO SCALE

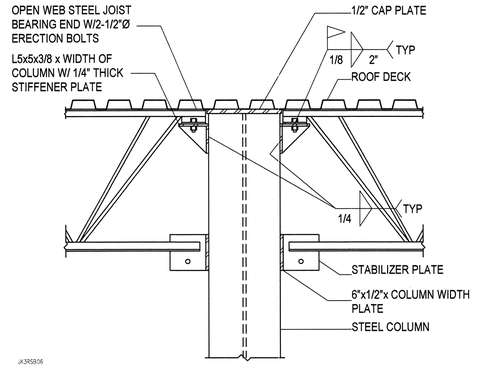


B4 / SF512 — TYPICAL OPEN WEB STEEL JOIST BEARING AT STEEL COLUMN FLANGES

NO SCALE

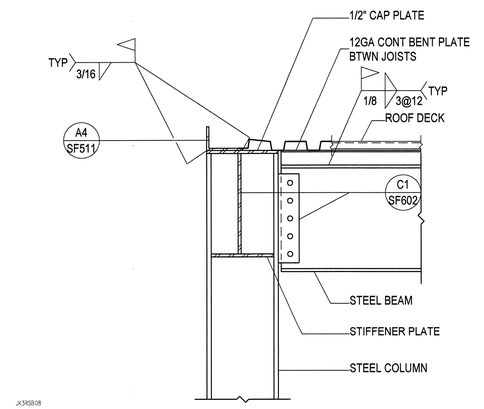


A1 / SF512 — TYPICAL ROOF BEAM CONNECTION TO COLUMN FLANGE - ONE SIDE

NO SCALE

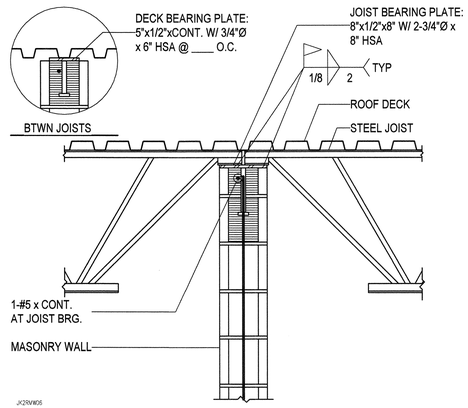


A2 / SF512 — TYPICAL JOIST/DECK BEARING AT MASONRY WALL

NO SCALE

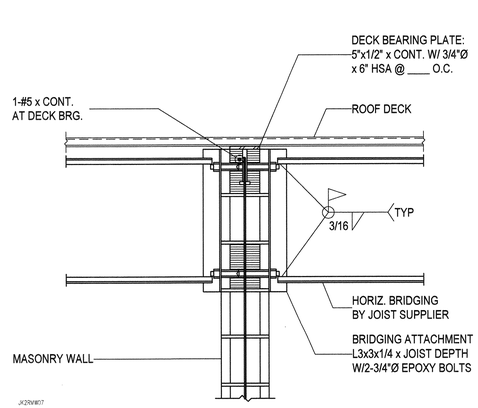


A3 / SF512 — TYP DECK BEARING AT MASONRY WALL WITH BRIDGING ATTACHMENT

NO SCALE

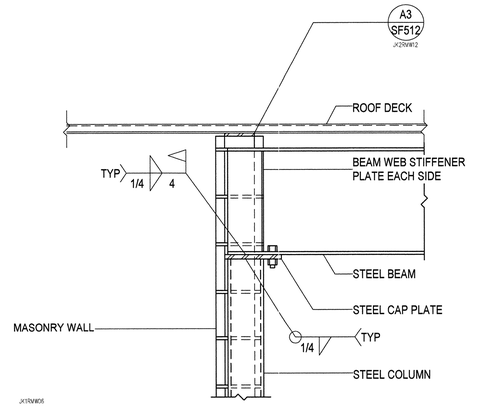


A4 / SF512 — TYP STEEL BEAM BEARING AT STEEL COLUMN IN MASONRY WALL

NO SCALE

ARCHITECT 0818

ajc architects

703 east 1700 south
salt lake city, utah 84105
ph: 801.466.8818
fx: 801.466.4411
www.ajcarchitects.com

P A Y E T T E

285 Summer Street
Boston, MA 02210-1522
www.payette.com

REAVELEY
ENGINEERS + ASSOCIATES
Consulting Structural Engineers

P: 801.486.3883
F: 801.485.0911

675 E. 500 S. Suite 400
Salt Lake City, Utah 84102
www.reaveley.com

OWNER INFORMATION

State of Utah
Department of Administrative Services

Division of Facilities
Construction & Management
4110 State Office Building
Salt Lake City, Utah 84114
Phone: (801) 538 - 3018
Fax: (801) 538 - 3267

Internet: http://www.dfcm.utah.gov

PROJECT DESCRIPTION

# LIFE SCIENCES RESEARCH CENTER
UTAH STATE UNIVERSITY

USTAR BUILDING #2
LOGAN, UTAH

SHEET NAME:

## TYPICAL ROOF FRAMING DETAILS

REVISIONS

| MARK | DATE | DESCRIPTION |
|---|---|---|

ISSUE DATA

| | |
|---|---|
| ISSUE DATE: | DEC. 9, 2008 |
| ISSUE TYPE: | B.P. #2 REVIEW |
| DRAWN BY: | R. HARRIS |
| CHECKED BY: | J. MILLER / C.PRICE |
| CAD FILE NAME: | |
| DFCM PROJECT # | 06292770 |
| STATE PROPERTY # | - |
| COPYRIGHT: | STATE OF UTAH |

SHEET NUMBER:

# SF512

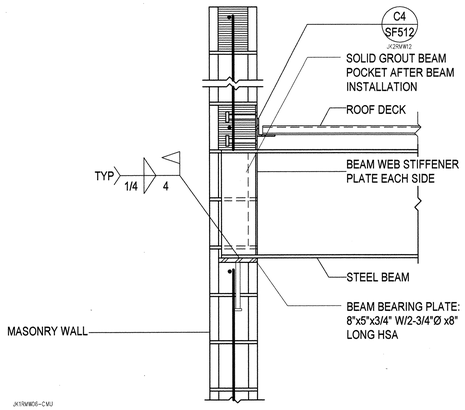


C1 / SF513 TYP STEEL BEAM BEARING AT STEEL COLUMN IN MASONRY WALL

NO SCALE

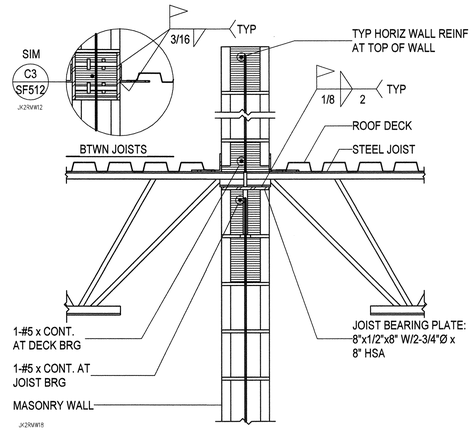


C2 / SF513 TYP JOIST/DECK BEARING AT MASONRY WALL - TWO SIDES

NO SCALE

NOTE TO BID PACKAGE #2.

BID PACKAGE #2 IS FOR FOOTING & FOUNDATION WORK ONLY. ALL OTHER STRUCTURAL STEEL DRAWINGS ARE INCLUDED FOR REFERENCE ONLY.

ARCHITECT 0818

ajc architects

703 east 1700 south
salt lake city, utah 84105
ph: 801.466.8818
fx: 801.466.4411
www.ajcarchitects.com

PAYETTE

285 Summer Street
Boston, MA 02210-1522
www.payette.com

REAVELEY
ENGINEERS + ASSOCIATES
Consulting Structural Engineers

P: 801.486.3883
F: 801.485.0911

675 E. 500 S. Suite 400
Salt Lake City, Utah 84102
www.reaveley.com

OWNER INFORMATION

State of Utah
Department of Administrative Services

Division of Facilities Construction & Management
4110 State Office Building
Salt Lake City, Utah 84114
Phone: (801) 538 - 3018
Fax: (801) 538 - 3267

Internet: http://www.dfcm.utah.gov

PROJECT DESCRIPTION

LIFE SCIENCES RESEARCH CENTER
UTAH STATE UNIVERSITY

USTAR BUILDING #2
LOGAN, UTAH

SHEET NAME:

TYPICAL ROOF FRAMING DETAILS

REVISIONS

| MARK | DATE | DESCRIPTION |
|---|---|---|

ISSUE DATA

| | |
|---|---|
| ISSUE DATE: | DEC. 9, 2008 |
| ISSUE TYPE: | B.P. #2 REVIEW |
| DRAWN BY: | R. HARRIS |
| CHECKED BY: | J. MILLER / C.PRICE |
| CAD FILE NAME: | |
| DFCM PROJECT # | 06292770 |
| STATE PROPERTY # | - |
| COPYRIGHT: | STATE OF UTAH |

SHEET NUMBER:

SF513

| | | | | | | | | | | | | | | | | | | | | | | | | | |
|---|---|---|---|---|---|---|---|---|---|---|---|---|---|---|---|---|---|---|---|---|---|---|---|---|---|
| Penthouse Roof | | | | | | | | | | | | | | | | | | | | | | | | | Penthouse Roof |
| 169' - 0" Parapet | | | | | HSS8x8x1/4 | HSS8x8x1/4 | | W10x45 | W10x45 | | | | | | | | | W10x33 | | W10x39 | | | HSS6x6x1/4 | | 169' - 0" Parapet |
| 160' - 0" Roof | | | | | | | | | | | | | | | | | | | | | | | | | 160' - 0" Roof |
| Penthouse Floor 152' - 0" 151' - 0" Level 3C | HSS8x8x1/4 | | | HSS6x6x1/4 | | | W10x33 | | | | | | W10x33 | W10x45 | W10x49 | HSS6x6x1/4 | W10x33 | | W10x49 | | W10x33 | | | | Penthouse Floor 152' - 0" 151' - 0" Level 3C |
| 142' - 0" Level 3 | | | HSS8x8x1/4 | | | | | | | | | | | | | | | | | | | | | | 142' - 0" Level 3 |
| 134' - 0" Level 2 | HSS8x8x1/4 | | | HSS6x6x1/4 | W10x49 | | W10x33 | W10x68 | W10x68 | W10x39 | W12x65 | HSS6x6x1/4 | W10x33 | W10x45 | W10x49 | HSS6x6x1/4 | W12x65 | W10x33 | W10x49 | W10x33 | W12x65 | W10x60 | W10x33 | | 134' - 0" Level 2 |
| Dock Roof 117' - 0" 115' - 9 1/2" Level 1 | HSS8x8x1/4 | HSS8x8x1/4 | | | | | | | | | | | | | | | W10x33 | | | | | | | | Dock Roof 117' - 0" 115' - 9 1/2" Level 1 |
| 100' - 0" Mech Room | | | | | | | | | | | | | | | | | | | | | | | | | 100' - 0" Mech Room |
| 96' - 0" | | | | | | | | | | | | | | | | | | | | | | | | | 96' - 0" |
| Column Locations | A-1.5, A-2.5(-5' - 1"), A-3 | A-2 | A-2(5' - 6") | B-1 | B-1.5 | B-3, J-1.5, K-1.5, L-1.5 | C-1 | C-1.5 | C-2 | C-2.5, D-2.5 | C-3 | C.2-3(-7' - 3 1/2") | C.2-4, C.2(-27' - 9 1/2")-4.7(4' - 5 1/8") | C.2-5 | C.2-6, G.6-11 | C.2-7, C.2-8, G.6-6 | C.2-12, F-12 | C.9-4 | C.9-6 | D-1 | D-1.5 | D-2 | D-3 | D(-2' - 8")-4(-1' - 6") | D(-2' - 8")-4(-13' - 5 1/8"), D.4(1' - 3")-5(7' - 10 7/8"), F-4(-1' - 6") | D.4(1' - 3")-5 | |

| | | | | | | | | | | | | | | | | | | | | | | | | | |
|---|---|---|---|---|---|---|---|---|---|---|---|---|---|---|---|---|---|---|---|---|---|---|---|---|---|
| Penthouse Roof | | | | | | | | | | | | | | | | | | | | | | | | | Penthouse Roof |
| 169' - 0" Parapet | | | | | | | | | | | | | W10x33 | | W10x33 | W10x45 | W10x49 | | HSS8x8x1/4 | | HSS8x8x1/4 | | | | 169' - 0" Parapet |
| 160' - 0" Roof | | | | | | | | | | | | | | | | | | | | | | | | | 160' - 0" Roof |
| Penthouse Floor 152' - 0" 151' - 0" Level 3C | | | | | | | | | | | W12x40 | | | | | | | | | HSS8x8x1/4 | | HSS8x8x1/4 | HSS8x8x1/4 | | Penthouse Floor 152' - 0" 151' - 0" Level 3C |
| 142' - 0" Level 3 | | | | | | | | | W10x49 | | | | | | | | | | | | | | | | 142' - 0" Level 3 |
| 134' - 0" Level 2 | W10x54 | W12x65 | W12x72 | HSS6x6x5/16 | W10x68 | W10x77 | W10x39 | | W10x60 | | W12x87 | W10x49 | W12x65 | W10x60 | W10x68 | W10x54 | | W10x54 | W10x49 | W10x33 | W10x60 | | HSS8x8x1/4 | HSS8x8x1/4 | | 134' - 0" Level 2 |
| Dock Roof 117' - 0" 115' - 9 1/2" Level 1 | | | | | | | | W12x136 | | | W12x87 | | | | | | | | | | HSS4x4x1/4 | | | | Dock Roof 117' - 0" 115' - 9 1/2" Level 1 |
| 100' - 0" Mech Room | | | | | | | | | | | | | | | | | | | | | | | | | 100' - 0" Mech Room |
| 96' - 0" | | | | | | | | | | | | | | | | | | | | | | | | | 96' - 0" |
| Column Locations | D.4(1' - 3")-6, F-11, G.6-10 | D.4-7, D.4-8, D.4-9, G.6-9 | D.4-10, F-10 | D.4-12 | E-1, F-1, H-1 | E-2, F-2 | E(10' - 8")-4(-1' - 6") | E.8-7, E.8-9 | F-6 | F-7, F-9 | F-8 | G-1, J-1 | G-1.5 | G-2 | G-3 | H-2 | H-3 | J-2, K-2 | J-3, K-3, L-3, N-1.5, N-2 | M-1 | M-1.5, M-3 | M(3' - 2")-2.5(-4' - 5 3/4"), M(10' - 10")-2.5(-4' - 5 3/4"), M(3' - 2")-3(3' - 3 1/4"), M(10' - 10")-3(3' - 3 1/4") | N-2.5 | N-3 | |


ARCHITECT 0818

ajc architects

703 east 1700 south
salt lake city, utah 84105
ph: 801.466.8818
fx: 801.466.4411
www.ajcarchitects.com

PAYETTE

285 Summer Street
Boston, MA 02210-1522
www.payette.com

REAVELEY
ENGINEERS + ASSOCIATES
Consulting Structural Engineers

P: 801.486.3883
F: 801.485.0911

675 E. 500 S. Suite 400
Salt Lake City, Utah 84102
www.reaveley.com


OWNER INFORMATION

State of Utah
Department of Administrative Services

Division of Facilities Construction & Management
4110 State Office Building
Salt Lake City, Utah 84114
Phone: (801) 538 - 3018
Fax: (801) 538 - 3267

Internet: http://www.dfcm.utah.gov

PROJECT DESCRIPTION

# LIFE SCIENCES RESEARCH CENTER
## UTAH STATE UNIVERSITY

USTAR BUILDING #2
LOGAN, UTAH

SHEET NAME:

## STEEL COLUMN SCHEDULE

REVISIONS

| MARK | DATE | DESCRIPTION |
|---|---|---|

ISSUE DATA

| | |
|---|---|
| ISSUE DATE: | DEC. 9, 2008 |
| ISSUE TYPE: | B.P. #2 REVIEW |
| DRAWN BY: | R. HARRIS |
| CHECKED BY: | J. MILLER / C.PRICE |
| CAD FILE NAME: | |
| DFCM PROJECT # | 06292770 |
| STATE PROPERTY # | - |
| COPYRIGHT: | STATE OF UTAH |

SHEET NUMBER:

# SF601

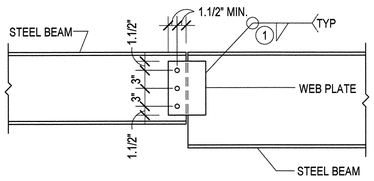


BEAM TO BEAM WEB PLATE CONNECTION

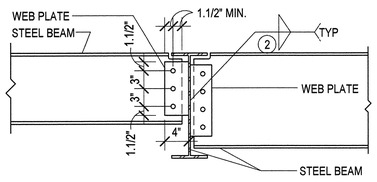


BEAM TO BEAM WEB PLATE CONNECTION

SBSCH006

## TYP BOLTED WEB PLATE CONN. W/ BOLT SCHED. (SINGLE SHEAR)

C1 / SF602

NO SCALE

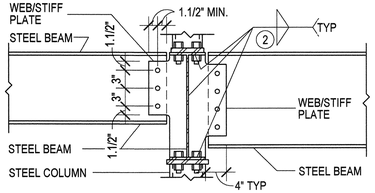


BEAM TO COLUMN WEB/STIFFENER PLATE CONNECTION

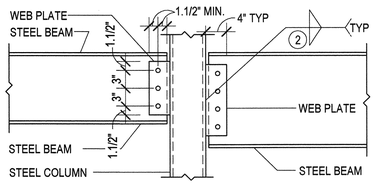


BEAM TO COLUMN WEB PLATE CONNECTION

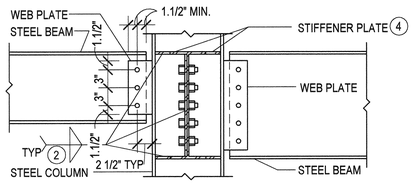


BEAM TO COLUMN WEB PLATE CONNECTION

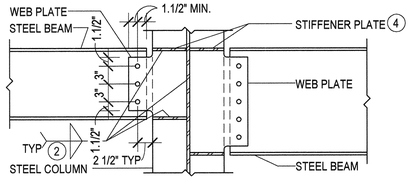


BEAM TO COLUMN WEB PLATE CONNECTION

## A325 BOLT SCHEDULE

| MAXIMUM BEAM SIZE IN EACH BEAM DEPTH GROUP | WEB PLATE THICKNESS | A325N BOLTS | |
|---|---|---|---|
| | | NUMBER | SIZE |
| W8, W10 | 3/8" | 2 | 3/4"Ø |
| W12, W14 | 3/8" | 3 | 3/4"Ø |
| W16 | 3/8" | 4 | 3/4"Ø |
| W18 | 3/8" | 5 | 3/4"Ø |
| W21, W24 | 1/2" | 6 | 3/4"Ø |
| W27 | 1/2" | 7 | 3/4"Ø |
| W30 | 1/2" | 8 | 3/4"Ø |
| W33, W36, W40 | 1/2" | 9 | 3/4"Ø |
| | | | |
| | | | |

NOTES:

1. FILLET WELDS ONE SIDE SHALL EQUAL THE PLATE THICKNESS MINUS 1/16" (1/4" MIN.)
2. FILLET WELDS TWO SIDES SHALL BE 3/4 THE PLATE THICKNESS (1/4" MIN.) EACH SIDE
3. BOLT EDGE DISTANCE SHALL BE 1.1/2" MIN. AT ALL EDGES. BOLT SPACING SHALL BE 3" MIN.
4. THICKNESS EQUALS BEAM FLANGE THICKNESS OF BEAM FRAMING INTO COLUMN WEB. (3/8" MIN.)

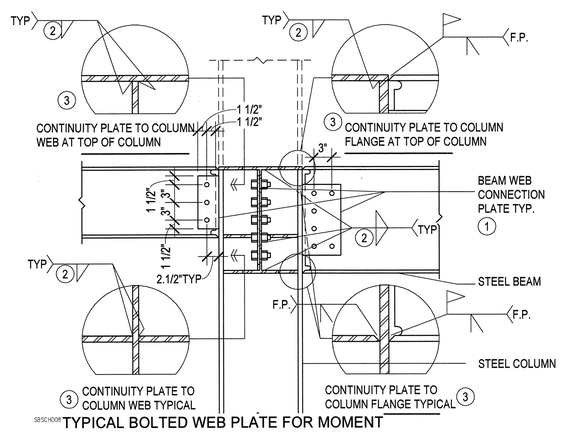


SBSCH008

TYPICAL BOLTED WEB PLATE FOR MOMENT FRAME CONNECTIONS W/ BOLT SCHEDULE (SINGLE SHEAR)

B1 / SF602

NO SCALE

## MOMENT FRAME BOLT SCHEDULE

| MAXIMUM BEAM SIZE IN EACH BEAM DEPTH GROUP | A-325SC BOLTS | |
|---|---|---|
| | NO. PER LEG | SIZE |
| W16 | 4 | 3/4"Ø |
| W18 | 5 | 3/4"Ø |
| W121, W24 | 6 | 3/4"Ø |
| W27 | 7 | 3/4"Ø |
| W30 | 8 | 3/4"Ø |
| | | |
| | | |
| | | |

1. BEAM WEB CONNECTION PLATES. THICKNESS EQUALS THE BEAM WEB THICKNESS PLUS 1/8" (3/8" MIN.)
2. FILLET WELDS SHALL BE AS FOLLOWS:
   ONE SIDE: PLATE THICKNESS MINUS 1/16" (1/4" MIN)
   TWO SIDES: 1/2 PLATE THICKNESS PLUS 1/16" (1/4" MIN.) EACH SIDE.
3. THICKNESS EQUALS BEAM FLANGE THICKNESS OF THE THICKEST FLANGE OF THE BEAMS FRAMING INTO THE COLUMN FLANGE OR WEB, PLUS 1/8" (3/8" MIN) U.N.O.
4. BOLT EDGE DISTANCE SHALL BE 1.1/2" MIN. AT ALL EDGES. BOLT SPACING SHALL BE 3" MIN.

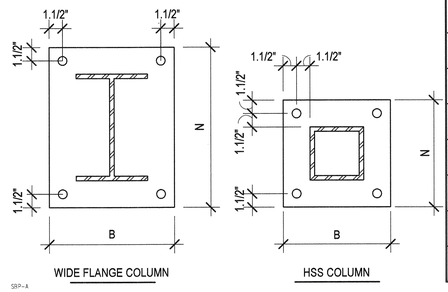


SBP-8

TYPICAL GRAVITY COLUMN STEEL BASE PLATE

B3 / SF602

NO SCALE

## BASE PLATE SIZE SCHEDULE

| COLUMN SIZE | N | B | t |
|---|---|---|---|
| HSS 6x6 | 12" | 12" | 3/4" |
| HSS 8x8 | 14" | 14" | 3/4" |
| W10x33,W10x49 | 16" | 16" | 1.1/4" |
| W10x45,W10x54,W10x60 | 17" | 17" | 1.1/2" |
| W12x65-W12x87 | 19" | 19" | 1.3/4" |
| W12x136 | 20" | 20" | 1.3/4" |
| | | | |
| | | | |
| | | | |

NOTES:

1. UNLESS NOTED OTHERWISE, ALL COLUMNS SHALL BE INSTALLED W/4-7/8"Ø, ASTM F1554 GRADE 36, ANCHOR RODS W/ 3" (MIN) HOOKS. PROJECT ANCHOR RODS 3" (MIN) ABOVE THE TOP OF THE BASE PLATE. EMBEDMENT SHALL BE 9" (MIN). ALL ANCHOR RODS SHALL BE INSTALLED W/ HARDENED WASHERS BENEATH THE NUT. ANY BOLT HOLES LARGER THAN THE BOLT DIAMETER PLUS 5/16" SHALL HAVE 5/16" PLATE WASHERS INSTALLED BENEATH THE HARDENED WASHERS.
2. ALL BOLTS IN CAP PLATES SHALL BE 3/4"Ø, A325N BOLTS TYPICAL U.N.O.
3. COLUMN SPLICES SHALL BE LOCATED PER SPLICE DETAILS, TYPICAL, U.N.O.
4. WELDS SHALL NOT BE MADE TO ANCHOR BOLTS.

NOTE TO BID PACKAGE #2.

BID PACKAGE #2 IS FOR FOOTING & FOUNDATION WORK ONLY. ALL OTHER STRUCTURAL STEEL DRAWINGS ARE INCLUDED FOR REFERENCE ONLY.

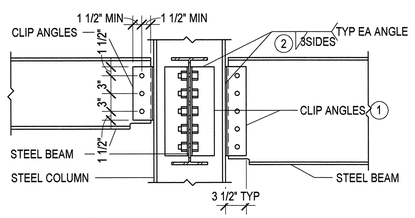


SBSCH001

TYPICAL BOLTED CLIP ANGLE CONNECTIONS W/ BOLT SCHEDULE (DOUBLE SHEAR)

A1 / SF602

NO SCALE

## A325 BOLT SCHEDULE

| MAXIMUM BEAM SIZE IN EACH BEAM DEPTH GROUP | A325N BOLTS | |
|---|---|---|
| | NO. PER LEG | SIZE |
| W24 | 6 | 3/4"Ø |
| W30 | 8 | 3/4"Ø |
| | | |
| | | |
| | | |
| | | |
| | | |
| | | |
| | | |

NOTES:

1. CLIP ANGLES: 2-L4x3.1/2. THICKNESS SHALL BE EQUAL TO ONE HALF THE BEAM WEB THICKNESS PLUS 1/16" (1/4" MIN.). FOR TWO ROWS OF BOLTS OR SKEWED CONNECTIONS, USE BENT PLATES.
2. FILLET WELDS SHALL BE ANGLE THICKNESS MINUS 1/16" (1/4" MIN.)
3. CONTRACTOR HAS OPTION TO BOLT CLIP ANGLES AT EITHER BEAM WEB IN BEAM TO BEAM CONNECTIONS.
4. BOLT EDGE DISTANCE SHALL BE 1.1/2" MIN. AT ALL BEAM AND CLIP ANGLE EDGES. BOLT SPACING SHALL BE 3" O.C. MIN.

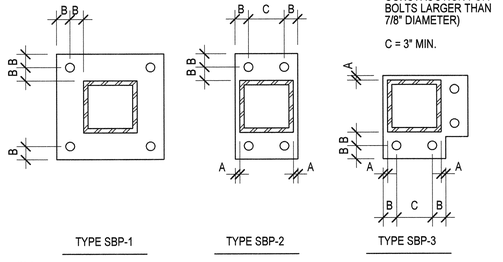


SBP-1

TYPICAL STEEL BASE PLATES - PLAN VIEW

A3 / SF602

NO SCALE

A = 1/2" MIN.
B = 1 1/2" MIN.
C = GAGE OF CONNECTED MEMBER
D = COLUMN WIDTH + 1", BEAM OR GIRDER WIDTH + 1", OR BOLT GAGE + 3", WHICHEVER IS GREATER.

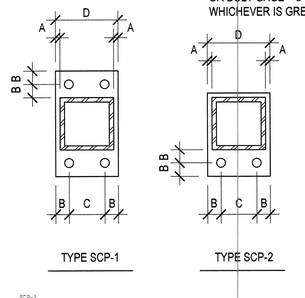


SCP-1

TYPICAL STEEL CAP PLATES - REFLECTED PLAN VIEW

A4 / SF602

NO SCALE


ARCHITECT 0818

ajc architects

703 east 1700 south
salt lake city, utah 84105
ph: 801.466.8818
fx: 801.466.4411
www.ajcarchitects.com

P A Y E T T E

285 Summer Street
Boston, MA 02210-1522
www.payette.com

REAVELEY
ENGINEERS + ASSOCIATES
Consulting Structural Engineers

P: 801.486.3883
F: 801.485.0911

675 E. 500 S. Suite 400
Salt Lake City, Utah 84102
www.reaveley.com


OWNER INFORMATION

State of Utah
Department of Administrative Services

Division of Facilities Construction & Management
4110 State Office Building
Salt Lake City, Utah 84114
Phone: (801) 538 - 3018
Fax: (801) 538 - 3267

Internet: http://www.dfcm.utah.gov

PROJECT DESCRIPTION

# LIFE SCIENCES RESEARCH CENTER
UTAH STATE UNIVERSITY

USTAR BUILDING #2
LOGAN, UTAH

SHEET NAME:

## STRUCTURAL STEEL SCHEDULES & DETAILS

REVISIONS

| MARK | DATE | DESCRIPTION |
|---|---|---|

ISSUE DATA

| | |
|---|---|
| ISSUE DATE: | DEC. 9, 2008 |
| ISSUE TYPE: | B.P. #2 REVIEW |
| DRAWN BY: | R. HARRIS |
| CHECKED BY: | J. MILLER / C.PRICE |
| CAD FILE NAME: | |
| DFCM PROJECT # | 06292770 |
| STATE PROPERTY # | - |
| COPYRIGHT: | STATE OF UTAH |

SHEET NUMBER:

# SF602

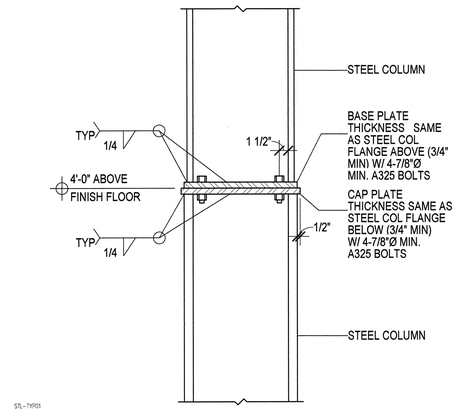


C1 / SF603 TYPICAL STEEL COLUMN SPLICE FOR GRAVITY COLUMNS WITH SAME NOMINAL DEPTH

NO SCALE

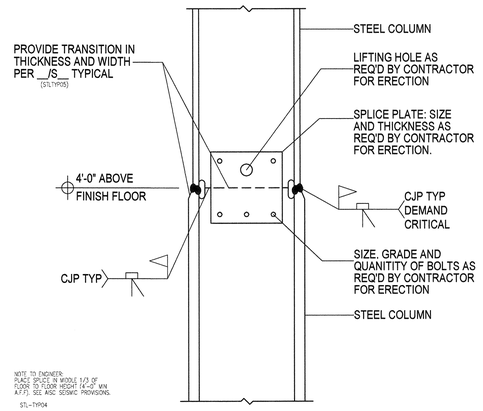


C2 / SF603 TYPICAL MOMENT FRAME & BRACED FRAME STEEL COLUMN SPLICE

NO SCALE

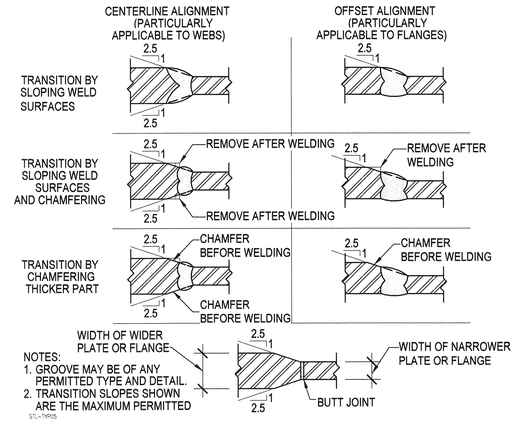


C3 / SF603 TYPICAL TRANSITION OF BUTT JOINTS IN PARTS OF UNEQUAL THICKNESS AND WIDTH

NO SCALE

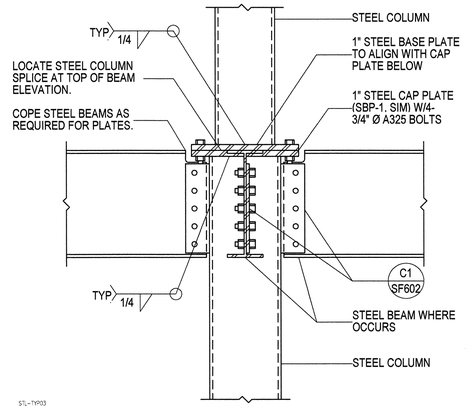


C4 / SF603 TYPICAL STEEL TUBE COLUMN SPLICE DETAIL

NO SCALE

NOTE TO BID PACKAGE #2.

BID PACKAGE #2 IS FOR FOOTING & FOUNDATION WORK ONLY. ALL OTHER STRUCTURAL STEEL DRAWINGS ARE INCLUDED FOR REFERENCE ONLY.

ARCHITECT 0818

ajc architects

703 east 1700 south
salt lake city, utah 84105
ph: 801.466.8818
fx: 801.466.4411
www.ajcarchitects.com

PAYETTE

285 Summer Street
Boston, MA 02210-1522
www.payette.com

REAVELEY
ENGINEERS + ASSOCIATES
Consulting Structural Engineers
P: 801.486.3883
F: 801.485.0911
675 E. 500 S. Suite 400
Salt Lake City, Utah 84102
www.reaveley.com

OWNER INFORMATION

State of Utah
Department of Administrative Services

Division of Facilities Construction & Management
4110 State Office Building
Salt Lake City, Utah 84114
Phone: (801) 538 - 3018
Fax: (801) 538 - 3267

Internet: http://www.dfcm.utah.gov

PROJECT DESCRIPTION

LIFE SCIENCES RESEARCH CENTER
UTAH STATE UNIVERSITY

USTAR BUILDING #2
LOGAN, UTAH

SHEET NAME:

STRUCTURAL STEEL SCHEDULES & DETAILS

REVISIONS

| MARK | DATE | DESCRIPTION |
|---|---|---|

ISSUE DATA

| | |
|---|---|
| ISSUE DATE: | DEC. 9, 2008 |
| ISSUE TYPE: | B.P. #2 REVIEW |
| DRAWN BY: | R. HARRIS |
| CHECKED BY: | J. MILLER / C.PRICE |
| CAD FILE NAME: | |
| DFCM PROJECT # | 06292770 |
| STATE PROPERTY # | - |
| COPYRIGHT: | STATE OF UTAH |

SHEET NUMBER:

SF603

# ABBREVIATIONS

| | |
|---|---|
| AB | ANCHOR BOLTS |
| ABBREV | ABBREVIATION (S) |
| ABB | ABBREVIATION (S) |
| APPR | APPROVED |
| ACOUS | ACOUSTICAL |
| AC | ASPHALT CONCRETE |
| A/C | AIR CONDITIONING |
| AD | ACCESS DOOR |
| A.F.F. | ABOVE FINISHED FLOOR |
| ALUM | ALUMINUM |
| BD | BOARD |
| BLDG | BUILDING |
| BLK | BLOCK |
| BM | BEAM |
| B.O.B. | BOTTOM OF BEAM |
| BOT | BOTTOM |
| C/C | CENTER TO CENTER |
| CER | CERAMIC |
| CH | CEILING HEIGHT |
| CEM | CEMENT |
| CLG | CEILING |
| CLOS. | CLOSET |
| CLR | CLEAR |
| CMU | CONCRETE MASONRY UNIT |
| COL | COLUMN |
| COMPO | COMPOSITION |
| CONC | CONCRETE |
| CONN | CONNECTION |
| CONT | CONTINUOUS |
| CORD | COORDINATE |
| CORR | CORRIDOR |
| CSK | COUNTERSINK |
| DEL | DELETE |
| DET | DETAIL |
| DF | DOUGLAS FIR |
| DF | DRINKING FOUNTAIN |
| DIA | DIAMETER |
| DIAG | DIAGONAL |
| DIM | DIMENSION |
| DIR | DIRECTION |
| DBL | DOUBLE |
| DN | DOWN |
| DO | DOOR OPENING |
| DR | DOOR |
| DS | DOWNSPOUT |
| DWG | DRAWING |

| | |
|---|---|
| EA | EACH |
| ELEC | ELECTRICAL |
| ELEV or EL | ELEVATION |
| ELEV | ELEVATOR |
| EQ | EQUAL |
| EQUIP | EQUIPMENT |
| EXIST | EXISTING |
| EJ | EXPANSION JOINT |
| EXT | EXTERIOR |
| EWC | ELEC WATER COOLER |
| FF | FINISH FLOOR |
| FHC | FIRE HOSE CABINET |
| FIN | FINISH |
| FLR | FLOOR |
| FO | FINISHED OPENING |
| FOC | FACE OF CONCRETE |
| FOS | FACE OF STUD |
| FOW | FACE OF WALL |
| FDN | FOUNDATION |
| FRP | FIBER REINFORCED PLASTIC |
| FD | FLOOR DRAIN |
| FS | FLOOR SINK |
| FS | FULL SIZE |
| FSD | FULL SIZE DETAIL |
| FT | FEET |
| FH | FULL HEIGHT |
| GA | GAUGE |
| GC | GENERAL CONTRACTOR |
| GL | GLASS |
| GALV or GV | GALVANIZED |
| GR | GRADE |
| GYP BD | GYPSUM BOARD |
| H | HIGH |
| HDWD | HARDWOOD |
| HORIZ | HORIZONTAL |
| HM | HOLLOW METAL |
| HP | HIGH POINT |
| ID | INSIDE DIAMETER |
| INSUL | INSULATION |
| INT | INTERIOR |
| JAN | JANITOR |
| LAV | LAVATORY |
| LEV | LEVEL |
| LTG | LIGHTING |
| LTWT | LIGHT WEIGHT |

| | |
|---|---|
| MAINT | MAINTENANCE |
| MAT'L | MATERIAL |
| MAX | MAXIMUM |
| MB | MACHINE BOLT |
| MECH | MECHANICAL |
| MET | METAL |
| MEZZ | MEZZANINE |
| MFG | MANUFACTURER |
| MISC | MISCELLANEOUS |
| MO | MASONRY OPENING |
| MIN | MINIMUM |
| MULL | MULLION |
| (N) | NEW |
| N.I.C. | NOT IN CONTRACT |
| NO. | NUMBER |
| N.T.S. | NOT TO SCALE |
| NR | NON-RATED |
| OC | ON CENTER |
| OCC | OPERATOR CONTROL CENTER |
| OD | OUTSIDE DIAMETER |
| OF | OVERFLOW |
| OFF | OFFICE |
| OFI | OWNER FURNISH ITEM |
| OFOI | OWNER FURNISHED OWNER INSTALLED |
| OH | OPPOSITE HAND |
| OPN'G | OPENING |
| OPP | OPPOSITE |
| PC | PORTLAND CEMENT |
| PL | PLATE |
| PLAS | PLASTER |
| PLYWD | PLYWOOD |
| PR | PAIR |
| PREP | PREPARATION |
| PROJ | PROJECTION |
| PT | PRESSURE TREATED |
| PTDF | PRESSURE TREATED DOUGLAS FIR |
| QT | QUARRY TILE |
| R | RISER |
| R or RAD | RADIUS |
| RD | ROOF DRAIN |
| REF | REFERENCE |
| REFL | REFLECTED |
| REINF | REINFORCE |
| REQ'D | REQUIRED |
| RES | RESILIENT |
| RM | ROOM |
| R.O. | ROUGH OPENING |
| REDW'D | REDWOOD |
| RR | RESTROOM(S) |
| RTU | ROOF TOP UNIT |

| | |
|---|---|
| SECT | SECTION |
| SHT | SHEET |
| SIM | SIMILAR |
| SIMUL | SIMULATED |
| SPECS | SPECIFICATIONS |
| SS | STAINLESS STEEL |
| STA | STATION |
| STD | STANDARD |
| STL | STEEL |
| STG | STORAGE |
| SQ | SQUARE |
| STRUCT | STRUCTURAL |
| SUSP | SUSPENDED |
| SYM | SYMMETRICAL |
| T | TREAD |
| TBC | TOP BACK OF CURB |
| TDC | TRAFFIC DECK COVERING |
| T & G | TONGUE & GROOVE |
| TEMP | TEMPERED |
| TEL | TELEPHONE |
| THK | THICK |
| T.O.C. | TOP OF CONCRETE or CURB |
| T.O.F. | TOP OF FOOTING |
| T.O.P. | TOP OF PARAPET |
| T.O.S. | TOP OF STEEL |
| TYP | TYPICAL |
| T.O.W. | TOP OF WALL |
| UNO | UNLESS NOTED OTHERWISE |
| VER | VERTICAL |
| V.I.F. | VERIFY IN FIELD |
| W | WIDE |
| W/ | WITH |
| WC | WATER CLOSET |
| WD | WOOD |
| WI | WROUGHT IRON |
| WL | WATER LEVEL |
| WP⊕ | WORKING POINT |
| WP | WATERPROOFING |

# MATERIALS LEGEND (TYPICAL PLAN VIEWS)

## NEW CONSTRUCTION

ALL NEW CONSTRUCTION IS SHOWN HATCHED & SHADED AS ILLUSTRATED BELOW
ALL NEW CONSTRUCTION IS FULLY NOTED AS SHOWN BELOW
ALL WORK IS NEW UNLESS LABELED "EXISTING"

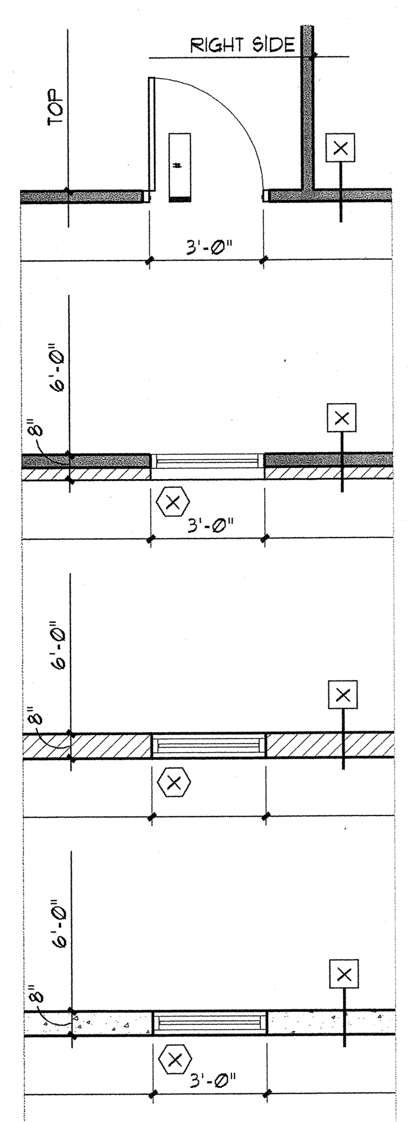


METAL OR WOOD STUD FRAMED WALL.
- WALL TYPE DESIGNATES WIDTH OF WALL
- WIDTH OF WALL DIMENSIONED ONLY AT 1/4"=1'-0" OR LARGER SCALE
- DOORS DIMENSIONED TO WIDTH OF NOMINAL OPENING
- WINDOWS DIMENSIONED TO NOMINAL FRAME SIZE - NOT ROUGH OPENING

METAL OR WOOD STUD FRAMED WALL W/ MASONRY OR STONE VENEER.
- WIDTH OF WALL DIMENSIONED FROM FACE OF MASONRY.
- WIDTH OF MASONRY WALL DIMENSIONED FROM FACE OF STUD.
- DOORS DIMENSIONED TO WIDTH OF NOMINAL OPENING
- WINDOWS DIMENSIONED TO NOMINAL FRAME SIZE - NOT ROUGH OPENING

MASONRY WALL
- WIDTH OF WALL DIMENSIONED TO NOMINAL SIZE.
- DOORS DIMENSIONED TO CENTERLINE OF NOMINAL OPENING
- WINDOWS DIMENSIONED TO NOMINAL FRAME SIZE - NOT MASONRY OPENING

CONCRETE WALL
- ACTUAL WIDTH OF WALL DIMENSIONED
- DOORS DIMENSIONED TO CENTERLINE OF NOMINAL OPENING
- WINDOWS DIMENSIONED TO NOMINAL FRAME SIZE - NOT ROUGH OPENING

## EXISTING CONDITIONS

ALL EXISTING CONSTRUCTION IS SHOWN WITHOUT HATCH AS ILLUSTRATED BELOW
ALL EXISTING CONSTRUCTION IS LABELED "EXISTING" BY KEYNOTE OR OTHERWISE
ALL DIMENSIONS TO EXISTING ARE APPROXIMATE ONLY AND ARE TO BE FIELD VERIFIED BY THE CONTRACTOR

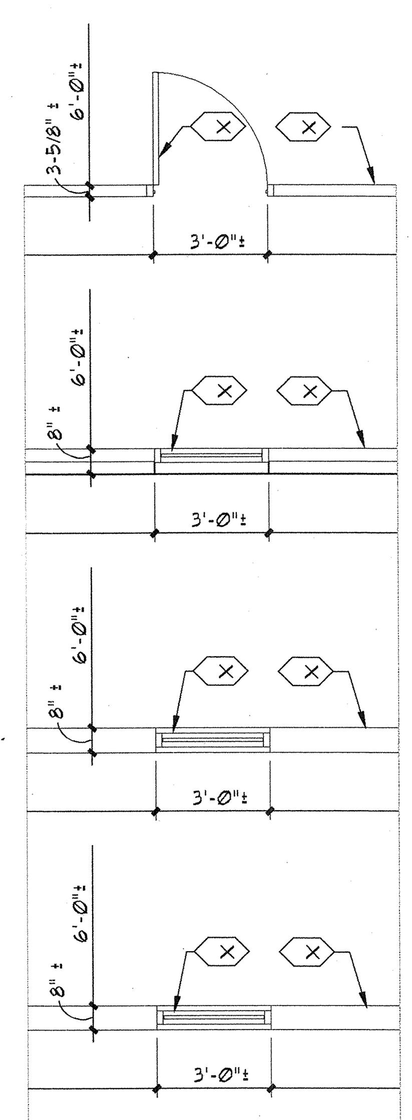


EXISTING
METAL OR WOOD STUD FRAMED WALL.
- WIDTH OF WALL DIMENSIONED TO FINISHED FACE.
- DOORS DIMENSIONED TO NOMINAL DOOR SIZE EXCLUDING FRAME
- WINDOWS DIMENSIONED TO NOMINAL FRAME SIZE

EXISTING
METAL OR WOOD STUD FRAMED WALL W/ MASONRY OR STONE VENEER.
- WIDTH OF WALL DIMENSIONED FROM FINISH FACE TO OVERALL NOMINAL WIDTH.
- DOORS DIMENSIONED TO NOMINAL DOOR SIZE EXCLUDING FRAME
- WINDOWS DIMENSIONED TO NOMINAL FRAME SIZE

EXISTING
MASONRY WALL (TO REMAIN)
- WIDTH OF WALL DIMENSIONED TO NOMINAL SIZE.
- DOORS DIMENSIONED TO NOMINAL DOOR SIZE EXCLUDING FRAME
- WINDOWS DIMENSIONED TO NOMINAL FRAME SIZE

EXISTING
CONCRETE WALL (TO REMAIN)
- NOMINAL WIDTH OF WALL DIMENSIONED
- DOORS DIMENSIONED TO NOMINAL DOOR SIZE EXCLUDING FRAME
- WINDOWS DIMENSIONED TO NOMINAL FRAME SIZE

## NEW CONSTRUCTION AT EXISTING

NEW CONSTRUCTION SHOWN HATCHED W/ THICKER LINE
ALL EXISTING COMPONENTS SHOWN THIN LINE SOLID, NO HATCH.

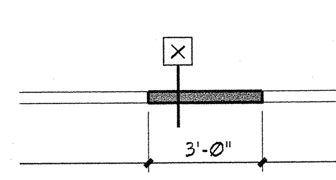


## DEMOLITION AT EXISTING CONDITIONS

ALL EXISTING COMPONENTS SHOWN THIN LINE SOLID, NO HATCH.
ALL COMPONENTS TO BE DEMOLISHED ARE SHOWN DASHED. THICK LINE

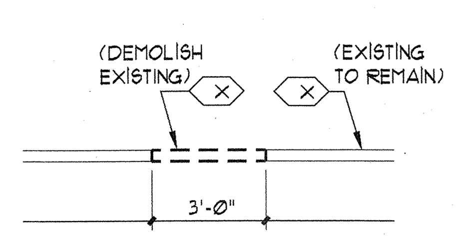


# SYMBOLS

| | | | | | |
|---|---|---|---|---|---|
| ∠ | ANGLE | ɸ | DIAMETER or ROUND | & | AND |
| [ | CHANNEL | □ | SQUARE | @ | AT |
| PL | PLATE | ⊕ | WORK POINT OR ELEV BENCH MARK | △ | DELTA |
| ℄ | CENTER LINE | # | NUMBER | d | PENNY |

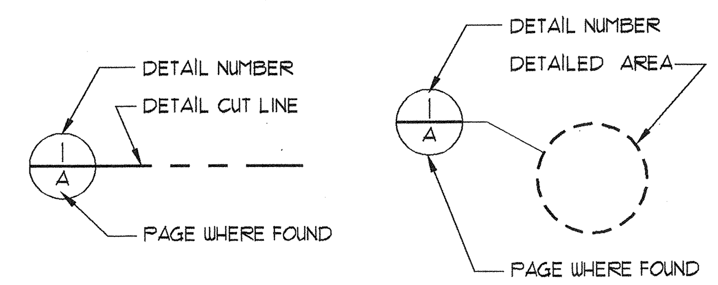


DETAIL TAGS

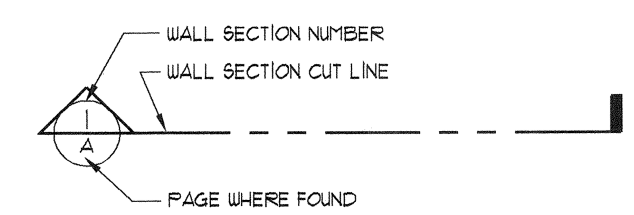


DETAIL TAGS

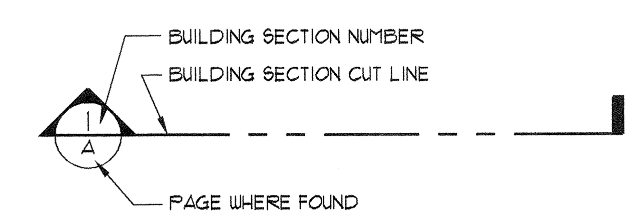


WALL SECTION TAG

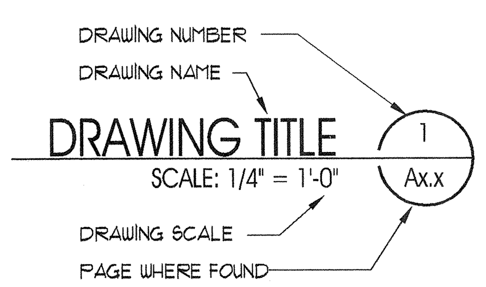


BUILDING SECTION TAG

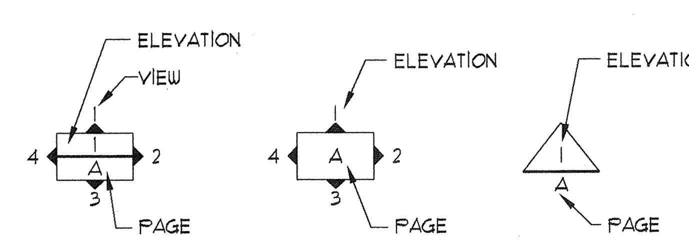


DRAWING TITLE

INTERIOR ELEVATION TAGS

| | |
|---|---|
| ▭— | WALL TYPE DESIGNATION. WHERE SUFFIXED BY "ALL AROUND" INDICATES ALL WALLS ENCOMPASSING THE ROOM WHERE THE TAG IS LOCATED. |
| ⬭ | KEYNOTE. |
| ◇ | WALL, FLOOR, BASE, CEILING FINISH KEYNOTE. THIS SYMBOL WHEN ATTACHED TO A WALL SHALL INDICATE THIS FINISH FOR ENTIRE LENGTH OF WALL FROM ONE INTERSECTION TO THE NEXT AND NOT BE TERMINATED BY WINDOWS OR DOORS UNO. |
| ⬡ | EXISTING/DEMO KEYNOTE. |
| ▭ | DOOR DESIGNATION. SEE DOOR SCHEDULE. |
| ▭ | WINDOW DESIGNATION. SEE WINDOW SCHEDULE. |

MISCELLANEOUS KEYED NOTE SYMBOLS

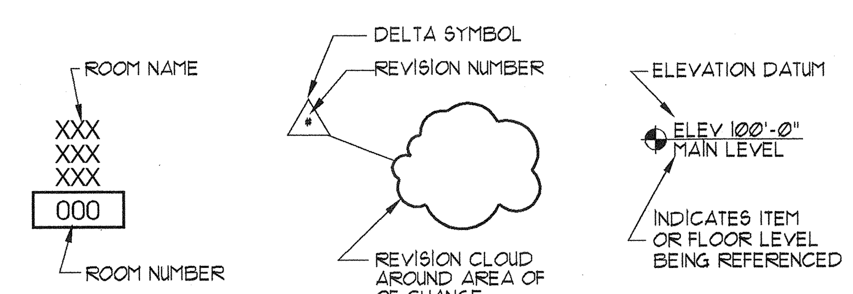


ROOM NAME TAG REVISION CLOUD DATUM TAG

# GENERAL NOTES:

0.1 THE GENERAL CONTRACTOR / CONSTRUCTION MANAGER (CM/GC) SHALL HEREAFTER BE REFERRED TO AS "GENERAL CONTRACTOR" OR "GC". THE OWNER (DFCM) MAY HEREAFTER BE REFERRED TO AS "OWNER"

0.2 PLEASE NOTE:
THE GENERAL CONTRACTOR IS RESPONSIBLE FOR ALL WORK REGARDLESS OF THE LOCATION OF THE INFORMATION IN THE DOCUMENTS. THE GENERAL CONTRACTOR SHALL UTILIZE THE CONSTRUCTION DRAWINGS AND WRITTEN SPECIFICATIONS FOR ALL REQUIRED INFORMATION TO PROVIDE COMPLETE CONSTRUCTION OF THIS PROJECT. ITEMS LISTED IN DRAWINGS MAY NOT BE INCLUDED IN SPECIFICATIONS. ITEMS LISTED IN SPECIFICATIONS MAY NOT BE INCLUDED IN DRAWINGS.

0.3 UNLESS OTHERWISE INDICATED IN THE CONSTRUCTION DOCUMENTS AS BEING NOT IN CONTRACT (N.I.C.) OR EXISTING, ALL ITEMS, MATERIALS AND INSTALLATION OF SAME ARE PART OF THE CONTRACT AS DEFINED BY THE CONSTRUCTION DOCUMENTS. THE GC SHALL PROVIDE AND INSTALL ALL ACCESSORIES, COMPONENTS AND ASSEMBLIES REQUIRED FOR THE WORK DEPICTED OR SPECIFIED.

0.4 THE GENERAL CONTRACTOR SHALL FIELD VERIFY ALL CONDITIONS AND DIMENSIONS PRIOR TO BEGINNING ANY WORK AND SHALL BE RESPONSIBLE FOR ALL WORK AND MATERIALS INCLUDING THOSE FURNISHED BY SUBCONTRACTORS. THE GC SHALL ACCEPT PREMISES AS FOUND. OWNER WILL MAINTAIN THE EXISTING CONDITION OF THE SITE AND EXISTING STRUCTURES AT THE TIME OF BIDDING.

0.5 DISCREPANCIES BETWEEN PORTIONS OF THE CONTRACT DOCUMENTS ARE NOT INTENDED. THE GENERAL CONTRACTOR IS TO CLARIFY WITH THE ARCHITECT ANY SUCH DISCREPANCIES PRIOR TO COMMENCING WORK.

0.6 DIMENSIONS TAKE PRECEDENCE OVER DRAWINGS: DO NOT SCALE DRAWINGS TO DETERMINE ANY LOCATIONS. THE ARCHITECT SHALL BE NOTIFIED OF ANY DISCREPANCY PRIOR TO CONTINUING WITH WORK.

0.7 ALL PLAN DIMENSIONS ARE FROM GRIDLINE OR FACE OF STUD OR FACE OF BLOCK UNLESS OTHERWISE INDICATED. SEE SECTION ON "DIMENSIONING" THIS SHEET.

0.8 THE CONTRACTOR SHALL REPORT TO THE ARCHITECT ALL CONDITIONS REQUIRING COORDINATION/ CHANGES WITH THE CONTRACT DOCUMENTS. COORDINATION / APPROVAL SHALL TAKE PLACE BEFORE THE WORK BEGINS. ALL CHANGES TO THE CONTRACT COST SHALL BE APPROVED THROUGH A CHANGE ORDER

0.9 DETAILED DRAWINGS AND LARGER SCALE DRAWINGS TAKE PRECEDENCE OVER SMALL SCALE DRAWINGS.

0.10 THE ARCHITECT WILL REVIEW SHOP DRAWINGS AND SAMPLES FOR CONFORMANCE WITH DESIGN CONCEPT OF THE PROJECT. THE ARCHITECT'S REVIEW OF A SEPARATE ITEM SHALL NOT INDICATE APPROVAL OF AN ASSEMBLY IN WHICH THE ITEM FUNCTIONS. THE ARCHITECT WILL NOT REVIEW SHOP DRAWINGS UNTIL THE GC HAS REVIEWED AND STAMPED THE SHOP DRAWING/SUBMITTAL. THE GC IS RESPONSIBLE FOR FIELD VERIFYING ALL DIMENSIONS SHOWN ON THE SHOP DRAWINGS. THE ARCHITECT'S REVIEW OF THE SHOP DRAWINGS SHALL NOT OVERRIDE THE CONDITIONS DESCRIBED IN THE CONTRACT DOCUMENTS UNLESS SPECIFICALLY NOTED OTHERWISE BY THE ARCHITECT

0.11 FOR CONSTRUCTION DETAILS NOT SHOWN, USE THE MANUFACTURER'S STANDARD DETAILS OR APPROVED SHOP DRAWINGS / DATA SHEETS IN ACCORDANCE WITH THE PROJECT SPECIFICATIONS.

0.12 FOR GRADING, TRENCHING ETC., CONTACT THE ARCHITECT FOR INSTRUCTIONS PRIOR TO THE CONTINUATION OF WORK SHOULD ANY UNUSUAL CONDITIONS BECOME APPARENT DURING GRADING OR FOUNDATION CONSTRUCTION. EXISTING ELEVATIONS AND LOCATIONS TO BE JOINED SHALL BE VERIFIED BY THE GENERAL CONTRACTOR BEFORE CONSTRUCTION.

1.1 ALL WORK, MATERIALS AND METHODS SHALL BE IN CONFORMANCE WITH THE CODES, ORDINANCES AND REGULATIONS OF ALL GOVERNMENTAL AGENCIES HAVING JURISDICTION AT THE PROJECT LOCATION. THE GENERAL CONTRACTOR MUST COMPLY WITH THE CONTRACTOR REGISTRATION REQUIREMENTS OF ALL GOVERNING AUTHORITIES.

1.2 ALL PROJECT CONSTRUCTION SHALL CONFORM WITH ANSI A-117.1-1998, AND THE AMERICANS WITH DISABILITIES ACT (ADA).

1.3 THE GENERAL CONTRACTOR SHALL NOTIFY ALL APPLICABLE LOCAL GOVERNING AUTHORITIES (UTAH STATE UNIVERSITY AND DFCM BUILDING OFFICIALS) AND UTILITIES PRIOR TO COVERING UP ANY WORK REQUIRING INSPECTION.

1.4 THE GENERAL CONTRACTOR SHALL MAINTAIN ALL REQUIRED EXITS AND FIRE LANES IN WORKING ORDER.

1.5 A GENERAL BUILDING PERMIT IS NOT REQUIRED. ALL OTHER PERMITS OR CONNECTION FEES SHALL BE SECURED BY THE GENERAL CONTRACTOR AND REIMBURSED THROUGH THE OWNER.

1.6 THE GENERAL CONTRACTOR SHALL PROVIDE AND INSTALL FIRE EXTINGUISHERS WHERE SHOWN ON PLAN.

1.7 MINIMUM FLAME SPREAD CLASSIFICATION OF INTERIOR FINISH SHALL CONFORM TO THE BUILDING CODE AND LOCAL GOVERNING BUILDING CODES/ORDINANCES. SEE CODE SUMMARY, SHEET G1002.

2.1 THE GENERAL CONTRACTOR SHALL PROVIDE AND IS SOLELY RESPONSIBLE AND LIABLE FOR PUBLIC AND EMPLOYEE PROTECTION AS NECESSARY AND AS REQUIRED BY THE CODES, INCLUDING EXTERIOR AND INTERIOR PEDESTRIAN TRAFFIC BARRIERS. ALL WORK SHALL CONFORM TO THE ORDINANCES AND REGULATIONS OF GOVERNMENTAL AGENCIES HAVING JURISDICTION AT THE PROJECT.

2.2 THE GENERAL CONTRACTOR SHALL PROVIDE TEMPORARY BARRICADES FOR DUST AND NOISE CONTROL, AND ALL REQUIRED ENVIRONMENTAL PROTECTION WHERE WORK JOINS EXISTING CONDITIONS.

2.3 ALL DEBRIS SHALL BE REMOVED FROM PREMISES AND ALL AREAS SHALL BE LEFT IN A CLEAN (BROOM) CONDITION DAILY.

2.4 IT SHALL BE THE RESPONSIBILITY OF THE GENERAL CONTRACTOR TO COORDINATE AND OR CALL BLUE STAKES TO LOCATE ALL EXISTING UTILITIES, WHETHER SHOWN HEREIN OR NOT, AND WHEN IDENTIFIED TO PROTECT THEM FROM DAMAGE. THE GENERAL CONTRACTOR SHALL BEAR ALL EXPENSE OF REPAIR OR REPLACEMENT OF IDENTIFIED UTILITIES OR OTHER PROPERTY DAMAGED BY OPERATIONS IN CONJUNCTION WITH THE EXECUTION OF THE WORK.

2.5 APPROVED PLANS SHALL BE KEPT IN A PLAN BOX AND SHALL NOT BE USED BY WORKMEN. ALL CONSTRUCTION SETS SHALL REFLECT THE SAME INFORMATION. THE GENERAL CONTRACTOR SHALL ALSO MAINTAIN, IN GOOD CONDITION, ONE COMPLETE SET OF PLANS WITH ALL REVISIONS, ADDENDA AND CHANGE ORDERS, ON THE PREMISES AT ALL TIMES. THESE ARE TO BE KEPT UNDER THE CARE OF THE JOB SUPERINTENDENT.

2.7 THE GENERAL CONTRACTOR IS TO PROVIDE BLOCKING AS REQUIRED FOR MOUNTING OF WALL MOUNTED SHELVES, CABINETS, HC GRAB BARS AND PARTITION BRACES AND ALL OTHER ITEMS IDENTIFIED ON THE EQUIPMENT OR ACCESSORY SCHEDULE. BLOCKING SHALL BE FIRE TREATED WHERE REQUIRED BY THE BUILDING CODE.

2.8 THE GENERAL CONTRACTOR IS RESPONSIBLE FOR RECEIVING, UNLOADING, UNCRATING, INSTALLATION AND HOOK-UP OF ALL OWNER FURNISHED ITEMS UNLESS NOTED OTHERWISE ON THE DRAWINGS.

2.9 THE GENERAL CONTRACTOR IS TO ASSURE THAT NO REBAR OR REINFORCEMENT IS PRESENT PRIOR TO CORE DRILLING OR PLACING BOLTS OR ANY OTHER ITEM WHICH COULD DISTURB THE STRUCTURAL SLAB OR FOUNDATION WALLS.

2.10 PROVIDE GALVANIC PROTECTION BETWEEN DISSIMILAR MATERIALS WHERE REQUIRED.

2.11 PROVIDE METAL TRIM OR CASING AT ALL EDGES OF PLASTER AND DRYWALL SURFACES WHERE IT TERMINATES OR MEETS ANY OTHER MATERIAL, UNLESS NOTED OTHERWISE.

2.12 PROVIDE METAL CORNER TRIM AT ALL OUTSIDE CORNERS OF PLASTER AND DRYWALL SURFACES.

2.13 ALL PENETRATIONS THROUGH ANY SURFACE SHALL BE THOROUGHLY SEALED WITH APPROPRIATE SEALANT MATERIAL.

2.14 UNLESS OTHERWISE NOTED, ALL EXTERIOR AND INTERIOR METAL, TRIM, TREILLAGE, RAILINGS, MOLDINGS, FRAMES, CASTING ETC., SHALL BE PAINTED.

2.15 FOR PLUMBING, FIRE SPRINKLER AND ELECTRICAL SYSTEMS, PROVIDE APPROVED ASSEMBLIES WITH SELF CLOSING DEVICES FOR ANY PENETRATIONS IN RATED CONSTRUCTION.

2.16 THE GC SHALL VERIFY LOCATIONS OF ALL CEILING ACCESS PANELS WITH MECHANICAL, FIRE SPRINKLER AND PLUMBING PLANS. ACCESS PANELS SHALL BE FURNISHED AND INSTALLED WITH A FIRE RATING EQUAL TO THE WALL OR CEILING ASSEMBLY INTO WHICH THEY ARE TO BE INSTALLED. FINISH AND LOCATION SHALL BE APPROVED BY THE ARCHITECT.

2.17 THE GC SHALL VERIFY DIMENSIONS OF ALL EQUIPMENT PADS & BASES WITH EQUIPMENT MANUFACTURERS & SHALL VERIFY ALL SIZES AND LOCATIONS OF DUCT OPENINGS ON ROOF AND INTERIOR SHAFTS.

# NEW MATERIALS LEGEND (TYPICAL SECTION VIEWS)

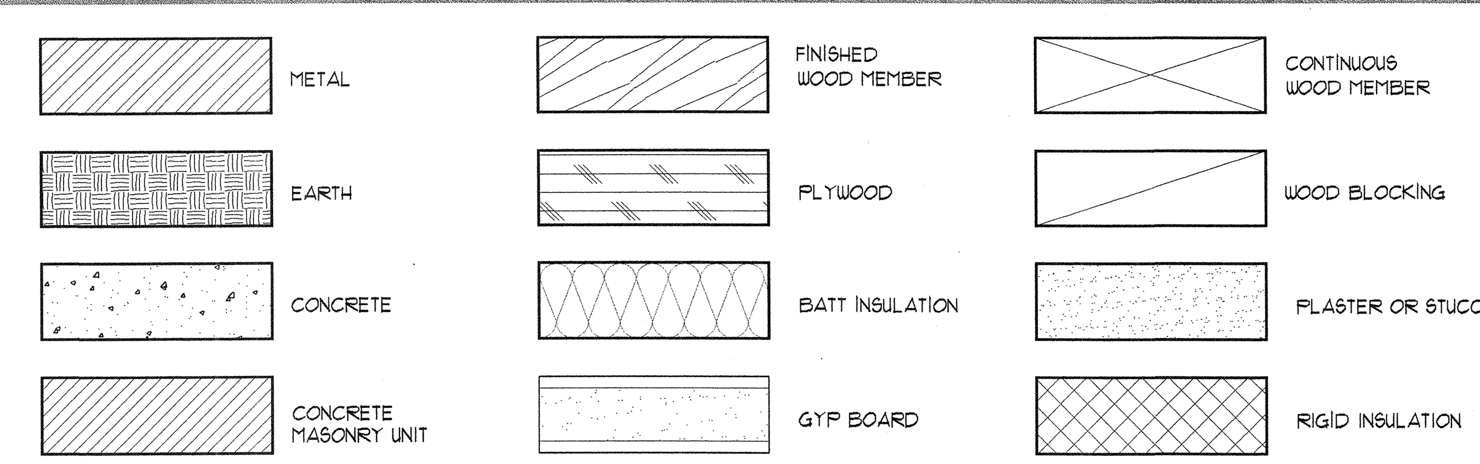



ARCHITECT 0818

ajc architects

703 east 1700 south
salt lake city, utah 84105
ph: 801.466.8818
fx: 801.466.4411
ajc@ajcarchitects.com



OWNER INFORMATION

State of Utah
Department of Administrative Services

DFCM
Division of Facilities Construction & Management
4110 State Office Building
Salt Lake City, Utah 84114
Phone: (801) 538 - 3018
Fax: (801) 538 - 3267

Internet: http://www.dfcm.utah.gov


PROJECT DESCRIPTION

LIFE SCIENCES RESEARCH CENTER
UTAH STATE UNIVERSITY

USTAR BUILDING #2
350 EAST GRAND AVE.
LOGAN, UTAH

SHEET NAME:

GENERAL NOTES
LEGENDS
ABBREVATIONS

REVISIONS

| MARK | DATE | DESCRIPTION |
|---|---|---|

ISSUE DATA

| | |
|---|---|
| ISSUE DATE: | DEC. 9, 2008 |
| ISSUE TYPE: | DESDEV |
| DRAWN BY: | J. NIELSEN |
| CHECKED BY: | J. JONES |
| CAD FILE NAME: | 0731AE001 |
| DFCM PROJECT # | 06292770 |
| STATE PROPERTY # | - |
| COPYRIGHT: | STATE OF UTAH |

SHEET NUMBER:

AE001


P:\0800\0818 USTAR at USU\03DESDEV\05ARCHITECTURAL\0818AE001.dwg, 12/6/2008 2:16:40 PM, jnielsen

## GENERAL NOTES:
FOR ALL WALL TYPES.

- ALL WALLS EXCEPT THOSE LISTED AS "EXTEND WALL TO DECK" SHALL TERMINATE NO LESS THAN 6" ABOVE FINISH CEILING HEIGHT. ALL WALLS THAT DO NOT EXTEND TO THE DECK SHALL BE BRACED TO THE STRUCTURE ABOVE AS PER THE IBC.
- ALL WALLS THAT EXTEND TO THE DECK SHALL EXTEND GYP. BD. BOTH SIDES TO DECK. GYP. BD. SHALL BE TAPED, NOT PAINTED, ABOVE CEILING LINE. GYP. BD. SHALL ENCLOSE AREAS BETWEEN FRAMING. JOINTS SHALL BE CAULKED. WHERE WALLS ARE FIRE RATED JOINTS SHALL BE SEALED PER THE UL LISTING.
- WHERE THE WALL TYPE SYMBOL IS SHOWN ON THE PLANS IT APPLIES TO THE ENTIRE LENGTH OF THE WALL AND IS NOT INTERRUPTED BY WINDOWS OR DOORS (UNO) AND OCCURS BOTH ABOVE AND BELOW WINDOWS (UNO).
- PROVIDE A SPRAY ON VAPOR BARRIER AT THE ROOM SIDE OF ALL FRAMED EXTERIOR WALLS.
- SEE FLOOR PLANS FOR EXTERIOR WATERPROOFING LOCATIONS. SEE BLDG SECTION, DETAILS AND SPECIFICATIONS FOR ADDITIONAL INFORMATION.

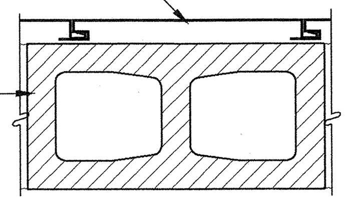


E5

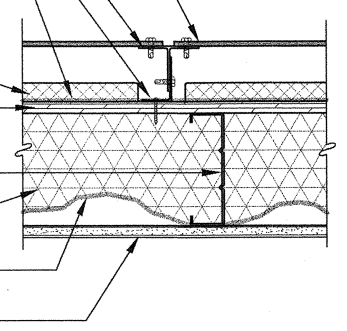


E6

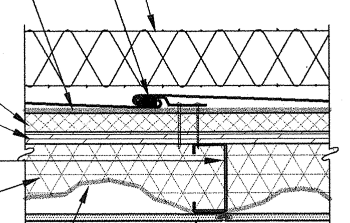


E7

NOTE:
WALL TYPE E9 CHANGES TO E10 AT THE PENTHOUSE BELOW ELEVATION 161'-0" AS PLANS AND ELEVATIONS.

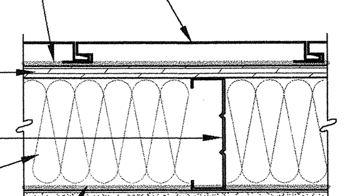


E9

NOTE:
WALL TYPE E9 CHANGES TO E10 AT THE PENTHOUSE BELOW ELEVATION 161'-0" AS PLANS AND ELEVATIONS.

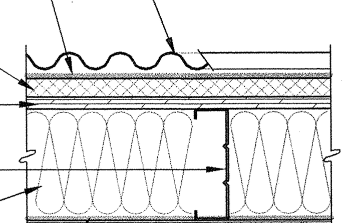


E10

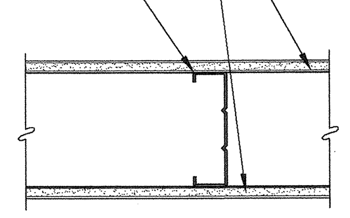


D

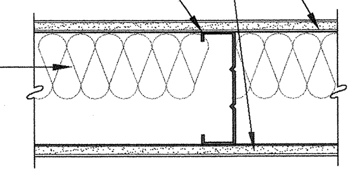


D1

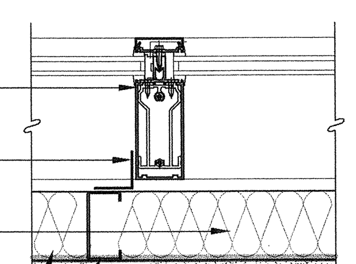


E1

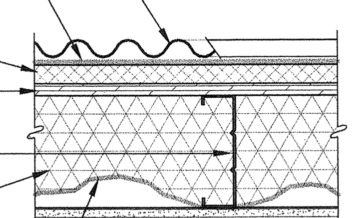


E2

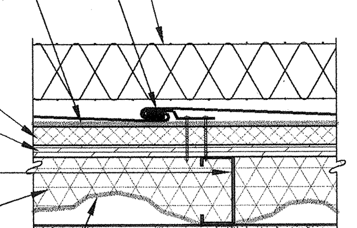


E3

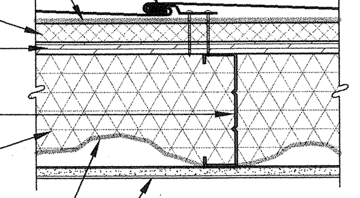


E4

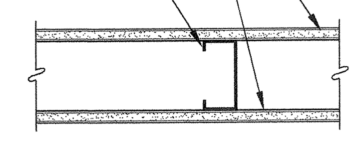


NOTE:
GYP. BD. REQ'D ONLY ONE SIDE AT PLUMBING CHASES OR COLUMN ENCLOSURES.

A

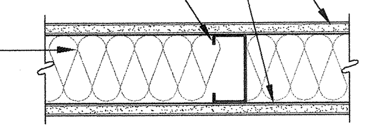


NOTE:
GYP. BD. REQ'D ONLY ONE SIDE AT PLUMBING CHASES OR COLUMN ENCLOSURES.

A1

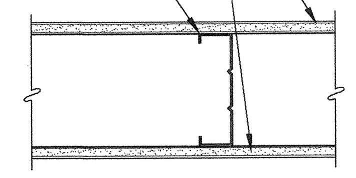


B

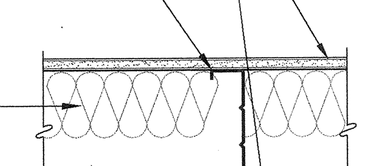


B1

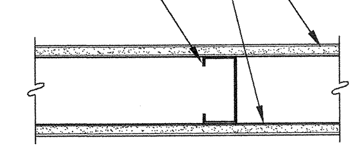


NOTE:
GYP. BD. REQ'D ONLY ONE SIDE AT PLUMBING CHASES OR COLUMN ENCLOSURES.

C

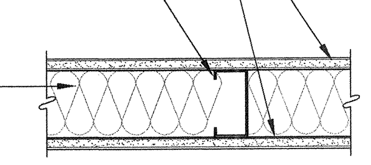


NOTE:
GYP. BD. REQ'D ONLY ONE SIDE AT PLUMBING CHASES OR COLUMN ENCLOSURES.

C1

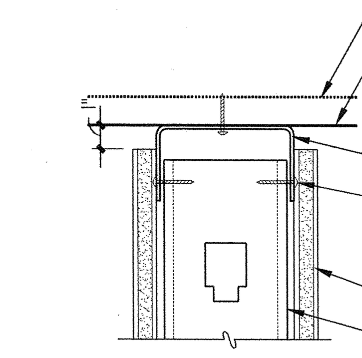


NOTE:
DEFELECTION TRACK IS REQUIRED AT ALL LOCATIONS WHERE WALLS EXTEND TO DECK OR UNDERSIDE OF STRUCTURAL MEMBERS.

### DEFLECTION TRACK
SCALE: N.T.S. C5 / AE002

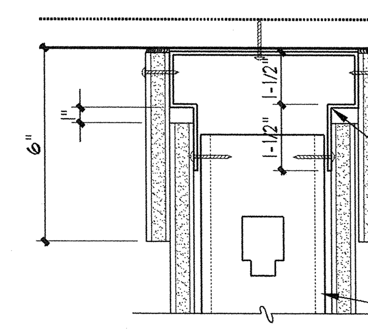


NOTE:
DEFELECTION TRACK IS REQUIRED AT ALL LOCATIONS WHERE WALLS EXTEND TO DECK OR UNDERSIDE OF STRUCTURAL MEMBERS.

### FIRE RATED DEFLECTION TRACK
SCALE: N.T.S. B5 / AE002


ARCHITECT 0818
ajc architects
703 east 1700 south
salt lake city, utah 84105
ph: 801.466.8818
fx: 801.466.4411
ajc@ajcarchitects.com


OWNER INFORMATION


State of Utah
Department of Administrative Services
Division of Facilities Construction & Management
4110 State Office Building
Salt Lake City, Utah 84114
Phone: (801) 538 - 3018
Fax: (801) 538 - 3267
Internet: http://www.dfcm.utah.gov


PROJECT DESCRIPTION

# LIFE SCIENCES RESEARCH CENTER
UTAH STATE UNIVERSITY

USTAR BUILDING #2
350 EAST GRAND AVE.
LOGAN, UTAH

SHEET NAME:

WALL TYPES

REVISIONS

MARK DATE DESCRIPTION

ISSUE DATA

| | |
|---|---|
| ISSUE DATE: | DEC. 9, 2008 |
| ISSUE TYPE: | DESDEV |
| DRAWN BY: | J. NIELSEN |
| CHECKED BY: | J. JONES |
| CAD FILE NAME: | 0818AE002 |
| DFCM PROJECT # | 06292770 |
| STATE PROPERTY # | - |
| COPYRIGHT: | STATE OF UTAH |

SHEET NUMBER:

AE002


P:\0800\0818 USTAR at USU\03DESDEV\05ARCHITECTURAL\0818AE002.dwg, 12/6/2008 2:56:30 PM, jnielsen

✱ SEE AE002 FOR TYPICAL WALL TYPE NOTES

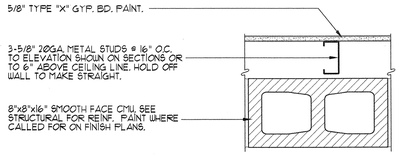


M5

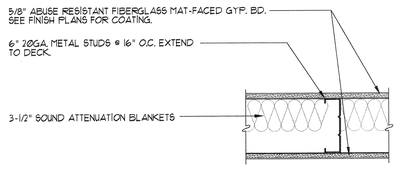


L4

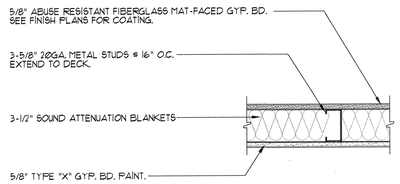


L5

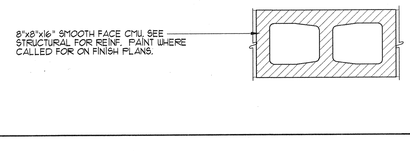


M1

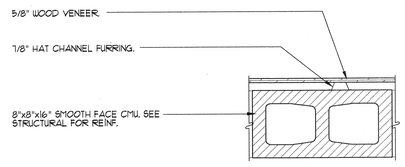


M2

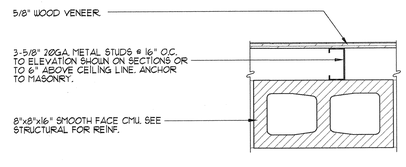


M3

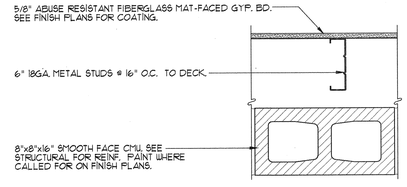


M4

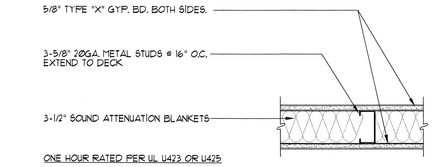


F1

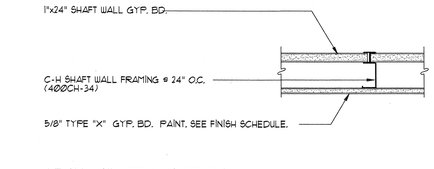


F2

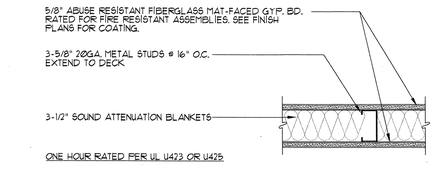


F3

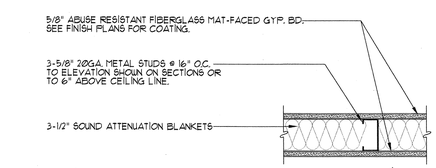


L1

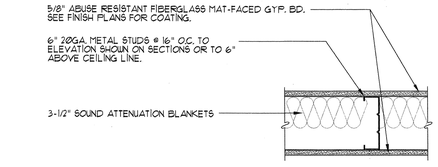


L2

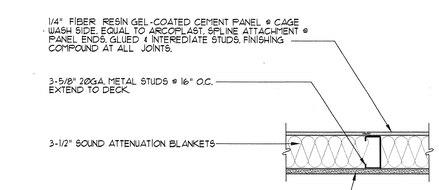


L3

ARCHITECT 0818

ajc architects

703 east 1700 south
salt lake city, utah 84105
ph: 801.466.8818
fx: 801.466.4411
ajc@ajcarchitects.com

OWNER INFORMATION

**State of Utah**
Department of Administrative Services

Division of Facilities
Construction & Management
4110 State Office Building
Salt Lake City, Utah 84114
Phone: (801) 538 - 3018
Fax: (801) 538 - 3267

Internet: http://www.dfcm.utah.gov

PROJECT DESCRIPTION

# LIFE SCIENCES RESEARCH CENTER
## UTAH STATE UNIVERSITY

USTAR BUILDING #2
350 EAST GRAND AVE.
LOGAN, UTAH

SHEET NAME:

WALL TYPES

REVISIONS

| MARK | DATE | DESCRIPTION |
|---|---|---|

ISSUE DATA

| | |
|---|---|
| ISSUE DATE: | DEC. 9, 2008 |
| ISSUE TYPE: | DESDEV |
| DRAWN BY: | J. NIELSEN |
| CHECKED BY: | J. JONES |
| CAD FILE NAME: | 0818AE003 |
| DFCM PROJECT # | 06292770 |
| STATE PROPERTY # | - |
| COPYRIGHT: | STATE OF UTAH |

SHEET NUMBER:

AE003

P:\0800\0818 USTAR #2\BIM\0818REVIT\ARCHITECT_BIM\0818AE003.dwg, 12/9/2008 2:19:27 PM, ###admin

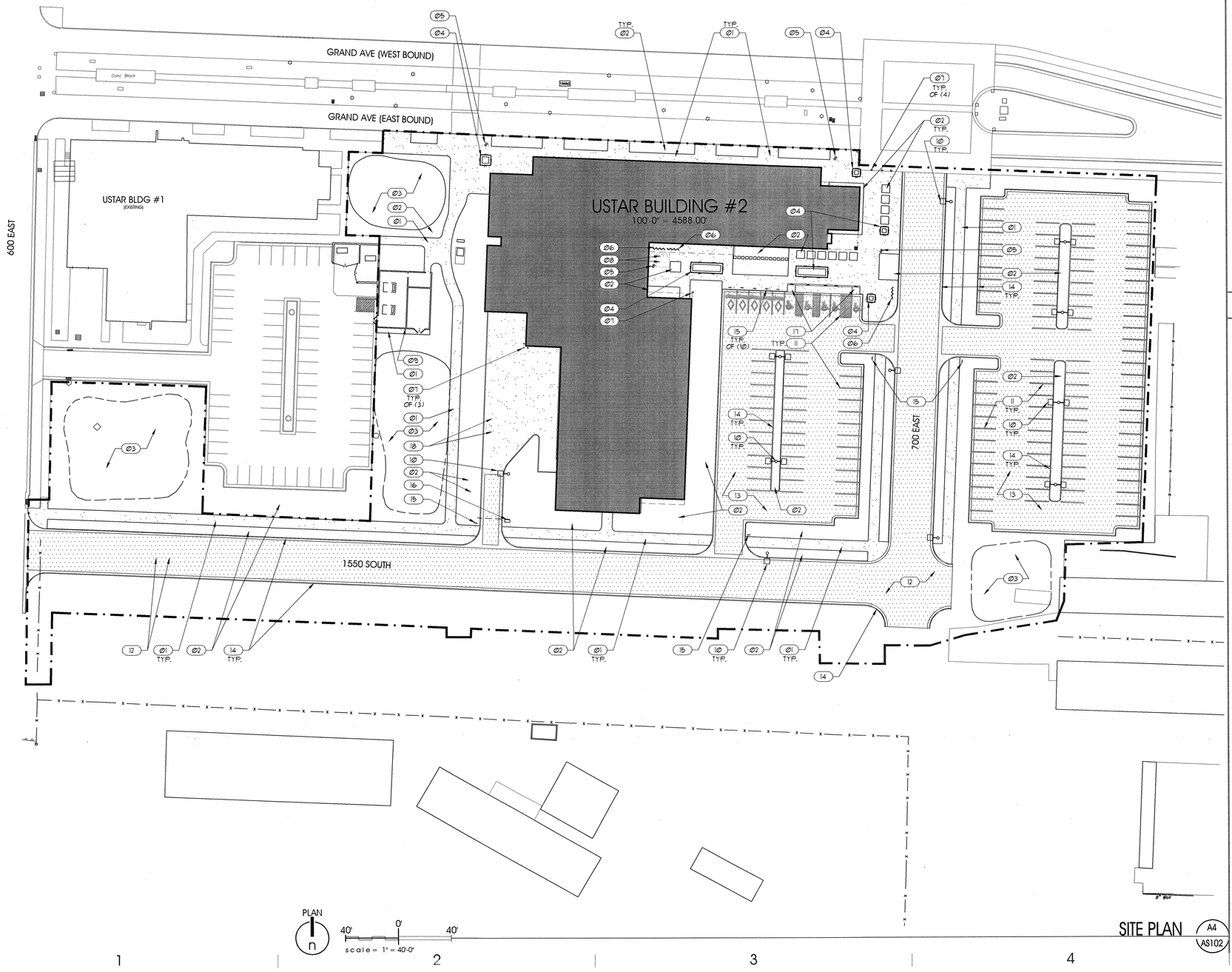


## GENERAL NOTES AND LEGEND:

FOR SHEET AS102 ONLY.

- SEE SHEET AE001 FOR GENERAL NOTES.
- SEE TITLE SHEET G1001 FOR DRAWING INDEX.
- DO NOT SCALE DRAWINGS.
- CONTRACTOR /SUBCONTRACTOR'S SHALL VERIFY ALL DIMENSIONS AND CONDITIONS BEFORE BEGINNING WORK AND SHALL REPORT TO THE ARCHITECT ANY ERRORS, INCONSISTENCIES OR OMISSIONS BEFORE BEGINNING WORK. SEE GENERAL NOTES AND SPECIFICATIONS.

LIMIT OF DISTURBANCE

ASPHALT

CONCRETE

## KEYED NOTES:

FOR SHEET AS102 ONLY.

01 CONCRETE WALK.
02 LANDSCAPED AREA - SEE LANDSCAPE DRAWINGS.
03 DETENTION POND - SEE LANDSCAPE & CIVIL DRAWINGS.
04 RAISED PLANTER / BENCH W/ RECESSED LIGHTING.
05 WASTE RECEPTACLE.
06 BICYCLE RACK.
07 BOLLARD.
08 CLEAR AREA FOR MECH. PENTHOUSE HOIST (ABOVE).
09 TRANSFORMER / GENERATOR ENCLOSURE. SEE ELECTRICAL DRAWINGS.
10 LIGHT FIXTURE - SEE ELECTRICAL DRAWINGS.
11 PARKING STRIPING.
12 ASPHALT ROAD - SEE CIVIL DRAWINGS.
13 ASPHALT PARKING LOT - SEE CIVIL DRAWINGS.
14 CURB / GUTTER - SEE CIVIL DRAWINGS.
15 SIGNAGE.
16 SECURITY GATE.
17 ADA RAMP.
18 CONCRETE LOADING DOCK AREA.

ARCHITECT 0818

ajc architects

703 east 1700 south
salt lake city, utah 84105
ph: 801.466.8818
fx: 801.466.4411
www.ajcarchitects.com

PAYETTE

285 Summer Street
Boston, MA 02210-1522
www.payette.com

OWNER INFORMATION

State of Utah
Department of Administrative Services

Division of Facilities
Construction & Management
4110 State Office Building
Salt Lake City, Utah 84114
Phone: (801) 538 - 3018
Fax: (801) 538 - 3267

Internet: http://www.dfcm.utah.gov

PROJECT DESCRIPTION

# LIFE SCIENCES RESEARCH CENTER
## UTAH STATE UNIVERSITY

USTAR BUILDING #2
350 EAST GRAND AVE.
LOGAN, UTAH

SHEET NAME:

SITE PLAN

REVISIONS

| MARK | DATE | DESCRIPTION |
|---|---|---|

ISSUE DATA

| | |
|---|---|
| ISSUE DATE: | DEC. 9, 2008 |
| ISSUE TYPE: | DESDEV |
| DRAWN BY: | J. NIELSEN |
| CHECKED BY: | J. JONES |
| CAD FILE NAME: | |
| DFCM PROJECT # | 06292770 |
| STATE PROPERTY # | - |
| COPYRIGHT: | STATE OF UTAH |

SHEET NUMBER:

AS102

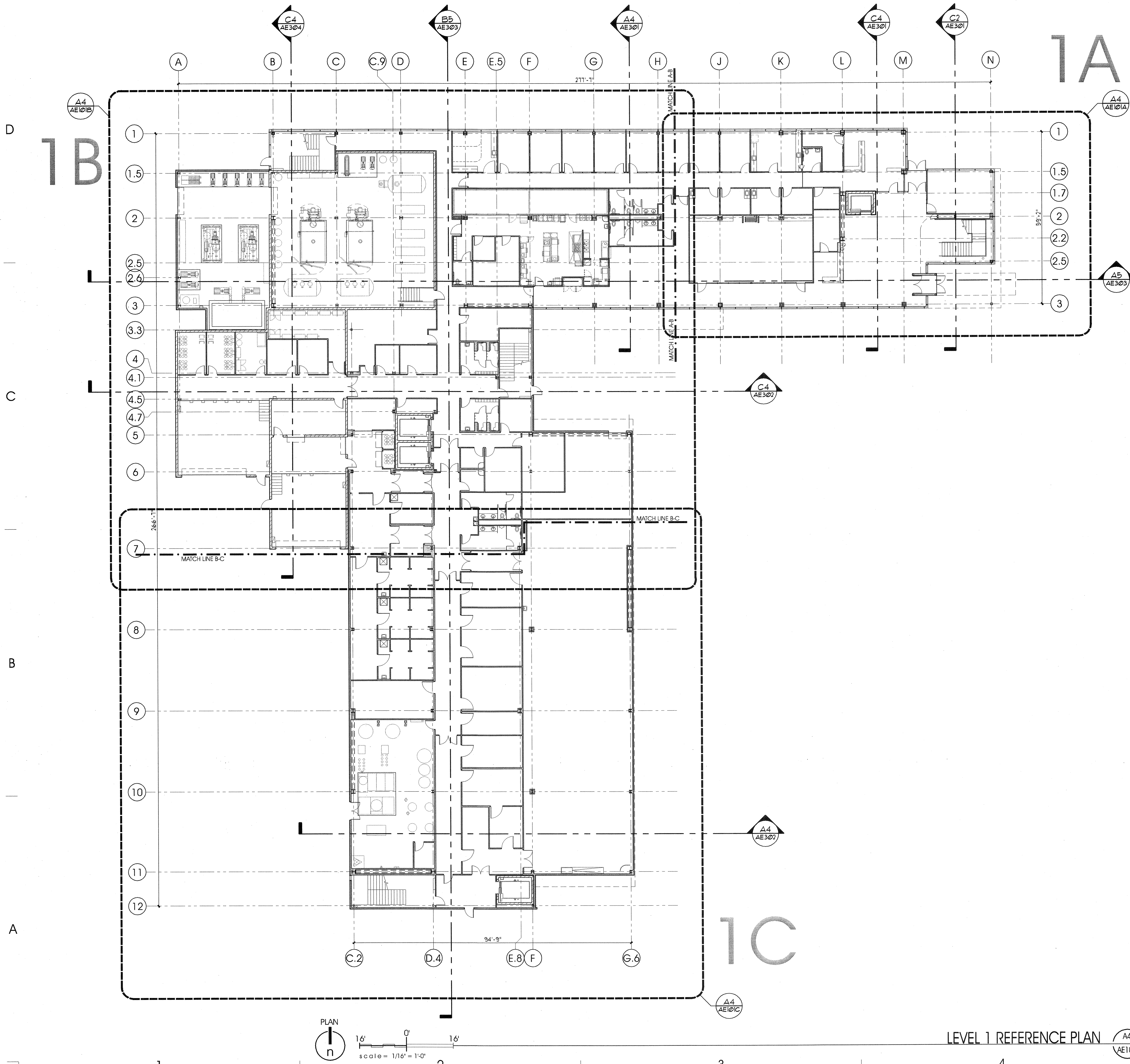


LEVEL 1 REFERENCE PLAN A4 AE101

## GENERAL NOTES AND LEGEND:

- SEE SHEET AE001 FOR GENERAL NOTES.
- SEE TITLE SHEET G1001 FOR DRAWING INDEX.
- DO NOT SCALE DRAWINGS.
- CONTRACTOR /SUBCONTRACTOR'S SHALL VERIFY ALL DIMENSIONS AND CONDITIONS BEFORE BEGINNING WORK AND SHALL REPORT TO THE ARCHITECT ANY ERRORS, INCONSISTENCIES OR OMISSIONS BEFORE BEGINNING WORK. SEE GENERAL NOTES AND SPECIFICATIONS.

KEY PLAN

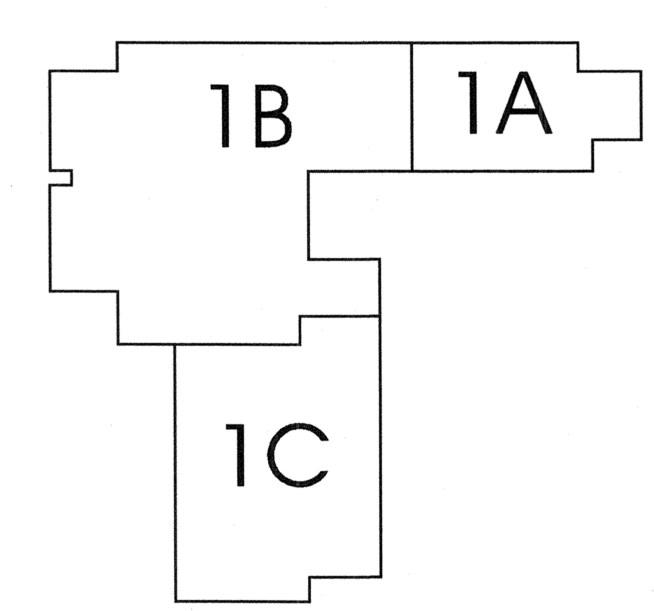


ARCHITECT 0818

ajc architects
703 east 1700 south
salt lake city, utah 84105
ph: 801.466.8818
fx: 801.466.4411
www.ajcarchitects.com

PAYETTE
285 Summer Street
Boston, MA 02210-1522
www.payette.com

OWNER INFORMATION

**State of Utah**
Department of Administrative Services

Division of Facilities
Construction & Management
4110 State Office Building
Salt Lake City, Utah 84114
Phone: (801) 538 - 3018
Fax: (801) 538 - 3267

Internet: http://www.dfcm.utah.gov

PROJECT DESCRIPTION

# LIFE SCIENCES RESEARCH CENTER
UTAH STATE UNIVERSITY

USTAR BUILDING #2
350 EAST GRAND AVE.
LOGAN, UTAH

SHEET NAME:

LEVEL 1
REFERENCE PLAN

REVISIONS

| MARK | DATE | DESCRIPTION |
| --- | --- | --- |

ISSUE DATA

| | |
| --- | --- |
| ISSUE DATE: | DEC. 9, 2008 |
| ISSUE TYPE: | DESDEV |
| DRAWN BY: | J. NIELSEN |
| CHECKED BY: | J. JONES |
| CAD FILE NAME: | |
| DFCM PROJECT # | 06292770 |
| STATE PROPERTY # | - |
| COPYRIGHT: | STATE OF UTAH |

SHEET NUMBER:

AE101

## GENERAL NOTES AND LEGEND:

- SEE SHEET AE001 FOR GENERAL NOTES.
- SEE TITLE SHEET G1001 FOR DRAWING INDEX.
- DO NOT SCALE DRAWINGS.
- CONTRACTOR /SUBCONTRACTOR'S SHALL VERIFY ALL DIMENSIONS AND CONDITIONS BEFORE BEGINNING WORK AND SHALL REPORT TO THE ARCHITECT ANY ERRORS, INCONSISTENCIES OR OMISSIONS BEFORE BEGINNING WORK. SEE GENERAL NOTES AND SPECIFICATIONS.

SOLID HATCH INDICATES AREA OF 2" RECESSED SLAB

ALL WALLS THIS SHEET ARE WALL TYPE "A1" U.N.O. — A1

## KEYED NOTES:

- 01 STEEL COL. (SEE STRUCTURAL) WRAPPED WALL TYPE A
- 02 STEEL COL. (SEE STRUCTURAL) WRAPPED IN GYP. BD.
- 03 STEEL COL. / BRACE FRAME (SEE STRUCTURAL) EXPOSED. PAINT.
- 04 PLUMBING FIXTURE. SEE PLUMBING DRAWINGS.
- 05 CASEWORK. SEE INTERIOR ELEVATIONS.
- 06 SPACE FOR REFRIGERATOR.
- 07 ENCLOSURE ABOVE.
- 08 CANOPY ABOVE.

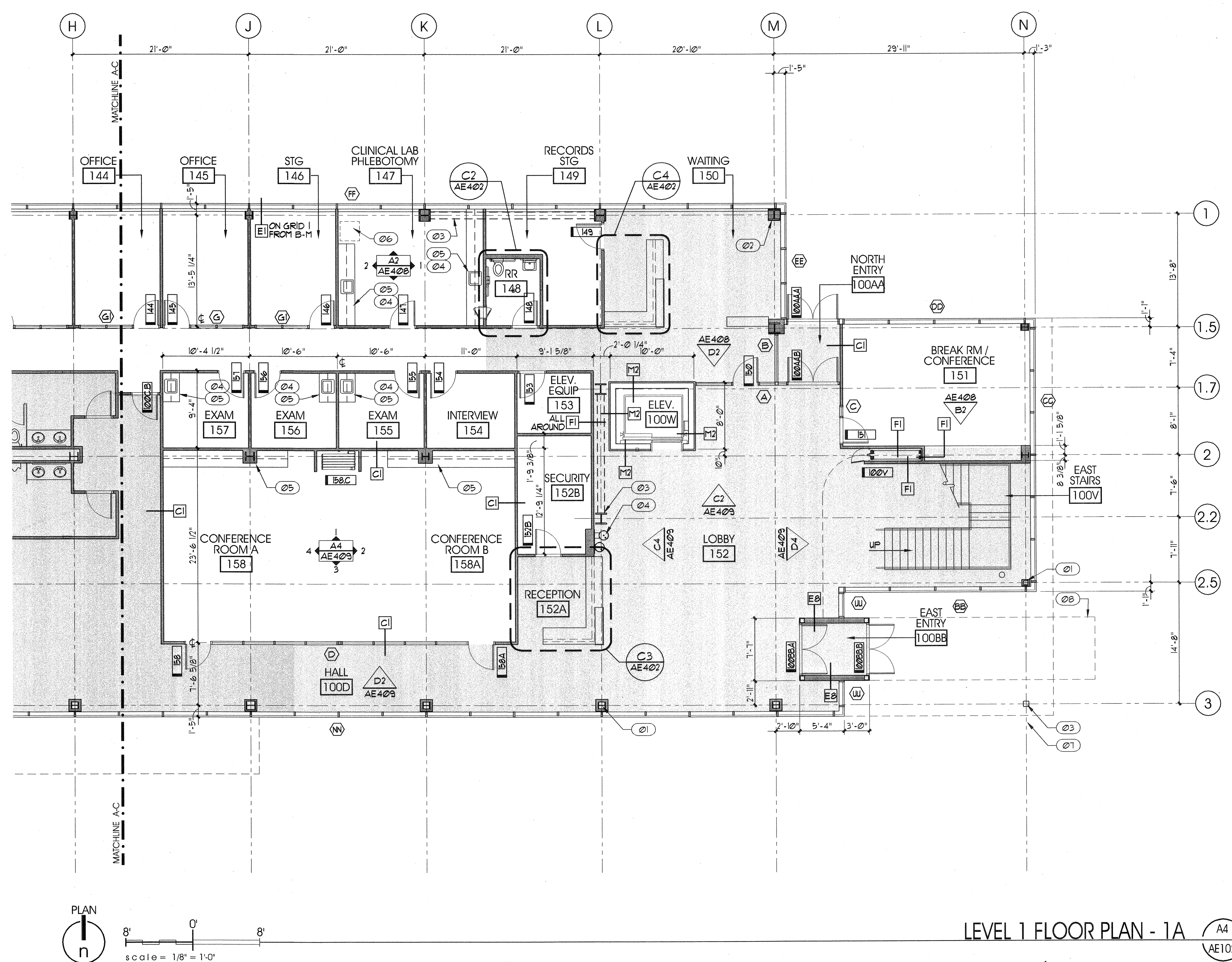


LEVEL 1 FLOOR PLAN - 1A (A4 / AE102)

## KEY PLAN

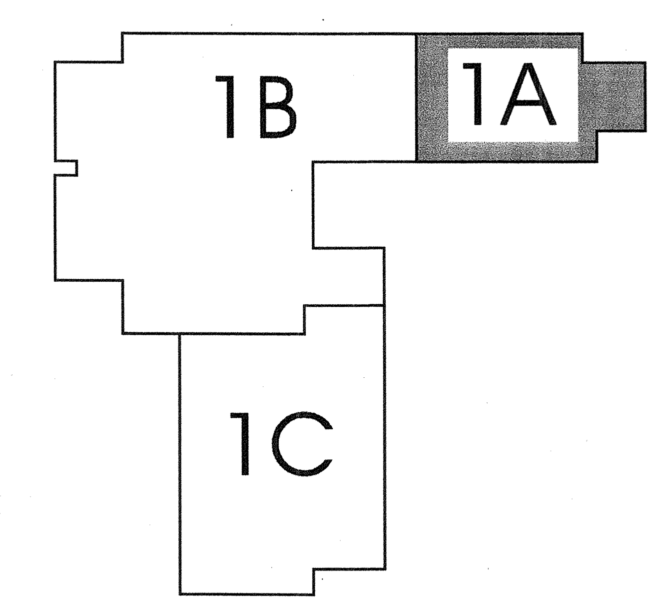



ARCHITECT 0818

ajc architects
703 east 1700 south
salt lake city, utah 84105
ph: 801.466.8818
fx: 801.466.4411
www.ajcarchitects.com

PAYETTE
285 Summer Street
Boston, MA 02210-1522
www.payette.com

OWNER INFORMATION

State of Utah
Department of Administrative Services

Division of Facilities Construction & Management
4110 State Office Building
Salt Lake City, Utah 84114
Phone: (801) 538 - 3018
Fax: (801) 538 - 3267
Internet: http://www.dfcm.utah.gov


PROJECT DESCRIPTION

LIFE SCIENCES RESEARCH CENTER
UTAH STATE UNIVERSITY

USTAR BUILDING #2
350 EAST GRAND AVE.
LOGAN, UTAH

SHEET NAME:

LEVEL 1
FLOOR PLAN - 1A

REVISIONS

| MARK | DATE | DESCRIPTION |
|---|---|---|

ISSUE DATA

| | |
|---|---|
| ISSUE DATE: | DEC. 9, 2008 |
| ISSUE TYPE: | DESDEV |
| DRAWN BY: | J. NIELSEN |
| CHECKED BY: | J. JONES |
| CAD FILE NAME: | |
| DFCM PROJECT # | 06292770 |
| STATE PROPERTY # | - |
| COPYRIGHT: | STATE OF UTAH |

SHEET NUMBER:

# AE101A

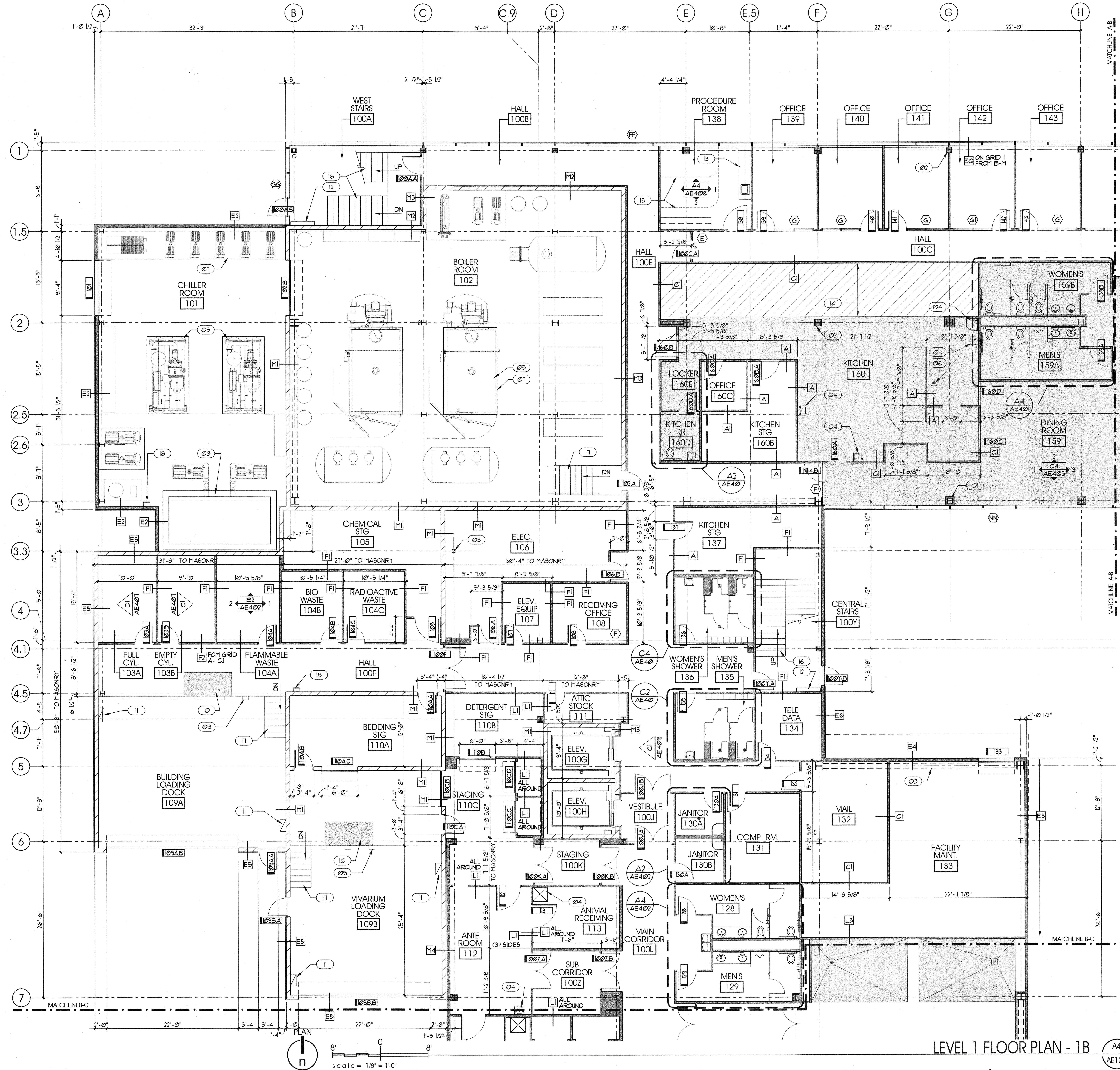


LEVEL 1 FLOOR PLAN - 1B
A4 AE103

## GENERAL NOTES AND LEGEND:

- SEE SHEET AE001 FOR GENERAL NOTES.
- SEE TITLE SHEET G1001 FOR DRAWING INDEX.
- DO NOT SCALE DRAWINGS.
- CONTRACTOR /SUBCONTRACTOR'S SHALL VERIFY ALL DIMENSIONS AND CONDITIONS BEFORE BEGINNING WORK AND SHALL REPORT TO THE ARCHITECT ANY ERRORS, INCONSISTENCIES OR OMISSIONS BEFORE BEGINNING WORK. SEE GENERAL NOTES AND SPECIFICATIONS.

SOLID HATCH INDICATES AREA OF 2" RECESSED SLAB

ANGLE HATCH INDICATES AREA OF 1" RECESSED SLAB

ALL WALLS THIS SHEET ARE WALL TYPE "A1" U.N.O. — A1

## KEYED NOTES:

| | |
|---|---|
| 01 | STEEL COL. (SEE STRUCTURAL) WRAPPED WALL TYPE A |
| 02 | STEEL COL. (SEE STRUCTURAL) WRAPPED IN GYP. BD. |
| 03 | STEEL COL. / (OR) BRACE FRAME (SEE STRUCTURAL) EXPOSED. PAINT. |
| 04 | PLUMBING FIXTURE. SEE PLUMBING DRAWINGS. |
| 05 | MECHANICAL EQUIPMENT. SEE MECH. DRAWINGS. |
| 06 | FLOOR DRAIN / FLOOR SINK. SEE PLUMBING DRAWINGS. |
| 07 | CONCRETE HOUSEKEEPING PAD. SEE MECHANICAL DRAWINGS. COORDINATE SIZE AND LOCATION WITH EQUIPMENT CUT SHEETS. |
| 08 | ABOVE GRADE SUMP. SEE MECHANICAL DRAWINGS. |
| 09 | DOCK BUMPERS. SEE SPECIFICATIONS. |
| 10 | DOCK LEVELER. SEE SPECIFICATIONS. |
| 11 | MECH. DUCT TO FLOOR. SEE MECHANICAL DRAWINGS. |
| 12 | UNIT HEATER. SEE MECHANICAL DRAWINGS. |
| 13 | CASEWORK. SEE INTERIOR ELEVATIONS. |
| 14 | RECESS SLAB 1" FOR FREEZER / W.I.C. |
| 15 | PRIVACY CURTAIN. SEE ACCESSORY SCHEDULE. |
| 16 | CONC. FILLED METAL PAN STAIRS. |
| 17 | METAL GRATE STAIRS & PIPE RAIL GUARD. |
| 18 | STEEL ROOF ACCESS LADDER. |

## KEY PLAN

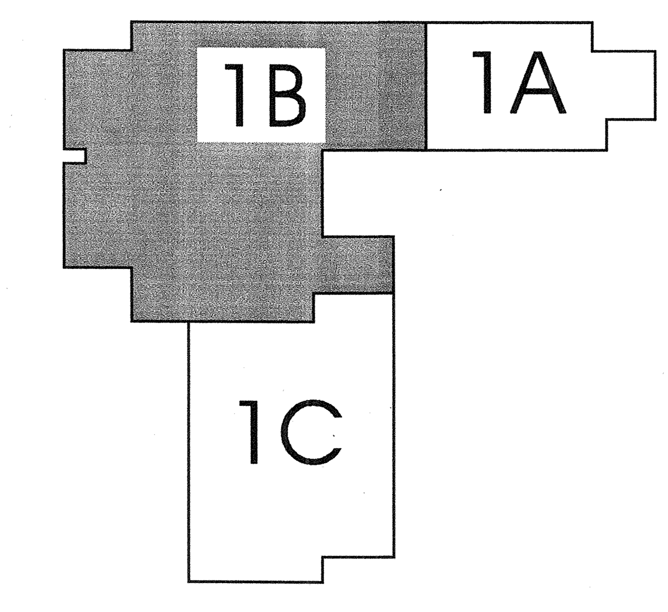



ARCHITECT 0818

ajc architects
703 east 1700 south
salt lake city, utah 84105
ph: 801.466.8818
fx: 801.466.4411
www.ajcarchitects.com

PAYETTE
285 Summer Street
Boston, MA 02210-1522
www.payette.com



OWNER INFORMATION

State of Utah
Department of Administrative Services
Division of Facilities Construction & Management
4110 State Office Building
Salt Lake City, Utah 84114
Phone: (801) 538 - 3018
Fax: (801) 538 - 3267

Internet: http://www.dfcm.utah.gov


PROJECT DESCRIPTION

LIFE SCIENCES RESEARCH CENTER
UTAH STATE UNIVERSITY

USTAR BUILDING #2
350 EAST GRAND AVE.
LOGAN, UTAH

SHEET NAME:

LEVEL 1
FLOOR PLAN - 1B

REVISIONS

| MARK | DATE | DESCRIPTION |
|---|---|---|

ISSUE DATA

| | |
|---|---|
| ISSUE DATE: | DEC. 9, 2008 |
| ISSUE TYPE: | DESDEV |
| DRAWN BY: | J. NIELSEN |
| CHECKED BY: | J. JONES |
| CAD FILE NAME: | |
| DFCM PROJECT # | 06292770 |
| STATE PROPERTY # - | |
| COPYRIGHT: | STATE OF UTAH |

SHEET NUMBER:

# AE101B

LEVEL 1 FLOOR PLAN - 1C

A4
AE104

## GENERAL NOTES AND LEGEND:

- SEE SHEET AE001 FOR GENERAL NOTES.
- SEE TITLE SHEET G1001 FOR DRAWING INDEX.
- DO NOT SCALE DRAWINGS.
- CONTRACTOR /SUBCONTRACTOR'S SHALL VERIFY ALL DIMENSIONS AND CONDITIONS BEFORE BEGINNING WORK AND SHALL REPORT TO THE ARCHITECT ANY ERRORS, INCONSISTENCIES OR OMISSIONS BEFORE BEGINNING WORK. SEE GENERAL NOTES AND SPECIFICATIONS.

RECESS SLAB FOR EQUIPMENT. COORD SIZE W/ EQUIPMENT.

ALL WALLS THIS SHEET ARE WALL TYPE "L1" U.N.O. L1

## KEYED NOTES:

- 01 PLUMBING FIXTURE. SEE PLUMBING DRAWINGS.
- 02 FLOOR DRAIN / FLOOR SINK. SEE PLUMBING DRAWINGS.
- 03 12" DEEP CONC. FORMED TRENCH DRAIN. SEE PLUMBING DRAWINGS.
- 04 RECESS SLAB 12" FOR EQUIPMENT. SEE LAB DRAWINGS. COORDINATE SIZE AND LOCATION WITH EQUIPMENT CUT SHEETS.
- 05 MECHANICAL EQUIPMENT. SEE MECHANICAL DRAWINGS.
- 06 CONC. HOUSEKEEPING PAD. SEE MECHANICAL DRAWINGS. COORD. SIZE AND LOCATIC OF PAD W/ EQUIPMENT CUT SHEETS.
- 07 UNIT HEATER. SEE MECHANCAL DRAWINGS.
- 08 CONCRETE FILLED METAL PAN STAIRS.
- 09 4' x 4' BLOCKOUT FOR FIRE LINE PIPING ALL THE WAY THROUGH MATT FOOTING W. CONC. FDN. WALL FROM FTG UP TO SLAB ON GRADE.

## KEY PLAN

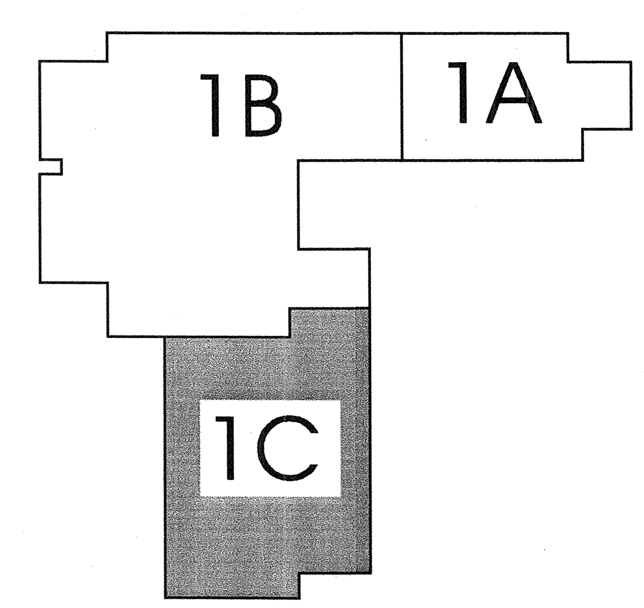



ARCHITECT 0818

ajc architects
703 east 1700 south
salt lake city, utah 84105
ph: 801.466.8818
fx: 801.466.4411
www.ajcarchitects.com

PAYETTE
285 Summer Street
Boston, MA 02210-1522
www.payette.com

OWNER INFORMATION

State of Utah
Department of Administrative Services
Division of Facilities Construction & Management
4110 State Office Building
Salt Lake City, Utah 84114
Phone: (801) 538 - 3018
Fax: (801) 538 - 3267
Internet: http://www.dfcm.utah.gov


PROJECT DESCRIPTION

LIFE SCIENCES RESEARCH CENTER
UTAH STATE UNIVERSITY

USTAR BUILDING #2
350 EAST GRAND AVE.
LOGAN, UTAH

SHEET NAME:

LEVEL 1
FLOOR PLAN - 1C

REVISIONS

| MARK | DATE | DESCRIPTION |
| --- | --- | --- |

ISSUE DATA

| | |
| --- | --- |
| ISSUE DATE: | DEC. 9, 2008 |
| ISSUE TYPE: | DESDEV |
| DRAWN BY: | J. NIELSEN |
| CHECKED BY: | J. JONES |
| CAD FILE NAME: | |
| DFCM PROJECT # | 06292770 |
| STATE PROPERTY # | - |
| COPYRIGHT: | STATE OF UTAH |

SHEET NUMBER:

AE101C

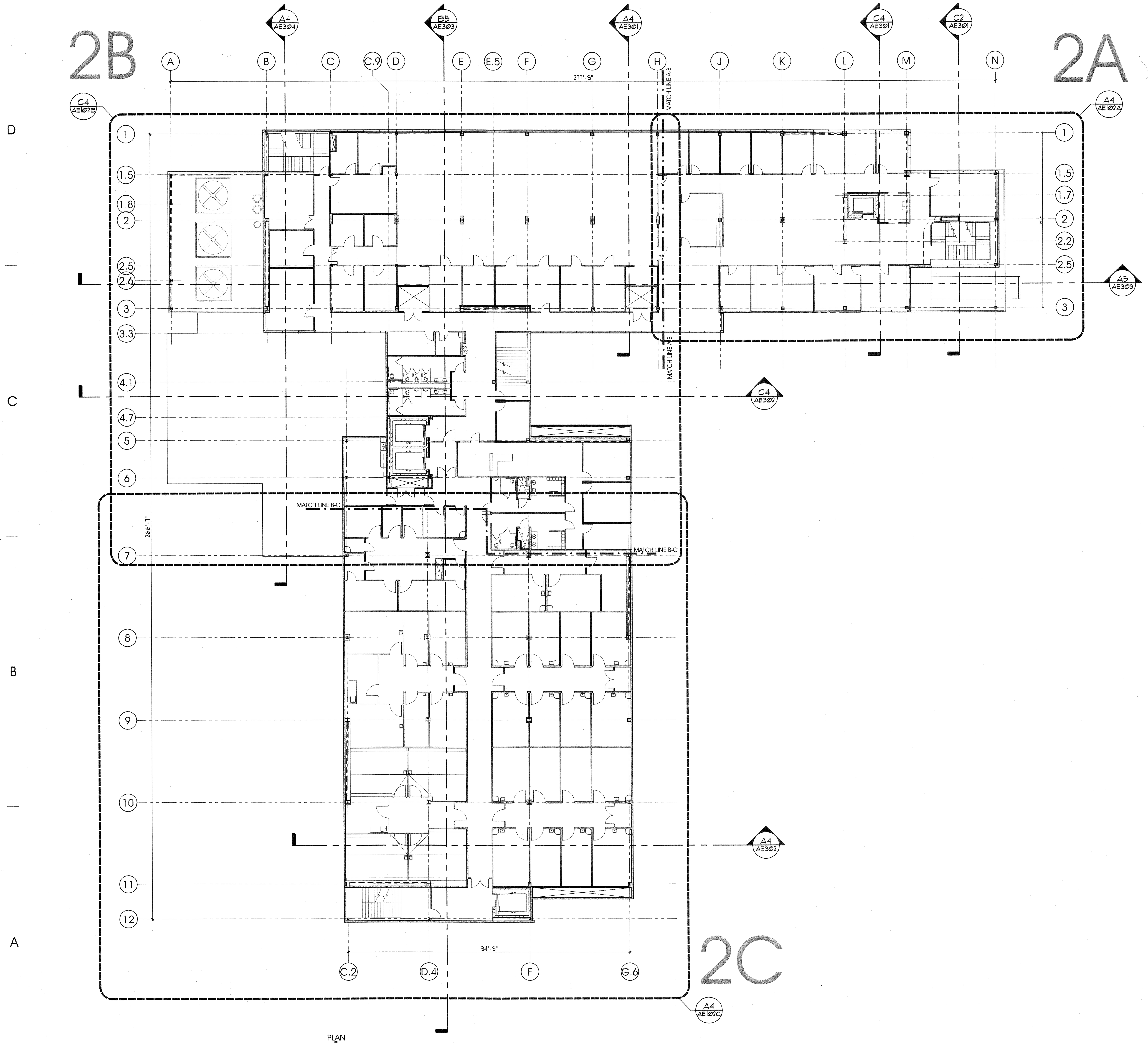


LEVEL 2 REFERENCE PLAN

A4 AE105

PLAN

scale = 1/16" = 1'-0"

## GENERAL NOTES AND LEGEND:

- SEE SHEET AE001 FOR GENERAL NOTES.
- SEE TITLE SHEET G1001 FOR DRAWING INDEX.
- DO NOT SCALE DRAWINGS.
- CONTRACTOR /SUBCONTRACTOR'S SHALL VERIFY ALL DIMENSIONS AND CONDITIONS BEFORE BEGINNING WORK AND SHALL REPORT TO THE ARCHITECT ANY ERRORS, INCONSISTENCIES OR OMISSIONS BEFORE BEGINNING WORK. SEE GENERAL NOTES AND SPECIFICATIONS.

## KEY PLAN

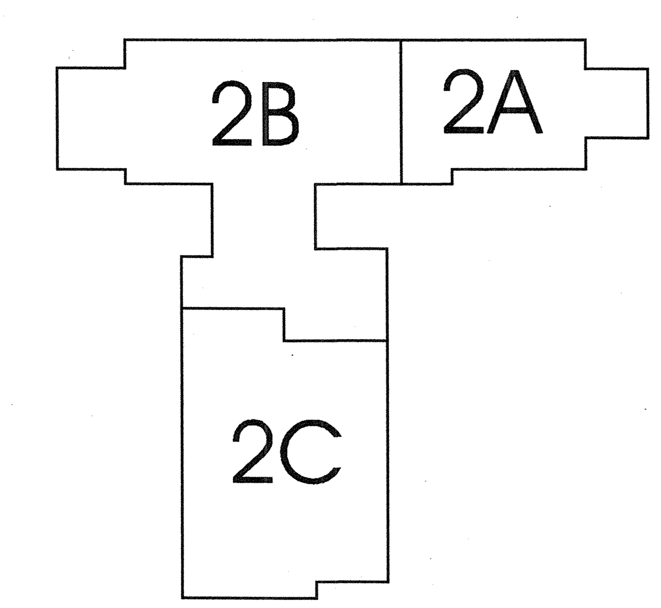


ARCHITECT 0818

ajc architects
703 east 1700 south
salt lake city, utah 84105
ph: 801.466.8818
fx: 801.466.4411
www.ajcarchitects.com

PAYETTE
285 Summer Street
Boston, MA 02210-1522
www.payette.com

OWNER INFORMATION

**State of Utah**
Department of Administrative Services

Division of Facilities Construction & Management
4110 State Office Building
Salt Lake City, Utah 84114
Phone: (801) 538 - 3018
Fax: (801) 538 - 3267

Internet: http://www.dfcm.utah.gov

PROJECT DESCRIPTION

LIFE SCIENCES RESEARCH CENTER
UTAH STATE UNIVERSITY

USTAR BUILDING #2
350 EAST GRAND AVE.
LOGAN, UTAH

SHEET NAME:

LEVEL 2
REFERENCE PLAN

REVISIONS

| MARK | DATE | DESCRIPTION |
|---|---|---|

ISSUE DATA

| | |
|---|---|
| ISSUE DATE: | DEC. 9, 2008 |
| ISSUE TYPE: | DESDEV |
| DRAWN BY: | J. NIELSEN |
| CHECKED BY: | J. JONES |
| CAD FILE NAME: | |
| DFCM PROJECT # | 06292770 |
| STATE PROPERTY # | - |
| COPYRIGHT: | STATE OF UTAH |

SHEET NUMBER:

# AE102

# GENERAL NOTES AND LEGEND:

- SEE SHEET AE001 FOR GENERAL NOTES.
- SEE TITLE SHEET G1001 FOR DRAWING INDEX.
- DO NOT SCALE DRAWINGS.
- CONTRACTOR /SUBCONTRACTOR'S SHALL VERIFY ALL DIMENSIONS AND CONDITIONS BEFORE BEGINNING WORK AND SHALL REPORT TO THE ARCHITECT ANY ERRORS, INCONSISTENCIES OR OMISSIONS BEFORE BEGINNING WORK. SEE GENERAL NOTES AND SPECIFICATIONS.

ALL WALLS THIS SHEET ARE WALL TYPE "A1" U.N.O. — A1

# KEYED NOTES:

- 01 STEEL COL. (SEE STRUCTURAL) WRAPPED WALL TYPE A
- 02 STEEL COL. (SEE STRUCTURAL) WRAPPED IN GYP. BD.
- 03 STEEL COL. / BRACE FRAME (SEE STRUCTURAL) EXPOSED. PAINT.
- 04 FIRE RISER.
- 05 CASEWORK. SEE INTERIOR ELEVATIONS.
- 06 ROOF BELOW.

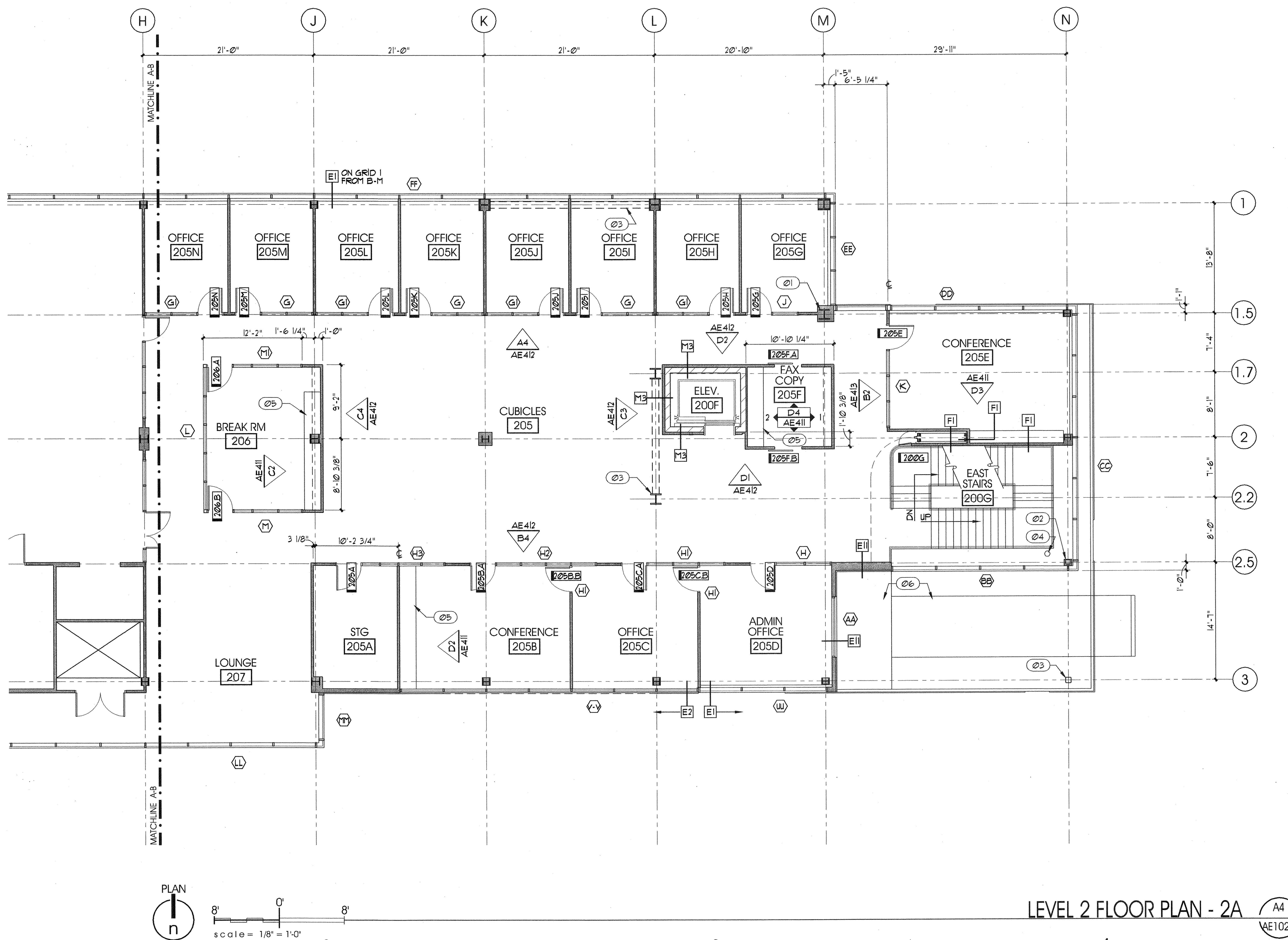


LEVEL 2 FLOOR PLAN - 2A

A4 / AE102A

# KEY PLAN

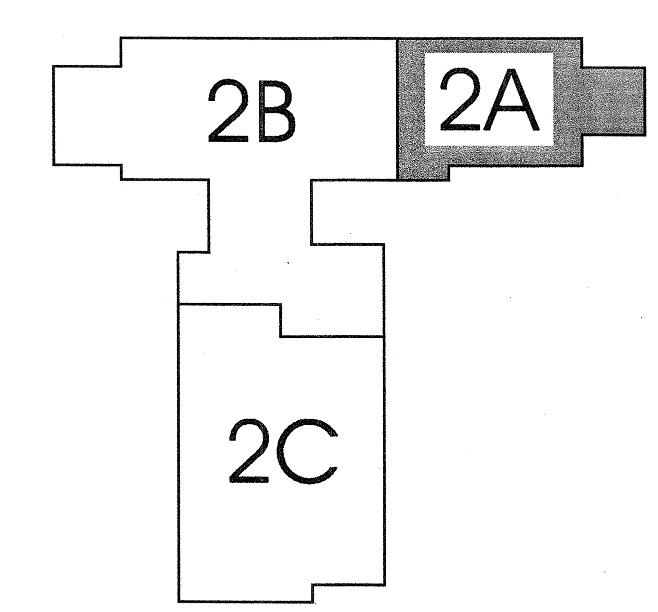



ARCHITECT 0818

ajc architects

703 east 1700 south
salt lake city, utah 84105
ph: 801.466.8818
fx: 801.466.4411
www.ajcarchitects.com

P A Y E T T E

285 Summer Street
Boston, MA 02210-1522
www.payette.com

OWNER INFORMATION

State of Utah
Department of Administrative Services

Division of Facilities Construction & Management
4110 State Office Building
Salt Lake City, Utah 84114
Phone: (801) 538 - 3018
Fax: (801) 538 - 3267

Internet: http://www.dfcm.utah.gov


PROJECT DESCRIPTION

LIFE SCIENCES RESEARCH CENTER
UTAH STATE UNIVERSITY

USTAR BUILDING #2
350 EAST GRAND AVE.
LOGAN, UTAH

SHEET NAME:

LEVEL 2
FLOOR PLAN - 2A

REVISIONS

| MARK | DATE | DESCRIPTION |
| --- | --- | --- |

ISSUE DATA

| | |
| --- | --- |
| ISSUE DATE: | DEC. 9, 2008 |
| ISSUE TYPE: | DESDEV |
| DRAWN BY: | J. NIELSEN |
| CHECKED BY: | J. JONES |
| CAD FILE NAME: | |
| DFCM PROJECT # | 06292770 |
| STATE PROPERTY # | - |
| COPYRIGHT: | STATE OF UTAH |

SHEET NUMBER:

AE102A

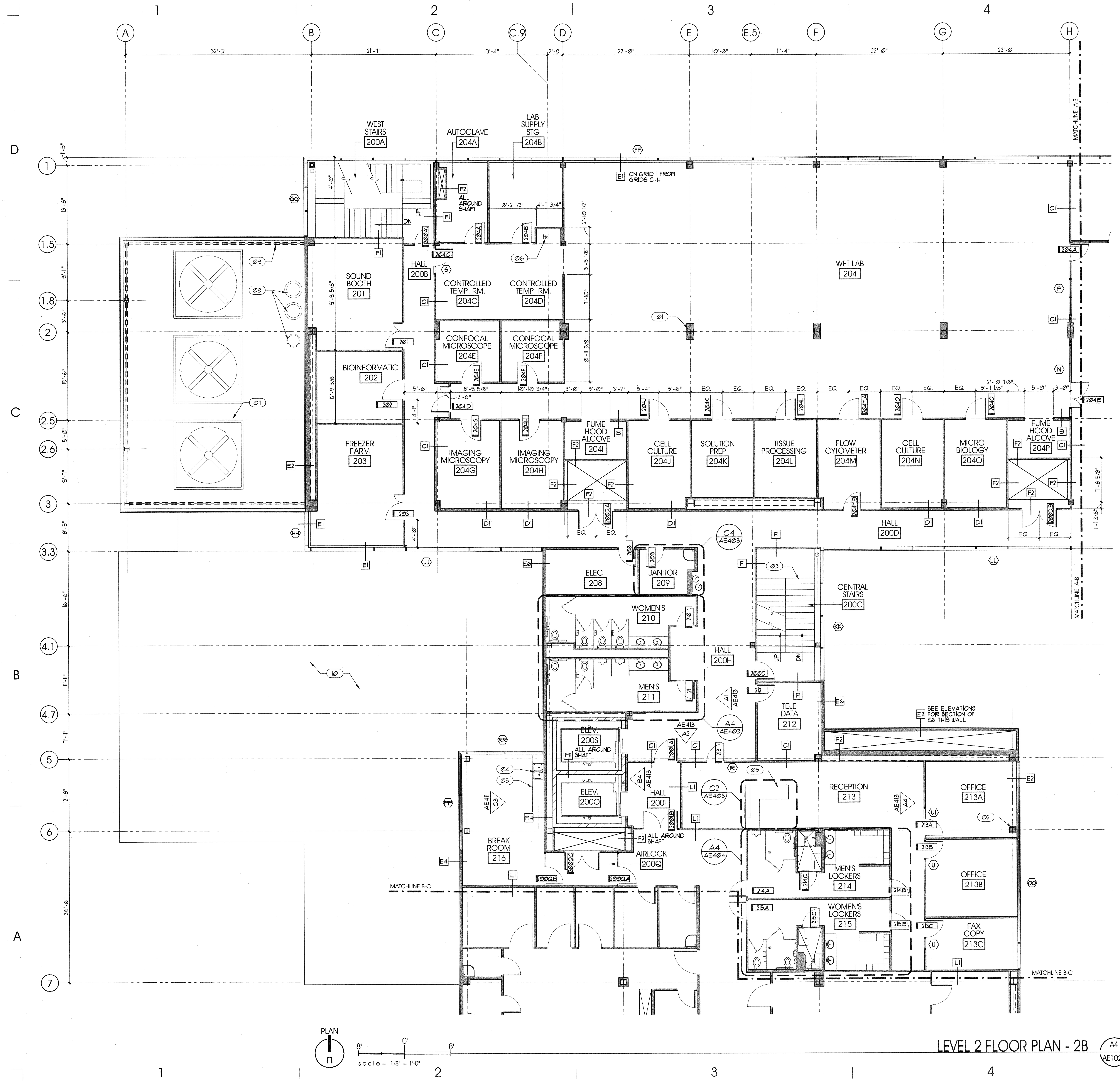


LEVEL 2 FLOOR PLAN - 2B

# GENERAL NOTES AND LEGEND:

- SEE SHEET AE001 FOR GENERAL NOTES.
- SEE TITLE SHEET G1001 FOR DRAWING INDEX.
- DO NOT SCALE DRAWINGS.
- CONTRACTOR /SUBCONTRACTOR'S SHALL VERIFY ALL DIMENSIONS AND CONDITIONS BEFORE BEGINNING WORK AND SHALL REPORT TO THE ARCHITECT ANY ERRORS, INCONSISTENCIES OR OMISSIONS BEFORE BEGINNING WORK. SEE GENERAL NOTES AND SPECIFICATIONS.

ALL WALLS THIS SHEET ARE WALL TYPE "A1" U.N.O. — A1

# KEYED NOTES:

01 STEEL COL. (SEE STRUCTURAL) WRAPPED WALL TYPE A
02 STEEL COL. (SEE STRUCTURAL) WRAPPED IN GYP. BD.
03 CONC. FILLED METAL PAN STAIRS.
04 PLUMBING FIXTURE. SEE PLUMBING DRAWINGS.
05 CASEWORK. SEE INTERIOR ELEVATIONS.
06 FLOOR DRAIN / FLOOR SINK. SEE PLUMBING DRAWINGS.
07 MECHANICAL EQUIPMENT AT ROOF. SEE MECHANICAL DRAWINGS.
08 EXHAUST FLUES. SEE MECHANICAL DRAWINGS.
09 STEEL GRID STRUCTURE AT ENCLOSURE. PAINT STEEL FRAME. SEE STRUCTURAL.
10 ROOF BELOW. SEE ROOF PLAN.

# KEY PLAN

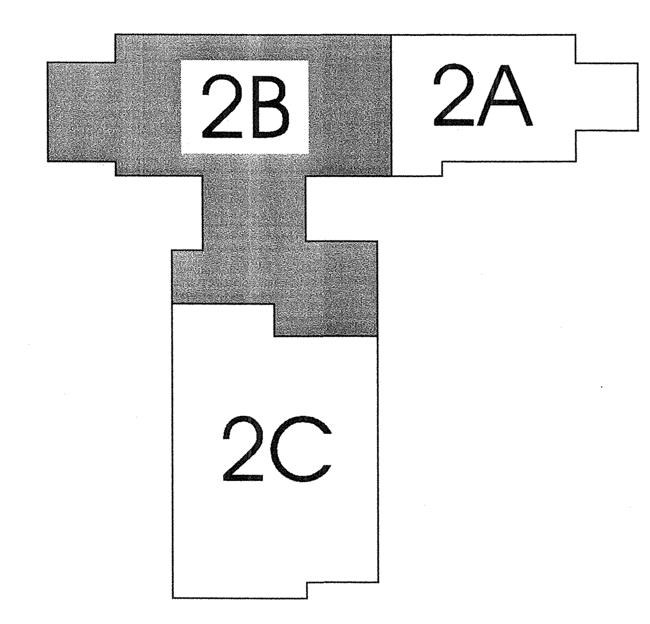



ARCHITECT 0818

ajc architects
703 east 1700 south
salt lake city, utah 84105
ph: 801.466.8818
fx: 801.466.4411
www.ajcarchitects.com

PAYETTE
285 Summer Street
Boston, MA 02210-1522
www.payette.com


OWNER INFORMATION


State of Utah
Department of Administrative Services

Division of Facilities Construction & Management
4110 State Office Building
Salt Lake City, Utah 84114
Phone: (801) 538 - 3018
Fax: (801) 538 - 3267

Internet: http://www.dfcm.utah.gov


PROJECT DESCRIPTION

LIFE SCIENCES RESEARCH CENTER
UTAH STATE UNIVERSITY

USTAR BUILDING #2
350 EAST GRAND AVE.
LOGAN, UTAH

SHEET NAME:

LEVEL 2
FLOOR PLAN - 2B

REVISIONS

MARK DATE DESCRIPTION

ISSUE DATA

| | |
|---|---|
| ISSUE DATE: | DEC. 9, 2008 |
| ISSUE TYPE: | DESDEV |
| DRAWN BY: | J. NIELSEN |
| CHECKED BY: | J. JONES |
| CAD FILE NAME: | |
| DFCM PROJECT # | 06292770 |
| STATE PROPERTY # | - |
| COPYRIGHT: | STATE OF UTAH |

SHEET NUMBER:

AE102B

## GENERAL NOTES AND LEGEND:

- SEE SHEET AE001 FOR GENERAL NOTES.
- SEE TITLE SHEET G1001 FOR DRAWING INDEX.
- DO NOT SCALE DRAWINGS.
- CONTRACTOR /SUBCONTRACTOR'S SHALL VERIFY ALL DIMENSIONS AND CONDITIONS BEFORE BEGINNING WORK AND SHALL REPORT TO THE ARCHITECT ANY ERRORS, INCONSISTENCIES OR OMISSIONS BEFORE BEGINNING WORK. SEE GENERAL NOTES AND SPECIFICATIONS.

ALL WALLS THIS SHEET ARE WALL TYPE "L1" U.N.O. — L1

## KEYED NOTES:

- 01 STEEL COL. (SEE STRUCTURAL) WRAPPED WALL TYPE L1.
- 02 STEEL COL. (SEE STRUCTURAL) WRAPPED IN GYP. BD.
- 03 STEEL COL. (SEE STRUCTURAL) EXPOSED.
- 04 PLUMBING FIXTURE. SEE PLUMBING DRAWINGS.
- 05 FLOOR DRAIN / FLOOR SINK. SEE PLUMBING DRAWINGS.
- 06 TRENCH DRAIN FORMED IN SLAB.
- 07 HIDDEN LINES INDICATE FUTURE BUILD OUT.
- 08 CONC. FILLED METAL PAN STAIRS.

## KEY PLAN

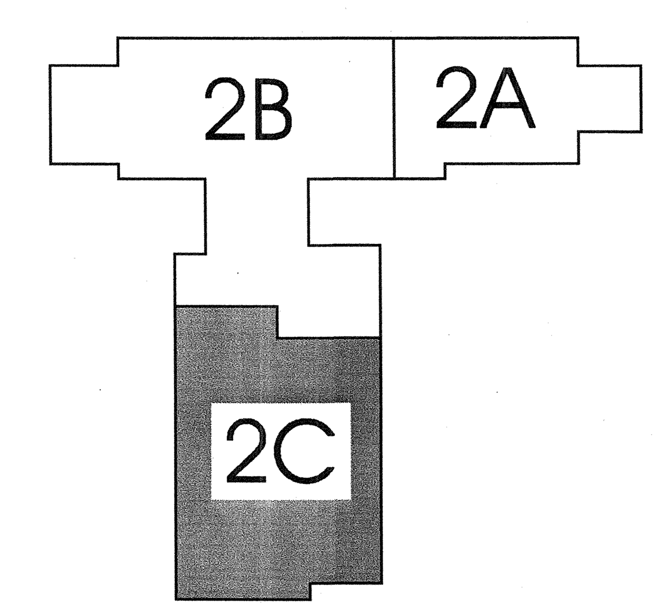


ARCHITECT 0818

ajc architects
703 east 1700 south
salt lake city, utah 84105
ph: 801.466.8818
fx: 801.466.4411
www.ajcarchitects.com

PAYETTE
285 Summer Street
Boston, MA 02210-1522
www.payette.com

OWNER INFORMATION

State of Utah
Department of Administrative Services
Division of Facilities Construction & Management
4110 State Office Building
Salt Lake City, Utah 84114
Phone: (801) 538 - 3018
Fax: (801) 538 - 3267
Internet: http://www.dfcm.utah.gov

PROJECT DESCRIPTION

LIFE SCIENCES RESEARCH CENTER
UTAH STATE UNIVERSITY

USTAR BUILDING #2
350 EAST GRAND AVE.
LOGAN, UTAH

SHEET NAME:

LEVEL 2
FLOOR PLAN - 2C

REVISIONS

| MARK | DATE | DESCRIPTION |
|---|---|---|

ISSUE DATA

| | |
|---|---|
| ISSUE DATE: | DEC. 9, 2008 |
| ISSUE TYPE: | DESDEV |
| DRAWN BY: | J. NIELSEN |
| CHECKED BY: | J. JONES |
| CAD FILE NAME: | |
| DFCM PROJECT # | 06292770 |
| STATE PROPERTY # | - |
| COPYRIGHT: | STATE OF UTAH |

SHEET NUMBER:

AE102C

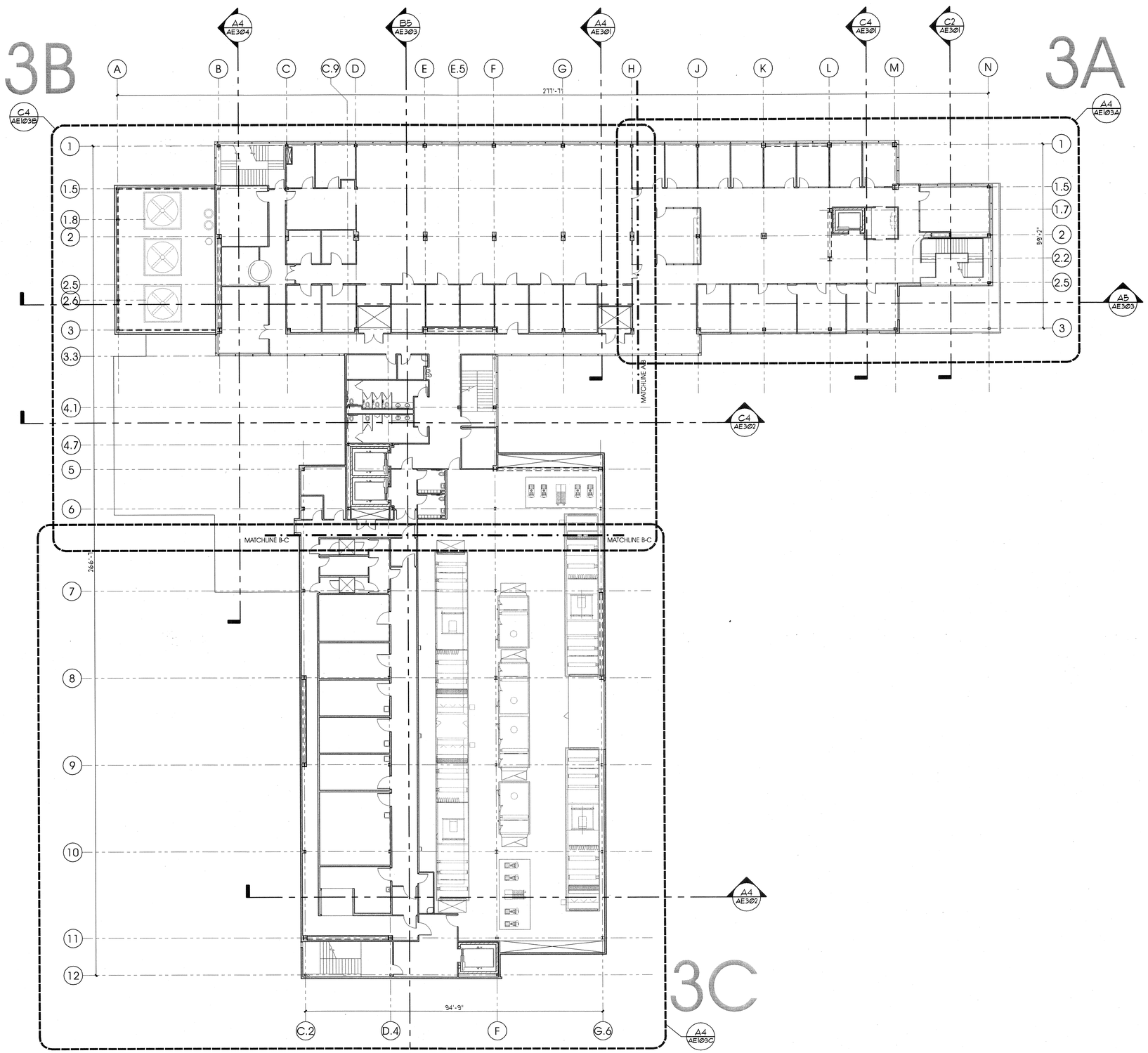


PLAN
16' 0' 16'
scale = 1/16" = 1'-0"

LEVEL 3 REFERENCE PLAN A4 AE103

## GENERAL NOTES AND LEGEND:

- SEE SHEET AEØØ1 FOR GENERAL NOTES.
- SEE TITLE SHEET GIØØ1 FOR DRAWING INDEX.
- DO NOT SCALE DRAWINGS.
- CONTRACTOR /SUBCONTRACTOR'S SHALL VERIFY ALL DIMENSIONS AND CONDITIONS BEFORE BEGINNING WORK AND SHALL REPORT TO THE ARCHITECT ANY ERRORS, INCONSISTENCIES OR OMISSIONS BEFORE BEGINNING WORK. SEE GENERAL NOTES AND SPECIFICATIONS.

## KEY PLAN

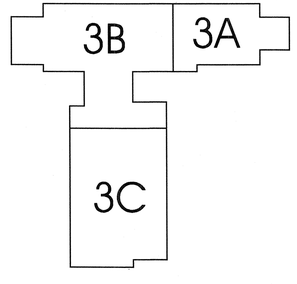


ARCHITECT 0818

ajc architects

703 east 1700 south
salt lake city, utah 84105
ph: 801.466.8818
fx: 801.466.4411
www.ajcarchitects.com

PAYETTE

285 Summer Street
Boston, MA 02210-1522
www.payette.com

OWNER INFORMATION

**State of Utah**
Department of Administrative Services

Division of Facilities
Construction & Management
4110 State Office Building
Salt Lake City, Utah 84114
Phone: (801) 538 - 3018
Fax: (801) 538 - 3267

Internet: http://www.dfcm.utah.gov

PROJECT DESCRIPTION

# LIFE SCIENCES RESEARCH CENTER
## UTAH STATE UNIVERSITY

USTAR BUILDING #2
350 EAST GRAND AVE.
LOGAN, UTAH

SHEET NAME:

LEVEL 3
REFERENCE PLAN

REVISIONS

| MARK | DATE | DESCRIPTION |
|---|---|---|

ISSUE DATA

| | |
|---|---|
| ISSUE DATE: | DEC. 9, 2008 |
| ISSUE TYPE: | DESDEV |
| DRAWN BY: | J. NIELSEN |
| CHECKED BY: | J. JONES |
| CAD FILE NAME: | |
| DFCM PROJECT # | 06292770 |
| STATE PROPERTY # | - |
| COPYRIGHT: | STATE OF UTAH |

SHEET NUMBER:

AE103

P:\06292770.18 USTAR UT-USU\DESIGN\REVIT\ARCHITECTURAL\DRAWING\AE103.dwg, 12/9/2008 3:57:02 PM, jnielsen

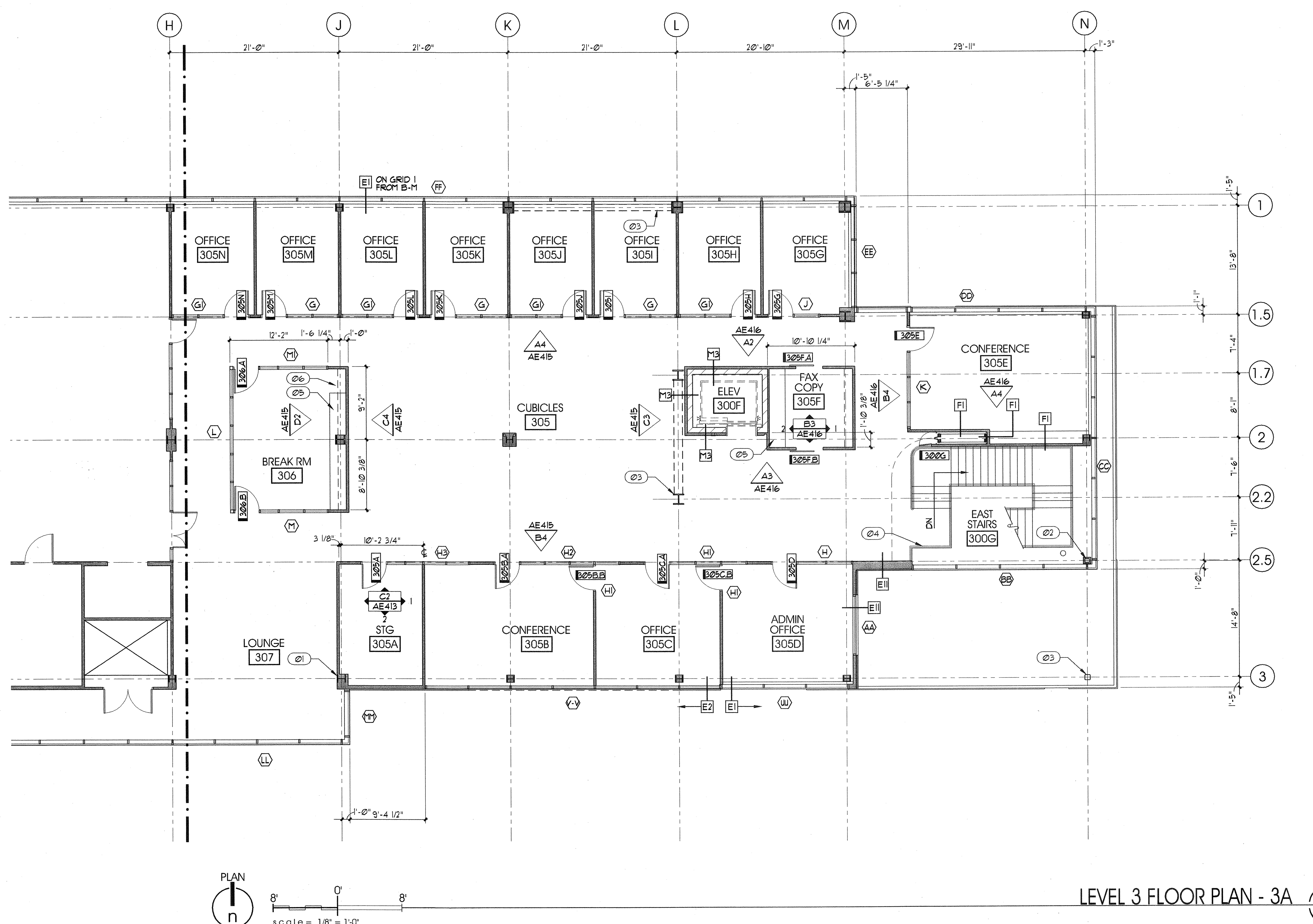


LEVEL 3 FLOOR PLAN - 3A

A4 AE103A

## GENERAL NOTES AND LEGEND:

- SEE SHEET AE001 FOR GENERAL NOTES.
- SEE TITLE SHEET G1001 FOR DRAWING INDEX.
- DO NOT SCALE DRAWINGS.
- CONTRACTOR /SUBCONTRACTOR'S SHALL VERIFY ALL DIMENSIONS AND CONDITIONS BEFORE BEGINNING WORK AND SHALL REPORT TO THE ARCHITECT ANY ERRORS, INCONSISTENCIES OR OMISSIONS BEFORE BEGINNING WORK. SEE GENERAL NOTES AND SPECIFICATIONS.

ALL WALLS THIS SHEET ARE WALL TYPE "A1" U.N.O. — L1

## KEYED NOTES:

- 01 STEEL COL. (SEE STRUCTURAL) WRAPPED WALL TYPE A
- 02 STEEL COL. (SEE STRUCTURAL) WRAPPED IN GYP. BD.
- 03 STEEL COL. / (OR) BRACE FRAME (SEE STRUCTURAL) EXPOSED. PAINT.
- 04 STAIRS.
- 05 CASEWORK. SEE INTERIOR ELEVATIONS.
- 06 SPACE FOR REFRIGERATOR.

## KEY PLAN

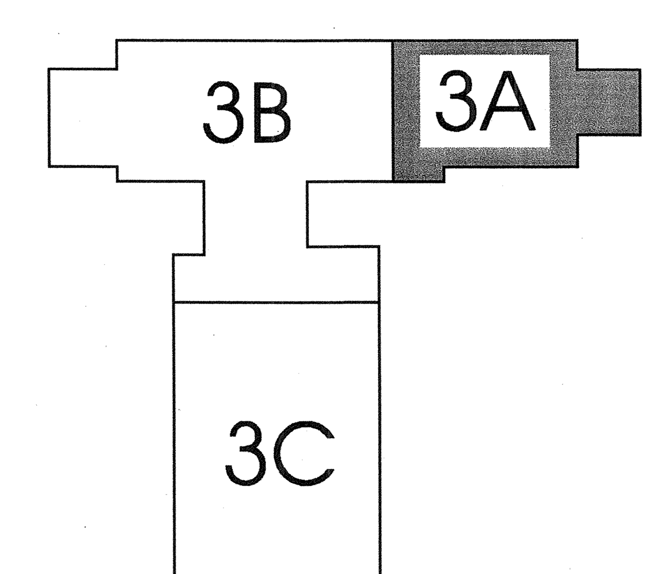



ARCHITECT 0818

ajc architects
703 east 1700 south
salt lake city, utah 84105
ph: 801.466.8818
fx: 801.466.4411
www.ajcarchitects.com

PAYETTE
285 Summer Street
Boston, MA 02210-1522
www.payette.com


OWNER INFORMATION

State of Utah
Department of Administrative Services

Division of Facilities Construction & Management
4110 State Office Building
Salt Lake City, Utah 84114
Phone: (801) 538 - 3018
Fax: (801) 538 - 3267

Internet: http://www.dfcm.utah.gov

PROJECT DESCRIPTION

LIFE SCIENCES RESEARCH CENTER
UTAH STATE UNIVERSITY

USTAR BUILDING #2
350 EAST GRAND AVE.
LOGAN, UTAH

SHEET NAME:

LEVEL 3
FLOOR PLAN - 3A

REVISIONS

| MARK | DATE | DESCRIPTION |
|---|---|---|

ISSUE DATA

| | |
|---|---|
| ISSUE DATE: | DEC. 9, 2008 |
| ISSUE TYPE: | DESDEV |
| DRAWN BY: | J. NIELSEN |
| CHECKED BY: | J. JONES |
| CAD FILE NAME: | |
| DFCM PROJECT # | 06292770 |
| STATE PROPERTY # | - |
| COPYRIGHT: | STATE OF UTAH |

SHEET NUMBER:

AE103A

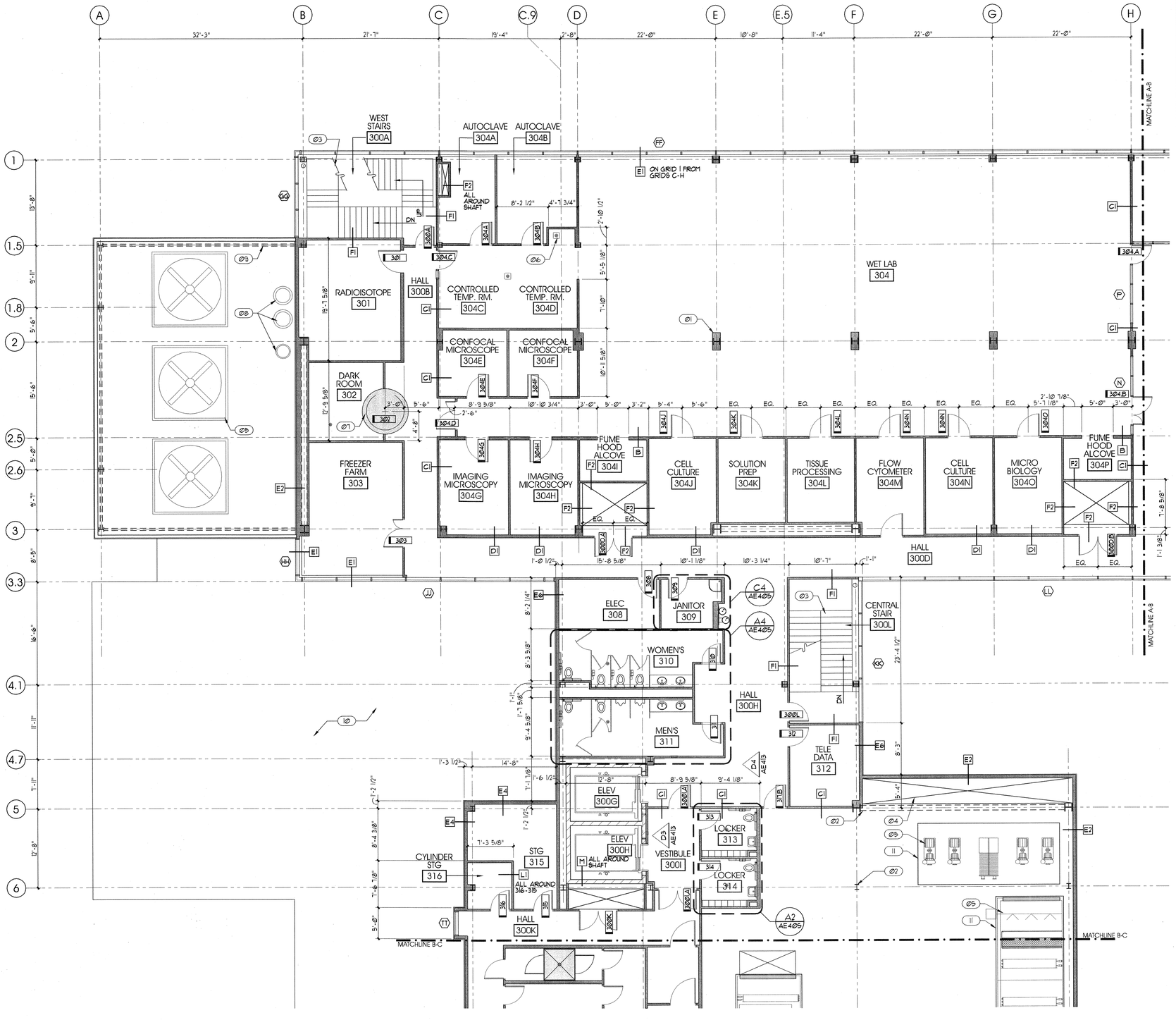


PLAN
scale = 1/8" = 1'-0"

LEVEL 3 FLOOR PLAN - 3B A4 AE103B

## GENERAL NOTES AND LEGEND:

- SEE SHEET AEØØI FOR GENERAL NOTES.
- SEE TITLE SHEET GIØØI FOR DRAWING INDEX.
- DO NOT SCALE DRAWINGS.
- CONTRACTOR /SUBCONTRACTOR'S SHALL VERIFY ALL DIMENSIONS AND CONDITIONS BEFORE BEGINNING WORK AND SHALL REPORT TO THE ARCHITECT ANY ERRORS, INCONSISTENCIES OR OMISSIONS BEFORE BEGINNING WORK. SEE GENERAL NOTES AND SPECIFICATIONS.

ALL WALLS THIS SHEET ARE WALL TYPE "A1" U.N.O. — A1

## KEYED NOTES:

Ø1 STEEL COL. (SEE STRUCTURAL) WRAPPED WALL TYPE A
Ø2 STEEL COL. / OR BRACED FRAME (SEE STRUCTURAL) EXPOSED.
Ø3 CONC. FILLED METAL PAN STAIRS.
Ø4 1 HOUR RATED FLOOR ENLOSURE AT TOP OF SHAFT.
Ø5 MECHANICAL EQUIPMENT, SEE MECHANICAL DRAWINGS.
Ø6 FLOOR DRAIN / FLOOR SINK. SEE PLUMBING DRAWINGS.
Ø7 RECESS SLAB FOR DOOR.
Ø8 EXHAUST FLUES. SEE MECHANICAL DRAWINGS.
Ø9 STEEL GRID STRUCTURE AT ENCLOSURE. PAINT STEEL FRAME. SEE STRUCTURAL.
10 ROOF BELOW. SEE ROOF PLAN.
11 HOUSEKEEPING PAD. COORDINATE SIZE AND LOCATION WITH EQUIPMENT CUT SHEETS.

## KEY PLAN

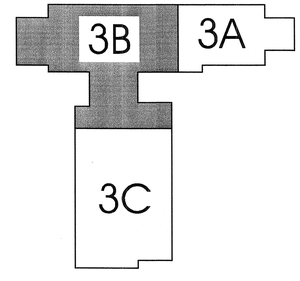



ARCHITECT 0818

ajc architects

703 east 1700 south
salt lake city, utah 84105
ph: 801.466.8818
fx: 801.466.4411
www.ajcarchitects.com

PAYETTE

285 Summer Street
Boston, MA 02210-1522
www.payette.com


OWNER INFORMATION

**State of Utah**
Department of Administrative Services

Division of Facilities Construction & Management
4110 State Office Building
Salt Lake City, Utah 84114
Phone: (801) 538 - 3018
Fax: (801) 538 - 3267

Internet: http://www.dfcm.utah.gov

PROJECT DESCRIPTION

# LIFE SCIENCES RESEARCH CENTER
## UTAH STATE UNIVERSITY

USTAR BUILDING #2
350 EAST GRAND AVE.
LOGAN, UTAH

SHEET NAME:

LEVEL 3
FLOOR PLAN - 3B

REVISIONS

| MARK | DATE | DESCRIPTION |
|---|---|---|

ISSUE DATA

| | |
|---|---|
| ISSUE DATE: | DEC. 9, 2008 |
| ISSUE TYPE: | DESDEV |
| DRAWN BY: | J. NIELSEN |
| CHECKED BY: | J. JONES |
| CAD FILE NAME: | |
| DFCM PROJECT # | 06292770 |
| STATE PROPERTY # | - |
| COPYRIGHT: | STATE OF UTAH |

SHEET NUMBER:

# AE103B

P:\06292770 LIFE SCIENCES RESEARCH CENTER\ARCHITECTURAL\AE103B.dwg, 12/9/2008 4:23:13 PM, mwilson

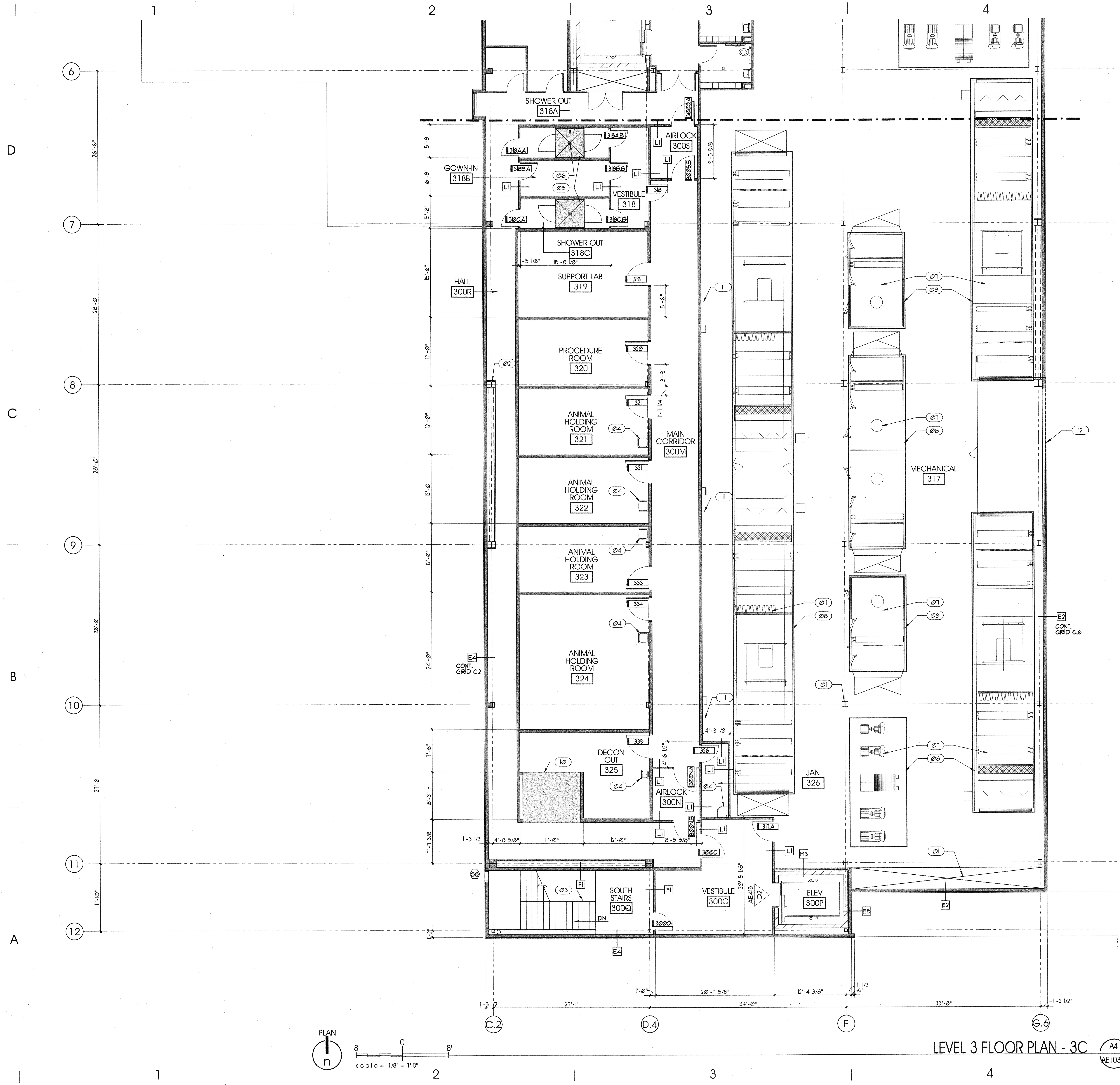


LEVEL 3 FLOOR PLAN - 3C

A4 AE103C

# GENERAL NOTES AND LEGEND:

- SEE SHEET AE001 FOR GENERAL NOTES.
- SEE TITLE SHEET G1001 FOR DRAWING INDEX.
- DO NOT SCALE DRAWINGS.
- CONTRACTOR /SUBCONTRACTOR'S SHALL VERIFY ALL DIMENSIONS AND CONDITIONS BEFORE BEGINNING WORK AND SHALL REPORT TO THE ARCHITECT ANY ERRORS, INCONSISTENCIES OR OMISSIONS BEFORE BEGINNING WORK. SEE GENERAL NOTES AND SPECIFICATIONS.

ALL WALLS THIS SHEET ARE WALL TYPE "L2" U.N.O. — L2

# KEYED NOTES:

- 01 STEEL COL. EXPOSED. (SEE STRUCTURAL)
- 02 STEEL COL. (SEE STRUCTURAL) WRAPPED IN GYP. BD.
- 03 CONC. FILLED METAL PAN STAIRS.
- 04 PLUMBING FIXTURE. SEE PLUMBING DRAWINGS.
- 05 SHOWER ENCLOSURE. SEE PLUMBING DRAWINGS.
- 06 FLOOR DRAIN / FLOOR SINK. SEE PLUMBING DRAWINGS.
- 07 MECHANICAL EQUIPMENT. SEE MECHANICAL DRAWINGS.
- 08 CONC. HOUSEKEEPING PAD. SEE MECHANICAL DRAWINGS. COORD. SIZE AND LOCATIC EQUIPMENT CUT SHEETS.
- 09 1 HOUR ENCLOSURE AT TOP OF SHAFT AT FLOOR LEVEL.
- 10 RECESS FLOOR FOR EQUIPMENT. SEE LAB DRAWINGS.
- 11 STEEL LADDER.
- 12 LOUVER. SEE MECHANICAL.

# KEY PLAN

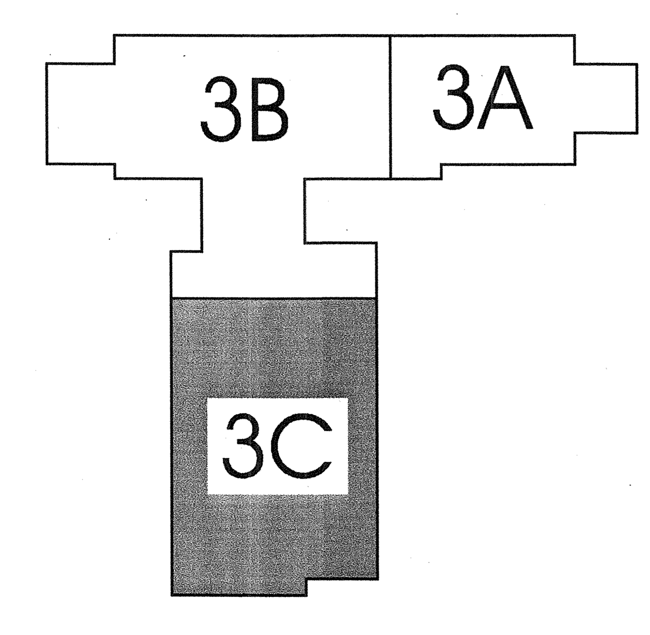


ARCHITECT 0818

ajc architects
703 east 1700 south
salt lake city, utah 84105
ph: 801.466.8818
fx: 801.466.4411
www.ajcarchitects.com

PAYETTE
285 Summer Street
Boston, MA 02210-1522
www.payette.com

OWNER INFORMATION

State of Utah
Department of Administrative Services
Division of Facilities Construction & Management
4110 State Office Building
Salt Lake City, Utah 84114
Phone: (801) 538 - 3018
Fax: (801) 538 - 3267
Internet: http://www.dfcm.utah.gov

PROJECT DESCRIPTION

LIFE SCIENCES RESEARCH CENTER
UTAH STATE UNIVERSITY

USTAR BUILDING #2
350 EAST GRAND AVE.
LOGAN, UTAH

SHEET NAME:

LEVEL 3
FLOOR PLAN - 3C

REVISIONS

| MARK | DATE | DESCRIPTION |
|---|---|---|

ISSUE DATA

| | |
|---|---|
| ISSUE DATE: | DEC. 9, 2008 |
| ISSUE TYPE: | DESDEV |
| DRAWN BY: | J. NIELSEN |
| CHECKED BY: | J. JONES |
| CAD FILE NAME: | |
| DFCM PROJECT # | 06292770 |
| STATE PROPERTY # | - |
| COPYRIGHT: | STATE OF UTAH |

SHEET NUMBER:

AE103C

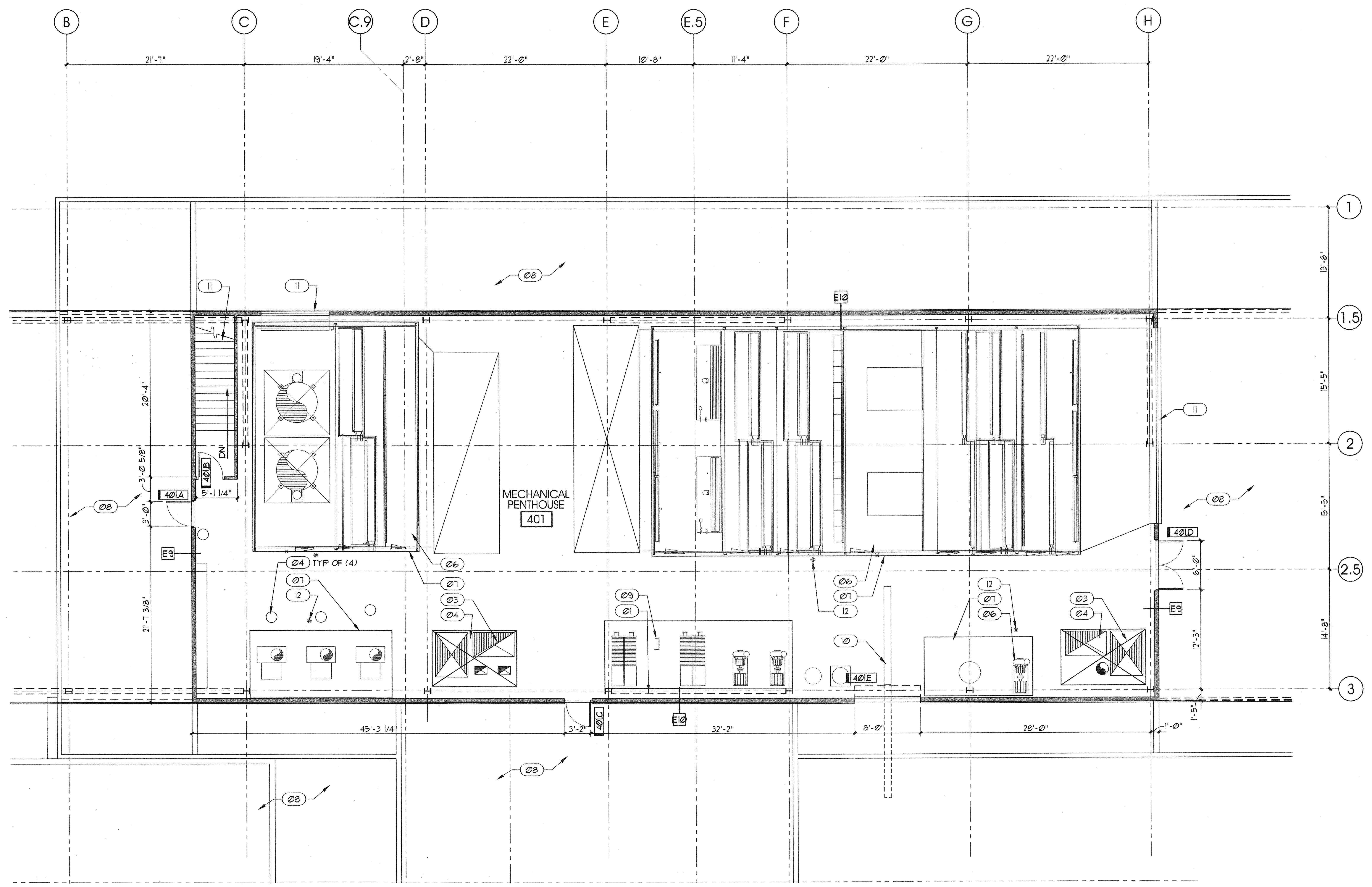


PLAN
n
8' 0' 8'
scale= 1/8" = 1'-0"

PENTHOUSE PLAN - 4B
A4
AE104B

# GENERAL NOTES AND LEGEND:

- SEE SHEET AE001 FOR GENERAL NOTES.
- SEE TITLE SHEET G1001 FOR DRAWING INDEX.
- DO NOT SCALE DRAWINGS.
- CONTRACTOR /SUBCONTRACTOR'S SHALL VERIFY ALL DIMENSIONS AND CONDITIONS BEFORE BEGINNING WORK AND SHALL REPORT TO THE ARCHITECT ANY ERRORS, INCONSISTENCIES OR OMISSIONS BEFORE BEGINNING WORK. SEE GENERAL NOTES AND SPECIFICATIONS.

# KEYED NOTES:

- 01 STEEL COL. / BRACE FRAME. SEE STRUCTURAL.
- 02 CONC. FILLED METAL PAN STAIRS.
- 03 1 HOUR RATED SHAFT ENCLOSURE AT FLOOR LEVEL.
- 04 DUCT INTO SHAFT. SEE MECHANICAL PLANS.
- 05 FLOOR DRAIN / FLOOR SINK. SEE PLUMBING DRAWINGS.
- 06 MECHANICAL EQUIPMENT. SEE MECHANICAL DRAWINGS.
- 07 CONC. HOUSEKEEPING PADS. SEE MECHANICAL DRAWINGS. COORD. SIZE AND LOCATI( EQUIPMENT CUT SHEETS.
- 08 ROOF. SEE ROOF PLAN.
- 09 ROOF ACCESS LADDER.
- 10 ELECTRIC HOIST. SEE ACCESSORY SCHEDULE.
- 11 LOUVER. SEE MECHANICAL PLANS.
- 12 FLOOR DRAIN. SEE PLUMBING DRAWINGS.

# KEY PLAN

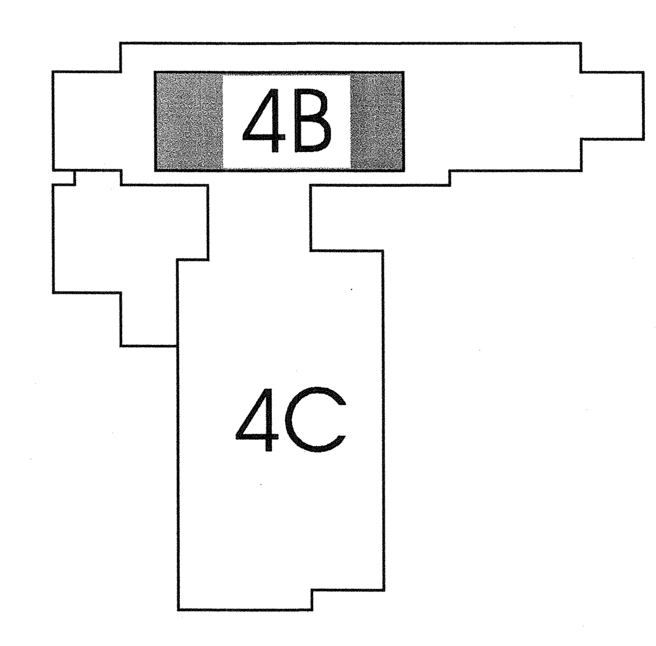



ARCHITECT 0818

ajc architects
703 east 1700 south
salt lake city, utah 84105
ph: 801.466.8818
fx: 801.466.4411
www.ajcarchitects.com

PAYETTE
285 Summer Street
Boston, MA 02210-1522
www.payette.com


OWNER INFORMATION

State of Utah
Department of Administrative Services


Division of Facilities Construction & Management
DFCM
4110 State Office Building
Salt Lake City, Utah 84114
Phone: (801) 538 - 3018
Fax: (801) 538 - 3267

Internet: http://www.dfcm.utah.gov


PROJECT DESCRIPTION

LIFE SCIENCES RESEARCH CENTER
UTAH STATE UNIVERSITY

USTAR BUILDING #2
350 EAST GRAND AVE.
LOGAN, UTAH

SHEET NAME:

PENTHOUSE PLAN
FLOOR PLAN - 4B

REVISIONS

| MARK | DATE | DESCRIPTION |
| --- | --- | --- |

ISSUE DATA

| | |
| --- | --- |
| ISSUE DATE: | DEC. 9, 2008 |
| ISSUE TYPE: | DESDEV |
| DRAWN BY: | J. NIELSEN |
| CHECKED BY: | J. JONES |
| CAD FILE NAME: | |
| DFCM PROJECT # | 06292770 |
| STATE PROPERTY # | - |
| COPYRIGHT: | STATE OF UTAH |

SHEET NUMBER:

AE104B

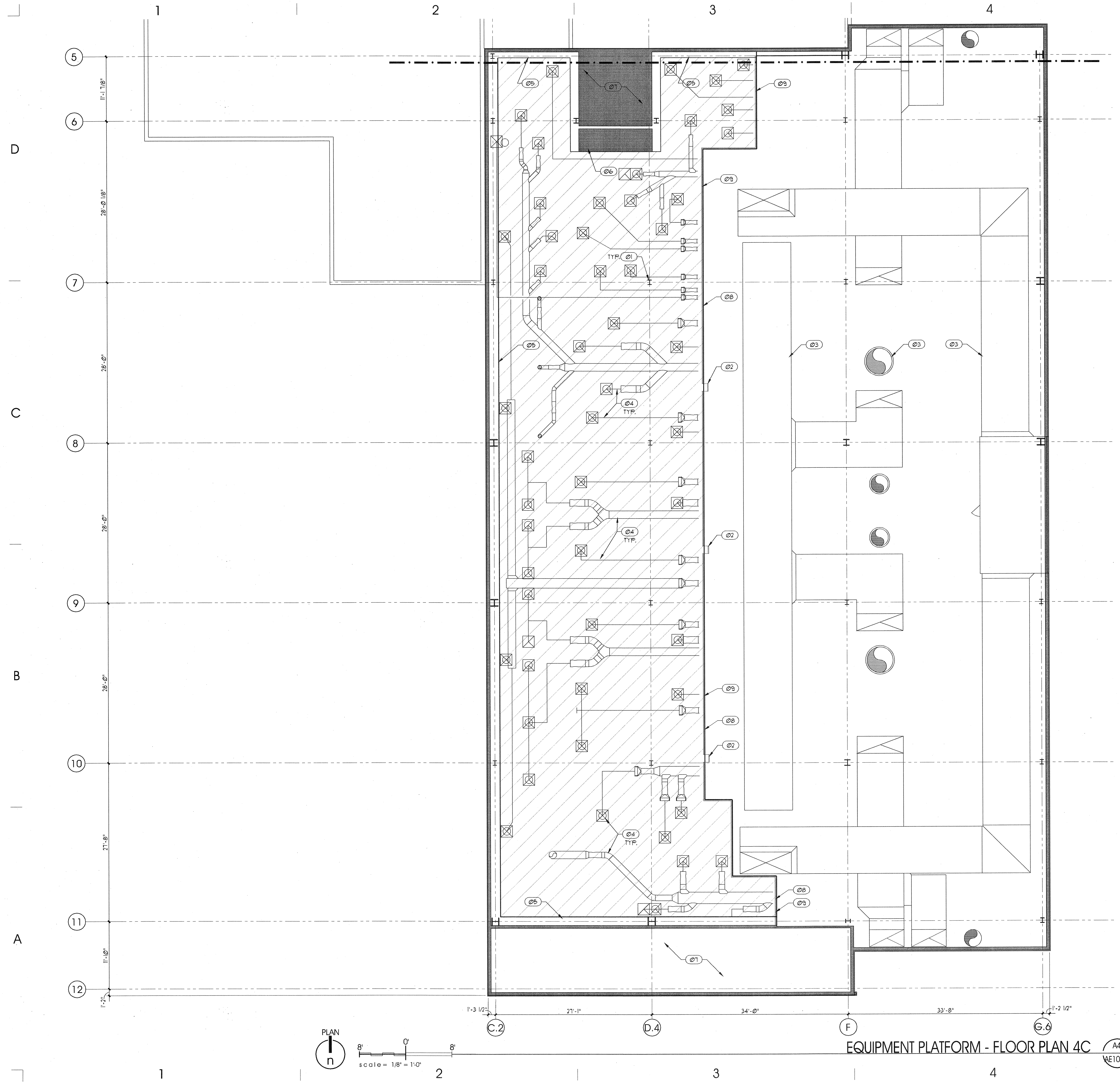


EQUIPMENT PLATFORM - FLOOR PLAN 4C

A4
AE104C

# GENERAL NOTES AND LEGEND:

- SEE SHEET AE001 FOR GENERAL NOTES.
- SEE TITLE SHEET G1001 FOR DRAWING INDEX.
- DO NOT SCALE DRAWINGS.
- CONTRACTOR /SUBCONTRACTOR'S SHALL VERIFY ALL DIMENSIONS AND CONDITIONS BEFORE BEGINNING WORK AND SHALL REPORT TO THE ARCHITECT ANY ERRORS, INCONSISTENCIES OR OMISSIONS BEFORE BEGINNING WORK. SEE GENERAL NOTES AND SPECIFICATIONS.

HATCH INDICATES AREA OF PLATFORM FLOOR. FLOOR SHALL BE: METAL DECK BEARING ON METAL FRAMING (PER STRUCTURAL DRAWINGS) W/ 5/8" GLAS MAT TILE BACKER OVER DECK & COATING AS PER FINISH PLANS.

# KEYED NOTES:

| | |
|---|---|
| 01 | STEEL COL. SEE STRUCTURAL. |
| 02 | STEEL LADDER. |
| 03 | MECHANICAL DUCT ABOVE AIR HANDLERS. |
| 04 | MECHANICAL DUCT / EQUIPMENT AT FLOOR LEVEL OF |
| 05 | CURB @ PERIMETER OF PLATFORM. |
| 06 | CURB AT TOP OF PIPE SHAFT. |
| 07 | CEILNG SPACE. |
| 08 | EDGE OF PLATFORM. |
| 09 | 42" HIGH PIPE RAIL GUARD W/ (2) INTERMEDIATE RAILS. |

# KEY PLAN

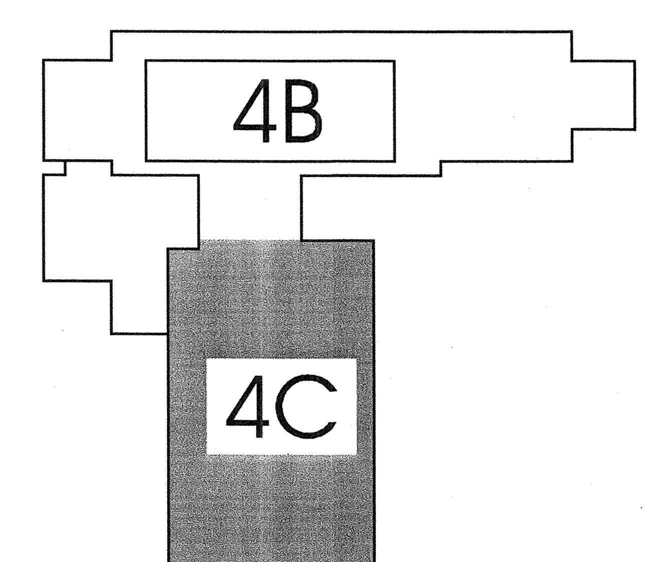


ARCHITECT 0818

ajc architects
703 east 1700 south
salt lake city, utah 84105
ph: 801.466.8818
fx: 801.466.4411
www.ajcarchitects.com

PAYETTE
285 Summer Street
Boston, MA 02210-1522
www.payette.com

OWNER INFORMATION

State of Utah
Department of Administrative Services

Division of Facilities Construction & Management
4110 State Office Building
Salt Lake City, Utah 84114
Phone: (801) 538 - 3018
Fax: (801) 538 - 3267

Internet: http://www.dfcm.utah.gov

PROJECT DESCRIPTION

## LIFE SCIENCES RESEARCH CENTER
UTAH STATE UNIVERSITY

USTAR BUILDING #2
350 EAST GRAND AVE.
LOGAN, UTAH

SHEET NAME:

EQUIPMENT PLATFORM
FLOOR PLAN - 4C

REVISIONS

| MARK | DATE | DESCRIPTION |
|---|---|---|

ISSUE DATA

| | |
|---|---|
| ISSUE DATE: | DEC. 9, 2008 |
| ISSUE TYPE: | DESDEV |
| DRAWN BY: | J. NIELSEN |
| CHECKED BY: | J. JONES |
| CAD FILE NAME: | |
| DFCM PROJECT # | 06292770 |
| STATE PROPERTY # | - |
| COPYRIGHT: | STATE OF UTAH |

SHEET NUMBER:

# AE104C

## GENERAL NOTES AND LEGEND:

- SEE SHEET AE001 FOR GENERAL NOTES.
- SEE COVER SHEET FOR DRAWING INDEX.
- DO NOT SCALE DRAWINGS.
- CONTRACTOR SHALL VERIFY ALL DIMENSIONS AND CONDITIONS BEFORE BEGINNING WORK AND SHALL REPORT TO THE ARCHITECT ANY ERRORS, INCONSISTENCIES OR OMISSIONS BEFORE BEGINNING WORK. SEE GENERAL NOTES AND SPECIFICATIONS.

CARPET

STONE TILE

CERAMIC FLOOR TILE.

VINYL COMPOSITION TILE (VCT)

WALK OFF MAT CARPET TILES

THE FINISH SYMBOL GROUP AS SHOWN BELOW APPLIES TO THE ENTIRE AREA OF THE ROOM WHICH THE SYMBOL IS LOCATED IN. WHEN A FINISH SYMBOL IS SHOWN SINGLY IT OVERIDES THE SYMBOL GROUP FOR THAT ARE FOR WHICH IT IS ATTACHED.

WALL (WEST) — WALL (NORTH)
FLOOR — BASE
WALL (SOUTH) — WALL (EAST)

VINYL TRANSITION STRIP — SEE -

MARBLE THRESHOLD — SEE -

ALUM. THRESHOLD — INSTALL PER MFG. DIRECTIONS. SEE DOOR SCHEDULE.

FOR TYPICAL RUBBER BASE DETAIL — SEE -

FOR TYPICAL TILE BASE DETAIL — SEE -

## KEYED NOTES:

(01) FLOOR DRAIN. SEE PLUMBING DWG'S.

## KEY PLAN

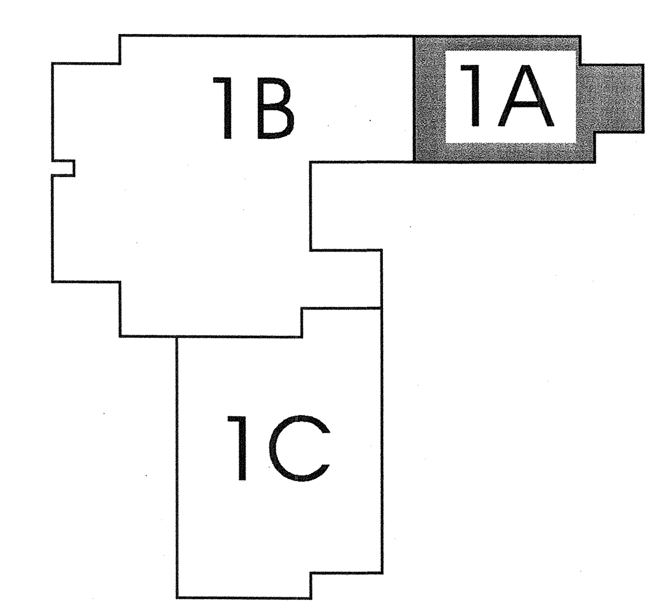


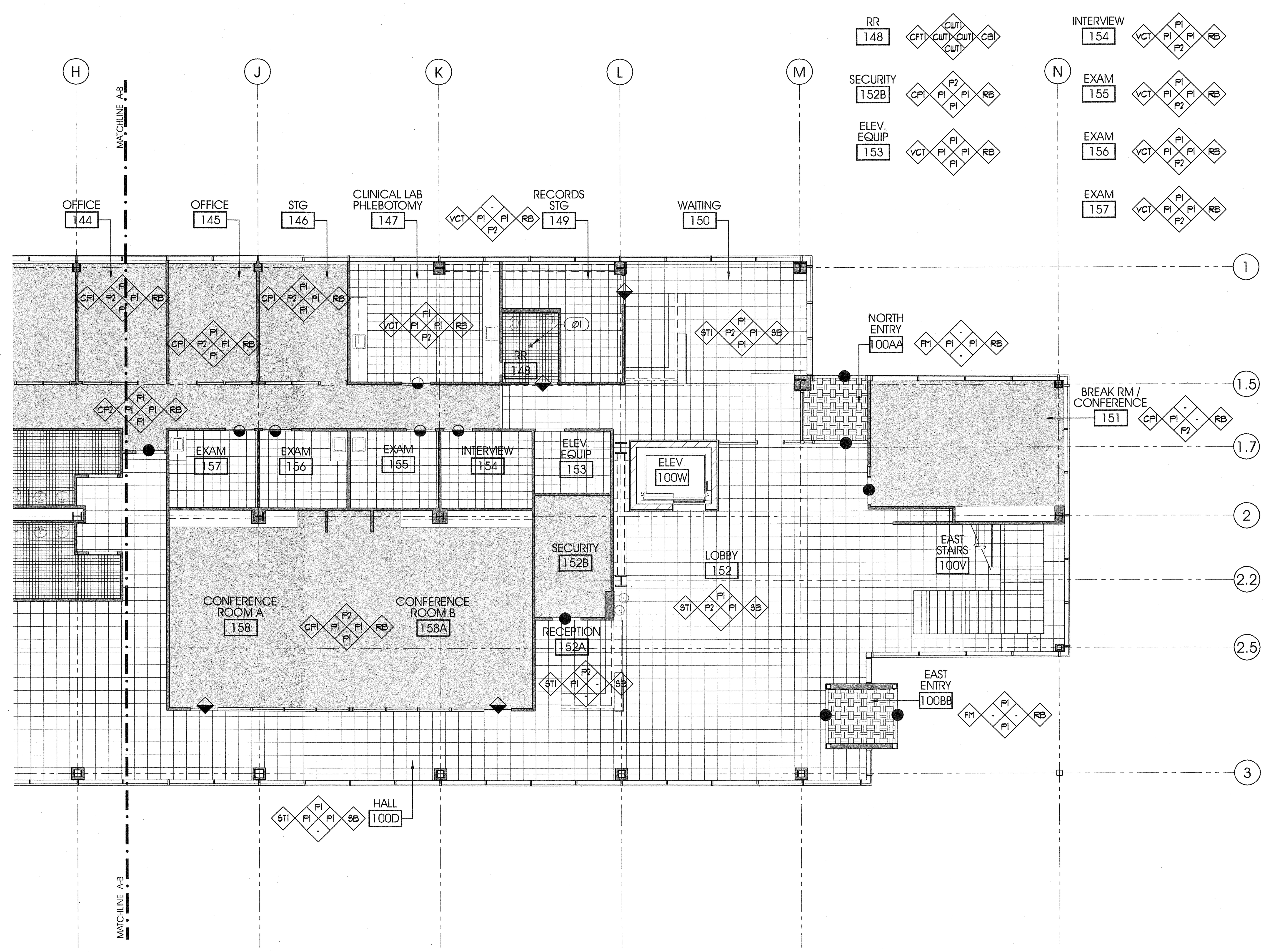


LEVEL 1 FINISH PLAN - 1A (A4 / AE105A)


ARCHITECT 0818
ajc architects
703 east 1700 south
salt lake city, utah 84105
ph: 801.466.8818
fx: 801.466.4411
www.ajcarchitects.com

PAYETTE
285 Summer Street
Boston, MA 02210-1522
www.payette.com



OWNER INFORMATION
State of Utah
Department of Administrative Services
Division of Facilities Construction & Management
4110 State Office Building
Salt Lake City, Utah 84114
Phone: (801) 538 - 3018
Fax: (801) 538 - 3267
Internet: http://www.dfcm.utah.gov


PROJECT DESCRIPTION

LIFE SCIENCES RESEARCH CENTER
UTAH STATE UNIVERSITY

USTAR BUILDING #2
350 EAST GRAND AVE.
LOGAN, UTAH

SHEET NAME:

LEVEL 1
FINISH PLAN - 1A

REVISIONS

| MARK | DATE | DESCRIPTION |
|---|---|---|

ISSUE DATA

| | |
|---|---|
| ISSUE DATE: | DEC. 9, 2008 |
| ISSUE TYPE: | DESDEV |
| DRAWN BY: | J. NIELSEN |
| CHECKED BY: | J. JONES |
| CAD FILE NAME: | |
| DFCM PROJECT # | 06292770 |
| STATE PROPERTY # | - |
| COPYRIGHT: | STATE OF UTAH |

SHEET NUMBER:

AE105A

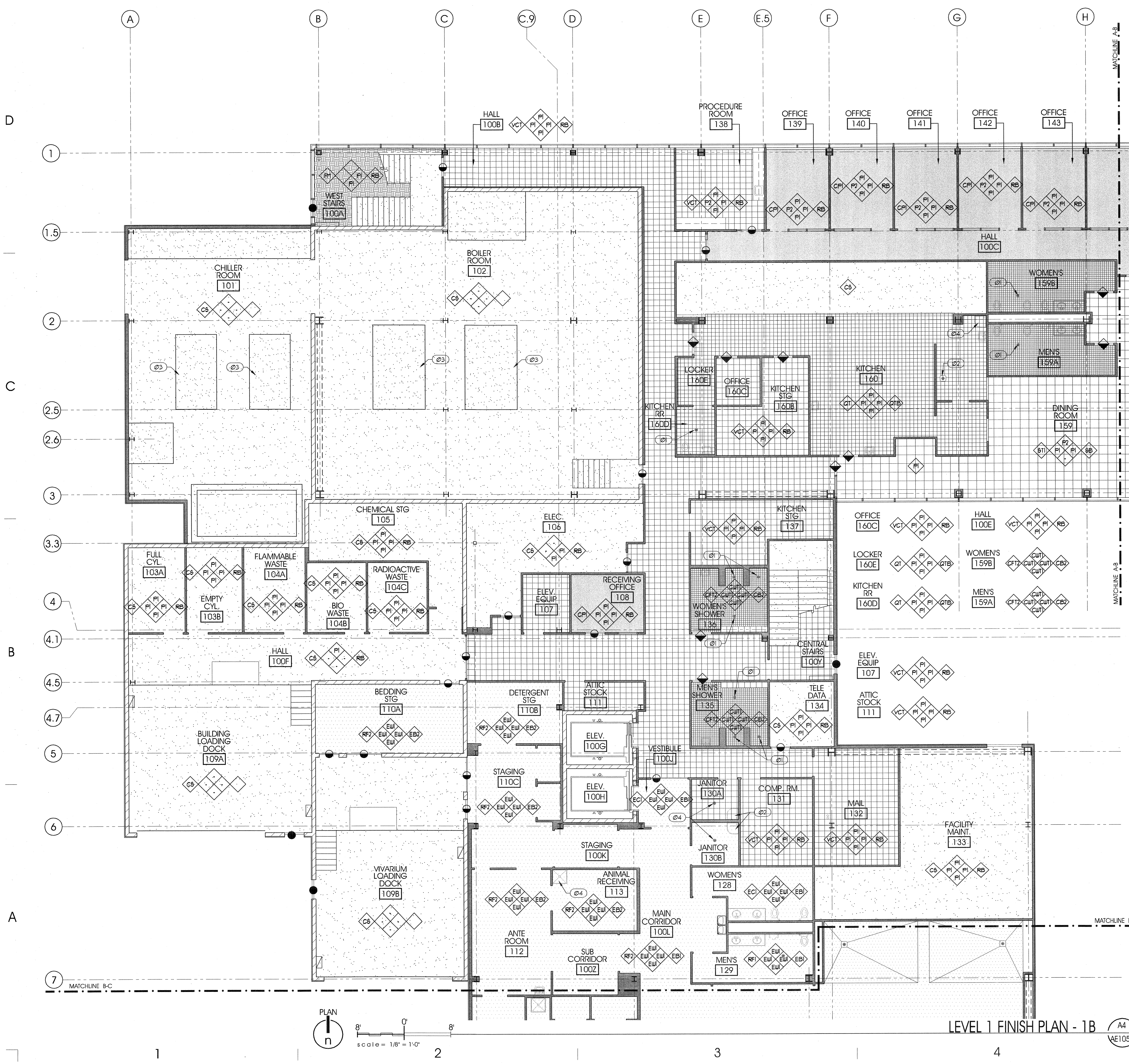


## GENERAL NOTES AND LEGEND:

- SEE SHEET AE001 FOR GENERAL NOTES.
- SEE COVER SHEET FOR DRAWING INDEX.
- DO NOT SCALE DRAWINGS.
- CONTRACTOR SHALL VERIFY ALL DIMENSIONS AND CONDITIONS BEFORE BEGINNING WORK AND SHALL REPORT TO THE ARCHITECT ANY ERRORS, INCONSISTENCIES OR OMISSIONS BEFORE BEGINNING WORK. SEE GENERAL NOTES AND SPECIFICATIONS.

CARPET
STONE TILE
CERAMIC FLOOR TILE
SEALED CONCRETE
VINYL COMPOSITION TILE (VCT)
WALK OFF MAT CARPET TILES
QUARRY TILE

THE FINISH SYMBOL GROUP AS SHOWN BELOW APPLIES TO THE ENTIRE AREA OF THE ROOM WHICH THE SYMBOL IS LOCATED IN. WHEN A FINISH SYMBOL IS SHOWN SINGLY IT OVERIDES THE SYMBOL GROUP FOR THAT ARE FOR WHICH IT IS ATTACHED.

WALL (WEST) — WALL (NORTH)
FLOOR — BASE
WALL (SOUTH) — WALL (EAST)

VINYL TRANSITION STRIP — SEE -
MARBLE THRESHOLD — SEE -
ALUM. THRESHOLD — INSTALL PER MFG. DIRECTIONS. SEE DOOR SCHEDULE.
FOR TYPICAL RUBBER BASE DETAIL — SEE -
FOR TYPICAL TILE BASE DETAIL — SEE -

## KEYED NOTES:

- 01 FLOOR DRAIN. SEE PLUMBING DWG'S.
- 02 FLOOR SINK. SEE PLUMBING DWG'S.
- 03 HOUSEKEEPING PAD.
- 04 MOP SINK.

## KEY PLAN

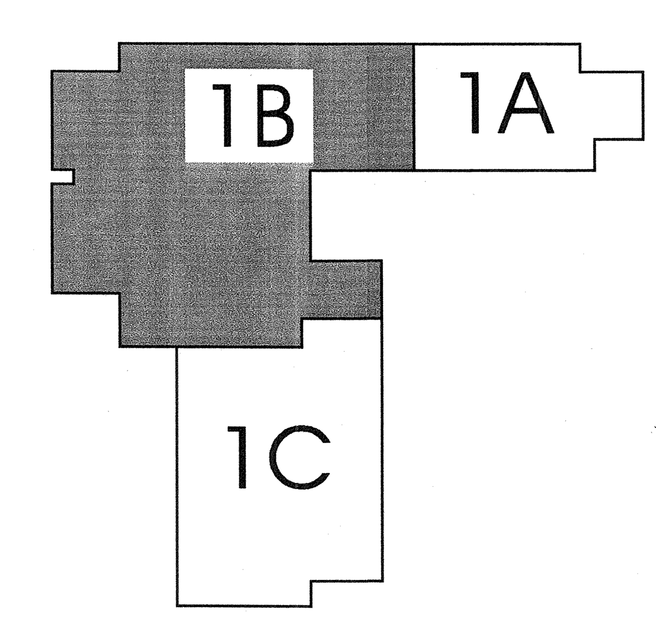



ARCHITECT 0818

ajc architects
703 east 1700 south
salt lake city, utah 84105
ph: 801.466.8818
fx: 801.466.4411
www.ajcarchitects.com

PAYETTE
285 Summer Street
Boston, MA 02210-1522
www.payette.com

OWNER INFORMATION
State of Utah
Department of Administrative Services
Division of Facilities Construction & Management
4110 State Office Building
Salt Lake City, Utah 84114
Phone: (801) 538 - 3018
Fax: (801) 538 - 3267
Internet: http://www.dfcm.utah.gov


PROJECT DESCRIPTION

# LIFE SCIENCES RESEARCH CENTER
UTAH STATE UNIVERSITY

USTAR BUILDING #2
350 EAST GRAND AVE.
LOGAN, UTAH

SHEET NAME:
LEVEL 1
FINISH PLAN - 1B

REVISIONS

| MARK | DATE | DESCRIPTION |
|---|---|---|

ISSUE DATA

| | |
|---|---|
| ISSUE DATE: | DEC. 9, 2008 |
| ISSUE TYPE: | DESDEV |
| DRAWN BY: | J. NIELSEN |
| CHECKED BY: | J. JONES |
| CAD FILE NAME: | |
| DFCM PROJECT # | 06292770 |
| STATE PROPERTY # | - |
| COPYRIGHT: | STATE OF UTAH |

SHEET NUMBER:
# AE105B

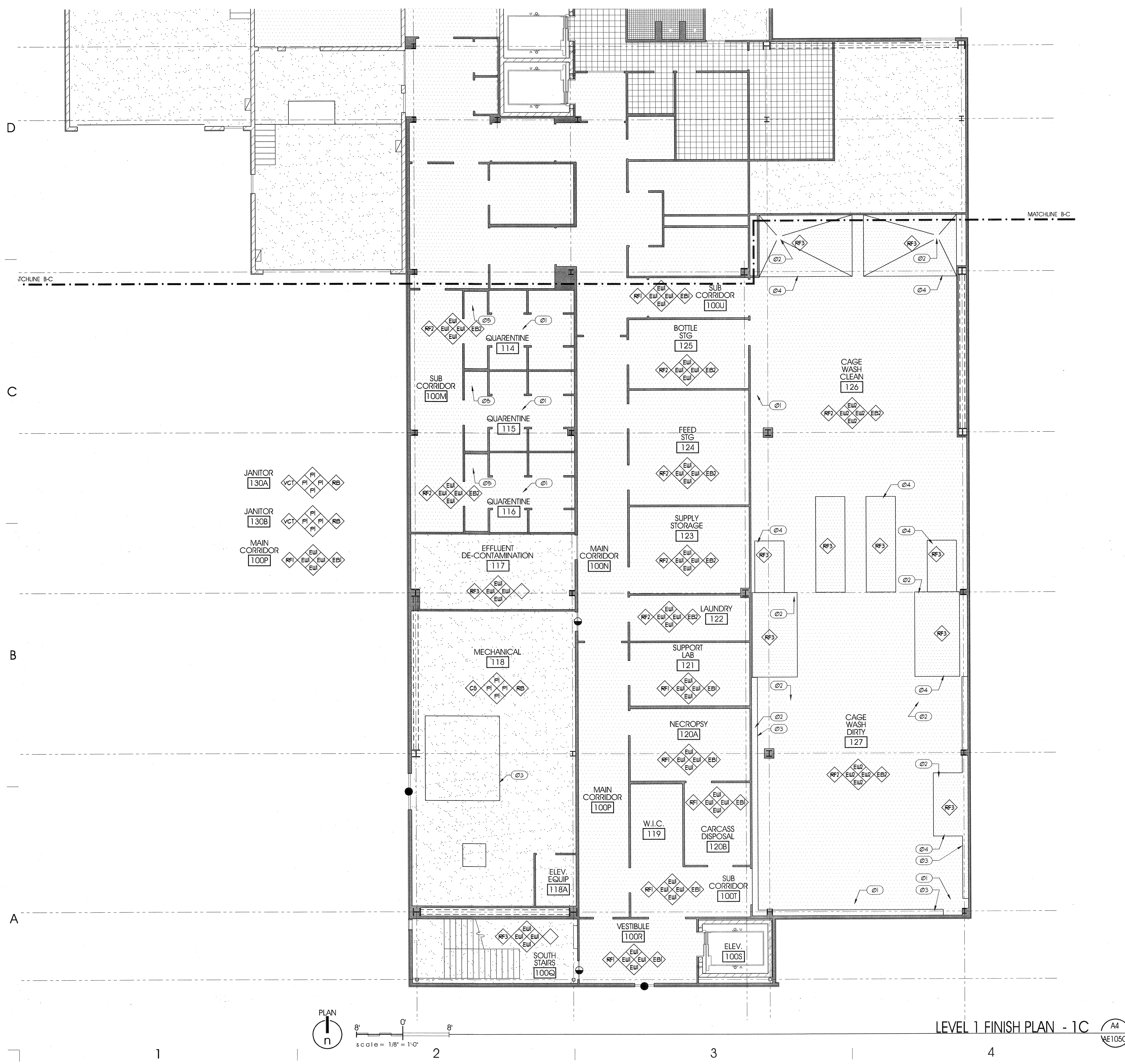


## GENERAL NOTES AND LEGEND:

- SEE SHEET AE001 FOR GENERAL NOTES.
- SEE COVER SHEET FOR DRAWING INDEX.
- DO NOT SCALE DRAWINGS.
- CONTRACTOR SHALL VERIFY ALL DIMENSIONS AND CONDITIONS BEFORE BEGINNING WORK AND SHALL REPORT TO THE ARCHITECT ANY ERRORS, INCONSISTENCIES OR OMISSIONS BEFORE BEGINNING WORK. SEE GENERAL NOTES AND SPECIFICATIONS.

SEALED CONCRETE

URETHANE MORTAR COATING

THE FINISH SYMBOL GROUP AS SHOWN BELOW APPLIES TO THE ENTIRE AREA OF THE ROOM WHICH THE SYUMBOL IS LOCATED IN. WHEN A FINISH SYMBOL IS SHOWN SINGLY IT OVERIDES THE SYMBOL GROUP FOR THAT ARE FOR WHICH IT IS ATTACHED.

WALL (WEST) — WALL (NORTH)
FLOOR — BASE
WALL (SOUTH) — WALL (EAST)

| | |
|---|---|
| VINYL TRANSITION STRIP | SEE - |
| MARBLE THRESHOLD | SEE - |
| ALUM. THRESHOLD | INSTALL PER MFG. DIRECTIONS. SEE DOOR SCHEDULE. |
| FOR TYPICAL RUBBER BASE DETAIL | SEE - |
| FOR TYPICAL TILE BASE DETAIL | SEE - |

## KEYED NOTES:

- (01) FLOOR DRAIN. SEE PLUMBING DRAWINGS.
- (02) FLOOR SINK. SEE PLUMBING DRAWINGS.
- (03) CONCRETE FORMED TRENCH DRAIN. SEE PLUMBING DRAWINGS.
- (04) RECESS SLAB FOR EQUIPMENT. COORD. W/ EQUIPMENT.
- (05) MOP SINK. SEE PLUMBING DRAWINGS.

## KEY PLAN

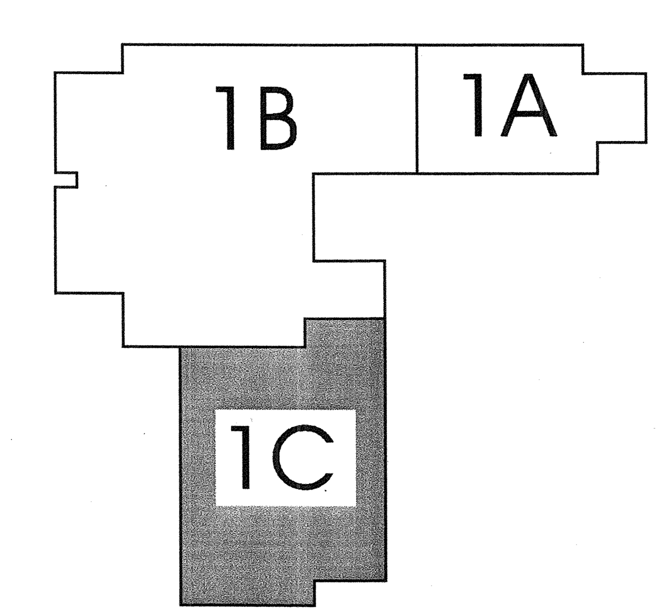


ARCHITECT 0818

ajc architects
703 east 1700 south
salt lake city, utah 84105
ph: 801.466.8818
fx: 801.466.4411
www.ajcarchitects.com

PAYETTE
285 Summer Street
Boston, MA 02210-1522
www.payette.com

OWNER INFORMATION

State of Utah
Department of Administrative Services
Division of Facilities Construction & Management
4110 State Office Building
Salt Lake City, Utah 84114
Phone: (801) 538 - 3018
Fax: (801) 538 - 3267
Internet: http://www.dfcm.utah.gov

PROJECT DESCRIPTION

# LIFE SCIENCES RESEARCH CENTER
UTAH STATE UNIVERSITY

USTAR BUILDING #2
350 EAST GRAND AVE.
LOGAN, UTAH

SHEET NAME:
LEVEL 1
FINISH PLAN - 1C

REVISIONS

| MARK | DATE | DESCRIPTION |
|---|---|---|

ISSUE DATA

| | |
|---|---|
| ISSUE DATE: | DEC. 9, 2008 |
| ISSUE TYPE: | DESDEV |
| DRAWN BY: | J. NIELSEN |
| CHECKED BY: | J. JONES |
| CAD FILE NAME: | |
| DFCM PROJECT # | 06292770 |
| STATE PROPERTY # | - |
| COPYRIGHT: | STATE OF UTAH |

SHEET NUMBER:
AE105C

## GENERAL NOTES AND LEGEND:

- SEE SHEET AE001 FOR GENERAL NOTES.
- SEE COVER SHEET FOR DRAWING INDEX.
- DO NOT SCALE DRAWINGS.
- CONTRACTOR SHALL VERIFY ALL DIMENSIONS AND CONDITIONS BEFORE BEGINNING WORK AND SHALL REPORT TO THE ARCHITECT ANY ERRORS, INCONSISTENCIES OR OMISSIONS BEFORE BEGINNING WORK. SEE GENERAL NOTES AND SPECIFICATIONS.

CARPET

VINYL COMPOSITION TILE (VCT)

THE FINISH SYMBOL GROUP AS SHOWN BELOW APPLIES TO THE ENTIRE AREA OF THE ROOM WHICH THE SYMBOL IS LOCATED IN. WHEN A FINISH SYMBOL IS SHOWN SINGLY IT OVERIDES THE SYMBOL GROUP FOR THAT ARE FOR WHICH IT IS ATTACHED.

WALL (WEST) — WALL (NORTH)
FLOOR — BASE
WALL (SOUTH) — WALL (EAST)

VINYL TRANSITION STRIP — SEE -

MARBLE THRESHOLD — SEE -

ALUM. THRESHOLD — INSTALL PER MFG. DIRECTIONS. SEE DOOR SCHEDULE.

FOR TYPICAL RUBBER BASE DETAIL — SEE -

FOR TYPICAL TILE BASE DETAIL — SEE -

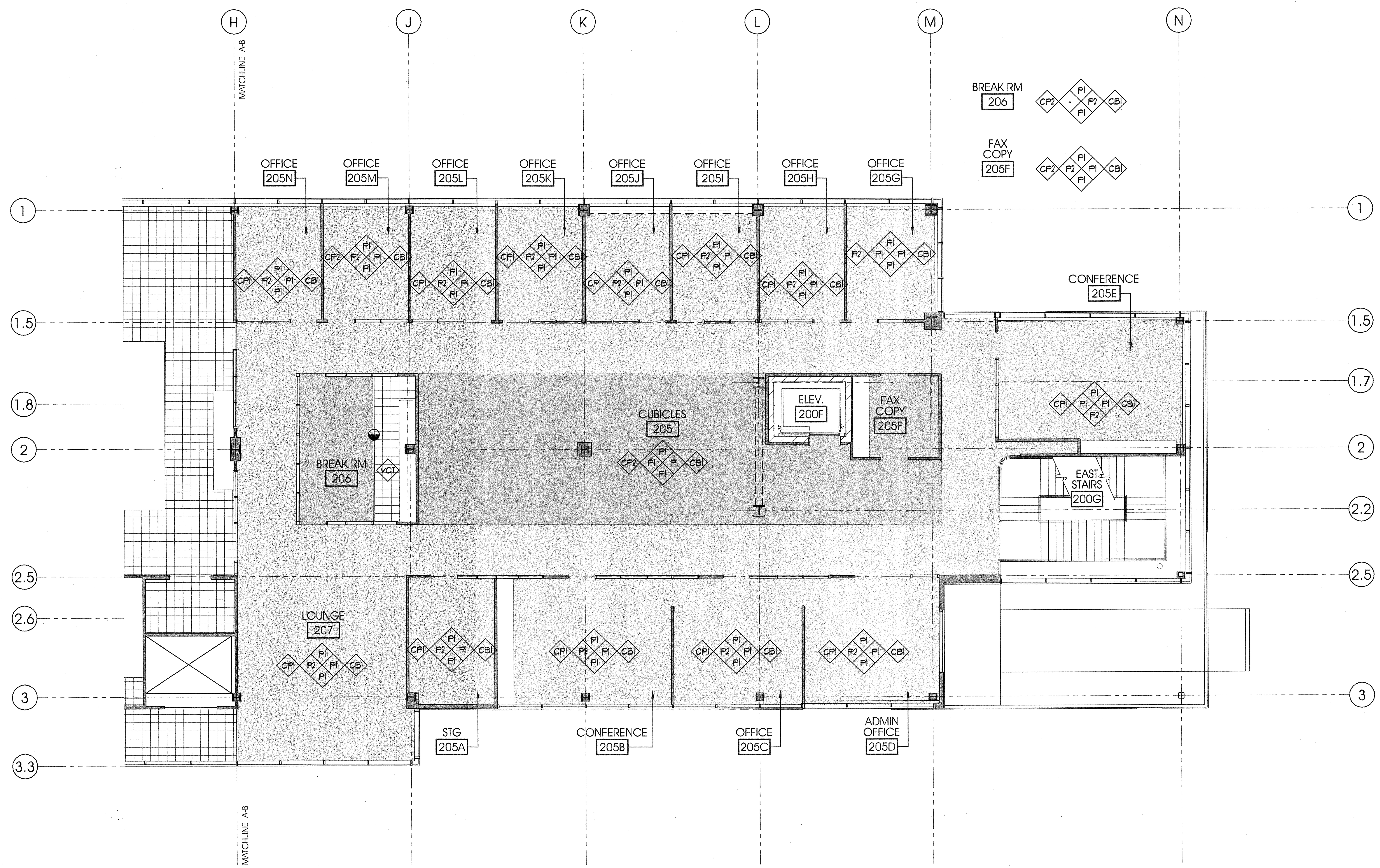


PLAN
n

8' 0' 8'
scale = 1/8" = 1'-0"

LEVEL 2 FINISH PLAN - 2A
A4
AE106A

KEY PLAN

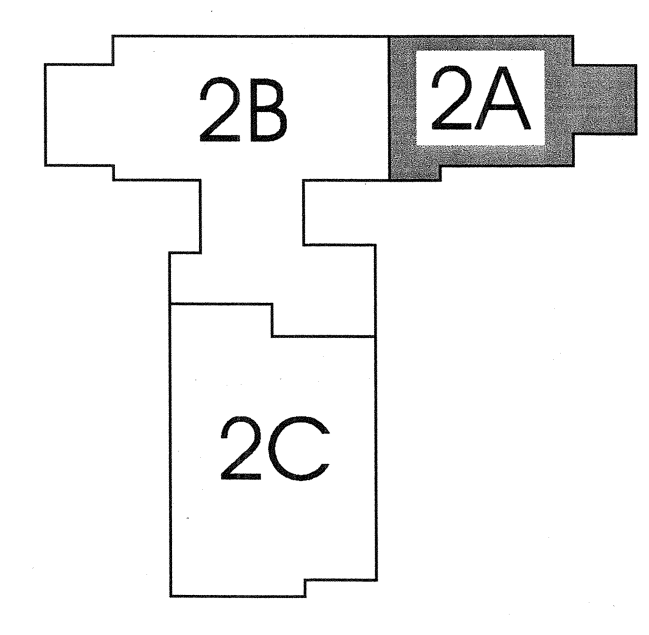


ARCHITECT 0818


ajc architects
703 east 1700 south
salt lake city, utah 84105
ph: 801.466.8818
fx: 801.466.4411
www.ajcarchitects.com

P A Y E T T E
285 Summer Street
Boston, MA 02210-1522
www.payette.com


OWNER INFORMATION


State of Utah
Department of Administrative Services
Division of Facilities Construction & Management
DFCM
4110 State Office Building
Salt Lake City, Utah 84114
Phone: (801) 538 - 3018
Fax: (801) 538 - 3267
Internet: http://www.dfcm.utah.gov


PROJECT DESCRIPTION

LIFE SCIENCES
RESEARCH CENTER
UTAH STATE UNIVERSITY

USTAR BUILDING #2
350 EAST GRAND AVE.
LOGAN, UTAH

SHEET NAME:

LEVEL 2
FINISH PLAN - 2A

REVISIONS

| MARK | DATE | DESCRIPTION |
| --- | --- | --- |

ISSUE DATA

| | |
| --- | --- |
| ISSUE DATE: | DEC. 9, 2008 |
| ISSUE TYPE: | DESDEV |
| DRAWN BY: | J. NIELSEN |
| CHECKED BY: | J. JONES |
| CAD FILE NAME: | |
| DFCM PROJECT # | 06292770 |
| STATE PROPERTY # | - |
| COPYRIGHT: | STATE OF UTAH |

SHEET NUMBER:

AE106A

## GENERAL NOTES AND LEGEND:

- SEE SHEET AE001 FOR GENERAL NOTES.
- SEE COVER SHEET FOR DRAWING INDEX.
- DO NOT SCALE DRAWINGS.
- CONTRACTOR SHALL VERIFY ALL DIMENSIONS AND CONDITIONS BEFORE BEGINNING WORK AND SHALL REPORT TO THE ARCHITECT ANY ERRORS, INCONSISTENCIES OR OMISSIONS BEFORE BEGINNING WORK. SEE GENERAL NOTES AND SPECIFICATIONS.

CARPET

CERAMIC FLOOR TILE

SEALED CONCRETE

VINYL COMPOSITION TILE (VCT)

URETHANE MORTAR COATING

THE FINISH SYMBOL GROUP AS SHOWN BELOW APPLIES TO THE ENTIRE AREA OF THE ROOM WHICH THE SYMBOL IS LOCATED IN. WHEN A FINISH SYMBOL IS SHOWN SINGLY IT OVERIDES THE SYMBOL GROUP FOR THAT ARE FOR WHICH IT IS ATTACHED.

WALL (WEST) — WALL (NORTH)
FLOOR — BASE
WALL (SOUTH) — WALL (EAST)

VINYL TRANSITION STRIP — SEE -

MARBLE THRESHOLD — SEE -

ALUM. THRESHOLD — INSTALL PER MFG. DIRECTIONS, SEE DOOR SCHEDULE.

FOR TYPICAL RUBBER BASE DETAIL — SEE -

FOR TYPICAL TILE BASE DETAIL — SEE -

## KEYED NOTES:

01 FLOOR DRAIN, SEE PLUMBING DWG'S.

## KEY PLAN

2B 2A 2C


ARCHITECT 0818

ajc architects

703 east 1700 south
salt lake city, utah 84105
ph: 801.466.8818
fx: 801.466.4411
www.ajcarchitects.com

PAYETTE

285 Summer Street
Boston, MA 02210-1522
www.payette.com

OWNER INFORMATION

State of Utah
Department of Administrative Services

Division of Facilities Construction & Management
4110 State Office Building
Salt Lake City, Utah 84114
Phone: (801) 538 - 3018
Fax: (801) 538 - 3267

Internet: http://www.dfcm.utah.gov


PROJECT DESCRIPTION

# LIFE SCIENCES RESEARCH CENTER
UTAH STATE UNIVERSITY

USTAR BUILDING #2
350 EAST GRAND AVE.
LOGAN, UTAH

SHEET NAME:

LEVEL 2
FINISH PLAN - 2B

REVISIONS

| MARK | DATE | DESCRIPTION |
| --- | --- | --- |

ISSUE DATA

| | |
| --- | --- |
| ISSUE DATE: | DEC. 9, 2008 |
| ISSUE TYPE: | DESDEV |
| DRAWN BY: | J. NIELSEN |
| CHECKED BY: | J. JONES |
| CAD FILE NAME: | |
| DFCM PROJECT # | 06292770 |
| STATE PROPERTY # | - |
| COPYRIGHT: | STATE OF UTAH |

SHEET NUMBER:

AE106B

PLAN

8' 0' 8'

scale = 1/8" = 1'-0"

LEVEL 2 FINISH PLAN - 2C

A4 / AE106C

## GENERAL NOTES AND LEGEND:

- SEE SHEET AE@@I FOR GENERAL NOTES.
- SEE COVER SHEET FOR DRAWING INDEX.
- DO NOT SCALE DRAWINGS.
- CONTRACTOR SHALL VERIFY ALL DIMENSIONS AND CONDITIONS BEFORE BEGINNING WORK AND SHALL REPORT TO THE ARCHITECT ANY ERRORS, INCONSISTENCIES OR OMISSIONS BEFORE BEGINNING WORK. SEE GENERAL NOTES AND SPECIFICATIONS.

SEALED CONCRETE

URETHANE MORTAR COATING

THE FINISH SYMBOL GROUP AS SHOWN BELOW APPLIES TO THE ENTIRE AREA OF THE ROOM WHICH THE SYMBOL IS LOCATED IN. WHEN A FINISH SYMBOL IS SHOWN SINGLY IT OVERRIDES THE SYMBOL GROUP FOR THAT ARE FOR WHICH IT IS ATTACHED.

WALL (WEST) — WALL (NORTH)
FLOOR — BASE
WALL (SOUTH) — WALL (EAST)

VINYL TRANSITION STRIP — SEE -

## KEYED NOTES:

- Ø1 FLOOR DRAIN. SEE PLUMBING DWG'S.
- Ø2 MOP SINK. SEE PLUMBING DWG'S.
- Ø3 TRENCH DRAIN.

## KEY PLAN

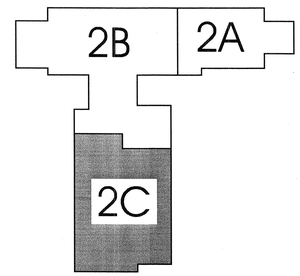



ARCHITECT 0818

ajc architects

703 east 1700 south
salt lake city, utah 84105
ph: 801.466.8818
fx: 801.466.4411
www.ajcarchitects.com

PAYETTE

285 Summer Street
Boston, MA 02210-1522
www.payette.com


OWNER INFORMATION

State of Utah
Department of Administrative Services

Division of Facilities
Construction & Management
4110 State Office Building
Salt Lake City, Utah 84114
Phone: (801) 538 - 3018
Fax: (801) 538 - 3267

Internet: http://www.dfcm.utah.gov

PROJECT DESCRIPTION

LIFE SCIENCES RESEARCH CENTER
UTAH STATE UNIVERSITY

USTAR BUILDING #2
350 EAST GRAND AVE.
LOGAN, UTAH

SHEET NAME:

LEVEL 2
FINISH PLAN - 2C

REVISIONS

| MARK | DATE | DESCRIPTION |
|---|---|---|

ISSUE DATA

| | |
|---|---|
| ISSUE DATE: | DEC. 9, 2008 |
| ISSUE TYPE: | DESDEV |
| DRAWN BY: | J. NIELSEN |
| CHECKED BY: | J. JONES |
| CAD FILE NAME: | |
| DFCM PROJECT # | 06292770 |
| STATE PROPERTY # | - |
| COPYRIGHT: | STATE OF UTAH |

SHEET NUMBER:

AE106C

P:\06292770.B USTAR #2 USU\DESIGN\ARCHITECTURAL\USTAR 2 AE106C.dwg, 12/9/2008 9:43:26 PM, jnielsen

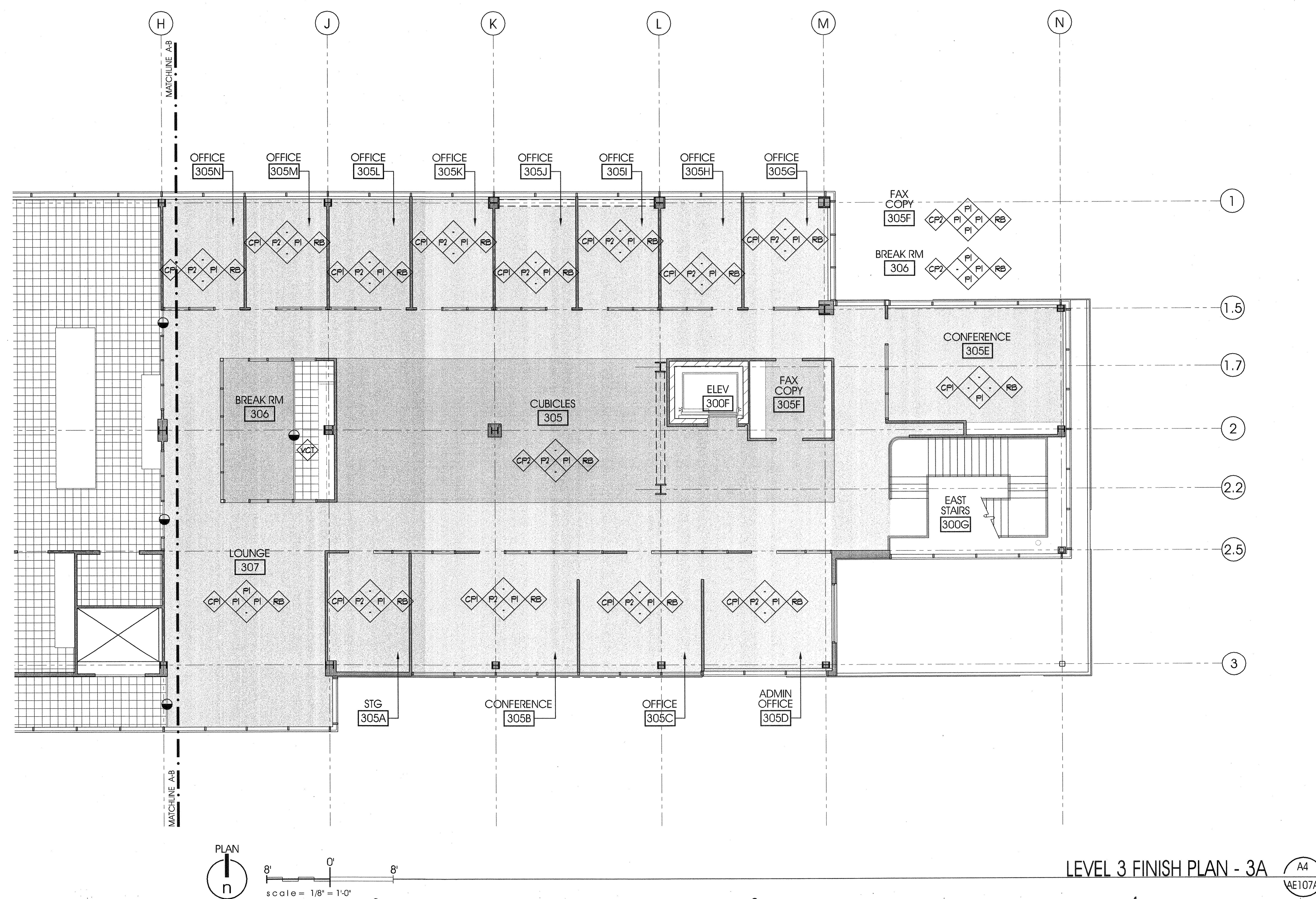


LEVEL 3 FINISH PLAN - 3A

A4 / AE107A

## GENERAL NOTES AND LEGEND:

- SEE SHEET AE001 FOR GENERAL NOTES.
- SEE COVER SHEET FOR DRAWING INDEX.
- DO NOT SCALE DRAWINGS.
- CONTRACTOR SHALL VERIFY ALL DIMENSIONS AND CONDITIONS BEFORE BEGINNING WORK AND SHALL REPORT TO THE ARCHITECT ANY ERRORS, INCONSISTENCIES OR OMISSIONS BEFORE BEGINNING WORK. SEE GENERAL NOTES AND SPECIFICATIONS.

CARPET

VINYL COMPOSITION TILE (VCT)

THE FINISH SYMBOL GROUP AS SHOWN BELOW APPLIES TO THE ENTIRE AREA OF THE ROOM WHICH THE SYUMBOL IS LOCATED IN. WHEN A FINISH SYMBOL IS SHOWN SINGLY IT OVERIDES THE SYMBOL GROUP FOR THAT ARE FOR WHICH IT IS ATTACHED.

WALL (WEST) — WALL (NORTH)
FLOOR — BASE
WALL (SOUTH) — WALL (EAST)

VINYL TRANSITION STRIP — SEE A-

MARBLE THRESHOLD — SEE-

ALUM. THRESHOLD — INSTALL PER MFG. DIRECTIONS. SEE DOOR SCHEDULE.

FOR TYPICAL RUBBER BASE DETAIL — SEE -

FOR TYPICAL TILE BASE DETAIL — SEE -

## KEY PLAN

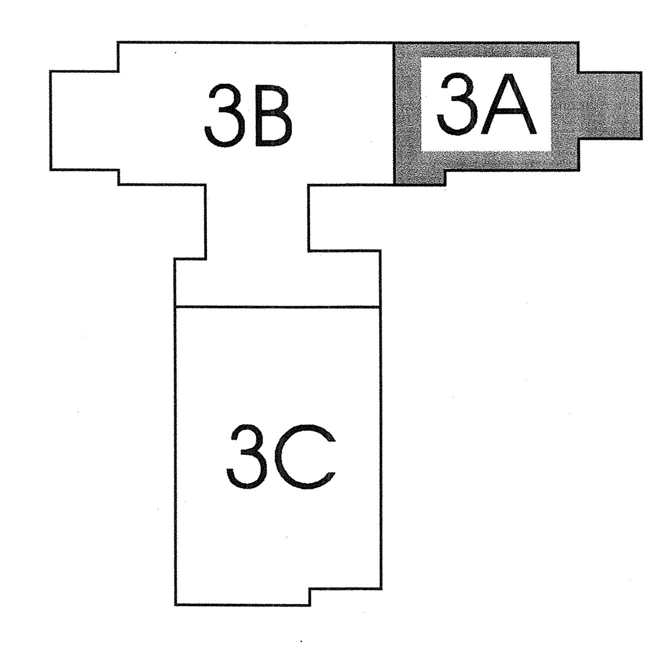



ARCHITECT 0818

ajc architects
703 east 1700 south
salt lake city, utah 84105
ph: 801.466.8818
fx: 801.466.4411
www.ajcarchitects.com

PAYETTE
285 Summer Street
Boston, MA 02210-1522
www.payette.com



OWNER INFORMATION

State of Utah
Department of Administrative Services

Division of Facilities Construction & Management
4110 State Office Building
Salt Lake City, Utah 84114
Phone: (801) 538 - 3018
Fax: (801) 538 - 3267

Internet: http://www.dfcm.utah.gov


PROJECT DESCRIPTION

LIFE SCIENCES RESEARCH CENTER
UTAH STATE UNIVERSITY

USTAR BUILDING #2
350 EAST GRAND AVE.
LOGAN, UTAH

SHEET NAME:

LEVEL 3
FINISH PLAN - 3A

REVISIONS

| MARK | DATE | DESCRIPTION |
| --- | --- | --- |

ISSUE DATA

| | |
| --- | --- |
| ISSUE DATE: | DEC. 9, 2008 |
| ISSUE TYPE: | DESDEV |
| DRAWN BY: | J. NIELSEN |
| CHECKED BY: | J. JONES |
| CAD FILE NAME: | |
| DFCM PROJECT # | 06292770 |
| STATE PROPERTY # | - |
| COPYRIGHT: | STATE OF UTAH |

SHEET NUMBER:

AE107A

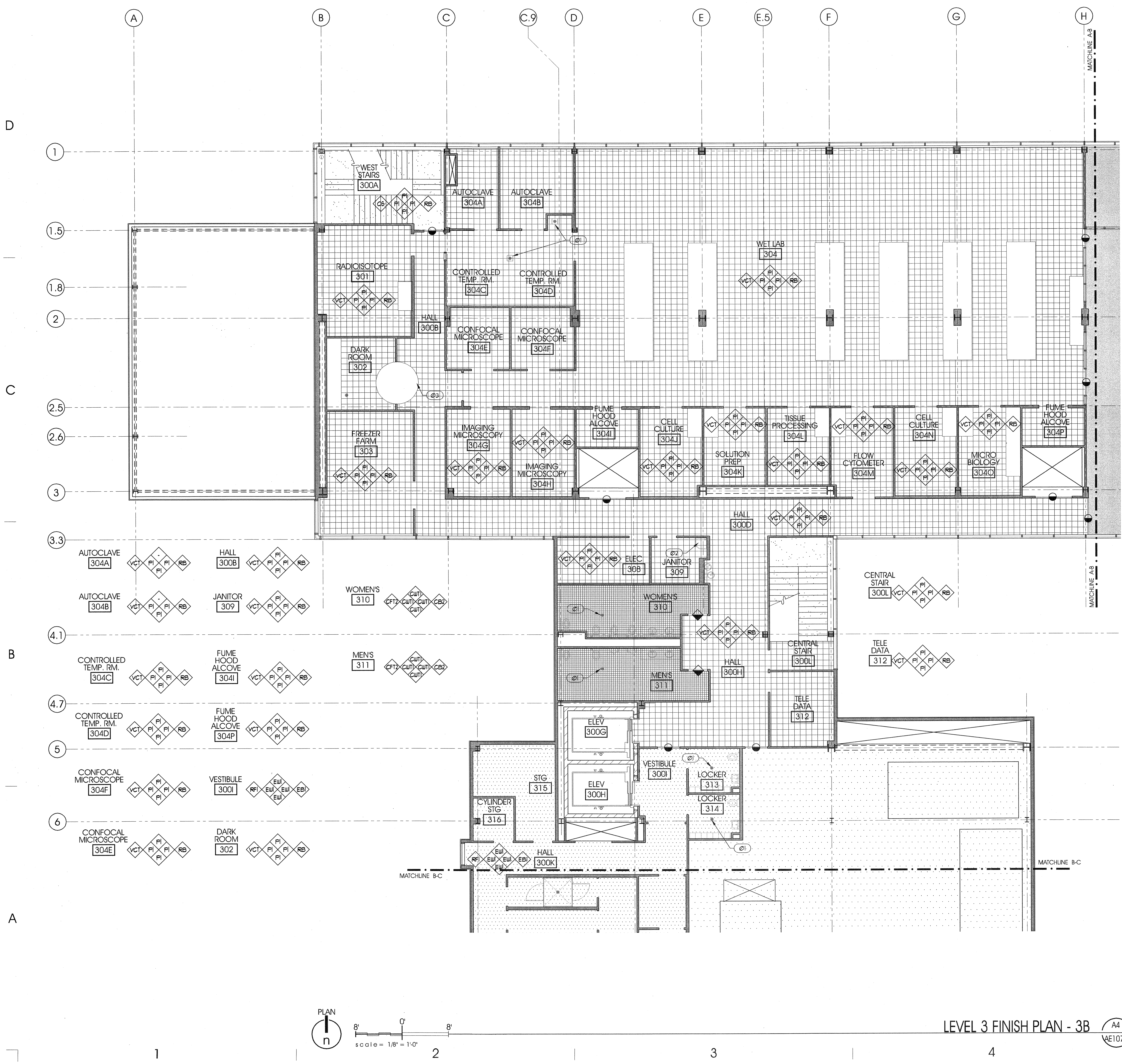


# GENERAL NOTES AND LEGEND:

- SEE SHEET AE001 FOR GENERAL NOTES.
- SEE COVER SHEET FOR DRAWING INDEX.
- DO NOT SCALE DRAWINGS.
- CONTRACTOR SHALL VERIFY ALL DIMENSIONS AND CONDITIONS BEFORE BEGINNING WORK AND SHALL REPORT TO THE ARCHITECT ANY ERRORS, INCONSISTENCIES OR OMISSIONS BEFORE BEGINNING WORK. SEE GENERAL NOTES AND SPECIFICATIONS.

CARPET

CERAMIC FLOOR TILE.

SEALED CONCRETE

VINYL COMPOSITION TILE (VCT)

URETHANE MORTAR COATING

THE FINISH SYMBOL GROUP AS SHOWN BELOW APPLIES TO THE ENTIRE AREA OF THE ROOM WHICH THE SYUMBOL IS LOCATED IN. WHEN A FINISH SYMBOL IS SHOWN SINGLY IT OVERIDES THE SYMBOL GROUP FOR THAT ARE FOR WHICH IT IS ATTACHED.

WALL (WEST) — FLOOR — WALL (SOUTH) — WALL (NORTH) — BASE — WALL (EAST)

| | |
|---|---|
| VINYL TRANSITION STRIP | SEE - |
| MARBLE THRESHOLD | SEE - |
| ALUM. THRESHOLD | INSTALL PER MFG. DIRECTIONS. SEE DOOR SCHEDULE. |
| FOR TYPICAL RUBBER BASE DETAIL | SEE - |
| FOR TYPICAL TILE BASE DETAIL | SEE - |

## KEYED NOTES:

- Ø1 FLOOR DRAIN. SEE PLUMBING DWG'S.
- Ø2 MOP SINK. SEE PLUMBING DRAWINGS.
- Ø3 RECESS FOR DARK ROOM DOOR.

## KEY PLAN

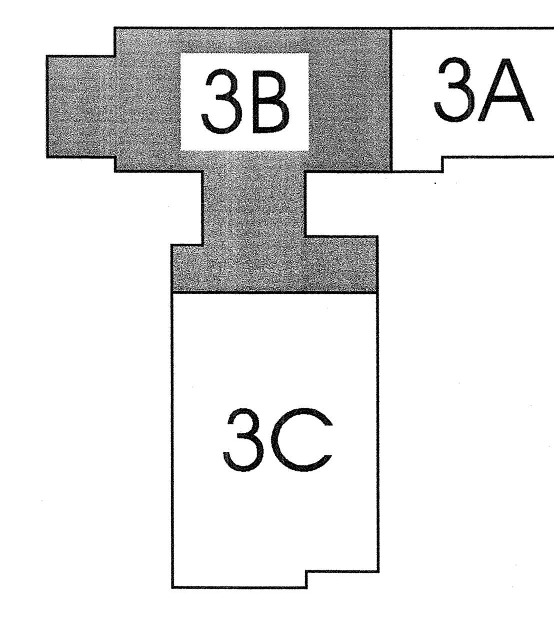


ARCHITECT 0818
ajc architects
703 east 1700 south
salt lake city, utah 84105
ph: 801.466.8818
fx: 801.466.4411
www.ajcarchitects.com

PAYETTE
285 Summer Street
Boston, MA 02210-1522
www.payette.com

OWNER INFORMATION
State of Utah
Department of Administrative Services
Division of Facilities Construction & Management
4110 State Office Building
Salt Lake City, Utah 84114
Phone: (801) 538 - 3018
Fax: (801) 538 - 3267
Internet: http://www.dfcm.utah.gov

PROJECT DESCRIPTION

LIFE SCIENCES RESEARCH CENTER
UTAH STATE UNIVERSITY

USTAR BUILDING #2
350 EAST GRAND AVE.
LOGAN, UTAH

SHEET NAME:

LEVEL 3
FINISH PLAN - 3B

REVISIONS

| MARK | DATE | DESCRIPTION |
|---|---|---|

ISSUE DATA

| | |
|---|---|
| ISSUE DATE: | DEC. 9, 2008 |
| ISSUE TYPE: | DESDEV |
| DRAWN BY: | J. NIELSEN |
| CHECKED BY: | J. JONES |
| CAD FILE NAME: | |
| DFCM PROJECT # | 06292770 |
| STATE PROPERTY # | - |
| COPYRIGHT: | STATE OF UTAH |

SHEET NUMBER:

AE107B

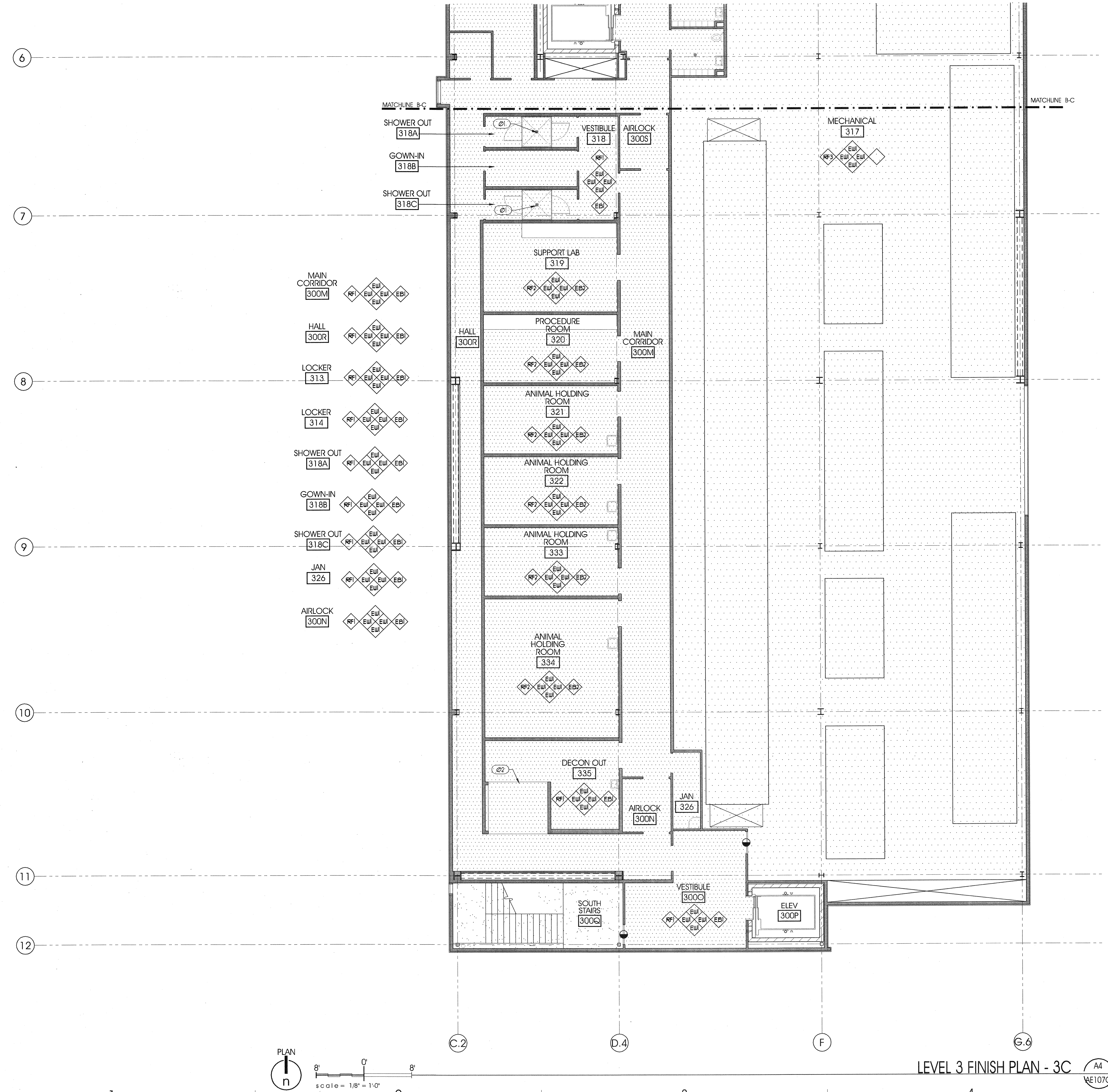


## GENERAL NOTES AND LEGEND:

- SEE SHEET AE001 FOR GENERAL NOTES.
- SEE COVER SHEET FOR DRAWING INDEX.
- DO NOT SCALE DRAWINGS.
- CONTRACTOR SHALL VERIFY ALL DIMENSIONS AND CONDITIONS BEFORE BEGINNING WORK AND SHALL REPORT TO THE ARCHITECT ANY ERRORS, INCONSISTENCIES OR OMISSIONS BEFORE BEGINNING WORK. SEE GENERAL NOTES AND SPECIFICATIONS.

SEALED CONCRETE

URETHANE MORTAR COATING

THE FINISH SYMBOL GROUP AS SHOWN BELOW APPLIES TO THE ENTIRE AREA OF THE ROOM WHICH THE SYMBOL IS LOCATED IN. WHEN A FINISH SYMBOL IS SHOWN SINGLY IT OVERIDES THE SYMBOL GROUP FOR THAT ARE FOR WHICH IT IS ATTACHED.

WALL (WEST) — WALL (NORTH)
FLOOR — BASE
WALL (SOUTH) — WALL (EAST)

VINYL TRANSITION STRIP — SEE -

MARBLE THRESHOLD — SEE -

ALUM. THRESHOLD — INSTALL PER MFG. DIRECTIONS. SEE DOOR SCHEDULE.

FOR TYPICAL RUBBER BASE DETAIL — SEE -

FOR TYPICAL TILE BASE DETAIL — SEE-

## KEYED NOTES:

01 FLOOR DRAIN. SEE PLUMBING DWG'S.
02 RECESS FOR AUTOCLAVE.

## KEY PLAN

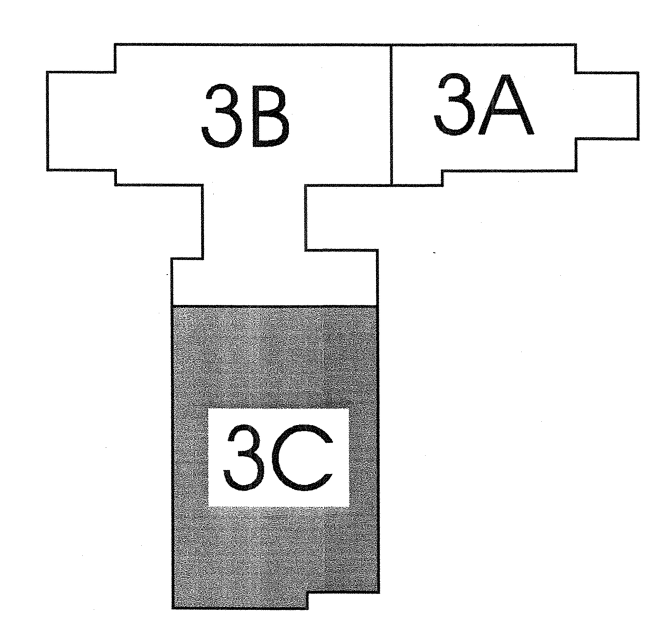



ARCHITECT 0818

ajc architects
703 east 1700 south
salt lake city, utah 84105
ph: 801.466.8818
fx: 801.466.4411
www.ajcarchitects.com

PAYETTE
285 Summer Street
Boston, MA 02210-1522
www.payette.com


OWNER INFORMATION

State of Utah
Department of Administrative Services
Division of Facilities Construction & Management
4110 State Office Building
Salt Lake City, Utah 84114
Phone: (801) 538 - 3018
Fax: (801) 538 - 3267
Internet: http://www.dfcm.utah.gov

PROJECT DESCRIPTION

LIFE SCIENCES RESEARCH CENTER
UTAH STATE UNIVERSITY

USTAR BUILDING #2
350 EAST GRAND AVE.
LOGAN, UTAH

SHEET NAME:

LEVEL 3
FINISH PLAN - 3C

REVISIONS

| MARK | DATE | DESCRIPTION |
|---|---|---|

ISSUE DATA

| | |
|---|---|
| ISSUE DATE: | DEC. 9, 2008 |
| ISSUE TYPE: | DESDEV |
| DRAWN BY: | J. NIELSEN |
| CHECKED BY: | J. JONES |
| CAD FILE NAME: | |
| DFCM PROJECT # | 06292770 |
| STATE PROPERTY # | - |
| COPYRIGHT: | STATE OF UTAH |

SHEET NUMBER:

AE107C

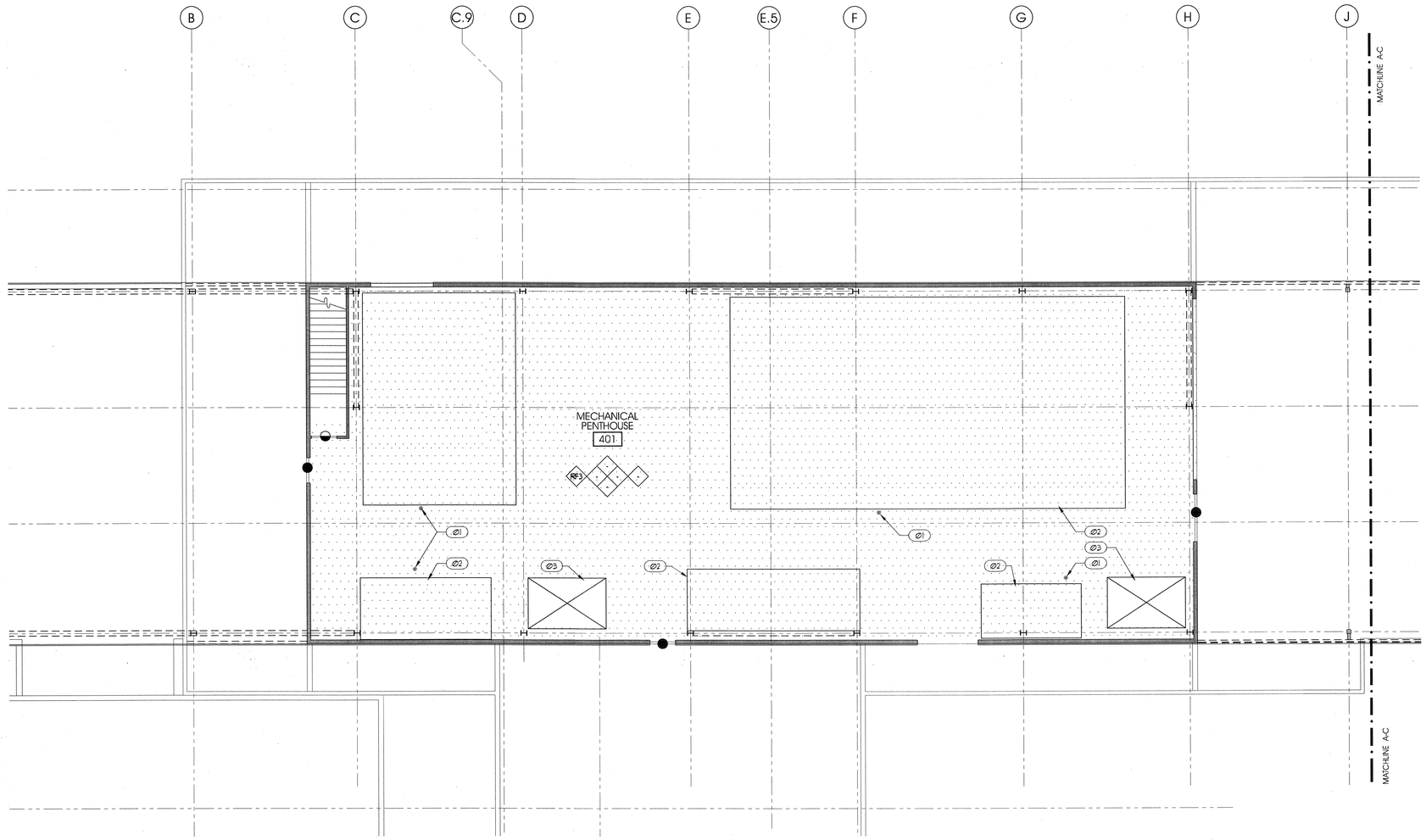


PLAN

8' 0' 8'

scale = 1/8" = 1'-0"

PENTHOUSE FINISH PLAN - 4B

A4 / AE108B

# GENERAL NOTES AND LEGEND:

- SEE SHEET AE000 FOR GENERAL NOTES.
- SEE COVER SHEET FOR DRAWING INDEX.
- DO NOT SCALE DRAWINGS.
- CONTRACTOR SHALL VERIFY ALL DIMENSIONS AND CONDITIONS BEFORE BEGINNING WORK AND SHALL REPORT TO THE ARCHITECT ANY ERRORS, INCONSISTENCIES OR OMISSIONS BEFORE BEGINNING WORK. SEE GENERAL NOTES AND SPECIFICATIONS.

EPOXY COATING

THE FINISH SYMBOL GROUP AS SHOWN BELOW APPLIES TO THE ENTIRE AREA OF THE ROOM WHICH THE SYMBOL IS LOCATED IN. WHEN A FINISH SYMBOL IS SHOWN SINGLY IT OVERRIDES THE SYMBOL GROUP FOR THAT ARE FOR WHICH IT IS ATTACHED.

WALL (WEST) / WALL (NORTH)
FLOOR / BASE
WALL (SOUTH) / WALL (EAST)

| | |
|---|---|
| VINYL TRANSITION STRIP | SEE A5/AE506 |
| MARBLE THRESHOLD | SEE B4 & B5/AE506 |
| ALUM. THRESHOLD | INSTALL PER MFG. DIRECTIONS. SEE DOOR SCHEDULE. |
| FOR TYPICAL RUBBER BASE DETAIL | SEE D5/AE506 |
| FOR TYPICAL TILE BASE DETAIL | SEE C4 & C5/AE506 |

# KEYED NOTES:

Ø1 FLOOR DRAIN. SEE PLUMBING DWG'S.
Ø2 CONC. HOUSEKEEPING PAD. SEE MECHANICAL.
Ø3 1 HR. ENCLOSURE AT TOP OF SHAFT AT FLOOR LEVEL.

# KEY PLAN

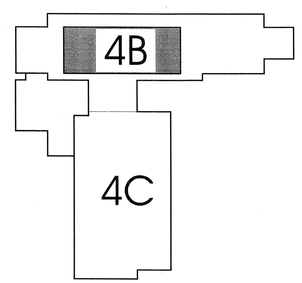



ARCHITECT 0818

ajc architects

703 east 1700 south
salt lake city, utah 84105
ph: 801.466.8818
fx: 801.466.4411
www.ajcarchitects.com

P A Y E T T E

285 Summer Street
Boston, MA 02210-1522
www.payette.com


OWNER INFORMATION

**State of Utah**
Department of Administrative Services

Division of Facilities
Construction & Management
4110 State Office Building
Salt Lake City, Utah 84114
Phone: (801) 538 - 3018
Fax: (801) 538 - 3267

Internet: http://www.dfcm.utah.gov

PROJECT DESCRIPTION

LIFE SCIENCES RESEARCH CENTER
UTAH STATE UNIVERSITY

USTAR BUILDING #2
350 EAST GRAND AVE.
LOGAN, UTAH

SHEET NAME:

PENTHOUSE
FINISH PLAN - 4B

REVISIONS

| MARK | DATE | DESCRIPTION |
|---|---|---|

ISSUE DATA

| | |
|---|---|
| ISSUE DATE: | DEC. 9, 2008 |
| ISSUE TYPE: | DESDEV |
| DRAWN BY: | J. NIELSEN |
| CHECKED BY: | J. JONES |
| CAD FILE NAME: | |
| DFCM PROJECT # | 06292770 |
| STATE PROPERTY # | - |
| COPYRIGHT: | STATE OF UTAH |

SHEET NUMBER:

AE108B

P:\06292770.8 USTAR #2 BUILDING\ARCHITECTURAL\AE108B.dwg, 12/4/2008 4:17:33 PM, jnielsen

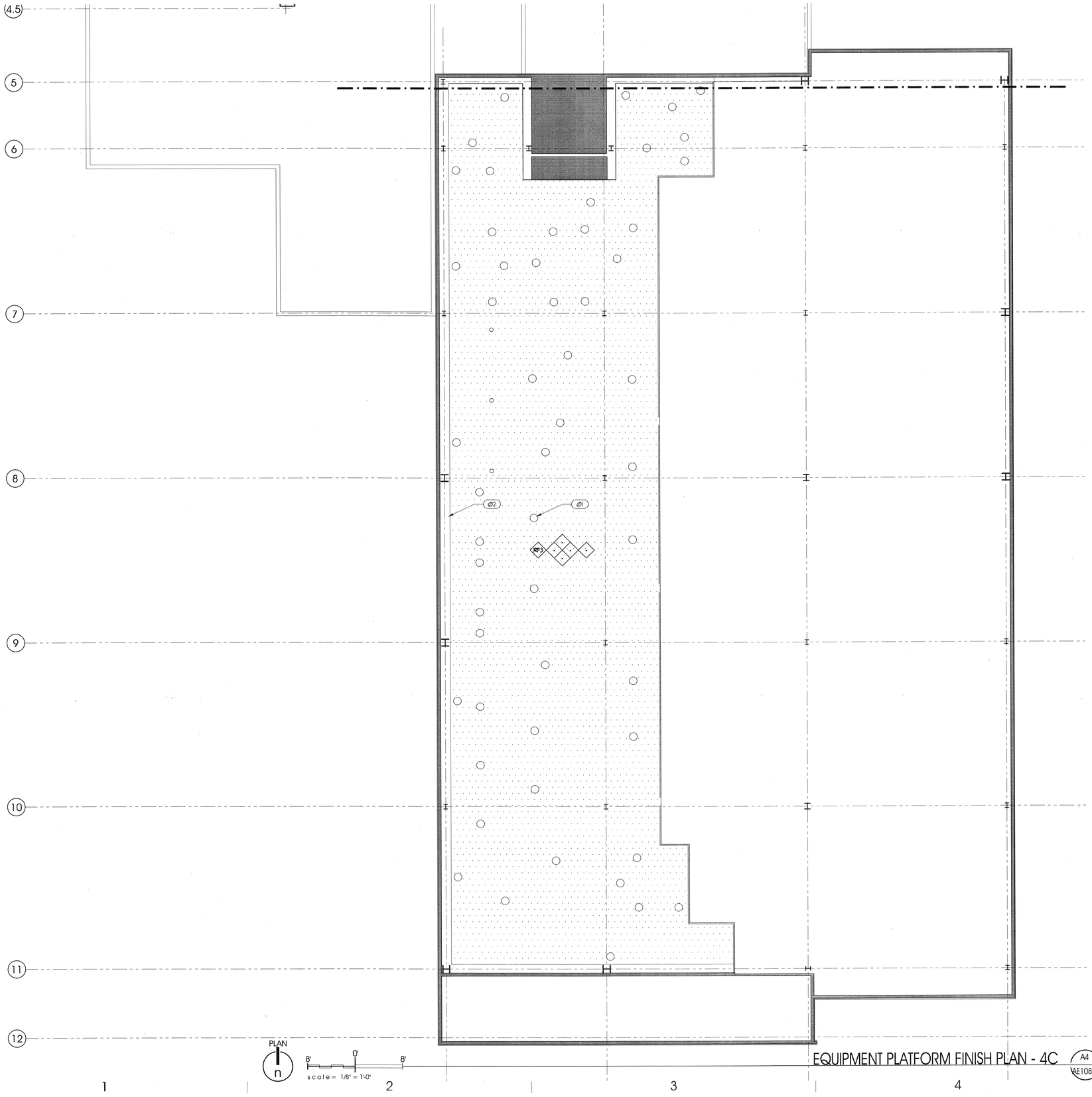


PLAN

8' 0' 8'

scale = 1/8" = 1'-0"

EQUIPMENT PLATFORM FINISH PLAN - 4C

A4 / AE108C

## GENERAL NOTES AND LEGEND:

- SEE SHEET AE@@I FOR GENERAL NOTES.
- SEE COVER SHEET FOR DRAWING INDEX.
- DO NOT SCALE DRAWINGS.
- CONTRACTOR SHALL VERIFY ALL DIMENSIONS AND CONDITIONS BEFORE BEGINNING WORK AND SHALL REPORT TO THE ARCHITECT ANY ERRORS, INCONSISTENCIES OR OMISSIONS BEFORE BEGINNING WORK. SEE GENERAL NOTES AND SPECIFICATIONS.

EPOXY COATING.

PENETRATION THROUGH FLOOR FOR DUCT. FLASH AND SEAL.

THE FINISH SYMBOL GROUP AS SHOWN BELOW APPLIES TO THE ENTIRE AREA OF THE ROOM WHICH THE SYMBOL IS LOCATED IN. WHEN A FINISH SYMBOL IS SHOWN SINGLY IT OVERIDES THE SYMBOL GROUP FOR THAT ARE FOR WHICH IT IS ATTACHED.

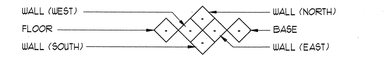


## KEYED NOTES:

Ø1 PENETRATION THROUGH FLOOR FOR DUCT. FLASH AND SEAL.

Ø2 EXTEND WATERPROOF COATING UP CURB.

## KEY PLAN

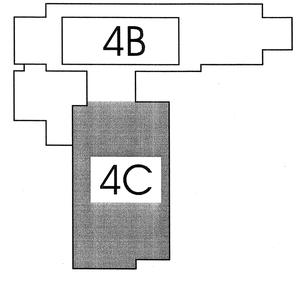


ARCHITECT 0818

ajc architects

703 east 1700 south
salt lake city, utah 84105
ph: 801.466.8818
fx: 801.466.4411
www.ajcarchitects.com

P A Y E T T E

285 Summer Street
Boston, MA 02210-1522
www.payette.com

OWNER INFORMATION

**State of Utah**
Department of Administrative Services

Division of Facilities
Construction & Management
4110 State Office Building
Salt Lake City, Utah 84114
Phone: (801) 538 - 3018
Fax: (801) 538 - 3267

Internet: http://www.dfcm.utah.gov

PROJECT DESCRIPTION

LIFE SCIENCES
RESEARCH CENTER
UTAH STATE UNIVERSITY

USTAR BUILDING #2
350 EAST GRAND AVE.
LOGAN, UTAH

SHEET NAME:

EQUIPMENT PLATFORM
FINISH PLAN - 4C

REVISIONS

| MARK | DATE | DESCRIPTION |
|---|---|---|

ISSUE DATA

| | |
|---|---|
| ISSUE DATE: | DEC. 9, 2008 |
| ISSUE TYPE: | DESDEV |
| DRAWN BY: | J. NIELSEN |
| CHECKED BY: | J. JONES |
| CAD FILE NAME: | |
| DFCM PROJECT # | 06292770 |
| STATE PROPERTY # | - |
| COPYRIGHT: | STATE OF UTAH |

SHEET NUMBER:

AE108C

P:\06292770 USTAR #2 USU\DESDEV\DWG\ARCHITECTURAL\06292770-AE108C.dwg, 12/9/2008 6:32:14 PM, jnielsen

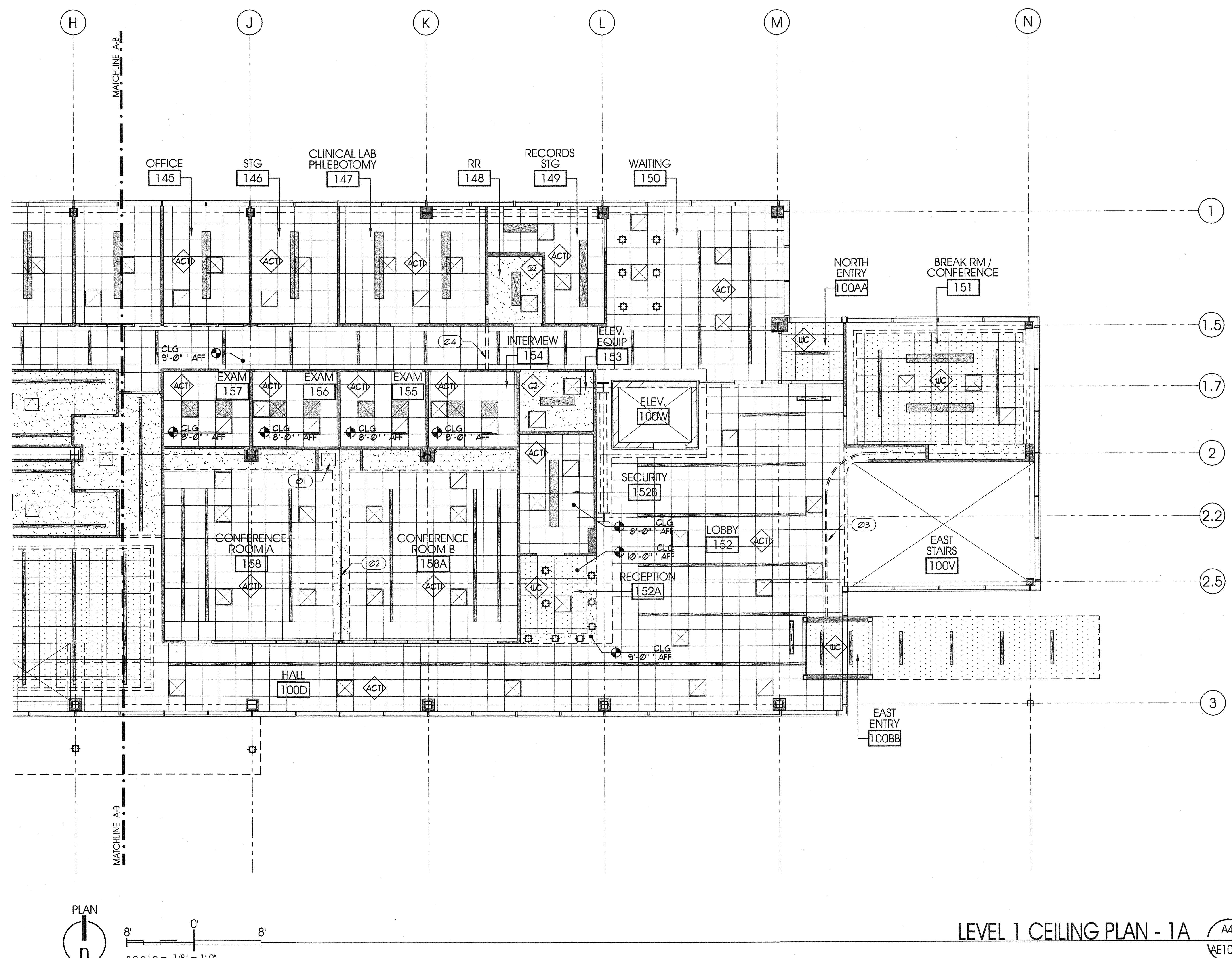


## LEVEL 1 CEILING PLAN - 1A

A4 / AE109A

PLAN

scale = 1/8" = 1'-0"

# GENERAL NOTES AND LEGEND:

- SEE SHEET AE001 FOR GENERAL NOTES.
- SEE COVER SHEET FOR DRAWING INDEX.
- DO NOT SCALE DRAWINGS.
- CONTRACTOR SHALL VERIFY ALL DIMENSIONS AND CONDITIONS BEFORE BEGINNING WORK AND SHALL REPORT TO THE ARCHITECT ANY ERRORS, INCONSISTENCIES OR OMISSIONS BEFORE BEGINNING WORK. SEE GENERAL NOTES AND SPECIFICATIONS.
- THIS IS A REFLECTED CEILING PLAN AND IS NOT INTENDED TO BE A LIGHTING PLAN. NO WALL MOUNTED LIGHTING FIXTURES OR OTHER WALL MOUNTED APPURTENANCES ARE SHOWN. SEE THE LIGHTING PLAN FOR ALL LIGHTING AND EGRESS SIGNS, SIZE AND TYPES OF ELECTRICAL FIXTURES ETC. SEE MECHANICAL PLANS FOR ALL CEILING MOUNTED DIFFUSERS / GRILLES ETC.

SUSPENDED ACOUSTICAL PANEL CEILING SYSTEM.
CLG HEIGHT 12'-0" AFF U.N.O.

SUSPENDED PERFORATED WOOD CEILING TILES.
CLG HEIGHT 12'-0" AFF U.N.O.

PAINTED GYP. BD. CEILING & SOFFITS.
CLG HEIGHT 8'-0" AFF U.N.O.

SURFACE MOUNTED OR LAY-IN CEILING FLUORESCENT FIXTURE INDICATED BY "X" THROUGH FIXTURE. SEE ELECTRICAL PLAN FOR SIZE AND TYPE.

SUSPENDED FLUORESCENT FIXTURE INDICATED BY "CIRCLE" THROUGH FIXTURE. SEE ELECTRICAL PLAN FOR SIZE AND TYPE.

RECESS LIGHT FIXTURE. SEE ELECTRICAL PLAN FOR SIZE AND TYPE.

PENDANT MOUNT OR SURFACE MOUNT FIXTURE. SEE ELECTRICAL PLAN FOR SIZE AND TYPE.

CEILING MOUNTED EXIT SIGNAGE. SEE ELECTRICAL DRAWINGS. (WALL MOUNTED SIGNS NOT SHOWN THIS SHEET. SEE ELECTRICAL SHEETS.)

SUPPLY, RETURN & EXHAUST DIFFUSERS/GRILLES. SEE MECHANICAL.
SUPPLY RETURN/EXHAUST

# KEYED NOTES:

01 ACCESS PANEL. PAINT.
02 OPERABLE WALL TRACK.
03 FIRE DOOR TRACK.
04 GYP. BD. HEADER AT CHANGE IN CLG. HEIGHT.

# KEY PLAN

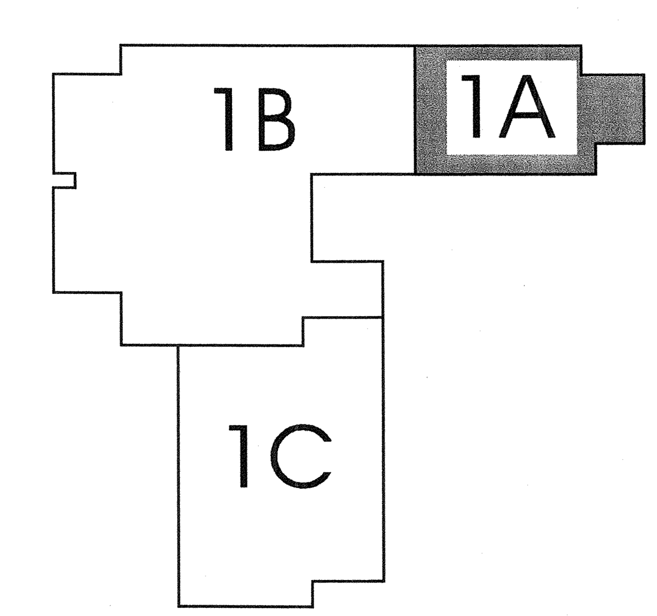



ARCHITECT 0818

ajc architects
703 east 1700 south
salt lake city, utah 84105
ph: 801.466.8818
fx: 801.466.4411
www.ajcarchitects.com

PAYETTE
285 Summer Street
Boston, MA 02210-1522
www.payette.com



OWNER INFORMATION

State of Utah
Department of Administrative Services
Division of Facilities Construction & Management
4110 State Office Building
Salt Lake City, Utah 84114
Phone: (801) 538 - 3018
Fax: (801) 538 - 3267
Internet: http://www.dfcm.utah.gov


PROJECT DESCRIPTION

LIFE SCIENCES RESEARCH CENTER
UTAH STATE UNIVERSITY

USTAR BUILDING #2
350 EAST GRAND AVE.
LOGAN, UTAH

SHEET NAME:

LEVEL 1
CEILING PLAN - 1A

REVISIONS

| MARK | DATE | DESCRIPTION |
|---|---|---|

ISSUE DATA

| | |
|---|---|
| ISSUE DATE: | DEC. 9, 2008 |
| ISSUE TYPE: | DESDEV |
| DRAWN BY: | J. NIELSEN |
| CHECKED BY: | J. JONES |
| CAD FILE NAME: | |
| DFCM PROJECT # | 06292770 |
| STATE PROPERTY # | - |
| COPYRIGHT: | STATE OF UTAH |

SHEET NUMBER:

AE109A

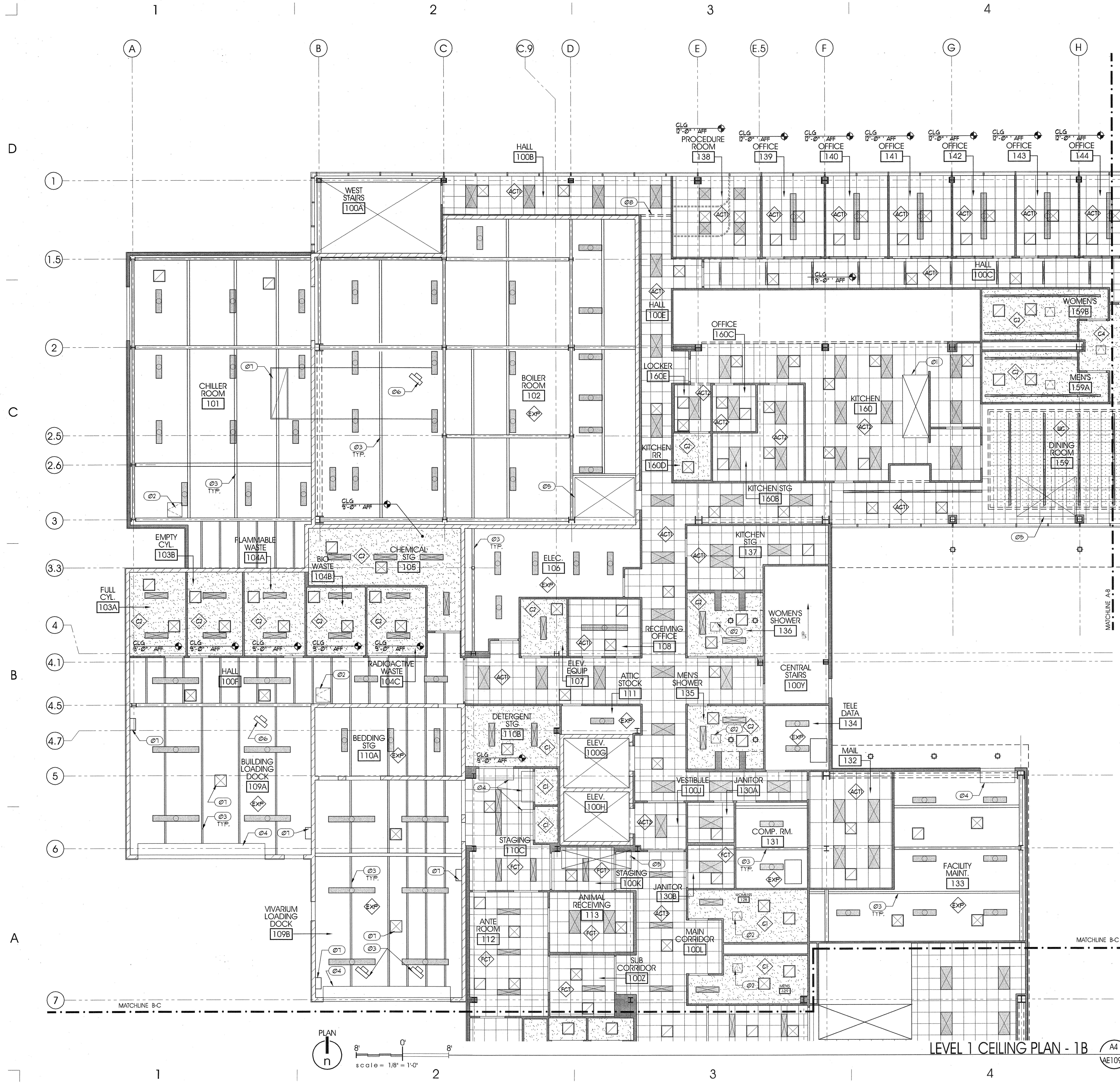

LEVEL 1 CEILING PLAN - 1B

PLAN

scale = 1/8" = 1'-0"

## GENERAL NOTES AND LEGEND:

- SEE SHEET AEØØ1 FOR GENERAL NOTES.
- SEE COVER SHEET FOR DRAWING INDEX.
- DO NOT SCALE DRAWINGS.
- CONTRACTOR SHALL VERIFY ALL DIMENSIONS AND CONDITIONS BEFORE BEGINNING WORK AND SHALL REPORT TO THE ARCHITECT ANY ERRORS, INCONSISTENCIES OR OMISSIONS BEFORE BEGINNING WORK. SEE GENERAL NOTES AND SPECIFICATIONS.
- THIS IS A REFLECTED CEILING PLAN AND IS NOT INTENDED TO BE A LIGHTING PLAN. NO WALL MOUNTED LIGHTING FIXTURES OR OTHER WALL MOUNTED APPURTENANCES ARE SHOWN. SEE THE LIGHTING PLAN FOR ALL LIGHTING AND EGRESS SIGNS, SIZE AND TYPES OF ELECTRICAL FIXTURES ETC. SEE MECHANICAL PLANS FOR ALL CEILING MOUNTED DIFFUSERS / GRILLES ETC.

SUSPENDED ACOUSTICAL PANEL CEILING SYSTEM.
CLG HEIGHT 9'-Ø" AFF U.N.O.

SUSPENDED PERFORATED WOOD CEILING TILES.
CLG HEIGHT 12'-Ø" AFF U.N.O.

PAINTED GYP. BD. CEILING & SOFFITS.
CLG HEIGHT 8'-Ø" AFF U.N.O.

SURFACE MOUNTED OR LAY-IN CEILING FLUORESCENT FIXTURE INDICATED BY "X" THROUGH FIXTURE. SEE ELECTRICAL PLAN FOR SIZE AND TYPE.

SUSPENDED FLUORESCENT FIXTURE INDICATED BY "CIRCLE" THROUGH FIXTURE. SEE ELECTRICAL PLAN FOR SIZE AND TYPE.

RECESS LIGHT FIXTURE. SEE ELECTRICAL PLAN FOR SIZE AND TYPE.

PENDANT MOUNT OR SURFACE MOUNT FIXTURE. SEE ELECTRICAL PLAN FOR SIZE AND TYPE.

CEILING MOUNTED EXIT SIGNAGE. SEE ELECTRICAL DRAWINGS. (WALL MOUNTED SIGNS NOT SHOWN THIS SHEET. SEE ELECTRICAL SHEETS.)

SUPPLY, RETURN & EXHAUST DIFFUSERS/GRILLES. SEE MECHANICAL.
SUPPLY RETURN/EXHAUST

## KEYED NOTES:

Ø1 S.S. HOOD. SEE FOODSERVICE DWG'S.
Ø2 ROOF ACCESS HATCH.
Ø3 STEEL BEAM/JOIST. SEE STRUCTURAL.
Ø4 OVERHEAD DOOR COIL HOUSING.
Ø5 TERMINATION OF SHAFT IN CEILING.
Ø6 UNIT HEATER. SEE MECHANICAL.
Ø7 EXPOSED DUCT. SEE MECHANICAL.
Ø8 GYP. BD. HEADER AT CHANGE OF CLG. HEIGHT.

## KEY PLAN

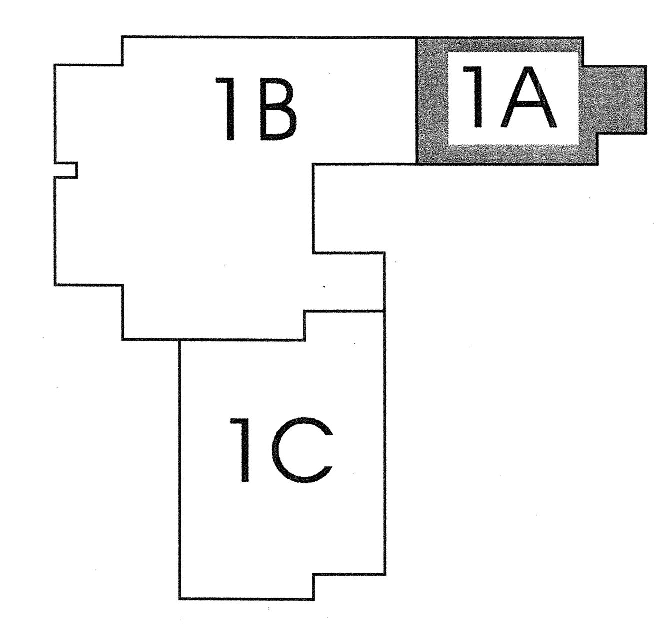


ARCHITECT 0818

ajc architects
703 east 1700 south
salt lake city, utah 84105
ph: 801.466.8818
fx: 801.466.4411
www.ajcarchitects.com

PAYETTE
285 Summer Street
Boston, MA 02210-1522
www.payette.com

OWNER INFORMATION

**State of Utah**
Department of Administrative Services

Division of Facilities Construction & Management
4110 State Office Building
Salt Lake City, Utah 84114
Phone: (801) 538 - 3018
Fax: (801) 538 - 3267

Internet: http://www.dfcm.utah.gov

PROJECT DESCRIPTION

LIFE SCIENCES RESEARCH CENTER
UTAH STATE UNIVERSITY

USTAR BUILDING #2
350 EAST GRAND AVE.
LOGAN, UTAH

SHEET NAME:

LEVEL 1
CEILING PLAN - 1B

REVISIONS

MARK DATE DESCRIPTION

ISSUE DATA

ISSUE DATE: DEC. 9, 2008
ISSUE TYPE: DESDEV
DRAWN BY: J. NIELSEN
CHECKED BY: J. JONES
CAD FILE NAME:
DFCM PROJECT # 06292770
STATE PROPERTY # -
COPYRIGHT: STATE OF UTAH

SHEET NUMBER:

AE109B

LEVEL 1 CEILING PLAN - 1C (A4 / AE109C)

## GENERAL NOTES AND LEGEND:

- SEE SHEET AE001 FOR GENERAL NOTES.
- SEE COVER SHEET FOR DRAWING INDEX.
- DO NOT SCALE DRAWINGS.
- CONTRACTOR SHALL VERIFY ALL DIMENSIONS AND CONDITIONS BEFORE BEGINNING WORK AND SHALL REPORT TO THE ARCHITECT ANY ERRORS, INCONSISTENCIES OR OMISSIONS BEFORE BEGINNING WORK. SEE GENERAL NOTES AND SPECIFICATIONS.
- THIS IS A REFLECTED CEILING PLAN AND IS NOT INTENDED TO BE A LIGHTING PLAN. NO WALL MOUNTED LIGHTING FIXTURES OR OTHER WALL MOUNTED APPURTENANCES ARE SHOWN. SEE THE LIGHTING PLAN FOR ALL LIGHTING AND EGRESS SIGNS, SIZE AND TYPES OF ELECTRICAL FIXTURES ETC. SEE MECHANICAL PLANS FOR ALL CEILING MOUNTED DIFFUSERS / GRILLES ETC.

SUSPENDED ACOUSTICAL PANEL CEILING SYSTEM. CLG HEIGHT 9'-0" AFF U.N.O.

PAINTED GYP. BD. CEILING & SOFFITS. CLG HEIGHT 9'-0" AFF U.N.O.

SURFACE MOUNTED OR LAY-IN CEILING FLUORESCENT FIXTURE INDICATED BY "X" THROUGH FIXTURE. SEE ELECTRICAL PLAN FOR SIZE AND TYPE.

SUSPENDED FLUORESCENT FIXTURE INDICATED BY "CIRCLE" THROUGH FIXTURE. SEE ELECTRICAL PLAN FOR SIZE AND TYPE.

RECESS LIGHT FIXTURE. SEE ELECTRICAL PLAN FOR SIZE AND TYPE.

PENDANT MOUNT OR SURFACE MOUNT FIXTURE. SEE ELECTRICAL PLAN FOR SIZE AND TYPE.

CEILING MOUNTED EXIT SIGNAGE. SEE ELECTRICAL DRAWINGS. (WALL MOUNTED SIGNS NOT SHOWN THIS SHEET. SEE ELECTRICAL SHEETS.)

SUPPLY, RETURN & EXHAUST DIFFUSERS/GRILLES. SEE MECHANICAL. SUPPLY RETURN/EXHAUST

SECURITY CAMERA. SEE AV DRAWINGS

## KEYED NOTES:

- 01 S.S. HOOD. SEE MECHANICAL.
- 02 STEEL BEAM/JOIST. SEE STRUCTURAL.
- 03 GYP. BD. HEADER FROM TOP OF CLG TO DECK.
- 04 S.S. PARTITION BELOW.
- 05 UNIT HEATER. SEE MECHANICAL.
- 06 DUCT THROUGH CLG. SEE MECHANICAL AND LAB DWG'S.

## KEY PLAN

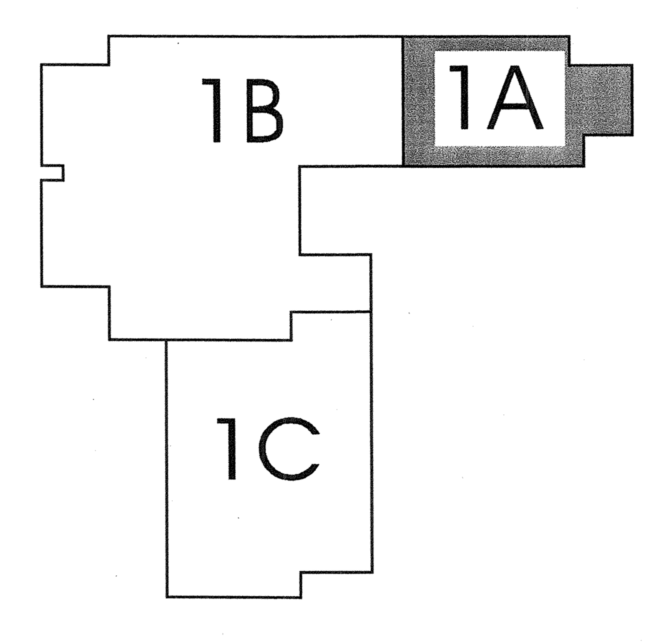


ARCHITECT 0818
ajc architects
703 east 1700 south
salt lake city, utah 84105
ph: 801.466.8818
fx: 801.466.4411
www.ajcarchitects.com

PAYETTE
285 Summer Street
Boston, MA 02210-1522
www.payette.com

OWNER INFORMATION
State of Utah
Department of Administrative Services
Division of Facilities Construction & Management
4110 State Office Building
Salt Lake City, Utah 84114
Phone: (801) 538 - 3018
Fax: (801) 538 - 3267
Internet: http://www.dfcm.utah.gov

PROJECT DESCRIPTION

LIFE SCIENCES RESEARCH CENTER
UTAH STATE UNIVERSITY

USTAR BUILDING #2
350 EAST GRAND AVE.
LOGAN, UTAH

SHEET NAME:

LEVEL 1
CEILING PLAN - 1C

REVISIONS

MARK DATE DESCRIPTION

ISSUE DATA

| | |
|---|---|
| ISSUE DATE: | DEC. 9, 2008 |
| ISSUE TYPE: | DESDEV |
| DRAWN BY: | J. NIELSEN |
| CHECKED BY: | J. JONES |
| CAD FILE NAME: | |
| DFCM PROJECT # | 06292770 |
| STATE PROPERTY # | - |
| COPYRIGHT: | STATE OF UTAH |

SHEET NUMBER:

AE109C

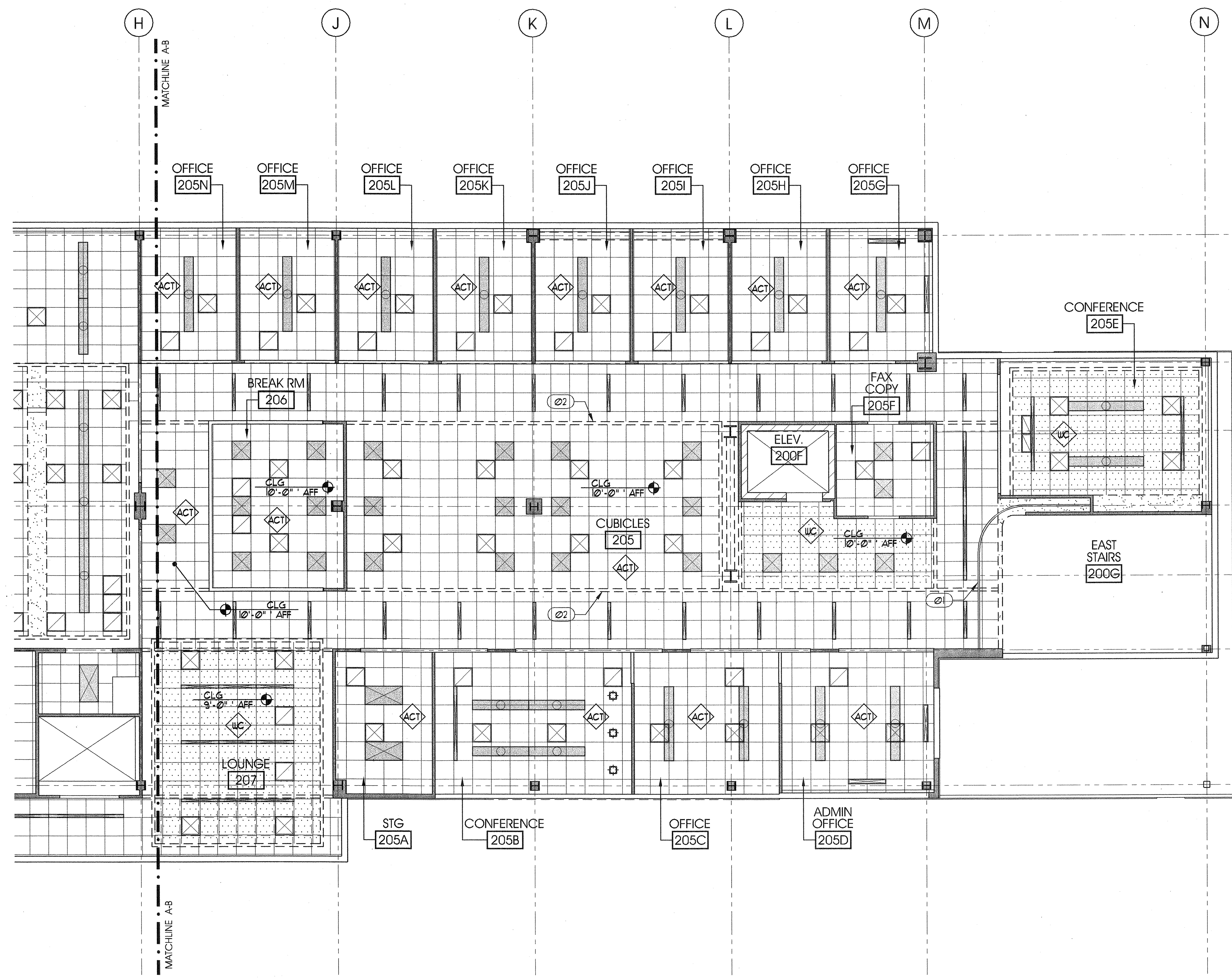


PLAN n

8' 0' 8'
scale = 1/8" = 1'-0"

LEVEL 2 CEILING PLAN - 2A (A4 / AE110A)

# GENERAL NOTES AND LEGEND:

- SEE SHEET AE001 FOR GENERAL NOTES.
- SEE COVER SHEET FOR DRAWING INDEX.
- DO NOT SCALE DRAWINGS.
- CONTRACTOR SHALL VERIFY ALL DIMENSIONS AND CONDITIONS BEFORE BEGINNING WORK AND SHALL REPORT TO THE ARCHITECT ANY ERRORS, INCONSISTENCIES OR OMISSIONS BEFORE BEGINNING WORK. SEE GENERAL NOTES AND SPECIFICATIONS.
- THIS IS A REFLECTED CEILING PLAN AND IS NOT INTENDED TO BE A LIGHTING PLAN. NO WALL MOUNTED LIGHTING FIXTURES OR OTHER WALL MOUNTED APPURTENANCES ARE SHOWN. SEE THE LIGHTING PLAN FOR ALL LIGHTING AND EGRESS SIGNS, SIZE AND TYPES OF ELECTRICAL FIXTURES ETC. SEE MECHANICAL PLANS FOR ALL CEILING MOUNTED DIFFUSERS / GRILLES ETC.

SUSPENDED ACOUSTICAL PANEL CEILING SYSTEM.
CLG HEIGHT 12'-0" AFF U.N.O.

SUSPENDED PERFORATED WOOD CEILING TILES.
CLG HEIGHT 12'-0" AFF U.N.O.

SURFACE MOUNTED OR LAY-IN CEILING FLUORESCENT FIXTURE INDICATED BY "X" THROUGH FIXTURE. SEE ELECTRICAL PLAN FOR SIZE AND TYPE.

SUSPENDED FLUORESCENT FIXTURE INDICATED BY "CIRCLE" THROUGH FIXTURE. SEE ELECTRICAL PLAN FOR SIZE AND TYPE.

RECESS LIGHT FIXTURE. SEE ELECTRICAL PLAN FOR SIZE AND TYPE.

PENDANT MOUNT OR SURFACE MOUNT FIXTURE. SEE ELECTRICAL PLAN FOR SIZE AND TYPE.

CEILING MOUNTED EXIT SIGNAGE. SEE ELECTRICAL DRAWINGS. (WALL MOUNTED SIGNS NOT SHOWN THIS SHEET. SEE ELECTRICAL SHEETS.)

SUPPLY, RETURN & EXHAUST DIFFUSERS/GRILLES. SEE MECHANICAL.
SUPPLY — RETURN/EXHAUST

# KEYED NOTES:

01 TRACK FOR FIRE DOOR.
02 GYP. BD. HEADER AT CHANGE IN CEILING HEIGHT, PAINT.

# KEY PLAN

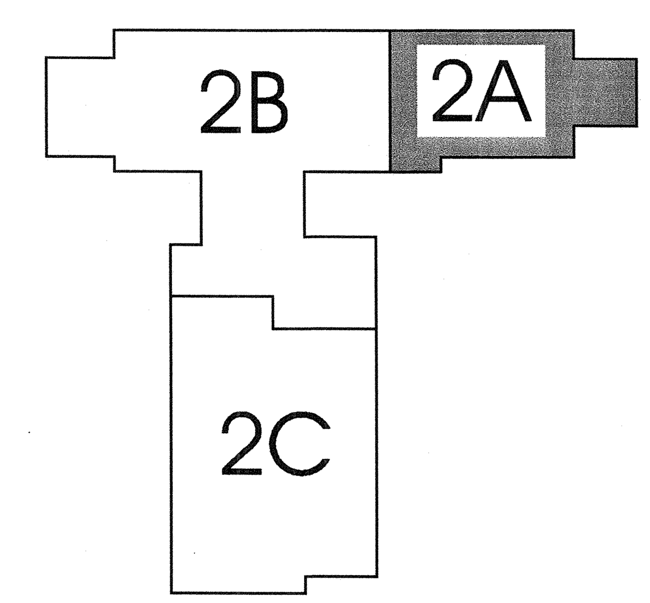


ARCHITECT 0818

ajc architects
703 east 1700 south
salt lake city, utah 84105
ph: 801.466.8818
fx: 801.466.4411
www.ajcarchitects.com

PAYETTE
285 Summer Street
Boston, MA 02210-1522
www.payette.com

OWNER INFORMATION
State of Utah
Department of Administrative Services
Division of Facilities Construction & Management
4110 State Office Building
Salt Lake City, Utah 84114
Phone: (801) 538 - 3018
Fax: (801) 538 - 3267
Internet: http://www.dfcm.utah.gov

PROJECT DESCRIPTION
LIFE SCIENCES RESEARCH CENTER
UTAH STATE UNIVERSITY

USTAR BUILDING #2
350 EAST GRAND AVE.
LOGAN, UTAH

SHEET NAME:
LEVEL 2
CEILING PLAN - 2A

REVISIONS

| MARK | DATE | DESCRIPTION |
|---|---|---|

ISSUE DATA

ISSUE DATE: DEC. 9, 2008
ISSUE TYPE: DESDEV
DRAWN BY: J. NIELSEN
CHECKED BY: J. JONES
CAD FILE NAME:
DFCM PROJECT # 06292770
STATE PROPERTY # -
COPYRIGHT: STATE OF UTAH

SHEET NUMBER:
AE110A

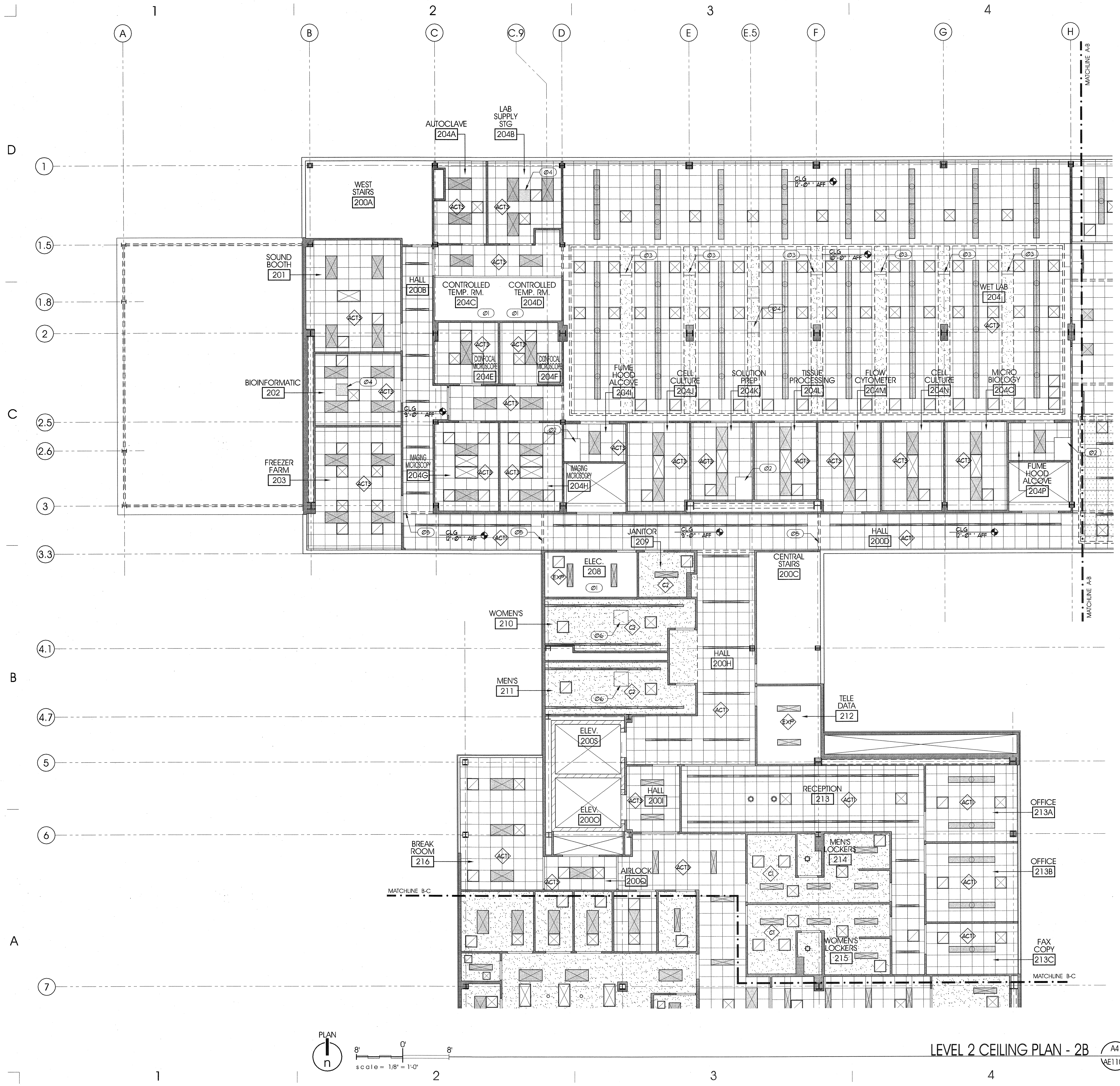


LEVEL 2 CEILING PLAN - 2B

A4 / AE110B

## GENERAL NOTES AND LEGEND:

- SEE SHEET AE001 FOR GENERAL NOTES.
- SEE COVER SHEET FOR DRAWING INDEX.
- DO NOT SCALE DRAWINGS.
- CONTRACTOR SHALL VERIFY ALL DIMENSIONS AND CONDITIONS BEFORE BEGINNING WORK AND SHALL REPORT TO THE ARCHITECT ANY ERRORS, INCONSISTENCIES OR OMISSIONS BEFORE BEGINNING WORK. SEE GENERAL NOTES AND SPECIFICATIONS.
- THIS IS A REFLECTED CEILING PLAN AND IS NOT INTENDED TO BE A LIGHTING PLAN. NO WALL MOUNTED LIGHTING FIXTURES OR OTHER WALL MOUNTED APPURTENANCES ARE SHOWN. SEE THE LIGHTING PLAN FOR ALL LIGHTING AND EGRESS SIGNS, SIZE AND TYPES OF ELECTRICAL FIXTURES ETC. SEE MECHANICAL PLANS FOR ALL CEILING MOUNTED DIFFUSERS / GRILLES ETC.

SUSPENDED ACOUSTICAL PANEL CEILING SYSTEM.
CLG HEIGHT 9'-0" AFF U.N.O.

PAINTED GYP. BD. CEILING & SOFFITS.
CLG HEIGHT 8'-0" AFF U.N.O.

SURFACE MOUNTED OR LAY-IN CEILING FLUORESCENT FIXTURE INDICATED BY "X" THROUGH FIXTURE. SEE ELECTRICAL PLAN FOR SIZE AND TYPE.

SUSPENDED FLUORESCENT FIXTURE INDICATED BY "CIRCLE" THROUGH FIXTURE. SEE ELECTRICAL PLAN FOR SIZE AND TYPE.

RECESS LIGHT FIXTURE. SEE ELECTRICAL PLAN FOR SIZE AND TYPE.

PENDANT MOUNT OR SURFACE MOUNT FIXTURE. SEE ELECTRICAL PLAN FOR SIZE AND TYPE.

CEILING MOUNTED EXIT SIGNAGE. SEE ELECTRICAL DRAWINGS. (WALL MOUNTED SIGNS NOT SHOWN THIS SHEET. SEE ELECTRICAL SHEETS.)

SUPPLY, RETURN & EXHAUST DIFFUSERS/GRILLES. SEE MECHANICAL.
SUPPLY — RETURN/EXHAUST

## KEYED NOTES:

- 01 NO CEILING.
- 02 FUME HOOD ENCLOSURE
- 03 LAB BENCH UMBILICAL.
- 04 OVERHEAD SERVICE PANEL.
- 05 GYP. BD. HEADER AT CHANGE IN CEILING HEIGHT.
- 06 CEILING ACCESS PANEL. PAINT.

## KEY PLAN

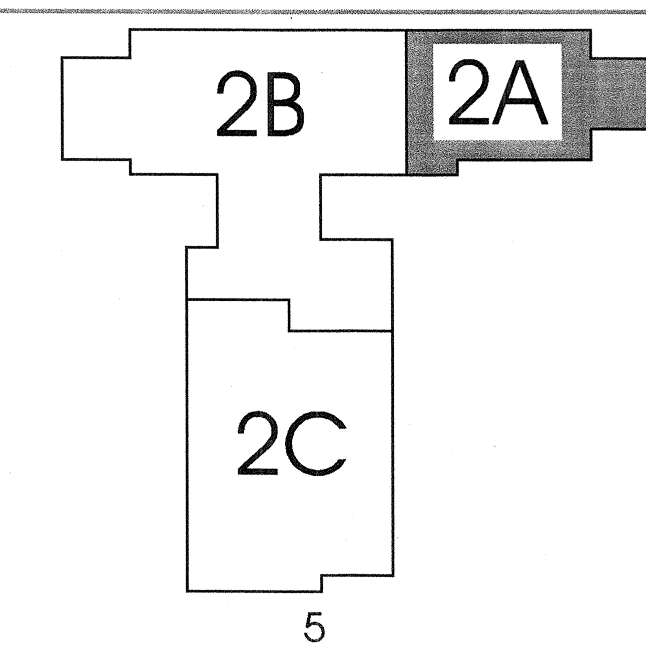



ARCHITECT 0818

ajc architects
703 east 1700 south
salt lake city, utah 84105
ph: 801.466.8818
fx: 801.466.4411
www.ajcarchitects.com

PAYETTE
285 Summer Street
Boston, MA 02210-1522
www.payette.com



OWNER INFORMATION

State of Utah
Department of Administrative Services
Division of Facilities Construction & Management
4110 State Office Building
Salt Lake City, Utah 84114
Phone: (801) 538 - 3018
Fax: (801) 538 - 3267
Internet: http://www.dfcm.utah.gov


PROJECT DESCRIPTION

# LIFE SCIENCES RESEARCH CENTER
UTAH STATE UNIVERSITY

USTAR BUILDING #2
350 EAST GRAND AVE.
LOGAN, UTAH

SHEET NAME:
LEVEL 2
CEILING PLAN - 2B

REVISIONS

| MARK | DATE | DESCRIPTION |
|---|---|---|

ISSUE DATA

| | |
|---|---|
| ISSUE DATE: | DEC. 9, 2008 |
| ISSUE TYPE: | DESDEV |
| DRAWN BY: | J. NIELSEN |
| CHECKED BY: | J. JONES |
| CAD FILE NAME: | |
| DFCM PROJECT # | 06292770 |
| STATE PROPERTY # | - |
| COPYRIGHT: | STATE OF UTAH |

SHEET NUMBER:
AE110B

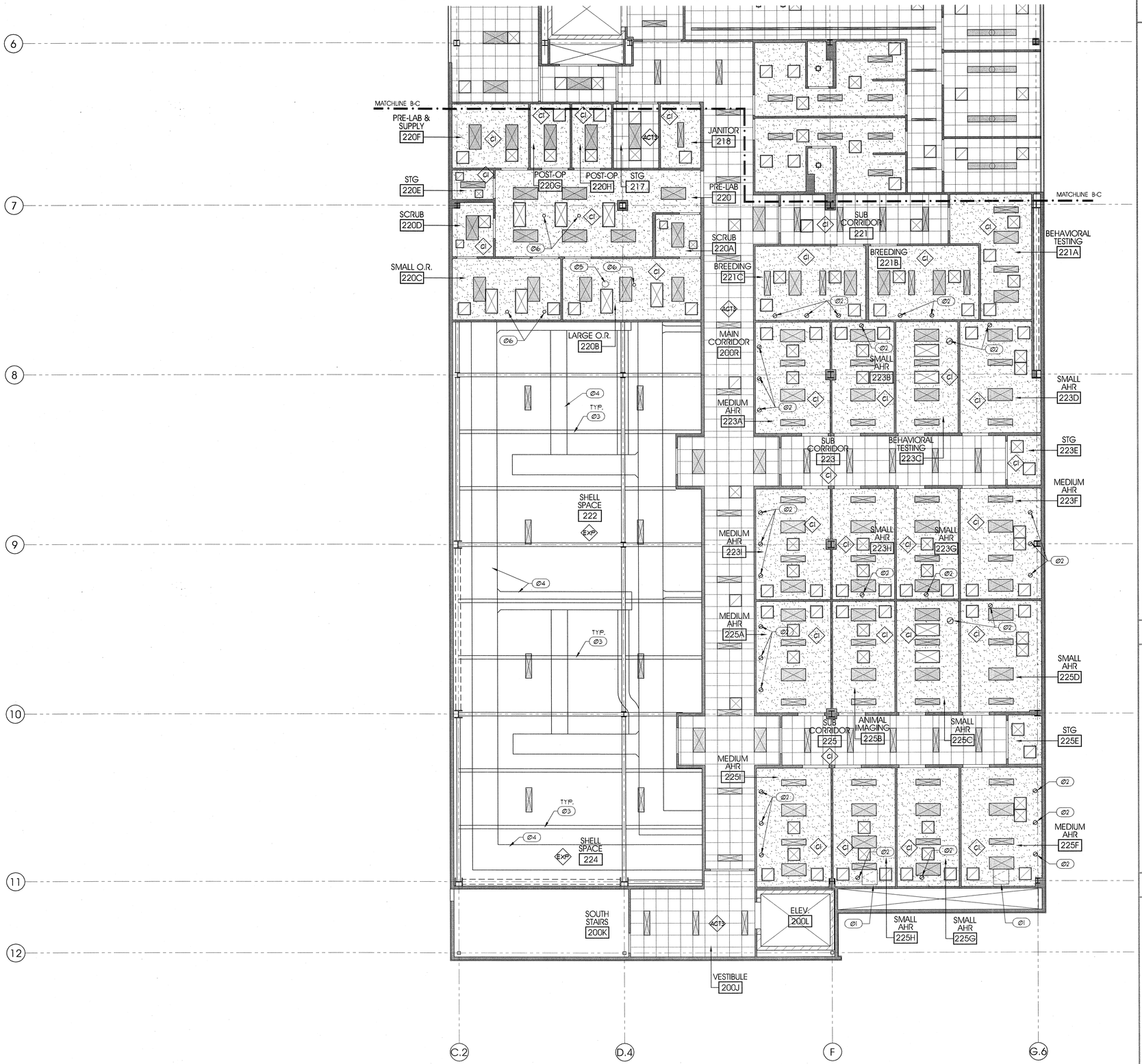


PLAN

8' 0' 8'

scale = 1/8" = 1'-0"

## LEVEL 2 CEILING PLAN - 2C

A4 / AE110C

## GENERAL NOTES AND LEGEND:

- SEE SHEET AE000 FOR GENERAL NOTES.
- SEE COVER SHEET FOR DRAWING INDEX.
- DO NOT SCALE DRAWINGS.
- CONTRACTOR SHALL VERIFY ALL DIMENSIONS AND CONDITIONS BEFORE BEGINNING WORK AND SHALL REPORT TO THE ARCHITECT ANY ERRORS, INCONSISTENCIES OR OMISSIONS BEFORE BEGINNING WORK. SEE GENERAL NOTES AND SPECIFICATIONS.
- THIS IS A REFLECTED CEILING PLAN AND IS NOT INTENDED TO BE A LIGHTING PLAN. NO WALL MOUNTED LIGHTING FIXTURES OR OTHER WALL MOUNTED APPURTENANCES ARE SHOWN. SEE THE LIGHTING PLAN FOR ALL LIGHTING AND EGRESS SIGNS. SIZE AND TYPES OF ELECTRICAL FIXTURES ETC. SEE MECHANICAL PLANS FOR ALL CEILING MOUNTED DIFFUSERS / GRILLES ETC.

SUSPENDED ACOUSTICAL PANEL CEILING SYSTEM. CLG HEIGHT 9'-0" AFF U.N.O.

PAINTED GYP. BD. CEILING & SOFFITS. CLG HEIGHT 9'-0" AFF U.N.O.

SURFACE MOUNTED OR LAY-IN CEILING FLUORESCENT FIXTURE. INDICATED BY "X" THROUGH FIXTURE. SEE ELECTRICAL PLAN FOR SIZE AND TYPE.

SUSPENDED FLUORESCENT FIXTURE INDICATED BY "CIRCLE" THROUGH FIXTURE. SEE ELECTRICAL PLAN FOR SIZE AND TYPE.

RECESS LIGHT FIXTURE. SEE ELECTRICAL PLAN FOR SIZE AND TYPE.

PENDANT MOUNT OR SURFACE MOUNT FIXTURE. SEE ELECTRICAL PLAN FOR SIZE AND TYPE.

CEILING MOUNTED EXIT SIGNAGE. SEE ELECTRICAL DRAWINGS. (WALL MOUNTED SIGNS NOT SHOWN THIS SHEET. SEE ELECTRICAL SHEETS.)

SUPPLY, RETURN & EXHAUST DIFFUSERS/GRILLES. SEE MECHANICAL. SUPPLY / RETURN/ EXHAUST

## KEYED NOTES:

- Ø1 ACCESS PANEL.
- Ø2 DUCT THROUGH CLG. SEE MECH. AND LAB DWG'S.
- Ø3 EXPOSED BEAM.
- Ø4 EXPOSED DUCT. SEE MECHANICAL.
- Ø5 OVERHEAD SERVICE PANEL.
- Ø6 LOCATION FOR CEILING MOUNTED SURGICAL LIGHT.

## KEY PLAN

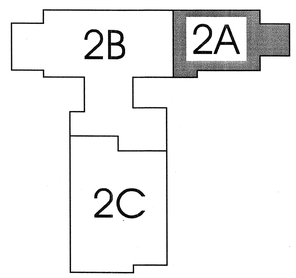



ARCHITECT 0818

ajc architects

703 east 1700 south
salt lake city, utah 84105
ph: 801.466.8818
fx: 801.466.4411
www.ajcarchitects.com

PAYETTE

285 Summer Street
Boston, MA 02210-1522
www.payette.com


OWNER INFORMATION

**State of Utah**
Department of Administrative Services

Division of Facilities Construction & Management
4110 State Office Building
Salt Lake City, Utah 84114
Phone: (801) 538 - 3018
Fax: (801) 538 - 3267

Internet: http://www.dfcm.utah.gov

PROJECT DESCRIPTION

# LIFE SCIENCES RESEARCH CENTER
## UTAH STATE UNIVERSITY

USTAR BUILDING #2
350 EAST GRAND AVE.
LOGAN, UTAH

SHEET NAME:

LEVEL 2
CEILING PLAN - 2C

REVISIONS

| MARK | DATE | DESCRIPTION |
|---|---|---|

ISSUE DATA

| | |
|---|---|
| ISSUE DATE: | DEC. 9, 2008 |
| ISSUE TYPE: | DESDEV |
| DRAWN BY: | J. NIELSEN |
| CHECKED BY: | J. JONES |
| CAD FILE NAME: | |
| DFCM PROJECT # | 06292770 |
| STATE PROPERTY # | - |
| COPYRIGHT: | STATE OF UTAH |

SHEET NUMBER:

# AE110C

P:\06292770 USTAR #2 GRAND AVE\ARCHITECTURAL\06 BASE 110C.dwg, 12/4/2008 7:37:07 PM, jnielsen

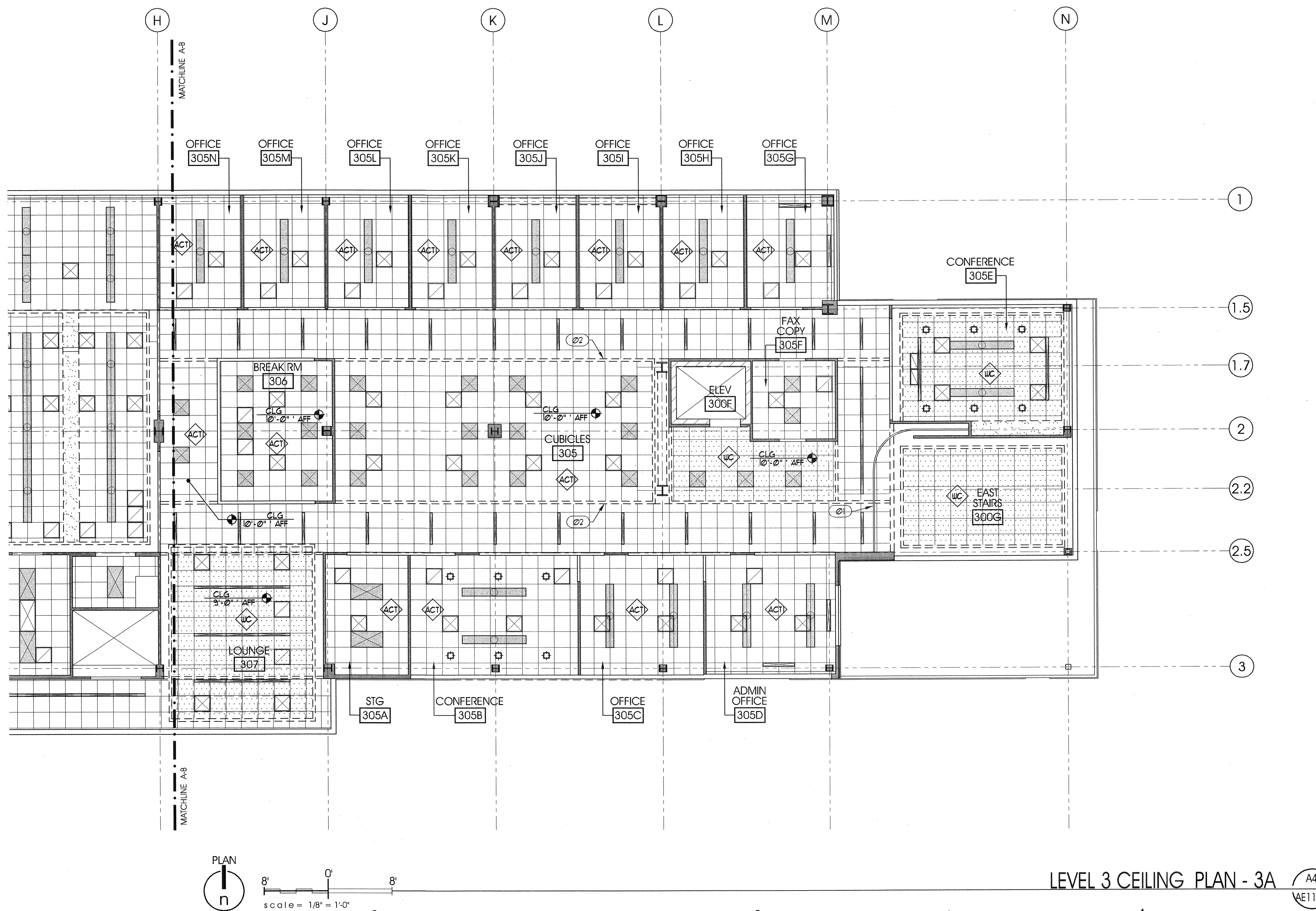


LEVEL 3 CEILING PLAN - 3A

A4 AE111A

# GENERAL NOTES AND LEGEND:

- SEE SHEET AE001 FOR GENERAL NOTES.
- SEE COVER SHEET FOR DRAWING INDEX.
- DO NOT SCALE DRAWINGS.
- CONTRACTOR SHALL VERIFY ALL DIMENSIONS AND CONDITIONS BEFORE BEGINNING WORK AND SHALL REPORT TO THE ARCHITECT ANY ERRORS, INCONSISTENCIES OR OMISSIONS BEFORE BEGINNING WORK. SEE GENERAL NOTES AND SPECIFICATIONS.
- THIS IS A REFLECTED CEILING PLAN AND IS NOT INTENDED TO BE A LIGHTING PLAN. NO WALL MOUNTED LIGHTING FIXTURES OR OTHER WALL MOUNTED APPURTENANCES ARE SHOWN. SEE THE LIGHTING PLAN FOR ALL LIGHTING AND EGRESS SIGNS, SIZE AND TYPES OF ELECTRICAL FIXTURES ETC. SEE MECHANICAL PLANS FOR ALL CEILING MOUNTED DIFFUSERS / GRILLES ETC.

SUSPENDED ACOUSTICAL PANEL CEILING SYSTEM. CLG HEIGHT 12'-0" AFF U.N.O.

SUSPENDED PERFORATED WOOD CEILING TILES. CLG HEIGHT 12'-0" AFF U.N.O.

SURFACE MOUNTED OR LAY-IN CEILING FLUORESCENT FIXTURE INDICATED BY "X" THROUGH FIXTURE. SEE ELECTRICAL PLAN FOR SIZE AND TYPE.

SUSPENDED FLUORESCENT FIXTURE INDICATED BY "CIRCLE" THROUGH FIXTURE. SEE ELECTRICAL PLAN FOR SIZE AND TYPE.

RECESS LIGHT FIXTURE. SEE ELECTRICAL PLAN FOR SIZE AND TYPE.

PENDANT MOUNT OR SURFACE MOUNT FIXTURE. SEE ELECTRICAL PLAN FOR SIZE AND TYPE.

CEILING MOUNTED EXIT SIGNAGE. SEE ELECTRICAL DRAWINGS. (WALL MOUNTED SIGNS NOT SHOWN THIS SHEET. SEE ELECTRICAL SHEETS.)

SUPPLY, RETURN & EXHAUST DIFFUSERS/GRILLES. SEE MECHANICAL. SUPPLY RETURN/EXHAUST

# KEYED NOTES:

Ø1 TRACK FOR FIRE DOOR.

Ø2 GYP. BD. HEADER AT CHANGE IN CEILING HEIGHT.

# KEY PLAN

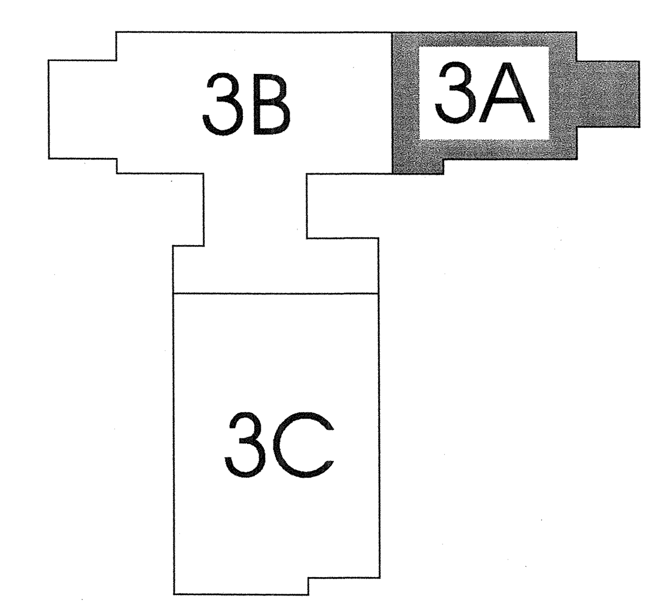



ARCHITECT 0818

ajc architects
703 east 1700 south
salt lake city, utah 84105
ph: 801.466.8818
fx: 801.466.4411
www.ajcarchitects.com

PAYETTE
285 Summer Street
Boston, MA 02210-1522
www.payette.com

OWNER INFORMATION
State of Utah
Department of Administrative Services
Division of Facilities Construction & Management
4110 State Office Building
Salt Lake City, Utah 84114
Phone: (801) 538 - 3018
Fax: (801) 538 - 3267
Internet: http://www.dfcm.utah.gov


PROJECT DESCRIPTION

LIFE SCIENCES RESEARCH CENTER
UTAH STATE UNIVERSITY

USTAR BUILDING #2
350 EAST GRAND AVE.
LOGAN, UTAH

SHEET NAME:

LEVEL 3
CEILING PLAN - 3A

REVISIONS

| MARK | DATE | DESCRIPTION |
|---|---|---|

ISSUE DATA

| | |
|---|---|
| ISSUE DATE: | DEC. 9, 2008 |
| ISSUE TYPE: | DESDEV |
| DRAWN BY: | J. NIELSEN |
| CHECKED BY: | J. JONES |
| CAD FILE NAME: | |
| DFCM PROJECT # | 06292770 |
| STATE PROPERTY # | - |
| COPYRIGHT: | STATE OF UTAH |

SHEET NUMBER:

AE111A

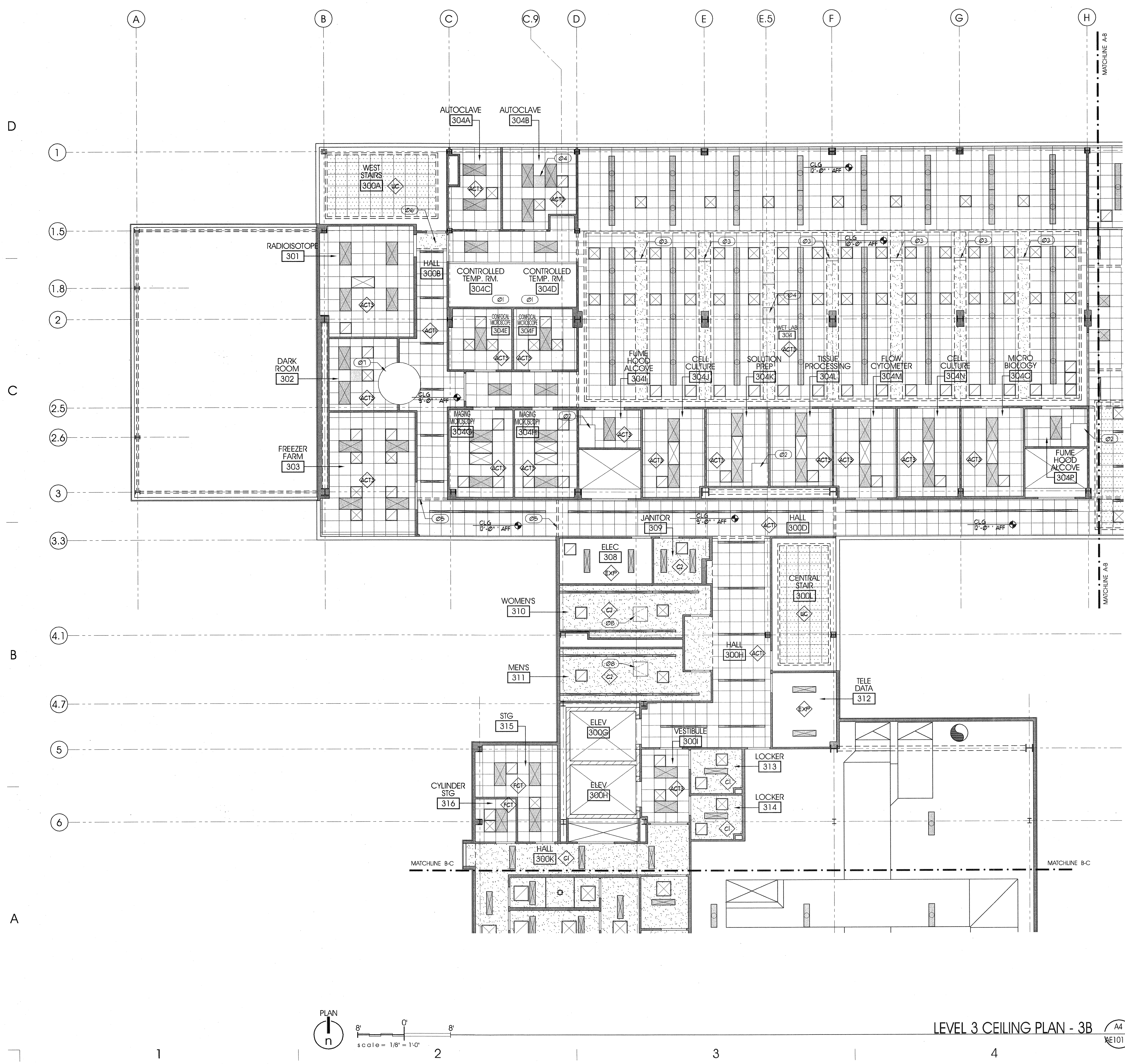


LEVEL 3 CEILING PLAN - 3B

A4 AE101B

## GENERAL NOTES AND LEGEND:

- SEE SHEET AE001 FOR GENERAL NOTES.
- SEE COVER SHEET FOR DRAWING INDEX.
- DO NOT SCALE DRAWINGS.
- CONTRACTOR SHALL VERIFY ALL DIMENSIONS AND CONDITIONS BEFORE BEGINNING WORK AND SHALL REPORT TO THE ARCHITECT ANY ERRORS, INCONSISTENCIES OR OMISSIONS BEFORE BEGINNING WORK. SEE GENERAL NOTES AND SPECIFICATIONS.
- THIS IS A REFLECTED CEILING PLAN AND IS NOT INTENDED TO BE A LIGHTING PLAN. NO WALL MOUNTED LIGHTING FIXTURES OR OTHER WALL MOUNTED APPURTENANCES ARE SHOWN. SEE THE LIGHTING PLAN FOR ALL LIGHTING AND EGRESS SIGNS, SIZE AND TYPES OF ELECTRICAL FIXTURES ETC. SEE MECHANICAL PLANS FOR ALL CEILING MOUNTED DIFFUSERS / GRILLES ETC.

SUSPENDED ACOUSTICAL PANEL CEILING SYSTEM.
CLG HEIGHT 9'-0" AFF U.N.O.

SUSPENDED PERFORATED WOOD CEILING TILES
CLG HEIGHT 12'-0" AFF U.N.O.

PAINTED GYP. BD. CEILING & SOFFITS.
CLG HEIGHT 8'-0" AFF U.N.O.

SURFACE MOUNTED OR LAY-IN CEILING FLUORESCENT FIXTURE INDICATED BY "X" THROUGH FIXTURE. SEE ELECTRICAL PLAN FOR SIZE AND TYPE.

SUSPENDED FLUORESCENT FIXTURE INDICATED BY "CIRCLE" THROUGH FIXTURE. SEE ELECTRICAL PLAN FOR SIZE AND TYPE.

RECESS LIGHT FIXTURE. SEE ELECTRICAL PLAN FOR SIZE AND TYPE.

PENDANT MOUNT OR SURFACE MOUNT FIXTURE. SEE ELECTRICAL PLAN FOR SIZE AND TYPE.

CEILING MOUNTED EXIT SIGNAGE. SEE ELECTRICAL DRAWINGS. (WALL MOUNTED SIGNS NOT SHOWN THIS SHEET. SEE ELECTRICAL SHEETS.)

SUPPLY, RETURN & EXHAUST DIFFUSERS/GRILLES. SEE MECHANICAL.
SUPPLY RETURN/EXHAUST

## KEYED NOTES:

01 NO CEILING.
02 FUME HOOD ENCLOSURE
03 LAB BENCH UMBILICAL.
04 OVERHEAD SERVICE PANEL.
05 GYP. BD. HEADER AT CHANGE IN CEILING HGT.
06 SLOPE GYP. BD. CLG. @ BOTTOM OF STAIRS.

## KEY PLAN

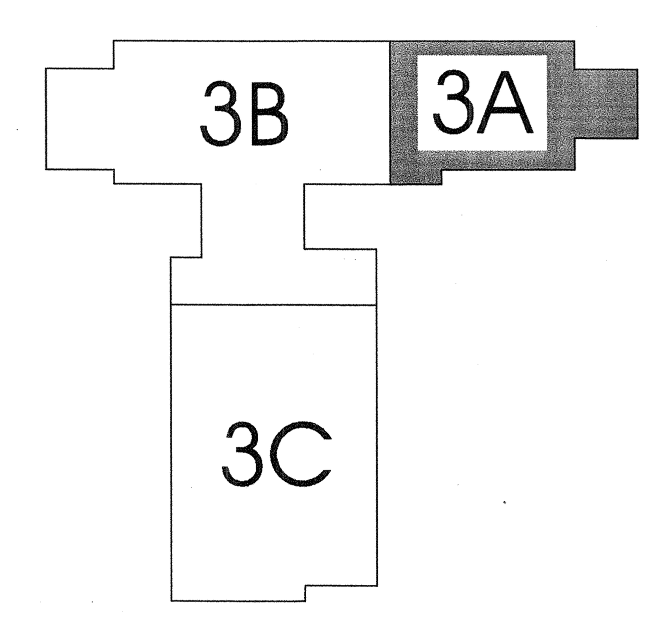


ARCHITECT 0818
ajc architects
703 east 1700 south
salt lake city, utah 84105
ph: 801.466.8818
fx: 801.466.4411
www.ajcarchitects.com

PAYETTE
285 Summer Street
Boston, MA 02210-1522
www.payette.com

OWNER INFORMATION
State of Utah
Department of Administrative Services
Division of Facilities Construction & Management
4110 State Office Building
Salt Lake City, Utah 84114
Phone: (801) 538 - 3018
Fax: (801) 538 - 3267
Internet: http://www.dfcm.utah.gov

PROJECT DESCRIPTION
LIFE SCIENCES RESEARCH CENTER
UTAH STATE UNIVERSITY

USTAR BUILDING #2
350 EAST GRAND AVE.
LOGAN, UTAH

SHEET NAME:
LEVEL 3
CEILING PLAN - 3B

REVISIONS
MARK DATE DESCRIPTION

ISSUE DATA

| | |
|---|---|
| ISSUE DATE: | DEC. 9, 2008 |
| ISSUE TYPE: | DESDEV |
| DRAWN BY: | J. NIELSEN |
| CHECKED BY: | J. JONES |
| CAD FILE NAME: | |
| DFCM PROJECT # | 06292770 |
| STATE PROPERTY # | - |
| COPYRIGHT: | STATE OF UTAH |

SHEET NUMBER:
AE111B

LEVEL 3 CEILING PLAN - 3C

A4 / AE111C

## GENERAL NOTES AND LEGEND:

- SEE SHEET AE001 FOR GENERAL NOTES.
- SEE COVER SHEET FOR DRAWING INDEX.
- DO NOT SCALE DRAWINGS.
- CONTRACTOR SHALL VERIFY ALL DIMENSIONS AND CONDITIONS BEFORE BEGINNING WORK AND SHALL REPORT TO THE ARCHITECT ANY ERRORS, INCONSISTENCIES OR OMISSIONS BEFORE BEGINNING WORK. SEE GENERAL NOTES AND SPECIFICATIONS.
- THIS IS A REFLECTED CEILING PLAN AND IS NOT INTENDED TO BE A LIGHTING PLAN. NO WALL MOUNTED LIGHTING FIXTURES OR OTHER WALL MOUNTED APPURTENANCES ARE SHOWN. SEE THE LIGHTING PLAN FOR ALL LIGHTING AND EGRESS SIGNS, SIZE AND TYPES OF ELECTRICAL FIXTURES ETC. SEE MECHANICAL PLANS FOR ALL CEILING MOUNTED DIFFUSERS / GRILLES ETC.

SUSPENDED ACOUSTICAL PANEL CEILING SYSTEM.
CLG HEIGHT 9'-0" AFF U.N.O.

PAINTED GYP. BD. CEILING & SOFFITS.
CLG HEIGHT 9'-0" AFF U.N.O.

SURFACE MOUNTED OR LAY-IN CEILING FLUORESCENT FIXTURE INDICATED BY "X" THROUGH FIXTURE. SEE ELECTRICAL PLAN FOR SIZE AND TYPE.

SUSPENDED FLUORESCENT FIXTURE INDICATED BY "CIRCLE" THROUGH FIXTURE. SEE ELECTRICAL PLAN FOR SIZE AND TYPE.

RECESS LIGHT FIXTURE. SEE ELECTRICAL PLAN FOR SIZE AND TYPE.

PENDANT MOUNT OR SURFACE MOUNT FIXTURE. SEE ELECTRICAL PLAN FOR SIZE AND TYPE.

CEILING MOUNTED EXIT SIGNAGE. SEE ELECTRICAL DRAWINGS. (WALL MOUNTED SIGNS NOT SHOWN THIS SHEET. SEE ELECTRICAL SHEETS.)

SUPPLY, RETURN & EXHAUST DIFFUSERS/GRILLES. SEE MECHANICAL.
SUPPLY RETURN/EXHAUST

## KEYED NOTES:

- 01 EXPOSED DUCT. SEE MECHANICAL.
- 02 S.S. HOOD & STERILIZER. SEE LAB AND MECH. DWG'S.
- 03 NO CEILING.

## KEY PLAN

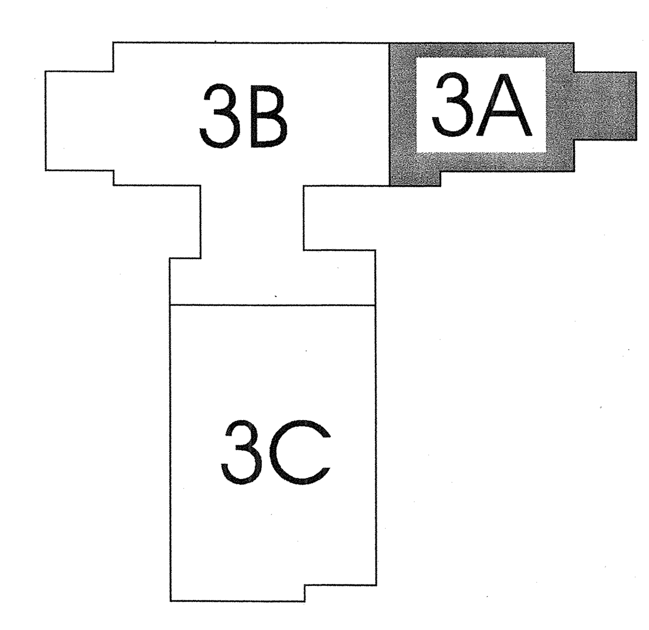


ARCHITECT 0818
ajc architects
703 east 1700 south
salt lake city, utah 84105
ph: 801.466.8818
fx: 801.466.4411
www.ajcarchitects.com

PAYETTE
285 Summer Street
Boston, MA 02210-1522
www.payette.com

OWNER INFORMATION
State of Utah
Department of Administrative Services
Division of Facilities Construction & Management
4110 State Office Building
Salt Lake City, Utah 84114
Phone: (801) 538 - 3018
Fax: (801) 538 - 3267
Internet: http://www.dfcm.utah.gov

PROJECT DESCRIPTION
LIFE SCIENCES RESEARCH CENTER
UTAH STATE UNIVERSITY

USTAR BUILDING #2
350 EAST GRAND AVE.
LOGAN, UTAH

SHEET NAME:
LEVEL 3
CEILING PLAN - 3C

REVISIONS

| MARK | DATE | DESCRIPTION |
| --- | --- | --- |

ISSUE DATA

| | |
| --- | --- |
| ISSUE DATE: | DEC. 9, 2008 |
| ISSUE TYPE: | DESDEV |
| DRAWN BY: | J. NIELSEN |
| CHECKED BY: | J. JONES |
| CAD FILE NAME: | |
| DFCM PROJECT # | 06292770 |
| STATE PROPERTY # | - |
| COPYRIGHT: | STATE OF UTAH |

SHEET NUMBER:
AE111C

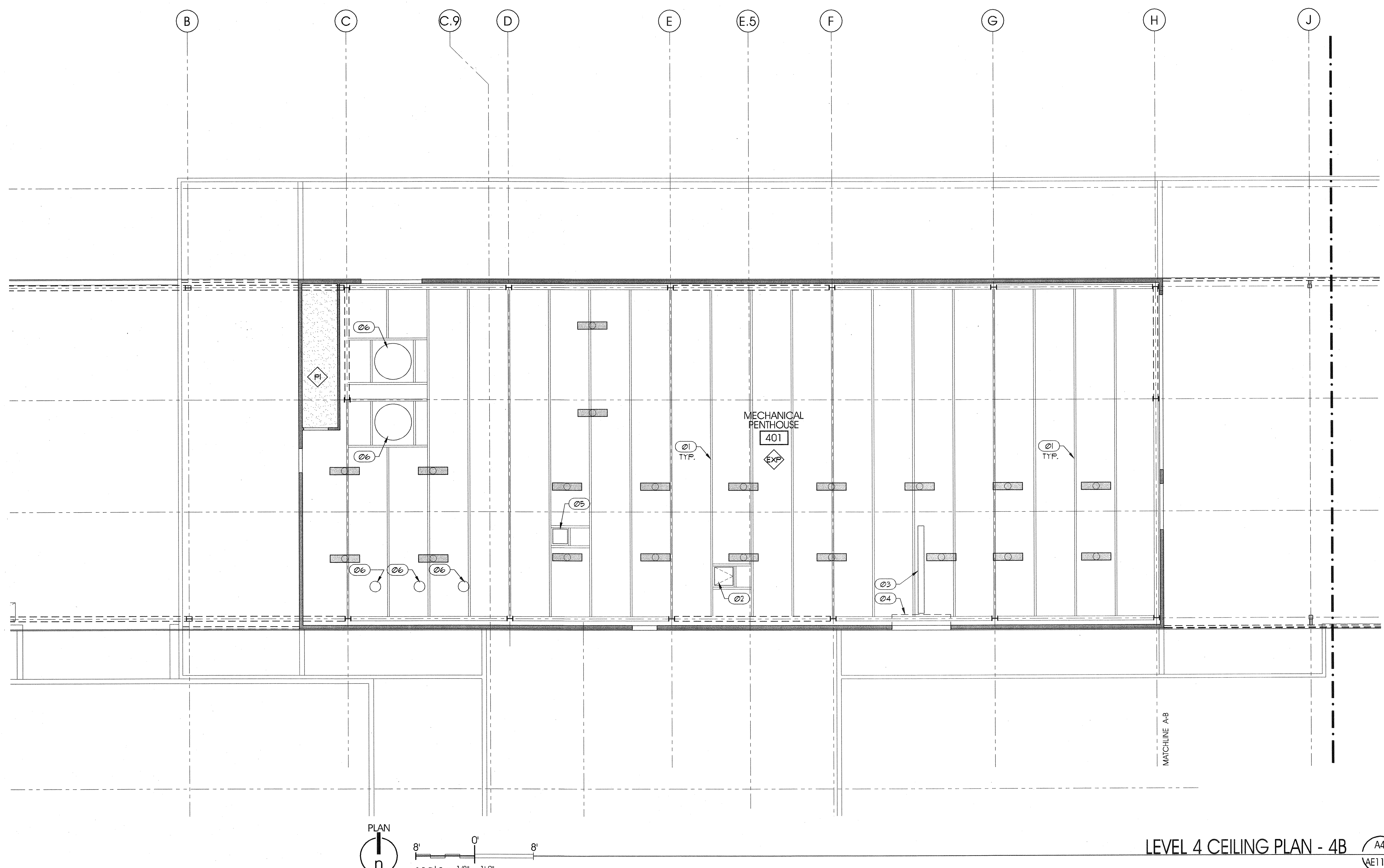


LEVEL 4 CEILING PLAN - 4B

A4 AE112B

# GENERAL NOTES AND LEGEND:

- SEE SHEET AE001 FOR GENERAL NOTES.
- SEE COVER SHEET FOR DRAWING INDEX.
- DO NOT SCALE DRAWINGS.
- CONTRACTOR SHALL VERIFY ALL DIMENSIONS AND CONDITIONS BEFORE BEGINNING WORK AND SHALL REPORT TO THE ARCHITECT ANY ERRORS, INCONSISTENCIES OR OMISSIONS BEFORE BEGINNING WORK. SEE GENERAL NOTES AND SPECIFICATIONS.
- THIS IS A REFLECTED CEILING PLAN AND IS NOT INTENDED TO BE A LIGHTING PLAN. NO WALL MOUNTED LIGHTING FIXTURES OR OTHER WALL MOUNTED APPURTENANCES ARE SHOWN. SEE THE LIGHTING PLAN FOR ALL LIGHTING AND EGRESS SIGNS, SIZE AND TYPES OF ELECTRICAL FIXTURES ETC. SEE MECHANICAL PLANS FOR ALL CEILING MOUNTED DIFFUSERS / GRILLES ETC.

PAINTED GYP. BD. CEILING & SOFFITS. SEE DETAIL A5/AE503. (CEILING MAY BE FRAMED OR SUSPENDED PER GC OPTION)

CLG HEIGHT 8'-0" AFF U.N.O.

P6

SUSPENDED FLUORESCENT FIXTURE INDICATED BY "CIRCLE" THROUGH FIXTURE. SEE ELECTRICAL PLAN FOR SIZE AND TYPE.

# KEYED NOTES:

- Ø1 EXPOSED ROOF STRUCTURE. SEE STRUCTURAL PLANS.
- Ø2 ROOF HATCH.
- Ø3 EQUIPMENT HOIST STRUCTURE. SEE STRUCTURAL PLANS AND ACCESORY SCHEDULE.
- Ø4 COIL HOUSING FOR OVERHEAD COILING DOOR.
- Ø5 DUCT / FAN PENETRATION.
- Ø6 DUCT PENETRATION THROUGH ROOF.

# KEY PLAN

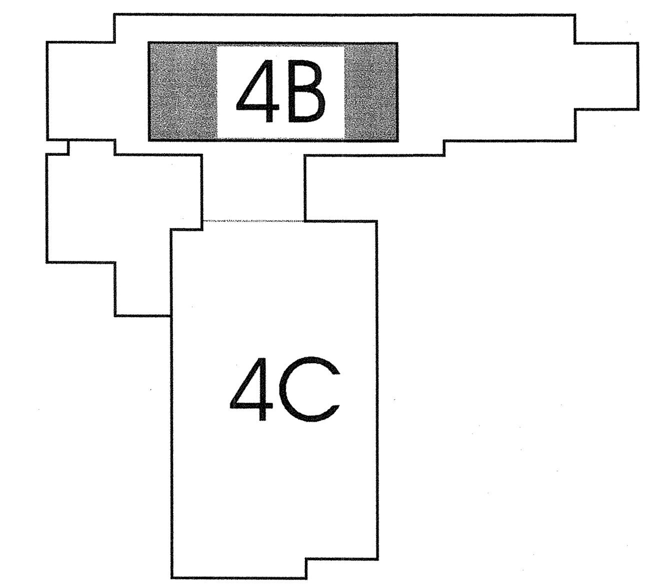



ARCHITECT 0818

ajc architects

703 east 1700 south
salt lake city, utah 84105
ph: 801.466.8818
fx: 801.466.4411
www.ajcarchitects.com

PAYETTE

285 Summer Street
Boston, MA 02210-1522
www.payette.com


OWNER INFORMATION

State of Utah
Department of Administrative Services

Division of Facilities Construction & Management
4110 State Office Building
Salt Lake City, Utah 84114
Phone: (801) 538 - 3018
Fax: (801) 538 - 3267

Internet: http://www.dfcm.utah.gov

PROJECT DESCRIPTION

LIFE SCIENCES RESEARCH CENTER
UTAH STATE UNIVERSITY

USTAR BUILDING #2
350 EAST GRAND AVE.
LOGAN, UTAH

SHEET NAME:

LEVEL 4
CEILING PLAN - 4B

REVISIONS

| MARK | DATE | DESCRIPTION |
|---|---|---|

ISSUE DATA

| | |
|---|---|
| ISSUE DATE: | DEC. 9, 2008 |
| ISSUE TYPE: | DESDEV |
| DRAWN BY: | J. NIELSEN |
| CHECKED BY: | J. JONES |
| CAD FILE NAME: | |
| DFCM PROJECT # | 06292770 |
| STATE PROPERTY # | - |
| COPYRIGHT: | STATE OF UTAH |

SHEET NUMBER:

AE112B

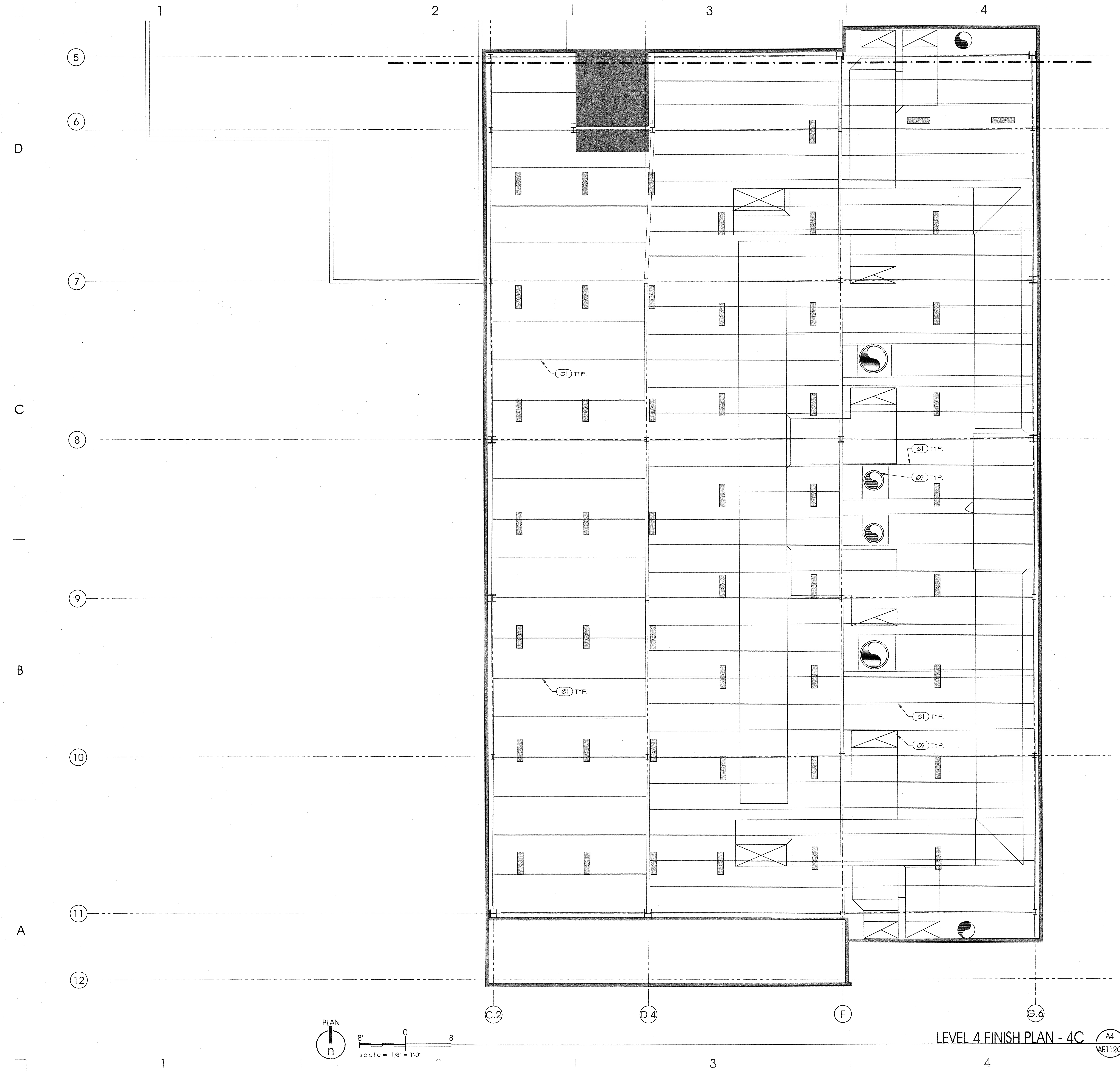


LEVEL 4 FINISH PLAN - 4C

A4
AE112C

## GENERAL NOTES AND LEGEND:

- SEE SHEET AEØØ1 FOR GENERAL NOTES.
- SEE COVER SHEET FOR DRAWING INDEX.
- DO NOT SCALE DRAWINGS.
- CONTRACTOR SHALL VERIFY ALL DIMENSIONS AND CONDITIONS BEFORE BEGINNING WORK AND SHALL REPORT TO THE ARCHITECT ANY ERRORS, INCONSISTENCIES OR OMISSIONS BEFORE BEGINNING WORK. SEE GENERAL NOTES AND SPECIFICATIONS.
- THIS IS A REFLECTED CEILING PLAN AND IS NOT INTENDED TO BE A LIGHTING PLAN. NO WALL MOUNTED LIGHTING FIXTURES OR OTHER WALL MOUNTED APPURTENANCES ARE SHOWN. SEE THE LIGHTING PLAN FOR ALL LIGHTING AND EGRESS SIGNS, SIZE AND TYPES OF ELECTRICAL FIXTURES ETC. SEE MECHANICAL PLANS FOR ALL CEILING MOUNTED DIFFUSERS / GRILLES ETC.

SUSPENDED FLUORESCENT FIXTURE INDICATED BY "CIRCLE" THROUGH FIXTURE. SEE ELECTRICAL PLAN FOR SIZE AND TYPE.

## KEYED NOTES:

Ø1 EXPOSED ROOF STRUCTURE. SEE STRUCTURAL PLANS.

Ø2 EXPOSED MECHANICAL DUCT IN CEILING SPACE. SEE MECHANICAL PLANS.

## KEY PLAN

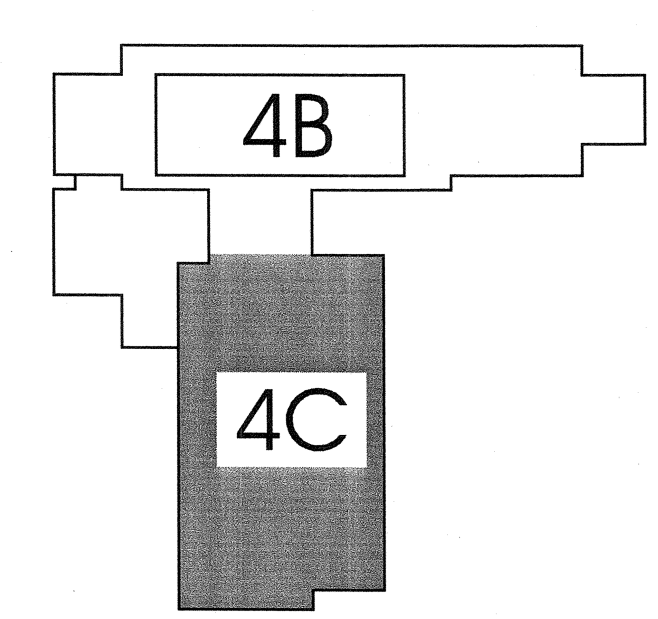



ARCHITECT 0818

ajc architects
703 east 1700 south
salt lake city, utah 84105
ph: 801.466.8818
fx: 801.466.4411
www.ajcarchitects.com

PAYETTE
285 Summer Street
Boston, MA 02210-1522
www.payette.com



OWNER INFORMATION

State of Utah
Department of Administrative Services
Division of Facilities Construction & Management
4110 State Office Building
Salt Lake City, Utah 84114
Phone: (801) 538 - 3018
Fax: (801) 538 - 3267
Internet: http://www.dfcm.utah.gov


PROJECT DESCRIPTION

LIFE SCIENCES RESEARCH CENTER
UTAH STATE UNIVERSITY

USTAR BUILDING #2
350 EAST GRAND AVE.
LOGAN, UTAH

SHEET NAME:

LEVEL 4
FINISH PLAN - 4C

REVISIONS

| MARK | DATE | DESCRIPTION |
|---|---|---|

ISSUE DATA

| | |
|---|---|
| ISSUE DATE: | DEC. 9, 2008 |
| ISSUE TYPE: | DESDEV |
| DRAWN BY: | J. NIELSEN |
| CHECKED BY: | J. JONES |
| CAD FILE NAME: | |
| DFCM PROJECT # | 06292770 |
| STATE PROPERTY # | - |
| COPYRIGHT: | STATE OF UTAH |

SHEET NUMBER:

AE112C

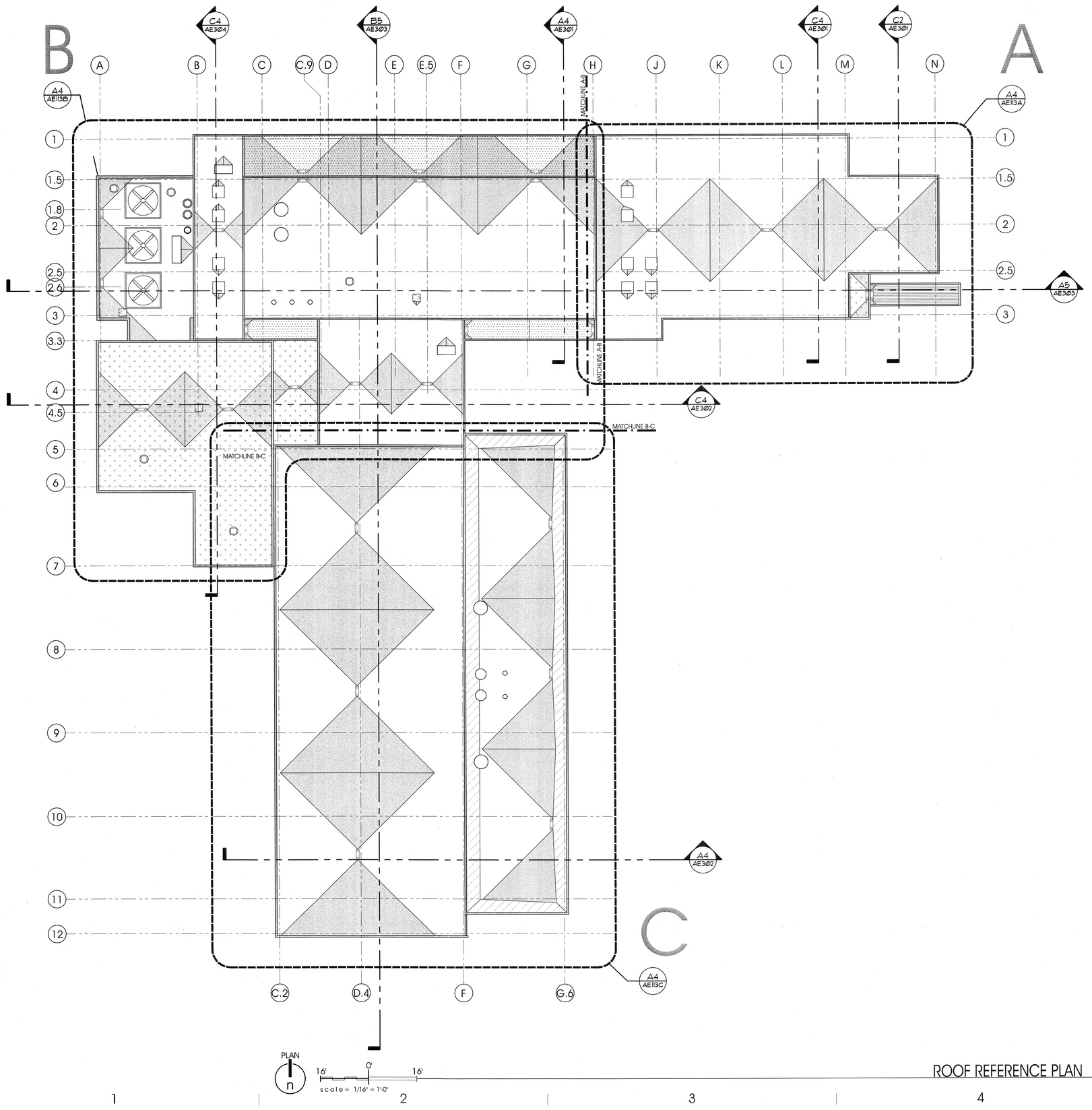


ROOF REFERENCE PLAN A4 AE113

## GENERAL NOTES AND LEGEND:

- SEE SHEET AE000 FOR GENERAL NOTES.
- SEE TITLE SHEET G1001 FOR DRAWING INDEX.
- DO NOT SCALE DRAWINGS.
- CONTRACTOR /SUBCONTRACTOR'S SHALL VERIFY ALL DIMENSIONS AND CONDITIONS BEFORE BEGINNING WORK AND SHALL REPORT TO THE ARCHITECT ANY ERRORS, INCONSISTENCIES OR OMISSIONS BEFORE BEGINNING WORK. SEE GENERAL NOTES AND SPECIFICATIONS.

KEY PLAN

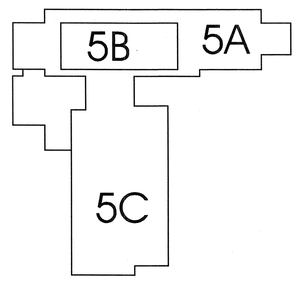


ARCHITECT 0818

ajc architects

703 east 1700 south
salt lake city, utah 84105
ph: 801.466.8818
fx: 801.466.4411
www.ajcarchitects.com

P A Y E T T E

285 Summer Street
Boston, MA 02210-1522
www.payette.com

OWNER INFORMATION

**State of Utah**
Department of Administrative Services

Division of Facilities
Construction & Management
4110 State Office Building
Salt Lake City, Utah 84114
Phone: (801) 538 - 3018
Fax: (801) 538 - 3267

Internet: http://www.dfcm.utah.gov

PROJECT DESCRIPTION

LIFE SCIENCES
RESEARCH CENTER
UTAH STATE UNIVERSITY

USTAR BUILDING #2
350 EAST GRAND AVE.
LOGAN, UTAH

SHEET NAME:

ROOF REFERENCE PLAN

REVISIONS

| MARK | DATE | DESCRIPTION |
|---|---|---|

ISSUE DATA

| | |
|---|---|
| ISSUE DATE: | DEC. 9, 2008 |
| ISSUE TYPE: | DESDEV |
| DRAWN BY: | J. NIELSEN |
| CHECKED BY: | J. JONES |
| CAD FILE NAME: | |
| DFCM PROJECT # | 06292770 |
| STATE PROPERTY # | - |
| COPYRIGHT: | STATE OF UTAH |

SHEET NUMBER:

AE113

P:\06292008 USTAR UBUILDING\REVIT\ARCHITECTURE\AE113.dwg, 12/9/2008 8:54:43 PM, mielsen

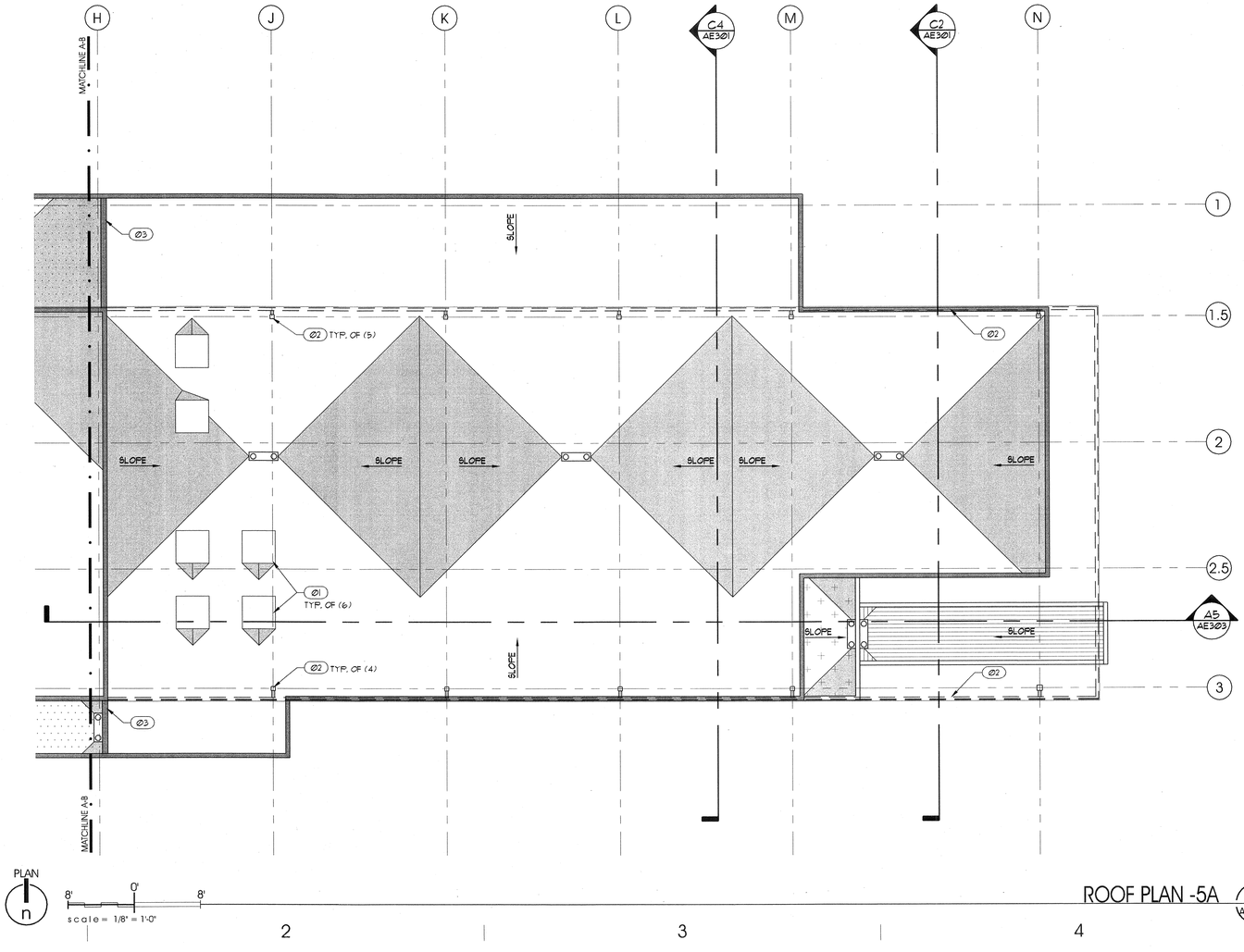


PLAN

8' 0' 8'

scale = 1/8" = 1'-0"

ROOF PLAN -5A (A4 / AE113A)

## GENERAL NOTES AND LEGEND:

- SEE SHEET AE000 FOR GENERAL NOTES.
- SEE TITLE SHEET G1001 FOR DRAWING INDEX.
- DO NOT SCALE DRAWINGS.
- CONTRACTOR /SUBCONTRACTOR'S SHALL VERIFY ALL DIMENSIONS AND CONDITIONS BEFORE BEGINNING WORK AND SHALL REPORT TO THE ARCHITECT ANY ERRORS, INCONSISTENCIES OR OMISSIONS BEFORE BEGINNING WORK. SEE GENERAL NOTES AND SPECIFICATIONS.

SINGLE PLY MEMBRANE ROOF OVER 4" ROOF INSULATION
BUILT UP EPS CRICKET W/ 1/4" / FT SLOPE.

METAL ROOF PANEL (MATCH WALL PANEL)

"GREEN ROOF" 2"-3" CLEAN WASHED RIVER ROCK OVER FULLY ADHERED SINGLE PLY MEMBRANE ROOFING.

PRIMARY AND OVERFLOW ROOF DRAIN
SEE PLUMBING DRAWINGS.

## KEYED NOTES:

Ø1 ROOF CURB FOR CONDENSERS.
Ø2 STRUCTURE FOR PERFORATED METAL PANEL PARAPET.
Ø2 POURED IN PLACE CONC. CURB AT CHANGE IN ROOF SLOPE.

## KEY PLAN

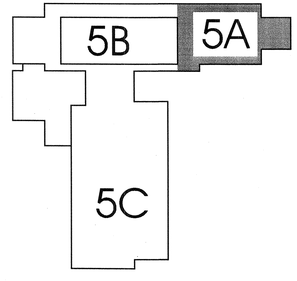


ARCHITECT 0818

ajc architects

703 east 1700 south
salt lake city, utah 84105
ph: 801.466.8818
fx: 801.466.4411
www.ajcarchitects.com

PAYETTE

285 Summer Street
Boston, MA 02210-1522
www.payette.com

OWNER INFORMATION

**State of Utah**
Department of Administrative Services

Division of Facilities
Construction & Management
4110 State Office Building
Salt Lake City, Utah 84114
Phone: (801) 538 - 3018
Fax: (801) 538 - 3267

Internet: http://www.dfcm.utah.gov

PROJECT DESCRIPTION

LIFE SCIENCES
RESEARCH CENTER
UTAH STATE UNIVERSITY

USTAR BUILDING #2
350 EAST GRAND AVE.
LOGAN, UTAH

SHEET NAME:
ROOF PLAN
5A

REVISIONS

| MARK | DATE | DESCRIPTION |
|---|---|---|

ISSUE DATA

| | |
|---|---|
| ISSUE DATE: | DEC. 9, 2008 |
| ISSUE TYPE: | DESDEV |
| DRAWN BY: | J. NIELSEN |
| CHECKED BY: | J. JONES |
| CAD FILE NAME: | |
| DFCM PROJECT # | 06292770 |
| STATE PROPERTY # | - |
| COPYRIGHT: | STATE OF UTAH |

SHEET NUMBER:
AE113A

P:\06292901.0 UTAH ST UNIVERSITY\DESDEV\ARCHITECTURAL\01 REVIT\1.5A.dwg, 12/4/2008 8:08:34 PM, jnielsen

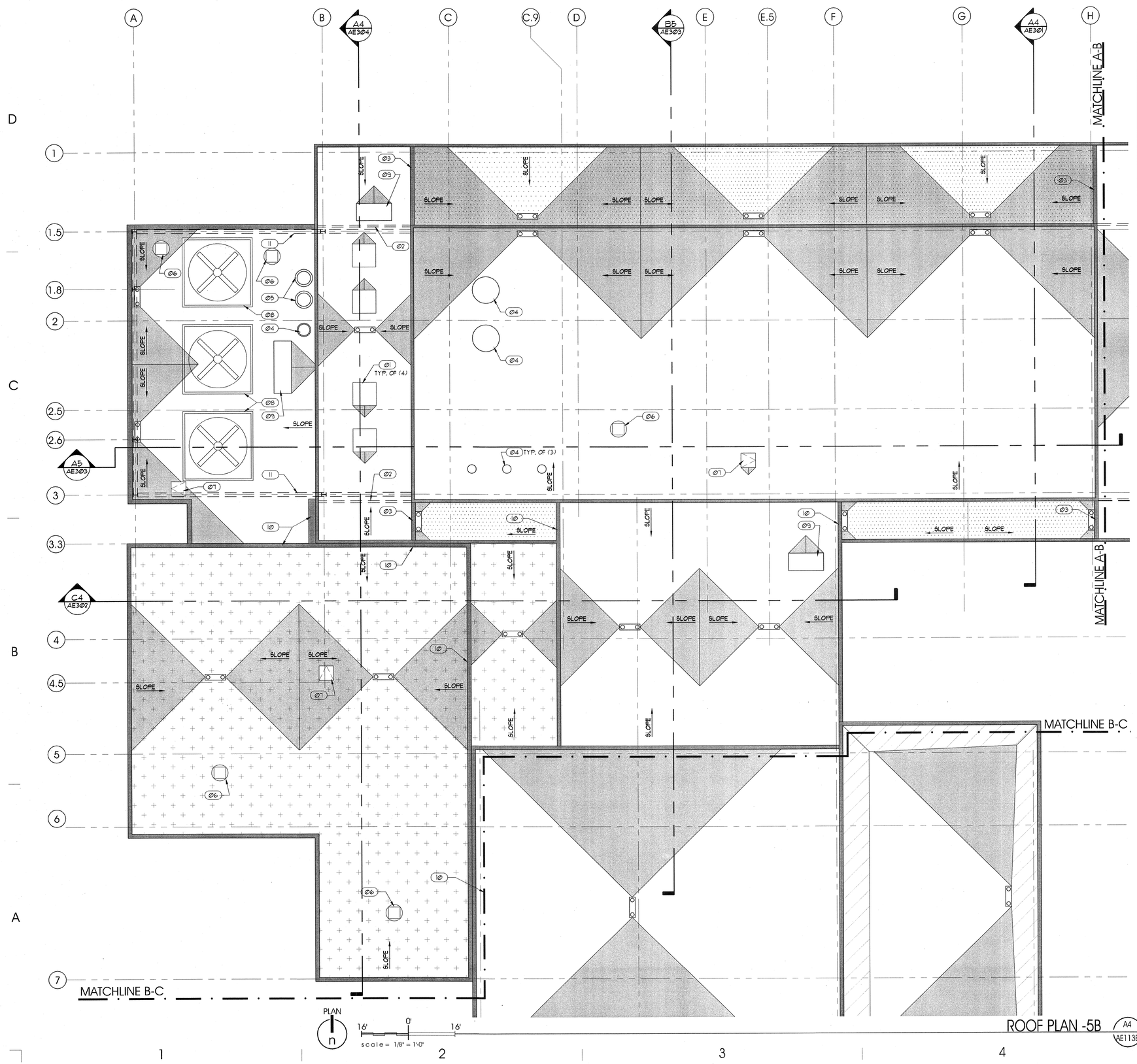


## GENERAL NOTES AND LEGEND:

- SEE SHEET AE000 FOR GENERAL NOTES.
- SEE TITLE SHEET G1001 FOR DRAWING INDEX.
- DO NOT SCALE DRAWINGS.
- CONTRACTOR /SUBCONTRACTOR'S SHALL VERIFY ALL DIMENSIONS AND CONDITIONS BEFORE BEGINNING WORK AND SHALL REPORT TO THE ARCHITECT ANY ERRORS, INCONSISTENCIES OR OMISSIONS BEFORE BEGINNING WORK. SEE GENERAL NOTES AND SPECIFICATIONS.

SINGLE PLY MEMBRANE ROOF OVER 4" ROOF INSULATION
BUILT UP EPS CRICKET W/ 1/4" / FT SLOPE

AREA OF FULLY TAPERED INSULATION SYSTEM. (NO SLOPE AT STRUCTURE)

"GREEN ROOF" 2"-3" CLEAN WASHED RIVER ROCK OVER FULLY ADHERED SINGLE PLY MEMBRANE ROOFING.

PRIMARY AND OVERFLOW ROOF DRAIN SEE PLUMBING DRAWINGS.

## KEYED NOTES:

(01) ROOF CURB FOR CONDENSERS.
(02) STRUCTURE FOR PERFORATED METAL PANEL PARAPET.
(03) POURED IN PLACE CONC. CURB AT CHANGE IN ROOF SLOPE.
(04) EXHAUST FLUE. SEE MECHANICAL DRAWINGS.
(05) BOILER FLUE. SEE MECHANICAL DRAWINGS.
(06) EXHAUST FAN. SEE MECHANICAL DRAWINGS.
(07) ROOF HATCH.
(08) COOLING TOWER ON FRAME.
(09) FRESH AIR PENTHOUSE. SEE MECHANICAL DRAWINGS.
(10) CURB AT STRUCTURAL TRANSITION.
(11) STRUCTURE. SEE STRUCTURAL PLANS, PAINT.

## KEY PLAN

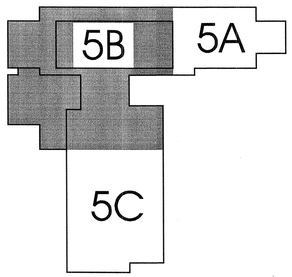



ARCHITECT 0818

ajc architects

703 east 1700 south
salt lake city, utah 84105
ph: 801.466.8818
fx: 801.466.4411
www.ajcarchitects.com

P A Y E T T E

285 Summer Street
Boston, MA 02210-1522
www.payette.com


OWNER INFORMATION

**State of Utah**
Department of Administrative Services

Division of Facilities
Construction & Management
4110 State Office Building
Salt Lake City, Utah 84114
Phone: (801) 538 - 3018
Fax: (801) 538 - 3267

Internet: http://www.dfcm.utah.gov

PROJECT DESCRIPTION

# LIFE SCIENCES RESEARCH CENTER
## UTAH STATE UNIVERSITY

USTAR BUILDING #2
350 EAST GRAND AVE.
LOGAN, UTAH

SHEET NAME:

ROOF PLAN
5B

REVISIONS

| MARK | DATE | DESCRIPTION |
|---|---|---|

ISSUE DATA

| | |
|---|---|
| ISSUE DATE: | DEC. 9, 2008 |
| ISSUE TYPE: | DESDEV |
| DRAWN BY: | J. NIELSEN |
| CHECKED BY: | J. JONES |
| CAD FILE NAME: | |
| DFCM PROJECT # | 06292770 |
| STATE PROPERTY # | - |
| COPYRIGHT: | STATE OF UTAH |

SHEET NUMBER:

# AE113B

P:\06292770.01.00\CAD\DESDEV\DGN\ARCHITECTURAL\06292770.01AE113B.dwg, 12/9/2008 9:03:47 PM, mwilson

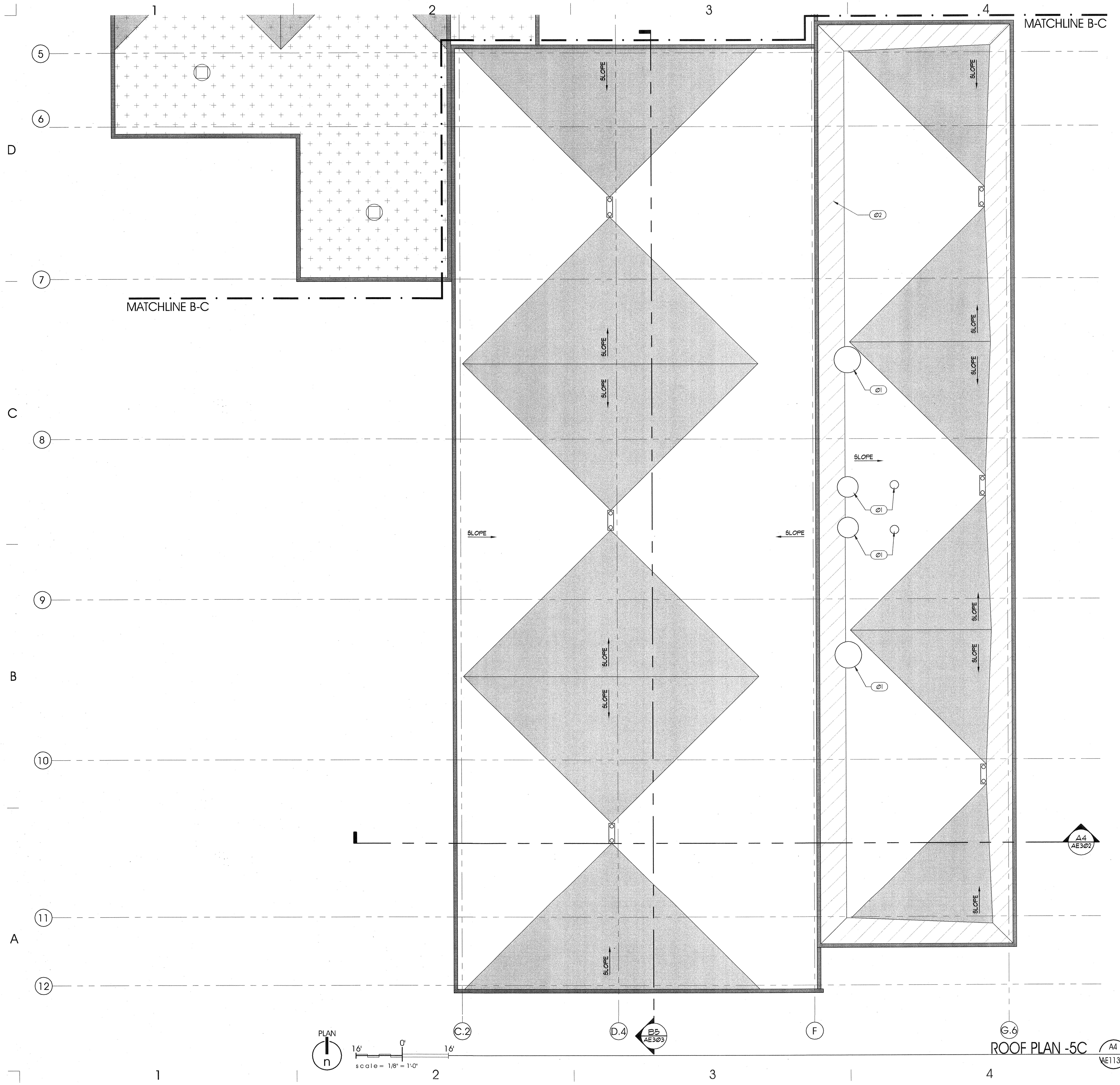


ROOF PLAN -5C (A4 AE113C)

## GENERAL NOTES AND LEGEND:

- SEE SHEET AE001 FOR GENERAL NOTES.
- SEE TITLE SHEET G1001 FOR DRAWING INDEX.
- DO NOT SCALE DRAWINGS.
- CONTRACTOR /SUBCONTRACTOR'S SHALL VERIFY ALL DIMENSIONS AND CONDITIONS BEFORE BEGINNING WORK AND SHALL REPORT TO THE ARCHITECT ANY ERRORS, INCONSISTENCIES OR OMISSIONS BEFORE BEGINNING WORK. SEE GENERAL NOTES AND SPECIFICATIONS.

SINGLE PLY MEMBRANE ROOF OVER 4" ROOF INSULATION

BUILT UP EPS CRICKET W/ 1/4" / FT SLOPE

CONT. SHEATHED KICKER.

PRIMARY AND OVERFLOW ROOF DRAIN SEE PLUMBING DRAWINGS.

## KEYED NOTES:

- Ø1 EXHAUST FLUE. SEE MECHANICAL DRAWINGS.
- Ø2 CONTINUOUS SHEATHED KICKER ALL AROUND HIGH PARAPET.

## KEY PLAN

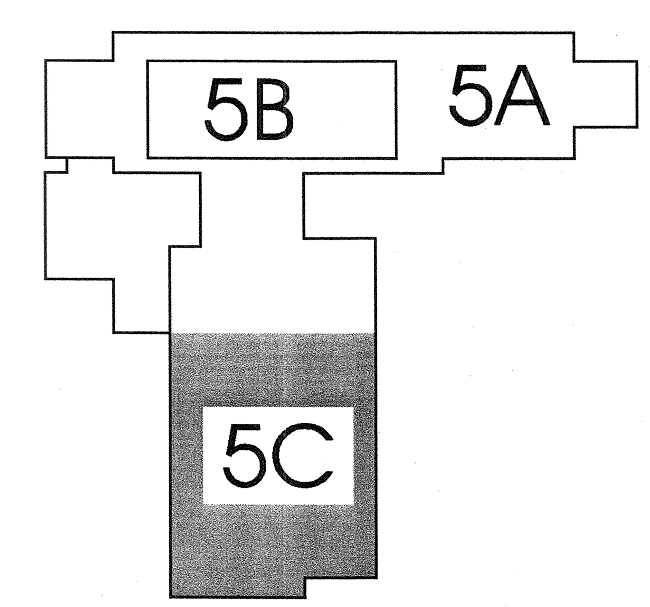



ARCHITECT 0818

ajc architects

703 east 1700 south
salt lake city, utah 84105
ph: 801.466.8818
fx: 801.466.4411
www.ajcarchitects.com

PAYETTE

285 Summer Street
Boston, MA 02210-1522
www.payette.com


OWNER INFORMATION

**State of Utah**
Department of Administrative Services

Division of Facilities Construction & Management
4110 State Office Building
Salt Lake City, Utah 84114
Phone: (801) 538 - 3018
Fax: (801) 538 - 3267

Internet: http://www.dfcm.utah.gov

PROJECT DESCRIPTION

# LIFE SCIENCES RESEARCH CENTER
UTAH STATE UNIVERSITY

USTAR BUILDING #2
350 EAST GRAND AVE.
LOGAN, UTAH

SHEET NAME:

ROOF PLAN
5C

REVISIONS

| MARK | DATE | DESCRIPTION |
|---|---|---|

ISSUE DATA

| | |
|---|---|
| ISSUE DATE: | DEC. 9, 2008 |
| ISSUE TYPE: | DESDEV |
| DRAWN BY: | J. NIELSEN |
| CHECKED BY: | J. JONES |
| CAD FILE NAME: | |
| DFCM PROJECT # | 06292770 |
| STATE PROPERTY # | - |
| COPYRIGHT: | STATE OF UTAH |

SHEET NUMBER:

AE113C

## GENERAL NOTES AND LEGEND:
-FOR SHEET AE201 ONLY.

- SEE SHEET AE001 FOR GENERAL NOTES.
- SEE TITLE SHEET G001 FOR DRAWING INDEX.
- DO NOT SCALE DRAWINGS.
- CONTRACTOR /SUBCONTRACTOR'S SHALL VERIFY ALL DIMENSIONS AND CONDITIONS BEFORE BEGINNING WORK AND SHALL REPORT TO THE ARCHITECT ANY ERRORS, INCONSISTENCIES OR OMISSIONS BEFORE BEGINNING WORK. SEE GENERAL NOTES AND SPECIFICATIONS.

CORRUGATED PERFORATED METAL PANEL

CORRUGATED METAL PANEL

SHIPLAP METAL PANEL

CURTAIN WALL SYSTEM — GLAZING, SPANDREL PANEL

COMPOSITE WOOD PANEL SYSTEM

GREEN SCREEN SYSTEM OVER SHIPLAP PANEL.

VERT. SEAM METAL PANEL.

## KEYED NOTES:
-FOR SHEET AE201 ONLY.

01 CORRUGATED PERFORATED METAL PANEL.
02 CORRUGATED METAL PANEL.
03 SHIPLAP METAL PANEL.
04 CURTAIN WALL SYSTEM.
05 COMPOSITE WOOD PANEL SYSTEM.
06 GREEN SCREEN SYSTEM OVER VERT. SEAM METAL PANEL.
07 OPENING THROUGH METAL PANEL.
08 VERT. SEAM METAL PANEL.
09 MECHANICAL LOUVER.

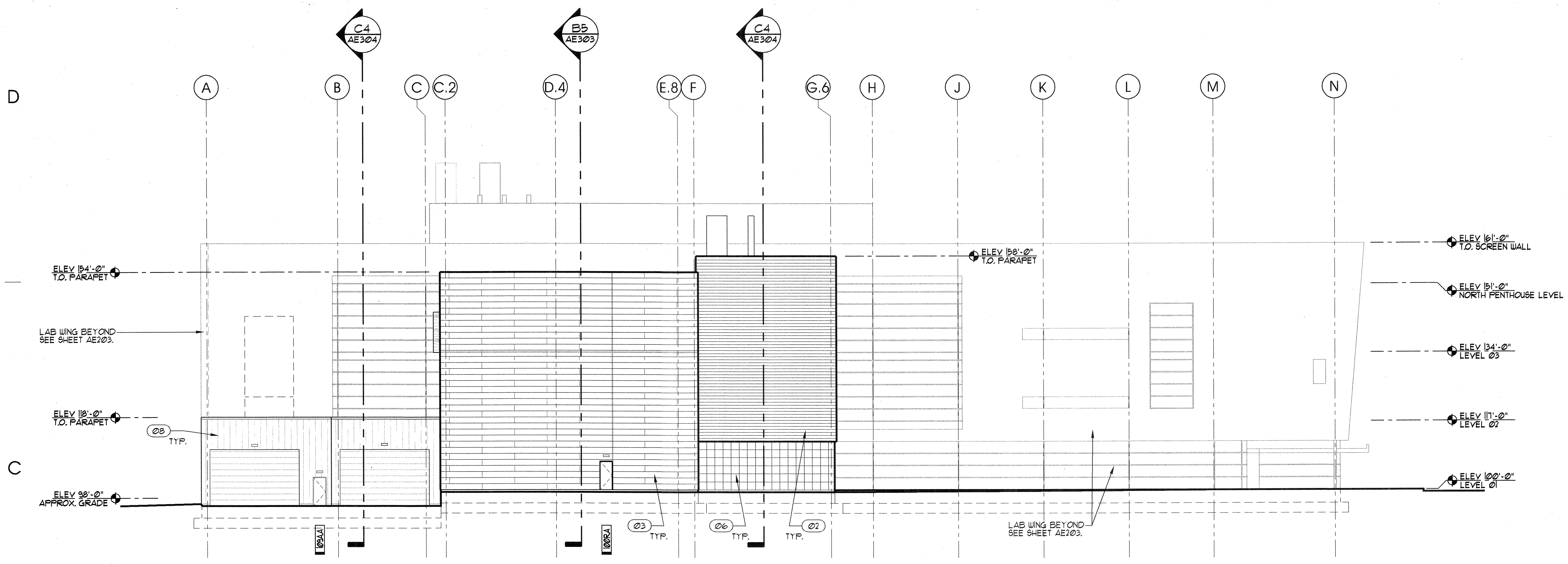


SOUTH ELEVATION C4/AE201

scale= 1/16" = 1'-0"

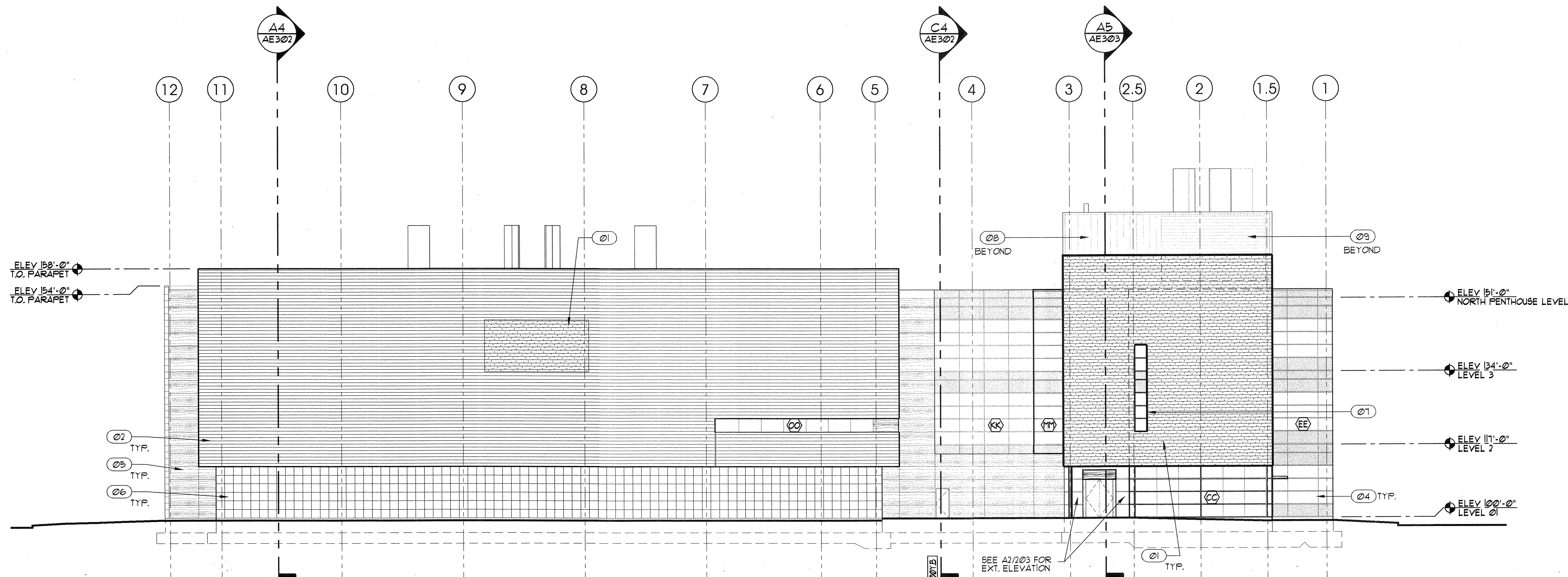


EAST ELEVATION A4/AE201

scale= 1/16" = 1'-0"


ARCHITECT 0818

ajc architects
703 east 1700 south
salt lake city, utah 84105
ph: 801.466.8818
fx: 801.466.4411
www.ajcarchitects.com

PAYETTE
285 Summer Street
Boston, MA 02210-1522
www.payette.com



OWNER INFORMATION

State of Utah
Department of Administrative Services
Division of Facilities Construction & Management
4110 State Office Building
Salt Lake City, Utah 84114
Phone: (801) 538 - 3018
Fax: (801) 538 - 3267
Internet: http://www.dfcm.utah.gov


PROJECT DESCRIPTION

# LIFE SCIENCES RESEARCH CENTER
UTAH STATE UNIVERSITY

USTAR BUILDING #2
350 EAST GRAND AVE.
LOGAN, UTAH

SHEET NAME:

EXTERIOR ELEVATIONS

REVISIONS

| MARK | DATE | DESCRIPTION |
|---|---|---|

ISSUE DATA

| | |
|---|---|
| ISSUE DATE: | DEC. 9, 2008 |
| ISSUE TYPE: | DESDEV |
| DRAWN BY: | J. NIELSEN |
| CHECKED BY: | J. JONES |
| CAD FILE NAME: | |
| DFCM PROJECT # | 06292770 |
| STATE PROPERTY # | - |
| COPYRIGHT: | STATE OF UTAH |

SHEET NUMBER:

# AE201

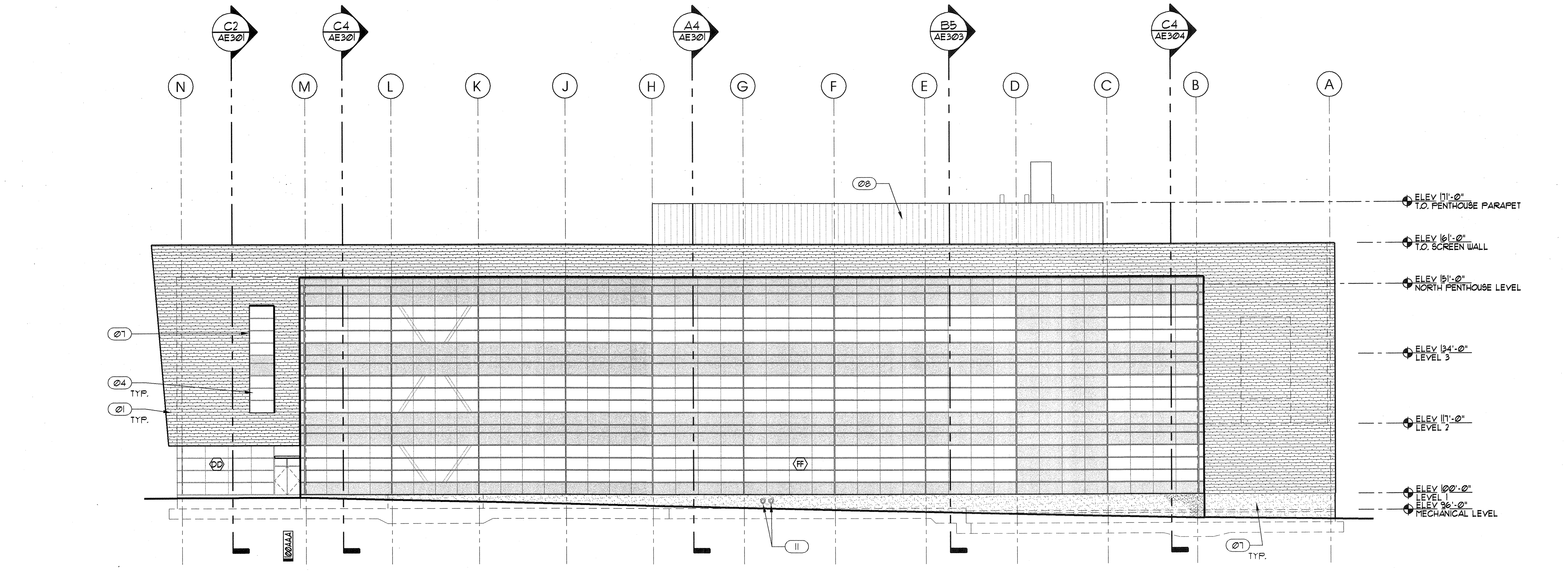


NORTH ELEVATION C4 / AE202

scale = 1/16" = 1'-0"

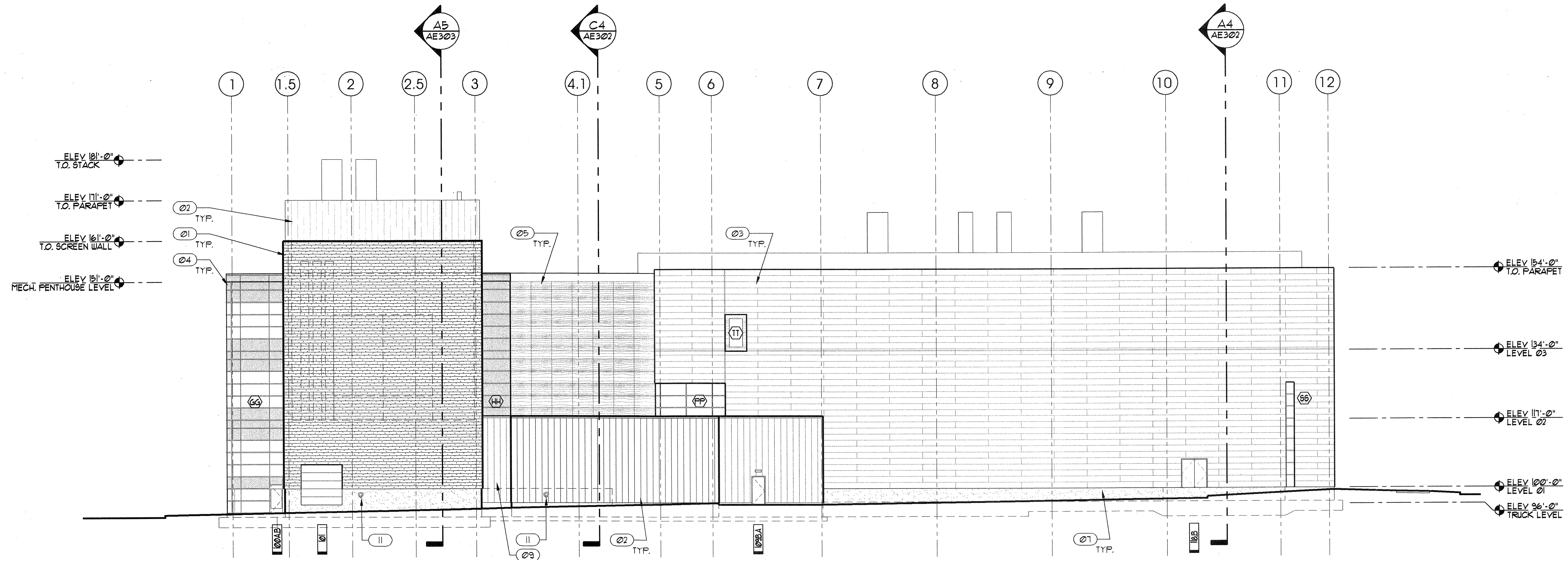


WEST ELEVATION A4 / AE202

scale = 1/16" = 1'-0"

## GENERAL NOTES AND LEGEND:

FOR SHEET AE202 ONLY.

- SEE SHEET AE001 FOR GENERAL NOTES.
- SEE TITLE SHEET G100 FOR DRAWING INDEX.
- DO NOT SCALE DRAWINGS.
- CONTRACTOR /SUBCONTRACTOR'S SHALL VERIFY ALL DIMENSIONS AND CONDITIONS BEFORE BEGINNING WORK AND SHALL REPORT TO THE ARCHITECT ANY ERRORS, INCONSISTENCIES OR OMISSIONS BEFORE BEGINNING WORK. SEE GENERAL NOTES AND SPECIFICATIONS.

CORRUGATED PERFORATED METAL

CORRUGATED METAL

SHIP-LAP METAL

CURTAIN WALL SYSTEM — GLAZING, SPANDREL PANEL

COMPOSITE WOOD PANEL SYSTEM

ARCHITECTURAL CONCRETE

## KEYED NOTES:

FOR SHEET AE202 ONLY.

01 CORRUGATED PERFORATED METAL PANEL.
02 CORRUGATED METAL PANEL.
03 SHIPLAP METAL PANEL.
04 CURTAIN WALL SYSTEM.
05 COMPOSITE WOOD PANEL SYSTEM.
06 GREEN SCREEN SYSTEM OVER VERT. SEAM METAL PANEL.
07 ARCHITECTURAL CONCRETE.
08 VERT. SEAM METAL PANEL.
09 MECHANICAL LOUVER.
10 OPENING THROUGH METAL PANEL.
11 OVERFLOW DRAIN DOWNSPOUT.


ARCHITECT 0818

ajc architects

703 east 1700 south
salt lake city, utah 84105
ph: 801.466.8818
fx: 801.466.4411
www.ajcarchitects.com

PAYETTE

285 Summer Street
Boston, MA 02210-1522
www.payette.com


OWNER INFORMATION

State of Utah
Department of Administrative Services

Division of Facilities Construction & Management
4110 State Office Building
Salt Lake City, Utah 84114
Phone: (801) 538 - 3018
Fax: (801) 538 - 3267

Internet: http://www.dfcm.utah.gov

PROJECT DESCRIPTION

# LIFE SCIENCES RESEARCH CENTER
UTAH STATE UNIVERSITY

USTAR BUILDING #2
350 EAST GRAND AVE.
LOGAN, UTAH

SHEET NAME:

## EXTERIOR ELEVATIONS

REVISIONS

MARK DATE DESCRIPTION

ISSUE DATA

| | |
|---|---|
| ISSUE DATE: | DEC. 9, 2008 |
| ISSUE TYPE: | DESDEV |
| DRAWN BY: | J. NIELSEN |
| CHECKED BY: | J. JONES |
| CAD FILE NAME: | |
| DFCM PROJECT # | 06292770 |
| STATE PROPERTY # | - |
| COPYRIGHT: | STATE OF UTAH |

SHEET NUMBER:

AE202

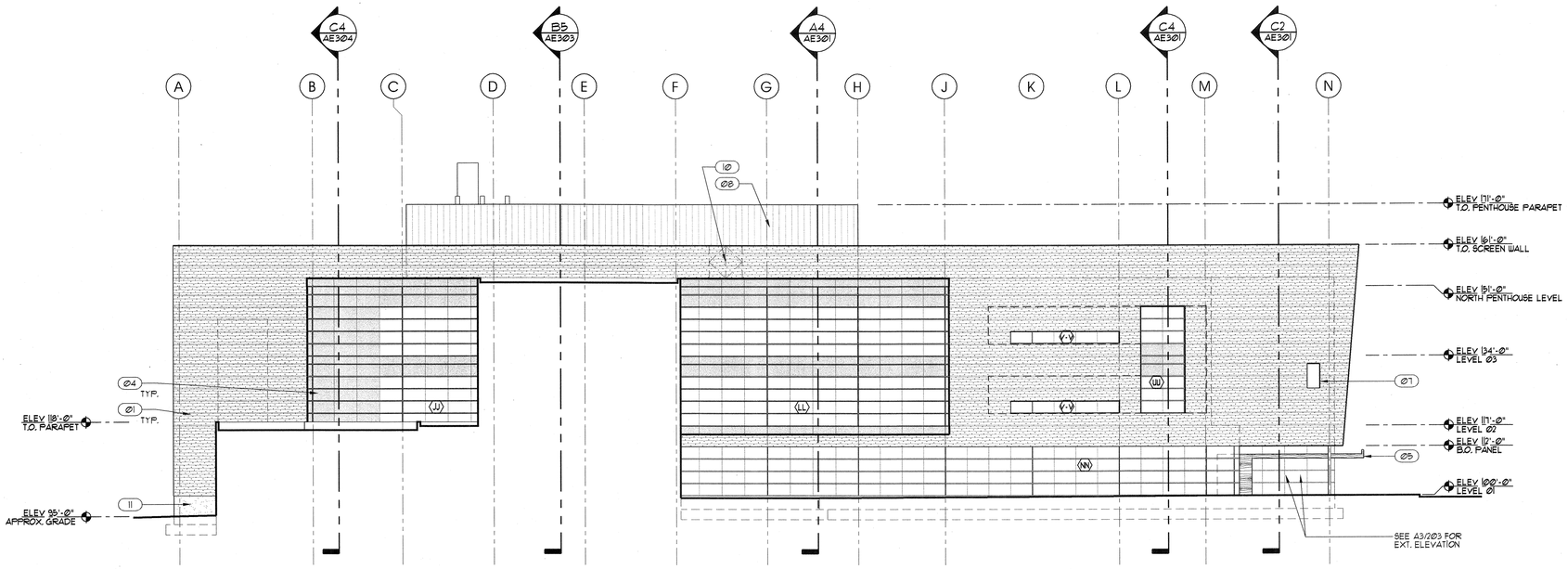


16' 0' 16'
scale = 1/16" = 1'-0"

SOUTH ELEVATION C4 / AE203

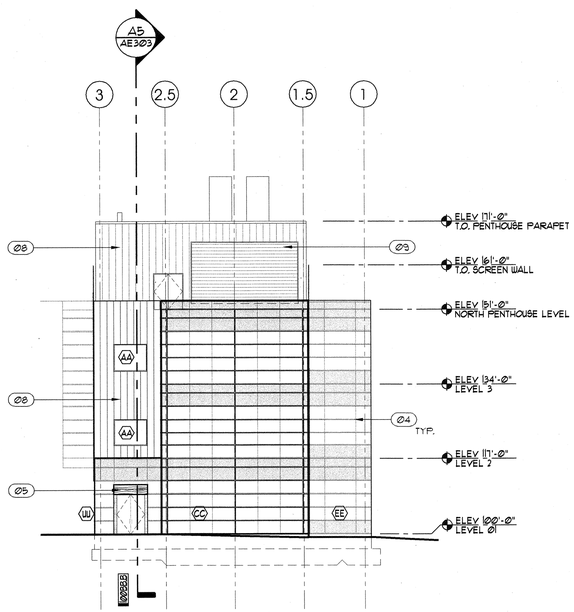


16' 0' 16'
scale = 1/16" = 1'-0"

EAST ELEVATION - ENTRY A2 / AE203

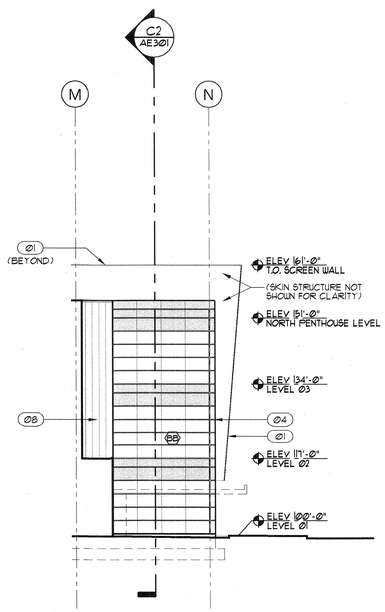


16' 0' 16'
scale = 1/16" = 1'-0"

SOUTH ELEVATION - ENTRY A3 / AE203

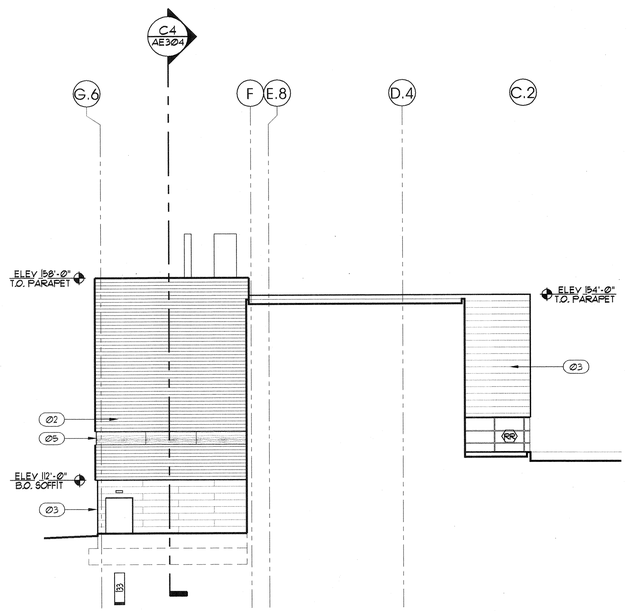


16' 0' 16'
scale = 1/16" = 1'-0"

NORTH ELEVATION - VIVARIUM A4 / AE203

# GENERAL NOTES AND LEGEND:

*FOR SHEET AEØ3 ONLY.

- SEE SHEET AEØØI FOR GENERAL NOTES.
- SEE TITLE SHEET GIØØI FOR DRAWING INDEX.
- DO NOT SCALE DRAWINGS.
- CONTRACTOR /SUBCONTRACTOR'S SHALL VERIFY ALL DIMENSIONS AND CONDITIONS BEFORE BEGINNING WORK AND SHALL REPORT TO THE ARCHITECT ANY ERRORS, INCONSISTENCIES OR OMISSIONS BEFORE BEGINNING WORK. SEE GENERAL NOTES AND SPECIFICATIONS.

CORRUGATED PERFORATED METAL PANEL

CORRUGATED METAL PANEL

SHIPLAP METAL PANEL

CURTAIN WALL SYSTEM
GLAZING
SPANDREL PANEL

COMPOSITE WOOD PANEL SYSTEM

VERT. SEAM METAL PANEL.

ARCHITECTURAL CONCRETE

# KEYED NOTES:

*FOR SHEET AE3Ø3 ONLY.

Ø1 CORRUGATED PERFORATED METAL PANEL.
Ø2 CORRUGATED METAL PANEL.
Ø3 SHIPLAP METAL PANEL.
Ø4 CURTAIN WALL SYSTEM.
Ø5 COMPOSITE WOOD PANEL SYSTEM.
Ø6 GREEN SCREEN SYSTEM OVER VERT. SEAM METAL PANEL.
Ø7 OPENING THROUGH METAL PANEL.
Ø8 VERT. SEAM METAL PANEL.
Ø9 MECHANICAL LOUVER.
I Ø ACCESS DOOR FOR MECH. PENTHOUSE.
II ARCHITECTURAL CONCRETE.


ARCHITECT 0818

ajc architects

703 east 1700 south
salt lake city, utah 84105
ph: 801.466.8818
fx: 801.466.4411
www.ajcarchitects.com

P A Y E T T E

285 Summer Street
Boston, MA 02210-1522
www.payette.com

OWNER INFORMATION

State of Utah
Department of Administrative Services

Division of Facilities
Construction & Management
4110 State Office Building
Salt Lake City, Utah 84114
Phone: (801) 538 - 3018
Fax: (801) 538 - 3267

Internet: http://www.dfcm.utah.gov


PROJECT DESCRIPTION

LIFE SCIENCES RESEARCH CENTER
UTAH STATE UNIVERSITY

USTAR BUILDING #2
350 EAST GRAND AVE.
LOGAN, UTAH

SHEET NAME:

EXTERIOR ELEVATIONS

REVISIONS

| MARK | DATE | DESCRIPTION |
|---|---|---|

ISSUE DATA

| | |
|---|---|
| ISSUE DATE: | DEC. 9, 2008 |
| ISSUE TYPE: | DESDEV |
| DRAWN BY: | J. NIELSEN |
| CHECKED BY: | J. JONES |
| CAD FILE NAME: | |
| DFCM PROJECT # | 06292770 |
| STATE PROPERTY # | - |
| COPYRIGHT: | STATE OF UTAH |

SHEET NUMBER:

AE203

P:\06292770 LIFE SCIENCES RESEARCH CTR USTAR BLDG #2\ARCHITECT\REVIT\06292770 AE203.dwg, 12/4/2008 12:29:23 PM, jnielsen

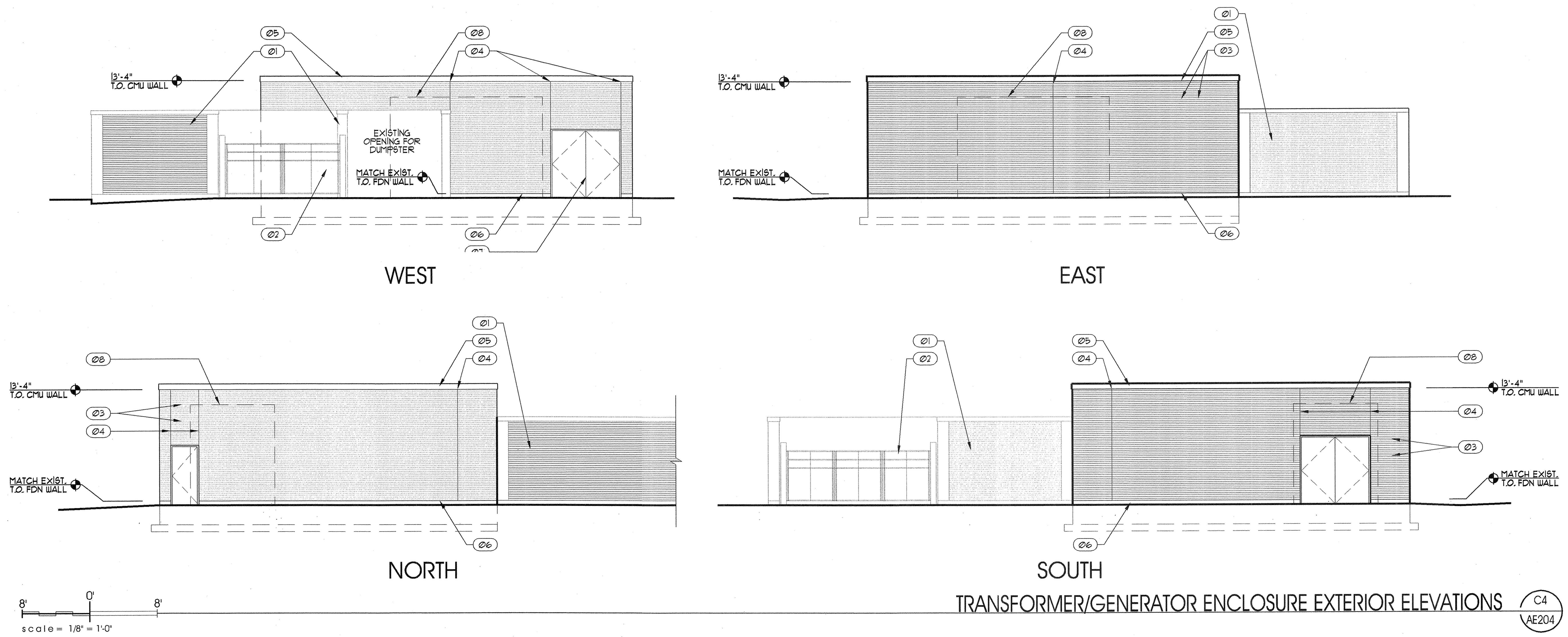


TRANSFORMER/GENERATOR ENCLOSURE EXTERIOR ELEVATIONS C4 AE204

# GENERAL NOTES AND LEGEND:
*FOR SHEET AE204 ONLY.

- SEE SHEET AE001 FOR GENERAL NOTES.
- SEE TITLE SHEET G1001 FOR DRAWING INDEX.
- DO NOT SCALE DRAWINGS.
- CONTRACTOR /SUBCONTRACTOR'S SHALL VERIFY ALL DIMENSIONS AND CONDITIONS BEFORE BEGINNING WORK AND SHALL REPORT TO THE ARCHITECT ANY ERRORS, INCONSISTENCIES OR OMISSIONS BEFORE BEGINNING WORK. SEE GENERAL NOTES AND SPECIFICATIONS.

BRICK VENEER

# KEYED NOTES:
*FOR SHEET AE204 ONLY.

Ø1 EXISTING CMU ENCLOSURE W/ BRICK VENEER & CONCRETE CAP AS SHOWN.
Ø2 EXISTING METAL GATES.
Ø3 BRICK VENEER (MATCH EXISTING).
Ø4 CONTROL JOINT IN BRICK VENEER.
Ø5 PRECAST CONCRETE CAP (MATCH EXISTING).
Ø6 FDN WALL.
Ø7 STAINLESS STEEL GATE.
Ø8 GENERATOR (SHOWN DASHED) - FOR REFERENCE ONLY.


ARCHITECT 0818

ajc architects
703 east 1700 south
salt lake city, utah 84105
ph: 801.466.8818
fx: 801.466.4411
www.ajcarchitects.com

PAYETTE
285 Summer Street
Boston, MA 02210-1522
www.payette.com

OWNER INFORMATION
State of Utah
Department of Administrative Services
Division of Facilities Construction & Management
4110 State Office Building
Salt Lake City, Utah 84114
Phone: (801) 538 - 3018
Fax: (801) 538 - 3267
Internet: http://www.dfcm.utah.gov


PROJECT DESCRIPTION

LIFE SCIENCES RESEARCH CENTER
UTAH STATE UNIVERSITY

USTAR BUILDING #2
350 EAST GRAND AVE.
LOGAN, UTAH

SHEET NAME:
EXTERIOR ELEVATIONS

REVISIONS

| MARK | DATE | DESCRIPTION |
|---|---|---|

ISSUE DATA

ISSUE DATE: DEC. 9, 2008
ISSUE TYPE: DESDEV
DRAWN BY: J. NIELSEN
CHECKED BY: J. JONES
CAD FILE NAME:
DFCM PROJECT # 06292770
STATE PROPERTY # -
COPYRIGHT: STATE OF UTAH

SHEET NUMBER:
AE204

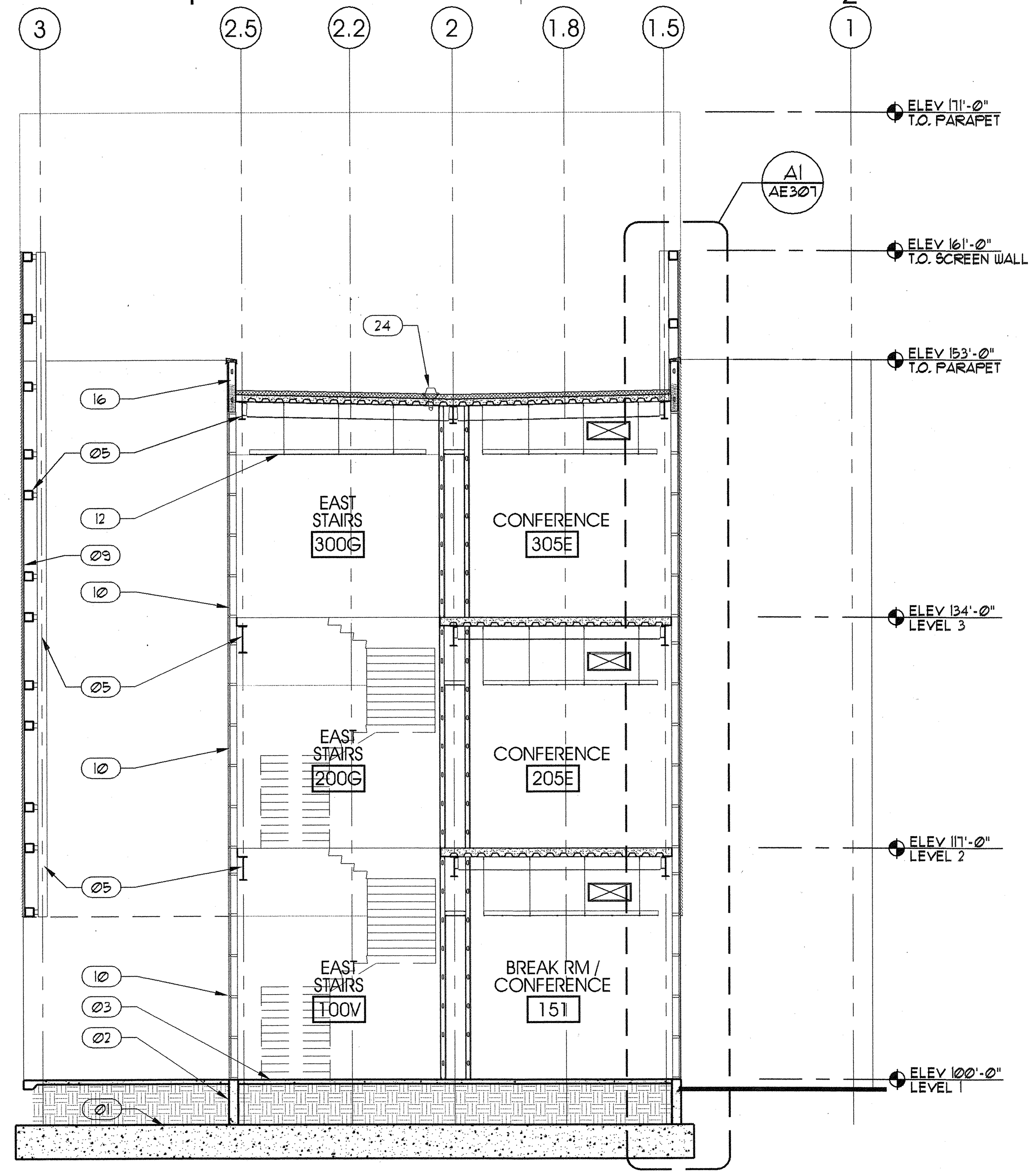


BUILDING SECTION C2/AE301
SCALE: 1/8" = 1'-0"

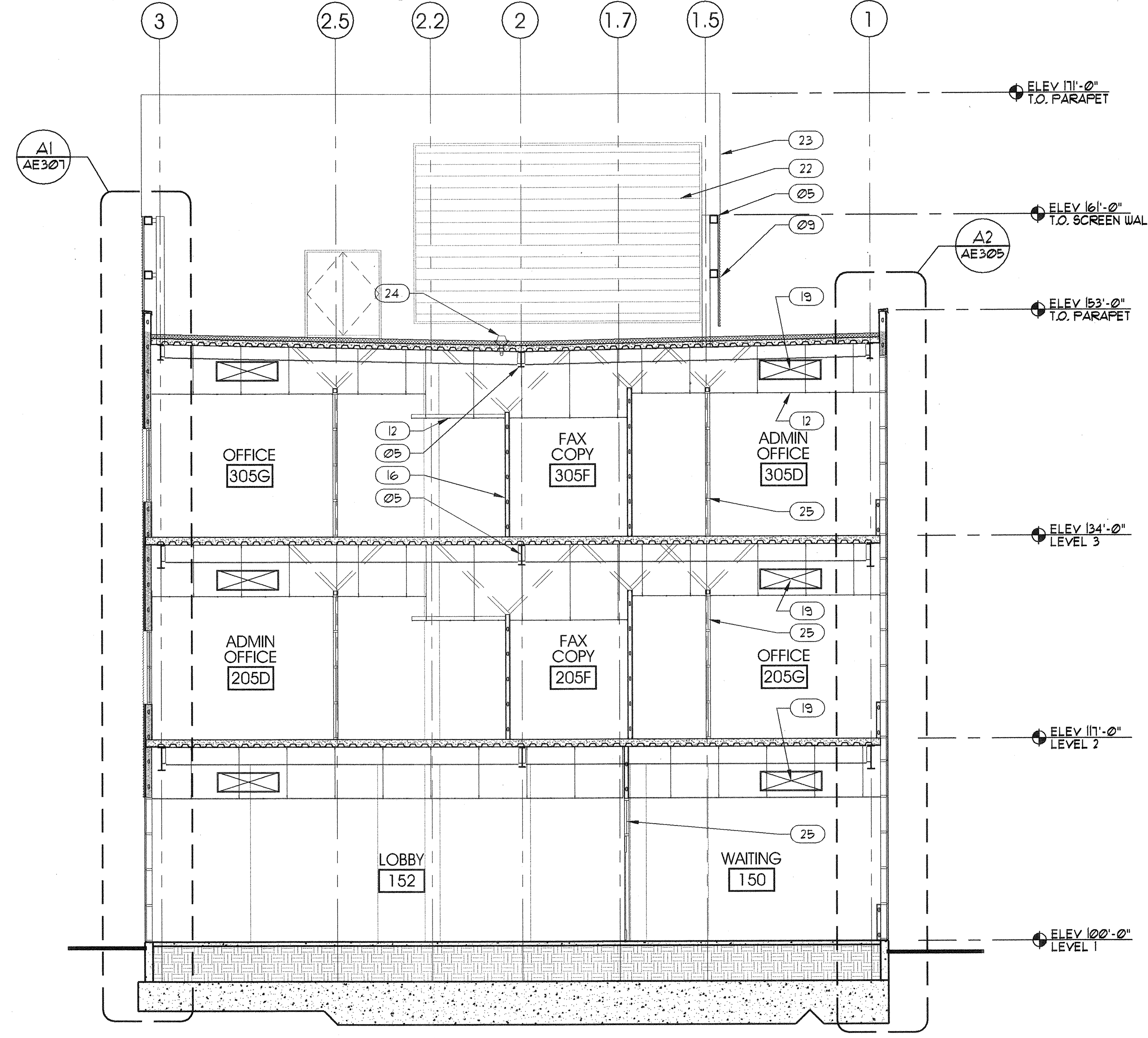


BUILDING SECTION C4/AE301
SCALE: 1/8" = 1'-0"

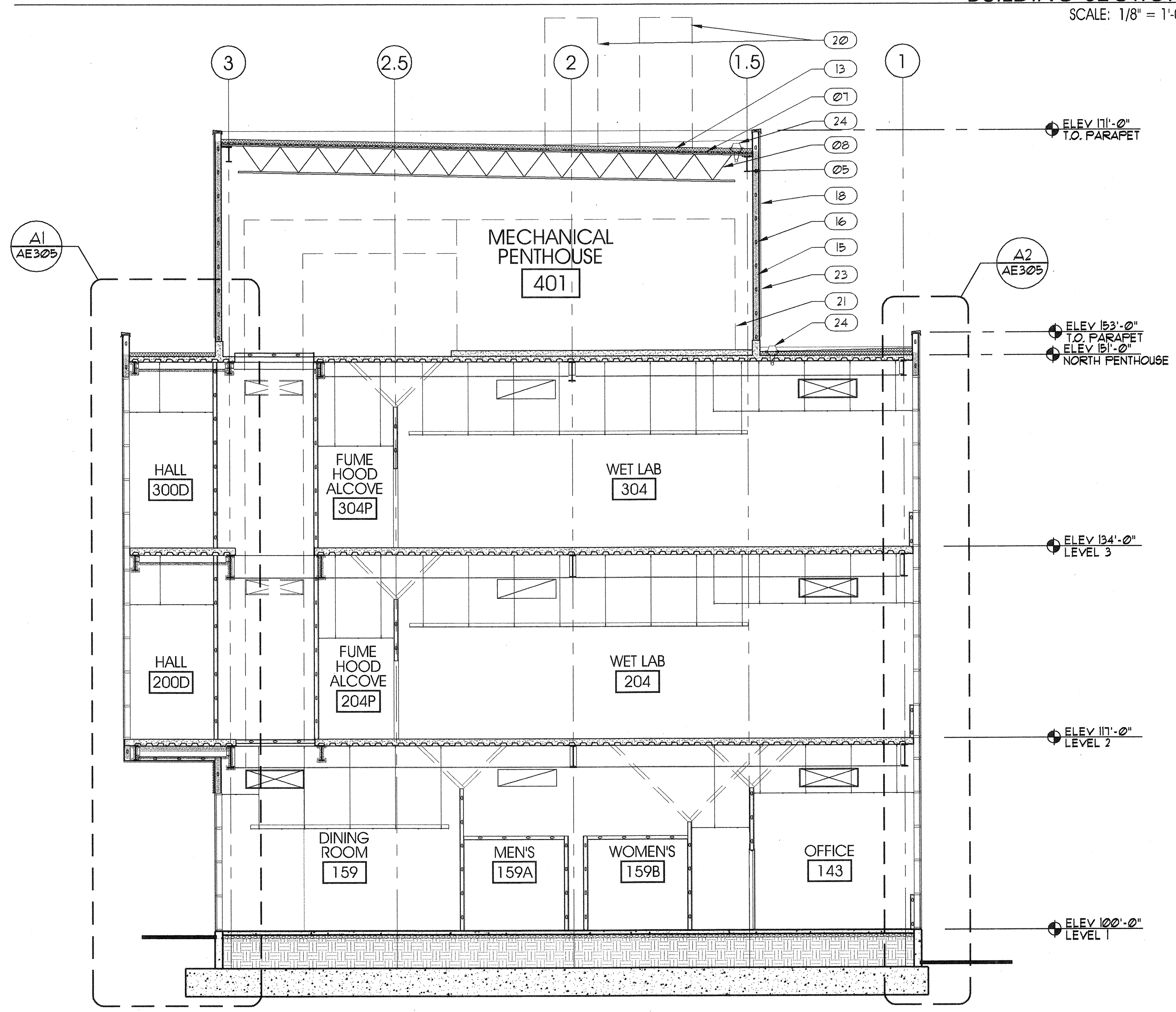


BUILDING SECTION A4/AE301
SCALE: 1/8" = 1'-0"

## GENERAL NOTES AND LEGEND:

- SEE SHEET AE001 FOR GENERAL NOTES.
- SEE TITLE SHEET G1001 FOR DRAWING INDEX.
- DO NOT SCALE DRAWINGS.
- CONTRACTOR /SUBCONTRACTOR'S SHALL VERIFY ALL DIMENSIONS AND CONDITIONS BEFORE BEGINNING WORK AND SHALL REPORT TO THE ARCHITECT ANY ERRORS, INCONSISTENCIES OR OMISSIONS BEFORE BEGINNING WORK. SEE GENERAL NOTES AND SPECIFICATIONS.

## KEYED NOTES:

01 REINF. CONCRETE FOOTING. SEE STRUCTURAL.
02 REINF. CONCRETE FOUNDATION WALL. SEE STRUCTURAL.
03 CONCRETE SLAB ON GRADE OVER FREE DRAINING GRAVEL AND VAPOR BARRIER. SEE STRUCTURAL.
04 FINISH GRADE. SLOPE AWAY FROM BUILDING. SEE CIVIL.
05 STEEL BEAM. SEE STRUCTURAL.
06 CONCRETE ON METAL DECK. SEE STRUCTURAL.
07 METAL ROOF DECK. SEE STRUCTURAL.
08 STEEL JOIST. SEE STRUCTURAL.
09 PERFORATED METAL PANEL SYSTEM. SEE WALL TYPES.
10 CURTAIN WALL. SEE WINDOW SCHEDULE.
11 CMU WALL. SEE WALL TYPES AND STRUCTURAL.
12 ACOUSTICAL PANEL CEILING. SEE CEILING PLANS.
13 ROOF MEMBRANE ON INSULATION. SEE ROOF PLANS.
14 GYP. BD. W/ PAINTED FINISH.
15 INSULATION.
16 METAL STUD FRAMING. SEE WALL TYPES.
17 GREEN SCREEN SYSTEM. SEE WALL TYPES.
18 METAL WALL PANEL. SEE WALL TYPES.
19 MECHANICAL DUCT. SEE MECHANICAL.
20 EXHAUST FLUE. SEE MECHANICAL.
21 AIR HANDLER. SEE MECHANICAL.
22 MECHANICAL LOUVER. SEE MECHANICAL.
23 PENTHOUSE.
24 ROOF DRAIN. SEE PLUMBING.
25 ALUMINUM STOREFRONT SYSTEM.
26 COMPOSITE WOOD PANEL SYSTEM. SEE WALL TYPES.
27 "GREEN ROOF". SEE ROOF PLAN.
28 METAL LAP SIDING. SEE WALL TYPES.

ARCHITECT 0818

ajc architects
703 east 1700 south
salt lake city, utah 84105
ph: 801.466.8818
fx: 801.466.4411
www.ajcarchitects.com

PAYETTE
285 Summer Street
Boston, MA 02210-1522
www.payette.com

OWNER INFORMATION

**State of Utah**
Department of Administrative Services

Division of Facilities Construction & Management
4110 State Office Building
Salt Lake City, Utah 84114
Phone: (801) 538 - 3018
Fax: (801) 538 - 3267

Internet: http://www.dfcm.utah.gov

PROJECT DESCRIPTION

# LIFE SCIENCES RESEARCH CENTER
UTAH STATE UNIVERSITY

USTAR BUILDING #2
350 EAST GRAND AVE.
LOGAN, UTAH

SHEET NAME:

BUILDING SECTIONS

REVISIONS

| MARK | DATE | DESCRIPTION |
| --- | --- | --- |

ISSUE DATA

| | |
| --- | --- |
| ISSUE DATE: | DEC. 9, 2008 |
| ISSUE TYPE: | DESDEV |
| DRAWN BY: | J. NIELSEN |
| CHECKED BY: | J. JONES |
| CAD FILE NAME: | |
| DFCM PROJECT # | 06292770 |
| STATE PROPERTY # | - |
| COPYRIGHT: | STATE OF UTAH |

SHEET NUMBER:

AE301

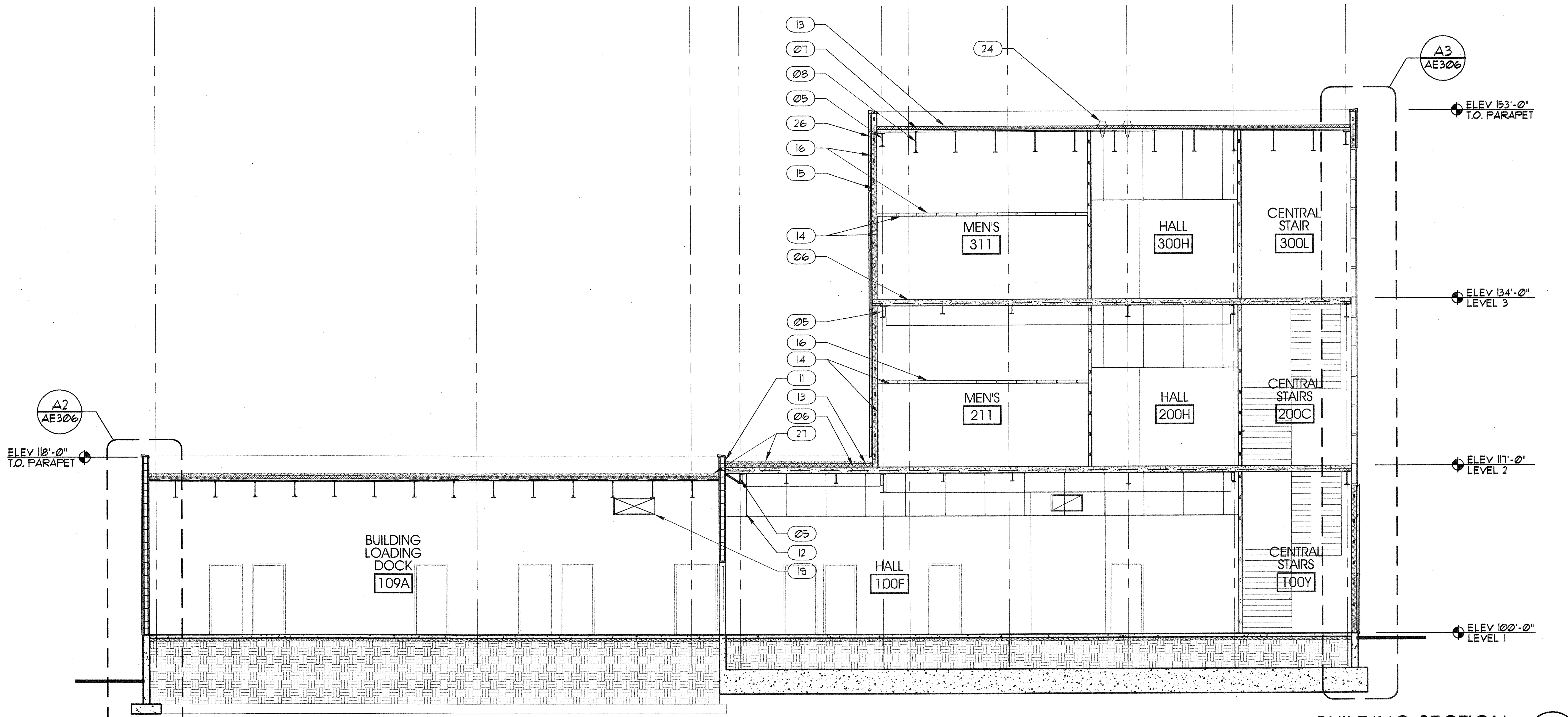


BUILDING SECTION C4 AE302
SCALE: 1/8" = 1'-0"

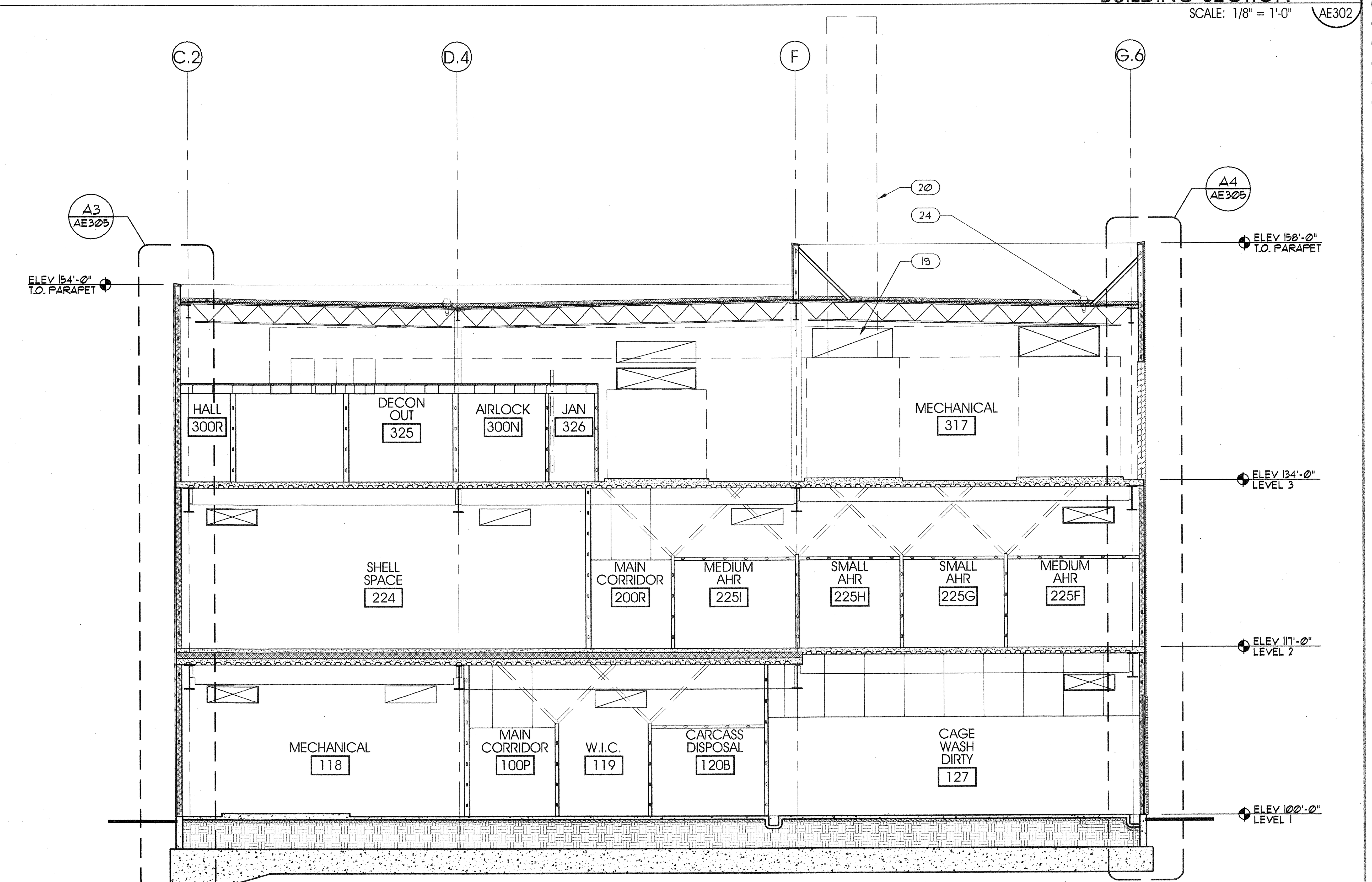


BUILDING SECTION A4 AE302
SCALE: 1/8" = 1'-0"

# GENERAL NOTES AND LEGEND:

- SEE SHEET AE001 FOR GENERAL NOTES.
- SEE TITLE SHEET G1001 FOR DRAWING INDEX.
- DO NOT SCALE DRAWINGS.
- CONTRACTOR /SUBCONTRACTOR'S SHALL VERIFY ALL DIMENSIONS AND CONDITIONS BEFORE BEGINNING WORK AND SHALL REPORT TO THE ARCHITECT ANY ERRORS, INCONSISTENCIES OR OMISSIONS BEFORE BEGINNING WORK. SEE GENERAL NOTES AND SPECIFICATIONS.

# KEYED NOTES:

01 REINF. CONCRETE FOOTING. SEE STRUCTURAL.
02 REINF. CONCRETE FOUNDATION WALL. SEE STRUCTURAL.
03 CONCRETE SLAB ON GRADE OVER FREE DRAINING GRAVEL AND VAPOR BARRIER. SEE STRUCTURAL.
04 FINISH GRADE. SLOPE AWAY FROM BUILDING. SEE CIVIL.
05 STEEL BEAM. SEE STRUCTURAL.
06 CONCRETE ON METAL DECK. SEE STRUCTURAL.
07 METAL ROOF DECK. SEE STRUCTURAL.
08 STEEL JOIST. SEE STRUCTURAL.
09 PERFORATED METAL PANEL SYSTEM. SEE WALL TYPES.
10 CURTAIN WALL. SEE WINDOW SCHEDULE.
11 CMU WALL. SEE WALL TYPES AND STRUCTURAL.
12 ACOUSTICAL PANEL CEILING. SEE CEILING PLANS.
13 ROOF MEMBRANE ON INSULATION. SEE ROOF PLANS.
14 GYP. BD. W/ PAINTED FINISH.
15 INSULATION.
16 METAL STUD FRAMING. SEE WALL TYPES.
17 GREEN SCREEN SYSTEM. SEE WALL TYPES.
18 METAL WALL PANEL. SEE WALL TYPES.
19 MECHANICAL DUCT. SEE MECHANCAL.
20 EXHAUST FLUE. SEE MECHANICAL.
21 AIR HANDLER. SEE MECHANICAL.
22 MECHANICAL LOUVER. SEE MECHANICAL.
23 PENTHOUSE.
24 ROOF DRAIN. SEE PLUMBING.
25 ALUMINUM STOREFRONT SYSTEM.
26 COMPOSITE WOOD PANEL SYSTEM. SEE WALL TYPES.
27 "GREEN ROOF". SEE ROOF PLAN.
28 METAL LAP SIDING. SEE WALL TYPES.

ARCHITECT 0818

ajc architects
703 east 1700 south
salt lake city, utah 84105
ph: 801.466.8818
fx: 801.466.4411
www.ajcarchitects.com

PAYETTE
285 Summer Street
Boston, MA 02210-1522
www.payette.com

OWNER INFORMATION
State of Utah
Department of Administrative Services
Division of Facilities Construction & Management
4110 State Office Building
Salt Lake City, Utah 84114
Phone: (801) 538 - 3018
Fax: (801) 538 - 3267
Internet: http://www.dfcm.utah.gov

PROJECT DESCRIPTION

LIFE SCIENCES RESEARCH CENTER
UTAH STATE UNIVERSITY

USTAR BUILDING #2
350 EAST GRAND AVE.
LOGAN, UTAH

SHEET NAME:

BUILDING SECTIONS

REVISIONS

| MARK | DATE | DESCRIPTION |
|---|---|---|

ISSUE DATA

| | |
|---|---|
| ISSUE DATE: | DEC. 9, 2008 |
| ISSUE TYPE: | DESDEV |
| DRAWN BY: | J. NIELSEN |
| CHECKED BY: | J. JONES |
| CAD FILE NAME: | |
| DFCM PROJECT # | 06292770 |
| STATE PROPERTY # | - |
| COPYRIGHT: | STATE OF UTAH |

SHEET NUMBER:

AE302

## KEYED NOTES:

- 01 REINF. CONCRETE FOOTING. SEE STRUCTURAL.
- 02 REINF. CONCRETE FOUNDATION WALL. SEE STRUCTURAL.
- 03 CONCRETE SLAB ON GRADE OVER FREE DRAINING GRAVEL AND VAPOR BARRIER. SEE STRUCTURAL.
- 04 FINISH GRADE. SLOPE AWAY FROM BUILDING. SEE CIVIL.
- 05 STEEL BEAM. SEE STRUCTURAL.
- 06 CONCRETE ON METAL DECK. SEE STRUCTURAL.
- 07 METAL ROOF DECK. SEE STRUCTURAL.
- 08 STEEL JOIST. SEE STRUCTURAL.
- 09 PERFORATED METAL PANEL SYSTEM. SEE WALL TYPES.
- 10 CURTAIN WALL. SEE WINDOW SCHEDULE.
- 11 CMU WALL. SEE WALL TYPES AND STRUCTURAL.
- 12 ACOUSTICAL PANEL CEILING. SEE CEILING PLANS.
- 13 ROOF MEMBRANE ON INSULATION. SEE ROOF PLANS.
- 14 GYP. BD. W/ PAINTED FINISH.
- 15 INSULATION.
- 16 METAL STUD FRAMING. SEE WALL TYPES.
- 17 GREEN SCREEN SYSTEM. SEE WALL TYPES.
- 18 METAL WALL PANEL. SEE WALL TYPES.

## KEYED NOTES:

- 19 MECHANICAL DUCT. SEE MECHANICAL.
- 20 EXHAUST FLUE. SEE MECHANICAL.
- 21 AIR HANDLER. SEE MECHANICAL.
- 22 MECHANICAL LOUVER. SEE MECHANICAL.
- 23 PENTHOUSE.
- 24 ROOF DRAIN. SEE PLUMBING.
- 25 ALUMINUM STOREFRONT SYSTEM.
- 26 COMPOSITE WOOD PANEL SYSTEM. SEE WALL TYPES.
- 27 "GREEN ROOF". SEE ROOF PLAN.
- 28 METAL LAP SIDING. SEE WALL TYPES.

## GENERAL NOTES AND LEGEND:

- SEE SHEET AE001 FOR GENERAL NOTES.
- SEE TITLE SHEET G001 FOR DRAWING INDEX.
- DO NOT SCALE DRAWINGS.
- CONTRACTOR /SUBCONTRACTOR'S SHALL VERIFY ALL DIMENSIONS AND CONDITIONS BEFORE BEGINNING WORK AND SHALL REPORT TO THE ARCHITECT ANY ERRORS, INCONSISTENCIES OR OMISSIONS BEFORE BEGINNING WORK. SEE GENERAL NOTES AND SPECIFICATIONS.

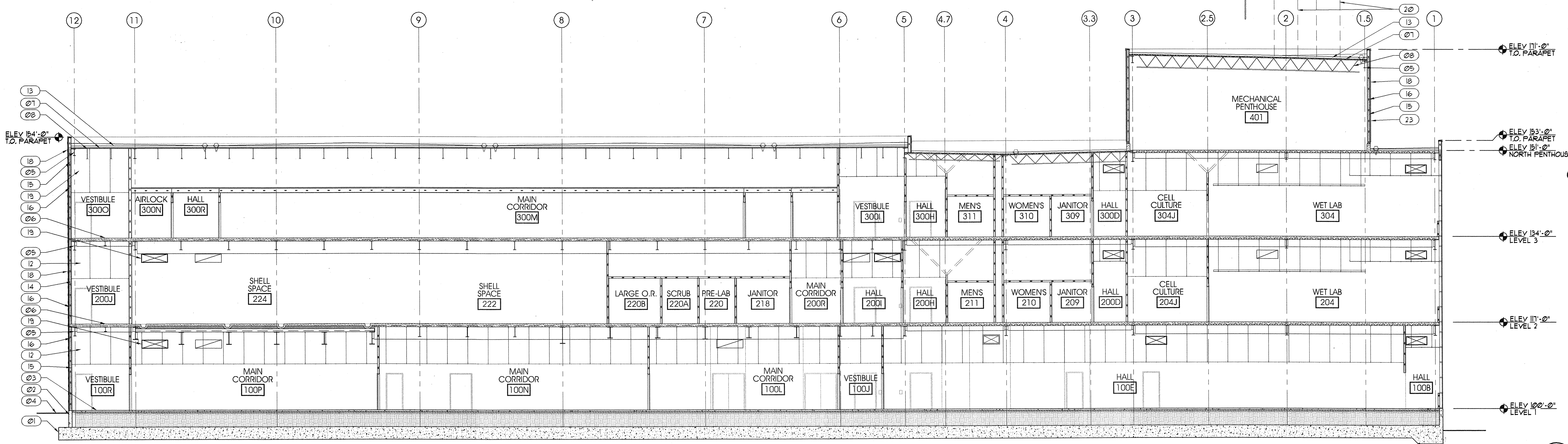


BUILDING SECTION B5 AE303
SCALE: 3/32" = 1'-0"

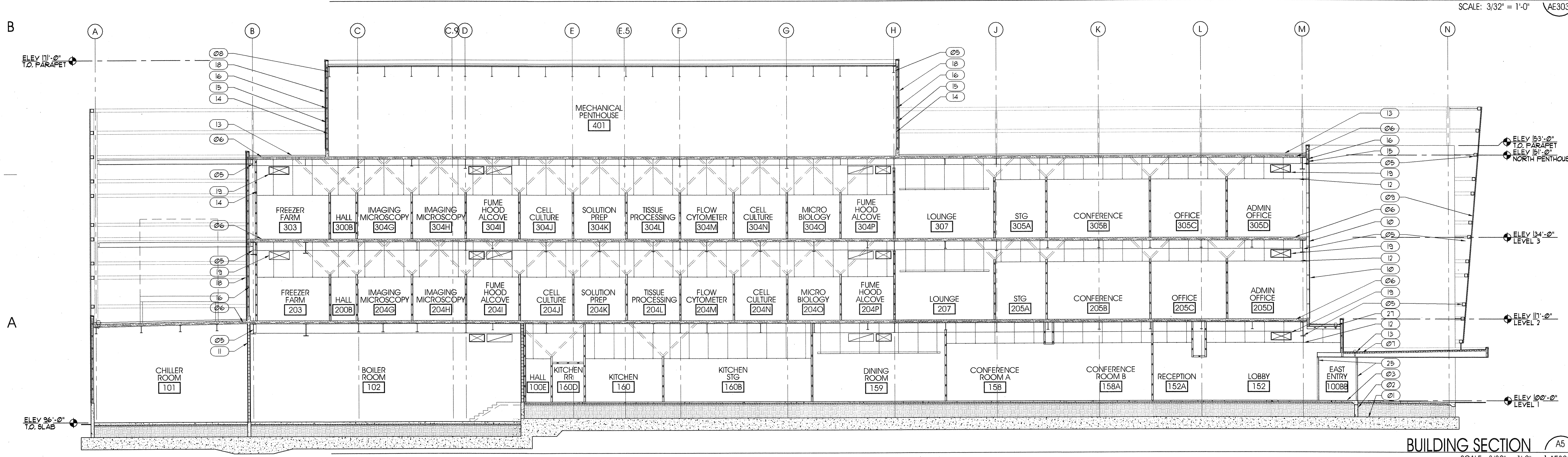


BUILDING SECTION A5 AE303
SCALE: 3/32" = 1'-0"

ARCHITECT 0818


ajc architects
703 east 1700 south
salt lake city, utah 84105
ph: 801.466.8818
fx: 801.466.4411
www.ajcarchitects.com

PAYETTE
285 Summer Street
Boston, MA 02210-1522
www.payette.com


OWNER INFORMATION


State of Utah
Department of Administrative Services
DFCM Division of Facilities Construction & Management
4110 State Office Building
Salt Lake City, Utah 84114
Phone: (801) 538 - 3018
Fax: (801) 538 - 3267
Internet: http://www.dfcm.utah.gov


PROJECT DESCRIPTION

# LIFE SCIENCES RESEARCH CENTER
UTAH STATE UNIVERSITY

USTAR BUILDING #2
350 EAST GRAND AVE.
LOGAN, UTAH

SHEET NAME:

BUILDING SECTION

REVISIONS

| MARK | DATE | DESCRIPTION |
|---|---|---|

ISSUE DATA

| | |
|---|---|
| ISSUE DATE: | DEC. 9, 2008 |
| ISSUE TYPE: | DESDEV |
| DRAWN BY: | J. NIELSEN |
| CHECKED BY: | J. JONES |
| CAD FILE NAME: | |
| DFCM PROJECT # | 06292770 |
| STATE PROPERTY # | - |
| COPYRIGHT: | STATE OF UTAH |

SHEET NUMBER:

AE303

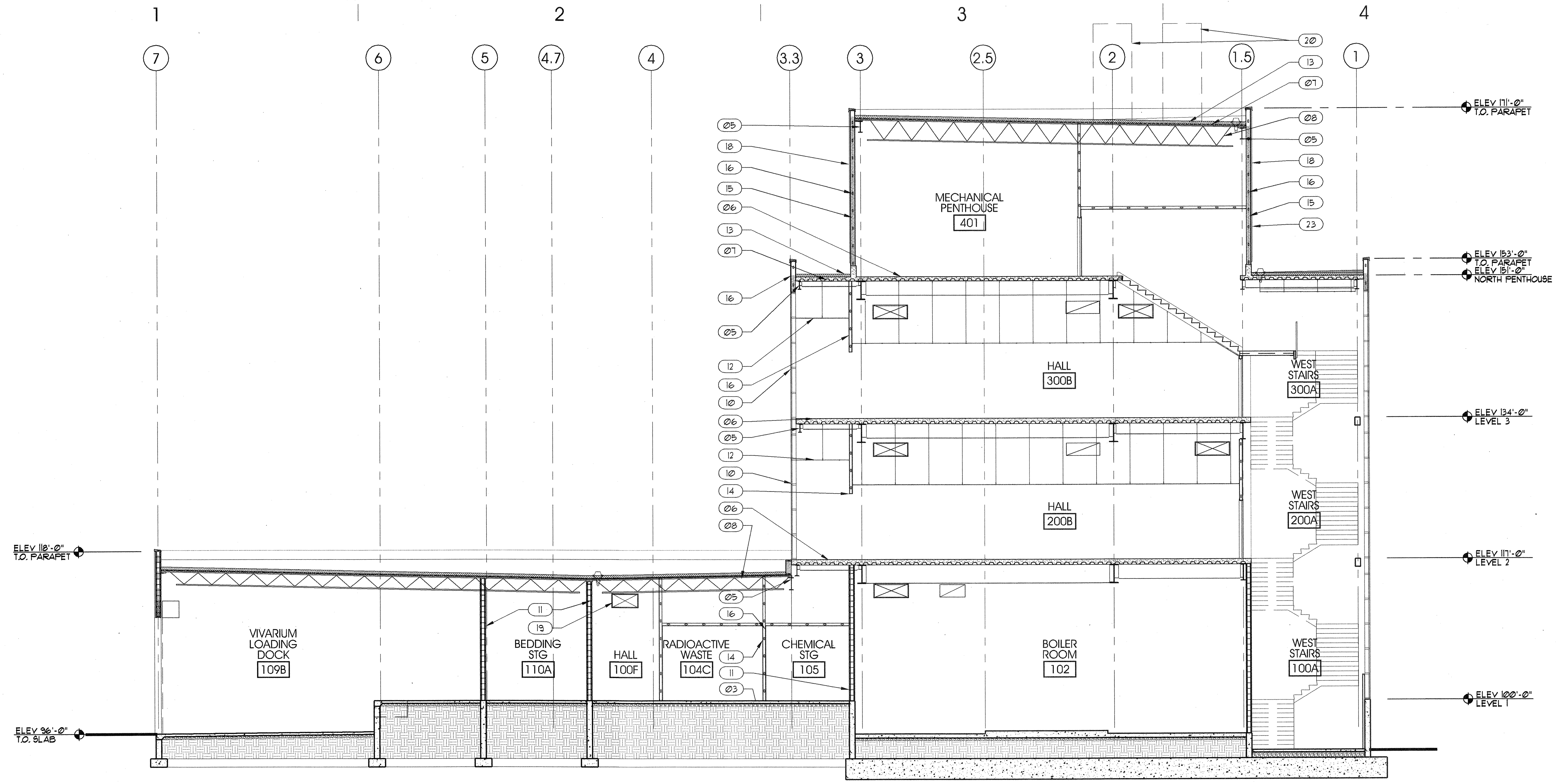


BUILDING SECTION C4 / AE304
SCALE: 1/8" = 1'-0"

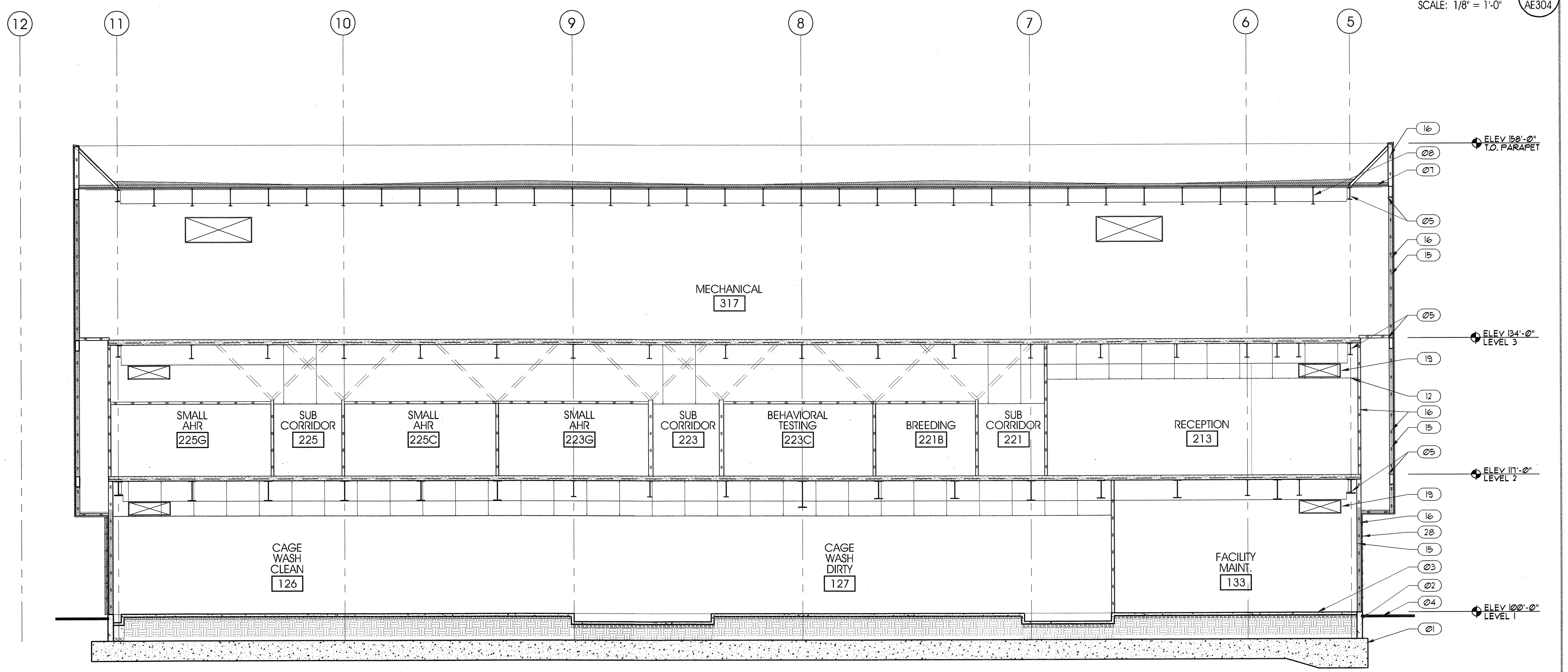


BUILDING SECTION C4 / AE304
SCALE: 1/8" = 1'-0"

# GENERAL NOTES AND LEGEND:

- SEE SHEET AE001 FOR GENERAL NOTES.
- SEE TITLE SHEET G1001 FOR DRAWING INDEX.
- DO NOT SCALE DRAWINGS.
- CONTRACTOR /SUBCONTRACTOR'S SHALL VERIFY ALL DIMENSIONS AND CONDITIONS BEFORE BEGINNING WORK AND SHALL REPORT TO THE ARCHITECT ANY ERRORS, INCONSISTENCIES OR OMISSIONS BEFORE BEGINNING WORK. SEE GENERAL NOTES AND SPECIFICATIONS.

# KEYED NOTES:

01 REINF. CONCRETE FOOTING. SEE STRUCTURAL.
02 REINF. CONCRETE FOUNDATION WALL. SEE STRUCTURAL.
03 CONCRETE SLAB ON GRADE OVER FREE DRAINING GRAVEL AND VAPOR BARRIER. SEE STRUCTURAL.
04 FINISH GRADE. SLOPE AWAY FROM BUILDING. SEE CIVIL.
05 STEEL BEAM. SEE STRUCTURAL.
06 CONCRETE ON METAL DECK. SEE STRUCTURAL.
07 METAL ROOF DECK. SEE STRUCTURAL.
08 STEEL JOIST. SEE STRUCTURAL.
09 PERFORATED METAL PANEL SYSTEM. SEE WALL TYPES.
10 CURTAIN WALL. SEE WINDOW SCHEDULE.
11 CMU WALL. SEE WALL TYPES AND STRUCTURAL.
12 ACOUSTICAL PANEL CEILING. SEE CEILING PLANS.
13 ROOF MEMBRANE ON INSULATION. SEE ROOF PLANS.
14 GYP. BD. W/ PAINTED FINISH.
15 INSULATION.
16 METAL STUD FRAMING. SEE WALL TYPES.
17 GREEN SCREEN SYSTEM. SEE WALL TYPES.
18 METAL WALL PANEL. SEE WALL TYPES.
19 MECHANICAL DUCT. SEE MECHANCAL.
20 EXHAUST FLUE. SEE MECHANICAL.
21 AIR HANDLER. SEE MECHANICAL.
22 MECHANICAL LOUVER. SEE MECHANICAL.
23 PENTHOUSE.
24 ROOF DRAIN. SEE PLUMBING.
25 ALUMINUM STOREFRONT SYSTEM.
26 COMPOSITE WOOD PANEL SYSTEM. SEE WALL TYPES.
27 "GREEN ROOF". SEE ROOF PLAN.
28 METAL LAP SIDING. SEE WALL TYPES.


ARCHITECT 0818
ajc architects
703 east 1700 south
salt lake city, utah 84105
ph: 801.466.8818
fx: 801.466.4411
www.ajcarchitects.com

PAYETTE
285 Summer Street
Boston, MA 02210-1522
www.payette.com

OWNER INFORMATION
State of Utah
Department of Administrative Services
Division of Facilities Construction & Management
4110 State Office Building
Salt Lake City, Utah 84114
Phone: (801) 538 - 3018
Fax: (801) 538 - 3267
Internet: http://www.dfcm.utah.gov


PROJECT DESCRIPTION

LIFE SCIENCES RESEARCH CENTER
UTAH STATE UNIVERSITY

USTAR BUILDING #2
350 EAST GRAND AVE.
LOGAN, UTAH

SHEET NAME:

BUILDING SECTIONS

REVISIONS

| MARK | DATE | DESCRIPTION |
|---|---|---|

ISSUE DATA

| | |
|---|---|
| ISSUE DATE: | DEC. 9, 2008 |
| ISSUE TYPE: | DESDEV |
| DRAWN BY: | J. NIELSEN |
| CHECKED BY: | J. JONES |
| CAD FILE NAME: | |
| DFCM PROJECT # | 06292770 |
| STATE PROPERTY # | - |
| COPYRIGHT: | STATE OF UTAH |

SHEET NUMBER:

AE304

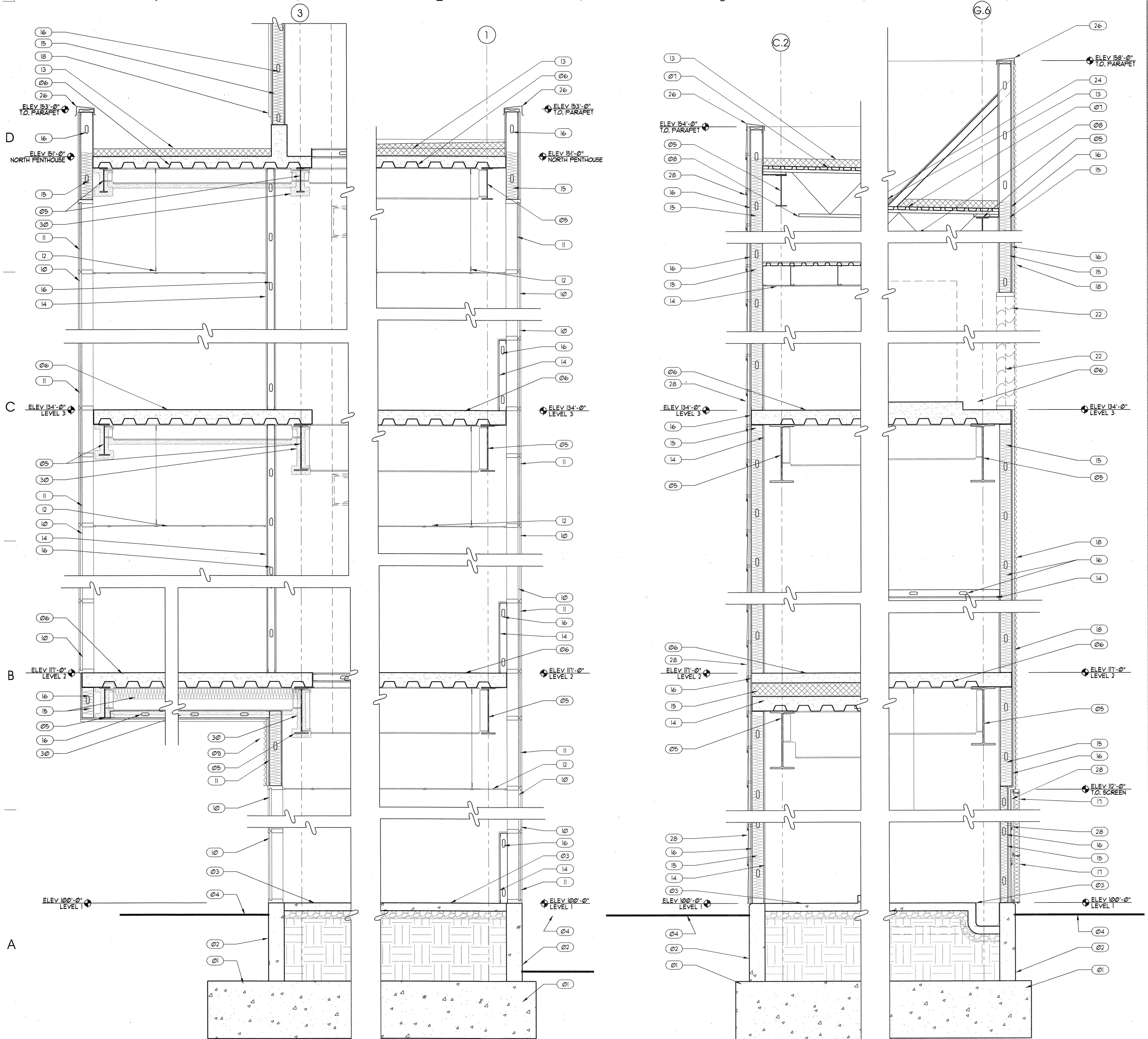


WALL SECTION A1 AE305 SCALE: 1/2" = 1'-0"

WALL SECTION A2 AE305 SCALE: 1/2" = 1'-0"

WALL SECTION A3 AE305 SCALE: 1/2" = 1'-0"

WALL SECTION A4 AE305 SCALE: 1/2" = 1'-0"

## GENERAL NOTES AND LEGEND:

- SEE SHEET AE001 FOR GENERAL NOTES.
- SEE TITLE SHEET G1001 FOR DRAWING INDEX.
- DO NOT SCALE DRAWINGS.
- CONTRACTOR /SUBCONTRACTOR'S SHALL VERIFY ALL DIMENSIONS AND CONDITIONS BEFORE BEGINNING WORK AND SHALL REPORT TO THE ARCHITECT ANY ERRORS, INCONSISTENCIES OR OMISSIONS BEFORE BEGINNING WORK. SEE GENERAL NOTES AND SPECIFICATIONS.

## KEYED NOTES:

01 REINF. CONCRETE FOOTING. SEE STRUCTURAL.
02 REINF. CONCRETE FOUNDATION WALL. SEE STRUCTURAL.
03 CONCRETE SLAB ON GRADE OVER FREE DRAINING GRAVEL AND VAPOR BARRIER. SEE STRUCTURAL.
04 FINISH GRADE. SLOPE AWAY FROM BUILDING. SEE CIVIL.
05 STEEL BEAM. SEE STRUCTURAL.
06 CONCRETE ON METAL DECK. SEE STRUCTURAL.
07 METAL ROOF DECK. SEE STRUCTURAL.
08 STEEL JOIST. SEE STRUCTURAL.
09 PERFORATED METAL PANEL SYSTEM. SEE WALL TYPES.
10 CURTAIN WALL GLAZING. SEE WINDOW SCHEDULE.
11 CURTAIN WALL SPANDREL. SEE WINDOW SCHEDULE.
12 ACOUSTICAL PANEL CEILING. SEE CEILING PLANS.
13 ROOF MEMBRANE ON INSULATION. SEE ROOF PLANS.
14 GYP. BD. W/ PAINTED FINISH.
15 INSULATION.
16 METAL STUD FRAMING. SEE WALL TYPES.
17 GREEN SCREEN SYSTEM. SEE WALL TYPES.
18 METAL WALL PANEL. SEE WALL TYPES.
19 MECHANICAL DUCT. SEE MECHANCAL.
20 EXHAUST FLUE. SEE MECHANICAL.
21 AIR HANDLER. SEE MECHANICAL.
22 MECHANICAL LOUVER. SEE MECHANICAL.
23 PENTHOUSE.
24 ROOF DRAIN. SEE PLUMBING.
25 ALUMINUM STOREFRONT SYSTEM.
26 METAL FLASHING.
27 CMU WALL. SEE WALL TYPES AND STRUCTURAL.
28 METAL LAP SIDING. SEE WALL TYPES.
29 STAIRS.
30 SPRAY-ON FIRE PROTECTION.


ARCHITECT 0818

ajc architects
703 east 1700 south
salt lake city, utah 84105
ph: 801.466.8818
fx: 801.466.4411
www.ajcarchitects.com

PAYETTE
285 Summer Street
Boston, MA 02210-1522
www.payette.com


OWNER INFORMATION

State of Utah
Department of Administrative Services

Division of Facilities Construction & Management
4110 State Office Building
Salt Lake City, Utah 84114
Phone: (801) 538 - 3018
Fax: (801) 538 - 3267

Internet: http://www.dfcm.utah.gov

PROJECT DESCRIPTION

LIFE SCIENCES RESEARCH CENTER
UTAH STATE UNIVERSITY

USTAR BUILDING #2
350 EAST GRAND AVE.
LOGAN, UTAH

SHEET NAME:

WALL SECTIONS

REVISIONS

MARK DATE DESCRIPTION

ISSUE DATA

ISSUE DATE: DEC. 9, 2008
ISSUE TYPE: DESDEV
DRAWN BY: J. NIELSEN
CHECKED BY: J. JONES
CAD FILE NAME:
DFCM PROJECT # 06292770
STATE PROPERTY # -
COPYRIGHT: STATE OF UTAH

SHEET NUMBER:

AE305

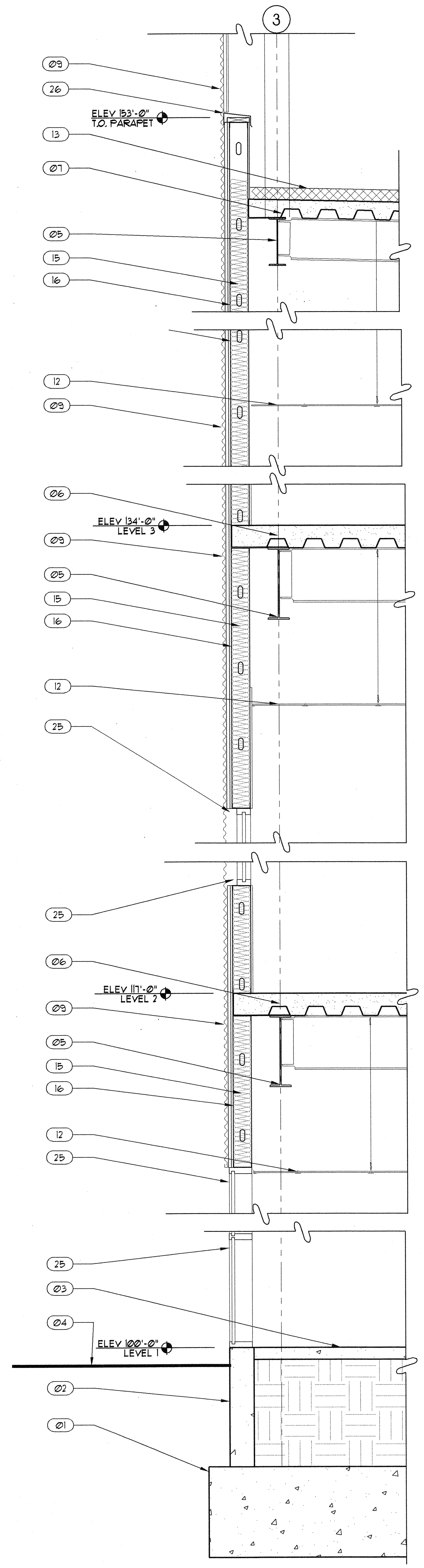


WALL SECTION (A1 / AE306)
SCALE: 1/2" = 1'-0"

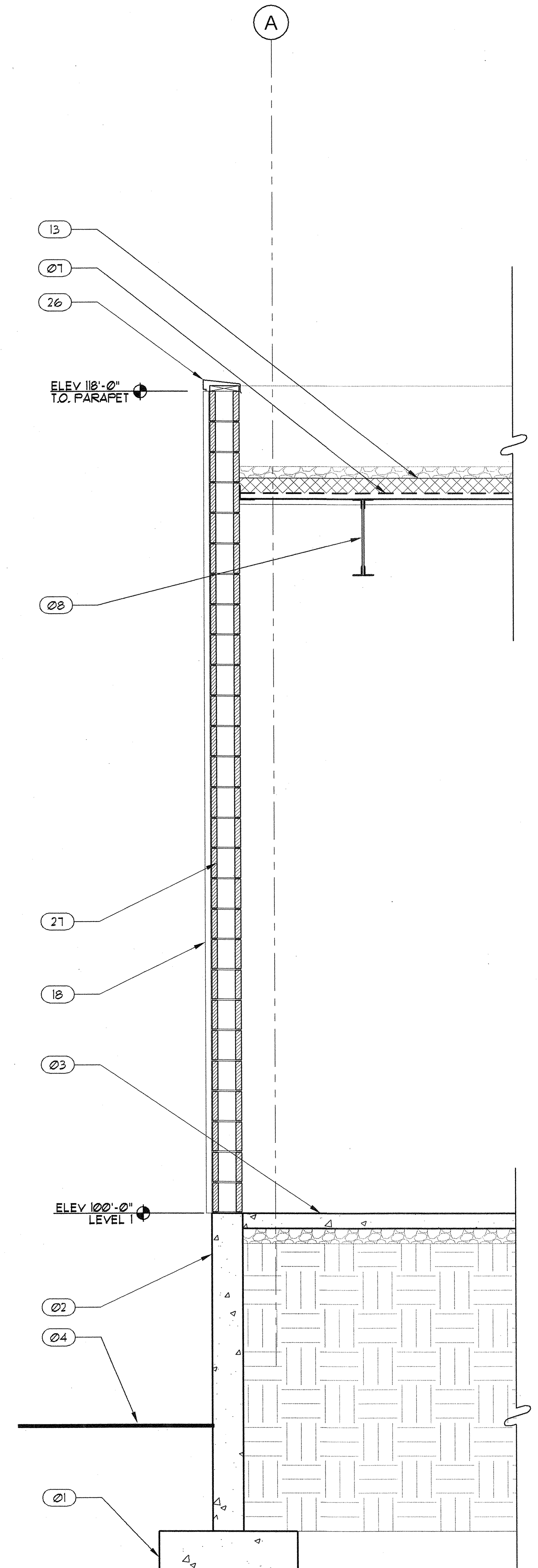


WALL SECTION (A2 / AE306)
SCALE: 1/2" = 1'-0"

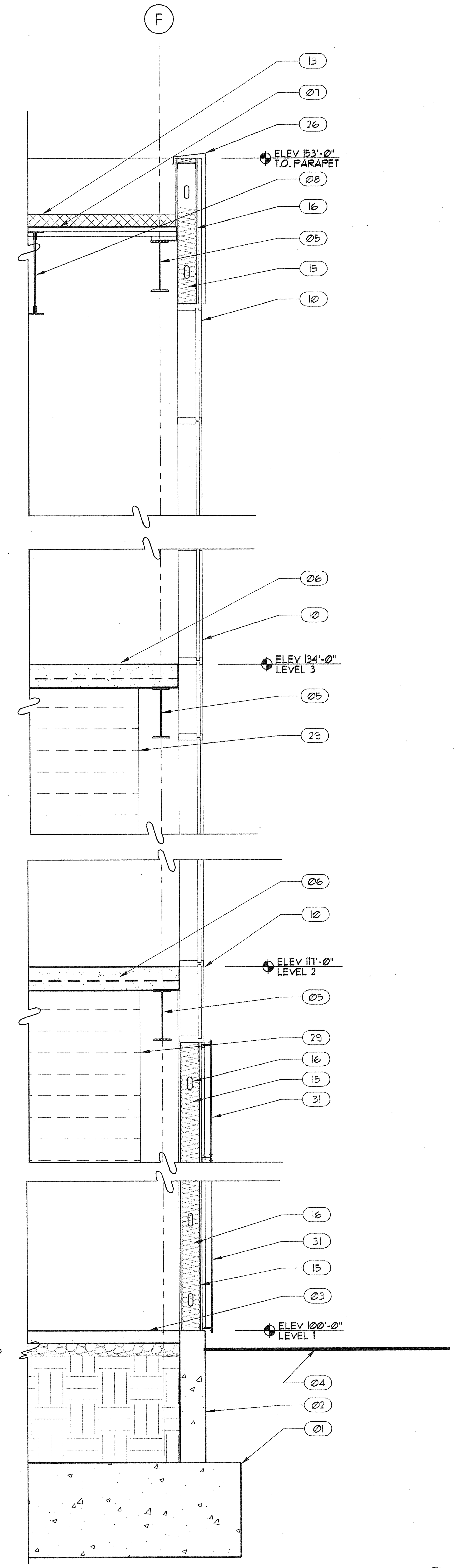


WALL SECTION (A3 / AE306)
SCALE: 1/2" = 1'-0"

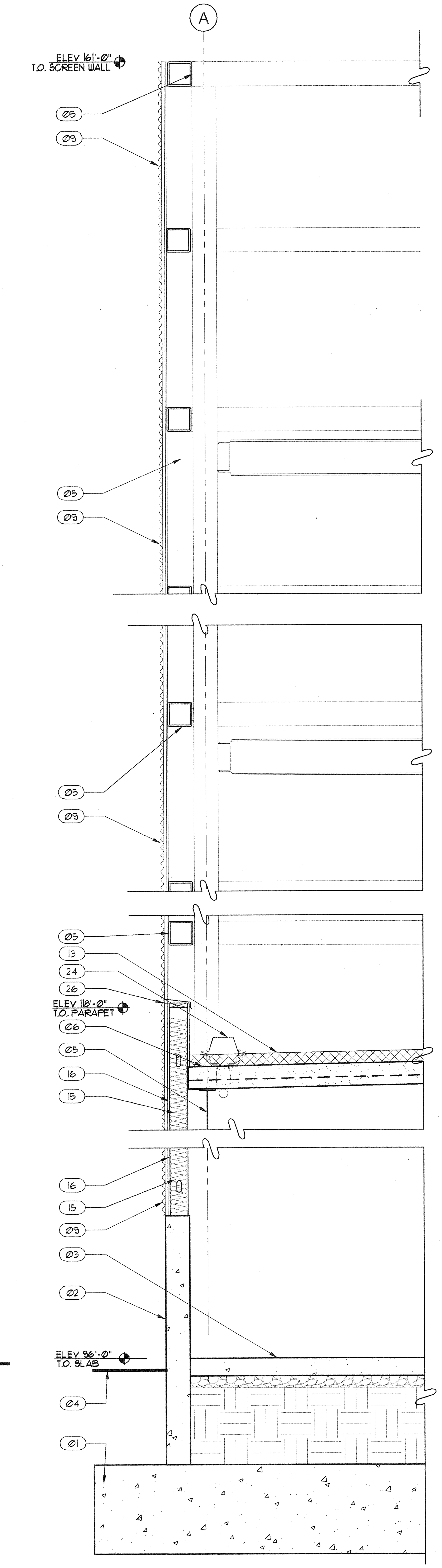


WALL SECTION (A4 / AE306)
SCALE: 1/2" = 1'-0"

## GENERAL NOTES AND LEGEND:

- SEE SHEET AE001 FOR GENERAL NOTES.
- SEE TITLE SHEET G1001 FOR DRAWING INDEX.
- DO NOT SCALE DRAWINGS.
- CONTRACTOR /SUBCONTRACTOR'S SHALL VERIFY ALL DIMENSIONS AND CONDITIONS BEFORE BEGINNING WORK AND SHALL REPORT TO THE ARCHITECT ANY ERRORS, INCONSISTENCIES OR OMISSIONS BEFORE BEGINNING WORK. SEE GENERAL NOTES AND SPECIFICATIONS.

## KEYED NOTES:

01 REINF. CONCRETE FOOTING. SEE STRUCTURAL.
02 REINF. CONCRETE FOUNDATION WALL. SEE STRUCTURAL.
03 CONCRETE SLAB ON GRADE OVER FREE DRAINING GRAVEL AND VAPOR BARRIER. SEE STRUCTURAL.
04 FINISH GRADE. SLOPE AWAY FROM BUILDING. SEE CIVIL.
05 STEEL BEAM. SEE STRUCTURAL.
06 CONCRETE ON METAL DECK. SEE STRUCTURAL.
07 METAL ROOF DECK. SEE STRUCTURAL.
08 STEEL JOIST. SEE STRUCTURAL.
09 PERFORATED METAL PANEL SYSTEM. SEE WALL TYPES.
10 CURTAIN WALL GLAZING. SEE WINDOW SCHEDULE.
11 CURTAIN WALL SPANDREL. SEE WINDOW SCHEDULE.
12 ACOUSTICAL PANEL CEILING. SEE CEILING PLANS.
13 ROOF MEMBRANE ON INSULATION. SEE ROOF PLANS.
14 GYP. BD. W/ PAINTED FINISH.
15 INSULATION.
16 METAL STUD FRAMING. SEE WALL TYPES.
17 GREEN SCREEN SYSTEM. SEE WALL TYPES.
18 METAL WALL PANEL. SEE WALL TYPES.
19 MECHANICAL DUCT. SEE MECHANCAL.
20 EXHAUST FLUE. SEE MECHANICAL.
21 AIR HANDLER. SEE MECHANICAL.
22 MECHANICAL LOUVER. SEE MECHANICAL.
23 PENTHOUSE.
24 ROOF DRAIN. SEE PLUMBING.
25 ALUMINUM STOREFRONT SYSTEM.
26 METAL FLASHING.
27 CMU WALL. SEE WALL TYPES AND STRUCTURAL.
28 METAL LAP SIDING. SEE WALL TYPES.
29 STAIRS.
30 SPRAY-ON FIRE PROTECTION.
31 COMPOSITE WOOD PANEL SYSTEM. SEE WALL TYPES.


ARCHITECT 0818

ajc architects
703 east 1700 south
salt lake city, utah 84105
ph: 801.466.8818
fx: 801.466.4411
www.ajcarchitects.com

PAYETTE
285 Summer Street
Boston, MA 02210-1522
www.payette.com


OWNER INFORMATION

**State of Utah**
Department of Administrative Services

Division of Facilities Construction & Management
4110 State Office Building
Salt Lake City, Utah 84114
Phone: (801) 538 - 3018
Fax: (801) 538 - 3267

Internet: http://www.dfcm.utah.gov

PROJECT DESCRIPTION

LIFE SCIENCES RESEARCH CENTER
UTAH STATE UNIVERSITY

USTAR BUILDING #2
350 EAST GRAND AVE.
LOGAN, UTAH

SHEET NAME:

WALL SECTIONS

REVISIONS

| MARK | DATE | DESCRIPTION |
| --- | --- | --- |

ISSUE DATA

ISSUE DATE: DEC. 9, 2008
ISSUE TYPE: DESDEV
DRAWN BY: J. NIELSEN
CHECKED BY: J. JONES
CAD FILE NAME:
DFCM PROJECT # 06292770
STATE PROPERTY # -
COPYRIGHT: STATE OF UTAH

SHEET NUMBER:

AE306

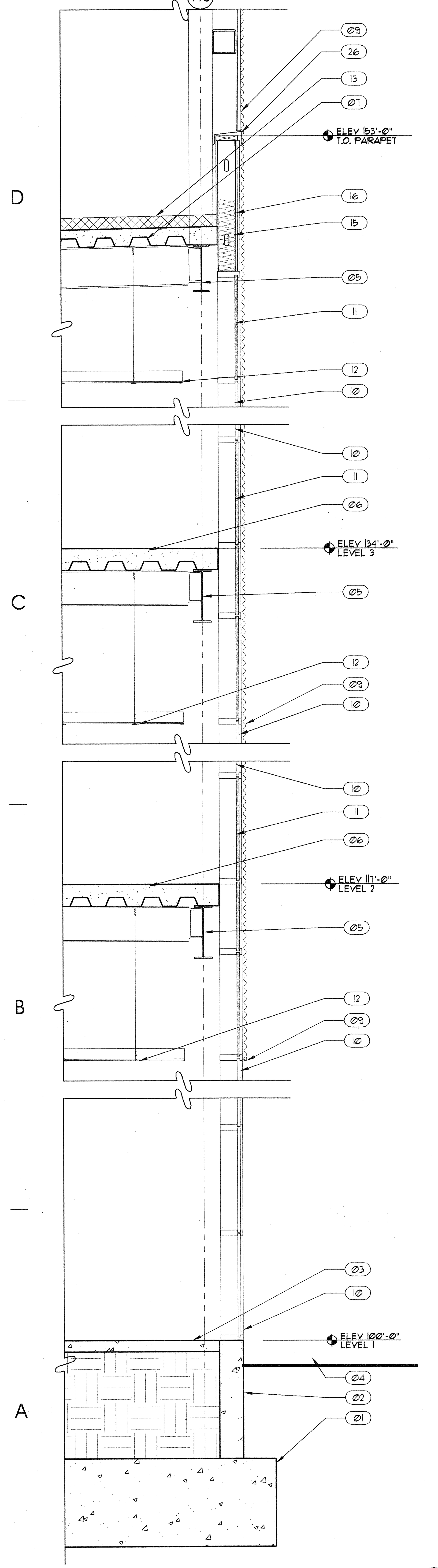


WALL SECTION A1 AE307
SCALE: 1/2" = 1'-0"

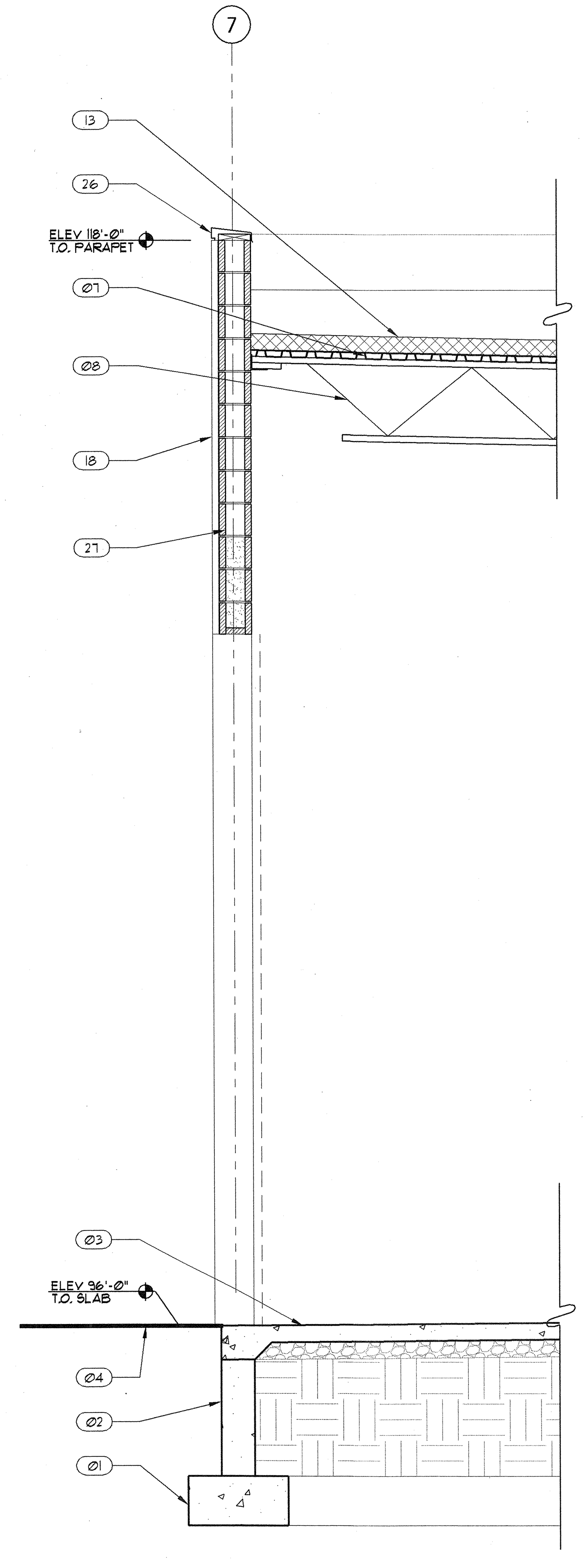


WALL SECTION A2 AE307
SCALE: 1/2" = 1'-0"

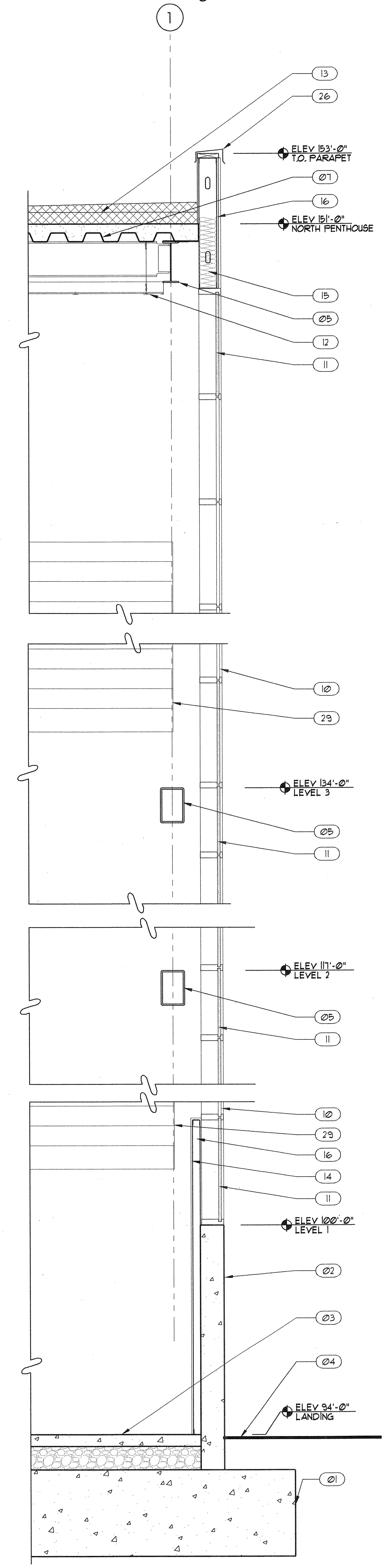


WALL SECTION A3 AE307
SCALE: 1/2" = 1'-0"

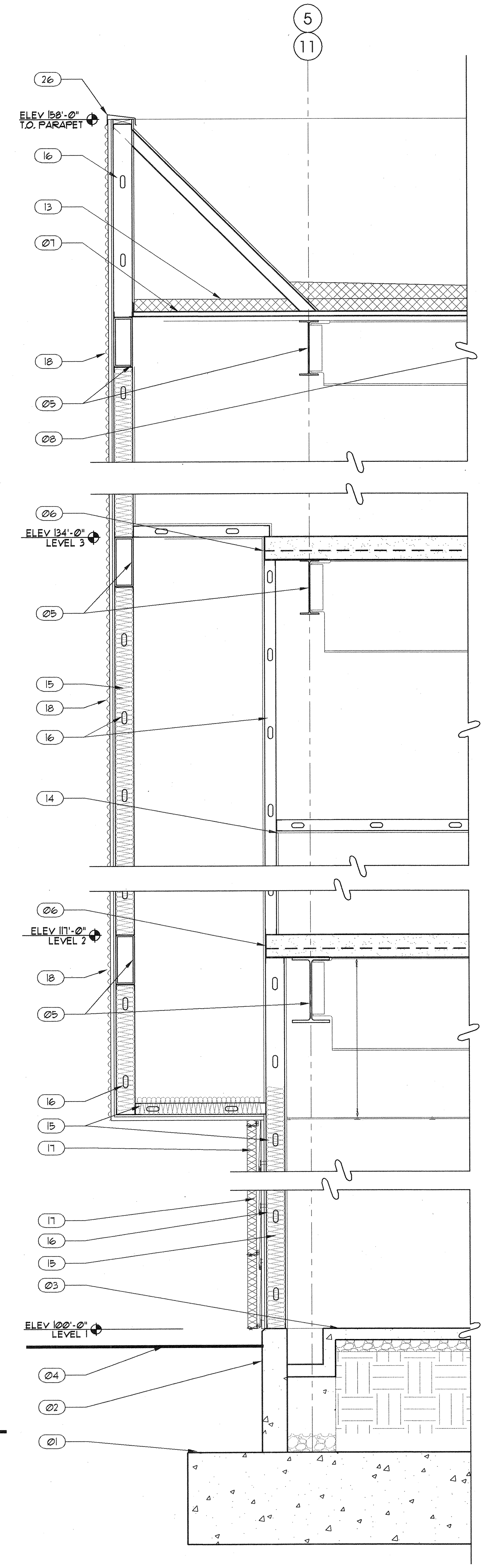


WALL SECTION A4 AE307
SCALE: 1/2" = 1'-0"

## GENERAL NOTES AND LEGEND:

- SEE SHEET AE001 FOR GENERAL NOTES.
- SEE TITLE SHEET G1001 FOR DRAWING INDEX.
- DO NOT SCALE DRAWINGS.
- CONTRACTOR /SUBCONTRACTOR'S SHALL VERIFY ALL DIMENSIONS AND CONDITIONS BEFORE BEGINNING WORK AND SHALL REPORT TO THE ARCHITECT ANY ERRORS, INCONSISTENCIES OR OMISSIONS BEFORE BEGINNING WORK. SEE GENERAL NOTES AND SPECIFICATIONS.

## KEYED NOTES:

01 REINF. CONCRETE FOOTING. SEE STRUCTURAL.
02 REINF. CONCRETE FOUNDATION WALL. SEE STRUCTURAL.
03 CONCRETE SLAB ON GRADE OVER FREE DRAINING GRAVEL AND VAPOR BARRIER. SEE STRUCTURAL.
04 FINISH GRADE. SLOPE AWAY FROM BUILDING. SEE CIVIL.
05 STEEL BEAM. SEE STRUCTURAL.
06 CONCRETE ON METAL DECK. SEE STRUCTURAL.
07 METAL ROOF DECK. SEE STRUCTURAL.
08 STEEL JOIST. SEE STRUCTURAL.
09 PERFORATED METAL PANEL SYSTEM. SEE WALL TYPES.
10 CURTAIN WALL GLAZING. SEE WINDOW SCHEDULE.
11 CURTAIN WALL SPANDREL. SEE WINDOW SCHEDULE.
12 ACOUSTICAL PANEL CEILING. SEE CEILING PLANS.
13 ROOF MEMBRANE ON INSULATION. SEE ROOF PLANS.
14 GYP. BD. W/ PAINTED FINISH.
15 INSULATION.
16 METAL STUD FRAMING. SEE WALL TYPES.
17 GREEN SCREEN SYSTEM. SEE WALL TYPES.
18 METAL WALL PANEL. SEE WALL TYPES.
19 MECHANICAL DUCT. SEE MECHANCAL.
20 EXHAUST FLUE. SEE MECHANICAL.
21 AIR HANDLER. SEE MECHANICAL.
22 MECHANICAL LOUVER. SEE MECHANICAL.
23 PENTHOUSE.
24 ROOF DRAIN. SEE PLUMBING.
25 ALUMINUM STOREFRONT SYSTEM.
26 METAL FLASHING.
27 CMU WALL. SEE WALL TYPES AND STRUCTURAL.
28 METAL LAP SIDING. SEE WALL TYPES.
29 STAIRS.
30 SPRAY-ON FIRE PROTECTION.
31 COMPOSITE WOOD PANEL SYSTEM. SEE WALL TYPES.

ARCHITECT 0818
ajc architects
703 east 1700 south
salt lake city, utah 84105
ph: 801.466.8818
fx: 801.466.4411
www.ajcarchitects.com

PAYETTE
285 Summer Street
Boston, MA 02210-1522
www.payette.com

OWNER INFORMATION
State of Utah
Department of Administrative Services
Division of Facilities Construction & Management
4110 State Office Building
Salt Lake City, Utah 84114
Phone: (801) 538 - 3018
Fax: (801) 538 - 3267
Internet: http://www.dfcm.utah.gov

PROJECT DESCRIPTION

LIFE SCIENCES RESEARCH CENTER
UTAH STATE UNIVERSITY

USTAR BUILDING #2
350 EAST GRAND AVE.
LOGAN, UTAH

SHEET NAME:

WALL SECTIONS

REVISIONS

| MARK | DATE | DESCRIPTION |
|---|---|---|

ISSUE DATA

| | |
|---|---|
| ISSUE DATE: | DEC. 9, 2008 |
| ISSUE TYPE: | DESDEV |
| DRAWN BY: | J. NIELSEN |
| CHECKED BY: | J. JONES |
| CAD FILE NAME: | |
| DFCM PROJECT # | 06292770 |
| STATE PROPERTY # | - |
| COPYRIGHT: | STATE OF UTAH |

SHEET NUMBER:

AE307

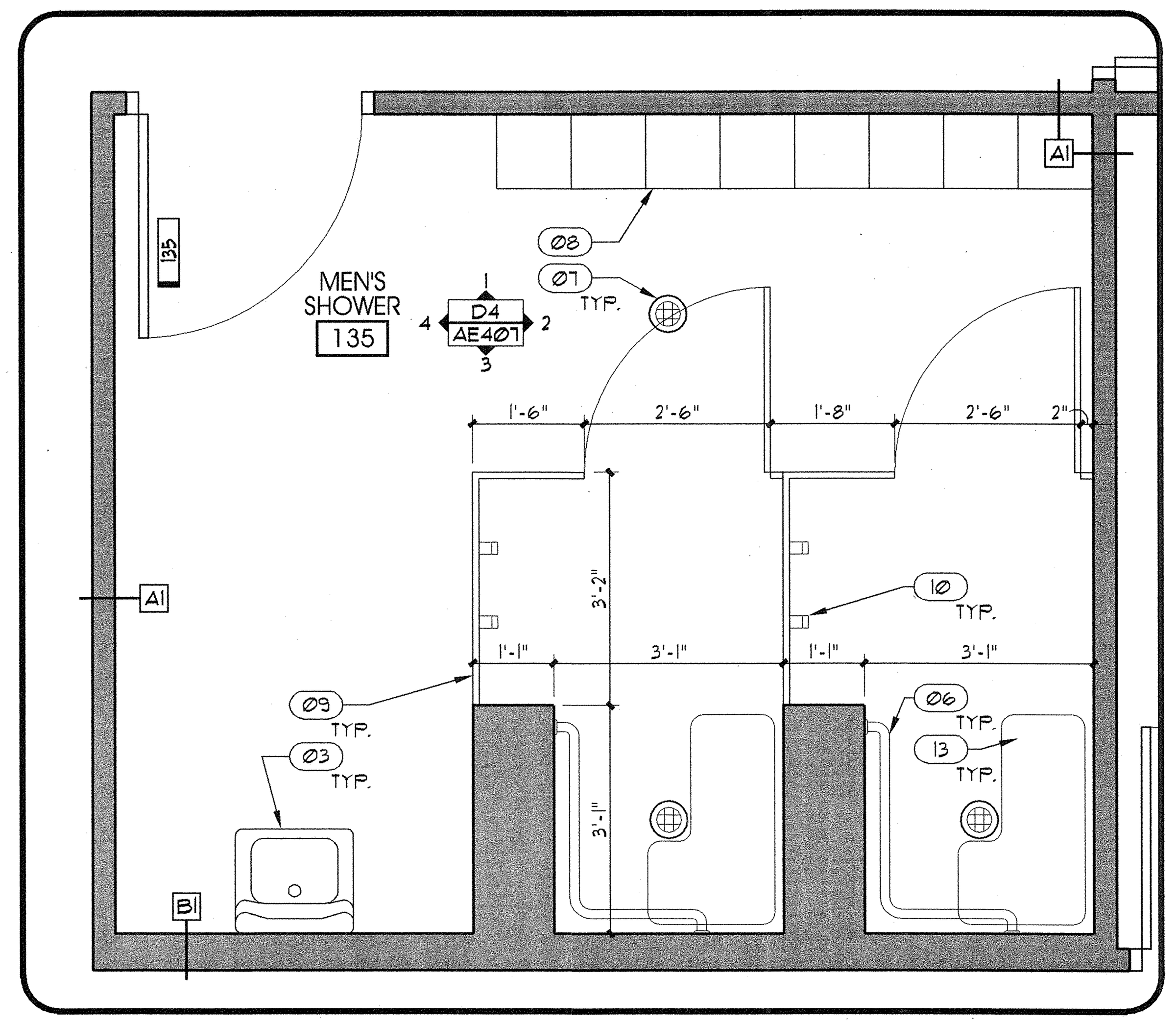


## MENS SHOWER 135
SCALE: 1/2"=1'-0"
C2 / AE401

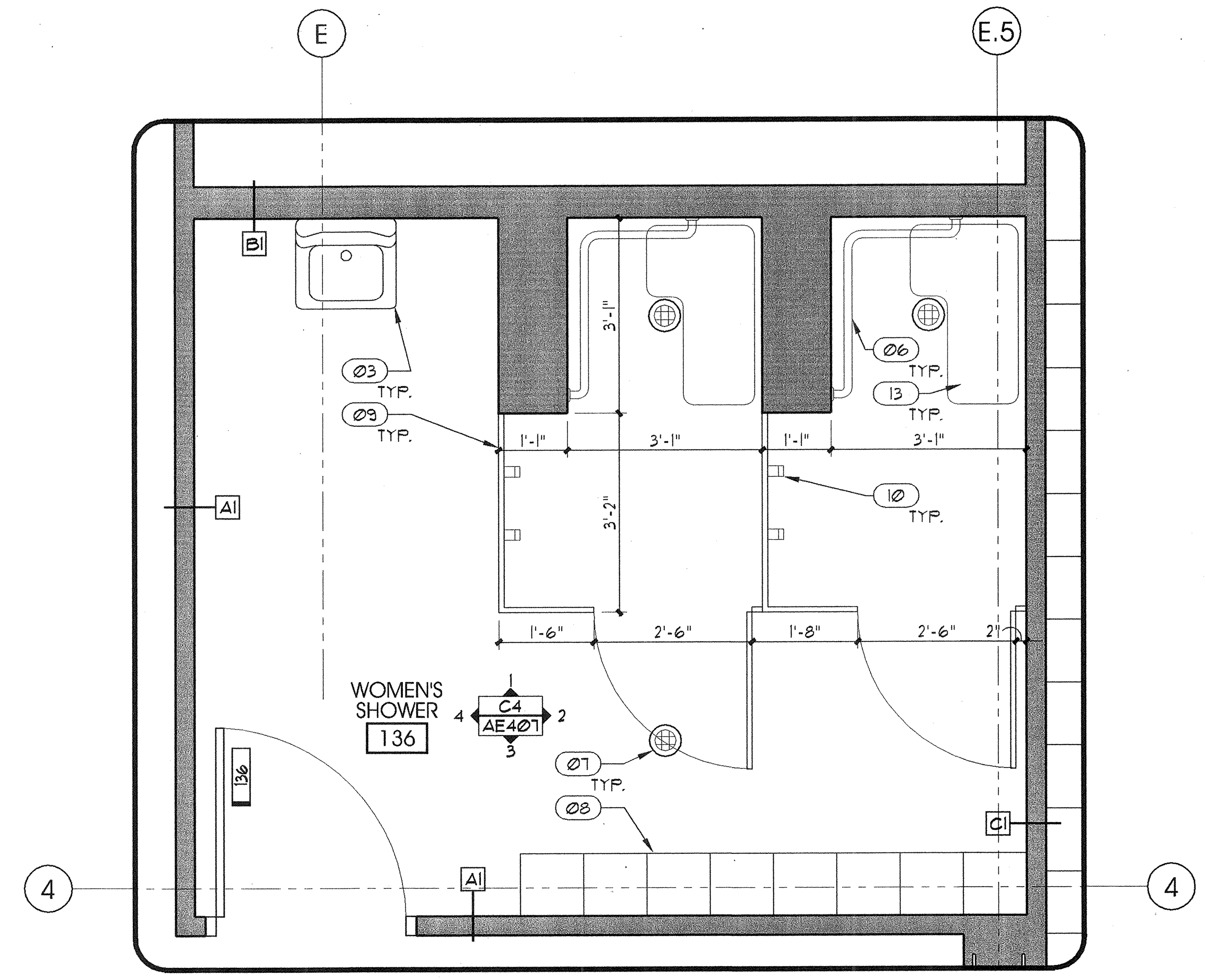


## WOMENS SHOWER 136
SCALE: 1/2"=1'-0"
C4 / AE401

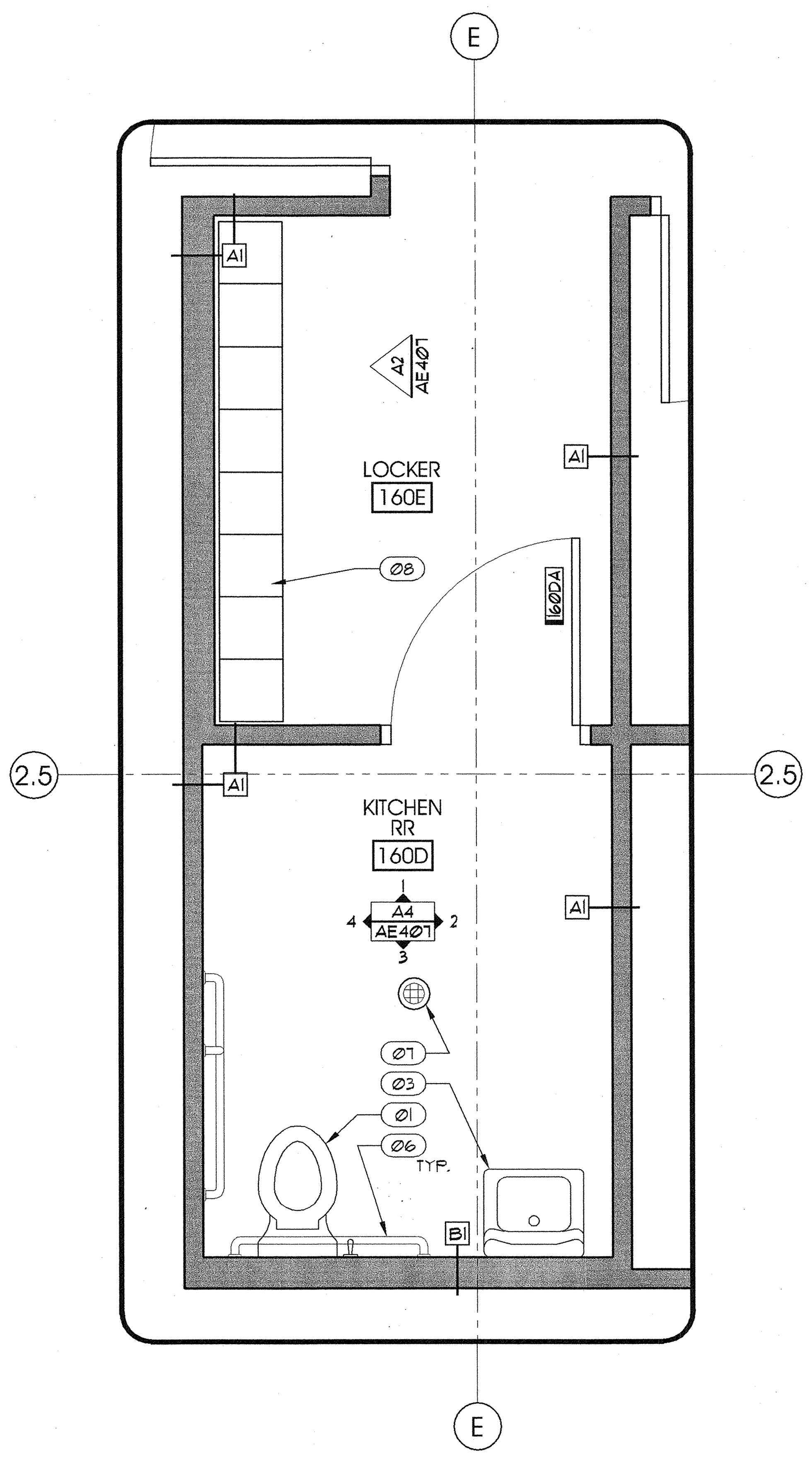


## LOCKER 160E & KITCHEN RR 160D
SCALE: 1/2"=1'-0"
A2 / AE401

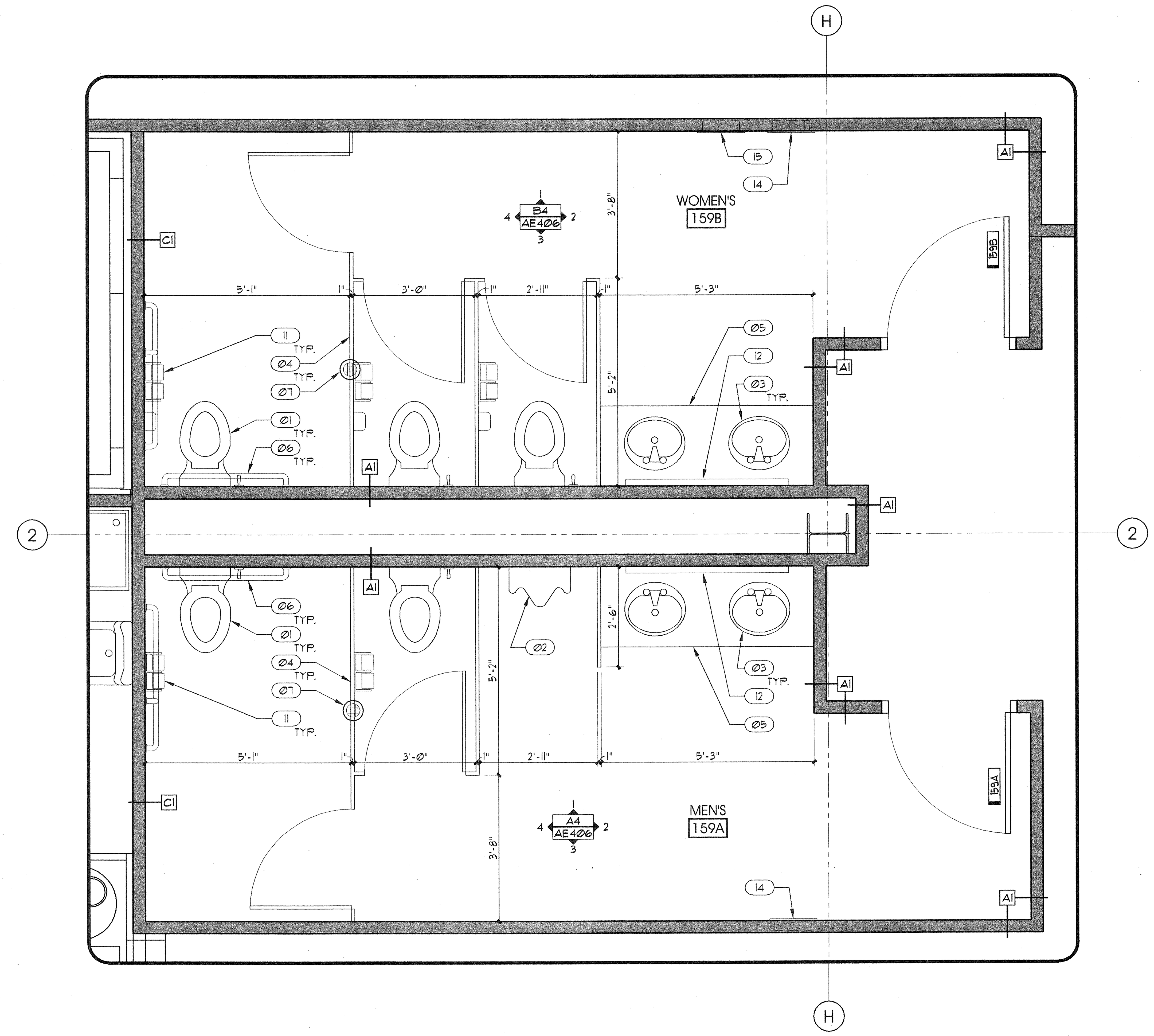


## MENS 159A & WOMENS 159B
SCALE: 1/2"=1'-0"
A4 / AE401

## GENERAL NOTES AND LEGEND:

- SEE SHEET AE001 FOR GENERAL NOTES.
- SEE TITLE SHEET G1001 FOR DRAWING INDEX.
- DO NOT SCALE DRAWINGS.
- CONTRACTOR /SUBCONTRACTOR'S SHALL VERIFY ALL DIMENSIONS AND CONDITIONS BEFORE BEGINNING WORK AND SHALL REPORT TO THE ARCHITECT ANY ERRORS, INCONSISTENCIES OR OMISSIONS BEFORE BEGINNING WORK. SEE GENERAL NOTES AND SPECIFICATIONS.

## KEYED NOTES:

- 01 WATER CLOSET. SEE PLUMBING.
- 02 URINAL. SEE PLUMBING.
- 03 SINK AND FAUCET. SEE PLUMBING.
- 04 TOILET PARTITION. SEE ACCESSORY SCHEDULE.
- 05 COUNTER TOP. SEE CASEWORK DETAILS.
- 06 GRAB BAR. SEE ACCESSORY SCHEDULE.
- 07 FLOOR DRAIN. SEE PLUMBING.
- 08 LOCKERS. SEE ACCESSORY SCHEDULE.
- 09 SHOWER ENCLOSURE. SEE INTERIOR ELEVATIONS.
- 10 TOWEL HOOKS. SEE ACCESSORY SCHEDULE.
- 11 TOILET PAPER DISPENSER. SEE ACCESSORY SCHEDULE.
- 12 MIRROR. SEE ACCESSORY SCHEDULE.
- 13 ACCESSIBLE SHOWER SEAT. SEE ACCESSORY SCHEDULE.
- 14 PAPER TOWEL DISPENSER. SEE ACCESSORY SCHEDULE.
- 15 SANITARY NAPKIN DISPENSER. SEE ACCESSORY SCHEDULE.
- 16 SANITARY NAPKIN DISPOSAL. SEE ACCESSORY SCHEDULE.

ARCHITECT 0818

ajc architects
703 east 1700 south
salt lake city, utah 84105
ph: 801.466.8818
fx: 801.466.4411
www.ajcarchitects.com

PAYETTE
285 Summer Street
Boston, MA 02210-1522
www.payette.com

OWNER INFORMATION

**State of Utah**
Department of Administrative Services

Division of Facilities Construction & Management
4110 State Office Building
Salt Lake City, Utah 84114
Phone: (801) 538 - 3018
Fax: (801) 538 - 3267

Internet: http://www.dfcm.utah.gov

PROJECT DESCRIPTION

# LIFE SCIENCES RESEARCH CENTER
UTAH STATE UNIVERSITY

USTAR BUILDING #2
350 EAST GRAND AVE.
LOGAN, UTAH

SHEET NAME:

ENLARGED PLANS

REVISIONS

| MARK | DATE | DESCRIPTION |
|---|---|---|

ISSUE DATA

| | |
|---|---|
| ISSUE DATE: | DEC. 9, 2008 |
| ISSUE TYPE: | DESDEV |
| DRAWN BY: | J. NIELSEN |
| CHECKED BY: | J. JONES |
| CAD FILE NAME: | |
| DFCM PROJECT # | 06292770 |
| STATE PROPERTY # | - |
| COPYRIGHT: | STATE OF UTAH |

SHEET NUMBER:

# AE401

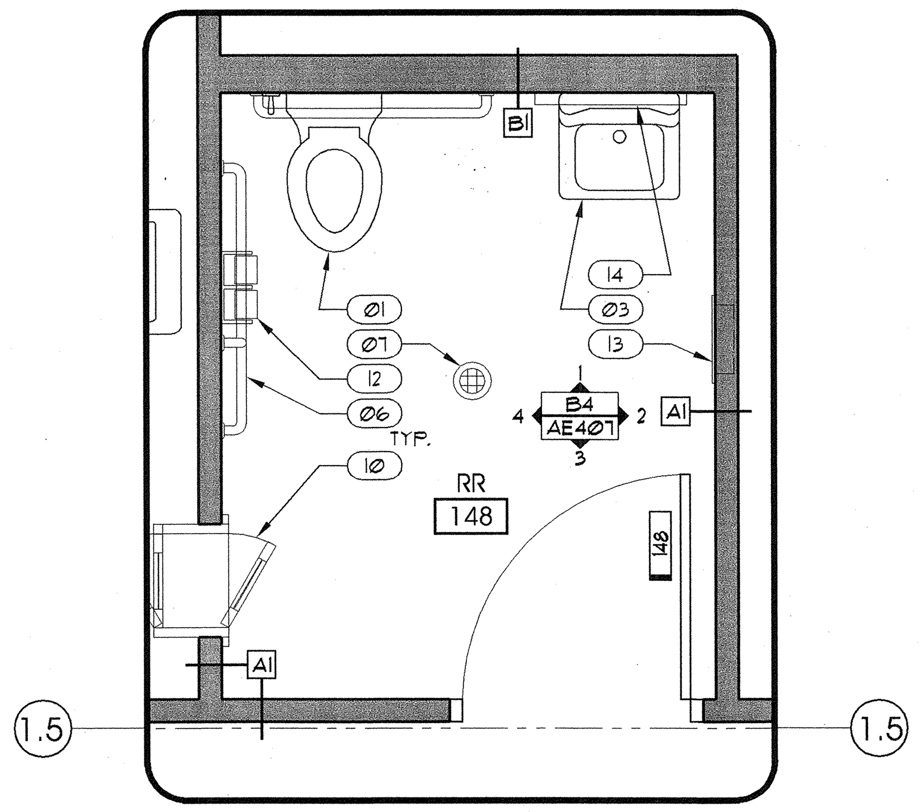

## RR 148
SCALE: 1/2"=1'-0"
C2 AE402

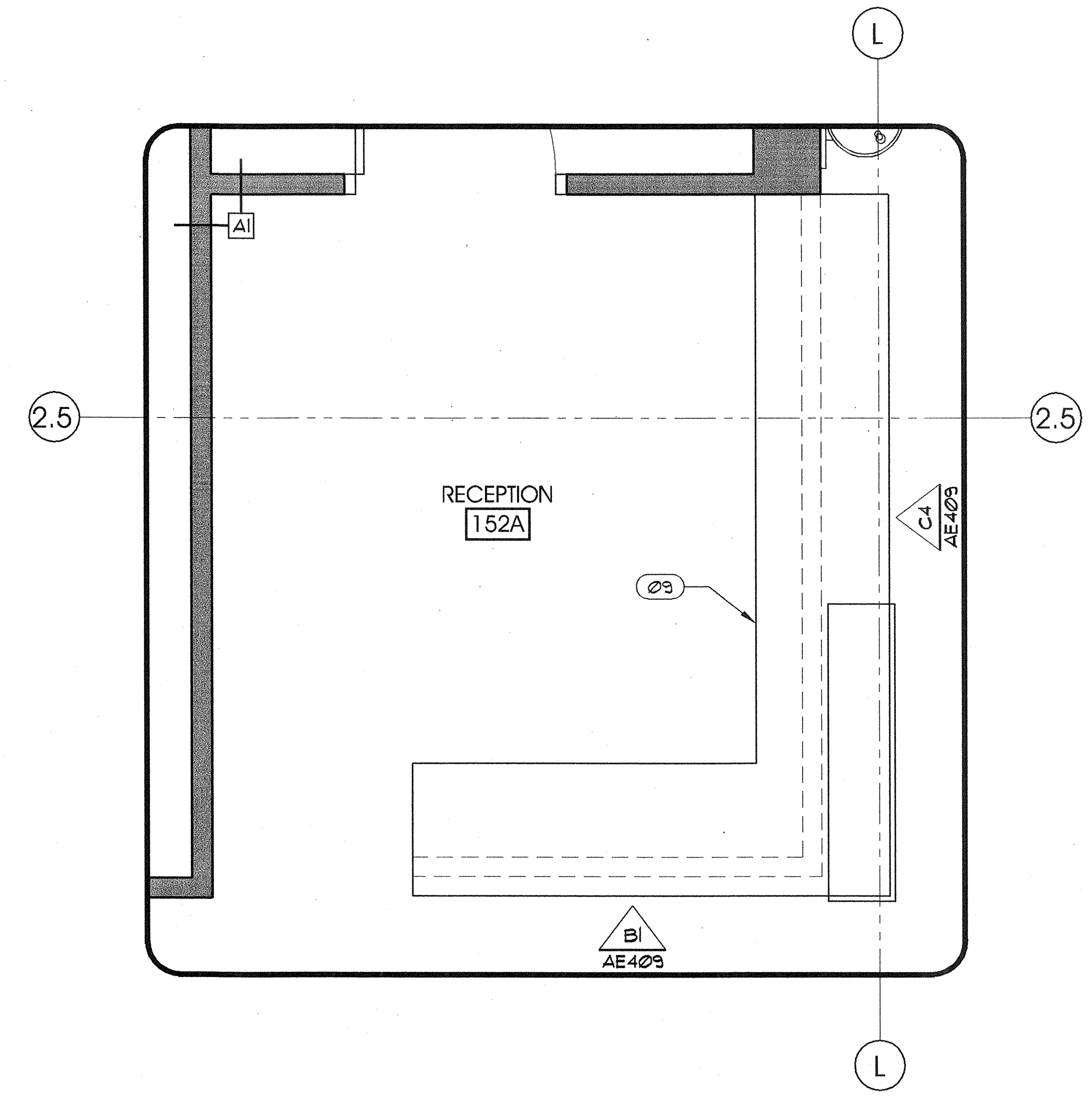

## RECEPTION 152A
SCALE: 1/2"=1'-0"
C3 AE402

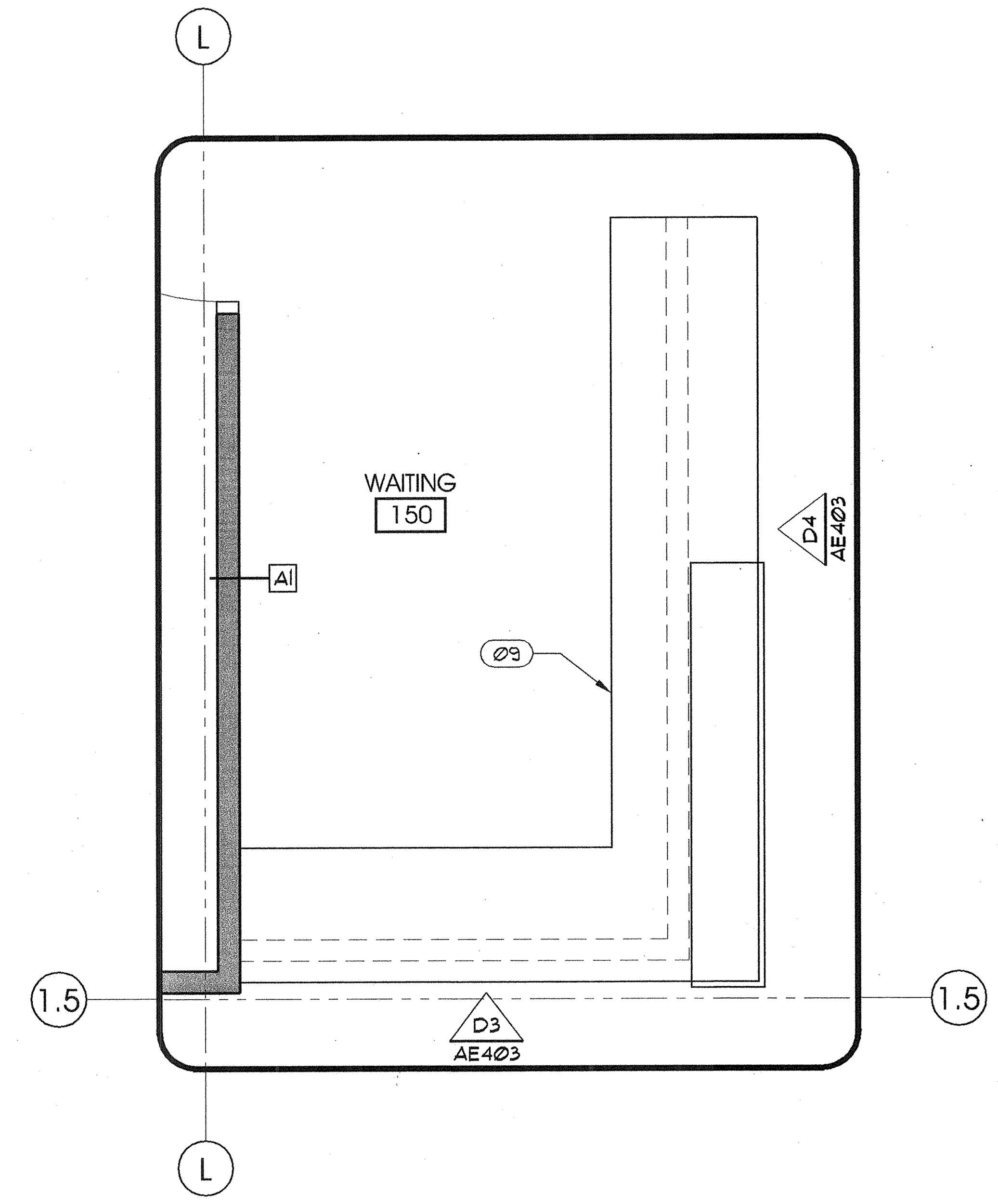

## WAITING 150
SCALE: 1/2"=1'-0"
C4 AE402

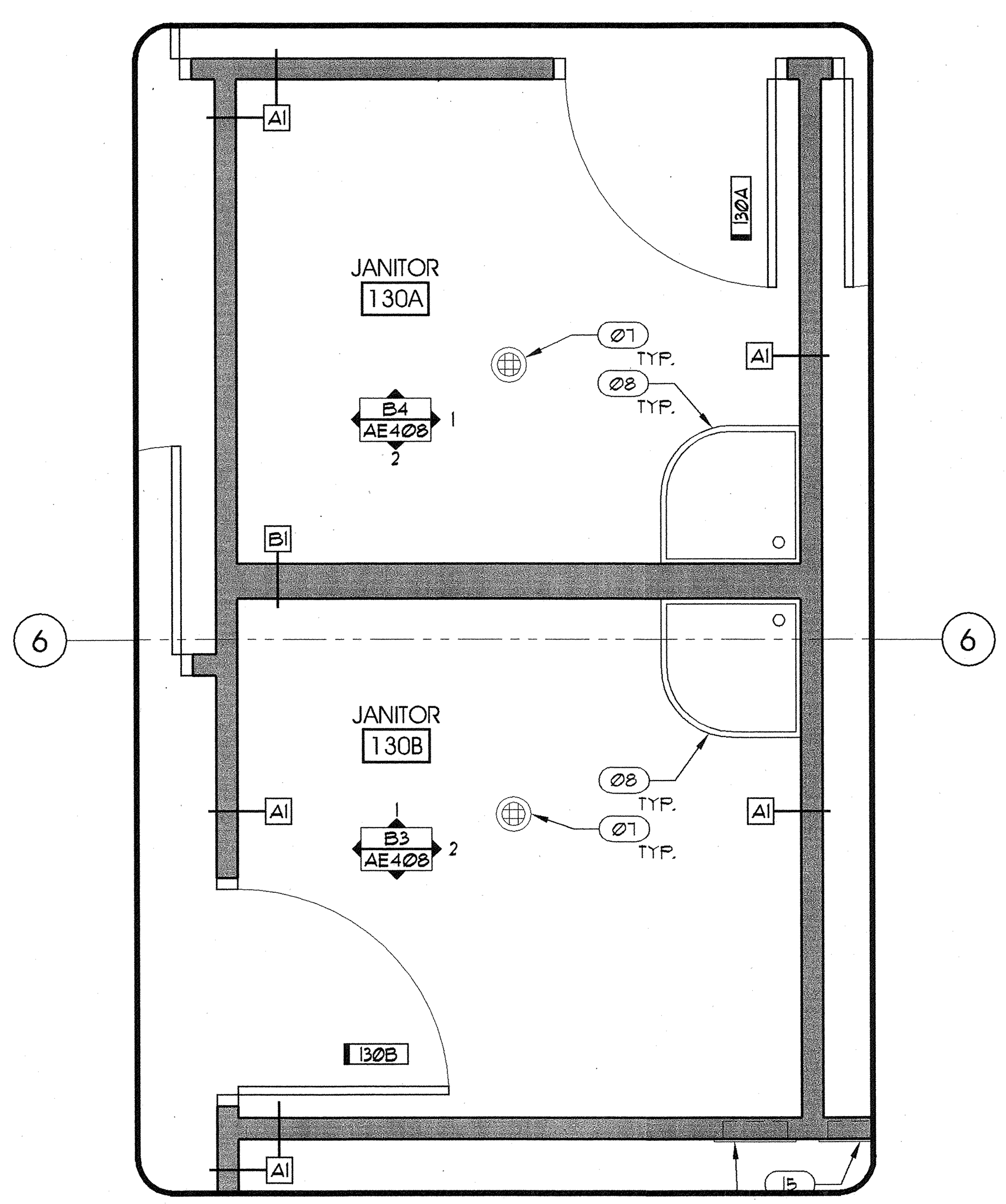

## JANITOR 130A & JANITOR 130B
SCALE: 1/2"=1'-0"
A2 AE402

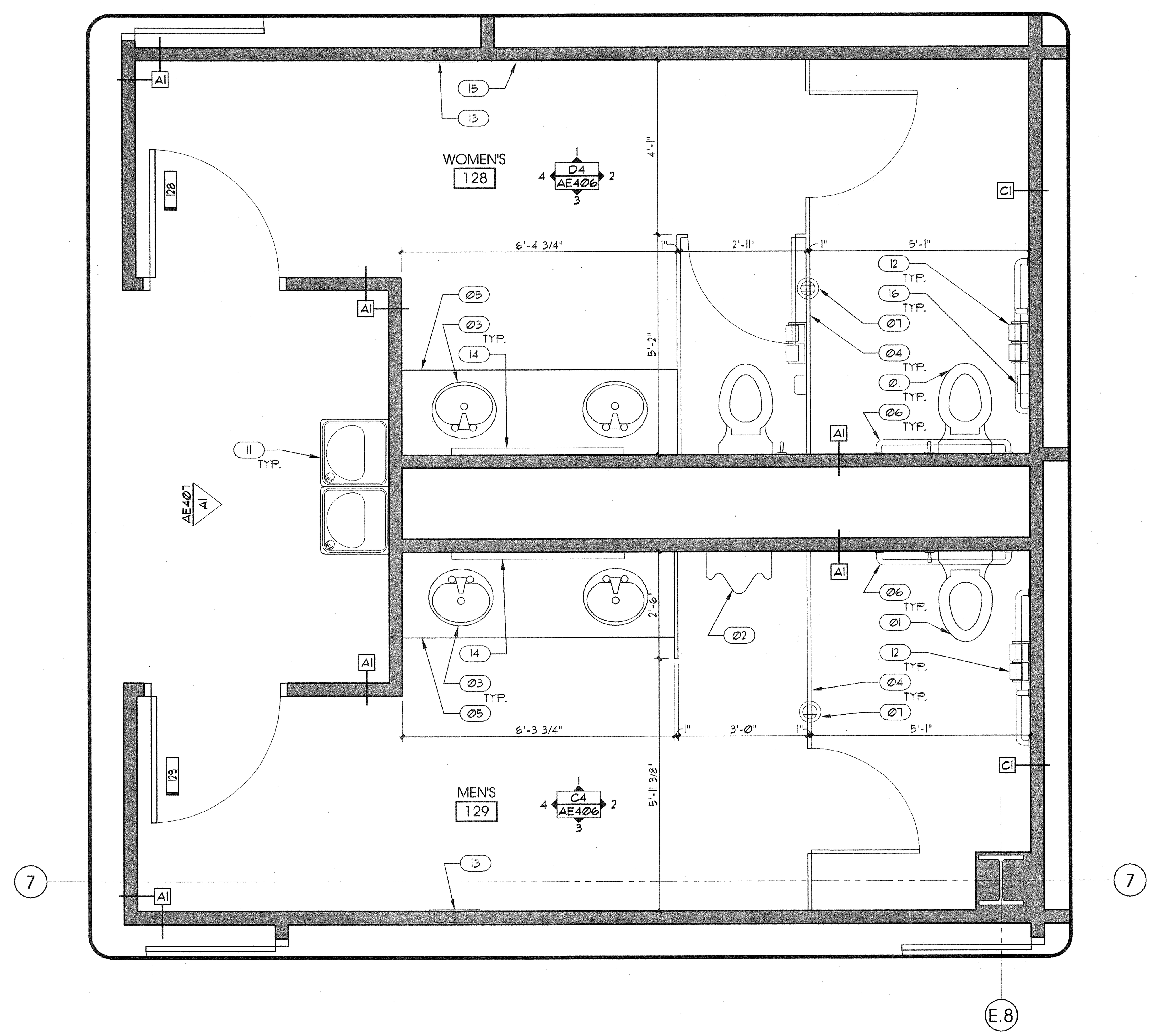

## WOMENS 128 & MENS 129
SCALE: 1/2"=1'-0"
A4 AE402

## GENERAL NOTES AND LEGEND:

- SEE SHEET AE001 FOR GENERAL NOTES.
- SEE TITLE SHEET G1001 FOR DRAWING INDEX.
- DO NOT SCALE DRAWINGS.
- CONTRACTOR /SUBCONTRACTOR'S SHALL VERIFY ALL DIMENSIONS AND CONDITIONS BEFORE BEGINNING WORK AND SHALL REPORT TO THE ARCHITECT ANY ERRORS, INCONSISTENCIES OR OMISSIONS BEFORE BEGINNING WORK. SEE GENERAL NOTES AND SPECIFICATIONS.

## KEYED NOTES:

- 01 WATER CLOSET. SEE PLUMBING.
- 02 URINAL. SEE PLUMBING.
- 03 SINK AND FAUCET. SEE PLUMBING.
- 04 TOILET PARTITION. SEE ACCESSORY SCHEDULE.
- 05 COUNTER TOP. SEE CASEWORK DETAILS.
- 06 GRAB BAR. SEE ACCESSORY SCHEDULE.
- 07 FLOOR DRAIN. SEE PLUMBING.
- 08 MOP SINK. SEE PLUMBING.
- 09 CASEWORK. SEE CASEWORK DETAILS.
- 10 PASS-THROUGH. SEE ACCESSORY SCHEDULE.
- 11 DRINKING FOUNTAIN. SEE PLUMBING.
- 12 TOILET PAPER DISPENSER. SEE ACCESSORY SCHEDULE.
- 13 PAPER TOWEL DISPENSER. SEE ACCESSORY SCHEDULE.
- 14 MIRROR. SEE ACCESSORY SCHEDULE.
- 15 SANITARY NAPKIN DISPENSER. SEE ACCESSORY SCHEDULE.
- 16 SANITARY NAPKIN DISPOSAL. SEE ACCESSORY SCHEDULE.


ARCHITECT 0818

ajc architects
703 east 1700 south
salt lake city, utah 84105
ph: 801.466.8818
fx: 801.466.4411
www.ajcarchitects.com

PAYETTE
285 Summer Street
Boston, MA 02210-1522
www.payette.com

OWNER INFORMATION

State of Utah
Department of Administrative Services
Division of Facilities Construction & Management
4110 State Office Building
Salt Lake City, Utah 84114
Phone: (801) 538 - 3018
Fax: (801) 538 - 3267
Internet: http://www.dfcm.utah.gov


PROJECT DESCRIPTION

LIFE SCIENCES RESEARCH CENTER
UTAH STATE UNIVERSITY

USTAR BUILDING #2
350 EAST GRAND AVE.
LOGAN, UTAH

SHEET NAME:

ENLARGED PLANS

REVISIONS

| MARK | DATE | DESCRIPTION |
|---|---|---|

ISSUE DATA

| | |
|---|---|
| ISSUE DATE: | DEC. 9, 2008 |
| ISSUE TYPE: | DESDEV |
| DRAWN BY: | J. NIELSEN |
| CHECKED BY: | J. JONES |
| CAD FILE NAME: | |
| DFCM PROJECT # | 06292770 |
| STATE PROPERTY # | - |
| COPYRIGHT: | STATE OF UTAH |

SHEET NUMBER:

# AE402

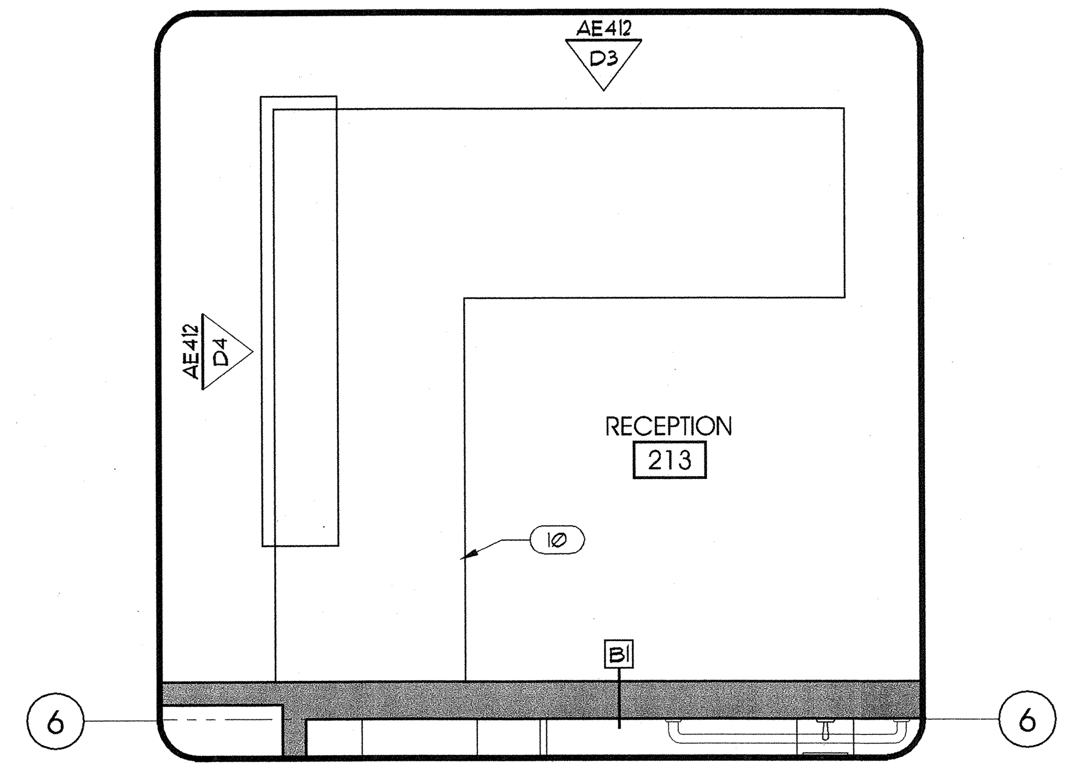


RECEPTION 213 (C2 / AE403)
SCALE: 1/2"=1'-0"

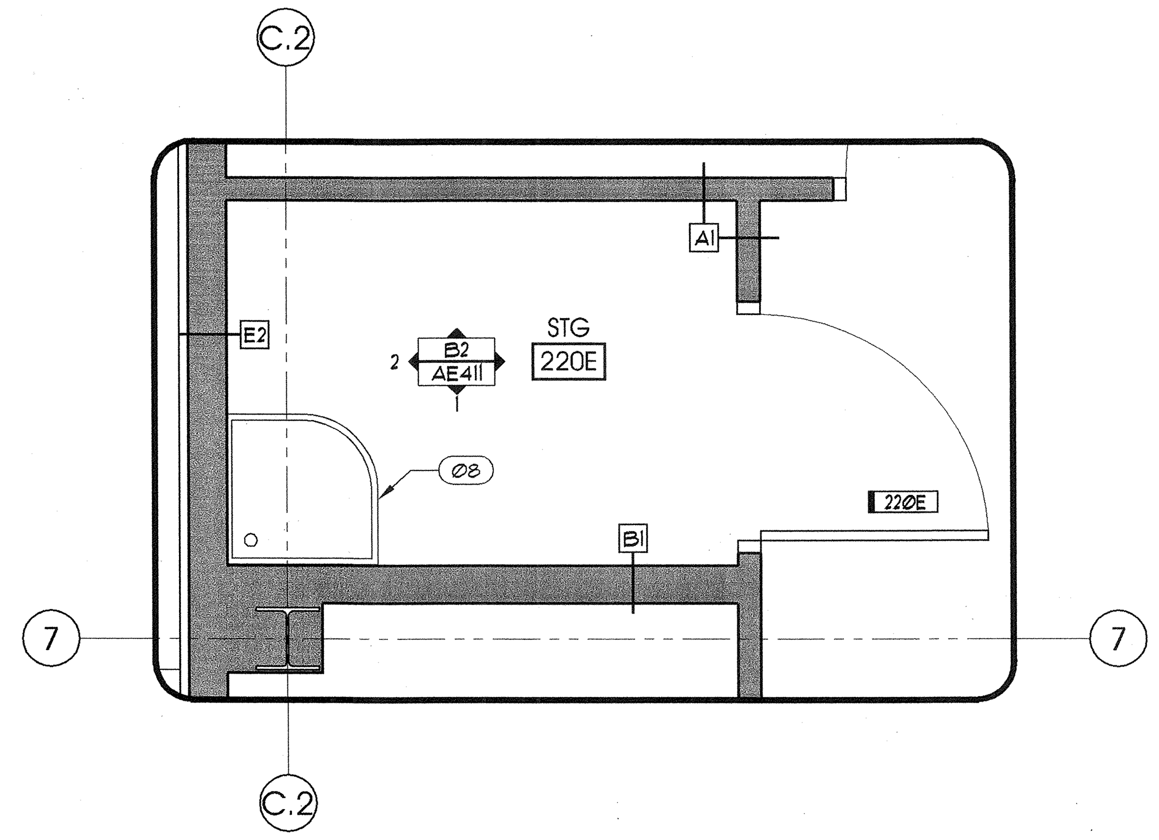


STG 220E (C3 / AE403)
SCALE: 1/2"=1'-0"

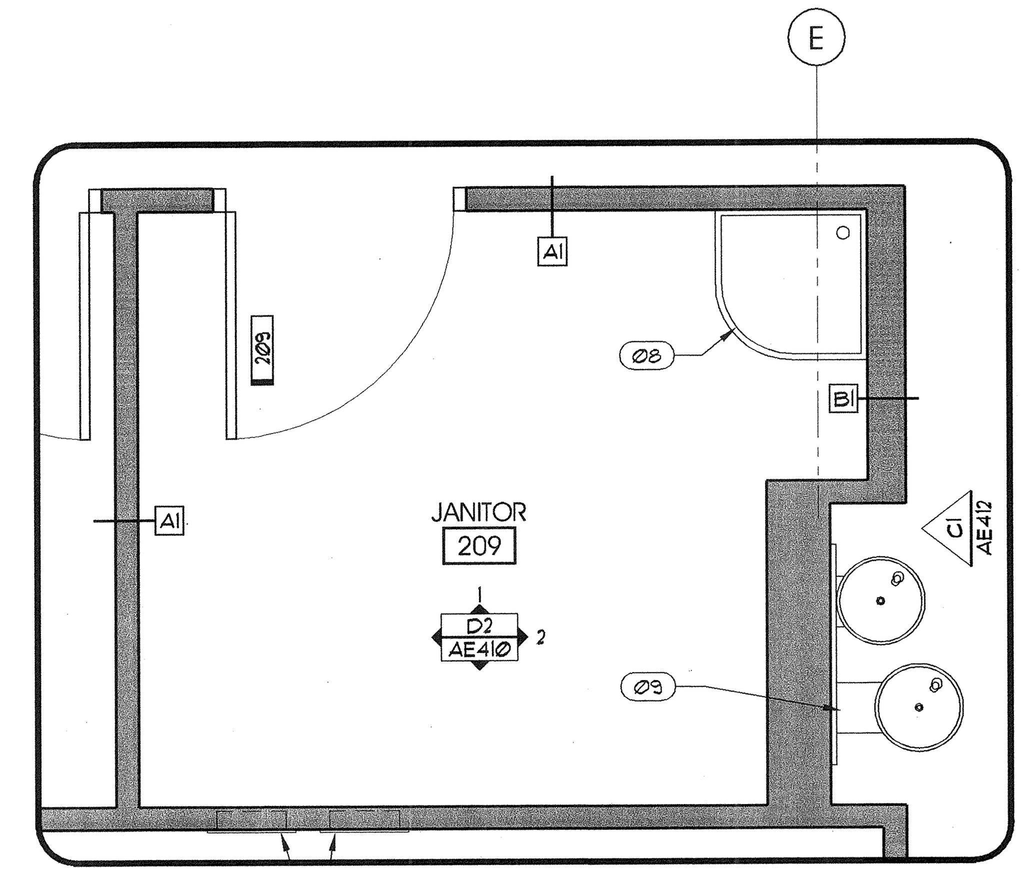


JANITOR 209 (C4 / AE403)
SCALE: 1/2"=1'-0"

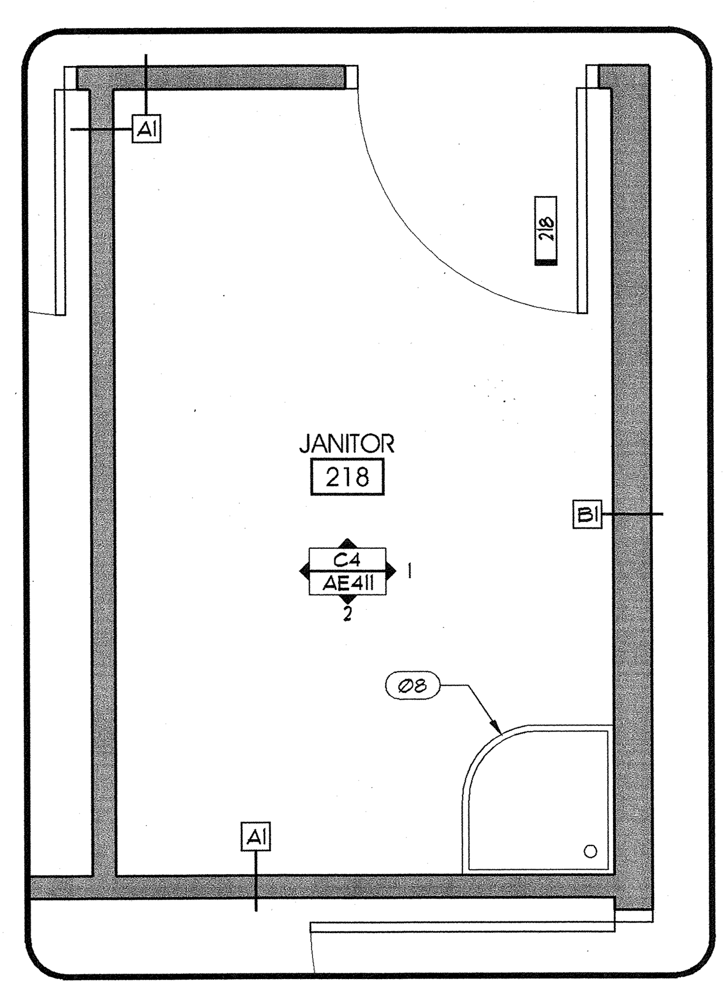


JANITOR 218 (A2 / AE403)
SCALE: 1/2"=1'-0"

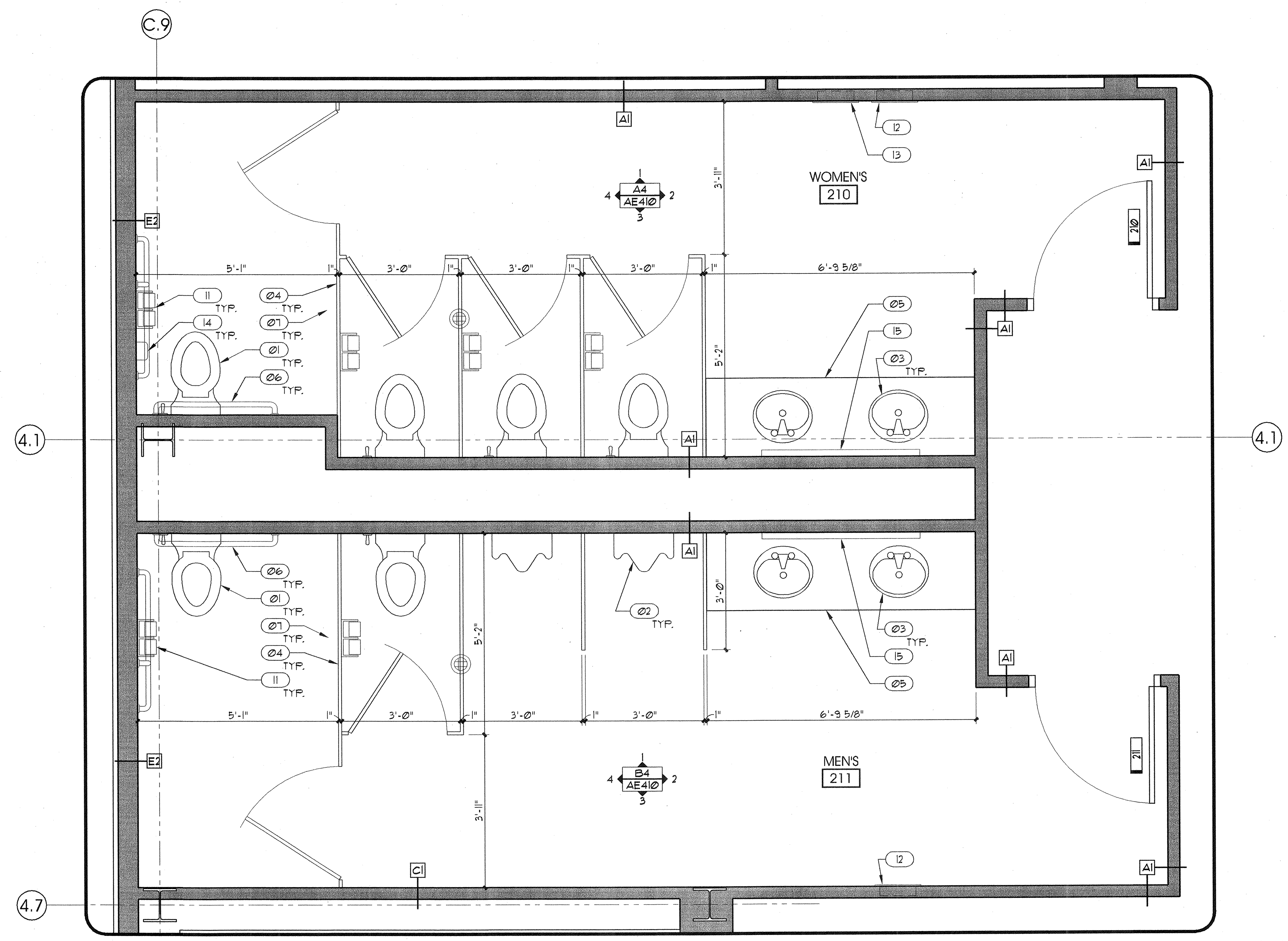


WOMEN'S 210 & MEN'S 211 (A4 / AE403)
SCALE: 1/2"=1'-0"

## GENERAL NOTES AND LEGEND:

- SEE SHEET AEØØ1 FOR GENERAL NOTES.
- SEE TITLE SHEET G1ØØ1 FOR DRAWING INDEX.
- DO NOT SCALE DRAWINGS.
- CONTRACTOR /SUBCONTRACTOR'S SHALL VERIFY ALL DIMENSIONS AND CONDITIONS BEFORE BEGINNING WORK AND SHALL REPORT TO THE ARCHITECT ANY ERRORS, INCONSISTENCIES OR OMISSIONS BEFORE BEGINNING WORK. SEE GENERAL NOTES AND SPECIFICATIONS.

## KEYED NOTES:

- Ø1 WATER CLOSET. SEE PLUMBING.
- Ø2 URINAL. SEE PLUMBING.
- Ø3 SINK AND FAUCET. SEE PLUMBING.
- Ø4 TOILET PARTITION. SEE ACCESSORY SCHEDULE.
- Ø5 COUNTER TOP. SEE CASEWORK DETAILS.
- Ø6 GRAB BAR. SEE ACCESSORY SCHEDULE.
- Ø7 FLOOR DRAIN. SEE PLUMBING.
- Ø8 MOP SINK. SEE PLUMBING.
- Ø9 DRINKING FOUNTAIN. SEE PLUMBING.
- 1Ø CASEWORK. SEE CASEWORK DETAILS.
- 11 TOILET PAPER DISPENSER. SEE ACCESSORY SCHEDULE.
- 12 PAPER TOWEL DISPENSER. SEE ACCESSORY SCHEDULE.
- 13 SANITARY NAPKIN DISPENSER. SEE ACCESSORY SCHEDULE.
- 14 SANITARY NAPKIN DISPOSAL. SEE ACCESSORY SCHEDULE.
- 15 MIRROR. SEE ACCESSORY SCHEDULE.


ARCHITECT 0818

ajc architects

703 east 1700 south
salt lake city, utah 84105
ph: 801.466.8818
fx: 801.466.4411
www.ajcarchitects.com

PAYETTE

285 Summer Street
Boston, MA 02210-1522
www.payette.com



OWNER INFORMATION

State of Utah
Department of Administrative Services

Division of Facilities
Construction & Management
4110 State Office Building
Salt Lake City, Utah 84114
Phone: (801) 538 - 3018
Fax: (801) 538 - 3267

Internet: http://www.dfcm.utah.gov


PROJECT DESCRIPTION

LIFE SCIENCES
RESEARCH CENTER
UTAH STATE UNIVERSITY

USTAR BUILDING #2
350 EAST GRAND AVE.
LOGAN, UTAH

SHEET NAME:

ENLARGED PLANS

REVISIONS

| MARK | DATE | DESCRIPTION |
|---|---|---|

ISSUE DATA

| | |
|---|---|
| ISSUE DATE: | DEC. 9, 2008 |
| ISSUE TYPE: | DESDEV |
| DRAWN BY: | J. NIELSEN |
| CHECKED BY: | J. JONES |
| CAD FILE NAME: | |
| DFCM PROJECT # | 06292770 |
| STATE PROPERTY # | - |
| COPYRIGHT: | STATE OF UTAH |

SHEET NUMBER:

# AE403

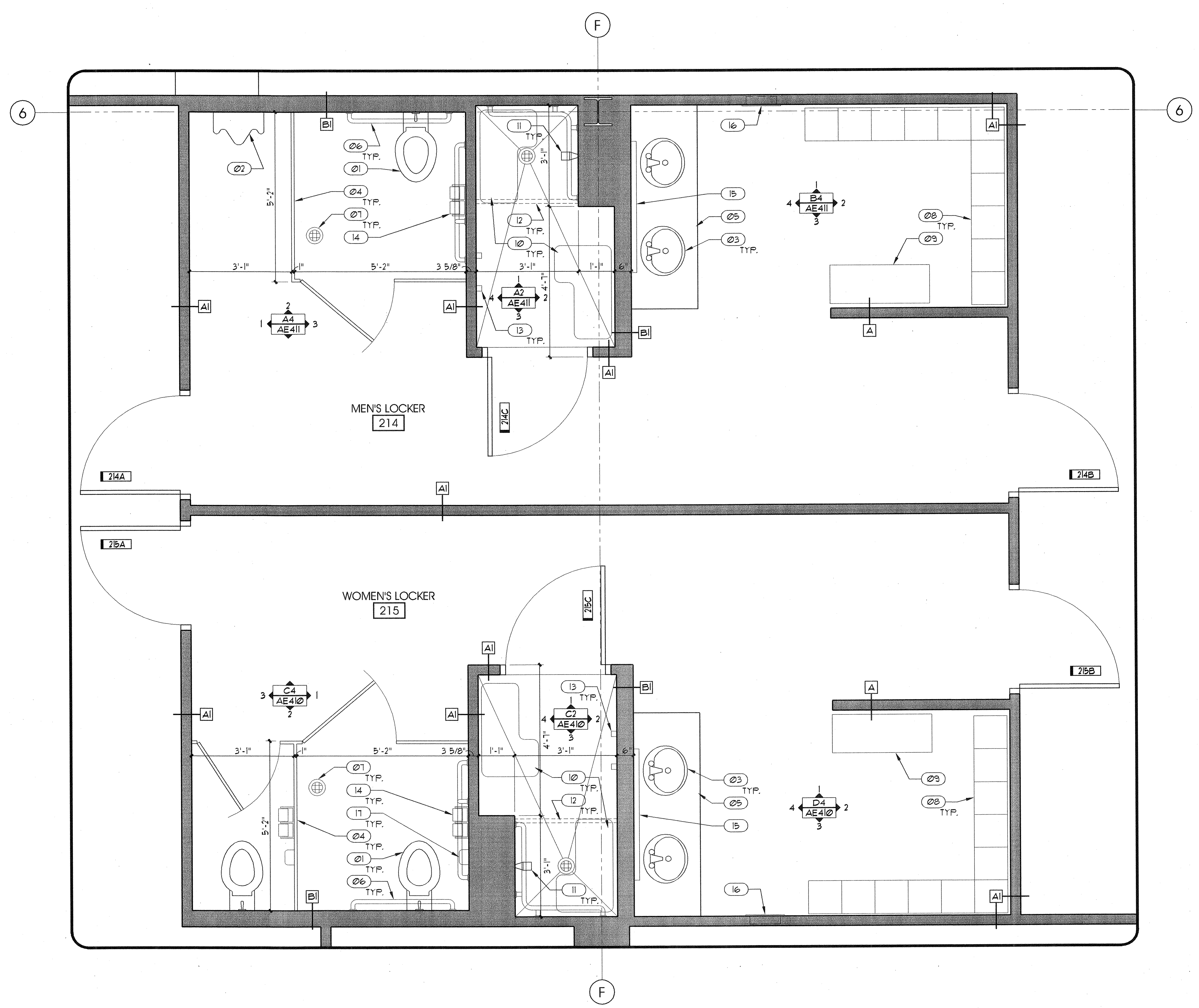


MEN'S LOCKER 214 & WOMEN'S LOCKER 215
SCALE: 1/2"=1'-0"
A4
AE404

## GENERAL NOTES AND LEGEND:

- SEE SHEET AE001 FOR GENERAL NOTES.
- SEE TITLE SHEET G1001 FOR DRAWING INDEX.
- DO NOT SCALE DRAWINGS.
- CONTRACTOR /SUBCONTRACTOR'S SHALL VERIFY ALL DIMENSIONS AND CONDITIONS BEFORE BEGINNING WORK AND SHALL REPORT TO THE ARCHITECT ANY ERRORS, INCONSISTENCIES OR OMISSIONS BEFORE BEGINNING WORK. SEE GENERAL NOTES AND SPECIFICATIONS.

## KEYED NOTES:

| | |
|---|---|
| 01 | WATER CLOSET. SEE PLUMBING. |
| 02 | URINAL. SEE PLUMBING. |
| 03 | SINK AND FAUCET. SEE PLUMBING. |
| 04 | TOILET PARTITION. SEE ACCESSORY SCHEDULE. |
| 05 | COUNTER TOP. SEE CASEWORK DETAILS. |
| 06 | GRAB BAR. SEE ACCESSORY SCHEDULE. |
| 07 | FLOOR DRAIN. SEE PLUMBING. |
| 08 | LOCKERS. SEE ACCESSORY SCHEDULE. |
| 09 | BENCH. SEE ACCESSORY SCHEDULE. |
| 10 | ACCESSIBLE SHOWER SEAT. SEE ACCESSORY SCHEDULE. |
| 11 | ACCESSIBLE SHOWER CONTROLS. SEE PLUMBING. |
| 12 | SHOWER CURTAIN ROD ABOVE. SEE ACCESSORY SCHEDULE. |
| 13 | TOWEL HOOKS. SEE ACCESSORY SCHEDULE. |
| 14 | TOILET PAPER DISPENSER. SEE ACCESSORY SCHEDULE. |
| 15 | MIRROR. SEE ACCESSORY SCHEDULE. |
| 16 | PAPER TOWEL DISPENSER. SEE ACCESSORY SCHEDULE. |
| 17 | SANITARY NAPKIN DISPOSAL. SEE ACCESSORY SCHEDULE. |


ARCHITECT 0818

ajc architects
703 east 1700 south
salt lake city, utah 84105
ph: 801.466.8818
fx: 801.466.4411
www.ajcarchitects.com

PAYETTE
285 Summer Street
Boston, MA 02210-1522
www.payette.com

OWNER INFORMATION
State of Utah
Department of Administrative Services
Division of Facilities Construction & Management
4110 State Office Building
Salt Lake City, Utah 84114
Phone: (801) 538 - 3018
Fax: (801) 538 - 3267
Internet: http://www.dfcm.utah.gov


PROJECT DESCRIPTION

LIFE SCIENCES RESEARCH CENTER
UTAH STATE UNIVERSITY

USTAR BUILDING #2
350 EAST GRAND AVE.
LOGAN, UTAH

SHEET NAME:
ENLARGED PLANS

REVISIONS

| MARK | DATE | DESCRIPTION |
|---|---|---|

ISSUE DATA

| | |
|---|---|
| ISSUE DATE: | DEC. 9, 2008 |
| ISSUE TYPE: | DESDEV |
| DRAWN BY: | J. NIELSEN |
| CHECKED BY: | J. JONES |
| CAD FILE NAME: | |
| DFCM PROJECT # | 06292770 |
| STATE PROPERTY # | - |
| COPYRIGHT: | STATE OF UTAH |

SHEET NUMBER:
AE404

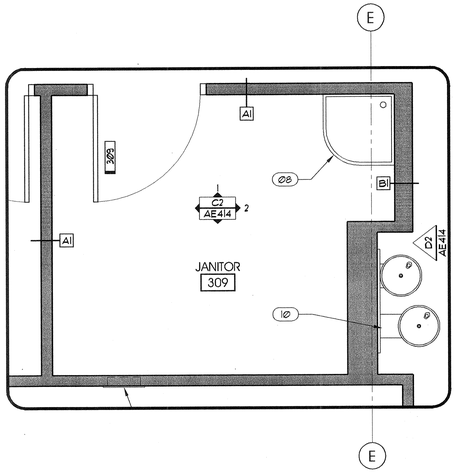


JANITOR 309 — SCALE: 1/2"=1'-0" — C4 / AE405

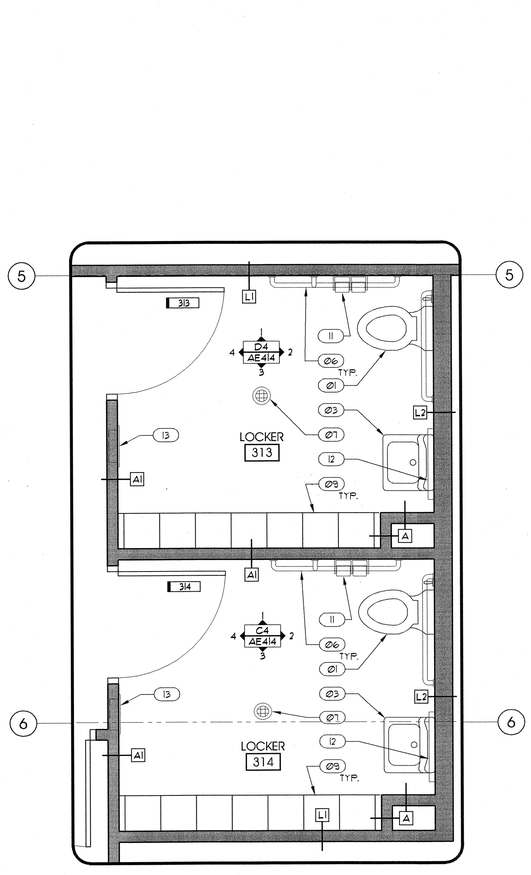


LOCKER 313 & LOCKER 314 — SCALE: 1/2"=1'-0" — A2 / AE405

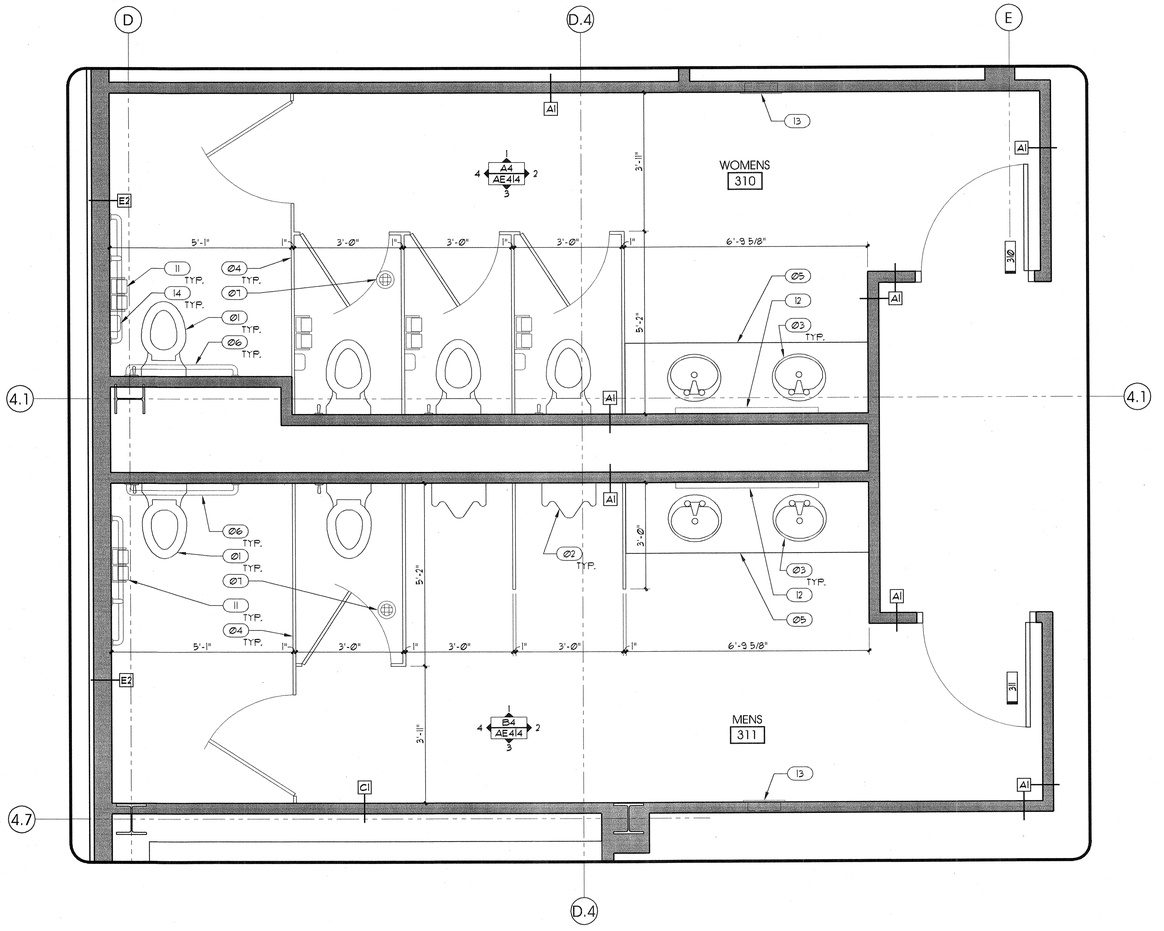


WOMENS 310 & MENS 311 — SCALE: 1/2"=1'-0" — A4 / AE405

## GENERAL NOTES AND LEGEND:

- SEE SHEET AEØØ1 FOR GENERAL NOTES.
- SEE TITLE SHEET GIØØ1 FOR DRAWING INDEX.
- DO NOT SCALE DRAWINGS.
- CONTRACTOR /SUBCONTRACTOR'S SHALL VERIFY ALL DIMENSIONS AND CONDITIONS BEFORE BEGINNING WORK AND SHALL REPORT TO THE ARCHITECT ANY ERRORS, INCONSISTENCIES OR OMISSIONS BEFORE BEGINNING WORK. SEE GENERAL NOTES AND SPECIFICATIONS.

## KEYED NOTES:

| | |
|---|---|
| Ø1 | WATER CLOSET. SEE PLUMBING. |
| Ø2 | URINAL. SEE PLUMBING. |
| Ø3 | SINK AND FAUCET. SEE PLUMBING. |
| Ø4 | TOILET PARTITION. SEE ACCESSORY SCHEDULE. |
| Ø5 | COUNTER TOP. SEE CASEWORK DETAILS. |
| Ø6 | GRAB BAR. SEE ACCESSORY SCHEDULE. |
| Ø7 | FLOOR DRAIN. SEE PLUMBING. |
| Ø8 | MOP SINK. SEE PLUMBING. |
| Ø9 | LOCKERS. SEE ACCESSORY SCHEDULE. |
| 10 | DRINKING FOUNTAIN. SEE PLUMBING. |
| 11 | TOILET PAPER DISPENSER. SEE ACCESSORY SCHEDULE. |
| 12 | MIRROR. SEE ACCESSORY SCHEDULE. |
| 13 | PAPER TOWEL DISPENSER. SEE ACCESSORY SCHEDULE. |
| 14 | SANITARY NAPKIN DISPOSAL. SEE ACCESSORY SCHEDULE. |


ARCHITECT 0818

ajc architects

703 east 1700 south
salt lake city, utah 84105
ph: 801.466.8818
fx: 801.466.4411
www.ajcarchitects.com

P A Y E T T E

285 Summer Street
Boston, MA 02210-1522
www.payette.com


OWNER INFORMATION

**State of Utah**
Department of Administrative Services

Division of Facilities
Construction & Management
4110 State Office Building
Salt Lake City, Utah 84114
Phone: (801) 538 - 3018
Fax: (801) 538 - 3267

Internet: http://www.dfcm.utah.gov

PROJECT DESCRIPTION

# LIFE SCIENCES RESEARCH CENTER
## UTAH STATE UNIVERSITY

USTAR BUILDING #2
350 EAST GRAND AVE.
LOGAN, UTAH

SHEET NAME:

ENLARGED PLANS

REVISIONS

| MARK | DATE | DESCRIPTION |
|---|---|---|

ISSUE DATA

| | |
|---|---|
| ISSUE DATE: | DEC. 9, 2008 |
| ISSUE TYPE: | DESDEV |
| DRAWN BY: | J. NIELSEN |
| CHECKED BY: | J. JONES |
| CAD FILE NAME: | |
| DFCM PROJECT # | 06292770 |
| STATE PROPERTY # | - |
| COPYRIGHT: | STATE OF UTAH |

SHEET NUMBER:

AE405


P:\2006\06018 USTAR #2 (BUILDING)\CAD\ARCHITECTURAL\06018AE405.dwg, 12/4/2008 5:58:47 PM, jnielsen

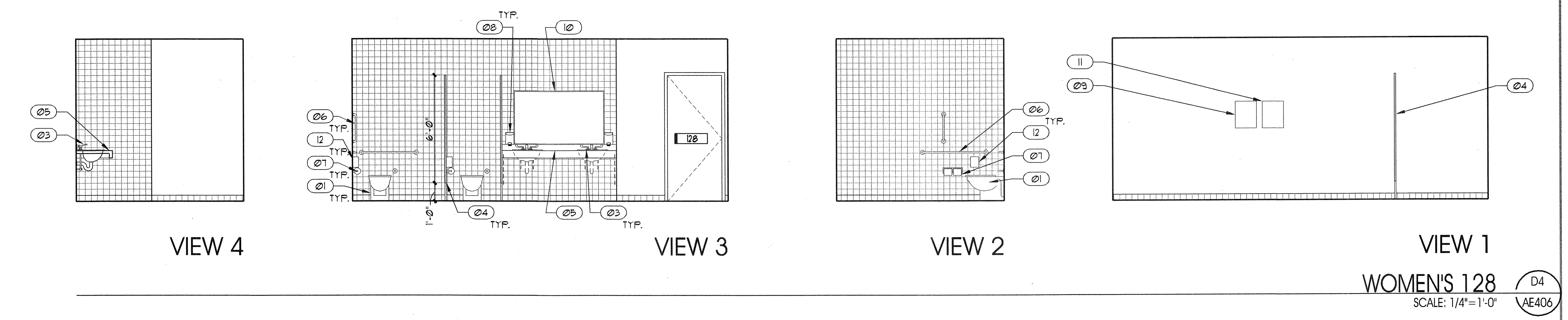


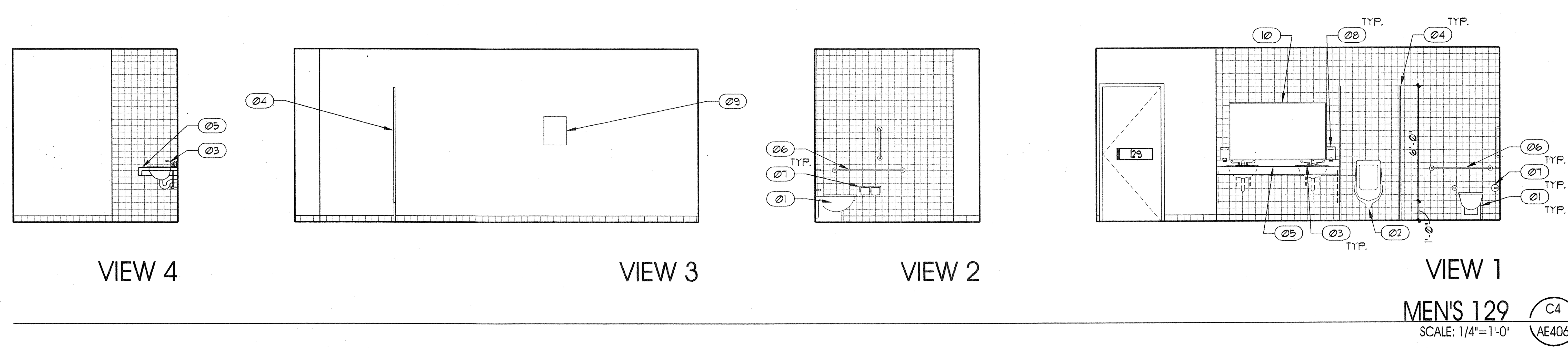


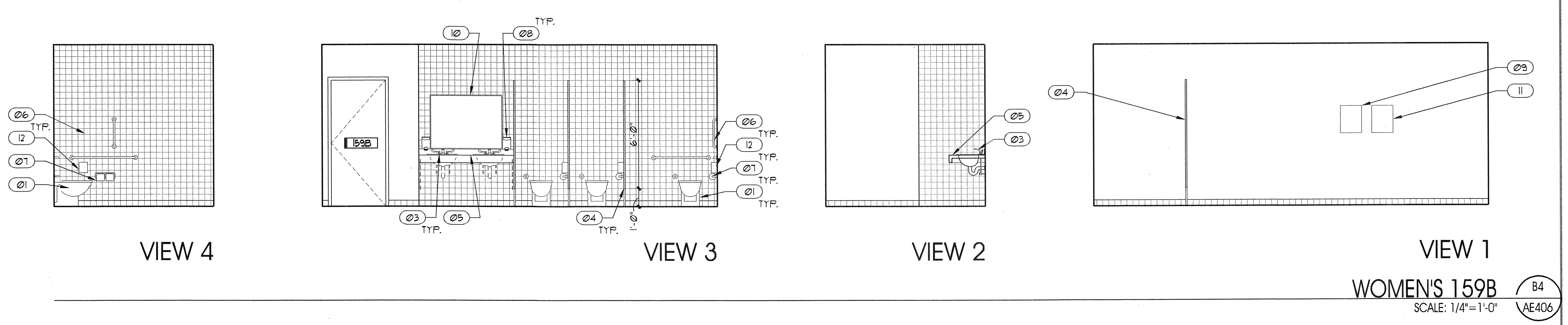


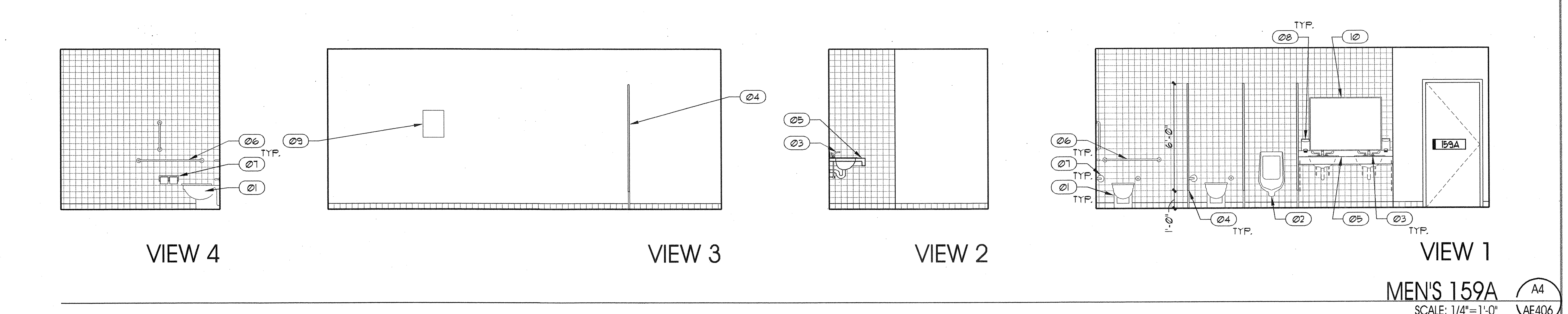


## GENERAL NOTES AND LEGEND:

- SEE SHEET AE001 FOR GENERAL NOTES.
- SEE TITLE SHEET G1001 FOR DRAWING INDEX.
- DO NOT SCALE DRAWINGS.
- CONTRACTOR /SUBCONTRACTOR'S SHALL VERIFY ALL DIMENSIONS AND CONDITIONS BEFORE BEGINNING WORK AND SHALL REPORT TO THE ARCHITECT ANY ERRORS, INCONSISTENCIES OR OMISSIONS BEFORE BEGINNING WORK. SEE GENERAL NOTES AND SPECIFICATIONS.

## KEYED NOTES:

| | |
|---|---|
| 01 | WATER CLOSET. SEE PLUMBING. |
| 02 | URINAL. SEE PLUMBING. |
| 03 | SINK AND FAUCET. SEE PLUMBING. |
| 04 | TOILET PARTITION. SEE ACCESSORY SCHEDULE. |
| 05 | COUNTER TOP. SEE CASEWORK DETAILS. |
| 06 | GRAB BAR. SEE ACCESSORY SCHEDULE. |
| 07 | TOILET PAPER DISPENSER. SEE ACCESSORY SCHEDULE |
| 08 | SOAP DISPENSER. SEE ACCESSORY SCHEDULE. |
| 09 | PAPER TOWEL DISPENSER. SEE ACCESSORY SCHEDULE. |
| 10 | MIRROR. SEE ACCESSORY SCHEDULE. |
| 11 | SANITARY NAPKIN DISPENSER. SEE ACCESSORY SCHEDULE. |
| 12 | SANITARY NAPKIN DISPOSAL. SEE ACCESSORY SCHEDULE. |

ARCHITECT 0818
ajc architects
703 east 1700 south
salt lake city, utah 84105
ph: 801.466.8818
fx: 801.466.4411
www.ajcarchitects.com

PAYETTE
285 Summer Street
Boston, MA 02210-1522
www.payette.com

OWNER INFORMATION
State of Utah
Department of Administrative Services
Division of Facilities Construction & Management
4110 State Office Building
Salt Lake City, Utah 84114
Phone: (801) 538 - 3018
Fax: (801) 538 - 3267
Internet: http://www.dfcm.utah.gov

PROJECT DESCRIPTION

# LIFE SCIENCES RESEARCH CENTER
UTAH STATE UNIVERSITY

USTAR BUILDING #2
350 EAST GRAND AVE.
LOGAN, UTAH

SHEET NAME:
INTERIOR ELEVATIONS

REVISIONS

| MARK | DATE | DESCRIPTION |
|---|---|---|

ISSUE DATA

| | |
|---|---|
| ISSUE DATE: | DEC. 9, 2008 |
| ISSUE TYPE: | DESDEV |
| DRAWN BY: | J. NIELSEN |
| CHECKED BY: | J. JONES |
| CAD FILE NAME: | |
| DFCM PROJECT # | 06292770 |
| STATE PROPERTY # | - |
| COPYRIGHT: | STATE OF UTAH |

SHEET NUMBER:
AE406

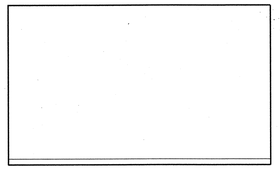

FULL CYL. 103A (D1 / AE407)
SCALE: 1/4"=1'-0"

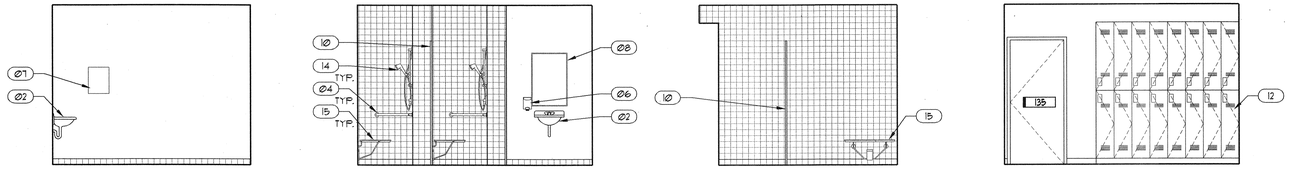


MEN'S SHOWER 135 (D4 / AE407)
SCALE: 1/4"=1'-0"

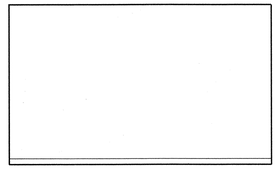

EMPTY CYL 103B (C1 / AE407)
SCALE: 1/4"=1'-0"

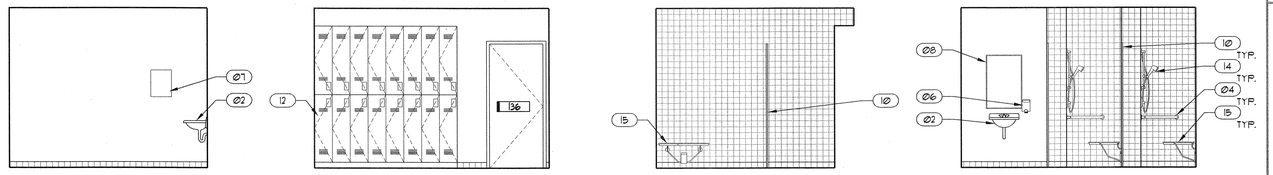


WOMEN'S SHOWER 136 (C4 / AE407)
SCALE: 1/4"=1'-0"

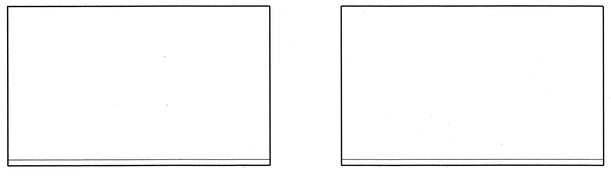


FLAMMABLE WASTE 104A (B2 / AE407)
SCALE: 1/4"=1'-0"

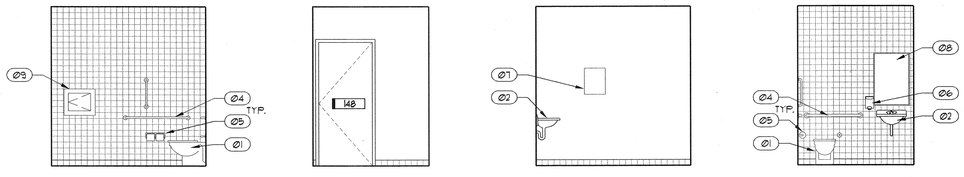


RR 148 (B4 / AE407)
SCALE: 1/4"=1'-0"

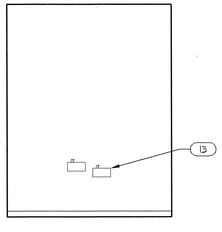


MAIN CORRIDOR 100L (A1 / AE407)
SCALE: 1/4"=1'-0"

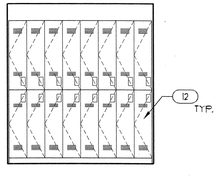


LOCKER 160E (A2 / AE407)
SCALE: 1/4"=1'-0"

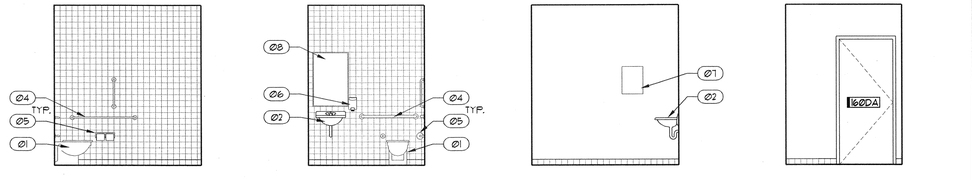


KITCHEN RR 160D (A4 / AE407)
SCALE: 1/4"=1'-0"

## GENERAL NOTES AND LEGEND:

- SEE SHEET AE000 FOR GENERAL NOTES.
- SEE TITLE SHEET G1001 FOR DRAWING INDEX.
- DO NOT SCALE DRAWINGS.
- CONTRACTOR /SUBCONTRACTOR'S SHALL VERIFY ALL DIMENSIONS AND CONDITIONS BEFORE BEGINNING WORK AND SHALL REPORT TO THE ARCHITECT ANY ERRORS, INCONSISTENCIES OR OMISSIONS BEFORE BEGINNING WORK. SEE GENERAL NOTES AND SPECIFICATIONS.

## KEYED NOTES:

01 WATER CLOSET. SEE PLUMBING.
02 SINK AND FAUCET. SEE PLUMBING.
03 COUNTER TOP. SEE CASEWORK DETAILS.
04 GRAB BAR. SEE ACCESSORY SCHEDULE.
05 TOILET PAPER DISPENSER. SEE ACCESSORY SCHEDULE
06 SOAP DISPENSER. SEE ACCESSORY SCHEDULE.
07 PAPER TOWEL DISPENSER. SEE ACCESSORY SCHEDULE.
08 MIRROR. SEE ACCESSORY SCHEDULE.
09 PASS-THROUGH. SEE ACCESSORY SCHEDULE.
10 SHOWER ENCLOSURE. SEE ACCESSORY SCHEDULE.
11 BENCH. SEE ACCESSORY SCHEDULE.
12 LOCKERS. SEE ACCESSORY SCHEDULE.
13 DRINKING FOUNTAIN. SEE PLUMBING.
14 ACCESSIBLE SHOWER CONTROLS. SEE PLUMBING.
15 ACCESSIBLE SHOWER SEAT. SEE ACCESSORY SCHEDULE.

ARCHITECT 0818
ajc architects
703 east 1700 south
salt lake city, utah 84105
ph: 801.466.8818
fx: 801.466.4411
www.ajcarchitects.com

PAYETTE
285 Summer Street
Boston, MA 02210-1522
www.payette.com

OWNER INFORMATION
State of Utah
Department of Administrative Services
Division of Facilities Construction & Management
4110 State Office Building
Salt Lake City, Utah 84114
Phone: (801) 538 - 3018
Fax: (801) 538 - 3267
Internet: http://www.dfcm.utah.gov

PROJECT DESCRIPTION
LIFE SCIENCES RESEARCH CENTER
UTAH STATE UNIVERSITY

USTAR BUILDING #2
350 EAST GRAND AVE.
LOGAN, UTAH

SHEET NAME:
INTERIOR ELEVATIONS

REVISIONS
MARK DATE DESCRIPTION

ISSUE DATA
ISSUE DATE: DEC. 9, 2008
ISSUE TYPE: DESDEV
DRAWN BY: J. NIELSEN
CHECKED BY: J. JONES
CAD FILE NAME:
DFCM PROJECT # 06292770
STATE PROPERTY # -
COPYRIGHT: STATE OF UTAH

SHEET NUMBER:
AE407

P:\0818\0818 USTAR #1\SHEETS\CAD\ARCHITECTURAL\0818 AE407.dwg, 12/9/2008 10:12:09 PM, jnielsen

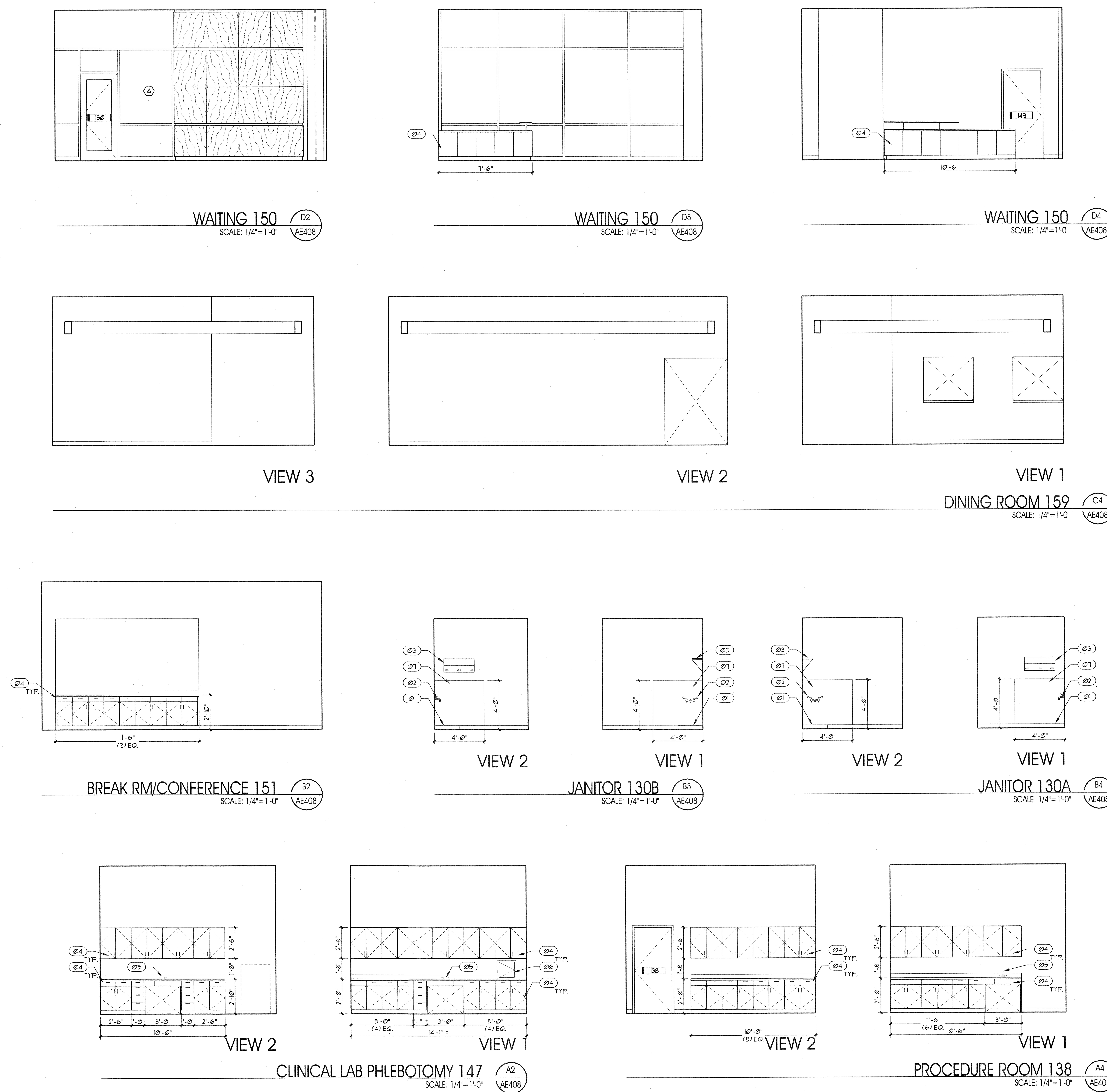


## GENERAL NOTES AND LEGEND:

- SEE SHEET AE001 FOR GENERAL NOTES.
- SEE TITLE SHEET G1001 FOR DRAWING INDEX.
- DO NOT SCALE DRAWINGS.
- CONTRACTOR /SUBCONTRACTOR'S SHALL VERIFY ALL DIMENSIONS AND CONDITIONS BEFORE BEGINNING WORK AND SHALL REPORT TO THE ARCHITECT ANY ERRORS, INCONSISTENCIES OR OMISSIONS BEFORE BEGINNING WORK. SEE GENERAL NOTES AND SPECIFICATIONS.

## KEYED NOTES:

- 01 MOP SINK. SEE PLUMBING.
- 02 FAUCET. SEE PLUMBING.
- 03 RACK. SEE ACCESSORY SCHEDULE.
- 04 CASEWORK. SEE CASEWORK DETAILS.
- 05 SINK AND FAUCET. SEE PLUMBING.
- 06 PASS-TRHOUGH. SEE ACCESSORY SCHEDULE.
- 07 FRP. SEE FINISH PLAN AND LEGEND.


ARCHITECT 0818

ajc architects
703 east 1700 south
salt lake city, utah 84105
ph: 801.466.8818
fx: 801.466.4411
www.ajcarchitects.com

PAYETTE
285 Summer Street
Boston, MA 02210-1522
www.payette.com



OWNER INFORMATION

State of Utah
Department of Administrative Services

Division of Facilities Construction & Management
4110 State Office Building
Salt Lake City, Utah 84114
Phone: (801) 538 - 3018
Fax: (801) 538 - 3267

Internet: http://www.dfcm.utah.gov


PROJECT DESCRIPTION

LIFE SCIENCES RESEARCH CENTER
UTAH STATE UNIVERSITY

USTAR BUILDING #2
350 EAST GRAND AVE.
LOGAN, UTAH

SHEET NAME:

INTERIOR ELEVATIONS

REVISIONS

| MARK | DATE | DESCRIPTION |
| --- | --- | --- |

ISSUE DATA

| | |
| --- | --- |
| ISSUE DATE: | DEC. 9, 2008 |
| ISSUE TYPE: | DESDEV |
| DRAWN BY: | J. NIELSEN |
| CHECKED BY: | J. JONES |
| CAD FILE NAME: | |
| DFCM PROJECT # | 06292770 |
| STATE PROPERTY # | - |
| COPYRIGHT: | STATE OF UTAH |

SHEET NUMBER:

AE408

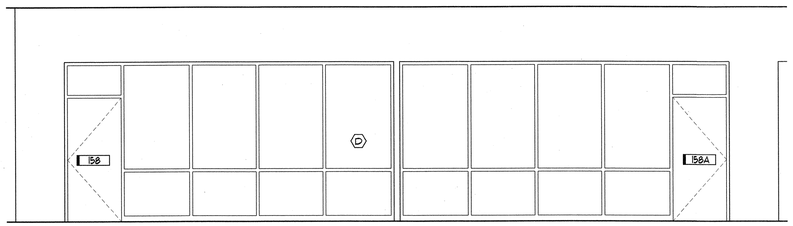


HALL 100D
SCALE: 1/4"=1'-0" D2 AE409

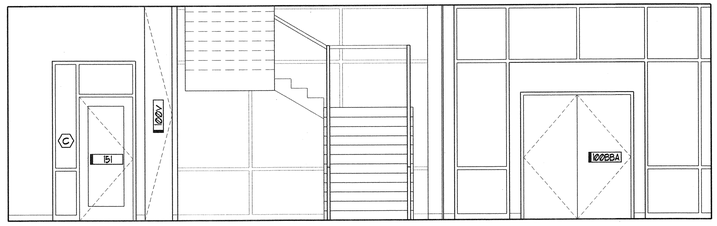


LOBBY 152
SCALE: 1/4"=1'-0" D4 AE409

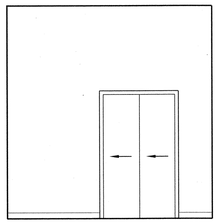

ELEV. 100G
SCALE: 1/4"=1'-0" C1 AE409

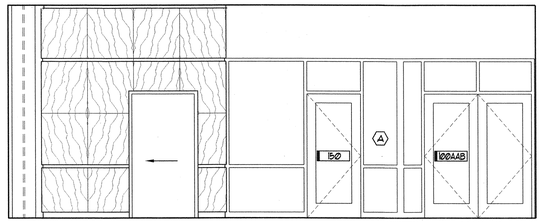


LOBBY 152
SCALE: 1/4"=1'-0" C2 AE409

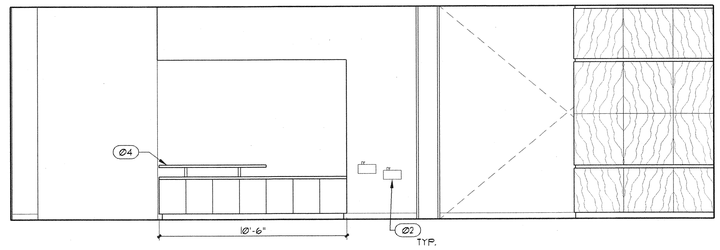


LOBBY 152
SCALE: 1/4"=1'-0" C4 AE409

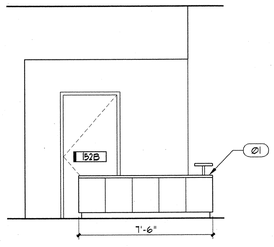


RECEPTION 152A
SCALE: 1/4"=1'-0" B1 AE409

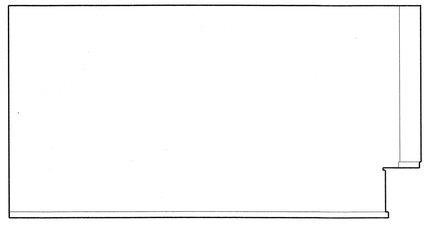

VIEW 4

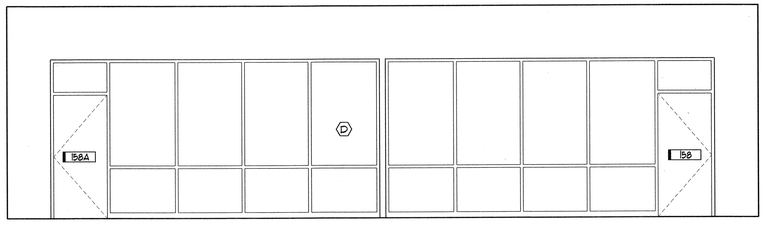


VIEW 3

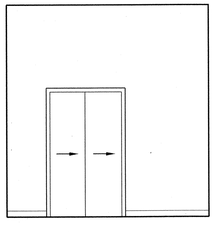

VESTIBULE 100R
SCALE: 1/4"=1'-0" A1 AE409

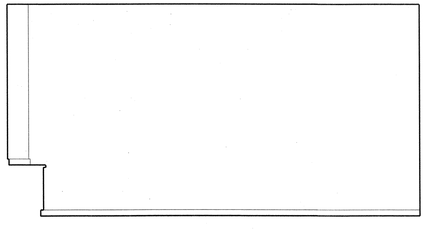

VIEW 2

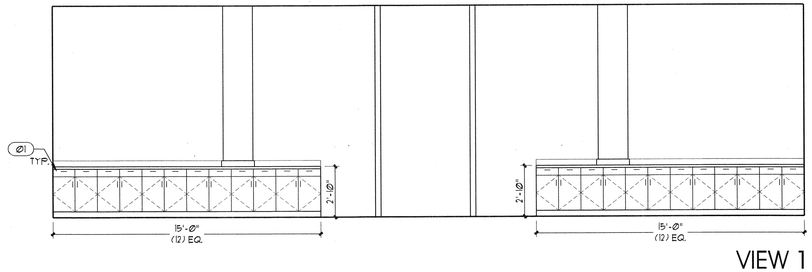


VIEW 1

CONFERENCE ROOM A 158 & CONFERENCE ROOM B 158A
SCALE: 1/4"=1'-0" A4 AE409

## GENERAL NOTES AND LEGEND:

- SEE SHEET AE000 FOR GENERAL NOTES.
- SEE TITLE SHEET G1001 FOR DRAWING INDEX.
- DO NOT SCALE DRAWINGS.
- CONTRACTOR /SUBCONTRACTOR'S SHALL VERIFY ALL DIMENSIONS AND CONDITIONS BEFORE BEGINNING WORK AND SHALL REPORT TO THE ARCHITECT ANY ERRORS, INCONSISTENCIES OR OMISSIONS BEFORE BEGINNING WORK. SEE GENERAL NOTES AND SPECIFICATIONS.

## KEYED NOTES:

Ø1 CASEWORK. SEE CASEWORK DETAILS.
Ø2 DRINKING FOUNTAIN. SEE PLUMBING.

ARCHITECT 0818
ajc architects
703 east 1700 south
salt lake city, utah 84105
ph: 801.466.8818
fx: 801.466.4411
www.ajcarchitects.com

PAYETTE
285 Summer Street
Boston, MA 02210-1522
www.payette.com

OWNER INFORMATION
State of Utah
Department of Administrative Services
Division of Facilities Construction & Management
4110 State Office Building
Salt Lake City, Utah 84114
Phone: (801) 538 - 3018
Fax: (801) 538 - 3267
Internet: http://www.dfcm.utah.gov

PROJECT DESCRIPTION
LIFE SCIENCES RESEARCH CENTER
UTAH STATE UNIVERSITY

USTAR BUILDING #2
350 EAST GRAND AVE.
LOGAN, UTAH

SHEET NAME:
INTERIOR ELEVATIONS

REVISIONS

| MARK | DATE | DESCRIPTION |
|---|---|---|

ISSUE DATA

| | |
|---|---|
| ISSUE DATE: | DEC. 9, 2008 |
| ISSUE TYPE: | DESDEV |
| DRAWN BY: | J. NIELSEN |
| CHECKED BY: | J. JONES |
| CAD FILE NAME: | |
| DFCM PROJECT # | 06292770 |
| STATE PROPERTY # | - |
| COPYRIGHT: | STATE OF UTAH |

SHEET NUMBER:
AE409

P:\06292770.18 USTAR #2 BUILDING\CAD\ARCHITECTURE\AE409.dwg 12/9/2008 10:13:27 PM jmielsen

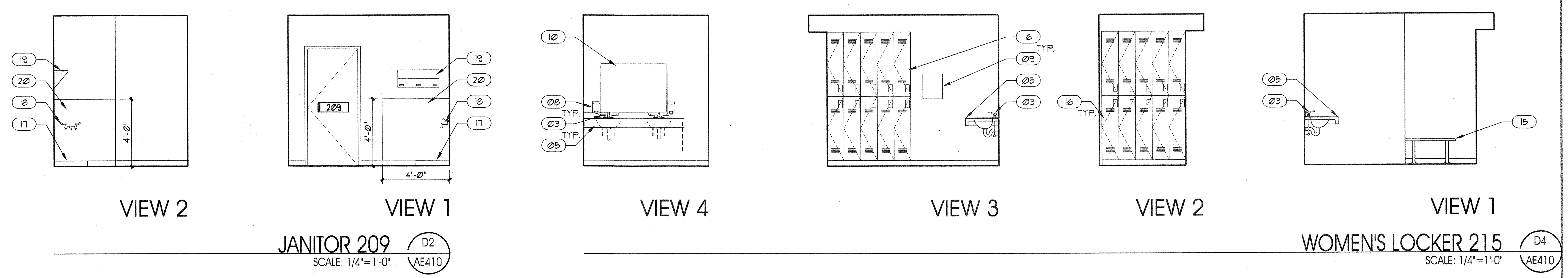


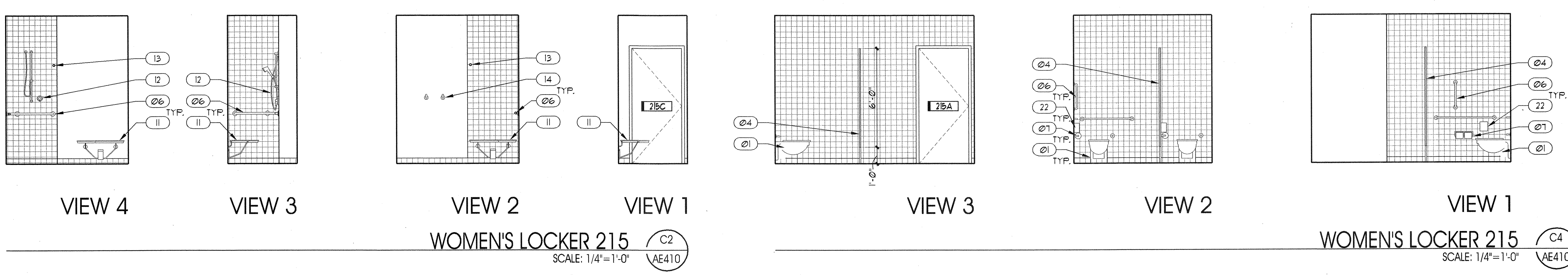


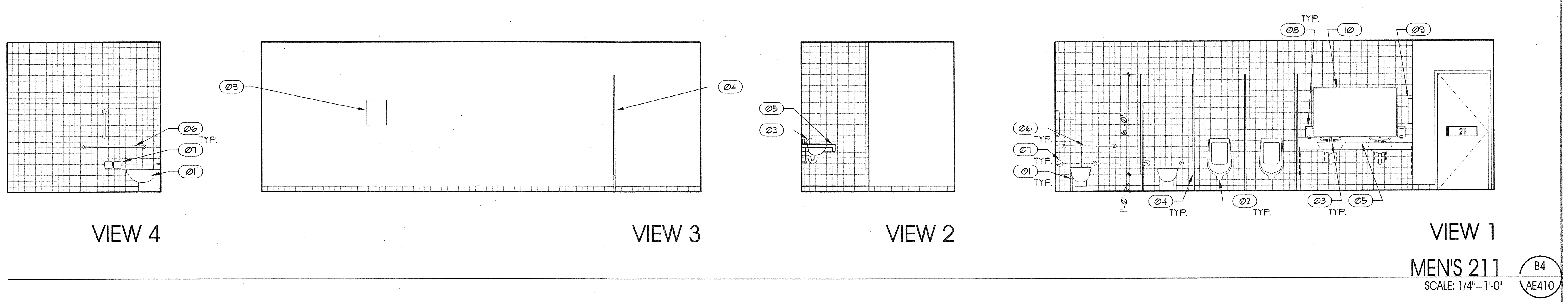


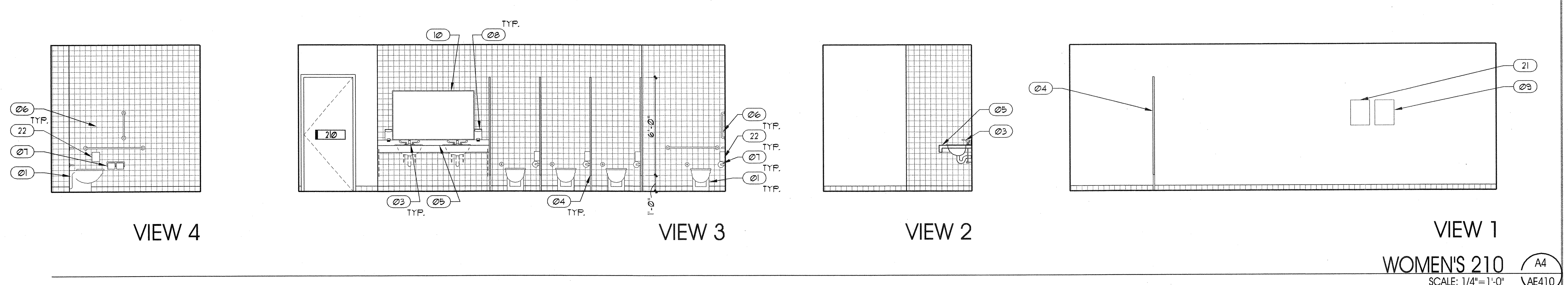


## GENERAL NOTES AND LEGEND:

- SEE SHEET AE001 FOR GENERAL NOTES.
- SEE TITLE SHEET G1001 FOR DRAWING INDEX.
- DO NOT SCALE DRAWINGS.
- CONTRACTOR /SUBCONTRACTOR'S SHALL VERIFY ALL DIMENSIONS AND CONDITIONS BEFORE BEGINNING WORK AND SHALL REPORT TO THE ARCHITECT ANY ERRORS, INCONSISTENCIES OR OMISSIONS BEFORE BEGINNING WORK. SEE GENERAL NOTES AND SPECIFICATIONS.

## KEYED NOTES:

- 01 WATER CLOSET. SEE PLUMBING.
- 02 URINAL. SEE PLUMBING.
- 03 SINK AND FAUCET. SEE PLUMBING.
- 04 TOILET PARTITION. SEE ACCESSORY SCHEDULE.
- 05 COUNTER TOP. SEE CASEWORK DETAILS.
- 06 GRAB BAR. SEE ACCESSORY SCHEDULE.
- 07 TOILET PAPER DISPENSER. SEE ACCESSORY SCHEDULE
- 08 SOAP DISPENSER. SEE ACCESSORY SCHEDULE.
- 09 PAPER TOWEL DISPENSER. SEE ACCESSORY SCHEDULE.
- 10 MIRROR. SEE ACCESSORY SCHEDULE.
- 11 ACCESSIBLE SHOWER SEAT. SEE ACCESSORY SCHEDULE.
- 12 ACCESSIBLE SHOWER CONTROLS. SEE PLUMBING.
- 13 SHOWER CURTAIN ROD. SEE ACCESSORY SCHEDULE.
- 14 TOWEL HOOKS. SEE ACCESSORY SCHEDULE.
- 15 BENCH. SEE ACCESSORY SCHEDULE.
- 16 LOCKERS. SEE ACCESSORY SCHEDULE.
- 17 MOP SINK. SEE PLUMBING.
- 18 FAUCET. SEE PLUMBING.
- 19 RACK. SEE ACCESSORY SCHEDULE.
- 20 FRP. SEE FINISH PLAN AND LEGEND.
- 21 SANITARY NAPKIN DISPENSER. SEE ACCESSORY SCHEDULE.
- 22 SANITARY NAPKIN DISPOSAL. SEE ACCESSORY SCHEDULE.

ARCHITECT 0818
ajc architects
703 east 1700 south
salt lake city, utah 84105
ph: 801.466.8818
fx: 801.466.4411
www.ajcarchitects.com

PAYETTE
285 Summer Street
Boston, MA 02210-1522
www.payette.com

OWNER INFORMATION

State of Utah
Department of Administrative Services

Division of Facilities
Construction & Management
4110 State Office Building
Salt Lake City, Utah 84114
Phone: (801) 538 - 3018
Fax: (801) 538 - 3267
Internet: http://www.dfcm.utah.gov

PROJECT DESCRIPTION

LIFE SCIENCES
RESEARCH CENTER
UTAH STATE UNIVERSITY

USTAR BUILDING #2
350 EAST GRAND AVE.
LOGAN, UTAH

SHEET NAME:

INTERIOR ELEVATIONS

REVISIONS

| MARK | DATE | DESCRIPTION |
|---|---|---|

ISSUE DATA

| | |
|---|---|
| ISSUE DATE: | DEC. 9, 2008 |
| ISSUE TYPE: | DESDEV |
| DRAWN BY: | J. NIELSEN |
| CHECKED BY: | J. JONES |
| CAD FILE NAME: | |
| DFCM PROJECT # | 06292770 |
| STATE PROPERTY # | - |
| COPYRIGHT: | STATE OF UTAH |

SHEET NUMBER:

# AE410

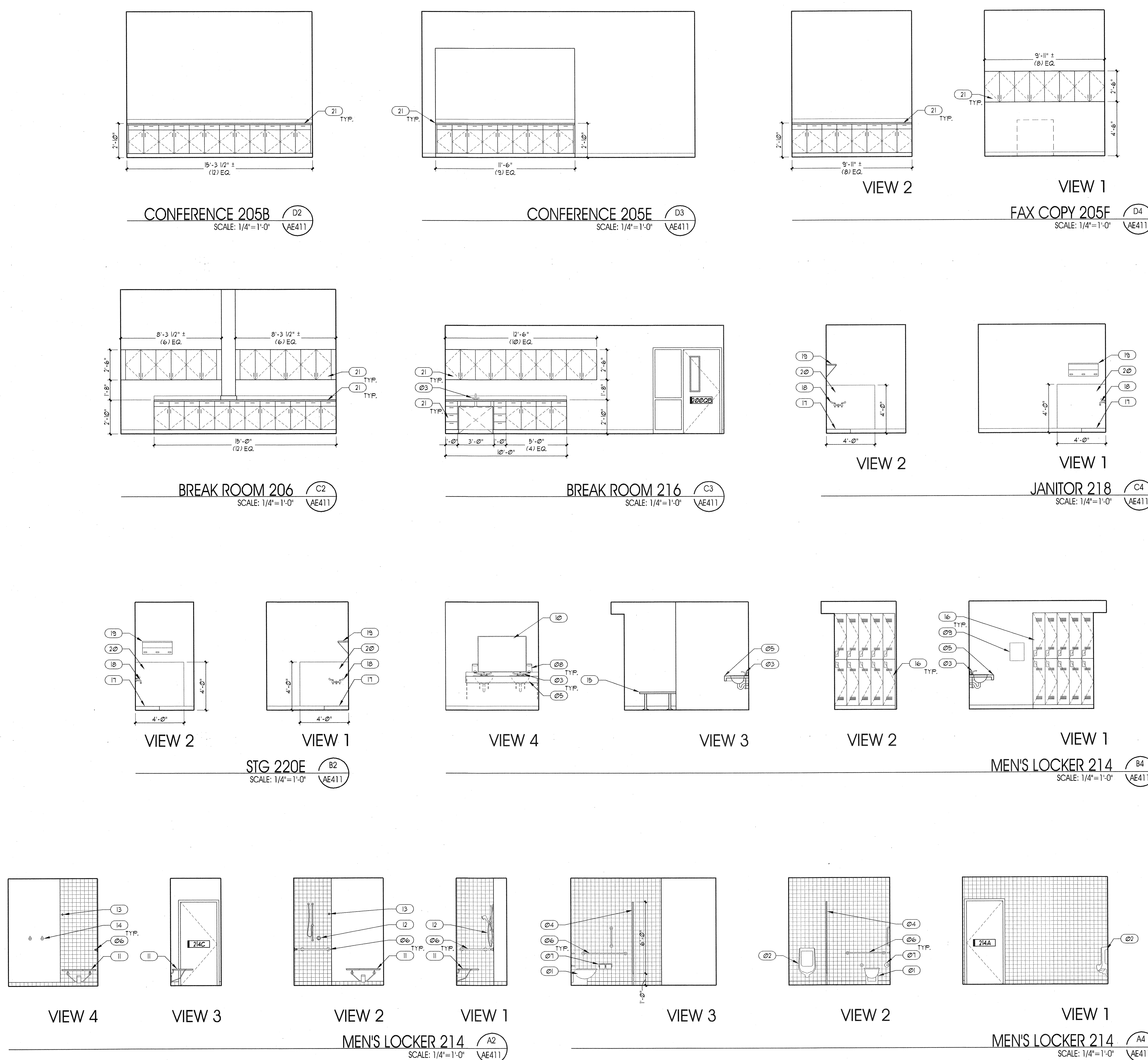


## GENERAL NOTES AND LEGEND:

- SEE SHEET AE001 FOR GENERAL NOTES.
- SEE TITLE SHEET G1001 FOR DRAWING INDEX.
- DO NOT SCALE DRAWINGS.
- CONTRACTOR /SUBCONTRACTOR'S SHALL VERIFY ALL DIMENSIONS AND CONDITIONS BEFORE BEGINNING WORK AND SHALL REPORT TO THE ARCHITECT ANY ERRORS, INCONSISTENCIES OR OMISSIONS BEFORE BEGINNING WORK. SEE GENERAL NOTES AND SPECIFICATIONS.

## KEYED NOTES:

- 01 WATER CLOSET. SEE PLUMBING.
- 02 URINAL. SEE PLUMBING.
- 03 SINK AND FAUCET. SEE PLUMBING.
- 04 TOILET PARTITION. SEE ACCESSORY SCHEDULE.
- 05 COUNTER TOP. SEE CASEWORK DETAILS.
- 06 GRAB BAR. SEE ACCESSORY SCHEDULE.
- 07 TOILET PAPER DISPENSER. SEE ACCESSORY SCHEDULE
- 08 SOAP DISPENSER. SEE ACCESSORY SCHEDULE.
- 09 PAPER TOWEL DISPENSER. SEE ACCESSORY SCHEDULE.
- 10 MIRROR. SEE ACCESSORY SCHEDULE.
- 11 ACCESSIBLE SHOWER SEAT. SEE ACCESSORY SCHEDULE.
- 12 ACCESSIBLE SHOWER CONTROLS. SEE PLUMBING.
- 13 SHOWER CURTAIN ROD. SEE ACCESSORY SCHEDULE.
- 14 TOWEL HOOKS. SEE ACCESSORY SCHEDULE.
- 15 BENCH. SEE ACCESSORY SCHEDULE.
- 16 LOCKERS. SEE ACCESSORY SCHEDULE.
- 17 MOP SINK. SEE PLUMBING.
- 18 FAUCET. SEE PLUMBING.
- 19 RACK. SEE ACCESSORY SCHEDULE.
- 20 FRP. SEE FINISH PLAN AND LEGEND.
- 21 CASEWORK. SEE CASEWORK DETAILS.


ARCHITECT 0818

ajc architects

703 east 1700 south
salt lake city, utah 84105
ph: 801.466.8818
fx: 801.466.4411
www.ajcarchitects.com

PAYETTE

285 Summer Street
Boston, MA 02210-1522
www.payette.com


OWNER INFORMATION

**State of Utah**
Department of Administrative Services

Division of Facilities Construction & Management
4110 State Office Building
Salt Lake City, Utah 84114
Phone: (801) 538 - 3018
Fax: (801) 538 - 3267

Internet: http://www.dfcm.utah.gov

PROJECT DESCRIPTION

LIFE SCIENCES RESEARCH CENTER
UTAH STATE UNIVERSITY

USTAR BUILDING #2
350 EAST GRAND AVE.
LOGAN, UTAH

SHEET NAME:

INTERIOR ELEVATIONS

REVISIONS

| MARK | DATE | DESCRIPTION |
|---|---|---|

ISSUE DATA

| | |
|---|---|
| ISSUE DATE: | DEC. 9, 2008 |
| ISSUE TYPE: | DESDEV |
| DRAWN BY: | J. NIELSEN |
| CHECKED BY: | J. JONES |
| CAD FILE NAME: | |
| DFCM PROJECT # | 06292770 |
| STATE PROPERTY # | - |
| COPYRIGHT: | STATE OF UTAH |

SHEET NUMBER:

# AE411

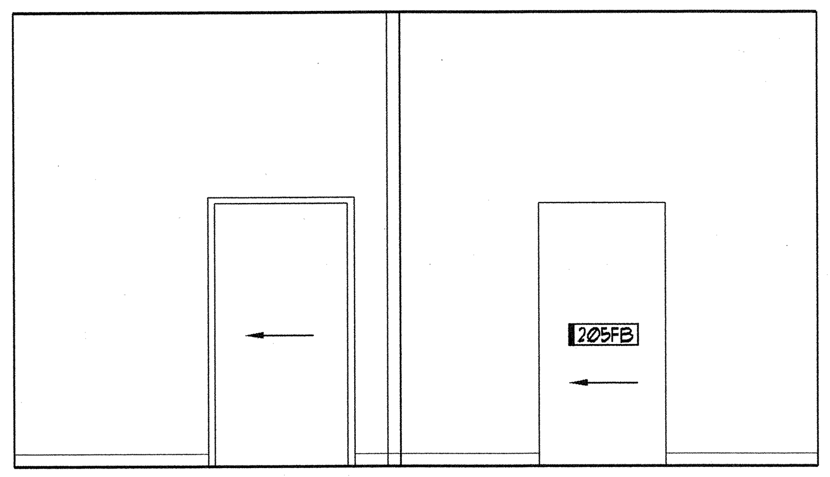


CUBICLES 205 (D1 / AE412)
SCALE: 1/4"=1'-0"

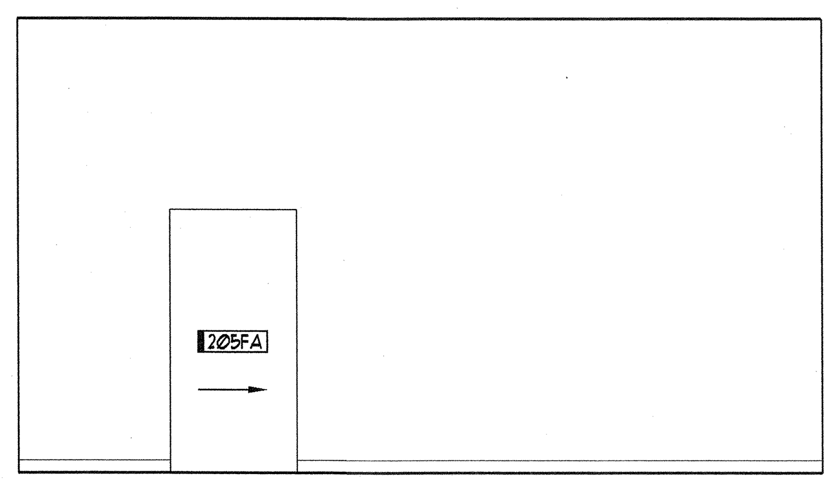


CUBICLES 205 (D2 / AE412)
SCALE: 1/4"=1'-0"

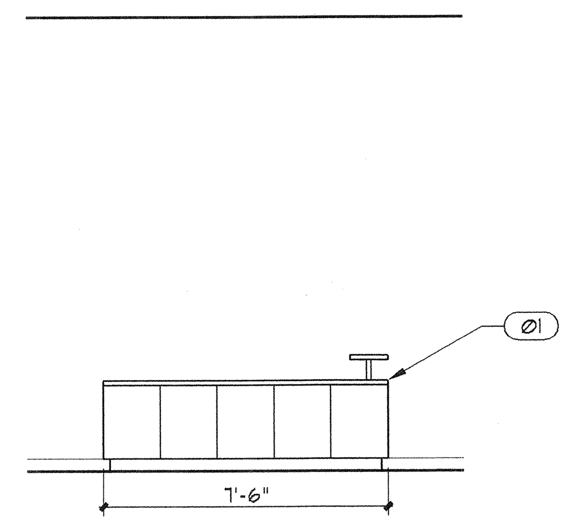


RECEPTION 213 (D3 / AE412)
SCALE: 1/4"=1'-0"

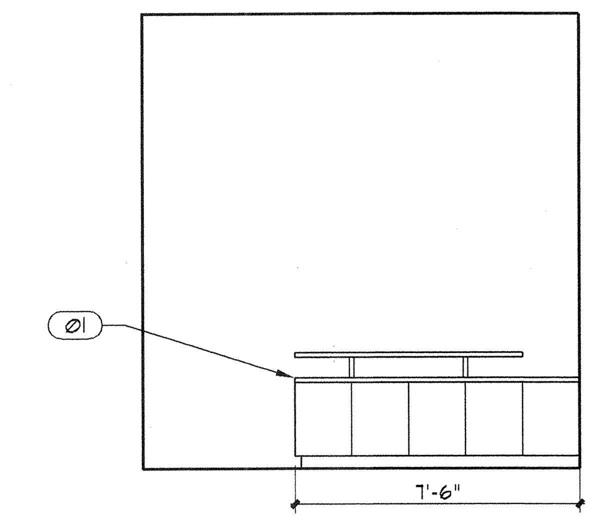


RECEPTION 213 (D4 / AE412)
SCALE: 1/4"=1'-0"

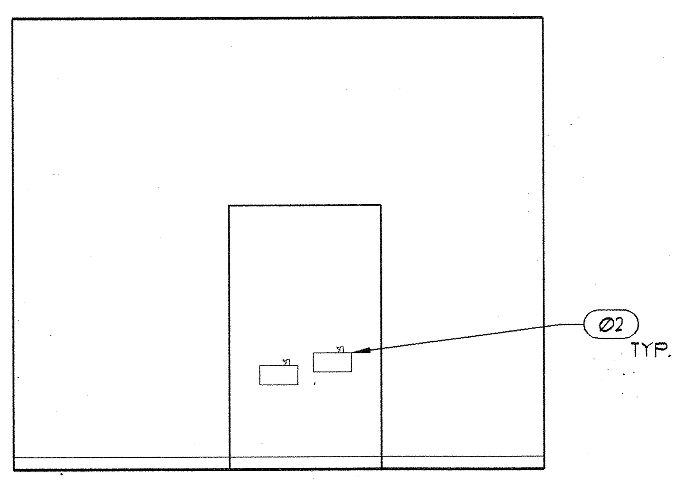


HALL 200H (C1 / AE412)
SCALE: 1/4"=1'-0"

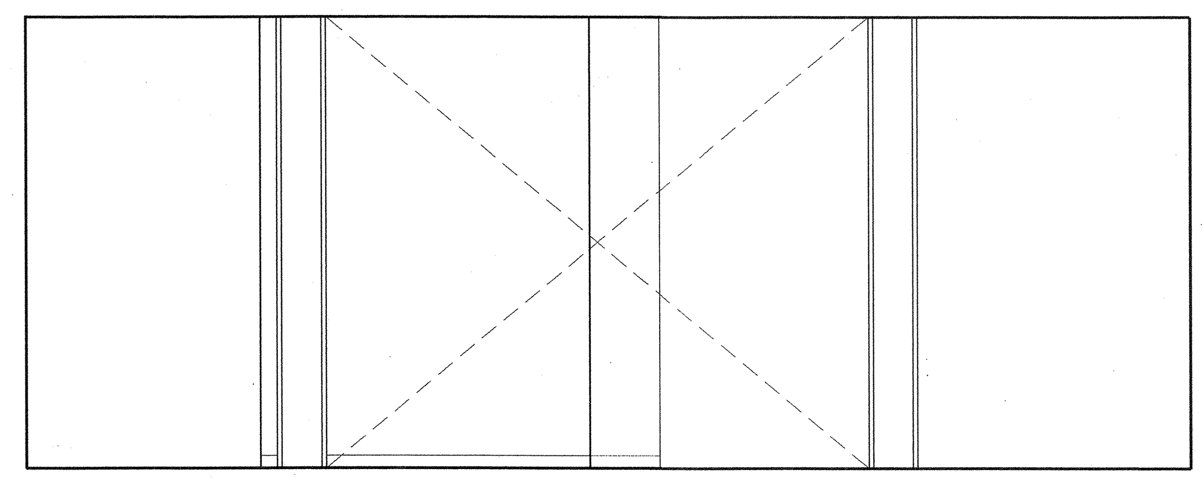

CUBICLES 205 (C3 / AE412)
SCALE: 1/4"=1'-0"

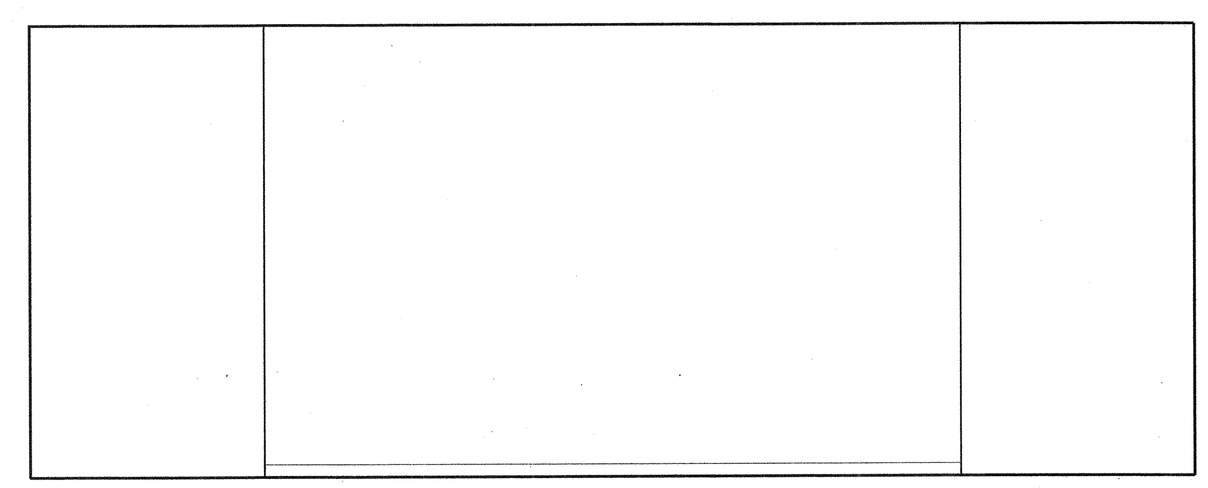

CUBICLES 205 (C4 / AE412)
SCALE: 1/4"=1'-0"

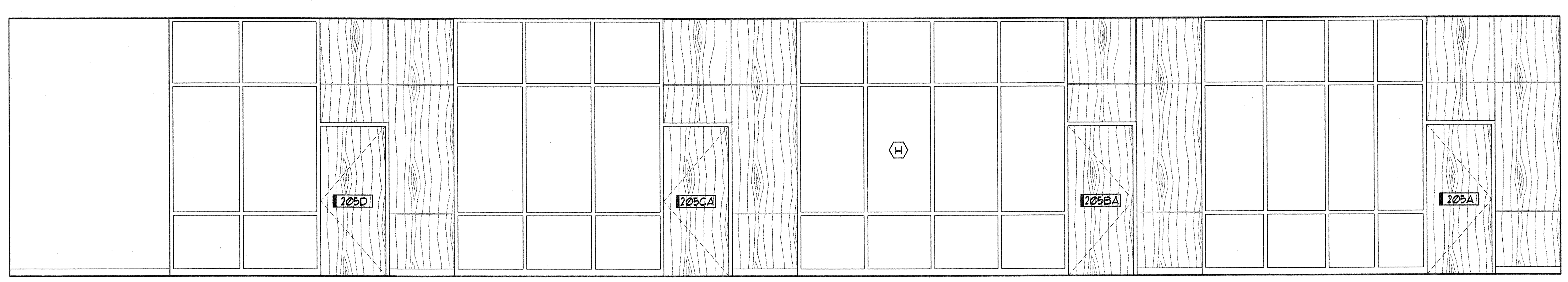


CUBICLES 205 (B4 / AE412)
SCALE: 1/4"=1'-0"

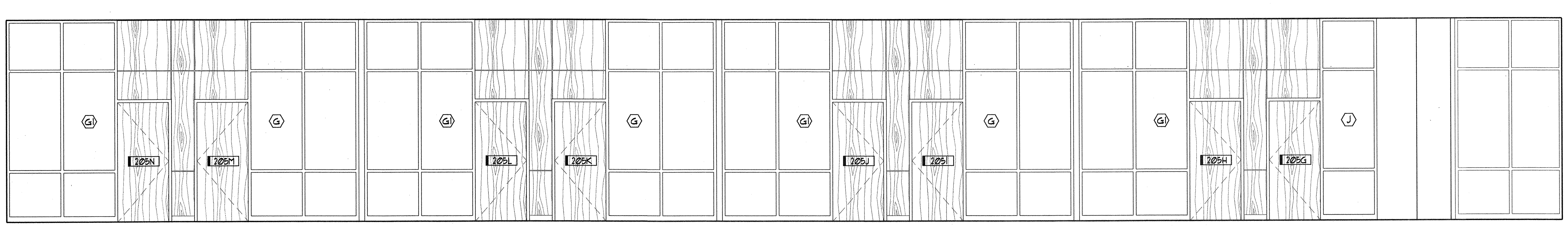


CUBICLES 205 (A4 / AE412)
SCALE: 1/4"=1'-0"

## GENERAL NOTES AND LEGEND:

- SEE SHEET AE001 FOR GENERAL NOTES.
- SEE TITLE SHEET G1001 FOR DRAWING INDEX.
- DO NOT SCALE DRAWINGS.
- CONTRACTOR /SUBCONTRACTOR'S SHALL VERIFY ALL DIMENSIONS AND CONDITIONS BEFORE BEGINNING WORK AND SHALL REPORT TO THE ARCHITECT ANY ERRORS, INCONSISTENCIES OR OMISSIONS BEFORE BEGINNING WORK. SEE GENERAL NOTES AND SPECIFICATIONS.

## KEYED NOTES:

- 01 CASEWORK. SEE CASEWORK DETAILS.
- 02 DRINKING FOUNTAIN. SEE PLUMBING.


ARCHITECT 0818

ajc architects
703 east 1700 south
salt lake city, utah 84105
ph: 801.466.8818
fx: 801.466.4411
www.ajcarchitects.com

PAYETTE
285 Summer Street
Boston, MA 02210-1522
www.payette.com

OWNER INFORMATION
State of Utah
Department of Administrative Services
Division of Facilities Construction & Management
DFCM
4110 State Office Building
Salt Lake City, Utah 84114
Phone: (801) 538 - 3018
Fax: (801) 538 - 3267
Internet: http://www.dfcm.utah.gov


PROJECT DESCRIPTION

LIFE SCIENCES RESEARCH CENTER
UTAH STATE UNIVERSITY

USTAR BUILDING #2
350 EAST GRAND AVE.
LOGAN, UTAH

SHEET NAME:
INTERIOR ELEVATIONS

REVISIONS

| MARK | DATE | DESCRIPTION |
|---|---|---|

ISSUE DATA

| | |
|---|---|
| ISSUE DATE: | DEC. 9, 2008 |
| ISSUE TYPE: | DESDEV |
| DRAWN BY: | J. NIELSEN |
| CHECKED BY: | J. JONES |
| CAD FILE NAME: | |
| DFCM PROJECT # | 06292770 |
| STATE PROPERTY # | - |
| COPYRIGHT: | STATE OF UTAH |

SHEET NUMBER:

AE412

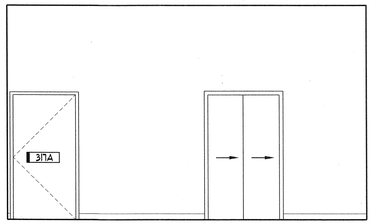


VESTIBULE 300O
SCALE: 1/4"=1'-0"
D2 / AE413

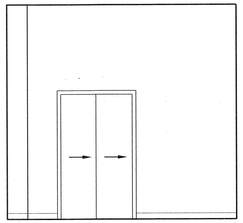

VESTIBULE 300I
SCALE: 1/4"=1'-0"
D3 / AE413

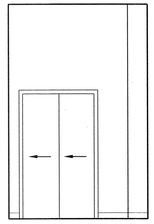

HALL 300H
SCALE: 1/4"=1'-0"
D4 / AE413

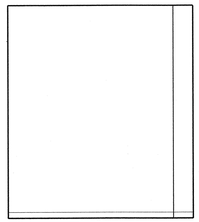

VIEW 2

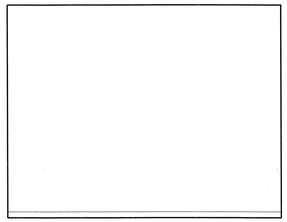

VIEW 1

STG 305A
SCALE: 1/4"=1'-0"
C2 / AE413

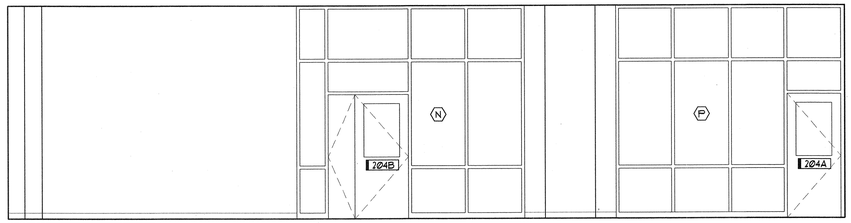


CUBICLES 205
SCALE: 1/4"=1'-0"
C4 / AE413

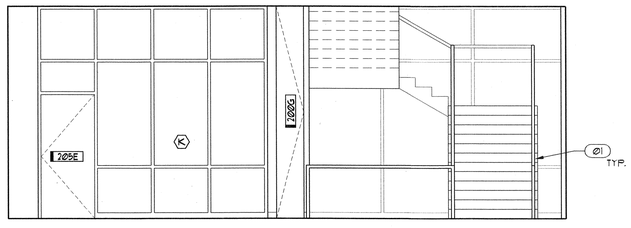


CUBICLES 205
SCALE: 1/4"=1'-0"
B2 / AE413

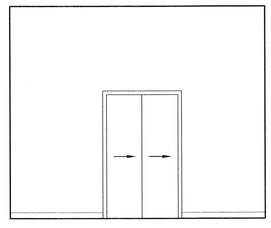

VESTIBULE 200J
SCALE: 1/4"=1'-0"
B3 / AE413

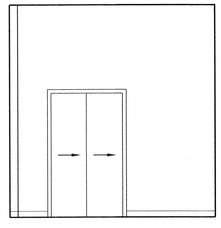

HALL 200I
SCALE: 1/4"=1'-0"
B4 / AE413

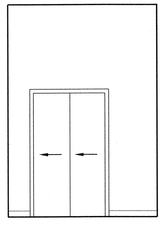

HALL 200H
SCALE: 1/4"=1'-0"
A1 / AE413

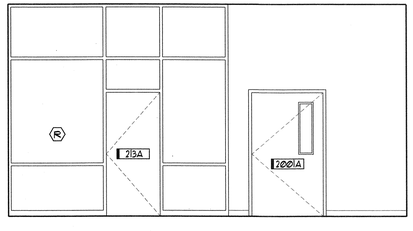


HALL 200H
SCALE: 1/4"=1'-0"
A2 / AE413

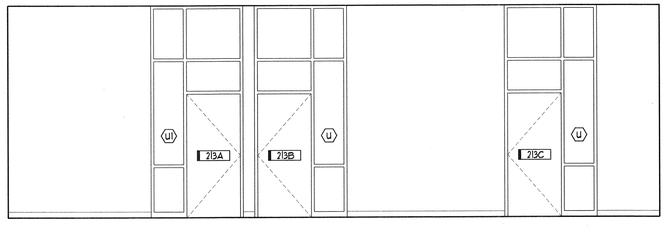


RECEPTION 213
SCALE: 1/4"=1'-0"
A4 / AE413

## GENERAL NOTES AND LEGEND:

- SEE SHEET AE000I FOR GENERAL NOTES.
- SEE TITLE SHEET G000I FOR DRAWING INDEX.
- DO NOT SCALE DRAWINGS.
- CONTRACTOR /SUBCONTRACTOR'S SHALL VERIFY ALL DIMENSIONS AND CONDITIONS BEFORE BEGINNING WORK AND SHALL REPORT TO THE ARCHITECT ANY ERRORS, INCONSISTENCIES OR OMISSIONS BEFORE BEGINNING WORK. SEE GENERAL NOTES AND SPECIFICATIONS.

## KEYED NOTES:

Ø1 RAILING. SEE SPECIFICATION.

ARCHITECT 0818

ajc architects

703 east 1700 south
salt lake city, utah 84105
ph: 801.466.8818
fx: 801.466.4411
www.ajcarchitects.com

P A Y E T T E

285 Summer Street
Boston, MA 02210-1522
www.payette.com

OWNER INFORMATION

**State of Utah**
Department of Administrative Services

Division of Facilities
Construction & Management
4110 State Office Building
Salt Lake City, Utah 84114
Phone: (801) 538 - 3018
Fax: (801) 538 - 3267

Internet: http://www.dfcm.utah.gov

PROJECT DESCRIPTION

LIFE SCIENCES
RESEARCH CENTER
UTAH STATE UNIVERSITY

USTAR BUILDING #2
350 EAST GRAND AVE.
LOGAN, UTAH

SHEET NAME:

INTERIOR ELEVATIONS

REVISIONS

| MARK | DATE | DESCRIPTION |
|---|---|---|

ISSUE DATA

| | |
|---|---|
| ISSUE DATE: | DEC. 9, 2008 |
| ISSUE TYPE: | DESDEV |
| DRAWN BY: | J. NIELSEN |
| CHECKED BY: | J. JONES |
| CAD FILE NAME: | |
| DFCM PROJECT # | 06292770 |
| STATE PROPERTY # | - |
| COPYRIGHT: | STATE OF UTAH |

SHEET NUMBER:

AE413

P:\0818\0818 USTAR #1\BIM\MODELS\ARCHITECTURAL\0818 AE413.dwg 12/9/2008 10:14:29 PM jnielsen

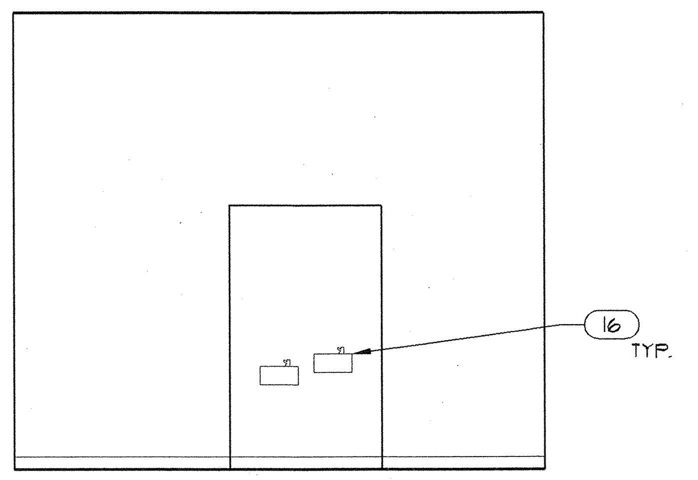


## HALL 300H
SCALE: 1/4"=1'-0" (D2 / AE414)

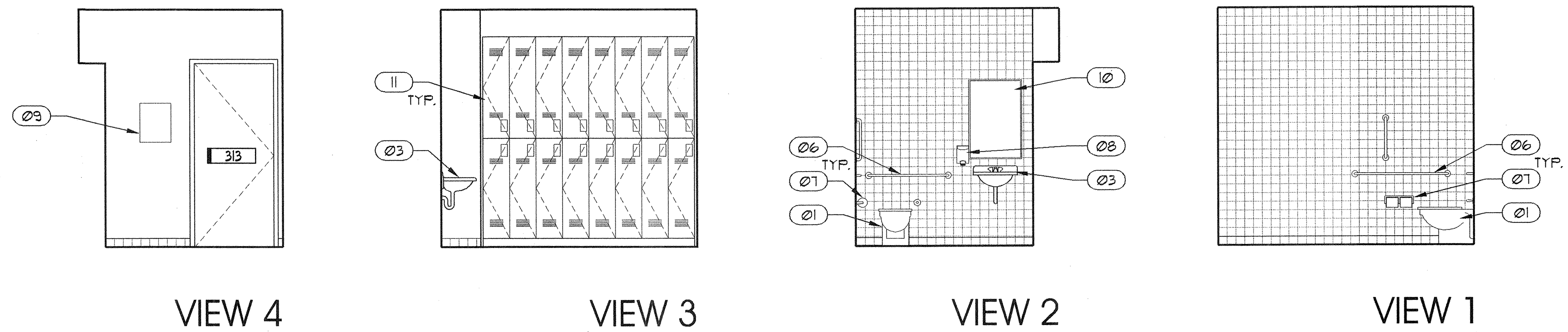


## LOCKER 313
SCALE: 1/4"=1'-0" (D4 / AE414)

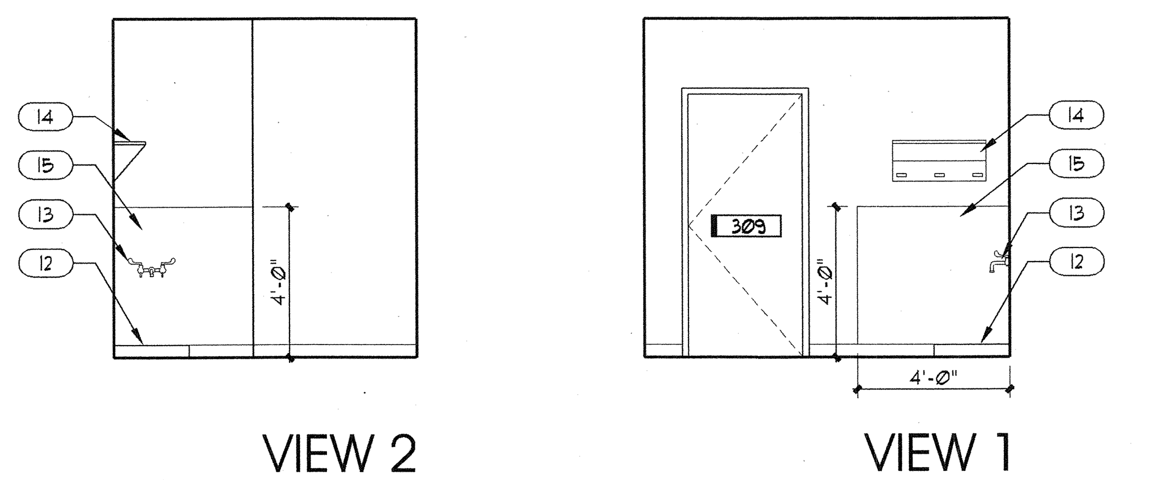


## JANITOR 309
SCALE: 1/4"=1'-0" (C2 / AE414)

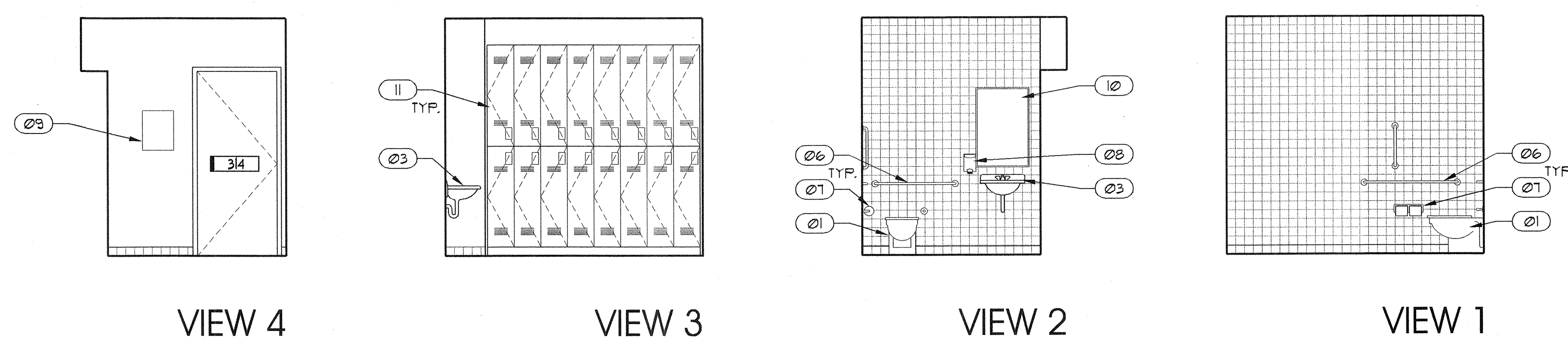


## LOCKER 314
SCALE: 1/4"=1'-0" (C4 / AE414)

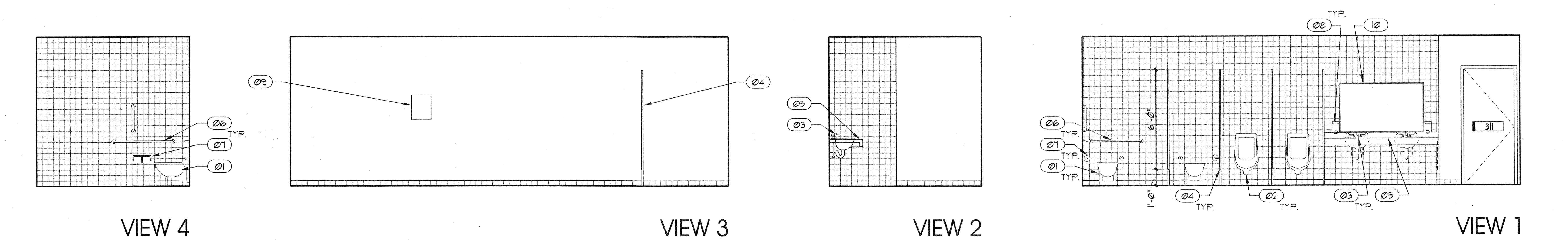


## MEN'S 311
SCALE: 1/4"=1'-0" (B4 / AE414)

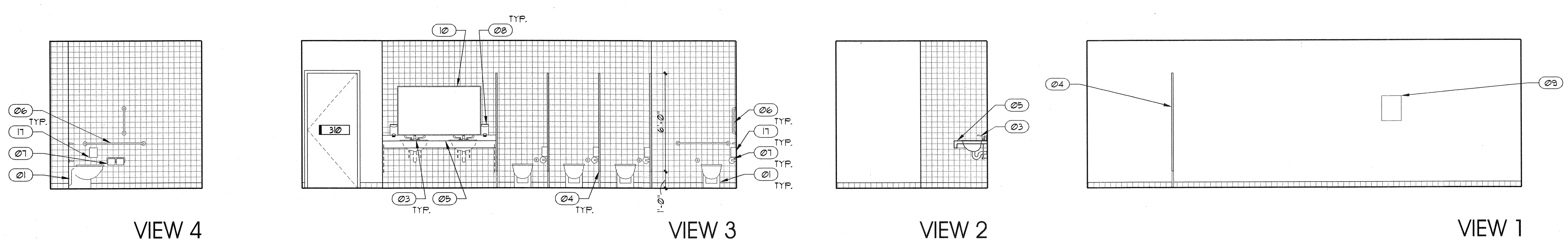


## WOMEN'S 310
SCALE: 1/4"=1'-0" (A4 / AE414)

## GENERAL NOTES AND LEGEND:

- SEE SHEET AE001 FOR GENERAL NOTES.
- SEE TITLE SHEET G1001 FOR DRAWING INDEX.
- DO NOT SCALE DRAWINGS.
- CONTRACTOR /SUBCONTRACTOR'S SHALL VERIFY ALL DIMENSIONS AND CONDITIONS BEFORE BEGINNING WORK AND SHALL REPORT TO THE ARCHITECT ANY ERRORS, INCONSISTENCIES OR OMISSIONS BEFORE BEGINNING WORK. SEE GENERAL NOTES AND SPECIFICATIONS.

## KEYED NOTES:

01 WATER CLOSET. SEE PLUMBING.
02 URINAL. SEE PLUMBING.
03 SINK AND FAUCET. SEE PLUMBING.
04 TOILET PARTITION. SEE ACCESSORY SCHEDULE.
05 COUNTER TOP. SEE CASEWORK DETAILS.
06 GRAB BAR. SEE ACCESSORY SCHEDULE.
07 TOILET PAPER DISPENSER. SEE ACCESSORY SCHEDULE
08 SOAP DISPENSER. SEE ACCESSORY SCHEDULE.
09 PAPER TOWEL DISPENSER. SEE ACCESSORY SCHEDULE.
10 MIRROR. SEE ACCESSORY SCHEDULE.
11 LOCKERS. SEE ACCESSORY SCHEDULE.
12 MOP SINK. SEE PLUMBING.
13 FAUCET. SEE PLUMBING.
14 RACK. SEE ACCESSORY SCHEDULE.
15 FRP. SEE FINISH PLAN AND LEGEND.
16 DRINKING FOUNTAIN. SEE PLUMBING.
17 SANITARY NAPKIN DISPOSAL. SEE ACCESORY SCHEDULE.

ARCHITECT 0818

ajc architects
703 east 1700 south
salt lake city, utah 84105
ph: 801.466.8818
fx: 801.466.4411
www.ajcarchitects.com

PAYETTE
285 Summer Street
Boston, MA 02210-1522
www.payette.com

OWNER INFORMATION

State of Utah
Department of Administrative Services
Division of Facilities Construction & Management
4110 State Office Building
Salt Lake City, Utah 84114
Phone: (801) 538 - 3018
Fax: (801) 538 - 3267
Internet: http://www.dfcm.utah.gov

PROJECT DESCRIPTION

LIFE SCIENCES RESEARCH CENTER
UTAH STATE UNIVERSITY

USTAR BUILDING #2
350 EAST GRAND AVE.
LOGAN, UTAH

SHEET NAME:
INTERIOR ELEVATIONS

REVISIONS

| MARK | DATE | DESCRIPTION |
|---|---|---|

ISSUE DATA

| | |
|---|---|
| ISSUE DATE: | DEC. 9, 2008 |
| ISSUE TYPE: | DESDEV |
| DRAWN BY: | J. NIELSEN |
| CHECKED BY: | J. JONES |
| CAD FILE NAME: | |
| DFCM PROJECT # | 06292770 |
| STATE PROPERTY # | - |
| COPYRIGHT: | STATE OF UTAH |

SHEET NUMBER:
AE414

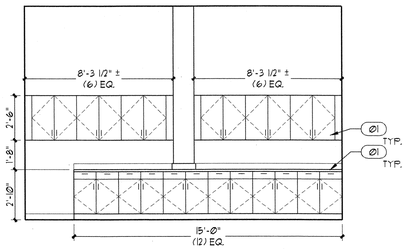


BREAK ROOM 306 — D2 / AE415
SCALE: 1/4"=1'-0"

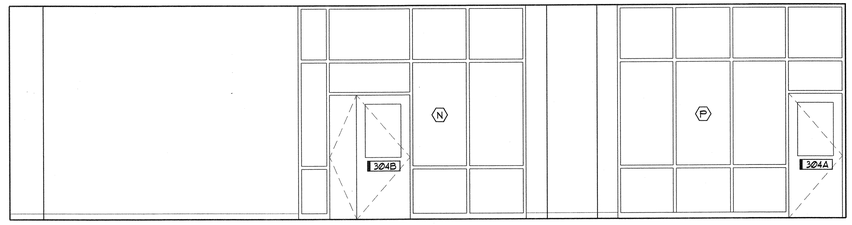


CUBICLES 305 — D4 / AE415
SCALE: 1/4"=1'-0"

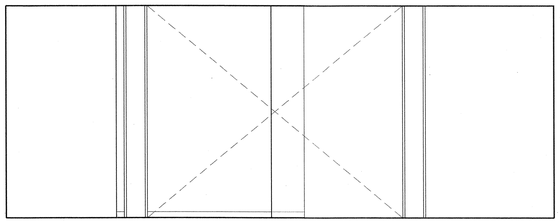

CUBICLES 305 — C3 / AE415
SCALE: 1/4"=1'-0"

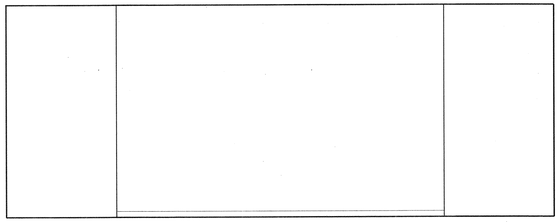

CUBICLES 305 — C4 / AE415
SCALE: 1/4"=1'-0"

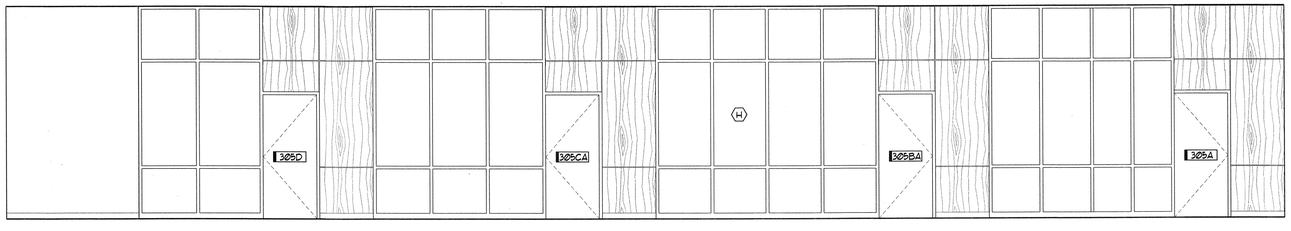


CUBICLES 305 — B4 / AE415
SCALE: 1/4"=1'-0"

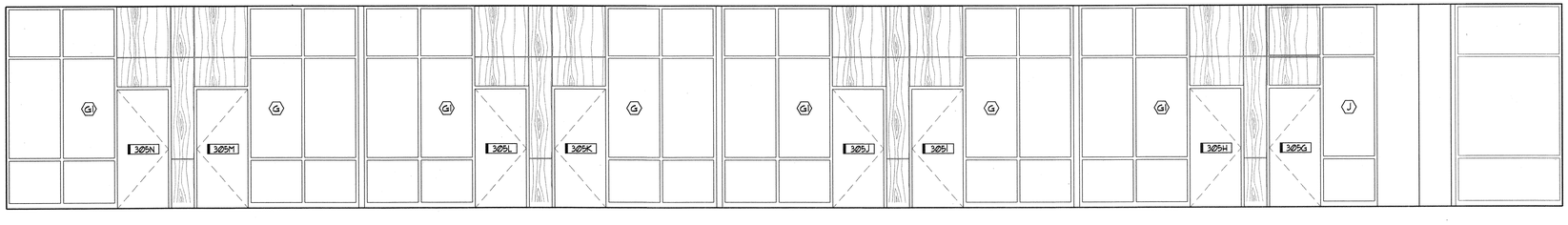


CUBICLES 305 — A4 / AE415
SCALE: 1/4"=1'-0"

## GENERAL NOTES AND LEGEND:

- SEE SHEET AE000 FOR GENERAL NOTES.
- SEE TITLE SHEET G000 FOR DRAWING INDEX.
- DO NOT SCALE DRAWINGS.
- CONTRACTOR /SUBCONTRACTOR'S SHALL VERIFY ALL DIMENSIONS AND CONDITIONS BEFORE BEGINNING WORK AND SHALL REPORT TO THE ARCHITECT ANY ERRORS, INCONSISTENCIES OR OMISSIONS BEFORE BEGINNING WORK. SEE GENERAL NOTES AND SPECIFICATIONS.

## KEYED NOTES:

Ø1 CASEWORK. SEE CASEWORK DETAILS.


ARCHITECT 0818

ajc architects

703 east 1700 south
salt lake city, utah 84105
ph: 801.466.8818
fx: 801.466.4411
www.ajcarchitects.com

PAYETTE

285 Summer Street
Boston, MA 02210-1522
www.payette.com


OWNER INFORMATION

**State of Utah**
Department of Administrative Services

Division of Facilities
Construction & Management
4110 State Office Building
Salt Lake City, Utah 84114
Phone: (801) 538 - 3018
Fax: (801) 538 - 3267

Internet: http://www.dfcm.utah.gov

PROJECT DESCRIPTION

LIFE SCIENCES
RESEARCH CENTER
UTAH STATE UNIVERSITY

USTAR BUILDING #2
350 EAST GRAND AVE.
LOGAN, UTAH

SHEET NAME:

INTERIOR ELEVATIONS

REVISIONS

| MARK | DATE | DESCRIPTION |
|---|---|---|

ISSUE DATA

| | |
|---|---|
| ISSUE DATE: | DEC. 9, 2008 |
| ISSUE TYPE: | DESDEV |
| DRAWN BY: | J. NIELSEN |
| CHECKED BY: | J. JONES |
| CAD FILE NAME: | |
| DFCM PROJECT # | 06292770 |
| STATE PROPERTY # | - |
| COPYRIGHT: | STATE OF UTAH |

SHEET NUMBER:

AE415

P:\06292770\18 US\AE\AE415.dwg, 12/9/2008 10:17:57 PM, jnielsen

## GENERAL NOTES AND LEGEND:

- SEE SHEET AE@01 FOR GENERAL NOTES.
- SEE TITLE SHEET G1@01 FOR DRAWING INDEX.
- DO NOT SCALE DRAWINGS.
- CONTRACTOR /SUBCONTRACTOR'S SHALL VERIFY ALL DIMENSIONS AND CONDITIONS BEFORE BEGINNING WORK AND SHALL REPORT TO THE ARCHITECT ANY ERRORS, INCONSISTENCIES OR OMISSIONS BEFORE BEGINNING WORK. SEE GENERAL NOTES AND SPECIFICATIONS.

## KEYED NOTES:

(01) CASEWORK. SEE CASEWORK DETAILS.
(02) RAILING. SEE SPECIFICATIONS.

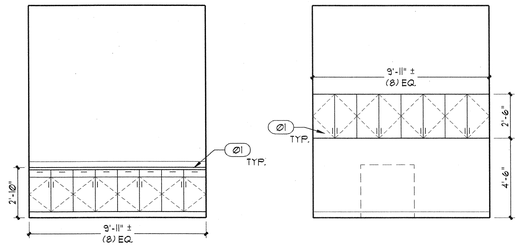


VIEW 2 VIEW 1

FAX COPY 305F B3 AE416
SCALE: 1/4"=1'-0"

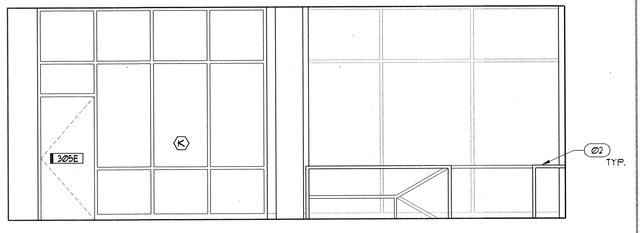


CUBICLES 305 B4 AE416
SCALE: 1/4"=1'-0"

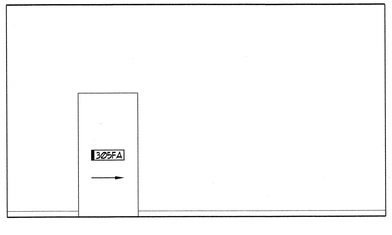


CUBICLES 305 A2 AE416
SCALE: 1/4"=1'-0"

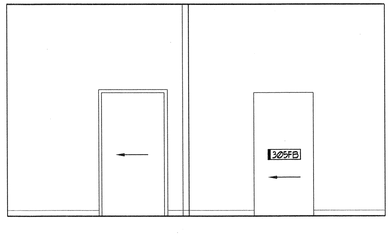


CUBICLES 305 A3 AE416
SCALE: 1/4"=1'-0"

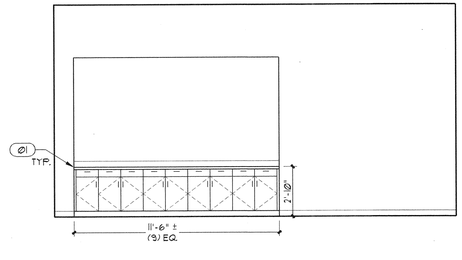


CONFERENCE 305E A4 AE416
SCALE: 1/4"=1'-0"


ARCHITECT 0818

ajc architects

703 east 1700 south
salt lake city, utah 84105
ph: 801.466.8818
fx: 801.466.4411
www.ajcarchitects.com

PAYETTE

285 Summer Street
Boston, MA 02210-1522
www.payette.com


OWNER INFORMATION

**State of Utah**
Department of Administrative Services

Division of Facilities
Construction & Management
4110 State Office Building
Salt Lake City, Utah 84114
Phone: (801) 538 - 3018
Fax: (801) 538 - 3267

Internet: http://www.dfcm.utah.gov

PROJECT DESCRIPTION

# LIFE SCIENCES RESEARCH CENTER
## UTAH STATE UNIVERSITY

USTAR BUILDING #2
350 EAST GRAND AVE.
LOGAN, UTAH

SHEET NAME:
INTERIOR ELEVATIONS

REVISIONS

| MARK | DATE | DESCRIPTION |
|---|---|---|

ISSUE DATA

| | |
|---|---|
| ISSUE DATE: | DEC. 9, 2008 |
| ISSUE TYPE: | DESDEV |
| DRAWN BY: | J. NIELSEN |
| CHECKED BY: | J. JONES |
| CAD FILE NAME: | |
| DFCM PROJECT # | 06292770 |
| STATE PROPERTY # | - |
| COPYRIGHT: | STATE OF UTAH |

SHEET NUMBER:

AE416

P:\06292770.18 USTAR UT USA\DESDEV\DWG\ARCHITECTURAL\01 PLAN AE416.dwg, 12/4/2008 10:19:28 PM, jnielsen

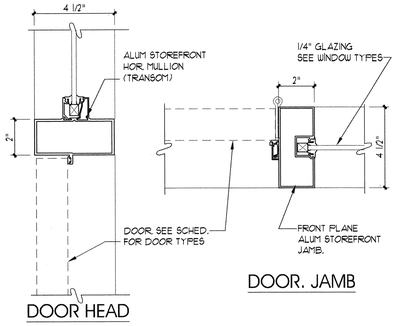


WINDOW/DOOR MULLION D1 AE501
SCALE: 3"= 1'-0"

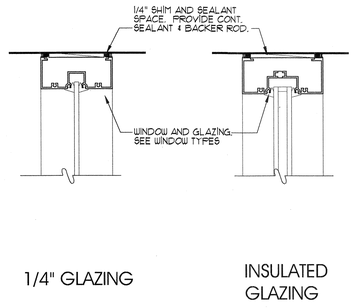


WINDOW HEAD D2 AE501
SCALE: 3"= 1'-0"

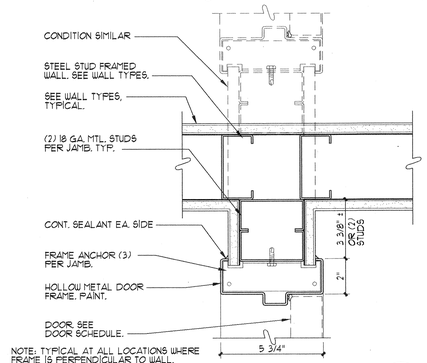


DOOR JAMB D3 AE501
SCALE: 3"= 1'-0"

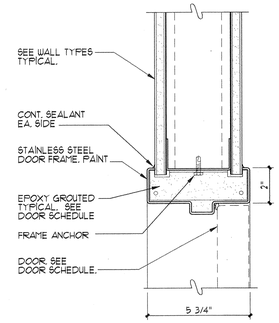


DOOR HEAD D4 AE501
SCALE: 3"= 1'-0"

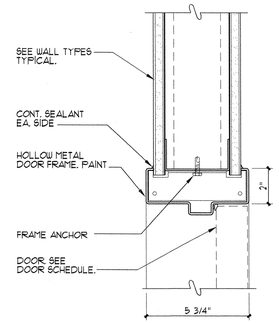


DOOR HEAD D5 AE501
SCALE: 3"= 1'-0"

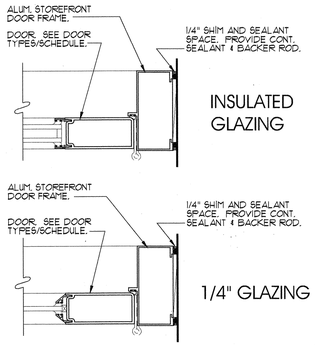


DOOR JAMB C1 AE501
SCALE: 3"= 1'-0"

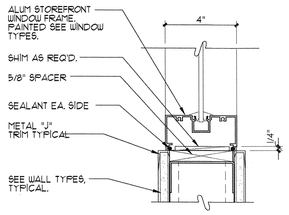


WINDOW SILL C2 AE501
SCALE: 3"= 1'-0"

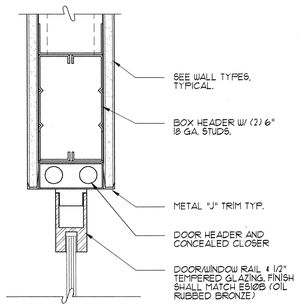


DOOR HEAD C3 AE501
SCALE: 3"= 1'-0"

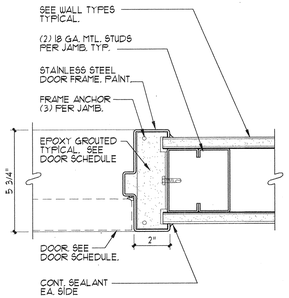


DOOR JAMB C4 AE501
SCALE: 3"= 1'-0"

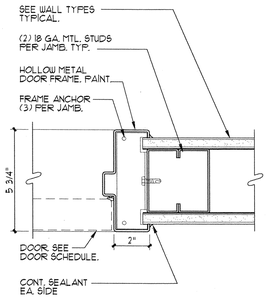


DOOR JAMB C5 AE501
SCALE: 3"= 1'-0"

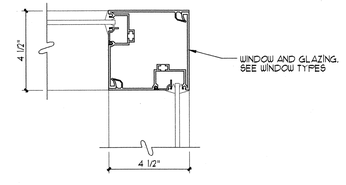


WINDOW JAMB B1 AE501
SCALE: 3"= 1'-0"

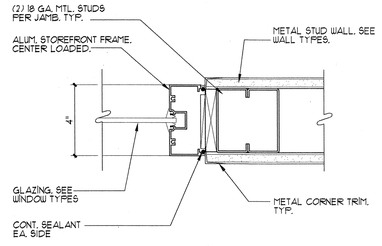


WINDOW JAMB B2 AE501
SCALE: 3"= 1'-0"

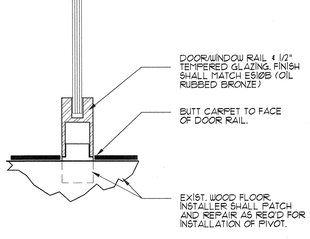


DOOR THRESHOLD B3 AE501
SCALE: 3"= 1'-0"

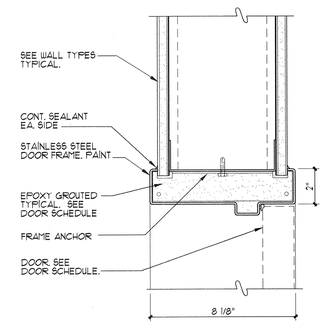


DOOR HEAD B4 AE501
SCALE: 3"= 1'-0"

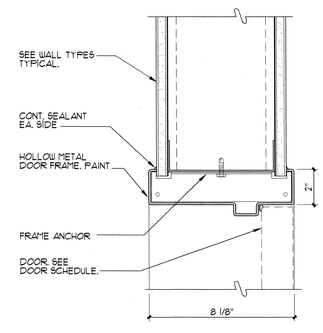


DOOR HEAD B5 AE501
SCALE: 3"= 1'-0"

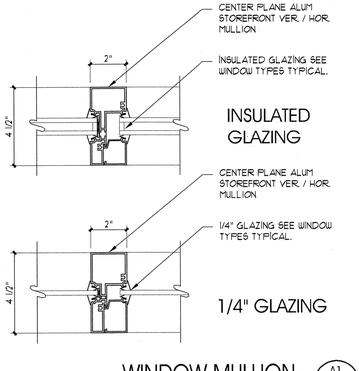


WINDOW MULLION A1 AE501
SCALE: 3"= 1'-0"

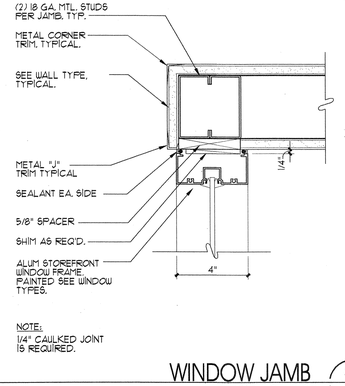


WINDOW JAMB A2 AE501
SCALE: 3"= 1'-0"

SCALE: 3"= 1'-0" A3 AE501

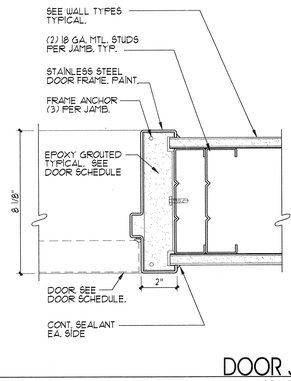


DOOR JAMB A4 AE501
SCALE: 3"= 1'-0"

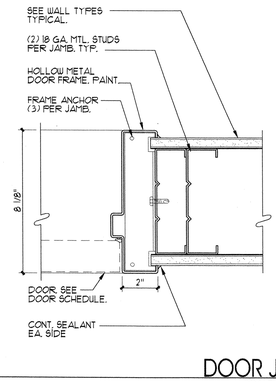


DOOR JAMB A5 AE501
SCALE: 3"= 1'-0"

1 2 3 4 5

ARCHITECT 0818
ajc architects
703 east 1700 south
salt lake city, utah 84105
ph: 801.466.8818
fx: 801.466.4411
www.ajcarchitects.com

PAYETTE
285 Summer Street
Boston, MA 02210-1522
www.payette.com

OWNER INFORMATION
**State of Utah**
Department of Administrative Services
Division of Facilities Construction & Management
4110 State Office Building
Salt Lake City, Utah 84114
Phone: (801) 538 - 3018
Fax: (801) 538 - 3267
Internet: http://www.dfcm.utah.gov

PROJECT DESCRIPTION
LIFE SCIENCES RESEARCH CENTER
UTAH STATE UNIVERSITY

USTAR BUILDING #2
350 EAST GRAND AVE.
LOGAN, UTAH

SHEET NAME:
DETAILS

REVISIONS

| MARK | DATE | DESCRIPTION |
|---|---|---|

ISSUE DATA

| | |
|---|---|
| ISSUE DATE: | DEC. 9, 2008 |
| ISSUE TYPE: | DESDEV |
| DRAWN BY: | J. NIELSEN |
| CHECKED BY: | J. JONES |
| CAD FILE NAME: | |
| DFCM PROJECT # | 06292770 |
| STATE PROPERTY # | - |
| COPYRIGHT: | STATE OF UTAH |

SHEET NUMBER:
AE501

P:\06292770.10\AE\AE501.dwg, 12/9/2008 10:19:03 PM, jnielsen

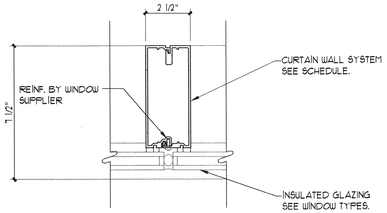


## CURTAIN WALL MULLION

D3 / AE502

SCALE: 3"= 1'-0"

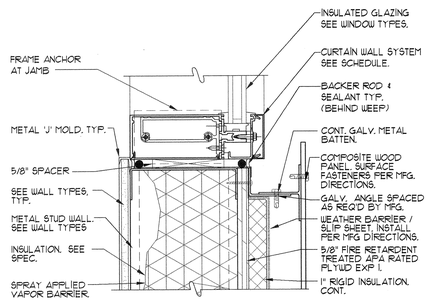


## CURTAIN WALL SILL

D2 / AE502

SCALE: 3"= 1'-0"

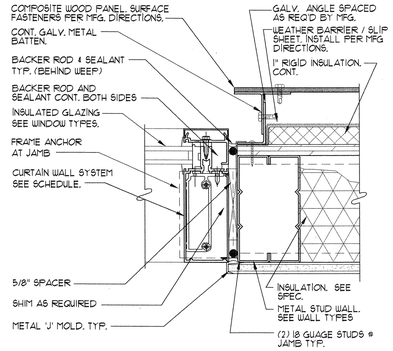


## CURTAIN WALL JAMB

D5 / AE502

SCALE: 3"= 1'-0"

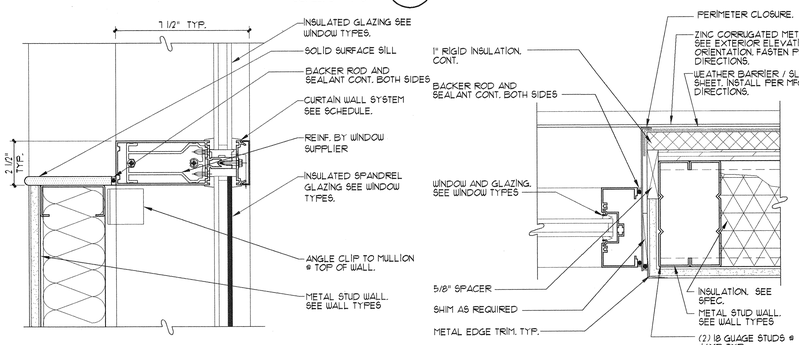


## CURTAIN WALL MULLION @ WALL

C3 / AE502

SCALE: 3"= 1'-0"




## STOREFRONT JAMB

C4 / AE502

SCALE: 3"= 1'-0"

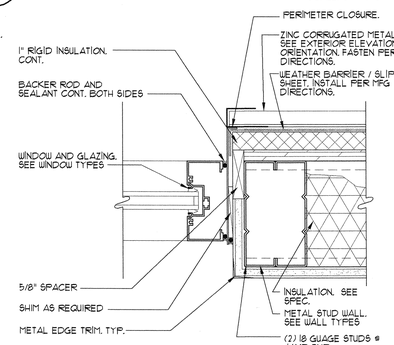


## STOREFRONT JAMB

C5 / AE502

SCALE: 3"= 1'-0"

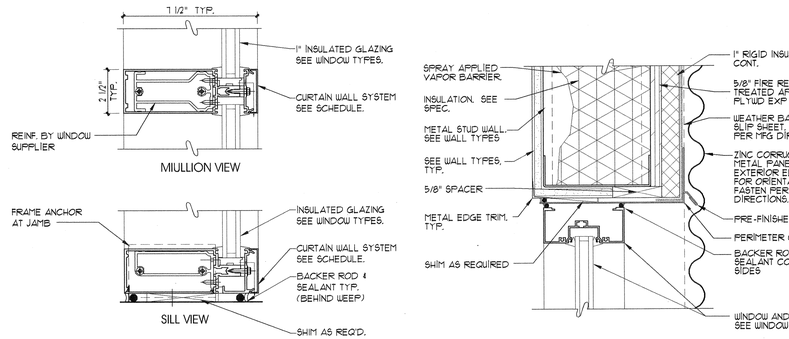


## CURTAIN WALL SILL/MULLION

B3 / AE502

SCALE: 3"= 1'-0"




## STOREFRONT HEAD

B4 / AE502

SCALE: 3"= 1'-0"

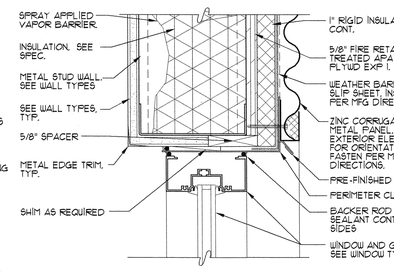


## STOREFRONT HEAD

B5 / AE502

SCALE: 3"= 1'-0"

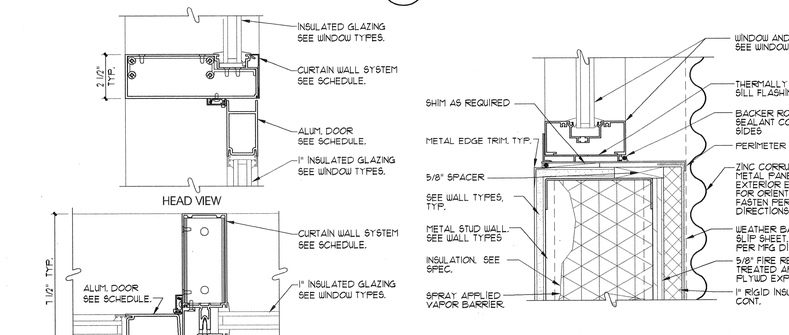


## CURTAIN WALL DOOR JAMB/HEAD

A3 / AE502

SCALE: 3"= 1'-0"




## STOREFRONT SILL

A4 / AE502

SCALE: 3"= 1'-0"

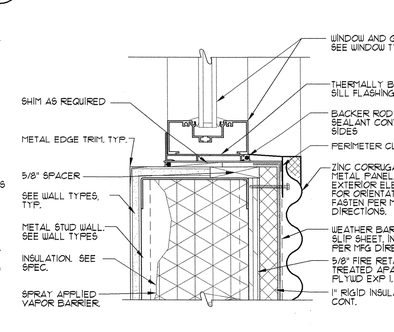


## STOREFRONT SILL

A5 / AE502

SCALE: 3"= 1'-0"

ARCHITECT 0818

ajc architects

703 east 1700 south
salt lake city, utah 84105
ph: 801.466.8818
fx: 801.466.4411
www.ajcarchitects.com

PAYETTE

285 Summer Street
Boston, MA 02210-1522
www.payette.com

OWNER INFORMATION

**State of Utah**
Department of Administrative Services

Division of Facilities Construction & Management
4110 State Office Building
Salt Lake City, Utah 84114
Phone: (801) 538 - 3018
Fax: (801) 538 - 3267

Internet: http://www.dfcm.utah.gov

PROJECT DESCRIPTION

# LIFE SCIENCES RESEARCH CENTER
## UTAH STATE UNIVERSITY

USTAR BUILDING #2
350 EAST GRAND AVE.
LOGAN, UTAH

SHEET NAME:

DETAILS

REVISIONS

| MARK | DATE | DESCRIPTION |
|---|---|---|

ISSUE DATA

| | |
|---|---|
| ISSUE DATE: | DEC. 9, 2008 |
| ISSUE TYPE: | DESDEV |
| DRAWN BY: | J. NIELSEN |
| CHECKED BY: | J. JONES |
| CAD FILE NAME: | |
| DFCM PROJECT # | 06292770 |
| STATE PROPERTY # | - |
| COPYRIGHT: | STATE OF UTAH |

SHEET NUMBER:

# AE502

P:\06292770.18 USTAR #2 USU\ARCHITECTURE\18 ARCH\DETAILS\AE502.dwg 12/9/2008 10:19:20 PM jmeilsen

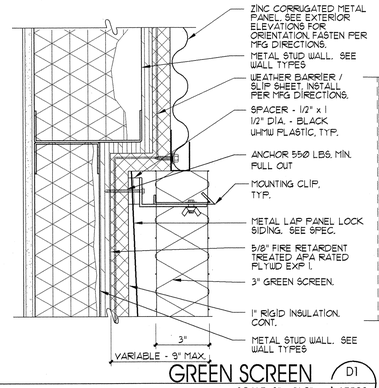


GREEN SCREEN D1 — SCALE: 3"= 1'-0" — AE502

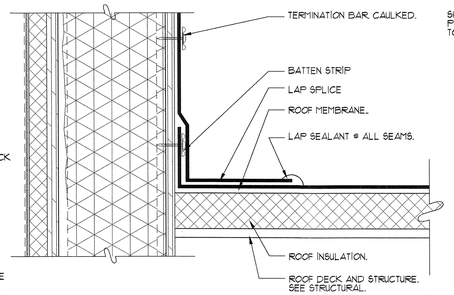


ROOF MEMBRANE LAP SEAM D2 — SCALE: 3"= 1'-0" — AE502

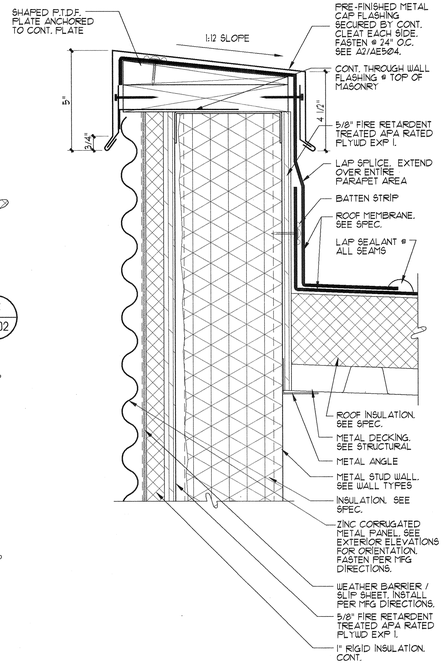


ROOF PARAPET C3 — SCALE: 3"= 1'-0" — AE502

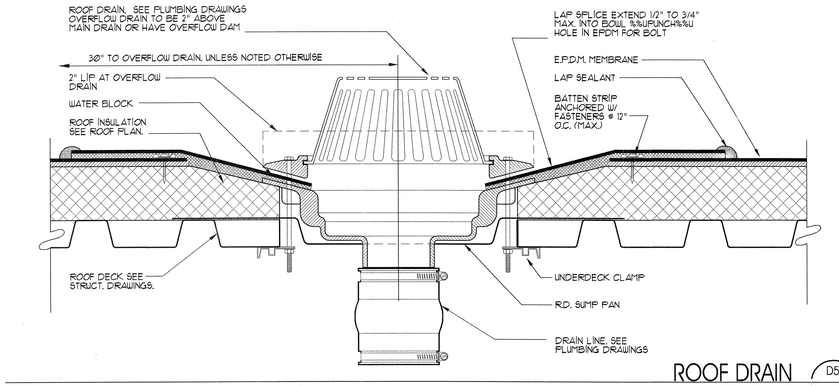


ROOF DRAIN D5 — SCALE: 3"= 1'-0" — AE502

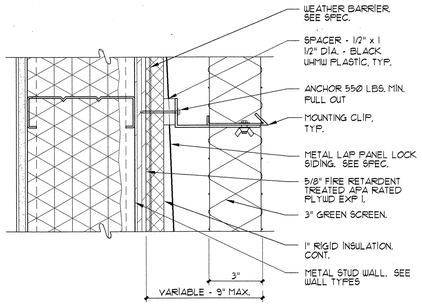


GREEN SCREEN C1 — SCALE: 3"= 1'-0" — AE502

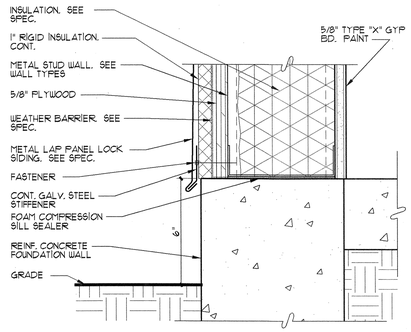


METAL LAP PANEL SILL C2 — SCALE: 3"= 1'-0" — AE502

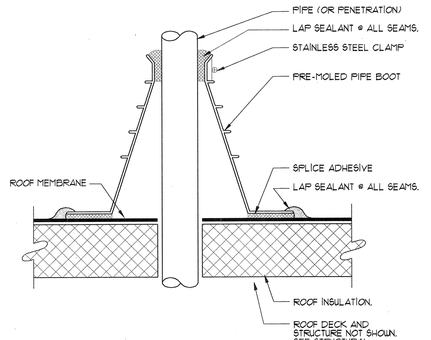


ROOF PENETRATION C4 — SCALE: 3"= 1'-0" — AE502

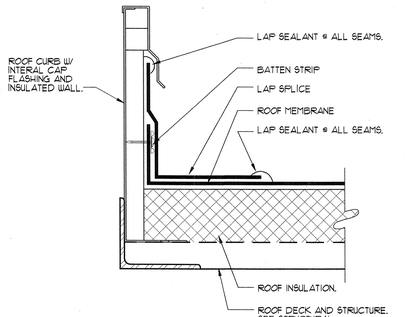


ROOF CURB C5 — SCALE: 3"= 1'-0" — AE502

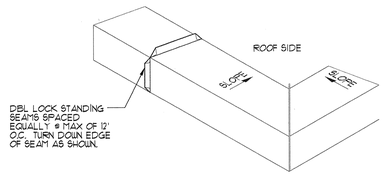


PARAPET CAP B3 — SCALE: 3"= 1'-0" — AE502

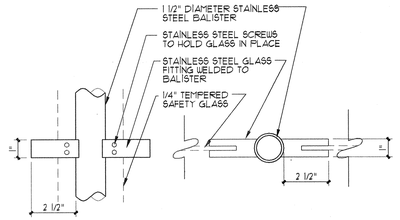


RAILING POST B4 — SCALE: 3"= 1'-0" — AE502

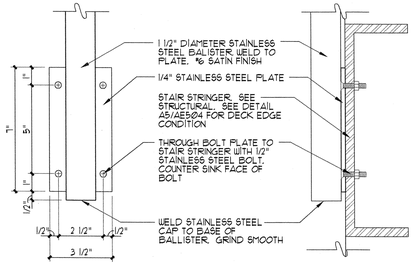


RAILING POST B5 — SCALE: 3"= 1'-0" — AE502

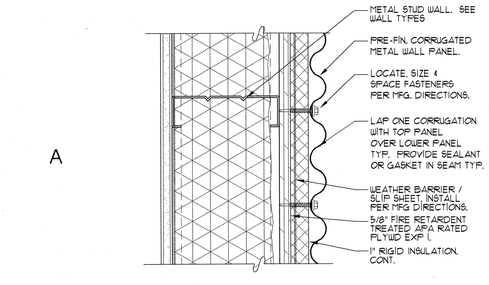


METAL WALL PANEL SEAM A1 — SCALE: 3"= 1'-0" — AE502

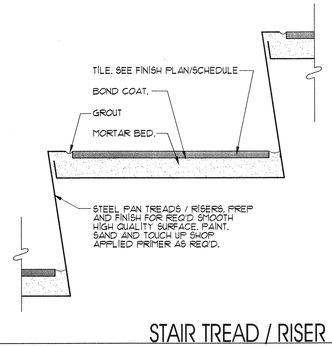


STAIR TREAD / RISER A3 — SCALE: 3"= 1'-0" — AE502

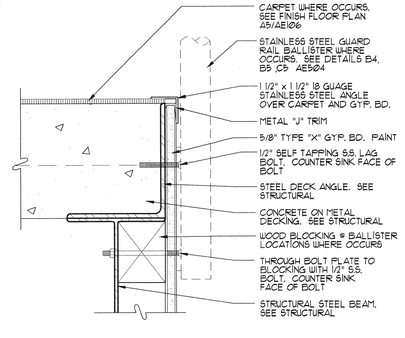


RAILING POST A4 — SCALE: 3"= 1'-0" — AE502

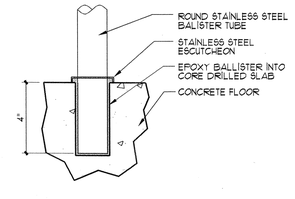


RAILING POST A5 — SCALE: 3"= 1'-0" — AE502

ARCHITECT 0818
ajc architects
703 east 1700 south
salt lake city, utah 84105
ph: 801.466.8818
fx: 801.466.4411
www.ajcarchitects.com

PAYETTE
285 Summer Street
Boston, MA 02210-1522
www.payette.com

OWNER INFORMATION

**State of Utah**
Department of Administrative Services
Division of Facilities Construction & Management
4110 State Office Building
Salt Lake City, Utah 84114
Phone: (801) 538 - 3018
Fax: (801) 538 - 3267
Internet: http://www.dfcm.utah.gov

PROJECT DESCRIPTION

LIFE SCIENCES RESEARCH CENTER
UTAH STATE UNIVERSITY

USTAR BUILDING #2
350 EAST GRAND AVE.
LOGAN, UTAH

SHEET NAME:
DETAILS

REVISIONS

| MARK | DATE | DESCRIPTION |
|---|---|---|

ISSUE DATA

| | |
|---|---|
| ISSUE DATE: | DEC. 9, 2008 |
| ISSUE TYPE: | DESDEV |
| DRAWN BY: | J. NIELSEN |
| CHECKED BY: | J. JONES |
| CAD FILE NAME: | |
| DFCM PROJECT # | 06292770 |
| STATE PROPERTY # | - |
| COPYRIGHT: | STATE OF UTAH |

SHEET NUMBER:
AE503

P:\06292618.US\AE\dgn\SDES\SDES\VOL\ARCHITECTURAL\VOL1\AE503.dwg, 12/9/2008 10:25:33 PM, mwilson

# DOOR SCHEDULE

| ROOM NO. | ROOM NAME | DOOR NO. | DOOR SIZE | FIRE RATING | DOOR TYPE | DOOR FINISH | FRAME TYPE | FRAME FINISH | SEE FRAME TYPES FOR TYPICAL DETAILS, SEE BELOW FOR NON-TYP. DETAILS: HEAD | JAMB | JAMB | DOOR NOTES |
|---|---|---|---|---|---|---|---|---|---|---|---|---|
| 100V | EAST STAIRS | 100V | 10'-0" X 19'-0" | 90 MIN. | T | | | | | | | |
| 100A | WEST STAIRS | 100A.A | 3'-0" X 7'-0" | 90 MIN. | C | | 1 | | | | | 5 |
| 100A | WEST STAIRS | 100A.B | 3'-0" X 7'-0" | 90 MIN. | A | | 2 | | | | | 5 |
| 100AA | NORTH ENTRY | 100AA.A | (2) 3'-0" X 7'-0" | | U | | 2 | | | | | 5 |
| 100AA | NORTH ENTRY | 100AA.B | (2) 3'-0" X 7'-0" | | U | | 2 | | | | | 5 |
| 100BB | EAST ENTRY | 100BB.A | (2) 3'-0" X 7'-0" | | U | | 2 | | | | | 5 |
| 100BB | EAST ENTRY | 100BB.B | (2) 3'-0" X 7'-0" | | U | | 2 | | | | | 5 |
| 100C | HALL | 100C.A | 3'-0" X 7'-0" | | D | | 2 | | | | | 5 |
| 100C | HALL | 100C.B | 3'-0" X 7'-0" | | D | | 2 | | | | | 5 |
| 100J | VESTIBULE | 100J.A | (2) 3'-0" X 7'-0" | | J | | 1 | | | | | 5 |
| 100J | VESTIBULE | 100J.B | (2) 3'-0" X 7'-0" | | J | | 1 | | | | | 5 |
| 100K | STAGING | 100K.A | (2) 3'-0" X 7'-0" | | J | | 1 | | | | | |
| 100K | STAGING | 100K.B | (2) 3'-0" X 7'-0" | | J | | 1 | | | | | |
| 100L | MAIN CORRIDOR | 100L | (2) 3'-0" X 7'-0" | | J | | 1 | | | | | 5 |
| 100M | SUB CORRIDOR | 100M | 4'-0" X 7'-0" | | F | | 1 | | | | | 5 |
| 100P | MAIN CORRIDOR | 100P | (2) 3'-0" X 7'-0" | | J | | 1 | | | | | 5 |
| 100F | HALL | 100F | (2) 3'-0" X 7'-0" | | L | | 1 | | | | | 5 |
| 100Q | SOUTH STAIRS | 100Q | 3'-0" X 7'-0" | 90 MIN. | C | | 1 | | | | | 5 |
| 100R | VESTIBULE | 100R.A | 3'-0" X 7'-0" | | J | | 1 | | | | | 5 |
| 100R | VESTIBULE | 100R.B | 3'-0" X 7'-0" | | J | | 1 | | | | | 5 |
| 100T | SUB CORRIDOR | 100T.B | (2) 3'-0" X 7'-0" | | J | | 1 | | | | | 5 |
| 100T | SUB CORRIDOR | 100T.A | 4'-0" X 7'-0" | | F | | 1 | | | | | 5 |
| 100U | SUB CORRIDOR | 100U.A | (2) 3'-0" X 7'-0" | | J | | 1 | | | | | 5 |
| 100U | SUB CORRIDOR | 100U.B | (2) 3'-0" X 7'-0" | | J | | 1 | | | | | 5 |
| 100Y | CENTRAL STAIRS | 100Y | 3'-0" X 7'-0" | 90 MIN. | C | | 1 | | | | | 5 |
| 100Y | CENTRAL STAIRS | 100Y | 3'-0" X 7'-0" | 90 MIN. | C | | 1 | | | | | 5 |
| 100Z | SUB CORRIDOR | 100Z.A | (2) 3'-0" X 7'-0" | | J | | 1 | | | | | 5 |
| 100Z | SUB CORRIDOR | 100Z.B | (2) 3'-0" X 7'-0" | | J | | 1 | | | | | 5 |
| 101 | CHILLER ROOM | 101 | 9'-4" X 8'-0" | | R | | | | | | | 5 |
| 102 | BOILER ROOM | 102.A | 3'-0" X 7'-0" | | C | | 1 | | | | | 5 |
| 102 | BOILER ROOM | 102.B | 9'-4" X 8'-0" | | S | | | | | | | 5 |
| 103A | FULL CYL. | 103A | 3'-0" X 7'-0" | 60 MIN. | C | | 1 | | | | | 5 |
| 103B | EMPTY CYL. | 103B | 3'-0" X 7'-0" | | C | | 1 | | | | | 5 |
| 104A | FLAMMABLE WASTE | 104A | 3'-0" X 7'-0" | 60 MIN. | C | | 1 | | | | | 5 |
| 104B | BIO WASTE | 104B | 3'-0" X 7'-0" | | C | | 1 | | | | | 5 |
| 104C | RADIOACTIVE WASTE | 104C | 3'-0" X 7'-0" | | C | | 1 | | | | | 5 |
| 105 | CHEMICAL STG | 105 | 4'-0" X 7'-0" | 60 MIN. | C | | 1 | | | | | 5 |
| 106 | ELEC. | 106.A | 3'-0" X 7'-0" | | C | | 1 | | | | | 5 |
| 106 | ELEC. | 106.B | 3'-0" X 7'-0" | | C | | 1 | | | | | 5 |
| 107 | ELEV. EQUIP | 107 | 3'-0" X 7'-0" | 60 MIN. | C | | 1 | | | | | 5 |
| 108 | RECEIVING OFFICE | 108 | 3'-0" X 7'-0" | | C | | 1 | | | | | |
| 109A | BUILDING LOADING DOCK | 109A.A | 3'-0" X 7'-0" | | C | | 1 | | | | | |
| 109A | BUILDING LOADING DOCK | 109A.B | 22'-0" X 18'-0" | | R | | | | | | | |
| 109B | VIVARIUM LOADING DOCK | 109B.A | 3'-0" X 7'-0" | | C | | 1 | | | | | |
| 109B | VIVARIUM LOADING DOCK | 109B.B | 22'-0" X 18'-0" | | R | | | | | | | |
| 110A | BEDDING STG | 110A.A | 3'-0" X 7'-0" | | C | | 1 | | | | | |
| 110A | BEDDING STG | 110A.B | 3'-0" X 7'-0" | | C | | 1 | | | | | |
| 110A | BEDDING STG | 110A.C | 6'-0" X 8'-0" | | S | | | | | | | |
| 110B | DETERGENT STG | 110B | 6'-0" X 8'-0" | | S | | | | | | | |
| 110C | STAGING | 110C.A | 3'-0" X 7'-0" | | C | | 1 | | | | | |
| 110C | STAGING | 110C.B | 6'-0" X 8'-0" | | S | | | | | | | |
| 110C | STAGING | 110C.C | 5'-4" X 8'-0" | | S | | | | | | | |
| 110C | STAGING | 110C.D | 5'-4" X 8'-0" | | S | | | | | | | |
| 111 | ATTIC STOCK | 111 | 3'-0" X 7'-0" | | C | | 1 | | | | | |
| 112 | ANTE ROOM | 112 | 4'-0" X 7'-0" | | F | | 1 | | | | | |
| 113 | ANIMAL RECEIVING | 113 | 4'-0" X 8'-0" | | I | | 1 | | | | | 1, 2, 5 |
| 114 | QUARENTINE | 114 | 4'-0" X 8'-0" | | I | | 1 | | | | | 1, 2, 5 |
| 115 | QUARENTINE | 115 | 4'-0" X 8'-0" | | I | | 1 | | | | | 1, 2, 5 |
| 116 | QUARENTINE | 116 | 4'-0" X 8'-0" | | I | | 1 | | | | | 1, 2, 5 |
| 117 | EFFLUENT DE-CONTAMIN. | 117 | 4'-0" X 7'-0" | | F | | 3 | | | | | 1, 2, 5 |
| 118 | MECHANICAL | 118.B | (2) 3'-0" X 7'-0" | 60 MIN. | L | | 3 | | | | | 5 |
| 118 | MECHANICAL | 118.A | 3'-0" X 7'-0" | 60 MIN. | C | | 1 | | | | | 5 |
| 118A | ELEV. EQUIP | 118A | 3'-0" X 7'-0" | 60 MIN. | C | | 1 | | | | | 5 |
| 120A | NECROPSY | 120A | 4'-0" X 7'-0" | | F | | 1 | | | | | |
| 120B | CARCASS DISPOSAL | 120B.A | 4'-0" X 7'-0" | | F | | 1 | | | | | |
| 120B | CARCASS DISPOSAL | 120B.B | 4'-0" X 7'-0" | | F | | 1 | | | | | |
| 121 | SUPPORT LAB | 121 | 4'-0" X 7'-0" | | F | | 1 | | | | | |
| 122 | LAUNDRY | 122 | 4'-0" X 7'-0" | | F | | 1 | | | | | |
| 123 | SUPPLY STORAGE | 123 | 4'-0" X 7'-0" | | F | | 1 | | | | | |
| 124 | FEED STG | 124.A | 4'-0" X 7'-0" | | F | | 1 | | | | | |
| 124 | FEED STG | 124.B | 4'-0" X 7'-0" | | F | | 1 | | | | | |
| 125 | BOTTLE STG | 125.A | 4'-0" X 7'-0" | | F | | 1 | | | | | |
| 125 | BOTTLE STG | 125.B | 4'-0" X 7'-0" | | F | | 1 | | | | | |
| 127 | CAGE WASH DIRTY | 127 | (2) 3'-0" X 7'-0" | | J | | 1 | | | | | |
| 128 | WOMEN'S | 128 | 3'-0" X 7'-0" | | F | | 1 | | | | | 5 |
| 129 | MEN'S | 129 | 3'-0" X 7'-0" | | F | | 1 | | | | | 5 |
| 130A | JANITOR | 130A | 3'-0" X 7'-0" | | C | | 1 | | | | | |
| 130B | JANITOR | 130B | 3'-0" X 7'-0" | | C | | 1 | | | | | |
| 131 | COMP. RM. | 131 | 3'-0" X 7'-0" | | C | | 1 | | | | | |
| 132 | MAIL | 132 | 3'-0" X 7'-0" | | C | | 1 | | | | | |
| 132 | MAIL | 132 | 3'-0" X 7'-0" | | C | | 1 | | | | | |
| 132 | MAIL | 132 | 3'-0" X 7'-0" | | C | | 1 | | | | | |
| 132 | MAIL | 132 | 3'-0" X 7'-0" | | C | | 1 | | | | | |
| 132 | MAIL | 132 | 3'-0" X 7'-0" | | C | | 1 | | | | | |
| 132 | MAIL | 132 | 3'-0" X 7'-0" | | C | | 1 | | | | | |
| 133 | FACILITY MAINT. | 133 | 6'-0" X 8'-0" | | R | | | | | | | |
| 134 | TELE/DATA | 134 | 3'-0" X 7'-0" | | C | | 1 | | | | | |
| 135 | MEN'S SHOWER | 135 | 3'-0" X 7'-0" | | C | | 1 | | | | | 5 |
| 136 | WOMEN'S SHOWER | 136 | 3'-0" X 7'-0" | | C | | 1 | | | | | 5 |
| 137 | KITCHEN STG | 137 | 3'-0" X 7'-0" | | C | | 1 | | | | | |
| 138 | PROCEDURE ROOM | 138 | 3'-0" X 7'-0" | | A | | 1 | | | | | |
| 139 | OFFICE | 139 | 3'-0" X 7'-0" | | A | | 2 | | | | | |
| 140 | OFFICE | 140 | 3'-0" X 7'-0" | | A | | 2 | | | | | |
| 141 | OFFICE | 141 | 3'-0" X 7'-0" | | A | | 2 | | | | | |
| 142 | OFFICE | 142 | 3'-0" X 7'-0" | | A | | 2 | | | | | |
| 143 | OFFICE | 143 | 3'-0" X 7'-0" | | A | | 2 | | | | | |
| 144 | OFFICE | 144 | 3'-0" X 7'-0" | | A | | 2 | | | | | |
| 145 | OFFICE | 145 | 3'-0" X 7'-0" | | A | | 2 | | | | | |
| 146 | STG | 146 | 3'-0" X 7'-0" | | A | | 1 | | | | | |
| 147 | CLINICAL LAB PHLEBOT. | 147 | 3'-0" X 7'-0" | | A | | 1 | | | | | |
| 148 | RR | 148 | 3'-0" X 7'-0" | | A | | 1 | | | | | |
| 149 | RECORDS STG | 149 | 3'-0" X 7'-0" | | A | | 1 | | | | | |
| 150 | WAITING | 150 | 3'-0" X 7'-0" | | B | | 2 | | | | | |
| 151 | BREAK RM / CONFERENCE | 151 | 3'-0" X 7'-0" | | B | | 2 | | | | | |
| 152B | SECURITY | 152B | 3'-0" X 7'-0" | | A | | 1 | | | | | |
| 153 | ELEV. EQUIP | 153 | 3'-0" X 7'-0" | | A | | 1 | | | | | 5 |
| 154 | INTERVIEW | 154 | 3'-0" X 7'-0" | | A | | 1 | | | | | |
| 155 | EXAM | 155 | 3'-0" X 7'-0" | | A | | 1 | | | | | |
| 156 | EXAM | 156 | 3'-0" X 7'-0" | | A | | 1 | | | | | |
| 157 | EXAM | 157 | 3'-0" X 7'-0" | | A | | 1 | | | | | |
| 158 | CONFERENCE ROOM A | 158 | 3'-0" X 7'-0" | | A | | 2 | | | | | |
| 158A | CONFERENCE ROOM B | 158A | 3'-0" X 7'-0" | | A | | 2 | | | | | |
| 159A | MEN'S | 159A | 3'-0" X 7'-0" | | A | | 1 | | | | | |
| 159B | WOMEN'S | 159B | 3'-0" X 7'-0" | | A | | 1 | | | | | |
| 160 | KITCHEN | 160.A | 3'-0" X 7'-0" | | A | | 1 | | | | | |
| 160 | KITCHEN | 160.B | 3'-0" X 7'-0" | | A | | 1 | | | | | |
| 160 | KITCHEN | 160.C | 4'-0" X 4'-0" | | U | | | | | | | |
| 160 | KITCHEN | 160.D | 4'-0" X 4'-0" | | U | | | | | | | |
| 160B | KITCHEN STG | 160B.A | 3'-0" X 7'-0" | | C | | 1 | | | | | |
| 160C | OFFICE | 160C.A | 3'-0" X 7'-0" | | A | | 1 | | | | | |
| 160D | KITCHEN RR | 160D.A | 3'-0" X 7'-0" | | A | | 1 | | | | | |
| 200G | EAST STAIRS | 200G | 10'-0" X 19'-0" | 90 MIN. | T | | | | | | | |
| 200A | WEST STAIRS | 200A | 3'-0" X 7'-0" | 90 MIN. | A | | 1 | | | | | 5 |
| 200C | CENTRAL STAIRS | 200C | 3'-0" X 7'-0" | 90 MIN. | A | | 1 | | | | | 5 |
| 200D | HALL | 200D.A | (2) 3'-0" X 7'-0" | | L | | 1 | | | | | 5 |
| 200D | HALL | 200D.B | (2) 3'-0" X 7'-0" | | L | | 1 | | | | | 5 |
| 200I | HALL | 200I.A | 4'-0" X 7'-0" | | K | | 1 | | | | | 5 |
| 200I | HALL | 200I.B | (2) 3'-0" X 7'-0" | | J | | 1 | | | | | 5 |
| 200J | VESTIBULE | 200J | (2) 3'-0" X 7'-0" | | J | | 1 | | | | | 5 |
| 200K | SOUTH STAIRS | 200K | 3'-0" X 7'-0" | 90 MIN. | C | | 1 | | | | | 5 |
| 200Q | AIRLOCK | 200Q.A | 3'-0" X 7'-0" | | K | | 1 | | | | | 7, 8, 5 |
| 200Q | AIRLOCK | 200Q.B | 3'-0" X 7'-0" | | K | | 1 | | | | | 7, 8, 5 |
| 200Q | AIRLOCK | 200Q.C | (2) 3'-0" X 7'-0" | | L | | 1 | | | | | 7, 8, 5 |
| 201 | SOUND BOOTH | 201 | 3'-0" X 7'-0" + 1'-6" X 7'-0" | | M | | 1 | | | | | |
| 202 | BIOINFORMATIC | 202 | 3'-0" X 7'-0" | | A | | 1 | | | | | |
| 203 | FREEZER FARM | 203 | 3'-0" X 7'-0" + 1'-6" X 7'-0" | | M | | 1 | | | | | |
| 204 | WET LAB | 204.A | 3'-0" X 7'-0" | | P | | 2 | | | | | |
| 204 | WET LAB | 204.B | 3'-0" X 7'-0" + 1'-6" X 7'-0" | | O | | 2 | | | | | |
| 204 | WET LAB | 204.C | 3'-0" X 7'-0" | | P | | 2 | | | | | |
| 204 | WET LAB | 204.D | 3'-0" X 7'-0" + 1'-6" X 7'-0" | | O | | 2 | | | | | |
| 204A | AUTOCLAVE | 204A | 3'-0" X 7'-0" | | A | | 1 | | | | | |
| 204B | LAB SUPPLY STG | 204B | 3'-0" X 7'-0" | | A | | 1 | | | | | |
| 204E | CONFOCAL MICROSCOPE | 204E | 3'-0" X 7'-0" | | A | | 1 | | | | | |
| 204F | CONFOCAL MICROSCOPE | 204F | 3'-0" X 7'-0" | | A | | 1 | | | | | |
| 204G | IMAGING MICROSCOPY | 204G | 3'-0" X 7'-0" | | A | | 1 | | | | | |
| 204H | IMAGING MICROSCOPY | 204H | 3'-0" X 7'-0" | | A | | 1 | | | | | |
| 204J | CELL CULTURE | 204J | 3'-0" X 7'-0" | | D | | 1 | | | | | |
| 204K | SOLUTION PREP | 204K | 3'-0" X 7'-0" | | D | | 1 | | | | | |
| 204L | TISSUE PROCESSING | 204L | 3'-0" X 7'-0" | | D | | 1 | | | | | |
| 204M | FLOW CYTOMETER | 204M.A | 3'-0" X 7'-0" | | D | | 1 | | | | | |
| 204M | FLOW CYTOMETER | 204M.B | 3'-0" X 7'-0" | | D | | 1 | | | | | |
| 204N | CELL CULTURE | 204N | 3'-0" X 7'-0" | | D | | 1 | | | | | |
| 204O | MICRO BIOLOGY | 204O | 3'-0" X 7'-0" | | D | | 1 | | | | | |
| 205A | STG | 205A | 3'-0" X 7'-0" | | A | | 2 | | | | | |
| 205B | CONFERENCE | 205B.A | 3'-0" X 7'-0" | | A | | 2 | | | | | |
| 205B | CONFERENCE | 205B.B | 3'-0" X 7'-0" | | A | | 2 | | | | | |
| 205C | OFFICE | 205C.A | 3'-0" X 7'-0" | | A | | 2 | | | | | |
| 205C | OFFICE | 205C.B | 3'-0" X 7'-0" | | A | | 2 | | | | | |
| 205D | ADMIN OFFICE | 205D | 3'-0" X 7'-0" | | A | | 2 | | | | | |
| 205E | CONFERENCE | 205E | 3'-0" X 7'-0" | | A | | 2 | | | | | |
| 205F | FAX/COPY | 205F.A | 3'-0" X 7'-0" | | A | | 1 | | | | | |
| 205F | FAX/COPY | 205F.B | 3'-0" X 7'-0" | | A | | 1 | | | | | |
| 205G | OFFICE | 205G | 3'-0" X 7'-0" | | A | | 2 | | | | | |
| 205H | OFFICE | 205H | 3'-0" X 7'-0" | | A | | 2 | | | | | |
| 205I | OFFICE | 205I | 3'-0" X 7'-0" | | A | | 2 | | | | | |
| 205J | OFFICE | 205J | 3'-0" X 7'-0" | | A | | 2 | | | | | |
| 205K | OFFICE | 205K | 3'-0" X 7'-0" | | A | | 2 | | | | | |
| 205L | OFFICE | 205L | 3'-0" X 7'-0" | | A | | 2 | | | | | |
| 205M | OFFICE | 205M | 3'-0" X 7'-0" | | A | | 2 | | | | | |
| 205N | OFFICE | 205N | 3'-0" X 7'-0" | | A | | 2 | | | | | |
| 206 | BREAK RM | 206.A | 3'-0" X 7'-0" | | A | | 2 | | | | | |
| 206 | BREAK RM | 206.B | 3'-0" X 7'-0" | | A | | 2 | | | | | |
| 208 | ELEC. | 208 | 3'-0" X 7'-0" | | C | | 1 | | | | | |
| 209 | JANITOR | 209 | 3'-0" X 7'-0" | | A | | 1 | | | | | |
| 210 | WOMEN'S | 210 | 3'-0" X 7'-0" | | A | | 1 | | | | | 5 |
| 211 | MEN'S | 211 | 3'-0" X 7'-0" | | A | | 1 | | | | | 5 |
| 212 | TELE/DATA | 212 | 3'-0" X 7'-0" | | A | | 1 | | | | | |
| 213 | RECEPTION | 213 | 3'-0" X 7'-0" | | A | | 2 | | | | | |
| 214 | MEN'S LOCKERS | 214.A | 3'-0" X 7'-0" | | F | | 1 | | | | | 5 |
| 214 | MEN'S LOCKERS | 214.B | 3'-0" X 7'-0" | | A | | 1 | | | | | 5 |
| 214 | MEN'S LOCKERS | 214.C | 3'-0" X 7'-0" | | F | | 1 | | | | | 5 |
| 215 | WOMEN'S LOCKERS | 215.A | 3'-0" X 7'-0" | | F | | 1 | | | | | 5 |
| 215 | WOMEN'S LOCKERS | 215.B | 3'-0" X 7'-0" | | A | | 1 | | | | | 5 |
| 215 | WOMEN'S LOCKERS | 215.C | 3'-0" X 7'-0" | | F | | 1 | | | | | 5 |
| 217 | STG | 217 | 3'-0" X 7'-0" | | F | | 1 | | | | | |
| 218 | JANITOR | 218 | 3'-0" X 7'-0" | | F | | 1 | | | | | |
| 221 | SUB CORRIDOR | 221 | 4'-0" X 7'-0" | | K | | 1 | | | | | 5 |
| 222 | SHELL SPACE | 222 | 4'-0" X 7'-0" | | F | | 1 | | | | | |
| 223 | SUB CORRIDOR | 223 | 4'-0" X 7'-0" | | K | | 1 | | | | | 5 |
| 224 | SHELL SPACE | 224 | 4'-0" X 7'-0" | | F | | 1 | | | | | |
| 225 | SUB CORRIDOR | 225 | 4'-0" X 7'-0" | | K | | 1 | | | | | |
| 213A | OFFICE | 213A | 3'-0" X 7'-0" | | A | | 2 | | | | | |
| 213B | OFFICE | 213B | 3'-0" X 7'-0" | | A | | 2 | | | | | |
| 213C | OFFICE | 213C | 3'-0" X 7'-0" | | A | | 2 | | | | | |
| 220 | PRE-LAB | 220 | 4'-0" X 7'-0" | | K | | 3 | | | | | |
| 220A | SCRUB | 220A | 3'-0" X 7'-0" | | K | | 1 | | | | | |
| 220B | LARGE OR | 220B.A | 4'-0" X 7'-0" | | K | | 1 | | | | | |
| 220B | LARGE OR | 220B.B | 3'-0" X 7'-0" | | K | | 1 | | | | | |
| 220C | SMALL OR | 220C.A | 4'-0" X 7'-0" | | K | | 1 | | | | | |
| 220C | SMALL OR | 220C.B | 3'-0" X 7'-0" | | K | | 1 | | | | | |
| 220D | SCRUB | 220D | 3'-0" X 7'-0" | | K | | 1 | | | | | |
| 220E | STG | 220E | 3'-0" X 7'-0" | | F | | 1 | | | | | |
| 220F | PRE-LAB & SUPPLY | 220F | 4'-0" X 7'-0" | | F | | 1 | | | | | |
| 220G | POST-OP | 220G | 4'-0" X 7'-0" | | K | | 1 | | | | | |
| 220H | POST-OP | 220H | 4'-0" X 7'-0" | | K | | 1 | | | | | |
| 221A | BEHAVIORAL TESTING | 221A | 4'-0" X 8'-0" | | I | | 1 | | | | | 1, 2, 5 |
| 221B | BREEDING | 221B | 4'-0" X 8'-0" | | I | | 1 | | | | | 1, 2, 5 |
| 221C | BREEDING | 221C | 4'-0" X 8'-0" | | I | | 1 | | | | | 1, 2, 5 |
| 223A | MEDIUM AHR | 223A | 4'-0" X 8'-0" | | I | | 3 | | | | | 1, 2, 5 |
| 223B | SMALL AHR | 223B | 4'-0" X 8'-0" | | I | | 3 | | | | | 1, 2, 5 |
| 223C | BEHAVIORAL TESTING | 223C | 4'-0" X 8'-0" | | I | | 3 | | | | | 1, 2, 5 |
| 223D | SMALL AHR | 223D | 4'-0" X 8'-0" | | I | | 3 | | | | | 1, 2, 5 |
| 223E | STG | 223E | (2) 3'-0" X 7'-0" | | N | | 1 | | | | | |
| 223F | MEDIUM AHR | 223F | 4'-0" X 8'-0" | | I | | 3 | | | | | 1, 2, 5 |
| 223G | SMALL AHR | 223G | 4'-0" X 8'-0" | | I | | 3 | | | | | 1, 2, 5 |
| 223H | SMALL AHR | 223H | 4'-0" X 8'-0" | | I | | 3 | | | | | 1, 2, 5 |
| 223I | MEDIUM AHR | 223I | 4'-0" X 8'-0" | | I | | 3 | | | | | 1, 2, 5 |
| 225A | MEDIUM AHR | 225A | 4'-0" X 8'-0" | | I | | 3 | | | | | 1, 2, 5 |
| 225B | ANIMAL IMAGING | 225B | 4'-0" X 8'-0" | | I | | 3 | | | | | 1, 2, 5 |
| 225C | SMALL AHR | 225C | 4'-0" X 8'-0" | | I | | 3 | | | | | 1, 2, 5 |
| 225D | SMALL AHR | 225D | 4'-0" X 8'-0" | | I | | 3 | | | | | 1, 2, 5 |
| 225E | STG | 225E | (2) 3'-0" X 7'-0" | | N | | 1 | | | | | |
| 225F | MEDIUM AHR | 225F | 4'-0" X 8'-0" | | I | | 3 | | | | | 1, 2, 5 |
| 225G | SMALL AHR | 225G | 4'-0" X 8'-0" | | I | | 3 | | | | | 1, 2, 5 |
| 225H | SMALL AHR | 225H | 4'-0" X 8'-0" | | I | | 3 | | | | | 1, 2, 5 |
| 225I | MEDIUM AHR | 225I | 4'-0" X 8'-0" | | I | | 3 | | | | | 1, 2, 5 |
| 300A | WEST STAIRS | 300A | 3'-0" X 7'-0" | 90 MIN. | A | | 1 | | | | | 1, 2, 5 |
| 300D | HALL | 300D.A | (2) 3'-0" X 7'-0" | | L | | 1 | | | | | 5 |
| 300D | HALL | 300D.B | (2) 3'-0" X 7'-0" | | L | | 1 | | | | | 5 |
| 300G | EAST STAIRS | 300G | 10'-0" X 19'-0" | 90 MIN. | T | | | | | | | |
| 300I | VESTIBULE | 300I.A | 3'-6" X 7'-0" | | K | | 4 | | | | | 3, 4, 5 |
| 300I | VESTIBULE | 300I.B | (2) 3'-0" X 7'-0" | | J | | 4 | | | | | 3, 4, 5 |
| 300K | HALL | 300K | (2) 3'-0" X 7'-0" | | L | | 4 | | | | | 3, 4, 5 |
| 300L | CENTRAL STAIRS | 300L | 3'-0" X 7'-0" | 90 MIN. | A | | 1 | | | | | 5 |
| 300S | AIRLOCK | 300S.A | 4'-0" X 7'-0" | | K | | 4 | | | | | 3, 4, 5, 7, 8 |
| 300S | AIRLOCK | 300S.B | 4'-0" X 7'-0" | | K | | 4 | | | | | 3, 4, 5, 7, 8 |
| 300N | AIRLOCK | 300N.A | 4'-0" X 7'-0" | | K | | 4 | | | | | 3, 4, 5, 7, 8 |
| 300N | AIRLOCK | 300N.B | 4'-0" X 7'-0" | | K | | 4 | | | | | 3, 4, 5, 7, 8 |
| 300O | VESTIBULE | 300O | 4'-0" X 7'-0" | | F | | 4 | | | | | 3, 4, 5 |
| 300Q | SOUTH STAIRS | 300Q | 3'-0" X 7'-0" | 90 MIN. | C | | 1 | | | | | 5 |
| 301 | RADIOISOTOPE | 301 | 3'-6" X 7'-0" | | A | | 1 | | | | | |
| 302 | DARK ROOM | 302 | | | | | | | | | | |
| 303 | FREEZER FARM | 303 | 3'-0" X 7'-0" + 1'-6" X 7'-0" | | M | | 1 | | | | | |
| 304 | WET LAB | 304.A | 3'-0" X 7'-0" | | P | | 2 | | | | | |
| 304 | WET LAB | 304.B | 3'-0" X 7'-0" + 1'-6" X 7'-0" | | O | | 2 | | | | | |
| 304 | WET LAB | 304.C | 3'-0" X 7'-0" | | P | | 2 | | | | | |
| 304 | WET LAB | 304.D | 3'-0" X 7'-0" + 1'-6" X 7'-0" | | O | | 2 | | | | | |
| 304A | AUTOCLAVE | 304A | 3'-0" X 7'-0" | | A | | 1 | | | | | |
| 304B | AUTOCLAVE | 304B | 3'-0" X 7'-0" | | A | | 1 | | | | | |
| 304E | CONFOCAL MICROSCOPE | 304E | 3'-0" X 7'-0" | | A | | 1 | | | | | |
| 304F | CONFOCAL MICROSCOPE | 304F | 3'-0" X 7'-0" | | A | | 1 | | | | | |


ARCHITECT 0818

ajc architects

703 east 1700 south
salt lake city, utah 84105
ph: 801.466.8818
fx: 801.466.4411
ajc@ajcarchitects.com


OWNER INFORMATION

**State of Utah**
Department of Administrative Services

Division of Facilities
Construction & Management
4110 State Office Building
Salt Lake City, Utah 84114
Phone: (801) 538 - 3018
Fax: (801) 538 - 3267

Internet: http://www.dfcm.utah.gov

PROJECT DESCRIPTION

**LIFE SCIENCES RESEARCH CENTER**
**UTAH STATE UNIVERSITY**

USTAR BUILDING #2
350 EAST GRAND AVE.
LOGAN, UTAH

SHEET NAME:

DOOR SCHEDULE

REVISIONS

| MARK | DATE | DESCRIPTION |
|---|---|---|

ISSUE DATA

| | |
|---|---|
| ISSUE DATE: | DEC. 9, 2008 |
| ISSUE TYPE: | DESDEV |
| DRAWN BY: | J. NIELSEN |
| CHECKED BY: | J. JONES |
| CAD FILE NAME: | 0654AE601 |
| DFCM PROJECT # | 06292770 |
| STATE PROPERTY # | - |
| COPYRIGHT: | STATE OF UTAH |

SHEET NUMBER:

AE601

# DOOR SCHEDULE

| ROOM NO. | ROOM NAME | DOOR NO. | DOOR SIZE | FIRE RATING | DOOR TYPE | DOOR FINISH | FRAME TYPE | FRAME FINISH | SEE FRAME TYPES FOR TYPICAL DETAILS. SEE BELOW FOR NON-TYP. DETAILS HEAD | JAMB | JAMB | DOOR NOTES |
|---|---|---|---|---|---|---|---|---|---|---|---|---|
| 304G | IMAGING MICROSCOPY | 304G | 3'-Ø" X 7'-Ø" | | A | | 1 | | | | | |
| 304H | IMAGING MICROSCOPY | 304H | 3'-Ø" X 7'-Ø" | | A | | 1 | | | | | |
| 304J | CELL CULTURE | 304J | 3'-Ø" X 7'-Ø" | | D | | 1 | | | | | |
| 304K | SOLUTION PREP | 304K | 3'-Ø" X 7'-Ø" | | D | | 1 | | | | | |
| 304L | TISSUE PROCESSING | 304L | 3'-Ø" X 7'-Ø" | | D | | 1 | | | | | |
| 304M | FLOW CYTOMETER | 304M | 3'-Ø" X 7'-Ø" | | D | | 1 | | | | | |
| 304N | CELL CULTURE | 304N | 3'-Ø" X 7'-Ø" | | D | | 1 | | | | | |
| 304O | MICRO BIOLOGY | 304O | 3'-Ø" X 7'-Ø" | | D | | 1 | | | | | |
| 305A | STG | 305A | 3'-Ø" X 7'-Ø" | | A | | 2 | | | | | |
| 305B | CONFERENCE | 305B.A | 3'-Ø" X 7'-Ø" | | A | | 2 | | | | | |
| 305B | CONFERENCE | 305B.B | 3'-Ø" X 7'-Ø" | | A | | 2 | | | | | |
| 305C | OFFICE | 305C.A | 3'-Ø" X 7'-Ø" | | A | | 2 | | | | | |
| 305C | OFFICE | 305C.B | 3'-Ø" X 7'-Ø" | | A | | 2 | | | | | |
| 305D | ADMIN OFFICE | 305D | 3'-Ø" X 7'-Ø" | | A | | 2 | | | | | |
| 305E | CONFERENCE | 305E | 3'-Ø" X 7'-Ø" | | A | | 2 | | | | | |
| 305F | FAX/COPY | 305F.A | 3'-Ø" X 7'-Ø" | | A | | 1 | | | | | |
| 305F | FAX/COPY | 305F.B | 3'-Ø" X 7'-Ø" | | A | | 1 | | | | | |
| 305G | OFFICE | 305G | 3'-Ø" X 7'-Ø" | | A | | 2 | | | | | |
| 305H | OFFICE | 305H | 3'-Ø" X 7'-Ø" | | A | | 2 | | | | | |
| 305I | OFFICE | 305I | 3'-Ø" X 7'-Ø" | | A | | 2 | | | | | |
| 305J | OFFICE | 305J | 3'-Ø" X 7'-Ø" | | A | | 2 | | | | | |
| 305K | OFFICE | 305K | 3'-Ø" X 7'-Ø" | | A | | 2 | | | | | |
| 305L | OFFICE | 305L | 3'-Ø" X 7'-Ø" | | A | | 2 | | | | | |
| 305M | OFFICE | 305M | 3'-Ø" X 7'-Ø" | | A | | 2 | | | | | |
| 305N | OFFICE | 305N | 3'-Ø" X 7'-Ø" | | A | | 2 | | | | | |
| 306 | BREAK RM | 306.A | 3'-Ø" X 7'-Ø" | | A | | 2 | | | | | |
| 306 | BREAK RM | 306.B | 3'-Ø" X 7'-Ø" | | A | | 2 | | | | | |
| 308 | ELEC | 308 | 3'-Ø" X 7'-Ø" | | C | | 1 | | | | | |
| 309 | JANITOR | 309 | 3'-Ø" X 7'-Ø" | | A | | 1 | | | | | |
| 310 | WOMEN'S | 310 | 3'-Ø" X 7'-Ø" | | A | | 1 | | | | | 5 |
| 311 | MEN'S | 311 | 3'-Ø" X 7'-Ø" | | A | | 1 | | | | | 5 |
| 312 | TELE/DATA | 312 | 3'-Ø" X 7'-Ø" | | A | | 1 | | | | | |
| 313 | LOCKER | 313 | 3'-Ø" X 7'-Ø" | | F | | 1 | | | | | 5 |
| 314 | LOCKER | 314 | 3'-Ø" X 7'-Ø" | | F | | 1 | | | | | 5 |
| 315 | STG | 315 | 3'-Ø" X 7'-Ø" | | F | | 4 | | | | | 3, 4 |
| 316 | CYLINDER STG | 316 | 3'-Ø" X 7'-Ø" | | F | | 4 | | | | | 3, 4 |
| 317 | MECHANICAL | 317.A | 3'-6" X 7'-Ø" | 60 MIN. | C | | 1 | | | | | 5 |
| 317 | MECHANICAL | 317.B | 3'-6" X 7'-Ø" | 60 MIN. | C | | 1 | | | | | 5 |
| 318 | VESTIBULE | 318 | 3'-Ø" X 7'-Ø" | | F | | 4 | | | | | 3, 4, 5 |
| 318A | SHOWER OUT | 318A.A | 3'-Ø" X 7'-Ø" | | F | | 4 | | | | | 3, 4, 5 |
| 318A | SHOWER OUT | 318A.B | 3'-Ø" X 7'-Ø" | | F | | 4 | | | | | 3, 4, 5 |
| 318B | GOWN-IN | 318B.A | 3'-Ø" X 7'-Ø" | | F | | 4 | | | | | 3, 4, 5 |
| 318B | GOWN-IN | 318B.B | 3'-Ø" X 7'-Ø" | | F | | 4 | | | | | 3, 4, 5 |
| 318C | SHOWER OUT | 318C.A | 3'-Ø" X 7'-Ø" | | F | | 4 | | | | | 3, 4, 5 |
| 318C | SHOWER OUT | 318C.B | 3'-Ø" X 7'-Ø" | | F | | 4 | | | | | 3, 4, 5 |
| 319 | SUPPORT LAB | 319 | 4'-Ø" X 7'-Ø" | | K | | 5 | | | | | 3, 4 |
| 320 | PROCEDURE ROOM | 320 | 4'-Ø" X 7'-Ø" | | K | | 5 | | | | | 3, 4 |
| 321 | ANIMAL HOLDING ROOM | 321 | 4'-Ø" X 8'-Ø" | | I | | 5 | | | | | 1, 2, 3, 4, 5 |
| 322 | ANIMAL HOLDING ROOM | 322 | 4'-Ø" X 8'-Ø" | | I | | 5 | | | | | 1, 2, 3, 4, 5 |
| 326 | JAN | 326 | 3'-Ø" X 7'-Ø" | | F | | 4 | | | | | 3, 4 |
| 333 | ANIMAL HOLDING ROOM | 333 | 4'-Ø" X 8'-Ø" | | I | | 5 | | | | | 1, 2, 3, 4, 5 |
| 334 | ANIMAL HOLDING ROOM | 334 | 4'-Ø" X 8'-Ø" | | I | | 5 | | | | | 1, 2, 3, 4, 5 |
| 335 | DECON OUT | 335 | 4'-Ø" X 7'-Ø" | | F | | 5 | | | | | 3, 4, 5 |
| 401 | MECHANICAL PENTHOUSE | 401.A | 3'-Ø" X 7'-Ø" | | C | | 1 | | | | | 5 |
| 401 | MECHANICAL PENTHOUSE | 401.B | 3'-Ø" X 7'-Ø" | | C | | 1 | | | | | 5 |
| 401 | MECHANICAL PENTHOUSE | 401.C | 3'-Ø" X 7'-Ø" | | C | | 1 | | | | | 5 |
| 401 | MECHANICAL PENTHOUSE | 401.D | (2) 3'-Ø" X 7'-Ø" | | L | | 1 | | | | | 5 |

# DOOR SCHEDULE NOTES

| | |
|---|---|
| 1 | STAINLESS STEEL PROTECTION PLATES FULL WIDTH OF THE DOOR AND 36" AFF IN HGT. DOOR HANDLE PROTECTORS SHALL BE PROVIDED ON THE CORRIDOR SIDE. |
| 2 | SURFACE MOUNTED SWEEP (ADJUSTABLE) WITH CHEMICAL RESISTANT BRUSH ON CORRIDOR SIDE. GAP SHALL NOT EXCEED 1/4". |
| 3 | ALL SPECIFIED DOOR HARDWARE SHALL BE SET IN SEALANT. |
| 4 | STAINLESS STEEL STANDARD HINGE CONTINUOUS HINGE. |
| 5 | SELF-CLOSING CLOSER WITH VARIABLE DELAY AND HOLD OPEN SURFACE MOUNTED ON ROOM SIDE. |
| 6 | TRASHOLD SHALL BE FULLY EPOXY GROUTED AND INSTALLED IN A BED OF SEALANT. |
| 7 | DOORS SERVING AIRLOCK/ANTE ROOM SHALL BE ELECTRONICALLY INTERLOCKED SO THAT ONLY ONE DOOR MAY BE OPENED AT A TIME. |
| 8 | ALL AIRLOCK DOOR SHALL BE PROVIDED WITH EMERGENCY OVERRIDE FEATURE FOR EGRESS POURPOSE. |

# DOOR SCHEDULE ABBREVIATIONS

NOTE: NOT ALL ABBREVIATIONS MAY BE USED THIS SHEET.

| | | | |
|---|---|---|---|
| HM | HOLLOW METAL | ST | STAIN (SELECTED BY ARCHITECT) |
| PT | PAINT (SEE FINISH SCHEDULE) | WD | WOOD |
| FA | FACTORY FINISH | AL | ANODIZED |
| | | CL | PROVIDE FINAL CLEAN OF EXISTING FINISH TO REMAIN. |

# DOOR TYPES

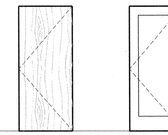

"A"
SOLID CORE FLUSH WOOD DOOR

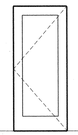

"B"
ALUMINUM STOREFRONT W/ FULL LIGHT & MEDIUM STILE AND RAIL. W/ CLEAR TEMPERED INSULATED GLAZING

"C"
16 GA INSULATED HOLLOW METAL DOOR PAINT. (GALVANIZED & PRIMED AT ALL EXTERIOR LOCATIONS.)

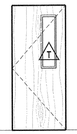

"D"
SOLID CORE FLUSH WOOD DOOR W/ STANDARD NARROW LIGHT W/ CLEAR TEMPERED GLAZING.

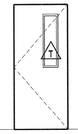

"E"
16 GA INSULATED HOLLOW METAL DOOR PAINT. W/ STANDARD NARROW LIGHT W/ CLEAR TEMPERED GLAZING.

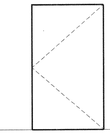

"F"
FRP DOOR W/ FULLY WELDED EDGES AND SOLID FILLED CAVITY.

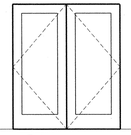

"G"
ALUMINUM STOREFRONT W/ FULL LIGHT & MEDIUM STILE AND RAIL. W/ CLEAR TEMPERED INSULATED GLAZING

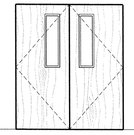

"H"
SOLID CORE FLUSH WOOD DOOR W/ STANDARD NARROW LIGHT W/ CLEAR TEMPERED GLAZING.

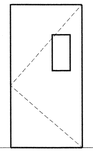

"I"
FRP DOOR W/ FULLY WELDED EDGES AND SOLID FILLED CAVITY. W/ 12"X24" VIEW WINDOW W/ RED LAMINATED GLASS.

FINISH FLR.

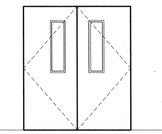

"J"
FRP DOOR W/ FULLY WELDED EDGES AND SOLID FILLED CAVITY. W/ STANDARD NARROW LIGHT W/ CLEAR TEMPERED GLAZING.

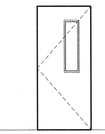

"K"
FRP DOOR W/ FULLY WELDED EDGES AND SOLID FILLED CAVITY W/ STANDARD NARROW LIGHT W/ CLEAR TEMPERED GLAZING.

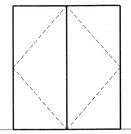

"L"
16 GA INSULATED HOLLOW METAL DOOR PAINT.

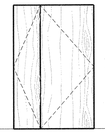

"M"
SOLID CORE FLUSH WOOD DOOR

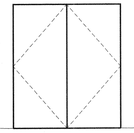

"N"
FRP DOOR W/ FULLY WELDED EDGES AND SOLID FILLED CAVITY.

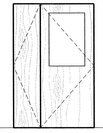

"O"
SOLID CORE FLUSH WOOD DOOR W/ HALF LIGHT. W/ CLEAR TEMPERED INSULATED GLAZING

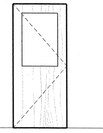

"P"
SOLID CORE FLUSH WOOD DOOR W/ HALF LIGHT. W/ CLEAR TEMPERED INSULATED GLAZING

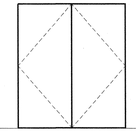

"U"
ALL GLASS ENTRANCE DOOR W/ PIVOTS TOP & BOTTOM, 1/2" THICK TEMPERED GLAZING & FULLS ON BOTH SIDES.

FINISH FLR.

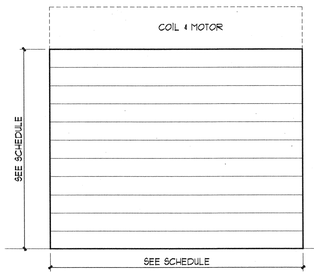


"R"
MOTORIZED INSULATED OVERHEAD COILING DOOR.

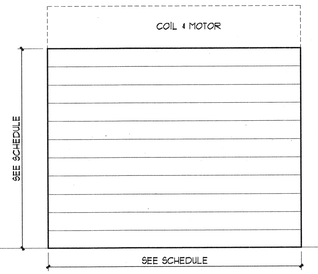


"S"
MOTORIZED UNINSULATED OVERHEAD COILING DOOR.

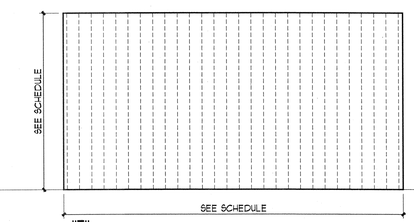


"T"
NON-DOOR FIREGUARD - MOTORIZED ACCORDION FIRE SAFETY DOOR.

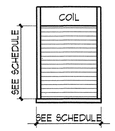


"U"
PUSH-UP S.S. BETWEEN JAMBS MANUAL COUNTER DOOR W/ INTEGRAL S.S. JAMB AND SILL.

FINISH FLR.

# FRAME TYPES

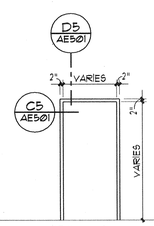


"1"
2"x 5-3/4" HOLLOW METAL FULLY WELDED FRAME. GALVANIZED & PRIMED AT ALL EXTERIOR LOCATIONS.

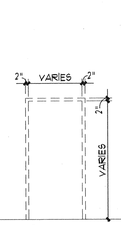


"2"
PART OF WINDOW. SEE WINDOW TYPES

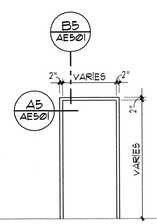


"3"
2"x 8-1/8" HOLLOW METAL FULLY WELDED FRAME. GALVANIZED & PRIMED AT ALL EXTERIOR LOCATIONS.

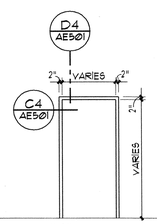


"4"
2"x 5-3/4" STAINLESS STEEL FULLY WELDED FRAME. HIGH-PERFORMANCE EPOXY COATED. EPOXY GROUTED SOLID.

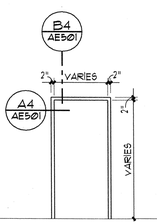


"5"
2"x 8-1/8" STAINLESS STEEL FULLY WELDED FRAME. HIGH-PERFORMANCE EPOXY COATED. EPOXY GROUTED SOLID.

FINISH FLR.


ARCHITECT 0818

ajc architects

703 east 1700 south
salt lake city, utah 84105
ph: 801.466.8818
fx: 801.466.4411
ajc@ajcarchitects.com


OWNER INFORMATION

**State of Utah**
Department of Administrative Services

DFCM
Division of Facilities Construction & Management
4110 State Office Building
Salt Lake City, Utah 84114
Phone: (801) 538 - 3018
Fax: (801) 538 - 3267

Internet: http://www.dfcm.utah.gov

PROJECT DESCRIPTION

LIFE SCIENCES RESEARCH CENTER
UTAH STATE UNIVERSITY

USTAR BUILDING #2
350 EAST GRAND AVE.
LOGAN, UTAH

SHEET NAME:
DOOR SCHEDULE
DOOR TYPES &
FRAME TYPES

REVISIONS

| MARK | DATE | DESCRIPTION |
|---|---|---|

ISSUE DATA

| | |
|---|---|
| ISSUE DATE: | DEC. 9, 2008 |
| ISSUE TYPE: | DESDEV |
| DRAWN BY: | J. NIELSEN |
| CHECKED BY: | J. JONES |
| CAD FILE NAME: | 0654AE601 |
| DFCM PROJECT # | 06292770 |
| STATE PROPERTY # | - |
| COPYRIGHT: | STATE OF UTAH |

SHEET NUMBER:

AE602

## GRAPHIC LEGEND

SPANDREL

CORRUGATED PERFORATED METAL PANEL ON CURTAIN WALL - SEE EXT. ELEVATIONS.

OPERABLE WINDOW — HINGED SIDE

## TYPICAL CURTAIN WALL DETAILS

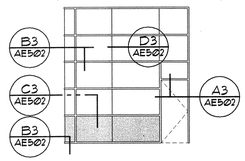


## GLAZING TYPES

| | |
|---|---|
| 1/4" CLEAR GLAZING | A |
| 1" TINTED LOW 'E' INSULATED GLAZING | B |
| 1" SPANDREL GLAZING | C |
| 1/4" CLEAR TEMPERED GLAZING | T1 |
| 1/4" FROSTED TEMPERED GLAZING | T2 |
| 1" TINTED LOW 'E' INSULATED TEMPERED GLAZING | T3 |

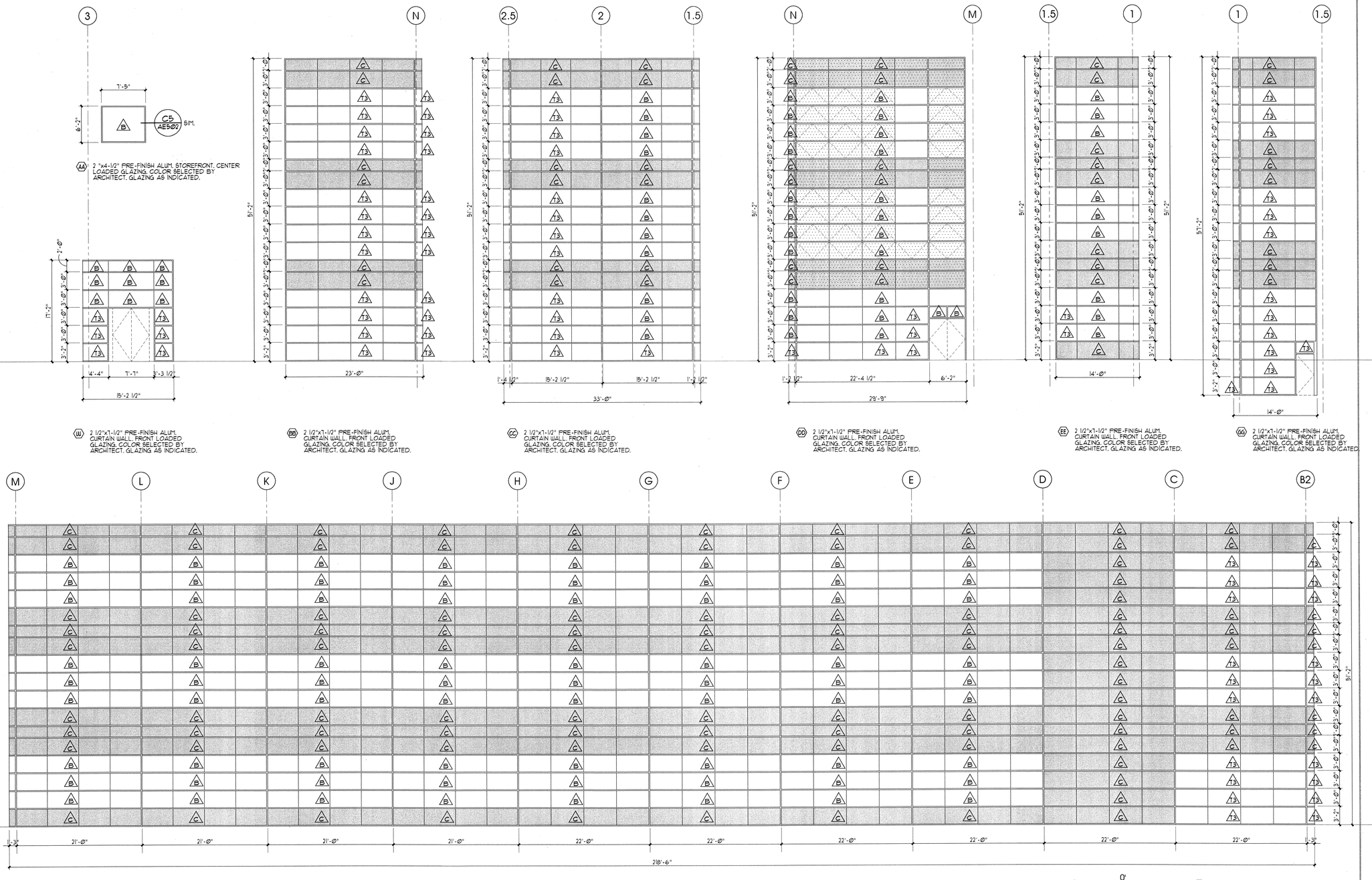


(AA) 2 "x4-1/2" PRE-FINISH ALUM. STOREFRONT, CENTER LOADED GLAZING, COLOR SELECTED BY ARCHITECT. GLAZING AS INDICATED.

(W) 2 1/2"x7-1/2" PRE-FINISH ALUM. CURTAIN WALL, FRONT LOADED GLAZING, COLOR SELECTED BY ARCHITECT. GLAZING AS INDICATED.

(BB) 2 1/2"x7-1/2" PRE-FINISH ALUM. CURTAIN WALL, FRONT LOADED GLAZING, COLOR SELECTED BY ARCHITECT. GLAZING AS INDICATED.

(CC) 2 1/2"x7-1/2" PRE-FINISH ALUM. CURTAIN WALL, FRONT LOADED GLAZING, COLOR SELECTED BY ARCHITECT. GLAZING AS INDICATED.

(DD) 2 1/2"x7-1/2" PRE-FINISH ALUM. CURTAIN WALL, FRONT LOADED GLAZING, COLOR SELECTED BY ARCHITECT. GLAZING AS INDICATED.

(EE) 2 1/2"x7-1/2" PRE-FINISH ALUM. CURTAIN WALL, FRONT LOADED GLAZING, COLOR SELECTED BY ARCHITECT. GLAZING AS INDICATED.

(GG) 2 1/2"x7-1/2" PRE-FINISH ALUM. CURTAIN WALL, FRONT LOADED GLAZING, COLOR SELECTED BY ARCHITECT. GLAZING AS INDICATED.

8' 0' 8'
scale = 1/8" = 1'-0"

(FF) 2 1/2"x7-1/2" PRE-FINISH ALUM. CURTAIN WALL, FRONT LOADED GLAZING, COLOR SELECTED BY ARCHITECT. GLAZING AS INDICATED.


ARCHITECT 0818

ajc architects

703 east 1700 south
salt lake city, utah 84105
ph: 801.466.8818
fx: 801.466.4411
ajc@ajcarchitects.com


OWNER INFORMATION

**State of Utah**
Department of Administrative Services

Division of Facilities Construction & Management
4110 State Office Building
Salt Lake City, Utah 84114
Phone: (801) 538 - 3018
Fax: (801) 538 - 3267

Internet: http://www.dfcm.utah.gov

PROJECT DESCRIPTION

# LIFE SCIENCES RESEARCH CENTER
## UTAH STATE UNIVERSITY

USTAR BUILDING #2
350 EAST GRAND AVE.
LOGAN, UTAH

SHEET NAME:
WINDOW FRAME TYPES

REVISIONS

| MARK | DATE | DESCRIPTION |
|---|---|---|

ISSUE DATA

| | |
|---|---|
| ISSUE DATE: | DEC. 9, 2008 |
| ISSUE TYPE: | DESDEV |
| DRAWN BY: | J. NIELSEN |
| CHECKED BY: | J. JONES |
| CAD FILE NAME: | 0654AE601 |
| DFCM PROJECT # | 06292770 |
| STATE PROPERTY # | - |
| COPYRIGHT: | STATE OF UTAH |

SHEET NUMBER:

AE603

## GRAPHIC LEGEND

SPANDREL

CORRUGATED PERFORATED METAL PANEL ON CURTAIN WALL - SEE EXT. ELEVATIONS.

OPERABLE WINDOW — HINGED SIDE

## TYPICAL CURTAIN WALL DETAILS

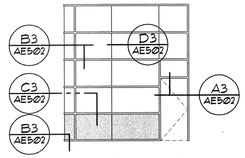


## GLAZING TYPES

| | |
|---|---|
| 1/4" CLEAR GLAZING | A |
| 1" TINTED LOW 'E' INSULATED GLAZING | B |
| 1" SPANDREL GLAZING | C |
| 1/4" CLEAR TEMPERED GLAZING | T1 |
| 1/4" FROSTED TEMPERED GLAZING | T2 |
| 1" TINTED LOW 'E' INSULATED TEMPERED GLAZING | T3 |

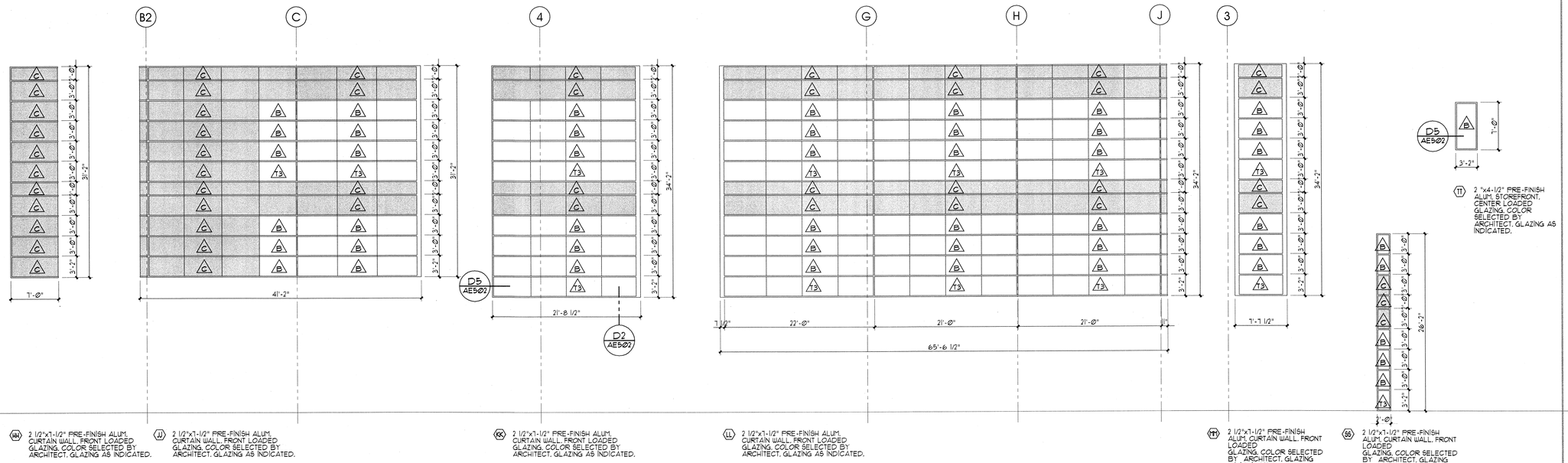


(MM) 2 1/2"x1-1/2" PRE-FINISH ALUM. CURTAIN WALL, FRONT LOADED GLAZING, COLOR SELECTED BY ARCHITECT. GLAZING AS INDICATED.

(JJ) 2 1/2"x1-1/2" PRE-FINISH ALUM. CURTAIN WALL, FRONT LOADED GLAZING, COLOR SELECTED BY ARCHITECT. GLAZING AS INDICATED.

(KK) 2 1/2"x1-1/2" PRE-FINISH ALUM. CURTAIN WALL, FRONT LOADED GLAZING, COLOR SELECTED BY ARCHITECT. GLAZING AS INDICATED.

(LL) 2 1/2"x1-1/2" PRE-FINISH ALUM. CURTAIN WALL, FRONT LOADED GLAZING, COLOR SELECTED BY ARCHITECT. GLAZING AS INDICATED.

(YY) 2 1/2"x1-1/2" PRE-FINISH ALUM. CURTAIN WALL, FRONT LOADED GLAZING, COLOR SELECTED BY ARCHITECT. GLAZING AS INDICATED.

(SS) 2 1/2"x1-1/2" PRE-FINISH ALUM. CURTAIN WALL, FRONT LOADED GLAZING, COLOR SELECTED BY ARCHITECT. GLAZING AS INDICATED.

(T1) 2 "x4-1/2" PRE-FINISH ALUM. STOREFRONT, CENTER LOADED GLAZING, COLOR SELECTED BY ARCHITECT. GLAZING AS INDICATED.

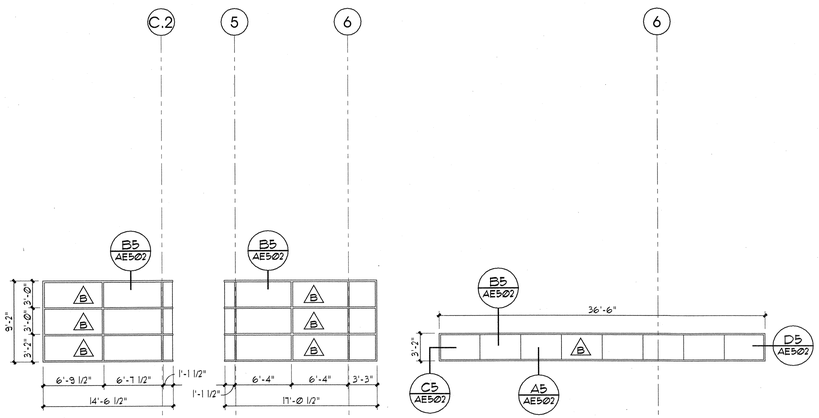


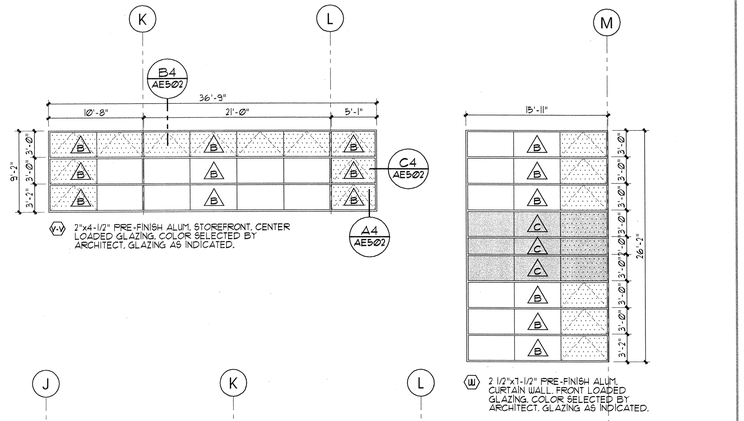


(W-W) 2"x4-1/2" PRE-FINISH ALUM. STOREFRONT, CENTER LOADED GLAZING, COLOR SELECTED BY ARCHITECT. GLAZING AS INDICATED.

(WW) 2 1/2"x1-1/2" PRE-FINISH ALUM. CURTAIN WALL, FRONT LOADED GLAZING, COLOR SELECTED BY ARCHITECT. GLAZING AS INDICATED.

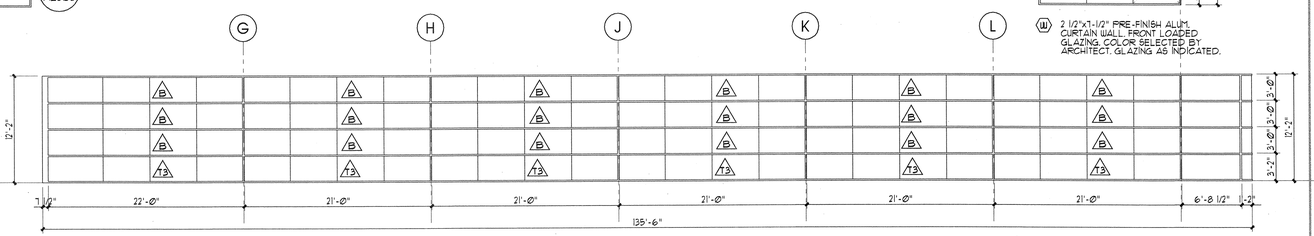


(RR) 2 1/2"x1-1/2" PRE-FINISH ALUM. STOREFRONT, CENTER LOADED GLAZING, COLOR SELECTED BY ARCHITECT. GLAZING AS INDICATED.

(PP) 2 1/2"x1-1/2" PRE-FINISH ALUM. STOREFRONT, CENTER LOADED GLAZING, COLOR SELECTED BY ARCHITECT. GLAZING AS INDICATED.

(QQ) 2 1/2"x1-1/2" PRE-FINISH ALUM. STOREFRONT, CENTER LOADED GLAZING, COLOR SELECTED BY ARCHITECT. GLAZING AS INDICATED.

(NN) 2 1/2"x1-1/2" PRE-FINISH ALUM. CURTAIN WALL, FRONT LOADED GLAZING, COLOR SELECTED BY ARCHITECT. GLAZING AS INDICATED.

(UU) 2 1/2"x1-1/2" PRE-FINISH ALUM. CURTAIN WALL, FRONT LOADED GLAZING, COLOR SELECTED BY ARCHITECT. GLAZING AS INDICATED.

8' 0' 8'
scale = 1/8" = 1'-0"


ARCHITECT 0818

ajc architects

703 east 1700 south
salt lake city, utah 84105
ph: 801.466.8818
fx: 801.466.4411
ajc@ajcarchitects.com


OWNER INFORMATION

**State of Utah**
Department of Administrative Services

Division of Facilities
Construction & Management
4110 State Office Building
Salt Lake City, Utah 84114
Phone: (801) 538 - 3018
Fax: (801) 538 - 3267

Internet: http://www.dfcm.utah.gov

PROJECT DESCRIPTION

# LIFE SCIENCES RESEARCH CENTER
## UTAH STATE UNIVERSITY

USTAR BUILDING #2
350 EAST GRAND AVE.
LOGAN, UTAH

SHEET NAME:
WINDOW FRAME TYPES

REVISIONS

| MARK | DATE | DESCRIPTION |
|---|---|---|

ISSUE DATA

| | |
|---|---|
| ISSUE DATE: | DEC. 9, 2008 |
| ISSUE TYPE: | DESDEV |
| DRAWN BY: | J. NIELSEN |
| CHECKED BY: | J. JONES |
| CAD FILE NAME: | 0654AE601 |
| DFCM PROJECT # | 06292770 |
| STATE PROPERTY # | - |
| COPYRIGHT: | STATE OF UTAH |

SHEET NUMBER:

# AE604

## GLAZING TYPES

| | |
|---|---|
| 1/4" CLEAR GLAZING | A |
| 1/2" CLEAR INSULATED GLAZING | B |
| 1/2" SPANDREL GLAZING | C |
| 1/4" CLEAR TEMPERED GLAZING | T1 |
| 1/4" FROSTED TEMPERED GLAZING | T2 |
| 1/2" CLEAR INSULATED TEMPERED GLAZING | T3 |

## TYPICAL WINDOW FRAME DETAILS

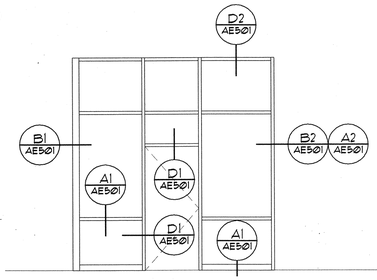


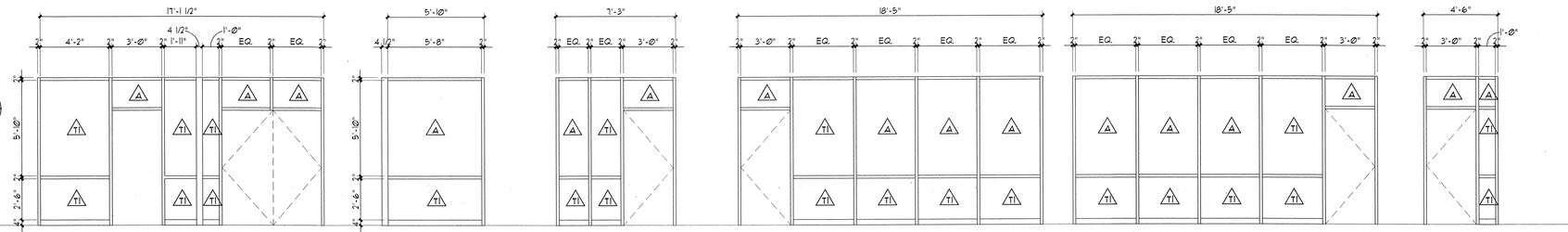


(A) 2"x4-1/2" ALUM. STOREFRONT FRAME. CENTER LOADED GLAZING. GLAZING AS INDICATED.
(B) 2"x4-1/2" ALUM. STOREFRONT FRAME. CENTER LOADED GLAZING. GLAZING AS INDICATED.
(C) 2"x4-1/2" ALUM. STOREFRONT FRAME. CENTER LOADED GLAZING. GLAZING AS INDICATED.
(D) 2"x4-1/2" ALUM. STOREFRONT FRAME. CENTER LOADED GLAZING. GLAZING AS INDICATED.
(D) 2"x4-1/2" ALUM. STOREFRONT FRAME. CENTER LOADED GLAZING. GLAZING AS INDICATED.
(E) 2"x4-1/2" ALUM. STOREFRONT FRAME. CENTER LOADED GLAZING. GLAZING AS INDICATED.

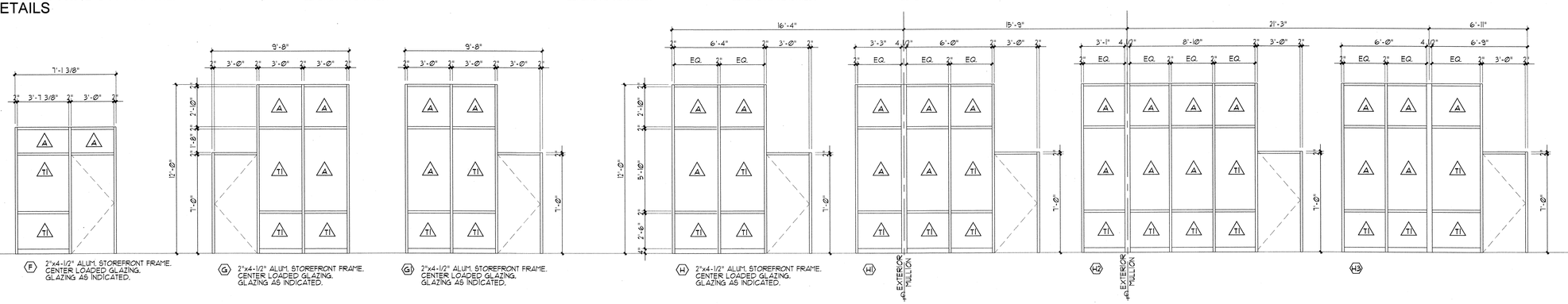


(F) 2"x4-1/2" ALUM. STOREFRONT FRAME. CENTER LOADED GLAZING. GLAZING AS INDICATED.
(G) 2"x4-1/2" ALUM. STOREFRONT FRAME. CENTER LOADED GLAZING. GLAZING AS INDICATED.
(G1) 2"x4-1/2" ALUM. STOREFRONT FRAME. CENTER LOADED GLAZING. GLAZING AS INDICATED.
(H) 2"x4-1/2" ALUM. STOREFRONT FRAME. CENTER LOADED GLAZING. GLAZING AS INDICATED.
(H1) (H2) (H3)

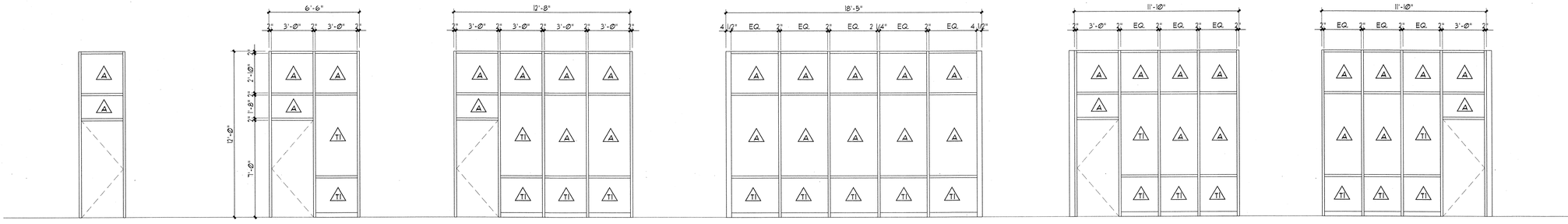


(H1) 2"x4-1/2" ALUM. STOREFRONT FRAME. CENTER LOADED GLAZING. GLAZING AS INDICATED.
(J) 2"x4-1/2" ALUM. STOREFRONT FRAME. CENTER LOADED GLAZING. GLAZING AS INDICATED.
(K) 2"x4-1/2" ALUM. STOREFRONT FRAME. CENTER LOADED GLAZING. GLAZING AS INDICATED.
(L) 2"x4-1/2" ALUM. STOREFRONT FRAME. CENTER LOADED GLAZING. GLAZING AS INDICATED.
(M) 2"x4-1/2" ALUM. STOREFRONT FRAME. CENTER LOADED GLAZING. GLAZING AS INDICATED.
(M1) 2"x4-1/2" ALUM. STOREFRONT FRAME. CENTER LOADED GLAZING. GLAZING AS INDICATED.

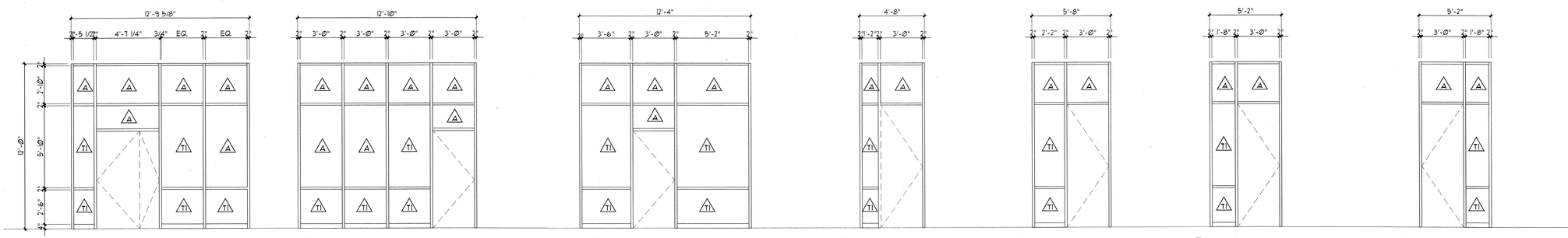


(N) 2"x4-1/2" ALUM. STOREFRONT FRAME. CENTER LOADED GLAZING. GLAZING AS INDICATED.
(P) 2"x4-1/2" ALUM. STOREFRONT FRAME. CENTER LOADED GLAZING. GLAZING AS INDICATED.
(R) 2"x4-1/2" ALUM. STOREFRONT FRAME. CENTER LOADED GLAZING. GLAZING AS INDICATED.
(S) 2"x4-1/2" ALUM. STOREFRONT FRAME. CENTER LOADED GLAZING. GLAZING AS INDICATED.
(T) 2"x4-1/2" ALUM. STOREFRONT FRAME. CENTER LOADED GLAZING. GLAZING AS INDICATED.
(U) 2"x4-1/2" ALUM. STOREFRONT FRAME. CENTER LOADED GLAZING. GLAZING AS INDICATED.
(U1) 2"x4-1/2" ALUM. STOREFRONT FRAME. CENTER LOADED GLAZING. GLAZING AS INDICATED.

4' 0' 4'
scale = 1/4" = 1'-0"


ARCHITECT 0818
ajc architects
703 east 1700 south
salt lake city, utah 84105
ph: 801.466.8818
fx: 801.466.4411
ajc@ajcarchitects.com


OWNER INFORMATION

**State of Utah**
Department of Administrative Services
Division of Facilities Construction & Management
4110 State Office Building
Salt Lake City, Utah 84114
Phone: (801) 538 - 3018
Fax: (801) 538 - 3267
Internet: http://www.dfcm.utah.gov

PROJECT DESCRIPTION

# LIFE SCIENCES RESEARCH CENTER
## UTAH STATE UNIVERSITY

USTAR BUILDING #2
350 EAST GRAND AVE.
LOGAN, UTAH

SHEET NAME:
WINDOW FRAME TYPES

REVISIONS

| MARK | DATE | DESCRIPTION |
|---|---|---|

ISSUE DATA

| | |
|---|---|
| ISSUE DATE: | DEC. 9, 2008 |
| ISSUE TYPE: | DESDEV |
| DRAWN BY: | J. NIELSEN |
| CHECKED BY: | J. JONES |
| CAD FILE NAME: | 0654AE601 |
| DFCM PROJECT # | 06292770 |
| STATE PROPERTY # | - |
| COPYRIGHT: | STATE OF UTAH |

SHEET NUMBER:

# AE605

# ACCESSORY SCHEDULE:

ALL ITEMS CONTRACTOR PROVIDED AND CONTRACTOR INSTALLED UNLESS NOTED OTHERWISE AS PER ABBREVIATIONS BELOW.

OFOI = OWNER FURNISHED AND OWNER INSTALLED.

OFCI = OWNER FURNISHED AND CONTRACTOR INSTALLED.

PROVIDE BLOCKING IN WALLS FOR ALL EQUIPMENT LISTED BELOW AND SHOWN ELSEWHERE IN DRAWINGS.

ACCESSORY ITEM (ONE EACH ROOM UNLESS NOTED OTHERWISE)

| ITEM | ITEM | ITEM | ITEM | ITEM | ITEM |
|---|---|---|---|---|---|
| 8 FT WIDE PROJECTION SCREEN RECESSED CEILING MOUNTED W/ PULL CHORD | 8 FT WIDE PROJECTION SCREEN RECESSED CEILING MOTORIZED | 4' x 4' WHITE BOARD (HIGH GLOSS WHITE) W/ CHALK TRAY | (2) TIER LOCKERS. | WALL MOUNTED SOAP DISPENSER BOBRICK B-132 | 18", 42", 36" WC GRAB BARS. VERIFY QTY ON PLANS. BOBRICK B-5806 |
| ROOM | ROOM | ROOM | ROOM | ROOM | ROOM |
| - | - | - | - | - | - |

| ITEM | ITEM | ITEM | ITEM | ITEM | ITEM |
|---|---|---|---|---|---|
| SHOWER GRAB BAR VERIFY QTY ON PLAN BOBRICK B-5837 | BABY CHANGING STATION BOBRICK B-2210 | COAT HOOKS. (MOUNT ON RM SIDE OF DOOR) BOBRICK B-253 | SHOWER SEAT -B-5181<br>SHOWER ROD -B-6047-36<br>SHOWER CURTAIN -B-204-2<br>TOWEL SHELF -B-7676 | MIRROR 24"x30" BOBRICK B-165 | MIRROR 48"x 30" BOBRICK B-165 |
| ROOM | ROOM | ROOM | ROOM | ROOM | ROOM |
| - | - | - | - | - | - |

| ITEM | ITEM | ITEM | ITEM | ITEM | ITEM |
|---|---|---|---|---|---|
| MOP RACK BOBRICK B-239 | SANITARY NAPKIN DISPOSAL VERIFY QTY ON PLAN BOBRICK B-270 | TOILET PAPER DISPENSER BOBRICK B-253 | RECESSED PAPER TOWEL DISPENSER BOBRICK B-35903 | | |
| ROOM | ROOM | ROOM | ROOM | | |
| - | - | - | - | | |

## WINDOW COVERINGS

| ITEM | ITEM |
|---|---|
| HORIZONTAL LOUVER BLINDS @ INTERIOR WINDOWS OF: | ROLLER SHADES @ EXTERIOR WINDOWS OF: |
| ROOM | ROOM |
| 205B<br>205E<br>305B<br>305E | 158A 204 304<br>158B 205B-N 305B-N<br>138<br>151 |

## MISC EQUIPMENT

| ITEM | ITEM | ITEM | ITEM | ITEM | ITEM |
|---|---|---|---|---|---|
| DOCK LEVELER | BIKE RACK | PASS THROUGH | HOIST TELESCOPING TROLLEY W/ WIRE ROPE HOIST RATED @ 1 TON W/ 100 FT LIFT | | |
| ROOM | ROOM | ROOM | ROOM | | |
| 109B<br>109A | (3) TOTAL AT SITE | 148 | PENTHOUSE | | |

## ELEVATOR

| ITEM | ITEM | ITEM | ITEM | |
|---|---|---|---|---|
| ELEVATOR 100W HOLELESS JACK 2100 LB 36" DOOR | ELEVATOR 100G HOLELESS JACK 4500 LB 48" DOOR | ELEVATOR 100H HOLELESS JACK 3500 LB 48" DOOR | ELEVATOR 100S HOLELESS JACK 3500 LB 48" DOOR | |
| | | | | |

# INTERIOR FINISH LEGEND

| SYMBOL | FINISH | NOTE (SEE ALSO ROOM FINISH NOTES) |
|---|---|---|
| | **FLOOR** | |
| CP1 | CARPET: | CARPET TILE |
| CP2 | CARPET: | CARPET TILE |
| ST | PORCELAIN OR STONE TILE: | LARGE FORMAT 18"x18" ON 2" MUD BED |
| FM | WALK-OFF MAT: | GRATE |
| CS | CONCRETE FLOOR SEALER | - |
| CFT1 | CERAMIC FLOOR TILE 1: | 80% PRICE GROUP 2-3, 20% PRICE GROUP 4 |
| CFT2 | CERAMIC FLOOR TILE 2 : | 80% PRICE GROUP 2-3, 20% PRICE GROUP 4 |
| QT | QUARRY TILE: | 8" QUARRY TILE ON 2" MUD BED |
| RF1 | EPOXY COATING: 3/16" TROWELED URETHANE MORTAR SYSTEM W/ INTEGRAL COVE BASE EXTENDING 6" AFF. | - |
| RF2 | EPOXY COATING: 1/4" TROWELED URETHANE MORTAR SYSTEM W/ INTEGRAL COVE BASE EXTENDING 6" AFF. | - |
| RF3 | HIGH PERFORMANCE RESINOUS EPOXY EQUAL TO CROSSFIELD DEX-O-TEX M-E WITH WATERPROOF MEMBRANE LAYER. | - |
| VCT | VINYL COMPOSITE TILE: | FIELD COLOR W/ BORDER |
| CO | CONCRETE-NO SEALER | - |
| | **BASE** | |
| EB1 | EPOXY COATING: 3/16" INTEGRAL COVE BASE EXTENDING 6" AFF | - |
| EB2 | EPOXY COATING: 1/4" INTEGRAL COVE BASE EXTENDING 6" AFF. | - |
| RB | RUBBER BASE: 4" HIGH RUBBER COVE BASE. | - |
| CTB | CERAMIC TILE BASE: | W/ SANITARY COVE |
| VB | VINYL BASE: 4" HIGH APPLIED VINYL COVE BASE. | - |
| | **WALL FINISH** | |
| CWT1 | CERAMIC WALL TILE 1: | 80% PRICE GROUP 2-3, 20% PRICE GROUP 4 |
| CWT2 | CERAMIC WALL TILE 2: | 80% PRICE GROUP 2-3, 20% PRICE GROUP 4 |
| EW1 | HIGH-PERFORMANCE EPOXY WALL COATING. | - |
| EW2 | FIBER RESIN GEL-COATED CEMENT PANEL. | EQUAL TO ARCOPLAST |
| | **CEILINGS** | |
| EXP | EXPOSED STRUCTURE. NO PAINT. | - |
| ACT1 | ACOUSTICAL CEILING TILES 2' x 2' | EQUAL TO ARMSTRONG DUNE |
| ACT2 | MYLAR FACED ACOUSTICAL CEILING TILES 2' x 4' | - |
| ACT3 | MYLAR FACED ACOUSTICAL CEILING TILES 2' x 2' | - |
| FCT | FIBER RESIN CEMENT CEILING TILES 2' x 2' | EQUAL TO ARCOPLAST |
| C1 | IMPACT RESISTANT (IR) GYP. BD. WITH HIGH PERFORMANCE EPOXY COATING. | - |
| C2 | GYP. BD. PAINT. ACRYLIC LATEX FLAT FINISH | - |
| C3 | (2) LAYERS 5/8" IMPACT RESISTANT GYP. BD. WITH HIGH PERFORMANCE EPOXY COATING. | - |
| WC | PERFORATED WOOD CEILING TILES | EQUAL TO ARMSTRONG |
| | **PAINT LEGEND** | |
| P1 | PAINT: PAINT FIELD | - |
| P2 | PAINT: PAINT ACCENT | - |

## EXTERIOR MATERIAL / FINISH LEGEND

| ITEM: | DESCRIPTION: |
|---|---|
| PERFORATED CORRUGATED METAL PANEL | EQUAL TO UMICORE VM ZINC 7/8" CORRUGATE (SINGLE WAVE) PANEL PERFORATED TO 50% TRANSPARENCY |
| CORRUGATED METAL PANEL | EQUAL TO UMICORE VM ZINC 7/8" CORRUGATE (SINGLE WAVE) PANEL |
| SHIPLAP METAL PANEL | EQUAL TO UMICORE VM ZINC FLATLOCK WALL PANEL |
| COMPOSITE WOOD PANEL | EQUAL TO PARKLEX FACADE |
| GLAZED CURTAIN WALL | EQUAL TO KAWNEER 1600 SYSTEM 2. CUSTOM COLOR BY ARCHITECT. |
| GLAZED ALUMINUM STOREFRONT | EQUAL TO KAWNER 451. CUSTOM COLOR BY ARCHITECT. |
| GREEN SCREEN | EQUAL TO GREENSCREEN MODULAR WALL HUNG TRELLIS |
| EXPOSED STRUCTURAL STEEL | PAINT W/ TENEMEC PRIMER. |
| BRICK | MATCH TO BUILDING 620 (USE AT GENERATOR ENCLOSURE) |
| PARAPET CAP FLASHING & ALL EXPOSED ROOF FLASHING | PRE-FINISHED KYNAR METAL. |


ARCHITECT 0818

ajc architects

703 east 1700 south
salt lake city, utah 84105
ph: 801.466.8818
fx: 801.466.4411
ajc@ajcarchitects.com



OWNER INFORMATION

State of Utah
Department of Administrative Services

Division of Facilities
Construction & Management
4110 State Office Building
Salt Lake City, Utah 84114
Phone: (801) 538 - 3018
Fax: (801) 538 - 3267

Internet: http://www.dfcm.utah.gov


PROJECT DESCRIPTION

LIFE SCIENCES RESEARCH CENTER
UTAH STATE UNIVERSITY

USTAR BUILDING #2
350 EAST GRAND AVE.
LOGAN, UTAH

SHEET NAME:

FINISH LEGEND
ACCESORY SCHEDULE
ACCESSIBILITY LEGEND
SIGN SCHEDULE

REVISIONS

MARK DATE DESCRIPTION


ISSUE DATA

ISSUE DATE: DEC. 9, 2008
ISSUE TYPE: DESDEV
DRAWN BY: J. NIELSEN
CHECKED BY: J. JONES
CAD FILE NAME: 0654AE604
DFCM PROJECT # 06292770
STATE PROPERTY # -



COPYRIGHT: STATE OF UTAH


SHEET NUMBER:

AE606

# INTERIOR LAB, VIVARIUM, AND BIOCONTAINMENT FIT-OUT DRAWINGS

## ABBREVIATIONS AND SYMBOLS

C— LAB COLD WATER
H— LAB HOT WATER
MV MIXING VALVE
RO — REVERSE OSMOSIS WATER
N— NITROGEN
A— COMPRESSED AIR
V— LAB VACUUM
$CO_2$ — CARBON DIOXIDE (PROVIDED FROM LOCAL TANK(S))
SP— SPARE / FUTURE USE OUTLET
ST— STEAM (PRESSURE TBD)
$P_S$— PROCESS CHILLED WATER SUPPLY
$P_R$— PROCESS CHILLED WATER RETURN
EW EYE WASH
EW/ES EYE WASH AND EMERGENCY SAFETY SHOWER
OSP OVERHEAD SERVICE PANEL
PLUMBING OUTLETS IN OSP TO BE QUICK DISCONNECT TYPE
ELECTRICAL OUTLETS IN OSP TO BE TWIST LOCK TYPE
TELEPHONE OUTLET
"W"= WALL TELEPHONE OUTLET
STANDARD DATA OUTLET (2 JACKS/OUTLET UNLESS OTHERWISE BY NUMBER)
"DP2"= BENCH TOP DATA PEDESTAL DUPLEX OUTLET
110 VOLT DUPLEX OUTLET (2 OUTLETS UNLESS OTHERWISE BY NUMBER)
"SB"= STAND-BY POWER GENERATOR OUTLET. (ALL SB OUTLETS TO BE 20A SINGLE CIRCUIT)
"KS"= OUTLET LOCATED IN KNEE SPACE / UNDER COUNTER
"GF"= GROUND FAULT PROTECTED OUTLET
"EP4"= BENCH TOP ELECTRICAL PEDESTAL 110 V QUAD OUTLET
208V SPECIAL VOLTAGE ELECTRICAL OUTLET
PREFIX WILL DENOTE VOLATGE AND/OR AMPERAGE
EX 4" DIAMETER EXHAUST PORT/BLAST GATE WITH STRUCTURE TO SUPPORT ARTICULATED ARM SNORKEL AND REDUCER FOR SMALL DIAMETER CONNECTIONS
SURFACE MOUNTED RACEWAY (SMR). (ALL SB OUTLETS TO BE 20A SINGLE CIRCUIT)
SMR-1: 120V DUPLEX OUTLETS @ 24" O.C. W/ (1) 120V SB + DUPLEX DATA JACKS @ 48" O.C.
SMR-2: 120V DUPLEX OUTLETS @ 24" O.C. W/ (2) 120V SB & (1) 208V SB + DUPLEX DATA JACKS @ 72" O.C.
SMR-3: 120V DUPLEX OUTLETS @ 48" O.C. & 208V SB @ 48" O.C. + DUPLEX DATA JACKS @ 72" O.C.

FD FLOOR DRAIN
FH FUME HOOD
FH-1 = 4' FUME HOOD
FH-2 = 5' FUME HOOD
FH-3 = 6' FUME HOOD
S-1 SINK
NUMBER REFERS TO RELATIVE SIZE

IB-1 ISLAND BENCH, TYPE 1 - SEE QL910
IB-2 ISLAND BENCH, TYPE 2 - SEE QL911
IB-3 ISLAND BENCH, TYPE 3 - SEE QL912
WB-1 WALL BENCH, TYPE 1 (INCLUDES OPPOSITE HAND CONFIGURATION OF LAYOUT) - SEE QL914
WB-2 WALL BENCH, TYPE 2 (INCLUDES OPPOSITE HAND CONFIGURATION OF LAYOUT) - SEE QL914
WB-3 WALL BENCH, TYPE 3 (INCLUDES OPPOSITE HAND CONFIGURATION OF LAYOUT) - SEE QL914
WB-4 WALL BENCH, TYPE 4 - SEE QL914
WB-5 WALL BENCH, TYPE 5 - SEE QL914
WB-6 WALL BENCH, TYPE 6 - SEE QL914
SSTBL-1 STAINLESS STEEL TABLE, TYPE 1
MB-1 MOBILE BENCH, TYPE 1 - SEE QL913
MB-1A MOBILE BENCH, TYPE 1A - SEE QL913
WCAB WALL HUNG CABINET
TCAB-1 TALL CABINET W/SHELVES, TYPE 1 (OPEN FRONT)
B= 36" WIDE
TCAB-2 TALL CABINET W/SHELVES, TYPE 2 (WOOD & GLASS DOOR FRONT)
A= 30" WIDE
B= 36" WIDE

PR PROXIMITY READER
BMR BIOMETRIC READER
REF REFRIGERATOR
S SINK (SS = STAINLESS STEEL)
SCS SCULLERY SINK
HS HAND SINK
CS CUSTODIAL SINK
SCR SCRUB SINK
—H HOT WATER
—C COLD WATER
WB WALL BENCH (SS = STAINLESS STEEL)
WCAB WALL HUNG CABINETS/SHELVES (SS = STAINLESS STEEL)
WSAB WALL MOUNTED WIRE SHELVING
SSIC STAINLESS STEEL ISOLATION CUBICLE
LC LIGHTING CONTROL
ECMP ENVIRONMENTAL CONTROL MONITORING PANEL
VHP VAPORIZED HYDROGEN PEROXIDE PORT
BR BUMPER RAIL
CG CORNER GUARD
WS WIRE SHELVING
N.I.C. NOT IN CONTRACT
PS48 4' x 4' PALETTE STORAGE
SMR SURFACE MOUNTED RACEWAY
BSC BIOSAFETY CABINET
FH FUME HOOD
OHEP OVERHEAD EXHAUST PORT CONNECTION
CSP CEILING SERVICE PANEL
DPVC DIGESTER PRESSURE VESSEL & CONTROLLER
FD FLOOR DRAIN
PTD PERIMETER TRENCH DRAIN
SSCC STAINLESS STEEL CAPTURE CANOPY (ABOVE)
BDS BEDDING DUMP STATION
BFS BEDDING FILL STATION
TW TUNNEL WASHER
CRW CAGE AND RACK WASHER
WP BOLLARD OR WALL MOUNTED PROTECTION
M MARKER BOARD
IW INSTRUMENT WASHER
FUT FOLD UP TABLE
MB MOVABLE BENCH
EL EXAM LIGHT
HD HAND DRYER
CH COAT HOOKS
PT PASS-THROUGH
SEC SECURITY CAMERA
CR CAGE RACK
ATS ANIMAL TRANSFER STATION
CTC CAG TRANSPORT CART
VPI VISUAL PRESSURE INDICATOR
DVPI DIGITAL VISUAL PRESSURE INDICATOR
NARCO NARCOTICS CABINET

## DRAWING LIST


QL101 ABBREVIATIONS, SYMBOLS, DRAWING LIST
QL201 REFERENCE FLOOR PLAN - LEVEL 1
QL202 REFERENCE FLOOR PLAN - LEVEL 2
QL203 REFERENCE FLOOR PLAN - LEVEL 3
QL401 ENLARGED PARTIAL FLOOR PLAN - LEVEL 1
QL402 ENLARGED PARTIAL FLOOR PLAN - LEVEL 1
QL403 ENLARGED PARTIAL FLOOR PLAN - LEVEL 1
QL404 ENLARGED PARTIAL FLOOR PLAN - LEVEL 2
QL405 ENLARGED PARTIAL FLOOR PLAN - LEVEL 2
QL406 ENLARGED PARTIAL FLOOR PLAN - LEVEL 2
QL407 ENLARGED PARTIAL FLOOR PLAN - LEVEL 2
QL408 ENLARGED PARTIAL FLOOR PLAN - LEVEL 3
QL409 ENLARGED PARTIAL FLOOR PLAN - LEVEL 3
QL410 ENLARGED PARTIAL FLOOR PLAN - LEVEL 3
QL411 ENLARGED PARTIAL FLOOR PLAN - LEVEL 3
QL501 INTERIOR ELEVATIONS
QL502 INTERIOR ELEVATIONS
QL504 INTERIOR ELEVATIONS
QL505 INTERIOR ELEVATIONS
QL506 INTERIOR ELEVATIONS
QL507 INTERIOR ELEVATIONS
QL508 INTERIOR ELEVATIONS
QL509 INTERIOR ELEVATIONS
QL901 BIOCONTAINMENT TYPICAL DETAILS
QL905 CASEWORK MENU
QL910 LAB BENCH DETAILS
QL911 LAB BENCH DETAILS
QL912 LAB BENCH DETAILS
QL913 LAB BENCH DETAILS
QL914 LAB BENCH DETAILS
QL915 LAB BENCH DETAILS
QL916 FUME HOOD DETAILS



ARCHITECT 0818
ajc architects
703 east 1700 south
salt lake city, utah 84105
ph: 801.466.8818
fx: 801.466.4411
www.ajcarchitects.com

P A Y E T T E
285 Summer Street
Boston, MA 02210-1522
www.payette.com


OWNER INFORMATION
State of Utah
Department of Administrative Services
DFCM
Division of Facilities Construction & Management
4110 State Office Building
Salt Lake City, Utah 84114
Phone: (801) 538 - 3018
Fax: (801) 538 - 3267
Internet: http://www.dfcm.utah.gov

PROJECT DESCRIPTION
LIFE SCIENCES
RESEARCH CENTER
UTAH STATE UNIVERSITY

USTAR BUILDING #2
LOGAN, UTAH

SHEET NAME:
ABBREVIATIONS, SYMBOLS, AND DRAWING LIST

REVISIONS
MARK DATE DESCRIPTION

ISSUE DATA
ISSUE DATE: DEC. 9, 2008
ISSUE TYPE: DESDEV
DRAWN BY: D.J.P.
CHECKED BY: K.P., J.S., J.Z.
CAD FILE NAME:
DFCM PROJECT # 06292770
STATE PROPERTY #
COPYRIGHT: STATE OF UTAH

SHEET NUMBER:
QL101

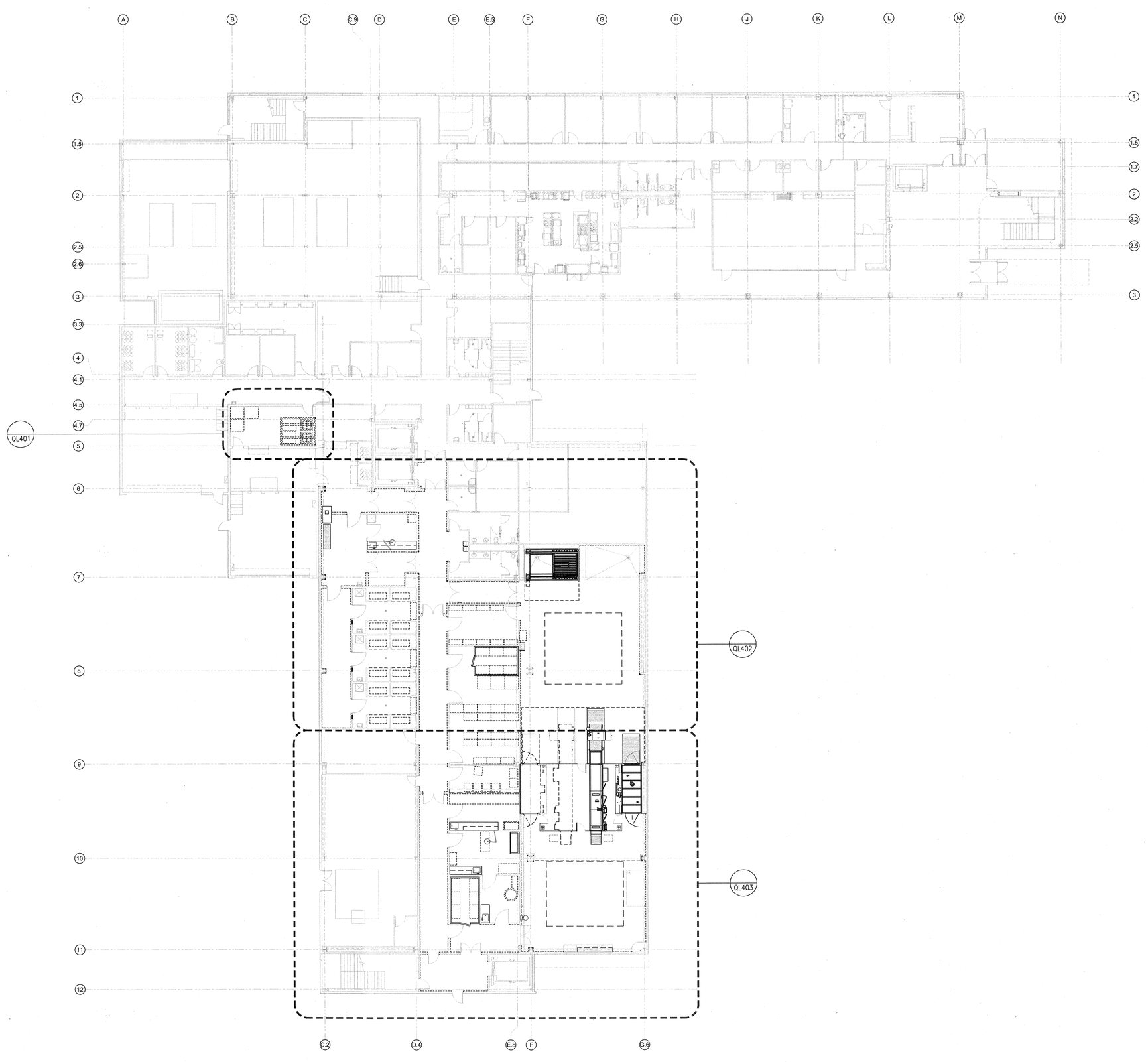


ARCHITECT 0818

ajc architects

703 east 1700 south
salt lake city, utah 84105
ph: 801.466.8818
fx: 801.466.4411
www.ajcarchitects.com

PAYETTE

285 Summer Street
Boston, MA 02210-1522
www.payette.com

OWNER INFORMATION

State of Utah
Department of Administrative Services

Division of Facilities
Construction & Management
4110 State Office Building
Salt Lake City, Utah 84114
Phone: (801) 538 - 3018
Fax: (801) 538 - 3267

Internet: http://www.dfcm.utah.gov

PROJECT DESCRIPTION

LIFE SCIENCES
RESEARCH CENTER
UTAH STATE UNIVERSITY

USTAR BUILDING #2
LOGAN, UTAH

SHEET NAME:

LEVEL 1 REFERENCE
INTERIOR LAB
FIT-OUT PLAN

REVISIONS

| MARK | DATE | DESCRIPTION |
|---|---|---|

ISSUE DATA

| | |
|---|---|
| ISSUE DATE: | DEC. 9, 2008 |
| ISSUE TYPE: | DESDEV |
| DRAWN BY: | D.J.P. |
| CHECKED BY: | K.P., J.S., J.Z. |
| CAD FILE NAME: | |
| DFCM PROJECT # | 06292770 |
| STATE PROPERTY # | |
| COPYRIGHT: | STATE OF UTAH |

SHEET NUMBER:

QL201

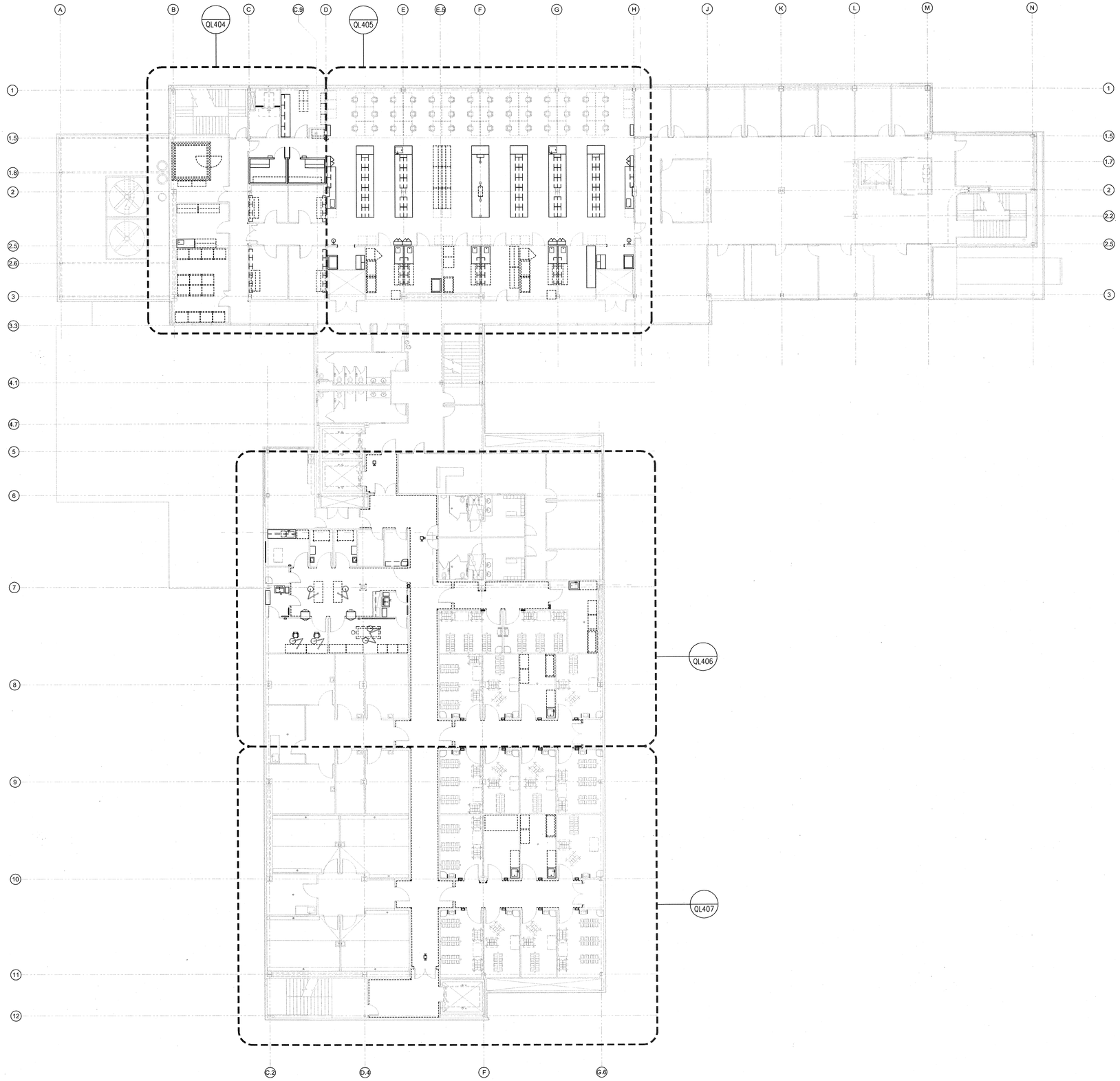


ARCHITECT 0818

ajc architects

703 east 1700 south
salt lake city, utah 84105
ph: 801.466.8818
fx: 801.466.4411
www.ajcarchitects.com

PAYETTE

285 Summer Street
Boston, MA 02210-1522
www.payette.com

OWNER INFORMATION

State of Utah
Department of Administrative Services

Division of Facilities
Construction & Management
4110 State Office Building
Salt Lake City, Utah 84114
Phone: (801) 538 - 3018
Fax: (801) 538 - 3267

Internet: http://www.dfcm.utah.gov

PROJECT DESCRIPTION

LIFE SCIENCES
RESEARCH CENTER
UTAH STATE UNIVERSITY

USTAR BUILDING #2
LOGAN, UTAH

SHEET NAME:

LEVEL 2 REFERENCE
INTERIOR LAB
FIT-OUT PLAN

REVISIONS

| MARK | DATE | DESCRIPTION |
|---|---|---|

ISSUE DATA

| | |
|---|---|
| ISSUE DATE: | DEC. 9, 2008 |
| ISSUE TYPE: | DESDEV |
| DRAWN BY: | D.J.P. |
| CHECKED BY: | K.P., J.S., J.Z. |
| CAD FILE NAME: | |
| DFCM PROJECT # | 06292770 |
| STATE PROPERTY # | |
| COPYRIGHT: | STATE OF UTAH |

SHEET NUMBER:

QL202

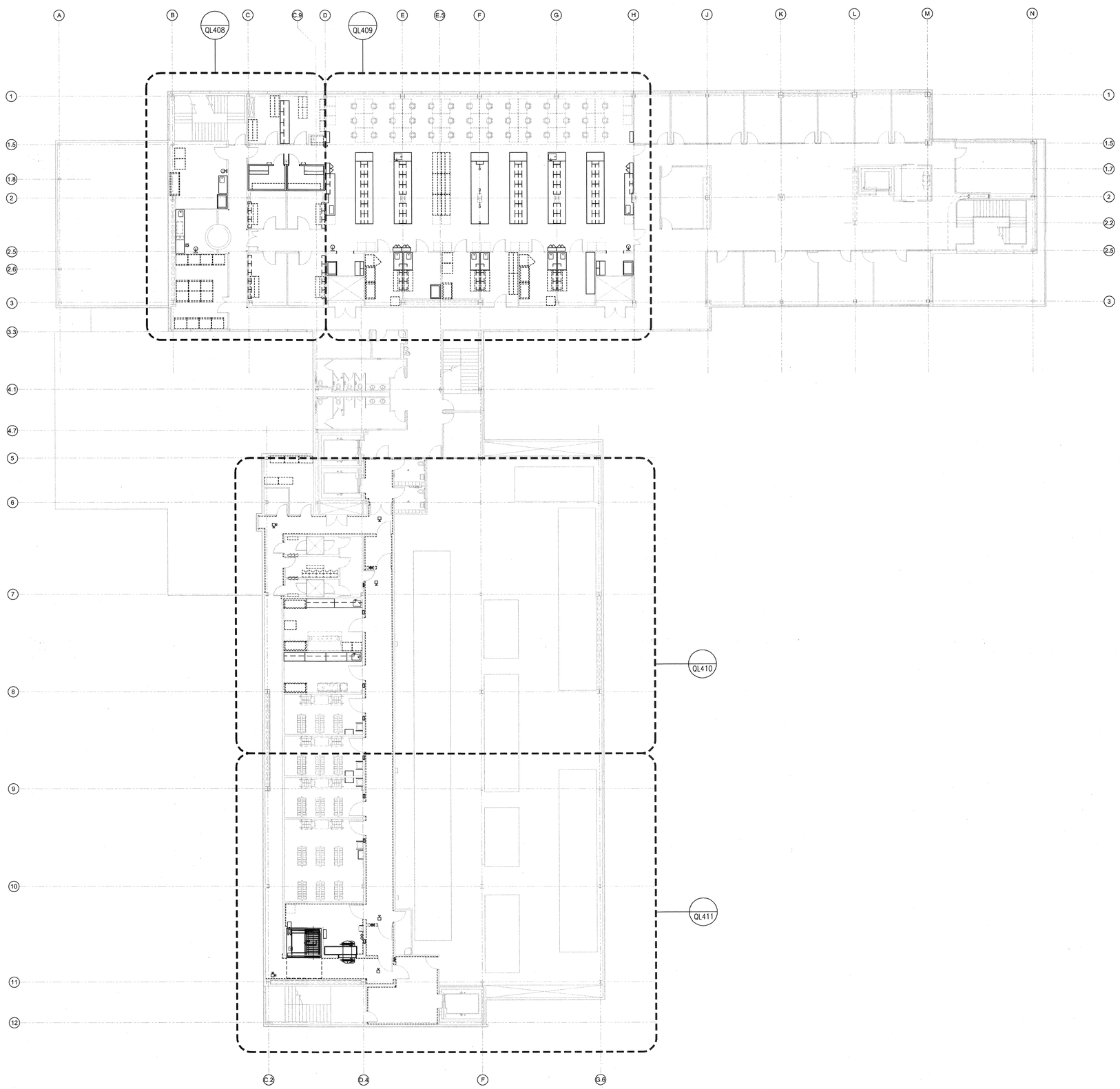


ARCHITECT 0818

ajc architects

703 east 1700 south
salt lake city, utah 84105
ph: 801.466.8818
fx: 801.466.4411
www.ajcarchitects.com

PAYETTE

285 Summer Street
Boston, MA 02210-1522
www.payette.com

OWNER INFORMATION

State of Utah
Department of Administrative Services

Division of Facilities
Construction & Management
4110 State Office Building
Salt Lake City, Utah 84114
Phone: (801) 538 - 3018
Fax: (801) 538 - 3267

Internet: http://www.dfcm.utah.gov

PROJECT DESCRIPTION

LIFE SCIENCES
RESEARCH CENTER
UTAH STATE UNIVERSITY

USTAR BUILDING #2
LOGAN, UTAH

SHEET NAME:

LEVEL 3 REFERENCE
INTERIOR LAB
FIT-OUT PLAN

REVISIONS

| MARK | DATE | DESCRIPTION |
|---|---|---|

ISSUE DATA

| | |
|---|---|
| ISSUE DATE: | DEC. 9, 2008 |
| ISSUE TYPE: | DESDEV |
| DRAWN BY: | D.J.P. |
| CHECKED BY: | K.P., J.S., J.Z. |
| CAD FILE NAME: | |
| DFCM PROJECT # | 06292770 |
| STATE PROPERTY # | |
| COPYRIGHT: | STATE OF UTAH |

SHEET NUMBER:

QL203

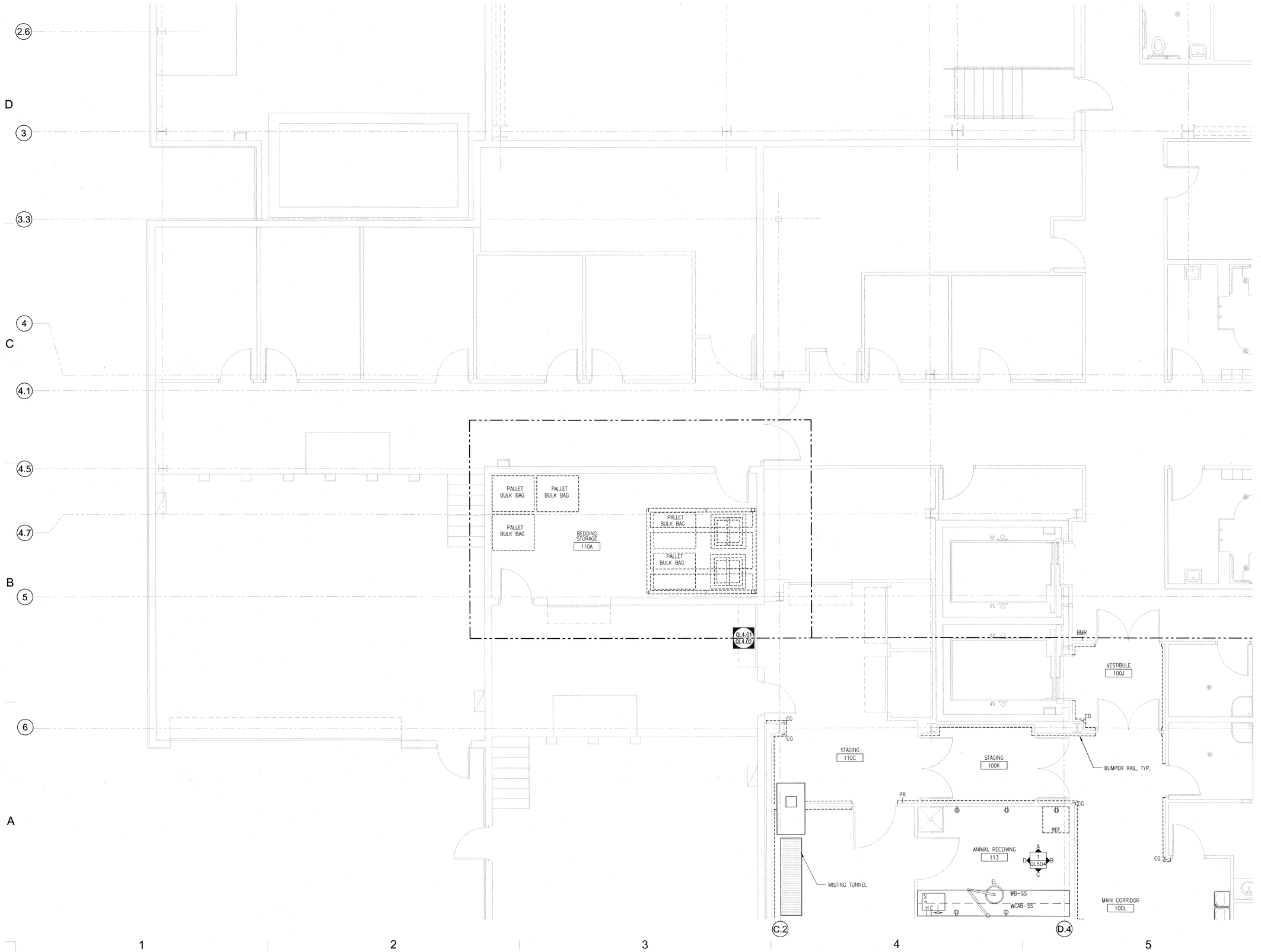



ARCHITECT 0818

ajc architects

703 east 1700 south
salt lake city, utah 84105
ph: 801.466.8818
fx: 801.466.4411
www.ajcarchitects.com

PAYETTE

285 Summer Street
Boston, MA 02210-1522
www.payette.com

OWNER INFORMATION

State of Utah
Department of Administrative Services

Division of Facilities
Construction & Management
4110 State Office Building
Salt Lake City, Utah 84114
Phone: (801) 538 - 3018
Fax: (801) 538 - 3267

Internet: http://www.dfcm.utah.gov


PROJECT DESCRIPTION

LIFE SCIENCES
RESEARCH CENTER
UTAH STATE UNIVERSITY

USTAR BUILDING #2
LOGAN, UTAH

SHEET NAME:

LEVEL 1 ENLARGED
LAB FIT-OUT PLAN

REVISIONS

| MARK | DATE | DESCRIPTION |
|---|---|---|

ISSUE DATA

ISSUE DATE: DEC. 9, 2008
ISSUE TYPE: DESDEV
DRAWN BY: D.J.P.
CHECKED BY: K.P., J.S., J.Z.
CAD FILE NAME:
DFCM PROJECT # 06292770
STATE PROPERTY #
COPYRIGHT: STATE OF UTAH

SHEET NUMBER:

# QL401

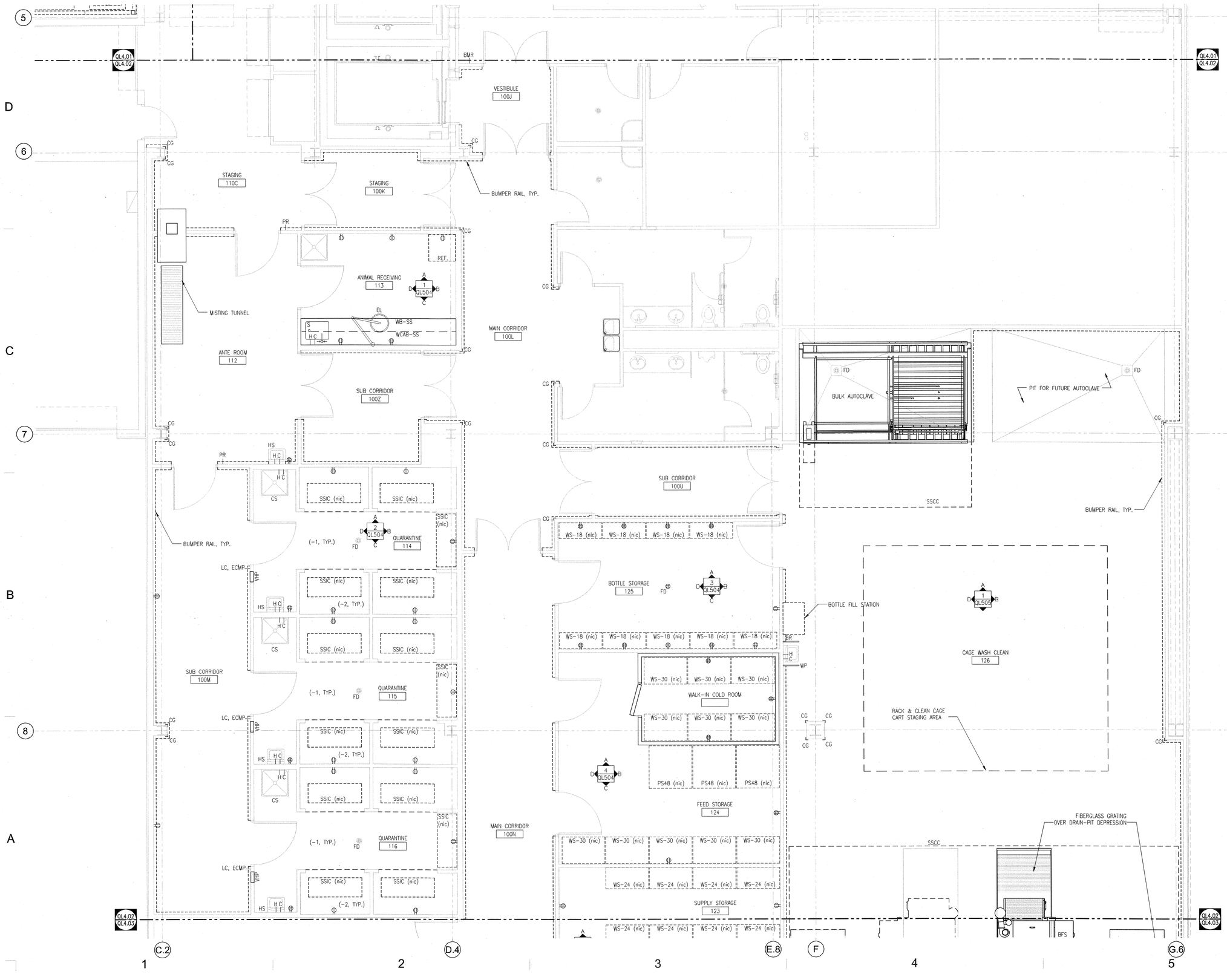



ARCHITECT 0818

ajc architects

703 east 1700 south
salt lake city, utah 84105
ph: 801.466.8818
fx: 801.466.4411
www.ajcarchitects.com

PAYETTE

285 Summer Street
Boston, MA 02210-1522
www.payette.com

OWNER INFORMATION

State of Utah
Department of Administrative Services

Division of Facilities
Construction & Management
4110 State Office Building
Salt Lake City, Utah 84114
Phone: (801) 538 - 3018
Fax: (801) 538 - 3267

Internet: http://www.dfcm.utah.gov


PROJECT DESCRIPTION

LIFE SCIENCES
RESEARCH CENTER
UTAH STATE UNIVERSITY

USTAR BUILDING #2
LOGAN, UTAH

SHEET NAME:

LEVEL 1 ENLARGED
LAB FIT-OUT PLAN

REVISIONS

| MARK | DATE | DESCRIPTION |
|---|---|---|

ISSUE DATA

| | |
|---|---|
| ISSUE DATE: | DEC. 9, 2008 |
| ISSUE TYPE: | DESDEV |
| DRAWN BY: | D.J.P. |
| CHECKED BY: | K.P., J.S., J.Z. |
| CAD FILE NAME: | |
| DFCM PROJECT # | 06292770 |
| STATE PROPERTY # | |
| COPYRIGHT: | STATE OF UTAH |

SHEET NUMBER:

QL402

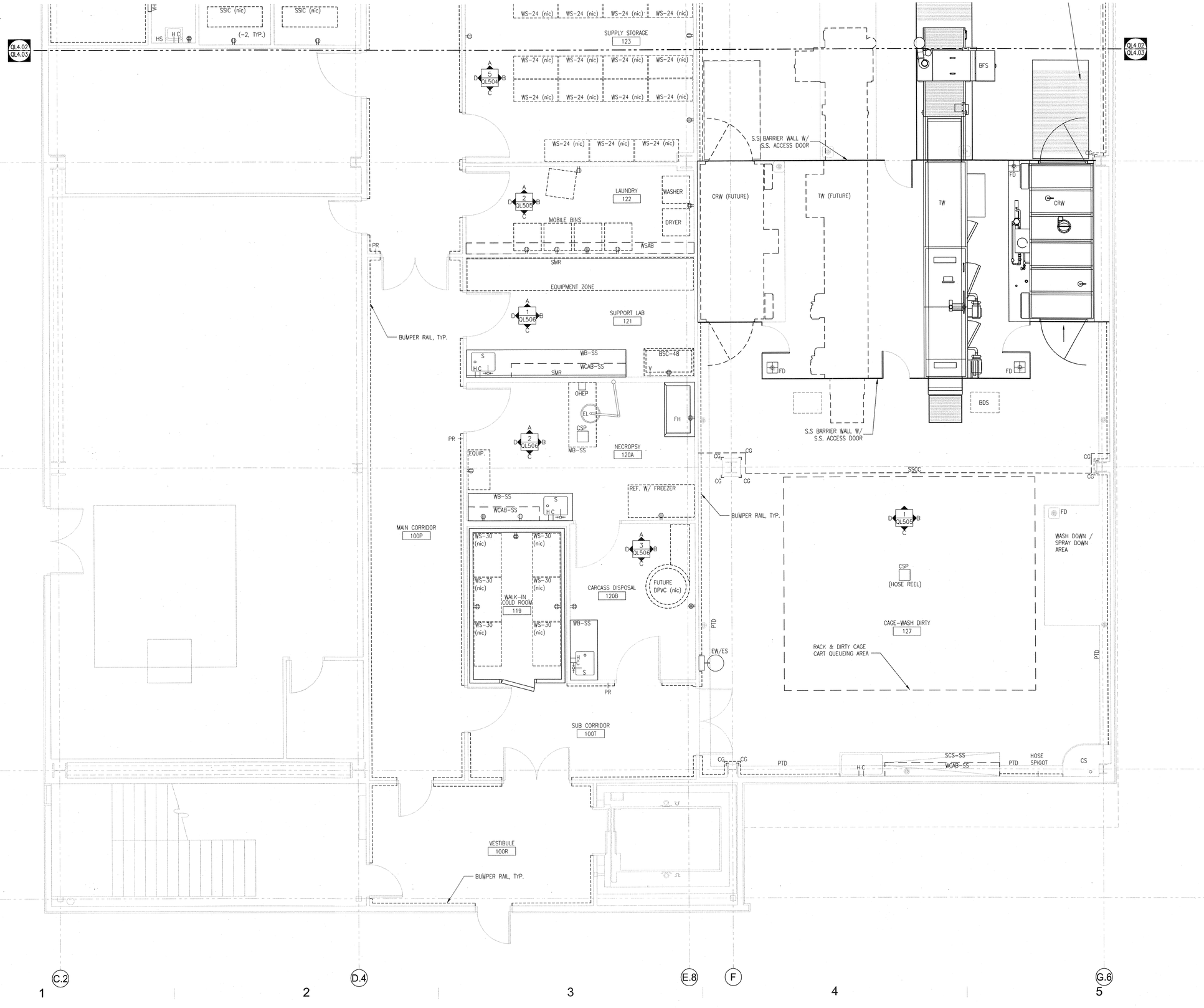


ARCHITECT 0818

ajc architects
703 east 1700 south
salt lake city, utah 84105
ph: 801.466.8818
fx: 801.466.4411
www.ajcarchitects.com

PAYETTE
285 Summer Street
Boston, MA 02210-1522
www.payette.com

OWNER INFORMATION

State of Utah
Department of Administrative Services
Division of Facilities Construction & Management
4110 State Office Building
Salt Lake City, Utah 84114
Phone: (801) 538 - 3018
Fax: (801) 538 - 3267
Internet: http://www.dfcm.utah.gov

PROJECT DESCRIPTION

LIFE SCIENCES
RESEARCH CENTER
UTAH STATE UNIVERSITY

USTAR BUILDING #2
LOGAN, UTAH

SHEET NAME:

LEVEL 1 ENLARGED LAB FIT-OUT PLAN

REVISIONS

| MARK | DATE | DESCRIPTION |
|---|---|---|

ISSUE DATA

ISSUE DATE: DEC. 9, 2008
ISSUE TYPE: DESDEV
DRAWN BY: D.J.P.
CHECKED BY: K.P., J.S., J.Z.
CAD FILE NAME:
DFCM PROJECT # 06292770
STATE PROPERTY #
COPYRIGHT: STATE OF UTAH

SHEET NUMBER:

QL403

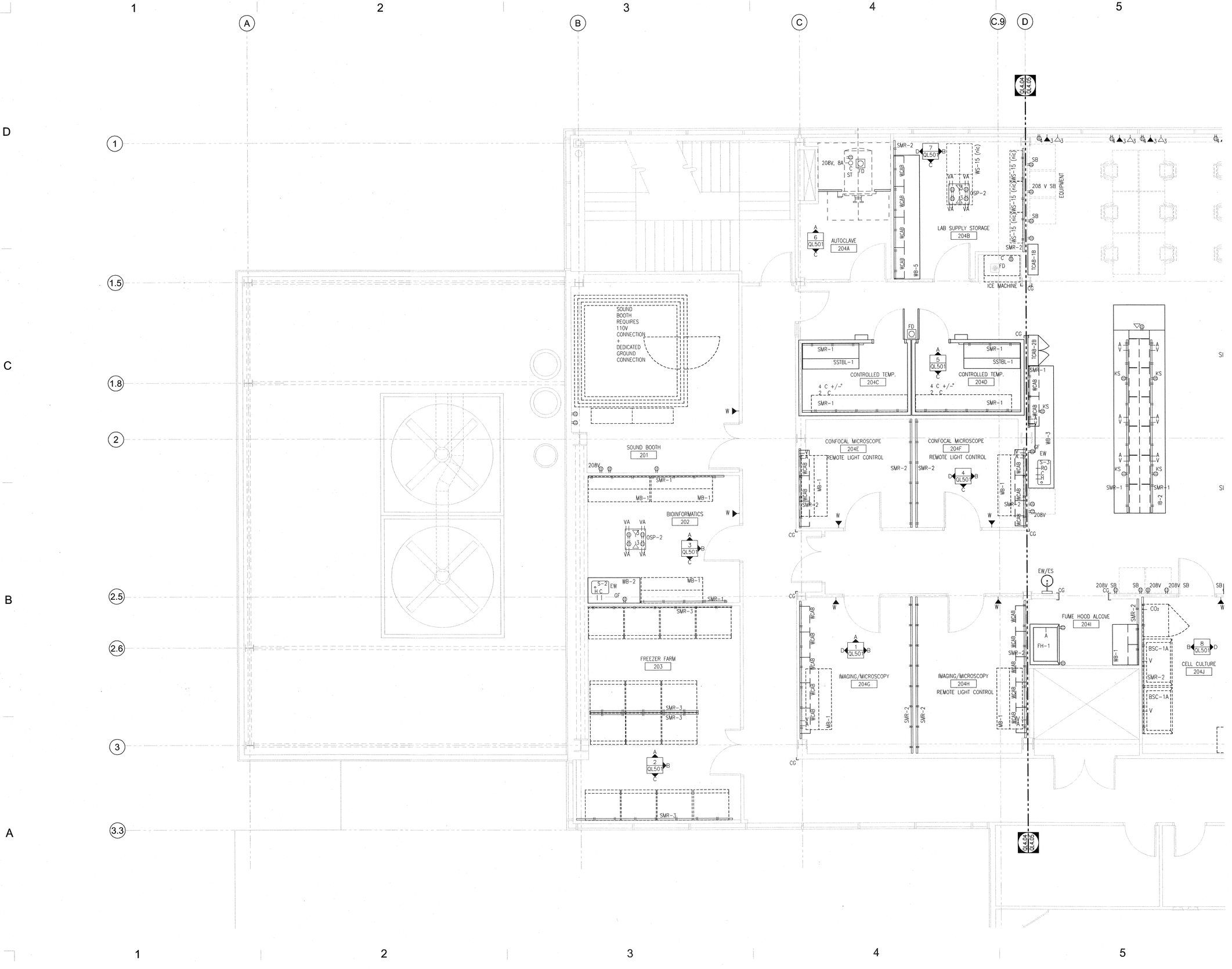


ARCHITECT 0818

ajc architects

703 east 1700 south
salt lake city, utah 84105
ph: 801.466.8818
fx: 801.466.4411
www.ajcarchitects.com

PAYETTE

285 Summer Street
Boston, MA 02210-1522
www.payette.com

OWNER INFORMATION

State of Utah
Department of Administrative Services

Division of Facilities
Construction & Management
4110 State Office Building
Salt Lake City, Utah 84114
Phone: (801) 538 - 3018
Fax: (801) 538 - 3267

Internet: http://www.dfcm.utah.gov

PROJECT DESCRIPTION

LIFE SCIENCES
RESEARCH CENTER
UTAH STATE UNIVERSITY

USTAR BUILDING #2
LOGAN, UTAH

SHEET NAME:

LEVEL 2 ENLARGED
LAB FIT-OUT PLAN

REVISIONS

| MARK | DATE | DESCRIPTION |
|---|---|---|

ISSUE DATA

ISSUE DATE: DEC. 9, 2008
ISSUE TYPE: DESDEV
DRAWN BY: D.J.P.
CHECKED BY: K.P., J.S., J.Z.
CAD FILE NAME:
DFCM PROJECT # 06292770
STATE PROPERTY #
COPYRIGHT: STATE OF UTAH

SHEET NUMBER:

QL404

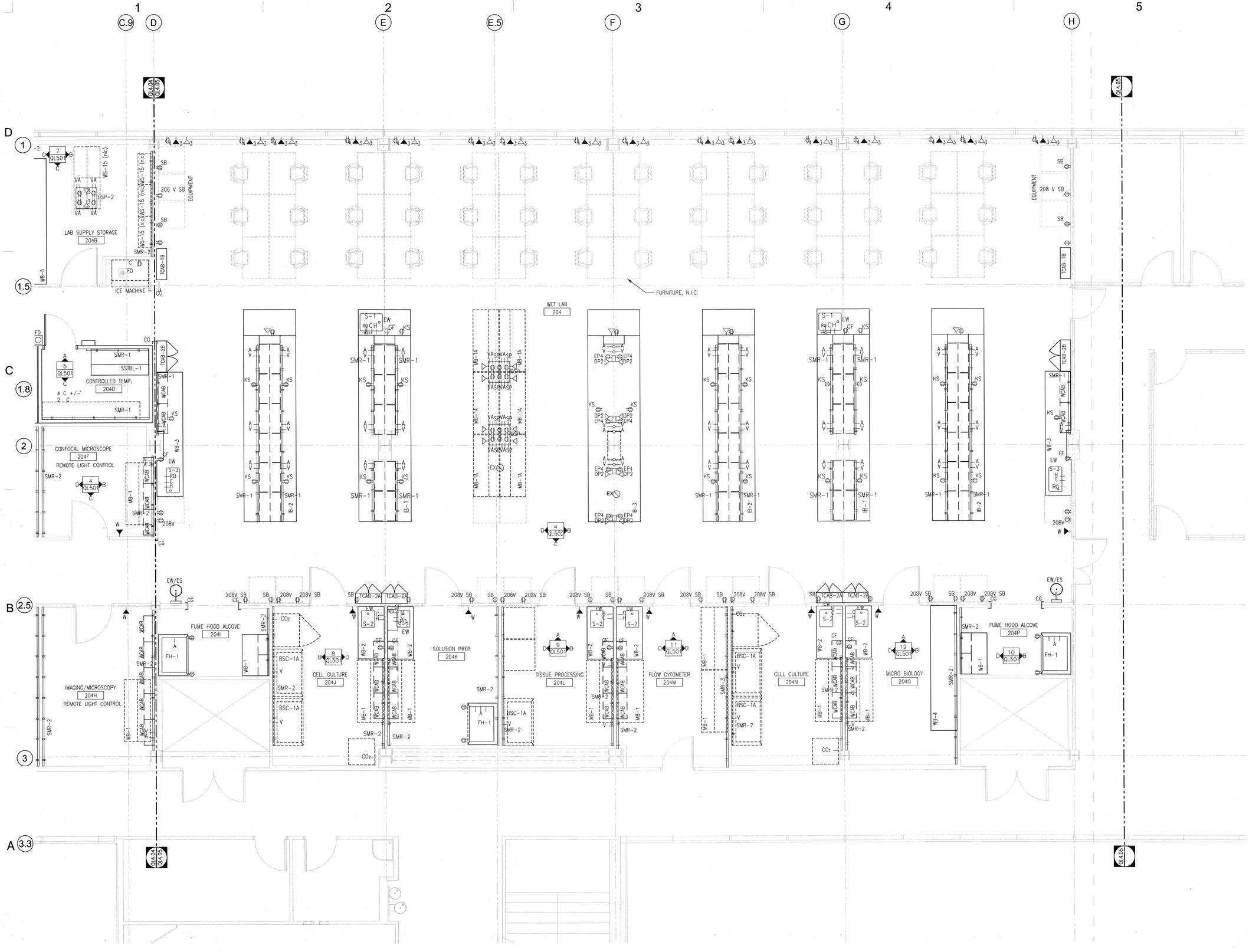



ARCHITECT 0818

ajc architects

703 east 1700 south
salt lake city, utah 84105
ph: 801.466.8818
fx: 801.466.4411
www.ajcarchitects.com

PAYETTE

285 Summer Street
Boston, MA 02210-1522
www.payette.com


OWNER INFORMATION

State of Utah
Department of Administrative Services

Division of Facilities
Construction & Management
4110 State Office Building
Salt Lake City, Utah 84114
Phone: (801) 538 - 3018
Fax: (801) 538 - 3267

Internet: http://www.dfcm.utah.gov

PROJECT DESCRIPTION

# LIFE SCIENCES
RESEARCH CENTER
UTAH STATE UNIVERSITY

USTAR BUILDING #2
LOGAN, UTAH

SHEET NAME:

## LEVEL 2 ENLARGED LAB FIT-OUT PLAN

REVISIONS

| MARK | DATE | DESCRIPTION |
|---|---|---|

ISSUE DATA

| | |
|---|---|
| ISSUE DATE: | DEC. 9, 2008 |
| ISSUE TYPE: | DESDEV |
| DRAWN BY: | D.J.P. |
| CHECKED BY: | K.P., J.S., J.Z. |
| CAD FILE NAME: | |
| DFCM PROJECT # | 06292770 |
| STATE PROPERTY # | |
| COPYRIGHT: | STATE OF UTAH |

SHEET NUMBER:

# QL405

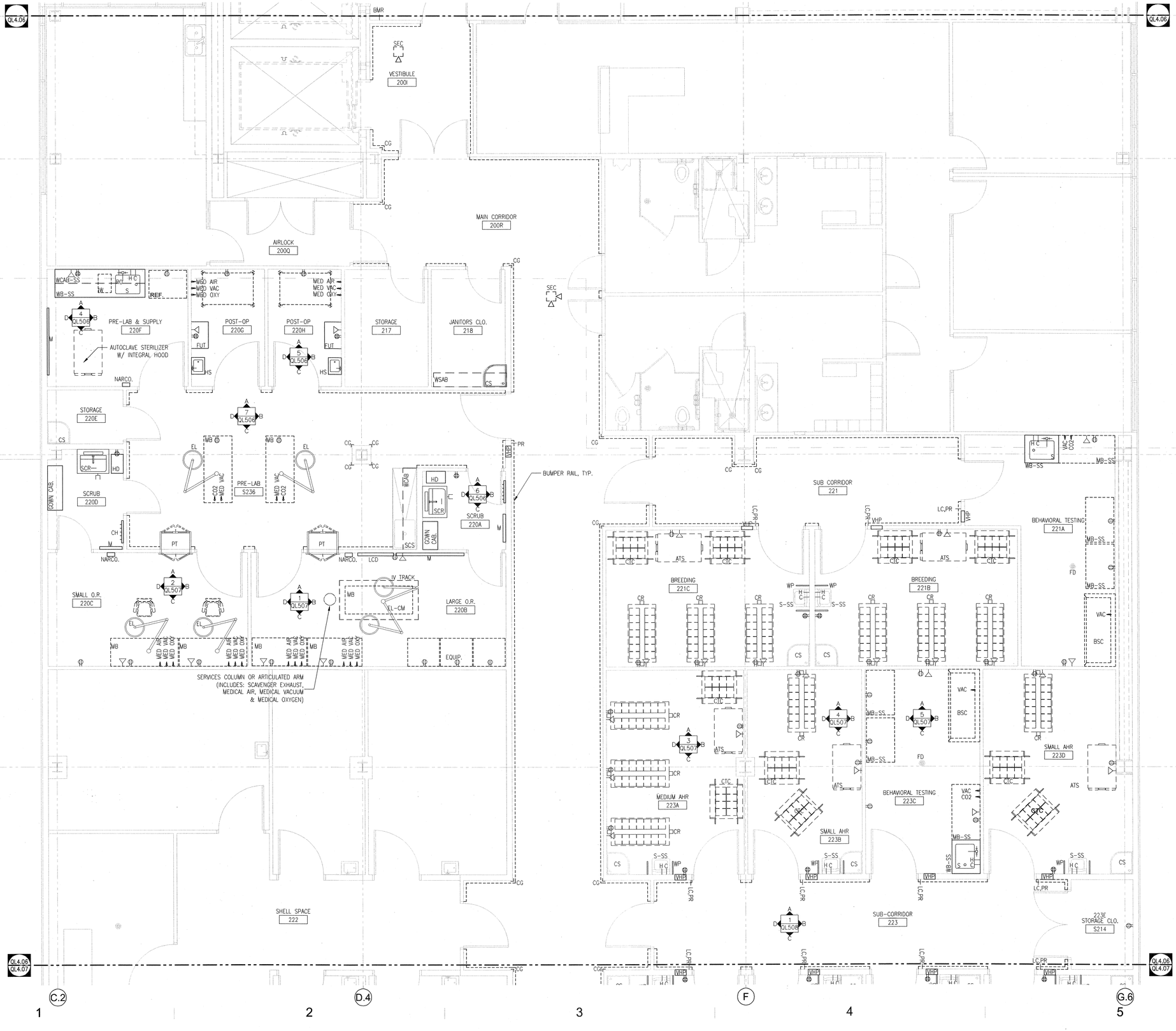


ARCHITECT 0818

ajc architects

703 east 1700 south
salt lake city, utah 84105
ph: 801.466.8818
fx: 801.466.4411
www.ajcarchitects.com

PAYETTE

285 Summer Street
Boston, MA 02210-1522
www.payette.com

OWNER INFORMATION

**State of Utah**
Department of Administrative Services

Division of Facilities
Construction & Management
4110 State Office Building
Salt Lake City, Utah 84114
Phone: (801) 538 - 3018
Fax: (801) 538 - 3267

Internet: http://www.dfcm.utah.gov

PROJECT DESCRIPTION

# LIFE SCIENCES
RESEARCH CENTER
UTAH STATE UNIVERSITY

USTAR BUILDING #2
LOGAN, UTAH

SHEET NAME:

LEVEL 2 ENLARGED
LAB FIT-OUT PLAN

REVISIONS

| MARK | DATE | DESCRIPTION |
|---|---|---|

ISSUE DATA

ISSUE DATE: DEC. 9, 2008
ISSUE TYPE: DESDEV
DRAWN BY: D.J.P.
CHECKED BY: K.P., J.S., J.Z.
CAD FILE NAME:
DFCM PROJECT # 06292770
STATE PROPERTY #
COPYRIGHT: STATE OF UTAH

SHEET NUMBER:

# QL406

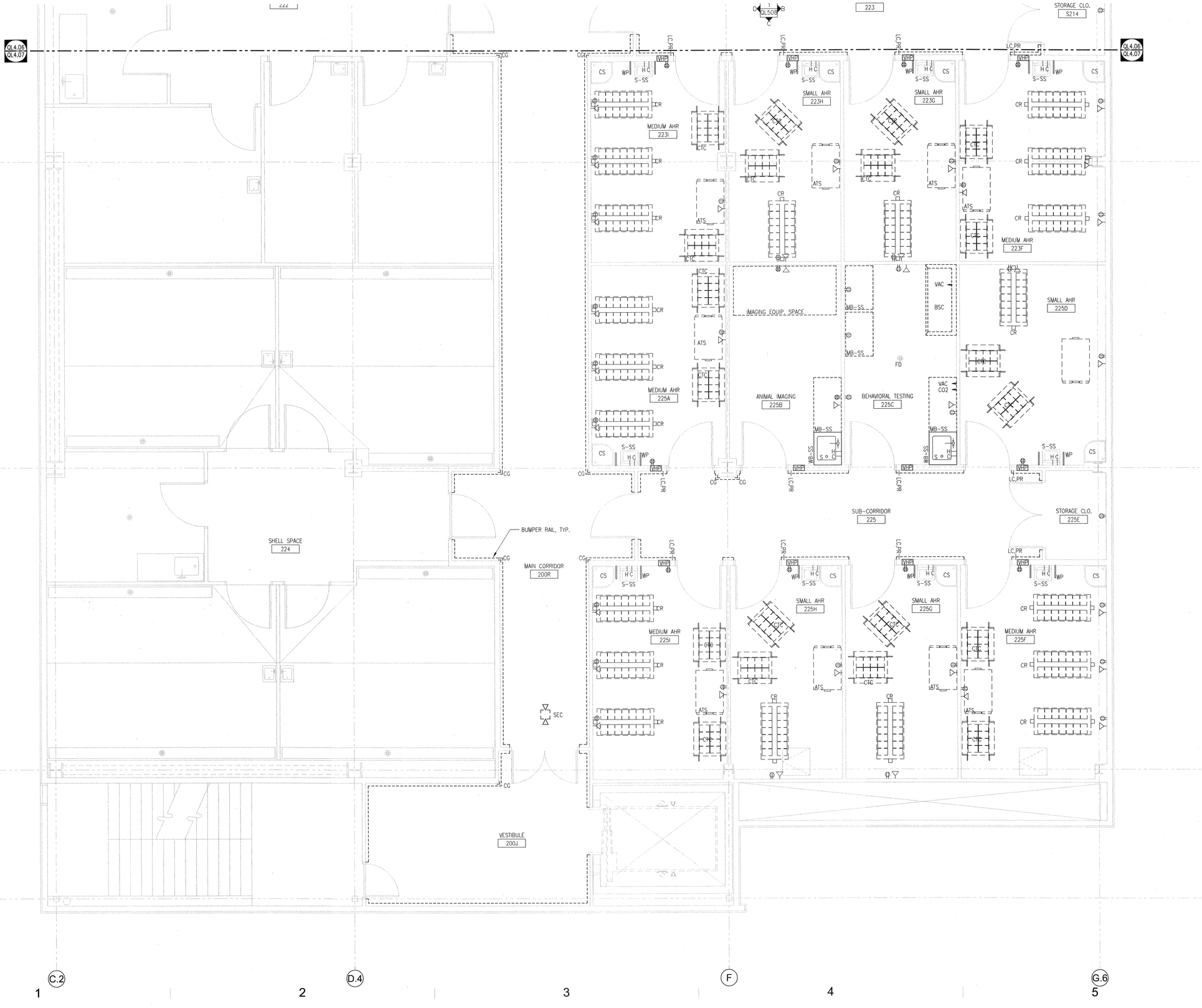



ARCHITECT 0818

ajc architects

703 east 1700 south
salt lake city, utah 84105
ph: 801.466.8818
fx: 801.466.4411
www.ajcarchitects.com

P A Y E T T E

285 Summer Street
Boston, MA 02210-1522
www.payette.com

OWNER INFORMATION

State of Utah
Department of Administrative Services

Division of Facilities
Construction & Management
4110 State Office Building
Salt Lake City, Utah 84114
Phone: (801) 538 - 3018
Fax: (801) 538 - 3267

Internet: http://www.dfcm.utah.gov


PROJECT DESCRIPTION

LIFE SCIENCES
RESEARCH CENTER
UTAH STATE UNIVERSITY

USTAR BUILDING #2
LOGAN, UTAH

SHEET NAME:

LEVEL 2 ENLARGED
LAB FIT-OUT PLAN

REVISIONS

| MARK | DATE | DESCRIPTION |
|---|---|---|

ISSUE DATA

ISSUE DATE: DEC. 9, 2008
ISSUE TYPE: DESDEV
DRAWN BY: D.J.P.
CHECKED BY: K.P., J.S., J.Z.
CAD FILE NAME:
DFCM PROJECT # 06292770
STATE PROPERTY #
COPYRIGHT: STATE OF UTAH

SHEET NUMBER:

QL407

ARCHITECT 0818

ajc architects
703 east 1700 south
salt lake city, utah 84105
ph: 801.466.8818
fx: 801.466.4411
www.ajcarchitects.com

PAYETTE
285 Summer Street
Boston, MA 02210-1522
www.payette.com

OWNER INFORMATION

State of Utah
Department of Administrative Services
Division of Facilities Construction & Management
4110 State Office Building
Salt Lake City, Utah 84114
Phone: (801) 538 - 3018
Fax: (801) 538 - 3267
Internet: http://www.dfcm.utah.gov

PROJECT DESCRIPTION

# LIFE SCIENCES RESEARCH CENTER UTAH STATE UNIVERSITY

USTAR BUILDING #2
LOGAN, UTAH

SHEET NAME:

## LEVEL 3 ENLARGED LAB FIT-OUT PLAN

REVISIONS

| MARK | DATE | DESCRIPTION |
|---|---|---|

ISSUE DATA

ISSUE DATE: DEC. 9, 2008
ISSUE TYPE: DESDEV
DRAWN BY: D.J.P.
CHECKED BY: K.P., J.S., J.Z.
CAD FILE NAME:
DFCM PROJECT # 06292770
STATE PROPERTY #
COPYRIGHT: STATE OF UTAH

SHEET NUMBER:

# QL408

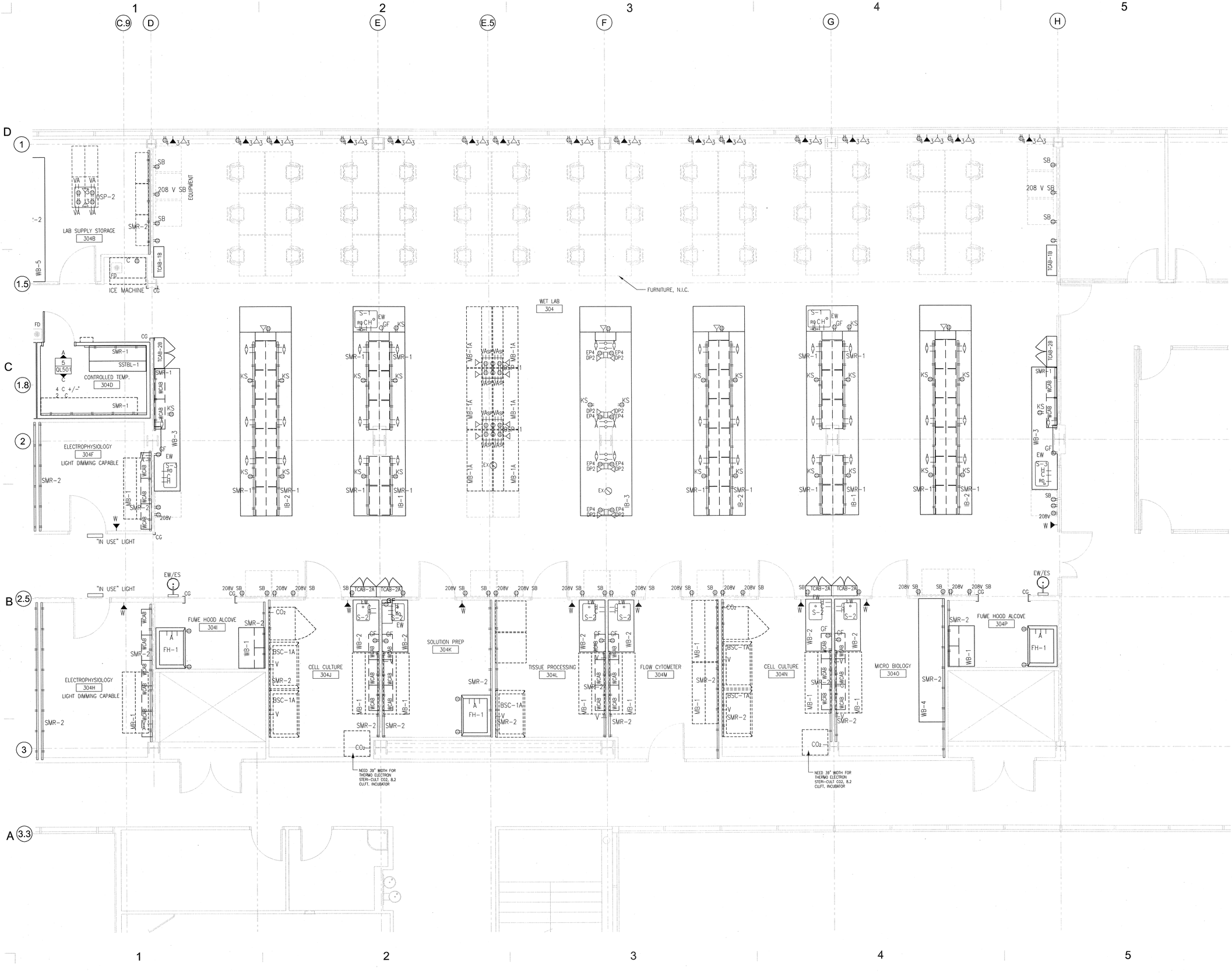


ARCHITECT 0818

ajc architects

703 east 1700 south
salt lake city, utah 84105
ph: 801.466.8818
fx: 801.466.4411
www.ajcarchitects.com

P A Y E T T E

285 Summer Street
Boston, MA 02210-1522
www.payette.com

OWNER INFORMATION

**State of Utah**
Department of Administrative Services

Division of Facilities
Construction & Management
4110 State Office Building
Salt Lake City, Utah 84114
Phone: (801) 538 - 3018
Fax: (801) 538 - 3267

Internet: http://www.dfcm.utah.gov

PROJECT DESCRIPTION

# LIFE SCIENCES
RESEARCH CENTER
UTAH STATE UNIVERSITY

USTAR BUILDING #2
LOGAN, UTAH

SHEET NAME:

## LEVEL 3 ENLARGED LAB FIT-OUT PLAN

REVISIONS

| MARK | DATE | DESCRIPTION |
|---|---|---|

ISSUE DATA

ISSUE DATE: DEC. 9, 2008
ISSUE TYPE: DESDEV
DRAWN BY: D.J.P.
CHECKED BY: K.P., J.S., J.Z.
CAD FILE NAME:
DFCM PROJECT # 06292770
STATE PROPERTY #
COPYRIGHT: STATE OF UTAH

SHEET NUMBER:

# QL409

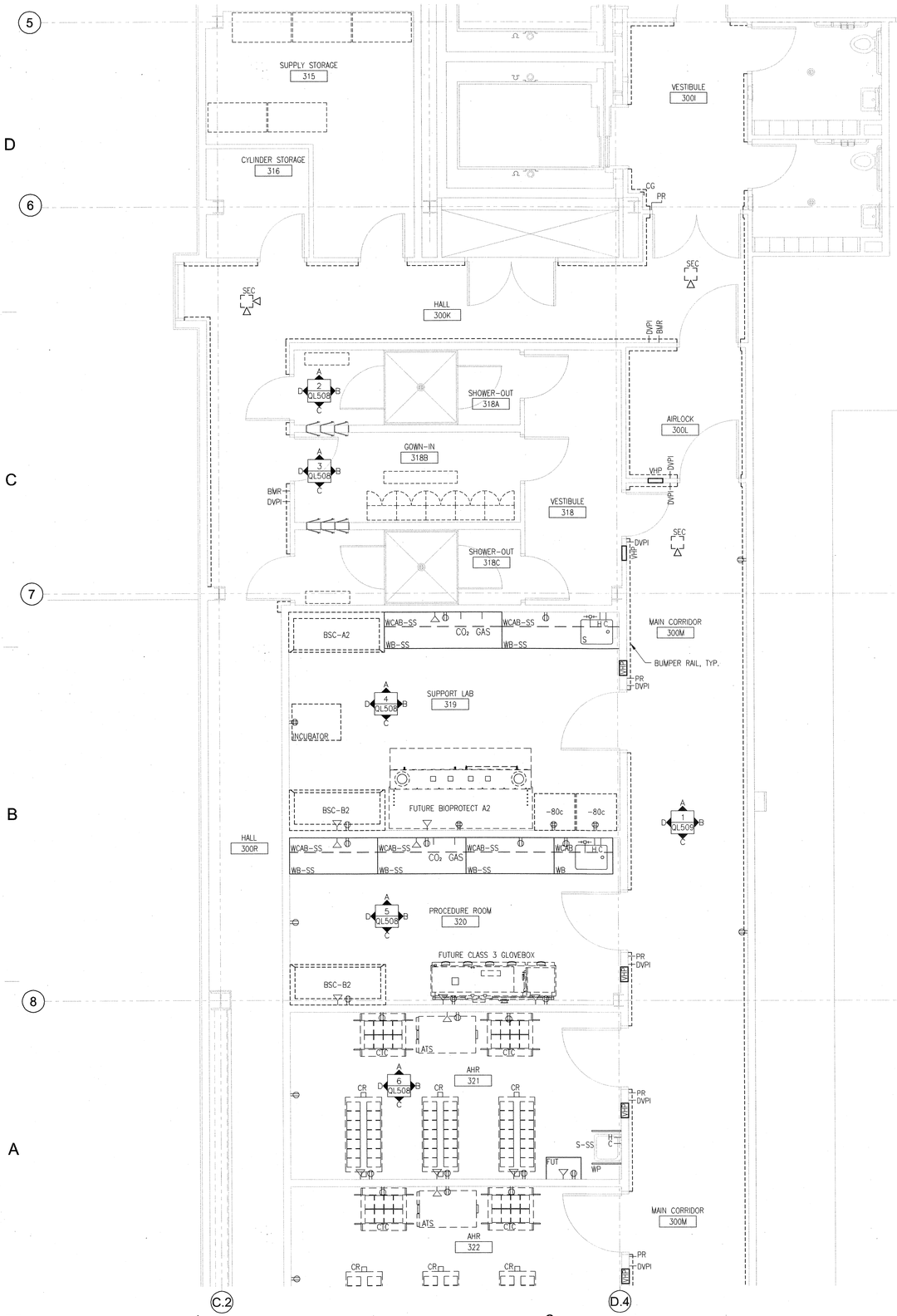


ARCHITECT 0818

ajc architects

703 east 1700 south
salt lake city, utah 84105
ph: 801.466.8818
fx: 801.466.4411
www.ajcarchitects.com

PAYETTE

285 Summer Street
Boston, MA 02210-1522
www.payette.com

OWNER INFORMATION

State of Utah
Department of Administrative Services

Division of Facilities
Construction & Management
4110 State Office Building
Salt Lake City, Utah 84114
Phone: (801) 538 - 3018
Fax: (801) 538 - 3267

Internet: http://www.dfcm.utah.gov

PROJECT DESCRIPTION

LIFE SCIENCES
RESEARCH CENTER
UTAH STATE UNIVERSITY

USTAR BUILDING #2
LOGAN, UTAH

SHEET NAME:

LEVEL 3 ENLARGED
LAB FIT-OUT PLAN

REVISIONS

| MARK | DATE | DESCRIPTION |
|---|---|---|

ISSUE DATA

| | |
|---|---|
| ISSUE DATE: | DEC. 9, 2008 |
| ISSUE TYPE: | DESDEV |
| DRAWN BY: | D.J.P. |
| CHECKED BY: | K.P., J.S., J.Z. |
| CAD FILE NAME: | |
| DFCM PROJECT # | 06292770 |
| STATE PROPERTY # | |
| COPYRIGHT: | STATE OF UTAH |

SHEET NUMBER:

QL410

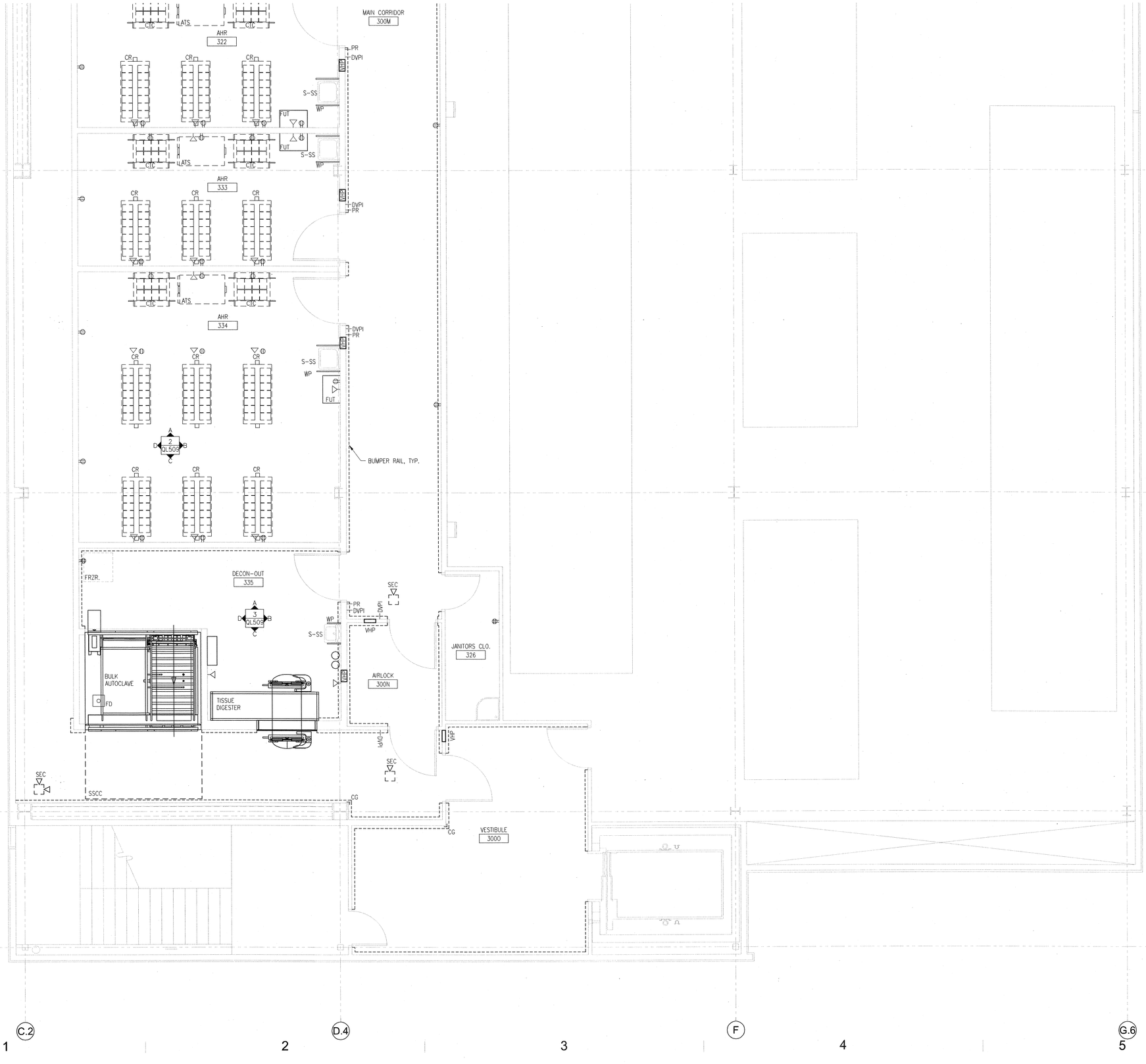



ARCHITECT 0818

ajc architects

703 east 1700 south
salt lake city, utah 84105
ph: 801.466.8818
fx: 801.466.4411
www.ajcarchitects.com

PAYETTE

285 Summer Street
Boston, MA 02210-1522
www.payette.com


OWNER INFORMATION

**State of Utah**
Department of Administrative Services

Division of Facilities
Construction & Management
4110 State Office Building
Salt Lake City, Utah 84114
Phone: (801) 538 - 3018
Fax: (801) 538 - 3267

Internet: http://www.dfcm.utah.gov

PROJECT DESCRIPTION

# LIFE SCIENCES
RESEARCH CENTER
UTAH STATE UNIVERSITY

USTAR BUILDING #2
LOGAN, UTAH

SHEET NAME:

LEVEL 3 ENLARGED
LAB FIT-OUT PLAN

REVISIONS

| MARK | DATE | DESCRIPTION |
|---|---|---|

ISSUE DATA

| | |
|---|---|
| ISSUE DATE: | DEC. 9, 2008 |
| ISSUE TYPE: | DESDEV |
| DRAWN BY: | D.J.P. |
| CHECKED BY: | K.P., J.S., J.Z. |
| CAD FILE NAME: | |
| DFCM PROJECT # | 06292770 |
| STATE PROPERTY # | |
| COPYRIGHT: | STATE OF UTAH |

SHEET NUMBER:

# QL411

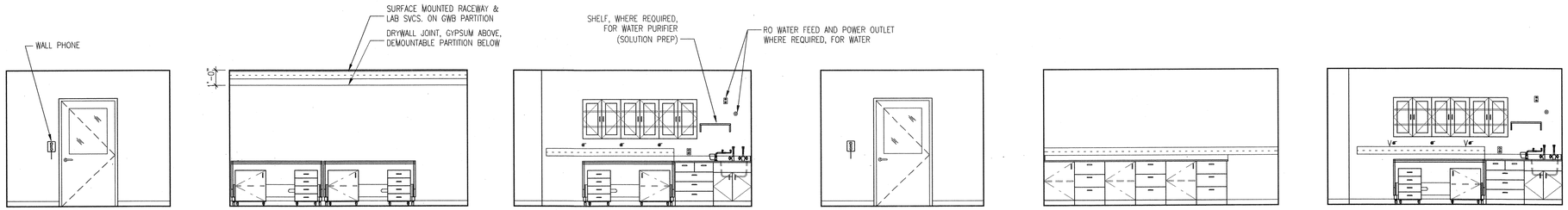


11 FLOW CYTOMETER ROOM 204M
A SCALE: 1/4" = 1'-0"

12 MICRO BIOLOGY ROOM 204O
A SCALE: 1/4" = 1'-0"

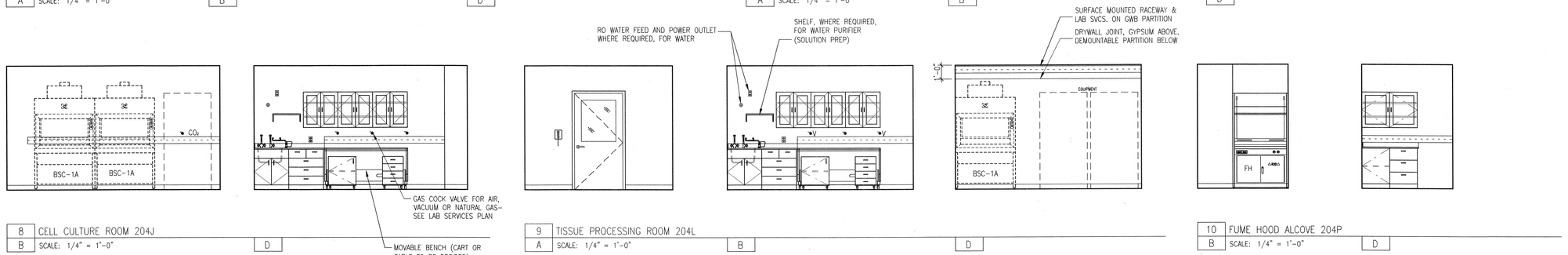


8 CELL CULTURE ROOM 204J
B SCALE: 1/4" = 1'-0"

9 TISSUE PROCESSING ROOM 204L
A SCALE: 1/4" = 1'-0"

10 FUME HOOD ALCOVE 204P
B SCALE: 1/4" = 1'-0"

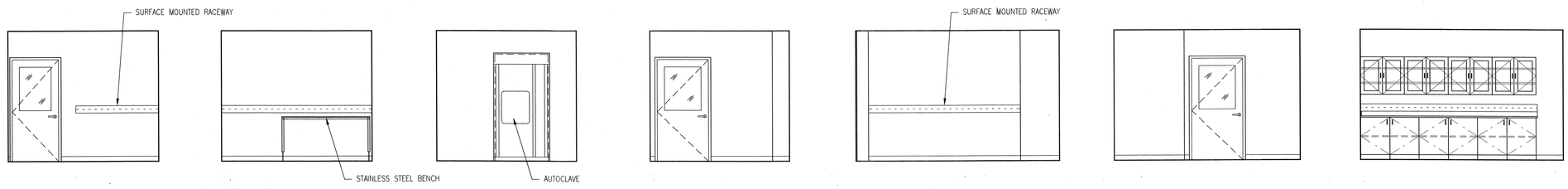


5 CONTROLLED TEMP ROOM 204D
A SCALE: 1/4" = 1'-0"

6 AUTOCLAVE ROOM 204A
A SCALE: 1/4" = 1'-0"

7 LAB SUPPLY STORAGE ROOM 204B
B SCALE: 1/4" = 1'-0"

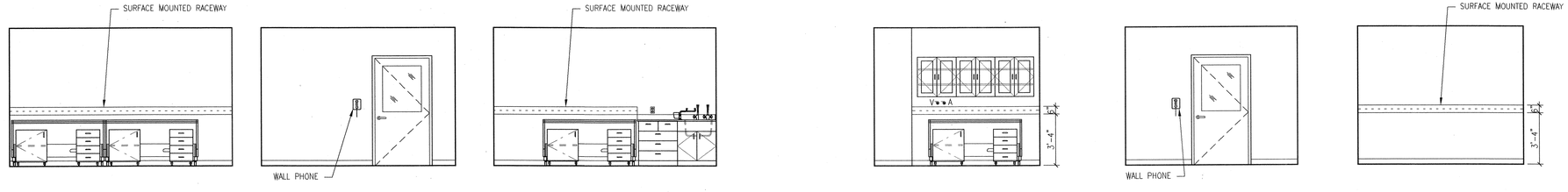


3 BIOINFORMATICS ROOM 202
A SCALE: 1/4" = 1'-0"

4 CONFOCAL MICROSCOPE ROOM 204F
B SCALE: 1/4" = 1'-0"

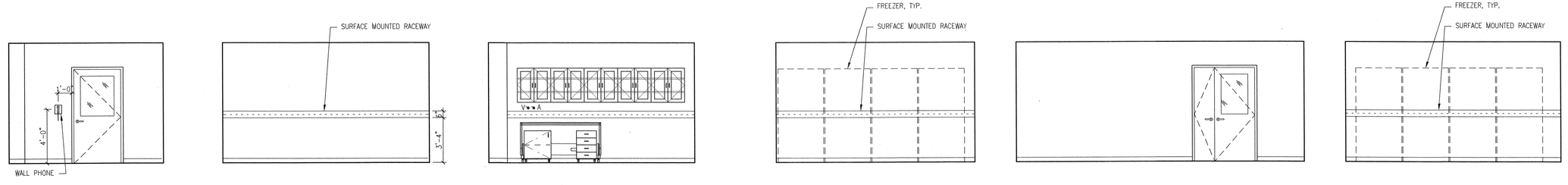


1 IMAGING/MICROSCOPY ROOM 204G
A SCALE: 1/4" = 1'-0"

2 FREEZER FARM ROOM 203
A SCALE: 1/4" = 1'-0"

ARCHITECT 0818
ajc architects
703 east 1700 south
salt lake city, utah 84105
ph: 801.466.8818
fx: 801.466.4411
www.ajcarchitects.com

PAYETTE
285 Summer Street
Boston, MA 02210-1522
www.payette.com

OWNER INFORMATION
State of Utah
Department of Administrative Services
Division of Facilities Construction & Management
4110 State Office Building
Salt Lake City, Utah 84114
Phone: (801) 538 - 3018
Fax: (801) 538 - 3267
Internet: http://www.dfcm.utah.gov

PROJECT DESCRIPTION
LIFE SCIENCES
RESEARCH CENTER
UTAH STATE UNIVERSITY

USTAR BUILDING #2
LOGAN, UTAH

SHEET NAME:
INTERIOR LAB
FIT-OUT ELEVATIONS

REVISIONS
MARK DATE DESCRIPTION

ISSUE DATA
ISSUE DATE: DEC. 9, 2008
ISSUE TYPE: DESDEV
DRAWN BY: D.J.P.
CHECKED BY: K.P., J.S., J.Z.
CAD FILE NAME:
DFCM PROJECT # 06292770
STATE PROPERTY #
COPYRIGHT: STATE OF UTAH

SHEET NUMBER:
QL501

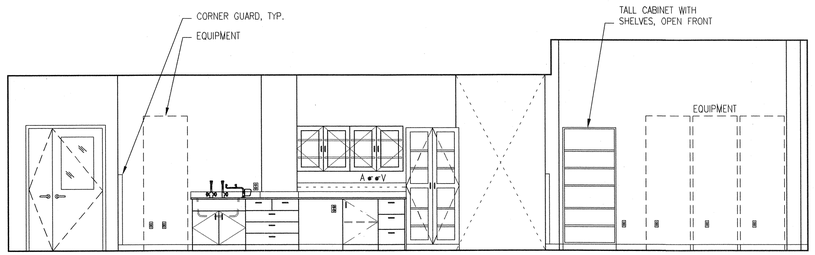


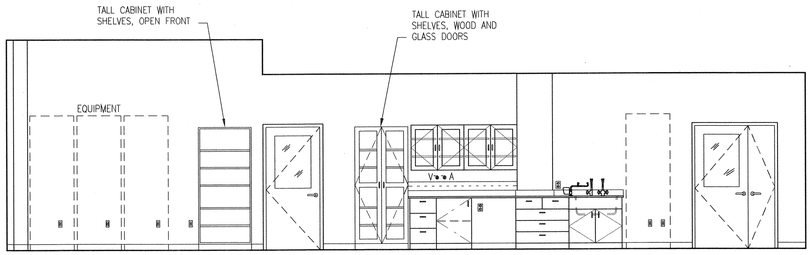


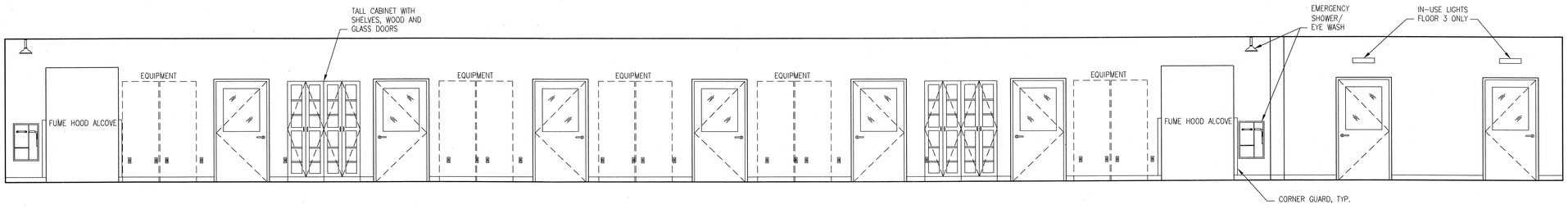


4 WET LAB 204 (304 SIM.)
C SCALE: 1/4" = 1'-0"

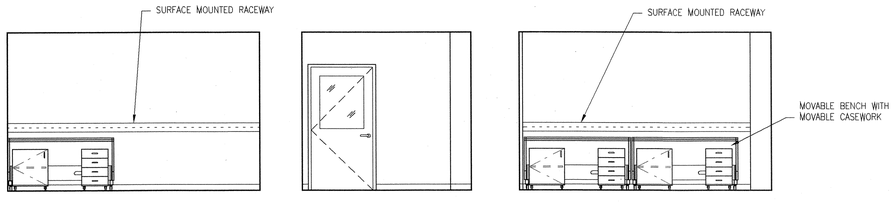


3 SMALL SUPPORT ROOM 304A
B SCALE: 1/4" = 1'-0"

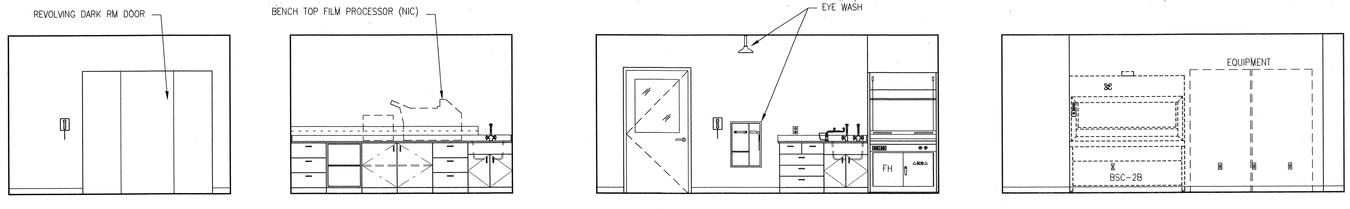


1 DARK ROOM 302
B SCALE: 1/4" = 1'-0"

2 RADIOISOTOPE ROOM 301
B SCALE: 1/4" = 1'-0"

ARCHITECT 0818
ajc architects
703 east 1700 south
salt lake city, utah 84105
ph: 801.466.8818
fx: 801.466.4411
www.ajcarchitects.com

P A Y E T T E
285 Summer Street
Boston, MA 02210-1522
www.payette.com

OWNER INFORMATION
State of Utah
Department of Administrative Services
Division of Facilities Construction & Management
4110 State Office Building
Salt Lake City, Utah 84114
Phone: (801) 538 - 3018
Fax: (801) 538 - 3267
Internet: http://www.dfcm.utah.gov

PROJECT DESCRIPTION
LIFE SCIENCES
RESEARCH CENTER
UTAH STATE UNIVERSITY

USTAR BUILDING #2
LOGAN, UTAH

SHEET NAME:
INTERIOR LAB
FIT-OUT ELEVATIONS

REVISIONS
MARK DATE DESCRIPTION

ISSUE DATA
ISSUE DATE: DEC. 9, 2008
ISSUE TYPE: DESDEV
DRAWN BY: D.J.P.
CHECKED BY: K.P., J.S., J.Z.
CAD FILE NAME:
DFCM PROJECT # 06292770
STATE PROPERTY #
COPYRIGHT: STATE OF UTAH

SHEET NUMBER:
QL502

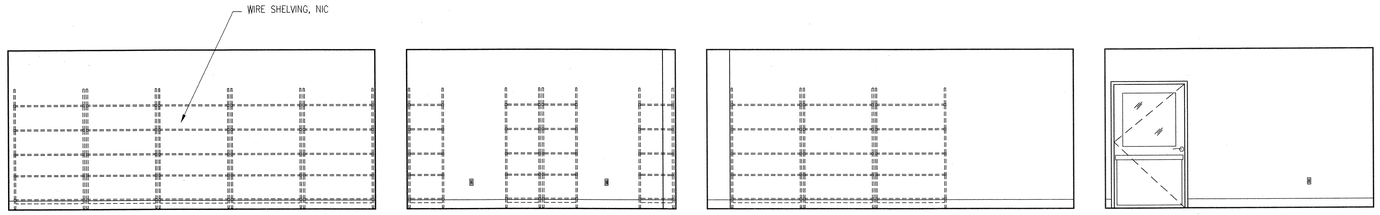


5 A SUPPLY STORAGE ROOM 123
SCALE: 1/4" = 1'-0"

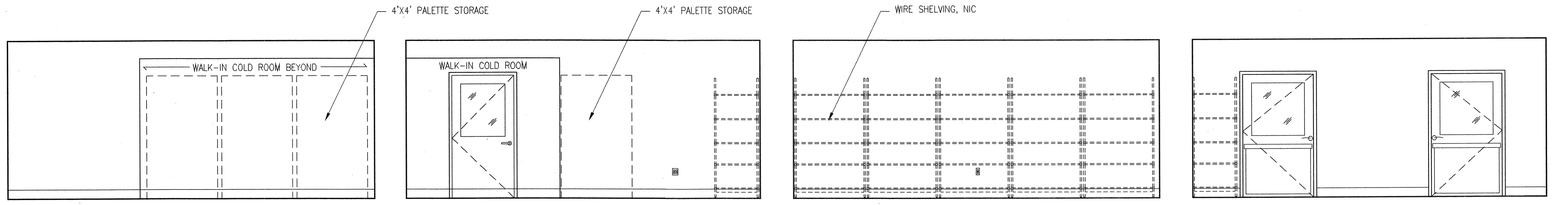


4 A FEED STORAGE ROOM 124
SCALE: 1/4" = 1'-0"

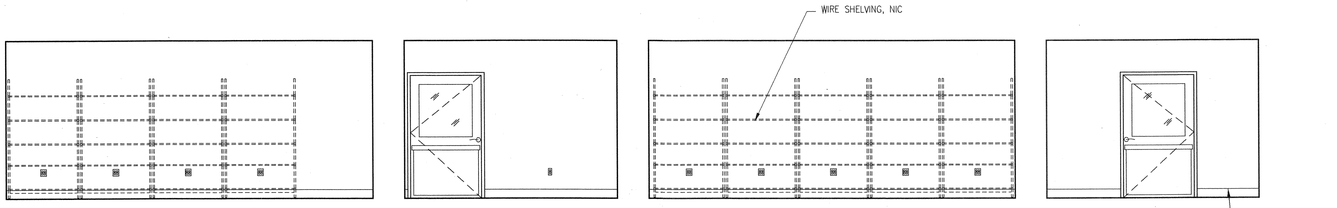


3 A BOTTLE STORAGE ROOM 125
SCALE: 1/4" = 1'-0"

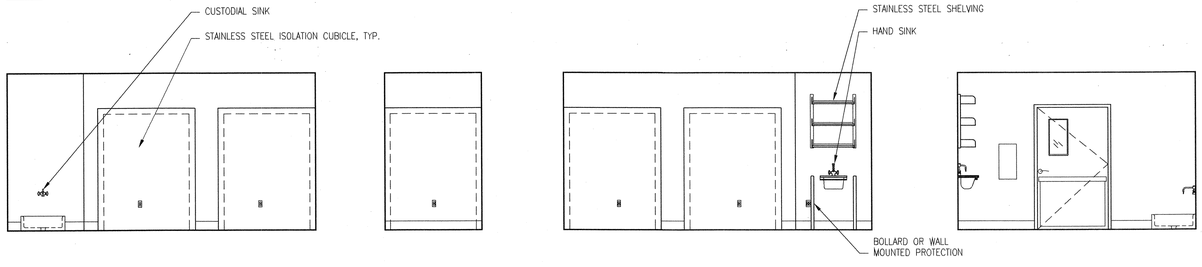


2 A QUARANTINE ROOM 114
SCALE: 1/4" = 1'-0"

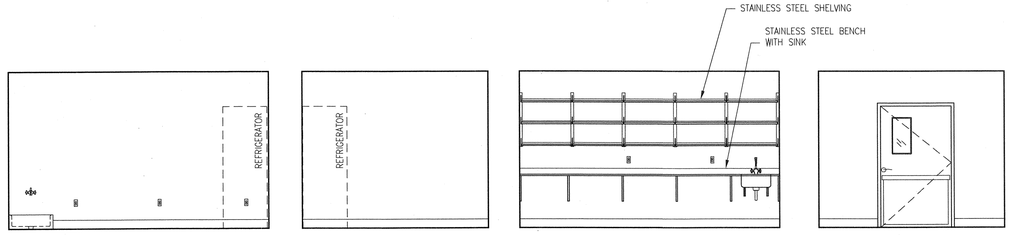


1 A ANIMAL RECEIVING ROOM 113
SCALE: 1/4" = 1'-0"

ARCHITECT 0818

ajc architects

703 east 1700 south
salt lake city, utah 84105
ph: 801.466.8818
fx: 801.466.4411
www.ajcarchitects.com

P A Y E T T E

285 Summer Street
Boston, MA 02210-1522
www.payette.com

OWNER INFORMATION

State of Utah
Department of Administrative Services

Division of Facilities
Construction & Management
4110 State Office Building
Salt Lake City, Utah 84114
Phone: (801) 538 - 3018
Fax: (801) 538 - 3267

Internet: http://www.dfcm.utah.gov

PROJECT DESCRIPTION

LIFE SCIENCES
RESEARCH CENTER
UTAH STATE UNIVERSITY

USTAR BUILDING #2
LOGAN, UTAH

SHEET NAME:

INTERIOR LAB
FIT-OUT ELEVATIONS

REVISIONS

| MARK | DATE | DESCRIPTION |
|---|---|---|

ISSUE DATA

ISSUE DATE: DEC. 9, 2008
ISSUE TYPE: DESDEV
DRAWN BY: D.J.P.
CHECKED BY: K.P., J.S., J.Z.
CAD FILE NAME:
DFCM PROJECT # 06292770
STATE PROPERTY #
COPYRIGHT: STATE OF UTAH

SHEET NUMBER:

QL504

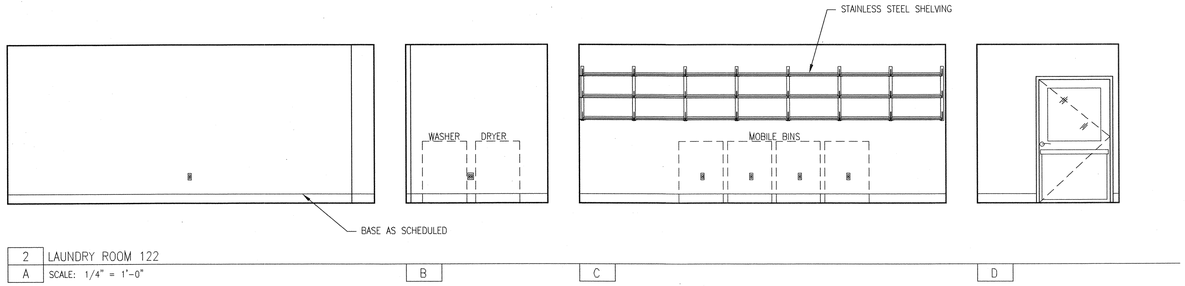


2 A LAUNDRY ROOM 122
SCALE: 1/4" = 1'-0"

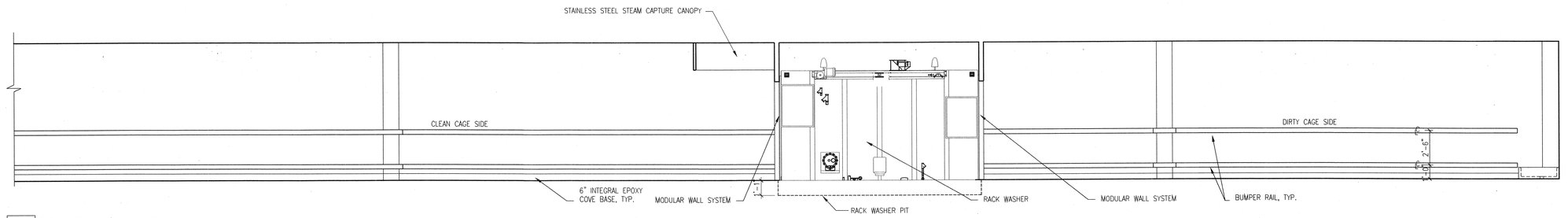


1 D CAGE WASH ROOM 126,127
SCALE: 1/4" = 1'-0"

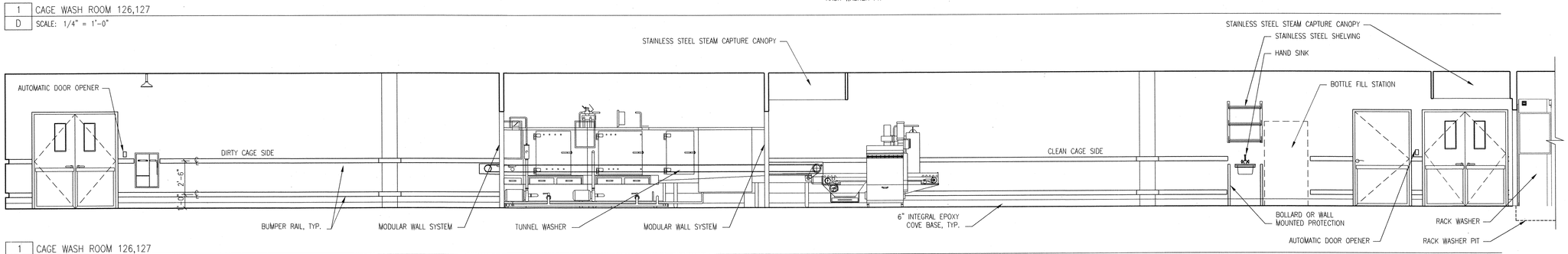


1 B CAGE WASH ROOM 126,127
SCALE: 1/4" = 1'-0"

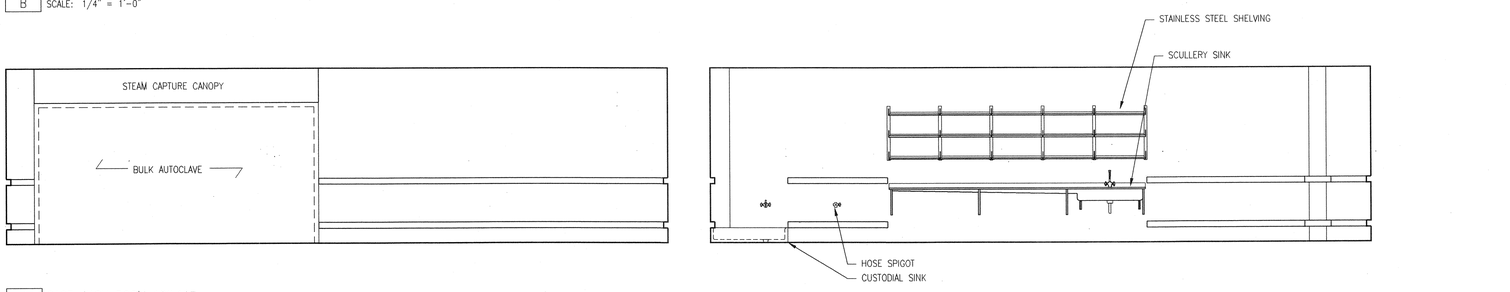


1 A CAGE WASH ROOM 126,127
SCALE: 1/4" = 1'-0"

ARCHITECT 0818
ajc architects
703 east 1700 south
salt lake city, utah 84105
ph: 801.466.8818
fx: 801.466.4411
www.ajcarchitects.com

PAYETTE
285 Summer Street
Boston, MA 02210-1522
www.payette.com

OWNER INFORMATION
State of Utah
Department of Administrative Services
Division of Facilities Construction & Management
4110 State Office Building
Salt Lake City, Utah 84114
Phone: (801) 538 - 3018
Fax: (801) 538 - 3267
Internet: http://www.dfcm.utah.gov

PROJECT DESCRIPTION
LIFE SCIENCES
RESEARCH CENTER
UTAH STATE UNIVERSITY

USTAR BUILDING #2
LOGAN, UTAH

SHEET NAME:
INTERIOR LAB
FIT-OUT ELEVATIONS

REVISIONS
MARK DATE DESCRIPTION

ISSUE DATA
ISSUE DATE: DEC. 9, 2008
ISSUE TYPE: DESDEV
DRAWN BY: D.J.P.
CHECKED BY: K.P., J.S., J.Z.
CAD FILE NAME:
DFCM PROJECT # 06292770
STATE PROPERTY #
COPYRIGHT: STATE OF UTAH

SHEET NUMBER:
QL505

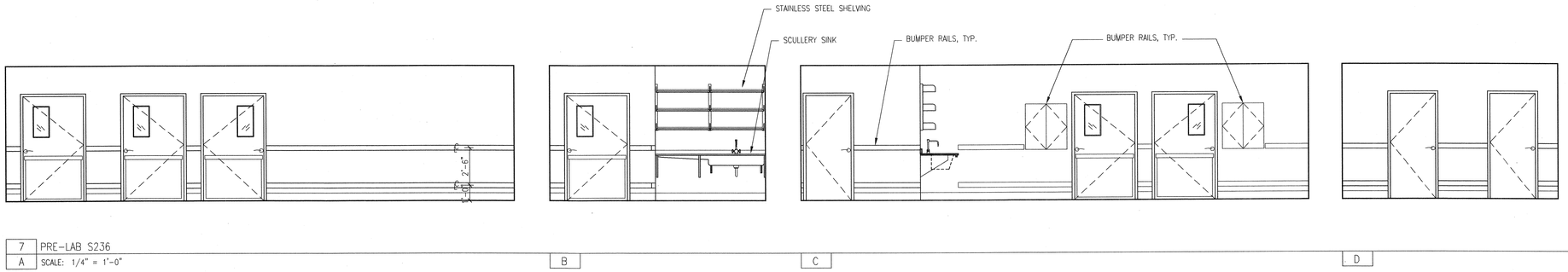


7 PRE-LAB S236
A SCALE: 1/4" = 1'-0"

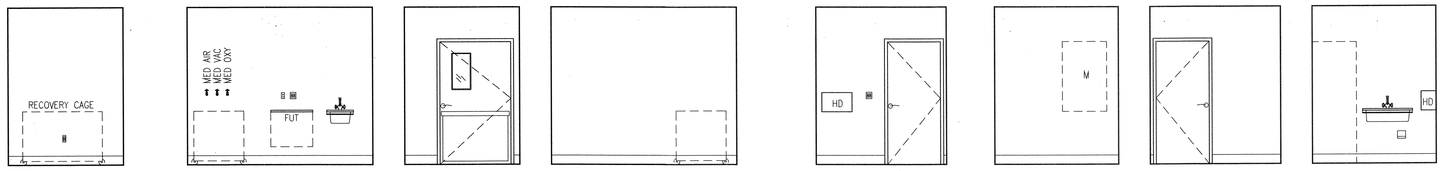


5 POST-OP ROOM 220H
A SCALE: 1/4" = 1'-0"

6 SCRUB ROOM 220A
A SCALE: 1/4" = 1'-0"

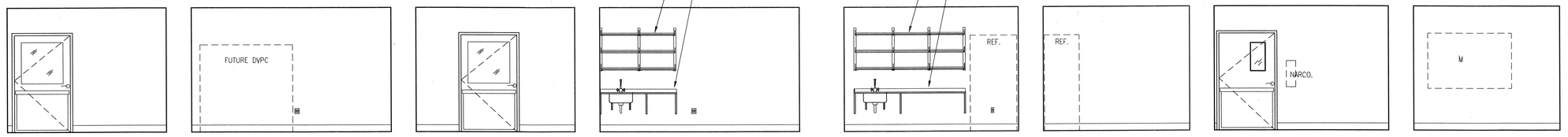


3 CARCASS DISPOSAL ROOM 120B
A SCALE: 1/4" = 1'-0"

4 PRE-LAB & SUPPLY ROOM 220F
A SCALE: 1/4" = 1'-0"

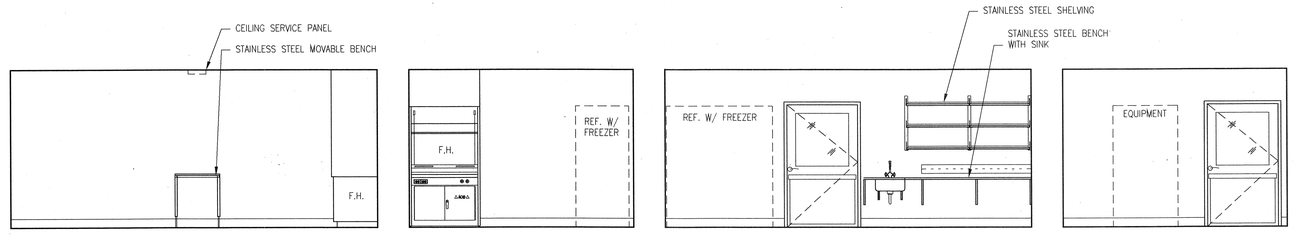


2 NECROPSY ROOM 120A
A SCALE: 1/4" = 1'-0"

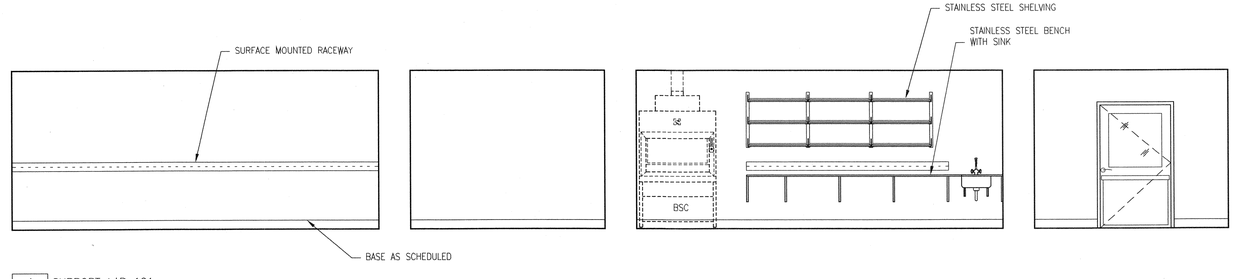


1 SUPPORT LAB 121
A SCALE: 1/4" = 1'-0"

ARCHITECT 0818
ajc architects
703 east 1700 south
salt lake city, utah 84105
ph: 801.466.8818
fx: 801.466.4411
www.ajcarchitects.com

P A Y E T T E
285 Summer Street
Boston, MA 02210-1522
www.payette.com

OWNER INFORMATION
State of Utah
Department of Administrative Services
Division of Facilities Construction & Management
4110 State Office Building
Salt Lake City, Utah 84114
Phone: (801) 538 - 3018
Fax: (801) 538 - 3267
Internet: http://www.dfcm.utah.gov

PROJECT DESCRIPTION
LIFE SCIENCES
RESEARCH CENTER
UTAH STATE UNIVERSITY

USTAR BUILDING #2
LOGAN, UTAH

SHEET NAME:
INTERIOR LAB
FIT-OUT ELEVATIONS

REVISIONS
MARK DATE DESCRIPTION

ISSUE DATA
ISSUE DATE: DEC. 9, 2008
ISSUE TYPE: DESDEV
DRAWN BY: D.J.P.
CHECKED BY: K.P., J.S., J.Z.
CAD FILE NAME:
DFCM PROJECT # 06292770
STATE PROPERTY #
COPYRIGHT: STATE OF UTAH

SHEET NUMBER:
QL506

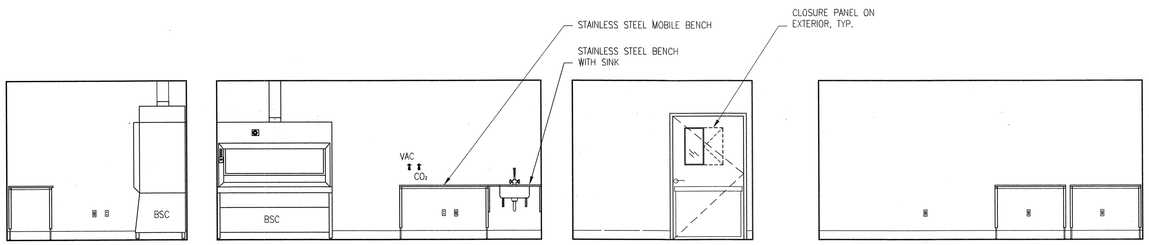


5 A BEHAVIORAL TESTING ROOM 223C
SCALE: 1/4" = 1'-0"

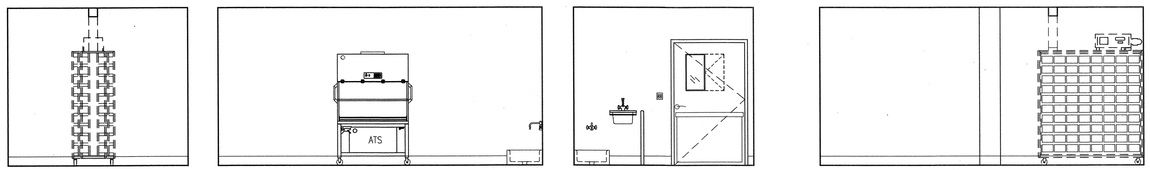


4 A SMALL AHR 223B
SCALE: 1/4" = 1'-0"

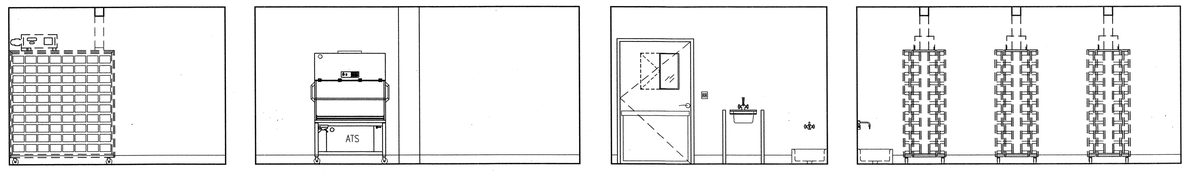


3 A MEDIUM AHR 223A
SCALE: 1/4" = 1'-0"

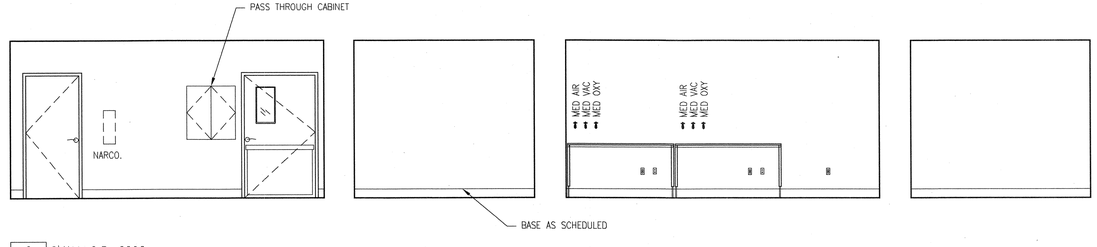


2 A SMALL O.R. 220C
SCALE: 1/4" = 1'-0"

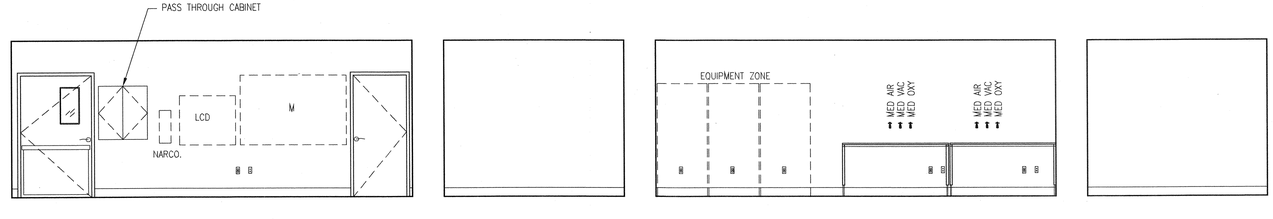


1 A LARGE O.R. 220B
SCALE: 1/4" = 1'-0"

ARCHITECT 0818
ajc architects
703 east 1700 south
salt lake city, utah 84105
ph: 801.466.8818
fx: 801.466.4411
www.ajcarchitects.com

PAYETTE
285 Summer Street
Boston, MA 02210-1522
www.payette.com

OWNER INFORMATION
State of Utah
Department of Administrative Services
Division of Facilities
Construction & Management
4110 State Office Building
Salt Lake City, Utah 84114
Phone: (801) 538 - 3018
Fax: (801) 538 - 3267
Internet: http://www.dfcm.utah.gov

PROJECT DESCRIPTION
LIFE SCIENCES
RESEARCH CENTER
UTAH STATE UNIVERSITY

USTAR BUILDING #2
LOGAN, UTAH

SHEET NAME:
INTERIOR LAB
FIT-OUT ELEVATIONS

REVISIONS
MARK DATE DESCRIPTION

ISSUE DATA
ISSUE DATE: DEC. 9, 2008
ISSUE TYPE: DESDEV
DRAWN BY: D.J.P.
CHECKED BY: K.P., J.S., J.Z.
CAD FILE NAME:
DFCM PROJECT # 06292770
STATE PROPERTY #
COPYRIGHT: STATE OF UTAH

SHEET NUMBER:
QL507

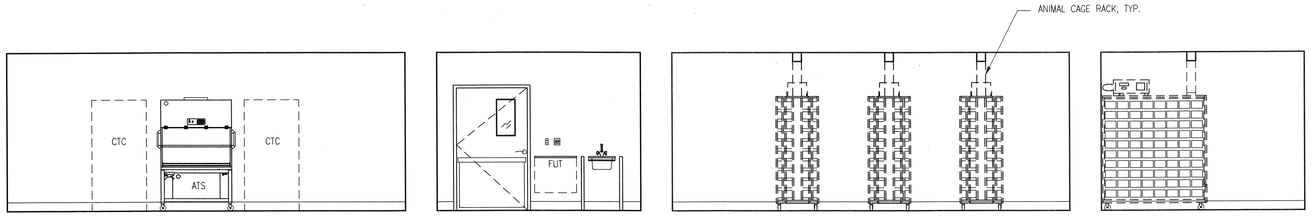


6 AHR 321
A SCALE: 1/4" = 1'-0"

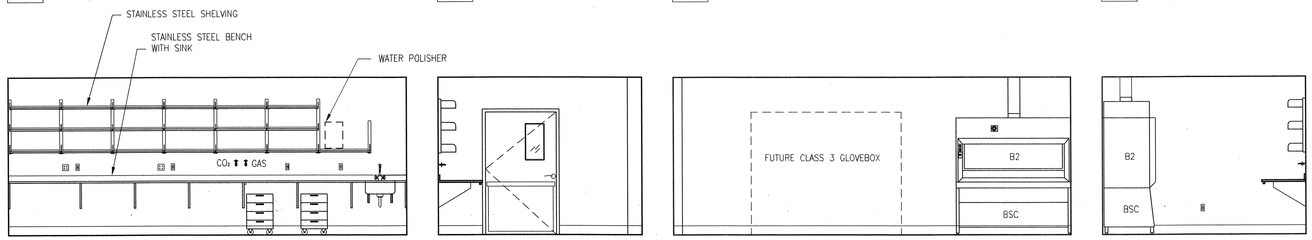


5 PROCEDURE ROOM 320
A SCALE: 1/4" = 1'-0"

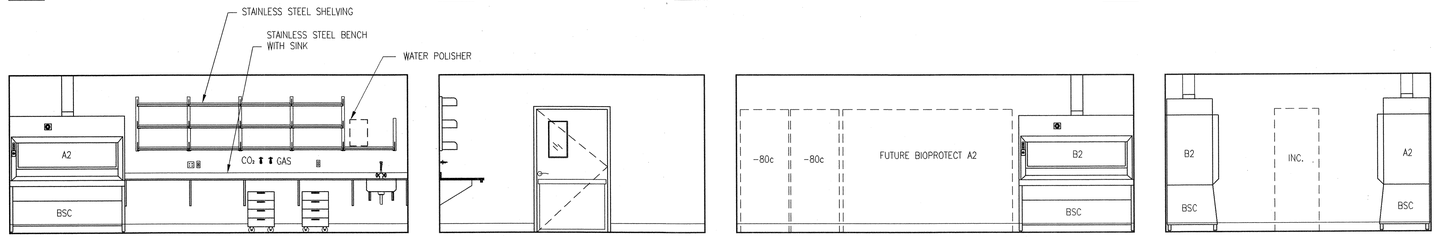


4 SUPPORT LAB 319
A SCALE: 1/4" = 1'-0"

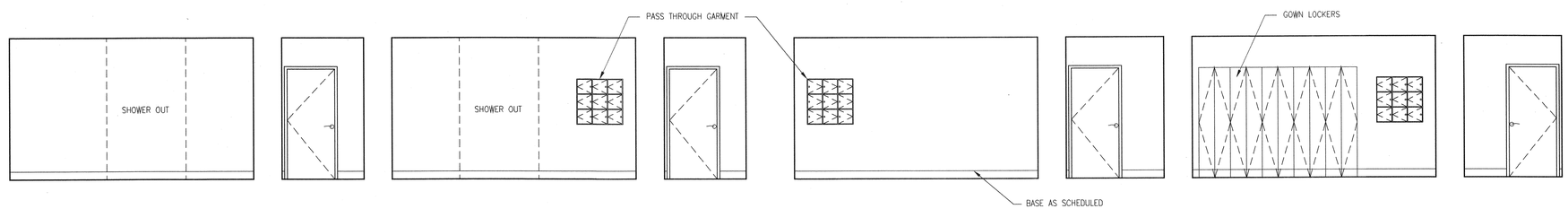


2 SHOWER-OUT ROOM 318A
A SCALE: 1/4" = 1'-0"

3 GOWN-IN ROOM 318B
A SCALE: 1/4" = 1'-0"

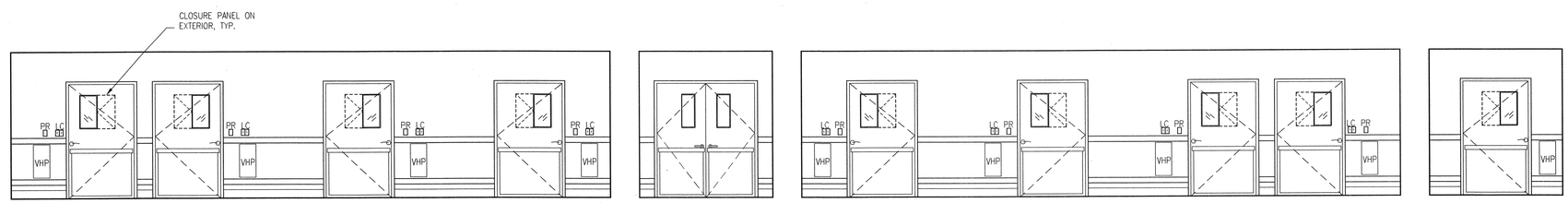


1 SUB-CORRIDOR 223
A SCALE: 1/4" = 1'-0"

ARCHITECT 0818
ajc architects
703 east 1700 south
salt lake city, utah 84105
ph: 801.466.8818
fx: 801.466.4411
www.ajcarchitects.com

PAYETTE
285 Summer Street
Boston, MA 02210-1522
www.payette.com

OWNER INFORMATION
State of Utah
Department of Administrative Services
Division of Facilities Construction & Management
4110 State Office Building
Salt Lake City, Utah 84114
Phone: (801) 538 - 3018
Fax: (801) 538 - 3267
Internet: http://www.dfcm.utah.gov

PROJECT DESCRIPTION
LIFE SCIENCES
RESEARCH CENTER
UTAH STATE UNIVERSITY

USTAR BUILDING #2
LOGAN, UTAH

SHEET NAME:
INTERIOR LAB
FIT-OUT ELEVATIONS

REVISIONS
MARK DATE DESCRIPTION

ISSUE DATA
ISSUE DATE: DEC. 9, 2008
ISSUE TYPE: DESDEV
DRAWN BY: D.J.P.
CHECKED BY: K.P., J.S., J.Z.
CAD FILE NAME:
DFCM PROJECT # 06292770
STATE PROPERTY #
COPYRIGHT: STATE OF UTAH

SHEET NUMBER:
QL508

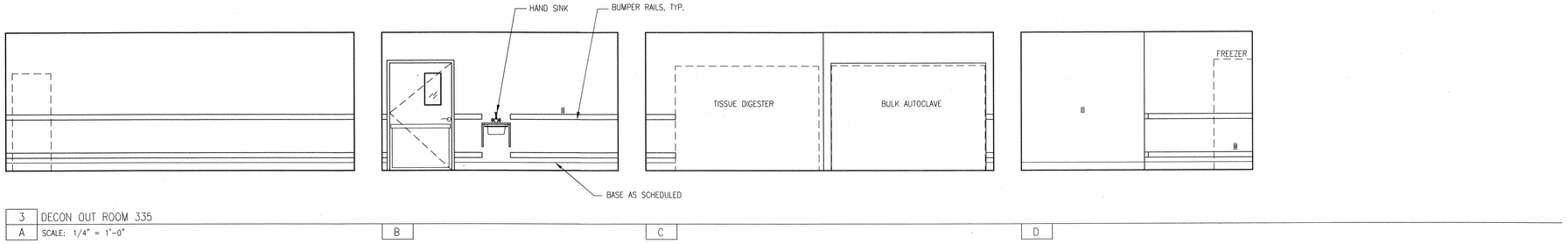


3 A DECON OUT ROOM 335
SCALE: 1/4" = 1'-0"

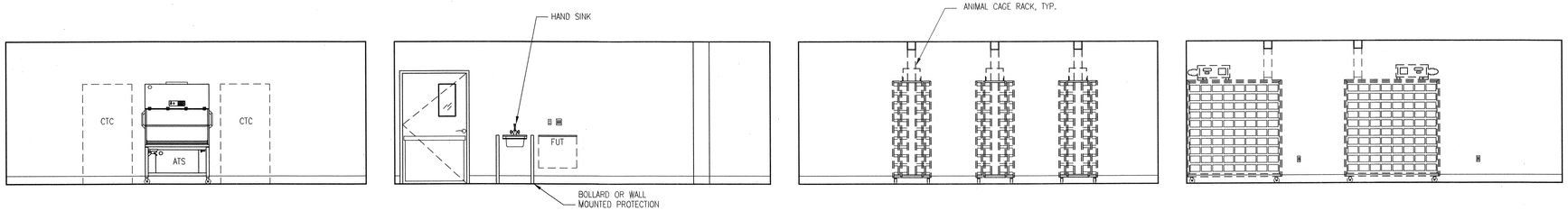


2 A AHR 334
SCALE: 1/4" = 1'-0"

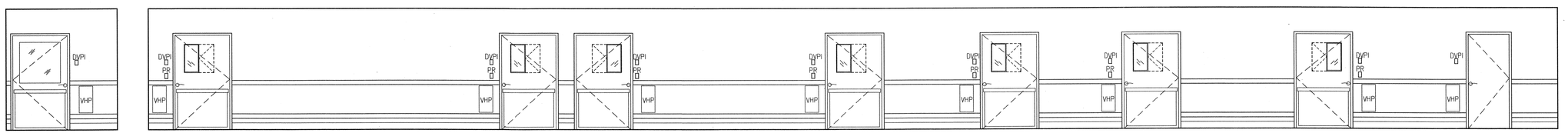


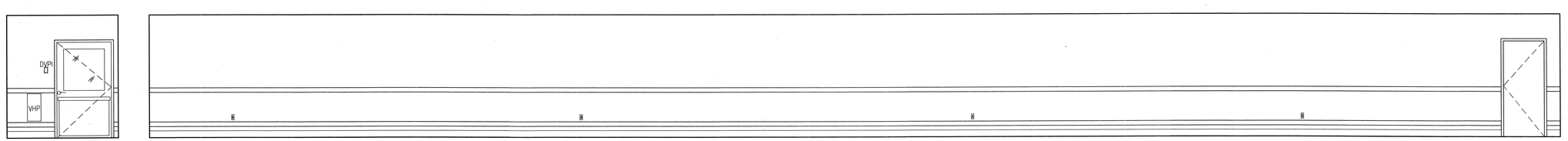


1 A MAIN CORRIDOR 300M
SCALE: 1/4" = 1'-0"

ARCHITECT 0818
ajc architects
703 east 1700 south
salt lake city, utah 84105
ph: 801.466.8818
fx: 801.466.4411
www.ajcarchitects.com

P A Y E T T E
285 Summer Street
Boston, MA 02210-1522
www.payette.com

OWNER INFORMATION
State of Utah
Department of Administrative Services
Division of Facilities
Construction & Management
4110 State Office Building
Salt Lake City, Utah 84114
Phone: (801) 538 - 3018
Fax: (801) 538 - 3267
Internet: http://www.dfcm.utah.gov

PROJECT DESCRIPTION
LIFE SCIENCES
RESEARCH CENTER
UTAH STATE UNIVERSITY

USTAR BUILDING #2
LOGAN, UTAH

SHEET NAME:
INTERIOR LAB
FIT-OUT ELEVATIONS

REVISIONS
MARK DATE DESCRIPTION

ISSUE DATA
ISSUE DATE: DEC. 9, 2008
ISSUE TYPE: DESDEV
DRAWN BY: D.J.P.
CHECKED BY: K.P., J.S., J.Z.
CAD FILE NAME:
DFCM PROJECT # 06292770
STATE PROPERTY #
COPYRIGHT: STATE OF UTAH

SHEET NUMBER:
QL509

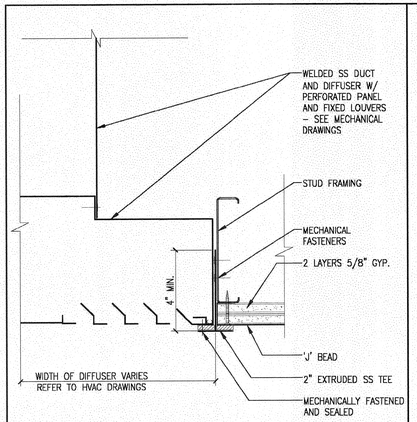


BSL-3 BARRIER PENETRATION DETAIL
DIFFUSER PENETRATION
SCALE: 3" = 1'-0"

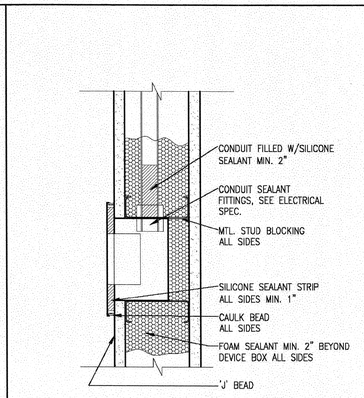


BSL-3 BARRIER PENETRATION DETAIL
RECESSED ELECTRICAL DEVICE BOX
SCALE: 3" = 1'-0"

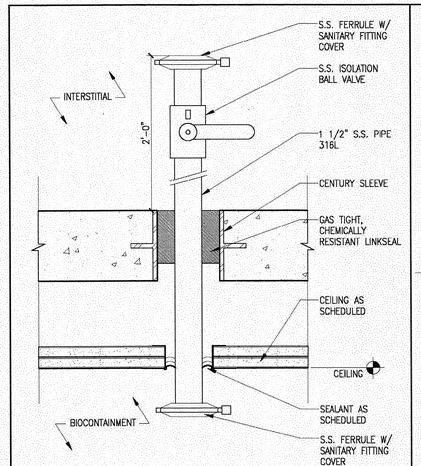


BIOCONTAINMENT BARRIER DETAIL
VHP PENETRATION DETAIL
SCALE: 3" = 1'-0"

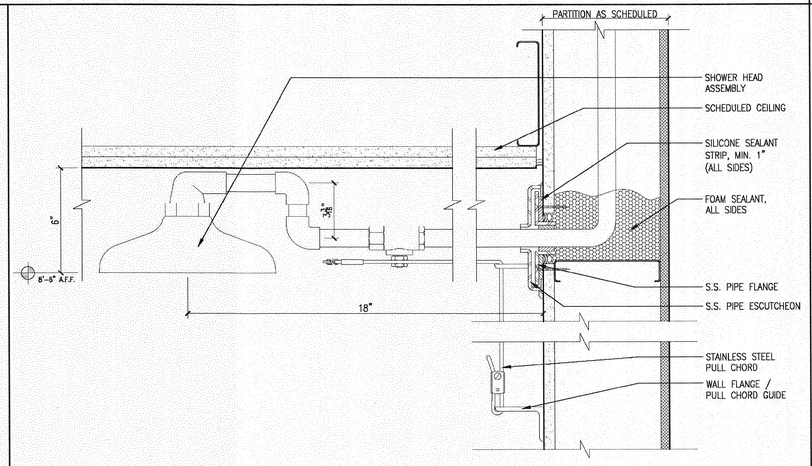


BSL-3 BARRIER PENETRATION DETAIL
EMERGENCY SHOWER
SCALE: 3" = 1'-0"

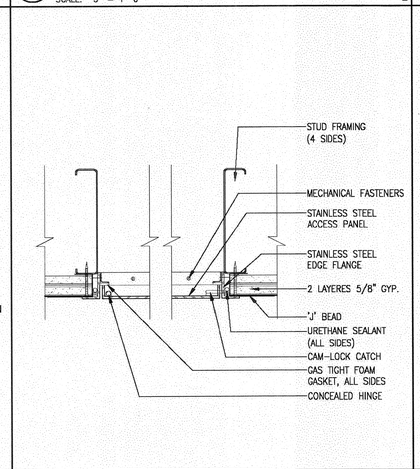


BSL-3 BARRIER PENETRATION DETAIL
ACCESS PANEL DETAIL
SCALE: 3" = 1'-0"

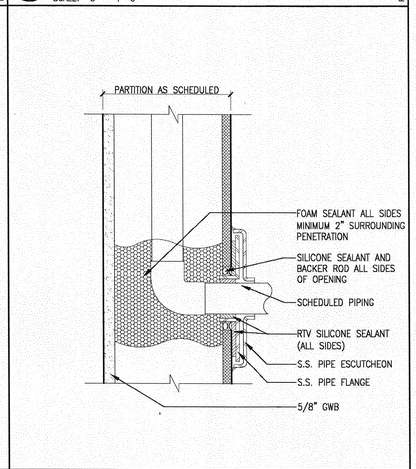


BSL-3 BARRIER PENETRATION DETAIL
PLUMBING PENETRATION
SCALE: 3" = 1'-0"

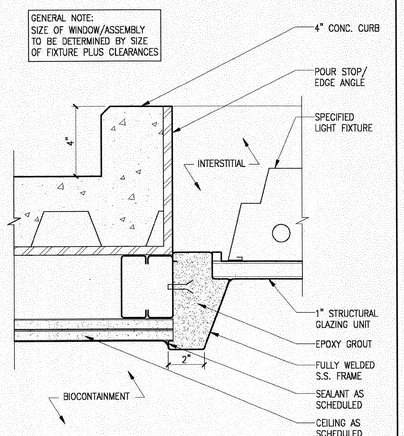


BIOCONTAINMENT BARRIER DETAIL
CEILING WINDOW/LIGHT FIXTURE
SCALE: 3" = 1'-0"

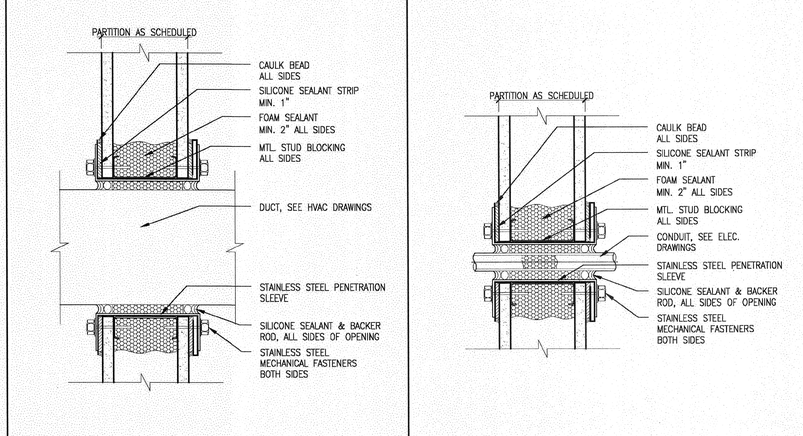


BSL-3 BARRIER PENETRATION DETAIL
TYPICAL HVAC PENETRATION
SCALE: 3" = 1'-0"




BSL-3 BARRIER PENETRATION DETAIL
TYPICAL ELECTRICAL/TEL DATA PENETRATION
SCALE: 3" = 1'-0"

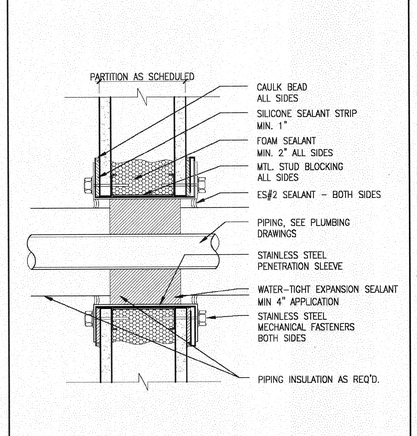


BSL-3 BARRIER PENETRATION DETAIL
PLUMBING PENETRATION FOR DYNAMIC SYSTEM APPLICATIONS
SCALE: 3" = 1'-0"

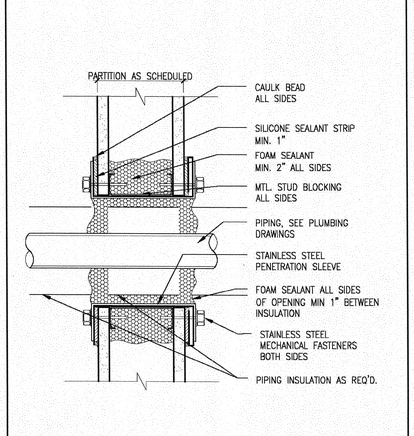


BSL-3 BARRIER PENETRATION DETAIL
TYPICAL PLUMBING PENETRATION
SCALE: 3" = 1'-0"

ARCHITECT 0818
ajc architects
703 east 1700 south
salt lake city, utah 84105
ph: 801.466.8818
fx: 801.466.4411
www.ajcarchitects.com

PAYETTE
285 Summer Street
Boston, MA 02210-1522
www.payette.com

OWNER INFORMATION
State of Utah
Department of Administrative Services
Division of Facilities Construction & Management
4110 State Office Building
Salt Lake City, Utah 84114
Phone: (801) 538 - 3018
Fax: (801) 538 - 3267
Internet: http://www.dfcm.utah.gov

PROJECT DESCRIPTION
LIFE SCIENCES
RESEARCH CENTER
UTAH STATE UNIVERSITY

USTAR BUILDING #2
LOGAN, UTAH

SHEET NAME:
BIOCONTAINMENT FIT-OUT DETAILS

REVISIONS
MARK DATE DESCRIPTION

ISSUE DATA
ISSUE DATE: DEC. 9, 2008
ISSUE TYPE: DESDEV
DRAWN BY: D.J.P.
CHECKED BY: K.P., J.S., J.Z.
CAD FILE NAME:
DFCM PROJECT # 06292770
STATE PROPERTY #
COPYRIGHT: STATE OF UTAH

SHEET NUMBER:
QL901

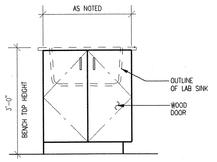


S5E FIXED BASE CABINET DOUBLE DOORS
WIDTH: 2'-6"

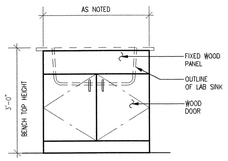


S6E FIXED BASE CABINET DOUBLE DOORS
WIDTH: 2'-6"

S6F FIXED BASE CABINET DOUBLE DOORS
WIDTH: 3'-0"

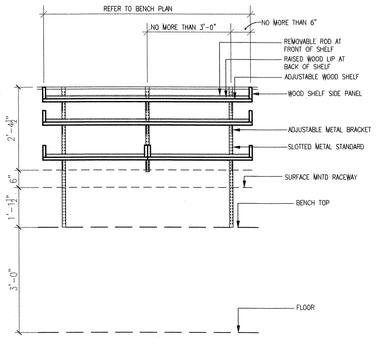


B-F SHELVING ABOVE LAB BENCH ADJUSTABLE
WIDTH: 3'-0"

B-N SHELVING ABOVE LAB BENCH ADJUSTABLE
WIDTH: 6'-0"

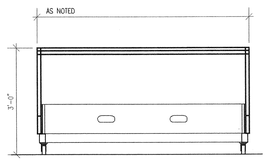


M10N MOBILE BENCH
WIDTH: 6'-0"

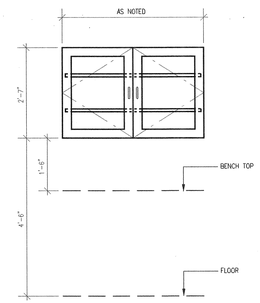


W5E WALL CABINET 2 DOOR W/ SHELVES
WIDTH: 2'-6"

W5F WALL CABINET 2 DOOR W/ SHELVES
WIDTH: 3'-0"

W5H WALL CABINET 2 DOOR W/ SHELVES
WIDTH: 4'-0"

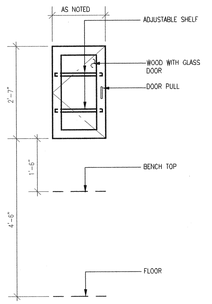


W1? WALL CABINET LH DOOR
WIDTH:

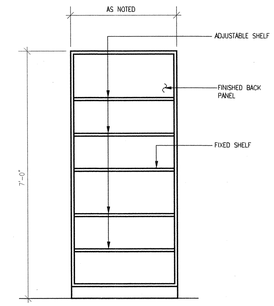


F10F FULL HEIGHT CABINET OPEN FACE W/ SHELVES
WIDTH: 3'-0"

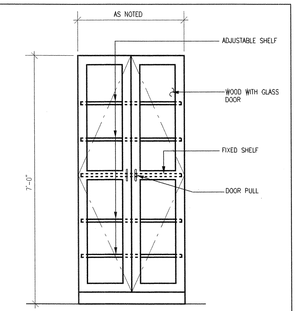


F5E FULL HEIGHT CABINET 2 DOOR W/ SHELVES
WIDTH: 2'-6"

F5F FULL HEIGHT CABINET 2 DOOR W/ SHELVES
WIDTH: 3'-0"

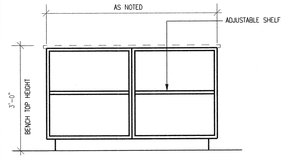


H10K FIXED BASE CABINET OPEN FACE
WIDTH: 4'-10"

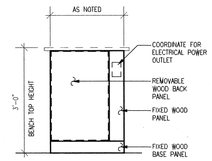


KNEE SPACE,HIGH

K-E KNEE SPACE HIGH
WIDTH: 2'-6"

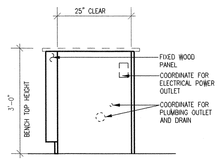


K-D KNEE SPACE FUTURE GLASS WASH
WIDTH: 2'-1"

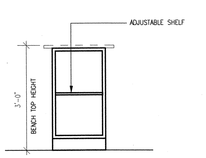


H10B FIXED BASE CABINET OPEN FACE
WIDTH: 1'-6"

H10C FIXED BASE CABINET OPEN FACE
WIDTH: 2'-0"

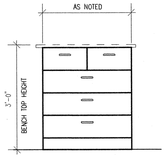


H9E FIXED BASE CABINET 5 DRAWER
WIDTH: 2'-6"

H9F FIXED BASE CABINET 5 DRAWER
WIDTH: 3'-0"

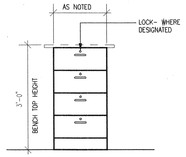


H8B FIXED BASE CABINET 4 DRAWER
WIDTH: 1'-6"

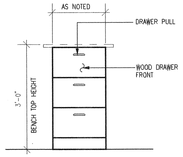


H7B FIXED BASE CABINET 3 DRAWER
WIDTH: 1'-6"

H7C FIXED BASE CABINET 3 DRAWER
WIDTH: 2'-0"

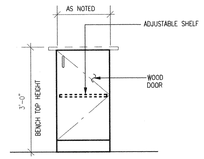


H3B FIXED BASE CABINET RH DOOR
WIDTH: 1'-6"

H3C FIXED BASE CABINET RH DOOR
WIDTH: 2'-0"

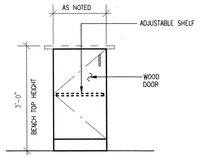


H1B FIXED BASE CABINET LH DOOR
WIDTH: 1'-6"

H1C FIXED BASE CABINET LH DOOR
WIDTH: 2'-0"

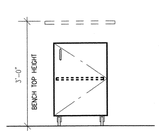


M3B MOBILE BASE CABINET RH DOOR
WIDTH: 1'-6"

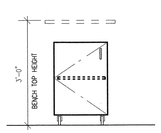


M1B MOBILE BASE CABINET LH DOOR
WIDTH: 1'-6"

M1C MOBILE BASE CABINET LH DOOR
WIDTH: 2'-0"

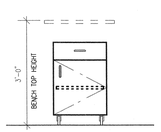


M4C MOBILE BASE CABINET RH DOOR/DRAWER
WIDTH: 2'-0"

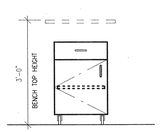


M2C MOBILE BASE CABINET LH DOOR/DRAWER
WIDTH: 2'-0"

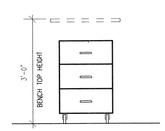


M7B MOBILE BASE CABINET 3 DRAWERS
WIDTH: 1'-6"

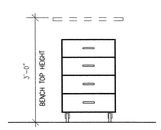


M8B MOBILE BASE CABINET 4 DRAWERS
WIDTH: 1'-6"

CASEWORK NOTES:

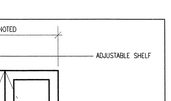


CASEWORK FAMILIES:
H: FIXED HIGH BASE CABINET
M: MOBILE HIGH BASE CABINET
S: SINK BASE CABINET
W: WALL CABINET
K: KNEE SPACE
B: SHELVING
T: TABLE
F: FULL HEIGHT CABINET

CASEWORK TYPE:
1: LEFT HAND DOOR
2: LEFT HAND DOOR & DRAWER
3: RIGHT HAND DOOR
4: RIGHT HAND DOOR & DRAWER
5: DOUBLE DOOR
6: DOUBLE DOOR W/ FIXED PANEL
7: THREE DRAWER
8: FOUR DRAWER
9: FIVE DRAWER
10: OPEN FACE

CASEWORK WIDTH KEY:

| | | | |
|---|---|---|---|
| A: | 1'-0" W | J: | 4'-6" W |
| B: | 1'-6" W | K: | 4'-10" W |
| C: | 2'-0" W | L: | 5'-0" W |
| D: | 2'-1" W | M: | 5'-6" W |
| E: | 2'-6" W | N: | 6'-0" W |
| F: | 3'-0" W | O: | 6'-6" W |
| G: | 3'-6" W | | |
| H: | 4'-0" W | | |

GENERAL NOTES
1. ALL SHELVING SHALL BE 1" THICK AND 1'-1" DEEP MIN.
2. ALL SHELVING OVERHANGS SHALL BE 6" MAXIMUM.
3. TOP SHELF SHALL BE LOCATED AT 7'-0" MAXIMUM. ABOVE FINISHED FLOOR.
4. ALL BASE CABINETS AND FULL HEIGHT CABINETS SHALL BE 2'-0" DEEP UNLESS OTHERWISE NOTED
5. ALL WALL CABINETS SHALL BE 1'-1" DEEP UNLESS OTHERWISE NOTED.
6. ALL BASES SHALL BE 3" HIGH UNLESS OTHERWISE NOTED.
7. ALL BASE CABINETS AND WALL CABINETS SHALL HAVE 1 ADJUSTABLE SHELF UNLESS OTHERWISE NOTED.

ARCHITECT 0818
ajc architects
703 east 1700 south
salt lake city, utah 84105
ph: 801.466.8818
fx: 801.466.4411
www.ajcarchitects.com

PAYETTE
285 Summer Street
Boston, MA 02210-1522
www.payette.com

OWNER INFORMATION
State of Utah
Department of Administrative Services
Division of Facilities Construction & Management
4110 State Office Building
Salt Lake City, Utah 84114
Phone: (801) 538 - 3018
Fax: (801) 538 - 3267
Internet: http://www.dfcm.utah.gov

PROJECT DESCRIPTION
LIFE SCIENCES
RESEARCH CENTER
UTAH STATE UNIVERSITY

USTAR BUILDING #2
LOGAN, UTAH

SHEET NAME:
CASEWORK MENU
INTERIOR LAB
FIT-OUT

REVISIONS
MARK DATE DESCRIPTION

ISSUE DATA
ISSUE DATE: DEC. 9, 2008
ISSUE TYPE: DESDEV
DRAWN BY: D.J.P.
CHECKED BY: K.P., J.S., J.Z.
CAD FILE NAME:
DFCM PROJECT # 06292770
STATE PROPERTY #
COPYRIGHT: STATE OF UTAH

SHEET NUMBER:
QL905

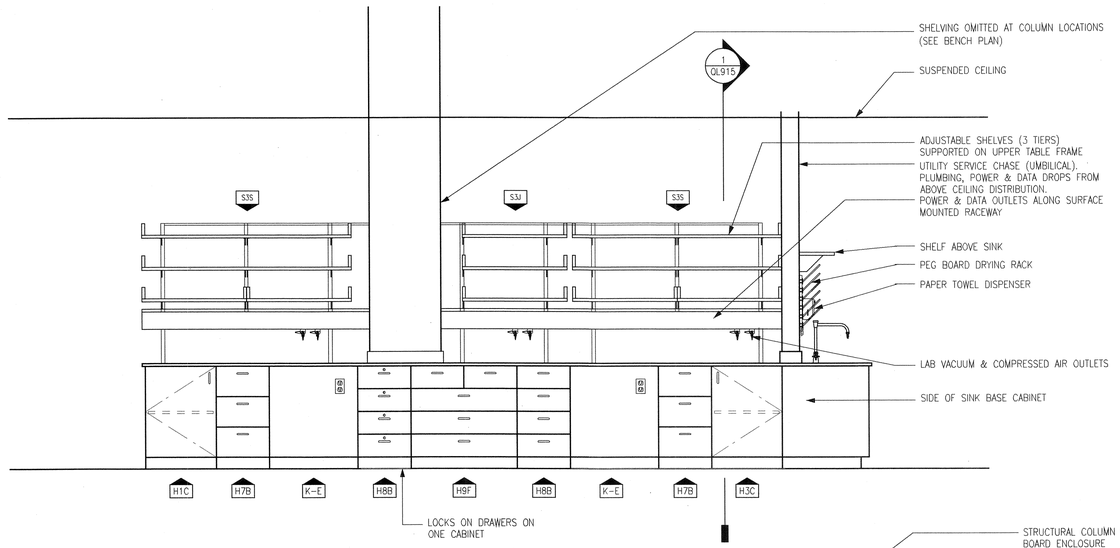


2 ELEVATION
ISLAND BENCH: TYPE IB-1
SCALE: 1/2" = 1'-0"

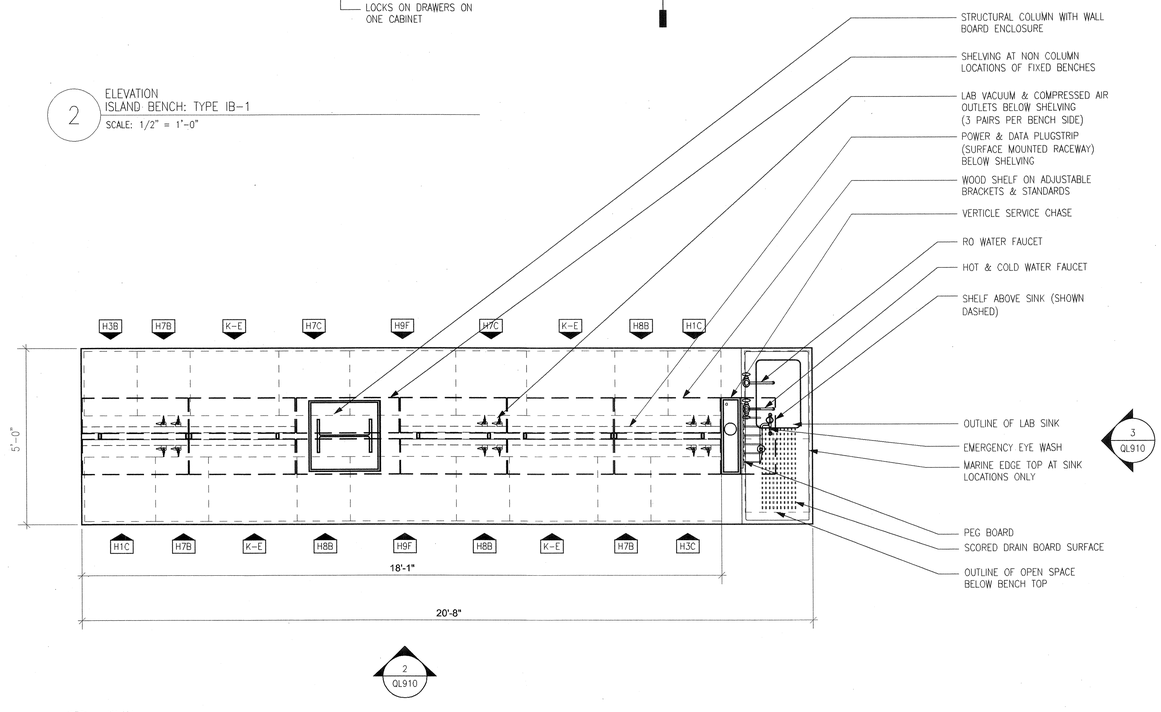


1 PLAN
ISLAND BENCH: TYPE IB-1
SCALE: 1/2" = 1'-0"

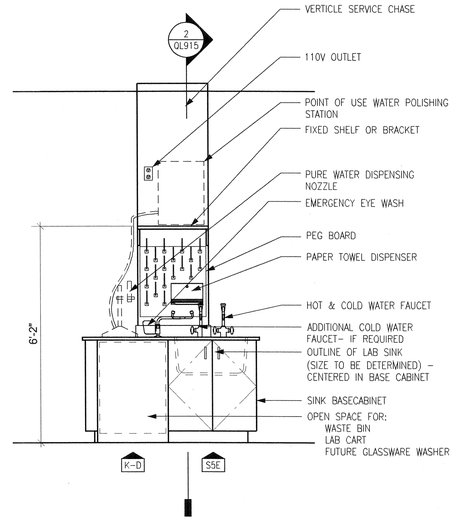


3 ELEVATION
ISLAND BENCH: TYPE IB-1
SCALE: 1/2" = 1'-0"

ARCHITECT 0818
ajc architects
703 east 1700 south
salt lake city, utah 84105
ph: 801.466.8818
fx: 801.466.4411
www.ajcarchitects.com

PAYETTE
285 Summer Street
Boston, MA 02210-1522
www.payette.com

OWNER INFORMATION
State of Utah
Department of Administrative Services
Division of Facilities Construction & Management
4110 State Office Building
Salt Lake City, Utah 84114
Phone: (801) 538 - 3018
Fax: (801) 538 - 3267
Internet: http://www.dfcm.utah.gov

PROJECT DESCRIPTION
LIFE SCIENCES
RESEARCH CENTER
UTAH STATE UNIVERSITY

USTAR BUILDING #2
LOGAN, UTAH

SHEET NAME:
LAB BENCH DETAILS
INTERIOR
LAB FIT-OUT

REVISIONS

| MARK | DATE | DESCRIPTION |
|---|---|---|

ISSUE DATA

ISSUE DATE: DEC. 9, 2008
ISSUE TYPE: DESDEV
DRAWN BY: D.J.P.
CHECKED BY: K.P., J.S., J.Z.
CAD FILE NAME:
DFCM PROJECT # 06292770
STATE PROPERTY #
COPYRIGHT: STATE OF UTAH

SHEET NUMBER:
QL910

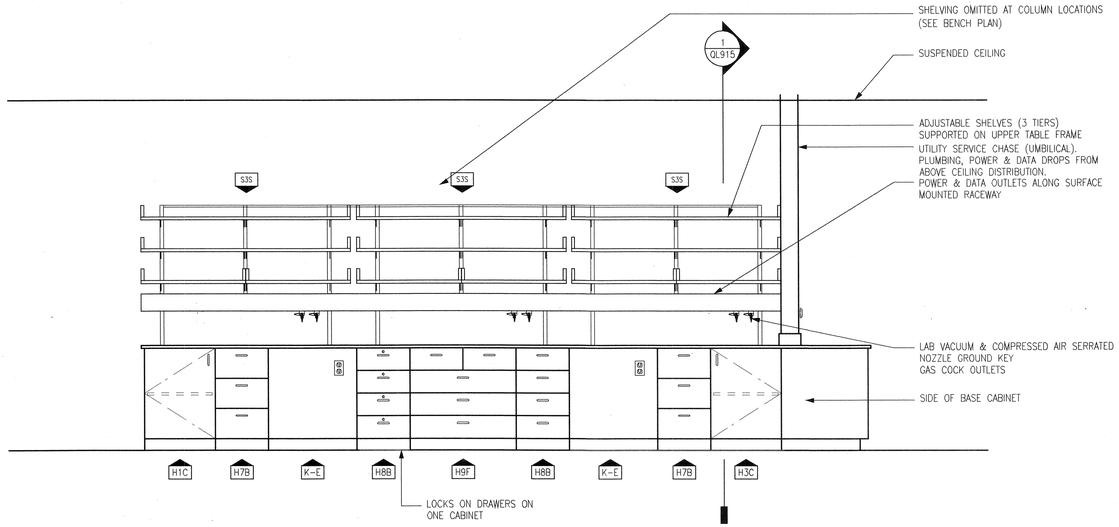


2 ELEVATION
ISLAND BENCH: TYPE IB-2
SCALE: 1/2" = 1'-0"

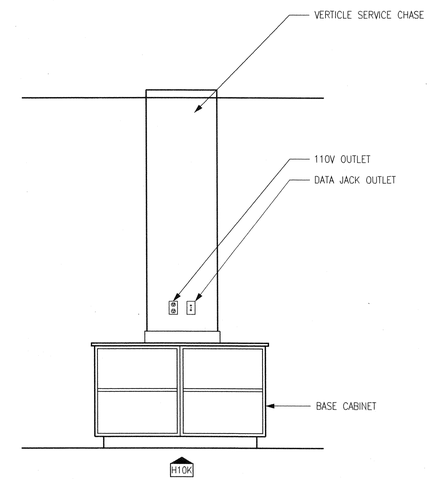


3 ELEVATION
ISLAND BENCH: TYPE IB-2, IB-3
SCALE: 1/2" = 1'-0"

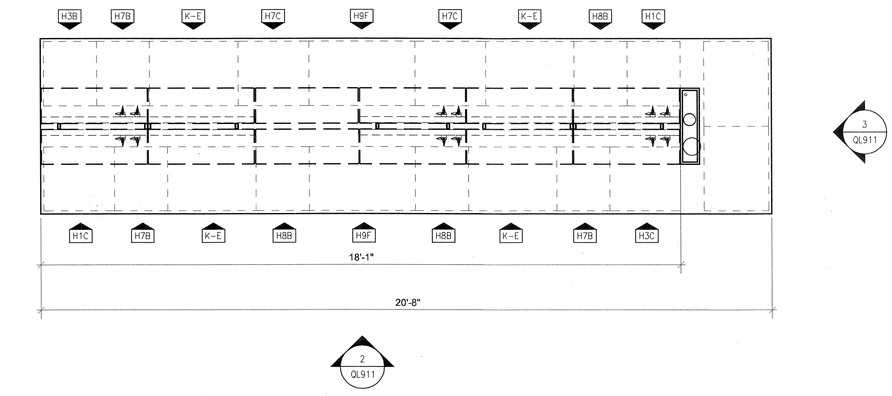


1 PLAN
ISLAND BENCH: TYPE IB-2
SCALE: 1/2" = 1'-0"

ARCHITECT 0818
ajc architects
703 east 1700 south
salt lake city, utah 84105
ph: 801.466.8818
fx: 801.466.4411
www.ajcarchitects.com

P A Y E T T E
285 Summer Street
Boston, MA 02210-1522
www.payette.com

OWNER INFORMATION
State of Utah
Department of Administrative Services
Division of Facilities Construction & Management
4110 State Office Building
Salt Lake City, Utah 84114
Phone: (801) 538 - 3018
Fax: (801) 538 - 3267
Internet: http://www.dfcm.utah.gov

PROJECT DESCRIPTION
LIFE SCIENCES
RESEARCH CENTER
UTAH STATE UNIVERSITY

USTAR BUILDING #2
LOGAN, UTAH

SHEET NAME:
LAB BENCH DETAILS
INTERIOR
LAB FIT-OUT

REVISIONS
MARK DATE DESCRIPTION

ISSUE DATA
ISSUE DATE: DEC. 9, 2008
ISSUE TYPE: DESDEV
DRAWN BY: D.J.P.
CHECKED BY: K.P., J.S., J.Z.
CAD FILE NAME:
DFCM PROJECT # 06292770
STATE PROPERTY #
COPYRIGHT: STATE OF UTAH

SHEET NUMBER:
QL911

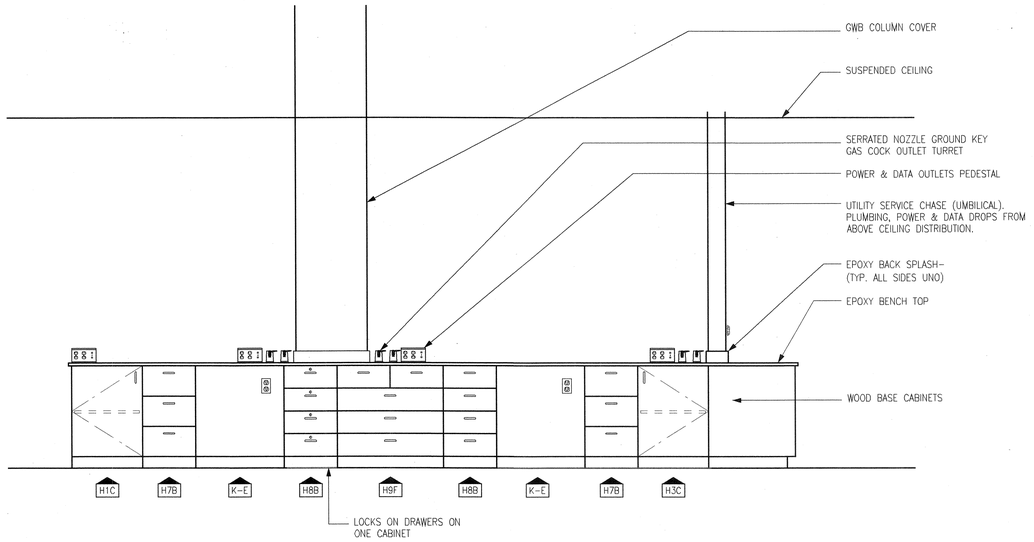


2 ELEVATION
ISLAND BENCH: TYPE IB-3
SCALE: 1/2" = 1'-0"

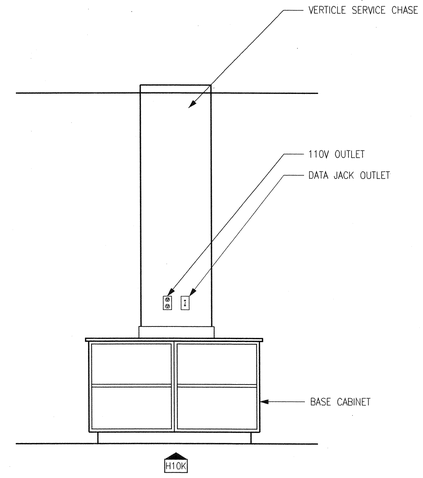


3 ELEVATION
ISLAND BENCH: TYPE IB-2, IB-3
SCALE: 1/2" = 1'-0"

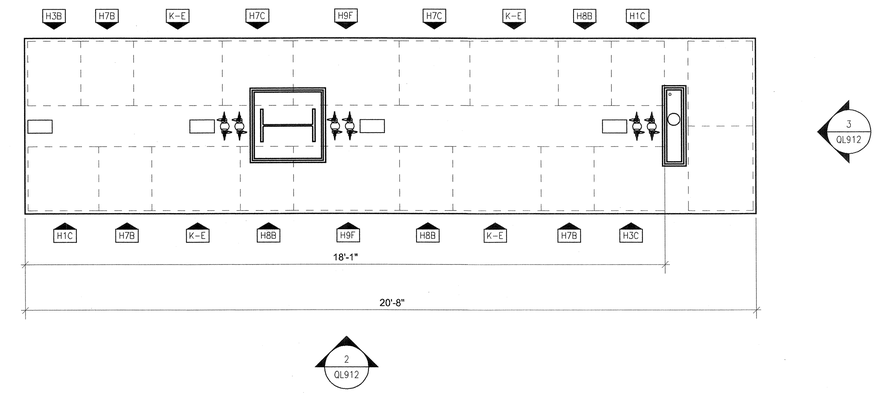


1 PLAN
ISLAND BENCH: TYPE IB-3
SCALE: 1/2" = 1'-0"

ARCHITECT 0818
ajc architects
703 east 1700 south
salt lake city, utah 84105
ph: 801.466.8818
fx: 801.466.4411
www.ajcarchitects.com

P A Y E T T E
285 Summer Street
Boston, MA 02210-1522
www.payette.com

OWNER INFORMATION
**State of Utah**
Department of Administrative Services
Division of Facilities Construction & Management
4110 State Office Building
Salt Lake City, Utah 84114
Phone: (801) 538 - 3018
Fax: (801) 538 - 3267
Internet: http://www.dfcm.utah.gov

PROJECT DESCRIPTION
LIFE SCIENCES
RESEARCH CENTER
UTAH STATE UNIVERSITY

USTAR BUILDING #2
LOGAN, UTAH

SHEET NAME:
LAB BENCH DETAILS
INTERIOR
LAB FIT-OUT

REVISIONS
MARK DATE DESCRIPTION

ISSUE DATA
ISSUE DATE: DEC. 9, 2008
ISSUE TYPE: DESDEV
DRAWN BY: D.J.P.
CHECKED BY: K.P., J.S., J.Z.
CAD FILE NAME:
DFCM PROJECT # 06292770
STATE PROPERTY #
COPYRIGHT: STATE OF UTAH

SHEET NUMBER:
QL912

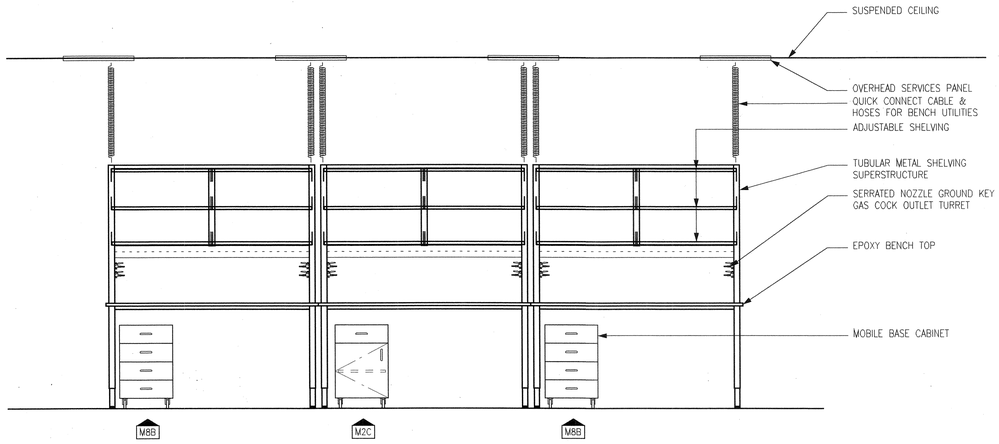


2 ELEVATION
ISLAND BENCH: COMPRISED OF SIX TYPE MB-1A BENCHES
SCALE: 1/2" = 1'-0"

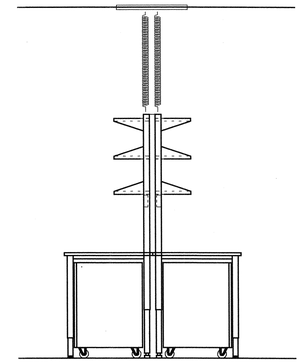

3 ELEVATION
ISLAND BENCH: COMPRISED OF SIX TYPE MB-1A BENCHES
SCALE: 1/2" = 1'-0"

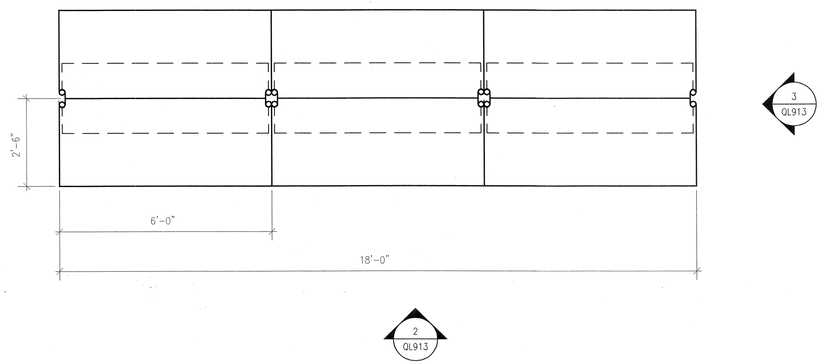


1 PLAN
ISLAND BENCH: COMPRISED OF SIX TYPE MB-1A BENCHES
SCALE: 1/2" = 1'-0"

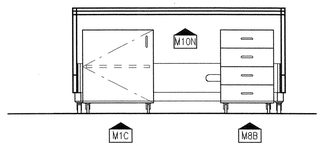


4 ELEVATION
MOVABLE BENCH: TYPE MB-1
SCALE: 1/2" = 1'-0"

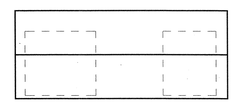

5 PLAN
MOVABLE BENCH: TYPE MB-1
SCALE: 1/2" = 1'-0"

ARCHITECT 0818
ajc architects
703 east 1700 south
salt lake city, utah 84105
ph: 801.466.8818
fx: 801.466.4411
www.ajcarchitects.com

P A Y E T T E
285 Summer Street
Boston, MA 02210-1522
www.payette.com

OWNER INFORMATION
State of Utah
Department of Administrative Services
Division of Facilities Construction & Management
4110 State Office Building
Salt Lake City, Utah 84114
Phone: (801) 538 - 3018
Fax: (801) 538 - 3267
Internet: http://www.dfcm.utah.gov

PROJECT DESCRIPTION
LIFE SCIENCES
RESEARCH CENTER
UTAH STATE UNIVERSITY

USTAR BUILDING #2
LOGAN, UTAH

SHEET NAME:
LAB BENCH DETAILS
INTERIOR
LAB FIT-OUT

REVISIONS
MARK DATE DESCRIPTION

ISSUE DATA
ISSUE DATE: DEC. 9, 2008
ISSUE TYPE: DESDEV
DRAWN BY: D.J.P.
CHECKED BY: K.P., J.S., J.Z.
CAD FILE NAME:
DFCM PROJECT # 06292770
STATE PROPERTY #
COPYRIGHT: STATE OF UTAH

SHEET NUMBER:
QL913

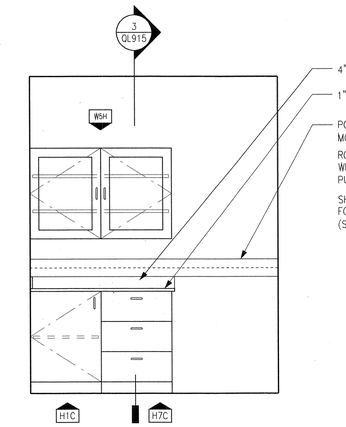


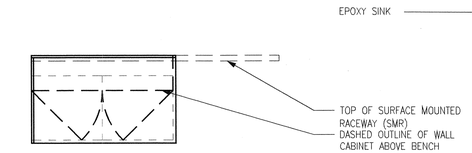


1 PLAN
WALL BENCH: TYPE WB-1
SCALE: 1/2" = 1'-0"




2 ELEVATION
WALL BENCH: TYPE WB-1
SCALE: 1/2" = 1'-0"

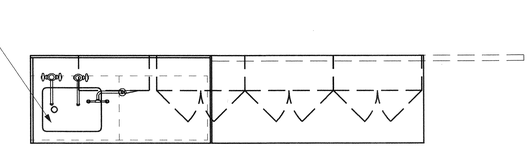


3 PLAN
WALL BENCH: TYPE WB-2
SCALE: 1/2" = 1'-0"

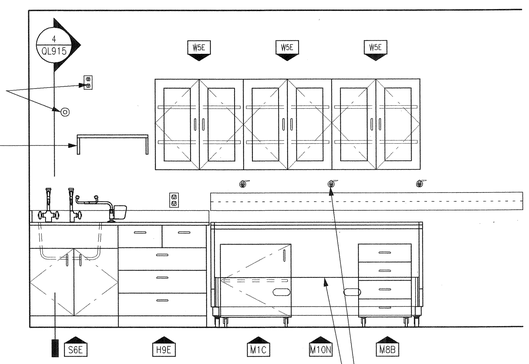


4 ELEVATION
WALL BENCH: TYPE WB-2
SCALE: 1/2" = 1'-0"

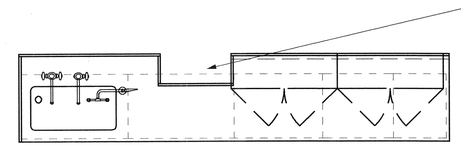


5 PLAN
WALL BENCH: TYPE WB-3
SCALE: 1/2" = 1'-0"

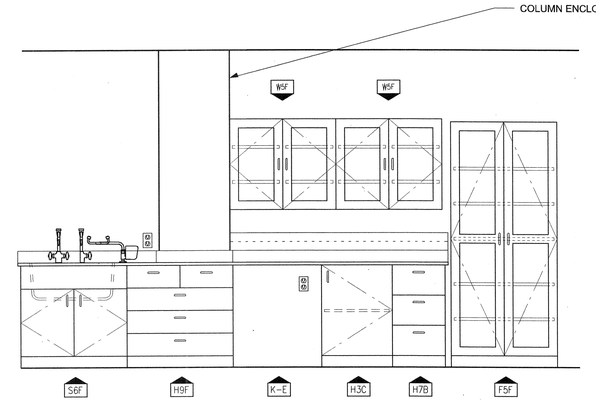


6 ELEVATION
WALL BENCH: TYPE WB-3
SCALE: 1/2" = 1'-0"

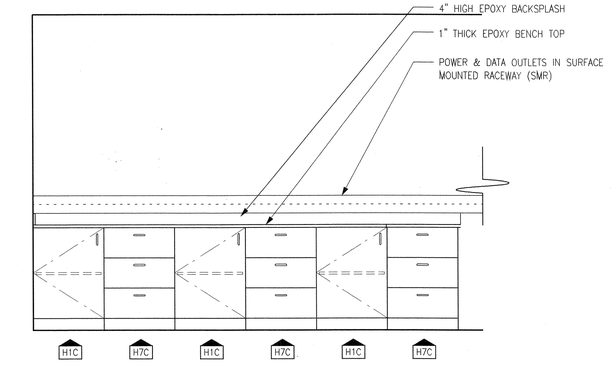


8 ELEVATION
WALL BENCH: TYPE WB-4
SCALE: 1/2" = 1'-0"

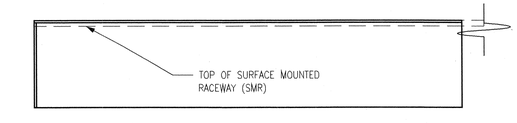


7 PLAN
WALL BENCH: TYPE WB-4
SCALE: 1/2" = 1'-0"

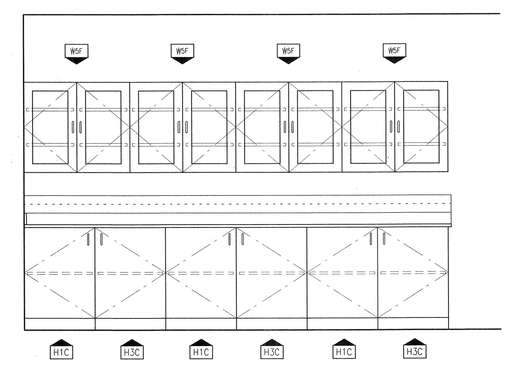


10 ELEVATION
WALL BENCH: TYPE WB-5
SCALE: 1/2" = 1'-0"

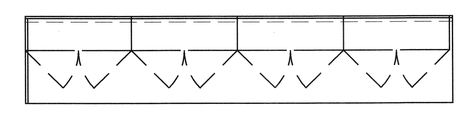

9 PLAN
WALL BENCH: TYPE WB-5
SCALE: 1/2" = 1'-0"

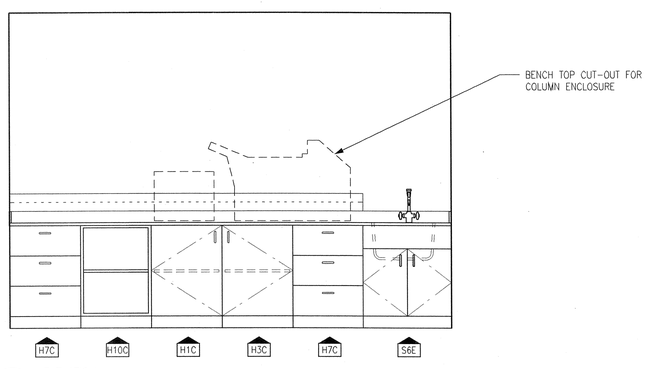


12 ELEVATION
WALL BENCH: TYPE WB-6
SCALE: 1/2" = 1'-0"

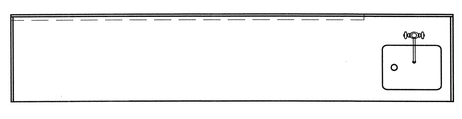

11 PLAN
WALL BENCH: TYPE WB-6
SCALE: 1/2" = 1'-0"

ARCHITECT 0818
ajc architects
703 east 1700 south
salt lake city, utah 84105
ph: 801.466.8818
fx: 801.466.4411
www.ajcarchitects.com

PAYETTE
285 Summer Street
Boston, MA 02210-1522
www.payette.com

OWNER INFORMATION
State of Utah
Department of Administrative Services
Division of Facilities Construction & Management
4110 State Office Building
Salt Lake City, Utah 84114
Phone: (801) 538 - 3018
Fax: (801) 538 - 3267
Internet: http://www.dfcm.utah.gov

PROJECT DESCRIPTION
LIFE SCIENCES
RESEARCH CENTER
UTAH STATE UNIVERSITY

USTAR BUILDING #2
LOGAN, UTAH

SHEET NAME:
LAB BENCH DETAILS
INTERIOR
LAB FIT-OUT

REVISIONS
MARK DATE DESCRIPTION

ISSUE DATA
ISSUE DATE: DEC. 9, 2008
ISSUE TYPE: DESDEV
DRAWN BY: D.J.P.
CHECKED BY: K.P., J.S., J.Z.
CAD FILE NAME:
DFCM PROJECT # 06292770
STATE PROPERTY #
COPYRIGHT: STATE OF UTAH

SHEET NUMBER:
QL914

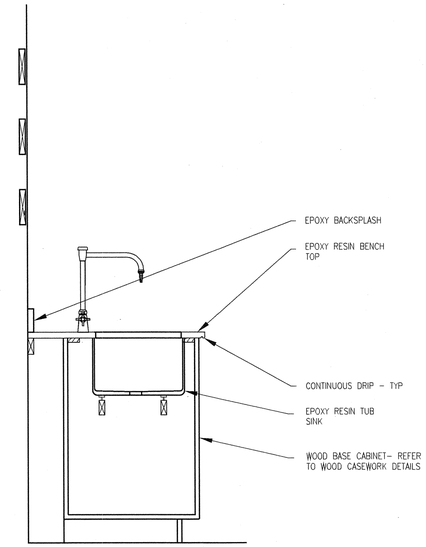


4 SECTION
WALL BENCH AT LAB SINK
SCALE: 1" = 1'-0"

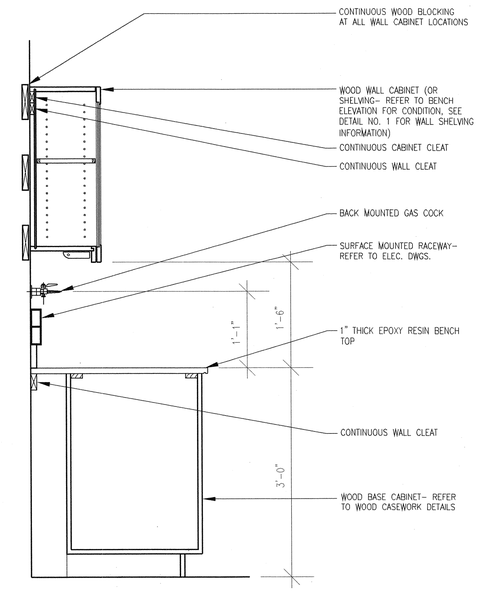


3 SECTION
WALL BENCH
SCALE: 1" = 1'-0"

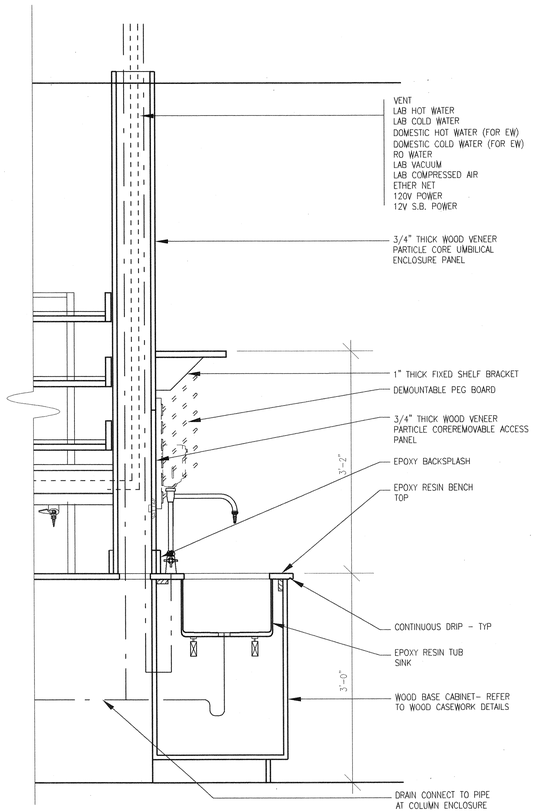


2 SECTION
ISLAND BENCH @ LAB SINK
SCALE: 1" = 1'-0"

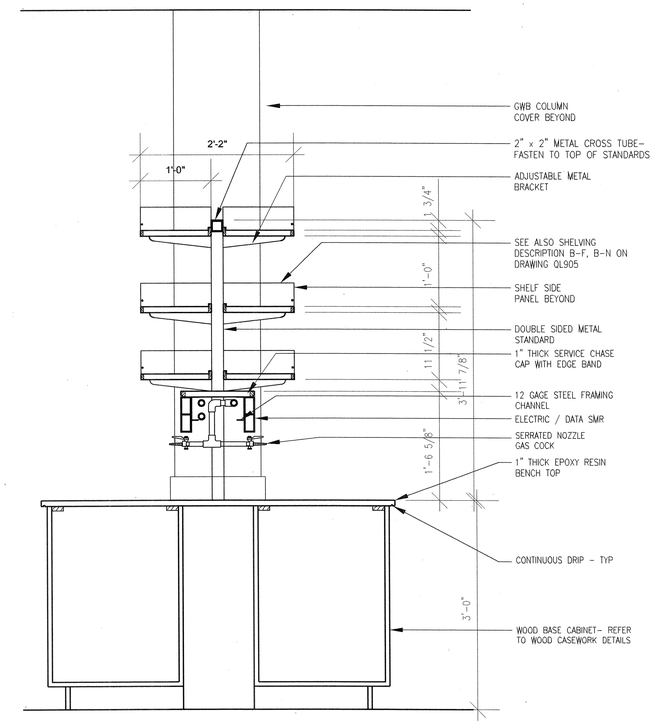


1 SECTION
ISLAND BENCH
SCALE: 1" = 1'-0"

ARCHITECT 0818
ajc architects
703 east 1700 south
salt lake city, utah 84105
ph: 801.466.8818
fx: 801.466.4411
www.ajcarchitects.com

P A Y E T T E
285 Summer Street
Boston, MA 02210-1522
www.payette.com

OWNER INFORMATION
State of Utah
Department of Administrative Services
Division of Facilities Construction & Management
4110 State Office Building
Salt Lake City, Utah 84114
Phone: (801) 538 - 3018
Fax: (801) 538 - 3267
Internet: http://www.dfcm.utah.gov

PROJECT DESCRIPTION
LIFE SCIENCES
RESEARCH CENTER
UTAH STATE UNIVERSITY

USTAR BUILDING #2
LOGAN, UTAH

SHEET NAME:
LAB BENCH DETAILS
INTERIOR
LAB FIT-OUT

REVISIONS
MARK DATE DESCRIPTION

ISSUE DATA
ISSUE DATE: DEC. 9, 2008
ISSUE TYPE: DESDEV
DRAWN BY: D.J.P.
CHECKED BY: K.P., J.S., J.Z.
CAD FILE NAME:
DFCM PROJECT # 06292770
STATE PROPERTY #
COPYRIGHT: STATE OF UTAH

SHEET NUMBER:
QL915

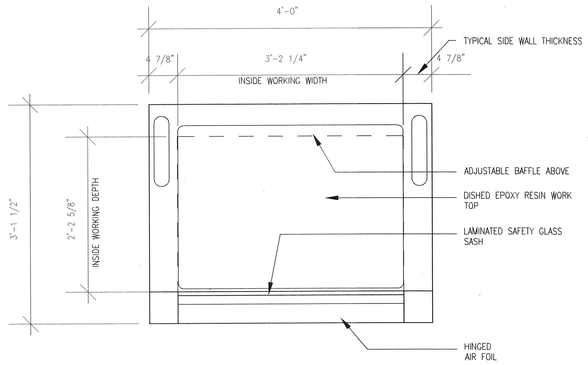


3 PLAN
FUME HOOD WORK TOP
SCALE: 1" = 1'-0"

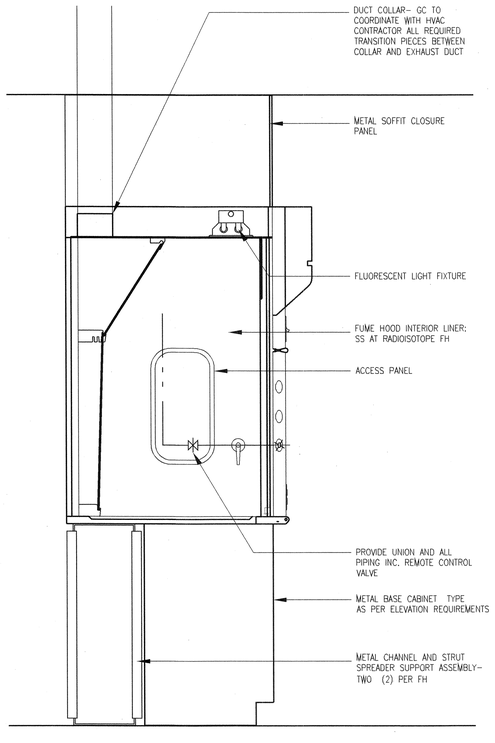


2 SECTION
FUME HOOD
SCALE: 1" = 1'-0"

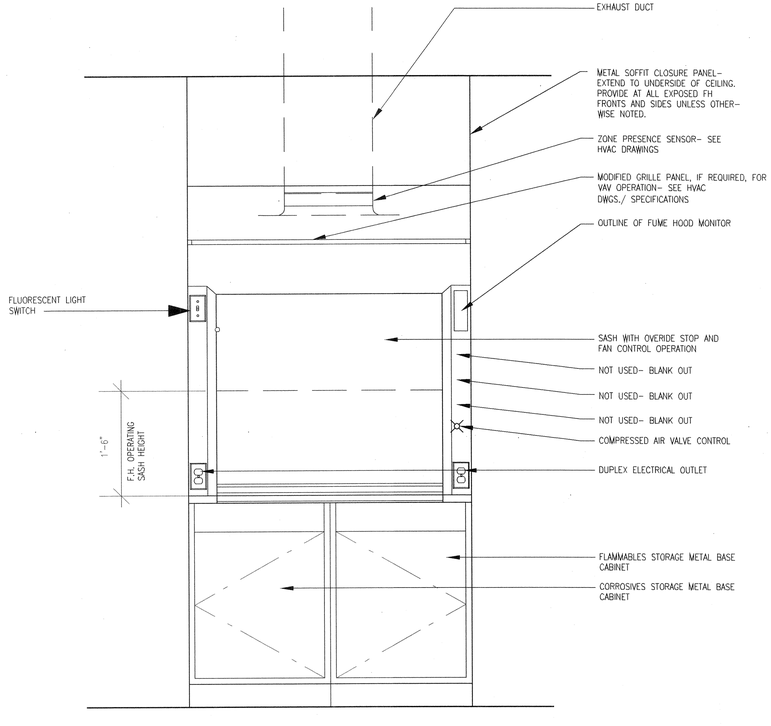


1 ELEVATION
FUME HOOD
SCALE: 1" = 1'-0"

ARCHITECT 0818
ajc architects
703 east 1700 south
salt lake city, utah 84105
ph: 801.466.8818
fx: 801.466.4411
www.ajcarchitects.com

P A Y E T T E
285 Summer Street
Boston, MA 02210-1522
www.payette.com

OWNER INFORMATION
State of Utah
Department of Administrative Services
Division of Facilities Construction & Management
4110 State Office Building
Salt Lake City, Utah 84114
Phone: (801) 538 - 3018
Fax: (801) 538 - 3267
Internet: http://www.dfcm.utah.gov

PROJECT DESCRIPTION
LIFE SCIENCES
RESEARCH CENTER
UTAH STATE UNIVERSITY

USTAR BUILDING #2
LOGAN, UTAH

SHEET NAME:
FUME HOOD DETAILS
INTERIOR
LAB FIT-OUT

REVISIONS
MARK DATE DESCRIPTION

ISSUE DATA
ISSUE DATE: DEC. 9, 2008
ISSUE TYPE: DESDEV
DRAWN BY: D.J.P.
CHECKED BY: K.P., J.S., J.Z.
CAD FILE NAME:
DFCM PROJECT # 06292770
STATE PROPERTY #
COPYRIGHT: STATE OF UTAH

SHEET NUMBER:
QL916