MULTI-STEP BIDDING PROCESS
FOR
CONTRACTORS

Request For Solicitation For Construction Services

Stage II – General Contractors Bidders List FY08

July 26, 2007

NORTH SALT LAKE DRIVER LICENSE REMODEL

DEPARTMENT OF PUBLIC SAFETY
NORTH SALT LAKE, UTAH

DFCM Project No. 07009370

Axis Architects
352 South Denver Street, #205
Salt Lake City, Utah 84111

TABLE OF CONTENTS

	Page #
Title Sheet	1
Table of Contents	2
Invitation to Bid	3
Stage II – Multi-Step Bidding Process	4
Stage II - Project Schedule	8
Bid Form	9
Bid Bond Form	11
Contractors Sublist Form	12
Contractor's Agreement	15
Performance Bond	20
Payment Bond	21
Certificate of Substantial Completion	22
DFCM General Contract Past Performance Rating Form	

Current copies of the following documents are hereby made part of these contract documents by reference. These documents are available on the DFCM web site at http://dfcm.utah.gov or are available upon request from DFCM:

DFCM General Conditions dated May 25, 2005
DFCM Application and Certificate for Payment dated May 25, 2005

Technical Specifications:
Drawings:

The Agreement and General Conditions dated May 25, 2005 have been updated from versions that were formally adopted and in use prior to this date. The changes made to the General Conditions are identified in a document entitled Revisions to General Conditions that is available on DFCM's web site at http://dfcm.utah.gov

INVITATION TO BID

ONLY FIRMS PRE-QUALIFIED DURING STAGE I OF THE RFS ARE ALLOWED TO BID ON THIS PROJECT

The State of Utah - Division of Facilities Construction and Management (DFCM) is requesting bids for the construction of the following project:

NORTH SALT LAKE DRIVER LICENSE REMODEL
DEPARTMENT OF PUBLIC SAFETY – NORTH SALT LAKE, UTAH
DFCM Project No: 07009370

Project Description: Demolition and remodel of approximately 10,500 square feet of interior space. The project will include new bathrooms, electrical, mechanical, and interior finishes. Construction Cost Estimate: $550,000.

Firm Name	Contact	Fax
Arnell-West, Inc	Jason Arnell	(801) 975-9967
Ascent Construction	Brad L. Knowlton	(801) 299-0663
Bailey Construction Co., Inc.	Tracy Bailey	(435) 245-6413
Benstog Construction, Corp.	Patrick Benstog	(801) 399-1335
Bradley Construction, LLC.	Brad Piggott	(801) 298-6308
Broderick and Henderson Const	Gary Broderick	(801) 225-4697
CDC Restoration & Construction	Ralph Midgley	(801) 266-6645
Chad Husband Construction, Inc.	Richard Marshall	(801) 886-1784
CSM Construction, Inc.	Dan Noorda	(801) 280-2813
Darrell Anderson Construction	James Anderson	(435) 752-7606
Hidden Peak Electric Co., Inc.	Dereke Lee	(801) 262-5689
JC Construction	John Cecala	(801) 262-7966
Jepson Construction	Rick Jepson	(801) 773-8980
Keller Construction	S. Daniel Hill	(801) 972-1063
McCullough Engineering	Jim McCullough	(801) 466-4989
Mecham Brother, Inc.	G. Scott Mecham	(801) 985-0423
MW Construction, Inc.	Bill Shuldverg	(435) 245-4660
Raymond Construction Co.	A. Spencer Raymond	(435) 752-2914
Rueckert Construction Co.	Ken M. Rueckert	(801) 253-1774
Spindler Construction Corporation	Gary R. Stevens	(435) 753-0728
Steve Draper Construction	Steve Draper	(801) 756-7179
Wade Payne Construction, Inc.	Wade Payne	(801) 226-7772
Wasatch West Construction	JD Tyrrell	(801) 299-8541

The bid documents will be available at 12:00 Noon on Thursday, July 26, 2007 in electronic format only on CDs from DFCM at 4110 State Office Building, Salt Lake City, Utah 84114, telephone (801)538-3018 and on the DFCM web page at http://dfcm.utah.gov. For questions regarding this project, please contact Michael Ambre, Project Manager, DFCM, at (801) 209-9104. No others are to be contacted regarding this project. A **MANDATORY** pre-bid meeting and site visit will be held at 10:00 AM on Wednesday, August 1, 2007 at the Utah State Fairpark, Conference Center (Building #33), Salt Lake City, Utah. Please refer to map at http://www.utah-state-fair.com/pn/index.php?module=Pagesetter&func=viewpub&tid=3&pid=113. All pre-qualified prime contractors wishing to bid on this project must attend this meeting. Bids must be submitted by 3:00 PM on Tuesday, August 21, 2007 to DFCM, 4110 State Office Building, Salt Lake City, Utah 84114. Bids will be opened and read aloud in the DFCM Conference Room, 4110 State Office Building, Salt Lake City, Utah. Note: Bids must be received at 4110 State Office Building by the specified time. The contractor shall comply with and require all of its subcontractors to comply with the license laws as required by the State of Utah. A bid bond in the amount of five percent (5%) of the bid amount, made payable to the Division of Facilities Construction and Management on DFCM's bid bond form, shall accompany the bid. The Division of Facilities Construction & Management reserves the right to reject any or all bids or to waive any formality or technicality in any bid in the interest of the State.

DIVISION OF FACILITIES CONSTRUCTION AND MANAGEMENT
Marla Workman, Contract Coordinator
4110 State Office Bldg., Salt Lake City, Utah 84114

STAGE II - MULTI-STEP BIDDING PROCESS

ONLY FIRMS PRE-QUALIFIED DURING STAGE I OF THE RFS ARE ALLOWED TO BID ON THIS PROJECT

1. Invitational Bid Procedures

The following is an overview of the invitational bid process. More detailed information is contained throughout the document. Contractors are responsible for reading and complying with all information contained in this document.

Notification: DFCM will notify each registered pre-qualified firm (via fax or e-mail) when a project is ready for Construction Services and invite them to bid on the project.

Description of Work: A description of work or plans/specifications will be given to each contractor. If required, the plans and specifications will be available on the DFCM web page at http://dfcm.utah.gov and on CDs from DFCM, at 4110 State Office Building, Salt Lake City, Utah 84114.

Schedule: The Stage II Schedule shows critical dates including the mandatory pre-bid site meeting (if required), the question and answer period, the bid submittal deadline, the subcontractor list submittal deadline, etc. Contractors are responsible for meeting all deadlines shown on the schedule.

Mandatory Pre-Bid Site Meeting: If a firm fails to attend a pre-bid site meeting labeled "Mandatory" they will not be allowed to bid on the project. At the mandatory meeting, contractors may have an opportunity to inspect the site, receive additional instructions and ask questions about project. The schedule contains information on the date, time, and place of the mandatory pre-bid site meeting.

Written Questions: All questions must be in writing and directed to DFCM's project manager assigned to this project. No others are to be contacted regarding this project. The schedule contains information on the deadline for submitting questions.

Addendum: All clarifications from DFCM will be in writing and issued as an addendum to the RFS. Addenda will be posted on DFCM's web site at http://dfcm.utah.gov. Contractors are responsible for obtaining information contained in each addendum from the web site. Addenda issued prior to the submittal deadline shall become part of the bidding process and must be acknowledged on the bid form. Failure to acknowledge addenda may result in disqualification from bidding.

Submitting Bids: Bids must be submitted to DFCM 4110 State Office Building, Salt Lake City, Utah 84114 by the deadline indicated on the schedule. Bids submitted after the deadline will not be accepted. Bids will be opened at DFCM on the date, time, and place indicated on the schedule.

Subcontractors List: The firm selected for the project must submit a list of all subcontractors by the deadline indicated on the schedule contained in this document.

Pre-qualified List of Contractors: Contractors shall remain on DFCM's list of pre-qualified contractors provided: (a) they maintain a performance rating of 3.5 or greater on each project, (b) they are not suspended for failure to comply with requirements of their contract, (c) the firm has not undergone a significant reorganization involving the loss of key personnel (site superintendents, project managers, owners, etc.) to a degree such that the firm no longer meets the pre-qualification requirements outlined in Stage I, (d) the financial viability of the firm has not significantly changed, and (e) the firm is not otherwise disqualified by DFCM. Note: If a contractor fails to comply with items (a) through (e) above,

they may be removed from DFCM's list of pre-qualified contractors following an evaluation by a review committee. Contractors will be given the opportunity to address the review committee before a decision is made. Pre-qualified contractors are ONLY authorized to bid on projects within the discipline that they were originally pre-qualified under.

2. Drawings and Specifications and Interpretations

Drawings, specifications and other contract documents may be obtained as stated in the Invitation to Bid. If any firm is in doubt as to the meaning or interpretation of any part of the drawings, specifications, scope of work or contract documents, they shall submit, in writing, a request for interpretation to the authorized DFCM representative by the deadline identified in the schedule. Answers to questions and interpretations will be made via addenda issued by DFCM. Neither DFCM or the designer shall be responsible for incorrect information obtained by contractors from sources other than the official drawings/specifications and addenda issued by DFCM.

3. Product Approvals

Where reference is made to one or more proprietary products in the contract documents, but restrictive descriptive materials of one or more manufacturer(s) is referred to in the contract documents, the products of other manufacturers will be accepted, provided they equal or exceed the standards set forth in the drawings and specifications and are compatible with the intent and purpose of the design, subject to the written approval of the Designer. Such written approval must occur prior to the deadline established for the last scheduled addendum to be issued. The Designer's written approval will be included as part of the addendum issued by DFCM. If the descriptive material is not restrictive, the products of other manufacturers specified will be accepted without prior approval provided they are compatible with the intent and purpose of the design as determined by the Designer.

4. Addenda

All clarifications from DFCM will be in writing and issued as an addendum to the RFS. Addenda will be posted on DFCM's web site at http://dfcm.utah.gov. Contractors are responsible for obtaining information contained in each addendum from the web site. Addenda issued prior to the submittal deadline shall become part of the bidding process and must be acknowledged on the bid form. Failure to acknowledge addenda shall result in disqualification from bidding. DFCM shall not be responsible for incorrect information obtained by contractors from sources other than official addenda issued by DFCM.

5. Financial Responsibility of Contractors, Subcontractors and Sub-subcontractors

Contractors shall respond promptly to any inquiry in writing by DFCM to any concern of financial responsibility of the Contractor, Subcontractor or Sub-subcontractor. Failure to respond may result in suspension from DFCM's list of pre-qualified contractors.

6. Licensure

The Contractor shall comply with and require all of its Subcontractors to comply with the license laws as required by the State of Utah.

7. Permits

In concurrence with the requirements for permitting in the general conditions, it is the responsibility of the contractor to obtain the fugitive dust plan requirements from the Utah Division of air Quality and the SWPPP requirements from the Utah Department of Environmental Quality and submit the completed forms and pay any permit fee that may be required for this specific project. Failure to obtain the required permit may result in work stoppage and/or fines from the regulating authority that will be the sole responsibility of the contractor. Any delay to the project as a result of any such failure to obtain the permit or noncompliance with the permit shall not be eligible for any extension in the Contract Time.

8. Time is of the Essence

Time is of the essence in regard to all the requirements of the contract documents.

9. Bids

Before submitting a bid, each bidder shall carefully examine the contract documents; shall visit the site of the work; shall fully inform themselves as to all existing conditions and limitations; and shall include in the bid the cost of all items required by the contract documents including those added via addenda. If the bidder observes that portions of the contract documents are at variance with applicable laws, building codes, rules, regulations or contain obvious erroneous or uncoordinated information, the bidder shall promptly notify the DFCM Project Manager prior to the bidding deadline. Changes necessary to correct these issues will be made via addenda issued by DFCM.

The bid, bearing original signatures, must be typed or handwritten in ink on the Bid Form provided in the procurement documents and submitted in a sealed envelope at the location specified by the Invitation to Bid prior to the published deadline for the submission of bids.

Bid bond security, in the amount of five percent (5%) of the bid, made payable to the Division of Facilities Construction and Management, shall accompany bid. THE BID BOND MUST BE ON THE BID BOND FORM PROVIDED IN THE PROCUREMENT DOCUMENTS IN ORDER TO BE CONSIDERED AN ACCEPTABLE BID.

If the bid bond security is submitted on a form other than DFCM's required bid bond form, and the bid security meets all other legal requirements, the bidder will be allowed to provide an acceptable bid bond by the close of business on the next business day following notification by DFCM of submission of a defective bid bond security. **A cashier's check cannot be used as a substitute for a bid bond.**

10. Listing of Subcontractors

Listing of Subcontractors shall be as summarized in the "Instructions and Subcontractor's List Form", included as part of the contract documents. The subcontractors list shall be delivered to DFCM or faxed to DFCM at (801)538-3677 within 24 hours of the bid opening. Requirements for listing additional subcontractors will be listed in the contract documents.

DFCM retains the right to audit or take other steps necessary to confirm compliance with requirements for the listing and changing of subcontractors. Any contractor who is found to not be in compliance with these requirements may be suspended from DFCM's list of pre-qualified contractors.

11. Contract and Bond

The Contractor's Agreement will be in the form provided in this document. The duration of the contract shall be for the time indicated by the project completion deadline shown on the schedule. The successful bidder, simultaneously with the execution of the Contractor's Agreement, will be required to furnish a performance bond and a payment bond, both bearing original signatures, upon the forms provided in the procurement documents.

The performance and payment bonds shall be for an amount equal to one hundred percent (100%) of the Contract Sum and secured from a company that meets the requirements specified in the requisite forms. Any bonding requirements for Subcontractors will be specified in the Supplementary General Conditions.

12. Award of Contract

The Contract will be awarded as soon as possible to the lowest, responsive and responsible bidder, based on the lowest combination of base bid and acceptable prioritized alternates, provided the bid is reasonable, is in the interests of DFCM to accept and after applying the Utah Preference Laws in U.C.A. Title 63, Chapter 56. DFCM reserves the right to waive any technicalities or formalities in any bid or in the bidding. Alternates will be accepted on a prioritized basis with Alternate 1 being highest priority, Alternate 2 having second priority, etc. Alternates will be selected in prioritized order up to the construction cost estimate.

13. Right to Reject Bids

DFCM reserves the right to reject any or all Bids.

14. Withdrawal of Bids

Bids may be withdrawn on written request received from bidders within 24 hours after the bid opening if the contractor has made an error in preparing the bid.

15. DFCM Contractor Performance Rating

As a contractor completes each project, DFCM will evaluate project performance based on the enclosed "DFCM Contractor Performance Rating" form. The ratings issued on this project may affect the firm's "pre-qualified" status and their ability to obtain future work with DFCM.

Stage II
PROJECT SCHEDULE

PROJECT NAME: **NORTH SALT LAKE DRIVER LICENSE REMODEL**
DEPARTMENT OF PUBLIC SAFETY – NORTH SALT LAKE, UTAH
DFCM PROJECT #: **07009370**

Event	Day	Date	Time	Place
Stage II Bidding Documents Available	Thursday	July 26, 2007	12:00 NOON	DFCM 4110 State Office Building SLC, UT and the DFCM web site*
Mandatory Pre-bid Site Meeting	Wednesday	August 1, 2007	10:00 AM	Conference Center (Bldg #33) Utah State Fairpark Salt Lake City, UT **
Deadline for Submitting Questions	Monday	August 13, 2007	12:00 NOON	Mike Ambre – DFCM E-mail mambre@utah.gov
Addendum Deadline (exception for bid delays)	Wednesday	August 15, 2007	12:00 NOON	DFCM web site*
Prime Contractors Turn in Bid and Bid Bond	Tuesday	August 21, 2007	3:00 PM	DFCM 4110 State Office Building SLC, UT
Subcontractors List Due	Wednesday	August 22, 2007	3:00 PM	DFCM 4110 State Office Building SLC, UT Fax 801-538-3677
Substantial Completion Date	Thursday	January 31, 2008	5:00 PM	

* **NOTE: DFCM's web site address is http://dfcm.utah.gov**

** http://www.utah-state-fair.com/pn/index.php?module=Pagesetter&func=viewpub&tid=3&pid=113

BID FORM

NAME OF BIDDER _____ DATE _____

To the Division of Facilities Construction and Management
4110 State Office Building
Salt Lake City, Utah 84114

The undersigned, responsive to the "Invitation to Bid" and in accordance with the Request for Bids for the **NORTH SALT LAKE DRIVER LICENSE REMODEL – DEPARTMENT OF PUBLIC SAFETY – NORTH SALT LAKE, UTAH - DFCM PROJECT NO. 07009370** and having examined the Contract Documents and the site of the proposed Work and being familiar with all of the conditions surrounding the construction of the proposed Project, including the availability of labor, hereby proposes to furnish all labor, materials and supplies as required for the Work in accordance with the Contract Documents as specified and within the time set forth and at the price stated below. This price is to cover all expenses incurred in performing the Work required under the Contract Documents of which this bid is a part:

I/We acknowledge receipt of the following Addenda: _____

For all work shown on the Drawings and described in the Specifications and Contract Documents, I/we agree to perform for the sum of:

_____ DOLLARS ($_____)
(In case of discrepancy, written amount shall govern)

I/We guarantee that the Work will be Substantially Complete by **January 31, 2008**, should I/we be the successful bidder, and agree to pay liquidated damages in the amount of **$250.00** per day for each day after expiration of the Contract Time as stated in Article 3 of the Contractor's Agreement.

This bid shall be good for 45 days after bid opening.

Enclosed is a 5% bid bond, as required, in the sum of _____

The undersigned Contractor's License Number for Utah is _____._____

Upon receipt of notice of award of this bid, the undersigned agrees to execute the contract within ten (10) days, unless a shorter time is specified in Contract Documents, and deliver acceptable Performance and Payment bonds in the prescribed form in the amount of 100% of the Contract Sum for faithful performance of the contract. The Bid Bond attached, in the amount not less than five percent (5%) of the above bid sum, shall become the property of the Division of Facilities Construction and Management as liquidated damages for delay and additional expense caused thereby in the event that the contract is not executed and/or acceptable l00% Performance and Payment bonds are not delivered within time set forth.

Type of Organization: _____
(Corporation, Partnership, Individual, etc.)

Any request and information related to Utah Preference Laws:

_____

Respectfully submitted,

_____
Name of Bidder

ADDRESS:

_____

_____

_____
Authorized Signature

BID BOND

(Title 63, Chapter 56, U. C. A. l953, as Amended)

KNOW ALL PERSONS BY THESE PRESENTS:

That _____ hereinafter referred to as the "Principal," and_____, a corporation organized and existing under the laws of the State of _____, with its principal office in the City of _____ and authorized to transact business in this State and U. S. Department of the Treasury Listed, (Circular 570, Companies Holding Certificates of Authority as Acceptable Securities on Federal Bonds and as Acceptable Reinsuring Companies); hereinafter referred to as the "Surety," are held and firmly bound unto the STATE OF UTAH, hereinafter referred to as the "Obligee," in the amount of $_____ (5% of the accompanying bid), being the sum of this Bond to which payment the Principal and Surety bind themselves, their heirs, executors, administrators, successors and assigns, jointly and severally, firmly by these presents.

THE CONDITION OF THIS OBLIGATION IS SUCH that whereas the Principal has submitted to Obligee the accompanying bid incorporated by reference herein, dated as shown, to enter into a contract in writing for the_____ _____ Project.

NOW, THEREFORE, THE CONDITION OF THE ABOVE OBLIGATION IS SUCH, that if the said principal does not execute a contract and give bond to be approved by the Obligee for the faithful performance thereof within ten (10) days after being notified in writing of such contract to the principal, then the sum of the amount stated above will be forfeited to the State of Utah as liquidated damages and not as a penalty; if the said principal shall execute a contract and give bond to be approved by the Obligee for the faithful performance thereof within ten (10) days after being notified in writing of such contract to the Principal, then this obligation shall be null and void. It is expressly understood and agreed that the liability of the Surety for any and all defaults of the Principal hereunder shall be the full penal sum of this Bond. The Surety, for value received, hereby stipulates and agrees that obligations of the Surety under this Bond shall be for a term of sixty (60) days from actual date of the bid opening.

PROVIDED, HOWEVER, that this Bond is executed pursuant to provisions of Title 63, Chapter 56, Utah Code Annotated, 1953, as amended, and all liabilities on this Bond shall be determined in accordance with said provisions to same extent as if it were copied at length herein.

IN WITNESS WHEREOF, the above bounden parties have executed this instrument under their several seals on the date indicated below, the name and corporate seal of each corporate party being hereto affixed and these presents duly signed by its undersigned representative, pursuant to authority of its governing body.

DATED this _____ day of _____, 20_____ .

Principal's name and address (if other than a corporation):

_____

_____

By:_____

Title: _____

Principal's name and address (if a corporation):

_____

_____

By:_____

Title: _____

(Affix Corporate Seal)

Surety's name and address:

_____

_____

By: _____

Attorney-in-Fact (Affix Corporate Seal)

STATE OF _____)
) ss.
COUNTY OF _____)

On this ____ day of _____, 20____, personally appeared before me _____, whose identity is personally known to me or proved to me on the basis of satisfactory evidence, and who, being by me duly sworn, did say that he/she is the Attorney-in-fact of the above-named Surety Company, and that he/she is duly authorized to execute the same and has complied in all respects with the laws of Utah in reference to becoming sole surety upon bonds, undertakings and obligations, and that he/she acknowledged to me that as Attorney-in-fact executed the same.

Subscribed and sworn to before me this _____ day of _____, 20_____.
My Commission Expires: _____
Resides at: _____

_____
NOTARY PUBLIC

Agency: _____
Agent: _____
Address: _____
Phone: _____

Approved As To Form: May 25, 2005
By Alan S. Bachman, Asst Attorney General

INSTRUCTION AND SUBCONTRACTORS LIST FORM

The three low bidders, as well as all other bidders that desire to be considered, are required by law to submit to DFCM within 24 hours of bid opening a list of **ALL** first-tier subcontractors, including the subcontractor's name, bid amount and other information required by Building Board Rule and as stated in these Contract Documents, on the following basis:

PROJECTS UNDER $500,000 - ALL SUBS $20,000 OR OVER MUST BE LISTED
PROJECTS $500,000 OR MORE - ALL SUBS $35,000 OR OVER MUST BE LISTED

- Any additional subcontractors identified in the bid documents shall also be listed.
- The DFCM Director may not consider any bid submitted by a bidder if the bidder fails to submit a subcontractor list meeting the requirements of State law.
- List subcontractors for base bid as well as the impact on the list that the selection of any alternate may have.
- Bidder may not list more than one subcontractor to perform the same work.
- Bidder must list "Self" if performing work itself.

LICENSURE:

The subcontractor's name, the type of work, the subcontractor's bid amount, and the subcontractor's license number as issued by DOPL, if such license is required under Utah Law, shall be listed. Bidder shall certify that all subcontractors, required to be licensed, are licensed as required by State law. A subcontractor includes a trade contractor or specialty contractor and does not include suppliers who provide only materials, equipment, or supplies to a contractor or subcontractor.

BIDDER LISTING 'SELF' AS PERFORMING THE WORK:

Any bidder that is properly licensed for the particular work and intends to perform that work itself in lieu of a subcontractor that would otherwise be required to be on the subcontractor list, must insert the term 'Self' for that category on the subcontractor list form. Any listing of 'Self' on the sublist form shall also include the amount allocated for that work.

'SPECIAL EXCEPTION':

A bidder may list 'Special Exception' in place of a subcontractor when the bidder intends to obtain a subcontractor to perform the work at a later date because the bidder was unable to obtain a qualified or reasonable bid under the provisions of U.C.A.Section 63A-5-208(4). The bidder shall insert the term 'Special Exception' for that category of work, and shall provide documentation with the subcontractor list describing the bidder's efforts to obtain a bid of a qualified subcontractor at a reasonable cost and why the bidder was unable to obtain a qualified subcontractor bid. The Director must find that the bidder complied in good faith with State law requirements for any 'Special Exception' designation, in order for the bid to be considered. If awarded the contract, the Director shall supervise the bidder's efforts to obtain a qualified subcontractor bid. The amount of the awarded contract may not be adjusted to reflect the actual amount of the subcontractor's bid. Any listing of 'Special Exception' on the sublist form shall also include amount allocated for that work.

GROUNDS FOR DISQUALIFICATION:

The Director may not consider any bid submitted by a bidder if the bidder fails to submit a subcontractor list meeting the requirements of State law. Director may withhold awarding the contract to a particular bidder if one or more of the proposed subcontractors are considered by the Director to be unqualified to do the Work or for such other reason in the best interest of the State of Utah. Notwithstanding any other provision in these instructions, if there is a good faith error on the sublist form, at the sole discretion of the Director, the Director may provide notice to the contractor and the contractor shall have 24 hours to submit the correction to the Director. If such correction is submitted timely, then the sublist requirements shall be considered met.

CHANGES OF SUBCONTRACTORS SPECIFICALLY IDENTIFIED ON SUBLIST FORM:

Subsequent to twenty-four hours after the bid opening, the contractor may change its listed subcontractors only after receiving written permission from the Director based on complying with all of the following criteria.

(1) The contractor has established in writing that the change is in the best interest of the State and that the contractor establishes an appropriate reason for the change, which may include, but not is not limited to, the following reasons: the original subcontractor has failed to perform, or is not qualified or capable of performing, and/or the subcontractor has requested in writing to be released.
(2) The circumstances related to the request for the change do not indicate any bad faith in the original listing of the subcontractors.
(3) Any requirement set forth by the Director to ensure that the process used to select a new subcontractor does not give rise to bid shopping.
(4) Any increase in the cost of the subject subcontractor work is borne by the contractor.
(5) Any decrease in the cost of the subject subcontractor work shall result in a deductive change order being issued for the contract for such decreased amount.
(6) The Director will give substantial weight to whether the subcontractor has consented in writing to being removed unless the Contractor establishes that the subcontractor is not qualified for the work.

EXAMPLE:

Example of a list where there are only four subcontractors:

TYPE OF WORK	SUBCONTRACTOR, "SELF" OR "SPECIAL EXCEPTION"	SUBCONTRACTOR BID AMOUNT	CONT. LICENSE #
ELECTRICAL	ABCD Electric Inc.	$350,000.00	123456789000
LANDSCAPING	"Self"	300,000.00	123456789000
CONCRETE (ALTERNATE #1)	XYZ Concrete Inc	298,000.00	987654321000
MECHANICAL	"Special Exception" (attach documentation)	Fixed at: 350,000.00	(TO BE PROVIDED AFTER OBTAINING SUBCONTRACTOR)

PURSUANT TO STATE LAW - SUBCONTRACTOR BID AMOUNTS CONTAINED IN THIS SUBCONTRACTOR LIST SHALL NOT BE DISCLOSED UNTIL THE CONTRACT HAS BEEN AWARDED.

STATE OF UTAH - DEPARTMENT OF ADMINISTRATIVE SERVICES

Division of Facilities Construction and Management

DFCM

SUBCONTRACTORS LIST
FAX TO 801-538-3677

PROJECT TITLE: _____

Caution: You must read and comply fully with instructions.

TYPE OF WORK	SUBCONTRACTOR, "SELF" OR "SPECIAL EXCEPTION"	SUBCONTRACTOR BID AMOUNT	CONT. LICENSE #

We certify that:

1. This list includes all subcontractors as required by the instructions, including those related to the base bid as well as any alternates.
2. We have listed "Self" or "Special Exception" in accordance with the instructions.
3. All subcontractors are appropriately licensed as required by State law.

FIRM: _____

DATE: _____ SIGNED BY: _____

NOTICE: FAILURE TO SUBMIT THIS FORM, PROPERLY COMPLETED AND SIGNED, AS REQUIRED IN THESE CONTRACT DOCUMENTS, SHALL BE GROUNDS FOR DFCMS REFUSAL TO ENTER INTO A WRITTEN CONTRACT WITH BIDDER. ACTION MAY BE TAKEN AGAINST BIDDERS BID BOND AS DEEMED APPROPRIATE BY DFCM. ATTACH A SECOND PAGE IF NECESSARY.

300/300/____/FVA/____/_____/__/_
Project No. _____

CONTRACTOR'S AGREEMENT

FOR:

_____
_____
_____

THIS CONTRACTOR'S AGREEMENT, made and entered into this ____ day of _____, 20__, by and between the DIVISION OF FACILITIES CONSTRUCTION AND MANAGEMENT, hereinafter referred to as "DFCM", and _____, incorporated in the State of _____ and authorized to do business in the State of Utah, hereinafter referred to as "Contractor", whose address is _____.

WITNESSETH: WHEREAS, DFCM intends to have Work performed at _____ _____.

WHEREAS, Contractor agrees to perform the Work for the sum stated herein.

NOW, THEREFORE, DFCM and Contractor for the consideration provided in this Contractor's Agreement, agree as follows:

ARTICLE 1. SCOPE OF WORK. The Work to be performed shall be in accordance with the Contract Documents prepared by _____ and entitled "_____."

The DFCM General Conditions ("General Conditions") dated May 25, 2005 on file at the office of DFCM and available on the DFCM website, are hereby incorporated by reference as part of this Agreement and are included in the specifications for this Project. All terms used in this Contractor's Agreement shall be as defined in the Contract Documents, and in particular, the General Conditions.

The Contractor Agrees to furnish labor, materials and equipment to complete the Work as required in the Contract Documents which are hereby incorporated by reference. It is understood and agreed by the parties hereto that all Work shall be performed as required in the Contract Documents and shall be subject to inspection and approval of DFCM or its authorized representative. The relationship of the Contractor to the DFCM hereunder is that of an independent Contractor.

ARTICLE 2. CONTRACT SUM. The DFCM agrees to pay and the Contractor agrees to accept in full performance of this Contractor's Agreement, the sum of _____ _____ DOLLARS AND NO CENTS ($_____.00), which is the base bid, and which sum also includes the cost of a 100%

Performance Bond and a 100% Payment Bond as well as all insurance requirements of the Contractor. Said bonds have already been posted by the Contractor pursuant to State law. The required proof of insurance certificates have been delivered to DFCM in accordance with the General Conditions before the execution of this Contractor's Agreement.

ARTICLE 3. TIME OF COMPLETION AND DELAY REMEDY. The Work shall be Substantially Complete by _____. Contractor agrees to pay liquidated damages in the amount of $_____ per day for each day after expiration of the Contract Time until the Contractor achieves Substantial Completion in accordance with the Contract Documents, if Contractor's delay makes the damages applicable. The provision for liquidated damages is: (a) to compensate the DFCM for delay only; (b) is provided for herein because actual damages can not be readily ascertained at the time of execution of this Contractor's Agreement; (c) is not a penalty; and (d) shall not prevent the DFCM from maintaining Claims for other non-delay damages, such as costs to complete or remedy defective Work.

No action shall be maintained by the Contractor, including its or Subcontractor or suppliers at any tier, against the DFCM or State of Utah for damages or other claims due to losses attributable to hindrances or delays from any cause whatsoever, including acts and omissions of the DFCM or its officers, employees or agents, except as expressly provided in the General Conditions. The Contractor may receive a written extension of time, signed by the DFCM, in which to complete the Work under this Contractor's Agreement in accordance with the General Conditions.

ARTICLE 4. CONTRACT DOCUMENTS. The Contract Documents consist of this Contractor's Agreement, the Conditions of the Contract (DFCM General Conditions, Supplementary and other Conditions), the Drawings, Specifications, Addenda and Modifications. The Contract Documents shall also include the bidding documents, including the Notice to Contractors, Instructions to Bidders/Proposers and the Bid/Proposal, to the extent not in conflict therewith and other documents and oral presentations that are documented as an attachment to the contract.

All such documents are hereby incorporated by reference herein. Any reference in this Contractor's Agreement to certain provisions of the Contract Documents shall in no way be construed as to lessen the importance or applicability of any other provisions of the Contract Documents.

ARTICLE 5. PAYMENT. The DFCM agrees to pay the Contractor from time to time as the Work progresses, but not more than once each month after the date of Notice to Proceed, and only upon Certificate of the A/E for Work performed during the preceding calendar month, ninety-five percent (95%) of the value of the labor performed and ninety-five percent (95%) of the value of materials furnished in place or on the site. The Contractor agrees to furnish to the DFCM invoices for materials purchased and on the site but not installed, for which the Contractor requests payment and agrees to safeguard and protect such equipment or materials and is responsible for safekeeping thereof and if such be stolen, lost or destroyed, to replace same.

Such evidence of labor performed and materials furnished as the DFCM may reasonably require shall be supplied by the Contractor at the time of request for Certificate of Payment on account. Materials for which payment has been made cannot be removed from the job site without DFCM's written approval. Five percent (5%) of the earned amount shall be retained from each monthly payment. The retainage, including any additional retainage imposed and the release of any retainage, shall be in accordance with UCA 13-8-5 as amended. Contractor shall also comply with the requirements of UCA 13-8-5, including restrictions of retainage regarding subcontractors and the distribution of interest earned on the retention proceeds. The DFCM shall not be responsible for enforcing the Contractor's obligations under State law in fulfilling the retention law requirements with subcontractors at any tier.

ARTICLE 6. INDEBTEDNESS. Before final payment is made, the Contractor must submit evidence satisfactory to the DFCM that all payrolls, materials bills, subcontracts at any tier and outstanding indebtedness in connection with the Work have been properly paid. Final Payment will be made after receipt of said evidence, final acceptance of the Work by the DFCM as well as compliance with the applicable provisions of the General Conditions.

Contractor shall respond immediately to any inquiry in writing by DFCM as to any concern of financial responsibility and DFCM reserves the right to request any waivers, releases or bonds from Contractor in regard to any rights of Subcontractors (including suppliers) at any tier or any third parties prior to any payment by DFCM to Contractor.

ARTICLE 7. ADDITIONAL WORK. It is understood and agreed by the parties hereto that no money will be paid to the Contractor for additional labor or materials furnished unless a new contract in writing or a Modification hereof in accordance with the General Conditions and the Contract Documents for such additional labor or materials has been executed. The DFCM specifically reserves the right to modify or amend this Contractor's Agreement and the total sum due hereunder either by enlarging or restricting the scope of the Work.

ARTICLE 8. INSPECTIONS. The Work shall be inspected for acceptance in accordance with the General Conditions.

ARTICLE 9. DISPUTES. Any dispute, PRE or Claim between the parties shall be subject to the provisions of Article 7 of the General Conditions. DFCM reserves all rights to pursue its rights and remedies as provided in the General Conditions.

ARTICLE 10. TERMINATION, SUSPENSION OR ABANDONMENT. This Contractor's Agreement may be terminated, suspended or abandoned in accordance with the General Conditions.

ARTICLE 11. DFCM'S RIGHT TO WITHHOLD CERTAIN AMOUNT AND MAKE USE THEREOF. The DFCM may withhold from payment to the Contractor such amount as, in DFCM's judgment, may be necessary to pay just claims against the Contractor or Subcontractor at any tier for labor and services rendered and materials furnished in and about the Work. The DFCM may apply such withheld amounts for the payment of such claims in DFCM's discretion. In so doing, the DFCM shall be deemed the agent of Contractor and payment so made by the DFCM shall be considered as payment made under this Contractor's Agreement by the DFCM to the Contractor. DFCM shall not be liable to the Contractor for any such payment made in good faith. Such withholdings and payments may be made without prior approval of the Contractor and may be also be prior to any determination as a result of any dispute, PRE, Claim or litigation.

ARTICLE 12. INDEMNIFICATION. The Contractor shall comply with the indemnification provisions of the General Conditions.

ARTICLE 13. SUCCESSORS AND ASSIGNMENT OF CONTRACT. The DFCM and Contractor, respectively bind themselves, their partners, successors, assigns and legal representatives to the other party to this Agreement, and to partners, successors, assigns and legal representatives of such other party with respect to all covenants, provisions, rights and responsibilities of this Contractor’s Agreement. The Contractor shall not assign this Contractor’s Agreement without the prior written consent of the DFCM, nor shall the Contractor assign any moneys due or to become due as well as any rights under this Contractor’s Agreement, without prior written consent of the DFCM.

ARTICLE 14. RELATIONSHIP OF THE PARTIES. The Contractor accepts the relationship of trust and confidence established by this Contractor's Agreement and covenants with the DFCM to cooperate with the DFCM and A/E and use the Contractor's best skill, efforts and judgment in furthering the interest of the DFCM; to furnish efficient business administration and supervision; to make best efforts to furnish at all times an adequate supply of workers and materials; and to perform the Work in the best and most expeditious and economic manner consistent with the interests of the DFCM.

ARTICLE 15. AUTHORITY TO EXECUTE AND PERFORM AGREEMENT. Contractor and DFCM each represent that the execution of this Contractor's Agreement and the performance thereunder is within their respective duly authorized powers.

ARTICLE 16. ATTORNEY FEES AND COSTS. Except as otherwise provided in the dispute resolution provisions of the General Conditions, the prevailing party shall be entitled to reasonable attorney fees and costs incurred in any action in the District Court and/or appellate body to enforce this Contractor's Agreement or recover damages or any other action as a result of a breach thereof.

IN WITNESS WHEREOF, the parties hereto have executed this Contractor's Agreement on the day and year stated hereinabove.

CONTRACTOR: _____

_____
Signature Date

Title: _____

_____
Please type/print name clearly

State of _____)
)
County of _____)

On this ____ day of _____, 20____, personally appeared before me, _____, whose identity is personally known to me (or proved to me on the basis of satisfactory evidence) and who by me duly sworn (or affirmed), did say that he (she) is the _____ (title or office) of the firm and that said document was signed by him (her) in behalf of said firm.

_____
Notary Public

(SEAL)

My Commission Expires _____

APPROVED AS TO AVAILABILITY OF FUNDS:

_____
David D. Williams, Jr. Date
DFCM Administrative Services Director

DIVISION OF FACILITIES CONSTRUCTION AND MANAGEMENT

_____
_____ - Manager Date
Capital Development/Improvements

APPROVED AS TO FORM:
ATTORNEY GENERAL
November 30, 2006
By: Alan S. Bachman
Asst Attorney General

APPROVED FOR EXPENDITURE:

_____
Division of Finance Date

PERFORMANCE BOND

(Title 63, Chapter 56, U. C. A. 1953, as Amended)

That _____ hereinafter referred to as the "Principal" and _____, a corporation organized and existing under the laws of the State of _____, with its principal office in the City of _____ and authorized to transact business in this State and U. S. Department of the Treasury Listed (Circular 570, Companies Holding Certificates of Authority as Acceptable Securities on Federal Bonds and as Acceptable Reinsuring Companies); hereinafter referred to as the "Surety," are held and firmly bound unto the State of Utah, hereinafter referred to as the "Obligee, " in the amount of _____ _____ DOLLARS ($_____) for the payment whereof, the said Principal and Surety bind themselves and their heirs, administrators, executors, successors and assigns, jointly and severally, firmly by these presents.

WHEREAS, the Principal has entered into a certain written Contract with the Obligee, dated the _____ day of _____, 20____, to construct _____ in the County of _____, State of Utah, Project No. _____, for the approximate sum of _____ _____ Dollars ($_____), which Contract is hereby incorporated by reference herein.

NOW, THEREFORE, the condition of this obligation is such that if the said Principal shall faithfully perform the Contract in accordance with the Contract Documents including, but not limited to, the Plans, Specifications and conditions thereof, the one year performance warranty, and the terms of the Contract as said Contract may be subject to Modifications or changes, then this obligation shall be void; otherwise it shall remain in full force and effect.

No right of action shall accrue on this bond to or for the use of any person or corporation other than the state named herein or the heirs, executors, administrators or successors of the Owner.

The parties agree that the dispute provisions provided in the Contract Documents apply and shall constitute the sole dispute procedures of the parties.

PROVIDED, HOWEVER, that this Bond is executed pursuant to the Provisions of Title 63, Chapter 56, Utah Code Annotated, 1953, as amended, and all liabilities on this Bond shall be determined in accordance with said provisions to the same extent as if it were copied at length herein.

IN WITNESS WHEREOF, the said Principal and Surety have signed and sealed this instrument this _____ day of _____, 20_____.

WITNESS OR ATTESTATION:

_____

PRINCIPAL:

_____

By: _____ (Seal)

Title: _____

WITNESS OR ATTESTATION:

_____

SURETY:

_____

By: _____

Attorney-in-Fact (Seal)

STATE OF _____)
) ss.
COUNTY OF _____)

On this _____ day of _____, 20___, personally appeared before me _____, whose identity is personally known to me or proved to me on the basis of satisfactory evidence, and who, being by me duly sworn, did say that he/she is the Attorney in-fact of the above-named Surety Company and that he/she is duly authorized to execute the same and has complied in all respects with the laws of Utah in reference to becoming sole surety upon bonds, undertakings and obligations, and that he/she acknowledged to me that as Attorney-in-fact executed the same.

Subscribed and sworn to before me this _____ day of _____, 20_____.

My commission expires: _____

Resides at: _____

_____

NOTARY PUBLIC

Agency: _____
Agent: _____
Address: _____
Phone: _____

Approved As To Form: May 25, 2005
By Alan S. Bachman, Asst Attorney General

PAYMENT BOND

(Title 63, Chapter 56, U. C. A. l953, as Amended)

KNOW ALL PERSONS BY THESE PRESENTS:

That _____ hereinafter referred to as the "Principal," and _____ _____, a corporation organized and existing under the laws of the State of _____authorized to do business in this State and U. S. Department of the Treasury Listed (Circular 570, Companies Holding Certificates of Authority as Acceptable Securities on Federal Bonds and as Acceptable Reinsuring Companies); with its principal office in the City of _____, hereinafter referred to as the "Surety," are held and firmly bound unto the State of Utah hereinafter referred to as the "Obligee," in the amount of _____ Dollars ($_____) for the payment whereof, the said Principal and Surety bind themselves and their heirs, administrators, executors, successors and assigns, jointly and severally, firmly by these presents.

WHEREAS, the Principal has entered into a certain written Contract with the Obligee, dated the _____ day of _____, 20____, to construct _____ in the County of _____, State of Utah, Project No. _____ for the approximate sum of _____ _____ Dollars ($_____), which contract is hereby incorporated by reference herein.

NOW, THEREFORE, the condition of this obligation is such that if the said Principal shall pay all claimants supplying labor or materials to Principal or Principal's Subcontractors in compliance with the provisions of Title 63, Chapter 56, of Utah Code Annotated, l953, as amended, and in the prosecution of the Work provided for in said Contract, then, this obligation shall be void; otherwise it shall remain in full force and effect.

That said Surety to this Bond, for value received, hereby stipulates and agrees that no changes, extensions of time, alterations or additions to the terms of the Contract or to the Work to be performed thereunder, or the specifications or drawings accompanying same shall in any way affect its obligation on this Bond, and does hereby waive notice of any such changes, extensions of time, alterations or additions to the terms of the Contract or to the Work or to the specifications or drawings and agrees that they shall become part of the Contract Documents.

PROVIDED, HOWEVER, that this Bond is executed pursuant to the provisions of Title 63, Chapter 56, Utah Code Annotated, 1953, as amended, and all liabilities on this Bond shall be determined in accordance with said provisions to the same extent as if it were copied at length herein.

IN WITNESS WHEREOF, the said Principal and Surety have signed and sealed this instrument this _____ day of _____, 20____.

WITNESS OR ATTESTATION:

_____

PRINCIPAL:

_____

By: _____
(Seal)

Title: _____

WITNESS OR ATTESTATION:

_____

SURETY:

_____

By: _____
Attorney-in-Fact (Seal)

STATE OF _____)
) ss.
COUNTY OF _____)

On this _____ day of _____, 20_____, personally appeared before me _____ _____, whose identity is personally known to me or proved to me on the basis of satisfactory evidence, and who, being by me duly sworn, did say that he/she is the Attorney-in-fact of the above-named Surety Company, and that he/she is duly authorized to execute the same and has complied in all respects with the laws of Utah in reference to becoming sole surety upon bonds, undertakings and obligations, and that he/she acknowledged to me that as Attorney-in-fact executed the same.

Subscribed and sworn to before me this _____ day of _____, 20_____.

My commission expires: _____
Resides at: _____

_____
NOTARY PUBLIC

Agency: _____
Agent: _____
Address: _____
Phone: _____

Approved As To Form: May 25, 2005
By Alan S. Bachman, Asst Attorney General

STATE OF UTAH - DEPARTMENT OF ADMINISTRATIVE SERVICES

Division of Facilities Construction and Management

DFCM

CERTIFICATE OF SUBSTANTIAL COMPLETION

PROJECT _____ PROJECT NO: _____

AGENCY/INSTITUTION _____

AREA ACCEPTED _____

The Work performed under the subject Contract has been reviewed on this date and found to be Substantially Completed as defined in the General Conditions; including that the construction is sufficiently completed in accordance with the Contract Documents, as modified by any change orders agreed to by the parties, so that the State of Utah can occupy the Project or specified area of the Project for the use for which it is intended.

The DFCM - (Owner) accepts the Project or specified area of the Project as Substantially Complete and will assume full possession of the Project or specified area of the Project at _____ (time) on _____ (date).

The DFCM accepts the Project for occupancy and agrees to assume full responsibility for maintenance and operation, including utilities and insurance, of the Project subject to the itemized responsibilities and/or exceptions noted below:

_____

_____

The Owner acknowledges receipt of the following closeout and transition materials:

Record Drawings | O & M Manuals | Warranty Documents | Completion of Training Requirements

A list of items to be completed or corrected (Punch List) is attached hereto. The failure to include an item on it does not alter the responsibility of the Contractor to complete all the Work in accordance with the Contract Documents, including authorized changes thereof. The amount of_____. (Twice the value of the punch list work) shall be retained to assure the completion of the punch list work.

The Contractor shall complete or correct the Work on the list of (Punch List) items appended hereto within _____ ____calendar days from the above date of issuance of this Certificate. If the list of items is not completed within the time allotted the Owner has the right to be compensated for the delays and/or complete the work with the help of independent contractor at the expense of the retained project funds. If the retained project funds are insufficient to cover the delay/completion damages, the Owner shall be promptly reimbursed for the balance of the funds needed to compensate the Owner.

_____ by: _____

CONTRACTOR (include name of firm) (Signature) DATE

_____ by: _____

A/E (include name of firm) (Signature) DATE

_____ by: _____

USING INSTITUTION OR AGENCY (Signature) DATE

_____ by: _____

DFCM (Owner) (Signature) DATE

4110 State Office Building, Salt Lake City, Utah 84114
telephone 801-538-3018 • facsimile 801-538-3267 • http://dfcm.utah.gov

cc: Parties Noted
DFCM, Director

STATE OF UTAH - DEPARTMENT OF ADMINISTRATIVE SERVICES

Division of Facilities Construction and Management

DFCM

General Contractor Performance Rating Form

Project Name:		DFCM Project#	
Contractor: (ABC Construction, John Doe, 111-111-1111)	A/E: (ABC Architects, Jane Doe, 222-222-2222)	Original Contract Amount:	Final Contract Amount:
DFCM Project Manager:		Contract Date:	
Completion Date:		Date of Rating:	

Rating Guideline	QUALITY OF PRODUCT OR SERVICES	COST CONTROL	TIMELINESS OF PERFORMANCE	BUSINESS RELATIONS
5-Exceptional	Contractor has demonstrated an exceptional performance level in any of the above four categories that justifies adding a point to the score. Contractor performance clearly exceeds the performance levels described as "Very Good"			
4-Very Good	Contractor is in compliance with contract requirements and/or delivers quality product/service.	Contractor is effective in managing costs and submits current, accurate, and complete billings	Contractor is effective in meeting milestones and delivery schedule	Response to inquiries, technical/service/ administrative issues is effective
3-Satisfactory	Minor inefficiencies/errors have been identified	Contractor is usually effective in managing cost	Contractor is usually effective in meeting milestones and delivery schedules	Response to inquires technical/ service/administrative issues is somewhat effective
2-Marginal	Major problems have been encountered	Contractor is having major difficulty managing cost effectively	Contractor is having major difficulty meeting milestones and delivery schedule	Response to inquiries, technical/service/administrative issues is marginally effective
1-Unsatisfactory	Contractor is not in compliance and is jeopardizing achievement of contract objectives	Contractor is unable to manage costs effectively	Contractor delays are jeopardizing performance of contract objectives	Response to inquiries, technical/service/administrative issues is not effective

1. Rate Contractors quality of workmanship, management of sub contractor performance, project cleanliness, organization and safety requirement.	**Score**
Agency Comments:	
A & E Comments:	
DFCM Project Manager Comments:	

2. Rate Contractor administration of project costs, change orders and financial management of the project budget.	Score
Agency Comments:	
A & E Comments:	
DFCM Project Manager Comments:	

3. Rate Contractor's performance and adherence to Project Schedule, delay procedures and requirements of substantial completion, inspection and punch-list performance.	Score
Agency Comments:	
A & E Comments:	
DFCM Project Manager Comments:	

4. Evaluate performance of contractor management team including project manager, engineer and superintendent also include in the rating team's ability to work well with owner, user agency and consultants.	Score
Agency Comments:	
A & E Comments:	
DFCM Project Manager Comments:	

5. Rate success of Contractor's management plan, completion of the plans mitigation of project risks and performance of value engineering concepts.	Score
Agency Comments:	
A & E Comments:	
DFCM Project Manager Comments:	

Signed by:	Date:	Mean Score

Additional Comments:

Project Manual

Project Number 0633
DFCM PROJECT # 07009370

STATE FAIR PARK
Drivers License Office Remodel

155 N.1000 West, SLC. Utah 84116

July 16, 2007

Axis Architects

INDEX TO PROJECT MANUAL

DIVISION AND SECTION	TITLE
DIVISION 0	BIDDING AND CONTRACT REQUIREMENTS
	General Conditions
DIVISION 1	GENERAL REQUIREMENTS
Section 01100	Summary
Section 01190	Definitions and Standards
Section 01250	Contract Modification Procedures
Section 01290	Payment Procedures
Section 01310	Project Management And Coordination
Section 01320	Construction Progress Documentation
Section 01330	Submittal Procedures
Section 01400	Quality Requirements
Section 01500	Temporary Facilities and Controls
Section 01600	Product Requirements
Section 01700	Execution Requirements
Section 01731	Cutting and Patching
Section 01732	Selective Demolition
Section 01770	Closeout Procedures
Section 01781	Project Record Documents
Section 01782	Operation and Maintenance Data
Section 01820	Demonstration and Training
DIVISION 2	SITEWORK
Not Used	
DIVISION 3	CONCRETE
Section 03300	Cast-in-Place Concrete
DIVISION 4	MASONRY
Not Used	
DIVISION 5	METALS
Section 05500	Metal Fabrications
Section 05521	Pipe and Tube Railings

DIVISION 6 WOOD AND PLASTICS

Section 06100 Rough Carpentry
Section 06402 Interior Architectural Woodwork

DIVISION 7 THERMAL AND MOISTURE PROTECTION

Section 07210 Building Insulation
Section 07841 Through-Penetration Firestop Systems
Section 07920 Joint Sealants

DIVISION 8 DOORS AND WINDOWS

Section 08110 Steel Doors and Frames
Section 08211 Flush Wood Doors
Section 08411 Aluminum-Framed Entrances and Storefronts
Section 08711 Door Hardware
Section 08800 Glazing

DIVISION 9 FINISHES

Section 09250 Gypsum Board
Section 09310 Ceramic Tile
Section 09511 Acoustical Panel Ceilings
Section 09651 Resilient Floor Tile
Section 09681 Carpet Tile
Section 09912 Painting
Section 09981 Cementitious Coatings

DIVISION 10 SPECIALTIES

Section 10155 Toilet Compartments
Section 10425 Signs
Section 10801 Toilet and Bath Accessories

DIVISION 11 EQUIPMENT

Not Used

DIVISION 12 FURNISHINGS

Section 12481 Entrances Floor Mats and Frames
Section 12491 Horizontal Louver Blinds

DIVISION 13 thru DIVISION 14

DIVISION 15	MECHANICAL
Section 15010	Basic Mechanical Requirements
Section 15050	Basic Mechanical Materials and Methods
Section 15055	Motors
Section 15060	Hangers and Supports
Section 15071	Mechanical Vibration and Seismic Controls
Section 15075	Mechanical Identification
Section 15080	Mechanical Insulation
Section 15110	Valves
Section 15122	Meters and Gages
Section 15183	Refrigerant Piping
Section 15410	Plumbing Fixtures
Section 15411	Plumbing Piping
Section 15430	Plumbing Specialties
Section 15480	Domestic Water Heaters
Section 15738	Split System Air Conditioning Units
Section 15784	Rooftop Units
Section 15815	Metal Ducts
Section 15820	Duct Accessories
Section 15850	Air Handling
Section 15950	Testing, Adjusting and Balancing
DIVISION 16	ELECTRICAL
Section 16001	Electrical General Provisions
Section 16070	Electrical Connections for Equipment
Section 16080	Demolition
Section 16110	Conduit Raceways
Section 16111	Raceway Systems
Section 16120	Conductors and Cables
Section 16135	Electrical Boxes and Fittings
Section 16136	Supporting Devices
Section 16140	Wiring Devices
Section 16160	Panelboards
Section 16180	Overcurrent Protective Devices
Section 16452	Grounding
Section 16510	Interior and Exterior Building Lighting
Section 16560	Lighting Control Equipment
Section 16561	Occupancy Lighting Control and Equipment
Section 16721	Fire Alarm and Detection Systems
Section 16740	Telephone/Data Systems (Raceways)
Section 16782	Security Systems (Raceways)

END OF INDEX TO PROJECT MANUAL

DIVISION 1 - GENERAL REQUIREMENTS

Section 01100	Summary
Section 01190	Definitions and Standards
Section 01250	Contract Modification Procedures
Section 01290	Payment Procedures
Section 01310	Project Management and Coordination
Section 01320	Construction Progress Documentation
Section 01330	Submittal Procedures
Section 01400	Quality Requirements
Section 01500	Temporary Facilities and Controls
Section 01600	Product Requirements
Section 01700	Execution Requirements
Section 01731	Cutting and Patching
Section 01732	Selective Demolition
Section 01770	Closeout Procedures
Section 01781	Project Record Documents
Section 01782	Operation and Maintenance Data
Section 01820	Demonstration and Training

SECTION 01100 – SUMMARY July 16, 2007

PART 1 - GENERAL

1.1 RELATED DOCUMENTS

A. Drawings and general provisions of the Contract, including General and Supplementary Conditions and other Division 1 Specification Sections, apply to this Section.

1.2 SUMMARY

A. This Section includes the following:

1. Work covered by the Contract Documents.
2. Type of the Contract.
3. Work phases.
4. Work under other contracts.
5. Products ordered in advance.
6. Owner-furnished products.
7. Use of premises.
8. Owner's occupancy requirements.
9. Work restrictions.
10. Specification formats and conventions.

B. Related Sections include the following:

1. Division 1 Section "Temporary Facilities and Controls" for limitations and procedures governing temporary use of Owner's facilities.

1.3 WORK COVERED BY CONTRACT DOCUMENTS

A. Project Identification: Drivers License Office remodeling

1. Project Location: Located at the State Fair Park at 155 North 1000 West in Salt Lake City, Utah 84116.

B. Owner: State of Utah.

C. Project Number: DFCM 07009370.

D. Architect: Axis Architects.

E. Construction Manager:

1. A Construction Manager will be engaged for this Project to serve as an advisor to Owner and to provide assistance in administering the Contract for Construction between Owner and Contractor, according to a separate contract between Owner and Construction Manager.

2. Construction Manager for this Project is Project's Constructor. In Divisions 1 through 16 Sections, the terms "Construction Manager" and "Contractor" are synonymous.

F. The Work consists of the following:

1. The Work includes all of the work of Divisions 01 thru 16 for the Drivers License Office remodel at the Utah State Fair Park.

1.4 TYPE OF CONTRACT

A. Project will be constructed under a single prime contract.

1.5 WORK PHASES

A. The Work may be conducted in phases, with each phase substantially complete before beginning the next phase:

B. Before commencing Work of each phase, submit a schedule showing the sequence, commencement and completion dates, and move-out and -in dates of Owner's personnel for all phases of the Work.

1.6 WORK UNDER OTHER CONTRACTS

A. General: Cooperate fully with separate contractors so work on those contracts may be carried out smoothly, without interfering with or delaying work under this Contract. Coordinate the Work of this Contract with work performed under separate contracts.

B. Preceding Work: Owner will award separate contract(s) for other construction operations at Project site. Those operations are scheduled to be substantially complete before work under this Contract begins.

C. Concurrent Work: Owner will award separate contract(s) for the following construction operations at Project site. Those operations will be conducted simultaneously with work under this Contract.

D. Future Work: Owner will award separate contract(s) for the following additional work to be performed at site after Substantial Completion. Completion of that work will depend on successful completion of preparatory work under this Contract.

1.7 PRODUCTS ORDERED IN ADVANCE

A. General: Owner has negotiated Purchase Orders with suppliers of material and equipment to be incorporated into the Work. Owner will assign these Purchase Orders to Contractor. Costs for receiving, handling, storage if required, and installation of material and equipment are included in the Contract Sum.

1. Contractor's responsibilities are same as if Contractor had negotiated Purchase Orders, including responsibility to renegotiate purchase and to execute final Purchase-Order agreements.

1.8 OWNER-FURNISHED PRODUCTS

A. Owner will furnish products indicated. The Work includes providing support systems to receive Owner's equipment and making plumbing, mechanical, and electrical connections.

1. Owner will arrange for and deliver Shop Drawings, Product Data, and Samples to Contractor.
2. Owner will arrange and pay for delivery of Owner-furnished items according to Contractor's Construction Schedule.
3. After delivery, Owner will inspect delivered items for damage. Contractor shall be present for and assist in Owner's inspection.
4. If Owner-furnished items are damaged, defective, or missing, Owner will arrange for replacement.
5. Owner will arrange for manufacturer's field services and for delivery of manufacturer's warranties to Contractor.
6. Owner will furnish Contractor the earliest possible delivery date for Owner-furnished products. Using Owner-furnished earliest possible delivery dates, Contractor shall designate delivery dates of Owner-furnished items in Contractor's Construction Schedule.
7. Contractor shall review Shop Drawings, Product Data, and Samples and return them to Architect noting discrepancies or anticipated problems in use of product.
8. Contractor is responsible for receiving, unloading, and handling Owner-furnished items at Project site.
9. Contractor is responsible for protecting Owner-furnished items from damage during storage and handling, including damage from exposure to the elements.
10. If Owner-furnished items are damaged as a result of Contractor's operations, Contractor shall repair or replace them.
11. Contractor shall install and otherwise incorporate Owner-furnished items into the Work.

1.9 USE OF PREMISES

A. General: Contractor shall have limited use of premises for construction operations as indicated on Drawings by the Contract limits.

B. Use of Site: Limit use of premises to areas within the Contract limits indicated. Do not disturb portions of Project site beyond areas in which the Work is indicated.

1. Limits: Confine construction operations to Contract limits.

   a. Limit site disturbance, including earthwork and clearing of vegetation, to 40 feet (12.2 m) beyond building perimeter; 5 feet (1.5 m) beyond primary roadway curbs, walkways, and main utility branch trenches; and 25 feet (7.6 m) beyond pervious paving areas.

2. Owner Occupancy: Allow for Owner occupancy of Project site.
3. Driveways and Entrances: Keep driveways and entrances serving premises clear and available to Owner, Owner's employees, and emergency vehicles at all times. Do not use these areas for parking or storage of materials.

a. Schedule deliveries to minimize use of driveways and entrances.
b. Schedule deliveries to minimize space and time requirements for storage of materials and equipment on-site.

C. Use of Existing Building: Maintain existing building in a weathertight condition throughout construction period. Repair damage caused by construction operations. Protect building and its occupants during construction period.

1.10 OWNER'S OCCUPANCY REQUIREMENTS

A. Full Owner Occupancy: Owner will occupy site and existing adjacent building during entire construction period. Cooperate with Owner during construction operations to minimize conflicts and facilitate Owner usage. Perform the Work so as not to interfere with Owner's day-to-day operations. Maintain existing exits, unless otherwise indicated.

1. Maintain access to existing walkways, corridors, and other adjacent occupied or used facilities. Do not close or obstruct walkways, corridors, or other occupied or used facilities without written permission from Owner and authorities having jurisdiction.
2. Provide not less than 72 hours' notice to Owner of activities that will affect Owner's operations.

B. Partial Owner Occupancy: Owner will occupy the premises during entire construction period, with the exception of areas under construction. Cooperate with Owner during construction operations to minimize conflicts and facilitate Owner usage. Perform the Work so as not to interfere with Owner's operations. Maintain existing exits, unless otherwise indicated.

1. Maintain access to existing walkways, corridors, and other adjacent occupied or used facilities. Do not close or obstruct walkways, corridors, or other occupied or used facilities without written permission from Owner and authorities having jurisdiction.
2. Provide not less than 72 hours' notice to Owner of activities that will affect Owner's operations.

C. Owner Occupancy of Completed Areas of Construction: Owner reserves the right to occupy and to place and install equipment in completed areas of building, before Substantial Completion, provided such occupancy does not interfere with completion of the Work. Such placement of equipment and partial occupancy shall not constitute acceptance of the total Work.

1. Architect will prepare a Certificate of Substantial Completion for each specific portion of the Work to be occupied before Owner occupancy.
2. Obtain a Certificate of Occupancy from authorities having jurisdiction before Owner occupancy.
3. Before partial Owner occupancy, mechanical and electrical systems shall be fully operational, and required tests and inspections shall be successfully completed. On occupancy, Owner will operate and maintain mechanical and electrical systems serving occupied portions of building.
4. On occupancy, Owner will assume responsibility for maintenance and custodial service for occupied portions of building.

1.11 WORK RESTRICTIONS

A. On-Site Work Hours: Work shall be generally performed inside the existing building during normal business working hours, except otherwise indicated.

B. Existing Utility Interruptions: Do not interrupt utilities serving facilities occupied by Owner or others unless permitted under the following conditions and then only after arranging to provide temporary utility services according to requirements indicated:

1. Notify Architect and Owner not less than two days in advance of proposed utility interruptions.
2. Do not proceed with utility interruptions without Owner's written permission.

    a. Implied where a colon (:) is used within a sentence or phrase.

PART 2 - PRODUCTS

(Not Used)

PART 3 - EXECUTION

(Not Used)

END OF SECTION 01100

SECTION 01190 - DEFINITIONS AND STANDARDS July 16, 2007

PART 1 - GENERAL

1.1 SUMMARY

A. Definitions: Basic Contract definitions are included in the General Conditions.

1. Directed: Terms such as "directed", "requested", "authorized", "selected", "approved", "required", and "permitted" mean "directed by the Architect", "requested by the Architect", and similar phrases. However, no implied meaning shall be interpreted to extend the Architect's responsibility into the Contractor's area of construction supervision.
2. Approve: The term "approved," where used in conjunction with the Architect's action on the Contractor's submittals, applications, and requests, is limited to the duties and responsibilities of the Architect as stated in General and Supplementary Conditions. Such approval shall not release the Contractor from responsibility to fulfill Contract requirements unless otherwise provided in the Contract Documents.
3. Furnish: The term "furnish" is used to mean "supply and deliver to the Project site, ready for unloading, unpacking, assembly, installation, and similar operations."
4. Install: The term "install" is used to describe operations at project site including the actual "unloading, unpacking, assembly, erection, placing, anchoring, applying, working to dimension, finishing, curing, protecting, cleaning, and similar operations."
5. Provide: The term "provide" means "to furnish and install, complete and ready for the intended use."

B. Specification Format and Conventions:

1. Specification Format: The Specifications are organized into Divisions and Sections using the 16-division format and CSI/CSC's "MasterFormat" numbering system.
   a. Section Identification: The Specifications use section numbers and titles to help cross-referencing in the Contract Documents. Sections in the Project Manual are in numeric sequence; however, the sequence is incomplete. Consult the table of contents at the beginning of the Project Manual to determine numbers and names of sections in the Contract Documents.
   b. Division 1: Sections in Division 1 govern the execution of the Work of all Sections in the Specifications.

2. Specification Content: The Specifications use certain conventions for style of language and the intended meaning of terms, words, and phrases when used in particular situations. These conventions are as follows.
   a. Abbreviated Language: Language used in the Specifications and other Contract Documents is abbreviated. Words and meanings shall be interpreted as appropriate. Words implied, but not stated shall be inferred as the sense requires. Singular words shall be interpreted as plural, and plural words shall be interpreted as singular where applicable as the context of the Contract Documents indicates.
   b. Imperative mood and streamlined language are generally used in the Specifications. Requirements expressed in the imperative mood are to be performed by Contractor. Occasionally, hte indicative or subjunctive mood may be used in the Section Text for clarity to describe responsibilities that must be fulfilled indirectly by Contractor or by others when so noted.
      1) The words "shall," "shall be," or "shall comply with," depending on the context, are implied where a colon (:) is used within a sentence

or phrase.

C. Drawing Symbols:
   1. Graphic symbols: Where not otherwise noted, symbols are defined by "Architectural Graphic Standards," published by John Wiley & Sons, Inc., eighth edition.
      a. Mechanical/Electrical Drawings: Graphic symbols used on mechanical and electrical Drawings are generally aligned with symbols recommended by ASHRAE. Where appropriate, they are supplemented by more specific symbols recommended by technical associations including ASME, ASPE, IEEE, and similar organizations. Refer instances of uncertainty to the Architect for clarification before proceeding.

D. Industry Standards:
   1. Applicability of Standards: Except where the Contract Documents include more stringent requirements, applicable construction industry standards have the same force and effect as if bound or copied directly into the Contract Documents. Such standards are made a part of the Contract Documents by reference. Individual Sections indicate which codes and standards the Contractor must keep available at the Project Site for reference.
   2. Publication Dates: Where the date of issue of a referenced standard is not specified, comply with the standard in effect as of date of Contract Documents.
   3. Conflicting Requirements: Where compliance with two or more standards is specified, and they establish different or conflicting requirements for minimum quantities or quality levels, the most stringent requirement will be enforced, unless the Contract Documents indicate otherwise. Refer requirements that are different, but apparently equal, and uncertainties as to which quality level is more stringent to the Architect for a decision before proceeding.
   4. Copies of Standards: Each entity engaged in construction on the Project is required to be familiar with industry standards applicable to that entity's construction activity. Copies of applicable standards are not bound with the Contract Documents.
      a. Where copies of standards are needed for performance of a required construction activity, the Contractor shall obtain copies directly from the publication source.
      b. Although copies of standards needed for enforcement of requirements also may, be included as part of required submittals, the Architect reserves the right to require the Contractor to submit additional copies as necessary for enforcement of requirements.
   5. Abbreviations and Names: Trade association names and titles of general standards are frequently abbreviated. Where such acronyms or abbreviations are used in the Specifications or other Contract Documents, they mean the recognized name of the trade association, standards generating organization, authority having jurisdiction, or other entity applicable to the context of the text provision.
      a. A copy of the CSI directory of Construction Industry Associations, Societies, and Institutes, and Abbreviations is on file in the office of the Architect.

END OF SECTION 01190

SECTION 01250 - CONTRACT MODIFICATION PROCEDURES July 16, 2007

PART 1 - GENERAL

1.1 RELATED DOCUMENTS

A. Drawings and general provisions of the Contract, including General and Supplementary Conditions and other Division 1 Specification Sections, apply to this Section.

1.2 SUMMARY

A. This Section specifies administrative and procedural requirements for handling and processing Contract modifications.

B. Related Sections include the following:
   1. Division 1 Section "Product Requirements" for administrative procedures for handling requests for substitutions made after Contract award.

1.3 MINOR CHANGES IN THE WORK

A. Architect will issue supplemental instructions authorizing Minor Changes in the Work, not involving adjustment to the Contract Sum or the Contract Time, on AIA Document G710, "Architect's Supplemental Instructions."

1.4 PROPOSAL REQUESTS

A. Owner-Initiated Proposal Requests: Architect will issue a detailed description of proposed changes in the Work that may require adjustment to the Contract Sum or the Contract Time. If necessary, the description will include supplemental or revised Drawings and Specifications.
   1. Proposal Requests issued by Architect are for information only. Do not consider them instructions either to stop work in progress or to execute the proposed change.
   2. Within time specified in Proposal Request after receipt of Proposal Request, submit a quotation estimating cost adjustments to the Contract Sum and the Contract Time necessary to execute the change.
      a. Include a list of quantities of products required or eliminated and unit costs, with total amount of purchases and credits to be made. If requested, furnish survey data to substantiate quantities.
      b. Indicate applicable taxes, delivery charges, equipment rental, and amounts of trade discounts.
      c. Include an updated Contractor's Construction Schedule that indicates the effect of the change, including, but not limited to, changes in activity duration, start and finish times, and activity relationship. Use available total float before requesting an extension of the Contract Time.

B. Contractor-Initiated Proposals: If latent or unforeseen conditions require modifications to the Contract, Contractor may propose changes by submitting a request for a change Architect.
   1. Include a statement outlining reasons for the change and the effect of the change on the Work. Provide a complete description of the proposed change. Indicate the effect of the proposed change on the Contract Sum and the Contract Time.
   2. Include a list of quantities of products required or eliminated and unit costs, with total amount of purchases and credits to be made. If requested, furnish survey data to

substantiate quantities.

3. Indicate applicable taxes, delivery charges, equipment rental, and amounts of trade discounts.
4. Include an updated Contractor's Construction Schedule that indicates the effect of the change, including, but not limited to, changes in activity duration, start and finish times, and activity relationship. Use available total float before requesting an extension of the Contract Time.
5. Comply with requirements in Division 1 Section "Product Requirements" if the proposed change requires substitution of one product or system for product or system specified.

C. Proposal Request Form: Use AIA Document G709 for Proposal Requests.

1.5 CHANGE ORDER PROCEDURES

A. On Owner's approval of a Proposal Request, Architect will issue a Change Order for signatures of Owner and Contractor on AIA Document G701.

1.6 CONSTRUCTION CHANGE DIRECTIVE

A. Construction Change Directive: Architect may issue a Construction Change Directive on AIA Document G714. Construction Change Directive instructs Contractor to proceed with a change in the Work, for subsequent inclusion in a Change Order.
   1. Construction Change Directive contains a complete description of change in the Work. It also designates method to be followed to determine change in the Contract Sum or the Contract Time.

B. Documentation: Maintain detailed records on a time and material basis of work required by the Construction Change Directive.
   1. After completion of change, submit an itemized account and supporting data necessary to substantiate cost and time adjustments to the Contract.

PART 2 - PRODUCTS

(Not Used)

PART 3 - EXECUTION

(Not Used)

END OF SECTION 01250

SECTION 01290 - PAYMENT PROCEDURES July 16, 2007

PART 1 - GENERAL

1.1 RELATED DOCUMENTS

A. Drawings and general provisions of the Contract, including General and Supplementary Conditions and other Division 1 Specification Sections, apply to this Section.

1.2 SUMMARY

A. This Section specifies administrative and procedural requirements necessary to prepare and process Applications for Payment.

B. Related Sections include the following:
1. Division 1 Section "Contract Modification Procedures" for administrative procedures for handling changes to the Contract.
2. Division 1 Section "Construction Progress Documentation" for administrative requirements governing preparation and submittal of Contractor's Construction Schedule and Submittals Schedule.

1.3 DEFINITIONS

A. Schedule of Values: A statement furnished by Contractor allocating portions of the Contract Sum to various portions of the Work and used as the basis for reviewing Contractor's Applications for Payment.

1.4 SCHEDULE OF VALUES

A. Coordination: Coordinate preparation of the Schedule of Values with preparation of Contractor's Construction Schedule.
1. Correlate line items in the Schedule of Values with other required administrative forms and schedules, including the following:
   a. Application for Payment forms with Continuation Sheets.
   b. Submittals Schedule.
2. Submit the Schedule of Values to Architect at earliest possible date but no later than seven days before the date scheduled for submittal of initial Applications for Payment.
3. Subschedules: Where the Work is separated into phases requiring separately phased payments, provide subschedules showing values correlated with each phase of payment.

B. Format and Content: Use the Project Manual table of contents as a guide to establish line items for the Schedule of Values. Provide at least one line item for each Specification Section.
1. Identification: Include the following Project identification on the Schedule of Values:
   a. Project name and location.
   b. Name of Architect.
   c. Architect's project number.
   d. Contractor's name and address.
   e. Date of submittal.
2. Arrange the Schedule of Values in tabular form with separate columns to indicate the

following for each item listed:

a. Related Specification Section or Division.
b. Description of the Work.
c. Name of subcontractor.
d. Name of manufacturer or fabricator.
e. Name of supplier.
f. Change Orders (numbers) that affect value.
g. Dollar value.
   1) Percentage of the Contract Sum to nearest one-hundredth percent, adjusted to total 100 percent.

3. Provide a breakdown of the Contract Sum in enough detail to facilitate continued evaluation of Applications for Payment and progress reports. Coordinate with the Project Manual table of contents. Provide several line items for principal subcontract amounts, where appropriate.
4. Round amounts to nearest whole dollar; total shall equal the Contract Sum.
5. Provide a separate line item in the Schedule of Values for each part of the Work where Applications for Payment may include materials or equipment purchased or fabricated and stored, but not yet installed.
   a. Differentiate between items stored on-site and items stored off-site. Include evidence of insurance or bonded warehousing if required.
6. Provide separate line items in the Schedule of Values for initial cost of materials, for each subsequent stage of completion, and for total installed value of that part of the Work.
7. Each item in the Schedule of Values and Applications for Payment shall be complete. Include total cost and proportionate share of general overhead and profit for each item.
   a. Temporary facilities and other major cost items that are not direct cost of actual work-in-place may be shown either as separate line items in the Schedule of Values or distributed as general overhead expense, at Contractor's option.
8. Schedule Updating: Update and resubmit the Schedule of Values before the next Applications for Payment when Change Orders or Construction Change Directives result in a change in the Contract Sum.

1.5 APPLICATIONS FOR PAYMENT

A. Each Application for Payment shall be consistent with previous applications and payments as certified by Architect and paid for by Owner.
   1. Initial Application for Payment, Application for Payment at time of Substantial Completion, and final Application for Payment involve additional requirements.

B. Payment Application Times: The date for each progress payment is indicated in the Agreement between Owner and Contractor. The period of construction Work covered by each Application for Payment is the period indicated in the Agreement.

C. Payment Application Forms: Use AIA Document G702 and AIA Document G703 Continuation Sheets as form for Applications for Payment.

D. Application Preparation: Complete every entry on form. Notarize and execute by a person authorized to sign legal documents on behalf of Contractor. Architect will return incomplete applications without action.
   1. Entries shall match data on the Schedule of Values and Contractor's Construction Schedule. Use updated schedules if revisions were made.

2. Include amounts of Change Orders and Construction Change Directives issued before last day of construction period covered by application.

E. Transmittal: Submit 4 signed and notarized original copies of each Application for Payment to Architect by a method ensuring receipt within 24 hours. One copy shall include waivers of lien and similar attachments if required.
   1. Transmit each copy with a transmittal form listing attachments and recording appropriate information about application.

F. Waivers of Mechanic's Lien: With each Application for Payment, submit waivers of mechanic's liens from subcontractors, sub-subcontractors, and suppliers for construction period covered by the previous application.
   1. Submit partial waivers on each item for amount requested, before deduction for retainage, on each item.
   2. When an application shows completion of an item, submit final or full waivers.
   3. Owner reserves the right to designate which entities involved in the Work must submit waivers.
   4. Waiver Delays: Submit each Application for Payment with Contractor's waiver of mechanic's lien for construction period covered by the application.
      a. Submit final Application for Payment with or preceded by final waivers from every entity involved with performance of the Work covered by the application who is lawfully entitled to a lien.
   5. Waiver Forms: Submit waivers of lien on forms, executed in a manner acceptable to Owner.

G. Initial Application for Payment: Administrative actions and submittals that must precede or coincide with submittal of first Application for Payment include the following:
   1. List of subcontractors.
   2. Schedule of Values.
   3. Contractor's Construction Schedule (preliminary if not final).
   4. Products list.
   5. Schedule of unit prices.
   6. Submittals Schedule (preliminary if not final).
   7. List of Contractor's staff assignments.
   8. List of Contractor's principal consultants.
   9. Copies of building permits.
   10. Copies of authorizations and licenses from authorities having jurisdiction for performance of the Work.
   11. Initial progress report.
   12. Report of preconstruction conference.
   13. Certificates of insurance and insurance policies.
   14. Performance and payment bonds.
   15. Data needed to acquire Owner's insurance.
   16. Initial settlement survey and damage report if required.

H. Application for Payment at Substantial Completion: After issuing the Certificate of Substantial Completion, submit an Application for Payment showing 100 percent completion for portion of the Work claimed as substantially complete.
   1. Include documentation supporting claim that the Work is substantially complete and a statement showing an accounting of changes to the Contract Sum.
   2. This application shall reflect Certificates of Partial Substantial Completion issued previously for Owner occupancy of designated portions of the Work.

I. Final Payment Application: Submit final Application for Payment with releases and supporting documentation not previously submitted and accepted, including, but not limited, to the following:
   1. Evidence of completion of Project closeout requirements.
   2. Insurance certificates for products and completed operations where required and proof that taxes, fees, and similar obligations were paid.
   3. Updated final statement, accounting for final changes to the Contract Sum.
   4. AIA Document G706, "Contractor's Affidavit of Payment of Debts and Claims."
   5. AIA Document G706A, "Contractor's Affidavit of Release of Liens."
   6. AIA Document G707, "Consent of Surety to Final Payment."
   7. Evidence that claims have been settled.
   8. Final meter readings for utilities, a measured record of stored fuel, and similar data as of date of Substantial Completion or when Owner took possession of and assumed responsibility for corresponding elements of the Work.
   9. Final, liquidated damages settlement statement.

PART 2 - PRODUCTS

(Not Used)

PART 3 - EXECUTION

(Not Used)

END OF SECTION 01290

SECTION 01310 - PROJECT MANAGEMENT AND COORDINATION July 16, 2007

PART 1 - GENERAL

1.1 RELATED DOCUMENTS

A. Drawings and general provisions of the Contract, including General and Supplementary Conditions and other Division 1 Specification Sections, apply to this Section.

1.2 SUMMARY

A. This Section includes administrative provisions for coordinating construction operations on Project including, but not limited to, the following:
   1. General project coordination procedures.
   2. Conservation.
   3. Coordination Drawings.
   4. Administrative and supervisory personnel.
   5. Project meetings.

B. Each contractor shall participate in coordination requirements. Certain areas of responsibility will be assigned to a specific contractor.

C. Related Sections: The following Sections contain requirements that relate to this Section:
   1. Division 1 Section "Construction Progress Documentation" for preparing and submitting the Contractor's Construction Schedule.
   2. Division 1 Section "Execution Requirements" for procedures for coordinating general installation and field-engineering services, including establishment of benchmarks and control points.
   3. Division 1 Section "Closeout Procedures" for coordinating Contract closeout.

1.3 COORDINATION

A. Coordination: Coordinate construction operations included in various Sections of the Specifications to ensure efficient and orderly installation of each part of the Work. Coordinate construction operations, included in different Sections, that depend on each other for proper installation, connection, and operation.
   1. Schedule construction operations in sequence required to obtain the best results where installation of one part of the Work depends on installation of other components, before or after its own installation.
   2. Coordinate installation of different components with other contractors to ensure maximum accessibility for required maintenance, service, and repair.
   3. Make adequate provisions to accommodate items scheduled for later installation.

B. If necessary, prepare memoranda for distribution to each party involved, outlining special procedures required for coordination. Include such items as required notices, reports, and list of attendees at meetings.
   1. Prepare similar memoranda for Owner and separate contractors if coordination of their Work is required.

C. Administrative Procedures: Coordinate scheduling and timing of required administrative procedures with other construction activities and activities of other contractors to avoid conflicts and to ensure orderly progress of the Work. Such administrative activities include,

but are not limited to, the following:

1. Preparation of Contractor's Construction Schedule.
2. Preparation of the Schedule of Values.
3. Installation and removal of temporary facilities and controls.
4. Delivery and processing of submittals.
5. Progress meetings.
6. Preinstallation conferences.
7. Project closeout activities.

D. Conservation: Coordinate construction activities to ensure that operations are carried out with consideration given to conservation of energy, water, and materials.

1. Salvage materials and equipment involved in performance of, but not actually incorporated into, the Work.

1.4 SUBMITTALS

A. Coordination Drawings: Prepare Coordination Drawings if limited space availability necessitates maximum utilization of space for efficient installation of different components or if coordination is required for installation of products and materials fabricated by separate entities.

1. Indicate relationship of components shown on separate Shop Drawings.
2. Indicate required installation sequences.
3. Refer to Division 15 Section "Basic Mechanical Materials and Methods" and Division 16 Section "Basic Electrical Materials and Methods" for specific Coordination Drawing requirements for mechanical and electrical installations.

B. Staff Names: Within 15 days of starting construction operations, submit a list of principal staff assignments, including superintendent and other personnel in attendance at Project site. Identify individuals and their duties and responsibilities; list addresses and telephone numbers, including home and office telephone numbers. Provide names, addresses, and telephone numbers of individuals assigned as standbys in the absence of individuals assigned to Project.

1. Post copies of list in Project meeting room, in temporary field office, and by each temporary telephone.

1.5 ADMINISTRATIVE AND SUPERVISORY PERSONNEL

A. General: In addition to Project superintendent, provide other administrative and supervisory personnel as required for proper performance of the Work.

1. Include special personnel required for coordination of operations with other contractors.

1.6 PROJECT MEETINGS

A. General: Schedule and conduct meetings and conferences at Project site, unless otherwise indicated.

1. Attendees: Inform participants and others involved, and individuals whose presence is required, of date and time of each meeting. Notify Owner and Architect of scheduled meeting dates and times.
2. Agenda: Prepare the meeting agenda. Distribute the agenda to all invited attendees.
3. Minutes: Record significant discussions and agreements achieved. Distribute the meeting minutes to everyone concerned, including Owner and Architect, within 3

days of the meeting.

B. Preconstruction Conference: Schedule a preconstruction conference before starting construction, at a time convenient to Owner and Architect, but no later than 15 days after execution of the Agreement. Hold the conference at Project site or another convenient location. Conduct the meeting to review responsibilities and personnel assignments.

1. Attendees: Authorized representatives of Owner, Architect, and their consultants; Contractor and its superintendent; major subcontractors; manufacturers; suppliers; and other concerned parties shall attend the conference. All participants at the conference shall be familiar with Project and authorized to conclude matters relating to the Work.
2. Agenda: Discuss items of significance that could affect progress, including the following:
   a. Tentative construction schedule.
   b. Phasing.
   c. Critical work sequencing.
   d. Designation of responsible personnel.
   e. Procedures for processing field decisions and Change Orders.
   f. Procedures for processing Applications for Payment.
   g. Distribution of the Contract Documents.
   h. Submittal procedures.
   i. Preparation of Record Documents.
   j. Use of the premises.
   k. Responsibility for temporary facilities and controls.
   l. Parking availability.
   m. Office, work, and storage areas.
   n. Equipment deliveries and priorities.
   o. First aid.
   p. Security.
   q. Progress cleaning.
   r. Working hours.

C. Preinstallation Conferences: Conduct a preinstallation conference at Project site before each construction activity that requires coordination with other construction. Including, but no limited to: Demolition, concrete, masonry, excavation, mechanical, plumbing, electrical, steel erection and stud framing, roofing drywall and finish work.

1. Attendees: Installer and representatives of manufacturers and fabricators involved in or affected by the installation and its coordination or integration with other materials and installations that have preceded or will follow, shall attend the meeting. Advise Architect of scheduled meeting dates.
2. Agenda: Review progress of other construction activities and preparations for the particular activity under consideration, including requirements for the following:
   a. Contract Documents.
   b. Options.
   c. Related Change Orders.
   d. Purchases.
   e. Deliveries.
   f. Submittals.
   g. Review of mockups.
   h. Possible conflicts.
   i. Compatibility problems.
   j. Time schedules.
   k. Weather limitations.

l. Manufacturer's written recommendations.
m. Warranty requirements.
n. Compatibility of materials.
o. Acceptability of substrates.
p. Temporary facilities and controls.
q. Space and access limitations.
r. Regulations of authorities having jurisdiction.
s. Testing and inspecting requirements.
t. Required performance results.
u. Protection of construction and personnel.

3. Record significant conference discussions, agreements, and disagreements.
4. Do not proceed with installation if the conference cannot be successfully concluded. Initiate whatever actions are necessary to resolve impediments to performance of the Work and reconvene the conference at earliest feasible date.

D. Progress Meetings: Conduct progress meetings at weekly intervals. Coordinate dates of meetings with preparation of payment requests.

1. Attendees: In addition to representatives of Owner and Architect, each contractor, subcontractor, supplier, and other entity concerned with current progress or involved in planning, coordination, or performance of future activities shall be represented at these meetings. All participants at the conference shall be familiar with Project and authorized to conclude matters relating to the Work.
2. Agenda: Review and correct or approve minutes of previous progress meeting. Review other items of significance that could affect progress. Include topics for discussion as appropriate to status of Project.
   a. Contractor's Construction Schedule: Review progress since the last meeting. Determine whether each activity is on time, ahead of schedule, or behind schedule, in relation to Contractor's Construction Schedule. Determine how construction behind schedule will be expedited; secure commitments from parties involved to do so. Discuss whether schedule revisions are required to ensure that current and subsequent activities will be completed within the Contract Time.
   b. Review present and future needs of each entity present, including the following:
      1) Interface requirements.
      2) Sequence of operations.
      3) Status of submittals.
      4) Deliveries.
      5) Off-site fabrication.
      6) Access.
      7) Site utilization.
      8) Temporary facilities and controls.
      9) Work hours.
      10) Hazards and risks.
      11) Progress cleaning.
      12) Quality and work standards.
      13) Change Orders.
      14) Documentation of information for payment requests.
3. Reporting: Distribute minutes of the meeting to each party present and to parties who should have been present. Include a brief summary, in narrative form, of progress since the previous meeting and report.
   a. Schedule Updating: Revise Contractor's Construction Schedule after each

progress meeting where revisions to the schedule have been made or recognized. Issue revised schedule concurrently with the report of each meeting.

PART 2 - PRODUCTS

(Not Used)

PART 3 - EXECUTION

(Not Used)

END OF SECTION 01310

SECTION 01320 - CONSTRUCTION PROGRESS DOCUMENTATION July 16, 2007

PART 1 - GENERAL

1.1 RELATED DOCUMENTS

A. Drawings and general provisions of the Contract, including General and Supplementary Conditions and other Division 1 Specification Sections, apply to this Section.

1.2 SUMMARY

A. This Section includes administrative and procedural requirements for documenting the progress of construction during performance of the Work, including the following:
   1. Contractor's Construction Schedule.
   2. Submittals Schedule.
   3. Daily construction reports.
   4. Material location reports.
   5. Field condition reports.
   6. Special reports.

B. Related Sections include the following:
   1. Division 1 Section "Project Management and Coordination" for submitting and distributing meeting and conference minutes.
   2. Division 1 Section "Submittal Procedures" for submitting schedules and reports.
   3. Division 1 Section "Quality Requirements" for submitting a schedule of tests and inspections.

1.3 DEFINITIONS

A. Activity: A discrete part of a project that can be identified for planning, scheduling, monitoring, and controlling the construction project. Activities included in a construction schedule consume time and resources.
   1. Critical activities are activities on the critical path. They must start and finish on the planned early start and finish times.
   2. Predecessor Activity: An activity that precedes another activity in the network.
   3. Successor Activity: An activity that follows another activity in the network.

B. Cost Loading: The allocation of the Schedule of Values for the completion of an activity as scheduled. The sum of costs for all activities must equal the total Contract Sum, unless otherwise approved by Architect.

C. CPM: Critical path method, which is a method of planning and scheduling a construction project where activities are arranged based on activity relationships. Network calculations determine when activities can be performed and the critical path of Project.

D. Critical Path: The longest connected chain of interdependent activities through the network schedule that establishes the minimum overall Project duration and contains no float.

E. Event: The starting or ending point of an activity.

F. Float: The measure of leeway in starting and completing an activity.
   1. Float time is not for the exclusive use or benefit of either Owner or Contractor, but is

a jointly owned, expiring Project resource available to both parties as needed to meet schedule milestones and Contract completion date.

2. Free float is the amount of time an activity can be delayed without adversely affecting the early start of the successor activity.
3. Total float is the measure of leeway in starting or completing an activity without adversely affecting the planned Project completion date.

G. Fragnet: A partial or fragmentary network that breaks down activities into smaller activities for greater detail.

H. Major Area: A story of construction, a separate building, or a similar significant construction element.

I. Milestone: A key or critical point in time for reference or measurement.

J. Network Diagram: A graphic diagram of a network schedule, showing activities and activity relationships.

K. Resource Loading: The allocation of manpower and equipment necessary for the completion of an activity as scheduled.

1.4 SUBMITTALS

A. Submittals Schedule: Submit three copies of schedule. Arrange the following information in a tabular format:
1. Scheduled date for first submittal.
2. Specification Section number and title.
3. Submittal category (action or informational).
4. Name of subcontractor.
5. Description of the Work covered.
6. Scheduled date for Architect's and Construction Manager's final release or approval.

B. Contractor's Construction Schedule: Submit two opaque copies of initial schedule, large enough to show entire schedule for entire construction period.

C. CPM Reports: Concurrent with CPM schedule, submit three copies of each of the following computer-generated reports. Format for each activity in reports shall contain activity number, activity description, original duration, remaining duration, early start date, early finish date, late start date, late finish date, and total float in calendar days.
1. Activity Report: List of all activities sorted by activity number and then early start date, or actual start date if known.
2. Total Float Report: List of all activities sorted in ascending order of total float.
3. Earnings Report: Compilation of Contractor's total earnings from commencement of the Work until most recent Application for Payment.

D. Daily Construction Reports: Submit one copy at weekly intervals.

E. Material Location Reports: Submit two copies at monthly intervals.

F. Field Condition Reports: Submit two copies at time of discovery of differing conditions.

G. Special Reports: Submit two copies at time of unusual event.

1.5 COORDINATION

A. Coordinate preparation and processing of schedules and reports with performance of construction activities and with scheduling and reporting of separate contractors.

B. Coordinate Contractor's Construction Schedule with the Schedule of Values, list of subcontracts, Submittals Schedule, progress reports, payment requests, and other required schedules and reports.
   1. Secure time commitments for performing critical elements of the Work from parties involved.
   2. Coordinate each construction activity in the network with other activities and schedule them in proper sequence.

PART 2 - PRODUCTS

2.1 SUBMITTALS SCHEDULE

A. Preparation: Submit a schedule of submittals, arranged in chronological order by dates required by construction schedule. Include time required for review, resubmittal, ordering, manufacturing, fabrication, and delivery when establishing dates.
   1. Coordinate Submittals Schedule with list of subcontracts, the Schedule of Values, and Contractor's Construction Schedule.
   2. Initial Submittal: Submit concurrently with preliminary bar-chart schedule or network diagram. Include submittals required during the first 60 days of construction. List those required to maintain orderly progress of the Work and those required early because of long lead time for manufacture or fabrication.
   3. Final Submittal: Submit concurrently with the first complete submittal of Contractor's Construction Schedule.

2.2 REPORTS

A. Daily Construction Reports: Prepare a daily construction report recording the following information concerning events at Project site:
   1. List of subcontractors at Project site.
   2. List of separate contractors at Project site.
   3. Approximate count of personnel at Project site.
   4. Equipment at Project site.
   5. Major material deliveries.
   6. High and low temperatures and general weather conditions.
   7. Accidents.
   8. Meetings and significant decisions.
   9. Unusual events (refer to special reports).
   10. Stoppages, delays, shortages, and losses.
   11. Meter readings and similar recordings.
   12. Emergency procedures.
   13. Orders and requests of authorities having jurisdiction.
   14. Change Orders received and implemented.
   15. Construction or Work Change Directives received and implemented.
   16. Services connected and disconnected.
   17. Equipment or system tests and startups.
   18. Partial Completions and occupancies.
   19. Substantial Completions authorized.

B. Material Location Reports: At monthly intervals, prepare and submit a comprehensive list of materials delivered to and stored at Project site. List shall be cumulative, showing materials previously reported plus items recently delivered. Include with list a statement of progress on and delivery dates for materials or items of equipment fabricated or stored away from Project site.

C. Field Condition Reports: Immediately on discovery of a difference between field conditions and the Contract Documents, prepare and submit a detailed report. Submit with a request for interpretation on CSI Form 13.2A. Include a detailed description of the differing conditions, together with recommendations for changing the Contract Documents.

2.3 SPECIAL REPORTS

A. General: Submit special reports directly to Owner within one (1) day of an occurrence. Distribute copies of report to parties affected by the occurrence.

B. Reporting Unusual Events: When an event of an unusual and significant nature occurs at Project site, whether or not related directly to the Work, prepare and submit a special report. List chain of events, persons participating, response by Contractor's personnel, evaluation of results or effects, and similar pertinent information. Advise Owner in advance when these events are known or predictable.

PART 3 - EXECUTION

3.1 CONTRACTOR'S CONSTRUCTION SCHEDULE

A. Contractor's Construction Schedule Updating: At monthly intervals, update schedule to reflect actual construction progress and activities. Issue schedule one week before each regularly scheduled progress meeting.
   1. Revise schedule immediately after each meeting or other activity where revisions have been recognized or made. Issue updated schedule monthly.
   2. Include a report with updated schedule that indicates every change, including, but not limited to, changes in logic, durations, actual starts and finishes, and activity durations.
   3. As the Work progresses, indicate Actual Completion percentage for each activity.

B. Distribution: Distribute copies of approved schedule to Architect, Construction Manager, Owner, separate contractors, testing and inspecting agencies, and other parties identified by Contractor with a need-to-know schedule responsibility.
   1. Post copies in Project meeting rooms and temporary field offices.
   2. When revisions are made, distribute updated schedules to the same parties and post in the same locations. Delete parties from distribution when they have completed their assigned portion of the Work and are no longer involved in performance of construction activities.

END OF SECTION 01320

SECTION 01330 - SUBMITTAL PROCEDURES July 16, 2007

PART 1 - GENERAL

1.1 RELATED DOCUMENTS

A. Drawings and general provisions of the Contract, including General and Supplementary Conditions and other Division 1 Specification Sections, apply to this Section.

1.2 SUMMARY

A. This Section includes administrative and procedural requirements for submitting Shop Drawings, Product Data, Samples, and other submittals.

B. Related Sections include the following:
1. Division 1 Section "Project Management and Coordination" for submitting and distributing meeting and conference minutes and for submitting Coordination Drawings.
2. Division 1 Section "Quality Requirements" for submitting test and inspection reports and for mockup requirements.
3. Division 1 Section "Closeout Procedures" for submitting warranties.
4. Division 1 Section "Project Record Documents" for submitting Record Drawings, Record Specifications, and Record Product Data.
5. Division 1 Section "Operation and Maintenance Data" for submitting operation and maintenance manuals.
6. Division 1 Section "Demonstration and Training" for submitting videotapes of demonstration of equipment and training of Owner's personnel.
7. Divisions 2 through 16 Sections for specific requirements for submittals in those Sections.

1.3 DEFINITIONS

A. Action Submittals: Written and graphic information that requires Architect's responsive action.

B. Informational Submittals: Written information that does not require Architect's responsive action. Submittals may be rejected for not complying with requirements.

1.4 SUBMITTAL PROCEDURES

A. Coordination: Coordinate preparation and processing of submittals with performance of construction activities.
1. Coordinate each submittal with fabrication, purchasing, testing, delivery, other submittals, and related activities that require sequential activity.
2. Coordinate transmittal of different types of submittals for related parts of the Work so processing will not be delayed because of need to review submittals concurrently for coordination.
   a. Architect reserves the right to withhold action on a submittal requiring coordination with other submittals until related submittals are received.

B. Submittals Schedule: Provide a prioritized schedule of submittals.

C. Processing Time: Allow enough time for submittal review, including time for resubmittals, as follows. Time for review shall commence on Architect's receipt of submittal. No extension of the Contract Time will be authorized because of failure to transmit submittals enough in advance of the Work to permit processing, including resubmittals.
   1. Initial Review: Allow 15 days for initial review of each submittal. Allow additional time if coordination with subsequent submittals is required. Construction Manager will advise Contractor when a submittal being processed must be delayed for coordination.
   2. Intermediate Review: If intermediate submittal is necessary, process it in same manner as initial submittal.
   3. Resubmittal Review: Allow 15 days for review of each resubmittal.
   4. Concurrent Consultant Review: Where the Contract Documents indicate that submittals may be transmitted simultaneously to Architect and to Architect's consultants, allow 15 days for review of each submittal. Submittal will be returned to Construction Manager, through Architect, before being returned to Contractor.

D. Identification: Place a permanent label or title block on each submittal for identification.
   1. Indicate name of firm or entity that prepared each submittal on label or title block.
   2. Provide a space approximately 5" x 10" on label or beside title block to record Contractor's review and approval markings and action taken by Architect.
   3. Include the following information on label for processing and recording action taken:
      a. Project name.
      b. Date.
      c. Name and address of Architect and Construction Manager.
      d. Name and address of Contractor or Subcontractor.
      e. Name and address of supplier.
      f. Name of manufacturer.
      g. Number and title of appropriate Specification Section.

E. Deviations: Highlight, encircle, or otherwise specifically identify deviations from the Contract Documents on submittals.

F. Additional Copies: Unless additional copies are required for final submittal, and unless Architect observes noncompliance with provisions in the Contract Documents, initial submittal may serve as final submittal.
   1. Submit one copy of submittal to concurrent reviewer in addition to specified number of copies to Architect.

G. Transmittal: Package each submittal appropriately for transmittal and handling. Transmit each submittal using a transmittal form. Architect will return submittals, without review, received from sources other than Construction Manager.
   1. Transmittal Form: Use regular transmittal form.
   2. On an attached separate sheet, prepared on Contractor's letterhead, record relevant information, requests for data, revisions other than those requested by Architect on previous submittals, and deviations from requirements in the Contract Documents, including minor variations and limitations. Include same label information as related submittal.

H. Resubmittals: Make resubmittals in same form and number of copies as initial submittal.
   1. Note date and content of previous submittal.
   2. Note date and content of revision in label or title block and clearly indicate extent of revision.
   3. Resubmit submittals until they are marked "Conforms@.

I. Distribution: Furnish copies of final submittals to manufacturers, subcontractors, suppliers, fabricators, installers, authorities having jurisdiction, and others as necessary for performance of construction activities. Show distribution on transmittal forms.

J. Use for Construction: Use only final submittals with mark indicating "Conforms" taken by Architect and Construction Manager.

PART 2 - PRODUCTS

2.1 ACTION SUBMITTALS

A. General: Prepare and submit Action Submittals required by individual Specification Sections.

B. Product Data: Collect information into a single submittal for each element of construction and type of product or equipment.
   1. If information must be specially prepared for submittal because standard printed data are not suitable for use, submit as Shop Drawings, not as Product Data.
   2. Mark each copy of each submittal to show which products and options are applicable.
   3. Include the following information, as applicable:
      a. Manufacturer's written recommendations.
      b. Manufacturer's product specifications.
      c. Manufacturer's installation instructions.
      d. Standard color charts.
      e. Manufacturer's catalog cuts.
      f. Wiring diagrams showing factory-installed wiring.
      g. Printed performance curves.
      h. Operational range diagrams.
      i. Mill reports.
      j. Standard product operation and maintenance manuals.
      k. Compliance with specified referenced standards.
      l. Testing by recognized testing agency.
      m. Application of testing agency labels and seals.
      n. Notation of coordination requirements.
   4. Submit Product Data before or concurrent with Samples.
   5. Number of Copies: Submit four (4) copies of Product Data, unless otherwise indicated. Architect will return two (2) copies. Mark up and retain one returned copy as a Project Record Document.

C. Shop Drawings: Prepare Project-specific information, drawn accurately to scale. Do not base Shop Drawings on reproductions of the Contract Documents or standard printed data.
   1. Preparation: Fully illustrate requirements in the Contract Documents. Include the following information, as applicable:
      a. Dimensions.
      b. Identification of products.
      c. Fabrication and installation drawings.
      d. Roughing-in and setting diagrams.
      e. Wiring Diagrams:
         1) Differentiate between manufacturer-installed and field-installed wiring.
         2) Show field-installed wiring, including power, signal, and control

wiring.

f. Shopwork manufacturing instructions.
g. Templates and patterns.
h. Schedules.
i. Design calculations.
j. Compliance with specified standards.
k. Notation of coordination requirements.
l. Notation of dimensions established by field measurement.
m. Relationship to adjoining construction clearly indicated.
n. Seal and signature of Utah registered professional engineer if specified.
o. Wiring Diagrams: Differentiate between manufacturer-installed and field-installed wiring.

2. Sheet Size: Except for templates, patterns, and similar full-size drawings, submit Shop Drawings on sheets at least 8-1/2 by 11 inches(215 by 280 mm) but no larger than 30 by 42 inches (750 by 1000 mm).
3. Number of Copies: Submit copies of each submittal, as follows:
   a. One set of reproducible vellums and five (5) copies.
   b. Must be reviewed, approved, stamped, signed and dated by Construction Manager.
   c. Show Specification Section Number (from Project Manual).
   d. Show Contractor=s name, address, telephone and fax numbers and Contact Person.
   e. Construction Manager:
      1) Shall receive back his one set of reproducible vellum drawings and one print copy, as reviewed by the Architect and/or Engineer.
      2) Construction Manager is responsible for print sets and distribution of same.
      3) Shop Drawing originals belong to the Construction Manager and shall remain in his files.

D. Samples: Submit Samples for review of kind, color, pattern, and texture for a check of these characteristics with other elements and for a comparison of these characteristics between submittal and actual component as delivered and installed.
1. Transmit Samples that contain multiple, related components such as accessories together in one submittal package.
2. Identification: Attach label on unexposed side of Samples that includes the following:
   a. Generic description of Sample.
   b. Product name and name of manufacturer.
   c. Sample source.
   d. Number and title of appropriate Specification Section.
3. Disposition: Maintain sets of approved Samples at Project site, available for quality-control comparisons throughout the course of construction activity. Sample sets may be used to determine final acceptance of construction associated with each set.
   a. Samples that may be incorporated into the Work are indicated in individual Specification Sections. Such Samples must be in an undamaged condition at time of use.
   b. Samples not incorporated into the Work, or otherwise designated as Owner's property, are the property of Contractor.
4. Samples for Initial Selection: Submit manufacturer's color charts consisting of units or sections of units showing the full range of colors, textures, and patterns available.
   a. Number of Samples: Submit two (2) full set(s) of available choices where color, pattern, texture, or similar characteristics are required to be selected

from manufacturer's product line. Architect, through Construction Manager, will return one submittal with options selected.

5. Samples for Verification: Submit full-size units or Samples of size indicated, prepared from same material to be used for the Work, cured and finished in manner specified, and physically identical with material or product proposed for use, and that show full range of color and texture variations expected. Samples include, but are not limited to, the following: partial sections of manufactured or fabricated components; small cuts or containers of materials; complete units of repetitively used materials; swatches showing color, texture, and pattern; color range sets; and components used for independent testing and inspection.
   a. Number of Samples: Submit three (3) sets of Samples. Architect will retain one (1) Sample set; remainder will be returned.
      1) Submit a single Sample where assembly details, workmanship, fabrication techniques, connections, operation, and other similar characteristics are to be demonstrated.
      2) If variation in color, pattern, texture, or other characteristic is inherent in material or product represented by a Sample, submit at least three (3) sets of paired units that show approximate limits of variations.

E. Product Schedule or List: As required in individual Specification Sections, prepare a written summary indicating types of products required for the Work and their intended location. Include the following information in tabular form:
   1. Type of product. Include unique identifier for each product.
   2. Number and name of room or space.
   3. Location within room or space.
   4. Number of Copies: Submit five (5) copies of product schedule or list, unless otherwise indicated. Architect will return three (3) copies.
      a. Mark up and retain one returned copy as a Project Record Document.

F. Delegated-Design Submittal: Comply with requirements in Division 1 Section AQuality Requirements@.

G. Submittals Schedule: Provide a prioritized schedule of submittals.

H. Subcontract List: Prepare a written summary identifying individuals or firms proposed for each portion of the Work, including those who are to furnish products or equipment fabricated to a special design. Include the following information in tabular form:
   1. Name, address, and telephone number of entity performing subcontract or supplying products.
   2. Number and title of related Specification Section(s) covered by subcontract.
   3. Drawing number and detail references, as appropriate, covered by subcontract.

2.2 INFORMATIONAL SUBMITTALS

A. General: Prepare and submit Informational Submittals required by other Specification Sections.
   1. Number of Copies: Submit two (2) copies of each submittal, unless otherwise indicated. Architect will not return copies.
   2. Certificates and Certifications: Provide a notarized statement that includes signature of entity responsible for preparing certification. Certificates and certifications shall be signed by an officer or other individual authorized to sign documents on behalf of that entity.

3. Test and Inspection Reports: Comply with requirements specified in Division 1 Section "Quality Requirements."

B. Coordination Drawings: Comply with requirements specified in Division 1 Section "Project Management and Coordination."

C. Contractor's Construction Schedule: Comply with requirements specified in Division 1 Section "Project Management and Coordination."

D. Qualification Data: Prepare written information that demonstrates capabilities and experience of firm or person. Include lists of completed projects with project names and addresses, names and addresses of architects and owners, and other information specified.

E. Welding Certificates: Prepare written certification that welding procedures and personnel comply with requirements in the Contract Documents. Submit record of Welding Procedure Specification (WPS) and Procedure Qualification Record (PQR) on AWS forms. Include names of firms and personnel certified.

F. Installer Certificates: Prepare written statements on manufacturer's letterhead certifying that Installer complies with requirements in the Contract Documents and, where required, is authorized by manufacturer for this specific Project.

G. Manufacturer Certificates: Prepare written statements on manufacturer's letterhead certifying that manufacturer complies with requirements in the Contract Documents. Include evidence of manufacturing experience where required.

H. Product Certificates: Prepare written statements on manufacturer's letterhead certifying that product complies with requirements in the Contract Documents.

I. Material Certificates: Prepare written statements on manufacturer's letterhead certifying that material complies with requirements in the Contract Documents.

J. Material Test Reports: Prepare reports written by a qualified testing agency, on testing agency's standard form, indicating and interpreting test results of material for compliance with requirements in the Contract Documents.

K. Product Test Reports: Prepare written reports indicating current product produced by manufacturer complies with requirements in the Contract Documents. Base reports on evaluation of tests performed by manufacturer and witnessed by a qualified testing agency, or on comprehensive tests performed by a qualified testing agency.

L. Research/Evaluation Reports: Prepare written evidence, from a model code organization acceptable to authorities having jurisdiction, that product complies with building code in effect for Project. Include the following information:
1. Name of evaluation organization.
2. Date of evaluation.
3. Time period when report is in effect.
4. Product and manufacturers' names.
5. Description of product.
6. Test procedures and results.
7. Limitations of use.

M. Schedule of Tests and Inspections: Comply with requirements specified in Division 1 Section

"Quality Requirements."

N. Preconstruction Test Reports: Prepare reports written by a qualified testing agency, on testing agency's standard form, indicating and interpreting results of tests performed before installation of product, for compliance with performance requirements in the Contract Documents.

O. Compatibility Test Reports: Prepare reports written by a qualified testing agency, on testing agency's standard form, indicating and interpreting results of compatibility tests performed before installation of product. Include written recommendations for primers and substrate preparation needed for adhesion.

P. Field Test Reports: Prepare reports written by a qualified testing agency, on testing agency's standard form, indicating and interpreting results of field tests performed either during installation of product or after product is installed in its final location, for compliance with requirements in the Contract Documents.

Q. Maintenance Data: Prepare written and graphic instructions and procedures for operation and normal maintenance of products and equipment. Comply with requirements specified in Division 1 Section "Operation and Maintenance Data."

R. Design Data: Prepare written and graphic information, including, but not limited to, performance and design criteria, list of applicable codes and regulations, and calculations. Include list of assumptions and other performance and design criteria and a summary of loads. Include load diagrams if applicable. Provide name and version of software, if any, used for calculations. Include page numbers.

S. Manufacturer's Instructions: Prepare written or published information that documents manufacturer's recommendations, guidelines, and procedures for installing or operating a product or equipment. Include name of product and name, address, and telephone number of manufacturer. Include the following, as applicable:
   1. Preparation of substrates.
   2. Required substrate tolerances.
   3. Sequence of installation or erection.
   4. Required installation tolerances.
   5. Required adjustments.
   6. Recommendations for cleaning and protection.

T. Manufacturer's Field Reports: Prepare written information documenting factory-authorized service representative's tests and inspections. Include the following, as applicable:
   1. Name, address, and telephone number of factory-authorized service representative making report.
   2. Statement on condition of substrates and their acceptability for installation of product.
   3. Statement that products at Project site comply with requirements.
   4. Summary of installation procedures being followed, whether they comply with requirements and, if not, what corrective action was taken.
   5. Results of operational and other tests and a statement of whether observed performance complies with requirements.
   6. Statement whether conditions, products, and installation will affect warranty.
   7. Other required items indicated in individual Specification Sections.

U. Insurance Certificates and Bonds: Prepare written information indicating current status of insurance or bonding coverage. Include name of entity covered by insurance or bond, limits

of coverage, amounts of deductibles, if any, and term of the coverage.

V. Material Safety Data Sheets (MSDSs): Submit information directly to Owner; do not submit to Architect.
   1. Architect will not review submittals that include MSDSs and will return them with no action taken.

2.3 DELEGATED DESIGN

A. Performance and Design Criteria: Where professional design services or certifications by a design professional are specifically required of Contractor by the Contract Documents, provide products and systems complying with specific performance and design criteria indicated.
   1. If criteria indicated are not sufficient to perform services or certification required, submit a written request for additional information to Architect.

B. Delegated-Design Submittal: In addition to Shop Drawings, Product Data, and other required submittals, submit three (3) copies of a statement, signed and sealed by the responsible design professional, for each product and system specifically assigned to Contractor to be designed or certified by a design professional.
   1. Indicate that products and systems comply with performance and design criteria in the Contract Documents. Include list of codes, loads, and other factors used in performing these services.

PART 3 - EXECUTION

3.1 CONSTRUCTION MANAGER'S REVIEW

A. Review each submittal and check for coordination with other Work of the Contract and for compliance with the Contract Documents. Note corrections and field dimensions. Mark with review stamp before submitting to Architect.

B. Review Stamp: Stamp each submittal with a uniform, review stamp. Include Project name and location, submittal number, Specification Section title and number, name of reviewer, date of Contractor's review, and statement certifying that submittal has been reviewed, checked, and reviewed for compliance with the Contract Documents.

3.2 ARCHITECT'S ACTION

A. General: Architect will not review submittals that do not bear Construction Manager's review stamp and will return them without action.

B. Action Submittals: Architect will review each submittal, make marks to indicate corrections or modifications required, and return it. Architect will stamp each submittal with an action stamp and will mark stamp appropriately to indicate action taken, as follows:
   1. Final Unrestricted Release: When the Architect marks a submittal AConforms@ the work covered by the submittal may proceed provided it complies with requirements of the Contract Documents. Final payment depends on that compliance.
   2. Final-But-Restricted Release: When the Architect marks a submittal ARe: Notes@, the work covered by the submittal may proceed provided it complies with the notations or corrections on the submittal and requirements of the Contract Documents. Final payment depends on that compliance.

3. Returned For Resubmittal: When the Architect marks a submittal ARevise and Resubmit@, do not proceed with work covered by the submittal, including purchasing, fabrication, delivery, or other activity. Revise or prepare a new submittal according to the notations; resubmit without delay. Repeat if necessary to obtain different action mark.
   a. Do not use, or allow others to use, submittals marked ARevise and Resubmit@, at the Project Site or elsewhere where work is in progress.
4. Returned For Alternate Submittal: When Architect marks a submittal ADoes Not Conform@, do not proceed with work covered by the submittal, including purchasing, fabrication, delivery, or other activity. Product was not appropriate or as specified. Prepare a new submittal according to the Contract Documents.

C. Informational Submittals: Architect will review each submittal and will not return it, or will return it if it does not comply with requirements. Architect will forward each submittal to appropriate party.

D. Partial submittals are not acceptable, will be considered nonresponsive, and will be returned without review.

E. Submittals not required by the Contract Documents may not be reviewed and may be discarded.

END OF SECTION 01330

SECTION 01400 - QUALITY CONTROL SERVICES July 16, 2007

PART 1 - GENERAL

1.1 SUMMARY

A. This Section specifies administrative and procedural requirements for quality control services.

B. Quality control services include inspections and tests and related actions including reports, performed by independent agencies, governing authorities, and the Contractor. They do not include Contract enforcement activities performed by the Architect.

C. Inspection and testing services are required to verify compliance with requirements specified or indicated. These services do not relieve the Contractor of responsibility for compliance with Contract Document requirements.
   1. Specific quality control requirements for individual construction activities are specified in the Sections that specify those activities.
   2. Inspections, test and related actions specified are not intended to limit the Contractor's quality control procedures that facilitate compliance with Contract Document requirements.

D. Requirements for the Contractor to provide quality control services required by the Architect, Owner, or authorities having jurisdiction are not limited by provisions of this Section.

E. Related Documents: Drawings and general provisions of Contract, including General and Supplementary Conditions and other Division-1 Specification Sections, apply to this Section.

1.2 RESPONSIBILITIES

A. Contractor Responsibilities:
   1. Unless otherwise indicated as the responsibility of another identified entity, Contractor shall provide inspections, tests, and other quality-control services specified elsewhere in the Contract Documents and required by authorities having jurisdiction. Costs for these services shall be included in the Contract Sum.
      a. Where individual Sections specifically indicate that certain inspections, tests, and other quality-control services are the Contractor=s responsibility, the Contractor shall employ and pay a qualified independent testing agency to perform quality-control services. Costs for these services are included in the Contract Sum.
      b. Where individual Sections specifically indicate that certain inspections, tests, and other quality-control services are the Owner=s responsibility, the Owner will employ and pay a qualified independent testing agency to perform those services.
   2. Retesting: The Contractor is responsible for retesting where results of required inspections, tests or similar services prove unsatisfactory and do not indicate compliance with Contract Document requirements, regardless of whether the original test was the Contractor's responsibility.
   3. Cost of retesting construction revised or replaced by the Contractor is the Contractor's responsibility, where required tests were performed on original construction.
   4. Associated Services: The Contractor shall cooperate with agencies performing required inspections, tests and similar services and provide reasonable auxiliary

services as requested. Notify the agency sufficiently in advance of operations to permit assignment of personnel. Auxiliary services required include but are not limited to:

a. Providing access to the Work and furnishing incidental labor and facilities necessary to facilitate inspections and tests.
b. Taking adequate quantities of representative samples of materials that require testing or assisting the agency in taking samples.
c. Providing facilities for storage and curing of test samples, and delivery of samples to testing laboratories.
d. Security and protection of samples and test equipment at the Project site.

B. Owner Responsibilities: The Owner will provide inspections, tests and similar quality control services specified to be performed by independent agencies and not by the Contractor, except where they are specifically indicated as the Contractor's responsibility or are provided by another identified entity. Costs for these services are not included in the Contract Sum.

1. The Owner will employ and pay for the services of an independent agency, testing laboratory or other qualified firm to perform services which are the Owner's responsibility.

C. Duties of the Testing Agency: The independent testing agency engaged to perform inspections, sampling and testing of materials and construction specified in individual Specification Sections shall cooperate with the Architect and Contractor in performance of its duties, and shall provide qualified personnel to perform required inspections and tests.

1. The agency shall notify the Architect and Contractor promptly of irregularities or deficiencies observed in the Work during performance of its services.
2. The agency is not authorized to release, revoke, alter or enlarge requirements of the Contract Documents, or approve or accept any portion of the Work.
3. The agency shall not perform any duties of the Contractor.

D. Coordination: The Contractor and each agency engaged to perform inspections, tests and similar services shall coordinate the sequence of activities to accommodate required services with a minimum of delay. In addition the Contractor and each agency shall coordinate activities to avoid the necessity of removing and replacing construction to accommodate inspections and tests.

1. The Contractor is responsible for scheduling times for inspections, tests, taking samples and similar activities.

1.3 SUBMITTALS

A. The independent testing agency shall submit a certified written report of each inspection, test or similar service, to the Architect, in duplicate

1. Submit additional copies of each written report directly to the governing authority, when the authority so directs.
2. Report Data: Written reports of each inspection, test or similar service shall include, but not be limited to:
   a. Date of issue.
   b. Project title and number.
   c. Name, address and telephone number of testing agency.
   d. Dates and locations of samples and tests or inspections.
   e. Names of individuals making the inspection or test.
   f. Designation of the Work and test method.
   g. Identification of product and Specification Section.
   h. Complete inspection or test data.

i. Test results and an interpretations of test results.
j. Ambient conditions at the time of sample-taking and testing.
k. Name and signature of laboratory inspector.
l. Recommendations on retesting.

1.4 QUALITY ASSURANCE

A. Qualification for Service Agencies: Engage inspection and testing service agencies, including independent testing laboratories, which are prequalified as complying with "Recommended Requirements for Independent Laboratory Qualification" by the American Council of Independent Laboratories, and which specialize in the types of inspections and tests to be performed.
   1. Each independent inspection and testing agency engaged on the Project shall be authorized by authorities having jurisdiction to operate in the State in which the Project is located.

PART 2 - PRODUCTS

(Not Used)

PART 3 - EXECUTION

3.1 TESTS REQUIRED

A. Tests required may include but not be limited to the following:
   1. Soil compaction per IBC 1802.6.
   2. Concrete, per IBC 1704.4 and Table 1704.4.
   3. Welding, per IBC 1704.3 and Table 1704.3.
   4. High strength bolts, per IBC 1704.3.3.
   5. Structural masonry, per IBC 1704.5.

3.2 REPAIR AND PROTECTION

A. General: Upon completion of inspection, testing, sample-taking and similar services, repair damaged construction and restore substrates and finishes to eliminate deficiencies, including deficiencies in visual qualities of exposed finishes.
   1. Protect construction exposed by or for quality control service activities, and protect repaired construction.
   2. Repair and protection is the Contractor's responsibility, regardless of the assignment of responsibility for inspection, testing or similar services.

END OF SECTION 01400

SECTION 01500 - TEMPORARY FACILITIES AND CONTROLS July 16, 2007

PART 1 - GENERAL

1.1 RELATED DOCUMENTS

A. Drawings and general provisions of the Contract, including General and Supplementary Conditions and other Division 1 Specification Sections, apply to this Section.

1.2 SUMMARY

A. This Section includes requirements for temporary facilities and controls, including temporary utilities, support facilities, and security and protection facilities.

B. Temporary utilities include, but are not limited to, the following:
1. Sewers and drainage.
2. Water service and distribution.
3. Sanitary facilities, including toilets, wash facilities, and drinking-water facilities.
4. Heating and cooling facilities.
5. Ventilation.
6. Electric power service.
7. Lighting.
8. Telephone service.
9. Facsimile machine.

C. Support facilities include, but are not limited to, the following:
1. Temporary roads and paving.
2. Dewatering facilities and drains.
3. Project identification and temporary signs.
4. Waste disposal facilities.
5. Field offices.
6. Storage and fabrication sheds.
7. Lifts and hoists.
8. Temporary elevator usage.
9. Temporary stairs.
10. Construction aids and miscellaneous services and facilities.
11. First aid station.

D. Security and protection facilities include, but are not limited to, the following:
1. Environmental protection.
2. Stormwater control.
3. Tree and plant protection.
4. Pest control.
5. Site enclosure fence.
6. Security enclosure and lockup.
7. Barricades, warning signs, and lights.
8. Covered walkways.
9. Temporary enclosures.
10. Temporary partitions.
11. Fire protection.

E. Related Sections include the following:
   1. Division 1 Section "Submittal Procedures" for procedures for submitting copies of implementation and termination schedule and utility reports.
   2. Division 1 Section "Execution Requirements" for progress cleaning requirements.
   3. Divisions 2 through 16 for temporary heat, ventilation, and humidity requirements for products in those Sections.

1.3 DEFINITIONS

A. Permanent Enclosure: As determined by Architect, permanent or temporary roofing is complete, insulated, and weathertight; exterior walls are insulated and weathertight; and all openings are closed with permanent construction or substantial temporary closures.

1.4 USE CHARGES

A. General: Cost or use charges for temporary facilities are not chargeable to Owner or Architect and shall be included in the Contract Sum. Allow other entities to use temporary services and facilities without cost, including, but not limited to, the following:
   1. Owner's construction forces.
   2. Occupants of Project.
   3. Architect.
   4. Testing agencies.
   5. Personnel of authorities having jurisdiction.

B. Sewer Service: Pay sewer service use charges for sewer usage, by all parties engaged in construction, at Project site.

C. Water Service: Pay water service use charges, whether metered or otherwise, for water used by all entities engaged in construction activities at Project site.

D. Electric Power Service: Pay electric power service use charges, whether metered or otherwise, for electricity used by all entities engaged in construction activities at Project site.

1.5 QUALITY ASSURANCE

A. Standards: Comply with ANSI A10.6, NECA's "Temporary Electrical Facilities," and NFPA 241.
   1. Trade Jurisdictions: Assigned responsibilities for installation and operation of temporary utilities are not intended to interfere with trade regulations and union jurisdictions.
   2. Electric Service: Comply with NECA, NEMA, and UL standards and regulations for temporary electric service. Install service to comply with NFPA 70.

B. Tests and Inspections: Arrange for authorities having jurisdiction to test and inspect each temporary utility before use. Obtain required certifications and permits.

1.6 PROJECT CONDITIONS

A. Temporary Utilities: At earliest feasible time, when acceptable to Owner, change over from use of temporary service to use of permanent service.
   1. Temporary Use of Permanent Facilities: Installer of each permanent service shall assume responsibility for operation, maintenance, and protection of each permanent service during its use as a construction facility before Owner's acceptance,

regardless of previously assigned responsibilities.

B. Conditions of Use: The following conditions apply to use of temporary services and facilities by all parties engaged in the Work:
   1. Keep temporary services and facilities clean and neat.
   2. Relocate temporary services and facilities as required by progress of the Work.

PART 2 - PRODUCTS

2.1 MATERIALS

A. General: Provide new materials. Undamaged, previously used materials in serviceable condition may be used if approved by Architect. Provide materials suitable for use intended.

B. Chain-Link Fencing: Minimum 2-inch (50-mm), 0.148-inch- (3.76-mm-) thick, galvanized steel, chain-link fabric fencing; minimum 6 feet (1.8 m) high with galvanized steel pipe posts; minimum 2-3/8-inch- (60-mm-) OD line posts and 2-7/8-inch- (73-mm-) OD corner and pull posts, with 1-5/8-inch- (42-mm-) OD top rails.

C. Lumber and Plywood: Comply with requirements in Division 6 Section "Miscellaneous Carpentry."

D. Tarpaulins: Fire-resistive labeled with flame-spread rating of 15 or less.

E. Water: Potable.

2.2 EQUIPMENT

A. General: Provide equipment suitable for use intended.

B. Field Offices: Prefabricated or mobile units with lockable entrances, operable windows, and serviceable finishes; heated and air conditioned; on foundations adequate for normal loading.

C. Fire Extinguishers: Hand carried, portable, UL rated. Provide class and extinguishing agent as indicated or a combination of extinguishers of NFPA-recommended classes for exposures.
   1. Comply with NFPA 10 and NFPA 241 for classification, extinguishing agent, and size required by location and class of fire exposure.

D. Self-Contained Toilet Units: Single-occupant units of chemical, aerated recirculation, or combustion type; vented; fully enclosed with a glass-fiber-reinforced polyester shell or similar nonabsorbent material.

E. Drinking-Water Fixtures: Containerized, tap-dispenser, bottled-water drinking-water units, including paper cup supply.
   1. Where power is accessible, provide electric water coolers to maintain dispensed water temperature at 45 to 55 deg F (7.2 to 12.7 deg C).

F. Heating Equipment: Unless Owner authorizes use of permanent heating system, provide vented, self-contained, liquid-propane-gas or fuel-oil heaters with individual space thermostatic control.
   1. Use of gasoline-burning space heaters, open-flame heaters, or salamander-type heating units is prohibited.

2. Heating Units: Listed and labeled, by a testing agency acceptable to authorities having jurisdiction, and marked for intended use for type of fuel being consumed.

G. Electrical Outlets: Properly configured, NEMA-polarized outlets to prevent insertion of 110- to 120-V plugs into higher-voltage outlets; equipped with ground-fault circuit interrupters, reset button, and pilot light.

H. Power Distribution System Circuits: Where permitted and overhead and exposed for surveillance, wiring circuits, not exceeding 125-V ac, 20-A rating, and lighting circuits may be nonmetallic sheathed cable.

PART 3 - EXECUTION

3.1 INSTALLATION, GENERAL

A. Locate facilities where they will serve Project adequately and result in minimum interference with performance of the Work. Relocate and modify facilities as required.

B. Provide each facility ready for use when needed to avoid delay. Maintain and modify as required. Do not remove until facilities are no longer needed or are replaced by authorized use of completed permanent facilities.

3.2 TEMPORARY UTILITY INSTALLATION

A. General: Engage appropriate local utility company to install temporary service or connect to existing service. Where utility company provides only part of the service, provide the remainder with matching, compatible materials and equipment. Comply with utility company recommendations.
1. Arrange with utility company, Owner, and existing users for time when service can be interrupted, if necessary, to make connections for temporary services.
2. Provide adequate capacity at each stage of construction. Before temporary utility is available, provide trucked-in services.
3. Obtain easements to bring temporary utilities to Project site where Owner's easements cannot be used for that purpose.

B. Sewers and Drainage: Provide temporary connections to remove effluent that can be discharged lawfully.
1. Filter out excessive soil, construction debris, chemicals, oils, and similar contaminants that might clog sewers or pollute waterways before discharge.
2. Connect temporary sewers to municipal system as directed by sewer department officials.
3. Maintain temporary sewers and drainage facilities in a clean, sanitary condition. After heavy use, restore normal conditions promptly.
4. Provide temporary filter beds, settlement tanks, separators, and similar devices to purify effluent to levels acceptable to authorities having jurisdiction.

C. Water Service: Install water service and distribution piping in sizes and pressures adequate for construction until permanent water service is in use. Sterilize temporary water piping before use.
1. Provide rubber hoses as necessary to serve Project site.
2. As soon as water is required at each level, extend service to form a temporary water- and fire-protection standpipe. Provide distribution piping. Space outlets so water

can be reached with a 100-foot (30-m) hose. Provide one hose at each outlet.

3. Where installations below an outlet might be damaged by spillage or leakage, provide a drip pan of suitable size to minimize water damage. Drain accumulated water promptly from pans.

D. Sanitary Facilities: Provide temporary toilets, wash facilities, and drinking-water fixtures. Comply with regulations and health codes for type, number, location, operation, and maintenance of fixtures and facilities.

1. Disposable Supplies: Provide toilet tissue, paper towels, paper cups, and similar disposable materials for each facility. Maintain adequate supply. Provide covered waste containers for disposal of used material.
2. Toilets: Install self-contained toilet units. Shield toilets to ensure privacy. Provide separate facilities for male and female personnel.
3. Drinking-Water Facilities: Provide bottled-water, drinking-water units.
   a. Where power is accessible, provide electric water coolers to maintain dispensed water temperature at 45 to 55 deg F (7.2 to 12.7 deg C).

E. Heating and Cooling: Provide temporary heating and cooling required by construction activities for curing or drying of completed installations or for protecting installed construction from adverse effects of low temperatures or high humidity. Select equipment from that specified that will not have a harmful effect on completed installations or elements being installed.

1. Maintain a minimum temperature of 50 deg F (10 deg C) in permanently enclosed portions of building for normal construction activities, and 65 deg F (18.3 deg C) for finishing activities and areas where finished Work has been installed.

F. Ventilation and Humidity Control: Provide temporary ventilation required by construction activities for curing or drying of completed installations or for protecting installed construction from adverse effects of high humidity. Select equipment from that specified that will not have a harmful effect on completed installations or elements being installed. Coordinate ventilation requirements to produce ambient condition required and minimize energy consumption.

G. Electric Power Service: Provide weatherproof, grounded electric power service and distribution system of sufficient size, capacity, and power characteristics during construction period. Include meters, transformers, overload-protected disconnecting means, automatic ground-fault interrupters, and main distribution switchgear.

1. Install power distribution wiring overhead and rise vertically where least exposed to damage.
2. Connect temporary service to Owner's existing power source, as directed by electric company officials.

H. Electric Distribution: Provide receptacle outlets adequate for connection of power tools and equipment.

1. Provide waterproof connectors to connect separate lengths of electrical power cords if single lengths will not reach areas where construction activities are in progress. Do not exceed safe length-voltage ratio.
2. Provide warning signs at power outlets other than 110 to 120 V.
3. Provide metal conduit, tubing, or metallic cable for wiring exposed to possible damage. Provide rigid steel conduits for wiring exposed on grades, floors, decks, or other traffic areas.
4. Provide metal conduit enclosures or boxes for wiring devices.
5. Provide 4-gang outlets, spaced so 100-foot (30-m) extension cord can reach each area for power hand tools and task lighting. Provide a separate 125-V ac, 20-A

circuit for each outlet.

I. Lighting: Provide temporary lighting with local switching that provides adequate illumination for construction operations and traffic conditions.
   1. Install and operate temporary lighting that fulfills security and protection requirements without operating entire system.
   2. Provide one 100-W incandescent lamp per 500 sq. ft. (45 sq. m), uniformly distributed, for general lighting, or equivalent illumination.
   3. Provide one 100-W incandescent lamp every 50 feet (15 m) in traffic areas.
   4. Provide one 100-W incandescent lamp per story in stairways and ladder runs, located to illuminate each landing and flight.
   5. Install exterior-yard site lighting that will provide adequate illumination for construction operations, traffic conditions, and signage visibility when the Work is being performed.

J. Telephone Service: Provide temporary telephone service throughout construction period for common-use facilities used by all personnel engaged in construction activities. Install separate telephone line for each field office and first-aid station.
   1. Provide additional telephone lines for the following:
      a. In field office with more than two occupants, install a telephone for each additional occupant or pair of occupants.
      b. Provide a dedicated telephone line for each facsimile machine and computer with modem in each field office.
      c. Provide a separate telephone line for Owner's use.
      d. Install a telephone on every second or third story of construction.
   2. At each telephone, post a list of important telephone numbers.
      a. Police and fire departments.
      b. Ambulance service.
      c. Contractor's home office.
      d. Architect's office.
      e. Engineers' offices.
      f. Owner's office.
      g. Principal subcontractors' field and home offices.
   3. Provide an answering machine or voice-mail service on superintendent's telephone.
   4. Provide a portable cellular telephone for superintendent's use in making and receiving telephone calls when away from field office.

3.3 SUPPORT FACILITIES INSTALLATION

A. General: Comply with the following:
   1. Locate field offices, storage sheds, sanitary facilities, and other temporary construction and support facilities for easy access.
   2. Provide incombustible construction for offices, shops, and sheds located within construction area or within 30 feet (9 m) of building lines. Comply with NFPA 241.
   3. Maintain support facilities until near Substantial Completion. Remove before Substantial Completion. Personnel remaining after Substantial Completion will be permitted to use permanent facilities, under conditions acceptable to Owner.

B. Temporary Roads and Paved Areas: Construct and maintain temporary roads and paved areas adequate to support loads and to withstand exposure to traffic during construction period. Locate temporary roads and paved areas within construction limits indicated on Drawings.
   1. Provide a reasonably level, graded, well-drained subgrade of satisfactory soil

material, compacted to not less than 95 percent of maximum dry density in the top 6 inches (150 mm).

2. Provide gravel paving course of subbase material not less than 3 inches (75 mm) thick; roller compacted to a level, smooth, dense surface.
3. Provide dust-control treatment that is nonpolluting and nontracking. Reapply treatment as required to minimize dust.

C. Traffic Controls: Provide temporary traffic controls at junction of temporary roads with public roads. Include warning signs for public traffic and "STOP" signs for entrance onto public roads. Comply with requirements of authorities having jurisdiction.

D. Dewatering Facilities and Drains: Comply with requirements in applicable Division 2 Sections for temporary drainage and dewatering facilities and operations not directly associated with construction activities included in individual Sections. Where feasible, use same facilities. Maintain Project site, excavations, and construction free of water.

1. Dispose of rainwater in a lawful manner that will not result in flooding Project or adjoining property nor endanger permanent Work or temporary facilities.
2. Before connection and operation of permanent drainage piping system, provide temporary drainage where roofing or similar waterproof deck construction is completed.
3. Remove snow and ice as required to minimize accumulations.

E. Project Identification and Temporary Signs: Prepare Project identification and other signs in sizes indicated. Install signs where indicated to inform public and persons seeking entrance to Project. Do not permit installation of unauthorized signs.

1. Engage an experienced sign painter to apply graphics for Project identification signs. Comply with details indicated.
2. Prepare temporary signs to provide directional information to construction personnel and visitors.
3. Construct signs of exterior-type Grade B-B high-density concrete form overlay plywood in sizes and thicknesses indicated. Support on posts or framing of preservative-treated wood or steel.
4. Paint sign panel and applied graphics with exterior-grade alkyd gloss enamel over exterior primer.
5. Provide one 72" high x 96" wide project sign with text as follows:
   a. Name of Project - allow 2 line.
   b. Name of Owner - allow 2 lines.
   c. Owner=s Logo - allow 24" x 16" space.
   d. Name of Architect - allow 4 lines.
   e. Architect=s Logo - allow (2) 24" x 16" spaces.
   f. Name of Contractor - allow 2 lines.
   g. Contractor=s Logo - allow 24" x 16" space.
   h. Allow 24 additional lines.

F. Waste Disposal Facilities:

1. Establish a system for daily collection and disposal of waste or extraneous materials from all construction areas on site that may present a hazard to the project, its craftsmen and the expeditious construction of the work. The Contractor shall provide to the Owner a satisfactory method to assure clean-up is performed in a timely and expeditious fashion. Enforce requirements strictly. Do not hold collected materials at the site longer than 7 days during normal weather or 3 days when the daily temperature is expected to rise above 80 degrees F. Handle waste materials that are hazardous, dangerous, or unsanitary separately from other inert waste by

containerizing appropriately. Dispose of waste material in a lawful manner.

a. Burying or burning of waste materials on the site will not be permitted.

b. Washing waste materials down sewers or into waterways will not be permitted.

c. Provide rodent proof containers located on each floor level of construction work, to encourage depositing of lunch garbage and similar wastes by construction personnel.

2. The Owner reserves the right to withhold payments and perform the clean-up, if necessary, at the expense of the Contractor, if unsatisfactory clean-up efforts are not performed in a timely fashion.

G. Common-Use Field Office: Provide an insulated, weathertight, air-conditioned field office for use as a common facility by all personnel engaged in construction activities; of sufficient size to accommodate required office personnel and meetings of 12 persons at Project site. Keep office clean and orderly.

1. Furnish and equip offices as follows:

a. Desk and four chairs, four-drawer file cabinet, a plan table, a plan rack, and bookcase.

b. Provide a room of not less than 240 sq. ft. (18.0 sq. m) for Project meetings. Furnish room with conference table, 12 folding chairs, and 4-foot- (1.2-m-) square tack board.

2. Provide resilient floor covering and painted gypsum wallboard walls and acoustical ceiling. Provide operable windows with adjustable blinds and insect screens.

3. Provide an electric heater with thermostat capable of maintaining a uniform indoor temperature of 68 deg F (20 deg C). Provide an air-conditioning unit capable of maintaining an indoor temperature of 72 deg F (23 deg C).

4. Provide fluorescent light fixtures capable of maintaining average illumination of 20 fc (215 lx) at desk height. Provide 110- to 120-V duplex outlets spaced at not more than 12-foot (4-m) intervals, 1 per wall in each room.

H. Storage and Fabrication Sheds: Provide sheds sized, furnished, and equipped to accommodate materials and equipment involved, including temporary utility services. Sheds may be open shelters or fully enclosed spaces within building or elsewhere on-site.

I. Lifts and Hoists: Provide facilities for hoisting materials and personnel. Truck cranes and similar devices used for hoisting materials are considered "tools and equipment" and not temporary facilities.

J. Temporary Elevator Usage: Provide protective coverings, barriers, devices, signs, or other procedures to protect elevator car and entrance doors and frame. If, despite such protection, elevators become damaged, engage elevator Installer to restore damaged work so no evidence remains of correction work. Return items that cannot be refinished in field to the shop, make required repairs and refinish entire unit, or provide new units as required.

K. Temporary Stairs: Provide temporary stairs where ladders are not adequate. Cover finished, permanent stairs with protective covering of plywood or similar material so finishes will be undamaged at time of acceptance.

3.4 SECURITY AND PROTECTION FACILITIES INSTALLATION

A. Environmental Protection: Provide protection, operate temporary facilities, and conduct construction in ways and by methods that comply with environmental regulations and that minimize possible air, waterway, and subsoil contamination or pollution or other undesirable

effects. Avoid using tools and equipment that produce harmful noise. Restrict use of noisemaking tools and equipment to hours that will minimize complaints from persons or firms near Project site.

B. Stormwater Control: Provide earthen embankments and similar barriers in and around excavations and subgrade construction, sufficient to prevent flooding by runoff of stormwater from heavy rains.

C. Tree and Plant Protection: Install temporary fencing located as indicated or outside the drip line of trees to protect vegetation from construction damage. Protect tree root systems from damage, flooding, and erosion.

D. Pest Control: Before deep foundation work has been completed, retain a local exterminator or pest-control company to recommend practices to minimize attraction and harboring of rodents, roaches, and other pests. Engage this pest-control service to perform extermination and control procedures at regular intervals so Project will be free of pests and their residues at Substantial Completion. Obtain extended warranty for Owner. Perform control operations lawfully, using environmentally safe materials.

E. Site Enclosure Fence: Before construction operations begin, install chain-link enclosure fence with lockable entrance gates. Locate where indicated, or enclose entire Project site or portion determined sufficient to accommodate construction operations. Install in a manner that will prevent people, dogs, and other animals from easily entering site except by entrance gates.
   1. Set fence posts in concrete bases.
   2. Provide gates in sizes and at locations necessary to accommodate delivery vehicles and other construction operations.
   3. Maintain security by limiting number of keys and restricting distribution to authorized personnel.

F. Security Enclosure and Lockup: Install substantial temporary enclosure around partially completed areas of construction. Provide lockable entrances to prevent unauthorized entrance, vandalism, theft, and similar violations of security.

G. Barricades, Warning Signs, and Lights: Comply with standards and code requirements for erecting structurally adequate barricades. Paint with appropriate colors, graphics, and warning signs to inform personnel and public of possible hazard. Where appropriate and needed, provide lighting, including flashing red or amber lights.
   1. For safety barriers, sidewalk bridges, and similar uses, provide minimum 5/8-inch-(16-mm-) thick exterior plywood.

H. Covered Walkway: Where required, erect a structurally adequate, protective, covered walkway for passage of persons along adjacent public street. Coordinate with entrance gates, other facilities, and obstructions. Comply with regulations of authorities having jurisdiction.

I. Temporary Enclosures: Provide temporary enclosures for protection of construction, in progress and completed, from exposure, foul weather, other construction operations, and similar activities. Provide temporary weathertight enclosure for building exterior.
   1. Where heating or cooling is needed and permanent enclosure is not complete, provide insulated temporary enclosures. Coordinate enclosure with ventilating and material drying or curing requirements to avoid dangerous conditions and effects.
   2. Vertical Openings: Close openings of 25 sq. ft. (2.3 sq. m) or less with plywood or

similar materials.

3. Horizontal Openings: Close openings in floor or roof decks and horizontal surfaces with load-bearing, wood-framed construction.
4. Install tarpaulins securely using fire-retardant-treated wood framing and other materials.
5. Where temporary wood or plywood enclosure exceeds 100 sq. ft. (9.2 sq. m) in area, use fire-retardant-treated material for framing and main sheathing.

J. Temporary Partitions: Erect and maintain dustproof partitions and temporary enclosures to limit dust and dirt migration and to separate areas from fumes and noise.
1. Construct dustproof partitions of not less than nominal 4-inch (100-mm) studs, 5/8-inch (16-mm) gypsum wallboard with joints taped on occupied side, and 1/2-inch (13-mm) fire-retardant plywood on construction side.
2. Insulate partitions to provide noise protection to occupied areas.
3. Seal joints and perimeter. Equip partitions with dustproof doors and security locks.
4. Protect air-handling equipment.
5. Weatherstrip openings.

K. Temporary Fire Protection: Until fire-protection needs are supplied by permanent facilities, install and maintain temporary fire-protection facilities of types needed to protect against reasonably predictable and controllable fire losses. Comply with NFPA 241.
1. Provide fire extinguishers, installed on walls on mounting brackets, visible and accessible from space being served, with sign mounted above.
   a. Field Offices: Class A stored-pressure water-type extinguishers.
   b. Other Locations: Class ABC dry-chemical extinguishers or a combination of extinguishers of NFPA-recommended classes for exposures.
   c. Locate fire extinguishers where convenient and effective for their intended purpose; provide not less than one extinguisher on each floor at or near each usable stairwell.
2. Store combustible materials in containers in fire-safe locations.
3. Maintain unobstructed access to fire extinguishers, fire hydrants, temporary fire-protection facilities, stairways, and other access routes for firefighting. Prohibit smoking in hazardous fire-exposure areas.
4. Supervise welding operations, combustion-type temporary heating units, and similar sources of fire ignition.
5. Permanent Fire Protection: At earliest feasible date in each area of Project, complete installation of permanent fire-protection facility, including connected services, and place into operation and use. Instruct key personnel on use of facilities.
6. Develop and supervise an overall fire-prevention and first-aid fire-protection program for personnel at Project site. Review needs with local fire department and establish procedures to be followed. Instruct personnel in methods and procedures. Post warnings and information.
7. Provide temporary standpipes and hoses for fire protection. Hang hoses with a warning sign stating that hoses are for fire-protection purposes only and are not to be removed. Match hose size with outlet size and equip with suitable nozzles.

3.5 OPERATION, TERMINATION, AND REMOVAL

A. Supervision: Enforce strict discipline in use of temporary facilities. To minimize waste and abuse, limit availability of temporary facilities to essential and intended uses.

B. Maintenance: Maintain facilities in good operating condition until removal. Protect from

damage caused by freezing temperatures and similar elements.

1. Maintain operation of temporary enclosures, heating, cooling, humidity control, ventilation, and similar facilities on a 24-hour basis where required to achieve indicated results and to avoid possibility of damage.
2. Prevent water-filled piping from freezing. Maintain markers for underground lines. Protect from damage during excavation operations.

C. Temporary Facility Changeover: Except for using permanent fire protection as soon as available, do not change over from using temporary security and protection facilities to permanent facilities until Substantial Completion.

D. Termination and Removal: Remove each temporary facility when need for its service has ended, when it has been replaced by authorized use of a permanent facility, or no later than Substantial Completion. Complete or, if necessary, restore permanent construction that may have been delayed because of interference with temporary facility. Repair damaged Work, clean exposed surfaces, and replace construction that cannot be satisfactorily repaired.

1. Materials and facilities that constitute temporary facilities are the property of Contractor. Owner reserves right to take possession of Project identification signs.
2. Remove materials contaminated with road oil, asphalt and other petrochemical compounds, and other substances that might impair growth of plant materials or lawns. Repair or replace street paving, curbs, and sidewalks at temporary entrances, as required by authorities having jurisdiction.
3. At Substantial Completion, clean and renovate permanent facilities used during construction period. Comply with final cleaning requirements in Division 1 Section "Closeout Procedures."

END OF SECTION 01500

SECTION 01700 - EXECUTION REQUIREMENTS July 16, 2007

PART 1 - GENERAL

1.1 RELATED DOCUMENTS

A. Drawings and general provisions of the Contract, including General and Supplementary Conditions and other Division 1 Specification Sections, apply to this Section.

1.2 SUMMARY

A. This Section includes general procedural requirements governing execution of the Work including, but not limited to, the following:
1. Construction layout.
2. Field engineering and surveying.
3. General installation of products.
4. Progress cleaning.
5. Starting and adjusting.
6. Protection of installed construction.
7. Correction of the Work.

B. Related Sections include the following:
1. Division 1 Section "Project Management and Coordination" for procedures for coordinating field engineering with other construction activities.
2. Division 1 Section "Submittal Procedures" for submitting surveys.
3. Division 1 Section "Cutting and Patching" for procedural requirements for cutting and patching necessary for the installation or performance of other components of the Work.
4. Division 1 Section "Closeout Procedures" for submitting final property survey with Project Record Documents, recording of Owner-accepted deviations from indicated lines and levels, and final cleaning.

1.3 SUBMITTALS

A. Landfill Receipts: Submit copy of receipts issued by a landfill facility, licensed to accept hazardous materials, for hazardous waste disposal.

PART 2 - PRODUCTS

(Not Used)

PART 3 - EXECUTION

3.1 EXAMINATION

A. Existing Conditions: The existence and location of site improvements, utilities, and other construction indicated as existing are not guaranteed. Before beginning work, investigate and verify the existence and location of mechanical and electrical systems and other construction affecting the Work.
1. Before construction, verify the location and points of connection of utility services.

B. Existing Utilities: The existence and location of underground and other utilities and construction indicated as existing are not guaranteed. Before beginning sitework, investigate and verify the existence and location of underground utilities and other construction affecting the Work.
   1. Before construction, verify the location and invert elevation at points of connection of sanitary sewer, storm sewer, and water-service piping; and underground electrical services.
   2. Furnish location data for work related to Project that must be performed by public utilities serving Project site.

C. Acceptance of Conditions: Examine substrates, areas, and conditions, with Installer or Applicator present where indicated, for compliance with requirements for installation tolerances and other conditions affecting performance. Record observations.
   1. Written Report: Where a written report listing conditions detrimental to performance of the Work is required by other Sections, include the following:
      a. Description of the Work.
      b. List of detrimental conditions, including substrates.
      c. List of unacceptable installation tolerances.
      d. Recommended corrections.
   2. Verify compatibility with and suitability of substrates, including compatibility with existing finishes or primers.
   3. Examine roughing-in for mechanical and electrical systems to verify actual locations of connections before equipment and fixture installation.
   4. Examine walls, floors, and roofs for suitable conditions where products and systems are to be installed.
   5. Proceed with installation only after unsatisfactory conditions have been corrected. Proceeding with the Work indicates acceptance of surfaces and conditions.

3.2 PREPARATION

A. Existing Utility Interruptions: Do not interrupt utilities serving facilities occupied unless permitted under the following conditions and then only after arranging to provide temporary utility services according to requirements indicated:
   1. Notify Architect and Owner not less than two days in advance of proposed utility interruptions.
   2. Do not proceed with utility interruptions without Architect's and Owner's written permission.

B. Field Measurements: Take field measurements as required to fit the Work properly. Recheck measurements before installing each product. Where portions of the Work are indicated to fit to other construction, verify dimensions of other construction by field measurements before fabrication. Coordinate fabrication schedule with construction progress to avoid delaying the Work.

C. Space Requirements: Verify space requirements and dimensions of items shown diagrammatically on Drawings.

D. Review of Contract Documents and Field Conditions: Immediately on discovery of the need for clarification of the Contract Documents, submit a request for information to Architect. Include a detailed description of problem encountered, together with recommendations for changing the Contract Documents.

3.3 CONSTRUCTION LAYOUT

A. Verification: Before proceeding to lay out the Work, verify layout information shown on Drawings, in relation to the property survey and existing benchmarks. If discrepancies are discovered, notify Architect promptly.

B. General: Engage a land surveyor/professional engineer to lay out the Work using accepted surveying practices.
   1. Establish benchmarks and control points to set lines and levels at each story of construction and elsewhere as needed to locate each element of Project.
   2. Establish dimensions within tolerances indicated. Do not scale Drawings to obtain required dimensions.
   3. Inform installers of lines and levels to which they must comply.
   4. Check the location, level and plumb, of every major element as the Work progresses.
   5. Notify Architect when deviations from required lines and levels exceed allowable tolerances.
   6. Close site surveys with an error of closure equal to or less than the standard established by authorities having jurisdiction.

C. Building Lines and Levels: Locate and lay out control lines and levels for structures, building foundations, column grids, and floor levels, including those required for mechanical and electrical work. Transfer survey markings and elevations for use with control lines and levels. Level foundations and piers from two or more locations.

D. Record Log: Maintain a log of layout control work. Record deviations from required lines and levels. Include beginning and ending dates and times of surveys, weather conditions, name and duty of each survey party member, and types of instruments and tapes used. Make the log available for reference by Architect.

3.4 FIELD ENGINEERING

A. Identification: Owner will identify existing benchmarks, control points, and property corners.

B. Reference Points: Locate existing permanent benchmarks, control points, and similar reference points before beginning the Work. Preserve and protect permanent benchmarks and control points during construction operations.
   1. Do not change or relocate existing benchmarks or control points without prior written approval of Architect. Report lost or destroyed permanent benchmarks or control points promptly. Report the need to relocate permanent benchmarks or control points to Architect before proceeding.
   2. Replace lost or destroyed permanent benchmarks and control points promptly. Base replacements on the original survey control points.

C. Benchmarks: Establish and maintain a minimum of two permanent benchmarks on Project site, referenced to data established by survey control points. Comply with authorities having jurisdiction for type and size of benchmark.
   1. Record benchmark locations, with horizontal and vertical data, on Project Record Documents.
   2. Where the actual location or elevation of layout points cannot be marked, provide temporary reference points sufficient to locate the Work.
   3. Remove temporary reference points when no longer needed. Restore marked construction to its original condition.

3.5 INSTALLATION

A. General: Locate the Work and components of the Work accurately, in correct alignment and elevation, as indicated.
   1. Make vertical work plumb and make horizontal work level.
   2. Where space is limited, install components to maximize space available for maintenance and ease of removal for replacement.
   3. Conceal pipes, ducts, and wiring in finished areas, unless otherwise indicated.
   4. Maintain minimum headroom clearance as indicated in spaces without a suspended ceiling.

B. Comply with manufacturer's written instructions and recommendations for installing products in applications indicated.

C. Install products at the time and under conditions that will ensure the best possible results. Maintain conditions required for product performance until Substantial Completion.

D. Conduct construction operations so no part of the Work is subjected to damaging operations or loading in excess of that expected during normal conditions of occupancy.

E. Tools and Equipment: Do not use tools or equipment that produce harmful noise levels.

F. Anchors and Fasteners: Provide anchors and fasteners as required to anchor each component securely in place, accurately located and aligned with other portions of the Work.
   1. Mounting Heights: Where mounting heights are not indicated, mount components at heights directed by Architect.
   2. Allow for building movement, including thermal expansion and contraction.

G. Joints: Make joints of uniform width. Where joint locations in exposed work are not indicated, arrange joints for the best visual effect. Fit exposed connections together to form hairline joints.

H. Hazardous Materials: Use products, cleaners, and installation materials that are not considered hazardous.

3.6 PROGRESS CLEANING

A. General: Clean Project site and work areas daily, including common areas. Coordinate progress cleaning for joint-use areas where more than one installer has worked. Enforce requirements strictly. Dispose of materials lawfully.
   1. Comply with requirements in NFPA 241 for removal of combustible waste materials and debris.
   2. Do not hold materials more than 7 days during normal weather or 3 days if the temperature is expected to rise above 80 deg F (27 deg C).
   3. Containerize hazardous and unsanitary waste materials separately from other waste. Mark containers appropriately and dispose of legally, according to regulations.

B. Site: Maintain Project site free of waste materials and debris.

C. Work Areas: Clean areas where work is in progress to the level of cleanliness necessary for proper execution of the Work.
   1. Remove liquid spills promptly.
   2. Where dust would impair proper execution of the Work, broom-clean or vacuum the

entire work area, as appropriate.

D. Installed Work: Keep installed work clean. Clean installed surfaces according to written instructions of manufacturer or fabricator of product installed, using only cleaning materials specifically recommended. If specific cleaning materials are not recommended, use cleaning materials that are not hazardous to health or property and that will not damage exposed surfaces.

E. Concealed Spaces: Remove debris from concealed spaces before enclosing the space.

F. Exposed Surfaces: Clean exposed surfaces and protect as necessary to ensure freedom from damage and deterioration at time of Substantial Completion.

G. Cutting and Patching: Clean areas and spaces where cutting and patching are performed. Completely remove paint, mortar, oils, putty, and similar materials.
   1. Thoroughly clean piping, conduit, and similar features before applying paint or other finishing materials. Restore damaged pipe covering to its original condition.

H. Waste Disposal: Burying or burning waste materials on-site will not be permitted. Washing waste materials down sewers or into waterways will not be permitted.

I. During handling and installation, clean and protect construction in progress and adjoining materials already in place. Apply protective covering where required to ensure protection from damage or deterioration at Substantial Completion.

J. Clean and provide maintenance on completed construction as frequently as necessary through the remainder of the construction period. Adjust and lubricate operable components to ensure operability without damaging effects.

K. Limiting Exposures: Supervise construction operations to assure that no part of the construction, completed or in progress, is subject to harmful, dangerous, damaging, or otherwise deleterious exposure during the construction period.

3.7 STARTING AND ADJUSTING

A. Start equipment and operating components to confirm proper operation. Remove malfunctioning units, replace with new units, and retest.

B. Adjust operating components for proper operation without binding. Adjust equipment for proper operation.

C. Test each piece of equipment to verify proper operation. Test and adjust controls and safeties. Replace damaged and malfunctioning controls and equipment.

D. Manufacturer's Field Service: If a factory-authorized service representative is required to inspect field-assembled components and equipment installation, comply with qualification requirements in Division 1 Section "Quality Requirements."

3.8 PROTECTION OF INSTALLED CONSTRUCTION

A. Provide final protection and maintain conditions that ensure installed Work is without damage or deterioration at time of Substantial Completion.

B. Comply with manufacturer's written instructions for temperature and relative humidity.

3.9 CORRECTION OF THE WORK

A. Repair or remove and replace defective construction. Restore damaged substrates and finishes. Comply with requirements in Division 1 Section "Cutting and Patching."
   1. Repairing includes replacing defective parts, refinishing damaged surfaces, touching up with matching materials, and properly adjusting operating equipment.

B. Restore permanent facilities used during construction to their specified condition.

C. Remove and replace damaged surfaces that are exposed to view if surfaces cannot be repaired without visible evidence of repair.

D. Repair components that do not operate properly. Remove and replace operating components that cannot be repaired.

E. Remove and replace chipped, scratched, and broken glass or reflective surfaces.

END OF SECTION 01700

SECTION 01731 - CUTTING AND PATCHING July 16, 2007

PART 1 - GENERAL

1.1 RELATED DOCUMENTS

A. Drawings and general provisions of the Contract, including General and Supplementary Conditions and other Division 1 Specification Sections, apply to this Section.

1.2 SUMMARY

A. This Section includes procedural requirements for cutting and patching.

B. Related Sections include the following:
1. Division 1 Section "Selective Demolition" for demolition of selected portions of the building for alterations.
2. Division 7 Section "Through-Penetration Firestop Systems" for patching fire-rated construction.
3. Divisions 2 through 16 Sections for specific requirements and limitations applicable to cutting and patching individual parts of the Work.
   a. Requirements in this Section apply to mechanical and electrical installations. Refer to Divisions 15 and 16 Sections for other requirements and limitations applicable to cutting and patching mechanical and electrical installations.

1.3 DEFINITIONS

A. Cutting: Removal of existing construction necessary to permit installation or performance of other Work.

B. Patching: Fitting and repair work required to restore surfaces to original conditions after installation of other Work.

1.4 SUBMITTALS

A. Cutting and Patching Proposal: Submit a proposal describing procedures at least 10 days before the time cutting and patching will be performed, requesting approval to proceed.
1. Architect's Approval: Obtain approval of cutting and patching proposal before cutting and patching. Approval does not waive right to later require removal and replacement of unsatisfactory work.

1.5 QUALITY ASSURANCE

A. Structural Elements: Do not cut and patch structural elements in a manner that could change their load-carrying capacity or load-deflection ratio.

B. Operational Elements: Do not cut and patch operating elements and related components in a manner that results in reducing their capacity to perform as intended or that results in increased maintenance or decreased operational life or safety, including but not limited to the following:
1. Primary operational systems and equipment.
2. Air or smoke barriers.
3. Fire-protection systems.

4. Control systems.
5. Communication systems.
6. Conveying systems.
7. Electrical wiring systems.
8. Operating systems of special construction in Division 13 Sections.

C. Miscellaneous Elements: Do not cut and patch the following elements or related components in a manner that could change their load-carrying capacity, that results in reducing their capacity to perform as intended, or that results in increased maintenance or decreased operational life or safety.
1. Water, moisture, or vapor barriers.
2. Membranes and flashings.
3. Exterior curtain-wall construction.
4. Equipment supports.
5. Piping, ductwork, vessels, and equipment.
6. Noise- and vibration-control elements and systems.

D. Visual Requirements: Do not cut and patch construction in a manner that results in visual evidence of cutting and patching. Do not cut and patch construction exposed on the exterior or in occupied spaces in a manner that would, in Architect's opinion, reduce the building's aesthetic qualities. Remove and replace construction that has been cut and patched in a visually unsatisfactory manner.
1. If possible, retain original Installer or fabricator to cut and patch exposed Work. If it is impossible to engage original Installer or fabricator, engage another recognized, experienced, and specialized firm.

E. Cutting and Patching Conference: Before proceeding, meet at Project site with parties involved in cutting and patching, including mechanical and electrical trades. Review areas of potential interference and conflict. Coordinate procedures and resolve potential conflicts before proceeding.

1.6 WARRANTY

A. Existing Warranties: Remove, replace, patch, and repair materials and surfaces cut or damaged during cutting and patching operations, by methods and with materials so as not to void existing warranties.

PART 2 - PRODUCTS

2.1 MATERIALS

A. General: Comply with requirements specified in other Sections of these Specifications.

B. Existing Materials: Use materials identical to existing materials. For exposed surfaces, use materials that visually match existing adjacent surfaces to the fullest extent possible.
1. If identical materials are unavailable or cannot be used, use materials that, when installed, will match the visual and functional performance of existing materials.

PART 3 - EXECUTION

3.1 EXAMINATION

A. Examine surfaces to be cut and patched and conditions under which cutting and patching are to be performed.
   1. Compatibility: Before patching, verify compatibility with and suitability of substrates, including compatibility with existing finishes or primers.
   2. Proceed with installation only after unsafe or unsatisfactory conditions have been corrected.

3.2 PREPARATION

A. Temporary Support: Provide temporary support of Work to be cut.

B. Protection: Protect existing construction during cutting and patching to prevent damage. Provide protection from adverse weather conditions for portions of Project that might be exposed during cutting and patching operations.

C. Adjoining Areas: Avoid interference with use of adjoining areas or interruption of free passage to adjoining areas.

D. Existing Services: Where existing services are required to be removed, relocated, or abandoned, bypass such services before cutting to minimize interruption of services to occupied areas.

3.3 PERFORMANCE

A. General: Employ skilled workers to perform cutting and patching. Proceed with cutting and patching at the earliest feasible time, and complete without delay.
   1. Cut existing construction to provide for installation of other components or performance of other construction, and subsequently patch as required to restore surfaces to their original condition.

B. Cutting: Cut existing construction by sawing, drilling, breaking, chipping, grinding, and similar operations, including excavation, using methods least likely to damage elements retained or adjoining construction. If possible, review proposed procedures with original Installer; comply with original Installer's written recommendations.
   1. In general, use hand or small power tools designed for sawing and grinding, not hammering and chopping. Cut holes and slots as small as possible, neatly to size required, and with minimum disturbance of adjacent surfaces. Temporarily cover openings when not in use.
   2. Existing Finished Surfaces: Cut or drill from the exposed or finished side into concealed surfaces.
   3. Concrete/Masonry: Cut using a cutting machine, such as an abrasive saw or a diamond-core drill.
   4. Excavating and Backfilling: Comply with requirements in applicable Division 2 Sections where required by cutting and patching operations.
   5. Mechanical and Electrical Services: Cut off pipe or conduit in walls or partitions to be removed. Cap, valve, or plug and seal remaining portion of pipe or conduit to prevent entrance of moisture or other foreign matter after cutting.
   6. Proceed with patching after construction operations requiring cutting are complete.

C. Patching: Patch construction by filling, repairing, refinishing, closing up, and similar operations following performance of other Work. Patch with durable seams that are as invisible as possible. Provide materials and comply with installation requirements specified in other Sections of these Specifications.

1. Inspection: Where feasible, test and inspect patched areas after completion to demonstrate integrity of installation.
2. Exposed Finishes: Restore exposed finishes of patched areas and extend finish restoration into retained adjoining construction in a manner that will eliminate evidence of patching and refinishing.
3. Floors and Walls: Where walls or partitions that are removed extend one finished area into another, patch and repair floor and wall surfaces in the new space. Provide an even surface of uniform finish, color, texture, and appearance. Remove existing floor and wall coverings and replace with new materials, if necessary, to achieve uniform color and appearance.
   a. Where patching occurs in a painted surface, apply primer and intermediate paint coats over the patch and apply final paint coat over entire unbroken surface containing the patch. Provide additional coats until patch blends with adjacent surfaces.
4. Ceilings: Patch, repair, or rehang existing ceilings as necessary to provide an even-plane surface of uniform appearance.
5. Exterior Building Enclosure: Patch components in a manner that restores enclosure to a weathertight condition.

END OF SECTION 01731

SECTION 01732 - SELECTIVE DEMOLITION July 16, 2007

PART 1 - GENERAL

1.1 RELATED DOCUMENTS

A. Drawings and general provisions of the Contract, including General and Supplementary Conditions and other Division 1 Specification Sections, apply to this Section.

1.2 SUMMARY

A. This Section includes the following:
1. Demolition and removal of selected portions of a building or structure.
2. Repair procedures for selective demolition operations.

B. Related Sections include the following:
1. Division 1 Section "Summary" for use of the premises and phasing requirements.
2. Division 1 Section "Cutting and Patching" for cutting and patching procedures for selective demolition operations.
3. Division 15 Sections for demolishing, cutting, patching, or relocating mechanical items.
4. Division 16 Sections for demolishing, cutting, patching, or relocating electrical items.

1.3 DEFINITIONS

A. Remove: Detach items from existing construction and legally dispose of them off-site, unless indicated to be removed and salvaged or removed and reinstalled.

B. Remove and Salvage: Detach items from existing construction and deliver them to Owner ready for reuse.

C. Remove and Reinstall: Detach items from existing construction, prepare them for reuse, and reinstall them where indicated.

D. Existing to Remain: Existing items of construction that are not to be removed and that are not otherwise indicated to be removed, removed and salvaged, or removed and reinstalled.

1.4 MATERIALS OWNERSHIP

A. Historic items, relics, and similar objects including, but not limited to, cornerstones and their contents, commemorative plaques and tablets, antiques, and other items of interest or value to Owner that may be encountered during selective demolition remain Owner's property. Carefully remove and salvage each item or object in a manner to prevent damage and deliver promptly to Owner.

1.5 SUBMITTALS

A. Qualification Data: For firms and persons specified in "Quality Assurance" Article to demonstrate their capabilities and experience. Include lists of completed projects with project names and addresses, names and addresses of architects and owners, and other information specified.

B. Proposed Dust-Control and Noise-Control Measures: Submit statement or drawing that indicates the measures proposed for use, proposed locations, and proposed time frame for their operation. Identify options if proposed measures are later determined to be inadequate.

C. Schedule of Selective Demolition Activities: Indicate the following:
   1. Detailed sequence of selective demolition and removal work, with starting and ending dates for each activity. Ensure Owner's on-site operations are uninterrupted.
   2. Interruption of utility services.
   3. Coordination for shutoff, capping, and continuation of utility services.
   4. Use of elevator and stairs.
   5. Locations of temporary partitions and means of egress.
   6. Coordination of Owner's continuing occupancy of portions of existing building and of Owner's partial occupancy of completed Work.

D. Inventory: After selective demolition is complete, submit a list of items that have been removed and salvaged.

E. Predemolition Photographs or Videotape: Show existing conditions of adjoining construction and site improvements, including finish surfaces, that might be misconstrued as damage caused by selective demolition operations. Submit before Work begins.

F. Landfill Records: Indicate receipt and acceptance of hazardous wastes by a landfill facility licensed to accept hazardous wastes.

1.6 QUALITY ASSURANCE

A. Demolition Firm Qualifications: An experienced firm that has specialized in demolition work similar in material and extent to that indicated for this Project.

B. Regulatory Requirements: Comply with governing EPA notification regulations before beginning selective demolition. Comply with hauling and disposal regulations of authorities having jurisdiction.

C. Standards: Comply with ANSI A10.6 and NFPA 241.

D. Predemolition Conference: Conduct conference at Project site to comply with requirements in Division 1 Section "Project Management and Coordination." Review methods and procedures related to selective demolition including, but not limited to, the following:
   1. Inspect and discuss condition of construction to be selectively demolished.
   2. Review structural load limitations of existing structure.
   3. Review and finalize selective demolition schedule and verify availability of materials, demolition personnel, equipment, and facilities needed to make progress and avoid delays.
   4. Review requirements of work performed by other trades that rely on substrates exposed by selective demolition operations.

1.7 PROJECT CONDITIONS

A. Owner will occupy portions of building immediately adjacent to selective demolition area. Conduct selective demolition so Owner's operations will not be disrupted. Provide not less than 72 hours' notice to Owner of activities that will affect Owner's operations.

B. Maintain access to existing walkways, corridors, and other adjacent occupied or used

facilities.

1. Do not close or obstruct walkways, corridors, or other occupied or used facilities without written permission from authorities having jurisdiction.

C. Owner assumes no responsibility for condition of areas to be selectively demolished.

1. Conditions existing at time of inspection for bidding purpose will be maintained by Owner as far as practical.

D. Hazardous Materials: It is not expected that hazardous materials will be encountered in the Work.

1. Hazardous materials will be removed by Owner before start of the Work.
2. If materials suspected of containing hazardous materials are encountered, do not disturb; immediately notify Architect and Owner. Hazardous materials will be removed by Owner under a separate contract.

E. Storage or sale of removed items or materials on-site will not be permitted.

F. Utility Service: Maintain existing utilities indicated to remain in service and protect them against damage during selective demolition operations.

1. Maintain fire-protection facilities in service during selective demolition operations.

PART 2 - PRODUCTS

2.1 REPAIR MATERIALS

A. Use repair materials identical to existing materials.

1. If identical materials are unavailable or cannot be used for exposed surfaces, use materials that visually match existing adjacent surfaces to the fullest extent possible.
2. Use materials whose installed performance equals or surpasses that of existing materials.

B. Comply with material and installation requirements specified in individual Specification Sections.

PART 3 - EXECUTION

3.1 EXAMINATION

A. Verify that utilities have been disconnected and capped.

B. Survey existing conditions and correlate with requirements indicated to determine extent of selective demolition required.

C. Inventory and record the condition of items to be removed and reinstalled and items to be removed and salvaged.

D. When unanticipated mechanical, electrical, or structural elements that conflict with intended function or design are encountered, investigate and measure the nature and extent of conflict. Promptly submit a written report to Architect.

E. Engage a professional engineer to survey condition of building to determine whether

removing any element might result in structural deficiency or unplanned collapse of any portion of structure or adjacent structures during selective demolition operations.

F. Perform surveys as the Work progresses to detect hazards resulting from selective demolition activities.

3.2 UTILITY SERVICES

A. Existing Utilities: Maintain services indicated to remain and protect them against damage during selective demolition operations.

B. Do not interrupt existing utilities serving occupied or operating facilities unless authorized in writing by Owner and authorities having jurisdiction. Provide temporary services during interruptions to existing utilities, as acceptable to Owner and to authorities having jurisdiction.
   1. Provide at least 72 hours' notice to Owner if shutdown of service is required during changeover.

C. Utility Requirements: Locate, identify, disconnect, and seal or cap off indicated utilities serving areas to be selectively demolished.
   1. Owner will arrange to shut off indicated utilities when requested by Contractor.
   2. If utility services are required to be removed, relocated, or abandoned, before proceeding with selective demolition provide temporary utilities that bypass area of selective demolition and that maintain continuity of service to other parts of building.
   3. Cut off pipe or conduit in walls or partitions to be removed. Cap, valve, or plug and seal remaining portion of pipe or conduit after bypassing.

D. Utility Requirements: Refer to Division 15 and 16 Sections for shutting off, disconnecting, removing, and sealing or capping utilities. Do not start selective demolition work until utility disconnecting and sealing have been completed and verified in writing.

3.3 PREPARATION

A. Dangerous Materials: Drain, purge, or otherwise remove, collect, and dispose of chemicals, gases, explosives, acids, flammables, or other dangerous materials before proceeding with selective demolition operations.

B. Pest Control: Employ a certified, licensed exterminator to treat building and to control rodents and vermin before and during selective demolition operations.

C. Site Access and Temporary Controls: Conduct selective demolition and debris-removal operations to ensure minimum interference with roads, streets, walks, walkways, and other adjacent occupied and used facilities.
   1. Do not close or obstruct streets, walks, walkways, or other adjacent occupied or used facilities without permission from Owner and authorities having jurisdiction. Provide alternate routes around closed or obstructed traffic ways if required by governing regulations.
   2. Erect temporary protection, such as walks, fences, railings, canopies, and covered passageways, where required by authorities having jurisdiction.
   3. Protect existing site improvements, appurtenances, and landscaping to remain.
   4. Erect a plainly visible fence around drip line of individual trees or around perimeter drip line of groups of trees to remain.

D. Temporary Facilities: Provide temporary barricades and other protection required to prevent

injury to people and damage to adjacent buildings and facilities to remain.

1. Provide protection to ensure safe passage of people around selective demolition area and to and from occupied portions of building.
2. Provide temporary weather protection, during interval between selective demolition of existing construction on exterior surfaces and new construction, to prevent water leakage and damage to structure and interior areas.
3. Protect walls, ceilings, floors, and other existing finish work that are to remain or that are exposed during selective demolition operations.
4. Cover and protect furniture, furnishings, and equipment that have not been removed.

E. Temporary Enclosures: Provide temporary enclosures for protection of existing building and construction, in progress and completed, from exposure, foul weather, other construction operations, and similar activities. Provide temporary weathertight enclosure for building exterior.

1. Where heating or cooling is needed and permanent enclosure is not complete, provide insulated temporary enclosures. Coordinate enclosure with ventilating and material drying or curing requirements to avoid dangerous conditions and effects.

F. Temporary Partitions: Erect and maintain dustproof partitions and temporary enclosures to limit dust and dirt migration and to separate areas from fumes and noise.

G. Temporary Shoring: Provide and maintain shoring, bracing, or structural support to preserve stability and prevent movement, settlement, or collapse of construction to remain, and to prevent unexpected or uncontrolled movement or collapse of construction being demolished.

1. Strengthen or add new supports when required during progress of selective demolition.

3.4 POLLUTION CONTROLS

A. Dust Control: Use water mist, temporary enclosures, and other suitable methods to limit spread of dust and dirt. Comply with governing environmental-protection regulations.

1. Do not use water when it may damage existing construction or create hazardous or objectionable conditions, such as ice, flooding, and pollution.
2. Wet mop floors to eliminate trackable dirt and wipe down walls and doors of demolition enclosure. Vacuum carpeted areas.

B. Disposal: Remove and transport debris in a manner that will prevent spillage on adjacent surfaces and areas.

1. Remove debris from elevated portions of building by chute, hoist, or other device that will convey debris to grade level in a controlled descent.

C. Cleaning: Clean adjacent structures and improvements of dust, dirt, and debris caused by selective demolition operations. Return adjacent areas to condition existing before selective demolition operations began.

3.5 SELECTIVE DEMOLITION

A. General: Demolish and remove existing construction only to the extent required by new construction and as indicated. Use methods required to complete the Work within limitations of governing regulations and as follows:

1. Proceed with selective demolition systematically, from higher to lower level. Complete selective demolition operations above each floor or tier before disturbing supporting members on the next lower level.

2. Neatly cut openings and holes plumb, square, and true to dimensions required. Use cutting methods least likely to damage construction to remain or adjoining construction. Use hand tools or small power tools designed for sawing or grinding, not hammering and chopping, to minimize disturbance of adjacent surfaces. Temporarily cover openings to remain.
3. Cut or drill from the exposed or finished side into concealed surfaces to avoid marring existing finished surfaces.
4. Do not use cutting torches until work area is cleared of flammable materials. At concealed spaces, such as duct and pipe interiors, verify condition and contents of hidden space before starting flame-cutting operations. Maintain portable fire-suppression devices during flame-cutting operations.
5. Maintain adequate ventilation when using cutting torches.
6. Remove decayed, vermin-infested, or otherwise dangerous or unsuitable materials and promptly dispose of off-site.
7. Remove structural framing members and lower to ground by method suitable to avoid free fall and to prevent ground impact or dust generation.
8. Locate selective demolition equipment and remove debris and materials so as not to impose excessive loads on supporting walls, floors, or framing.
9. Dispose of demolished items and materials promptly.
10. Return elements of construction and surfaces that are to remain to condition existing before selective demolition operations began.

B. Existing Facilities: Comply with Owner=s requirements for using and protecting elevators, stairs, walkways, loading docks, building entries, and other building facilities during selective demolition operations.

C. Removed and Salvaged Items: Comply with the following:
1. Clean salvaged items.
2. Pack or crate items after cleaning. Identify contents of containers.
3. Store items in a secure area until delivery to Owner.
4. Transport items to Owner's storage area designated by Owner.
5. Protect items from damage during transport and storage.

D. Removed and Reinstalled Items: Comply with the following:
1. Clean and repair items to functional condition adequate for intended reuse. Paint equipment to match new equipment.
2. Pack or crate items after cleaning and repairing. Identify contents of containers.
3. Protect items from damage during transport and storage.
4. Reinstall items in locations indicated. Comply with installation requirements for new materials and equipment. Provide connections, supports, and miscellaneous materials necessary to make item functional for use indicated.

E. Existing Items to Remain: Protect construction indicated to remain against damage and soiling during selective demolition. When permitted by Architect, items may be removed to a suitable, protected storage location during selective demolition and cleaned and reinstalled in their original locations after selective demolition operations are complete.

F. Concrete: Demolish in sections. Cut concrete full depth at junctures with construction to remain and at regular intervals, using power-driven saw, then remove concrete between saw cuts.

G. Masonry: Demolish in small sections. Cut masonry at junctures with construction to remain, using power-driven saw, then remove masonry between saw cuts.

H. Concrete Slabs-on-Grade: Saw-cut perimeter of area to be demolished, then break up and remove.

I. Resilient Floor Coverings: Remove floor coverings and adhesive according to recommendations in RFCI-WP and its Addendum.
   1. Remove residual adhesive and prepare substrate for new floor coverings by one of the methods recommended by RFCI.

J. Roofing: Remove no more existing roofing than can be covered in one day by new roofing. Refer to applicable Division 7 Section for new roofing requirements.

K. Air-Conditioning Equipment: Remove equipment without releasing refrigerants.

3.6 PATCHING AND REPAIRS

A. General: Promptly repair damage to adjacent construction caused by selective demolition operations.

B. Repairs: Where repairs to existing surfaces are required, patch to produce surfaces suitable for new materials.
   1. Completely fill holes and depressions in existing masonry walls that are to remain with an approved masonry patching material applied according to manufacturer's written recommendations.

C. Finishes: Restore exposed finishes of patched areas and extend restoration into adjoining construction in a manner that eliminates evidence of patching and refinishing.

D. Floors and Walls: Where walls or partitions that are demolished extend one finished area into another, patch and repair floor and wall surfaces in the new space. Provide an even surface of uniform finish color, texture, and appearance. Remove existing floor and wall coverings and replace with new materials, if necessary, to achieve uniform color and appearance.
   1. Patch with durable seams that are as invisible as possible. Provide materials and comply with installation requirements specified in other Sections of these Specifications.
   2. Where patching occurs in a painted surface, apply primer and intermediate paint coats over patch and apply final paint coat over entire unbroken surface containing patch. Provide additional coats until patch blends with adjacent surfaces.
   3. Where feasible, test and inspect patched areas after completion to demonstrate integrity of installation.

E. Ceilings: Patch, repair, or rehang existing ceilings as necessary to provide an even-plane surface of uniform appearance.

3.7 DISPOSAL OF DEMOLISHED MATERIALS

A. General: Promptly dispose of demolished materials. Do not allow demolished materials to accumulate on-site.

B. Burning: Do not burn demolished materials.

C. Disposal: Transport demolished materials off Owner's property and legally dispose of them.

END OF SECTION 01732

SECTION 01770 - CLOSEOUT PROCEDURES July 16, 2007

PART 1 - GENERAL

1.1 RELATED DOCUMENTS

A. Drawings and general provisions of the Contract, including General and Supplementary Conditions and other Division 1 Specification Sections, apply to this Section.

1.2 SUMMARY

A. This Section includes administrative and procedural requirements for contract closeout, including, but not limited to, the following:
   1. Inspection procedures.
   2. Warranties.
   3. Final cleaning.

B. Related Sections include the following:
   1. Division 1 Section "Payment Procedures" for requirements for Applications for Payment for Substantial and Final Completion.
   2. Division 1 Section "Execution Requirements" for progress cleaning of Project site.
   3. Division 1 Section "Project Record Documents" for submitting Record Drawings, Record Specifications, and Record Product Data.
   4. Division 1 Section "Operation and Maintenance Data" for operation and maintenance manual requirements.
   5. Division 1 Section "Demonstration and Training" for requirements for instructing Owner's personnel.
   6. Divisions 2 through 16 Sections for specific closeout and special cleaning requirements for the Work in those Sections.

1.3 SUBSTANTIAL COMPLETION

A. Preliminary Procedures: Before requesting inspection for determining date of Substantial Completion, complete the following. List items below that are incomplete in request.
   1. Prepare a list of items to be completed and corrected (punch list), the value of items on the list, and reasons why the Work is not complete.
   2. Advise Owner of pending insurance changeover requirements.
   3. Submit specific warranties, workmanship bonds, maintenance service agreements, final certifications, and similar documents.
   4. Obtain and submit releases permitting Owner unrestricted use of the Work and access to services and utilities. Include occupancy permits, operating certificates, and similar releases.
   5. Prepare and submit Project Record Documents, operation and maintenance manuals, Final Completion construction photographs, damage or settlement surveys, property surveys, and similar final record information.
   6. Deliver tools, spare parts, extra materials, and similar items to location designated by Owner. Label with manufacturer's name and model number where applicable.
   7. Make final changeover of permanent locks and deliver keys to Owner. Advise Owner's personnel of changeover in security provisions.
   8. Complete startup testing of systems.
   9. Submit test/adjust/balance records.
   10. Terminate and remove temporary facilities from Project site, along with mockups,

construction tools, and similar elements.

11. Advise Owner of changeover in heat and other utilities.
12. Submit changeover information related to Owner's occupancy, use, operation, and maintenance.
13. Complete final cleaning requirements, including touchup painting.
14. Touch up and otherwise repair and restore marred exposed finishes to eliminate visual defects.

B. Inspection: Submit a written request for inspection for Substantial Completion. On receipt of request, Architect will either proceed with inspection or notify Contractor of unfulfilled requirements. Architect will prepare the Certificate of Substantial Completion after inspection or will notify Contractor of items, either on Contractor's list or additional items identified by Architect, that must be completed or corrected before certificate will be issued.
   1. Reinspection: Request reinspection when the Work identified in previous inspections as incomplete is completed or corrected.
   2. Results of completed inspection will form the basis of requirements for Final Completion.

1.4 FINAL COMPLETION

A. Preliminary Procedures: Before requesting final inspection for determining date of Final Completion, complete the following:
   1. Submit a final Application for Payment according to Division 1 Section "Payment Procedures."
   2. Submit certified copy of Architect's Substantial Completion inspection list of items to be completed or corrected (punch list), endorsed and dated by Architect. The certified copy of the list shall state that each item has been completed or otherwise resolved for acceptance.
   3. Submit evidence of final, continuing insurance coverage complying with insurance requirements.
   4. Submit pest-control final inspection report and warranty.
   5. Instruct Owner's personnel in operation, adjustment, and maintenance of products, equipment, and systems. Submit demonstration and training videotapes.

B. Inspection: Submit a written request for final inspection for acceptance. On receipt of request, Architect will either proceed with inspection or notify Contractor of unfulfilled requirements. Architect will prepare a final Certificate for Payment after inspection or will notify Contractor of construction that must be completed or corrected before certificate will be issued.
   1. Reinspection: Request reinspection when the Work identified in previous inspections as incomplete is completed or corrected.

1.5 LIST OF INCOMPLETE ITEMS (PUNCH LIST)

A. Preparation: Submit three copies of list. Include name and identification of each space and area affected by construction operations for incomplete items and items needing correction including, if necessary, areas disturbed by Contractor that are outside the limits of construction.
   1. Organize list of spaces in sequential order, starting with exterior areas first and proceeding from lowest floor to highest floor.
   2. Organize items applying to each space by major element, including categories for ceiling, individual walls, floors, equipment, and building systems.
   3. Include the following information at the top of each page:

a. Project name.
b. Date.
c. Name of Architect.
d. Name of Contractor.
e. Page number.

1.6 WARRANTIES

A. Submittal Time: Submit written warranties on request of Architect for designated portions of the Work where commencement of warranties other than date of Substantial Completion is indicated.

B. Organize warranty documents into an orderly sequence based on the table of contents of the Project Manual.
1. Bind warranties and bonds in heavy-duty, 3-ring, vinyl-covered, loose-leaf binders, thickness as necessary to accommodate contents, and sized to receive 8-1/2-by-11-inch (215-by-280-mm) paper.
2. Provide heavy paper dividers with plastic-covered tabs for each separate warranty. Mark tab to identify the product or installation. Provide a typed description of the product or installation, including the name of the product and the name, address, and telephone number of Installer.
3. Identify each binder on the front and spine with the typed or printed title "WARRANTIES," Project name, and name of Contractor.

C. Provide additional copies of each warranty to include in operation and maintenance manuals.

PART 2 - PRODUCTS

2.1 MATERIALS

A. Cleaning Agents: Use cleaning materials and agents recommended by manufacturer or fabricator of the surface to be cleaned. Do not use cleaning agents that are potentially hazardous to health or property or that might damage finished surfaces.

PART 3 - EXECUTION

3.1 FINAL CLEANING

A. General: Provide final cleaning. Conduct cleaning and waste-removal operations to comply with local laws and ordinances and Federal and local environmental and antipollution regulations.

B. Cleaning: Employ experienced workers or professional cleaners for final cleaning. Clean each surface or unit to condition expected in an average commercial building cleaning and maintenance program. Comply with manufacturer's written instructions.
1. Complete the following cleaning operations before requesting inspection for certification of Substantial Completion for entire Project or for a portion of Project:
a. Clean Project site, yard, and grounds, in areas disturbed by construction activities, including landscape development areas, of rubbish, waste material, litter, and other foreign substances.
b. Sweep paved areas broom clean. Remove petrochemical spills, stains, and

other foreign deposits.

c. Rake grounds that are neither planted nor paved to a smooth, even-textured surface.

d. Remove tools, construction equipment, machinery, and surplus material from Project site.

e. Remove snow and ice to provide safe access to building.

f. Clean exposed exterior and interior hard-surfaced finishes to a dirt-free condition, free of stains, films, and similar foreign substances. Avoid disturbing natural weathering of exterior surfaces. Restore reflective surfaces to their original condition.

g. Remove debris and surface dust from limited access spaces, including roofs, plenums, shafts, trenches, equipment vaults, manholes, attics, and similar spaces.

h. Sweep concrete floors broom clean in unoccupied spaces.

i. Vacuum carpet and similar soft surfaces, removing debris and excess nap; shampoo if visible soil or stains remain.

j. Clean transparent materials, including mirrors and glass in doors and windows. Remove glazing compounds and other noticeable, vision-obscuring materials. Replace chipped or broken glass and other damaged transparent materials. Polish mirrors and glass, taking care not to scratch surfaces.

k. Remove labels that are not permanent.

l. Touch up and otherwise repair and restore marred, exposed finishes and surfaces. Replace finishes and surfaces that cannot be satisfactorily repaired or restored or that already show evidence of repair or restoration.

1) Do not paint over "UL" and similar labels, including mechanical and electrical nameplates.

m. Wipe surfaces of mechanical and electrical equipment, elevator equipment, and similar equipment. Remove excess lubrication, paint and mortar droppings, and other foreign substances.

n. Replace parts subject to unusual operating conditions.

o. Clean plumbing fixtures to a sanitary condition, free of stains, including stains resulting from water exposure.

p. Replace disposable air filters and clean permanent air filters. Clean exposed surfaces of diffusers, registers, and grills.

q. Clean ducts, blowers, and coils if units were operated without filters during construction.

r. Clean light fixtures, lamps, globes, and reflectors to function with full efficiency. Replace burned-out bulbs, and those noticeably dimmed by hours of use, and defective and noisy starters in fluorescent and mercury vapor fixtures to comply with requirements for new fixtures.

s. Leave Project clean and ready for occupancy.

C. Pest Control: Engage an experienced, licensed exterminator to make a final inspection and rid Project of rodents, insects, and other pests. Prepare a report.

D. Comply with safety standards for cleaning. Do not burn waste materials. Do not bury debris or excess materials on Owner's property. Do not discharge volatile, harmful, or dangerous materials into drainage systems. Remove waste materials from Project site and dispose of lawfully.

END OF SECTION 01770

SECTION 01781 - PROJECT RECORD DOCUMENTS July 16, 2007

PART 1 - GENERAL

1.1 RELATED DOCUMENTS

A. Drawings and general provisions of the Contract, including General and Supplementary Conditions and other Division 1 Specification Sections, apply to this Section.

1.2 SUMMARY

A. This Section includes administrative and procedural requirements for Project Record Documents, including the following:
   1. Record Drawings.
   2. Record Specifications.
   3. Record Product Data.
   4. Record Submittals as requested by the Owner.

B. Related Sections include the following:
   1. Division 1 Section "Closeout Procedures" for general closeout procedures.
   2. Division 1 Section "Operation and Maintenance Data" for operation and maintenance manual requirements.
   3. Divisions 2 through 16 Sections for specific requirements for Project Record Documents of the Work in those Sections.

1.3 SUBMITTALS

A. Record Drawings: Comply with the following:
   1. Number of Copies: Submit one set of marked-up Record Prints.

B. Record Specifications: Submit one copy of Project's Specifications, including addenda and contract modifications.

C. Record Product Data: Submit one copy of each Product Data submittal.
   1. Where Record Product Data is required as part of operation and maintenance manuals, submit marked-up Product Data as an insert in manual instead of submittal as Record Product Data.

D. Record Shop Drawings: Provide copies of shop drawings or other submittals as requested by the Owner.

PART 2 - PRODUCTS

2.1 RECORD DRAWINGS

A. Record Prints: Maintain one set of white prints of the Contract Drawings and Shop Drawings.
   1. Preparation: Mark Record Prints to show the actual installation where installation varies from that shown originally. Require individual or entity who obtained record data, whether individual or entity is Installer, subcontractor, or similar entity, to prepare the marked-up Record Prints.
      a. Give particular attention to information on concealed elements that would be

difficult to identify or measure and record later.

b. Accurately record information in an understandable drawing technique.

c. Record data as soon as possible after obtaining it. Record and check the markup before enclosing concealed installations.

2. Content: Types of items requiring marking include, but are not limited to, the following:
   a. Dimensional changes to Drawings.
   b. Revisions to details shown on Drawings.
   c. Depths of foundations below first floor.
   d. Locations and depths of underground utilities.
   e. Revisions to routing of piping and conduits.
   f. Revisions to electrical circuitry.
   g. Actual equipment locations.
   h. Duct size and routing.
   i. Locations of concealed internal utilities.
   j. Changes made by Change Order or Construction Change Directive.
   k. Changes made following Architect's written orders.
   l. Details not on the original Contract Drawings.
   m. Field records for variable and concealed conditions.
   n. Record information on the Work that is shown only schematically.

3. Mark the Contract Drawings or Shop Drawings, whichever is most capable of showing actual physical conditions, completely and accurately. If Shop Drawings are marked, show cross-reference on the Contract Drawings.
4. Mark record sets with erasable, red-colored pencil. Use other colors to distinguish between changes for different categories of the Work at same location.
5. Mark important additional information that was either shown schematically or omitted from original Drawings.
6. Note Construction Change Directive numbers, alternate numbers, Change Order numbers, and similar identification, where applicable.

2.2 RECORD SPECIFICATIONS

A. Preparation: Mark Specifications to indicate the actual product installation where installation varies from that indicated in Specifications, addenda, and contract modifications.
   1. Give particular attention to information on concealed products and installations that cannot be readily identified and recorded later.
   2. Note related Change Orders, Product Data, and Record Drawings where applicable.

2.3 RECORD PRODUCT DATA

A. Preparation: Mark Product Data to indicate the actual product installation where installation varies substantially from that indicated in Product Data submittal.
   1. Give particular attention to information on concealed products and installations that cannot be readily identified and recorded later.
   2. Include significant changes in the product delivered to Project site and changes in manufacturer's written instructions for installation.
   3. Note related Change Orders, Record Specifications, and Record Drawings where applicable.

2.4 MISCELLANEOUS RECORD SUBMITTALS

A. Assemble miscellaneous records required by other Specification Sections for miscellaneous record keeping and submittal in connection with actual performance of the Work. Bind or file miscellaneous records and identify each, ready for continued use and reference.

PART 3 - EXECUTION

3.1 RECORDING AND MAINTENANCE

A. Recording: Maintain one copy of each submittal during the construction period for Project Record Document purposes. Post changes and modifications to Project Record Documents as they occur; do not wait until the end of Project.

B. Maintenance of Record Documents and Samples: Store Record Documents and Samples in the field office apart from the Contract Documents used for construction. Do not use Project Record Documents for construction purposes. Maintain Record Documents in good order and in a clean, dry, legible condition, protected from deterioration and loss. Provide access to Project Record Documents for Architect's and Owner=s reference during normal working hours.

END OF SECTION 01781

SECTION 01782 - OPERATION AND MAINTENANCE DATA July 16, 2007

PART 1 - GENERAL

1.1 RELATED DOCUMENTS

A. Drawings and general provisions of the Contract, including General and Supplementary Conditions and other Division 1 Specification Sections, apply to this Section.

1.2 SUMMARY

A. This Section includes administrative and procedural requirements for preparing operation and maintenance manuals, including the following:
   1. Operation and maintenance documentation directory.
   2. Emergency manuals.
   3. Operation manuals for systems, subsystems, and equipment.
   4. Maintenance manuals for the care and maintenance of products, materials, and finishes systems and equipment.

B. Related Sections include the following:
   1. Division 1 Section "Submittal Procedures" for submitting copies of submittals for operation and maintenance manuals.
   2. Division 1 Section "Closeout Procedures" for submitting operation and maintenance manuals.
   3. Division 1 Section "Project Record Documents" for preparing Record Drawings for operation and maintenance manuals.
   4. Divisions 2 through 16 Sections for specific operation and maintenance manual requirements for the Work in those Sections.

1.3 DEFINITIONS

A. System: An organized collection of parts, equipment, or subsystems united by regular interaction.

B. Subsystem: A portion of a system with characteristics similar to a system.

1.4 SUBMITTALS

A. Initial Submittal: Submit 2 draft copies of each manual at least 15 days before requesting inspection for Substantial Completion. Include a complete operation and maintenance directory. Architect will return one copy of draft and mark whether general scope and content of manual are acceptable.

B. Final Submittal: Submit 2 of each manual in final form at least 15 days before final inspection. Architect will return copy with comments within 15 days after final inspection.
   1. Correct or modify each manual to comply with Architect's comments. Submit 3 copies of each corrected manual within 15 days of receipt of Architect's comments.

1.5 COORDINATION

A. Where operation and maintenance documentation includes information on installations by more than one factory-authorized service representative, assemble and coordinate

information furnished by representatives and prepare manuals.

PART 2 - PRODUCTS

2.1 OPERATION AND MAINTENANCE DOCUMENTATION DIRECTORY

A. Organization: Include a section in the directory for each of the following:
   1. List of documents.
   2. List of systems.
   3. List of equipment.
   4. Table of contents.

B. List of Systems and Subsystems: List systems alphabetically. Include references to operation and maintenance manuals that contain information about each system.

C. List of Equipment: List equipment for each system, organized alphabetically by system. For pieces of equipment not part of system, list alphabetically in separate list.

D. Tables of Contents: Include a table of contents for each emergency, operation, and maintenance manual.

E. Identification: In the documentation directory and in each operation and maintenance manual, identify each system, subsystem, and piece of equipment with same designation used in the Contract Documents. If no designation exists, assign a designation according to ASHRAE Guideline 4, "Preparation of Operating and Maintenance Documentation for Building Systems."

2.2 MANUALS, GENERAL

A. Organization: Unless otherwise indicated, organize each manual into a separate section for each system and subsystem, and a separate section for each piece of equipment not part of a system. Each manual shall contain the following materials, in the order listed:
   1. Title page.
   2. Table of contents.
   3. Manual contents.

B. Title Page: Enclose title page in transparent plastic sleeve. Include the following information:
   1. Subject matter included in manual.
   2. Name and address of Project.
   3. Name and address of Owner.
   4. Date of submittal.
   5. Name, address, and telephone number of Contractor.
   6. Name and address of Architect.
   7. Cross-reference to related systems in other operation and maintenance manuals.

C. Table of Contents: List each product included in manual, identified by product name, indexed to the content of the volume, and cross-referenced to Specification Section number in Project Manual.
   1. If operation or maintenance documentation requires more than one volume to accommodate data, include comprehensive table of contents for all volumes in each volume of the set.

D. Manual Contents: Organize into sets of manageable size. Arrange contents alphabetically by system, subsystem, and equipment. If possible, assemble instructions for subsystems, equipment, and components of one system into a single binder.

1. Binders: Heavy-duty, 3-ring, vinyl-covered, loose-leaf binders, in thickness necessary to accommodate contents, sized to hold 8-1/2-by-11-inch (215-by-280-mm) paper; with clear plastic sleeve on spine to hold label describing contents and with pockets inside covers to hold folded oversize sheets.
   a. If two or more binders are necessary to accommodate data of a system, organize data in each binder into groupings by subsystem and related components. Cross-reference other binders if necessary to provide essential information for proper operation or maintenance of equipment or system.
   b. Identify each binder on front and spine, with printed title "OPERATION AND MAINTENANCE MANUAL," Project title or name, and subject matter of contents. Indicate volume number for multiple-volume sets.
2. Dividers: Heavy-paper dividers with plastic-covered tabs for each section. Mark each tab to indicate contents. Include typed list of products and major components of equipment included in the section on each divider, cross-referenced to Specification Section number and title of Project Manual.
3. Protective Plastic Sleeves: Transparent plastic sleeves designed to enclose diagnostic software diskettes for computerized electronic equipment.
4. Supplementary Text: Prepared on 8-1/2-by-11-inch (215-by-280-mm) white bond paper.
5. Drawings: Attach reinforced, punched binder tabs on drawings and bind with text.
   a. If oversize drawings are necessary, fold drawings to same size as text pages and use as foldouts.
   b. If drawings are too large to be used as foldouts, fold and place drawings in labeled envelopes and bind envelopes in rear of manual. At appropriate locations in manual, insert typewritten pages indicating drawing titles, descriptions of contents, and drawing locations.

2.3 EMERGENCY MANUALS

A. Content: Organize manual into a separate section for each of the following:
   1. Type of emergency.
   2. Emergency instructions.
   3. Emergency procedures.

B. Type of Emergency: Where applicable for each type of emergency indicated below, include instructions and procedures for each system, subsystem, piece of equipment, and component:
   1. Fire.
   2. Flood.
   3. Gas leak.
   4. Water leak.
   5. Power failure.
   6. Water outage.
   7. System, subsystem, or equipment failure.
   8. Chemical release or spill.

C. Emergency Instructions: Describe and explain warnings, trouble indications, error messages, and similar codes and signals. Include responsibilities of Owner's operating personnel for notification of Installer, supplier, and manufacturer to maintain warranties.

D. Emergency Procedures: Include the following, as applicable:
1. Instructions on stopping.
2. Shutdown instructions for each type of emergency.
3. Operating instructions for conditions outside normal operating limits.
4. Required sequences for electric or electronic systems.
5. Special operating instructions and procedures.

2.4 OPERATION MANUALS

A. Content: In addition to requirements in this Section, include operation data required in individual Specification Sections and the following information:
1. System, subsystem, and equipment descriptions.
2. Performance and design criteria if Contractor is delegated design responsibility.
3. Operating standards.
4. Operating procedures.
5. Operating logs.
6. Wiring diagrams.
7. Control diagrams.
8. Piped system diagrams.
9. Precautions against improper use.
10. License requirements including inspection and renewal dates.

B. Descriptions: Include the following:
1. Product name and model number.
2. Manufacturer's name.
3. Equipment identification with serial number of each component.
4. Equipment function.
5. Operating characteristics.
6. Limiting conditions.
7. Performance curves.
8. Engineering data and tests.
9. Complete nomenclature and number of replacement parts.

C. Operating Procedures: Include the following, as applicable:
1. Startup procedures.
2. Equipment or system break-in procedures.
3. Routine and normal operating instructions.
4. Regulation and control procedures.
5. Instructions on stopping.
6. Normal shutdown instructions.
7. Seasonal and weekend operating instructions.
8. Required sequences for electric or electronic systems.
9. Special operating instructions and procedures.

D. Systems and Equipment Controls: Describe the sequence of operation, and diagram controls as installed.

E. Piped Systems: Diagram piping as installed, and identify color-coding where required for identification.

2.5 PRODUCT MAINTENANCE MANUAL

A. Content: Organize manual into a separate section for each product, material, and finish. Include source information, product information, maintenance procedures, repair materials and sources, and warranties and bonds, as described below.

B. Source Information: List each product included in manual, identified by product name and arranged to match manual's table of contents. For each product, list name, address, and telephone number of Installer or supplier and maintenance service agent, and cross-reference Specification Section number and title in Project Manual.

C. Product Information: Include the following, as applicable:
   1. Product name and model number.
   2. Manufacturer's name.
   3. Color, pattern, and texture.
   4. Material and chemical composition.
   5. Reordering information for specially manufactured products.

D. Maintenance Procedures: Include manufacturer's written recommendations and the following:
   1. Inspection procedures.
   2. Types of cleaning agents to be used and methods of cleaning.
   3. List of cleaning agents and methods of cleaning detrimental to product.
   4. Schedule for routine cleaning and maintenance.
   5. Repair instructions.

E. Repair Materials and Sources: Include lists of materials and local sources of materials and related services.

F. Warranties and Bonds: Include copies of warranties and bonds and lists of circumstances and conditions that would affect validity of warranties or bonds.
   1. Include procedures to follow and required notifications for warranty claims.

2.6 SYSTEMS AND EQUIPMENT MAINTENANCE MANUAL

A. Content: For each system, subsystem, and piece of equipment not part of a system, include source information, manufacturers' maintenance documentation, maintenance procedures, maintenance and service schedules, spare parts list and source information, maintenance service contracts, and warranty and bond information, as described below.

B. Source Information: List each system, subsystem, and piece of equipment included in manual, identified by product name and arranged to match manual's table of contents. For each product, list name, address, and telephone number of Installer or supplier and maintenance service agent, and cross-reference Specification Section number and title in Project Manual.

C. Manufacturers' Maintenance Documentation: Manufacturers' maintenance documentation including the following information for each component part or piece of equipment:
   1. Standard printed maintenance instructions and bulletins.
   2. Drawings, diagrams, and instructions required for maintenance, including disassembly and component removal, replacement, and assembly.
   3. Identification and nomenclature of parts and components.
   4. List of items recommended to be stocked as spare parts.

D. Maintenance Procedures: Include the following information and items that detail essential

maintenance procedures:

1. Test and inspection instructions.
2. Troubleshooting guide.
3. Precautions against improper maintenance.
4. Disassembly; component removal, repair, and replacement; and reassembly instructions.
5. Aligning, adjusting, and checking instructions.
6. Demonstration and training videotape, if available.

E. Maintenance and Service Schedules: Include service and lubrication requirements, list of required lubricants for equipment, and separate schedules for preventive and routine maintenance and service with standard time allotment.

1. Scheduled Maintenance and Service: Tabulate actions for daily, weekly, monthly, quarterly, semiannual, and annual frequencies.
2. Maintenance and Service Record: Include manufacturers' forms for recording maintenance.

F. Spare Parts List and Source Information: Include lists of replacement and repair parts, with parts identified and cross-referenced to manufacturers' maintenance documentation and local sources of maintenance materials and related services.

G. Maintenance Service Contracts: Include copies of maintenance agreements with name and telephone number of service agent.

H. Warranties and Bonds: Include copies of warranties and bonds and lists of circumstances and conditions that would affect validity of warranties or bonds.

1. Include procedures to follow and required notifications for warranty claims.

PART 3 - EXECUTION

3.1 MANUAL PREPARATION

A. Operation and Maintenance Documentation Directory: Prepare a separate manual that provides an organized reference to emergency, operation, and maintenance manuals.

B. Emergency Manual: Assemble a complete set of emergency information indicating procedures for use by emergency personnel and by Owner's operating personnel for types of emergencies indicated.

C. Product Maintenance Manual: Assemble a complete set of maintenance data indicating care and maintenance of each product, material, and finish incorporated into the Work.

D. Operation and Maintenance Manuals: Assemble a complete set of operation and maintenance data indicating operation and maintenance of each system, subsystem, and piece of equipment not part of a system.

1. Engage a factory-authorized service representative to assemble and prepare information for each system, subsystem, and piece of equipment not part of a system.
2. Prepare a separate manual for each system and subsystem, in the form of an instructional manual for use by Owner's operating personnel.

E. Manufacturers' Data: Where manuals contain manufacturers' standard printed data, include

only sheets pertinent to product or component installed. Mark each sheet to identify each product or component incorporated into the Work. If data include more than one item in a tabular format, identify each item using appropriate references from the Contract Documents. Identify data applicable to the Work and delete references to information not applicable.

1. Prepare supplementary text if manufacturers' standard printed data are not available and where the information is necessary for proper operation and maintenance of equipment or systems.

F. Drawings: Prepare drawings supplementing manufacturers' printed data to illustrate the relationship of component parts of equipment and systems and to illustrate control sequence and flow diagrams. Coordinate these drawings with information contained in Record Drawings to ensure correct illustration of completed installation.

1. Do not use original Project Record Documents as part of operation and maintenance manuals.
2. Comply with requirements of newly prepared Record Drawings in Division 1 Section "Project Record Documents."

G. Comply with Division 1 Section "Closeout Procedures" for schedule for submitting operation and maintenance documentation.

END OF SECTION 01782

SECTION 01820 - DEMONSTRATION AND TRAINING July 16, 2007

PART 1 - GENERAL

1.1 RELATED DOCUMENTS

A. Drawings and general provisions of the Contract, including General and Supplementary Conditions and other Division 1 Specification Sections, apply to this Section.

1.2 SUMMARY

A. This Section includes administrative and procedural requirements for instructing Owner's personnel, including the following:
   1. Demonstration of operation of systems, subsystems, and equipment.
   2. Training in operation and maintenance of systems, subsystems, and equipment.
   3. Demonstration and training videotapes.

B. Related Sections include the following:
   1. Division 1 Section "Project Management and Coordination" for requirements for preinstruction conferences.
   2. Divisions 2 through 16 Sections for specific requirements for demonstration and training for products in those Sections.

C. Unit Price for Instruction Time: Length of instruction time will be measured by actual time spent performing demonstration and training in required location. No payment will be made for time spent assembling educational materials, setting up, or cleaning up.

1.3 SUBMITTALS

A. Instruction Program: Submit two copies of outline of instructional program for demonstration and training, including a schedule of proposed dates, times, length of instruction time, and instructors' names for each training module. Include learning objective and outline for each training module.
   1. At completion of training, submit two complete training manual(s) for Owner's use.

B. Qualification Data: For firms and persons specified in AQuality Assurance@ Article to demonstrate their capabilities and experience. Include lists of completed projects with project names and addresses, names and addresses of architects and owners and other information specified.

C. Attendance Record: For each training module, submit list of participants and length of instruction time.

D. Evaluations: For each participant and for each training module, submit results and documentation of performance-based test.

E. Demonstration and Training Videotapes: Submit two copies within seven days of end of each training module.
   1. Identification: On each copy, provide an applied label with the following information:
      a. Name of Project.
      b. Name and address of photographer.
      c. Name of Architect and Construction Manager.

d. Name of Contractor.
e. Date videotape was recorded.
f. Description of vantage point, indicating location, direction (by compass point), and elevation or story of construction.

2. Transcript: Prepared on 8-1/2-by-11-inch (215-by-280-mm) paper, punched and bound in heavy-duty, 3-ring, vinyl-covered binders. Mark appropriate identification on front and spine of each binder. Include a cover sheet with same label information as the corresponding videotape. Include name of Project and date of videotape on each page.

1.4 QUALITY ASSURANCE

A. Instructor Qualifications: A factory-authorized service representative, complying with requirements in Division 1 Section "Quality Requirements," experienced in operation and maintenance procedures and training.

B. Preinstruction Conference: Conduct conference at Project site to comply with requirements in Division 1 Section "Project Management and Coordination." Review methods and procedures related to demonstration and training including, but not limited to, the following:
1. Inspect and discuss locations and other facilities required for instruction.
2. Review and finalize instruction schedule and verify availability of educational materials, instructors' personnel, audiovisual equipment, and facilities needed to avoid delays.
3. Review required content of instruction.
4. For instruction that must occur outside, review weather and forecasted weather conditions and procedures to follow if conditions are unfavorable.

1.5 COORDINATION

A. Coordinate instruction schedule with Owner's operations. Adjust schedule as required to minimize disrupting Owner's operations.

B. Coordinate instructors, including providing notification of dates, times, length of instruction time, and course content.

C. Coordinate content of training modules with content of approved emergency, operation, and maintenance manuals. Do not submit instruction program until operation and maintenance data has been reviewed and approved by Architect.

PART 2 - PRODUCTS

2.1 INSTRUCTION PROGRAM

A. Program Structure: Develop an instruction program that includes individual training modules for each system and equipment not part of a system, as required by individual Specification Sections, and as follows:
1. Motorized doors, including overhead coiling doors and automatic entrance doors.
2. Equipment, including projection screens, loading dock equipment, food-service equipment, and residential appliances.
3. Fire-protection systems, including fire alarm and fire-extinguishing systems.
4. Intrusion detection systems.
5. Conveying systems, including elevators and wheelchair lifts.

6. Heat generation, including boilers, feedwater equipment, pumps and water distribution piping.
7. Refrigeration systems, including chillers, cooling towers, condensers, pumps and distribution piping.
8. HVAC systems, including air-handling equipment, air distribution systems and terminal equipment and devices.
9. HVAC instrumentation and controls.
10. Electrical service and distribution, including transformers, switchboards, panelboards, uninterruptible power supplies and motor controls.
11. Packaged engine generators, including transfer switches.
12. Lighting equipment and controls.
13. Communication systems, including intercommunication, surveillance, clocks and programming, voice and data and television equipment.

B. Training Modules: Develop a learning objective and teaching outline for each module. Include a description of specific skills and knowledge that participant is expected to master. For each module, include instruction for the following:
1. Basis of System Design, Operational Requirements, and Criteria: Include the following:
   a. System, subsystem, and equipment descriptions.
   b. Operating standards.
   c. Regulatory requirements.
   d. Equipment function.
   e. Operating characteristics.
   f. Limiting conditions.
   g. Performance curves.
2. Documentation: Review the following items in detail:
   a. Emergency manuals.
   b. Operations manuals.
   c. Maintenance manuals.
   d. Project Record Documents.
   e. Identification systems.
   f. Warranties and bonds.
   g. Maintenance service agreements and similar continuing commitments.
3. Emergencies: Include the following, as applicable:
   a. Instructions on meaning of warnings, trouble indications, and error messages.
   b. Instructions on stopping.
   c. Shutdown instructions for each type of emergency.
   d. Operating instructions for conditions outside of normal operating limits.
   e. Sequences for electric or electronic systems.
   f. Special operating instructions and procedures.
4. Operations: Include the following, as applicable:
   a. Startup procedures.
   b. Equipment or system break-in procedures.
   c. Routine and normal operating instructions.
   d. Regulation and control procedures.
   e. Control sequences.
   f. Safety procedures.
   g. Instructions on stopping.
   h. Normal shutdown instructions.
   i. Operating procedures for emergencies.
   j. Operating procedures for system, subsystem, or equipment failure.

k. Seasonal and weekend operating instructions.
l. Required sequences for electric or electronic systems.
m. Special operating instructions and procedures.

5. Adjustments: Include the following:
   a. Alignments.
   b. Checking adjustments.
   c. Noise and vibration adjustments.
   d. Economy and efficiency adjustments.
6. Troubleshooting: Include the following:
   a. Diagnostic instructions.
   b. Test and inspection procedures.
7. Maintenance: Include the following:
   a. Inspection procedures.
   b. Types of cleaning agents to be used and methods of cleaning.
   c. List of cleaning agents and methods of cleaning detrimental to product.
   d. Procedures for routine cleaning
   e. Procedures for preventive maintenance.
   f. Procedures for routine maintenance.
   g. Instruction on use of special tools.
8. Repairs: Include the following:
   a. Diagnosis instructions.
   b. Repair instructions.
   c. Disassembly; component removal, repair, and replacement; and reassembly instructions.
   d. Instructions for identifying parts and components.
   e. Review of spare parts needed for operation and maintenance.

PART 3 - EXECUTION

3.1 PREPARATION

A. Assemble educational materials necessary for instruction, including documentation and training module. Assemble training modules into a combined training manual.

B. Set up instructional equipment at instruction location.

3.2 INSTRUCTION

A. Engage qualified instructors to instruct Owner's personnel to adjust, operate, and maintain systems, subsystems, and equipment not part of a system.
   1. Owner will furnish Contractor with names and positions of participants.

B. Scheduling: Provide instruction at mutually agreed on times. For equipment that requires seasonal operation, provide similar instruction at start of each season.
   1. Schedule training with Owner, through Construction Manager, with at least 14 days' advance notice.

C. Evaluation: At conclusion of each training module, assess and document each participant's mastery of module by use of a demonstration performance-based test.

D. Cleanup: Collect used and leftover educational materials and give to Owner. Remove instructional equipment. Restore systems and equipment to condition existing before initial

training use.

3.3 DEMONSTRATION AND TRAINING VIDEOTAPES

A. General: Engage a qualified commercial photographer to record demonstration and training videotapes. Record each training module separately. Include classroom instructions and demonstrations, board diagrams, and other visual aids, but not student practice.

1. At beginning of each training module, record each chart containing learning objective and lesson outline.

B. Videotape Format: Provide high-quality VHS color videotape in full-size cassettes.

C. Recording: Mount camera on tripod before starting recording, unless otherwise necessary to show area of demonstration and training. Display continuous running time.

D. Narration: Describe scenes on videotape by audio narration by microphone while videotape is recorded. Include description of items being viewed. Describe vantage point, indicating location, direction (by compass point), and elevation or story of construction.

END OF SECTION 01820

DIVISION 2 - SITE WORK

Not Used

DIVISION 3 - CONCRETE

Section 03300 Cast-in-Place Concrete

SECTION 03300 - CAST-IN-PLACE CONCRETE July 16, 2007

PART 1 - GENERAL

1.1 RELATED DOCUMENTS

A. Drawings and general provisions of the Contract, including General and Supplementary Conditions and Division 1 Specification Sections, apply to this Section.

1.2 SUMMARY

A. This Section specifies cast-in place concrete, including formwork, reinforcing, mix design, placement procedures, and finishes.

B. Cast-in-place concrete includes the following:
1. Foundations and footings.
2. Slabs-on-grade.
3. Walls, columns, and beams.
4. Interior utility equipment pads and bases.

C. Related Sections: The following Sections contain requirements that relate to this Section:
1. Division 2 Section "Portland Cement Concrete Paving" for concrete paving and walks will be bid in a future bid package.

1.3 SUBMITTALS

A. General: Submit the following according to Conditions of the Contract and Division 1 Specification Sections.

B. Product data for proprietary materials and items, including reinforcement and forming accessories, admixtures, patching compounds, waterstops, joint systems, and others as requested by Architect.

C. Shop drawings for reinforcement detailing fabricating, bending, and placing concrete reinforcement. Comply with ACI 315 "Manual of Standard Practice for Detailing Reinforced Concrete Structures" showing bar schedules, stirrup spacing, bent bar diagrams, and arrangement of concrete reinforcement. Include special reinforcing required for openings through concrete structures.
1. Include shop drawings for all walls indicating locations for all rustication lines. Indicate that all joints in the plywood forms occur at these rustication lines.

D. Laboratory test reports for concrete materials and mix design test.

E. Material certificates in lieu of material laboratory test reports when permitted by Architect. Material certificates shall be signed by manufacturer and Contractor, certifying that each material item complies with or exceeds specified requirements. Provide certification from admixture manufacturers that chloride content complies with specification requirements.

1.4 QUALITY ASSURANCE

A. Codes and Standards: Comply with provisions of the most current version of the following codes, specifications, and standards, except where more stringent requirements are shown

or specified:

1. ACI 301 "Specifications for Structural Concrete for Buildings".
2. ACI 305 “Hot Weather Concreting.”
3. ACI 306.1 “Standard Specification for Cold Weather Concreting.”
4. ACI 311 "Recommended Practice For Concrete Inspection".
5. ACI 315 "Manual Of Standard Practice For Detailing Concrete Reinforcement".
6. ACI 318 "Building Code Requirements for Reinforced Concrete".
7. ACI 347 "Recommended Practice For Concrete Formwork".
8. Concrete Reinforcing Steel Institute (CRSI), "Manual of Standard Practice".

B. Concrete Testing Service: Engage a testing agency acceptable to Architect to perform material evaluation tests and to design concrete mixes.

1. Field Quality Control: The Owner will engage a testing laboratory to perform quality control testing during construction.
2. Materials and installed work may require testing and retesting at any time during progress of Work. Retesting of rejected materials for installed Work, shall be done at Contractor's expense.

PART 2 - PRODUCTS

2.1 FORM MATERIALS

A. Forms for Exposed Finish Concrete: Forms shall have sufficient wall thickness and or bracing to resist wet concrete loads without deformation.

B. Form Release Agent: Provide commercial formulation form release agent with a maximum of 350 mg/l volatile organic compounds (VOCs) that will not bond with, stain, or adversely affect concrete surfaces and will not impair subsequent treatments of concrete surfaces.

C. Form Ties: Factory-fabricated, adjustable-length, removable or snap-off metal form ties designed to prevent form deflection and to prevent spalling of concrete upon removal. Provide units that will leave no metal closer than 1-1/2 inches to the plane of the exposed concrete surface.

2.2 REINFORCING MATERIALS

A. Reinforcing Bars: ASTM A 615, Grade 60, deformed, except use ASTM A706, grade 60 as noted on drawings.

B. Steel Wire: ASTM A 82, plain, cold-drawn steel.

C. Supports for Reinforcement: Bolsters, chairs, spacers, and other devices for spacing, supporting, and fastening reinforcing bars and welded wire fabric in place. Use wire bar-type supports complying with CRSI specifications.

1. For slabs-on-grade, use supports with sand plates or horizontal runners where base material will not support chair legs.
2. For exposed-to-view concrete surfaces where legs of supports are in contact with forms, provide supports with legs that are protected by plastic (CRSI, Class 1) or stainless steel (CRSI, Class 2).

D. Welded-Wire Fabric: ASTM A185

2.3 CONCRETE MATERIALS

A. Portland Cement: ASTM C 150, Type I/II (Low Alkali)

B. Fly Ash: ASTM C618, Type F, except maximum loss on ignition is limited to 1% with maximum variation of 0.5%.

C. Normal-Weight Aggregates: ASTM C 33 and as specified. Provide aggregates from a single source for exposed concrete.
   1. For exposed exterior surfaces, do not use fine or coarse aggregates containing spalling-causing deleterious substances.

D. Water: Potable.

E. Admixtures, General: Provide concrete admixtures that contain not more than 0.1 percent chloride ions.

F. Air-Entraining Admixture: ASTM C 260, certified by manufacturer to be compatible with other required admixtures and containing no calcium chloride.
   1. Products: Subject to compliance with requirements, provide one of the following:
      a. Air-Mix or Perma-Air, Euclid Chemical Co.
      b. Darex AEA or Daravair, W.R. Grace & Co.
      c. MB-VR or Micro-Air, Master Builders, Inc.
      d. Sealtight AEA, W.R. Meadows, Inc.
      e. Sika AER, Sika Corp.

G. Water-Reducing Admixture: ASTM C 494, Type A.
   1. Products: Subject to compliance with requirements, provide one of the following:
      a. Eucon WR-75, Euclid Chemical Co.
      b. WRDA, W.R. Grace & Co.
      c. Pozzolith Normal or Polyheed, Master Builders, Inc.
      d. Plastocrete 161, Sika Corp.

H. High-Range Water-Reducing Admixture: ASTM C 494, Type F or Type G.
   1. Products: Subject to compliance with requirements, provide one of the following:
      a. Super P, Anti-Hydro Co., Inc.
      b. Eucon 37, Euclid Chemical Co.
      c. WRDA 19 or Daracem, W.R. Grace & Co.
      d. Rheobuild or Polyheed, Master Builders, Inc.
      e. Sikament 300, Sika Corp.

I. Water-Reducing, Accelerating Admixture: ASTM C 494, Type E.
   1. Products: Subject to compliance with requirements, provide one of the following:
      a. Accelguard 80, Euclid Chemical Co.
      b. Polarset, W.R. Grace & Co.
      c. Pozzutec 20, Master Builders, Inc.

J. Water-Reducing, Retarding Admixture: ASTM C 494, Type D.
   1. Products: Subject to compliance with requirements, provide one of the following:
      a. Eucon Retarder 75, Euclid Chemical Co.
      b. Daratard-17, W.R. Grace & Co.
      c. Pozzolith R, Master Builders, Inc.
      d. Plastiment, Sika Corporation.

2.4 RELATED MATERIALS

A. Evaporation Control: Monomolecular film-forming compound applied to exposed concrete slab surfaces for temporary protection from rapid moisture loss.
   1. Products: Subject to compliance with requirements, provide one of the following:
      a. Eucobar, Euclid Chemical Co.
      b. E-Con, L&M Construction Chemicals, Inc.
      c. Confilm, Master Builders, Inc.

B. Bonding Agent: Acrylic or Styrene Butadiene base.
   1. Products: Subject to compliance with requirements, provide one of the following:
      a. "J-40 Bonding Agent"; Dayton Superior Corp.
      b. "Everbond"; L & M Construction Chemicals.
      c. "Hornweld"; A.C. Horn, Inc.
      d. "Sonocrete"; Sonneborn-Rexnord.
      e. "Acrylic Bondcrete"; The Burke Co.
      f. "SBR Latex"; Euclid Chemical Co.
      g. "Daraweld C"; W.R. Grace
      h. "Proweld Acrylic"; Prokrete Industries

C. Epoxy Adhesive: ASTM C 881, two-component material suitable for use on dry or damp surfaces. Provide material type, grade, and class to suit Project requirements. Provide pressure injectable type where conditions require same.
   1. Products: Subject to compliance with requirements, provide one of the following:
      a. Euco Epoxy System #452 or #620, Euclid Chemical Co.
      b. Concresive Standard Liquid, Master Builders, Inc.
      c. Rezi-Weld 1000, W.R. Meadows, Inc.
      d. Epcon System Ceramic 6 Epoxy, ITW Redhead/Ramset.
      e. Sikadur 32 Hi-Mod, Sika Corp.

D. Mortar Patching Material: Prepackaged material suitable for use on dry or damp surfaces.
   1. Products: Subject to compliance with requirements, provide one of the following:
      a. Emaco R350, Master Builders, Inc.
      b. SikaRepair 223, Sika Corp.

2.5 PROPORTIONING AND DESIGNING MIXES

A. Prepare design mixes for each type and strength of concrete by laboratory trial batch method as specified in ACI 301. Use an independent testing agency acceptable to Architect for preparing and reporting proposed mix designs.
   1. Do not use the same testing agency as that used for field quality control testing.

B. Submit written reports to Architect of each proposed mix for each class of concrete at least 15 days prior to start of Work. Do not begin concrete production until proposed mix designs have been reviewed by Architect.

C. Design mixes to provide concrete with the following properties as indicated on drawings:
   1. Water-cement ratio = water/(cement + fly ash).
   2. Normal weight concrete shall have a total weight of between 145 and 155 lbs. per cu.ft.
   3. Light Weight concrete shall have a total dry weight not exceeding 110 lbs. per cu. ft.
   4. 4000 psi, 28-day compressive strength; water-cement ratio, 0.45 maximum.

5. 3000 psi, 28-day compressive strength; water-cement ratio, 0.50 maximum.

D. Slump Limits: Proportion and design mixes to result in concrete slump at point of placement as follows
1. Ramps, slabs, and sloping surfaces: Not more than 3 inches (75 mm).
2. Reinforced foundation systems and all site walls: Not less than 1 inch (25 mm) and not more than 4 inches (100 mm).
3. Concrete containing high-range water-reducing admixture (superplasticizer): Not more than 8 inches (200 mm) after adding admixture to site-verified 2 - 3 inch (50 - 75 mm) slump concrete.
4. Other concrete: Not more than 4 inches (100 mm).

E. Adjustment to Concrete Mixes: Mix design adjustments may be requested by Contractor when characteristics of materials, job conditions, weather, test results, or other circumstances warrant, at no additional cost to Owner and as accepted by Architect. Laboratory test data for revised mix design and strength results must be submitted to and accepted by Architect before using in Work.

F. Concrete mixes shall be proportioned to minimize drying shrinkage. Use the largest coarse aggregate size practical and proportion mix designs to minimize total water content.

2.6 ADMIXTURES

A. Use water-reducing admixture or high-range water-reducing admixture (superplasticizer) in concrete, as required, for placement and workability.

B. Use accelerating admixture in concrete slabs placed at ambient temperatures below 50 deg F (10 deg C).

C. High-range water-reducing admixture may be used in concrete with water-cement ratios below 0.50.

D. Use air-entraining admixture where indicated. Add air-entraining admixture at manufacturer's prescribed rate to result in concrete at point of placement having total air content with a tolerance of plus or minus 1-1/2 percent within the following limits:
1. Concrete structures and slabs exposed to freezing and thawing, deicer chemicals, or hydraulic pressure:
   a. 6.0 percent for 1 inch (25 mm) maximum aggregate.
   b. 6.5 percent for 3/4 inch (19 mm) maximum aggregate.

2. Other concrete not exposed to freezing, thawing, or hydraulic pressure, or to receive a surface hardener: 2 to 4 percent air.

E. Use of additional specified admixtures for water-reducing and set-control is at Contractor's option, at no additional expense to Owner, subject to Architect's approval prior to inclusion in mix designs. Use approved admixtures in strict compliance with manufacturer's directions.

2.7 CONCRETE MIXING

A. Ready-Mix Concrete: Comply with requirements of ASTM C 94, and as herein specified.
1. Materials handling, batching, and mixing shall conform to applicable provisions of ASTM C 94, except delete references to allowing additional water to be added to material with insufficient slump.

2. When air temperature is between 85 deg F (29 deg C) and 90 deg F (32 deg C), reduce mixing and delivery time from 1-1/2 hours to 75 minutes, and when air temperature is above 90 deg F (32 deg C), reduce mixing and delivery time to 60 minutes.
3. Furnish delivery tickets with each load of concrete delivered to site. In addition to the requirements of ASTM C 94 Section 16.1, provide the following information on delivery tickets:
   a. Date and time of dispatch.
   b. Proportions of all materials used.
   c. Approximate location of final deposit in structure.
   d. Scale weight of load.

PART 3 - EXECUTION

3.1 GENERAL

A. Coordinate the installation of joint materials with placement of forms and reinforcing steel.

3.2 FORMS

A. General: Design, erect, support, brace, and maintain formwork to support vertical, lateral, static, and dynamic loads that might be applied until concrete structure can support such loads. Construct formwork so concrete members and structures are of correct size, shape, alignment, elevation, and position. Maintain formwork construction tolerances and surface irregularities complying with the following ACI 347 limits:
   1. Provide Class A tolerances for concrete surfaces exposed to view.
   2. All footing shall be formed.

B. Construct forms to sizes, shapes, lines, and dimensions shown and to obtain accurate alignment, location, grades, level, and plumb work in finished structures. Provide for openings, offsets, sinkages, keyways, recesses, moldings, rustications, reglets, blocking, screeds, bulkheads, anchorages and inserts, and other features required in the Work. Use selected materials to obtain required finishes. Solidly butt joints and provide backup at joints to prevent leakage of cement paste. Coordinate with structural steel supplier for placement of embedded steel items and bolts.

C. Fabricate forms for easy removal without hammering or prying against concrete surfaces. Provide crush plates or wrecking plates where stripping may damage cast concrete surfaces. Provide top forms for inclined surfaces where slope is too steep to place concrete with bottom forms only. Kerf wood inserts for forming keyways, reglets, recesses, and the like for easy removal.

D. Provide temporary openings for clean-outs and inspections where interior area of formwork is inaccessible before and during concrete placement. Securely brace temporary openings and set tightly to forms to prevent losing concrete mortar. Locate temporary openings in forms at inconspicuous locations.

E. Provisions for Other Trades: Provide openings in concrete formwork to accommodate work of other trades. Determine size and location of openings, recesses, and chases from trades providing such items. Accurately place and securely support items built into forms.

F. Cleaning and Tightening: Thoroughly clean forms and adjacent surfaces to receive concrete.

Remove chips, wood, sawdust, dirt, or other debris just before placing concrete. Retighten forms and bracing before placing concrete, as required, to prevent mortar leaks and maintain proper alignment.

3.3 PLACING REINFORCEMENT

A. General: Comply with Concrete Reinforcing Steel Institute's recommended practice for "Placing Reinforcing Bars," for details and methods of reinforcement placement and supports and as herein specified.

B. Clean reinforcement of loose rust and mill scale, earth, ice, and other materials that reduce or destroy bond with concrete.

C. Accurately position, support, and secure reinforcement against displacement. Locate and support reinforcing by metal chairs, runners, bolsters, spacers, and hangers, as approved by Architect.

D. Place reinforcement to maintain minimum coverages as indicated for concrete protection. Arrange, space, and securely tie bars and bar supports to hold reinforcement in position during concrete placement operations. Set wire ties so ends are directed into concrete, not toward exposed concrete surfaces.

E. Splice reinforcing bars in accordance with ACI 318. Splice only where required or permitted by drawings, or where authorized by Architect.

3.4 JOINTS

A. Construction Joints: Locate and install construction joints so they do not impair strength or appearance of the structure, as acceptable to Architect.

B. Provide keyways at least 1-1/2 inches deep in construction joints in walls and slabs and between walls and footings. Accepted bulkheads designed for this purpose may be used for slabs.

C. Place construction joints perpendicular to main reinforcement. Continue reinforcement across construction joints except as indicated otherwise. Do not continue reinforcement through sides of strip placements.

D. Use bonding agent on existing concrete surfaces that will be joined with fresh concrete.

E. Isolation Joints in Slabs-on-Ground: Construct isolation joints in slabs-on-ground at points of contact between slabs-on-grade and vertical surfaces, such as column pedestals, foundation walls, grade beams, and elsewhere as indicated.
   1. Use 15 lb. building paper for isolation joints.

F. Contraction (Control) Joints in Slabs-on-Ground: Construct contraction joints in slabs-on-ground to form panels of patterns as shown. Use saw cuts 1/4 inch wide by one-fourth of slab depth or inserts 1/4 inch wide by one-fourth of slab depth, unless otherwise indicated.
   1. Form contraction joints by inserting premolded plastic, hardboard, or fiberboard strip into fresh concrete until top surface of strip is flush with slab surface. Tool slab edges round on each side of insert. After concrete has cured, remove inserts and clean groove of loose debris.

2. Contraction joints may be formed by saw cuts as soon as possible after slab finishing as may be safely done without dislodging aggregate.
3. If joint pattern is not shown, provide joints not exceeding 10 feet in either direction and located to conform to bay spacing wherever possible (at column centerlines, half bays, third bays).
4. Joint sealants material is specified in Division 7 Sections of these specifications.

3.5 INSTALLING EMBEDDED ITEMS

A. General: Set and build into formwork anchorage devices and other embedded items required for other work that is attached to or supported by cast-in-place concrete. Use setting drawings, diagrams, instructions, and directions provided by suppliers of items to be attached thereto.

B. Forms for Slabs: Set edge forms, bulkheads, and intermediate screed strips for slabs to achieve required elevations and contours in finished surfaces. Provide and secure units to support screed strips using strike-off templates or compacting-type screeds.

3.6 PREPARATION OF FORM SURFACES

A. General: Coat contact surfaces of forms with an approved, nonresidual, low-VOC, form-coating compound before placing reinforcement.

B. Do not allow excess form-coating material to accumulate in forms or come into contact with in-place concrete surfaces against which fresh concrete will be placed. Apply according to manufacturer's instructions.

C. Coat steel forms with a nonstaining, rust-preventative material. Rust-stained steel formwork is not acceptable.

3.7 CONCRETE PLACEMENT

A. Inspection: Before placing concrete, inspect and complete formwork installation, reinforcing steel, and items to be embedded or cast in. Notify other trades to permit installation of their work cooperate with such trades in setting such work.

B. General: Comply with ACI 304, "Recommended Practice for Measuring, Mixing, Transporting, and Placing Concrete," and as herein specified.

C. Deposit concrete continuously or in layers of such thickness that no new concrete will be placed on concrete that has hardened sufficiently to cause seams or planes of weakness. If a section cannot be placed continuously, provide construction joints as specified. Deposit concrete to avoid segregation at its final location.

D. Placing Concrete in Forms: Deposit concrete in forms in horizontal layers no deeper than 24 inches and in a manner to avoid inclined construction joints. Where placement consists of several layers, place each layer while preceding layer is still plastic to avoid cold joints.
1. Consolidate placed concrete by mechanical vibrating equipment supplemented by hand-spading, rodding, or tamping. Use equipment and procedures for consolidation of concrete complying with ACI 309.
2. Do not use vibrators to transport concrete inside forms. Insert and withdraw vibrators vertically at uniformly spaced locations no farther than the visible effectiveness of the machine. Place vibrators to rapidly penetrate placed layer and

at least 6 inches into preceding layer. Do not insert vibrators into lower layers of concrete that have begun to set. At each insertion, limit duration of vibration to time necessary to consolidate concrete and complete embedment of reinforcement and other embedded items without causing segregation of mix.

E. Placing Concrete Slabs: Deposit and consolidate concrete slabs in a continuous operation, within limits of construction joints, until the placement of a panel or section is completed.
   1. Consolidate concrete during placement operations so that concrete is thoroughly worked around reinforcement, other embedded items and into corners.
   2. Bring slab surfaces to correct level with a straightedge and strike off. Use bull floats or darbies to smooth surface free of humps or hollows. Do not disturb slab surfaces prior to beginning finishing operations.
   3. Maintain reinforcing in proper position during concrete placement.

F. Cold-Weather Placement: Comply with provisions of ACI 306.1 and as follows. Protect concrete work from physical damage or reduced strength that could be caused by frost, freezing actions, or low temperatures.
   1. When air temperature has fallen to or is expected to fall below 40 deg F (4 deg C), uniformly heat water and aggregates before mixing to obtain a concrete mixture temperature of not less than 55 deg F and not more than 75 deg F at point of placement.
   2. Do not use frozen materials or materials containing ice or snow. Do not place concrete on frozen subgrade or on subgrade containing frozen materials.
   3. Do not use calcium chloride, salt, or other materials containing antifreeze agents or chemical accelerators.

G. Hot-Weather Placement: When hot weather conditions exist that would seriously impair quality and strength of concrete, place concrete in compliance with ACI 305 and as herein specified. Hot weather is defined as air temperature exceeding 90 deg F (32 deg C), or any combination of temperature, humidity and wind velocity which causes a rate of evaporation in excess of 0.2 pounds per square foot per hour as determined by ACI C 305R figure 2.1.5.
   1. Cool ingredients before mixing to maintain concrete temperature at time of placement to below 90 deg F (32 deg C). Mixing water may be chilled, or chopped ice may be used to control temperature, provided water equivalent of ice is calculated to total amount of mixing water. Use of liquid nitrogen to cool concrete is Contractor's option.
   2. Cover reinforcing steel with water-soaked burlap if it becomes too hot, so that steel temperature will not exceed the ambient air temperature immediately before embedment in concrete.
   3. Fog spray forms, reinforcing steel, and subgrade just before concrete is placed.
   4. Use water-reducing retarding admixture (type D) when required by high temperatures, low humidity, or other adverse placing conditions.

3.8 FINISH OF FORMED SURFACES

A. Rough Form Finish: Formed concrete surfaces not exposed-to-view in the finish work or by other construction, unless otherwise indicated. This is the concrete surface having texture imparted by form facing material used, with tie holes and defective areas repaired and patched and fins and other projections exceeding 1/4" in height rubbed down or chipped off.

B. Smooth Form Finish: For formed concrete surfaces exposed-to-view, or that are to be covered with a coating material applied directly to concrete, or a covering material applied directly to concrete, such as waterproofing, dampproofing, veneer plaster, painting, or other

similar system. This is as-cast concrete surface obtained with selected form facing material, arranged orderly and symmetrically with a minimum of seams. Repair and patch defective areas with fins or other projections completely removed and smoothed.

1. Smooth Rubbed Finish: Provide smooth rubbed finish to concrete surfaces, which have received smooth form finish treatment, not later than one day after form removal.
   a. Moisten concrete surfaces and rub with carborundum brick or other abrasive until a uniform color and texture is produced. Do not apply cement grout other than that created by the rubbing process.

C. Related Unformed Surfaces: At tops of walls, horizontal offsets, and similar unformed surfaces occurring adjacent to formed surfaces, strike-off smooth and finish with a texture matching adjacent formed surfaces. Continue final surface treatment of formed surfaces uniformly across adjacent unformed surfaces, unless otherwise indicated.

3.9 MONOLITHIC SLAB FINISHES

A. General: Comply with recommendations in ACI 302.1R for screeding, restraightening, and finishing operations for concrete surfaces. Do not wet concrete surfaces.

B. Scratch Finish: Apply scratch finish to monolithic slab surfaces that are to receive concrete floor topping or mortar setting beds for tile, portland cement terrazzo, and other bonded applied cementitious finish flooring material, and as otherwise indicated.

1. After placing slabs, plane surface to tolerances for floor flatness (F) of 15 and floor levelness (F) of 13. Slope surfaces uniformly to drains where required. After leveling, roughen surface before final set, with stiff brushes, brooms, or rakes.

C. Float Finish: Apply float finish to monolithic slab surfaces to receive trowel finish and other finishes as hereinafter specified, and slab surfaces which are to be covered with membrane or elastic waterproofing, membrane or elastic roofing, or sand-bed terrazzo, and as otherwise indicated.

1. After screeding, consolidating, and leveling concrete slabs, do not work surface until ready for floating. Begin floating when surface water has disappeared or when concrete has stiffened sufficiently to permit operation of power-driven floats, or both, Consolidate surface with power-driven floats, or by hand-floating if area is small or inaccessible to power units. Check and level surface plane to tolerances of F 18 - F 15. Cut down high spots and fill low spots. Uniformly slope surfaces to drains. Immediately after leveling, refloat surface to a uniform, smooth, granular texture.

D. Trowel Finish: Apply trowel finish to monolithic slab surfaces to be exposed-to-view, and slab surfaces to be covered with resilient flooring, carpet, ceramic or quarry tile, paint, or other thin film finish coating system.

1. After floating, begin first trowel finish operation using a power-driven trowel. Begin final troweling when surface produces a ringing sound as trowel is moved over surface. Consolidate concrete surface by final hand-troweling operation, free of trowel marks, uniform in texture and appearance, and with surface leveled to tolerances of F 20 - F 17. Grind smooth surface defects which would telegraph through applied floor covering system.

E. Trowel and Fine Broom Finish: Where ceramic or quarry tile is to be installed with thin-set mortar, apply trowel finish as specified, then immediately follow with slightly scarifying surface by fine brooming.

F. Non-Slip Broom Finish: Apply non-slip broom finish to exterior concrete platforms, steps, and ramps, and elsewhere as indicated.
   1. Immediately after float finishing, slightly roughen concrete surface by brooming with fiber bristle broom perpendicular to main traffic route. Coordinate required final finish with Architect before application.

3.10 MISCELLANEOUS CONCRETE ITEMS

A. Filling In: Fill in holes and openings left in concrete structures for passage of work by other trades, unless otherwise shown or directed, after work of other trades is in place. Mix, place, and cure concrete as specified to blend with in-place construction. Provide other miscellaneous concrete filling shown or required to complete Work.

3.11 CONCRETE CURING AND PROTECTION

A. General: Protect freshly placed concrete from premature drying and excessive cold or hot temperatures.
   1. Start initial curing as soon as free water has disappeared from concrete surface after placing and finishing. Weather permitting, keep continuously moist for not less than 7 days.
   2. Begin final curing procedures immediately following initial curing and before concrete has dried. Continue final curing for at least 7 days in accordance with ACI 301 procedures. Avoid rapid drying at end of final curing period.

B. Curing Methods: Perform curing of concrete by curing and sealing compound, by moist curing, by moisture-retaining cover curing, and by combinations thereof, as herein specified.
   1. Provide moisture curing by following methods.
      a. Keep concrete surface continuously wet by covering with water.
      b. Continuous water-fog spray.
      c. Covering concrete surface with specified absorptive cover, thoroughly saturating cover with water and keeping continuously wet. Place absorptive cover to provide coverage of concrete surfaces and edges, with 4" lap over adjacent absorptive covers.
   2. Provide moisture-cover curing as follows:
      a. Cover concrete surfaces with moisture-retaining cover for curing concrete, placed in widest practicable width with sides and ends lapped at least 3" and sealed by waterproof tape or adhesive. Immediately repair any holes or tears during curing period using cover material and waterproof tape.
   3. Provide curing and sealing compound to exposed interior slabs and to exterior slabs, walks, and curbs, as follows:
      a. Apply specified curing and sealing compound to concrete slabs as soon as final finishing operations are complete (within 2 hours). Apply uniformly in continuous operation by power-spray or roller in accordance with manufacturer's directions. Recoat areas subjected to heavy rainfall within 3 hours after initial application. Maintain continuity of coating and repair damage during curing period.
      b. Do not use membrane curing compounds on surfaces which are to be covered with coating material applied directly to concrete, liquid floor hardener, waterproofing, dampproofing, membrane roofing, flooring (such as ceramic or quarry tile, glue-down carpet), painting, and other coatings and finish materials, unless otherwise acceptable to Architect.
   4. Curing Formed Surfaces: Cure formed concrete surfaces, including undersides of beams, supported slabs, and other similar surfaces by moist curing with forms in

place for full curing period or until forms are removed. If forms are removed, continue curing by methods specified above, as applicable.

5. Curing Unformed Surfaces: Cure unformed surfaces, such as slabs, floor topping, and other flat surfaces by application of appropriate curing method.
6. Final cure concrete surfaces to receive liquid floor hardener or finish flooring by use of moisture-retaining cover, unless otherwise directed.
7. Sealer and Dustproofer: Apply a second coat of specified curing and sealing compound only to surfaces given a first coat.

3.12 REMOVAL OF FORMS

A. General: Formwork not supporting weight of concrete, such as sides of beams, walls, columns, and similar parts of the work, may be removed after cumulatively curing at not less than 50 deg F (10 deg C) for 24 hours after placing concrete, provided concrete is sufficiently hard to not be damaged by form-removal operations, and provided curing and protection operations are maintained.

B. Formwork supporting weight of concrete, such as beam soffits, joists, slabs, and other structural elements, may not be removed in less than 14 days or until concrete has attained at least 75 percent of design minimum compressive strength at 28 days. Determine potential compressive strength of in-place concrete by testing field-cured specimens representative of concrete location or members, at Contractor's expense.

C. Form-facing material may be removed 4 days after placement only if shores and other vertical supports have been arranged to permit removal of form-facing material without loosening or disturbing shores and supports. Apply curing to formed surfaces upon removal of forms and continue curing.

3.13 REUSE OF FORMS

A. Re-Used of Forms:
1. Clean and repair surfaces of forms to be re-used in work. Split, frayed, delaminated, or otherwise damaged form facing material will not be acceptable for exposed surfaces. Apply new form coating compound as specified for new formwork.
2. When forms are extended for successive concrete placement, thoroughly clean surfaces, remove fins and laitance, and tighten forms to close joints. Align and secure joint to avoid offsets. Do not use "patched" forms for exposed concrete surfaces, except as acceptable to Architect.

3.14 CONCRETE SURFACE REPAIRS

A. Patching Defective Areas: Repair and patch defective areas with repair mortar immediately after removing forms, when acceptable to Architect. Refer to Section 03331 for specific requirements.

B. Perform structural repairs with prior approval of Architect for method and procedure, using specified epoxy adhesive and mortar.

3.15 QUALITY CONTROL TESTING DURING CONSTRUCTION

A. General: The Owner will employ a testing agency to perform tests and to submit test reports.

B. Sampling and testing for quality control during concrete placement may include the following,

as directed by Architect.

1. Sampling Fresh Concrete: ASTM C 172, except modified for slump to comply with ASTM C 94.
    a. Slump: ASTM C 143; one test at point of discharge for every third load. Also verify initial slump when HRWR (superplasticizer) is used.
    b. Air Content: ASTM C 173, volumetric method for lightweight or normal weight concrete; ASTM C 231, pressure method for normal weight concrete; one for each set of compressive strength test specimens.
    c. Concrete Temperature: Test hourly when air temperature is 40 deg F (4 deg C) and below, when 80 deg F (27 deg C) and above, and each time a set of compression test specimens is made.
    d. Compression Test Specimen: ASTM C 31; one set of 4 standard cylinders (plus additional cylinders as required by contractor for post-tensioned concrete) for each compressive-strength test, unless otherwise directed. Mold and store cylinders for laboratory-cured test specimens except when field-cured test specimens are required.
    e. Compressive-Strength Tests: ASTM C 39; one set for each 50 cubic yards, or fraction thereof, of each concrete class placed in any one day,or for each 5000 sq. ft. of surface area placed; one specimens tested at 7 days, two specimens tested at 28 days, and one specimen retained in reserve for later testing if required.
    f. Slump, air and temperature of concrete used for suspended slabs at parking garage, including exhibition suspended floor slab, shall be tested at point of discharge for every load.
    g. All steel elements shall be fabricated on premises of a fabricator registered and approved by the building officials per section 1701.7 of the U.B.C.
2. When frequency of testing will provide fewer than five strength tests for a given class of concrete, conduct testing from at least 5 randomly selected batches or from each batch if fewer than 5 are used.
3. When strength of field-cured cylinders is less than 85 percent of companion laboratory-cured cylinders, evaluate current operations and provide corrective procedures for protecting and curing the in-place concrete.

C. Test results will be reported in writing to Architect and Contractor within 24 hours after tests. Reports of compressive strength tests shall contain the Project identification name and number, date of concrete placement, name of concrete testing service, concrete type and class, location of concrete batch in structure, design compressive strength at 28 days, concrete mix proportions and materials, compressive breaking strength, and type of break for both 7-day tests and 28-day tests.

D. Additional Tests: The testing agency will make additional tests of in-place concrete when test results indicate specified concrete strengths and other characteristics have not been attained in the structure, as directed by Architect. Testing agency may conduct tests to determine adequacy of concrete by cored cylinders complying with ASTM C 42, or by other methods as directed. Contractor shall pay for such tests when unacceptable concrete is verified.

END OF SECTION 03300

DIVISION 4 - MASONRY

Not Used

DIVISION 5 - METALS

Section 05500	Metal Fabrications
Section 05521	Pipe and Tube Railings

SECTION 05500 - METAL FABRICATIONS July 16, 2007

PART 1 - GENERAL

1.1 RELATED DOCUMENTS

A. Drawings and general provisions of the Contract, including General and Supplementary Conditions and Division 1 Specification Sections, apply to this Section.

1.2 SUMMARY

A. This Section includes the following:
   1. Steel framing and supports for mechanical and electrical equipment.
   2. Steel framing and supports for applications where framing and supports are not specified in other Sections.

1.3 SUBMITTALS

A. Product Data: For the following:
   1. Paint products.
   2. Grout.

B. Shop Drawings: Detail fabrication and erection of each metal fabrication indicated. Include plans, elevations, sections, and details of metal fabrications and their connections. Show anchorage and accessory items.
   1. Provide templates for anchors and bolts specified for installation under other Sections.

C. Welding Certificates: Copies of certificates for welding procedures and personnel.

D. Qualification Data: For firms and persons specified in "Quality Assurance" Article to demonstrate their capabilities and experience. Include lists of completed projects with project names and addresses, names and addresses of architects and owners, and other information specified.

1.4 QUALITY ASSURANCE

A. Fabricator Qualifications: A firm experienced in producing metal fabrications similar to those indicated for this Project and with a record of successful in-service performance, as well as sufficient production capacity to produce required units.

B. Welding: Qualify procedures and personnel according to the following:
   1. AWS D1.1, "Structural Welding Code--Steel."
   2. AWS D1.3, "Structural Welding Code--Sheet Steel."
   3. Certify that each welder has satisfactorily passed AWS qualification tests for welding processes involved and, if pertinent, has undergone recertification.

1.5 PROJECT CONDITIONS

A. Field Measurements: Where metal fabrications are indicated to fit walls and other construction, verify dimensions by field measurements before fabrication and indicate measurements on Shop Drawings. Coordinate fabrication schedule with construction

progress to avoid delaying the Work.

1. Established Dimensions: Where field measurements cannot be made without delaying the Work, establish dimensions and proceed with fabricating metal fabrications without field measurements. Coordinate construction to ensure that actual dimensions correspond to established dimensions. Allow for trimming and fitting.

1.6 COORDINATION

A. Coordinate installation of anchorages for metal fabrications. Furnish setting drawings, templates, and directions for installing anchorages, including sleeves, concrete inserts, anchor bolts, and items with integral anchors, that are to be embedded in concrete or masonry. Deliver such items to Project site in time for installation.

PART 2 - PRODUCTS

2.1 METALS, GENERAL

A. Metal Surfaces, General: For metal fabrications exposed to view in the completed Work, provide materials with smooth, flat surfaces without blemishes. Do not use materials with exposed pitting, seam marks, roller marks, rolled trade names, or roughness.

2.2 FERROUS METALS

A. Steel Plates, Shapes, and Bars: ASTM A 36/A 36M.

B. Steel Tubing: Cold-formed steel tubing complying with ASTM A 500.

C. Steel Pipe: ASTM A 53, standard weight (Schedule 40), unless another weight is indicated or required by structural loads.

D. Slotted Channel Framing: Cold-formed metal channels with flange edges returned toward web and with 9/16-inch- (14.3-mm-) wide slotted holes in webs at 2 inches (51 mm) o.c.

1. Width of Channels: 1-5/8 inches (41 mm).
2. Depth of Channels: 1-5/8 inches (41 mm).
3. Metal and Thickness: Uncoated steel complying with ASTM A 570, Grade 33; 0.0677-inch (1.7-mm) minimum thickness.
4. Finish: Rust-inhibitive, baked-on, acrylic enamel.

E. Malleable-Iron Castings: ASTM A 47, Grade 32510 (ASTM A 47M, Grade 22010).

F. Gray-Iron Castings: ASTM A 48, Class 30 (ASTM A 48M, Class 200), unless another class is indicated or required by structural loads.

G. Cast-in-Place Anchors in Concrete: Anchors of type indicated below, fabricated from corrosion-resistant materials capable of sustaining, without failure, the load imposed within a safety factor of 4, as determined by testing per ASTM E 488, conducted by a qualified independent testing agency.

1. Threaded or wedge type; galvanized ferrous castings, either ASTM A 47 (ASTM A 47M) malleable iron or ASTM A 27/A 27M cast steel. Provide bolts, washers, and shims as needed, hot-dip galvanized per ASTM A 153/A 153M.

H. Welding Rods and Bare Electrodes: Select according to AWS specifications for metal alloy welded.

2.3 PAINT

A. Shop Primer for Ferrous Metal: Fast-curing, lead- and chromate-free, universal modified-alkyd primer complying with performance requirements in FS TT-P-664; selected for good resistance to normal atmospheric corrosion, compatibility with finish paint systems indicated, and capability to provide a sound foundation for field-applied topcoats despite prolonged exposure.
   1. Refer to Section 09900 - Painting for specific primer required on identified steel items.

B. Galvanizing Repair Paint: High-zinc-dust-content paint for regalvanizing welds in steel, complying with SSPC-Paint 20.

C. Bituminous Paint: Cold-applied asphalt mastic complying with SSPC-Paint 12, except containing no asbestos fibers, or cold-applied asphalt emulsion complying with ASTM D 1187.

2.4 FASTENERS

A. General: Provide Type 304 or 316 stainless-steel fasteners for exterior use and zinc-plated fasteners with coating complying with ASTM B 633, Class Fe/Zn 5, where built into exterior walls. Select fasteners for type, grade, and class required.

B. Bolts and Nuts: Regular hexagon-head bolts, ASTM A 307, Grade A (ASTM F 568M, Property Class 4.6); with hex nuts, ASTM A 563 (ASTM A 563M); and, where indicated, flat washers.

C. Anchor Bolts: ASTM F 1554, Grade 36.

D. Machine Screws: ASME B18.6.3 (ASME B18.6.7M).

E. Plain Washers: Round, carbon steel, ASME B18.22.1 (ASME B18.22M).

F. Lock Washers: Helical, spring type, carbon steel, ASME B18.21.1 (ASME B18.21.2M).

G. Expansion Anchors: Anchor bolt and sleeve assembly of material indicated below with capability to sustain, without failure, a load equal to six times the load imposed when installed in unit masonry and equal to four times the load imposed when installed in concrete, as determined by testing per ASTM E 488, conducted by a qualified independent testing agency.
   1. Material: Carbon-steel components zinc-plated to comply with ASTM B 633, Class Fe/Zn 5.

2.5 GROUT

A. Nonshrink, Nonmetallic Grout: Factory-packaged, nonstaining, noncorrosive, nongaseous grout complying with ASTM C 1107. Provide grout specifically recommended by manufacturer for interior and exterior applications.

2.6 FABRICATION, GENERAL

A. Shop Assembly: Preassemble items in shop to greatest extent possible to minimize field splicing and assembly. Disassemble units only as necessary for shipping and handling limitations. Use connections that maintain structural value of joined pieces. Clearly mark units for reassembly and coordinated installation.

B. Shear and punch metals cleanly and accurately. Remove burrs.

C. Ease exposed edges to a radius of approximately 1/32 inch (1 mm), unless otherwise indicated. Form bent-metal corners to smallest radius possible without causing grain separation or otherwise impairing work.

D. Weld corners and seams continuously to comply with the following:
   1. Use materials and methods that minimize distortion and develop strength and corrosion resistance of base metals.
   2. Obtain fusion without undercut or overlap.
   3. Remove welding flux immediately.
   4. At exposed connections, finish exposed welds and surfaces smooth and blended so no roughness shows after finishing and contour of welded surface matches that of adjacent surface.

E. Provide for anchorage of type indicated; coordinate with supporting structure. Fabricate and space anchoring devices to secure metal fabrications rigidly in place and to support indicated loads.

F. Cut, reinforce, drill, and tap metal fabrications as indicated to receive finish hardware, screws, and similar items.

G. Fabricate joints that will be exposed to weather in a manner to exclude water, or provide weep holes where water may accumulate.

H. Allow for thermal movement resulting from the following maximum change (range) in ambient and surface temperatures by preventing buckling, opening up of joints, overstressing of components, failure of connections, and other detrimental effects. Base engineering calculation on surface temperatures of materials due to both solar heat gain and nighttime-sky heat loss.
   1. Temperature Change (Range): 120 deg F (67 deg C), ambient; 180 deg F (100 deg C), material surfaces.

I. Form exposed work true to line and level with accurate angles and surfaces and straight sharp edges.

J. Remove sharp or rough areas on exposed traffic surfaces.

K. Form exposed connections with hairline joints, flush and smooth, using concealed fasteners where possible. Use exposed fasteners of type indicated or, if not indicated, Phillips flat-head (countersunk) screws or bolts. Locate joints where least conspicuous.

2.7 MISCELLANEOUS FRAMING AND SUPPORTS

A. General: Provide steel framing and supports that are not a part of structural-steel framework as necessary to complete the Work.

B. Fabricate units from structural-steel shapes, plates, and bars of welded construction, unless otherwise indicated. Fabricate to sizes, shapes, and profiles indicated and as necessary to receive adjacent construction retained by framing and supports. Cut, drill, and tap units to receive hardware, hangers, and similar items.
   1. Fabricate units from slotted channel framing where indicated.
   2. Where units are indicated to be cast into concrete or built into masonry, equip with integrally welded steel strap anchors 1-1/4 inches (32 mm) wide by 1/4 inch (6 mm) thick by 8 inches (200 mm) long at 24 inches (600 mm) o.c., unless otherwise indicated.
   3. Furnish inserts if units must be installed after concrete is placed.

C. Galvanize miscellaneous framing and supports in the following locations:
   1. Exterior locations and where miscellaneous items will be concealed from view.

2.8 MISCELLANEOUS STEEL TRIM

A. Unless otherwise indicated, fabricate units from structural-steel shapes, plates, and bars of profiles shown with continuously welded joints, and smooth exposed edges. Miter corners and use concealed field splices where possible.

B. Provide cutouts, fittings, and anchorages as needed to coordinate assembly and installation with other work. Provide anchors, welded to trim, for embedding in concrete or masonry construction, spaced not more than 6 inches (150 mm) from each end, 6 inches (150 mm) from corners, and 24 inches (600 mm) o.c., unless otherwise indicated.

C. Galvanize miscellaneous steel trim in the following locations:
   1. Exterior.

2.9 FINISHES, GENERAL

A. Comply with NAAMM's "Metal Finishes Manual for Architectural and Metal Products" for recommendations for applying and designating finishes.

B. Finish metal fabrications after assembly.

2.10 STEEL AND IRON FINISHES

A. Galvanizing: Hot-dip galvanize items as indicated to comply with applicable standard listed below:
   1. ASTM A 123, for galvanizing steel and iron products.
   2. ASTM A 153/A 153M, for galvanizing steel and iron hardware.

B. Preparation for Shop Priming: Prepare uncoated ferrous-metal surfaces to comply with minimum requirements indicated below for SSPC surface-preparation specifications and environmental exposure conditions of installed metal fabrications:
   1. Exteriors (SSPC Zone 1B): SSPC-SP 6/NACE No. 3, "Commercial Blast Cleaning."
   2. Interiors (SSPC Zone 1A): SSPC-SP 3, "Power Tool Cleaning."

C. Apply shop primer to uncoated surfaces of metal fabrications, except those with galvanized finishes and those to be embedded in concrete, sprayed-on fireproofing, or masonry, unless otherwise indicated. Comply with SSPC-PA 1, "Paint Application Specification No. 1," for shop painting.

1. Stripe paint corners, crevices, bolts, welds, and sharp edges.

PART 3 - EXECUTION

3.1 INSTALLATION, GENERAL

A. Fastening to In-Place Construction: Provide anchorage devices and fasteners where necessary for securing metal fabrications to in-place construction. Include threaded fasteners for concrete and masonry inserts, toggle bolts, through-bolts, lag bolts, wood screws, and other connectors.

B. Cutting, Fitting, and Placement: Perform cutting, drilling, and fitting required for installing metal fabrications. Set metal fabrications accurately in location, alignment, and elevation; with edges and surfaces level, plumb, true, and free of rack; and measured from established lines and levels.

C. Provide temporary bracing or anchors in formwork for items that are to be built into concrete, masonry, or similar construction.

D. Fit exposed connections accurately together to form hairline joints. Weld connections that are not to be left as exposed joints but cannot be shop welded because of shipping size limitations. Do not weld, cut, or abrade surfaces of exterior units that have been hot-dip galvanized after fabrication and are for bolted or screwed field connections.

E. Field Welding: Comply with the following requirements:
   1. Use materials and methods that minimize distortion and develop strength and corrosion resistance of base metals.
   2. Obtain fusion without undercut or overlap.
   3. Remove welding flux immediately.
   4. At exposed connections, finish exposed welds and surfaces smooth and blended so no roughness shows after finishing and contour of welded surface matches that of adjacent surface.

F. Corrosion Protection: Coat concealed surfaces of aluminum that will come into contact with grout, concrete, masonry, wood, or dissimilar metals with a heavy coat of bituminous paint.

3.2 INSTALLING MISCELLANEOUS FRAMING AND SUPPORTS

A. General: Install framing and supports to comply with requirements of items being supported, including manufacturers' written instructions and requirements indicated on Shop Drawings, if any.

3.3 ADJUSTING AND CLEANING

A. Touchup Painting: Immediately after erection, clean field welds, bolted connections, and abraded areas of shop paint, and paint exposed areas with the same material as used for shop painting to comply with SSPC-PA 1 for touching up shop-painted surfaces.
   1. Apply by brush or spray to provide a minimum 2.0-mil (0.05-mm) dry film thickness.

B. Galvanized Surfaces: Clean field welds, bolted connections, and abraded areas and repair galvanizing to comply with ASTM A 780.

END OF SECTION 05500

SECTION 05521 - PIPE AND TUBE RAILINGS July 16, 2007

PART 1 - GENERAL

1.1 RELATED DOCUMENTS

A. Drawings and general provisions of the Contract, including General and Supplementary Conditions and Division 1 Specification Sections, apply to this Section.

1.2 SUMMARY

A. This Section includes the following:
   1. Steel pipe and tube handrails and railings.

1.3 PERFORMANCE REQUIREMENTS

A. General: In engineering handrails and railings to withstand structural loads indicated, determine allowable design working stresses of handrail and railing materials based on the following:
   1. Structural Steel: AISC S335, "Specification for Structural Steel Buildings Allowable Stress Design and Plastic Design with Commentary."
   2. Cold-Formed Structural Steel: AISI SG-673, Part I, "Specification for the Design of Cold-Formed Steel Structural Members."

B. Structural Performance of Handrails and Railings: Provide handrails and railings capable of withstanding the following structural loads without exceeding allowable design working stresses of materials for handrails, railings, anchors, and connections:
   1. Top Rail of Guards: Capable of withstanding the following loads applied as indicated:
      a. Concentrated load of 200 lbf (890 N) applied at any point and in any direction.
      b. Uniform load of 50 lbf/ft. (730 N/m) applied horizontally and concurrently with uniform load of 100 lbf/ft. (1460 N/m) applied vertically downward.
      c. Concentrated and uniform loads above need not be assumed to act concurrently.
   2. Handrails Not Serving As Top Rails: Capable of withstanding the following loads applied as indicated:
      a. Concentrated load of 200 lbf (890 N) applied at any point and in any direction.
      b. Uniform load of 50 lbf/ft. (730 N/m) applied in any direction.
      c. Concentrated and uniform loads above need not be assumed to act concurrently.
   3. Infill Area of Guards: Capable of withstanding a horizontal concentrated load of 200 lbf (890 N) applied to 1 sq. ft. (0.09 sq. m) at any point in system, including panels, intermediate rails, balusters, or other elements composing infill area.
      a. Load above need not be assumed to act concurrently with loads on top rails in determining stress on guard.

C. Thermal Movements: Provide handrails and railings that allow for thermal movements resulting from the following maximum change (range) in ambient and surface temperatures by preventing buckling, opening of joints, overstressing of components, failure of connections, and other detrimental effects. Base engineering calculation on surface temperatures of

materials due to both solar heat gain and nighttime-sky heat loss.

1. Temperature Change (Range): 120 deg F (67 deg C), ambient; 180 deg F (100 deg C), material surfaces.

D. Control of Corrosion: Prevent galvanic action and other forms of corrosion by insulating metals and other materials from direct contact with incompatible materials.

1.4 SUBMITTALS

A. Product Data: For the following:

1. Grout, anchoring cement, and paint products.

B. Shop Drawings: Show fabrication and installation of handrails and railings. Include plans, elevations, sections, component details, and attachments to other Work.

1. For installed products indicated to comply with design loads, include structural analysis data signed and sealed by the qualified professional engineer responsible for their preparation.

C. Samples for Selection: Manufacturer's color charts showing the full range of colors available for products with factory-applied color finishes.

D. Samples for Verification: For each type of exposed finish required, prepared on components indicated below and of same thickness and metal indicated for the Work. If finishes involve normal color and texture variations, include sample sets showing the full range of variations expected.

1. Assembled sample of railing system, made from full-size components, including top rail, post, handrail, and infill. Show method of finishing members at intersections. Sample need not be full height.

E. Qualification Data: For firms and persons specified in "Quality Assurance" Article to demonstrate their capabilities and experience. Include lists of completed projects with project names and addresses, names and addresses of architects and owners, and other information specified.

F. Product Test Reports: From a qualified testing agency indicating products comply with requirements, based on comprehensive testing of current products.

1.5 QUALITY ASSURANCE

A. Source Limitations: Obtain each type of handrail and railing through one source from a single manufacturer.

1.6 STORAGE

A. Store handrails and railings in a dry, well-ventilated, weathertight place.

1.7 PROJECT CONDITIONS

A. Field Measurements: Verify handrail and railing dimensions by field measurements before fabrication and indicate measurements on Shop Drawings. Coordinate fabrication schedule with construction progress to avoid delaying the Work.

1. Established Dimensions: Where field measurements cannot be made without delaying the Work, establish dimensions and proceed with fabricating handrails and

railings without field measurements. Coordinate construction to ensure that actual dimensions correspond to established dimensions.

1.8 COORDINATION

A. Coordinate installation of anchorages for handrails and railings. Furnish setting drawings, templates, and directions for installing anchorages, including sleeves, concrete inserts, anchor bolts, and items with integral anchors, that are to be embedded in concrete or masonry. Deliver such items to Project site in time for installation.

1.9 SCHEDULING

A. Schedule installation so handrails and railings are mounted only on completed walls. Do not support temporarily by any means that does not satisfy structural performance requirements.

PART 2 - PRODUCTS

2.1 METALS

A. General: Provide metal free from pitting, seam marks, roller marks, stains, discolorations, and other imperfections where exposed to view on finished units.

B. Steel and Iron: Provide steel and iron in the form indicated, complying with the following requirements:
   1. Steel Pipe: ASTM A 53; finish, type, and weight class as follows:
      a. Black finish, unless otherwise indicated.
      b. Galvanized finish for exterior installations and where indicated.
      c. Type F, or Type S, Grade A, standard weight (Schedule 40), unless another grade and weight are required by structural loads.
   2. Steel Tubing: Cold-formed steel tubing, ASTM A 500, Grade A, unless another grade is required by structural loads.
   3. Steel Plates, Shapes, and Bars: ASTM A 36/A 36M.
   4. Iron Castings: Malleable iron complying with ASTM A 47, Grade 32510 (ASTM A 47M, Grade 22010).

C. Brackets, Flanges, and Anchors: Cast or formed metal of same type of material and finish as supported rails, unless otherwise indicated.

2.2 WELDING MATERIALS, FASTENERS, AND ANCHORS

A. Welding Electrodes and Filler Metal: Provide type and alloy of filler metal and electrodes as recommended by producer of metal to be welded and as required for color match, strength, and compatibility in fabricated items.

B. Fasteners for Anchoring Handrails and Railings to Other Construction: Select fasteners of type, grade, and class required to produce connections suitable for anchoring handrails and railings to other types of construction indicated and capable of withstanding design loads.
   1. For steel handrails, railings, and fittings, use plated fasteners complying with ASTM B 633, Class Fe/Zn 25 for electrodeposited zinc coating.
   2. For stainless-steel handrails and railings, use fasteners fabricated from Type 304 or Type 316 stainless steel.

C. Fasteners for Interconnecting Handrail and Railing Components: Use fasteners fabricated from same basic metal as fastened metal, unless otherwise indicated. Do not use metals that are corrosive or incompatible with materials joined.
   1. Provide concealed fasteners for interconnecting handrail and railing components and for attaching them to other work, unless otherwise indicated.

D. Cast-in-Place and Postinstalled Anchors: Anchors of type indicated below, fabricated from corrosion-resistant materials with capability to sustain, without failure, a load equal to six times the load imposed when installed in unit masonry and equal to four times the load imposed when installed in concrete, as determined by testing per ASTM E 488 conducted by a qualified independent testing agency.
   1. Expansion anchors.

2.3 PAINT

A. Shop Primer for Ferrous Metal: Fast-curing, lead- and chromate-free, universal modified-alkyd primer complying with performance requirements in FS TT-P-664; selected for good resistance to normal atmospheric corrosion, compatibility with finish paint systems indicated, and capability to provide a sound foundation for field-applied topcoats despite prolonged exposure.

B. Shop Primer for Galvanized Steel: Zinc-dust, zinc-oxide primer formulated for priming zinc-coated steel and for compatibility with finish paint systems indicated, and complying with SSPC-Paint 5.

C. Bituminous Paint: Cold-applied asphalt mastic complying with SSPC-Paint 12, except containing no asbestos fibers, or cold-applied asphalt emulsion complying with ASTM D 1187.

2.4 GROUT AND ANCHORING CEMENT

A. Nonshrink, Nonmetallic Grout: Premixed, factory-packaged, nonstaining, noncorrosive, nongaseous grout complying with ASTM C 1107. Provide grout specifically recommended by manufacturer for interior and exterior applications.

2.5 FABRICATION

A. General: Fabricate handrails and railings to comply with requirements indicated for design, dimensions, member sizes and spacing, details, finish, and anchorage, but not less than that required to support structural loads.

B. Assemble handrails and railings in the shop to greatest extent possible to minimize field splicing and assembly. Disassemble units only as necessary for shipping and handling limitations. Clearly mark units for reassembly and coordinated installation. Use connections that maintain structural value of joined pieces.

C. Form changes in direction of railing members as follows:
   1. By bending.
   2. By radius bends of radius indicated.
   3. By any method indicated above, applicable to change in direction involved.

D. Form simple and compound curves by bending members in jigs to produce uniform curvature for each repetitive configuration required; maintain cylindrical cross section of member

throughout entire bend without buckling, twisting, cracking, or otherwise deforming exposed surfaces of handrail and railing components.

E. Welded Connections: Fabricate handrails and railings for connecting members by welding. Cope components at perpendicular and skew connections to provide close fit, or use fittings designed for this purpose. Weld connections continuously to comply with the following:
   1. Use materials and methods that minimize distortion and develop strength and corrosion resistance of base metals.
   2. Obtain fusion without undercut or overlap.
   3. Remove flux immediately.
   4. At exposed connections, finish exposed surfaces smooth and blended so no roughness shows after finishing and welded surface matches contours of adjoining surfaces.

F. Nonwelded Connections: Fabricate handrails and railings by connecting members with concealed mechanical fasteners and fittings, unless otherwise indicated. Fabricate members and fittings to produce flush, smooth, rigid, hairline joints.
   1. Fabricate splice joints for field connection using an epoxy structural adhesive where this is manufacturer's standard splicing method.

G. Brackets, Flanges, Fittings, and Anchors: Provide wall brackets, flanges, miscellaneous fittings, and anchors to interconnect handrail and railing members to other work, unless otherwise indicated.

H. Provide inserts and other anchorage devices for connecting handrails and railings to concrete or masonry work. Fabricate anchorage devices capable of withstanding loads imposed by handrails and railings. Coordinate anchorage devices with supporting structure.

I. For railing posts set in concrete, provide preset sleeves of steel not less than 6 inches (150 mm) long with inside dimensions not less than 1/2 inch (12 mm) greater than outside dimensions of post, and steel plate forming bottom closure.

J. Shear and punch metals cleanly and accurately. Remove burrs from exposed cut edges.

K. Ease exposed edges to a radius of approximately 1/32 inch (1 mm), unless otherwise indicated. Form bent-metal corners to smallest radius possible without causing grain separation or otherwise impairing the Work.

L. Cut, reinforce, drill, and tap components, as indicated, to receive finish hardware, screws, and similar items.

M. Provide weep holes or another means to drain entrapped water in hollow sections of handrail and railing members that are exposed to exterior or to moisture from condensation or other sources.

N. Fabricate joints that will be exposed to weather in a watertight manner.

O. Close exposed ends of handrail and railing members with prefabricated end fittings.

P. Provide wall returns at ends of wall-mounted handrails, unless otherwise indicated. Close ends of returns, unless clearance between end of railing and wall is 1/4 inch (6 mm) or less.

Q. Fillers: Provide fillers made from steel plate, or other suitably crush-resistant material, where

needed to transfer wall bracket loads through wall finishes to structural supports. Size fillers to suit wall finish thicknesses and to produce adequate bearing area to prevent bracket rotation and overstressing of substrate.

2.6 FINISHES, GENERAL

A. Comply with NAAMM's "Metal Finishes Manual for Architectural and Metal Products" for recommendations for applying and designating finishes.

B. Protect mechanical finishes on exposed surfaces from damage by applying a strippable, temporary protective covering before shipping.

C. Appearance of Finished Work: Variations in appearance of abutting or adjacent pieces are acceptable if they are within one-half of the range of approved Samples. Noticeable variations in the same piece are not acceptable. Variations in appearance of other components are acceptable if they are within the range of approved Samples and are assembled or installed to minimize contrast.

D. Provide exposed fasteners with finish matching appearance, including color and texture, of handrails and railings.

2.7 STEEL FINISHES

A. Galvanized Handrails and Railings: Hot-dip galvanize exterior steel and iron handrails and railings to comply with ASTM A 123. Hot-dip galvanize hardware for exterior steel and iron handrails and railings to comply with ASTM A 153/A 153M.

B. Fill vent and drain holes that will be exposed in finished Work, unless indicated to remain as weep holes, by plugging with zinc solder and filing off smooth.

C. For galvanized handrails and railings, provide galvanized fittings, brackets, fasteners, sleeves, and other ferrous components.

D. For nongalvanized steel handrails and railings, provide nongalvanized ferrous-metal fittings, brackets, fasteners, and sleeves, except galvanize anchors to be embedded in exterior concrete or masonry.

E. Preparation for Shop Priming: After galvanizing, thoroughly clean handrails and railings of grease, dirt, oil, flux, and other foreign matter, and treat with metallic-phosphate process.

F. Preparation for Shop Priming: Prepare uncoated ferrous-metal surfaces to comply with minimum requirements indicated below for SSPC surface-preparation specifications and environmental exposure conditions of installed handrails and railings:
   1. Exteriors (SSPC Zone 1B): SSPC-SP 6, "Commercial Blast Cleaning."
   2. Interiors (SSPC Zone 1A): SSPC-SP 7, "Brush-off Blast Cleaning."

G. Apply shop primer to prepared surfaces of handrail and railing components, unless otherwise indicated. Comply with requirements in SSPC-PA 1, "Paint Application Specification No. 1," for shop painting. Primer need not be applied to surfaces to be embedded in concrete or masonry.
   1. Do not apply primer to galvanized surfaces.
   2. Stripe paint edges, corners, crevices, bolts, and welds.
   3. Delete shop primer where railings are indicated to receive a clear coat finish.

PART 3 - EXECUTION

3.1 EXAMINATION

A. Examine plaster and gypsum board assemblies, where reinforced to receive anchors, to verify that locations of concealed reinforcements have been clearly marked for Installer. Locate reinforcements and mark locations if not already done.

3.2 INSTALLATION, GENERAL

A. Fit exposed connections together to form tight, hairline joints.

B. Perform cutting, drilling, and fitting required to install handrails and railings. Set handrails and railings accurately in location, alignment, and elevation; measured from established lines and levels and free from rack.
   1. Do not weld, cut, or abrade surfaces of handrail and railing components that have been coated or finished after fabrication and that are intended for field connection by mechanical or other means without further cutting or fitting.
   2. Set posts plumb within a tolerance of 1/16 inch in 3 feet (2 mm in 1 m).
   3. Align rails so variations from level for horizontal members and from parallel with rake of steps and ramps for sloping members do not exceed 1/4 inch in 12 feet (5 mm in 3 m).

C. Corrosion Protection: Coat concealed surfaces that will be in contact with grout, concrete, masonry, wood, or dissimilar metals with a heavy coat of bituminous paint.

D. Adjust handrails and railings before anchoring to ensure matching alignment at abutting joints. Space posts at interval indicated, but not less than that required by structural loads.

E. Fastening to In-Place Construction: Use anchorage devices and fasteners where necessary for securing handrails and railings and for properly transferring loads to in-place construction.

3.3 RAILING CONNECTIONS

A. Nonwelded Connections: Use mechanical or adhesive joints for permanently connecting railing components. Use wood blocks and padding to prevent damage to railing members and fittings. Seal recessed holes of exposed locking screws using plastic cement filler colored to match finish of handrails and railings.

B. Welded Connections: Use fully welded joints for permanently connecting railing components. Comply with requirements for welded connections in "Fabrication" Article whether welding is performed in the shop or in the field.

C. Expansion Joints: Install expansion joints at locations indicated but not farther apart than required to accommodate thermal movement. Provide slip-joint internal sleeve extending 2 inches (50 mm) beyond joint on either side, fasten internal sleeve securely to one side, and locate joint within 6 inches (150 mm) of post.

3.4 ANCHORING POSTS

A. Cover anchorage joint with flange of same metal as post, attached to post as follows:

1. By set screws.

B. Anchor posts to metal surfaces with oval flanges, angle type, or floor type as required by conditions, connected to posts and to metal supporting members as follows:
   1. For steel pipe railings, weld flanges to post and bolt to metal supporting surfaces.

C. Install removable railing sections, where indicated, in slip-fit metal sockets cast in concrete.

3.5 ANCHORING RAILING ENDS

A. Anchor railing ends into concrete and masonry with round flanges connected to railing ends and anchored into wall construction with postinstalled anchors and bolts.

B. Anchor railing ends to metal surfaces with flanges bolted to metal surfaces.
   1. Connect flanges to railing ends using nonwelded connections.

3.6 ATTACHING HANDRAILS TO WALLS

A. Attach handrails to wall with wall brackets. Provide bracket with 1-1/2-inch (38-mm) clearance from inside face of handrail and finished wall surface.

B. Locate brackets as indicated or, if not indicated, at spacing required to support structural loads.

C. Secure wall brackets to building construction as follows:
   1. For concrete and solid masonry anchorage, use drilled-in expansion shields and hanger or lag bolts.
   2. For hollow masonry anchorage, use toggle bolts.
   3. For steel-framed gypsum board assemblies, use hanger or lag bolts set into wood backing between studs. Coordinate with stud installation to locate backing members.

3.7 CLEANING

A. Touchup Painting: Immediately after erection, clean field welds, bolted connections, and abraded areas of shop paint, and paint exposed areas with same material.

B. Galvanized Surfaces: Clean field welds, bolted connections, and abraded areas and repair galvanizing to comply with ASTM A 780.

3.8 PROTECTION

A. Protect finishes of handrails and railings from damage during construction period with temporary protective coverings approved by railing manufacturer. Remove protective coverings at the time of Substantial Completion.

B. Restore finishes damaged during installation and construction period so no evidence remains of correction work. Return items that cannot be refinished in the field to the shop; make required alterations and refinish entire unit, or provide new units.

END OF SECTION 05521

DIVISION 6 - WOOD AND PLASTIC

Section 06100	Rough Carpentry
Section 06402	Interior Architectural Woodwork

PART 1 - GENERAL

1.1 RELATED DOCUMENTS

A. Drawings and general provisions of the Contract, including General and Supplementary Conditions and Division 1 Specification Sections, apply to this Section.

1.2 SUMMARY

A. This Section includes the following:
1. Framing with dimension lumber.
2. Framing with engineered wood products.
3. Wood blocking and nailers.
4. Wood furring.
5. Plywood backing panels.

1.3 DEFINITIONS

A. Exposed Framing: Framing not concealed by other construction.

B. Dimension Lumber: Lumber of 2 inches nominal (38 mm actual) or greater but less than 5 inches nominal (114 mm actual) in least dimension.

C. Lumber grading agencies, and the abbreviations used to reference them, include the following:
1. NLGA: National Lumber Grades Authority.
2. RIS: Redwood Inspection Service.
3. SPIB: The Southern Pine Inspection Bureau.
4. WCLIB: West Coast Lumber Inspection Bureau.
5. WWPA: Western Wood Products Association.

1.4 SUBMITTALS

A. Product Data: For each type of process and factory-fabricated product. Indicate component materials and dimensions and include construction and application details.
1. Include data for wood-preservative treatment from chemical treatment manufacturer and certification by treating plant that treated materials comply with requirements. Indicate type of preservative used and net amount of preservative retained.
2. For products receiving a waterborne treatment, include statement that moisture content of treated materials was reduced to levels specified before shipment to Project site.
3. Include copies of warranties from chemical treatment manufacturers for each type of treatment.

B. Fastener Patterns: Full-size templates for fasteners in exposed framing.

C. Material Certificates: For dimension lumber specified to comply with minimum allowable unit stresses. Indicate species and grade selected for each use and design values approved by the ALSC Board of Review.

D. Research/Evaluation Reports: For the following, showing compliance with building code in effect for Project:
   1. Wood-preservative-treated wood.
   2. Engineered wood products.
   3. Power-driven fasteners.
   4. Powder-actuated fasteners.
   5. Expansion anchors.
   6. Metal framing anchors.

1.5 QUALITY ASSURANCE

A. Source Limitations for Engineered Wood Products: Obtain each type of engineered wood product through one source from a single manufacturer.

1.6 DELIVERY, STORAGE, AND HANDLING

A. Stack lumber flat with spacers between each bundle to provide air circulation. Provide for air circulation around stacks and under coverings.

PART 2 - PRODUCTS

2.1 WOOD PRODUCTS, GENERAL

A. Lumber: DOC PS 20 and applicable rules of grading agencies indicated. If no grading agency is indicated, provide lumber that complies with the applicable rules of any rules-writing agency certified by the ALSC Board of Review. Provide lumber graded by an agency certified by the ALSC Board of Review to inspect and grade lumber under the rules indicated.
   1. Factory mark each piece of lumber with grade stamp of grading agency.
   2. Where nominal sizes are indicated, provide actual sizes required by DOC PS 20 for moisture content specified. Where actual sizes are indicated, they are minimum dressed sizes for dry lumber.
   3. Provide dressed lumber, S4S, unless otherwise indicated.

B. Engineered Wood Products: Provide engineered wood products acceptable to authorities having jurisdiction and for which current model code research or evaluation reports exist that show compliance with building code in effect for Project.
   1. Allowable Design Stresses: Provide engineered wood products with allowable design stresses, as published by manufacturer, that meet or exceed those indicated. Manufacturer's published values shall be determined from empirical data or by rational engineering analysis and demonstrated by comprehensive testing performed by a qualified independent testing agency.

2.2 WOOD-PRESERVATIVE-TREATED LUMBER

A. Preservative Treatment by Pressure Process: AWPA C2, except that lumber that is not in contact with the ground and is continuously protected from liquid water may be treated according to AWPA C31 with inorganic boron (SBX).
   1. Preservative Chemicals: Acceptable to authorities having jurisdiction and containing no arsenic or chromium.

B. Kiln-dry lumber after treatment to a maximum moisture content of 19 percent. Do not use

material that is warped or does not comply with requirements for untreated material.

C. Mark lumber with treatment quality mark of an inspection agency approved by the ALSC Board of Review.

D. Application: Treat items indicated on Drawings, and the following:
   1. Wood cants, nailers, curbs, equipment support bases, blocking, stripping, and similar members in connection with roofing, flashing, vapor barriers, and waterproofing.
   2. Wood sills, sleepers, blocking, furring, and similar concealed members in contact with masonry or concrete.
   3. Wood framing and furring attached directly to the interior of below-grade exterior masonry or concrete walls.
   4. Wood framing members that are less than 18 inches (460 mm) above the ground in crawlspaces or unexcavated areas.
   5. Wood floor plates that are installed over concrete slabs-on-grade.

2.3 DIMENSION LUMBER FRAMING

A. Maximum Moisture Content: 19 percent.

B. Non-Load-Bearing Interior Partitions: Construction or No. 2 grade of any species.

C. Framing Other Than Non-Load-Bearing Interior Partitions: Construction or No. 2 grade and any of the following species:
   1. Hem-fir (north); NLGA.
   2. Douglas fir-larch; WCLIB or WWPA.
   3. Douglas fir-south; WWPA.
   4. Hem-fir; WCLIB or WWPA.

D. Joists, Rafters, and Other Framing Not Listed Above: Construction or No. 2 grade and any of the following species:
   1. Hem-fir (north); NLGA.
   2. Douglas fir-larch; WCLIB or WWPA.
   3. Douglas fir-south; WWPA.
   4. Hem-fir; WCLIB or WWPA.

2.4 ENGINEERED WOOD PRODUCTS

A. Laminated-Veneer Lumber: Structural composite lumber made from wood veneers with grain primarily parallel to member lengths, evaluated and monitored according to ASTM D 5456 and manufactured with an exterior-type adhesive complying with ASTM D 2559.
   1. Available Manufacturers: Subject to compliance with requirements, manufacturers offering products that may be incorporated into the Work include, but are not limited to, the following:
      a. Boise Cascade Corporation.
      b. Georgia-Pacific.
      c. Louisiana-Pacific Corporation.
      d. Weldwood of Canada Limited; Subsidiary of International Paper Corporation.
      e. Weyerhaeuser Company.
   2. Extreme Fiber Stress in Bending, Edgewise: 2600 psi (17.9 MPa) for 12-inch nominal- (286-mm actual-) depth members.
   3. Modulus of Elasticity, Edgewise: 1,800,000 psi (12 400 MPa).

2.5 MISCELLANEOUS LUMBER

A. General: Provide miscellaneous lumber indicated and lumber for support or attachment of other construction, including the following:
   1. Blocking.
   2. Nailers.
   3. Furring.

B. For items of dimension lumber size, provide Construction or No. 2 grade lumber with 19 percent maximum moisture content of any species.

C. For concealed boards, provide lumber with 19 percent maximum moisture content and any of the following species and grades:
   1. Mixed southern pine, No. 2 grade; SPIB.
   2. Hem-fir or hem-fir (north), Construction or 2 Common grade; NLGA, WCLIB, or WWPA.
   3. Western woods, Construction or No. 2 Common grade; WCLIB or WWPA.

D. For blocking not used for attachment of other construction, Utility, Stud, or No. 3 grade lumber of any species may be used provided that it is cut and selected to eliminate defects that will interfere with its attachment and purpose.

E. For blocking and nailers used for attachment of other construction, select and cut lumber to eliminate knots and other defects that will interfere with attachment of other work.

2.6 PLYWOOD BACKING PANELS

A. Telephone and Electrical Equipment Backing Panels: DOC PS 1, Exposure 1, C-D Plugged, in thickness indicated or, if not indicated, not less than 1/2-inch (13-mm) nominal thickness.

2.7 FASTENERS

A. General: Provide fasteners of size and type indicated that comply with requirements specified in this Article for material and manufacture.
   1. Where rough carpentry is exposed to weather, in ground contact, pressure-preservative treated, or in area of high relative humidity, provide fasteners with hot-dip zinc coating complying with ASTM A 153/A 153M.

B. Nails, Brads, and Staples: ASTM F 1667.

C. Power-Driven Fasteners: NES NER-272.

D. Wood Screws: ASME B18.6.1.

E. Lag Bolts: ASME B18.2.1 (ASME B18.2.3.8M).

F. Bolts: Steel bolts complying with ASTM A 307, Grade A (ASTM F 568M, Property Class 4.6); with ASTM A 563 (ASTM A 563M) hex nuts and, where indicated, flat washers.

G. Expansion Anchors: Anchor bolt and sleeve assembly of material indicated below with capability to sustain, without failure, a load equal to 6 times the load imposed when installed in unit masonry assemblies and equal to 4 times the load imposed when installed in concrete

as determined by testing per ASTM E 488 conducted by a qualified independent testing and inspecting agency.

1. Material: Carbon-steel components, zinc plated to comply with ASTM B 633, Class Fe/Zn 5.
2. Material: Stainless steel with bolts and nuts complying with ASTM F 593 and ASTM F 594, Alloy Group 1 or 2 (ASTM F 738M and ASTM F 836M, Grade A1 or A4).

2.8 METAL FRAMING ANCHORS

A. Available Manufacturers: Subject to compliance with requirements, manufacturers offering products that may be incorporated into the Work include, but are not limited to, the following:
   1. Alpine Engineered Products, Inc.
   2. Simpson Strong-Tie Co., Inc.

B. Allowable Design Loads: Provide products with allowable design loads, as published by manufacturer, that meet or exceed those indicated. Manufacturer's published values shall be determined from empirical data or by rational engineering analysis and demonstrated by comprehensive testing performed by a qualified independent testing agency.

C. Galvanized Steel Sheet: Hot-dip, zinc-coated steel sheet complying with ASTM A 653/A 653M, G60 (Z180) coating designation.
   1. Use for interior locations where stainless steel is not indicated.

D. Joist Hangers: U-shaped joist hangers with 2-inch- (50-mm-) long seat and 1-1/4-inch- (32-mm-) wide nailing flanges at least 85 percent of joist depth.
   1. Thickness: 0.062 inch (1.6 mm).

E. I-Joist Hangers: U-shaped joist hangers with 2-inch- (50-mm-) long seat and 1-1/4-inch- (32-mm-) wide nailing flanges full depth of joist. Nailing flanges provide lateral support at joist top chord.
   1. Thickness: 0.062 inch (1.6 mm).

F. Post Bases: Adjustable-socket type for bolting in place with standoff plate to raise post 1 inch (25 mm) above base and with 2-inch- (50-mm-) minimum side cover, socket 0.062 inch (1.6 mm) thick, and standoff and adjustment plates 0.108 inch (2.8 mm) thick.

G. Hold-Downs: Brackets for bolting to wall studs and securing to foundation walls with anchor bolts or to other hold-downs with threaded rods and designed with first of two bolts placed seven bolt diameters from reinforced base.
   1. Bolt Diameter: 5/8 inch (15.8 mm).
   2. Width: 2-1/2 inches (64 mm).
   3. Body Thickness: 0.108 inch (2.8 mm).
   4. Base Reinforcement Thickness: 0.108 inch (2.8 mm).

H. Wall Bracing: T-shaped bracing made for letting into studs in saw kerf, 1-1/8 inches (29 mm) wide by 9/16 inch (14 mm) deep by 0.034 inch (0.85 mm) thick with hemmed edges.

2.9 MISCELLANEOUS MATERIALS

A. Sill-Sealer Gaskets: Closed-cell neoprene foam, 1/4 inch (6.4 mm) thick, selected from manufacturer's standard widths to suit width of sill members indicated.

B. Water-Repellent Preservative: NWWDA-tested and -accepted formulation containing 3-iodo-2-propynyl butyl carbamate, combined with an insecticide containing chloropyrifos as its active ingredient.

PART 3 - EXECUTION

3.1 INSTALLATION, GENERAL

A. Set rough carpentry to required levels and lines, with members plumb, true to line, cut, and fitted. Fit rough carpentry to other construction; scribe and cope as needed for accurate fit. Locate furring, nailers, blocking, and similar supports to comply with requirements for attaching other construction.

B. Framing Standard: Comply with AF&PA's "Details for Conventional Wood Frame Construction," unless otherwise indicated.

C. Framing with Engineered Wood Products: Install engineered wood products to comply with manufacturer's written instructions.

D. Metal Framing Anchors: Install metal framing to comply with manufacturer's written instructions.

E. Do not splice structural members between supports, unless otherwise indicated.

F. Provide blocking and framing as indicated and as required to support facing materials, fixtures, specialty items, and trim.
   1. Provide metal clips for fastening gypsum board or lath at corners and intersections where framing or blocking does not provide a surface for fastening edges of panels. Space clips not more than 16 inches (406 mm) o.c.

G. Provide fire blocking in furred spaces, stud spaces, and other concealed cavities as indicated and as follows:
   1. Fire block furred spaces of walls, at each floor level, at ceiling, and at not more than 96 inches (2438 mm) o.c. with solid wood blocking or noncombustible materials accurately fitted to close furred spaces.
   2. Fire block concealed spaces of wood-framed walls and partitions at each floor level, at ceiling line of top story, and at not more than 96 inches (2438 mm) o.c. Where fire blocking is not inherent in framing system used, provide closely fitted solid wood blocks of same width as framing members and 2-inch nominal- (38-mm actual-) thickness.
   3. Fire block concealed spaces behind combustible cornices and exterior trim at not more than 20 feet (6 m) o.c.

H. Sort and select lumber so that natural characteristics will not interfere with installation or with fastening other materials to lumber. Do not use materials with defects that interfere with function of member or pieces that are too small to use with minimum number of joints or optimum joint arrangement.

I. Comply with AWPA M4 for applying field treatment to cut surfaces of preservative-treated lumber.
   1. Use inorganic boron for items that are continuously protected from liquid water.
   2. Use copper naphthenate for items not continuously protected from liquid water.

J. Securely attach rough carpentry work to substrate by anchoring and fastening as indicated, complying with the following:
   1. NES NER-272 for power-driven fasteners.
   2. Table 2304.9.1, "Fastening Schedule," in ICC's International Building Code.

K. Use common wire nails, unless otherwise indicated. Select fasteners of size that will not fully penetrate members where opposite side will be exposed to view or will receive finish materials. Make tight connections between members. Install fasteners without splitting wood; do not countersink nail heads, unless otherwise indicated.

3.2 WOOD BLOCKING, AND NAILER INSTALLATION

A. Install where indicated and where required for attaching other work. Form to shapes indicated and cut as required for true line and level of attached work. Coordinate locations with other work involved.

B. Attach items to substrates to support applied loading. Recess bolts and nuts flush with surfaces, unless otherwise indicated.

3.3 WOOD FURRING INSTALLATION

A. Install level and plumb with closure strips at edges and openings. Shim with wood as required for tolerance of finish work.

B. Furring to Receive Gypsum Board: Install 1-by-2-inch nominal- (19-by-38-mm actual-) size furring vertically at 16 inches (406 mm) o.c.

3.4 WALL AND PARTITION FRAMING INSTALLATION

A. General: Provide single bottom plate and double top plates using members of 2-inch nominal (38-mm actual) thickness whose widths equal that of studs, except single top plate may be used for non-load-bearing partitions. Fasten plates to supporting construction, unless otherwise indicated.
   1. For exterior walls, provide 2-by-6-inch nominal- (38-by-140-mm actual-) size wood studs spaced 16 inches (406 mm) o.c., unless otherwise indicated.
   2. For interior partitions and walls, provide 2-by-4-inch nominal- (38-by-89-mm actual-) size wood studs spaced 24 inches (610 mm) o.c., unless otherwise indicated.
   3. Provide continuous horizontal blocking at midheight of partitions more than 96 inches (2438 mm) high, using members of 2-inch nominal (38-mm actual) thickness and of same width as wall or partitions.

B. Construct corners and intersections with three or more studs.

C. Frame openings with multiple studs and headers. Provide nailed header members of thickness equal to width of studs. Support headers on jamb studs.
   1. For non-load-bearing partitions, provide double-jamb studs and headers not less than 4-inch nominal (89-mm actual) depth for openings 48 inches (1200 mm) and less in width, 6-inch nominal (140-mm actual) depth for openings 48 to 72 inches (1200 to 1800 mm) in width, 8-inch nominal (184-mm actual) depth for openings 72 to 120 inches (1800 to 3000 mm) in width, and not less than 10-inch nominal (235-mm actual) depth for openings 10 to 12 feet (3 to 3.6 m) in width.
   2. For load-bearing walls, provide double-jamb studs for openings 60 inches (1500 mm)

and less in width, and triple-jamb studs for wider openings. Provide headers of depth indicated.

D. Provide diagonal bracing in exterior walls, at both walls of each external corner, at 45-degree angle, full-story height, unless otherwise indicated. Use metal wall bracing, let into studs in saw kerf.

3.5 PROTECTION

A. Protect wood that has been treated with inorganic boron (SBX) from weather. If, despite protection, inorganic boron-treated wood becomes wet, apply EPA-registered borate treatment. Apply borate solution by spraying to comply with EPA-registered label.

B. Protect rough carpentry from weather. If, despite protection, rough carpentry becomes wet, apply EPA-registered borate treatment. Apply borate solution by spraying to comply with EPA-registered label.

END OF SECTION 06100

SECTION 06402 - INTERIOR ARCHITECTURAL WOODWORK July 16, 2007

PART 1 - GENERAL

1.1 RELATED DOCUMENTS

A. Drawings and general provisions of the Contract, including General and Supplementary Conditions and Division 1 Specification Sections, apply to this Section.

1.2 SUMMARY

A. This Section includes the following:
1. Interior standing and running trim.
2. Laminate-clad cabinets (plastic-covered casework).
3. Plastic-laminate countertops.

B. Related Sections include the following:
1. Division 6 Section "Rough Carpentry" for wood furring, blocking, shims, and hanging strips required for installing woodwork and concealed within other construction before woodwork installation.

1.3 DEFINITIONS

A. Interior architectural woodwork includes wood furring, blocking, shims, and hanging strips for installing woodwork items unless concealed within other construction prior to woodwork installation.

1.4 SUBMITTALS

A. General: Submit each item in this Article according to the Conditions of the Contract and Division 1 Specification Sections.

B. Product data for each type of product and process specified and incorporated into items of architectural woodwork during fabrication, finishing, and installation.

C. Shop drawings showing location of each item, dimensioned plans and elevations, large-scale details, attachment devices, and other components.
1. Show details full size.
2. Show locations and sizes of furring, blocking, and hanging strips, including concealed blocking and reinforcing specified in other Sections.

D. Samples for Selection: Manufacturer's color charts consisting of units or sections of units showing the full range of colors, textures, and patterns available for each type of material indicated.
1. Plastic laminates.
2. Thermoset decorative overlays.
3. Solid-surfacing materials.

E. Samples for verification of the following:
1. Lumber with or for transparent finish, 50 sq. in. (300 sq. cm), for each species and cut, finished on one side and one edge.
2. Plastic-laminate-clad panel products, 8 by 10 inches (200 by 250 mm), for each type,

color, pattern, and surface finish.

3. Thermoset decorative-overlay surfaced panel products, 8 by 10 inches (200 by 250 mm), for each type, color, pattern, and surface finish, with separate samples of unfaced panel product used for core.
4. Exposed cabinet hardware, one unit for each type and finish.

1.5 QUALITY ASSURANCE

A. Single-Source Responsibility for Fabrication and Installation: Engage a qualified woodworking firm to assume undivided responsibility for fabricating, finishing, and installing woodwork specified in this Section.

B. Quality Standard: Except as otherwise indicated, comply with the following standard:
   1. AWI Quality Standard: "Architectural Woodwork Quality Standards" of the Architectural Woodwork Institute for grades of interior architectural woodwork, construction, finishes, and other requirements.
      a. Provide AWI Certification Labels or Certificates of Compliance indicating that woodwork meets requirements of grades specified.

1.6 DELIVERY, STORAGE, AND HANDLING

A. Protect woodwork during transit, delivery, storage, and handling to prevent damage, soilage, and deterioration.

B. Do not deliver woodwork until painting and similar operations that could damage, soil, or deteriorate woodwork have been completed in installation areas. If woodwork must be stored in other than installation areas, store only in areas whose environmental conditions meet requirements specified in "Project Conditions."

1.7 PROJECT CONDITIONS

A. Environmental Limitations: Do not deliver or install woodwork until building is enclosed, wet-work is completed, and HVAC system is operating and will maintain temperature and relative humidity at occupancy levels during the remainder of the construction period.

B. Field Measurements: Where woodwork is indicated to be fitted to other construction, check actual dimensions of other construction by accurate field measurements before fabrication, and show recorded measurements on final shop drawings. Coordinate fabrication schedule with construction progress to avoid delaying the Work.
   1. Verify locations of concealed framing, blocking, reinforcements, and furring that support woodwork by accurate field measurements before being enclosed. Record measurements on final shop drawings.
   2. Where field measurements cannot be made without delaying the Work, guarantee dimensions and proceed with fabricating woodwork without field measurements. Provide allowance for trimming at site and coordinate construction to ensure that actual dimensions correspond to guaranteed dimensions.

1.8 COORDINATION

A. Coordinate sizes and locations of framing, blocking, furring, reinforcements, and other related units of Work specified in other Sections to ensure that interior architectural woodwork can be supported and installed as indicated.

PART 2 - PRODUCTS

2.1 WOODWORK FABRICATORS

A. Fabricators: Subject to compliance with requirements, provide interior architectural woodwork by one of the following:
   1. Huetter Mill and Cabinet Company.
   2. Granite Mill and Fixture Company.
   3. Anderson Mill, Inc.
   4. Crossroads Mill & Installation, Inc.
   5. Lloyd's Custom Cabinets.
   6. Other's bidding the work of this Section shall submit for approval prior to bidding.

2.2 MATERIALS

A. General: Provide materials that comply with requirements of the AWI quality standard for each type of woodwork and quality grade indicated and, where the following products are part of interior woodwork, with requirements of the referenced product standards that apply to product characteristics indicated:
   1. Hardboard: AHA A135.4.
   2. Particleboard: ANSI A208.1, Grade M-2.
   3. Softwood Plywood: PS 1.
   4. Hardwood Plywood and Face Veneers: HPVA HP-1.

B. Particleboard: ANSI A208.1, Grade M-2 made with phenol-formaldehyde resins.

C. Cores:
   1. All sides, tops, countertops, bottoms, doors, drawer fronts, and partitions shall have minimum 3/4" thick multi-core premium grade panel product cores manufactured for use as a core material for laminated casework. Provide 1-inch thickness for bottom panel of wall hung units (same as shelves).
   2. Shelf Cores: Shelves shall have the same core material as specified for the cabinet body except provide 1-inch thickness.
   3. Multi-Core Panel Products:
      a. Simpson Plyron, Simpson.
      b. Vencore, Timber Products Company.

D. Wood Species and Cut for Transparent Finish: Natural White Maple, flat cut.

E. High-Pressure Decorative Laminate: NEMA LD 3, grades as indicated, or if not indicated, as required by woodwork quality standard.
   1. Manufacturer: Subject to compliance with requirements, provide high-pressure decorative laminates by one of the following:
      a. Formica Corporation.
      b. Laminart.
      c. Nevamar Corp.
      d. Ralph Wilson Plastics Co.

F. Adhesive for Bonding Plastic Laminate: Contact cement.

G. Thermoset Decorative Overlay: Decorative surface of thermally fused polyester or melamine-impregnated web, bonded to specified substrate and complying with ALA 1992.

1. Substrate: Medium-density particleboard.

2.3 CABINET HARDWARE AND ACCESSORY MATERIALS

A. General: Provide cabinet hardware and accessory materials associated with architectural cabinets, except for items specified in Division 8 Section "Door Hardware."

1. Frameless Concealed Hinges (European Type): BHMA A156.9, B01602, 170 degrees of opening, self-closing.
   a. Equal to: Blum, 71.6500.
2. Pulls:
   a. Type No. 1: As selected by Architect.
   b. Type No. 2: HAFELE, 116.09.617, 106 x 35 x 96, Nickel Matt finish.
3. Catches: Friction roller catch.
4. Magnetic Pressure Catches: HAFELE, 245.61.322, black plastic. Provide matching strike as required.
5. Drawer Slides: Drawer slides for standard drawers shall be Blum BS230E or equal with 100 pound rating and baked enamel corrosion resistant finish. File drawers and paper drawer slides shall be KV8505 or equal full extension with 150 pound rating.
6. Adjustable Shelf Supports:
   a. Adjustable shelves shall be supported on adjustable shelf supports inserted in shelf holes drilled into the case ends or partitions and adjustable on 32mm (1 1/2") centers. Supports to be KV 346 clips.
7. Shelf Runners: HAFELE, 421.25.404, Model CY-100, 66 lb load carrying capacity per pair, epoxy coated steel, 11-5/8 inch extension.
8. Hanging File Rails: Side rails and frame for installation in filing cabinets or drawers. Frame shall be adjustable to fit various drawer sizes.
9. Locks: Locks for drawers and 3/4" hinged doors shall be National Lock #8053 disc tumber.
10. Wall Shelf Standards: Heavy-duty, double-tracked, double-formed, 2" based standards. Epoxy powder finish. Equal to Newtech Hardware.
11. Wall Shelf Brackets: 1" wide x 5/8" deep double slotted brackets adjustable on 1-3/4" centers. Equal to Newtech Hardware.
12. Cable Grommets: HAFELE, 429.94.258, 2-1/2” Matt Nickel finish.
13. Screws: Reed and Prince square drive screws. Standard wood screws and sheet metal screws are not acceptable.

2.4 INSTALLATION MATERIALS

A. Furring, Blocking, Shims, and Hanging Strips: Softwood or hardwood lumber, kiln dried to less than 15 percent moisture content.

B. Screws: Select material, type, size, and finish required for each use. Comply with ASME B18.6.1 for applicable requirements.

1. For metal framing supports, provide screws as recommended by metal-framing manufacturer.

C. Nails: Select material, type, size, and finish required for each use. Comply with FS FF-N-105 for applicable requirements.

D. Anchors: Select material, type, size, and finish required for each substrate for secure anchorage. Provide nonferrous metal or hot-dip galvanized anchors and inserts on inside face of exterior walls and elsewhere as required for corrosion resistance. Provide toothed steel or lead expansion bolt devices for drilled-in-place anchors.

2.5 FABRICATION, GENERAL

A. Interior Woodwork Grade: Provide interior woodwork complying with the referenced quality standard and of the following grade:
   1. Grade: Premium.

B. Wood Moisture Content: Comply with requirements of referenced quality standard for wood moisture content in relation to relative humidity conditions existing during time of fabrication and in installation areas.

C. Fabricate woodwork to dimensions, profiles, and details indicated. Ease edges to radius indicated for the following:
   1. Corners of cabinets and edges of solid-wood (lumber) members and rails: 1/16 inch (1.5 mm).

D. Complete fabrication, including assembly, finishing, and hardware application, before shipment to Project site to maximum extent possible. Disassemble components only as necessary for shipment and installation. Where necessary for fitting at site, provide ample allowance for scribing, trimming, and fitting.
   1. Trial fit assemblies at the fabrication shop that cannot be shipped completely assembled. Install dowels, screws, bolted connectors, and other fastening devices that can be removed after trial fitting. Verify that various parts fit as intended and check measurements of assemblies against field measurements indicated on approved shop drawings before disassembling for shipment.

E. Shop-cut openings, to maximum extent possible, to receive hardware, appliances, plumbing fixtures, electrical work, and similar items. Locate openings accurately and use templates or roughing-in diagrams to produce accurately sized and shaped openings. Smooth edges of cutouts and, where located in countertops and similar exposures, seal edges with a water-resistant coating.

2.6 INTERIOR STANDING AND RUNNING TRIM FOR TRANSPARENT FINISH

A. Quality Standard: Comply with AWI Section 300.

B. Grade: Premium.

C. For trim items wider than available lumber, use veneered construction. Do not glue for width.

D. For rails wider or thicker than available lumber, use veneered construction. Do not glue for width or thickness.

E. Backout or groove backs of flat trim members and kerf backs of other wide, flat members, except for members with ends exposed in finished work.

F. Assemble casings in plant except where limitations of access to place of installation require field assembly.

G. Assemble moldings in plant to maximum extent possible. Miter corners in plant and prepare for field assembly with bolted fittings designed to pull connections together.

H. Hardwood Lumber Trim for Transparent Finish (Stain or Clear Finish): Clear, kiln-dried,

Natural White Maple, flat cut, finished lumber (S4S).

2.7 LAMINATE-CLAD CABINETS (PLASTIC-COVERED CASEWORK)

A. Quality Standard: Comply with AWI Section 400 requirements for laminate-clad cabinets.
   1. Grade: Premium.

B. AWI Type of Cabinet Construction: Flush overlay.

C. Laminate Cladding for Exposed Surfaces: High-pressure decorative laminate complying with the following requirements:
   1. Horizontal Surfaces Other than Tops: GP-50, 0.050-inch (1.270-mm) nominal thickness.
   2. Postformed Surfaces: PF-42, 0.042-inch (1.067-mm) nominal thickness.
   3. Vertical Surfaces: GP-50, 0.050-inch (1.270-mm) nominal thickness.
   4. Edges: GP-50, 0.050-inch (1.270-mm) nominal thickness.

D. Materials for Semiexposed Surfaces: Provide surface materials indicated below:
   1. Surfaces Other than Drawer Bodies: High-pressure decorative laminate, Grade GP-28.
   2. Drawer Sides and Backs: Thermoset decorative overlay.
   3. Drawer Bottoms: Thermoset decorative overlay.

E. Colors, Patterns, and Finishes: Provide materials and products that result in colors and textures of exposed laminate surfaces complying with the following requirements:
   1. Match color, pattern, and finish indicated by reference to laminate manufacturer's standard designations for these characteristics.

F. Provide dust panels of 1/4-inch (6.4-mm) plywood or tempered hardboard above compartments and drawers except where located directly under tops.

2.8 PLASTIC-LAMINATE COUNTERTOPS

A. Grade: Premium.

B. High-Pressure Decorative Laminate Grade: HGS.

C. Colors, Patterns, and Finishes: Provide materials and products that result in colors and textures of exposed laminate surfaces complying with the following requirements:
   1. As indicated by manufacturer's designations.

D. Edge Treatment: Same as laminate cladding on horizontal surfaces, double bull-nose profile. Provide PVC T-mold matching laminate in color, pattern, and finish where indicated.

E. Core Material: Particleboard or medium-density fiberboard.

F. Core Material at Sinks: Particleboard made with exterior glue OR Medium-density fiberboard made with exterior glue.

G. Backer Sheet: Provide plastic-laminate backer sheet, Grade BKL, on underside of countertop substrate.

H. Provide backsplash along entire length of countertop and return backsplash along side walls

of all base cabinets.

2.9 SHOP FINISHING OF INTERIOR ARCHITECTURAL WOODWORK

A. Quality Standard: Comply with AWI Section 1500, unless otherwise indicated.

B. General: The entire finish of interior architectural woodwork is specified in this Section, regardless of whether shop applied or applied after installation.
   1. Shop Finishing: The extent to which the final finish is applied to architectural woodwork at the fabrication shop is the Contractor's option, except shop apply at least the prime/base coat to the greatest extent possible before delivery.

C. Preparations for Finishing: Comply with referenced quality standard for sanding, filling countersunk fasteners, sealing concealed surfaces, and similar preparations for finishing architectural woodwork, as applicable to each unit of work.
   1. Backpriming: Apply one coat of sealer or primer compatible with finish coats to concealed surfaces of woodwork, including backs of trim, cabinets, paneling, and ornamental work and the underside of countertops. Apply 2 coats to back of paneling. Concealed surfaces of plastic laminate-clad woodwork do not require backpriming when surfaced with plastic laminate or thermoset decorative overlay.

D. Washcoat for Stained Finish: Apply a vinyl washcoat to woodwork made from closed-grain wood before staining and finishing.

E. Transparent Finish: Comply with requirements indicated below for grade, finish system, staining, and sheen, with sheen measured on 60-degree gloss meter per ASTM D 523:
   1. Grade: Premium.
   2. AWI Finish System TR-6: Catalyzed polyurethane.
   3. Staining: Match existing.
   4. Wash Coat for Stained Finish: Apply a vinyl wash coat to woodwork made from closed-grain wood before staining and finishing.
   5. Open Finish for Open-Grain Woods: Do not apply filler to open-grain woods.
   6. Filled Finish for Open-Grain Woods: After staining (if any), apply paste wood filler to open-grain woods and wipe off excess. Tint filler to match stained wood.
      a. Apply vinyl wash coat sealer after staining and before filling.
   7. Sheen: Satin, 30-50 Gloss units.

PART 3 - EXECUTION

3.1 PREPARATION

A. Condition woodwork to average prevailing humidity conditions in installation areas before installing.

B. Before installing architectural woodwork, examine shop-fabricated work for completion and complete work as required, including back priming and removal of packing.

3.2 INSTALLATION

A. Quality Standard: Install woodwork to comply with AWI Section 1700 for the same grade specified in Part 2 of this Section for type of woodwork involved.

B. Install woodwork plumb, level, true, and straight with no distortions. Shim as required with concealed shims. Install to a tolerance of 1/8 inch in 96 inches (3 mm in 2400 mm) for plumb and level (including tops).

C. Scribe and cut woodwork to fit adjoining work and refinish cut surfaces or repair damaged finish at cuts.

D. Anchor woodwork to anchors or blocking built in or directly attached to substrates. Secure to grounds, stripping and blocking with countersunk, concealed fasteners and blind nailing as required for complete installation. Use fine finishing nails for exposed nailing, countersunk and filled flush with woodwork and matching final finish where transparent finish is indicated.

E. Standing and Running Trim: Install with minimum number of joints possible, using full-length pieces (from maximum length of lumber available) to greatest extent possible. Do not use pieces less than 96 inches (2400 mm) long, except where shorter single-length pieces are necessary. Scarf running joints and stagger in adjacent and related members.
   1. Fill gaps, if any, between top of base and wall with plastic wood filler, sand smooth, and finish same as wood base, if finished.
   2. Install standing and running trim with no more variation from a straight line than 1/8 inch in 96 inches (3 mm in 2400 mm).

F. Cabinets: Install without distortion so that doors and drawers fit openings properly and are accurately aligned. Adjust hardware to center doors and drawers in openings and to provide unencumbered operation. Complete the installation of hardware and accessory items as indicated.
   1. Install cabinets with no more than 1/8 inch in 96-inch (3 mm in 2400-mm) sag, bow, or other variation from a straight line.
   2. Maintain veneer sequence matching of cabinets with transparent finish.

G. Countertops: Anchor securely by screwing through corner blocks of base cabinets or other supports into underside of countertop.
   1. Install countertops with no more than 1/8 inch in 96-inch (3 mm in 2400-mm) sag, bow, or other variation from a straight line.
   2. Secure backsplashes to tops with concealed metal brackets at 16 inches (400 mm) o.c. and to walls with adhesive.
   3. Calk space between backsplash and wall with sealant specified in Division 7 Section "Joint Sealants."

H. Complete the finishing work specified in this Section to the extent not completed at shop or before installation of woodwork.

3.3 ADJUSTING AND CLEANING

A. Repair damaged and defective woodwork where possible to eliminate functional and visual defects; where not possible to repair, replace woodwork. Adjust joinery for uniform appearance.

B. Clean, lubricate, and adjust hardware.

C. Clean woodwork on exposed and semiexposed surfaces. Touch up shop-applied finishes to restore damaged or soiled areas.

3.4 PROTECTION

A. Provide final protection and maintain conditions in a manner acceptable to fabricator and Installer that ensures that woodwork is without damage or deterioration at the time of Substantial Completion.

END OF SECTION 06402

DIVISION 7 - THERMAL AND MOISTURE PROTECTION

Section 07210	Building Insulation
Section 07841	Through-Penetration Firestop Systems
Section 07920	Joint Sealants

SECTION 07210 - BUILDING INSULATION July 16, 2007

PART 1 - GENERAL

1.1 RELATED DOCUMENTS

A. Drawings and general provisions of the Contract, including General and Supplementary Conditions and Division 1 Specification Sections, apply to this Section.

1.2 SUMMARY

A. This Section includes the following:
   1. Concealed building insulation.
   2. Radiant barriers.
   3. Safing insulation.

B. Related Sections: The following Sections contain requirements that relate to this Section:
   1. Division 9 Section indicated below for insulation installed as part of metal-framed wall and partition assemblies:
      a. "Gypsum Board Assemblies."

1.3 SUBMITTALS

A. General: Submit each item in this Article according to the Conditions of the Contract and Division 1 Specification Sections.

B. Product Data for each type of insulation product specified.

C. Product test reports from and based on tests performed by a qualified independent testing agency evidencing compliance of insulation products with specified requirements including those for thermal resistance, fire-test-response characteristics, water-vapor transmission, water absorption, and other properties, based on comprehensive testing of current products.

1.4 QUALITY ASSURANCE

A. Single-Source Responsibility for Insulation Products: Obtain each type of building insulation from a single source with resources to provide products complying with requirements indicated without delaying the Work.

B. Fire-Test-Response Characteristics: Provide insulation and related materials with the fire-test-response characteristics indicated on Drawings or specified elsewhere in this Section as determined by testing identical products per test method indicated below by UL or another testing and inspecting agency acceptable to authorities having jurisdiction. Identify materials with appropriate markings of applicable testing and inspecting agency.
   1. Surface-Burning Characteristics: ASTM E 84.
   2. Fire-Resistance Ratings: ASTM E 119.
   3. Combustion Characteristics: ASTM E 136.

1.5 DELIVERY, STORAGE, AND HANDLING

A. Protect insulation materials from physical damage and from deterioration by moisture, soiling, and other sources. Store inside and in a dry location. Comply with manufacturer's written

instructions for handling, storing, and protecting during installation.

PART 2 - PRODUCTS

2.1 MANUFACTURERS

A. Available Manufacturers: Subject to compliance with requirements, manufacturers offering insulation products that may be incorporated in the work include, but are not limited to, the following:
   1. Glass-Fiber Insulation:
      a. CertainTeed Corporation.
      b. Knauf Fiber Glass GmbH.
      c. Owens-Corning Fiberglas Corporation.
      d. Johns Manville Corporation.

2.2 INSULATING MATERIALS

A. General: Provide insulating materials that comply with requirements and with referenced standards.
   1. Preformed Units: Sizes to fit applications indicated; selected from manufacturer's standard thicknesses, widths, and lengths.

B. Unfaced Mineral-Fiber Blanket Insulation: Thermal insulation combining mineral fibers of type described below with thermosetting resins to comply with ASTM C 665, Type I (blankets without membrane facing).
   1. Mineral-Fiber Type: Fibers manufactured from glass.
   2. Surface-Burning Characteristics: Maximum flame-spread and smoke-developed indices of 25 and 50, respectively.

C. Faced Mineral-Fiber Blanket Insulation: ASTM C 665, Type III (blankets with reflective membrane facing), Class A (membrane-faced surface with a flame spread of 25 or less); Category 1 (membrane is a vapor barrier), faced with foil-scrim-kraft, foil-scrim, or foil-scrim-polyethylene vapor-retarder membrane on one face; consisting of fibers manufactured from glass.

D. Sound Attenuation Blankets: ASTM C 665, Type I; semi-rigid mineral fiber blanket without membrane, Class 25 flame-spread. Furnish in 2-3/4", 4" and 6" thicknesses. Provide minimum thickness as required to achieve a minimum 50 STC in all walls.

2.3 SAFING INSULATION AND ACCESSORIES

A. Slag-Wool-Fiber Board Safing Insulation: Semirigid boards designed for use as fire stop at openings between edge of slab and exterior wall panels, produced by combining slag-wool fibers with thermosetting resin binders to comply with ASTM C 612, Type IA and IB; nominal density of 4 lb/cu. ft. (64 kg/cu. m); passing ASTM E 136 for combustion characteristics; thermal resistivity of 4 deg F x h x sq. ft./Btu x in. at 75 deg F (27.7 K x m/W at 24 deg C).

B. Calking Compound: Material approved by manufacturer of safing insulation for sealing joint between foil backing of safing insulation and edge of concrete floor slab against penetration of smoke.

C. Safing Clips: Galvanized steel safing clips approved by manufacturer of safing insulation for

holding safing insulation in place.

2.4 VAPOR RETARDERS

A. Reinforced-Polyethylene Vapor Retarders: 2 outer layers of polyethylene film laminated to an inner reinforcing layer consisting of either nylon cord or polyester scrim and weighing not less than 25 lb/1000 sq. ft. (12 kg/100 sq. m), with maximum permeance rating of 0.0507 perm (2.9 ng/Pa x s x sq. m).

B. Vapor-Retarder Tape: Pressure-sensitive tape of type recommended by vapor retarder manufacturer for sealing joints and penetrations in vapor retarder.

C. Available Products: Subject to compliance with requirements, products that may be incorporated into the Work include, but are not limited to, the following:
   1. Reinforced-Polyethylene Vapor Retarders:
      a. DURA-SKRIM 6WW; Raven Industries, Inc.
      b. Griffolyn T-65; Reef Industries, Inc., Griffolyn Div.

PART 3 - EXECUTION

3.1 EXAMINATION

A. Examine substrates and conditions, with Installer present, for compliance with requirements of Sections in which substrates and related work are specified and to determine if other conditions affecting performance of insulation are satisfactory. Do not proceed with installation until unsatisfactory conditions have been corrected.

3.2 PREPARATION

A. Clean substrates of substances harmful to insulations or vapor retarders, including removing projections capable of puncturing vapor retarders or that interfere with insulation attachment.

3.3 INSTALLATION, GENERAL

A. Comply with insulation manufacturer's written instructions applicable to products and application indicated.

B. Install insulation that is undamaged, dry, unsoiled, and has not been exposed at any time to ice and snow.

C. Extend insulation in thickness indicated to envelop entire area to be insulated. Cut and fit tightly around obstructions and fill voids with insulation. Remove projections that interfere with placement.

D. Apply single layer of insulation to produce thickness indicated, unless multiple layers are otherwise shown or required to make up total thickness.

3.4 INSTALLATION OF GENERAL BUILDING INSULATION

A. Apply insulation units to substrates by method indicated, complying with manufacturer's written instructions. If no specific method is indicated, bond units to substrate with adhesive or use mechanical anchorage to provide permanent placement and support of units.

B. Seal joints between closed-cell (nonbreathing) insulation units by applying adhesive, mastic, or sealant to edges of each unit to form a tight seal as units are shoved into place. Fill voids in completed installation with adhesive, mastic, or sealant as recommended by insulation manufacturer.

C. Set vapor-retarder-faced units with vapor retarder to warm side of construction, unless otherwise indicated. Do not obstruct ventilation spaces, except for firestopping.
   1. Tape joints and ruptures in vapor retarder, and seal each continuous area of insulation to surrounding construction to ensure airtight installation.

D. Install mineral-fiber blankets in cavities formed by framing members according to the following requirements:
   1. Use blanket widths and lengths that fill cavities formed by framing members. Where more than one length is required to fill cavity, provide lengths that will produce a snug fit between ends.
   2. Place blankets in cavities formed by framing members to produce a friction fit between edges of insulation and adjoining framing members.

E. Stuff glass-fiber loose-fill insulation into miscellaneous voids and cavity spaces. Compact to approximately 40 percent of normal maximum volume equaling a density of approximately 2.5 lb/cu. ft. (40 kg/cu. m).

3.5 INSTALLATION OF SAFING INSULATION

A. Install safing insulation to fill gap between edge of concrete floor slab and back of exterior spandrel panels on safing clips spaced as needed to support insulation, but not further apart than 24 inches (610 mm) o.c. Cut safing insulation wider than gap to be filled to ensure compression fit and seal joint between insulation and edge of slab with calking approved by safing insulation manufacturer for this purpose. Leave no voids in completed installation.

3.6 INSTALLATION OF VAPOR RETARDERS

A. General: Extend vapor retarder to extremities of areas to be protected from vapor transmission. Secure in place with adhesives or other anchorage system as indicated. Extend vapor retarder to cover miscellaneous voids in insulated substrates, including those filled with loose-fiber insulation.

B. Seal vertical joints in vapor retarders over framing by lapping not less than 2 wall studs. Fasten vapor retarders to framing at top, end, and bottom edges; at perimeter of wall openings; and at lap joints. Space fasteners 16 inches (406 mm) o.c.

C. Seal overlapping joints in vapor retarders with adhesives or vapor-retarder tape according to vapor retarder manufacturer's instructions. Seal butt joints and fastener penetrations with vapor-retarder tape. Locate all joints over framing members or other solid substrates.

D. Firmly attach vapor retarders to substrates with mechanical fasteners or adhesives as recommended by vapor retarder manufacturer.

E. Seal joints caused by pipes, conduits, electrical boxes, and similar items penetrating vapor retarders with vapor-retarder tape to create an airtight seal between penetrating objects and vapor retarder.

F. Repair any tears or punctures in vapor retarders immediately before concealment by other work. Cover with vapor-retarder tape or another layer of vapor retarder.

3.7 PROTECTION

A. General: Protect installed insulation and vapor retarders from damage due to harmful weather exposures, physical abuse, and other causes. Provide temporary coverings or enclosures where insulation is subject to abuse and cannot be concealed and protected by permanent construction immediately after installation.

END OF SECTION 07210

PART 1 - GENERAL

1.1 RELATED DOCUMENTS

A. Drawings and general provisions of the Contract, including General and Supplementary Conditions and Division 1 Specification Sections, apply to this Section.

1.2 SUMMARY

A. This Section includes through-penetration firestop systems for penetrations through fire-resistance-rated constructions, including both empty openings and openings containing penetrating items.
   1. The work of this section shall include, but not be limited to, all clips and other restraining devices necessary for holding fire protection material in place and other items necessary for a complete and integral installation thru out the entire perimeter and other penetrations.

B. Related Sections include the following:
   1. Division 7 Section "Fire-Resistive Joint Systems."
   2. Division 15 Sections specifying duct and piping penetrations.
   3. Division 16 Sections specifying cable and conduit penetrations.

1.3 PERFORMANCE REQUIREMENTS

A. General: For penetrations through the following fire-resistance-rated constructions, including both empty openings and openings containing penetrating items, provide through-penetration firestop systems that are produced and installed to resist spread of fire according to requirements indicated, resist passage of smoke and other gases, and maintain original fire-resistance rating of construction penetrated.
   1. Fire-resistance-rated walls including fire walls, fire partitions, fire barriers, and smoke barriers.
   2. Fire-resistance-rated horizontal assemblies including floor/ceiling assemblies and ceiling membranes of roof/ceiling assemblies.

B. Rated Systems: Provide through-penetration firestop systems with the following ratings determined per ASTM E 814 or UL 1479:
   1. F-Rated Systems: Provide through-penetration firestop systems with F-ratings indicated, but not less than that equaling or exceeding fire-resistance rating of constructions penetrated.
   2. T-Rated Systems: For the following conditions, provide through-penetration firestop systems with T-ratings indicated, as well as F-ratings, where systems protect penetrating items exposed to potential contact with adjacent materials in occupiable floor areas:
      a. Penetrations located outside wall cavities.
      b. Penetrations located outside fire-resistance-rated shaft enclosures.
   3. L-Rated Systems: Where through-penetration firestop systems are indicated in smoke barriers, provide through-penetration firestop systems with L-ratings of not more than 3.0 cfm/sq. ft (0.01524cu. m/s x sq. m) at both ambient temperatures and 400 deg F (204 deg C).

C. For through-penetration firestop systems exposed to view, traffic, moisture, and physical damage, provide products that, after curing, do not deteriorate when exposed to these conditions both during and after construction.
   1. For piping penetrations for plumbing and wet-pipe sprinkler systems, provide moisture-resistant through-penetration firestop systems.
   2. For floor penetrations with annular spaces exceeding 4 inches (100 mm) in width and exposed to possible loading and traffic, provide firestop systems capable of supporting floor loads involved, either by installing floor plates or by other means.
   3. For penetrations involving insulated piping, provide through-penetration firestop systems not requiring removal of insulation.

D. For through-penetration firestop systems exposed to view, provide products with flame-spread and smoke-developed indexes of less than 25 and 450, respectively, as determined per ASTM E 84.

1.4 SUBMITTALS

A. Product Data: For each type of product indicated.

B. Shop Drawings: For each through-penetration firestop system, show each type of construction condition penetrated, relationships to adjoining construction, and type of penetrating item. Include firestop design designation of qualified testing and inspecting agency that evidences compliance with requirements for each condition indicated.
   1. Submit documentation, including illustrations, from a qualified testing and inspecting agency that is applicable to each through-penetration firestop system configuration for construction and penetrating items.

C. Through-Penetration Firestop System Schedule: Indicate locations of each through-penetration firestop system, along with the following information:
   1. Types of penetrating items.
   2. Types of constructions penetrated, including fire-resistance ratings and, where applicable, thicknesses of construction penetrated.
   3. Through-penetration firestop systems for each location identified by firestop design designation of qualified testing and inspecting agency.

D. Qualification Data: For Installer.

E. Product Test Reports: From a qualified testing agency indicating through-penetration firestop system complies with requirements, based on comprehensive testing of current products.

1.5 QUALITY ASSURANCE

A. Installer Qualifications: A firm that has been approved by FMG according to FMG 4991, "Approval of Firestop Contractors."

B. Installation Responsibility: Assign installation of through-penetration firestop systems and fire-resistive joint systems in Project to a single qualified installer.

C. Source Limitations: Obtain through-penetration firestop systems, for each kind of penetration and construction condition indicated, through one source from a single manufacturer.

D. Fire-Test-Response Characteristics: Provide through-penetration firestop systems that comply with the following requirements and those specified in Part 1 "Performance

Requirements" Article:

1. Firestopping tests are performed by a qualified testing and inspecting agency. A qualified testing and inspecting agency is UL or another agency performing testing and follow-up inspection services for firestop systems acceptable to authorities having jurisdiction.
2. Through-penetration firestop systems are identical to those tested per testing standard referenced in "Part 1 Performance Requirements" Article. Provide rated systems complying with the following requirements:
    a. Through-penetration firestop system products bear classification marking of qualified testing and inspecting agency.
    b. Through-penetration firestop systems correspond to those indicated by reference to through-penetration firestop system designations listed by the following:
        1) UL in its "Fire Resistance Directory."

E. Preinstallation Conference: Conduct conference at Project site to comply with requirements in Division 1 Section "Project Management and Coordination."

1.6 DELIVERY, STORAGE, AND HANDLING

A. Deliver through-penetration firestop system products to Project site in original, unopened containers or packages with intact and legible manufacturers' labels identifying product and manufacturer, date of manufacture, lot number, shelf life if applicable, qualified testing and inspecting agency's classification marking applicable to Project, curing time, and mixing instructions for multicomponent materials.

B. Store and handle materials for through-penetration firestop systems to prevent their deterioration or damage due to moisture, temperature changes, contaminants, or other causes.

1.7 PROJECT CONDITIONS

A. Environmental Limitations: Do not install through-penetration firestop systems when ambient or substrate temperatures are outside limits permitted by through-penetration firestop system manufacturers or when substrates are wet due to rain, frost, condensation, or other causes.

B. Ventilate through-penetration firestop systems per manufacturer's written instructions by natural means or, where this is inadequate, forced-air circulation.

1.8 COORDINATION

A. Coordinate construction of openings and penetrating items to ensure that through-penetration firestop systems are installed according to specified requirements.

B. Coordinate sizing of sleeves, openings, core-drilled holes, or cut openings to accommodate through-penetration firestop systems.

C. Notify Owner's inspecting agency at least seven days in advance of through-penetration firestop system installations; confirm dates and times on days preceding each series of installations.

D. Do not cover up through-penetration firestop system installations that will become concealed behind other construction until each installation has been examined by Owner's inspecting

agency and building inspector, if required by authorities having jurisdiction.

PART 2 - PRODUCTS

2.1 MANUFACTURERS

A. Available Products: Subject to compliance with requirements, through-penetration firestop systems that may be incorporated into the Work include, but are not limited to, those systems indicated that are produced by one of the following manufacturers:
1. Grace, W. R. & Co. - Conn.
2. Hilti, Inc.
3. Nelson Firestop Products.
4. 3M; Fire Protection Products Division.
5. Tremco; Sealant/Weatherproofing Division.

2.2 FIRESTOPPING, GENERAL

A. Compatibility: Provide through-penetration firestop systems that are compatible with one another; with the substrates forming openings; and with the items, if any, penetrating through-penetration firestop systems, under conditions of service and application, as demonstrated by through-penetration firestop system manufacturer based on testing and field experience.

B. Accessories: Provide components for each through-penetration firestop system that are needed to install fill materials and to comply with Part 1 "Performance Requirements" Article. Use only components specified by through-penetration firestop system manufacturer and approved by qualified testing and inspecting agency for firestop systems indicated. Accessories include, but are not limited to, the following items:
1. Permanent forming/damming/backing materials, including the following:
   a. Slag-/rock-wool-fiber insulation.
   b. Sealants used in combination with other forming/damming/backing materials to prevent leakage of fill materials in liquid state.
   c. Fire-rated form board.
   d. Fillers for sealants.
2. Temporary forming materials.
3. Substrate primers.
4. Collars.
5. Steel sleeves.

2.3 FILL MATERIALS

A. General: Provide through-penetration firestop systems containing the types of fill materials indicated. Fill materials are those referred to in directories of referenced testing and inspecting agencies as "fill," "void," or "cavity" materials.

B. Cast-in-Place Firestop Devices: Factory-assembled devices for use in cast-in-place concrete floors and consisting of an outer metallic sleeve lined with an intumescent strip, a radial extended flange attached to one end of the sleeve for fastening to concrete formwork, and a neoprene gasket.

C. Latex Sealants: Single-component latex formulations that after cure do not re-emulsify during exposure to moisture.

D. Firestop Devices: Factory-assembled collars formed from galvanized steel and lined with intumescent material sized to fit specific diameter of penetrant.

E. Mortars: Prepackaged dry mixes consisting of a blend of inorganic binders, hydraulic cement, fillers, and lightweight aggregate formulated for mixing with water at Project site to form a nonshrinking, homogeneous mortar.

F. Pillows/Bags: Reusable heat-expanding pillows/bags consisting of glass-fiber cloth cases filled with a combination of mineral-fiber, water-insoluble expansion agents, and fire-retardant additives.

G. Silicone Foams: Multicomponent, silicone-based liquid elastomers that, when mixed, expand and cure in place to produce a flexible, nonshrinking foam.

H. Silicone Sealants: Single-component, silicone-based, neutral-curing elastomeric sealants of grade indicated below:
   1. Grade: Pourable (self-leveling) formulation for openings in floors and other horizontal surfaces, and nonsag formulation for openings in vertical and other surfaces requiring a nonslumping, gunnable sealant, unless indicated firestop system limits use to nonsag grade for both opening conditions.

2.4 MIXING

A. For those products requiring mixing before application, comply with through-penetration firestop system manufacturer's written instructions for accurate proportioning of materials, water (if required), type of mixing equipment, selection of mixer speeds, mixing containers, mixing time, and other items or procedures needed to produce products of uniform quality with optimum performance characteristics for application indicated.

PART 3 - EXECUTION

3.1 EXAMINATION

A. Examine substrates and conditions, with Installer present, for compliance with requirements for opening configurations, penetrating items, substrates, and other conditions affecting performance of work.
   1. Proceed with installation only after unsatisfactory conditions have been corrected.

3.2 PREPARATION

A. Surface Cleaning: Clean out openings immediately before installing through-penetration firestop systems to comply with firestop system manufacturer's written instructions and with the following requirements:
   1. Remove from surfaces of opening substrates and from penetrating items foreign materials that could interfere with adhesion of through-penetration firestop systems.
   2. Clean opening substrates and penetrating items to produce clean, sound surfaces capable of developing optimum bond with through-penetration firestop systems. Remove loose particles remaining from cleaning operation.
   3. Remove laitance and form-release agents from concrete.

B. Priming: Prime substrates where recommended in writing by through-penetration firestop

system manufacturer using that manufacturer's recommended products and methods. Confine primers to areas of bond; do not allow spillage and migration onto exposed surfaces.

C. Masking Tape: Use masking tape to prevent through-penetration firestop systems from contacting adjoining surfaces that will remain exposed on completion of Work and that would otherwise be permanently stained or damaged by such contact or by cleaning methods used to remove smears from firestop system materials. Remove tape as soon as possible without disturbing firestop system's seal with substrates.

3.3 THROUGH-PENETRATION FIRESTOP SYSTEM INSTALLATION

A. General: Install through-penetration firestop systems to comply with Part 1 "Performance Requirements" Article and with firestop system manufacturer's written installation instructions and published drawings for products and applications indicated.

B. Install forming/damming/backing materials and other accessories of types required to support fill materials during their application and in the position needed to produce cross-sectional shapes and depths required to achieve fire ratings indicated.
   1. After installing fill materials and allowing them to fully cure, remove combustible forming materials and other accessories not indicated as permanent components of firestop systems.

C. Install fill materials for firestop systems by proven techniques to produce the following results:
   1. Fill voids and cavities formed by openings, forming materials, accessories, and penetrating items as required to achieve fire-resistance ratings indicated.
   2. Apply materials so they contact and adhere to substrates formed by openings and penetrating items.
   3. For fill materials that will remain exposed after completing Work, finish to produce smooth, uniform surfaces that are flush with adjoining finishes.

3.4 IDENTIFICATION

A. Identify through-penetration firestop systems with preprinted metal or plastic labels. Attach labels permanently to surfaces adjacent to and within 6 inches (150 mm) of edge of the firestop systems so that labels will be visible to anyone seeking to remove penetrating items or firestop systems. Use mechanical fasteners for metal labels. For plastic labels, use self-adhering type with adhesives capable of permanently bonding labels to surfaces on which labels are placed and, in combination with label material, will result in partial destruction of label if removal is attempted. Include the following information on labels:
   1. The words "Warning - Through-Penetration Firestop System - Do Not Disturb. Notify Building Management of Any Damage."
   2. Contractor's name, address, and phone number.
   3. Through-penetration firestop system designation of applicable testing and inspecting agency.
   4. Date of installation.
   5. Through-penetration firestop system manufacturer's name.
   6. Installer's name.

3.5 FIELD QUALITY CONTROL

A. Inspecting Agency: Owner will engage a qualified, independent inspecting agency to inspect through-penetration firestops. Independent inspecting agency shall comply with ASTM E 2174 requirements including those related to qualifications, conducting inspections,

and preparing test reports.

B. Where deficiencies are found, repair or replace through-penetration firestop systems so they comply with requirements.

C. Proceed with enclosing through-penetration firestop systems with other construction only after inspection reports are issued and firestop installations comply with requirements.

3.6 CLEANING AND PROTECTING

A. Clean off excess fill materials adjacent to openings as Work progresses by methods and with cleaning materials that are approved in writing by through-penetration firestop system manufacturers and that do not damage materials in which openings occur.

B. Provide final protection and maintain conditions during and after installation that ensure that through-penetration firestop systems are without damage or deterioration at time of Substantial Completion. If, despite such protection, damage or deterioration occurs, cut out and remove damaged or deteriorated through-penetration firestop systems immediately and install new materials to produce systems complying with specified requirements.

END OF SECTION 07841

SECTION 07920 - JOINT SEALANTS July 16, 2007

PART 1 - GENERAL

1.1 RELATED DOCUMENTS

A. Drawings and general provisions of the Contract, including General and Supplementary Conditions and Division 1 Specification Sections, apply to this Section.

1.2 SUMMARY

A. This Section includes joint sealants for the following applications, including those specified by reference to this Section:
   1. Exterior joints in the following vertical surfaces and horizontal nontraffic surfaces:
      a. Construction joints in cast-in-place concrete.
      b. Control and expansion joints in unit masonry and cast stone units.
      c. Joints between metal panels.
      d. Joints between different materials listed above.
      e. Perimeter joints between materials listed above and frames of doors and windows.
      f. Control and expansion joints in ceilings and other overhead surfaces.
      g. Other joints as indicated.
   2. Exterior joints in the following horizontal traffic surfaces:
      a. Isolation and contraction joints in cast-in-place concrete slabs.
      b. Tile control and expansion joints.
      c. Joints between different materials listed above.
      d. Other joints as indicated.
   3. Interior joints in the following vertical surfaces and horizontal nontraffic surfaces:
      a. Control and expansion joints on exposed interior surfaces of exterior walls.
      b. Perimeter joints of exterior openings where indicated.
      c. Tile control and expansion joints.
      d. Vertical joints on exposed surfaces of walls and partitions.
      e. Perimeter joints between interior wall surfaces and frames of interior doors, windows and elevator entrances.
      f. Joints between plumbing fixtures and adjoining walls, floors, and counters.
      g. Other joints as indicated.
   4. Interior joints in the following horizontal traffic surfaces:
      a. Isolation joints in cast-in-place concrete slabs.
      b. Control and expansion joints in tile flooring.
      c. Other joints as indicated.

B. Related Sections include the following:
   1. Division 7 Section "Fire-Resistive Joint Systems" for sealing joints in fire-resistance-rated construction.
   2. Division 8 Section "Glazing" for glazing sealants.
   3. Division 9 Section "Gypsum Board Assemblies" for sealing perimeter joints of gypsum board partitions to reduce sound transmission.
   4. Division 9 Section "Acoustical Panel Ceilings" for sealing edge moldings at perimeters of acoustical ceilings.

1.3 PERFORMANCE REQUIREMENTS

A. Provide elastomeric joint sealants that establish and maintain watertight and airtight continuous joint seals without staining or deteriorating joint substrates.

B. Provide joint sealants for interior applications that establish and maintain airtight and water-resistant continuous joint seals without staining or deteriorating joint substrates.

1.4 SUBMITTALS

A. Product Data: For each joint-sealant product indicated.

B. Samples for Selection: Manufacturer's color charts consisting of strips of cured sealants showing the full range of colors available for each product exposed to view.

C. Product Certificates: For each type of joint sealant and accessory, signed by product manufacturer.

D. Qualification Data: For Installer.

E. Preconstruction Field Test Reports: Indicate which sealants and joint preparation methods resulted in optimum adhesion to joint substrates based on preconstruction testing specified in "Quality Assurance" Article.

F. Compatibility and Adhesion Test Reports: From sealant manufacturer, indicating the following:
   1. Materials forming joint substrates and joint-sealant backings have been tested for compatibility and adhesion with joint sealants.
   2. Interpretation of test results and written recommendations for primers and substrate preparation needed for adhesion.

G. Product Test Reports: Based on comprehensive testing of product formulations performed by a qualified testing agency, indicating that sealants comply with requirements.

H. Warranties: Special warranties specified in this Section.

1.5 QUALITY ASSURANCE

A. Installer Qualifications: Manufacturer's authorized Installer who is approved or licensed for installation of elastomeric sealants required for this Project.

B. Source Limitations: Obtain each type of joint sealant through one source from a single manufacturer.

C. Preconstruction Compatibility and Adhesion Testing: Submit to joint-sealant manufacturers, for testing indicated below, samples of materials that will contact or affect joint sealants.
   1. Use ASTM C 1087 to determine whether priming and other specific joint preparation techniques are required to obtain rapid, optimum adhesion of joint sealants to joint substrates.
   2. Submit not fewer than eight pieces of each type of material, including joint substrates, shims, joint-sealant backings, secondary seals, and miscellaneous materials.
   3. Schedule sufficient time for testing and analyzing results to prevent delaying the

Work.

4. For materials failing tests, obtain joint-sealant manufacturer's written instructions for corrective measures including use of specially formulated primers.
5. Testing will not be required if joint-sealant manufacturers submit joint preparation data that are based on previous testing of current sealant products for adhesion to, and compatibility with, joint substrates and other materials matching those submitted.

D. Preconstruction Field-Adhesion Testing: Before installing elastomeric sealants, field test their adhesion to Project joint substrates as follows:
1. Locate test joints where indicated on Project or, if not indicated, as directed by Architect.
2. Conduct field tests for each application indicated below:
   a. Each type of elastomeric sealant and joint substrate indicated.
   b. Each type of nonelastomeric sealant and joint substrate indicated.
3. Notify Architect seven days in advance of dates and times when test joints will be erected.
4. Test Method: Test joint sealants according to Method A, Field-Applied Sealant Joint Hand Pull Tab, in Appendix X1 in ASTM C 1193.
   a. For joints with dissimilar substrates, verify adhesion to each substrate separately; extend cut along one side, verifying adhesion to opposite side. Repeat procedure for opposite side.
5. Report whether sealant in joint connected to pulled-out portion failed to adhere to joint substrates or tore cohesively. Include data on pull distance used to test each type of product and joint substrate. For sealants that fail adhesively, retest until satisfactory adhesion is obtained.
6. Evaluation of Preconstruction Field-Adhesion-Test Results: Sealants not evidencing adhesive failure from testing, in absence of other indications of noncompliance with requirements, will be considered satisfactory. Do not use sealants that fail to adhere to joint substrates during testing.

E. Mockups: Build mockups incorporating sealant joints, as follows, to verify selections made under sample submittals and to demonstrate aesthetic effects and set quality standards for materials and execution:
1. Joints in mockups of assemblies specified in other Sections that are indicated to receive elastomeric joint sealants, which are specified by reference to this Section.

1.6 PROJECT CONDITIONS

A. Do not proceed with installation of joint sealants under the following conditions:
1. When ambient and substrate temperature conditions are outside limits permitted by joint-sealant manufacturer or are below 40 deg F (5 deg C).
2. When joint substrates are wet.
3. Where joint widths are less than those allowed by joint-sealant manufacturer for applications indicated.
4. Contaminants capable of interfering with adhesion have not yet been removed from joint substrates.

1.7 WARRANTY

A. Special Installer's Warranty: Installer's standard form in which Installer agrees to repair or replace elastomeric joint sealants that do not comply with performance and other requirements specified in this Section within specified warranty period.
1. Warranty Period: Three years from date of Substantial Completion.

B. Special warranties specified in this Article exclude deterioration or failure of elastomeric joint sealants from the following:
   1. Movement of the structure resulting in stresses on the sealant exceeding sealant manufacturer's written specifications for sealant elongation and compression caused by structural settlement or errors attributable to design or construction.
   2. Disintegration of joint substrates from natural causes exceeding design specifications.
   3. Mechanical damage caused by individuals, tools, or other outside agents.
   4. Changes in sealant appearance caused by accumulation of dirt or other atmospheric contaminants.

PART 2 - PRODUCTS

2.1 MANUFACTURERS

A. Available Products: Subject to compliance with requirements, products that may be incorporated into the Work include, but are not limited to, products listed in other Part 2 articles.

2.2 MATERIALS, GENERAL

A. Compatibility: Provide joint sealants, backings, and other related materials that are compatible with one another and with joint substrates under conditions of service and application, as demonstrated by sealant manufacturer, based on testing and field experience.

B. Colors of Exposed Joint Sealants: As selected by Architect from manufacturer's full range.

2.3 ELASTOMERIC JOINT SEALANTS

A. Elastomeric Sealants: Comply with ASTM C 920 and other requirements indicated for each liquid-applied chemically curing sealant specified, including those referencing ASTM C 920 classifications for type, grade, class, and uses related to exposure and joint substrates.

B. Stain-Test-Response Characteristics: Where elastomeric sealants are specified to be nonstaining to porous substrates, provide products that have undergone testing according to ASTM C 1248 and have not stained porous joint substrates indicated for Project.

C. Suitability for Immersion in Liquids. Where elastomeric sealants are indicated for Use I for joints that will be continuously immersed in liquids, provide products that have undergone testing according to ASTM C 1247 and qualify for the length of exposure indicated by reference to ASTM C 920 for Class 1 or 2. Liquid used for testing sealants is deionized water, unless otherwise indicated.

D. Suitability for Contact with Food: Where elastomeric sealants are indicated for joints that will come in repeated contact with food, provide products that comply with 21 CFR 177.2600.

E. Single-Component Neutral-Curing Silicone Sealant:
   1. Available Products:
      a. Pecora Corporation; 895.
   2. Type and Grade: S (single component) and NS (nonsag).
   3. Class: 50.

4. Use Related to Exposure: NT (nontraffic).
5. Uses Related to Joint Substrates: M, G, A, and, as applicable to joint substrates indicated, O.
   a. Use O Joint Substrates: Aluminum coated with a high-performance coating.
6. Stain-Test-Response Characteristics: Nonstaining to porous substrates per ASTM C 1248.

F. Single-Component Acid-Curing Silicone Sealant:
1. Available Products:
   a. Dow Corning Corporation; 999-A.
   b. GE Silicones; Construction
   c. Pecora Corporation; 860.
   d. Tremco; Proglaze.
2. Type and Grade: S (single component) and NS (nonsag).
3. Class: 25.
4. Use Related to Exposure: NT (nontraffic).
5. Uses Related to Joint Substrates: G, A, and, as applicable to joint substrates indicated, O.
   a. Use O Joint Substrates: Aluminum coated with a high-performance coating.

G. Multicomponent Nonsag Urethane Sealant:
1. Available Products:
   a. Pecora Corporation; Dynatrol II.
   b. Tremco; Dymeric 511.
2. Type and Grade: M (multicomponent) and NS (nonsag).
3. Class: 50.
4. Use Related to Exposure: NT (nontraffic).
5. Uses Related to Joint Substrates: M, A, and, as applicable to joint substrates indicated, O.
   a. Use O Joint Substrates: Aluminum coated with a high-performance coating.

H. Multicomponent Pourable Urethane Sealant:
1. Available Products:
   a. Pecora Corporation; Dynatrol II-SG.
   b. Sika Corporation, Inc.; Sikaflex - 2c SL.
   c. Sonneborn, Division of ChemRex Inc.; SL 2.
2. Type and Grade: M (multicomponent) and P (pourable).
3. Class: 25.
4. Uses Related to Exposure: T (traffic) and NT (nontraffic).
5. Uses Related to Joint Substrates: M, G, A, and, as applicable to joint substrates indicated, O.

I. Single-Component Nonsag Urethane Sealant:
1. Available Products:
   a. Pecora Corporation; Dynatrol I-XL.
   b. Sika Corporation, Inc.; Sikaflex - 15LM.
   c. Tremco; DyMonic.
2. Type and Grade: S (single component) and NS (nonsag).
3. Class: 25.
4. Use Related to Exposure: NT (nontraffic).
5. Uses Related to Joint Substrates: M, A, and, as applicable to joint substrates indicated, O.

2.4 SOLVENT-RELEASE JOINT SEALANTS

A. Acrylic-Based Solvent-Release Joint Sealant: Comply with ASTM C 1311 or FS TT-S-00230.
   1. Available Products:
      a. Tremco; Mono 555.

B. Butyl-Rubber-Based Solvent-Release Joint Sealant: Comply with ASTM C 1085.
   1. Available Products:
      a. Sonneborn, Division of ChemRex Inc.; Sonneborn Multi-Purpose Sealant.
      b. Tremco; Tremco Butyl Sealant.

2.5 LATEX JOINT SEALANTS

A. Latex Sealant: Comply with ASTM C 834, Type P, Grade NF.

B. Available Products:
   1. Pecora Corporation; AC-20+.
   2. Sonneborn, Division of ChemRex Inc.; Sonolac.
   3. Tremco; Tremflex 834.

2.6 ACOUSTICAL JOINT SEALANTS

A. Acoustical Sealant for Exposed and Concealed Joints: Manufacturer's standard nonsag, paintable, nonstaining latex sealant complying with ASTM C 834 and the following:
   1. Product effectively reduces airborne sound transmission through perimeter joints and openings in building construction as demonstrated by testing representative assemblies according to ASTM E 90.
   2. Available Products:
      a. Pecora Corporation; AC-20 FTR Acoustical and Insulation Sealant.
      b. United States Gypsum Co.; SHEETROCK Acoustical Sealant.

2.7 JOINT-SEALANT BACKING

A. General: Provide sealant backings of material and type that are nonstaining; are compatible with joint substrates, sealants, primers, and other joint fillers; and are approved for applications indicated by sealant manufacturer based on field experience and laboratory testing.

B. Cylindrical Sealant Backings: ASTM C 1330, Type C (closed-cell material with a surface skin), and of size and density to control sealant depth and otherwise contribute to producing optimum sealant performance:

C. Elastomeric Tubing Sealant Backings: Neoprene, butyl, EPDM, or silicone tubing complying with ASTM D 1056, nonabsorbent to water and gas, and capable of remaining resilient at temperatures down to minus 26 deg F (minus 32 deg C). Provide products with low compression set and of size and shape to provide a secondary seal, to control sealant depth, and to otherwise contribute to optimum sealant performance.

D. Bond-Breaker Tape: Polyethylene tape or other plastic tape recommended by sealant manufacturer for preventing sealant from adhering to rigid, inflexible joint-filler materials or joint surfaces at back of joint where such adhesion would result in sealant failure. Provide self-adhesive tape where applicable.

2.8 MISCELLANEOUS MATERIALS

A. Primer: Material recommended by joint-sealant manufacturer where required for adhesion of sealant to joint substrates indicated, as determined from preconstruction joint-sealant-substrate tests and field tests.

B. Cleaners for Nonporous Surfaces: Chemical cleaners acceptable to manufacturers of sealants and sealant backing materials, free of oily residues or other substances capable of staining or harming joint substrates and adjacent nonporous surfaces in any way, and formulated to promote optimum adhesion of sealants to joint substrates.

C. Masking Tape: Nonstaining, nonabsorbent material compatible with joint sealants and surfaces adjacent to joints.

PART 3 - EXECUTION

3.1 EXAMINATION

A. Examine joints indicated to receive joint sealants, with Installer present, for compliance with requirements for joint configuration, installation tolerances, and other conditions affecting joint-sealant performance.

B. Proceed with installation only after unsatisfactory conditions have been corrected.

3.2 PREPARATION

A. Surface Cleaning of Joints: Clean out joints immediately before installing joint sealants to comply with joint-sealant manufacturer's written instructions and the following requirements:
   1. Remove all foreign material from joint substrates that could interfere with adhesion of joint sealant, including dust, paints (except for permanent, protective coatings tested and approved for sealant adhesion and compatibility by sealant manufacturer), old joint sealants, oil, grease, waterproofing, water repellents, water, surface dirt, and frost.
   2. Clean porous joint substrate surfaces by brushing, grinding, blast cleaning, mechanical abrading, or a combination of these methods to produce a clean, sound substrate capable of developing optimum bond with joint sealants. Remove loose particles remaining after cleaning operations above by vacuuming or blowing out joints with oil-free compressed air. Porous joint substrates include the following:
      a. Concrete.
      b. Masonry.
      c. Unglazed surfaces of ceramic tile.
   3. Remove laitance and form-release agents from concrete.
   4. Clean nonporous surfaces with chemical cleaners or other means that do not stain, harm substrates, or leave residues capable of interfering with adhesion of joint sealants. Nonporous joint substrates include the following:
      a. Metal.
      b. Glass.
      c. Glazed surfaces of ceramic tile.

B. Joint Priming: Prime joint substrates, where recommended in writing by joint-sealant manufacturer, based on preconstruction joint-sealant-substrate tests or prior experience.

Apply primer to comply with joint-sealant manufacturer's written instructions. Confine primers to areas of joint-sealant bond; do not allow spillage or migration onto adjoining surfaces.

C. Masking Tape: Use masking tape where required to prevent contact of sealant with adjoining surfaces that otherwise would be permanently stained or damaged by such contact or by cleaning methods required to remove sealant smears. Remove tape immediately after tooling without disturbing joint seal.

3.3 INSTALLATION OF JOINT SEALANTS

A. General: Comply with joint-sealant manufacturer's written installation instructions for products and applications indicated, unless more stringent requirements apply.

B. Sealant Installation Standard: Comply with recommendations in ASTM C 1193 for use of joint sealants as applicable to materials, applications, and conditions indicated.

C. Acoustical Sealant Application Standard: Comply with recommendations in ASTM C 919 for use of joint sealants in acoustical applications as applicable to materials, applications, and conditions indicated.

D. Install sealant backings of type indicated to support sealants during application and at position required to produce cross-sectional shapes and depths of installed sealants relative to joint widths that allow optimum sealant movement capability.
   1. Do not leave gaps between ends of sealant backings.
   2. Do not stretch, twist, puncture, or tear sealant backings.
   3. Remove absorbent sealant backings that have become wet before sealant application and replace them with dry materials.

E. Install bond-breaker tape behind sealants where sealant backings are not used between sealants and backs of joints.

F. Install sealants using proven techniques that comply with the following and at the same time backings are installed:
   1. Place sealants so they directly contact and fully wet joint substrates.
   2. Completely fill recesses in each joint configuration.
   3. Produce uniform, cross-sectional shapes and depths relative to joint widths that allow optimum sealant movement capability.
   4. Seal abutting joint at all dissimilar materials.

G. Tooling of Nonsag Sealants: Immediately after sealant application and before skinning or curing begins, tool sealants according to requirements specified below to form smooth, uniform beads of configuration indicated; to eliminate air pockets; and to ensure contact and adhesion of sealant with sides of joint.
   1. Remove excess sealant from surfaces adjacent to joints.
   2. Use tooling agents that are approved in writing by sealant manufacturer and that do not discolor sealants or adjacent surfaces.
   3. Provide concave joint configuration per Figure 5A in ASTM C 1193, unless otherwise indicated.

3.4 CLEANING

A. Clean off excess sealant or sealant smears adjacent to joints as the Work progresses by methods and with cleaning materials approved in writing by manufacturers of joint sealants

and of products in which joints occur.

3.5 PROTECTION

A. Protect joint sealants during and after curing period from contact with contaminating substances and from damage resulting from construction operations or other causes so

B. sealants are without deterioration or damage at time of Substantial Completion. If, despite such protection, damage or deterioration occurs, cut out and remove damaged or deteriorated joint sealants immediately so installations with repaired areas are indistinguishable from original work.

3.6 JOINT-SEALANT SCHEDULE

A. Joint-Sealant Application: Exterior vertical construction joints in cast-in-place concrete.
   1. Joint Sealant: Multicomponent nonsag urethane sealant.
   2. Joint-Sealant Color: As selected by Architect from manufacturer's full range.

B. Joint-Sealant Application: Exterior horizontal nontraffic and traffic isolation and contraction joints in cast-in-place concrete slabs.
   1. Joint Sealant: Multicomponent pourable urethane sealant.
   2. Joint-Sealant Color: As selected by Architect from manufacturer's full range.

C. Joint-Sealant Application: Exterior vertical control and expansion joints in unit masonry.
   1. Joint Sealant: Multicomponent nonsag urethane sealant or Single-component nonsag urethane sealant.
   2. Joint-Sealant Color: As selected by Architect from manufacturer's full range.

D. Joint-Sealant Application: Exterior vertical joints between different materials listed above.
   1. Joint Sealant: Multicomponent nonsag urethane sealant or Single-component nonsag urethane sealant.
   2. Joint-Sealant Color: As selected by Architect from manufacturer's full range.

E. Joint-Sealant Application: Exterior perimeter joints between unit masonry and frames of doors and windows.
   1. Joint Sealant: Multicomponent nonsag urethane sealant or Single-component nonsag urethane sealant.
   2. Joint-Sealant Color: As selected by Architect from manufacturer's full range.

F. Joint-Sealant Application: Exterior control and expansion joints in ceilings and other overhead surfaces.
   1. Joint Sealant: Multicomponent nonsag urethane sealant or Single-component nonsag urethane sealant.
   2. Joint-Sealant Color: As selected by Architect from manufacturer's full range.

G. Joint-Sealant Application: Vertical control and expansion joints on exposed interior surfaces of exterior walls.
   1. Joint Sealant: Multicomponent nonsag urethane sealant or Single-component nonsag urethane sealant.
   2. Joint-Sealant Color: As selected by Architect from manufacturer's full range.

H. Joint-Sealant Application: Interior perimeter joints of exterior openings.
   1. Joint Sealant: Multicomponent nonsag urethane sealant or Single-component nonsag urethane sealant.

2. Joint-Sealant Color: As selected by Architect from manufacturer's full range.

I. Joint-Sealant Application: Vertical joints on exposed surfaces of interior unit masonry walls and partitions.
   1. Joint Sealant: Single-component nonsag urethane sealant.
   2. Joint-Sealant Color: As selected by Architect from manufacturer's full range.

J. Joint-Sealant Application: Perimeter joints between interior wall surfaces and frames of interior doors, windows and elevator entrances.
   1. Joint Sealant: Latex sealant.
   2. Joint-Sealant Color: As selected by Architect from manufacturer's full range.

END OF SECTION 07920

DIVISION 8 - DOORS AND WINDOWS

Section 08110	Steel Doors and Frames
Section 08211	Flush Wood Doors
Section 08411	Aluminum-Framed Entrances and Storefronts
Section 08711	Door Hardware
Section 08800	Glazing

SECTION 08110 - STEEL DOORS AND FRAMES July 16, 2007

PART 1 - GENERAL

1.1 RELATED DOCUMENTS

A. Drawings and general provisions of the Contract, including General and Supplementary Conditions and Division 1 Specification Sections, apply to this Section.

1.2 SUMMARY

A. Section Includes:
1. Standard hollow metal doors and frames.

B. Related Sections
1. Division 4 Section "Unit Masonry Assemblies" for embedding anchors for hollow metal work into masonry construction.
2. Division 8 Section "Door Hardware" for door hardware for hollow metal doors.
3. Division 9 Sections "Painting" for field painting hollow metal doors and frames.
4. Division 16 Sections for electrical connections including conduit and wiring for door controls and operators.

1.3 DEFINITIONS

A. Minimum Thickness: Minimum thickness of base metal without coatings.

B. Standard Hollow Metal Work: Hollow metal work fabricated according to ANSI/SDI A250.8.

1.4 SUBMITTALS

A. Product Data: For each type of product indicated. Include construction details, material descriptions, core descriptions, fire-resistance rating, temperature-rise ratings, and finishes.

B. Shop Drawings: Include the following:
1. Elevations of each door design.
2. Details of doors, including vertical and horizontal edge details and metal thicknesses.
3. Frame details for each frame type, including dimensioned profiles and metal thicknesses.
4. Locations of reinforcement and preparations for hardware.
5. Details of each different wall opening condition.
6. Details of anchorages, joints, field splices, and connections.
7. Details of accessories.
8. Details of moldings, removable stops, and glazing.
9. Details of conduit and preparations for power, signal, and control systems.

C. Other Action Submittals:
1. Schedule: Provide a schedule of hollow metal work prepared by or under the supervision of supplier, using same reference numbers for details and openings as those on Drawings. Coordinate with door hardware schedule.

D. Product Test Reports: Based on evaluation of comprehensive tests performed by a qualified testing agency, for each type of hollow metal door and frame assembly.

1.5 QUALITY ASSURANCE

A. Source Limitations: Obtain hollow metal work from single source from single manufacturer.

B. Fire-Rated Door Assemblies: Assemblies complying with NFPA 80 that are listed and labeled by a qualified testing agency, for fire-protection ratings indicated, based on testing at as close to neutral pressure as possible according to NFPA 252.
   1. Oversize Fire-Rated Door Assemblies: For units exceeding sizes of tested assemblies, provide certification by a qualified testing agency that doors comply with standard construction requirements for tested and labeled fire-rated door assemblies except for size.
   2. Temperature-Rise Limit: Where indicated, but not limited to, vertical exit enclosures and exit passageways, provide doors that have a maximum transmitted temperature end point of not more than 450 deg F (250 deg C) above ambient after 30 minutes of standard fire-test exposure.

C. Smoke-Control Door Assemblies: Comply with NFPA 105 or UL 1784.

1.6 DELIVERY, STORAGE, AND HANDLING

A. Deliver hollow metal work palletized, wrapped, or crated to provide protection during transit and Project-site storage. Do not use nonvented plastic.
   1. Provide additional protection to prevent damage to finish of factory-finished units.

B. Deliver welded frames with two removable spreader bars across bottom of frames, tack welded to jambs and mullions.

C. Store hollow metal work under cover at Project site. Place in stacks of five units maximum in a vertical position with heads up, spaced by blocking, on minimum 4-inch- (102-mm-) high wood blocking. Do not store in a manner that traps excess humidity.
   1. Provide minimum 1/4-inch (6-mm) space between each stacked door to permit air circulation.

1.7 PROJECT CONDITIONS

A. Field Measurements: Verify actual dimensions of openings by field measurements before fabrication.

1.8 COORDINATION

A. Coordinate installation of anchorages for hollow metal frames. Furnish setting drawings, templates, and directions for installing anchorages, including sleeves, concrete inserts, anchor bolts, and items with integral anchors. Deliver such items to Project site in time for installation.

PART 2 - PRODUCTS

2.1 MANUFACTURERS

A. Manufacturers: Subject to compliance with requirements, available manufacturers offering products that may be incorporated into the Work include, but are not limited to, the following:

1. Amweld Building Products, LLC.
2. Ceco Door Products; an Assa Abloy Group company.
3. Curries Company; an Assa Abloy Group company.
4. Kewanee Corporation (The).
5. Pioneer Industries, Inc.
6. Steelcraft; an Ingersoll-Rand company.
7. Windsor Republic Doors.

2.2 MATERIALS

A. Cold-Rolled Steel Sheet: ASTM A 1008/A 1008M, Commercial Steel (CS), Type B; suitable for exposed applications.

B. Hot-Rolled Steel Sheet: ASTM A 1011/A 1011M, Commercial Steel (CS), Type B; free of scale, pitting, or surface defects; pickled and oiled.

C. Metallic-Coated Steel Sheet: ASTM A 653/A 653M, Commercial Steel (CS), Type B; with minimum A40 (ZF120) metallic coating.

D. Frame Anchors: ASTM A 591/A 591M, Commercial Steel (CS), 40Z (12G) coating designation; mill phosphatized.
   1. For anchors built into exterior walls, steel sheet complying with ASTM A 1008/A 1008M or ASTM A 1011/A 1011M, hot-dip galvanized according to ASTM A 153/A 153M, Class B.

E. Inserts, Bolts, and Fasteners: Hot-dip galvanized according to ASTM A 153/A 153M.

F. Powder-Actuated Fasteners in Concrete: Fastener system of type suitable for application indicated, fabricated from corrosion-resistant materials, with clips or other accessory devices for attaching hollow metal frames of type indicated.

G. Grout: ASTM C 476, except with a maximum slump of 4 inches (102 mm), as measured according to ASTM C 143/C 143M.

H. Mineral-Fiber Insulation: ASTM C 665, Type I (blankets without membrane facing); consisting of fibers manufactured from slag or rock wool with 6- to 12-lb/cu. ft. (96- to 192-kg/cu. m) density; with maximum flame-spread and smoke-development indexes of 25 and 50, respectively; passing ASTM E 136 for combustion characteristics.

I. Glazing: Comply with requirements in Division 8 Section "Glazing."

J. Bituminous Coating: Cold-applied asphalt mastic, SSPC-Paint 12, compounded for 15-mil (0.4-mm) dry film thickness per coat. Provide inert-type noncorrosive compound free of asbestos fibers, sulfur components, and other deleterious impurities.

2.3 STANDARD HOLLOW METAL DOORS

A. General: Provide doors of design indicated, not less than thickness indicated; fabricated with smooth surfaces, without visible joints or seams on exposed faces unless otherwise indicated. Comply with ANSI/SDI A250.8.
   1. Design: Flush panel.
   2. Core Construction: Manufacturer's standard kraft-paper honeycomb, polystyrene, polyurethane, polyisocyanurate, mineral-board, or vertical steel-stiffener core.

a. Fire Door Core: As required to provide fire-protection and temperature-rise ratings indicated.

b. Thermal-Rated (Insulated) Doors: Where indicated, provide doors fabricated with thermal-resistance value (R-value) of not less than 12.3 deg F x h x sq. ft./Btu (2.166 K x sq. m/W) when tested according to ASTM C 1363.

1) Locations: Exterior doors and interior doors where indicated.

3. Vertical Edges for Single-Acting Doors: Beveled edge.

a. Beveled Edge: 1/8 inch in 2 inches (3 mm in 50 mm).

4. Top and Bottom Edges: Closed with flush or inverted 0.042-inch- (1.0-mm-) thick, end closures or channels of same material as face sheets.

5. Tolerances: Comply with SDI 117, "Manufacturing Tolerances for Standard Steel Doors and Frames."

B. Exterior Doors: Face sheets fabricated from metallic-coated steel sheet. Provide doors complying with requirements indicated below by referencing ANSI/SDI A250.8 for level and model and ANSI/SDI A250.4 for physical performance level:

1. Level 4 and Physical Performance Level A (Maximum Duty), Model 2 (Seamless) (14 gauge face).

C. Interior Doors: Face sheets fabricated from cold-rolled steel sheet unless metallic-coated sheet is indicated. Provide doors complying with requirements indicated below by referencing ANSI/SDI A250.8 for level and model and ANSI/SDI A250.4 for physical performance level:

1. Level 3 and Physical Performance Level A (Extra Heavy Duty), Model 2 (Seamless) (16 gauge face).

D. Hardware Reinforcement: Fabricate according to ANSI/SDI A250.6 with reinforcing plates from same material as door face sheets.

E. Fabricate concealed stiffeners and hardware reinforcement from either cold- or hot-rolled steel sheet.

2.4 STANDARD HOLLOW METAL FRAMES

A. General: Comply with ANSI/SDI A250.8 and with details indicated for type and profile.

B. Exterior Frames: Fabricated from metallic-coated steel sheet.

1. Fabricate frames with mitered or coped corners.
2. Fabricate frames as full profile welded unless otherwise indicated.
3. Frames for Level 4 Steel Doors: 0.067-inch- (1.7-mm-) thick steel sheet.

C. Interior Frames: Fabricated from cold-rolled steel sheet unless metallic-coated sheet is indicated.

1. Fabricate frames with mitered or coped corners.
2. Fabricate frames as full profile welded unless otherwise indicated.
3. Fabricate drywall slip-on frames for gypsum board partitions.
4. Frames for Level 3 Steel Doors: 0.053-inch- (1.3-mm-) thick steel sheet.

D. Hardware Reinforcement: Fabricate according to ANSI/SDI A250.6 with reinforcement plates from same material as frames.

2.5 FRAME ANCHORS

A. Jamb Anchors:
   1. Masonry Type: Adjustable strap-and-stirrup or T-shaped anchors to suit frame size, not less than 0.042 inch (1.0 mm) thick, with corrugated or perforated straps not less than 2 inches (50 mm) wide by 10 inches (250 mm) long; or wire anchors not less than 0.177 inch (4.5 mm) thick.
   2. Stud-Wall Type: Designed to engage stud, welded to back of frames; not less than 0.042 inch (1.0 mm) thick.
   3. Compression Type for Drywall Slip-on Frames: Adjustable compression anchors.
   4. Postinstalled Expansion Type for In-Place Concrete or Masonry: Minimum 3/8-inch-(9.5-mm-) diameter bolts with expansion shields or inserts. Provide pipe spacer from frame to wall, with throat reinforcement plate, welded to frame at each anchor location.

B. Floor Anchors: Formed from same material as frames, not less than 0.042 inch (1.0 mm) thick, and as follows:
   1. Monolithic Concrete Slabs: Clip-type anchors, with two holes to receive fasteners.

2.6 STOPS AND MOLDINGS

A. Moldings for Glazed Lites in Doors: Minimum 0.032 inch (0.8 mm) thick, fabricated from same material as door face sheet in which they are installed.

B. Fixed Frame Moldings: Formed integral with hollow metal frames, a minimum of 5/8 inch (16 mm) high unless otherwise indicated.

C. Loose Stops for Glazed Lites in Frames: Minimum 0.032 inch (0.8 mm) thick, fabricated from same material as frames in which they are installed.

2.7 ACCESSORIES

A. Mullions and Transom Bars: Join to adjacent members by welding or rigid mechanical anchors.

B. Ceiling Struts: Minimum 1/4-inch-thick by 1-inch- (6.4-mm-thick by 25.4-mm-) wide steel.

C. Grout Guards: Formed from same material as frames, not less than 0.016 inch (0.4 mm) thick.

2.8 FABRICATION

A. Fabricate hollow metal work to be rigid and free of defects, warp, or buckle. Accurately form metal to required sizes and profiles, with minimum radius for thickness of metal. Where practical, fit and assemble units in manufacturer's plant. To ensure proper assembly at Project site, clearly identify work that cannot be permanently factory assembled before shipment.

B. Tolerances: Fabricate hollow metal work to tolerances indicated in SDI 117.

C. Hollow Metal Doors:
   1. Exterior Doors: Provide weep-hole openings in bottom of exterior doors to permit moisture to escape. Seal joints in top edges of doors against water penetration.

2. Glazed Lites: Factory cut openings in doors.
3. Astragals: Provide overlapping astragal on one leaf of pairs of doors where required by NFPA 80 for fire-performance rating or where indicated. Extend minimum 3/4 inch (19 mm) beyond edge of door on which astragal is mounted.

D. Hollow Metal Frames: Where frames are fabricated in sections due to shipping or handling limitations, provide alignment plates or angles at each joint, fabricated of same thickness metal as frames.
1. Welded Frames: Weld flush face joints continuously; grind, fill, dress, and make smooth, flush, and invisible.
2. Sidelight Frames: Provide closed tubular members with no visible face seams or joints, fabricated from same material as door frame. Fasten members at crossings and to jambs by butt welding.
3. Provide countersunk, flat- or oval-head exposed screws and bolts for exposed fasteners unless otherwise indicated.
4. Grout Guards: Weld guards to frame at back of hardware mortises in frames to be grouted.
5. Floor Anchors: Weld anchors to bottom of jambs and mullions with at least four spot welds per anchor.
6. Jamb Anchors: Provide number and spacing of anchors as follows:
   a. Masonry Type: Locate anchors not more than 18 inches (457 mm) from top and bottom of frame. Space anchors not more than 32 inches (813 mm) o.c. and as follows:
      1) Two anchors per jamb up to 60 inches (1524 mm) high.
      2) Three anchors per jamb from 60 to 90 inches (1524 to 2286 mm) high.
      3) Four anchors per jamb from 90 to 120 inches (2286 to 3048 mm) high.
      4) Four anchors per jamb plus 1 additional anchor per jamb for each 24 inches (610 mm) or fraction thereof above 120 inches (3048 mm) high.
   b. Stud-Wall Type: Locate anchors not more than 18 inches (457 mm) from top and bottom of frame. Space anchors not more than 32 inches (813 mm) o.c. and as follows:
      1) Three anchors per jamb up to 60 inches (1524 mm) high.
      2) Four anchors per jamb from 60 to 90 inches (1524 to 2286 mm) high.
      3) Five anchors per jamb from 90 to 96 inches (2286 to 2438 mm) high.
      4) Five anchors per jamb plus 1 additional anchor per jamb for each 24 inches (610 mm) or fraction thereof above 96 inches (2438 mm) high.
      5) Two anchors per head for frames above 42 inches (1066 mm) wide and mounted in metal-stud partitions.
   c. Compression Type: Not less than two anchors in each jamb.
   d. Postinstalled Expansion Type: Locate anchors not more than 6 inches (152 mm) from top and bottom of frame. Space anchors not more than 26 inches (660 mm) o.c.
7. Door Silencers: Except on weather-stripped doors, drill stops to receive door silencers as follows. Keep holes clear during construction.
   a. Single-Door Frames: Drill stop in strike jamb to receive three door silencers.
   b. Double-Door Frames: Drill stop in head jamb to receive two door silencers.

E. Fabricate concealed stiffeners, edge channels, and hardware reinforcement from either cold- or hot-rolled steel sheet.

F. Hardware Preparation: Factory prepare hollow metal work to receive templated mortised hardware; include cutouts, reinforcement, mortising, drilling, and tapping according to the Door Hardware Schedule and templates furnished as specified in Division 8 Section "Door Hardware."
   1. Locate hardware as indicated, or if not indicated, according to ANSI/SDI A250.8.
   2. Reinforce doors and frames to receive nontemplated, mortised and surface-mounted door hardware.
   3. Comply with applicable requirements in ANSI/SDI A250.6 and ANSI/DHI A115 Series specifications for preparation of hollow metal work for hardware.
   4. Coordinate locations of conduit and wiring boxes for electrical connections with Division 16 Sections.

G. Stops and Moldings: Provide stops and moldings around glazed lites where indicated. Form corners of stops and moldings with butted or mitered hairline joints.
   1. Single Glazed Lites: Provide fixed stops and moldings welded on secure side of hollow metal work.
   2. Multiple Glazed Lites: Provide fixed and removable stops and moldings so that each glazed lite is capable of being removed independently.
   3. Provide fixed frame moldings on outside of exterior and on secure side of interior doors and frames.
   4. Provide loose stops and moldings on inside of hollow metal work.
   5. Coordinate rabbet width between fixed and removable stops with type of glazing and type of installation indicated.

2.9 STEEL FINISHES

A. Prime Finish: Apply manufacturer's standard primer immediately after cleaning and pretreating.
   1. Shop Primer: Manufacturer's standard, fast-curing, lead- and chromate-free primer complying with ANSI/SDI A250.10 acceptance criteria; recommended by primer manufacturer for substrate; compatible with substrate and field-applied coatings despite prolonged exposure.

PART 3 - EXECUTION

3.1 EXAMINATION

A. Examine substrates, areas, and conditions, with Installer present, for compliance with requirements for installation tolerances and other conditions affecting performance of the Work.

B. Examine roughing-in for embedded and built-in anchors to verify actual locations before frame installation.

C. For the record, prepare written report, endorsed by Installer, listing conditions detrimental to performance of the Work.

D. Proceed with installation only after unsatisfactory conditions have been corrected.

3.2 PREPARATION

A. Remove welded-in shipping spreaders installed at factory. Restore exposed finish by grinding, filling, and dressing, as required to make repaired area smooth, flush, and invisible on exposed faces.

B. Prior to installation, adjust and securely brace welded hollow metal frames for squareness, alignment, twist, and plumbness to the following tolerances:
   1. Squareness: Plus or minus 1/16 inch (1.6 mm), measured at door rabbet on a line 90 degrees from jamb perpendicular to frame head.
   2. Alignment: Plus or minus 1/16 inch (1.6 mm), measured at jambs on a horizontal line parallel to plane of wall.
   3. Twist: Plus or minus 1/16 inch (1.6 mm), measured at opposite face corners of jambs on parallel lines, and perpendicular to plane of wall.
   4. Plumbness: Plus or minus 1/16 inch (1.6 mm), measured at jambs on a perpendicular line from head to floor.

C. Drill and tap doors and frames to receive nontemplated, mortised, and surface-mounted door hardware.

3.3 INSTALLATION

A. General: Install hollow metal work plumb, rigid, properly aligned, and securely fastened in place; comply with Drawings and manufacturer's written instructions.

B. Hollow Metal Frames: Install hollow metal frames of size and profile indicated. Comply with ANSI/SDI A250.11.
   1. Set frames accurately in position, plumbed, aligned, and braced securely until permanent anchors are set. After wall construction is complete, remove temporary braces, leaving surfaces smooth and undamaged.
      a. At fire-protection-rated openings, install frames according to NFPA 80.
      b. Where frames are fabricated in sections because of shipping or handling limitations, field splice at approved locations by welding face joint continuously; grind, fill, dress, and make splice smooth, flush, and invisible on exposed faces.
      c. Install frames with removable glazing stops located on secure side of opening.
      d. Install door silencers in frames before grouting.
      e. Remove temporary braces necessary for installation only after frames have been properly set and secured.
      f. Check plumbness, squareness, and twist of frames as walls are constructed. Shim as necessary to comply with installation tolerances.
      g. Field apply bituminous coating to backs of frames that are filled with grout containing antifreezing agents.
   2. Floor Anchors: Provide floor anchors for each jamb and mullion that extends to floor, and secure with postinstalled expansion anchors.
      a. Floor anchors may be set with powder-actuated fasteners instead of postinstalled expansion anchors if so indicated and approved on Shop Drawings.
   3. Metal-Stud Partitions: Solidly pack mineral-fiber insulation behind frames.
   4. Masonry Walls: Coordinate installation of frames to allow for solidly filling space between frames and masonry with grout.

5. Concrete Walls: Solidly fill space between frames and concrete with grout. Take precautions, including bracing frames, to ensure that frames are not deformed or damaged by grout forces.
6. In-Place Concrete or Masonry Construction: Secure frames in place with postinstalled expansion anchors. Countersink anchors, and fill and make smooth, flush, and invisible on exposed faces.
7. In-Place Gypsum Board Partitions: Secure frames in place with postinstalled expansion anchors through floor anchors at each jamb. Countersink anchors, and fill and make smooth, flush, and invisible on exposed faces.
8. Ceiling Struts: Extend struts vertically from top of frame at each jamb to overhead structural supports or substrates above frame unless frame is anchored to masonry or to other structural support at each jamb. Bend top of struts to provide flush contact for securing to supporting construction. Provide adjustable wedged or bolted anchorage to frame jamb members.
9. Installation Tolerances: Adjust hollow metal door frames for squareness, alignment, twist, and plumb to the following tolerances:
   a. Squareness: Plus or minus 1/16 inch (1.6 mm), measured at door rabbet on a line 90 degrees from jamb perpendicular to frame head.
   b. Alignment: Plus or minus 1/16 inch (1.6 mm), measured at jambs on a horizontal line parallel to plane of wall.
   c. Twist: Plus or minus 1/16 inch (1.6 mm), measured at opposite face corners of jambs on parallel lines, and perpendicular to plane of wall.
   d. Plumbness: Plus or minus 1/16 inch (1.6 mm), measured at jambs at floor.

C. Hollow Metal Doors: Fit hollow metal doors accurately in frames, within clearances specified below. Shim as necessary.
1. Non-Fire-Rated Standard Steel Doors:
   a. Jambs and Head: 1/8 inch (3 mm) plus or minus 1/16 inch (1.6 mm).
   b. Between Edges of Pairs of Doors: 1/8 inch (3 mm) plus or minus 1/16 inch (1.6 mm).
   c. Between Bottom of Door and Top of Threshold: Maximum 3/8 inch (9.5 mm).
   d. Between Bottom of Door and Top of Finish Floor (No Threshold): Maximum 3/4 inch (19 mm).
2. Fire-Rated Doors: Install doors with clearances according to NFPA 80.
3. Smoke-Control Doors: Install doors according to NFPA 105.

3.4 ADJUSTING AND CLEANING

A. Final Adjustments: Check and readjust operating hardware items immediately before final inspection. Leave work in complete and proper operating condition. Remove and replace defective work, including hollow metal work that is warped, bowed, or otherwise unacceptable.

B. Remove grout and other bonding material from hollow metal work immediately after installation.

C. Prime-Coat Touchup: Immediately after erection, sand smooth rusted or damaged areas of prime coat and apply touchup of compatible air-drying, rust-inhibitive primer.

D. Metallic-Coated Surfaces: Clean abraded areas and repair with galvanizing repair paint according to manufacturer's written instructions.

END OF SECTION 08110

SECTION 08211 - FLUSH WOOD DOORS July 16, 2007

PART 1 - GENERAL

1.1 RELATED DOCUMENTS

A. Drawings and general provisions of the Contract, including General and Supplementary Conditions and Division 1 Specification Sections, apply to this Section.

1.2 SUMMARY

A. This Section includes the following:
1. Solid-core doors with wood-veneer faces.
2. Factory finishing flush wood doors.
3. Louvers for flush wood doors.

B. Related Sections include the following:
1. Division 8 Section "Glazing" for glass view panels in flush wood doors.

1.3 SUBMITTALS

A. Product Data: For each type of door. Include details of core and edge construction, louvers, and trim for openings. Include factory-finishing specifications.

B. Shop Drawings: Indicate location, size, and hand of each door; elevation of each kind of door; construction details not covered in Product Data; location and extent of hardware blocking; and other pertinent data.
1. Indicate dimensions and locations of mortises and holes for hardware.
2. Indicate dimensions and locations of cutouts.
3. Indicate requirements for veneer matching.
4. Indicate doors to be factory finished and finish requirements.
5. Indicate fire ratings for fire doors.

C. Samples for Selection: Color charts consisting of actual materials in small sections for the following:
1. Faces of Factory-Finished Doors: Show the full range of colors available for stained finishes.

1.4 QUALITY ASSURANCE

A. Source Limitations: Obtain flush wood doors through one source from a single manufacturer.

B. Quality Standard: Comply with AWI's "Architectural Woodwork Quality Standards Illustrated."
1. Provide AWI Quality Certification Labels or an AWI letter of licensing for Project indicating that doors comply with requirements of grades specified.

C. Fire-Rated Wood Doors: Doors complying with NFPA 80 that are listed and labeled by a testing and inspecting agency acceptable to authorities having jurisdiction, for fire ratings indicated, based on testing according to NFPA 252.
1. Test Pressure: Test at atmospheric pressure.
2. Oversize, Fire-Rated Wood Doors: For door assemblies exceeding sizes of tested assemblies, provide oversize fire door label or certificate of inspection, from a testing

and inspecting agency acceptable to authorities having jurisdiction, stating that doors comply with requirements of design, materials, and construction.

3. Temperature-Rise Rating: At exit enclosures, provide doors that have a temperature-rise rating of 450 deg F (250 deg C) maximum in 30 minutes of fire exposure.

1.5 DELIVERY, STORAGE, AND HANDLING

A. Comply with requirements of referenced standard and manufacturer's written instructions.

B. Package doors individually in plastic bags or cardboard cartons.

C. Mark each door on top and bottom rail with opening number used on Shop Drawings.

1.6 PROJECT CONDITIONS

A. Environmental Limitations: Do not deliver or install doors until building is enclosed, wet work is complete, and HVAC system is operating and will maintain temperature and relative humidity at occupancy levels during the remainder of the construction period.

1.7 WARRANTY

A. Special Warranty: Manufacturer's standard form, signed by manufacturer, Installer, and Contractor, in which manufacturer agrees to repair or replace doors that are defective in materials or workmanship, have warped (bow, cup, or twist) more than 1/4 inch (6.4 mm) in a 42-by-84-inch (1067-by-2134-mm) section, or show telegraphing of core construction in face veneers exceeding 0.01 inch in a 3-inch (0.25 mm in a 75-mm) span.

1. Warranty shall be in effect during the following period of time from date of Substantial Completion:
   a. Solid-Core Interior Doors: Life of installation.

PART 2 - PRODUCTS

2.1 MANUFACTURERS

A. Available Manufacturers: Subject to compliance with requirements, manufacturers offering products that may be incorporated into the Work include, but are not limited to, the following:

1. Flush Wood Doors:
   a. Algoma Hardwoods Inc.
   b. Buell Door Company.
   c. Eggers Industries; Architectural Door Division.
   d. GRAHAM Manufacturing Corp.
   e. Oshkosh Architectural Door Co.
   f. VT Industries Inc.
   g. Marshfield DoorSystems, Inc.
2. Metal Louvers for Doors:
   a. Air Louvers, Inc.
   b. Anemostat Door Products.

2.2 DOOR CONSTRUCTION, GENERAL

A. Adhesives: Do not use adhesives containing urea formaldehyde.

B. Doors for Transparent Finish:
1. Grade: Premium, with Grade AA faces.
2. Species and Cut: Natural White Maple, flat cut or sliced.
3. Match between Veneer Leaves: Book match.
4. Assembly of Veneer Leaves on Door Faces: Running match.
5. Pair and Set Match: Provide for doors hung in same opening or separated only by mullions.
6. Room Match: Provide door faces of compatible color and grain within each separate room or area of building.
7. Stiles: Same species as faces.

2.3 SOLID-CORE DOORS

A. Particleboard Cores: Comply with the following requirements:
1. Particleboard: ANSI A208.1, Grade LD-2.
   a. Use particleboard made with binder containing no urea-formaldehyde resin.
2. Blocking: Provide wood blocking in particleboard-core doors as follows:
   a. 5-inch (125-mm) top-rail blocking, in doors indicated to have closers.
   b. 5-inch (125-mm) bottom-rail blocking, in exterior doors and doors indicated to have kick, mop, or armor plates.
   c. 5-inch (125-mm) midrail blocking, in doors indicated to have exit devices.

B. Interior Veneer-Faced Doors:
1. Core: Particleboard.
2. Construction: Five plies with stiles and rails bonded to core, then entire unit abrasive planed before veneering.

C. Fire-Rated Doors:
1. Construction: Construction and core specified above for type of face indicated or manufacturer's standard mineral-core construction as needed to provide fire rating indicated.
2. Blocking: For mineral-core doors, provide composite blocking with improved screw-holding capability approved for use in doors of fire ratings indicated as follows:
   a. 5-inch (125-mm) top-rail blocking.
   b. 5-inch (125-mm) bottom-rail blocking, in doors indicated to have protection plates.
   c. 5-inch (125-mm) midrail blocking, in doors indicated to have armor plates.
   d. 5-inch (125-mm) midrail blocking, in doors indicated to have exit devices.
3. Edge Construction: At hinge stiles, provide manufacturer's standard laminated-edge construction with improved screw-holding capability and split resistance and with outer stile matching face veneer.
4. Pairs: Provide fire-rated pairs with fire-retardant stiles matching face veneer that are labeled and listed for kinds of applications indicated without formed-steel edges and astragals. Provide stiles with concealed intumescent seals.

2.4 LOUVERS AND LIGHT FRAMES

A. Metal Louvers:
1. Blade Type: Vision-proof, inverted V.
2. Metal and Finish: Extruded aluminum with Class II, clear anodic finish complying with AA-C22A31.

B. Fire Door Louvers: Metal louvers with fusible link and closing device, listed and labeled for use in doors with fire rating of one and one-half hours and less.
   1. Metal and Finish: Galvanized steel, 0.0396 inch (1.0 mm) thick, hot-dip zinc coated and factory primed for paint finish.

C. Metal Frames for Light Openings in Fire Doors: Manufacturer's standard frame formed of 0.0478-inch- (1.2-mm-) thick, cold-rolled steel sheet; factory primed and approved for use in doors of fire rating indicated.

2.5 FABRICATION

A. Fabricate doors in sizes indicated for Project-site fitting.
   1. Comply with clearance requirements of referenced quality standard for fitting. Comply with requirements in NFPA 80 for fire-rated doors.

B. Openings: Cut and trim openings through doors to comply with applicable requirements of referenced standards for kind(s) of door(s) required.
   1. Light Openings: Trim openings with moldings of material and profile indicated.
   2. Louvers: Factory install louvers in prepared openings.

2.6 FACTORY FINISHING

A. General: Comply with AWI's "Architectural Woodwork Quality Standards Illustrated" for factory finishing.

B. Finish doors at factory.

C. Transparent Finish:
   1. Grade: Premium.
   2. Finish: AWI System TR-6 catalyzed polyurethane.
   3. Staining: As selected by Architect from manufacturer's full range.
   4. Effect: Open-grain finish.
   5. Sheen: Semigloss.

PART 3 - EXECUTION

3.1 EXAMINATION

A. Examine doors and installed door frames before hanging doors.
   1. Verify that frames comply with indicated requirements for type, size, location, and swing characteristics and have been installed with level heads and plumb jambs.
   2. Reject doors with defects.

B. Proceed with installation only after unsatisfactory conditions have been corrected.

3.2 INSTALLATION

A. Hardware: For installation, see Division 8 Section "Door Hardware."

B. Manufacturer's Written Instructions: Install doors to comply with manufacturer's written instructions, referenced quality standard, and as indicated.
   1. Install fire-rated doors in corresponding fire-rated frames according to NFPA 80.

C. Job-Fitted Doors: Align and fit doors in frames with uniform clearances and bevels as indicated below; do not trim stiles and rails in excess of limits set by manufacturer or permitted for fire-rated doors. Machine doors for hardware. Seal cut surfaces after fitting and machining.

1. Clearances: Provide 1/8 inch (3.2 mm) at heads, jambs, and between pairs of doors. Provide 1/8 inch (3.2 mm) from bottom of door to top of decorative floor finish or covering. Where threshold is shown or scheduled, provide 1/4 inch (6.4 mm) from bottom of door to top of threshold.
   a. Comply with NFPA 80 for fire-rated doors.
2. Bevel non-fire-rated doors 1/8 inch in 2 inches (3-1/2 degrees) at lock and hinge edges.
3. Bevel fire-rated doors 1/8 inch in 2 inches (3-1/2 degrees) at lock edge; trim stiles and rails only to extent permitted by labeling agency.

D. Factory-Finished Doors: Restore finish before installation if fitting or machining is required at Project site.

3.3 ADJUSTING

A. Operation: Rehang or replace doors that do not swing or operate freely.

B. Finished Doors: Replace doors that are damaged or do not comply with requirements. Doors may be repaired or refinished if work complies with requirements and shows no evidence of repair or refinishing.

END OF SECTION 08211

SECTION 08411 - ALUMINUM-FRAMED ENTRANCES AND STOREFRONTS July 16, 2007

PART 1 - GENERAL

1.1 RELATED DOCUMENTS

A. Drawings and general provisions of the Contract, including General and Supplementary Conditions and Division 1 Specification Sections, apply to this Section.

1.2 SUMMARY

A. This Section includes the following:
   1. Exterior and interior aluminum-framed storefronts.
      a. Glazing is retained mechanically with gaskets on four sides.
   2. Exterior and interior manual-swing aluminum doors.

B. Related Sections include the following:
   1. Division 7 Section "Joint Sealants" for installation of joint sealants installed with aluminum-framed systems and for sealants to the extent not specified in this Section.
   2. Division 8 Section "Door Hardware" for hardware to the extent not specified in this Section.
   3. Division 8 Section "Glazing" for glazing requirements to the extent not specified in this Section.

1.3 PERFORMANCE REQUIREMENTS

A. General: Provide aluminum-framed systems, including anchorage, capable of withstanding, without failure, the effects of the following:
   1. Structural loads.
   2. Thermal movements.
   3. Movements of supporting structure indicated on Drawings including, but not limited to, story drift and deflection from uniformly distributed and concentrated live loads.
   4. Dimensional tolerances of building frame and other adjacent construction.
   5. Failure includes the following:
      a. Deflection exceeding specified limits.
      b. Thermal stresses transferred to building structure.
      c. Framing members transferring stresses, including those caused by thermal and structural movements, to glazing.
      d. Glazing-to-glazing contact.
      e. Noise or vibration created by wind and thermal and structural movements.
      f. Loosening or weakening of fasteners, attachments, and other components.
      g. Sealant failure.
      h. Failure of operating units to function properly.

B. Structural Loads:
   1. Wind Loads: As indicated on Drawings.
   2. Seismic Loads: As indicated on Drawings.

C. Deflection of Framing Members:
   1. Deflection Normal to Wall Plane: Limited to 1/175 of clear span for spans up to 13 feet 6 inches (4.1 m) and to 1/240 of clear span plus 1/4 inch (6.35 mm) for spans greater than 13 feet 6 inches (4.1 m) or an amount that restricts edge deflection of

individual glazing lites to 3/4 inch (19 mm), whichever is less.

2. Deflection Parallel to Glazing Plane: Limited to amount not exceeding that which reduces glazing bite to less than 75 percent of design dimension and that which reduces edge clearance between framing members and glazing or other fixed components directly below to less than 1/8 inch (3.2 mm) and clearance between members and operable units directly below to less than 1/16 inch (1.5 mm).

D. Structural-Test Performance: Provide aluminum-framed systems tested according to ASTM E 330 as follows:

1. When tested at positive and negative wind-load design pressures, systems do not evidence deflection exceeding specified limits.
2. When tested at 150 percent of positive and negative wind-load design pressures, systems, including anchorage, do not evidence material failures, structural distress, and permanent deformation of main framing members exceeding 0.2 percent of span.
3. Test Durations: As required by design wind velocity but not less than 10 seconds.

E. Story Drift: Provide aluminum-framed systems that accommodate design displacement of adjacent stories indicated.

1. Design Displacement: As indicated on Drawings.
2. Test Performance: Meeting criteria for passing based on building occupancy type when tested according to AAMA 501.4 at design displacement and 1.5 times design displacement.

F. Thermal Movements: Provide aluminum-framed systems that allow for thermal movements resulting from the following maximum change (range) in ambient and surface temperatures. Base engineering calculation on surface temperatures of materials due to both solar heat gain and nighttime-sky heat loss.

1. Temperature Change (Range): 120 deg F (67 deg C), ambient; 180 deg F (100 deg C), material surfaces.
2. Test Performance: No buckling; stress on glass; sealant failure; excess stress on framing, anchors, and fasteners; or reduction of performance when tested according to AAMA 501.5.
   a. Test High Exterior Ambient-Air Temperature: That which produces an exterior metal-surface temperature of 180 deg F (82 deg C).
   b. Test Low Exterior Ambient-Air Temperature: 0 deg F (minus 18 deg C) .
   c. Test Interior Ambient-Air Temperature: 75 deg F (24 deg C).

G. Air Infiltration: Provide aluminum-framed systems with maximum air leakage through fixed glazing and framing areas of 0.06 cfm/sq. ft. (0.03 L/s per sq. m) of fixed wall area when tested according to ASTM E 283 at a minimum static-air-pressure difference of 6.24 lbf/sq. ft. (300 Pa).

H. Water Penetration Under Static Pressure: Provide aluminum-framed systems that do not evidence water penetration through fixed glazing and framing areas when tested according to ASTM E 331 at a minimum static-air-pressure difference of 20 percent of positive wind-load design pressure, but not less than 6.24 lbf/sq. ft. (300 Pa).

I. Condensation Resistance: Provide aluminum-framed systems with fixed glazing and framing areas having condensation-resistance factor (CRF) of not less than 53 when tested according to AAMA 1503.

J. Average Thermal Conductance: Provide aluminum-framed systems with fixed glazing and

framing areas having average U-factor of not more than 0.69 Btu/sq. ft. x h x deg F (3.92 W/sq. m x K) when tested according to AAMA 1503.

1.4 SUBMITTALS

A. Product Data: Include construction details, material descriptions, dimensions of individual components and profiles, and finishes for each type of product indicated.

B. Shop Drawings: For aluminum-framed systems. Include plans, elevations, sections, details, and attachments to other work.
   1. Include structural analysis data signed and sealed by the qualified professional engineer responsible for their preparation.
   2. Include details of provisions for system expansion and contraction and for draining moisture occurring within the system to the exterior.
   3. For entrances, include hardware schedule and indicate operating hardware types, functions, quantities, and locations.

C. Samples for Selection: For units with factory-applied color finishes.

D. Fabrication Sample: Of each vertical-to-horizontal intersection of systems, made from 12-inch (300-mm) lengths of full-size components and showing details of the following:
   1. Joinery.
   2. Anchorage.
   3. Expansion provisions.
   4. Glazing.
   5. Flashing and drainage.

E. Welding certificates.

F. Qualification Data: For Installer.

G. Product Test Reports: Based on evaluation of comprehensive tests performed by a qualified testing agency, for aluminum-framed systems.

H. Maintenance Data: For aluminum-framed systems to include in maintenance manuals.

I. Warranties: Special warranties specified in this Section.

1.5 QUALITY ASSURANCE

A. Installer Qualifications: Capable of assuming engineering responsibility and performing work of this Section and who is acceptable to manufacturer.
   1. Engineering Responsibility: Preparation of data for aluminum-framed systems including Shop Drawings based on testing and engineering analysis of manufacturer's standard units in assemblies similar to those indicated for this Project and submission of reports of tests performed on manufacturer's standard assemblies.

B. Product Options: Information on Drawings and in Specifications establishes requirements for systems' aesthetic effects and performance characteristics. Aesthetic effects are indicated by dimensions, arrangements, alignment, and profiles of components and assemblies as they relate to sightlines, to one another, and to adjoining construction. Performance characteristics are indicated by criteria subject to verification by one or more methods

including preconstruction testing, field testing, and in-service performance.

1. Do not modify intended aesthetic effects, as judged solely by Architect, except with Architect's approval. If modifications are proposed, submit comprehensive explanatory data to Architect for review.

C. Accessible Entrances: Comply with the U.S. Architectural & Transportation Barriers Compliance Board's "Americans with Disabilities Act (ADA), Accessibility Guidelines for Buildings and Facilities (ADAAG)." and ICC/ANSI A117.1.

D. Welding: Qualify procedures and personnel according to AWS D1.2, "Structural Welding Code--Aluminum."

E. Mockups: Build mockups to demonstrate aesthetic effects and set quality standards for fabrication and installation.

1. Build mockup of typical wall area as shown on Drawings.
2. Field testing shall be performed on mockups according to requirements in Part 3 "Field Quality Control" Article.
3. Approved mockups may become part of the completed Work if undisturbed at time of Substantial Completion.

1.6 PROJECT CONDITIONS

A. Field Measurements: Verify actual locations of structural supports for aluminum-framed systems by field measurements before fabrication and indicate measurements on Shop Drawings.

1. Established Dimensions: Where field measurements cannot be made without delaying the Work, establish dimensions and proceed with fabricating aluminum-framed systems without field measurements. Coordinate construction to ensure that actual dimensions correspond to established dimensions.

1.7 WARRANTY

A. Special Assembly Warranty: Manufacturer's standard form in which manufacturer agrees to repair or replace components of aluminum-framed systems that do not comply with requirements or that deteriorate as defined in this Section within specified warranty period.

1. Failures include, but are not limited to, the following:
   a. Structural failures including, but not limited to, excessive deflection.
   b. Noise or vibration caused by thermal movements.
   c. Deterioration of metals, metal finishes, and other materials beyond normal weathering.
   d. Water leakage through fixed glazing and framing areas.
   e. Failure of operating components to function properly.
2. Warranty Period: Five years from date of Substantial Completion.

B. Special Finish Warranty: Manufacturer's standard form in which manufacturer agrees to repair or replace components on which finishes fail within specified warranty period. Warranty does not include normal weathering.

1. Warranty Period: 20 years from date of Substantial Completion.

PART 2 - PRODUCTS

2.1 MANUFACTURERS

A. Available Manufacturers: Subject to compliance with requirements, manufacturers offering products that may be incorporated into the Work include, but are not limited to, the following:
   1. EFCO Corporation.
   2. Kawneer.
      a. Equal to: TriFab VG 451T (Exterior) (Center-Glazed) and 451 (Interior) (Center-Glazed).
   3. United States Aluminum.
   4. Vistawall Architectural Products.
   5. Wausau Window and Wall Systems.

2.2 MATERIALS

A. Aluminum: Alloy and temper recommended by manufacturer for type of use and finish indicated.
   1. Sheet and Plate: ASTM B 209 (ASTM B 209M).
   2. Extruded Bars, Rods, Profiles, and Tubes: ASTM B 221 (ASTM B 221M).
   3. Extruded Structural Pipe and Tubes: ASTM B 429.
   4. Structural Profiles: ASTM B 308/B 308M.
   5. Welding Rods and Bare Electrodes: AWS A5.10/A5.10M.

B. Steel Reinforcement: With manufacturer's standard corrosion-resistant primer complying with SSPC-PS Guide No. 12.00 applied immediately after surface preparation and pretreatment. Select surface preparation methods according to recommendations in SSPC-SP COM and prepare surfaces according to applicable SSPC standard.
   1. Structural Shapes, Plates, and Bars: ASTM A 36/A 36M.
   2. Cold-Rolled Sheet and Strip: ASTM A 1008/A 1008M.
   3. Hot-Rolled Sheet and Strip: ASTM A 1011/A 1011M.

2.3 FRAMING SYSTEMS

A. Framing Members: Manufacturer's standard extruded-aluminum framing members of thickness required and reinforced as required to support imposed loads.
   1. Construction: Framing members are composite assemblies of two separate extruded-aluminum components permanently bonded by an elastomeric material of low thermal conductance.

B. Brackets and Reinforcements: Manufacturer's standard high-strength aluminum with nonstaining, nonferrous shims for aligning system components.

C. Fasteners and Accessories: Manufacturer's standard corrosion-resistant, nonstaining, nonbleeding fasteners and accessories compatible with adjacent materials.
   1. Where fasteners are subject to loosening or turning out from thermal and structural movements, wind loads, or vibration, use self-locking devices.
   2. Reinforce members as required to receive fastener threads.

D. Concrete and Masonry Inserts: Hot-dip galvanized cast-iron, malleable-iron, or steel inserts complying with ASTM A 123/A 123M or ASTM A 153/A 153M requirements.

E. Flashing: Manufacturer's standard corrosion-resistant, nonstaining, nonbleeding flashing

compatible with adjacent materials. Form exposed flashing from sheet aluminum finished to match framing and of sufficient thickness to maintain a flat appearance without visible deflection.

F. Framing System Gaskets and Sealants: Manufacturer's standard recommended by manufacturer for joint type.

2.4 GLAZING SYSTEMS

A. Glazing: As specified in Division 8 Section "Glazing."

B. Glazing Gaskets: Manufacturer's standard compression types, replaceable, molded or extruded, that maintain uniform pressure and watertight seal.

C. Spacers and Setting Blocks: Manufacturer's standard elastomeric types.

2.5 DOORS

A. Doors: Manufacturer's standard glazed doors, for manual swing operation.
1. Door Construction: 2-inch (50.8-mm) overall thickness, with minimum 0.188-inch-(4.8-mm-) thick, extruded-aluminum tubular rail and stile members. Mechanically fasten corners with reinforcing brackets that are deep penetration and fillet welded or that incorporate concealed tie rods.
2. Door Design: Medium stile; 3-1/2-inch (88.9-mm) nominal width.
   a. Accessible Doors: Smooth surfaced for width of door in area within 10 inches (255 mm) above floor or ground plane.
3. Glazing Stops and Gaskets: Square, snap-on, extruded-aluminum stops and preformed gaskets.
   a. Provide nonremovable glazing stops on outside of door.
4. Equal to: Kawneer, 350 Tuffline.

B. Entrance Door Frames: Provide tubular and channel frame entrance door frame assemblies, as indicated, with welded or mechanical joints in accordance with manufacturer's standards. Reinforce as necessary to support required loads. Entrance doors and frames shall be supplied as a complete system. Frames shall be minimum 3/16" wall thickness.

2.6 DOOR HARDWARE

A. General: Provide heavy-duty units in sizes and types recommended by entrance system and hardware manufacturers for entrances and uses indicated.
1. Opening-Force Requirements:
   a. Egress Doors: Not more than 30 lbf (133 N) required to set door in motion and not more than 15 lbf (67 N) required to open door to minimum required width.
   b. Accessible Interior Doors: Not more than 5 lbf (22.2 N).

B. Scheduled Door Hardware: Provide door hardware according to the Door Hardware Schedule.
1. Named Manufacturer's Products: Product designation and hardware manufacturer are listed in the Door Hardware Schedule to establish minimum requirements for design, grade, function, finish, size, and other distinctive qualities of each type of door hardware.
   a. Provide named hardware manufacturer's products.

b. Named products are basis-of-design products. Provide named hardware manufacturer's products or comparable products that are equivalent in function and quality and that are recommended and supplied by entrance system manufacturer.

2. References to BHMA Standards: Provide products complying with standards referenced in this Article and with requirements for description, quality, type, and function listed in the Door Hardware Schedule.

C. Continuous-Gear Hinges: Manufacturer's standard with stainless-steel bearings between knuckles; fabricated to full height of door and frame.

D. Locking Devices, General: Do not require use of key, tool, or special knowledge for operation.

1. Opening-Force Requirements:

a. Latches and Exit Devices: Not more than 15 lbf (67 N) required to release latch.

E. Manual Flush Bolts: BHMA A156.16, Grade 1.

F. Panic Exit Devices: Listed and labeled by a testing and inspecting agency acceptable to authorities having jurisdiction, for panic protection, based on testing according to UL 305.

1. Standard: BHMA A156.3, Grade 1.
2. Provide panic exit devices with request to exit feature, where indicated.
3. Provide panic exit devices matching those in Section 08710 - Door Hardware.

G. Cylinders: Match those as specified in Division 8 Section "Door Hardware."

H. Strikes: Provide strike with black-plastic dust box for each latch or lock bolt; fabricated for aluminum framing.

I. Operating Trim: BHMA A156.6.

J. Removable Mullions:

1. Standard: BHMA A156.3.
2. When used with panic exit devices, provide removable mullions listed and labeled by a testing and inspecting agency acceptable to authorities having jurisdiction, for panic protection, based on testing according to UL 305. Use only mullions that have been tested with exit devices to be used.

K. Surface-Mounted Overhead Closers: Modern type with cover, for parallel-arm-type mounting installation. Comply with ANSI A156.4, Grade 1. Comply with manufacturer=s recommendations for closer size, depending on door size, exposure to weather and anticipated frequency of use.

1. Equal to LCN P4041-EDA.

L. Surface-Mounted Overhead Closers: ANSI/BHMA A156.4, Grade 1. Provide cover and the following:

1. Mounting: Parallel arm.
2. Hold Open: Automatic, at angle selected by Architect from manufacturer=s standard options.
3. Back Check: Adjustable.
4. Equal to: LCN P4041-EDA H, 180 degree mounting where indicated

M. PushBars/Pull Handles: Aluminum pull handles of style indicated thru bolted through door.

N. Door Stops: BHMA A156.16, Grade 1, floor or wall mounted, as appropriate for door location indicated, with integral rubber bumper.

O. Weather Stripping: Manufacturer's standard replaceable components.
   1. Compression Type: Made of ASTM D 2000, molded neoprene, or ASTM D 2287, molded PVC.

P. Weather Sweeps: Manufacturer's standard exterior-door bottom sweep with concealed fasteners on mounting strip.

Q. Thresholds: Raised thresholds beveled with a slope of not more than 1:2, with maximum height of 1/2 inch (13 mm).
   1. Standard: BHMA A156.21.

R. Mullion Push-Plate Switch: Manufacturer's standard semiflush, mullion-mounted, door control switch; consisting of round or square, flat push plate; of material indicated; and actuator mounted in recessed junction box. Provide engraved message as indicated.
   1. Material: Stainless steel.
   2. Message: International symbol of accessibility and "Push to Open."

S. Remote Pedestal-Mounted Switch: Manufacturer's standard pedestal-mounted, door control switch; consisting of rectangular, flat push plate; of material indicated; and actuator mounted in junction box. Provide engraved message as indicated.
   1. Material: Stainless steel.
   2. Message: International symbol of accessibility and "Push to Open."
   3. Mounting: Pedestal.

2.7 HARDWARE SCHEDULE

A. Furnish the following items in the amounts indicated on the drawings and schedules or for a complete and operable facility.
   1. Refer to and provide hardware in accordance with Section 08710 – Door Hardware.

2.8 ACCESSORY MATERIALS

A. Joint Sealants: For installation at perimeter of aluminum-framed systems, as specified in Division 7 Section "Joint Sealants."

B. Bituminous Paint: Cold-applied asphalt-mastic paint complying with SSPC-Paint 12 requirements except containing no asbestos, formulated for 30-mil (0.762-mm) thickness per coat.

2.9 FABRICATION

A. Form aluminum shapes before finishing.

B. Weld in concealed locations to greatest extent possible to minimize distortion or discoloration of finish. Remove weld spatter and welding oxides from exposed surfaces by descaling or grinding.

C. Framing Members, General: Fabricate components that, when assembled, have the

following characteristics:

1. Profiles that are sharp, straight, and free of defects or deformations.
2. Accurately fitted joints with ends coped or mitered.
3. Means to drain water passing joints, condensation occurring within framing members, and moisture migrating within the system to exterior.
4. Physical and thermal isolation of glazing from framing members.
5. Accommodations for thermal and mechanical movements of glazing and framing to maintain required glazing edge clearances.
6. Provisions for field replacement of glazing from exterior.
7. Fasteners, anchors, and connection devices that are concealed from view to greatest extent possible.

D. Door Frames: Reinforce as required to support loads imposed by door operation and for installing hardware.

1. At exterior doors, provide compression weather stripping at fixed stops.
2. At interior doors, provide silencers at stops to prevent metal-to-metal contact. Install three silencers on strike jamb of single-door frames and two silencers on head of frames for pairs of doors.

E. Doors: Reinforce doors as required for installing hardware.

1. At pairs of exterior doors, provide sliding weather stripping retained in adjustable strip mortised into door edge.
2. At exterior doors, provide weather sweeps applied to door bottoms.

F. Hardware Installation: Factory install hardware to the greatest extent possible. Cut, drill, and tap for factory-installed hardware before applying finishes.

G. After fabrication, clearly mark components to identify their locations in Project according to Shop Drawings.

2.10 ALUMINUM FINISHES

A. General: Comply with NAAMM's "Metal Finishes Manual for Architectural and Metal Products" for recommendations for applying and designating finishes.

B. Finish designations prefixed by AA comply with the system established by the Aluminum Association for designating aluminum finishes.

C. Color Anodic Finish: AAMA 611, AA-M12C22A42/A44, Class I, 0.018 mm or thicker.

1. Color: Black.

PART 3 - EXECUTION

3.1 EXAMINATION

A. Examine areas, with Installer present, for compliance with requirements for installation tolerances and other conditions affecting performance of work.

1. Proceed with installation only after unsatisfactory conditions have been corrected.

3.2 INSTALLATION

A. General:
   1. Comply with manufacturer's written instructions.
   2. Do not install damaged components.
   3. Fit joints to produce hairline joints free of burrs and distortion.
   4. Rigidly secure nonmovement joints.
   5. Install anchors with separators and isolators to prevent metal corrosion and electrolytic deterioration.
   6. Seal joints watertight, unless otherwise indicated.

B. Metal Protection:
   1. Where aluminum will contact dissimilar metals, protect against galvanic action by painting contact surfaces with primer or by applying sealant or tape or installing nonconductive spacers as recommended by manufacturer for this purpose.
   2. Where aluminum will contact concrete or masonry, protect against corrosion by painting contact surfaces with bituminous paint.

C. Install components to drain water passing joints, condensation occurring within framing members, and moisture migrating within the system to exterior.

D. Set continuous sill members and flashing in full sealant bed as specified in Division 7 Section "Joint Sealants" and to produce weathertight installation.

E. Install components plumb and true in alignment with established lines and grades, without warp or rack.

F. Install glazing as specified in Division 8 Section AGlazing.@

G. Entrances: Install to produce smooth operation and tight fit at contact points.
   1. Exterior Entrances: Install to produce tight fit at weather stripping and weathertight closure.
   2. Field-Installed Hardware: Install surface-mounted hardware according to hardware manufacturers' written instructions using concealed fasteners to greatest extent possible.

H. Install perimeter joint sealants as specified in Division 7 Section "Joint Sealants" and to produce weathertight installation.

I. Erection Tolerances: Install aluminum-framed systems to comply with the following maximum tolerances:
   1. Location and Plane: Limit variation from true location and plane to 1/8 inch in 12 feet (3 mm in 3.7 m); 1/4 inch (6 mm) over total length.
   2. Alignment:
      a. Where surfaces abut in line, limit offset from true alignment to 1/16 inch (1.5 mm).
      b. Where surfaces meet at corners, limit offset from true alignment to 1/32 inch (0.8 mm).
   3. Diagonal Measurements: Limit difference between diagonal measurement to 1/8 inch (3 mm).

3.3 FIELD QUALITY CONTROL

A. Testing Agency: Owner will engage a qualified independent testing and inspecting agency to perform field tests and inspections and prepare test reports.

B. Testing Services: Testing and inspecting of representative areas to determine compliance of installed systems with specified requirements shall take place as follows and in successive stages as indicated on Drawings. Do not proceed with installation of the next area until test results for previously completed areas show compliance with requirements.

1. Air Infiltration: Areas shall be tested for air leakage of 1.5 times the rate specified for laboratory testing under Part 1 "Performance Requirements" Article, but not more than 0.09 cfm/sq. ft. (0.03 L/s per sq. m) of fixed wall area when tested according to ASTM E 783 at a minimum static-air-pressure difference of 6.24 lbf/sq. ft. (300 Pa).
2. Water Penetration: Areas shall be tested according to ASTM E 1105 at a minimum uniform and cyclic static-air-pressure difference of 0.67 times the static-air-pressure difference specified for laboratory testing under Part 1 "Performance Requirements" Article, but not less than 4.18 lbf/sq. ft. (200 Pa), and shall not evidence water penetration.

C. Repair or remove work where test results and inspections indicate that it does not comply with specified requirements.

D. Additional testing and inspecting, at Contractor's expense, will be performed to determine compliance of replaced or additional work with specified requirements.

3.4 ADJUSTING

A. Entrances: Adjust operating hardware for smooth operation according to hardware manufacturers' written instructions.

1. For doors accessible to people with disabilities, adjust closers to provide a 3-second closer sweep period for doors to move from a 70-degree open position to 3 inches (75 mm) from the latch measured to the leading door edge.

END OF SECTION 08411

SECTION 08711 - DOOR HARDWARE (SCHEDULED BY NAMING PRODUCTS) July 16, 2007

PART 1 - GENERAL

1.1 RELATED DOCUMENTS

A. Drawings and general provisions of the Contract, including General and Supplementary Conditions and Division 1 Specification Sections, apply to this Section.

1.2 SUMMARY

A. This Section includes the following:
   1. Commercial door hardware for the following:
      a. Swinging doors.
      b. Other doors to the extent indicated.
   2. Cylinders for doors specified in other Sections.

B. Related Sections include the following:
   1. Division 8 Section "Steel Doors and Frames" for astragals provided as part of a fire-rated labeled assembly and for door silencers provided as part of the frame.

C. Products furnished, but not installed, under this Section include the following. Coordinating, purchasing, delivering, and scheduling remain requirements of this Section.
   1. Cylinders for locks on aluminum and glass entrance doors.

1.3 SUBMITTALS

A. Product Data: Include installation details, material descriptions, dimensions of individual components and profiles, and finishes.

B. Door Hardware Schedule: Prepared by or under the supervision of supplier, detailing fabrication and assembly of door hardware, as well as procedures and diagrams. Coordinate the final Door Hardware Schedule with doors, frames, and related work to ensure proper size, thickness, hand, function, and finish of door hardware.
   1. Format: Comply with scheduling sequence and vertical format in DHI's "Sequence and Format for the Hardware Schedule."
   2. Organization: Organize the Door Hardware Schedule into door hardware sets indicating complete designations of every item required for each door or opening.
      a. Organize door hardware sets in same order as in the Door Hardware Schedule at the end of Part 3.
   3. Content: Include the following information:
      a. Type, style, function, size, label, hand, and finish of each door hardware item.
      b. Manufacturer of each item.
      c. Fastenings and other pertinent information.
      d. Location of each door hardware set, cross-referenced to Drawings, both on floor plans and in door and frame schedule.
      e. Explanation of abbreviations, symbols, and codes contained in schedule.
      f. Mounting locations for door hardware.
      g. Door and frame sizes and materials.
      h. Description of each electrified door hardware function, including location, sequence of operation, and interface with other building control systems.

1) Sequence of Operation: Include description of component functions that occur in the following situations: authorized person wants to enter; authorized person wants to exit; unauthorized person wants to enter; unauthorized person wants to exit.

4. Submittal Sequence: Submit initial draft of final schedule along with essential Product Data to facilitate the fabrication of other work that is critical in the Project construction schedule. Submit the final Door Hardware Schedule after Samples, Product Data, coordination with Shop Drawings of other work, delivery schedules, and similar information has been completed and accepted.

C. Keying Schedule: Prepared by or under the supervision of supplier, detailing Owner's final keying instructions for locks. Include schematic keying diagram and index each key set to unique door designations.

D. Maintenance Data: For each type of door hardware to include in maintenance manuals specified in Division 1.

E. Warranties: Special warranties specified in this Section.

1.4 QUALITY ASSURANCE

A. Installer Qualifications: An experienced installer who has completed door hardware similar in material, design, and extent to that indicated for this Project and whose work has resulted in construction with a record of successful in-service performance.

B. Supplier Qualifications: Door hardware supplier with warehousing facilities in Project's vicinity and who is or employs a qualified Architectural Hardware Consultant, available during the course of the Work to consult with Contractor, Architect, and Owner about door hardware and keying.

1. Scheduling Responsibility: Preparation of door hardware and keying schedules.

C. Architectural Hardware Consultant Qualifications: A person who is currently certified by the Door and Hardware Institute as an Architectural Hardware Consultant and who is experienced in providing consulting services for door hardware installations that are comparable in material, design, and extent to that indicated for this Project.

D. Source Limitations: Obtain each type and variety of door hardware from a single manufacturer, unless otherwise indicated.

E. Regulatory Requirements: Comply with provisions of the following:

1. Where indicated to comply with accessibility requirements, comply with ANSI A117.1, as follows:

a. Handles, Pulls, Latches, Locks, and other Operating Devices: Shape that is easy to grasp with one hand and does not require tight grasping, tight pinching, or twisting of the wrist.

b. Door Closers: Comply with the following maximum opening-force requirements indicated:

1) Interior Hinged Doors: 5 lbf (22.2 N) applied perpendicular to door.

2) Fire Doors: Minimum opening force allowable by authorities having jurisdiction.

c. Thresholds: Not more than 1/2 inch (13 mm) high. Bevel raised thresholds with a slope of not more than 1:2.

F. Fire-Rated Door Assemblies: Provide door hardware for assemblies complying with NFPA 80 that are listed and labeled by a testing and inspecting agency acceptable to authorities having jurisdiction, for fire ratings indicated, based on testing according to NFPA 252.
   1. Test Pressure: Test at atmospheric pressure.

G. Keying Conference: Conduct conference at Project site to comply with requirements in Division 1 Section "Project Meetings." Incorporate keying conference decisions into final keying schedule after reviewing door hardware keying system including, but not limited to, the following:
   1. Function of building, flow of traffic, purpose of each area, degree of security required, and plans for future expansion.
   2. Preliminary key system schematic diagram.
   3. Requirements for key control system.
   4. Address for delivery of keys.

H. Preinstallation Conference: Conduct conference at Project site to comply with requirements in Division 1 Section "Project Meetings." Review methods and procedures related to electrified door hardware including, but not limited to, the following:
   1. Inspect and discuss electrical roughing-in and other preparatory work performed by other trades.
   2. Review sequence of operation for each type of electrified door hardware.
   3. Review and finalize construction schedule and verify availability of materials, Installer's personnel, equipment, and facilities needed to make progress and avoid delays.
   4. Review required testing, inspecting, and certifying procedures.

1.5 DELIVERY, STORAGE, AND HANDLING

A. Inventory door hardware on receipt and provide secure lock-up for door hardware delivered to Project site.

B. Tag each item or package separately with identification related to the final Door Hardware Schedule, and include basic installation instructions with each item or package.

C. Deliver keys to Owner by registered mail or overnight package service.

1.6 COORDINATION

A. Templates: Obtain and distribute to the parties involved templates for doors, frames, and other work specified to be factory prepared for installing door hardware. Check Shop Drawings of other work to confirm that adequate provisions are made for locating and installing door hardware to comply with indicated requirements.

1.7 WARRANTY

A. General Warranty: Special warranties specified in this Article shall not deprive Owner of other rights Owner may have under other provisions of the Contract Documents and shall be in addition to, and run concurrent with, other warranties made by Contractor under requirements of the Contract Documents.

B. Special Warranty: Written warranty, executed by manufacturer agreeing to repair or replace components of door hardware that fail in materials or workmanship within specified warranty

period. Failures include, but are not limited to, the following:
1. Structural failures including excessive deflection, cracking, or breakage.
2. Faulty operation of operators and door hardware.
3. Deterioration of metals, metal finishes, and other materials beyond normal weathering.

C. Warranty Period: Three years from date of Substantial Completion, unless otherwise indicated.

D. Warranty Period for Manual Closers: 10 years from date of Substantial Completion.

1.8 MAINTENANCE SERVICE

A. Maintenance Tools and Instructions: Furnish a complete set of specialized tools and maintenance instructions as needed for Owner's continued adjustment, maintenance, and removal and replacement of door hardware.

PART 2 - PRODUCTS

2.1 SCHEDULED DOOR HARDWARE

A. General: Provide door hardware for each door to comply with requirements in this Section**,** and the Door Hardware Schedule at the end of Part 3.
1. Door Hardware Sets: Provide quantity, item, size, finish or color indicated, and products equivalent in function and comparable in quality to named products.
2. Sequence of Operation: Provide electrified door hardware function, sequence of operation, and interface with other building control systems indicated.

B. Designations: Requirements for design, grade, function, finish, size, and other distinctive qualities of each type of door hardware are indicated in the Door Hardware Schedule at the end of Part 3. Products are identified by using door hardware designations, as follows:
1. Named Manufacturer's Products: Product designation and manufacturer are listed for each door hardware type required for the purpose of establishing minimum requirements. Manufacturers' names are abbreviated in the Door Hardware Schedule.

2.2 HINGES AND PIVOTS

A. Available Manufacturers: Subject to compliance with requirements, manufacturers offering products that may be incorporated into the Work include, but are not limited to, the following:
1. Hinges:
   a. Bommer Industries, Inc. (BI).
   b. IVES Hardware; an Ingersoll-Rand Company (IVS).
   c. Hager Companies (HAG).
   d. McKinney Products Company; Div. of ESSEX Industries, Inc. (MCK).
   e. Stanley Commercial Hardware; Div. of The Stanley Works (STH).

B. Quantity: Provide the following, unless otherwise indicated:
1. Two Hinges: For doors with heights up to 60 inches (1524 mm).
2. Three Hinges: For doors with heights 61 to 90 inches (1549 to 2286 mm).
3. Four Hinges: For doors with heights 91 to 120 inches (2311 to 3048 mm).
4. For doors with heights more than 120 inches (3048 mm), provide 4 hinges, plus 1

hinge for every 30 inches (750 mm) of door height greater than 120 inches (3048 mm).

C. Template Requirements: Except for hinges and pivots to be installed entirely (both leaves) into wood doors and frames, provide only template-produced units.

D. Hinge Base Metal: Unless otherwise indicated, provide the following:
1. Interior Hinges: Brass, with stainless-steel pin body and brass protruding heads.
2. Hinges for Fire-Rated Assemblies: Steel, with steel pin.

E. Hinge Options: Comply with the following where indicated in the Door Hardware Schedule or on Drawings:
1. Nonremovable Pins: Provide set screw in hinge barrel that, when tightened into a groove in hinge pin, prevents removal of pin while door is closed; for the following applications:
a. Outswinging exterior doors.
b. Outswinging corridor doors with locks.
2. Corners: Square.

F. Fasteners: Comply with the following:
1. Machine Screws: For metal doors and frames. Install into drilled and tapped holes.
2. Wood Screws: For wood doors and frames.
3. Threaded-to-the-Head Wood Screws: For fire-rated wood doors.
4. Screws: Phillips flat-head screws; machine screws (drilled and tapped holes) for metal doors, wood screws for wood doors and frames. Finish screw heads to match surface of hinges.

2.3 LOCKS AND LATCHES

A. Available Manufacturers: Subject to compliance with requirements, manufacturers offering products that may be incorporated into the Work include, but are not limited to, the following:
1. Mechanical Locks and Latches:
a. Falcon Lock; an Ingersoll-Rand Company (FAL).

B. Bored Locks: BHMA Grade 1; Series 4000.

C. Certified Products: Provide door hardware listed in the following BHMA directories:
1. Mechanical Locks and Latches: BHMA's "Directory of Certified Locks & Latches."

D. Lock Trim: Comply with the following:
1. Lever: Cast.
2. Knob: Wrought.
3. Escutcheon (Rose): Wrought.
4. Dummy Trim: Match lever lock trim and escutcheons.
5. Lockset Designs: Provide the lockset design designated below or, if sets are provided by another manufacturer, provide designs that match those designated:
a. Bored Locks: Provide design indicated in schedules**.**

E. Lock Functions: Function numbers and descriptions indicated in the Door Hardware Schedule comply with the following:
1. Mortise Locks: BHMA A156.13.

F. Lock Throw: Comply with testing requirements for length of bolts to comply with labeled fire

door requirements, and as follows:
1. Mortise Locks: Minimum 3/4-inch (19-mm) latchbolt throw.
2. Deadbolts: Minimum 1-inch (25-mm) bolt throw.

G. Backset: 2-3/4 inches (70 mm), unless otherwise indicated.

2.4 DOOR BOLTS

A. Available Manufacturers: Subject to compliance with requirements, manufacturers offering products that may be incorporated into the Work include, but are not limited to, the following:
1. Flush Bolts:
   a. Glynn-Johnson; an Ingersoll-Rand Company (GJ).
   b. IVES Hardware; an Ingersoll-Rand Company (IVS).
   c. NT Quality Hardware; an Ingersoll-Rand Company (NTQ).
   d. Rockwood Manufacturing Company (RM).

B. Flush Bolts: BHMA Grade 1, designed for mortising into door edge.

C. Bolt Throw: Comply with testing requirements for length of bolts to comply with labeled fire door requirements, and as follows:
1. Half-Round Surface Bolts: Minimum 7/8-inch (22-mm) throw.
2. Interlocking Surface Bolts: Minimum 15/16-inch (24-mm) throw.
3. Fire-Rated Surface Bolts: Minimum 1-inch (25-mm) throw; listed and labeled for fire-rated doors.
4. Mortise Flush Bolts: Minimum 3/4-inch (19-mm) throw.

2.5 EXIT DEVICES

A. Available Manufacturers: Subject to compliance with requirements, manufacturers offering products that may be incorporated into the Work include, but are not limited to, the following:
1. Monarch Exit Devices & Door Hardware; an Ingersoll-Rand Company (MON).

B. Certified Products: Provide exit devices listed in BHMA's "Directory of Certified Exit Devices."

C. Panic Exit Devices: Listed and labeled by a testing and inspecting agency acceptable to authorities having jurisdiction, for panic protection, based on testing according to UL 305.

D. Fire Exit Devices: Complying with NFPA 80 that are listed and labeled by a testing and inspecting agency acceptable to authorities having jurisdiction, for fire and panic protection, based on testing according to UL 305 and NFPA 252.

E. Dummy Push Bar: Nonfunctioning push bar matching functional push bar.
1. Operation: Rigid.

F. Outside Trim: Lever or Lever with cylinder; material and finish to match locksets, unless otherwise indicated.
1. Match design for locksets and latchsets, unless otherwise indicated.

G. Through Bolts: For exit devices and trim on metal doors, non-fire-rated wood doors, and fire-rated wood doors.

2.6 CYLINDERS AND KEYING

A. Available Manufacturers: Subject to compliance with requirements, manufacturers offering products that may be incorporated into the Work include, but are not limited to, the following:
   1. Cylinders: Same manufacturer as for locks and latches.
   2. Key Control Systems:
      a. Key Control Systems, Inc. (KCS).
      b. Major Metalfab Co. (MM).
      c. Sargent Manufacturing Company; Div. of ESSEX Industries, Inc. (SGT).
      d. Sunroc Corporation (SUN).

B. Cylinders: Manufacturer's standard tumbler type, constructed from brass or bronze, stainless steel, or nickel silver, and complying with the following:
   1. Number of Pins: Seven.
   2. Mortise Type: Threaded cylinders with rings and straight- or clover-type cam.
   3. Rim Type: Cylinders with back plate, flat-type vertical or horizontal tailpiece, and raised trim ring.

C. Permanent Cores: Manufacturer's standard; finish face to match lockset; complying with the following:
   1. Removable Cores: Core insert, removable by use of a special key, and for use with only the core manufacturer's cylinder and door hardware.

D. Construction Keying: Comply with the following:
   1. Construction Cores: Provide construction cores that are replaceable by permanent cores. Provide 10 construction master keys.
      a. Replace construction cores with permanent cores, as directed by Owner.

E. Keying System: Unless otherwise indicated, provide a factory-registered keying system complying with the following requirements:
   1. Grand Master Key System: Cylinders are operated by a change key, a master key, and a grand master key.

F. Keys: Provide nickel-silver keys complying with the following:
   1. Stamping: Permanently inscribe each key with a visual key control number and include the following notation:
      a. Notation: "DO NOT DUPLICATE."
   2. Quantity: In addition to one extra blank key for each lock, provide the following:
      a. Cylinder Change Keys: Three.
      b. Master Keys: Five.
      c. Grand Master Keys: Five.

G. Key Control System: BHMA Grade 1 system, including key-holding hooks, labels, two sets of key tags with self-locking key holders, key-gathering envelopes, and temporary and permanent markers. Contain system in metal cabinet with baked-enamel finish.
   1. Wall-Mounted Cabinet: Cabinet with hinged-panel door equipped with key-holding panels and pin-tumbler cylinder door lock.
   2. Capacity: Able to hold keys for 150 percent of the number of locks.
   3. Cross-Index System: Set up by key control manufacturer, complying with the following:
      a. Card Index: Furnish four sets of index cards for recording key information. Include three receipt forms for each key-holding hook.

2.7 STRIKES

A. Strikes: Provide manufacturer's standard strike with strike box for each latch or lock bolt, with curved lip extended to protect frame, finished to match door hardware set, unless otherwise indicated, and as follows:
   1. Flat-Lip Strikes: For locks with three-piece antifriction latchbolts, as recommended by manufacturer.
   2. Extra-Long-Lip Strikes: For locks used on frames with applied wood casing trim.

B. Dustproof Strikes: BHMA Grade 1.

2.8 OPERATING TRIM

A. Available Manufacturers: Subject to compliance with requirements, manufacturers offering products that may be incorporated into the Work include, but are not limited to, the following:
   1. Hager Companies (HAG).
   2. IVES Hardware; an Ingersoll-Rand Company (IVS).
   3. NT Quality Hardware; an Ingersoll-Rand Company (NTQ).
   4. Rockwood Manufacturing Company (RM).
   5. Stanley Commercial Hardware; Div. of The Stanley Works (STH).

B. Materials: Fabricate from stainless steel, unless otherwise indicated.

C. Push-Pull Design: As illustrated on Drawings.

2.9 ACCESSORIES FOR PAIRS OF DOORS

A. Available Manufacturers: Subject to compliance with requirements, manufacturers offering products that may be incorporated into the Work include, but are not limited to, the following:
   1. Coordinators:
      a. Glynn-Johnson; an Ingersoll-Rand Company (GJ).
      b. Hager Companies (HAG).
      c. Ives: H. B. Ives (IVS).
      d. Rockwood Manufacturing Company (RM).
   2. Removable Mullions:
      a. Sargent Manufacturing Company; Div. of ESSEX Industries, Inc. (SGT).
      b. Von Duprin; an Ingersoll-Rand Company (VD).

B. Fire-Exit Removable Mullions: Provide removable mullions for use with fire exit devices complying with NFPA 80 that are listed and labeled by a testing and inspecting agency acceptable to authorities having jurisdiction, for fire and panic protection, based on testing according to UL 305 and NFPA 252. Mullions shall be used only with exit devices for which they have been tested.

2.10 CLOSERS

A. Available Manufacturers: Subject to compliance with requirements, manufacturers offering products that may be incorporated into the Work include, but are not limited to, the following:
   1. Surface-Mounted Closers:
      a. Dor-O-Matic; an Ingersoll-Rand Company (DOR).

B. Certified Products: Provide door closers listed in BHMA's "Directory of Certified Door Closers."

C. Hold-Open Closers/Detectors: Coordinate and interface integral smoke detector and closer

device with fire alarm system.

D. Size of Units: Unless otherwise indicated, comply with manufacturer's written recommendations for size of door closers depending on size of door, exposure to weather, and anticipated frequency of use. Provide factory-sized closers, adjustable to meet field conditions and requirements for opening force.

2.11 PROTECTIVE TRIM UNITS

A. Available Manufacturers: Subject to compliance with requirements, manufacturers offering products that may be incorporated into the Work include, but are not limited to, the following:
   1. Metal Protective Trim Units:
      a. Hager Companies (HAG).
      b. NT Quality Hardware; an Ingersoll-Rand Company (NTQ).
      c. Rockwood Manufacturing Company (RM).

B. Materials: Fabricate protection plates from the following:
   1. Stainless Steel: 0.050 inch (1.3 mm) thick; beveled top and 2 sides.

C. Fasteners: Provide manufacturer's standard exposed fasteners for door trim units consisting of either machine or self-tapping screws.

D. Furnish protection plates sized 2 inches (50.7 mm) less than door width on push side and 1/2 inch (13 mm) less than door width on pull side, by height specified in Door Hardware Schedule.

2.12 STOPS AND HOLDERS

A. Available Manufacturers: Subject to compliance with requirements, manufacturers offering products that may be incorporated into the Work include, but are not limited to, the following:
   1. Hager Companies (HAG).
   2. NT Quality Hardware; an Ingersoll-Rand Company (NTQ).
   3. Rockwood Manufacturing Company (RM).

B. Electromagnetic Door Holders for Labeled Fire Door Assemblies: Coordinate with fire detectors and interface with fire alarm system.

C. Floor Stops: For doors, unless wall or other type stops are scheduled or indicated. Do not mount floor stops where they will impede traffic.
   1. Where floor or wall stops are not appropriate, provide overhead holders.

D. Silencers for Wood Door Frames: BHMA Grade 1; neoprene or rubber, minimum 5/8 by 3/4 inch (16 by 19 mm); fabricated for drilled-in application to frame.

E. Silencers for Metal Door Frames: BHMA Grade 1; neoprene or rubber, minimum diameter 1/2 inch (13 mm); fabricated for drilled-in application to frame.

2.13 DOOR GASKETING

A. Available Manufacturers: Subject to compliance with requirements, manufacturers offering products that may be incorporated into the Work include, but are not limited to, the following:
   1. Door Gasketing:
      a. Hager Companies (HAG).

b. National Guard Products, Inc. (NGP).
c. Pemko Manufacturing Co., Inc. (PEM).
d. Zero International, Inc. (ZRO).

B. General: Provide continuous weather-strip gasketing on exterior doors and provide smoke, light, or sound gasketing on interior doors where indicated or scheduled. Provide noncorrosive fasteners for exterior applications and elsewhere as indicated.
1. Perimeter Gasketing: Apply to head and jamb, forming seal between door and frame.
2. Meeting Stile Gasketing: Fasten to meeting stiles, forming seal when doors are closed.
3. Door Bottoms: Apply to bottom of door, forming seal with threshold when door is closed.

C. Air Leakage: Not to exceed 0.50 cfm per foot (0.000774 cu. m/s per m) of crack length for gasketing other than for smoke control, as tested according to ASTM E 283.

D. Smoke-Labeled Gasketing: Assemblies complying with NFPA 105 that are listed and labeled by a testing and inspecting agency acceptable to authorities having jurisdiction, for smoke-control ratings indicated, based on testing according to UL 1784.
1. Provide smoke-labeled gasketing on 20-minute-rated doors and on smoke-labeled doors.

E. Fire-Labeled Gasketing: Assemblies complying with NFPA 80 that are listed and labeled by a testing and inspecting agency acceptable to authorities having jurisdiction, for fire ratings indicated, based on testing according to UL 10B or NFPA 252.

F. Replaceable Seal Strips: Provide only those units where resilient or flexible seal strips are easily replaceable and readily available from stocks maintained by manufacturer.

G. Gasketing Materials: Comply with ASTM D 2000 and AAMA 701/702.

2.14 THRESHOLDS

A. Available Manufacturers: Subject to compliance with requirements, manufacturers offering products that may be incorporated into the Work include, but are not limited to, the following:
1. Hager Companies (HAG).
2. National Guard Products, Inc. (NGP).
3. Pemko Manufacturing Co., Inc. (PEM).
4. Reese Enterprises, Inc. (RE).

2.15 FABRICATION

A. Manufacturer's Nameplate: Do not provide manufacturers' products that have manufacturer's name or trade name displayed in a visible location (omit removable nameplates) except in conjunction with required fire-rated labels and as otherwise approved by Architect.
1. Manufacturer's identification will be permitted on rim of lock cylinders only.

B. Base Metals: Produce door hardware units of base metal, fabricated by forming method indicated, using manufacturer's standard metal alloy, composition, temper, and hardness. Furnish metals of a quality equal to or greater than that of specified door hardware units and BHMA A156.18 for finishes. Do not furnish manufacturer's standard materials or forming methods if different from specified standard.

C. Fasteners: Provide door hardware manufactured to comply with published templates generally prepared for machine, wood, and sheet metal screws. Provide screws according to commercially recognized industry standards for application intended. Provide Phillips flat-head screws with finished heads to match surface of door hardware, unless otherwise indicated.

1. Concealed Fasteners: For door hardware units that are exposed when door is closed, except for units already specified with concealed fasteners. Do not use through bolts for installation where bolt head or nut on opposite face is exposed unless it is the only means of securely attaching the door hardware. Where through bolts are used on hollow door and frame construction, provide sleeves for each through bolt.
2. Steel Machine or Wood Screws: For the following fire-rated applications:
   a. Mortise hinges to doors.
   b. Strike plates to frames.
   c. Closers to doors and frames.
3. Steel Through Bolts: For the following fire-rated applications, unless door blocking is provided:
   a. Surface hinges to doors.
   b. Closers to doors and frames.
   c. Surface-mounted exit devices.
4. Spacers or Sex Bolts: For through bolting of hollow metal doors.
5. Fasteners for Wood Doors: Comply with requirements of DHI WDHS.2, "Recommended Fasteners for Wood Doors."

2.16 FINISHES

A. Standard: Comply with BHMA A156.18.

B. Protect mechanical finishes on exposed surfaces from damage by applying a strippable, temporary protective covering before shipping.

C. Appearance of Finished Work: Variations in appearance of abutting or adjacent pieces are acceptable if they are within one-half of the range of approved Samples. Noticeable variations in the same piece are not acceptable. Variations in appearance of other components are acceptable if they are within the range of approved Samples and are assembled or installed to minimize contrast.

PART 3 - EXECUTION

3.1 EXAMINATION

A. Examine doors and frames, with Installer present, for compliance with requirements for installation tolerances, labeled fire door assembly construction, wall and floor construction, and other conditions affecting performance.

B. Proceed with installation only after unsatisfactory conditions have been corrected.

3.2 PREPARATION

A. Steel Doors and Frames: Comply with DHI A115 series.
   1. Surface-Applied Door Hardware: Drill and tap doors and frames according to

SDI 107.

B. Wood Doors: Comply with DHI A115-W series.

3.3 INSTALLATION

A. Mounting Heights: Mount door hardware units at heights indicated in following applicable publications, unless specifically indicated or required to comply with governing regulations:
   1. Standard Steel Doors and Frames: DHI's "Recommended Locations for Architectural Hardware for Standard Steel Doors and Frames."
   2. Wood Doors: DHI WDHS.3, "Recommended Locations for Architectural Hardware for Wood Flush Doors."

B. Install each door hardware item to comply with manufacturer's written instructions. Where cutting and fitting are required to install door hardware onto or into surfaces that are later to be painted or finished in another way, coordinate removal, storage, and reinstallation of surface protective trim units with finishing work specified in Division 9 Sections. Do not install surface-mounted items until finishes have been completed on substrates involved.
   1. Set units level, plumb, and true to line and location. Adjust and reinforce attachment substrates as necessary for proper installation and operation.
   2. Drill and countersink units that are not factory prepared for anchorage fasteners. Space fasteners and anchors according to industry standards.

C. Key Control System: Place keys on markers and hooks in key control system cabinet, as determined by final keying schedule.

D. Thresholds: Set thresholds for exterior and acoustical doors in full bed of sealant complying with requirements specified in Division 7 Section "Joint Sealants."

3.4 ADJUSTING

A. Initial Adjustment: Adjust and check each operating item of door hardware and each door to ensure proper operation or function of every unit. Replace units that cannot be adjusted to operate as intended. Adjust door control devices to compensate for final operation of heating and ventilating equipment and to comply with referenced accessibility requirements.
   1. Electric Strikes: Adjust horizontal and vertical alignment of keeper to properly engage lock bolt.
   2. Door Closers: Adjust sweep period so that, from an open position of 70 degrees, the door will take at least 3 seconds to move to a point 3 inches (75 mm) from the latch, measured to the leading edge of the door.

B. Six-Month Adjustment: Approximately six months after date of Substantial Completion, Installer shall perform the following:
   1. Examine and readjust each item of door hardware as necessary to ensure function of doors, door hardware, and electrified door hardware.
   2. Consult with and instruct Owner's personnel on recommended maintenance procedures.
   3. Replace door hardware items that have deteriorated or failed due to faulty design, materials, or installation of door hardware units.

3.5 CLEANING AND PROTECTION

A. Clean adjacent surfaces soiled by door hardware installation.

B. Clean operating items as necessary to restore proper function and finish.

C. Provide final protection and maintain conditions that ensure door hardware is without damage or deterioration at time of Substantial Completion.

3.6 DEMONSTRATION

A. Engage a factory-authorized service representative to train Owner's maintenance personnel to adjust, operate, and maintain door hardware and door hardware finishes.

3.7 DOOR HARDWARE SCHEDULE

HW SET: 01

3	EA	HINGE	5BB1 4.5 X 4.5	652	IVE
1	EA	ENTRY/OFFICE LOCK	T511P6D QUA	626	FAL
1	EA	KICK PLATE	8400 10" X 2" LDW	630	IVE
1	EA	WALL STOP	WS406CCV	630	IVE
3	EA	SILENCER	SR64	GRY	IVE

HW SET: 02

3	EA	HINGE	5BB1 4.5 X 4.5	652	IVE
1	EA	ENTRY/OFFICE LOCK	T511P6D QUA	626	FAL
1	EA	SURFACE CLOSER	SC80 RW/PA OR HD/PA	689	DOR
1	EA	KICK PLATE	8400 10" X 2" LDW	630	IVE
1	EA	WALL STOP	WS406CCV	630	IVE
3	EA	SILENCER	SR64	GRY	IVE

HW SET: 03

3	EA	HINGE	5BB1 4.5 X 4.5	652	IVE
1	EA	PUSH PLATE	8200 6" X 16"	630	IVE
1	EA	PULL PLATE	8302-0 4" X 16"	630	IVE
1	EA	SURFACE CLOSER	SC80 RW/PA OR HD/PA	689	DOR
1	EA	KICK PLATE	8400 10" X 2" LDW	630	IVE
1	EA	WALL STOP	WS406CCV	630	IVE
3	EA	SILENCER	SR64	GRY	IVE

HW SET: 04

3	EA	HINGE	5BB1 4.5 X 4.5	652	IVE
1	EA	PASSAGE SET	T101S QUA	626	FAL
1	EA	WALL STOP	WS406CCV	630	IVE
3	EA	SILENCER	SR64	GRY	IVE

HW SET: 05

3	EA	HINGE	5BB1 4.5 X 4.5	652	IVE
1	EA	STOREROOM LOCK	T581P6D QUA	626	FAL
3	EA	SILENCER	SR64	GRY	IVE

HW SET: AL-01

2	EA	CONTINUOUS HINGE	112HD	628	IVE
1	EA	PANIC DEVICE	CD-17-C-EO	630	MON
1	EA	PANIC DEVICE	CD-17-C-NL-OP	630	MON
2	EA	MORTISE CYLINDER	MORTISE CYLINDER	626	FAL
1	EA	RIM CYLINDER	RIM CYLINDER	626	FAL
2	EA	OFFSET DOOR PULL	8190-0	630	IVE
1	EA	SURFACE CLOSER	SC80 HD/PA	689	DOR
1	EA	AUTO-EQUALIZER	4642	689	LCN
2	EA	WALL PLATE SWITCH	7910-956	630	LCN
2	EA	ESCUTCHEON	7910-972-4		LCN
1			THRESHOLD AND PERIMETER SEAL BY DOOR MFG		B/O

HW SET: AL-02

2	EA	CONTINUOUS HINGE	112HD	628	IVE
2	EA	PULL/PUSHBAR	9190-0	630	IVE
1	EA	SURFACE CLOSER	SC80 HD/PA	689	DOR
1	EA	AUTO-EQUALIZER	4642	689	LCN
1	EA	WALL PLATE SWITCH	7910-956	630	LCN
1	EA	ESCUTCHEON	7910-972-4		LCN
1			THRESHOLD AND PERIMETER SEAL BY DOOR MFG		B/O

END OF SECTION 08711

SECTION 08800 - GLAZING July 16, 2007

PART 1 - GENERAL

1.1 RELATED DOCUMENTS

A. Drawings and general provisions of the Contract, including General and Supplementary Conditions and Division 1 Specification Sections, apply to this Section.

1.2 SUMMARY

A. This Section includes glazing for the following products and applications, including those specified in other Sections where glazing requirements are specified by reference to this Section:
1. Windows.
2. Doors.
3. Glazed entrances.
4. Interior borrowed lites.
5. Storefront framing.

1.3 DEFINITIONS

A. Manufacturer: A firm that produces primary glass or fabricated glass as defined in referenced glazing publications.

B. Interspace: Space between lites of an insulating-glass unit that contains dehydrated air or a specified gas.

C. Deterioration of Coated Glass: Defects developed from normal use that are attributed to the manufacturing process and not to causes other than glass breakage and practices for maintaining and cleaning coated glass contrary to manufacturer's written instructions. Defects include peeling, cracking, and other indications of deterioration in metallic coating.

D. Deterioration of Insulating Glass: Failure of the hermetic seal under normal use that is attributed to the manufacturing process and not to causes other than glass breakage and practices for maintaining and cleaning insulating glass contrary to manufacturer's written instructions. Evidence of failure is the obstruction of vision by dust, moisture, or film on interior surfaces of glass.

1.4 PERFORMANCE REQUIREMENTS

A. General: Provide glazing systems capable of withstanding normal thermal movement and wind and impact loads (where applicable) without failure, including loss or glass breakage attributable to the following: defective manufacture, fabrication, and installation; failure of sealants or gaskets to remain watertight and airtight; deterioration of glazing materials; or other defects in construction.

B. Glass Design: Glass thicknesses indicated are minimums and are for detailing only. Confirm glass thicknesses by analyzing Project loads and in-service conditions. Provide glass lites for various size openings in nominal thicknesses indicated, but not less than thicknesses and in strengths (annealed or heat treated) required to meet or exceed the following criteria:
1. Glass Thicknesses: Select minimum glass thicknesses to comply with

ASTM E 1300, according to the following requirements:

a. Specified Design Wind Loads: Determine design wind loads applicable to Project from basic wind speed indicated in miles per hour (meters per second) at 33 feet (10 m) above grade, according to ASCE 7, "Minimum Design Loads for Buildings and Other Structures": Section 6.4.2, "Analytic Procedure," based on mean roof heights above grade indicated on Drawings.

b. Specified Design Snow Loads: As indicated, but not less than snow loads applicable to Project, required by ASCE 7, "Minimum Design Loads for Buildings and Other Structures": Section 7, "Snow Loads."

c. Probability of Breakage for Vertical Glazing: 8 lites per 1000 for lites set vertically or not more than 15 degrees off vertical and under wind action.
   1) Load Duration: 60 seconds or less.

d. Maximum Lateral Deflection: For the following types of glass supported on all four edges, provide thickness required that limits center deflection at design wind pressure to 1/50 times the short side length or 1 inch (25 mm), whichever is less.
   1) For monolithic-glass lites heat treated to resist wind loads.
   2) For insulating glass.

e. Minimum Glass Thickness for Exterior Lites: Not less than 6 mm.

f. Thickness of Tinted and Heat-Absorbing Glass: Provide the same thickness for each tint color indicated throughout Project.

C. Thermal Movements: Provide glazing that allows for thermal movements resulting from the following maximum change (range) in ambient and surface temperatures acting on glass framing members and glazing components. Base engineering calculation on surface temperatures of materials due to both solar heat gain and nighttime-sky heat loss.
   1. Temperature Change (Range): 120 deg F (67 deg C), ambient; 180 deg F (100 deg C), material surfaces.

D. Thermal and Optical Performance Properties: Provide glass with performance properties specified based on manufacturer's published test data, as determined according to procedures indicated below:
   1. For monolithic-glass lites, properties are based on units with lites 6 mm thick.
   2. For insulating-glass units, properties are based on units with lites 6 mm thick and a nominal 1/2-inch- (13-mm-) wide interspace.
   3. Center-of-Glass U-Values: NFRC 100 methodology using LBL-35298 WINDOW 4.1 computer program, expressed as Btu/ sq. ft. x h x deg F (W/sq. m x K).
   4. Center-of-Glass Solar Heat Gain Coefficient: NFRC 200 methodology using LBL-35298 WINDOW 4.1 computer program.
   5. Solar Optical Properties: NFRC 300.

1.5 SUBMITTALS

A. Product Data: For each glass product and glazing material indicated.

B. Samples: For the following products, in the form of 12-inch- (300-mm-) square Samples for glass and of 12-inch- (300-mm-) long Samples for sealants. Install sealant Samples between two strips of material representative in color of the adjoining framing system.
   1. Each color of tinted float glass.
   2. Coated vision glass.
   3. Wired glass.
   4. Insulating glass for each designation indicated.

5. For each color (except black) of exposed glazing sealant indicated.

C. Glazing Schedule: Use same designations indicated on Drawings for glazed openings in preparing a schedule listing glass types and thicknesses for each size opening and location.

D. Product Certificates: Signed by manufacturers of glass and glazing products certifying that products furnished comply with requirements.

E. Preconstruction Adhesion and Compatibility Test Report: From glazing sealant manufacturer indicating glazing sealants were tested for adhesion to glass and glazing channel substrates and for compatibility with glass and other glazing materials.

F. Product Test Reports: From a qualified testing agency indicating the following products comply with requirements, based on comprehensive testing of current products:
1. Tinted float glass.
2. Coated float glass.
3. Insulating glass.
4. Glazing sealants.
5. Glazing gaskets.

G. Warranties: Special warranties specified in this Section.

1.6 QUALITY ASSURANCE

A. Installer Qualifications: An experienced installer who has completed glazing similar in material, design, and extent to that indicated for this Project; whose work has resulted in glass installations with a record of successful in-service performance; and who employs glass installers for this Project who are certified under the National Glass Association Glazier Certification Program as Level 2 (Senior Glaziers) or Level 3 (Master Glaziers).

B. Source Limitations for Clear Glass: Obtain clear float glass from one primary-glass manufacturer.

C. Source Limitations for Tinted Glass: Obtain tinted, heat-absorbing, and light-reducing float glass from one primary-glass manufacturer for each tint color indicated.

D. Source Limitations for Coated Glass: Obtain coated glass from one manufacturer for each type of coating and each type and class of float glass indicated.

E. Source Limitations for Insulating Glass: Obtain insulating-glass units from one manufacturer using the same type of glass and other components for each type of unit indicated.

F. Source Limitations for Glazing Accessories: Obtain glazing accessories from one source for each product and installation method indicated.

G. Glass Product Testing: Obtain glass test results for product test reports in "Submittals" Article from a qualified testing agency based on testing glass products.
1. Glass Testing Agency Qualifications: An independent testing agency with the experience and capability to conduct the testing indicated, as documented according to ASTM E 548.

H. Elastomeric Glazing Sealant Product Testing: Obtain sealant test results for product test reports in "Submittals" Article from a qualified testing agency based on testing current sealant

formulations within a 36-month period.

1. Sealant Testing Agency Qualifications: An independent testing agency qualified according to ASTM C 1021 to conduct the testing indicated, as documented according to ASTM E 548.
2. Test elastomeric glazing sealants for compliance with requirements specified by reference to ASTM C 920, and where applicable, to other standard test methods.

I. Preconstruction Adhesion and Compatibility Testing: Submit to elastomeric glazing sealant manufacturers, for testing indicated below, samples of each glass type, tape sealant, gasket, glazing accessory, and glass-framing member that will contact or affect elastomeric glazing sealants.

1. Use manufacturer's standard test methods to determine whether priming and other specific preparation techniques are required to obtain rapid, optimum adhesion of glazing sealants to glass, tape sealants, gaskets, and glazing channel substrates.
   a. Perform tests under normal environmental conditions replicating those that will exist during installation.
2. Submit not fewer than nine pieces of each type and finish of glass-framing members and each type, class, kind, condition, and form of glass (monolithic, laminated, and insulating units) as well as one sample of each glazing accessory (gaskets, tape sealants, setting blocks, and spacers).
3. Schedule sufficient time for testing and analyzing results to prevent delaying the Work.
4. For materials failing tests, obtain sealant manufacturer's written instructions for corrective measures, including the use of specially formulated primers.
5. Testing will not be required if elastomeric glazing sealant manufacturers submit data based on previous testing of current sealant products for adhesion to, and compatibility with, glazing materials matching those submitted.

J. Fire-Rated Door Assemblies: Assemblies complying with NFPA 80 that are listed and labeled by a testing and inspecting agency acceptable to authorities having jurisdiction, for fire ratings indicated, based on testing according to NFPA 252.

K. Fire-Rated Window Assemblies: Assemblies complying with NFPA 80 that are listed and labeled by a testing and inspecting agency acceptable to authorities having jurisdiction, for fire ratings indicated, based on testing according to NFPA 257.

L. Safety Glass: Category II materials complying with testing requirements in 16 CFR 1201 and ANSI Z97.1.

1. Subject to compliance with requirements, permanently mark safety glass with certification label of Safety Glazing Certification Council or another certification agency acceptable to authorities having jurisdiction.

M. Glazing Publications: Comply with published recommendations of glass product manufacturers and organizations below, unless more stringent requirements are indicated. Refer to these publications for glazing terms not otherwise defined in this Section or in referenced standards.

1. GANA Publications: GANA'S "Glazing Manual" and "Laminated Glass Design Guide."
2. AAMA Publications: AAMA GDSG-1, "Glass Design for Sloped Glazing," and AAMA TIR-A7, "Sloped Glazing Guidelines."
3. SIGMA Publications: SIGMA TM-3000, "Vertical Glazing Guidelines," and SIGMA TB-3001, "Sloped Glazing Guidelines."

N. Insulating-Glass Certification Program: Permanently marked either on spacers or on at least one component lite of units with appropriate certification label of the following inspecting and testing agency:
   1. Insulating Glass Certification Council.
   2. Associated Laboratories, Inc.
   3. National Accreditation and Management Institute.

O. Preinstallation Conference: Conduct conference at Project site to comply with requirements in Division 1 Section "Project Meetings."

1.7 DELIVERY, STORAGE, AND HANDLING

A. Protect glazing materials according to manufacturer's written instructions and as needed to prevent damage to glass and glazing materials from condensation, temperature changes, direct exposure to sun, or other causes.

B. For insulating-glass units that will be exposed to substantial altitude changes, comply with insulating-glass manufacturer's written recommendations for venting and sealing to avoid hermetic seal ruptures.

1.8 PROJECT CONDITIONS

A. Environmental Limitations: Do not proceed with glazing when ambient and substrate temperature conditions are outside limits permitted by glazing material manufacturers and when glazing channel substrates are wet from rain, frost, condensation, or other causes.
   1. Do not install liquid glazing sealants when ambient and substrate temperature conditions are outside limits permitted by glazing sealant manufacturer or below 40 deg F (4.4 deg C).

1.9 WARRANTY

A. General Warranty: Special warranties specified in this Article shall not deprive Owner of other rights Owner may have under other provisions of the Contract Documents and shall be in addition to, and run concurrent with, other warranties made by Contractor under requirements of the Contract Documents.

B. Manufacturer's Special Warranty on Coated-Glass Products: Written warranty, made out to Owner and signed by coated-glass manufacturer agreeing to furnish replacements for those coated-glass units that deteriorate as defined in "Definitions" Article, f.o.b. the nearest shipping point to Project site, within specified warranty period indicated below.
   1. Warranty Period: 10 years from date of Substantial Completion.

C. Manufacturer's Special Warranty on Insulating Glass: Written warranty, made out to Owner and signed by insulating-glass manufacturer agreeing to furnish replacements for insulating-glass units that deteriorate as defined in "Definitions" Article, f.o.b. the nearest shipping point to Project site, within specified warranty period indicated below.
   1. Warranty Period: 10 years from date of Substantial Completion.

PART 2 - PRODUCTS

2.1 PRODUCTS AND MANUFACTURERS

A. Available Products: Subject to compliance with requirements, products that may be incorporated into the Work include, but are not limited to, the products indicated in schedules at the end of Part 3.

2.2 PRIMARY FLOAT GLASS

A. Float Glass: ASTM C 1036, Type I (transparent glass, flat), Quality q3 (glazing select); class as indicated in schedules at the end of Part 3.

2.3 HEAT-TREATED FLOAT GLASS

A. Fabrication Process: By horizontal (roller-hearth) process with roll-wave distortion parallel to bottom edge of glass as installed, unless otherwise indicated.

B. Heat-Treated Float Glass: ASTM C 1048; Type I (transparent glass, flat); Quality q3 (glazing select); class, kind, and condition as indicated in schedules at the end of Part 3.

2.4 COATED FLOAT GLASS

A. General: Provide coated glass complying with requirements indicated in this Article and in schedules at the end of Part 3.
   1. Provide Kind HS (heat-strengthened) coated float glass, except provide Kind FT (fully tempered) products where coated safety glass is indicated.

B. Sputter-Coated Float Glass: ASTM C 1376, float glass with metallic-oxide or -nitride coating deposited by vacuum deposition process after manufacture and heat treatment (if any), and complying with other requirements specified.

2.5 INSULATING GLASS

A. Insulating-Glass Units: Preassembled units consisting of sealed lites of glass separated by a dehydrated interspace, and complying with ASTM E 774 for Class CBA units and with requirements specified in this Article and in the Insulating-Glass Schedule at the end of Part 3.
   1. Provide Kind HS (heat-strengthened) float glass in place of annealed glass where needed to resist thermal stresses induced by differential shading of individual glass lites and to comply with glass design requirements specified in "Performance Requirements" Article. Provide Kind FT (fully tempered) where safety glass is indicated.

B. Overall Unit Thickness and Thickness of Each Lite: Dimensions indicated in the Insulating-Glass Schedule at the end of Part 3 are nominal and the overall thicknesses of units are measured perpendicularly from outer surfaces of glass lites at unit's edge.

C. Sealing System: Dual seal, with primary and secondary sealants as follows:
   1. Polyisobutylene and hot-melt butyl.

D. Spacer Specifications: Manufacturer's standard spacer material and construction complying with the following requirements:
   1. Aluminum with mill or clear-anodized finish.
   2. Desiccant: Molecular sieve or silica gel, or blend of both.
   3. Corner Construction: Manufacturer's standard corner construction.

2.6 ELASTOMERIC GLAZING SEALANTS

A. General: Provide products of type indicated, complying with the following requirements:
   1. Compatibility: Select glazing sealants that are compatible with one another and with other materials they will contact, including glass products, seals of insulating-glass units, and glazing channel substrates, under conditions of service and application, as demonstrated by sealant manufacturer based on testing and field experience.
   2. Suitability: Comply with sealant and glass manufacturers' written instructions for selecting glazing sealants suitable for applications indicated and for conditions existing at time of installation.
   3. Colors of Exposed Glazing Sealants: As selected by Architect from manufacturer's full range for this characteristic.

B. Elastomeric Glazing Sealant Standard: Comply with ASTM C 920 and other requirements indicated for each liquid-applied, chemically curing sealant in the Glazing Sealant Schedule at the end of Part 3, including those referencing ASTM C 920 classifications for type, grade, class, and uses.
   1. Additional Movement Capability: Where additional movement capability is specified in the Glazing Sealant Schedule, provide products with the capability, when tested for adhesion and cohesion under maximum cyclic movement per ASTM C 719, to withstand the specified percentage change in the joint width existing at time of installation and remain in compliance with other requirements in ASTM C 920 for uses indicated.

C. Glazing Sealant for Fire-Resistive Glazing Products: Identical to product used in test assembly to obtain fire-protection rating.

2.7 GLAZING TAPES

A. Back-Bedding Mastic Glazing Tape: Preformed, butyl-based elastomeric tape with a solids content of 100 percent; nonstaining and nonmigrating in contact with nonporous surfaces; with or without spacer rod as recommended in writing by tape and glass manufacturers for application indicated; packaged on rolls with a release paper backing; and complying with ASTM C 1281 and AAMA 800 for products indicated below:
   1. AAMA 806.3 tape, for glazing applications in which tape is subject to continuous pressure.

B. Expanded Cellular Glazing Tape: Closed-cell, PVC foam tape; factory coated with adhesive on both surfaces; packaged on rolls with release liner protecting adhesive; and complying with AAMA 800 for the following types:
   1. Type 1, for glazing applications in which tape acts as the primary sealant.
   2. Type 2, for glazing applications in which tape is used in combination with a full bead of liquid sealant.

2.8 GLAZING GASKETS

A. Lock-Strip Gaskets: Neoprene extrusions in size and shape indicated, fabricated into frames with molded corner units and zipper lock strips, complying with ASTM C 542, black.

B. Soft Compression Gaskets: Extruded or molded, closed-cell, integral-skinned gaskets of material indicated below; complying with ASTM C 509, Type II, black; and of profile and hardness required to maintain watertight seal:
   1. Neoprene.

2. EPDM.
3. Silicone.
4. Thermoplastic polyolefin rubber.
5. Any material indicated above.

2.9 MISCELLANEOUS GLAZING MATERIALS

A. General: Provide products of material, size, and shape complying with referenced glazing standard, requirements of manufacturers of glass and other glazing materials for application indicated, and with a proven record of compatibility with surfaces contacted in installation.

B. Cleaners, Primers, and Sealers: Types recommended by sealant or gasket manufacturer.

C. Setting Blocks: Elastomeric material with a Shore A durometer hardness of 85, plus or minus 5.

D. Spacers: Elastomeric blocks or continuous extrusions with a Shore A durometer hardness required by glass manufacturer to maintain glass lites in place for installation indicated.

E. Edge Blocks: Elastomeric material of hardness needed to limit glass lateral movement (side walking).

F. Cylindrical Glazing Sealant Backing: ASTM C 1330, Type O (open-cell material), of size and density to control glazing sealant depth and otherwise produce optimum glazing sealant performance.

2.10 FABRICATION OF GLASS AND OTHER GLAZING PRODUCTS

A. Fabricate glass and other glazing products in sizes required to glaze openings indicated for Project, with edge and face clearances, edge and surface conditions, and bite complying with written instructions of product manufacturer and referenced glazing standard, to comply with system performance requirements.

B. Clean-cut or flat-grind vertical edges of butt-glazed monolithic lites in a manner that produces square edges with slight kerfs at junctions with indoor and outdoor faces.

C. Grind smooth and polish exposed glass edges.

PART 3 - EXECUTION

3.1 EXAMINATION

A. Examine framing glazing, with Installer present, for compliance with the following:
1. Manufacturing and installation tolerances, including those for size, squareness, and offsets at corners.
2. Presence and functioning of weep system.
3. Minimum required face or edge clearances.
4. Effective sealing between joints of glass-framing members.

B. Proceed with installation only after unsatisfactory conditions have been corrected.

3.2 PREPARATION

A. Clean glazing channels and other framing members receiving glass immediately before glazing. Remove coatings not firmly bonded to substrates.

3.3 GLAZING, GENERAL

A. Comply with combined written instructions of manufacturers of glass, sealants, gaskets, and other glazing materials, unless more stringent requirements are indicated, including those in referenced glazing publications.

B. Glazing channel dimensions, as indicated on Drawings, provide necessary bite on glass, minimum edge and face clearances, and adequate sealant thicknesses, with reasonable tolerances. Adjust as required by Project conditions during installation.

C. Protect glass edges from damage during handling and installation. Remove damaged glass from Project site and legally dispose of off Project site. Damaged glass is glass with edge damage or other imperfections that, when installed, could weaken glass and impair performance and appearance.

D. Apply primers to joint surfaces where required for adhesion of sealants, as determined by preconstruction sealant-substrate testing.

E. Install setting blocks in sill rabbets, sized and located to comply with referenced glazing publications, unless otherwise required by glass manufacturer. Set blocks in thin course of compatible sealant suitable for heel bead.

F. Do not exceed edge pressures stipulated by glass manufacturers for installing glass lites.

G. Provide spacers for glass lites where the length plus width is larger than 50 inches (1270 mm) as follows:
   1. Locate spacers directly opposite each other on both inside and outside faces of glass. Install correct size and spacing to preserve required face clearances, unless gaskets and glazing tapes are used that have demonstrated ability to maintain required face clearances and to comply with system performance requirements.
   2. Provide 1/8-inch (3-mm) minimum bite of spacers on glass and use thickness equal to sealant width. With glazing tape, use thickness slightly less than final compressed thickness of tape.

H. Provide edge blocking where indicated or needed to prevent glass lites from moving sideways in glazing channel, as recommended in writing by glass manufacturer and according to requirements in referenced glazing publications.

I. Set glass lites in each series with uniform pattern, draw, bow, and similar characteristics.

J. Where wedge-shaped gaskets are driven into one side of channel to pressurize sealant or gasket on opposite side, provide adequate anchorage so gasket cannot walk out when installation is subjected to movement.

K. Square cut wedge-shaped gaskets at corners and install gaskets in a manner recommended by gasket manufacturer to prevent corners from pulling away; seal corner joints and butt joints with sealant recommended by gasket manufacturer.

3.4 TAPE GLAZING

A. Position tapes on fixed stops so that, when compressed by glass, their exposed edges are flush with or protrude slightly above sightline of stops.

B. Install tapes continuously, but not necessarily in one continuous length. Do not stretch tapes to make them fit opening.

C. Where framing joints are vertical, cover these joints by applying tapes to heads and sills first and then to jambs. Where framing joints are horizontal, cover these joints by applying tapes to jambs and then to heads and sills.

D. Place joints in tapes at corners of opening with adjoining lengths butted together, not lapped. Seal joints in tapes with compatible sealant approved by tape manufacturer.

E. Do not remove release paper from tape until just before each glazing unit is installed.

F. Apply heel bead of elastomeric sealant.

G. Center glass lites in openings on setting blocks and press firmly against tape by inserting dense compression gaskets formed and installed to lock in place against faces of removable stops. Start gasket applications at corners and work toward centers of openings.

H. Apply cap bead of elastomeric sealant over exposed edge of tape.

3.5 GASKET GLAZING (DRY)

A. Fabricate compression gaskets in lengths recommended by gasket manufacturer to fit openings exactly, with stretch allowance during installation.

B. Insert soft compression gasket between glass and frame or fixed stop so it is securely in place with joints miter cut and bonded together at corners.

C. Center glass lites in openings on setting blocks and press firmly against soft compression gasket by inserting dense compression gaskets formed and installed to lock in place against faces of removable stops. Start gasket applications at corners and work toward centers of openings. Compress gaskets to produce a weathertight seal without developing bending stresses in glass. Seal gasket joints with sealant recommended by gasket manufacturer.

D. Install gaskets so they protrude past face of glazing stops.

3.6 SEALANT GLAZING (WET)

A. Install continuous spacers, or spacers combined with cylindrical sealant backing, between glass lites and glazing stops to maintain glass face clearances and to prevent sealant from extruding into glass channel and blocking weep systems until sealants cure. Secure spacers or spacers and backings in place and in position to control depth of installed sealant relative to edge clearance for optimum sealant performance.

B. Force sealants into glazing channels to eliminate voids and to ensure complete wetting or bond of sealant to glass and channel surfaces.

C. Tool exposed surfaces of sealants to provide a substantial wash away from glass.

3.7 LOCK-STRIP GASKET GLAZING

A. Comply with ASTM C 716 and gasket manufacturer's written instructions. Provide supplementary wet seal and weep system, unless otherwise indicated.

3.8 PROTECTION AND CLEANING

A. Protect exterior glass from damage immediately after installation by attaching crossed streamers to framing held away from glass. Do not apply markers to glass surface. Remove nonpermanent labels, and clean surfaces.

B. Protect glass from contact with contaminating substances resulting from construction operations, including weld splatter. If, despite such protection, contaminating substances do come into contact with glass, remove them immediately as recommended by glass manufacturer.

C. Examine glass surfaces adjacent to or below exterior concrete and other masonry surfaces at frequent intervals during construction, but not less than once a month, for build-up of dirt, scum, alkaline deposits, or stains; remove as recommended by glass manufacturer.

D. Remove and replace glass that is broken, chipped, cracked, abraded, or damaged in any way, including natural causes, accidents, and vandalism, during construction period.

E. Wash glass on both exposed surfaces in each area of Project not more than four days before date scheduled for inspections that establish date of Substantial Completion. Wash glass as recommended by glass manufacturer.

3.9 MONOLITHIC FLOAT-GLASS SCHEDULE

A. Uncoated Clear Float Glass: Where glass as designated below is indicated, provide Type I (transparent glass, flat), Class 1 (clear) glass lites complying with the following:
   1. Uncoated Clear Annealed Float Glass: Annealed or Kind HS (heat strengthened), Condition A (uncoated surfaces) where heat strengthening is required to resist thermal stresses induced by differential shading of individual glass lites and to comply with performance requirements.
   2. Uncoated Clear Heat-Strengthened Float Glass: Kind HS (heat strengthened).
   3. Uncoated Clear Fully Tempered Float Glass: Kind FT (fully tempered).

3.10 INSULATING-GLASS SCHEDULE

A. Solar-Control Low-E Insulating-Glass Units:
   1. Where glass of this designation is indicated, provide insulating-glass units complying with the following:
      a. Products: Available products include the following:
         1) SOLARBAN 60 by PPG Industries.
   2. Overall Unit Thickness and Thickness of Each Lite: 25 and 6.0 mm.
   3. Interspace Content: Air.
   4. Outdoor Lite: Class 1 (clear) float glass.
      a. Kind HS (heat strengthened) or Kind FT (fully tempered).
   5. Indoor Lite: Class 1 (clear) float glass.
      a. Kind HS (heat strengthened) or Kind FT (fully tempered).
   6. Low-E Coating: Sputtered on second surface.
   7. Visible Light Transmittance: 70 percent minimum.

8. Winter Nighttime U-Factor: 0.29 maximum.
9. Summer Daytime U-Factor: 0.28 maximum.
10. Solar Heat Gain Coefficient: [0.38 maximum.
11. Outdoor Visible Reflectance: 11 percent maximum.
12. Shading Coefficient: 0.44.

3.11 GLAZING SEALANT SCHEDULE

A. Low-Modulus Nonacid-Curing Silicone Glazing Sealant: Where glazing sealants of this designation are indicated, provide products complying with the following:
   1. Products: Available products include the following:
      a. 790; Dow Corning.
      b. UltraPruf SCS2300; GE Silicones.
      c. Spectrem 1; Tremco.
   2. Type and Grade: S (single component) and NS (nonsag).
   3. Class: 25.
   4. Additional Movement Capability: 50 percent movement in extension and 50 percent movement in compression for a total of 100 percent movement.
   5. Use Related to Exposure: NT (nontraffic).
   6. Uses Related to Glazing Substrates: M, G, A, and, as applicable to glazing substrates indicated, O.
      a. Use O Glazing Substrates: Coated glass, color anodic aluminum, aluminum coated with a high-performance coating, galvanized steel, and wood.

END OF SECTION 08800

DIVISION 9 - FINISHES

Section 09250	Gypsum Board
Section 09310	Ceramic Tile
Section 09511	Acoustical Panel Ceilings
Section 09651	Resilient Floor Tile
Section 09681	Carpet Tile
Section 09912	Painting
Section 09981	Cementitious Coatings

SECTION 09250 - GYPSUM BOARD July 16, 2007

PART 1 - GENERAL

1.1 RELATED DOCUMENTS

A. Drawings and general provisions of the Contract, including General and Supplementary Conditions and Division 1 Specification Sections, apply to this Section.

1.2 SUMMARY

A. This Section includes the following:
1. Interior gypsum board.
2. Tile backing panels.

B. Related Sections include the following:
1. Division 7 Section "Building Insulation" for insulation and vapor retarders installed in assemblies that incorporate gypsum board.
2. Division 7 Section "Fire-Resistive Joint Systems" for head-of-wall assemblies that incorporate gypsum board.
3. Division 7 Section "Joint Sealants" for acoustical sealants installed in assemblies that incorporate gypsum board.
4. Division 9 Section "Non-Load-Bearing Steel Framing" for non-structural framing and suspension systems that support gypsum board.
5. Division 9 Section "Ceramic Tile" for cementitious backer units installed as substrates for ceramic tile.
6. Division 9 painting Sections for primers applied to gypsum board surfaces.

1.3 SUBMITTALS

A. Product Data: For each type of product indicated.

B. Samples: For the following products:
1. Trim Accessories: Full-size Sample in 12-inch- (300-mm-) long length for each trim accessory indicated.

1.4 QUALITY ASSURANCE

A. Fire-Resistance-Rated Assemblies: For fire-resistance-rated assemblies, provide materials and construction identical to those tested in assembly indicated according to ASTM E 119 by an independent testing agency.

B. STC-Rated Assemblies: For STC-rated assemblies, provide materials and construction identical to those tested in assembly indicated according to ASTM E 90 and classified according to ASTM E 413 by an independent testing agency.

1.5 STORAGE AND HANDLING

A. Store materials inside under cover and keep them dry and protected against damage from weather, condensation, direct sunlight, construction traffic, and other causes. Stack panels flat to prevent sagging.

1.6 PROJECT CONDITIONS

A. Environmental Limitations: Comply with ASTM C 840 requirements or gypsum board manufacturer's written recommendations, whichever are more stringent.

B. Do not install interior products until installation areas are enclosed and conditioned.

C. Do not install panels that are wet, those that are moisture damaged, and those that are mold damaged.
   1. Indications that panels are wet or moisture damaged include, but are not limited to, discoloration, sagging, or irregular shape.
   2. Indications that panels are mold damaged include, but are not limited to, fuzzy or splotchy surface contamination and discoloration.

PART 2 - PRODUCTS

2.1 PANELS, GENERAL

A. Size: Provide in maximum lengths and widths available that will minimize joints in each area and that correspond with support system indicated.

2.2 INTERIOR GYPSUM BOARD

A. General: Complying with ASTM C 36/C 36M or ASTM C 1396/C 1396M, as applicable to type of gypsum board indicated and whichever is more stringent.
   1. Available Manufacturers: Subject to compliance with requirements, manufacturers offering products that may be incorporated into the Work include, but are not limited to, the following:
      a. American Gypsum Co.
      b. BPB America Inc.
      c. G-P Gypsum.
      d. National Gypsum Company.
      e. PABCO Gypsum.
      f. USG Corporation.

B. Type X:
   1. Thickness: 5/8 inch (15.9 mm).
   2. Long Edges: Tapered.

C. Special Type X: Having improved fire resistance over standard Type X, and complying with requirements of fire-resistance-rated assemblies indicated on Drawings.
   1. Thickness: As required by fire-resistance-rated assembly indicated on Drawings.
   2. Long Edges: Tapered.

2.3 TILE BACKING PANELS

A. Glass-Mat, Water-Resistant Backing Board:
   1. Complying with ASTM C 1178/C 1178M.
      a. Product: Subject to compliance with requirements, provide "DensShield Tile Guard" by G-P Gypsum.
   2. Core: 5/8 inch (15.9 mm), Type X.

2.4 TRIM ACCESSORIES

A. Interior Trim: ASTM C 1047.
   1. Material: Galvanized or aluminum-coated steel sheet or rolled zinc.
   2. Shapes:
      a. Cornerbead.
      b. Bullnose bead.
      c. LC-Bead: J-shaped; exposed long flange receives joint compound.
      d. L-Bead: L-shaped; exposed long flange receives joint compound.
      e. U-Bead: J-shaped; exposed short flange does not receive joint compound.
      f. Expansion (control) joint.
      g. Curved-Edge Cornerbead: With notched or flexible flanges.

2.5 JOINT TREATMENT MATERIALS

A. General: Comply with ASTM C 475/C 475M.

B. Joint Tape:
   1. Interior Gypsum Wallboard: Paper.
   2. Tile Backing Panels: As recommended by panel manufacturer.

C. Joint Compound for Interior Gypsum Wallboard: For each coat use formulation that is compatible with other compounds applied on previous or for successive coats.
   1. Prefilling: At open joints, rounded or beveled panel edges, and damaged surface areas, use setting-type taping compound.
   2. Embedding and First Coat: For embedding tape and first coat on joints, fasteners, and trim flanges, use setting-type taping compound.
   3. Fill Coat: For second coat, use drying-type, all-purpose compound.
   4. Finish Coat: For third coat, use drying-type, all-purpose compound.

D. Joint Compound for Tile Backing Panels:
   1. Glass-Mat, Water-Resistant Backing Panel: As recommended by backing panel manufacturer.

2.6 AUXILIARY MATERIALS

A. General: Provide auxiliary materials that comply with referenced installation standards and manufacturer's written recommendations.

B. Laminating Adhesive: Adhesive or joint compound recommended for directly adhering gypsum panels to continuous substrate.
   1. Use adhesives that have a VOC content of 50 g/L or less when calculated according to 40 CFR 59, Subpart D (EPA Method 24).

C. Steel Drill Screws: ASTM C 1002, unless otherwise indicated.
   1. Use screws complying with ASTM C 954 for fastening panels to steel members from 0.033 to 0.112 inch (0.84 to 2.84 mm) thick.
   2. For fastening cementitious backer units, use screws of type and size recommended by panel manufacturer.

D. Acoustical Sealant: As specified in Division 7 Section "Joint Sealants."

E. Thermal Insulation: As specified in Division 7 Section "Building Insulation."

F. Vapor Retarder: As specified in Division 7 Section "Building Insulation."

PART 3 - EXECUTION

3.1 EXAMINATION

A. Examine areas and substrates, with Installer present, and including welded hollow-metal frames and framing, for compliance with requirements and other conditions affecting performance.

B. Examine panels before installation. Reject panels that are wet, moisture damaged, and mold damaged.

C. Proceed with installation only after unsatisfactory conditions have been corrected.

3.2 APPLYING AND FINISHING PANELS, GENERAL

A. Comply with ASTM C 840.

B. Install ceiling panels across framing to minimize the number of abutting end joints and to avoid abutting end joints in central area of each ceiling. Stagger abutting end joints of adjacent panels not less than one framing member.

C. Install panels with face side out. Butt panels together for a light contact at edges and ends with not more than 1/16 inch (1.5 mm) of open space between panels. Do not force into place.

D. Locate edge and end joints over supports, except in ceiling applications where intermediate supports or gypsum board back-blocking is provided behind end joints. Do not place tapered edges against cut edges or ends. Stagger vertical joints on opposite sides of partitions. Do not make joints other than control joints at corners of framed openings.

E. Form control and expansion joints with space between edges of adjoining gypsum panels.

F. Cover both faces of support framing with gypsum panels in concealed spaces (above ceilings, etc.), except in chases braced internally.
   1. Unless concealed application is indicated or required for sound, fire, air, or smoke ratings, coverage may be accomplished with scraps of not less than 8 sq. ft. (0.7 sq. m) in area.
   2. Fit gypsum panels around ducts, pipes, and conduits.
   3. Where partitions intersect structural members projecting below underside of floor/roof slabs and decks, cut gypsum panels to fit profile formed by structural members; allow 1/4- to 3/8-inch- (6.4- to 9.5-mm-) wide joints to install sealant.

G. Isolate perimeter of gypsum board applied to non-load-bearing partitions at structural abutments, except floors. Provide 1/4- to 1/2-inch- (6.4- to 12.7-mm-) wide spaces at these locations, and trim edges with edge trim where edges of panels are exposed. Seal joints between edges and abutting structural surfaces with acoustical sealant.

H. Attachment to Steel Framing: Attach panels so leading edge or end of each panel is attached to open (unsupported) edges of stud flanges first.

3.3 APPLYING INTERIOR GYPSUM BOARD

A. Install interior gypsum board in the following locations:
   1. Type X: Vertical surfaces, unless otherwise indicated.
   2. Special Type X: Where required for specific fire-resistance-rated assembly indicated.

B. Single-Layer Application:
   1. On ceilings, apply gypsum panels before wall/partition board application to greatest extent possible and at right angles to framing, unless otherwise indicated.
   2. On partitions/walls, apply gypsum panels horizontally (perpendicular to framing), unless otherwise indicated or required by fire-resistance-rated assembly, and minimize end joints.
      a. Stagger abutting end joints not less than one framing member in alternate courses of panels.
      b. At stairwells and other high walls, install panels horizontally, unless otherwise indicated or required by fire-resistance-rated assembly.
   3. On Z-furring members, apply gypsum panels vertically (parallel to framing) with no end joints. Locate edge joints over furring members.
   4. Fastening Methods: Apply gypsum panels to supports with steel drill screws.

C. Multilayer Application:
   1. On ceilings, apply gypsum board indicated for base layers before applying base layers on walls/partitions; apply face layers in same sequence. Apply base layers at right angles to framing members and offset face-layer joints 1 framing member, 16 inches (400 mm) minimum, from parallel base-layer joints, unless otherwise indicated or required by fire-resistance-rated assembly.
   2. On partitions/walls, apply gypsum board indicated for base layers and face layers vertically (parallel to framing) with joints of base layers located over stud or furring member and face-layer joints offset at least one stud or furring member with base-layer joints, unless otherwise indicated or required by fire-resistance-rated assembly. Stagger joints on opposite sides of partitions.
   3. On Z-furring members, apply base layer vertically (parallel to framing) and face layer either vertically (parallel to framing) or horizontally (perpendicular to framing) with vertical joints offset at least one furring member. Locate edge joints of base layer over furring members.
   4. Fastening Methods: Fasten base layers with screws; fasten face layers with adhesive and supplementary fasteners.

D. Laminating to Substrate: Where gypsum panels are indicated as directly adhered to a substrate (other than studs, joists, furring members, or base layer of gypsum board), comply with gypsum board manufacturer's written recommendations and temporarily brace or fasten gypsum panels until fastening adhesive has set.

3.4 APPLYING TILE BACKING PANELS

A. Glass-Mat, Water-Resistant Backing Panel: Comply with manufacturer's written installation instructions and install at locations indicated to receive tile. Install with 1/4-inch (6.4-mm) gap where panels abut other construction or penetrations.

B. Where tile backing panels abut other types of panels in same plane, shim surfaces to produce a uniform plane across panel surfaces.

3.5 INSTALLING TRIM ACCESSORIES

A. General: For trim with back flanges intended for fasteners, attach to framing with same fasteners used for panels. Otherwise, attach trim according to manufacturer's written instructions.

B. Control Joints: Install control joints according to ASTM C 840 and in specific locations approved by Architect for visual effect.

C. Interior Trim: Install in the following locations:
   1. Cornerbead: Use at outside corners, unless otherwise indicated.
   2. Bullnose Bead: Use where indicated.
   3. LC-Bead: Use at exposed panel edges.
   4. L-Bead: Use where indicated.
   5. U-Bead: Use at exposed panel edges.
   6. Curved-Edge Cornerbead: Use at curved openings.

D. Install corner beads at external corners. Provide metal trim to protect edge of gypsum board wherever gypsum board intersects a dissimilar material. Hold channel and >L= trim back from metal window and door frames 1/8 inch to allow for caulking.

3.6 FINISHING GYPSUM BOARD

A. General: Treat gypsum board joints, interior angles, edge trim, control joints, penetrations, fastener heads, surface defects, and elsewhere as required to prepare gypsum board surfaces for decoration. Promptly remove residual joint compound from adjacent surfaces.

B. Prefill open joints, rounded or beveled edges, and damaged surface areas.

C. Apply joint tape over gypsum board joints, except those with trim having flanges not intended for tape.

D. Gypsum Board Finish Levels: Finish panels to levels indicated below:
   1. Level 1: Ceiling plenum areas, concealed areas, and where indicated.
   2. Level 2: Panels that are substrate for tile.
   3. Level 3: Panels that are substrates for wall coverings and wall panels.
   4. Level 4: At panel surfaces that will be exposed to view, unless otherwise indicated.
      a. Primer and its application to surfaces are specified in other Division 9 Sections.

E. Glass-Mat, Water-Resistant Backing Panels: Finish according to manufacturer's written instructions.

3.7 PROTECTION

A. Protect installed products from damage from weather, condensation, direct sunlight, construction, and other causes during remainder of the construction period.

B. Remove and replace panels that are wet, moisture damaged, and mold damaged.
   1. Indications that panels are wet or moisture damaged include, but are not limited to, discoloration, sagging, or irregular shape.
   2. Indications that panels are mold damaged include, but are not limited to, fuzzy or

splotchy surface contamination and discoloration.

3.8 FIELD QUALITY CONTROL

A. Above-Ceiling Observation: Architect will conduct an above-ceiling observation before installing gypsum board ceilings and report deficiencies in the Work observed. Do not proceed with installation of gypsum board to ceiling support framing until deficiencies have been corrected.

1. Notify Architect seven days in advance of date and time when Project, or part of Project, will be ready for above-ceiling observation.
2. Before notifying Architect, complete the following in areas to receive gypsum board ceilings:
   a. Installation of 80 percent of lighting fixtures, powered for operation.
   b. Installation, insulation, and leak and pressure testing of water piping systems.
   c. Installation of air-duct systems.
   d. Installation of air devices.
   e. Installation of mechanical system control-air tubing.
   f. Installation of ceiling support framing.

END OF SECTION 09250

SECTION 09310 - CERAMIC TILE July 16, 2007

PART 1 - GENERAL

1.1 RELATED DOCUMENTS

A. Drawings and general provisions of the Contract, including General and Supplementary Conditions and Division 1 Specification Sections, apply to this Section.

1.2 SUMMARY

A. This Section includes the following:
1. Glazed wall tile.
2. Wall and floor accent tile.
3. Waterproof membrane for tile installations.
4. Thresholds installed as part of tile installations.

B. Related Sections include the following:
1. Division 3 Section "Cast-in-Place Concrete" for monolithic slab finishes specified for tile substrates.
2. Division 7 Section "Joint Sealants" for sealing of expansion, contraction, control, and isolation joints in tile surfaces.
3. Division 9 Section "Gypsum Board Assemblies" for cementitious backer units installed in gypsum wallboard assemblies.

1.3 DEFINITIONS

A. Module Size: Actual tile size (minor facial dimension as measured per ASTM C 499) plus joint width indicated.

B. Facial Dimension: Nominal tile size as defined in ANSI A137.1.

1.4 PERFORMANCE REQUIREMENTS

A. Static Coefficient of Friction: For tile installed on walkway surfaces, provide products with the following values as determined by testing identical products per ASTM C 1028:
1. Level Surfaces: Minimum 0.6.

B. Load-Bearing Performance: For ceramic tile installed on walkway surfaces, provide installations rated for the following load-bearing performance level based on testing assemblies according to ASTM C 627 that are representative of those indicated for this Project:
1. Heavy: Passes cycles 1 through 12.

1.5 SUBMITTALS

A. Product Data: For each type of tile, mortar, grout, and other products specified.

B. Tile Samples for Selection: Manufacturer's color charts consisting of actual tiles or sections of tiles showing the full range of colors, textures, and patterns available for each type and composition of tile indicated. Include Samples of accessories involving color selection.

C. Grout Samples for Selection: Manufacturer's color charts consisting of actual sections of grout showing the full range of colors available for each type of grout indicated.

1.6 QUALITY ASSURANCE

A. Installer Qualifications: Engage an experienced installer who has completed tile installations similar in material, design, and extent to that indicated for this Project and with a record of successful in-service performance.

B. Source Limitations for Tile: Obtain each color, grade, finish, type, composition, and variety of tile from one source with resources to provide products from the same production run for each contiguous area of consistent quality in appearance and physical properties without delaying the Work.

C. Source Limitations for Setting and Grouting Materials: Obtain ingredients of a uniform quality for each mortar, adhesive, and grout component from a single manufacturer and each aggregate from one source or producer.

D. Source Limitations for Other Products: Obtain each of the following products specified in this Section from one source and by a single manufacturer for each product:
   1. Stone thresholds.
   2. Waterproofing.

1.7 DELIVERY, STORAGE, AND HANDLING

A. Deliver and store packaged materials in original containers with seals unbroken and labels intact until time of use. Comply with requirement of ANSI A137.1 for labeling sealed tile packages.

B. Prevent damage or contamination to materials by water, freezing, foreign matter, and other causes.

C. Handle tile with temporary protective coating on exposed surfaces to prevent coated surfaces from contacting backs or edges of other units. If coating does contact bonding surfaces of tile, remove coating from bonding surfaces before setting tile.

1.8 PROJECT CONDITIONS

A. Environmental Limitations: Do not install tile until construction in spaces is completed and ambient temperature and humidity conditions are being maintained to comply with referenced standards and manufacturer's written instructions.

1.9 EXTRA MATERIALS

A. Deliver extra materials to Owner. Furnish extra materials described below that match products installed, are packaged with protective covering for storage, and are identified with labels describing contents.
   1. Tile and Trim Units: Furnish quantity of full-size units equal to 3 percent of amount installed, for each type, composition, color, pattern, and size indicated.

PART 2 - PRODUCTS

2.1 MANUFACTURERS

A. Available Manufacturers: Subject to compliance with requirements, manufacturers offering products that may be incorporated into the Work include, but are not limited to, the following:
   1. Tile Products:
      a. American Olean Tile Company.
      b. Dal-Tile Corporation.
      c. Florida Tile Industries, Inc.
      d. United States Ceramic Tile Company.
      e. Interceramics, USA.
   2. Tile-Setting and -Grouting Materials:
      a. American Olean Tile Company.
      b. Dal-Tile Corporation.
      c. Laticrete International, Inc.
      d. Mapei Corporation.

2.2 PRODUCTS, GENERAL

A. ANSI Ceramic Tile Standard: Provide tile that complies with ANSI A137.1, "Specifications for Ceramic Tile," for types, compositions, and other characteristics indicated.
   1. Provide tile complying with Standard Grade requirements, unless otherwise indicated.
   2. For facial dimensions of tile, comply with requirements relating to tile sizes specified in Part 1 "Definitions" Article.

B. ANSI Standards for Tile Installation Materials: Provide materials complying with ANSI standards referenced in "Setting Materials" and "Grouting Materials" articles.

C. Colors, Textures, and Patterns: Where manufacturer's standard products are indicated for tile, grout, and other products requiring selection of colors, surface textures, patterns, and other appearance characteristics, provide specific products or materials complying with the following requirements:
   1. Provide Architect's selections from manufacturer's full range of colors, textures, and patterns for products of type indicated.
   2. Provide tile trim and accessories that match color and finish of adjoining flat tile.

D. Factory Blending: For tile exhibiting color variations within the ranges selected during Sample submittals, blend tile in the factory and package so tile units taken from one package show the same range in colors as those taken from other packages and match approved Samples.

E. Mounting: Where factory-mounted tile is required, provide back- or edge-mounted tile assemblies as standard with manufacturer, unless another mounting method is indicated.
   1. Where tile is indicated for installation in wet areas, do not use back- or edge-mounted tile assemblies unless tile manufacturer specifies in writing that this type of mounting is suitable for these kinds of installations and has a record of successful in-service performance.

F. Factory-Applied Temporary Protective Coating: Where indicated under tile type, protect exposed surfaces of tile against adherence of mortar and grout by precoating them with a continuous film of petroleum paraffin wax, applied hot. Do not coat unexposed tile surfaces.

2.3 TILE PRODUCTS

A. Unglazed Ceramic Mosaic Tile: Provide factory-mounted flat tile complying with the following requirements:
   1. Composition: Porcelain.
   2. Module Size: 2 by 2 inches (50.8 by 50.8 mm) and as scheduled.
   3. Nominal Thickness: 1/4 inch (6.35 mm).
   4. Face: Plain with cushion edges.
   5. Colors: As selected by Architect from Price Group II.
   6. Accents: Provide accents as selected by the Architect.

B. Glazed Wall Tile: Provide flat tile complying with the following requirements:
   1. Module Size: 4-1/4 by 4-1/4 inches (108 by 108 mm) and as scheduled or detailed.
   2. Thickness: 5/16 inch (8 mm).
   3. Face: Plain with cushion edges.
   4. Mounting: Factory back-mounted.
   5. Colors: Refer to Color Schedule and drawings.
   6. Accents: Provide multiple accents as scheduled on the Drawings, selected from Price Group No. 3.

C. Unglazed Floor Tile: Provide flat tile complying with the following requirements:
   1. Composition: Porcelain.
   2. Module Size: 12 by 12 inches.
   3. Thickness: 3/8 inch.
   4. Face: Plain with cushion edges.
   5. Surface: Unpolished.
   6. Colors: As selected by Architect from manufacturer’s full range of colors.
   7. Equal to: DalTile, Aspen Lodge.

D. Trim Units: Provide tile trim units to match characteristics of adjoining flat tile and to comply with the following requirements:
   1. Size: As indicated, coordinated with sizes and coursing of adjoining flat tile where applicable.
   2. Shapes: As follows, selected from manufacturer's standard shapes:
      a. Base for Portland Cement Mortar Installations: Coved.
      b. Base for Thin-Set Mortar Installations: Coved.
      c. Wainscot Cap for Thin-Set Mortar Installations: Surface bullnose.
      d. External Corners for Thin-Set Mortar Installations: Surface bullnose.
      e. Internal Corners: Field-butted square corners, except with coved base and cap angle pieces designed to member with stretcher shapes.

2.4 THRESHOLDS

A. General: Provide thresholds that are uniform in color and finish, fabricated to sizes and profiles indicated to provide transition between tile surfaces and adjoining finished floor surfaces.
   1. Fabricate thresholds to heights indicated, but not more than 1/2 inch (12.7 mm) above adjoining finished floor surfaces, with transition edges beveled on a slope of no greater than 1:2.

B. Molded Thresholds:
   1. Solid Surfacing Material: Homogeneous solid sheets of filled plastic resin complying

with the material and performance requirements of ANSI Z124.3, Type 5 or Type 6, without a precoated finish.

a. Thresholds shall be minimum 1/2" thick.
b. Provide tapered front edge.
c. Thresholds shall be continuous between door jambs.
d. Provide colors as selected by architect from manufacturer's full range of colors.
e. Available Products: Subject to compliance with requirements, products that may be incorporated in the Work include, but are not limited to, the following:
    1) Corian; DuPont Polymers.
    2) Surell; Formica Corp.
    3) Fountainhead; Nevamar Corp.

2.5 WATERPROOFING MEMBRANES

A. General: Manufacturer's standard product that complies with ANSI A118.10.

B. Polyethylene Sheet Waterproofing: Manufacturer's standard proprietary product consisting of composite sheets, 60 inches wide by a nominal thickness of 0.030, composed of an inner layer of chlorinated polyethylene sheet faced on both sides with laminated high-strength nonwoven polyester material, designed for embedding in latex-portland cement mortar, and as substrate for latex-portland cement mortar setting bed.

1. Available Products:
    a) Polyethylene Sheet Waterproofing:
        1) "Nobleseal TS"; Noble Co. (distributed by H.B. Fuller Co.).

2.6 SETTING MATERIALS

A. Latex-Portland Cement Mortar: ANSI A118.4, composed as follows:

1. Mixture of Dry-Mortar Mix and Latex Additive: Mixture of prepackaged dry-mortar mix and liquid-latex additive complying with the following requirements:
    a. Latex Additive: Styrene butadiene rubber.
    b. Equal to: Laticrete 3701.
    c. For wall applications, provide nonsagging, latex-portland cement mortar complying with ANSI A118.4 for mortar of this type defined in Section F-2.1.2.

2.7 GROUTING MATERIALS

A. Latex-Portland Cement Grout: ANSI A118.6 for materials described in Section H-2.4, composed as follows:

1. Mixture of Dry-Grout Mix and Latex Additive: Mixture of factory-prepared, dry-grout mix and latex additive complying with the following requirements:
    a. Unsanded Dry-Grout Mix: Dry-set grout complying with ANSI A118.6 for materials described in Section H-2.3, for joints 1/8 inch (3.2 mm) and narrower.
    b. Sanded Dry-Grout Mix: Commercial portland cement grout complying with ANSI A118.6 for materials described in Section H-2.1, for joints 1/8 inch (3.2 mm) and wider.
    c. Latex Additive: Styrene butadiene rubber.
    d. Equal to: Laticrete 3701.
    e. Colors: Multiple colors will be selected to match wall tile color.

2.8 ELASTOMERIC SEALANTS

A. General: Provide manufacturer's standard chemically curing, elastomeric sealants of base polymer and characteristics indicated that comply with applicable requirements of Division 7 Section "Joint Sealants."

B. Colors: Provide colors of exposed sealants to match colors of grout in tile adjoining sealed joints, unless otherwise indicated.

C. One-Part, Mildew-Resistant Silicone Sealant: ASTM C 920; Type S; Grade NS; Class 25; Uses NT, G, A, and, as applicable to nonporous joint substrates indicated, O; formulated with fungicide, intended for sealing interior ceramic tile joints and other nonporous substrates that are subject to in-service exposures of high humidity and temperature extremes.

D. Multipart, Pourable Urethane Sealant for Use T: ASTM C 920; Type M; Grade P; Class 25; Uses T, M, A, and, as applicable to joint substrates indicated, O.

E. Available Products: Subject to compliance with requirements, products which may be incorporated into the Work include, but are not limited to, the following:
   1. One-Part, Mildew-Resistant Silicone Sealants:
      a. Dow Corning 786; Dow Corning Corporation.
      b. Sanitary 1700; GE Silicones.
      c. Pecora 898 Sanitary Silicone Sealant; Pecora Corp.
      d. Tremsil 600 White; Tremco, Inc.
   2. Multipart, Pourable Urethane Sealants:
      a. Chem-Calk 550; Bostik.
      b. Vulkem 245; Mameco International, Inc.
      c. NR-200 Urexpan; Pecora Corp.
      d. THC-900; Tremco, Inc.

2.9 MISCELLANEOUS MATERIALS

A. Trowelable Underlayments and Patching Compounds: Latex-modified, portland-cement-based formulation provided or approved by manufacturer of tile-setting materials for installations indicated.

B. Metal Edge Strips: White-zinc-alloy terrazzo strips, 1/8 inch (3.2 mm) wide at top edge with integral provision for anchorage to mortar bed or substrate, unless otherwise indicated.

C. Temporary Protective Coating: Provide product indicated below that is formulated to protect exposed surfaces of tile against adherence of mortar and grout; is compatible with tile, mortar, and grout products; and is easily removable after grouting is completed without damaging grout or tile.
   1. Petroleum paraffin wax, fully refined and odorless, containing at least 0.5 percent oil with a melting point of 120 to 140 deg F (49 to 60 deg C) per ASTM D 87.

D. Tile Cleaner: A neutral cleaner capable of removing soil and residue without harming tile and grout surfaces, specifically approved for materials and installations indicated by tile and grout manufacturers.

E. Grout Sealer: Solvent-based, no-sheen, natural-look penetrating sealer for all sanded and non-sanded grout joints.

1. Equal to: AQUA MIX, Inc., Sealer's Choice.

2.10 MIXING MORTARS AND GROUT

A. Mix mortars and grouts to comply with referenced standards and mortar and grout manufacturers' written instructions.

B. Add materials and additives in accurate proportions. Do not use or add any water to mortar or grout when mixing, use only latex additive.

C. Obtain and use type of mixing equipment, mixer speeds, mixing containers, mixing time, and other procedures to produce mortars and grouts of uniform quality with optimum performance characteristics for installations indicated.

PART 3 - EXECUTION

3.1 EXAMINATION

A. Examine substrates, areas, and conditions where tile will be installed, with Installer present, for compliance with requirements for installation tolerances and other conditions affecting performance of installed tile.
   1. Verify that substrates for setting tile are firm; dry; clean; free from oil, waxy films, and curing compounds; and within flatness tolerances required by referenced ANSI A108 series of tile installation standards for installations indicated.
   2. Verify that installation of grounds, anchors, recessed frames, electrical and mechanical units of work, and similar items located in or behind tile has been completed before installing tile.
   3. Verify that joints and cracks in tile substrates are coordinated with tile joint locations; if not coordinated, adjust latter in consultation with Architect.

B. Do not proceed with installation until unsatisfactory conditions have been corrected.

3.2 PREPARATION

A. Remove coatings, including curing compounds, and other substances that contain soap, wax, oil, or silicone and are incompatible with tile-setting materials by using a terrazzo or concrete grinder, a drum sander, or a polishing machine equipped with a heavy-duty wire brush.

B. Provide concrete substrates for tile floors installed with dry-set or latex-portland cement mortars that comply with flatness tolerances specified in referenced ANSI A108 series of tile installation standards for installations indicated.
   1. Use trowelable leveling and patching compounds per tile-setting material manufacturer's written instructions to fill cracks, holes, and depressions.
   2. Remove protrusions, bumps, and ridges by sanding or grinding.

C. Blending: For tile exhibiting color variations within the ranges selected during Sample submittals, verify that tile has been blended in the factory and packaged so tile units taken from one package show the same range in colors as those taken from other packages and match approved Samples. If not factory blended, either return to manufacturer or blend tiles at Project site before installing.

D. Field-Applied Temporary Protective Coating: Where indicated under tile type or needed to

prevent adhesion or staining of exposed tile surfaces by grout, protect exposed surfaces of tile against adherence of mortar and grout by precoating them with a continuous film of temporary protective coating indicated below, taking care not to coat unexposed tile surfaces:

1. Petroleum paraffin wax, applied hot.

3.3 INSTALLATION, GENERAL

A. ANSI Tile Installation Standards: Comply with parts of ANSI A108 series of tile installation standards in "Specifications for Installation of Ceramic Tile" that apply to types of setting and grouting materials and to methods indicated in ceramic tile installation schedules.

B. TCA Installation Guidelines: TCA's "Handbook for Ceramic Tile Installation." Comply with TCA installation methods indicated in ceramic tile installation schedules.

C. Extend tile work into recesses and under or behind equipment and fixtures to form a complete covering without interruptions, unless otherwise indicated. Terminate work neatly at obstructions, edges, and corners without disrupting pattern or joint alignments.

D. Accurately form intersections and returns. Perform cutting and drilling of tile without marring visible surfaces. Carefully grind cut edges of tile abutting trim, finish, or built-in items for straight aligned joints. Fit tile closely to electrical outlets, piping, fixtures, and other penetrations so plates, collars, or covers overlap tile.

E. Jointing Pattern: Lay tile in grid pattern, unless otherwise indicated. Align joints when adjoining tiles on floor, base, walls, and trim are the same size. Lay out tile work and center tile fields in both directions in each space or on each wall area. Adjust to minimize tile cutting. Provide uniform joint widths, unless otherwise indicated.

1. For tile mounted in sheets, make joints between tile sheets the same width as joints within tile sheets so joints between sheets are not apparent in finished work.

F. Lay out tile wainscots to next full tile beyond dimensions indicated.

G. Expansion Joints: Locate expansion joints and other sealant-filled joints, including control, contraction, and isolation joints, where indicated during installation of setting materials, mortar beds, and tile. Do not saw-cut joints after installing tiles.

1. Locate joints in tile surfaces directly above joints in concrete substrates.
2. Prepare joints and apply sealants to comply with requirements of Division 7 Section "Joint Sealants."

H. Grout tile to comply with the requirements of the following tile installation standards:

1. For ceramic tile grouts (sand-portland cement, dry-set, commercial portland cement, and latex-portland cement grouts), comply with ANSI A108.10.

3.4 WATERPROOFING MEMBRANE INSTALLATION

A. Install waterproofing to comply with ANSI A108.13 and waterproofing manufacturer's written instructions to produce waterproof membrane of uniform thickness bonded securely to substrate.

B. Do not install tile over waterproofing until waterproofing has cured and been tested to determine that it is watertight.

3.5 FLOOR TILE INSTALLATION

A. General: Install tile to comply with requirements in the Ceramic Tile Floor Installation Schedule, including those referencing TCA installation methods and ANSI A108 series of tile installation standards.
   1. Installation Methods:
      a. Tile over Concrete Surfaces: TCA F112.
      b. Tile over Concrete Surfaces (Thin Set): TCA F113.

B. Joint Widths: Install tile on floors with the following joint widths:
   1. Ceramic Mosaic Tile: 1/16 inch (1.6 mm).

C. Back Buttering: For installations indicated, obtain 100 percent mortar coverage by complying with applicable special requirements for back buttering of tile in referenced ANSI A108 series of tile installation standards:
   1. Tile floors in wet areas.
   2. Tile floors composed of tiles 8 by 8 inches (203 by 203 mm) or larger.

D. Stone Thresholds: Install stone thresholds at locations indicated; set in same type of setting bed as abutting field tile, unless otherwise indicated.
   1. Set thresholds in latex-portland cement mortar for locations where mortar bed would otherwise be exposed above adjacent nontile floor finish.

E. Metal Edge Strips: Install at locations indicated or where exposed edge of tile flooring meets carpet, wood, or other flooring that finishes flush with top of tile.

F. Apply two (2) coats of grout sealer in accordance with manufacturer's printed instructions and recommendations. Remove sealer remaining on the tile within 3 to 5 minutes of application.

3.6 WALL TILE INSTALLATION

A. Install types of tile designated for wall installations to comply with requirements in the Ceramic Tile Wall Installation Schedule, including those referencing TCA installation methods and ANSI setting-bed standards.
   1. Installation Methods:
      a. Tile over Masonry Surfaces: TCA W211.
      b. Tile over Cementitious Backer Unit Surfaces: TCA W244.
      c. Tile over Masonry in Wet Areas: TCA W211.

B. Joint Widths: Install tile on walls with the following joint widths:
   1. Ceramic Mosaic Tile: 1/16 inch (1.6 mm).
   2. Wall Tile: 1/16 inch (1.6 mm).

C. Back Buttering: For installations indicated, obtain 100 percent mortar coverage by complying with applicable special requirements for back buttering of tile in referenced ANSI A108 series of tile installation standards:
   1. Tile wall installations in wet areas, including showers.
   2. Tile wall installations composed of tiles 8 by 8 inches (203 by 203 mm) or larger.

D. Apply two (2) coats of grout sealer in accordance with manufacturer's printed instructions and recommendations. Remove sealer remaining on the tile within 3 to 5 minutes of application.

3.7 CLEANING AND PROTECTING

A. Cleaning: On completion of placement and grouting, clean all ceramic tile surfaces so they are free of foreign matter.
   1. Remove latex-portland cement grout residue from tile as soon as possible.
   2. Unglazed tile must be cleaned with acid solutions or other cleaner permitted by tile and grout manufacturer's written instructions, prior to final sealer installation. Protect metal surfaces, cast iron, and vitreous plumbing fixtures from effects of acid cleaning. Flush surface with clean water before and after cleaning.
   3. Remove temporary protective coating by method recommended by coating manufacturer that is acceptable to brick and grout manufacturer. Trap and remove coating to prevent it from clogging drains.

B. Finished Tile Work: Leave finished installation clean and free of cracked, chipped, broken, unbonded, and otherwise defective tile work.

C. Provide final protection and maintain conditions, in a manner acceptable to manufacturer and Installer, that ensure tile is without damage or deterioration at the time of Substantial Completion.
   1. When recommended by tile manufacturer, apply a protective coat of neutral protective cleaner to completed tile walls and floors. Protect installed tile work with kraft paper or other heavy covering during construction period to prevent staining, damage, and wear.
   2. Prohibit foot and wheel traffic from tiled floors for at least 7 days after grouting is completed.

D. Before final inspection, remove protective coverings and rinse neutral cleaner from tile surfaces.

END OF SECTION 09310

PART 1 - GENERAL

1.1 RELATED DOCUMENTS

A. Drawings and general provisions of the Contract, including General and Supplementary Conditions and Division 1 Specification Sections, apply to this Section.

1.2 SUMMARY

A. This Section includes acoustical panels and exposed suspension systems for ceilings.

B. Products furnished, but not installed under this Section, include anchors, clips, and other ceiling attachment devices to be cast in concrete at ceilings.

1.3 DEFINITIONS

A. AC: Articulation Class.

B. CAC: Ceiling Attenuation Class.

C. LR: Light Reflectance coefficient.

D. NRC: Noise Reduction Coefficient.

1.4 SUBMITTALS

A. Product Data: For each type of product indicated.

B. Coordinate Drawings: Reflected ceiling plans drawn to scale and coordinating penetrations and ceiling-mounted items. Show the following:
   1. Ceiling suspension members.
   2. Method of attaching hangers to building structure.
   3. Ceiling-mounted items including lighting fixtures, diffusers, grilles, speakers, sprinklers, access panels, and special moldings.
   4. Minimum Drawing Scale: 1/4 inch = 1 foot (1:48).

C. Samples for Initial Selection: For components with factory-applied color finishes.

D. Samples for Verification: For each component indicated and for each exposed finish required, prepared on Samples of size indicated below.
   1. Acoustical Panel: Set of 6-inch- (150-mm-) square Samples of each type, color, pattern, and texture.
   2. Exposed Suspension System Members, Moldings, and Trim: Set of 12-inch- (300-mm-) long Samples of each type, finish, and color.

E. Product Test Reports: Based on evaluation of comprehensive tests performed by a qualified testing agency, for each acoustical panel ceiling.

F. Maintenance Data: For finishes to include in maintenance manuals.

1.5 QUALITY ASSURANCE

A. Acoustical Testing Agency Qualifications: An independent testing laboratory, or an NVLAP-accredited laboratory, with the experience and capability to conduct the testing indicated, as documented according to ASTM E 548. NVLAP-accredited laboratories must document accreditation, based on a "Certificate of Accreditation" and a "Scope of Accreditation" listing the test methods specified.

B. Source Limitations:
   1. Acoustical Ceiling Panel: Obtain each type through one source from a single manufacturer.
   2. Suspension System: Obtain each type through one source from a single manufacturer.

C. Fire-Test-Response Characteristics: Provide acoustical panel ceilings that comply with the following requirements:
   1. Fire-Resistance Characteristics: Where indicated, provide acoustical panel ceilings identical to those of assemblies tested for fire resistance per ASTM E 119 by UL or another testing and inspecting agency acceptable to authorities having jurisdiction.
      a. Fire-Resistance Ratings: Indicated by design designations from UL's "Fire Resistance Directory" or from the listings of another testing and inspecting agency.
      b. Identify materials with appropriate markings of applicable testing and inspecting agency.
   2. Surface-Burning Characteristics: Provide acoustical panels with the following surface-burning characteristics complying with ASTM E 1264 for Class A materials as determined by testing identical products per ASTM E 84:
      a. Smoke-Developed Index: 450 or less.

D. Seismic Standard: Provide acoustical panel ceilings designed and installed to withstand the effects of earthquake motions according to the following:
   1. CISCA's Guidelines for Systems Requiring Seismic Restraint: Comply with CISCA's "Guidelines for Seismic Restraint of Direct-Hung Suspended Ceiling Assemblies--Seismic Zones 3 & 4."

E. Mockups: Build mockups to verify selections made under sample Submittals and to demonstrate aesthetic effects and qualities of materials and execution.
   1. Approved mockups may become part of the completed Work if undisturbed at time of Substantial Completion.

F. Preinstallation Conference: Conduct conference at Project site to comply with requirements in Division 1 Section "Project Management and Coordination."

1.6 DELIVERY, STORAGE, AND HANDLING

A. Deliver acoustical panels, suspension system components, and accessories to Project site in original, unopened packages and store them in a fully enclosed, conditioned space where they will be protected against damage from moisture, humidity, temperature extremes, direct sunlight, surface contamination, and other causes.

B. Before installing acoustical panels, permit them to reach room temperature and a stabilized moisture content.

C. Handle acoustical panels carefully to avoid chipping edges or damaging units in any way.

1.7 PROJECT CONDITIONS

A. Environmental Limitations: Do not install acoustical panel ceilings until spaces are enclosed and weatherproof, wet work in spaces is complete and dry, work above ceilings is complete, and ambient temperature and humidity conditions are maintained at the levels indicated for Project when occupied for its intended use.

1.8 COORDINATION

A. Coordinate layout and installation of acoustical panels and suspension system with other construction that penetrates ceilings or is supported by them, including light fixtures, HVAC equipment, fire-suppression system, and partition assemblies.

1.9 EXTRA MATERIALS

A. Furnish extra materials described below that match products installed and that are packaged with protective covering for storage and identified with labels describing contents.
   1. Acoustical Ceiling Panels: Full-size panels equal to 2.0 percent of quantity installed.
   2. Suspension System Components: Quantity of each exposed component equal to 2.0 percent of quantity installed.
   3. Hold-Down Clips: Equal to 2.0 percent of amount installed.

PART 2 - PRODUCTS

2.1 MANUFACTURERS

A. In other Part 2 articles where titles below introduce lists, the following requirements apply for product selection:
   1. Available Manufacturers: Subject to compliance with requirements, manufacturers offering products that may be incorporated into the Work include, but are not limited to, the following manufacturers:
      a. Armstrong World Industries, Inc.
      b. USG Interiors, Inc.
      c. Celotex Corporation, Architectural Ceilings Marketing Dept.

2.2 ACOUSTICAL PANELS, GENERAL

A. Acoustical Panel Standard: Provide manufacturer's standard panels of configuration indicated that comply with ASTM E 1264 classifications as designated by types, patterns, acoustical ratings, and light reflectances, unless otherwise indicated.
   1. Mounting Method for Measuring NRC: Type E-400; plenum mounting in which face of test specimen is 15-3/4 inches (400 mm) away from test surface per ASTM E 795.

B. Acoustical Panel Colors and Patterns: Match appearance characteristics indicated for each product type.

2.3 WATER-FELTED, MINERAL-BASE ACOUSTICAL PANELS FOR ACOUSTICAL PANEL CEILING

A. Available Products:
   1. Armstrong World Industries, Cortega (769).

B. Classification: Provide panels complying with ASTM E 1264 for Type III, mineral base with painted finish; Form 2, water felted; and pattern as follows:
   1. Pattern: C (perforated, small holes)/D (fissured).

C. Color: White.

D. LR: Not less than 0.82.

E. NRC: Not less than 0.55.

F. CAC: Not less than 35.

G. Edge Detail: Square-cut.

H. Thickness: 5/8 inch (15 mm).

I. Size: 24 by 48 inches (610 by 1220 mm).

2.4 METAL SUSPENSION SYSTEMS, GENERAL

A. Metal Suspension System Standard: Provide manufacturer's standard direct-hung metal suspension systems of types, structural classifications, and finishes indicated that comply with applicable requirements in ASTM C 635.

B. Finishes and Colors, General: Comply with NAAMM's "Metal Finishes Manual for Architectural and Metal Products" for recommendations for applying and designating finishes. Provide manufacturer's standard factory-applied finish for type of system indicated.

C. Attachment Devices: Size for five times the design load indicated in ASTM C 635, Table 1, "Direct Hung," unless otherwise indicated.
   1. Anchors in Concrete: Anchors of type and material indicated below, with holes or loops for attaching hangers of type indicated and with capability to sustain, without failure, a load equal to five times that imposed by ceiling construction, as determined by testing per ASTM E 488 or ASTM E 1512 as applicable, conducted by a qualified testing and inspecting agency.
      a. Type: Postinstalled expansion anchors.
      b. Corrosion Protection: Carbon-steel components zinc plated to comply with ASTM B 633, Class Fe/Zn 5 (0.005 mm) for Class SC 1 service condition.

D. Wire Hangers, Braces, and Ties: Provide wires complying with the following requirements:
   1. Zinc-Coated Carbon-Steel Wire: ASTM A 641/A 641M, Class 1 zinc coating, soft temper.
   2. Size: Select wire diameter so its stress at three times hanger design load (ASTM C 635, Table 1, "Direct Hung") will be less than yield stress of wire, but provide not less than 0.106-inch- (2.69-mm-) diameter wire.

E. Hanger Rods/Flat Hangers: Mild steel, zinc coated or protected with rust-inhibitive paint.

F. Angle Hangers: Angles with legs not less than 7/8 inch (22 mm) wide; formed with 0.04-inch- (1-mm-) thick, galvanized steel sheet complying with ASTM A 653/A 653M, G90 (Z275) coating designation; with bolted connections and 5/16-inch- (8-mm-) diameter bolts.

G. Seismic Struts: Manufacturer's standard compression struts designed to accommodate seismic forces.

H. Seismic Clips: Manufacturer's standard seismic clips designed and spaced to secure acoustical panels in-place.

2.5 METAL SUSPENSION SYSTEM FOR ACOUSTICAL PANEL CEILING

A. Wide-Face, Capped, Double-Web, Steel Suspension System: Main and cross runners roll formed from cold-rolled steel sheet, prepainted, electrolytically zinc coated, or hot-dip galvanized according to ASTM A 653/A 653M, not less than G30 (Z90) coating designation, with prefinished 15/16-inch- (24-mm-) wide metal caps on flanges.
   1. Structural Classification: Heavy-duty system.
   2. End Condition of Cross Runners: Butt-edge type.
   3. Face Design: Flat, flush.
   4. Cap Material: Steel cold-rolled sheet.
   5. Cap Finish: Painted white.

2.6 METAL EDGE MOLDINGS AND TRIM

A. Roll-Formed Sheet-Metal Edge Moldings and Trim: Type and profile indicated or, if not indicated, manufacturer's standard moldings for edges and penetrations that fit acoustical panel edge details and suspension systems indicated; formed from sheet metal of same material, finish, and color as that used for exposed flanges of suspension system runners.
   1. For lay-in panels with reveal edge details, provide stepped edge molding that forms reveal of same depth and width as that formed between edge of panel and flange at exposed suspension member.
   2. For circular penetrations of ceiling, provide edge moldings fabricated to diameter required to fit penetration exactly.

2.7 ACOUSTICAL SEALANT

A. Available Products:
   1. Acoustical Sealant for Exposed and Concealed Joints:
      a. Pecora Corp; AC-20 FTR Acoustical and Insulation Sealant.
      b. United States Gypsum Co.; SHEETROCK Acoustical Sealant.

B. Acoustical Sealant for Exposed and Concealed Joints: Manufacturer's standard nonsag, paintable, nonstaining latex sealant complying with ASTM C 834 and effective in reducing airborne sound transmission through perimeter joints and openings in building construction as demonstrated by testing representative assemblies according to ASTM E 90.

PART 3 - EXECUTION

3.1 EXAMINATION

A. Examine substrates, areas, and conditions, including structural framing to which acoustical panel ceilings attach or abut, with Installer present, for compliance with requirements specified in this and other Sections that affect ceiling installation and anchorage and with requirements for installation tolerances and other conditions affecting performance of acoustical panel ceilings.

B. Proceed with installation only after unsatisfactory conditions have been corrected.

3.2 PREPARATION

A. Measure each ceiling area and establish layout of acoustical panels to balance border widths at opposite edges of each ceiling. Avoid using less-than-half-width panels at borders, and comply with layout shown on reflected ceiling plans.

3.3 INSTALLATION, GENERAL

A. General: Install acoustical panel ceilings to comply with ASTM C 636 and seismic requirements indicated, per manufacturer's written instructions and CISCA's "Ceiling Systems Handbook."

B. Suspend ceiling hangers from building's structural members and as follows:
   1. Install hangers plumb and free from contact with insulation or other objects within ceiling plenum that are not part of supporting structure or of ceiling suspension system.
   2. Splay hangers only where required to miss obstructions; offset resulting horizontal forces by bracing, countersplaying, or other equally effective means.
   3. Where width of ducts and other construction within ceiling plenum produces hanger spacings that interfere with location of hangers at spacings required to support standard suspension system members, install supplemental suspension members and hangers in form of trapezes or equivalent devices. Size supplemental suspension members and hangers to support ceiling loads within performance limits established by referenced standards and publications.
   4. Secure wire hangers to ceiling suspension members and to supports above with a minimum of three tight turns. Connect hangers directly either to structures or to inserts, eye screws, or other devices that are secure and appropriate for substrate and that will not deteriorate or otherwise fail due to age, corrosion, or elevated temperatures.
   5. Secure flat, angle, channel, and rod hangers to structure, including intermediate framing members, by attaching to inserts, eye screws, or other devices that are secure and appropriate for both structure to which hangers are attached and type of hanger involved. Install hangers in a manner that will not cause them to deteriorate or fail due to age, corrosion, or elevated temperatures.
   6. Do not support ceilings directly from permanent metal forms or floor deck. Fasten hangers to cast-in-place hanger inserts, postinstalled mechanical or adhesive anchors, or power-actuated fasteners that extend through forms into concrete.
   7. Do not attach hangers to steel deck tabs.
   8. Do not attach hangers to steel roof deck. Attach hangers to structural members.
   9. Space hangers not more than 48 inches (1200 mm) o.c. along each member supported directly from hangers, unless otherwise indicated; provide hangers not more than 8 inches (200 mm) from ends of each member.

C. Secure bracing wires to ceiling suspension members and to supports with a minimum of four tight turns. Suspend bracing from building's structural members as required for hangers, without attaching to permanent metal forms, steel deck, or steel deck tabs. Fasten bracing wires into concrete with cast-in-place or postinstalled anchors.

D. Install edge moldings and trim of type indicated at perimeter of acoustical ceiling area and where necessary to conceal edges of acoustical panels.
   1. Apply acoustical sealant in a continuous ribbon concealed on back of vertical legs of

moldings before they are installed.

2. Screw attach moldings to substrate at intervals not more than 16 inches (400 mm) o.c. and not more than 3 inches (75 mm) from ends, leveling with ceiling suspension system to a tolerance of 1/8 inch in 12 feet (3.2 mm in 3.66 m). Miter corners accurately and connect securely.
3. Do not use exposed fasteners, including pop rivets, on moldings and trim.

E. Install suspension system runners so they are square and securely interlocked with one another. Remove and replace dented, bent, or kinked members.

F. Install acoustical panels with undamaged edges and fit accurately into suspension system runners and edge moldings. Scribe and cut panels at borders and penetrations to provide a neat, precise fit.

1. For square-edged panels, install panels with edges fully hidden from view by flanges of suspension system runners and moldings.For reveal-edged panels on suspension system runners, install panels with bottom of reveal in firm contact with top surface of runner flanges.
3. For reveal-edged panels on suspension system members with box-shaped flanges, install panels with reveal surfaces in firm contact with suspension system surfaces and panel faces flush with bottom face of runners.
4. Paint cut edges of panel remaining exposed after installation; match color of exposed panel surfaces using coating recommended in writing for this purpose by acoustical panel manufacturer.
5. Install hold-down clips in areas indicated, in areas required by authorities having jurisdiction, and for fire-resistance ratings; space as recommended by panel manufacturer's written instructions, unless otherwise indicated.
6. Protect lighting fixtures and air ducts to comply with requirements indicated for fire-resistance-rated assembly.

3.4 CLEANING

A. Clean exposed surfaces of acoustical panel ceilings, including trim, edge moldings, and suspension system members. Comply with manufacturer's written instructions for cleaning and touchup of minor finish damage. Remove and replace ceiling components that cannot be successfully cleaned and repaired to permanently eliminate evidence of damage.

END OF SECTION 09511

SECTION 09651 - RESILIENT FLOOR TILE July 16, 2007

PART 1 - GENERAL

1.1 RELATED DOCUMENTS

A. Drawings and general provisions of the Contract, including General and Supplementary Conditions and Division 1 Specification Sections, apply to this Section.

1.2 SUMMARY

A. This Section includes the following:
   1. Vinyl composition tile (VCT).
   2. Resilient wall base and accessories.

1.3 SUBMITTALS

A. Product Data: For each type of product indicated.

B. Samples for Initial Selection: For each type of product indicated.

C. Samples for Verification: Full-size units of each color and pattern of resilient floor tile required.
   1. Resilient Wall Base and Accessories: Manufacturer's standard-size Samples, but not less than 12 inches (300 mm) long, of each resilient product color and pattern required.

D. Maintenance Data: For resilient products to include in maintenance manuals.

1.4 QUALITY ASSURANCE

A. Fire-Test-Response Characteristics: Provide products identical to those tested for fire-exposure behavior per test method indicated by a testing and inspecting agency acceptable to authorities having jurisdiction.

1.5 DELIVERY, STORAGE, AND HANDLING

A. Store resilient products and installation materials in dry spaces protected from the weather, with ambient temperatures maintained within range recommended by manufacturer, but not less than 50 deg F (10 deg C) or more than 90 deg F (32 deg C). Store tiles on flat surfaces.

1.6 PROJECT CONDITIONS

A. Maintain temperatures within range recommended by manufacturer, but not less than 70 deg F (21 deg C) or more than 95 deg F (35 deg C), in spaces to receive floor tile during the following time periods:
   1. 48 hours before installation.
   2. During installation.
   3. 48 hours after installation.

B. After postinstallation period, maintain temperatures within range recommended by manufacturer, but not less than 55 deg F (13 deg C) or more than 95 deg F (35 deg C).

C. Close spaces to traffic during floor covering installation.

D. Close spaces to traffic for 48 hours after floor covering installation.

E. Install resilient products after other finishing operations, including painting, have been completed.

1.7 EXTRA MATERIALS

A. Furnish extra materials described below that match products installed and that are packaged with protective covering for storage and identified with labels describing contents.
   1. Floor Tile: Furnish 1 box for every 50 boxes or fraction thereof, of each type, color, and pattern of floor tile installed.
   2. Resilient Wall Base and Accessories: Furnish not less than 10 linear feet (3 linear m) for every 500 linear feet (150 linear m) or fraction thereof, of each type, color, pattern, and size of resilient product installed.

PART 2 - PRODUCTS

2.1 MANUFACTURERS

A. Available Products: Subject to compliance with requirements, products that may be incorporated into the Work include, but are not limited to, the products listed in other Part 2 articles.

2.2 COLORS AND PATTERNS

A. Colors and Patterns: As selected by Architect from manufacturer's full range.

2.3 VINYL COMPOSITION TILE

A. Vinyl Composition Tile (VCT): ASTM F 1066.
   1. Armstrong World Industries, Inc.;
   2. Azrock Commercial Flooring, DOMCO;
   3. Congoleum Corporation;
   4. Mannington Mills, Inc.;
   5. Tarkett Inc.;

B. Class: 2 (through-pattern tile).

C. Wearing Surface: Smooth.

D. Thickness: 0.125 inch (3.2 mm).

E. Size: 12 by 12 inches (305 by 305 mm).

F. Fire-Test-Response Characteristics:
   1. Critical Radiant Flux Classification: Class I, not less than 0.45 W/sq. cm per ASTM E 648.

2.4 RESILIENT WALL BASE

A. Wall Base: ASTM F 1861.
   1. AFCO-USA, American Floor Products Company, Inc.;
   2. Armstrong World Industries, Inc.;
   3. Burke Mercer Flooring Products;
   4. Johnsonite;
   5. Marley Flexco (USA), Inc.;
   6. Musson, R. C. Rubber Co.;
   7. Roppe Corporation;

B. Type (Material Requirement): TP (rubber, thermoplastic).

C. Group (Manufacturing Method): I (solid, homogeneous).

D. Style: Cove (base with toe) and Straight (flat or toeless).

E. Minimum Thickness: 0.125 inch (3.2 mm).

F. Height: 4 inches (102 mm).

G. Lengths: Coils in manufacturer's standard length.

H. Outside Corners: Premolded.

I. Inside Corners: Premolded.

J. Surface: Smooth.

2.5 RESILIENT MOLDING ACCESSORY

A. Description, including but not limited to: Carpet bar for tackless installations, Carpet edge for glue-down applications, Nosing for carpet, Nosing for resilient floor covering, Reducer strip for resilient floor covering, and Joiner for tile and carpet.
   1. Burke Mercer Flooring Products;
   2. Johnsonite;
   3. Marley Flexco (USA), Inc.;
   4. Roppe Corporation;

B. Material: Vinyl.

C. Profile and Dimensions: As indicated.

2.6 INSTALLATION MATERIALS

A. Trowelable Leveling and Patching Compounds: Latex-modified, portland cement based or blended hydraulic cement based formulation provided or approved by resilient product manufacturer for applications indicated.

B. Adhesives: Water-resistant type recommended by manufacturer to suit resilient products and substrate conditions indicated.

C. Metal Edge Strips: Extruded aluminum with mill finish of width shown, of height required to

protect exposed edges of tiles, and in maximum available lengths to minimize running joints.

PART 3 - EXECUTION

3.1 EXAMINATION

A. Examine substrates, with Installer present, for compliance with requirements for installation tolerances, moisture content, and other conditions affecting performance.
   1. Verify that finishes of substrates comply with tolerances and other requirements specified in other Sections and that substrates are free of cracks, ridges, depressions, scale, and foreign deposits that might interfere with adhesion of resilient products.
   2. Proceed with installation only after unsatisfactory conditions have been corrected.

3.2 PREPARATION

A. Prepare substrates according to manufacturer's written recommendations to ensure adhesion of resilient products.

B. Concrete Substrates: Prepare according to ASTM F 710.
   1. Verify that substrates are dry and free of curing compounds, sealers, and hardeners.
   2. Alkalinity and Adhesion Testing: Perform tests recommended by manufacturer. Proceed with installation only after substrates pass testing.
   3. Moisture Testing:
      a. Perform anhydrous calcium chloride test, ASTM F 1869. Proceed with installation only after substrates have maximum moisture-vapor-emission rate of 3 lb of water/1000 sq. ft. (1.36 kg of water/92.9 sq. m) in 24 hours.
      b. Perform tests recommended by manufacturer. Proceed with installation only after substrates pass testing.

C. Remove substrate coatings and other substances that are incompatible with adhesives and that contain soap, wax, oil, or silicone, using mechanical methods recommended by manufacturer. Do not use solvents.

D. Use trowelable leveling and patching compound to fill cracks, holes, and depressions in substrates.

E. Move resilient products and installation materials into spaces where they will be installed at least 48 hours in advance of installation.
   1. Do not install resilient products until they are same temperature as space where they are to be installed.

F. Sweep and vacuum clean substrates to be covered by resilient products immediately before installation. After cleaning, examine substrates for moisture, alkaline salts, carbonation, and dust. Proceed with installation only after unsatisfactory conditions have been corrected.

3.3 TILE INSTALLATION

A. Lay out tiles from center marks established with principal walls, discounting minor offsets, so tiles at opposite edges of room are of equal width. Adjust as necessary to avoid using cut widths that equal less than one-half tile at perimeter.
   1. Lay tiles square with room axis.

B. Match tiles for color and pattern by selecting tiles from cartons in the same sequence as manufactured and packaged, if so numbered. Discard broken, cracked, chipped, or deformed tiles.
   1. Lay tiles with grain direction alternating in adjacent tiles (basket-weave pattern).

C. Scribe, cut, and fit tiles to butt neatly and tightly to vertical surfaces and permanent fixtures including built-in furniture, cabinets, pipes, outlets, edgings, door frames, thresholds, and nosings.

D. Extend tiles into toe spaces, door reveals, closets, and similar openings.

E. Maintain reference markers, holes, and openings that are in place or marked for future cutting by repeating on floor tiles as marked on substrates. Use chalk or other nonpermanent, nonstaining marking device.

F. Install tiles on covers for telephone and electrical ducts and similar items in finished floor areas. Maintain overall continuity of color and pattern with pieces of tile installed on covers. Tightly adhere tile edges to substrates that abut covers and to cover perimeters.

G. Adhere tiles to flooring substrates using a full spread of adhesive applied to substrate to produce a completed installation without open cracks, voids, raising and puckering at joints, telegraphing of adhesive spreader marks, and other surface imperfections.

3.4 RESILIENT WALL BASE INSTALLATION

A. Apply wall base to walls, columns, pilasters, casework and cabinets in toe spaces, and other permanent fixtures in rooms and areas where base is required.

B. Install wall base in lengths as long as practicable without gaps at seams and with tops of adjacent pieces aligned.

C. Tightly adhere wall base to substrate throughout length of each piece, with base in continuous contact with horizontal and vertical substrates.

D. Do not stretch wall base during installation.

E. On masonry surfaces or other similar irregular substrates, fill voids along top edge of wall base with manufacturer's recommended adhesive filler material.

F. Premolded Corners: Install premolded corners before installing straight pieces.

3.5 RESILIENT ACCESSORY INSTALLATION

A. Resilient Molding Accessories: Butt to adjacent materials and tightly adhere to substrates throughout length of each piece. Install reducer strips at edges of floor coverings that would otherwise be exposed.

3.6 CLEANING AND PROTECTION

A. Perform the following operations immediately after completing resilient product installation:
   1. Remove adhesive and other blemishes from exposed surfaces.
   2. Sweep and vacuum surfaces thoroughly.

3. Damp-mop surfaces to remove marks and soil.
   a. Do not wash surfaces until after time period recommended by manufacturer.

B. Protect resilient products from mars, marks, indentations, and other damage from construction operations and placement of equipment and fixtures during remainder of construction period. Use protection methods recommended in writing by manufacturer.
   1. Apply protective floor polish to horizontal surfaces that are free from soil, visible adhesive, and surface blemishes if recommended in writing by manufacturer.
      a. Use commercially available product acceptable to manufacturer.
      b. Coordinate selection of floor polish with Owner's maintenance service.
   2. Cover products installed on horizontal surfaces with undyed, untreated building paper until Substantial Completion.
   3. Do not move heavy and sharp objects directly over surfaces. Place hardboard or plywood panels over flooring and under objects while they are being moved. Slide or roll objects over panels without moving panels.

END OF SECTION 09651

SECTION 09681 - CARPET TILE July 16, 2007

PART 1 - GENERAL

1.1 RELATED DOCUMENTS

A. Drawings and general provisions of the Contract, including General and Supplementary Conditions and Division 1 Specification Sections, apply to this Section.

1.2 SUMMARY

A. This Section includes carpet tile furnished by the Owner and installed by the Contractor.

B. Related Sections include the following:
1. Division 9 Section "Resilient Tile Flooring" for resilient wall base and accessories installed with carpet tile.

1.3 SUBMITTALS

A. Product Data: For each type of product indicated. Include manufacturer's written data on physical characteristics, durability, and fade resistance. Include installation methods.

B. Shop Drawings: Show the following:
1. Columns, doorways, enclosing walls or partitions, built-in cabinets, and locations where cutouts are required in carpet tiles.
2. Carpet tile type, color, and dye lot.
3. Type of installation.
4. Pattern of installation.
5. Pattern type, location, and direction.
6. Pile direction.
7. Type, color, and location of edge, transition, and other accessory strips.
8. Transition details to other flooring materials.

C. Samples: For each of the following products and for each color and texture required. Label each Sample with manufacturer's name, material description, color, pattern, and designation indicated on Drawings and in schedules.
1. Carpet Tile: Full-size Sample.
2. Exposed Edge Stripping and Accessory: 12-inch- (300-mm-) long Samples.

D. Product Schedule: Use same room and product designations indicated on Drawings and in schedules.

E. Maintenance Data: For carpet tile to include in maintenance manuals specified in Division 1. Include the following:
1. Methods for maintaining carpet tile, including cleaning and stain-removal products and procedures and manufacturer's recommended maintenance schedule.
2. Precautions for cleaning materials and methods that could be detrimental to carpet tile.

1.4 QUALITY ASSURANCE

A. Installer Qualifications: An experienced installer who is certified by the Floor Covering

Installation Board or who can demonstrate compliance with its certification program requirements.

B. Fire-Test-Response Characteristics: Provide products with the critical radiant flux classification indicated in Part 2, as determined by testing identical products per ASTM E 648 by an independent testing and inspecting agency acceptable to authorities having jurisdiction.

C. Product Options: Products and manufacturers named in Part 2 establish requirements for product quality in terms of appearance, construction, and performance. Other manufacturers' products comparable in quality to named products and complying with requirements may be considered.

1.5 DELIVERY, STORAGE, AND HANDLING

A. General: Comply with CRI 104, Section 5, "Storage and Handling."

1.6 PROJECT CONDITIONS

A. General: Comply with CRI 104, Section 6.1, "Site Conditions; Temperature and Humidity."

B. Environmental Limitations: Do not install carpet tile until wet work in spaces is complete and dry, and ambient temperature and humidity conditions are maintained at the levels indicated for Project when occupied for its intended use.

C. Do not install carpet tile over concrete slabs until slabs have cured and are sufficiently dry to bond with adhesive and concrete slabs have pH range recommended by carpet tile manufacturer.

D. Where demountable partitions or other items are indicated for installation on top of carpet tile, install carpet tile before installing these items.

1.7 WARRANTY

A. General Warranty: Special warranty specified in this Article shall not deprive Owner of other rights Owner may have under other provisions of the Contract Documents and shall be in addition to, and run concurrent with, other warranties made by Contractor under requirements of the Contract Documents.

B. Special Carpet Tile Warranty: Written warranty, signed by carpet tile manufacturer agreeing to replace carpet tile that does not comply with requirements or that fails within specified warranty period. Warranty does not include deterioration or failure of carpet tile due to unusual traffic, failure of substrate, vandalism, or abuse. Failures include, but are not limited to, more than 10 percent loss of face fiber, edge raveling, snags, runs, and delamination.
   1. Warranty Period: 10 years from date of Substantial Completion.

PART 2 - PRODUCTS

2.1 CARPET TILE

A. Available Products: Subject to compliance with requirements, products that may be incorporated into the Work include, but are not limited to, the following:

1. Shaw Contract Group

   a. Color: As selected by Architect from manufacturer's full range.
   b. Collection: Urban Reflections.
   c. Style Number: 59466
   d. Pattern: Mirror Image.

B. Fiber Content: 100 percent eco solution q premium branded nylon.

C. Pile Characteristic: Multilevel pattern loop.

D. Finished Pile Thickness: 0.121 inches for finished carpet tile per ASTM D 6859.

E. Density: 5,653 ozs./yd^3

F. Stitches: 9.66 stitches per inch.

G. Gage: 1/12 ends per inch.

H. Face Weight: 19.0 oz./sq. yd.

I. Primary Backing: Manufacturer's standard synthetic materials.

J. Secondary Backing: ecoworx.

K. Size: 24 by 24 inches (610 by 610 mm).

L. Applied Soil-Resistance Treatment: Manufacturer's standard material.

M. Antimicrobial Treatment: Manufacturer's standard material.

N. Performance Characteristics: As follows:

1. Critical Radiant Flux Classification: Not less than 0.45 W/sq. cm.
2. Antimicrobial Activity: Not less than 2-mm halo of inhibition for gram-positive bacteria; not less than 1-mm halo of inhibition for gram-negative bacteria; no fungal growth; per AATCC 174.

2.2 INSTALLATION ACCESSORIES

A. Trowelable Leveling and Patching Compounds: Where required on other than raised access floor panels provide latex-modified, hydraulic-cement-based formulation provided by or recommended by carpet tile manufacturer.

B. Adhesives: Water-resistant, mildew-resistant, nonstaining, pressure-sensitive type to suit products and subfloor conditions indicated, that complies with flammability requirements for installed carpet tile and is recommended by carpet tile manufacturer for releasable installation.

PART 3 - EXECUTION

3.1 EXAMINATION

A. Examine substrates, areas, and conditions for compliance with requirements for maximum moisture content, alkalinity range, installation tolerances, and other conditions affecting carpet tile performance. Verify that substrates and conditions are satisfactory for carpet tile installation and comply with requirements specified.

B. Concrete Subfloors: Verify that concrete slabs comply with ASTM F 710 and the following:
   1. Slab substrates are dry and free of curing compounds, sealers, hardeners, and other materials that may interfere with adhesive bond. Determine adhesion and dryness characteristics by performing bond and moisture tests recommended by carpet tile manufacturer.
   2. Subfloor finishes comply with requirements specified in Division 3 Section "Cast-in-Place Concrete" for slabs receiving carpet tile.
   3. Subfloors are free of cracks, ridges, depressions, scale, and foreign deposits.

C. Proceed with installation only after unsatisfactory conditions have been corrected.

3.2 PREPARATION

A. General: Comply with CRI 104, Section 6.2, "Site Conditions; Floor Preparation," and carpet tile manufacturer's written installation instructions for preparing substrates indicated to receive carpet tile installation.

B. Use trowelable leveling and patching compounds, according to manufacturer's written instructions, to fill cracks, holes, and depressions in substrates.

C. Remove coatings, including curing compounds, and other substances that are incompatible with adhesives and that contain soap, wax, oil, or silicone, without using solvents. Use mechanical methods recommended in writing by carpet tile manufacturer.

D. Broom and vacuum clean substrates to be covered immediately before installing carpet tile. After cleaning, examine substrates for moisture, alkaline salts, carbonation, or dust. Proceed with installation only after unsatisfactory conditions have been corrected.

3.3 INSTALLATION

A. General: Comply with CRI 104, Section 13, "Carpet Modules (Tiles)."

B. Installation Method: As recommended in writing by carpet tile manufacturer.

C. Cut and fit carpet tile to butt tightly to vertical surfaces, permanent fixtures, and built-in furniture including cabinets, pipes, outlets, edgings, thresholds, and nosings. Bind or seal cut edges as recommended by carpet tile manufacturer.

D. Extend carpet tile into toe spaces, door reveals, closets, open-bottomed obstructions, removable flanges, alcoves, and similar openings.

E. Maintain reference markers, holes, and openings that are in place or marked for future cutting by repeating on finish flooring as marked on subfloor. Use nonpermanent, nonstaining marking device.

F. Install pattern parallel to walls and borders.

G. Roll with appropriate roller for complete contact of carpet with mill-applied adhesive to sub-floor. Carpet to be securely adhered in accordance with ADA requirements (Section 4.5.3).

3.4 CLEANING AND PROTECTION

A. Perform the following operations immediately after installing carpet tile:
   1. Remove excess adhesive, seam sealer, and other surface blemishes using cleaner recommended by carpet tile manufacturer.
   2. Remove yarns that protrude from carpet tile surface.
   3. Vacuum carpet tile using commercial machine with face-beater element.

B. Protect installed carpet tile to comply with CRI 104, Section 15, "Protection of Indoor Installations."

C. Protect carpet tile against damage from construction operations and placement of equipment and fixtures during the remainder of construction period. Use protection methods indicated or recommended in writing by carpet tile manufacturer.

END OF SECTION 09681

SECTION 09912 - PAINTING (PROFESSIONAL LINE PRODUCTS) July 16, 2007

PART 1 - GENERAL

1.1 RELATED DOCUMENTS

A. Drawings and general provisions of the Contract, including General and Supplementary Conditions and Division 1 Specification Sections, apply to this Section.

1.2 SUMMARY

A. This Section includes surface preparation and field painting of exposed exterior and interior items and surfaces.
   1. Surface preparation, priming, and finish coats specified in this Section are in addition to shop priming and surface treatment specified in other Sections.

B. Paint exposed surfaces, except where these Specifications indicate that the surface or material is not to be painted or is to remain natural. If an item or a surface is not specifically mentioned, paint the item or surface the same as similar adjacent materials or surfaces. If a color of finish is not indicated, Architect will select from standard colors and finishes available.
   1. Painting includes field painting of exposed bare and covered pipes and ducts (including color coding), hangers, exposed steel and iron supports, and surfaces of mechanical and electrical equipment that do not have a factory-applied final finish.
   2. Walls behind scheduled coverings shall receive prime coat.
   3. If it can be seen, paint it.

C. Do not paint prefinished items, concealed surfaces, finished metal surfaces, operating parts, and labels.
   1. Prefinished items include the following factory-finished components:
      a. Architectural woodwork.
      b. Acoustical wall panels.
      c. Metal toilet enclosures.
      d. Metal lockers.
      e. Elevator entrance doors and frames.
      f. Elevator equipment.
      g. Finished mechanical and electrical equipment.
      h. Light fixtures.
   2. Concealed surfaces include walls or ceilings in the following generally inaccessible spaces:
      a. Foundation spaces.
      b. Furred areas.
      c. Ceiling plenums.
      d. Utility tunnels.
      e. Pipe spaces.
      f. Duct shafts.
      g. Elevator shafts.
   3. Finished metal surfaces include the following:
      a. Anodized aluminum.
      b. Stainless steel.
      c. Chromium plate.
      d. Copper and copper alloys.
      e. Bronze and brass.

4. Operating parts include moving parts of operating equipment and the following:
   a. Valve and damper operators.
   b. Linkages.
   c. Sensing devices.
   d. Motor and fan shafts.
5. Labels: Do not paint over UL, FMG, or other code-required labels or equipment name, identification, performance rating, or nomenclature plates.

D. Related Sections include the following:
1. Division 2 Section "Hot-Mix Asphalt Paving" for traffic-marking paint.
2. Division 2 Section "Cement Concrete Pavement" for traffic-marking paint.
3. Division 5 Section "Structural Steel" for shop priming structural steel.
4. Division 5 Section "Metal Fabrications" for shop priming ferrous metal.
5. Division 6 Section "Interior Architectural Woodwork" for shop priming interior architectural woodwork.
6. Division 8 Section "Steel Doors and Frames" for factory priming steel doors and frames.
7. Division 9 Section "Gypsum Board" for surface preparation of gypsum board.

1.3 DEFINITIONS

A. General: Standard coating terms defined in ASTM D 16 apply to this Section.
1. Flat refers to a lusterless or matte finish with a gloss range below 15 when measured at an 85-degree meter.
2. Eggshell refers to low-sheen finish with a gloss range between 20 and 35 when measured at a 60-degree meter.
3. Semigloss refers to medium-sheen finish with a gloss range between 35 and 70 when measured at a 60-degree meter.
4. Full gloss refers to high-sheen finish with a gloss range more than 70 when measured at a 60-degree meter.

1.4 SUBMITTALS

A. Product Data: For each paint system indicated. Include block fillers and primers.
1. Material List: An inclusive list of required coating materials. Indicate each material and cross-reference specific coating, finish system, and application. Identify each material by manufacturer's catalog number and general classification.
2. Manufacturer's Information: Manufacturer's technical information, including label analysis and instructions for handling, storing, and applying each coating material.

B. Samples for Initial Selection: For each type of finish-coat material indicated.
1. After color selection, Architect will furnish color chips for surfaces to be coated.

C. Samples for Verification: For each color and material to be applied, with texture to simulate actual conditions, on representative Samples of the actual substrate.
1. Provide stepped Samples, defining each separate coat, including block fillers and primers. Use representative colors when preparing Samples for review. Resubmit until required sheen, color, and texture are achieved.
2. Provide a list of materials and applications for each coat of each Sample. Label each Sample for location and application.
3. Submit Samples on the following substrates for Architect's review of color and texture only:
   a. Concrete and Concrete Unit Masonry: 4-by-8-inch (100-by-200-mm)

Samples of concrete and masonry, with mortar joint in the center of masonry, for each finish and color.

b. Painted Wood: 8-inch- (200-mm-) square Samples for each color and material on hardboard.

c. Stained or Natural Wood: 4-by-8-inch (100-by-200-mm) Samples of natural- or stained-wood finish on representative surfaces.

d. Ferrous Metal: 4-inch- (100-mm-) square Samples of flat metal and 6-inch- (150-mm-) long Samples of solid metal for each color and finish.

D. Qualification Data: For Applicator.

1.5 QUALITY ASSURANCE

A. Applicator Qualifications: A firm or individual experienced in applying paints and coatings similar in material, design, and extent to those indicated for this Project, whose work has resulted in applications with a record of successful in-service performance.

B. Source Limitations: Obtain block fillers and primers for each coating system from the same manufacturer as the finish coats.

1.6 DELIVERY, STORAGE, AND HANDLING

A. Deliver materials to Project site in manufacturer's original, unopened packages and containers bearing manufacturer's name and label and the following information:

1. Product name or title of material.
2. Product description (generic classification or binder type).
3. Manufacturer's stock number and date of manufacture.
4. Contents by volume, for pigment and vehicle constituents.
5. Thinning instructions.
6. Application instructions.
7. Color name and number.
8. VOC content.

B. Store materials not in use in tightly covered containers in a well-ventilated area at a minimum ambient temperature of 45 deg F (7 deg C). Maintain storage containers in a clean condition, free of foreign materials and residue.

1. Protect from freezing. Keep storage area neat and orderly. Remove oily rags and waste daily.

1.7 PROJECT CONDITIONS

A. Apply waterborne paints only when temperatures of surfaces to be painted and surrounding air are between 50 and 90 deg F (10 and 32 deg C).

B. Apply solvent-thinned paints only when temperatures of surfaces to be painted and surrounding air are between 45 and 95 deg F (7 and 35 deg C).

C. Do not apply paint in snow, rain, fog, or mist; or when relative humidity exceeds 85 percent; or at temperatures less than 5 deg F (3 deg C) above the dew point; or to damp or wet surfaces.

1. Painting may continue during inclement weather if surfaces and areas to be painted are enclosed and heated within temperature limits specified by manufacturer during application and drying periods.

1.8 EXTRA MATERIALS

A. Furnish extra paint materials from the same production run as the materials applied and in the quantities described below. Package with protective covering for storage and identify with labels describing contents. Deliver extra materials to Owner.
   1. Quantity: Furnish Owner with an additional 3 percent, but not less than 1 gal. (3.8 L) or 1 case, as appropriate, of each material and color applied.

PART 2 - PRODUCTS

2.1 MANUFACTURERS

A. Available Products: Subject to compliance with requirements, products that may be incorporated into the Work include, but are not limited to, products listed in other Part 2 articles.

B. Manufacturers' Names: Shortened versions (shown in parentheses) of the following manufacturers' names are used in other Part 2 articles:
   1. Benjamin Moore & Co. (Benjamin Moore).
   2. ICI Dulux Paint Centers (ICI Dulux Paints).
   3. Kwal-Howells Paint Co. (K-H).
   4. PPG Industries, Inc. (Pittsburgh Paints).
   5. Sherwin-Williams Co. (Sherwin-Williams).

2.2 PAINT MATERIALS, GENERAL

A. Material Compatibility: Provide block fillers, primers, and finish-coat materials that are compatible with one another and with the substrates indicated under conditions of service and application, as demonstrated by manufacturer based on testing and field experience.

B. Material Quality: Provide manufacturer's best-quality paint material of the various coating types specified that are factory formulated and recommended by manufacturer for application indicated. Paint-material containers not displaying manufacturer's product identification will not be acceptable.
   1. Proprietary Names: Use of manufacturer's proprietary product names to designate colors or materials is not intended to imply that products named are required to be used to the exclusion of equivalent products of other manufacturers. Furnish manufacturer's material data and certificates of performance for proposed substitutions.

C. Chemical Components of Interior Paints and Coatings: Provide products that comply with the following limits for VOC content when calculated according to 40 CFR 59, Subpart D (EPA Method 24) and the following chemical restrictions:
   1. Flat Paints and Coatings: VOC content of not more than 50 g/L.
   2. Non-Flat Paints and Coatings: VOC content of not more than 150 g/L.
   3. Anticorrosive Coatings: VOC content of not more than 250 g/L.
   4. Varnishes and Sanding Sealers: VOC content of not more than 350 g/L.
   5. Stains: VOC content of not more than 250 g/L.
   6. Aromatic Compounds: Paints and coatings shall not contain more than 1.0 percent by weight of total aromatic compounds (hydrocarbon compounds containing one or more benzene rings).

7. Restricted Components: Paints and coatings shall not contain any of the following:
   a. Acrolein.
   b. Acrylonitrile.
   c. Antimony.
   d. Benzene.
   e. Butyl benzyl phthalate.
   f. Cadmium.
   g. Di (2-ethylhexyl) phthalate.
   h. Di-n-butyl phthalate.
   i. Di-n-octyl phthalate.
   j. 1,2-dichlorobenzene.
   k. Diethyl phthalate.
   l. Dimethyl phthalate.
   m. Ethylbenzene.
   n. Formaldehyde.
   o. Hexavalent chromium.
   p. Isophorone.
   q. Lead.
   r. Mercury.
   s. Methyl ethyl ketone.
   t. Methyl isobutyl ketone.
   u. Methylene chloride.
   v. Naphthalene.
   w. Toluene (methylbenzene).
   x. 1,1,1-trichloroethane.
   y. Vinyl chloride.

D. Colors: Match Architect's samples and as selected by Architect from manufacturer's full range.

2.3 CONCRETE UNIT MASONRY BLOCK FILLERS

A. Concrete Unit Masonry Block Filler: Factory-formulated high-performance latex block fillers.
   1. Sherwin-Williams; Heavy Duty Block Filler B42W46: Applied at a dry film thickness of not less than 10.0 mils (0.254 mm).

2.4 EXTERIOR PRIMERS

A. Exterior Concrete and Masonry Primer: Factory-formulated alkali-resistant acrylic-latex primer for exterior application.
   1. Sherwin-Williams; Loxon Block Surfacer A24W200: Applied at a rate of 50-100 sq.ft./gal.

B. Exterior Ferrous-Metal Primer: Factory-formulated rust-inhibitive metal primer for exterior application.
   1. Sherwin-Williams; ProCryl Universal Primer B66-310 Series (110 g/L): Applied at a dry film thickness of not less than 3.0 mils (0.076 mm).

C. Exterior Galvanized Metal Primer: Factory-formulated galvanized metal primer for exterior application.
   1. Sherwin-Williams; Duration Exterior Latex Acrylic Gloss Coating, K34 Series: Applied at a dry film thickness of not less than 2.8 mils (0.071 mm) (7.0 mils wet).

D. Exterior Aluminum Primer under Acrylic Finishes: Factory-formulated acrylic-based metal primer for exterior application.
   1. Sherwin-Williams; DTM Acrylic Primer/Finish B66W1: Applied at a dry film thickness of not less than 2.5 mils (0.064 mm).

2.5 INTERIOR PRIMERS

A. Interior Concrete and Masonry Primer for Walls: Factory-formulated alkali-resistant acrylic-latex interior primer for interior application.
   1. Sherwin-Williams; Heavy Duty Block filler B42W46: Applied at a dry film thickness of not less than 10.0 mils (0.254 mm).

B. Interior Gypsum Board Primer: Factory-formulated latex-based primer for interior application.
   1. All areas except as scheduled for Wet Areas: Sherwin-Williams; Harmony Low Odor Interior Latex Primer B11W900 Series (0 VOC): Applied at a dry film thickness of not less than 1.3 mils (0.033 mm).
   2. Wet Areas (Scheduled for Epoxy Finish Coat): Sherwin-Williams; S-W PrepRite7 200 Latex Primer, B28W200. Applied at a dry film thickness of not less than 1.2 mils (0.030 mm) (4 mils wet).

C. Interior Ferrous-Metal Primer: Factory-formulated quick-drying rust-inhibitive alkyd-based metal primer.
   1. Sherwin-Williams; ProCryl Universal Primer B66-310 Series (110g/L): Applied at a dry film thickness of not less than 3.0 mils (0.076 mm).

D. Interior Zinc-Coated Metal Primer: Factory-formulated galvanized metal primer.
   1. Sherwin-Williams; ProCryl Universal Primer B66-310 Series (110g/L): Applied at a dry film thickness of not less than 3.0 mils (0.076 mm).

2.6 EXTERIOR FINISH COATS

A. Exterior Flat Elastomeric Paint for Masonry: Factory-formulated flat elastomeric paint for exterior application.
   1. Sherwin-Williams; Sherwin-Williams; ConFlex XL Elastomeric High Build Coating, A5-400 Series. Applied at a dry film thickness of not less than 7.5 mils (0.190 mm) (16 mils wet).

B. Exterior Full-Gloss Acrylic Enamel for Ferrous and Other Metals: Factory-formulated full-gloss waterborne acrylic-latex enamel for exterior application.
   1. Sherwin-Williams; Sher-Cryl High Performance Acrylic, B66-300 Series (192 g/L): Applied at a dry film thickness of not less than 4.0 mils (0.101 mm).

C. Exterior Full-Gloss Alkyd Enamel: Factory-formulated full-gloss alkyd enamel for exterior application.
   1. Sherwin-Williams; Waterbased Industrial Enamel, B53-300 Series (140 g/L): Applied at a dry film thickness of not less than 3.0 mils (0.076 mm).

D. Exterior Full-Gloss Urethane: Factory-formulated full-gloss urethane for exterior application.
   1. Sherwin-Williams; Centurion Water Based Urethane, B65-700 Series (66 g/L): Applied at a dry film thickness of not less than 3.0 mils (0.076 mm).

2.7 INTERIOR FINISH COATS

A. Interior Flat Acrylic Paint: Factory-formulated flat acrylic-emulsion latex paint for interior application.
   1. Sherwin-Williams; Harmony Low Odor Interior Latex Flat B5 Series (0 VOC): Applied at a dry film thickness of not less than 1.6 mils (0.041 mm).

B. Interior Low-Luster Acrylic Enamel: Factory-formulated eggshell acrylic-latex interior enamel.
   1. Sherwin-Williams; Harmony Low Odor Interior Latex Eg-Shel B9 Series (0 VOC): Applied at a dry film thickness of not less than 1.6 mils (0.041 mm).

C. Interior Semigloss Acrylic Enamel: Factory-formulated semigloss acrylic-latex enamel for interior application.
   1. Sherwin-Williams; Harmony Low Odor Interior Latex Semi-Gloss B10 Series (0 VOC): Applied at a dry film thickness of not less than 1.6 mils (0.041 mm).

D. Interior Gloss Epoxy for Masonry and Gypsum Board: Factory-formulated gloss water based polyamine epoxy.
   1. Sherwin-Williams; Fast Clad DTM WB Epoxy B70-800 Series. Applied at a dry film thickness of not less than 7.0 mils (0.180 mm) (18.0 mils wet).

PART 3 - EXECUTION

3.1 EXAMINATION

A. Examine substrates, areas, and conditions, with Applicator present, for compliance with requirements for paint application.
   1. Proceed with paint application only after unsatisfactory conditions have been corrected and surfaces receiving paint are thoroughly dry.
   2. Start of painting will be construed as Applicator's acceptance of surfaces and conditions within a particular area.

B. Coordination of Work: Review other Sections in which primers are provided to ensure compatibility of the total system for various substrates. On request, furnish information on characteristics of finish materials to ensure use of compatible primers.
   1. Notify Architect about anticipated problems when using the materials specified over substrates primed by others.

3.2 PREPARATION

A. General: Remove hardware and hardware accessories, plates, machined surfaces, lighting fixtures, and similar items already installed that are not to be painted. If removal is impractical or impossible because of size or weight of the item, provide surface-applied protection before surface preparation and painting.
   1. After completing painting operations in each space or area, reinstall items removed using workers skilled in the trades involved.

B. Cleaning: Before applying paint or other surface treatments, clean substrates of substances that could impair bond of the various coatings. Remove oil and grease before cleaning.
   1. Schedule cleaning and painting so dust and other contaminants from the cleaning process will not fall on wet, newly painted surfaces.

C. Surface Preparation: Clean and prepare surfaces to be painted according to manufacturer's

written instructions for each particular substrate condition and as specified.

1. Provide barrier coats over incompatible primers or remove and reprime.
2. Cementitious Materials: Prepare concrete, concrete unit masonry, cement plaster, and mineral-fiber-reinforced cement panel surfaces to be painted. Remove efflorescence, chalk, dust, dirt, grease, oils, and release agents. Roughen as required to remove glaze. If hardeners or sealers have been used to improve curing, use mechanical methods of surface preparation.
    a. Use abrasive blast-cleaning methods if recommended by paint manufacturer.
    b. Determine alkalinity and moisture content of surfaces by performing appropriate tests. If surfaces are sufficiently alkaline to cause the finish paint to blister and burn, correct this condition before application. Do not paint surfaces if moisture content exceeds that permitted in manufacturer's written instructions.
    c. Clean concrete floors to be painted with a 5 percent solution of muriatic acid or other etching cleaner. Flush the floor with clean water to remove acid, neutralize with ammonia, rinse, allow to dry, and vacuum before painting.
3. Wood: Clean surfaces of dirt, oil, and other foreign substances with scrapers, mineral spirits, and sandpaper, as required. Sand surfaces exposed to view smooth and dust off.
    a. Scrape and clean small, dry, seasoned knots, and apply a thin coat of white shellac or other recommended knot sealer before applying primer. After priming, fill holes and imperfections in finish surfaces with putty or plastic wood filler. Sand smooth when dried.
    b. Prime, stain, or seal wood to be painted immediately on delivery. Prime edges, ends, faces, undersides, and back sides of wood, including cabinets, counters, cases, and paneling.
    c. If transparent finish is required, backprime with spar varnish.
    d. Backprime paneling on interior partitions where masonry, plaster, or other wet wall construction occurs on back side.
    e. Seal tops, bottoms, and cutouts of unprimed wood doors with a heavy coat of varnish or sealer immediately on delivery.
4. Ferrous Metals: Clean ungalvanized ferrous-metal surfaces that have not been shop coated; remove oil, grease, dirt, loose mill scale, and other foreign substances. Use solvent or mechanical cleaning methods that comply with SSPC's recommendations.
    a. Blast steel surfaces clean as recommended by paint system manufacturer and according to SSPC-SP 6/NACE No. 3.
    b. Treat bare and sandblasted or pickled clean metal with a metal treatment wash coat before priming.
    c. Touch up bare areas and shop-applied prime coats that have been damaged. Wire-brush, clean with solvents recommended by paint manufacturer, and touch up with same primer as the shop coat.
5. Galvanized Surfaces: Clean galvanized surfaces with nonpetroleum-based solvents so surface is free of oil and surface contaminants. Remove pretreatment from galvanized sheet metal fabricated from coil stock by mechanical methods.

D. Material Preparation: Mix and prepare paint materials according to manufacturer's written instructions.

1. Maintain containers used in mixing and applying paint in a clean condition, free of foreign materials and residue.
2. Stir material before application to produce a mixture of uniform density. Stir as required during application. Do not stir surface film into material. If necessary, remove surface film and strain material before using.

3. Use only thinners approved by paint manufacturer and only within recommended limits.

E. Tinting: Tint each undercoat a lighter shade to simplify identification of each coat when multiple coats of same material are applied. Tint undercoats to match the color of the finish coat, but provide sufficient differences in shade of undercoats to distinguish each separate coat.

3.3 APPLICATION

A. General: Apply paint according to manufacturer's written instructions. Use applicators and techniques best suited for substrate and type of material being applied.
1. Paint colors, surface treatments, and finishes are indicated in the paint schedules.
2. Do not paint over dirt, rust, scale, grease, moisture, scuffed surfaces, or conditions detrimental to formation of a durable paint film.
3. Provide finish coats that are compatible with primers used.
4. The term "exposed surfaces" includes areas visible when permanent or built-in fixtures, grilles, convector covers, covers for finned-tube radiation, and similar components are in place. Extend coatings in these areas, as required, to maintain system integrity and provide desired protection.
5. Paint surfaces behind movable equipment and furniture the same as similar exposed surfaces. Before final installation of equipment, paint surfaces behind permanently fixed equipment or furniture with prime coat only.
6. Paint interior surfaces of ducts with a flat, nonspecular black paint where visible through registers or grilles.
7. Paint back sides of access panels and removable or hinged covers to match exposed surfaces.
8. Finish exterior doors on tops, bottoms, and side edges the same as exterior faces.
9. Sand lightly between each succeeding enamel or varnish coat.

B. Scheduling Painting: Apply first coat to surfaces that have been cleaned, pretreated, or otherwise prepared for painting as soon as practicable after preparation and before subsequent surface deterioration.
1. The number of coats and film thickness required are the same regardless of application method. Do not apply succeeding coats until previous coat has cured as recommended by manufacturer. If sanding is required to produce a smooth, even surface according to manufacturer's written instructions, sand between applications.
2. Omit primer over metal surfaces that have been shop primed and touchup painted.
3. If undercoats, stains, or other conditions show through final coat of paint, apply additional coats until paint film is of uniform finish, color, and appearance. Give special attention to ensure that edges, corners, crevices, welds, and exposed fasteners receive a dry film thickness equivalent to that of flat surfaces.
4. Allow sufficient time between successive coats to permit proper drying. Do not recoat surfaces until paint has dried to where it feels firm, and does not deform or feel sticky under moderate thumb pressure, and until application of another coat of paint does not cause undercoat to lift or lose adhesion.

C. Application Procedures: Apply paints and coatings by brush, roller, spray, or other applicators according to manufacturer's written instructions.
1. Brushes: Use brushes best suited for type of material applied. Use brush of appropriate size for surface or item being painted.
2. Rollers: Use rollers of carpet, velvet-back, or high-pile sheep's wool as recommended by manufacturer for material and texture required.

3. Spray Equipment: Use airless spray equipment with orifice size as recommended by manufacturer for material and texture required.

D. Minimum Coating Thickness: Apply paint materials no thinner than manufacturer's recommended spreading rate to achieve dry film thickness indicated. Provide total dry film thickness of the entire system as recommended by manufacturer.

E. Mechanical items to be painted include, but are not limited to, the following:
1. Uninsulated metal piping.
2. Uninsulated plastic piping.
3. Pipe hangers and supports.
4. Tanks that do not have factory-applied final finishes.
5. Visible portions of internal surfaces of metal ducts, without liner, behind air inlets and outlets.
6. Duct, equipment, and pipe insulation having "all-service jacket" or other paintable jacket material.
7. Mechanical equipment that is indicated to have a factory-primed finish for field painting.

F. Electrical items to be painted include, but are not limited to, the following:
1. Switchgear.
2. Panelboards.
3. Electrical equipment that is indicated to have a factory-primed finish for field painting.

G. Block Fillers: Apply block fillers to concrete masonry block at a rate to ensure complete coverage with pores filled.

H. Prime Coats: Before applying finish coats, apply a prime coat, as recommended by manufacturer, to material that is required to be painted or finished and that has not been prime coated by others. Recoat primed and sealed surfaces where evidence of suction spots or unsealed areas in first coat appears, to ensure a finish coat with no burn-through or other defects due to insufficient sealing.

I. Pigmented (Opaque) Finishes: Completely cover surfaces as necessary to provide a smooth, opaque surface of uniform finish, color, appearance, and coverage. Cloudiness, spotting, holidays, laps, brush marks, runs, sags, ropiness, or other surface imperfections will not be acceptable.

J. Transparent (Clear) Finishes: Use multiple coats to produce a glass-smooth surface film of even luster. Provide a finish free of laps, runs, cloudiness, color irregularity, brush marks, orange peel, nail holes, or other surface imperfections.
1. Provide satin finish for final coats.

K. Stipple Enamel Finish: Roll and redistribute paint to an even and fine texture. Leave no evidence of rolling, such as laps, irregularity in texture, skid marks, or other surface imperfections.

L. Completed Work: Match approved samples for color, texture, and coverage. Remove, refinish, or repaint work not complying with requirements.

3.4 FIELD QUALITY CONTROL

A. Owner reserves the right to invoke the following test procedure at any time and as often as

Owner deems necessary during the period when paint is being applied:

1. Owner may engage a qualified independent testing agency to sample paint material being used. Samples of material delivered to Project will be taken, identified, sealed, and certified in the presence of Contractor.
2. Owner may direct Contractor to stop painting if test results show material being used does not comply with specified requirements. Contractor shall remove noncomplying paint from Project site, pay for testing, and repaint surfaces previously coated with the noncomplying paint. If necessary, Contractor may be required to remove noncomplying paint from previously painted surfaces if, on repainting with specified paint, the two coatings are incompatible.

3.5 CLEANING

A. Cleanup: At the end of each workday, remove empty cans, rags, rubbish, and other discarded paint materials from Project site.

1. After completing painting, clean glass and paint-spattered surfaces. Remove spattered paint by washing and scraping without scratching or damaging adjacent finished surfaces.

3.6 PROTECTION

A. Protect work of other trades, whether being painted or not, against damage from painting. Correct damage by cleaning, repairing or replacing, and repainting, as approved by Architect.

B. Provide "Wet Paint" signs to protect newly painted finishes. After completing painting operations, remove temporary protective wrappings provided by others to protect their work.

1. After work of other trades is complete, touch up and restore damaged or defaced painted surfaces.

3.7 EXTERIOR PAINT SCHEDULE

A. Concrete, Stucco, and Masonry for Painted Finish (Other Than Concrete Unit Masonry): Provide the following finish systems over exterior concrete, stucco, and brick masonry substrates:

1. Flat Acrylic Finish: Two finish coats over a primer.
   a. Primer: Exterior concrete and masonry primer.
   b. Finish Coats: Exterior flat elastomeric paint.

B. Concrete Unit Masonry for Painted Finish: Provide the following finish systems over exterior concrete unit masonry:

1. Flat Acrylic Finish: Two finish coats over a block filler.
   a. Block Filler: Concrete unit masonry block filler.
   b. Finish Coats: Exterior flat elastomeric paint.

C. Ferrous Metal: Provide the following finish systems over exterior ferrous metal. Primer is not required on shop-primed items.

1. Full-Gloss Acrylic-Enamel Finish: Two finish coats over a rust-inhibitive primer.
   a. Primer: Exterior ferrous-metal primer.
   b. Finish Coats: Exterior full-gloss acrylic enamel for ferrous and other metals.
2. Full-Gloss Alkyd-Enamel Finish: Two finish coats over a rust-inhibitive primer.
   a. Primer: Exterior ferrous-metal primer.
   b. Finish Coats: Exterior full-gloss alkyd enamel.
3. Full-Gloss Urethane Finish: Two finish coats over a rust-inhibitive primer.

a. Primer: Exterior ferrous-metal primer.
b. Finish Coats: Exterior full-gloss urethane.

D. Zinc-Coated Metal: Provide the following finish systems over exterior zinc-coated metal surfaces:
1. Full-Gloss Acrylic-Enamel Finish: Two finish coats over a galvanized metal primer.
a. Primer: Exterior galvanized metal primer.
b. Finish Coats: Exterior full-gloss acrylic enamel for ferrous and other metals.

E. Aluminum: Provide the following finish systems over exterior aluminum surfaces:
1. Full-Gloss Acrylic-Enamel Finish: Two finish coats over a primer.
a. Primer: Exterior aluminum primer under acrylic finishes.
b. Finish Coats: Exterior full-gloss acrylic enamel for ferrous and other metals.

3.8 INTERIOR PAINT SCHEDULE

A. Concrete and Masonry (Other Than Concrete Unit Masonry): Provide the following paint systems over interior concrete and brick masonry substrates:
1. Semigloss Acrylic-Enamel Finish: Two finish coats over a primer.
a. Primer: Interior concrete and masonry primer.
b. Finish Coats: Interior semigloss acrylic enamel.

B. Concrete Unit Masonry: Provide the following finish systems over interior concrete masonry:
1. Semigloss Acrylic-Enamel Finish: Two finish coats over a block filler.
a. Block Filler: Concrete unit masonry block filler.
b. Finish Coats: Interior semigloss acrylic enamel.

C. Concrete Unit Masonry for Epoxy Finish: Provide the following finish systems over interior concrete masonry:
1. Gloss Epoxy Finish: Two finish coats over a block filler.
a. Block Filler: Concrete unit masonry block filler.
b. Finish Coats: Interior gloss epoxy.

D. Gypsum Board: Provide the following finish systems over interior gypsum board surfaces:
1. Flat Acrylic Finish: Two finish coats over a primer.
a. Primer: Interior gypsum board primer.
b. Finish Coats: Interior flat acrylic paint.
2. Low-Luster Acrylic-Enamel Finish: Two finish coats over a primer.
a. Primer: Interior gypsum board primer.
b. Finish Coats: Interior low-luster acrylic enamel.
3. Semigloss Acrylic-Enamel Finish: Two finish coats over a primer.
a. Primer: Interior gypsum board primer.
b. Finish Coats: Interior semigloss acrylic enamel.
4. Gloss Epoxy Finish: Two finish coats over a primer.
a. Primer: Interior gypsum board primer (wet areas).
b. Finish Coats: Interior gloss epoxy.

E. Wood and Hardboard: Provide the following paint finish systems over new interior wood surfaces:
1. Semigloss Acrylic-Enamel Finish: Two finish coats over a wood undercoater.
a. Primer: Interior wood primer for acrylic-enamel and semigloss alkyd-enamel finishes.
b. Finish Coats: Interior semigloss acrylic enamel.

F. Ferrous Metal: Provide the following finish systems over ferrous metal:
   1. Semigloss Acrylic-Enamel Finish: Two finish coats over a primer.
      a. Primer: Interior ferrous-metal primer.
      b. Finish Coats: Interior semigloss acrylic enamel.

G. Zinc-Coated Metal: Provide the following finish systems over interior zinc-coated metal surfaces:
   1. Semigloss Acrylic-Enamel Finish: Two finish coats over a primer.
      a. Primer: Interior zinc-coated metal primer.
      b. Finish Coats: Interior semigloss acrylic enamel.

H. All-Service Jacket over Insulation: Provide the following finish system on cotton or canvas insulation covering:
   1. Flat Acrylic Finish: Two finish coats. Add fungicidal agent to render fabric mildew proof.
      a. Finish Coats: Interior flat latex-emulsion size.

END OF SECTION 09912

SECTION 09981 - CEMENTITIOUS COATINGS July 16, 2007

PART 1 - GENERAL

1.1 RELATED DOCUMENTS

A. Drawings and general provisions of the Contract, including General and Supplementary Conditions and Division 1 Specification Sections, apply to this Section.

1.2 SUMMARY

A. This Section includes surface preparation, including crack repair, and application of cementitious coating systems to scheduled surfaces.

1.3 PERFORMANCE REQUIREMENTS

A. Provide cementitious coating systems with the following properties as determined by test methods indicated:
   1. Compressive Strength: Not less than 400 psi (2.76 MPa) at 28 days according to ASTM C 496.
   2. Flexural Strength: Not less than 700 psi (4.8 MPa) at 28 days according to ASTM C 348.
   3. Permeance: Not less than 9.50 perms (543 ng/Pa x s x sq. m) according to ASTM E 96.
   4. Accelerated Weathering: No failure after 5000 hours according to ASTM G 155.

1.4 SUBMITTALS

A. Product Data: For each cementitious coating system indicated.
   1. Material List: An inclusive list of each required coating material. Indicate each material and cross-reference the specific coating, finish system, and application. Identify each material by manufacturer's catalog number and general classification.
   2. Manufacturer's Information: Manufacturer's technical information including basic material analysis and instructions for handling, storing, and applying each coating material.

B. Samples for Selection: For each type of finish-coat material indicated.
   1. After color selection, Architect will return color chips indicating colors selected for surfaces to be coated.

C. Qualification Data: For Applicator.

D. Material Certificates: For each cementitious coating, signed by manufacturers.

E. Product Test Reports: From a qualified independent testing agency indicating compliance of cementitious coatings with requirements indicated based on comprehensive testing within last two years of current product formulations.

1.5 QUALITY ASSURANCE

A. Applicator Qualifications: A firm or individual experienced in applying cementitious coating systems similar in material and extent to those indicated for this Project, whose work has

resulted in applications and with a record of successful in-service performance.

B. Source Limitations: Obtain cementitious coating materials through one source from a single manufacturer.

1.6 DELIVERY, STORAGE, AND HANDLING

A. Deliver materials to Project site in manufacturer's original, new, unopened packages and containers bearing manufacturer's name and label, and the following information:
   1. Product name or title of material.
   2. Manufacturer's stock number and date of manufacture.
   3. Contents by volume, for pigment and vehicle constituents.
   4. Application instructions.
   5. Color name and number.
   6. Handling instructions and precautions.

B. Store materials not in use in tightly covered containers in a well-ventilated area at a minimum ambient temperature of 45 deg F (7 deg C). Maintain containers used in storage of coatings in a clean condition, free of foreign materials and residue.
   1. Protect cementitious coating materials from freezing. Keep materials dry and storage area neat and orderly. Remove waste daily. Take necessary measures to ensure that workers and work areas are protected from health hazards resulting from handling, mixing, and applying the coating.

1.7 PROJECT CONDITIONS

A. Temperature Conditions: Apply coatings only when temperature of surfaces to be coated and surrounding air temperatures are between 50 and 90 deg F (10 and 32 deg C), unless otherwise permitted by manufacturer's written instructions. Do not apply coatings if ambient or surface temperatures are expected to fall below 45 deg F (7 deg C) within 12 hours.

B. Weather Conditions: Do not apply cementitious coatings in snow, rain, fog, or mist; when relative humidity exceeds 85 percent; or at temperatures less than 5 deg F (3 deg C) above dew point. Allow surfaces to attain temperature and conditions specified before proceeding with or continuing coating operation.

1.8 EXTRA MATERIALS

A. Furnish extra cementitious coating materials from same production run as materials applied and in quantities described below. Package materials in unopened, factory-sealed containers for storage and identify with labels describing contents.
   1. Quantity: 1 gal. (3.8 L) of each color of cementitious coating material applied.

PART 2 - PRODUCTS

2.1 CEMENTITIOUS COATING MATERIALS, GENERAL

A. Material Compatibility: Provide crack fillers, block fillers, cementitious finish-coat materials, and related materials that are compatible with one another and the substrates indicated under conditions of service and application, as demonstrated by manufacturer based on testing and field experience.

B. Material Quality: Provide manufacturer's best-quality, polymer-modified cementitious coating material. Material containers not displaying manufacturer's product identification will not be acceptable.
   1. Proprietary Names: Use of manufacturers' proprietary product names to designate colors or materials is not intended to imply that products named are required to be used to the exclusion of equivalent products of other manufacturers. Furnish manufacturers' material data and certificates of performance of proposed substitutions.

C. Colors and Textures: As selected by Architect from manufacturer's full range.

2.2 POLYMER-MODIFIED CEMENTITIOUS COATING MATERIALS

A. Available Products: Subject to compliance with requirements, products that may be incorporated into the Work include, but are not limited to, one of the following:
   1. Excellent Coatings, Inc.; Excel-Coat K/D.

PART 3 - EXECUTION

3.1 EXAMINATION

A. Examine substrates and conditions, with Applicator present, for compliance with requirements for coating application.
   1. Proceed with coating application only after unsatisfactory conditions have been corrected and surfaces are thoroughly dry.
   2. Start of coating application will be construed as Applicator's acceptance of surface conditions.

3.2 PREPARATION

A. General: Remove hardware and hardware accessories, plates, machined surfaces, and similar items already installed that are not to be coated. If removal is impractical or impossible because of size or weight of item, provide surface-applied protection before surface preparation and coating.
   1. After completing coating operations in each area, reinstall removed items using workers skilled in trades involved.

B. Cleaning: Before applying coatings or other surface treatments, clean substrates of substances that could impair bond of coating systems. Remove oil and grease before cleaning.
   1. Schedule cleaning and coating application so dust and other contaminants from cleaning operations will not fall on wet, newly coated surfaces.

C. Surface Preparation: Clean and prepare surfaces to be coated according to manufacturer's written instructions for the particular substrate conditions and as specified.
   1. Cementitious Surfaces: Prepare concrete, concrete masonry units, and similar surfaces to be coated. Remove efflorescence, chalk, dust, dirt, release agents, grease, oil, and similar substances by abrasive or water blasting, followed by a clear-water rinse.
      a. Remove mildew and neutralize surfaces according to manufacturer's written instructions before patching materials are applied.
      b. Roughen to remove glaze. Use abrasive blast-cleaning methods if

recommended by coating manufacturer.

c. If hardeners or sealers have been used to improve curing, use mechanical methods of surface preparation.

d. Determine alkalinity and moisture content of surfaces to be coated by performing appropriate tests. Do not apply coatings over surfaces where moisture content exceeds that permitted in manufacturer's written instructions.

e. Remove existing paint residue from substrates that have been previously painted.

2. Previously Coated Surfaces: Clean surfaces previously coated with cementitious coatings according to manufacturer's written instructions. Remove chalk, dust, dirt, and other contaminants. If coating has been painted, remove remaining paint residue.

a. Remove portions of existing coating that have delaminated from substrate and patch according to manufacturer's written instructions.

3. Crack Repair: Fill cracks according to manufacturer's written instructions before coating surfaces.

a. Cracks Larger Than 1/32 Inch (0.8 mm): Cut out static cracks, voids, or honeycombing larger than 1/32 inch (0.8 mm) and patch with materials recommended in writing by coating manufacturer. Identify dynamic cracks and treat according to manufacturer's written instructions before beginning application.

D. Material Preparation: Carefully mix and prepare materials according to coating manufacturer's written instructions.

1. Mix components in a clean container by hand or with a heavy-duty, slow-speed drill with a mixing paddle to achieve a smooth, heavy-batter consistency.

2. After mixing, allow coating material to sit for approximately 10 minutes. Remix before beginning application.

3. Apply material within 40 to 60 minutes of mixing.

3.3 APPLICATION

A. General: Apply cementitious coatings to exposed surfaces indicated. Coating colors, surface treatments, and finishes are indicated in schedules in the Contract Documents.

1. Colors: Where an item or surface is not specifically mentioned in schedules, coat with same color as similar adjacent materials or surfaces. If a color is not designated, Architect will select a color from standards available.

B. Application Procedures: Apply cementitious coatings by brush or spray according to manufacturer's written instructions.

1. Dampen substrate of surfaces to receive cementitious coatings one hour before beginning application to prevent surface drag. Immediately before applying coatings, redampen substrate. Substrates shall be saturated surface dry at time of application.

2. Brushes: Use tampico or masonry brushes best suited for material being applied.

3. Spray Equipment: Use spray equipment recommended in writing by manufacturer for material and texture required.

C. Minimum Coating Thickness: Apply each material at not less than manufacturer's recommended spreading rate. Provide total cured material thickness indicated or as recommended in writing by manufacturer.

1. Number of coats and film thickness required are same regardless of application method. Do not apply succeeding coats until previous coat has cured as

recommended in writing by manufacturer.

D. Brush Application: Brush-out and work brush coats into surfaces in an even film, filling all pores and voids at rate recommended in writing by manufacturer to achieve cured material thickness indicated. Finish coat with smooth, horizontal strokes.

E. Spray Application: Where spray application is used, apply each coat according to manufacturer's written instructions to provide the equivalent hiding of brush-applied coats. Follow spray application with a general light brooming of coated surface to impart a slight texture.

F. Completed Work: Match approved Samples for color, texture, and coverage. Remove, refinish, or recoat work not complying with specified requirements.

3.4 CLEANING

A. Cleanup: Clean spilled or spattered materials from adjacent surfaces not to be coated, immediately before coating has achieved an initial set. Do not scratch or damage adjacent finished surfaces.
   1. At the end of each workday, remove rubbish, empty cans, rags, and other discarded materials from Project site.
   2. Clean tools, brushes, and containers at the end of each workday.

3.5 PROTECTION

A. Protect the work of other trades from damage, whether being coated or not. Correct damage by cleaning, repairing, replacing, and recoating as approved by Architect. Leave the work in an undamaged condition.

B. Provide "Wet Paint" signs to protect newly coated finishes. Remove temporary protective wrappings provided by others to protect their work after completing coating operations.
   1. At completion of construction activities of other trades, touch up and restore damaged or defaced coated surfaces.

3.6 COATING SCHEDULE

A. Provide the following cementitious coating systems for substrates indicated:
   1. Apply additional coats when undercoats or other conditions show through final coat until cured film is of uniform coating finish, color, and appearance.

B. Above-Grade Concrete and Masonry: Two finish coats with total cured thickness not less than 40 mils (1.0 mm).
   1. Primer: Apply primer at the rate of 250 square feet per gallon to properly prepared concrete surfaces.
   2. Slurry Coat: Apply polymer-modified cementitious coating material to achieve a total cured thickness of approximately 1/16".
   3. Texture Coat: Apply polymer-modified cementitious texture coating material, with retarder added, with a hopper. Allow texture to begin to dry (not more than 15 minutes) before knocking down with a steel trowel.
   4. Sealer Coats: Apply two coats of an acrylic lacquer sealer by roller or airless sprayer at a rate of 250 square feet per gallon per coat, for a net yield of 125 square feet per gallon total coverage.

END OF SECTION 09981

DIVISION 10 - SPECIALTIES

Section 10155	Toilet Compartments
Section 10425	Signs
Section 10801	Toilet and Bath Accessories

SECTION 10155 - TOILET COMPARTMENTS July 16, 2007

PART 1 - GENERAL

1.1 RELATED DOCUMENTS

A. Drawings and general provisions of the Contract, including General and Supplementary Conditions and Division 1 Specification Sections, apply to this Section.

1.2 SUMMARY

A. This Section includes baked-enamel units as follows:
   1. Toilet Enclosures: Overhead braced.
   2. Urinal Screens: Wall hung with floor/ceiling pilaster.

B. Related Sections include the following:
   1. Division 6 Section "Rough Carpentry" for blocking.
   2. Division 10 "Toilet and Bath Accessories" for toilet tissue dispensers, grab bars, purse shelves, and similar accessories.

1.3 SUBMITTALS

A. Product Data: For each type of product indicated. Include construction details, material descriptions, dimensions of individual components and profiles, and finishes.

B. Shop Drawings: Include plans, elevations, sections, details, and attachments to other work.
   1. Show locations of reinforcements for compartment-mounted grab bars.

C. Samples for Selection: For each type of unit indicated.

1.4 QUALITY ASSURANCE

A. Comply with requirements in CID-A-A-60003, "Partitions, Toilets, Complete."

1.5 PROJECT CONDITIONS

A. Field Measurements: Verify actual locations of walls, columns, ceilings, and other construction contiguous with toilet compartments by field measurements before fabrication and indicate measurements on Shop Drawings.
   1. Established Dimensions: Where field measurements cannot be made without delaying the Work, establish dimensions and proceed with fabricating toilet compartments without field measurements. Coordinate wall, floor, ceilings, and other contiguous construction to ensure that actual dimensions correspond to established dimensions.

PART 2 - PRODUCTS

2.1 METAL UNITS

A. Available Manufacturers: Subject to compliance with requirements, manufacturers offering products that may be incorporated into the Work include, but are not limited to, the following:

1. All American Metal Corp.
2. Hadrian Inc.
3. Knickerbocker Partitions Corp.
4. Metpar Corp.
5. Sanymetal; a Crane Plumbing Company.

B. Baked-Enamel Units: Facing sheets and closures fabricated from ASTM A 591/A 591M, 80Z (24G) (electrolytically zinc-coated) or ASTM A 653/A 653M (hot-dip galvanized or galvannealed), commercial steel sheet for exposed applications, that is mill phosphatized, and selected for smoothness.
   1. Facing Sheet Thicknesses: Minimum base-metal (uncoated) thicknesses as follows:
      a. Pilasters, Braced at Both Ends: Manufacturer's standard thickness, but not less than 0.0329 inch (0.85 mm).
      b. Panels: 0.0329 inch (0.0.85 mm).
      c. Doors: Manufacturer's standard thickness, but not less than 0.0269 inch (0.7 mm).
      d. Integral-Flange, Wall-Hung Urinal Screens: Manufacturer's standard thickness, but not less than 0.0269 inch (0.7 mm).
   2. Finish: Manufacturer's standard pigmented, organic coating, including thermosetting, electrostatically applied, and powder coatings. Provide coating system that complies with coating manufacturer's written instructions for pretreatment, application, baking, and minimum dry film thickness.
      a. Colors: As selected by Architect from manufacturer's full range of colors.

C. Door, Panel, and Pilaster Construction: Seamless, metal facing sheets are pressure laminated to core material. Units have continuous, interlocking molding strip or lapped and formed edge closures. Exposed surfaces are free of pitting, seam marks, roller marks, stains, discolorations, telegraphing of core material, or other imperfections. Corners are sealed by welding or clips. Exposed welds are ground smooth.
   1. Core Material: Manufacturer's standard sound-deadening honeycomb of resin-impregnated kraft paper in thickness required to provide finished thickness of 1 inch (25 mm) for doors and panels and 1-1/4 inches (32 mm) for pilasters.
   2. Grab-Bar Reinforcement: Provide concealed internal reinforcement for grab bars mounted on units.
   3. Tapping Reinforcement: Provide concealed reinforcement for tapping (threading) at locations where machine screws are used for attaching items to units.
   4. Urinal-Screen Construction: Matching panels.

D. Pilaster Shoes and Sleeves (Caps): Stainless steel, ASTM A 666, Type 302 or 304, not less than 0.0312 inch (0.8 mm) specified thickness and 3 inches (75 mm) high, finished to match hardware.

E. Brackets (Fittings):
   1. Full-Height (Continuous) Type: Manufacturer's standard design; aluminum.

2.2 ACCESSORIES

A. Hardware and Accessories: Manufacturer's standard design, heavy-duty operating hardware and accessories.
   1. Material: Stainless steel.

B. Overhead Bracing: Manufacturer's standard continuous, extruded-aluminum head rail with antigrip profile and in manufacturer's standard finish.

C. Anchorages and Fasteners: Manufacturer's standard exposed fasteners of stainless steel or chrome-plated steel or brass, finished to match hardware, with theft-resistant-type heads. Provide sex-type bolts for through-bolt applications. For concealed anchors, use hot-dip galvanized or other rust-resistant, protective-coated steel.

2.3 FABRICATION

A. Overhead-Braced Units: Provide manufacturer's standard corrosion-resistant supports, leveling mechanism, fasteners, and anchors at pilasters to suit floor conditions. Make provisions for setting and securing continuous head rail at top of each pilaster. Provide shoes at pilasters to conceal supports and leveling mechanism.

B. Floor-and-Ceiling-Anchored Screen Units: Provide manufacturer's standard corrosion-resistant anchoring assemblies complete with leveling adjustment at tops and bottoms of pilasters. Provide shoes and sleeves (caps) at pilasters to conceal anchorage.

C. Doors: Unless otherwise indicated, provide 24-inch- (610-mm-) wide in-swinging doors for standard toilet compartments and 36-inch- (914-mm-) wide out-swinging doors with a minimum 32-inch- (813-mm-) wide clear opening for compartments indicated to be accessible to people with disabilities.

1. Hinges: Self-closing type that can be adjusted to hold doors open at any angle up to 90 degrees. Provide full height, continuous APiano Type@ door hinge of extruded aluminum, 6063-T5, bright anodized finish or Type 304, 16 gauge satin-finish stainless steel. Knuckles shall have nylon separators. Pivot pin shall be 1/4" type 304 stainless steel. Hinge shall be predrilled for stainless steel tamper proof bolts, spaced at maximum 8" on center. Provide snap on cover over fasteners, attached at top and bottom with theft proof fasteners.
2. Latch and Keeper: Manufacturer's standard surface-mounted latch unit designed for emergency access and with combination rubber-faced door strike and keeper. Provide units that comply with accessibility requirements of authorities having jurisdiction at compartments indicated to be accessible to people with disabilities.
3. Coat Hook: Manufacturer's standard combination hook and rubber-tipped bumper, sized to prevent door from hitting compartment-mounted accessories.
4. Door Bumper: Manufacturer's standard rubber-tipped bumper at out-swinging doors.
5. Door Pull: Manufacturer's standard unit at out-swinging doors that complies with accessibility requirements of authorities having jurisdiction. Provide units on both sides of doors at compartments indicated to be accessible to people with disabilities.

PART 3 - EXECUTION

3.1 INSTALLATION

A. General: Comply with manufacturer's written installation instructions. Install units rigid, straight, level, and plumb. Secure units in position with manufacturer's recommended anchoring devices.

1. Maximum Clearances:
   a. Pilasters and Panels: 1/2 inch (13 mm).
   b. Panels and Walls: 1 inch (25 mm).

B. Overhead-Braced Units: Secure pilasters to floor and level, plumb, and tighten. Secure continuous head rail to each pilaster with not less than two fasteners. Hang doors to align

tops of doors with tops of panels and adjust so tops of doors are parallel with overhead brace when doors are in closed position.

C. Wall-Hung and Post-Supported Urinal Screens: Attach with anchoring devices to suit supporting structure. Set units level and plumb and to resist lateral impact.

3.2 ADJUSTING

A. Hardware Adjustment: Adjust and lubricate hardware according to manufacturer's written instructions for proper operation. Set hinges on in-swinging doors to hold doors open approximately 30 degrees from closed position when unlatched. Set hinges on out-swinging doors to return doors to fully closed position.

END OF SECTION 10155

SECTION 10425 - SIGNS July 16, 2007

PART 1 - GENERAL

1.1 RELATED DOCUMENTS

A. Drawings and general provisions of the Contract, including General and Supplementary Conditions and Division 1 Specification Sections, apply to this Section.

1.2 SUMMARY

A. This Section includes the following types of signs:
   1. Panel signs.
      a. Interior room identification signs.
      b. Handicap accessibility signage.
      c. Handicap entry signs.
   2. Dimensional letters and numbers.

1.3 SUBMITTALS

A. General: Submit the following according to the Conditions of the Contract and Division 1 Specification Sections.

B. Product data for each type of sign specified, including details of construction relative to materials, dimensions of individual components, profiles, and finishes.

C. Shop drawings showing fabrication and erection of signs. Include plans, elevations, and large-scale sections of typical members and other components. Show anchors, grounds, layout, reinforcement, accessories, and installation details.
   1. Provide message list for each sign required, including large-scale details of wording and lettering layout.
   2. For signs supported by or anchored to permanent construction, provide setting drawings, templates, and directions for installation of anchor bolts and other anchors to be installed as a unit of Work in other Sections.
   3. Templates: Furnish full-size spacing templates for individually mounted dimensional letters and numbers.

D. Samples: Provide the following samples of each sign component for initial selection of color, pattern and surface texture as required and for verification of compliance with requirements indicated.
   1. Samples for selection of color, pattern, and texture:
      a. Cast Acrylic Sheet and Plastic Laminate: Manufacturer's color charts consisting of actual sections of material including the full range of colors available for each material required.
      b. Aluminum: Samples of each finish type and color, on 6-inch-long sections of extrusions and not less than 4-inch squares of sheet or plate, showing the full range of colors available.

1.4 QUALITY ASSURANCE

A. Sign Fabricator Qualifications: Firm experienced in producing signs similar to those indicated for this Project, with a record of successful in-service performance, and sufficient production

capacity to produce sign units required without causing delay in the Work.

B. Single-Source Responsibility: For each separate sign type required, obtain signs from one source of a single manufacturer.

C. Handicapped Accessibility: Provide signs which are in conformance with the requirements of ANSI A117.1-2003 and the Americans with Disabilities Act of 1990 (ADA).

D. Design Concept: The Drawings indicate sizes, profiles, and dimensional requirements of signs and are based on the specific types and models indicated. Sign units by other manufacturers may be considered provided deviations in dimensions and profiles do not change the design concept as judged by the Architect. The burden of proof of equality is on the proposer.

1.5 DELIVERY AND HANDLING

A. Delivery: Provide protective covering or crating as recommended by the manufacturer to protect sign components and surfaces against damage during transportation and delivery.

B. Handle signs carefully to prevent breakage, surface abrasion, denting, soiling, and other defects. Comply with the manufacturer's written handling instructions for unloading components subject to damage.
   1. Inspect sign components for damage on delivery.
   2. Do not install damaged sign components.
   3. Repair minor damage to signs, provided the finished repair is equal in all respects to the original work and is approved by Architect; otherwise, remove and replace damaged sign components.

1.6 PROJECT CONDITIONS

A. Field Measurements: Take field measurements prior to preparation of shop drawings and fabrication to ensure proper fitting. Show recorded measurements on final shop drawings. Coordinate fabrication schedule with construction progress to avoid delay.

PART 2 - PRODUCTS

2.1 MANUFACTURERS

A. Available Manufacturers: Subject to compliance with requirements, manufacturers offering products that may be incorporated in the Work include, but are not limited to, the following:
   1. Manufacturers of Panel Signs:
      a. ABC Architectural Signing System.
      b. ASI Sign Systems, Inc.
      c. Best Manufacturing Company.
      d. Spanjer Brothers, Inc.
      e. Vomar Products, Inc.
   2. Manufacturers of Dimensional Letters:
      a. ASI Sign Systems, Inc.
      b. Metal Arts.
      c. Metallic Arts, Inc.
      d. The Southwell Company.
      e. Spanjer Brothers, Inc.

f. Vomar Products, Inc.

2.2 MATERIALS

A. Cast Acrylic Sheet: Provide cast (not extruded or continuous cast) methyl methacrylate monomer plastic sheet, in sizes and thicknesses indicated, with a minimum flexural strength of 16,000 psi when tested according to ASTM D 790, with a minimum allowable continuous service temperature of 176 deg F (80 deg C), and of the following general types:
   1. Opaque Sheet: Where sheet material is indicated as "opaque," provide colored opaque acrylic sheet in colors and finishes as selected from the manufacturer's standards.

B. Aluminum Sheet and Plate: ASTM B 209 (ASTM B 209M), alloy and temper recommended by aluminum producer and finisher for type of use and finish indicated, and with not less than the strength and durability properties of 6061-T6.

C. Aluminum Castings: Provide aluminum castings of alloy and temper recommended by the sign manufacturer for the casting process used and for the use and finish indicated.

D. Fasteners: Use concealed fasteners fabricated from metals that are not corrosive to the sign material and mounting surface.

E. Anchors and Inserts: Use nonferrous metal or hot-dipped galvanized anchors and inserts for exterior installations and elsewhere as required for corrosion resistance. Use toothed steel or lead expansion bolt devices for drilled-in-place anchors. Furnish inserts, as required, to be set into concrete or masonry work.

2.3 PANEL SIGNS

A. General: Provide panel signs that comply with requirements indicated for materials, thicknesses, finishes, colors, designs, shapes, sizes, and details of construction.
   1. Produce smooth panel sign surfaces constructed to remain flat under installed conditions within tolerance of plus or minus 1/16 inch1.5 mm measured diagonally.

B. Basis-of-Design Product: ASI Sign Systems, Inc.; ASI Tactile Graphics Plaque Sign System or a comparable product of one of the following:
   1. Available Manufacturers:
      a. APCO Graphics, Inc.
      b. Best Manufacturing Co.
      c. Mohawk Sign Systems.

C. Sign Face: High impact aluminum tri-hydrate filled polyester acrylate resin, pressure molded into a single polymerized component, using manufacturer=s standard co-molding process.

D. Unframed Panel Signs: Fabricate signs with edges mechanically and smoothly finished to comply with the following requirements:
   1. Edge Condition: Square cut.
   2. Corner Condition: Square.
   3. Depth: 0.25 inch thickness.
   4. Panel Appearance: As selected by Architect.
   5. Color: As selected by Architect from manufacturer=s full range of colors.
   6. Surface Texture: As selected by Architect.
   7. Letter Style: Arial.

8. Letter Height: As scheduled.

E. Brackets: Fabricate brackets and fittings for bracket-mounted signs from extruded aluminum to suit panel sign construction and mounting conditions indicated. Background chassis shall be concealed by modules and accessories.

F. Graphic Content and Style: Provide sign copy that complies with requirements indicated in the Sign Schedule for size, style, spacing, content, mounting height and location, material, finishes, and colors of signage.
1. Provide signage indicating handicap entry at each set of entry doors into facility.
2. Provide one wall mounted sign per door or set of doors throughout building.
   a. Provide signs with cutouts and removable inserts (maximum of three (3) per sign) with permanent ADA text.
3. Provide maximum occupancy load signs in assembly rooms as required by code.

G. Tactile and Braille Copy: Manufacturer's standard process for producing copy complying with ADA Accessibility Guidelines and ICC/ANSI A117.1. Text shall be accompanied by Grade 2 braille. Produce precisely formed characters with square cut edges free from burrs and cut marks.
1. Raised-Copy Thickness: Not less than 1/32 inch0.8 mm.

H. Applied Copy: Die-cut characters from vinyl film of nominal thickness of 3 mils (0.076 mm) with pressure-sensitive adhesive backing. Apply copy to exposed face of panel sign, glass, doors, or wall surfaces as indicated.

I. Colored Coatings: For copy and background colors, provide Pantone Matching System (PMS) colored coatings, including inks and paints, that are recommended by acrylic manufacturers for optimum adherence to acrylic surface and are nonfading for application intended.

2.4 DIMENSIONAL LETTERS AND NUMBERS

A. Cast Letters and Numbers: Form individual letters and numbers by casting. Produce characters with smooth, flat faces, sharp corners, and precisely formed lines and profiles, free from pits, scale, sand holes, or other defects. Cast lugs into the back of characters and tap to receive threaded mounting studs. Comply with requirements indicated for finish, style, and size.
1. Metal: Aluminum.
2. Provide letters of size and style as indicated attached to exterior building and monument sign surface as directed by architect.

2.5 FINISHES

A. Colors and Surface Textures: For exposed sign material that requires selection of materials with integral or applied colors, surface textures or other characteristics related to appearance, provide color matches indicated, or if not indicated, as selected by the Architect from the manufacturer's standards.

B. Metal Finishes: Comply with NAAMM "Metal Finishes Manual" for finish designations and applications recommendations.

C. Aluminum Finishes: Finish designations prefixed by "AA" conform to the system established by the Aluminum Association for designating aluminum finishes.

1. Baked-Enamel Finish: AA-M4xC12C42R1x (Mechanical Finish: Manufacturer's standard, other nondirectional textured; Chemical Finish: Chemical conversion coating, acid chromate-fluoride-phosphate pretreatment; Organic Coating: as specified below). Apply baked enamel in compliance with paint manufacturer's specifications for cleaning, conversion coating, and painting.
   a. Organic Coating: Thermosetting-modified acrylic enamel primer/topcoat system complying with AAMA 603.8 except with a minimum dry film thickness of 1.5 mils, medium gloss.
      1) Color: As selected by the Architect from the manufacturer's standard colors.

PART 3 - EXECUTION

3.1 INSTALLATION

A. General: Locate sign units and accessories where indicated, using mounting methods of the type described and in compliance with the manufacturer's instructions.
   1. Install signs level, plumb, and at the height indicated, with sign surfaces free from distortion or other defects in appearance.

B. Wall-Mounted Panel Signs: Attach panel signs to wall surfaces using the methods indicated below:
   1. Provide screws, bolts, and other exposed fastening devices of the same material as the items being fastened. Provide types, gages, and lengths to suit installation conditions. Use theft-proof fasteners where exposed to view.

C. Bracket-Mounted Units: Provide the manufacturer's standard brackets, fittings, and hardware as appropriate for mounting signs that project at right angles from walls and ceilings. Attach brackets and fittings securely to walls or ceilings with concealed fasteners and anchoring devices to comply with manufacturer's directions.

D. Dimensional Letters and Numbers: Mount letters and numbers using standard fastening methods recommended by the manufacturer for letter form, type of mounting, wall construction, and condition of exposure indicated. Provide heavy paper template to establish letter spacing and to locate holes for fasteners.
   1. Flush Mounting: Mount letters with backs in contact with the wall surface.

3.2 CLEANING AND PROTECTION

A. After installation, clean soiled sign surfaces according to the manufacturer's instructions. Protect units from damage until acceptance by the Owner.

END OF SECTION 10425

SECTION 10801 - TOILET AND BATH ACCESSORIES July 16, 2007

PART 1 - GENERAL

1.1 RELATED DOCUMENTS

A. Drawings and general provisions of the Contract, including General and Supplementary Conditions and Division 1 Specification Sections, apply to this Section.

1.2 SUMMARY

A. This Section includes the following:
   1. Toilet and bath accessories.
   2. Infant-care products.
   3. Underlavatory guards.

B. Related Sections include the following:
   1. Division 10 Section "Toilet Compartments" for compartments and screens.

1.3 SUBMITTALS

A. Product Data: Include construction details, material descriptions and thicknesses, dimensions, profiles, fastening and mounting methods, specified options, and finishes for each type of accessory specified.

B. Samples: For each accessory item to verify design, operation, and finish requirements.
   1. Approved full-size Samples will be returned and may be used in the Work.

C. Setting Drawings: For cutouts required in other work; include templates, substrate preparation instructions, and directions for preparing cutouts and installing anchoring devices.

D. Product Schedule: Indicating types, quantities, sizes, and installation locations by room of each accessory required. Use designations indicated in the Toilet and Bath Accessory Schedule and room designations indicated on Drawings in product schedule.

E. Maintenance Data: For accessories to include in maintenance manuals specified in Division 1. Provide lists of replacement parts and service recommendations.

1.4 QUALITY ASSURANCE

A. Source Limitations: Provide products of same manufacturer for each type of accessory unit and for units exposed to view in same areas, unless otherwise approved by Architect.

B. Product Options: Accessory requirements, including those for materials, finishes, dimensions, capacities, and performance, are established by specific products indicated in the Toilet and Bath Accessory Schedule.
   1. Products of other manufacturers listed in Part 2 with equal characteristics, as judged solely by Architect, may be provided.
   2. Do not modify aesthetic effects, as judged solely by Architect, except with Architect's approval. Where modifications are proposed, submit comprehensive explanatory data to Architect for review.

1.5 COORDINATION

A. Coordinate accessory locations with other work to prevent interference with clearances required for access by disabled persons, proper installation, adjustment, operation, cleaning, and servicing of accessories.

B. Deliver inserts and anchoring devices set into concrete or masonry as required to prevent delaying the Work.

1.6 WARRANTY

A. General Warranty: Special warranty specified in this Article shall not deprive Owner of other rights Owner may have under other provisions of the Contract Documents and shall be in addition to, and run concurrent with, other warranties made by Contractor under requirements of the Contract Documents.

B. Manufacturer's Mirror Warranty: Written warranty, executed by mirror manufacturer agreeing to replace mirrors that develop visible silver spoilage defects within minimum warranty period indicated.
   1. Minimum Warranty Period: 15 years from date of Substantial Completion.

PART 2 - PRODUCTS

2.1 MANUFACTURERS

A. Manufacturers: Subject to compliance with requirements, provide accessories by one of the following:
   1. Toilet and Bath Accessories:
      a. A & J Washroom Accessories, Inc.
      b. American Specialties, Inc.
      c. Bobrick Washroom Equipment, Inc.
      d. Bradley Corporation.
   2. Infant-Care Products:
      a. Bobrick Washroom Equipment, Inc.
      b. Koala Corporation.
   3. Underlavatory Guards:
      a. Brocar Products, Inc.
      b. Truebro, Inc.

2.2 MATERIALS

A. Stainless Steel: ASTM A 666, Type 304, with No. 4 finish (satin), in 0.0312-inch (0.8-mm) minimum nominal thickness, unless otherwise indicated.

B. Brass: ASTM B 19, leaded and unleaded flat products; ASTM B 16 (ASTM B 16M), rods, shapes, forgings, and flat products with finished edges; ASTM B 30, castings.

C. Sheet Steel: ASTM A 366/A 366M, cold rolled, commercial quality, 0.0359-inch (0.9-mm) minimum nominal thickness; surface preparation and metal pretreatment as required for applied finish.

D. Galvanized Steel Sheet: ASTM A 653/A 653M, G60 (Z180).

E. Chromium Plating: ASTM B 456, Service Condition Number SC 2 (moderate service), nickel plus chromium electrodeposited on base metal.

F. Baked-Enamel Finish: Factory-applied, gloss-white, baked-acrylic-enamel coating.

G. Mirror Glass: ASTM C 1036, Type I, Class 1, Quality q2, nominal 6.0 mm thick, with silvering, electroplated copper coating, and protective organic coating complying with FS DD-M-411.

H. Galvanized Steel Mounting Devices: ASTM A 153/A 153M, hot-dip galvanized after fabrication.

I. Fasteners: Screws, bolts, and other devices of same material as accessory unit, tamper and theft resistant when exposed, and of galvanized steel when concealed.

2.3 FABRICATION

A. General: Names or labels are not permitted on exposed faces of accessories. On interior surface not exposed to view or on back surface of each accessory, provide printed, waterproof label or stamped nameplate indicating manufacturer's name and product model number.

B. Surface-Mounted Toilet Accessories: Unless otherwise indicated, fabricate units with tight seams and joints, and exposed edges rolled. Hang doors and access panels with continuous stainless-steel hinge. Provide concealed anchorage where possible.

C. Recessed Toilet Accessories: Unless otherwise indicated, fabricate units of all-welded construction, without mitered corners. Hang doors and access panels with full-length, stainless-steel hinge. Provide anchorage that is fully concealed when unit is closed.

D. Framed Glass-Mirror Units: Fabricate frames for glass-mirror units to accommodate glass edge protection material. Provide mirror backing and support system that permits rigid, tamper-resistant glass installation and prevents moisture accumulation.
   1. Provide galvanized steel backing sheet, not less than 0.034 inch (0.85 mm) and full mirror size, with nonabsorptive filler material. Corrugated cardboard is not an acceptable filler material.

E. Mirror-Unit Hangers: Provide mirror-unit mounting system that permits rigid, tamper- and theft-resistant installation, as follows:
   1. Heavy-duty wall brackets of galvanized steel, equipped with concealed locking devices requiring a special tool to remove.

F. Keys: Provide universal keys for internal access to accessories for servicing and resupplying. Provide minimum of six keys to Owner's representative.

PART 3 - EXECUTION

3.1 INSTALLATION

A. Install accessories according to manufacturers' written instructions, using fasteners appropriate to substrate indicated and recommended by unit manufacturer. Install units level, plumb, and firmly anchored in locations and at heights indicated.

B. Secure mirrors to walls in concealed, tamper-resistant manner with special hangers, toggle bolts, or screws. Set units level, plumb, and square at locations indicated, according to manufacturer's written instructions for substrate indicated.

C. Install grab bars to withstand a downward load of at least 250 lbf (1112 N), when tested according to method in ASTM F 446.

3.2 ADJUSTING AND CLEANING

A. Adjust accessories for unencumbered, smooth operation and verify that mechanisms function properly. Replace damaged or defective items.

B. Remove temporary labels and protective coatings.

C. Clean and polish exposed surfaces according to manufacturer's written recommendations.

3.3 TOILET AND BATH ACCESSORY SCHEDULE

A. Toilet Tissue Dispenser: Where this designation is indicated, provide toilet tissue dispenser complying with the following:
1. Products: Available products include the following:
   a. Bobrick, B-2888
2. Type: Roll-in-reserve dispenser with hinged front secured with tumbler lockset
2. Mounting: Surface mounted with concealed anchorage.
3. Material: Stainless steel.
4. Operation: Noncontrol delivery with mfr's standard.
5. Capacity: Designed for 5-inch- (127-mm-) diameter-core tissue rolls.

B. Soap Dispenser: Where this designation is indicated, provide soap dispenser complying with the following:
1. Products: Available products include the following.
   a. Bobrick, B-2112
2. Liquid Soap Dispenser, Tank Type: Surface-mounted type, minimum 40-oz. (1182.9-mL) capacity tank with stainless-steel piston, springs, and internal parts designed to dispense soap in measured quantity by pump action; and stainless-steel cover with unbreakable window-type refill indicator.
   b. Soap Valve: Designed for dispensing soap in liquid form.

C. Sanitary Napkin Disposal Unit: Where this designation is indicated, provide stainless-steel sanitary napkin disposal unit complying with the following:
1. Products: Available products include the following:
   a. Equal to: Bobrick, B-270.
2. Surface-Mounted Type: With seamless exposed walls; self-closing top cover; locking bottom panel with stainless-steel, continuous hinge; and removable, reusable receptacle.

D. Paper Towel (Folded) Dispenser: Where this designation is indicated, provide stainless-steel paper towel dispensers complying with the following:
1. Mounting: Semirecessed.
2. Minimum Capacity: 400 C-fold or 525 multifold towels.
3. Material and Finish: Stainless steel, No. 4 finish (satin).
4. Lockset: Tumbler type.

5. Refill Indicators: Pierced slots at sides or front.

E. Seat-Cover Dispenser: Where this designation is indicated, provide stainless-steel seat-cover dispensers complying with the following:
1. Mounting: Recessed.
2. Minimum Capacity: 250 seat covers.
3. Exposed Material and Finish: Stainless steel, No. 4 finish (satin).
4. Lockset: Tumbler type.

F. Grab Bar: Where this designation is indicated, provide stainless-steel grab bar complying with the following:
1. Products: Available products include the following:
   a. Equal to: Bobrick, B-6806 Series.
2. Stainless-Steel Nominal Thickness: Minimum 0.05 inch (1.3 mm).
3. Mounting: Concealed with manufacturer's standard flanges and anchors.
4. Gripping Surfaces: Manufacturer's standard slip-resistant texture.
5. Outside Diameter: 1-1/2 inches (38 mm) for heavy-duty applications.

G. Mirror Unit: Where this designation is indicated, provide mirror unit complying with the following:
1. Products: Available products include the following:
   a. Equal to: Bobrick, B-290 Series.
2. Stainless-Steel, Angle-Framed Mirror: Fabricate frame from minimum nominal 0.05-inch- (1.3-mm-) thick stainless-steel angles, with square corners mitered, welded, and ground smooth.

H. Mop and Broom Holder: Where this designation is indicated, provide mop and broom holder complying with the following:
1. Products: Available products include the following:
   a. Bobrick, B-224x36
2. Mop and Broom Holder with Utility Shelf: 36-inch- (914-mm-) long unit fabricated of minimum nominal 0.05-inch- (1.3-mm-) thick stainless steel with shelf; support brackets for wall mounting; three hooks for wiping rags; four spring-loaded, rubber hat, cam-type, mop/broom holders mounted on front of shelf; and approximately 1/4-inch- (6-mm-) diameter, stainless-steel rod suspended beneath shelf for drying rags.

I. Diaper-Changing Station: Where this designation is indicated, provide infant-care product complying with the following:
1. Products: Available products include the following:
   a. Bobrick, B-2230.
2. Horizontal, Surface-Mounted Unit: Diaper-changing station with surface-mounted, mildew-resistant, molded polyethylene body that folds horizontally against wall when not in use; projects not more than 4 inches (100 mm) from wall when closed; and is engineered to support a minimum of 250-lb (113-kg) static weight when opened. Provide unit with pneumatic shock-absorbing operating mechanism and built-in dispenser for sanitary liners.

J. Underlavatory Guard: Where this designation is indicated, provide underlavatory guard complying with the following:
1. Insulating Piping Coverings: White, antimicrobial, molded-vinyl covering for supply and drain piping assemblies intended for use at accessible lavatories to prevent direct contact with and burns from piping. Provide components as required for

applications indicated with flip tops at valves that allow service access without removing coverings.

END OF SECTION 10801

DIVISION 11 - EQUIPMENT

Not Used

DIVISION 12 - FURNISHINGS

Section 12481	Entrance Floor Mats and Frames
Section 12491	Horizontal Louver Blinds

SECTION 12481 - ENTRANCE FLOOR MATS AND FRAMES July 16, 2007

PART 1 - GENERAL

1.1 RELATED DOCUMENTS

A. Drawings and general provisions of the Contract, including General and Supplementary Conditions and Division 01 Specification Sections, apply to this Section.

1.2 SUMMARY

A. This Section includes the following:
   1. Entrance mats in surface-mounted frames.

1.3 SUBMITTALS

A. Product Data: Include construction details, material descriptions, dimensions of individual components and profiles, and finishes.

B. Shop Drawings: Show the following:

   1. Items penetrating floor mats and frames, including the following:

      a. Door control devices.

   2. Divisions between mat sections.
   3. Perimeter floor moldings.

C. Samples for Selection: For each type of product indicated.

   1. Floor Mat: 12-inch- (300-mm-) square, assembled sections of floor mat.

D. Maintenance Data: For floor mats and frames to include in maintenance manuals.

1.4 QUALITY ASSURANCE

A. Source Limitations: Obtain floor mats through one source from a single manufacturer.

B. Accessibility Requirements: Provide installed floor mats that comply with Section 4.5 in the U.S. Architectural & Transportation Barriers Compliance Board's "Americans with Disabilities Act (ADA), Accessibility Guidelines for Buildings and Facilities (ADAAG)." and Sections 302 and 303 in ICC A117.1.

1.5 PROJECT CONDITIONS

A. Field Measurements: Indicate measurements on Shop Drawings.

1.6 COORDINATION

A. Coordinate size and location of recesses in concrete with installation of finish floors to receive floor mats.

PART 2 - PRODUCTS

2.1 ENTRANCE TILES

A. Basis-of-Design Product: Subject to compliance with requirements, provide Mannington Commercial; Recoarse/Modular or a comparable product.

B. Carpet-Type Tiles: Nylon carpet bonded to a flexible vinyl backing to form mats with nonraveling edges and meeting the following criteria:
   1. Construction: Pattern Textured Loop.
   2. Face Fiber: Type 6,6 nylon.
   3. Dye Method: Solution dyed.
   4. Gauge: 1/12
   5. Stitches per Inch: 10.33
   6. Pile Thickness: 0.186 inches.
   7. Tufted Yarn Weight: 38 ounces per square yard.
   8. Primary Backing: 100% Woven Synthetic
   9. Primary Precoat: 100% Vinyl Non-Aqueous Closed Cell Polymer.
   10. Secondary Backing: Infinity RE with a minimum 10% post-consumer and 20% pre-consumer recycled content by total product weight.
   11. Average Density: 7354
   12. Weight Density: 279,483
   13. Tile Size: 24” x 24”

   14. Colors, Textures, and Patterns: As selected by Architect from manufacturer's full range.

C. Surface-Mounted Frames:

   1. Tapered Frames: Tapered flexible vinyl edge-frame members, not less than 2 inches (50 mm) wide with welded mitered corners.
   2. Color: As selected by Architect from manufacturer's full range.

2.2 FABRICATION

A. Floor Mats: Shop fabricate units to greatest extent possible in sizes indicated. Unless otherwise indicated, provide single unit for each mat installation; do not exceed manufacturer's recommended maximum sizes for units that are removed for maintenance and cleaning. Where joints in mats are necessary, space symmetrically and away from normal traffic lanes. Miter corner joints in framing elements with hairline joints or provide prefabricated corner units without joints.

B. Surface-Mounted Frames: As indicated for permanent surface-mounted installation, complete with corner connectors, splice plates or connecting pins, and postinstalled expansion anchors.

PART 3 - EXECUTION

3.1 EXAMINATION

A. Examine substrates and floor conditions for compliance with requirements for location, sizes, and other conditions affecting installation of floor mats and frames.

1. Proceed with installation only after unsatisfactory conditions have been corrected.

3.2 INSTALLATION

A. Install surface-type units to comply with manufacturer's written instructions at locations indicated; coordinate with entrance locations and traffic patterns.

1. Anchor fixed surface-type frame members to floor with devices spaced as recommended by manufacturer.

3.3 PROTECTION

A. After completing frame installation and concrete work, provide temporary filler of plywood or fiberboard in recesses and cover frames with plywood protective flooring. Maintain protection until construction traffic has ended and Project is near Substantial Completion.

END OF SECTION 12481

SECTION 12491 - HORIZONTAL LOUVER BLINDS

July 16, 2007

PART 1 - GENERAL

1.1 RELATED DOCUMENTS

A. Drawings and general provisions of the Contract, including General and Supplementary Conditions and Division 1 Specification Sections, apply to this Section.

1.2 SUMMARY

A. This Section includes the following types of venetian blinds and accessories:
   1. Miniblinds with aluminum louver slats.

B. Related Sections include the following:
   1. Division 6 Section "Miscellaneous Carpentry" for wood blocking and grounds for mounting horizontal louver blinds and accessories.

1.3 DEFINITIONS

A. Miniblind: Venetian blind with nominal 1-inch- (25-mm-) wide louver slat.

1.4 SUBMITTALS

A. Product Data: For each type of product indicated. Include styles, material descriptions, construction details, dimensions of individual components and profiles, features, finishes, and operating instructions.

B. Shop Drawings: Show location and extent of horizontal louver blinds. Include elevations, sections, details, and dimensions not shown in Product Data. Show installation details, mountings, attachments to other Work, operational clearances, and relationship to adjoining work.

C. Samples for Selection: For each colored component of each type of horizontal louver blind indicated.
   1. Include similar Samples of accessories involving color selection.

D. Window Treatment Schedule: Include horizontal louver blinds in schedule using same room designations indicated on Drawings.

E. Maintenance Data: For horizontal louver blinds to include in maintenance manuals. Include the following:
   1. Methods for maintaining horizontal louver blinds and finishes.
   2. Precautions about cleaning materials and methods that could be detrimental to finishes and performance.
   3. Operating hardware.

1.5 QUALITY ASSURANCE

A. Source Limitations: Obtain horizontal louver blinds through one source from a single manufacturer.

B. Fire-Test-Response Characteristics: Provide horizontal louver blinds with the fire-test-response characteristics indicated, as determined by testing identical products per test method indicated below by UL or another testing and inspecting agency acceptable to authorities having jurisdiction:
   1. Flame-Resistance Ratings: Passes NFPA 701.

C. Corded Window Covering Product Standard: Provide horizontal louver blinds complying with WCMA A 100.1.

D. Mockups: Build mockups to verify selections made under sample Submittals and to demonstrate aesthetic effects and qualities of materials and execution.
   1. Build mockups in the location and of the size indicated or, if not indicated, as directed by Architect.
   2. Approved mockups may become part of the completed Work if undisturbed at time of Substantial Completion.

1.6 DELIVERY, STORAGE, AND HANDLING

A. Deliver blinds in factory packages, marked with manufacturer and product name, and location of installation using same room designations indicated on Drawings and in a window treatment schedule.

1.7 PROJECT CONDITIONS

A. Environmental Limitations: Do not install horizontal louver blinds until construction and wet and dirty finish work in spaces, including painting, is complete and ambient temperature and humidity conditions are maintained at the levels indicated for Project when occupied for its intended use.

B. Field Measurements: Where horizontal louver blinds are indicated to fit to other construction, verify dimensions of other construction by field measurements before fabrication and indicate measurements on Shop Drawings. Allow clearances for operable glazed units' operation hardware throughout the entire operating range. Notify Architect of discrepancies. Coordinate fabrication schedule with construction progress to avoid delaying the Work.

1.8 EXTRA MATERIALS

A. Furnish extra materials described below that match products installed and that are packaged with protective covering for storage and identified with labels describing contents.
   1. Horizontal Louver Blinds: Before installation begins, for each size, color, texture, pattern, and gloss indicated, full-size units equal to 5 percent of amount installed.

PART 2 - PRODUCTS

2.1 MANUFACTURERS

A. Available Manufacturers: Subject to compliance with requirements, manufacturers offering products that may be incorporated into the Work include, but are not limited to, the following:
   1. Horizontal Louver Blinds, Aluminum Louver Slats:
      a. Hunter Douglas Window Fashions.
      b. Levolor Contract; a Newell Company; Levolor.
      c. Springs Window Fashions Division, Inc.; Bali.

2.2 HORIZONTAL LOUVER BLINDS, ALUMINUM LOUVER SLATS

A. Louver Slats: Aluminum, alloy and temper recommended by producer for type of use and finish indicated; with crowned profile and radiused corners.
   1. Nominal Slat Width: 1 inch (25 mm) for miniblinds.
      a. Slat Spacing: Every 18 mm for 16.7 slats or more per foot (18 mm).
   2. Nominal Slat Thickness: Not less than 0.008 inch (0.20 mm).
   3. Slat Finish: Colors as indicated.
      a. Ionized Coating: Antistatic, dust-repellent, baked polyester finish.

B. Headrail: Formed steel or extruded aluminum; long edges returned or rolled; fully enclosing operating mechanisms on three sides and ends; capacity for one blind per headrail, unless otherwise indicated on Drawings.

C. Bottom Rail: Formed-steel or extruded-aluminum tube, sealed with plastic or metal capped ends top contoured to match crowned shape of louver slat; with enclosed and protected ladders and tapes to prevent their contact with sill.

D. Maximum Light Blocking Blinds: Designed for eliminating all visible light gaps if slats are tilted closed; with tight tape spacing indicated and slats with minimal-sized rout holes for ladders hidden and placed near back edge for maximum slat overlap; with headrail and bottom rail extended and formed for light-tight joints between rail and adjacent slats or construction.

E. Tilt Control: Consisting of enclosed worm gear mechanism and linkage rod, for the following operation:
   1. Tilt Operation: Manual with clear plastic wand.
   2. Length of Tilt Control: Length required to make operation convenient from floor level.
   3. Tilt: Full.

F. Lift Operation: Manual, cord lock; locks pull cord to stop blind at any position in ascending or descending travel.

G. Tilt-Control and Cord-Lock Position: Right side and left side of headrail, respectively, unless otherwise indicated.

H. Ladders: Evenly spaced to prevent long-term louver sag.
   1. For Blinds with Nominal Slat Width 1 Inch (25 mm) or Less: Braided string.
      a. Tape Color, Texture, and Pattern: Color, texture, and pattern as selected by Architect from manufacturer's full range.

I. Valance: Manufacturer's standard.
   1. Finish Color Characteristics: Match color, texture, pattern, and gloss of louver slats.

J. Mounting: Wall or ceiling mounting permitting easy removal and replacement without damaging blind or adjacent surfaces and finishes; with spacers and shims required for blind placement and alignment indicated.
   1. Provide intermediate support brackets if end support spacing exceeds spacing recommended by manufacturer for weight and size of blind.

K. Hold-Down Brackets and Hooks or Pins: Manufacturer's standard, as indicated.

L. Side Channels and Perimeter Seals: Manufacturer's standard for eliminating light gaps when blinds are closed.

M. Colors, Textures, Patterns, and Gloss: As selected by Architect from manufacturer's full range.

2.3 HORIZONTAL LOUVER BLINDS FABRICATION

A. Product Standard and Description: Comply with AWCMA Document 1029, unless otherwise indicated, for each horizontal louver blind designed to be self-leveling and consisting of louver slats, rails, ladders, tapes, lifting and tilting mechanisms, cord, cord lock, tilt control, and installation hardware.

B. Concealed Components: Noncorrodible or corrosion-resistant-coated materials.
   1. Lifting and Tilting Mechanisms: With permanently lubricated moving parts.

C. Unit Sizes: Obtain units fabricated in sizes to fill window and other openings as follows, measured at 74 deg F (23 deg C):
   1. Blind Units Installed between (Inside) Jambs: Width equal to 1/4 inch (6 mm) per side or 1/2 inch (12 mm) total, plus or minus 1/8 inch (3 mm), less than jamb-to-jamb dimension of opening in which each blind is installed. Length equal to 1/4 inch (6 mm), plus or minus 1/8 inch (3 mm), less than head-to-sill dimension of opening in which each blind is installed.
   2. Blind Units Installed Outside Jambs: Width and length as indicated, with terminations between blinds of end-to-end installations at centerlines of mullion or other defined vertical separations between openings.

D. Installation Brackets: Designed for easy removal and reinstallation of blind, for supporting headrail and operating hardware, and for hardware position and blind mounting method indicated.

E. Installation Fasteners: Not fewer than two fasteners per bracket, fabricated from metal noncorrosive to blind hardware and adjoining construction; type designed for securing to supporting substrate; and supporting blinds and accessories under conditions of normal use.

F. Color-Coated Finish:
   1. Metal: For components exposed to view, apply manufacturer's standard baked finish complying with manufacturer's written instructions for surface preparation including pretreatment, application, baking, and minimum dry film thickness.

G. Component Color: Provide rails, cords, ladders, and exposed-to-view metal and plastic matching or coordinating with slat color, unless otherwise indicated.

PART 3 - EXECUTION

3.1 EXAMINATION

A. Examine substrates, areas, and conditions, with Installer present, for compliance with requirements for installation tolerances, operational clearances, and other conditions affecting performance. Proceed with installation only after unsatisfactory conditions have been corrected.

3.2 HORIZONTAL LOUVER BLIND INSTALLATION

A. Install blinds level and plumb and aligned with adjacent units according to manufacturer's written instructions, and located so exterior louver edges in any position are not closer than 1 inch (25 mm) to interior face of glass. Install intermediate support as required to prevent deflection in headrail. Allow clearances between adjacent blinds and for operating glazed opening's operation hardware, if any.

B. Flush Mounted: At APunched@ glazed areas install blinds with louver edges flush with finish face of opening if slats are tilted open.

C. Head Mounted: At other glazed areas install headrail on face of opening head.

3.3 ADJUSTING

A. Adjust horizontal louver blinds to operate smoothly, easily, safely, and free from binding or malfunction throughout entire operational range.

3.4 CLEANING AND PROTECTION

A. Clean blind surfaces after installation, according to manufacturer's written instructions.

B. Provide final protection and maintain conditions, in a manner acceptable to manufacturer and Installer, that ensure that horizontal louver blinds are without damage or deterioration at time of Substantial Completion.

C. Replace damaged blinds that cannot be repaired, in a manner approved by Architect, before time of Substantial Completion.

END OF SECTION 12491

DIVISION 13 thru DIVISION 14

Not Used

DIVISION 15 - MECHANICAL

Section 15010	Basic Mechanical Requirements
Section 15050	Basic Mechanical Materials and Methods
Section 15055	Motors
Section 15060	Hangers and Supports
Section 15071	Mechanical Vibration and Seismic Controls
Section 15075	Mechanical Identification
Section 15080	Mechanical Insulation
Section 15110	Valves
Section 15122	Meters and Gages
Section 15183	Refrigerant Piping
Section 15410	Plumbing Fixtures
Section 15411	Plumbing Piping
Section 15430	Plumbing Specialties
Section 15480	Domestic Water Heaters
Section 15738	Split System Air Conditioning Units
Section 15784	Rooftop Units
Section 15815	Metal Ducts
Section 15820	Duct Accessories
Section 15850	Air Handling
Section 15950	Testing, Adjusting and Balancing

MECHANICAL SPECIFICATIONS INDEX July 10, 2007

Division	Section Title	Pages
DIVISION 15 - MECHANICAL		
15010	BASIC MECHANICAL REQUIREMENTS	7
15050	BASIC MECHANICAL MATERIALS AND METHODS	13
15055	MOTORS	3
15060	HANGERS AND SUPPORTS	9
15071	MECHANICAL VIBRATION AND SEISMIC CONTROLS	5
15075	MECHANICAL IDENTIFICATION	6
15080	MECHANICAL INSULATION	14
15110	VALVES	5
15122	METERS AND GAGES	5
15183	REFRIGERANT PIPING	9
15410	PLUMBING FIXTURES	12
15411	PLUMBING PIPING	11
15430	PLUMBING SPECIALTIES	9
15480	DOMESTIC WATER HEATERS	3
15738	SPLIT SYSTEM AIR CONDITIONING UNITS	5
15784	ROOFTOP UNITS	9
15815	METAL DUCTS	12
15820	DUCT ACCESSORIES	8
15850	AIR HANDLING	7
15950	TESTING, ADJUSTING, & BALANCING	8

SECTION 15010 - BASIC MECHANICAL REQUIREMENTS July 10, 2007

PART 1 - GENERAL

1.1 RELATED DOCUMENTS

A. Drawings and general provisions of Contract, including General and Supplementary Conditions and Division 1 Specification Sections, apply to this and the other sections of Division 15.

B. This section applies to all Division 15 specification sections.

1.2 SUMMARY

A. This Section includes general administrative and procedural requirements for mechanical installations. The following administrative and procedural requirements are included in this Section to expand the requirements specified in Division 1:
   1. Submittals.
   2. Coordination drawings.
   3. Record documents.
   4. Rough-ins.
   5. Mechanical installations.
   6. Cutting and patching.

B. Related Sections: The following sections contain requirements that relate to this section:
   1. Division 15 Section "BASIC MECHANICAL MATERIALS AND METHODS," for materials and methods common to the remainder of Division 15, plus general related specifications including:
      a. Access to mechanical installations.
      b. Excavation for mechanical installations within the building boundaries, and from building to utilities connections.

1.3 GOVERNING REGULATIONS AND AUTHORITIES

A. Regulations include laws, ordinances, codes, statutes, and lawful orders issued by authorities having jurisdiction, as well as rules, conventions, and agreements within the construction industry that control performance of the work, govern the execution of the work embodied in the contract documents, and the interpretation of the contract documents.

B. Applicable codes and documents to this project are, but not limited to, the following:
   1. 2003 International Building Code - (with Utah amendments)
   2. 2003 International Mechanical Code - (with Utah amendments)
   3. 2003 International Plumbing Code - (with Utah amendments)
   4. 2003 International Energy Conservation Code.
   5. National Electrical Code - current edition

1.4 SUBMITTALS

A. General: Follow the procedures specified in Division 1 Section "SUBMITTALS", and as outlined below.
   1. By description, catalog number and manufacturer's name standards of quality have been established for certain manufactured equipment items and specialties

which are to be furnished by this Division. Substitute products of equal or better quality may only be proposed for use if specifically named in the specifications or given written approval prior to bidding. Requests for substitution shall be made in accordance with the General Provisions.

2. Within 45 days after the date of award of contract, and before commencement of work, a complete schedule of all equipment and materials proposed for installation shall be submitted.
3. Submittal data for Division 15 shall be submitted arranged in a three-ring binder. Binder shall have a complete index with equipment listed in the same sequence as the sections in the specifications. Identify the equipment submitted with drawings, schedule number, and specification paragraph number.
4. Submittals shall include, but not be limited to the following:
   a. Scheduled Equipment Items
   b. Vibration Elimination Devices
   c. Seismic Restraint System
   d. Valves
   e. Insulation
   f. Registers, Grilles, and Diffusers
   g. Automatic Temperature Controls
   h. Automation System
   i. Plumbing Fixtures
   j. Certificates of Guarantee
5. Description of equipment shall include sizes, capacities, operating characteristics, brand names, motor horsepowers, accessories, materials gauges, manufacturer's maintenance instructions and other pertinent information required to establish quality of the products. List on the front of catalogs the page number referring to submitted items. Underline applicable data on the indicated pages. Where proposed equipment size varies from equipment first named, Contractor shall specifically call Architect's attention to that fact in writing at the time of submission of data.
6. All submittal data shall be turned over to the Architect at one time. No consideration will be given to partial submittals.
7. After engineering review, the Contractor may proceed to place an order for such item of equipment. However, actual fabrication by manufacturer may not commence until complete and accurate shop drawings have been submitted to Architect and have received his reviewed stamp and signature.
8. A copy of the complete contract specification for the item, including motor requirements and any specific details of construction, shown on the drawings shall be sent to the factory furnishing such item, at the time the order is placed to avoid unnecessary errors.
9. The Contractor should protect himself with the supplier of alternate named equipment. Should Contractor submit on any item of equipment other than first named equipment in the specification and if alternate equipment is rejected or disapproved by the Architect for any of the reasons stated above, the Contractor shall be required to resubmit on first named equipment.
10. All items other than first named specified equipment shall show and state all exceptions and deviations taken and shall include design calculations.
11. The Contractor shall review the submittals prior to submission to make sure that submittals are complete in all details. Contractor shall verify equipment dimensions to fit the spaces provided with sufficient clearance for servicing the equipment. Submittals will not be reviewed which do not bear the Contractor's notation that such checking has been made.
12. Equipment submittal shall show the proper arrangements to suit installation and maintenance such as motor location, access doors, filter removal, piping connections, etc.

13. Equipment submittal sheets shall be clearly marked indicating equipment symbol and exact selection of proposed equipment.
14. Review and acceptance of submittal does not relieve the Contractor of responsibility for fulfilling the contract requirements. Review of the submittal shall not change the contract requirements. Items not covered in the accepted submittal or items incorrectly covered but not recognized or identified shall not be used contrary to the contract documents.
15. Verify electrical characteristics of all equipment with Division 16 before ordering any equipment.

B. Increase, by the quantity listed below, the number of mechanical related shop drawings, product data, and samples submitted, to allow for required distribution plus one copy of each submittal required, which will be retained by the Mechanical Consulting Engineer.
1. Shop Drawings - Initial Submittal: 1 additional blue- or black-line prints.
2. Shop Drawings - Final Submittal: 1 additional blue- or black-line prints.
3. Product Data: 1 additional copy of each item.
4. Samples: 1 additional set.

C. Additional copies may be required by individual sections of these Specifications.

1.5 COORDINATION DRAWINGS

A. Prepare coordination drawings in accordance with Division 1 Section "COORDINATION," to a scale of 1/4"=1'-0" or larger; detailing major elements, components, and systems of mechanical equipment and materials in relationship with other systems, installations, and building components. Indicate locations where space is limited for installation and access and where sequencing and coordination of installations are of importance to the efficient flow of the Work, including (but not necessarily limited to) the following:
1. Indicate the proposed locations of piping, ductwork, equipment, and materials. Include the following:
   a. Clearances for installing and maintaining insulation.
   b. Clearances for servicing and maintaining equipment, including tube removal, filter removal, and space for equipment disassembly required for periodic maintenance.
   c. Equipment connections and support details.
   d. Exterior wall and foundation penetrations.
   e. Fire-rated wall and floor penetrations.
   f. Sizes and location of required concrete pads and bases.
   g. Valve stem movement.
2. Indicate scheduling, sequencing, movement, and positioning of large equipment into the building during construction.
3. Prepare floor plans, elevations, and details to indicate penetrations in floors, walls, and ceilings and their relationship to other penetrations and installations.
4. Prepare reflected ceiling plans to coordinate and integrate installations, air outlets and inlets, light fixtures, communication systems components, sprinklers, and other ceiling-mounted items.

1.6 RECORD DOCUMENTS

A. Prepare record documents in accordance with the requirements in Division 1 Section "CONTRACT CLOSEOUT." In addition to the requirements specified in Division 1, indicate the following installed conditions:
1. Ductwork mains and branches, size and location, for both exterior and interior; locations of dampers and other control devices; filters, boxes, and terminal units requiring periodic maintenance or repair.

2. Mains and branches of piping systems, with valves and control devices located and numbered, concealed unions located, and with items requiring maintenance located (i.e., traps, strainers, expansion compensators, tanks, etc.). Valve location diagrams, complete with valve tag chart. Refer to Division 15 Section "Mechanical Identification." Indicate actual inverts and horizontal locations of underground piping.
3. Equipment locations (exposed and concealed), dimensioned from prominent building lines.
4. Approved substitutions, Contract Modifications, and actual equipment and materials installed.

B. Engage the services of a Land Surveyor or Professional Engineer registered in the state in which the project is located as specified in Division 1 Section "FIELD ENGINEERING" to record the locations and invert elevations of underground installations.

1.7 DELIVERY, STORAGE, AND HANDLING

A. Deliver products to the project properly identified with names, model numbers, types, grades, compliance labels, and other information needed for identification.

1.8 WARRANTIES

A. In addition to guarantee specified in General Conditions, guarantee heating and plumbing systems to be free from noise in operation that may develop from failure to construct system in accordance with Contract Documents.

B. That the circulation of water or glycol shall be complete and even.

C. That all pipes, conduit, and connections shall be free from foreign matter and pockets and that all other obstructions to the free passage of water, liquid and vent shall be removed.

D. That all devices incorporated in these systems shall be adjusted in a manner that each shall develop its maximum efficiency in the operation of the system.

E. All equipment and the complete system shall be guaranteed for a period of one year from the date of Substantial Completion. The Contractor shall be responsible for a 100-percent guarantee for the system and all items of equipment for this period.

F. Any failure that disables a heating or cooling system shall have repairs completed within 24 hours. If repair parts are not available in local stock, they shall be shipped via air freight at no charge to the owner.

PART 2 - PRODUCTS

2.1 GENERAL

A. Arrange equipment with factory panels, conduits, piping, etc. to allow proper access to equipment. Comply with clearances required by the National Electric Code.

PART 3 - EXECUTION

3.1 ROUGH-IN

A. Verify final locations for rough-ins with field measurements and with the requirements of the actual equipment to be connected.

B. Refer to equipment specifications in Divisions 2 through 16 for rough-in requirements.

3.2 MECHANICAL INSTALLATIONS

A. General: Sequence, coordinate, and integrate the various elements of mechanical systems, materials, and equipment. Comply with the following requirements:

1. Coordinate mechanical systems, equipment, and materials installation with other building components.
2. Verify all dimensions by field measurements.
3. Arrange for chases, slots, and openings in other building components during progress of construction, to allow for mechanical installations.
4. Coordinate the installation of required supporting devices and sleeves to be set in poured-in-place concrete and other structural components, as they are constructed.
5. Sequence, coordinate, and integrate installations of mechanical materials and equipment for efficient flow of the Work. Give particular attention to large equipment requiring positioning prior to closing in the building.
6. Where mounting heights are not detailed or dimensioned, install systems, materials, and equipment to provide the maximum headroom possible.
7. Coordinate connection of mechanical systems with exterior underground and overhead utilities and services. Comply with requirements of governing regulations, franchised service companies, and controlling agencies. Provide required connection for each service.
8. Install systems, materials, and equipment to conform with manufacturers installation instructions and approved submittal data, including coordination drawings, to greatest extent possible. Conform to arrangements indicated by the Contract Documents, recognizing that portions of the Work are shown only in diagrammatic form. Where coordination requirements conflict with individual system requirements, refer conflict to the Architect.
9. Install systems, materials, and equipment level and plumb, parallel and perpendicular to other building systems and components, where installed exposed in finished spaces.
10. Install mechanical equipment to facilitate servicing, maintenance, and repair or replacement of equipment components. As much as practical, connect equipment for ease of disconnecting, with minimum of interference with other installations. Extend grease fittings to an accessible location.
11. Provide and install access panel or doors where mechanical devices such as valves, dampers, fire dampers, etc. are concealed behind finished surfaces. Access panels and doors are specified in Division 8 Section "ACCESS DOORS AND FRAMES."
12. Install systems, materials, and equipment giving right-of-way priority to systems required to be installed at a specified slope.
13. Completely clean all mechanical equipment and systems of dirt, dust, debris and overspray at the time of substantial completion.
14. All factory-authorized equipment start-ups shall be witnessed by the Owner's representative, unless written exception is given. Any equipment start-ups completed without Owner's representative being present shall be repeated.

3.3 CUTTING AND PATCHING

A. General: Perform cutting and patching in accordance with Division 1 Section "CUTTING AND PATCHING." In addition to the requirements specified in Division 1, the following requirements apply:
   1. Protection of Installed Work: During cutting and patching operations, protect adjacent installations.

B. Perform cutting, fitting, and patching of mechanical equipment and materials required to:
   1. Uncover Work to provide for installation of ill-timed Work.
   2. Remove and replace defective Work.
   3. Remove and replace Work not conforming to requirements of the Contract Documents.
   4. Remove samples of installed Work as specified for testing.
   5. Install equipment and materials in existing structures.
   6. Upon written instructions from the Architect, uncover and restore Work to provide for Architect/Engineer observation of concealed Work.

C. Cut, remove and legally dispose of selected mechanical equipment, components, and materials as indicated, including but not limited to removal of mechanical piping, heating units, plumbing fixtures and trim, and other mechanical items made obsolete by the new Work.

D. Protect the structure, furnishings, finishes, and adjacent materials not indicated or scheduled to be removed.

E. Provide and maintain temporary partitions or dust barriers adequate to prevent the spread of dust and dirt to adjacent areas.
   1. Patch existing finished surfaces and building components using new materials matching existing materials and experienced Installers. Installers' qualifications refer to the materials and methods required for the surface and building components being patched.
      a. Refer to Division 1 Section "DEFINITIONS AND STANDARDS" for definition of "experienced Installer."
   2. Patch finished surfaces and building components using new materials specified for the original installation and experienced Installers. Installers' qualifications refer to the materials and methods required for the surface and building components being patched.
      a. Refer to Division 1 Section "DEFINITIONS AND STANDARDS" for definition of "experienced Installer."

END OF SECTION 15010

SECTION 15050 - BASIC MECHANICAL MATERIALS AND METHODS July 10, 2007

PART 1 - GENERAL

1.1 RELATED DOCUMENTS

A. Drawings and general provisions of the Contract, including General and Supplementary Conditions and Division 1 Specification Sections, apply to this Section.

B. This section applies to all Division 15 specification sections.

1.2 SUMMARY

A. This Section includes the following basic mechanical materials and methods to complement other Division 15 Sections.
1. Piping materials and installation instructions common to most piping systems.
2. Concrete base construction requirements.
3. Escutcheons.
4. Dielectric fittings.
5. Flexible connectors.
6. Mechanical sleeve seals.
7. Equipment nameplate data requirements.
8. Labeling and identifying mechanical systems and equipment is specified in Division 15 Section "Mechanical Identification."
9. Nonshrink grout for equipment installations.
10. Field-fabricated metal and wood equipment supports.
11. Installation requirements common to equipment specification sections.
12. Mechanical demolition.
13. Cutting and patching.
14. Touchup painting and finishing.
15. Accessibility.

B. Pipe and pipe fitting materials are specified in Division 15 piping system Sections.

1.3 DEFINITIONS

A. Finished Spaces: Spaces other than mechanical and electrical equipment rooms, furred spaces, pipe and duct shafts, unheated spaces immediately below roof, spaces above ceilings, unexcavated spaces, crawl spaces, and tunnels.

B. Exposed, Interior Installations: Exposed to view indoors. Examples include finished occupied spaces, mechanical equipment rooms and utility tunnels.

C. Exposed, Exterior Installations: Exposed to view outdoors, or subject to outdoor ambient temperatures and weather conditions. Examples include rooftop locations.

D. Concealed, Interior Installations: Concealed from view and protected from physical contact by building occupants. Examples include above ceilings and in duct shafts.

E. Concealed, Exterior Installations: Concealed from view and protected from weather conditions and physical contact by building occupants, but subject to outdoor ambient temperatures. Examples include installations within unheated shelters.

F. The following are industry abbreviations for plastic materials:
   1. ABS: Acrylonitrile-butadiene-styrene plastic.
   2. CPVC: Chlorinated polyvinyl chloride plastic.
   3. NP: Nylon plastic.
   4. PE: Polyethylene plastic.
   5. PVC: Polyvinyl chloride plastic.

G. The following are industry abbreviations for rubber materials:
   1. CR: Chlorosulfonated polyethylene synthetic rubber.
   2. EPDM: Ethylene propylene diene terpolymer rubber.

1.4 SUBMITTALS

A. Product Data: For dielectric fittings, flexible connectors, mechanical sleeve seals, and identification materials and devices.

B. Shop Drawings: Detail fabrication and installation for metal and wood supports and anchorage for mechanical materials and equipment.

C. Welder Certificates signed by Contractor certifying that welders comply with requirements specified under the "Quality Assurance" Article.

1.5 COORDINATION DRAWINGS

A. General: Detail major elements, components, and systems of mechanical equipment and materials in relationship with other systems, installations, and building components. Show space requirements for installation and access. Indicate if sequence and coordination of installations are important to efficient flow of the Work. Have coordination drawings available at job site for coordination. Include the following:
   1. Planned piping layout, including valve and specialty locations and valve-stem movement.
   2. Clearances for installing and maintaining insulation.
   3. Clearances for servicing and maintaining equipment, accessories, and specialties, including space for disassembly required for periodic maintenance.
   4. Equipment and accessory service connections and support details.
   5. Exterior wall and foundation penetrations.
   6. Fire-rated wall and floor penetrations.
   7. Sizes and location of required concrete pads and bases.
   8. Scheduling, sequencing, movement, and positioning of large equipment into building during construction.
   9. Floor plans, elevations, and details to indicate penetrations in floors, walls, and ceilings and their relationship to other penetrations and installations.
   10. Reflected ceiling plans to coordinate and integrate installation of air outlets and inlets, light fixtures, communication system components, sprinklers, and other ceiling-mounted items.
   11. Planned duct systems layout, including elbow radii and duct accessories.
   12. Access panel and door locations.

B. Samples: Of color, lettering style, and other graphic representation required for each identification material and device.

1.6 QUALITY ASSURANCE

A. Comply with ASME A13.1 for lettering size, length of color field, colors, and viewing angles of identification devices.

B. Equipment Selection: Equipment of higher electrical characteristics, physical dimensions, capacities, and ratings may be furnished provided such proposed equipment is approved in writing and connecting mechanical and electrical services, circuit breakers, conduit, motors, bases, and equipment spaces are increased. No additional costs will be approved for these increases. If minimum energy ratings or efficiencies of equipment are specified, equipment must meet design and commissioning requirements.

C. Qualify welding processes and operators for structural steel according to AWS D1.1 "Structural Welding Code -- Steel."

D. Qualify welding processes and operators for piping according to ASME "Boiler and Pressure Vessel Code," Section IX, "Welding and Brazing Qualifications."
   1. Comply with provisions of ASME B31 Series "Code for Pressure Piping."
   2. Certify that each welder has passed AWS qualification tests for the welding processes involved and that certification is current.

1.7 DELIVERY, STORAGE, AND HANDLING

A. Deliver pipes and tubes with factory-applied end caps. Maintain end caps through shipping, storage, and handling to prevent pipe end damage and prevent entrance of dirt, debris, and moisture.

B. Protect stored pipes and tubes from moisture and dirt. Elevate above grade. Do not exceed structural capacity of floor, if stored inside.

C. Protect flanges, fittings, and piping specialties from moisture and dirt.

D. Store plastic pipes protected from direct sunlight. Support to prevent sagging and bending.

1.8 SEQUENCING AND SCHEDULING

A. Coordinate mechanical equipment installation with other building components.

B. Arrange for pipe spaces, chases, slots, and openings in building structure during progress of construction to allow for mechanical installations.

C. Coordinate installation of required supporting devices and set sleeves in poured-in-place concrete and other structural components, as they are constructed.

D. Sequence, coordinate, and integrate installations of mechanical materials and equipment for efficient flow of the Work. Coordinate installation of large equipment requiring positioning before closing in building.

E. Coordinate connection of mechanical systems with exterior underground and overhead utilities and services. Comply with requirements of governing regulations, franchised service companies, and controlling agencies.

F. Coordinate requirements for access panels and doors if mechanical items requiring access are concealed behind finished surfaces. Access panels and doors are specified in Division 8 Section "Access Doors and Frames."

G. Coordinate installation of identifying devices after completing covering and painting, if devices are applied to surfaces. Install identifying devices before installing acoustical ceilings and similar concealment.

H. Coordinate connection of electrical services.

PART 2 - PRODUCTS

2.1 MANUFACTURERS

A. Manufacturers: Subject to compliance with requirements, provide products by one of the following:

1. Dielectric Unions:
   a. Capitol Manufacturing Co.
   b. Central Plastics Co.
   c. Eclipse, Inc.; Rockford-Eclipse Div.
   d. Epco Sales Inc.
   e. Hart Industries International, Inc.
   f. Watts Industries, Inc.; Water Products Div.
   g. Zurn Industries, Inc.; Wilkins Div.

2. Dielectric Flanges:
   a. Capitol Manufacturing Co.
   b. Central Plastics Co.
   c. Epco Sales Inc.
   d. Watts Industries, Inc.; Water Products Div.

3. Dielectric-Flange Insulating Kits:
   a. Calpico, Inc.
   b. Central Plastics Co.

4. Dielectric Couplings:
   a. Calpico, Inc.
   b. Lochinvar Corp.

5. Dielectric Nipples:
   a. Grinnell Corp.; Grinnell Supply Sales Co.
   b. Perfection Corp.
   c. Victaulic Co. of America.

6. Metal, Flexible Connectors:
   a. ANAMET Industrial, Inc.
   b. Central Sprink, Inc.
   c. Flexicraft Industries.
   d. Flex-Weld, Inc.
   e. Grinnell Corp.; Grinnell Supply Sales Co.
   f. Hyspan Precision Products, Inc.
   g. McWane, Inc.; Tyler Pipe; Gustin-Bacon Div.
   h. Mercer Rubber Co.
   i. Metraflex Co.
   j. Proco Products, Inc.
   k. Uniflex, Inc.

7. Mechanical Sleeve Seals:
   a. Calpico, Inc.
   b. Metraflex Co.
   c. Thunderline/Link-Seal.

2.2 PIPE AND PIPE FITTINGS

A. All pipe and pipe fittings shall be American made and clearly labeled as such.

B. Refer to individual Division 15 piping Sections for pipe and fitting materials and joining methods.

C. Pipe Threads: ASME B1.20.1 for factory-threaded pipe and pipe fittings.

2.3 JOINING MATERIALS

A. Refer to individual Division 15 piping Sections for special joining materials not listed below.

B. Pipe-Flange Gasket Materials: Suitable for chemical and thermal conditions of piping system contents.
   1. ASME B16.21, nonmetallic, flat, asbestos-free, 1/8-inch (3.2-mm) maximum thickness, unless thickness or specific material is indicated.
      a. Full-Face Type: For flat-face, Class 125, cast-iron and cast-bronze flanges.
      b. Narrow-Face Type: For raised-face, Class 250, cast-iron and steel flanges.
   2. AWWA C110, rubber, flat face, 1/8 inch (3.2 mm) thick, unless otherwise indicated; and full-face or ring type, unless otherwise indicated.

C. Flange Bolts and Nuts: ASME B18.2.1, carbon steel, unless otherwise indicated.

D. Plastic, Pipe-Flange Gasket, Bolts, and Nuts: Type and material recommended by piping system manufacturer, unless otherwise indicated.

E. Solder Filler Metals: ASTM B 32.
   1. Alloy Sn95 or Alloy Sn94: Approximately 95 percent tin and 5 percent silver, with 0.10 percent lead content.
   2. Alloy E: Approximately 95 percent tin and 5 percent copper, with 0.10 percent maximum lead content.
   3. Alloy HA: Tin-antimony-silver-copper zinc, with 0.10 percent maximum lead content.
   4. Alloy HB: Tin-antimony-silver-copper nickel, with 0.10 percent maximum lead content.
   5. Alloy Sb5: 95 percent tin and 5 percent antimony, with 0.20 percent maximum lead content.

F. Brazing Filler Metals: AWS A5.8.
   1. BCuP Series: Copper-phosphorus alloys.
   2. BAg1: Silver alloy.

G. Welding Filler Metals: Comply with AWS D10.12 for welding materials appropriate for wall thickness and chemical analysis of steel pipe being welded.

H. Solvent Cements: Manufacturer's standard solvent cements for the following:
   1. ABS Piping: ASTM D 2235.
   2. CPVC Piping: ASTM F 493.
   3. PVC Piping: ASTM D 2564. Include primer according to ASTM F 656.
   4. PVC to ABS Piping Transition: ASTM D 3138.

I. Plastic Pipe Seals: ASTM F 477, elastomeric gasket.

J. Flanged, Ductile-Iron Pipe Gasket, Bolts, and Nuts: AWWA C110, rubber gasket, carbon-steel bolts and nuts.

K. Couplings: Iron-body sleeve assembly, fabricated to match OD of plain-end, pressure pipes.
   1. Sleeve: ASTM A 126, Class B, gray iron.
   2. Followers: ASTM A 47 (ASTM A 47M) malleable iron or ASTM A 536 ductile iron.
   3. Gaskets: Rubber.
   4. Bolts and Nuts: AWWA C111.
   5. Finish: Enamel paint.

2.4 DIELECTRIC FITTINGS

A. General: Assembly or fitting with insulating material isolating joined dissimilar metals, to prevent galvanic action and stop corrosion.

B. Description: Combination of copper alloy and ferrous; threaded, solder, plain, and weld-neck end types and matching piping system materials.

C. Insulating Material: Suitable for system fluid, pressure, and temperature.

D. Dielectric Unions: Factory-fabricated, union assembly, for 250-psig (1725-kPa) minimum working pressure at 180 deg F (82 deg C).

E. Dielectric Flanges: Factory-fabricated, companion-flange assembly, for 150- or 300-psig (1035- or 2070-kPa) minimum working pressure as required to suit system pressures.

F. Dielectric-Flange Insulation Kits: Field-assembled, companion-flange assembly, full-face or ring type. Components include neoprene or phenolic gasket, phenolic or polyethylene bolt sleeves, phenolic washers, and steel backing washers.
   1. Provide separate companion flanges and steel bolts and nuts for 150- or 300-psig (1035- or 2070-kPa) minimum working pressure as required to suit system pressures.

G. Dielectric Couplings: Galvanized-steel coupling with inert and noncorrosive, thermoplastic lining; threaded ends; and 300-psig (2070-kPa) minimum working pressure at 225 deg F (107 deg C).

H. Dielectric Nipples: Electroplated steel nipple with inert and noncorrosive, thermoplastic lining; plain, threaded, or grooved ends; and 300-psig (2070-kPa) minimum working pressure at 225 deg F (107 deg C).

2.5 FLEXIBLE CONNECTORS

A. General: Fabricated from materials suitable for system fluid and that will provide flexible pipe connections. Include 125-psig (860-kPa) minimum working-pressure rating, unless higher working pressure is indicated, and ends according to the following:
   1. 2-Inch NPS (DN50) and Smaller: Threaded.
   2. 2-1/2-Inch NPS (DN65) and Larger: Flanged.
   3. Option for 2-1/2-Inch NPS (DN65) and Larger: Grooved for use with keyed couplings.

B. Bronze-Hose, Flexible Connectors: Corrugated, bronze, inner tubing covered with bronze wire braid. Include copper-tube ends or bronze flanged ends, braze welded to hose.

C. Stainless-Steel-Hose/Steel Pipe, Flexible Connectors: Corrugated, stainless-steel, inner tubing covered with stainless-steel wire braid. Include steel nipples or flanges, welded to hose.

D. Stainless-Steel-Hose/Stainless-Steel Pipe, Flexible Connectors: Corrugated, stainless-steel, inner tubing covered with stainless-steel wire braid. Include stainless-steel nipples or flanges, welded to hose.

2.6 MECHANICAL SLEEVE SEALS

A. Description: Modular design, with interlocking rubber links shaped to continuously fill annular space between pipe and sleeve. Include connecting bolts and pressure plates.

2.7 PIPING SPECIALTIES

A. Sleeves: The following materials are for wall, floor, slab, and roof penetrations:
   1. Steel Sheet Metal: 0.0239-inch (0.6-mm) minimum thickness, galvanized, round tube closed with welded longitudinal joint.
   2. Steel Pipe: ASTM A 53, Type E, Grade A, Schedule 40, galvanized, plain ends.
   3. Stack Sleeve Fittings: Manufactured, cast-iron sleeve with integral clamping flange. Include clamping ring and bolts and nuts for membrane flashing.
      a. Underdeck Clamp: Clamping ring with set screws.

B. Escutcheons: Manufactured wall, ceiling, and floor plates; deep-pattern type if required to conceal protruding fittings and sleeves.
   1. ID: Closely fit around pipe, tube, and insulation of insulated piping.
   2. OD: Completely cover opening.
   3. Cast Brass: One piece, with set screw.
      a. Finish: Polished chrome-plate.
   4. Cast Brass: Split casting, with concealed hinge and set screw.
      a. Finish: Polished chrome-plate.
   5. Stamped Steel: One piece, with set screw and chrome-plated finish.
   6. Stamped Steel: One piece, with spring clips and chrome-plated finish.
   7. Stamped Steel: Split plate, with concealed hinge, set screw, and chrome-plated finish.
   8. Stamped Steel: Split plate, with concealed hinge, spring clips, and chrome-plated finish.
   9. Stamped Steel: Split plate, with exposed-rivet hinge, set screw, and chrome-plated finish.
   10. Stamped Steel: Split plate, with exposed-rivet hinge, spring clips, and chrome-plated finish.
   11. Cast-Iron Floor Plate: One-piece casting.

2.8 GROUT

A. Nonshrink, Nonmetallic Grout: ASTM C 1107, Grade B.
   1. Characteristics: Post-hardening, volume-adjusting, dry, hydraulic-cement grout, nonstaining, noncorrosive, nongaseous, and recommended for interior and exterior applications.
   2. Design Mix: 5000-psig (34.5-MPa), 28-day compressive strength.
   3. Packaging: Premixed and factory packaged.

PART 3 - EXECUTION

3.1 PIPING SYSTEMS - COMMON REQUIREMENTS

A. General: Install piping as described below, unless piping Sections specify otherwise. Individual Division 15 piping Sections specify unique piping installation requirements.

B. General Locations and Arrangements: Drawing plans, schematics, and diagrams indicate general location and arrangement of piping systems. Indicated locations and arrangements were used to size pipe and calculate friction loss, expansion, pump sizing, and other design considerations. Install piping as indicated, unless deviations to layout are approved on Coordination Drawings.

C. Install piping at indicated slope.

D. Install components with pressure rating equal to or greater than system operating pressure.

E. Install piping in concealed interior and exterior locations, except in equipment rooms and service areas.

F. Install piping free of sags and bends.

G. Install exposed interior and exterior piping at right angles or parallel to building walls. Diagonal runs are prohibited, unless otherwise indicated.

H. Install piping close to slabs, beams, joists, columns, walls, and other building elements. Allow sufficient space above removable ceiling panels to allow for ceiling panel removal.

I. Install piping to allow application of insulation plus 1-inch (25-mm) clearance around insulation.

J. Locate groups of pipes parallel to each other, spaced to permit valve servicing.

K. Install fittings for changes in direction and branch connections.

L. Install couplings according to manufacturer's written instructions.

M. Install pipe escutcheons for pipe penetrations of concrete and masonry walls, wall board partitions, and suspended ceilings according to the following:
   1. Chrome-Plated Piping: Cast brass, one piece, with set screw, and polished chrome-plated finish. Use split-casting escutcheons if required, for existing piping.
   2. Uninsulated Piping Wall Escutcheons: Cast brass or stamped steel, with set screw.
   3. Uninsulated Piping Floor Plates in Utility Areas: Cast-iron floor plates.
   4. Insulated Piping: Cast brass or stamped steel; with concealed hinge, spring clips, and chrome-plated finish.
   5. Piping in Utility Areas: Cast brass or stamped steel, with set-screw or spring clips.

N. Sleeves are not required for core drilled holes.

O. Permanent sleeves are not required for holes formed by PE removable sleeves.

P. Install sleeves for pipes passing through concrete and masonry walls, and concrete floor and roof slabs.

Q. Install sleeves for pipes passing through concrete and masonry walls, gypsum-board partitions, and concrete floor and roof slabs.
   1. Cut sleeves to length for mounting flush with both surfaces.
      a. Exception: Extend sleeves installed in floors of mechanical equipment areas or other wet areas 2 inches (50 mm) above finished floor level. Extend cast-iron sleeve fittings below floor slab as required to secure clamping ring if ring is specified.
   2. Build sleeves into new walls and slabs as work progresses.
   3. Install sleeves large enough to provide 1/4-inch (6.4-mm) annular clear space between sleeve and pipe or pipe insulation. Use the following sleeve materials:
      a. Steel Pipe Sleeves: For pipes smaller than 6-inch NPS (DN150).
      b. Steel, Sheet-Metal Sleeves: For pipes 6-inch NPS (DN150) and larger, penetrating gypsum-board partitions.
      c. Stack Sleeve Fittings: For pipes penetrating floors with membrane waterproofing. Secure flashing between clamping flanges. Install section of cast-iron soil pipe to extend sleeve to 2 inches (50 mm) above finished floor level. Refer to Division 7 Section "Sheet Metal Flashing and Trim" for flashing.
         1) Seal space outside of sleeve fittings with nonshrink, nonmetallic grout.
   4. Except for underground wall penetrations, seal annular space between sleeve and pipe or pipe insulation, using elastomeric joint sealants. Refer to Division 7 Section "Joint Sealants" for materials.
   5. Use Type S, Grade NS, Class 25, Use O, neutral-curing silicone sealant, unless otherwise indicated.

R. Aboveground, Exterior-Wall, Pipe Penetrations: Seal penetrations using sleeves and mechanical sleeve seals. Size sleeve for 1-inch (25-mm) annular clear space between pipe and sleeve for installing mechanical sleeve seals.
   1. Install steel pipe for sleeves smaller than 6 inches (150 mm) in diameter.
   2. Install cast-iron "wall pipes" for sleeves 6 inches (150 mm) in diameter and larger.
   3. Assemble and install mechanical sleeve seals according to manufacturer's written instructions. Tighten bolts that cause rubber sealing elements to expand and make watertight seal.

S. Underground, Exterior-Wall, Pipe Penetrations: Install cast-iron "wall pipes" for sleeves. Seal pipe penetrations using mechanical sleeve seals. Size sleeve for 1-inch (25-mm) annular clear space between pipe and sleeve for installing mechanical sleeve seals.
   1. Assemble and install mechanical sleeve seals according to manufacturer's written instructions. Tighten bolts that cause rubber sealing elements to expand and make watertight seal.

T. Fire-Barrier Penetrations: Maintain indicated fire rating of walls, partitions, ceilings, and floors at pipe penetrations. Seal pipe penetrations with firestopping materials. Refer to Division 7 Section "Firestopping" for materials.

U. Verify final equipment locations for roughing-in.

V. Refer to equipment specifications in other Sections of these Specifications for roughing-in requirements.

W. Piping Joint Construction: Join pipe and fittings as follows and as specifically required in individual piping specification Sections:

1. Ream ends of pipes and tubes and remove burrs. Bevel plain ends of steel pipe.
2. Remove scale, slag, dirt, and debris from inside and outside of pipe and fittings before assembly.
3. Soldered Joints: Construct joints according to AWS's "Soldering Manual," Chapter "The Soldering of Pipe and Tube"; or CDA's "Copper Tube Handbook."
4. Brazed Joints: Construct joints according to AWS's "Brazing Handbook," Chapter "Pipe and Tube."
5. Threaded Joints: Thread pipe with tapered pipe threads according to ASME B1.20.1. Cut threads full and clean using sharp dies. Ream threaded pipe ends to remove burrs and restore full ID. Join pipe fittings and valves as follows:
   a. Note internal length of threads in fittings or valve ends, and proximity of internal seat or wall, to determine how far pipe should be threaded into joint.
   b. Apply appropriate tape or thread compound to external pipe threads, unless dry seal threading is specified.
   c. Align threads at point of assembly.
   d. Tighten joint with wrench. Apply wrench to valve end into which pipe is being threaded.
   e. Damaged Threads: Do not use pipe or pipe fittings with threads that are corroded or damaged. Do not use pipe sections that have cracked or open welds.
6. Welded Joints: Construct joints according to AWS D10.12, "Recommended Practices and Procedures for Welding Low Carbon Steel Pipe," using qualified processes and welding operators according to "Quality Assurance" Article.
7. Flanged Joints: Align flange surfaces parallel. Select appropriate gasket material, size, type, and thickness for service application. Install gasket concentrically positioned. Assemble joints by sequencing bolt tightening to make initial contact of flanges and gaskets as flat and parallel as possible. Use suitable lubricants on bolt threads. Tighten bolts gradually and uniformly using torque wrench.
8. Plastic Piping Solvent-Cement Joints: Clean and dry joining surfaces by wiping with clean cloth or paper towels. Join pipe and fittings according to the following:
   a. Comply with ASTM F 402 for safe-handling practice of cleaners, primers, and solvent cements.
   b. ABS Piping: ASTM D 2235 and ASTM D 2661.
   c. CPVC Piping: ASTM D 2846 and ASTM F 493.
   d. PVC Pressure Piping: ASTM D 2672.
   e. PVC Nonpressure Piping: ASTM D 2855.
   f. PVC to ABS Nonpressure Transition Fittings: Procedure and solvent cement according to ASTM D 3138.
9. Plastic Piping Heat-Fusion Joints: Clean and dry joining surfaces by wiping with clean cloth or paper towels. Join according to ASTM D 2657 procedures and manufacturer's written instructions.
   a. Plain-End Pipe and Fittings: Use butt fusion.
   b. Plain-End Pipe and Socket Fittings: Use socket fusion.

X. Piping Connections: Make connections according to the following, unless otherwise indicated:

1. Install unions, in piping 2-inch NPS (DN50) and smaller, adjacent to each valve and at final connection to each piece of equipment with 2-inch NPS (DN50) or smaller threaded pipe connection.

2. Install flanges, in piping 2-1/2-inch NPS (DN65) and larger, adjacent to flanged valves and at final connection to each piece of equipment with flanged pipe connection.
3. Dry Piping Systems: Install dielectric unions and flanges to connect piping materials of dissimilar metals.
4. Wet Piping Systems: Install dielectric coupling and nipple fittings to connect piping materials of dissimilar metals.

3.2 EQUIPMENT INSTALLATION - COMMON REQUIREMENTS

A. Install equipment to provide maximum possible headroom, if mounting heights are not indicated.

B. Install equipment according to manufacturers written instructions and approved submittal data. Portions of the Work are shown only in diagrammatic form. Refer conflicts to Architect.

C. Install equipment level and plumb, parallel and perpendicular to other building systems and components in exposed interior spaces, unless otherwise indicated.

D. Install mechanical equipment to facilitate service, maintenance, and repair or replacement of components. Connect equipment for ease of disconnecting, with minimum interference to other installations. Extend grease fittings to accessible locations.

E. Install equipment giving right of way to piping installed at required slope.

F. Install flexible connectors on equipment side of shutoff valves, horizontally and parallel to equipment shafts if possible.

G. Coordinate the final location of concealed equipment and devices requiring access with final location of required access panels and doors.

3.3 PAINTING AND FINISHING

A. Refer to Division 9 Section "Painting" for paint materials, surface preparation, and application of paint.

B. Apply paint to exposed piping according to the following, unless otherwise indicated:
1. Interior, Ferrous Piping: Use semigloss, acrylic-enamel finish. Include finish coat over enamel undercoat and primer.
2. Interior, Galvanized-Steel Piping: Use semigloss, acrylic-enamel finish. Include two finish coats over galvanized metal primer.
3. Interior, Ferrous Supports: Use semigloss, acrylic-enamel finish. Include finish coat over enamel undercoat and primer.
4. Exterior, Ferrous Piping: Use semigloss, acrylic-enamel finish. Include two finish coats over rust-inhibitive metal primer.
5. Exterior, Galvanized-Steel Piping: Use semigloss, acrylic-enamel finish. Include two finish coats over galvanized metal primer.
6. Exterior, Ferrous Supports: Use semigloss, acrylic-enamel finish. Include two finish coats over rust-inhibitive metal primer.

C. Do not paint piping specialties with factory-applied finish.

D. Damage and Touchup: Repair marred and damaged factory-painted finishes with materials and procedures to match original factory finish.

3.4 CONCRETE BASES

A. Construct concrete bases of dimensions indicated, but not less than 4 inches (100 mm) larger in both directions than supported unit. Follow supported equipment manufacturer's setting templates for anchor bolt and tie locations. Use 3000-psig (20.7-MPa), 28-day compressive-strength concrete and reinforcement as specified in Division 3 Section "Cast-in-Place Concrete."

B. Reinforce with #3 bars at 12" O.C. both ways and anchor to floor with reinforcing steel unless otherwise indicated. Chamfer top edge and corners.

3.5 ERECTION OF METAL SUPPORTS AND ANCHORAGE

A. Cut, fit, and place miscellaneous metal supports accurately in location, alignment, and elevation to support and anchor mechanical materials and equipment.

B. Field Welding: Comply with AWS D1.1, "Structural Welding Code--Steel."

3.6 ERECTION OF WOOD SUPPORTS AND ANCHORAGE

A. Cut, fit, and place wood grounds, nailers, blocking, and anchorage to support and anchor mechanical materials and equipment.

B. Select fastener sizes that will not penetrate members if opposite side will be exposed to view or will receive finish materials. Tighten connections between members. Install fasteners without splitting wood members.

C. Attach to substrates as required to support applied loads.

3.7 DEMOLITION

A. Disconnect, demolish, and remove Work specified in Division 15 Sections.

B. If pipe, ductwork, insulation, or equipment to remain is damaged or disturbed, remove damaged portions and install new products of equal capacity and quality.

C. Accessible Work: Remove indicated exposed pipe and ductwork in its entirety.

D. Work Abandoned in Place: Cut and remove underground pipe a minimum of 2 inches (50 mm) beyond face of adjacent construction. Cap and patch surface to match existing finish.

E. Removal: Remove indicated equipment from Project site.

F. Temporary Disconnection: Remove, store, clean, reinstall, reconnect, and make operational equipment indicated for relocation.

3.8 CUTTING AND PATCHING

A. Cut, channel, chase, and drill floors, walls, partitions, ceilings, and other surfaces necessary for mechanical installations. Perform cutting by skilled mechanics of trades involved.

B. Repair cut surfaces to match adjacent surfaces.

3.9 GROUTING

A. Install nonmetallic, nonshrink, grout for mechanical equipment base bearing surfaces, pump and other equipment base plates, and anchors. Mix grout according to manufacturer's written instructions.

B. Clean surfaces that will come into contact with grout.

C. Provide forms as required for placement of grout.

D. Avoid air entrapment during placing of grout.

E. Place grout, completely filling equipment bases.

F. Place grout on concrete bases to provide smooth bearing surface for equipment.

G. Place grout around anchors.

H. Cure placed grout according to manufacturer's written instructions.

END OF SECTION 15050

SECTION 15055 - MOTORS July 10, 2007

PART 1 - GENERAL

1.1 RELATED DOCUMENTS

A. Drawings and general provisions of Contract, including General and Supplementary Conditions and Division 1 Specification Sections, apply to this Section.

1.2 SUMMARY

A. This Section includes basic requirements for motors. It includes motors that are factory-installed as part of equipment and appliances as well as field-installed motors.

1.3 QUALITY ASSURANCE

A. Comply with NFPA 70, "National Electrical Code."

B. NRTL Listing: Provide NRTL listed motors.
   1. Term "Listed": As defined in "National Electrical Code," Article 100.
   2. Listing Agency Qualifications: "Nationally Recognized Testing Laboratory" (NRTL) as defined in OSHA Regulation 1910.7.

C. Comply with NEMA MG 1, "Motors and Generators."

D. Comply with UL 1004, "Motors, Electric."

PART 2 - PRODUCTS

2.1 MOTORS, GENERAL

A. General: Requirements below apply to motors covered by this Section except as otherwise indicated.

B. Normally motors larger than 1/2 HP: Polyphase.

C. Normally motors 1/2 HP and smaller: Single-phase.

D. Frequency Rating: 60 Hz.

E. Voltage Rating: Determined by voltage of circuit to which motor is connected for the following motor voltage ratings (utilization voltages):
   1. 120 V Circuit: 115 V - motor rating.
   2. 208 V Circuit: 200 V - motor rating.
   3. 240 V Circuit: 230 V - motor rating.
   4. 480 V Circuit: 460 V - motor rating.

F. Service factors indicated for motors are minimum values and apply at frequency and utilization voltage at which motor is connected. Provide motors which will operate in service factor range when supply voltage is within 10 percent of motor voltage rating.

G. Capacity: Sufficient to start and operate connected loads at designated speeds in indicated environment, and with indicated operating sequence, without exceeding nameplate ratings. Provide motors rated for continuous duty at 100 percent of rated capacity. Provide NEMA torque curve for each motor provided and included in O & M manual.

H. Temperature Rise: Based on 40 deg C ambient except as otherwise indicated.

I. Enclosure: Open dripproof, unless otherwise specified or indicated.

2.2 POLYPHASE MOTORS

A. General: Squirrel-cage induction-type conforming to the following requirements except as otherwise indicated.

B. NEMA Design Letter Designation: "B."

C. Multi-Speed Motors: Separate winding for each speed.

D. Energy Efficient Motors: Nominal efficiency equal to or greater than that stated in NEMA MG 1, table 12-6C for that type and rating of motor.

E. Variable Speed Motors for Use With Solid-State Drives: Energy efficient, squirrel-cage induction, design B units with ratings, characteristics, and features coordinated with and approved by drive manufacturer. NEMA MG-1 Part 31 definite purpose inverter-fed polyphase.

F. Internal Thermal Overload Protection For Motors: For motors so indicated, protection automatically opens control circuit arranged for external connection. Protection operates when winding temperature exceeds safe value calibrated to the temperature rating of the motor insulation.

G. Bearings: Double-shielded, prelubricated ball bearings suitable for radial and thrust loading of the application.

H. Rugged Duty Motors: Totally enclosed with 1.25 minimum service factor. Provide motors with regreasable bearings and equipped with capped relief vents. Insulate windings with nonhygroscopic material. External finish shall be chemical resistant paint over corrosion resistant primer. Provide integral condensate drains.

I. Motors for Reduced Inrush Starting: Coordinate with indicated reduced inrush controller type and with characteristics of driven equipment load. Provide required wiring leads in motor terminal box to suit control method.

2.3 SINGLE-PHASE MOTORS

A. General: Conform to the following requirements except as otherwise indicated.

B. Energy Efficient Motors: One of the following types as selected to suit the starting torque and other requirements of the specific motor application.
   1. Permanent Split Capacitor.
   2. Split-Phase Start, Capacitor-Run.
   3. Capacitor-Start, Capacitor-Run.

C. Shaded-Pole Motors: Use only for motors smaller than 1/20 hp.

D. Internal Thermal Overload Protection for Motors: For motors so indicated, protection automatically opens the power supply circuit to the motor, or a control circuit arranged for external connection. Protection operates when winding temperature exceeds a safe value calibrated to the temperature rating of the motor insulation. Provide device that automatically resets when motor temperature returns to normal range except as otherwise indicated.

E. Bearings, belt connected motors and other motors with high radial forces on motor shaft shall be ball bearing type. Sealed, prelubricated sleeve bearings may be used for other single phase motors.

PART 3 - EXECUTION

3.1 INSTALLATION

A. General: The following requirements apply to field-installed motors.

B. Install motors in accordance with manufacturer's published instructions and the following:
   1. Direct Connected Motors: Mount securely in accurate alignment.
   2. Belt Drive Motors: Use adjustable motor mounting bases. Align pulleys and install belts. Use belts identified by the manufacturer and tension belts in accordance with manufacturer recommendations.

3.2 COMMISSIONING

A. Check operating motors, both factory and field-installed, for unusual conditions during normal operation. Coordinate with the commissioning of the equipment for which the motor is a part.

B. Report unusual conditions.

C. Correct deficiencies of field-installed units.

END OF SECTION 15055

SECTION 15060 - HANGERS AND SUPPORTS July 10, 2007

PART 1 - GENERAL

1.1 RELATED DOCUMENTS

A. Drawings and general provisions of the Contract, including General and Supplementary Conditions and Division 1 Specification Sections, apply to this Section.

1.2 SUMMARY

A. This Section includes hangers and supports for mechanical system piping and equipment.

B. Related Sections include the following:
   1. Division 15 Section "Mechanical Vibration and Seismic Controls" for vibration isolation and seismic restraint devices.

1.3 DEFINITIONS

A. MSS: Manufacturers Standardization Society for the Valve and Fittings Industry.

B. Terminology: As defined in MSS SP-90, "Guidelines on Terminology for Pipe Hangers and Supports."

1.4 PERFORMANCE REQUIREMENTS

A. Design channel support systems for piping to support multiple pipes capable of supporting combined weight of supported systems, system contents, and test water.

B. Design heavy-duty steel trapezes for piping to support multiple pipes capable of supporting combined weight of supported systems, system contents, and test water.

C. Design seismic restraint hangers and supports for piping and equipment.

D. Design and obtain approval from authorities having jurisdiction for seismic restraint hangers and supports for piping and equipment.

1.5 SUBMITTALS

A. Product Data: For each type of pipe hanger, channel support system component, and thermal-hanger shield insert indicated.

B. Shop Drawings: Signed and sealed by a qualified professional engineer for multiple piping supports and trapeze hangers. Include design calculations and indicate size and characteristics of components and fabrication details.

1.6 QUALITY ASSURANCE

A. Welding: Qualify processes and operators according to ASME Boiler and Pressure Vessel Code: Section IX, "Welding and Brazing Qualifications."

B. Engineering Responsibility: Design and preparation of Shop Drawings and calculations for each multiple pipe support and trapeze by a qualified professional engineer.

1. Professional Engineer Qualifications: A professional engineer who is legally qualified to practice in jurisdiction where Project is located and who is experienced in providing engineering services of the kind indicated. Engineering services are defined as those performed for installations of hangers and supports that are similar to those indicated for this Project in material, design, and extent.

PART 2 - PRODUCTS

2.1 MANUFACTURERS

A. Manufacturers: Subject to compliance with requirements, provide products by one of the following:

1. Pipe Hangers:
   a. AAA Technology and Specialties Co., Inc.
   b. B-Line Systems, Inc.
   c. Carpenter & Patterson, Inc.
   d. Empire Tool & Manufacturing Co., Inc.
   e. Globe Pipe Hanger Products, Inc.
   f. Grinnell Corp.
   g. GS Metals Corp.
   h. Michigan Hanger Co., Inc.
   i. National Pipe Hanger Corp.
   j. PHD Manufacturing, Inc.
   k. PHS Industries, Inc.
   l. Piping Technology & Products, Inc.

2. Channel Support Systems:
   a. B-Line Systems, Inc.
   b. Grinnell Corp.; Power-Strut Unit.
   c. GS Metals Corp.
   d. Michigan Hanger Co., Inc.; O-Strut Div.
   e. National Pipe Hanger Corp.
   f. Thomas & Betts Corp.
   g. Unistrut Corp.
   h. Wesanco, Inc.

3. Thermal-Hanger Shield Inserts:
   a. Carpenter & Patterson, Inc.
   b. Michigan Hanger Co., Inc.
   c. PHS Industries, Inc.
   d. Pipe Shields, Inc.
   e. Rilco Manufacturing Co., Inc.
   f. Value Engineered Products, Inc.

4. Powder-Actuated Fastener Systems:
   a. Gunnebo Fastening Corp.
   b. Hilti, Inc.
   c. ITW Ramset/Red Head.
   d. Masterset Fastening Systems, Inc.

2.2 MANUFACTURED UNITS

A. Pipe Hangers, Supports, and Components: MSS SP-58, factory-fabricated components. Refer to "Hanger and Support Applications" Article in Part 3 for where to use specific hanger and support types.
   1. Coatings: Galvanized, Metallic.
   2. Nonmetallic Coatings: On attachments for electrolytic protection where attachments are in direct contact with copper tubing.

B. Channel Support Systems: MFMA-2, factory-fabricated components for field assembly.
   1. Coatings: Galvanized, Metallic.
   2. Nonmetallic Coatings: On attachments for electrolytic protection where attachments are in direct contact with copper tubing.

C. Thermal-Hanger Shield Inserts: 100-psi (690-kPa) minimum compressive-strength insulation, encased in sheet metal shield.
   1. Material for Cold Piping: ASTM C 552, Type I cellular glass or water-repellent-treated, ASTM C 533, Type I calcium silicate with vapor barrier.
   2. Material for Hot Piping: ASTM C 552, Type I cellular glass or water-repellent-treated, ASTM C 533, Type I calcium silicate.
   3. For Trapeze or Clamped System: Insert and shield cover entire circumference of pipe.
   4. For Clevis or Band Hanger: Insert and shield cover lower 180 degrees of pipe.
   5. Insert Length: Extend 2 inches (50 mm) beyond sheet metal shield for piping operating below ambient air temperature.

D. Rooftop Support Systems: Factory-fabricated components consisting of rubber support base and 12 gage or 14 gage Channel.
   1. Supports complete with channel mounted on base or adjustable height angle supported from threaded rods attached to the base.
   2. Manufactured units by B-line; Series C, CB, CS or CE.

2.3 MISCELLANEOUS MATERIALS

A. Powder-Actuated Drive-Pin Fasteners: Powder-actuated-type, drive-pin attachments with pull-out and shear capacities appropriate for supported loads and building materials where used.

B. Mechanical-Anchor Fasteners: Insert-type attachments with pull-out and shear capacities appropriate for supported loads and building materials where used.

C. Structural Steel: ASTM A 36/A 36M, steel plates, shapes, and bars, black and galvanized.

D. Grout: ASTM C 1107, Grade B, factory-mixed and -packaged, nonshrink and nonmetallic, dry, hydraulic-cement grout.
   1. Characteristics: Post hardening and volume adjusting; recommended for both interior and exterior applications.
   2. Properties: Nonstaining, noncorrosive, and nongaseous.
   3. Design Mix: 5000-psi (34.5-MPa), 28-day compressive strength.

E. Rooftop Piping Supports: Unless otherwise indicated and except as specified in piping system Specification Sections, install pre-manufactured rooftop piping support systems.

PART 3 - EXECUTION

3.1 HANGER AND SUPPORT APPLICATIONS

A. Specific hanger requirements are specified in Sections specifying equipment and systems.

B. Comply with MSS SP-69 for pipe hanger selections and applications that are not specified in piping system Specification Sections.

C. Horizontal-Piping Hangers and Supports: Unless otherwise indicated and except as specified in piping system Specification Sections, install the following types:

1. Adjustable Steel Clevis Hangers (MSS Type 1): For suspension of noninsulated or insulated stationary pipes, NPS 1/2 to NPS 30 (DN15 to DN750).
2. Yoke-Type Pipe Clamps (MSS Type 2): For suspension of 120 to 450 deg F (49 to 232 deg C) pipes, NPS 4 to NPS 16 (DN100 to DN400), requiring up to 4 inches (100 mm) of insulation.
3. Carbon- or Alloy-Steel, Double-Bolt Pipe Clamps (MSS Type 3): For suspension of pipes, NPS 3/4 to NPS 24 (DN20 to DN600), requiring clamp flexibility and up to 4 inches (100 mm) of insulation.
4. Steel Pipe Clamps (MSS Type 4): For suspension of cold and hot pipes, NPS 1/2 to NPS 24 (DN15 to DN600), if little or no insulation is required.
5. Pipe Hangers (MSS Type 5): For suspension of pipes, NPS 1/2 to NPS 4 (DN15 to DN100), to allow off-center closure for hanger installation before pipe erection.
6. Adjustable Swivel Split- or Solid-Ring Hangers (MSS Type 6): For suspension of noninsulated stationary pipes, NPS 3/4 to NPS 8 (DN20 to DN200).
7. Adjustable Steel Band Hangers (MSS Type 7): For suspension of noninsulated stationary pipes, NPS 1/2 to NPS 8 (DN15 to DN200).
8. Adjustable Band Hangers (MSS Type 9): For suspension of noninsulated stationary pipes, NPS 1/2 to NPS 8 (DN15 to DN200).
9. Adjustable Swivel-Ring Band Hangers (MSS Type 10): For suspension of noninsulated stationary pipes, NPS 1/2 to NPS 2 (DN15 to DN50).
10. Split Pipe-Ring with or without Turnbuckle-Adjustment Hangers (MSS Type 11): For suspension of noninsulated stationary pipes, NPS 3/8 to NPS 8 (DN10 to DN200).
11. Extension Hinged or Two-Bolt Split Pipe Clamps (MSS Type 12): For suspension of noninsulated stationary pipes, NPS 3/8 to NPS 3 (DN10 to DN80).
12. U-Bolts (MSS Type 24): For support of heavy pipe, NPS 1/2 to NPS 30 (DN15 to DN750).
13. Clips (MSS Type 26): For support of insulated pipes not subject to expansion or contraction.
14. Pipe Saddle Supports (MSS Type 36): For support of pipes, NPS 4 to NPS 36 (DN100 to DN900), with steel pipe base stanchion support and cast-iron floor flange.
15. Pipe Stanchion Saddles (MSS Type 37): For support of pipes, NPS 4 to NPS 36 (DN100 to DN900), with steel pipe base stanchion support and cast-iron floor flange and with U-bolt to retain pipe.
16. Adjustable Pipe Saddle Supports (MSS Type 38): For stanchion-type support for pipes, NPS 2-1/2 to NPS 36 (DN65 to DN900), if vertical adjustment is required, with steel pipe base stanchion support and cast-iron floor flange.
17. Single Pipe Rolls (MSS Type 41): For suspension of pipes, NPS 1 to NPS 30 (DN25 to DN750), from two rods if longitudinal movement caused by expansion and contraction might occur.

18. Adjustable Roller Hangers (MSS Type 43): For suspension of pipes, NPS 2-1/2 to NPS 20 (DN65 to DN500), from single rod if horizontal movement caused by expansion and contraction might occur.
19. Complete Pipe Rolls (MSS Type 44): For support of pipes, NPS 2 to NPS 42 (DN50 to DN1050), if longitudinal movement caused by expansion and contraction might occur but vertical adjustment is not necessary.
20. Pipe Roll and Plate Units (MSS Type 45): For support of pipes, NPS 2 to NPS 24 (DN50 to DN600), if small horizontal movement caused by expansion and contraction might occur and vertical adjustment is not necessary.
21. Adjustable Pipe Roll and Base Units (MSS Type 46): For support of pipes, NPS 2 to NPS 30 (DN50 to DN750), if vertical and lateral adjustment during installation might be required in addition to expansion and contraction.

D. Vertical-Piping Clamps: Unless otherwise indicated and except as specified in piping system Specification Sections, install the following types:
1. Extension Pipe or Riser Clamps (MSS Type 8): For support of pipe risers, NPS 3/4 to NPS 20 (DN20 to DN500).
2. Carbon- or Alloy-Steel Riser Clamps (MSS Type 42): For support of pipe risers, NPS 3/4 to NPS 20 (DN20 to DN500), if longer ends are required for riser clamps.

E. Hanger-Rod Attachments: Unless otherwise indicated and except as specified in piping system Specification Sections, install the following types:
1. Steel Turnbuckles (MSS Type 13): For adjustment up to 6 inches (150 mm) for heavy loads.
2. Steel Clevises (MSS Type 14): For 120 to 450 deg F (49 to 232 deg C) piping installations.
3. Swivel Turnbuckles (MSS Type 15): For use with MSS Type 11, split pipe rings.
4. Malleable-Iron Sockets (MSS Type 16): For attaching hanger rods to various types of building attachments.
5. Steel Weldless Eye Nuts (MSS Type 17): For 120 to 450 deg F (49 to 232 deg C) piping installations.

F. Building Attachments: Unless otherwise indicated and except as specified in piping system Specification Sections, install the following types:
1. Steel or Malleable Concrete Inserts (MSS Type 18): For upper attachment to suspend pipe hangers from concrete ceiling.
2. Top-Beam C-Clamps (MSS Type 19): For use under roof installations with bar-joist construction to attach to top flange of structural shape.
3. Side-Beam or Channel Clamps (MSS Type 20): For attaching to bottom flange of beams, channels, or angles.
4. Center-Beam Clamps (MSS Type 21): For attaching to center of bottom flange of beams.
5. Welded Beam Attachments (MSS Type 22): For attaching to bottom of beams if loads are considerable and rod sizes are large.
6. C-Clamps (MSS Type 23): For structural shapes.
7. Top-Beam Clamps (MSS Type 25): For top of beams if hanger rod is required tangent to flange edge.
8. Side-Beam Clamps (MSS Type 27): For bottom of steel I-beams.
9. Steel-Beam Clamps with Eye Nuts (MSS Type 28): For attaching to bottom of steel I-beams for heavy loads.
10. Linked-Steel Clamps with Eye Nuts (MSS Type 29): For attaching to bottom of steel I-beams for heavy loads, with link extensions.
11. Malleable Beam Clamps with Extension Pieces (MSS Type 30): For attaching to structural steel.

12. Welded-Steel Brackets: For support of pipes from below or for suspending from above by using clip and rod. Use one of the following for indicated loads:
    a. Light (MSS Type 31): 750 lb (340 kg).
    b. Medium (MSS Type 32): 1500 lb (675 kg).
    c. Heavy (MSS Type 33): 3000 lb (1350 kg).
13. Side-Beam Brackets (MSS Type 34): For sides of steel or wooden beams.
14. Plate Lugs (MSS Type 57): For attaching to steel beams if flexibility at beam is required.
15. Horizontal Travelers (MSS Type 58): For supporting piping systems subject to linear horizontal movement where head room is limited.

G. Saddles and Shields: Unless otherwise indicated and except as specified in piping system Specification Sections, install the following types:
1. Steel Pipe-Covering Protection Saddles (MSS Type 39): To fill interior voids with insulation that matches adjoining insulation.
2. Protection Shields (MSS Type 40): Of length recommended by manufacturer to prevent crushing insulation.
3. Thermal-Hanger Shield Inserts: For supporting insulated pipe, 360-degree insert of high-density, 100-psi (690-kPa) minimum compressive-strength, water-repellent-treated calcium silicate or cellular-glass pipe insulation, same thickness as adjoining insulation with vapor barrier and encased in 360-degree sheet metal shield.

H. Spring Hangers and Supports: Unless otherwise indicated and except as specified in piping system Specification Sections, install the following types:
1. Restraint-Control Devices (MSS Type 47): Where indicated to control piping movement.
2. Spring Cushions (MSS Type 48): For light loads if vertical movement does not exceed 1-1/4 inches (32 mm).
3. Spring-Cushion Roll Hangers (MSS Type 49): For equipping Type 41 roll hanger with springs.
4. Spring Sway Braces (MSS Type 50): To retard sway, shock, vibration, or thermal expansion in piping systems.
5. Variable-Spring Hangers (MSS Type 51): Preset to indicated load and limit variability factor to 25 percent to absorb expansion and contraction of piping system from hanger.
6. Variable-Spring Base Supports (MSS Type 52): Preset to indicated load and limit variability factor to 25 percent to absorb expansion and contraction of piping system from base support.
7. Variable-Spring Trapeze Hangers (MSS Type 53): Preset to indicated load and limit variability factor to 25 percent to absorb expansion and contraction of piping system from trapeze support.
8. Constant Supports: For critical piping stress and if necessary to avoid transfer of stress from one support to another support, critical terminal, or connected equipment. Include auxiliary stops for erection, hydrostatic test, and load-adjustment capability. These supports include the following types:
    a. Horizontal (MSS Type 54): Mounted horizontally.
    b. Vertical (MSS Type 55): Mounted vertically.
    c. Trapeze (MSS Type 56): Two vertical-type supports and one trapeze member.

3.2 HANGER AND SUPPORT INSTALLATION

A. Pipe Hanger and Support Installation: Comply with MSS SP-69 and MSS SP-89. Install hangers, supports, clamps, and attachments as required to properly support piping from building structure.

B. Channel Support System Installation: Arrange for grouping of parallel runs of piping and support together on field-assembled channel systems.
   1. Field assemble and install according to manufacturer's written instructions.

C. Heavy-Duty Steel Trapeze Installation: Arrange for grouping of parallel runs of horizontal piping and support together on field-fabricated, heavy-duty trapezes.
   1. Pipes of Various Sizes: Support together and space trapezes for smallest pipe size or install intermediate supports for smaller diameter pipes as specified above for individual pipe hangers.
   2. Field fabricate from ASTM A 36/A 36M, steel shapes selected for loads being supported. Weld steel according to AWS D-1.1.

D. Install building attachments within concrete slabs or attach to structural steel. Space attachments within maximum piping span length indicated in MSS SP-69. Install additional attachments at concentrated loads, including valves, flanges, guides, strainers, and expansion joints, and at changes in direction of piping. Install concrete inserts before concrete is placed; fasten inserts to forms and install reinforcing bars through openings at top of inserts.

E. Install powder-actuated drive-pin fasteners in concrete after concrete is placed and completely cured. Use operators that are licensed by powder-actuated tool manufacturer. Install fasteners according to powder-actuated tool manufacturer's operating manual.

F. Install mechanical-anchor fasteners in concrete after concrete is placed and completely cured. Install fasteners according to manufacturer's written instructions.

G. Install hangers and supports complete with necessary inserts, bolts, rods, nuts, washers, and other accessories.

H. Install hangers and supports to allow controlled thermal and seismic movement of piping systems, to permit freedom of movement between pipe anchors, and to facilitate action of expansion joints, expansion loops, expansion bends, and similar units.

I. Load Distribution: Install hangers and supports so that piping live and dead loads and stresses from movement will not be transmitted to connected equipment.

J. Pipe Slopes: Install hangers and supports to provide indicated pipe slopes and so maximum pipe deflections allowed by ASME B31.9, "Building Services Piping," is not exceeded.

K. Insulated Piping: Comply with the following:
   1. Attach clamps and spacers to piping.
      a. Piping Operating above Ambient Air Temperature: Clamp may project through insulation.
      b. Piping Operating below Ambient Air Temperature: Use thermal-hanger shield insert with clamp sized to match OD of insert.
      c. Do not exceed pipe stress limits according to ASME B31.9.

2. Install MSS SP-58, Type 39 protection saddles, if insulation without vapor barrier is indicated. Fill interior voids with insulation that matches adjoining insulation.
   a. Option: Thermal-hanger shield inserts may be used. Include steel weight-distribution plate for pipe NPS 4 (DN100) and larger if pipe is installed on rollers.
3. Install MSS SP-58, Type 40 protective shields on cold piping with vapor barrier. Shields shall span arc of 180 degrees.
   a. Option: Thermal-hanger shield inserts may be used. Include steel weight-distribution plate for pipe NPS 4 (DN100) and larger if pipe is installed on rollers.
4. Shield Dimensions for Pipe: Not less than the following:
   a. NPS 1/4 to NPS 3-1/2 (DN8 to DN90): 12 inches (305 mm) long and 0.048 inch (1.22 mm) thick.
   b. NPS 4 (DN100): 12 inches (305 mm) long and 0.06 inch (1.52 mm) thick.
   c. NPS 5 and NPS 6 (DN125 and DN150): 18 inches (457 mm) long and 0.06 inch (1.52 mm) thick.
   d. NPS 8 to NPS 14 (DN200 to DN350): 24 inches (610 mm) long and 0.075 inch (1.91 mm) thick.
   e. NPS 16 to NPS 24 (DN400 to DN600): 24 inches (610 mm) long and 0.105 inch (2.67 mm) thick.
5. Pipes NPS 8 (DN200) and Larger: Include wood inserts.
6. Insert Material: Length at least as long as protective shield.
7. Thermal-Hanger Shields: Install with insulation same thickness as piping insulation.

3.3 EQUIPMENT SUPPORTS

A. Fabricate structural-steel stands to suspend equipment from structure above or to support equipment above floor.

B. Grouting: Place grout under supports for equipment and make smooth bearing surface.

3.4 METAL FABRICATION

A. Cut, drill, and fit miscellaneous metal fabrications for heavy-duty steel trapezes and equipment supports.

B. Fit exposed connections together to form hairline joints. Field-weld connections that cannot be shop-welded because of shipping size limitations.

C. Field Welding: Comply with AWS D1.1 procedures for shielded metal arc welding, appearance and quality of welds, and methods used in correcting welding work, and with the following:
   1. Use materials and methods that minimize distortion and develop strength and corrosion resistance of base metals.
   2. Obtain fusion without undercut or overlap.
   3. Remove welding flux immediately.
   4. Finish welds at exposed connections so no roughness shows after finishing and contours of welded surfaces match adjacent contours.

3.5 ADJUSTING

A. Hanger Adjustment: Adjust hangers to distribute loads equally on attachments and to achieve indicated slope of pipe.

3.6 PAINTING

A. Touching Up: Clean field welds and abraded areas of shop paint. Paint exposed areas immediately after erecting hangers and supports. Use same materials as used for shop painting. Comply with SSPC-PA 1 requirements for touching up field-painted surfaces.

1. Apply paint by brush or spray to provide a minimum dry film thickness of 2.0 mils (0.05 mm).

B. Galvanized Surfaces: Clean welds, bolted connections, and abraded areas and apply galvanizing-repair paint to comply with ASTM A 780.

END OF SECTION 15060

SECTION 15071 - MECHANICAL VIBRATION AND SEISMIC CONTROLS July 10, 2007

PART 1 - GENERAL

1.1 RELATED DOCUMENTS

A. Drawings and general provisions of Contract, including General and Supplementary Conditions and Division-1 Specification sections, apply to work of this section.

B. This section is part of each Division-15 section making reference to seismic and vibration control products specified herein.

1.2 SEISMIC AND VIBRATION CONTROL

A. General: Division 15 shall be responsible for purchasing and installing vibration isolators, flexible connections, rigid steel frames, concrete inertia bases, anchors, inserts, hangers and attachments and seismic bracing and snubbers as required for seismic control and prevention of the transmission of vibration for both isolated and non-isolated systems.

B. All mechanical equipment shall be designed for the site specific Seismic Zone as per the International Building Code.

C. Reference Standards: The work shall comply to the following standards:
1. International Building Code, current edition
2. NFPA Bulletin 90A, current edition
3. Bridge Bearing Specifications

D. Design Parameters: Refer to Section 1621 of the 2003 International Building Code and ASCE 7-02.

E. Approved Manufacturers:
1. In order to insure that the requirements of the project are achieved, the Contractor must secure the services of a manufacturer or supplier who has proven capabilities of dealing effectively with vibration characteristics, effects and criteria and can provide facilities and capabilities for measuring, evaluating and designing for seismic disturbances.
2. Manufacturers approved for use are:
   a. Mason Industries, Inc.
   b. Amber/Booth Company.
   c. Vibration Eliminator Co.
   d. Kinetics Noise Control.
3. The Manufacturer's responsibilities shall include designing and providing all vibration isolators and seismic restraints. He shall also be responsible for the proper installation of these components. Periodic inspections to the job site will be made as required. He shall make a final inspection and submit a report to the Architect certifying compliance to these specifications, drawings and related standards. Provide submittals as specified.
4. The Manufacturer's responsibilities shall include designing and providing all vibration isolators and seismic restraints. He shall also be responsible for the proper installation of these components. Periodic inspections to the job site will be made as required. The professional engineer who performs the calculations shall make a final inspection and submit a report to the Architect certifying compliance to these specifications, drawings and related standards. The Owner

shall be notified in advance when the seismic engineer will be performing final certification inspection. The Owner may wish to be present for this inspection. Provide submittals as specified.

F. Submittals: Submittal data prior to fabrication, shall include but not be limited to the following:
   1. Complete engineering calculations and shop drawings for all vibration and seismic requirements for all equipment, piping and ductwork.
   2. The Utah State professional stamp of the Engineer who is responsible for the design and operation of the Vibration and Seismic System.
   3. The type, size, and deflection of each isolator proposed for items in this specification and on the drawings.
   4. Details for all the isolators and seismic bracing with snubbers proposed for items in this specification and on the drawings.
   5. Details for steel frames and concrete inertia bases to be used in conjunction with the isolation and seismic restraint of the items in this specification and drawings.
   6. Clearly outlined procedures for installing and adjusting the isolators, seismic bracing and snubber.
   7. The size, loading and location of pipe and duct supports with an as-built plan or complete description of the system.

G. Vibration Isolation:
   1. All mechanical equipment 1 HP, and over unless otherwise noted, shall be isolated from the structure by means of resilient vibration and noise isolators designed and supplied by the Seismic and Vibration Control Manufacturer. Piping and ductwork connected to vibrating equipment shall be isolated from the structure as required to prevent vibration transmission. Isolation equipment, hangers, connections, and other isolating devices shall be designed and installed to prevent transmission of vibration to the structure from the mechanical equipment or any of the associated piping and ductwork.
   2. All vibration isolated equipment shall be mounted on rigid steel frames or concrete bases unless the equipment manufacturer certified direct attachment capability. The steel frames and bases on isolated equipment shall be provided by the Seismic and Vibration Control Manufacturer.

H. Vibration isolators shall be provided as follows and as otherwise indicated:
   1. Suspended exhaust fans and air handling units shall be suspended on Type D spring hangers with neoprene element.
   2. Centrifugal relief/exhaust fans shall be mounted on Type J concrete inertia base with Type B springs.
   3. Vertical pipe risers shall be supported with Type E precompressed spring hangers with neoprene element to allow for thermal expansion.
   4. Roof mounted and floor mounted utility exhaust fans shall be mounted on housed type spring isolators with integral seismic restraint.
   5. Isolate all water, steam and refrigerant piping 1-1/2" and larger within each mechanical equipment room which contains vibration isolated equipment. Isolators shall be Type D spring hangers with neoprene elements.
   6. Isolate all water, steam and refrigerant piping that is connected to vibration isolated equipment, for a distance of at least 50 feet from the equipment. Isolators shall be Type D spring hangers.
   7. Isolate all ductwork within the mechanical equipment rooms which contain vibration isolated equipment. Isolators shall be Type D spring isolators with neoprene elements.

8. Isolate all ductwork that is connected to vibration isolated equipment, for a distance of at least 50 feet from the equipment. Isolators shall be Type D spring hangers with neoprene elements.

I. Vibration isolators shall be as follows:

1. Type B Spring Mounting: Spring type isolators shall be free standing and laterally stable without any housing and complete with 1/4" neoprene acoustical friction pads between the baseplate and the support. All mountings shall have leveling bolts that must be rigidly bolted to the equipment. Spring diameters shall be no less than 0.8 of the compressed height of the spring at rated load. Springs shall have a minimum additional travel to solid equal to 50% of the rated deflection. Submittals shall include spring diameters, deflections, compressed spring height and solid spring height. Mountings shall be type SLF as manufactured by Mason Industries, Inc. or equal by Amber-Booth.
2. Type C Spring Mounting: Equipment with operating weight different from the installed weight, such as chillers, boilers, etc. and equipment exposed to the wind, such as cooling towers, shall be mounted on spring mountings Type B, but a housing shall be used that includes vertical limit stops to prevent spring extension when weight is removed. All restraining bolts shall have large rubber grommets to provide cushioning in the vertical and horizontal directions. The housing shall serve as blocking during erection and cooling tower mounts shall be located between the supporting steel and roof or the grillage and dunnage as shown on the drawings. The installed and operating heights shall be the same. A minimum clearance of 3/8" shall be maintained around restraining bolts and between the housing and the spring so as not to interfere with the spring action. Limit stops shall be out of contact during normal operations. Mounting used out of doors shall be hot dipped galvanized. Mountings shall be SLR as manufactured by Mason Industries, Inc. or equal by Amber-Booth.
3. Type D Spring Hangers: Vibration hangers shall contain a steel spring and 0.3" deflection neoprene element in series. The neoprene element shall be molded with a rod isolation bushing that passes through the hanger box. Spring diameters and hanger box lower hole sizes shall be large enough to permit the hanger rod to swing through a 30 degree arc before contacting the hole and short circuiting the spring. Springs shall have a minimum additional travel to solid equal to 50% of the rated deflection. Hangers shall be type 30N as manufactured by Mason Industries, Inc. or equal by Amber-Booth.
4. Type E Spring Hangers: Vibration hangers shall be Type D, but they shall be precompressed to the rated deflection so as to keep the piping or equipment at a fixed elevation during installation. The hangers shall be designed with a release mechanism to free the spring after the installation is complete and the hanger is subjected to it's full load. Deflection shall be clearly indicated by means of a scale. Hangers shall be type PC30N as manufactured by Mason Industries, Inc. or equal by Amber-Booth.
5. Type F Spring Hangers: Vibration hangers shall contain a steel spring located in a neoprene cup manufactured with a grommet to prevent short circuiting of the hanger rod. The cup shall contain a steel washer designed to properly distribute the load on the neoprene and prevent its extrusion. Spring diameters and hanger box lower hole sizes shall be large enough to permit the hanger rod to swing through a 30 degree arc before contacting the hole and short circuiting the spring. Springs shall have a minimum additional travel to solid equal to 50% of the rated deflection. Hangers shall be provided with an eye bolt on the spring end and provision to attach the housing to the flat iron duct straps. Submittals shall include a scale drawing of the hanger showing the 30 degree capability. Hangers shall be type W30 as manufactured by Mason Industries, Inc. or equal by Amber-Booth.

6. Type G Steel Bases: vibration isolator manufacturer shall furnish integral structural steel bases. Bases shall be rectangular in shape for all equipment other than centrifugal refrigeration machines and pump bases which may be 'T' or 'L' shaped. Pump bases for split case pumps shall include supports for suction and discharge base ells. All perimeter members shall be beams with a minimum depth equal to 1/10th of the longest dimension of the base. Beam depth need not exceed 14" provided that the deflection and misalignment is kept within acceptable limits as determined by the manufacturer. Height saving brackets shall be employed in all mounting locations to provide a base clearance of one inch. Bases shall be type WF as manufactured by Mason Industries, Inc. Mount on Mason SSFLH spring isolators with integral seismic restraints.
7. Type H Steel Bases: Vibration isolator manufacturer shall provide steel members welded to height saving brackets to cradle machines having legs or bases that do not require a compete supplementary base. Members shall be sufficiently rigid to prevent strains in the equipment. Inverted saddles shall be Type ICS as manufactured by Mason Industries, Inc., or equal by Amber-Booth.
8. Type J Concrete Inertia Bases: Vibration isolator manufacturer shall furnish rectangular structural beam or channel concrete forms for floating foundations. Bases for split case pumps shall be large enough to provide support for suction and discharge base ells. The base depth need not exceed 12" unless specifically recommended by the base manufacturer for mass or rigidity. In general, bases shall be a minimum of 1/12th of the longest dimension of the base, but not less than 6". Forms shall include minimum concrete reinforcement consisting of half-inch bars or angles welded in place on 6" centers running both ways in a layer 1-1/2" above the bottom, or additional steel as is required by the structural conditions. Forms shall be furnished with steel members to hold anchor-bolt sleeves when the anchor bolts fall in concrete locations. Height saving brackets shall be employed in all mounting locations to maintain a 1" clearance below the base. Bases shall be Type K as manufactured by Mason Industries, Inc.
9. Type P Neoprene Pad: A pad type mounting consisting of two layers of 3/8" thick ribbed or waffled bridge bearing neoprene pads bonded to a 16 gage galvanized steel separator plate. Anchor bolt with neoprene washer and sleeve.

J. Seismic Restraints:
1. General: The intent of the seismic restraints is to restrain the mechanical equipment, pipes and ducts during an earthquake for life safety purposes; to prevent equipment from overturning; to prevent suspended equipment, pipes and ducts from swaying or falling and creating a potential life safety hazard. For "Essential" and "Hazardous" facilities (as defined in the International Building Code), the intent of the seismic restraint system also includes keeping the mechanical systems operational during and following an earthquake. See Section 05500 "Metal Fabrication" for standards for miscellaneous metal fabrication.
2. The following mechanical items shall be seismically braced as specified, detailed on the drawings, or as recommended by the Seismic and Vibration Control manufacturer:
   a. Packaged Rooftop Air Handlers - anchor bolts
   b. Water Storage Tanks - anchor bolts and cables
   c. Expansion Tanks - cables or anchor bolts
   d. Water Heater - anchor bolts
   e. Roof Exhaust Fans - anchor bolts
   f. All duct work and piping shall be provided with seismic restraints in accordance with the current edition of the International Building Code. Insulated piping longitudinal restraints shall be attached directly to piping.

3. Connections of the seismic bracing to the structure shall be coordinated with the General Contractor and acceptable to the Structural Engineers. In general, connect to beams, concrete slabs, or to the top member of the joists at the panel points. Division 15 shall provide spanner beams where required for seismic bracing. Seismic anchorage shall extend through concrete house keeping pads and anchor to the building floor slabs.
4. The Seismic and Vibration Control manufacturer shall determine the number, size, and type of anchor bolts, cable restraints, seismic snubbers, etc., for each piece of equipment and groups of pipes and ducts. Individual pipes and ducts shall be braced as per the SMACNA details and approved and verified by the Seismic and Vibration Control manufacturer.

K. Seismic Snubbers:
1. All vibration isolated equipment shall be mounted on rigid steel frames or concrete bases as described in the vibration control specifications unless the equipment manufacturer certifies direct attachment capability. Each spring mounted base shall have a minimum of four all-directional seismic snubbers that are double acting and located as close to the vibration isolators as possible to facilitate attachment both to the base and the structure. The snubbers shall consist of interlocking steel members restrained by shock absorbent rubber materials compounded to bridge bearing specifications. Elastomeric materials shall be replaceable and a minimum of 3/4" thick. Snubbers shall be manufactured with an air gap between hard and resilient material of not less than 1/8" nor more than 1/4". Snubbers shall be installed with factory set clearances.
2. The capacity of the seismic snubber at 3/8" deflection shall be 3 to 4 times the load assigned to the mount grouping in its immediate area. Submittals shall include load deflection curves up to 1/2" deflection in the y and z planes. Test shall be conducted in an independent laboratory or under the signed supervision of an independent registered engineer. The snubber assemblies shall be bolted to the test machine as the snubber is normally installed. Test reports shall certify that neither the neoprene elements nor the snubber body sustained any obvious deformation after release of load. Snubbers shall be series Z-1011 as manufactured by Mason Industries, Inc. or equal by Amber-Booth.

END OF SECTION 15071

SECTION 15075 - MECHANICAL IDENTIFICATION July 10, 2007

PART 1 - GENERAL

1.1 RELATED DOCUMENTS

A. Drawings and general provisions of Contract, including General and Supplementary Conditions and Division 1 Specification Sections, apply to this Section.

1.2 SUMMARY

A. This Section includes mechanical identification materials and devices.

1.3 SUBMITTALS

A. General: Submit the following in accordance with Conditions of Contract and Division 1 Specifications Sections.

B. Product data for identification materials and devices.

C. Samples of color, lettering style, and other graphic representation required for each identification material and device.

D. Valve Schedules: Submit valve schedules for each piping system. Reproduce on standard-size bond paper. Tabulate valve number, piping system, system abbreviation (as shown on tag), location of valve (room or space), and variations for identification. Mark valves intended for emergency shutoff and similar special uses. Furnish extra copies (in addition to mounted copies) for Maintenance Manuals.

1.4 QUALITY ASSURANCE

A. Comply with ASME A13.1 for lettering size, length of color field, colors, and viewing angles of identification devices.

1.5 SEQUENCING AND SCHEDULING

A. Coordinate installation of identifying devices after completion of covering and painting where devices are applied to surfaces. Install identifying devices prior to installation of acoustical ceilings and similar concealment.

PART 2 - PRODUCTS

2.1 IDENTIFYING DEVICES AND LABELS

A. General: Products specified are manufacturer's standard products of categories and types required for each application as referenced in other Division 15 Sections. Where more than single type is specified for listed application, selection is Installer's option, but provide single selection for each product category.

B. Stencils: Standard stencils, prepared with letter sizes conforming to recommendations of ASME A13.1. Minimum letter height is 1-1/4 (30 mm) inches for ducts and 3/4 (19 mm) inch for access door signs and similar operational instructions.
   1. Material: Fiberboard or brass.
   2. Stencil Paint: Exterior, oil-based alkyd gloss black enamel, except as otherwise indicated. Paint may be in pressurized spray-can form.
   3. Identification Paint: Exterior, oil-based alkyd enamel in colors according to ASME A13.1, except as otherwise indicated.

C. Snap-On Plastic Pipe Markers: Manufacturer's standard pre-printed, semi-rigid snap-on, color-coded pipe markers conforming to ASME A13.1.

D. Pressure-Sensitive Pipe Markers: Manufacturer's standard pre-printed, color-coded, pressure-sensitive vinyl pipe markers, with permanent adhesive conforming to ASME A13.1.

E. Pipes Smaller Than 6 Inches (150 mm): Full-band pipe markers, extending 360 degrees around pipe at each location.

F. Pipes 6 Inches (150 mm) And Larger: Either full-band or strip-type pipe markers, at least 3 times the letter height and of length required for label.

G. Lettering: Manufacturer's standard pre-printed terms as selected by Architect.

H. Lettering: Use piping system terms as indicated and abbreviate only as necessary for each application length.
   1. Arrows: Either integrally with piping system service lettering (to accommodate both directions), or as separate unit, on each pipe marker to indicate direction of flow.

I. Plastic Duct Markers: Manufacturer's standard laminated plastic, duct markers in the following color code:
   1. Green: Cold air.
   2. Yellow: Hot air.
   3. Yellow/Green: Supply air.
   4. Blue: Exhaust, outside, return, and mixed air.
   5. For hazardous materials exhausts, use colors and designs recommended by ASME A13.1.
   6. Terminology: Include direction of air flow, duct service (supply, return, exhaust, etc.), duct origin (from), duct destination (to), and design cfm.

J. Plastic Tape: Manufacturer's standard color-coded, pressure-sensitive, self-adhesive, vinyl tape, at least 3-mils thick.
   1. Width: 1-1/2-inches (38 mm) wide on pipes with outside diameters (including insulation) less than 6 inches (150 mm); 2-1/2-inches (65 mm) wide for larger pipes.
   2. Color: Comply with ASME A13.1, except where another color selection is indicated.

K. Valve Tags: Stamped or engraved with 1/4-inch (6 mm) letters for piping system abbreviation and 1/2-inch (13 mm) sequenced numbers. Provide a 5/32-inch (4 mm) hole for fastener.
   1. Material: 19-gage polished brass.
   2. Material: 0.032-inch-thick (1 mm) aluminum.
   3. Material: 19-gage stainless steel.

4. Material: 3/32-inch-thick (2 mm) plastic laminate having 2 black surfaces and a white inner layer.
5. Material: Valve manufacturer's standard solid plastic.
6. Size: 1-1/2-inches (38 mm) diameter, except as otherwise indicated.
7. Shape: As indicated for each piping system.

L. Valve Tag Fasteners: Brass chain (wire link or beaded type) or brass S-hooks.

M. Access Panel Markers: 1/16-inch-thick (1.5 mm) engraved plastic-laminate markers, with abbreviated terms and numbers corresponding to concealed valve. Provide 1/8-inch (3 mm) center hole for attachment.

N. Valve Schedule Frames: Glazed extruded aluminum display frame, with screws for removable mounting on masonry walls for each page of valve schedule.
1. Glazing: ASTM C 1036, 2.5 mm, single thickness, sheet glass.
   a. Type: Type I, flat transparent.
   b. Class: Class 1, clear.
   c. Quality: Glazing B, for general applications.

O. Engraved Plastic-Laminate Signs: ASTM D 709, Type I, cellulose, paper-base, phenolic-resin-laminate engraving stock; Grade ES-2, black surface, black phenolic core, with white (letter color) melamine subcore, except when other colors are indicated. Fabricate in sizes required for message. Provide holes for mechanical fastening.
1. Engraved with engraver's standard letter style, of sizes and with terms to match equipment identification.
2. Thickness: 1/16 inch (1.5 mm), for units up to 20 square inches (13,000 sq. mm) or 8 inches (200 mm) length; 1/8 inch (3 mm) for larger units.
3. Fasteners: Self-tapping stainless steel screws or contact-type permanent adhesive.

P. Plastic Equipment Markers: Laminated-plastic, in the following color code:
1. Green: Cooling equipment and components.
2. Yellow: Heating equipment and components.
3. Yellow/Green: Combination cooling and heating equipment and components.
4. Brown: Energy reclamation equipment and components.
5. Blue: Equipment and components that do not meet any of above criteria.
6. For hazardous equipment, use colors and designs recommended by ASME A13.1.
7. Terminology: Include following, matching schedules as closely as possible:
   a. Name and plan number.
   b. Equipment service.
   c. Design capacity.
   d. Other design parameters such as pressure drop, entering and leaving conditions, and rpm.
8. Size: Approximate 2-1/2 by 4 inches (65 by 100 mm) for control devices, dampers, and valves; and 4-1/2 by 6 inches (115 by 150 mm) for equipment.

Q. Plasticized Tags: Pre-printed or partially pre-printed accident-prevention tags, of plasticized card stock with matt finish suitable for writing.
1. Size: Approximately 3-1/4 by 5-5/8 inches (80 by 140 mm).
2. Fasteners: Brass grommets and wire.
3. Nomenclature: Large-size primary wording such as "DANGER," "CAUTION," or "DO NOT OPERATE."

R. Lettering and Graphics: Coordinate names, abbreviations, and other designations used in mechanical identification, with corresponding designations indicated. Use numbers, letters, and terms indicated for proper identification, operation, and maintenance of mechanical systems and equipment.

1. Multiple Systems: Where multiple systems of same name are indicated, identify individual system number as well as service (such as Boiler No. 3, Air Supply No. 1H, or Standpipe F12).

PART 3 - EXECUTION

3.1 LABELING AND IDENTIFYING

A. Piping Systems: Install pipe markers on each system. Include arrows showing normal direction of flow.

1. Stenciled Markers: Complying with ASME A13.1.
2. Plastic markers, with application systems. Install on pipe insulation segment where required for hot non-insulated pipes.
   a. Fasten markers on pipes smaller than 6 inches (150 mm) by one of following methods:
      1) Snap-on application of pre-tensioned semi-rigid plastic pipe marker.
      2) Adhesive lap joint in pipe marker overlap.
      3) Laminated or bonded application of pipe marker to pipe (or insulation).
      4) Taped to pipe (or insulation) with color-coded plastic adhesive tape, not less than 3/4-inch (19 mm) wide, lapped 1-1/2 inches (38 mm) minimum at both ends of pipe marker, and covering full circumference of pipe.
   b. Fasten markers on pipes 6 inches (150 mm) and larger by one of following methods:
      1) Laminated or bonded application of pipe marker to pipe (or insulation).
      2) Taped to pipe (or insulation) with color-coded plastic adhesive tape, not less than 1-1/2-inches (38 mm) wide, lapped 3 inches (75 mm) minimum at both ends of pipe marker, and covering full circumference of pipe.
      3) Strapped to pipe (or insulation) with manufacturer's standard stainless steel bands.
3. Locate pipe markers and color bands as follows wherever piping is exposed in finished spaces, machine rooms, accessible maintenance spaces (shafts, tunnels, plenums) and exterior non-concealed locations.
   a. Near each valve and control device.
   b. Near each branch connection, excluding short take-offs for fixtures and terminal units. Mark each pipe at branch, where flow pattern is not obvious.
   c. Near penetrations through walls, floors, ceilings, or enter non-accessible enclosures.
   d. At access doors, manholes, and similar access points that permit view of concealed piping.
   e. Near major equipment items and other points of origination and termination.
   f. Spaced at a maximum of 50-feet (15 m) intervals along each run. Reduce intervals to 25 feet (7.5 m) in congested areas of piping and equipment.

g. On piping above removable acoustical ceilings, except omit intermediately spaced markers.

B. Valve Tags: Install valve tag on valves and control devices in piping systems, except check valves, valves within factory-fabricated equipment units, plumbing fixture supply stops, shut-off valves, faucets, convenience and lawn-watering hose bibbs, and HVAC terminal devices and similar roughing-in connections of end-use fixtures and units. List tagged valves in valve schedule.
1. Install mounted valve schedule in each major equipment room.

C. Equipment: Install engraved plastic laminate signs or equipment markers on or near each major item of mechanical equipment. Provide signs for following general categories of equipment:
1. Main control and operating valves, including safety devices and hazardous units such as gas outlets.
2. Meters, gages, thermometers, and similar units.
3. Fuel-burning units including boilers, furnaces, heaters, stills, and absorption units.
4. Pumps, compressors, chillers, condensers, and similar motor- driven units.
5. Heat exchangers, coils, evaporators, cooling towers, heat recovery units, and similar equipment.
6. Fans, blowers, primary balancing dampers, and mixing boxes.
7. Packaged HVAC central-station and zone-type units.
8. Tanks and pressure vessels.
9. Strainers, filters, humidifiers, water treatment systems, and similar equipment.

D. Optional Sign Types: Stenciled signs may be provided instead of engraved plastic, at Installer's option, where lettering larger than 1-inch (25 mm) high is needed for proper identification because of distance from normal location of required identification.
1. Lettering Size: Minimum 1/4 inch (6 mm) for name of unit where viewing distance is less than 2 feet (0.6 m), 1/2 inch (13 mm) for distances up to 6 feet (1.8 m), and proportionately larger lettering for greater distances. Provide secondary lettering 2/3 to 3/4 of size of principal lettering.
2. Terms on Signs: In addition to name of identified unit distinguish between multiple units, indicate operational requirements, indicate safety and emergency precautions, and warn of hazards and improper operations.

E. Plasticized Tags: Install within concealed space to reduce amount of text in exposed sign (outside concealment), where equipment to be identified is concealed above acoustical ceiling or similar concealment.
1. Identify operational valves and similar minor equipment items located in unoccupied spaces (including machine rooms) by installing plasticized tags.

F. Duct Systems: Identify air supply, return, exhaust, intake, and relief ducts with duct markers; or provide stenciled signs and arrows showing duct system service and direction of flow.
1. Location: In each space where ducts are exposed or concealed by removable ceiling system. Locate signs near points where ducts enter into concealed space and at maximum intervals of 50 feet (15 m).

3.2 ADJUSTING AND CLEANING

A. Relocate mechanical identification materials and devices which have become visually blocked by work of this Division or other Divisions.

B. Clean face of identification devices, and glass frames of valve charts.

END OF SECTION 15075

SECTION 15080 - MECHANICAL INSULATION July 10, 2007

PART 1 - GENERAL

1.1 RELATED DOCUMENTS

A. Drawings and general provisions of Contract, including General and Supplementary Conditions and Division 1 Specification Sections, apply to this Section.

1.2 SUMMARY

A. This Section includes pipe, duct, and equipment insulation.

B. Related Sections: The following sections contain requirements that relate to this section:
1. Division 15 Section "Hangers and Supports" for pipe insulation shields and protection saddles.
2. Division 15 Section "Metal Ducts" for duct lining.

1.3 DEFINITIONS

A. Hot Surfaces: Normal operating temperatures of 100 deg F or higher.

B. Dual-Temperature Surfaces: Normal operating temperatures that vary from hot to cold.

C. Cold Surfaces: Normal operating temperatures less than 75 deg F.

D. Thermal Resistivity: "r-values" represent the reciprocal of thermal conductivity (k-value). Thermal conductivity is the rate of heat flow through a homogenous material exactly 1 inch thick. Thermal resistivities are expressed by the temperature difference in degrees F between two exposed faces required to cause one Btu to flow through one square foot of material, in one hour, at a given mean temperature.

E. Density: Is expressed in lb/sq.ft.

1.4 SUBMITTALS

A. General: Submit the following in accordance with Conditions of Contract and Division 1 Specification Sections.

B. Product data for each type of mechanical insulation identifying k-value, thickness, and accessories.

C. Material test reports prepared by a qualified independent testing laboratory. Certify insulation meets specified requirements.

1.5 QUALITY ASSURANCE

A. Fire Performance Characteristics: Conform to the following characteristics for insulation including facings, cements, and adhesives, when tested according to ASTM E 84, by UL or other testing or inspecting organization acceptable to the authority having jurisdiction. Label insulation with appropriate markings of testing laboratory.

1. Interior Insulation: Flame spread rating of 25 or less and a smoke developed rating of 50 or less.
2. Exterior Insulation: Flame spread rating of 75 or less and a smoke developed rating of 150 or less.

B. Field-Constructed Mock-Up: Before installation, erect mock-up of size and at locations indicated to demonstrate workmanship quality. Include method of attachment and finishing for each.
1. Interior and exterior equipment.
2. Interior and exterior duct systems.
3. Interior and exterior piping systems.
4. Retain and protect mock-ups during construction as a standard for judging completed unit of Work.
5. Remove mock-ups from Project site when directed.
6. Accepted mock-ups may become part of completed unit of Work.

1.6 SEQUENCING AND SCHEDULING

A. Schedule insulation application after testing of piping and duct systems.

B. Schedule insulation application after installation and testing of heat trace tape.

PART 2 - PRODUCTS

2.1 MANUFACTURERS

A. Manufacturers: Subject to compliance with requirements, provide products by one of the following:

1. Glass Fiber:
   a. CertainTeed Corporation.
   b. Knauf Fiberglass GmbH.
   c. Manson.
   d. Owens-Corning Fiberglas Corporation.
   e. John Manville.
   f. USG Interiors, Inc. - Thermafiber Division.

2. Flexible Elastomeric Cellular:
   a. Armstrong World Industries, Inc.
   b. Halstead Industrial Products.
   c. IMCOA.
   d. Rubatex Corporation.

3. Calcium Silicate:
   a. Owens-Corning Corporation.
   b. John Manville.

2.2 GLASS FIBER

A. Material: Inorganic glass fibers, bonded with a thermosetting resin.

B. Jacket: All-purpose, factory-applied, laminated glass-fiber-reinforced, flame-retardant kraft paper and aluminum foil having self-sealing lap.

C. Board: ASTM C 612, Class 2, semi-rigid jacketed board.
   1. Thermal Conductivity: 0.26 average maximum, at 75 deg F mean temperature.
   2. Density: 6 pcf average maximum.

D. Blanket: ASTM C 553, Type II, Class F-1, jacketed flexible blankets.
   1. Thermal Conductivity: 0.32 average maximum, at 75 deg F mean temperature.

E. Preformed Pipe Insulation: ASTM C 547, Class 1, rigid pipe insulation, jacketed.
   1. Thermal Conductivity: 0.25 average maximum at 75 deg F mean temperature.
   2. Density: 10 pcf average maximum.

F. Adhesive: Produced under the UL Classification and Follow-up service.
   1. Type: Non-flammable, solvent-based.
   2. Service Temperature Range: Minus 20 to 180 deg F.

G. Vapor Barrier Coating: Waterproof coating recommended by insulation manufacturer for outside service.

2.3 FLEXIBLE ELASTOMERIC CELLULAR

A. Material: Flexible expanded closed-cell structure with smooth skin on both sides.
   1. Tubular Materials: ASTM C 534, Type I.
   2. Sheet Materials: ASTM C 534, Type II.

B. Thermal Conductivity: 0.30 average maximum at 75 deg F.

C. Coating: Water based latex enamel coating recommended by insulation manufacturer.

2.4 CALCIUM SILICATE

A. Material: ASTM C 533, Type I; inorganic, hydrous calcium silicate, non-asbestos fibrous reinforcement; incombustible.

B. Form: Molded flat block, curved block, grooved block, and preformed pipe sections as appropriate for surface.

C. Thermal Conductivity: 0.60 at 500 deg F.

D. Dry Density: 15.0 pcf maximum.

E. Compressive Strength: 60 psi minimum at 5 percent deformation.

F. Fire Performance Characteristics: Provide materials identical to those whose fire performance characteristics have been determined, per test method indicated below, by UL or other testing and inspecting organization acceptable to authorities having jurisdiction.
   1. Test Method: ASTM E 84.
   2. Flame Spread: 0.
   3. Smoke Developed: 0.

2.5 INSULATING CEMENTS

A. Mineral Fiber: ASTM C 195.
   1. Thermal Conductivity: 1.0 average maximum at 500 deg F mean temperature.
   2. Compressive Strength: 10 psi at 5 percent deformation.

B. Expanded or Exfoliated Vermiculite: ASTM C 196.
   1. Thermal Conductivity: 1.10 average maximum at 500 deg F mean temperature.
   2. Compressive Strength: 5 psi at 5 percent deformation.

C. Mineral Fiber, Hydraulic-Setting Insulating and Finishing Cement: ASTM C 449.
   1. Thermal Conductivity: 1.2 average maximum at 400 deg F mean temperature.
   2. Compressive Strength: 100 psi at 5 percent deformation.

2.6 ADHESIVES

A. Flexible Elastomeric Cellular Insulation Adhesive: Solvent-based, contact adhesive recommended by insulation manufacturer.

B. Lagging Adhesive: MIL-A-3316C, non-flammable adhesive in the following Classes and Grades:
   1. Class 1, Grade A for bonding glass cloth and tape to unfaced glass fiber insulation, sealing edges of glass fiber insulation, and bonding lagging cloth to unfaced glass fiber insulation.
   2. Class 2, Grade A for bonding glass fiber insulation to metal surfaces.

2.7 JACKETS

A. General: ASTM C 921, Type 1, except as otherwise indicated.

B. Foil and Paper Jacket: Laminated glass-fiber-reinforced, flame-retardant kraft paper and aluminum foil.
   1. Water Vapor Permeance: 0.02 perm maximum, when tested according to ASTM E 96.
   2. Puncture Resistance: 50 beach units minimum, when tested according to ASTM D 781.

C. PVC Jacketing: High-impact, ultra-violet-resistant PVC, 20-mils thick, roll stock ready for shop or field cutting and forming to indicated sizes.
   1. Adhesive: As recommended by insulation manufacturer.
   2. Color:
      a. Color as selected by Architect in all areas except tunnels and equipment rooms.
      b. In Equipment Rooms, color matching background identification color as specified in Section 15075 (ASME 13).

D. PVC Fitting Covers: Factory-fabricated fitting covers manufactured from 20-mil-thick, high-impact, ultra-violet-resistant PVC.
   1. Adhesive: As recommended by insulation manufacturer.
   2. Color:
      a. Color as selected by Architect in all areas except tunnels and equipment rooms.
      b. In Equipment Rooms, color matching background identification color as specified in Section 15075 (ASME 13).

E. Aluminum Jacket: ASTM B 209, 3003 Alloy, H-14 temper, roll stock ready for shop or field cutting and forming to indicated sizes or factory cut and rolled to indicated sizes.
   1. Moisture Barrier: 1-mil, heat-bonded polyethylene and kraft paper.
   2. Moisture Barrier: 3-mil Dupont Surlyn.
   3. Elbows: Preformed 45-degree and 90-degree, short- and long-radius elbows, same material, finish, and thickness as jacket.

F. Stainless-Steel Jacket: ASTM A 167, Type 304 or 316, 0.10-inch thick, No. 2B finish, and factory cut and rolled to indicated sizes.

G. Stainless-Steel Jacket: ASTM A 167, Type 304 or 316, 0.10-inch thick, No. 2B finish, and roll stock ready for shop or field cutting and forming to indicated sizes.
   1. Moisture Barrier: 1-mil, heat-bonded polyethylene and kraft paper.
   2. Moisture Barrier: 3-mil, heat-bonded polyethylene and kraft paper.
   3. Moisture Barrier: 2.5-mil Dupont Surlyn.
   4. Elbows: Gore type, for 45-degree and 90-degree elbows in same material, thickness, finish as jackets.
   5. Jacket Bands: Stainless steel, Type 304, 3/4-inch wide.

2.8 ACCESSORIES AND ATTACHMENTS

A. Glass Cloth and Tape: Woven glass fiber fabrics, plain weave, presized a minimum of 8 ounces per sq. yd.
   1. Tape Width: 4 inches.
   2. Cloth Standard: MIL-C-20079H, Type I.
   3. Tape Standard: MIL-C-20079H, Type II.

B. Bands: 3/4-inch wide, in one of the following materials compatible with jacket:
   1. Stainless Steel: Type 304, 0.020 inch thick.
   2. Galvanized Steel: 0.005 inch thick.
   3. Aluminum: 0.007 inch thick.
   4. Brass: 0.01 inch thick.
   5. Nickel-Copper Alloy: 0.005 inch thick.

C. Wire: 14-gage nickel copper alloy, 16-gage, soft-annealed stainless steel, or 16-gage, soft-annealed galvanized steel.

D. Corner Angles: 28-gage, 1-inch by 1-inch aluminum, adhered to 2-inch by 2-inch kraft paper.

E. Anchor Pins: Capable of supporting 20 pounds each. Provide anchor pins and speed washers of sizes and diameters as recommended by the manufacturer for insulation type and thickness.

2.9 SEALING COMPOUNDS

A. Vapor Barrier Compound: Water-based, fire-resistive composition.
   1. Water Vapor Permeance: 0.08 perm maximum.
   2. Temperature Range: Minus 20 to 180 deg F.

B. Weatherproof Sealant: Flexible-elastomer-based, vapor-barrier sealant designed to seal metal joints.
   1. Water Vapor Permeance: 0.02 perm maximum.
   2. Temperature Range: Minus 50 to 250 deg F.
   3. Color: Aluminum.

PART 3 - EXECUTION

3.1 PREPARATION

A. Surface Preparation: Clean, dry, and remove foreign materials such as rust, scale, and dirt.

B. Mix insulating cements with clean potable water. Mix insulating cements contacting stainless-steel surfaces with demineralized water.
   1. Follow cement manufacturer's printed instructions for mixing and portions.

3.2 INSTALLATION, GENERAL

A. Refer to schedules at the end of this Section for materials, forms, jackets, and thicknesses required for each mechanical system.

B. Select accessories compatible with materials suitable for the service. Select accessories that do not corrode, soften, or otherwise attack the insulation or jacket in either the wet or dry state.

C. Install vapor barriers on insulated pipes, ducts, and equipment having surface operating temperatures below 60 deg F.

D. Apply insulation material, accessories, and finishes according to the manufacturer's printed instructions.

E. Install insulation with smooth, straight, and even surfaces.

F. Seal joints and seams to maintain vapor barrier on insulation requiring a vapor barrier.

G. Seal penetrations for hangers, supports, anchors, and other projections in insulation requiring a vapor barrier.

H. Seal Ends: Except for flexible elastomeric insulation, taper ends at 45 degree angle and seal with lagging adhesive. Cut ends of flexible elastomeric cellular insulation square and seal with adhesive.

I. Apply adhesives and coatings at manufacturer's recommended coverage-per-gallon rate.

J. Keep insulation materials dry during application and finishing.

K. Items Not Insulated: Unless otherwise indicated do not apply insulation to the following systems, materials, and equipment:
   1. Fibrous glass ducts.
   2. Metal ducts with duct liner located inside building insulation envelope.
   3. Factory-insulated flexible ducts.
   4. Factory-insulated plenums, casings, terminal boxes, and filter boxes and sections.
   5. Flexible connectors for ducts and pipes.
   6. Vibration control devices.
   7. Testing laboratory labels and stamps.
   8. Nameplates and data plates.
   9. Access panels and doors in air distribution systems.
   10. Fire protection piping systems.
   11. Sanitary drainage and vent piping, unless indicated otherwise.

12. Drainage piping located in crawl spaces, unless indicated otherwise.
13. Below grade buried piping.
14. Chrome-plated pipes and fittings, except for plumbing fixtures for the disabled.
15. Piping specialties including air chambers, unions, strainers, check valves, plug valves, and flow regulators.
16. Factory insulated equipment.

3.3 PIPE INSULATION INSTALLATION, GENERAL

A. Tightly butt longitudinal seams and end joints. Bond with adhesive.

B. Stagger joints on double layers of insulation.

C. Apply insulation continuously over fittings, valves, and specialties, except as otherwise indicated.

D. Apply insulation with a minimum number of joints.

E. Apply insulation with integral jackets as follows:
1. Pull jacket tight and smooth.
2. Cover circumferential joints with butt strips, at least 3-inches wide, and of same material as insulation jacket. Secure with adhesive and outward clinching staples along both edges of butt strip and space 4 inches on center.
3. Longitudinal Seams: Overlap seams at least 1-1/2 inches. Apply insulation with longitudinal seams at bottom of pipe. Clean and dry surface to receive self-sealing lap. Staple laps with outward clinching staples along edge at 4 inches on center.
   a. Exception: Do not staple longitudinal laps on insulation applied to piping systems with surface temperatures at or below 35 deg F.
4. Vapor Barrier Coatings: Where vapor barriers are indicated, apply on seams and joints, over staples, and at ends butt to flanges, unions, valves, and fittings.
5. At penetrations in jackets for thermometers and pressure gages, fill and seal voids with vapor barrier coating.
6. Repair damaged insulation jackets, except metal jackets, by applying jacket material around damaged jacket. Adhere, staple, and seal. Extend patch at least 2 inches in both directions beyond damaged insulation jacket and around the entire circumference of the pipe.

F. Roof Penetrations: Apply insulation for interior applications to a point even with the top of the roof flashing. Seal with vapor barrier coating. Apply insulation for exterior applications butted tightly to interior insulation ends. Extend metal jacket for exterior insulation outside roof flashing at least 2 inches below top of roof flashing. Seal metal jacket to roof flashing with vapor barrier coating.

G. Exterior Wall Penetrations: For penetrations of below grade exterior walls, terminate insulation flush with mechanical sleeve seal. Seal terminations with vapor barrier coating.

H. Exterior Wall Penetrations: For penetrations of below grade exterior walls, extend metal jacket for exterior insulation through penetration to a point 2 inches from interior surface of wall inside the building. Seal ends of metal jacket with vapor barrier coating. Secure metal jacket ends with metal band. At point where insulation metal jacket contacts mechanical sleeve seal, insert cellular glass preformed pipe insulation to allow sleeve seal tightening against metal jacket. Tighten and seal sleeve to jacket to form a watertight seal.

I. Interior Walls and Partitions Penetrations: Apply insulation continuously through walls and partitions, except fire-rated walls and partitions. Apply an aluminum jacket with factory-applied moisture barrier over insulation. Extend 2 inches from both surfaces of wall or partition. Secure aluminum jacket with metal bands at both ends. Seal ends of jacket with vapor barrier coating. Seal around penetration with joint sealer. Refer to Division 7 Section "Joint Sealants."

J. Fire-Rated Walls and Partitions Penetrations: Terminate insulation at penetrations through fire-rated walls and partitions. Seal insulation ends with vapor barrier coating. Seal around penetration with firestopping or fire-resistant joint sealer. Refer to Division 7 for firestopping and fire-resistant joint sealers.

K. Floor Penetrations: Terminate insulation underside of floor assembly and at floor support at top of floor.

L. Flanges, Fittings, Valves, and Roof Drain Bowls - Interior Exposed and Concealed: Coat pipe insulation ends with vapor barrier coating. Apply premolded, precut, or field-fabricated segments of insulation around flanges, unions, valves, fittings, and roof drain bowls. Make joints tight. Bond with adhesive.
   1. Use same material and thickness as adjacent pipe insulation.
   2. Overlap nesting insulation by 2 inches or 1-pipe diameter, which ever is greater.
   3. Apply materials with adhesive, fill voids with mineral fiber insulating cement. Secure with wire or tape.
   4. Insulate elbows and tees smaller than 3-inches pipe size with premolded insulation.
   5. Insulate elbows and tees 3 inches and larger with premolded insulation or insulation material segments. Use at least 3 segments for each elbow.
   6. Cover insulation, except for metal jacketed insulation, with PVC fitting covers and seal circumferential joints with butt strips.

M. Hangers and Anchors: Apply insulation continuously through hangers and around anchor attachments. Install saddles, shields, and inserts as specified in Division 15 Section "Hangers and Supports." For cold surface piping, extend insulation on anchor legs a minimum of 12 inches and taper and seal insulation ends.
   1. Inserts and Shields: Cover hanger inserts and shields with jacket material matching adjacent pipe insulation.

3.4 GLASS FIBER PIPE INSULATION INSTALLATION

A. Bond insulation to pipe with lagging adhesive.

B. Seal exposed ends with lagging adhesive.

C. Seal seams and joints with vapor barrier compound.

3.5 FLEXIBLE ELASTOMERIC CELLULAR PIPE INSULATION INSTALLATION

A. Slip insulation on the pipe before making connections wherever possible. Seal joints with adhesive. Where the slip-on technique is not possible, cut one side longitudinally and apply to the pipe. Seal seams and joints with adhesive.

B. Valves, Fittings, and Flanges: Cut insulation segments from pipe or sheet insulation. Bond to valve, fitting, and flange and seal joints with adhesive.
   1. Miter cut materials to cover soldered elbows and tees.

2. Fabricate sleeve fitting covers from flexible elastomeric cellular insulation for screwed valves, fittings, and specialties. Miter cut materials. Overlap adjoining pipe insulation.

3.6 CALCIUM SILICATE PIPE INSULATION INSTALLATION

A. Secure insulation with stainless-steel bands spaced at 12-inch intervals.

B. Apply 2-layer insulation with joints tightly butted and staggered at least 3 inches. Secure inner layer with 16-gage soft-annealed stainless-steel wire spaced at 12-inch intervals. Secure outer layer with stainless-steel bands at 12-inch intervals.

C. Finishing: Apply a skim coat of mineral fiber, hydraulic-setting cement to surface of installed insulation. When dry, apply flood coat of lagging adhesive and press on 1 layer of glass cloth or glass tape. Overlap edges at least 1 inch. Apply finish coat of lagging adhesive over glass cloth or tape. Thin finish coat to achieve smooth finish.

D. Metal Jacket: Where indicated, apply metal jacket over finished insulation as specified in this Section for installation of metal jackets.

3.7 EQUIPMENT INSULATION INSTALLATION, GENERAL

A. Install board and block materials with a minimum dimension of 12 inches and a maximum dimension of 48 inches.

B. Groove and score insulation materials as required to fit as closely as possible to the equipment and to fit contours of equipment. Stagger end joints.

C. Insulation Thicknesses Greater than 2 Inches: Install insulation in multiple layers with staggered joints.

D. Bevel insulation edges for cylindrical surfaces for tight joint.

E. Secure sections of insulation in place with wire or bands spaced at 9-inch centers, except for flexible elastomeric cellular insulation.

F. Protect exposed corners with corner angles under wires and bands.

G. Manholes, Handholes, and Information Plates: Bevel and seal insulation ends around manholes, handholes, ASME stamps, and nameplates.

H. Removable Insulation: Install insulation on components that require periodic inspecting, cleaning, and repairing for easy removal and replacement without damage to adjacent insulation.

I. Pumps: Where insulation is indicated, fabricate galvanized steel boxes lined with insulation. Fit boxes around pumps and coincide joints in box with the splits in the pump casings. Fabricate joints with outward bolted flanges.

J. Finishing: Except for flexible elastomeric cellular insulation, apply 2 coats of vapor barrier compound to a minimum thickness of 1/16 inch. Install a layer of glass cloth embedded between layers.

3.8 GLASS FIBER EQUIPMENT INSULATION INSTALLATION

A. Secure insulation with anchor pins and speed washers.

B. Space anchors at maximum intervals of 18 inches in both directions and not more than 3 inches from edges and joints.

C. Apply a smoothing coat of insulating and finishing cement to finished insulation.

3.9 FLEXIBLE ELASTOMERIC CELLULAR EQUIPMENT INSULATION INSTALLATION

A. Install sheets of the largest manageable size.

B. Apply full coverage of adhesive to the surfaces of the equipment and to the insulation.

C. Butt insulation joints firmly together and apply adhesive to insulation edges at joints.

3.10 DUCT INSULATION

A. Install block and board insulation as follows:
   1. Adhesive and Band Attachment: Secure block and board insulation tight and smooth with at least 50 percent coverage of adhesive. Install bands spaced 12 inches apart. Protect insulation under bands and at exterior corners with metal corner angles. Fill joints, seams, and chipped edges with vapor barrier compound.
   2. Speed Washers Attachment: Secure insulation tight and smooth with speed washers and welded pins. Space anchor pins 18 inches apart each way and 3 inches from insulation joints. Apply vapor barrier coating compound to insulation in contact, open joints, breaks, punctures, and voids in insulation.

B. Blanket Insulation: Install tight and smooth. Secure to ducts having long sides or diameters as follows:
   1. Smaller Than 24 Inches: Bonding adhesive applied in 6-inch-wide transverse strips on 12-inch centers.
   2. 24 Inches and Larger: Anchor pins spaced 12 inches apart each way. Apply bonding adhesive to prevent sagging of the insulation.
   3. Overlap joints 3 inches.
   4. Seal joints, breaks, and punctures with vapor barrier compound.

C. Fire rated insulation wrap for grease ducts to be installed as per manufacturer's instructions.

3.11 JACKETS

A. Foil and Paper Jackets (FP): Install jackets drawn tight. Install lap or butt strips at joints with material same as jacket. Secure with adhesive. Install jackets with 1-1/2-inch laps at longitudinal joints and 3-inch-wide butt strips at end joints.
   1. Seal openings, punctures, and breaks in vapor barrier jackets and exposed insulation with vapor barrier compound.

B. Interior Exposed Insulation: Install continuous glass cloth jackets.

C. Exterior Exposed Insulation: Install continuous PVC jackets and seal all joints and seams with waterproof sealant.

D. Install metal jacket with 2-inch overlap at longitudinal and butt joints. Overlap longitudinal joints to shed water. Seal butt joints with weatherproof sealant recommended by insulation manufacturer. Secure jacket with stainless-steel draw bands 12 inches on center and at butt joints.

E. Install the PVC jacket with 1-inch overlap at longitudinal and butt joints and seal with adhesive.

F. Install glass cloth jacket directly over insulation. On insulation with a factory applied jacket, install the glass cloth jacket over the factory applied jacket. Install jacket drawn smooth and tight with a 2-inch overlap at joints. Embed glass cloth between (2) 1/16-inch-thick coats of lagging adhesive. Completely encapsulate the insulation with the jacket, leaving no exposed raw insulation.

3.12 FINISHES

A. Paint finished insulation (except colored PVC jacket) as specified in Division 9 Section "Painting."

B. Flexible Elastomeric Cellular Insulation: After adhesive has fully cured, apply 2 coats of protective coating to exposed insulation.

3.13 APPLICATIONS

A. General: Materials and thicknesses are specified in schedules at the end of this Section.

B. Interior Piping Systems: Unless otherwise indicated, insulate the following piping systems:
   1. Domestic cold water.
   2. Domestic hot water.
   3. Refrigerant suction.

C. Exterior Piping Systems: Unless otherwise indicated, insulate the following piping systems:
   1. Refrigerant suction.

D. Equipment: Unless otherwise indicated, insulate the following indoor equipment:
   1. Domestic hot water equipment, tanks, and water heaters.
   2. Refrigerated drinking water equipment, tanks, pumps, and heat exchangers.

E. Duct Systems: Unless otherwise indicated, insulate the following unlined duct systems:
   1. Interior concealed unlined supply, combustion, and outside air ductwork.
   2. Interior exposed unlined supply, combustion, and outside air ductwork.

3.14 PIPE INSULATION SCHEDULES

A. General: Abbreviations used in the following schedules include:
   1. Field-Applied Jackets: P - PVC, K - Foil and Paper, A - Aluminum, SS - Stainless Steel, C - Glass Cloth.
   2. Pipe Sizes: NPS - Nominal Pipe Size.
   3. All system piping shall be thermally insulated in accordance with ASHRAE 90.1-99, table 6.2.4.5.

INTERIOR DOMESTIC COLD WATER, STORM WATER, PLUMBING
VENTS WITHIN 6 LINEAL FEET OF ROOF
OUTLET, (40 TO 60 DEG. F)
(≤ Less than or Equal to) (>Greater than)

PIPE SIZES (NPS)	MATERIALS	THICKNESS IN INCHES	VAPOR BARRIER REQ'D	FIELD-APPLIED JACKET
≤1-1/2	GLASS FIBER	1	YES	CONCEALED (NONE) EXPOSED (A)(P)(C)
>1-1/2	GLASS FIBER	1	YES	CONCEALED (NONE) EXPOSED (A)(P)(C)

INTERIOR DOMESTIC HOT WATER AND RECIRCULATED HOT WATER
(105 TO 180 DEG. F)

PIPE SIZES (NPS)	MATERIALS	THICKNESS IN INCHES	VAPOR BARRIER REQ'D	FIELD-APPLIED JACKET
≤1-1/2	GLASS FIBER	1	NO	CONCEALED (NONE) EXPOSED (A)(P)(C)
>1-1/2	GLASS FIBER	1	NO	CONCEALED (NONE) EXPOSED (A)(P)(C)

INTERIOR LOW TEMPERATURE HYDRONIC (BELOW 40 DEG. F)
REFRIGERANT SUCTION, GLYCOL HEAT RECOVERY,
COMPUTER ROOM UNIT "GLYCOOL"

PIPE SIZES (NPS)	MATERIALS	THICKNESS IN INCHES	VAPOR BARRIER REQ'D	FIELD-APPLIED JACKET
≤1-1/2	GLASS FIBER	1	YES	CONCEALED (NONE) EXPOSED (A)(P)(C)
>1-1/2	GLASS FIBER	1.5	YES	CONCEALED (NONE) EXPOSED (A)(P)(C)

REFRIGERANT SUCTION

PIPE SIZES (NPS)	MATERIALS	THICKNESS IN INCHES	VAPOR BARRIER REQ'D	FIELD-APPLIED JACKET
ALL	FLEXIBLE ELASTOMERIC	3/4	YES	(A)(P)(C)

3.15 EQUIPMENT INSULATION SCHEDULES

INTERIOR EXPOSED DOMESTIC HOT WATER EQUIPMENT, TANKS, AND PUMPS

MATERIAL	FORM	THICKNESS IN INCHES	VAPOR BARRIER REQ'D	FIELD-APPLIED JACKET
GLASS FIBER	BLOCK	2	NO	(A)(C)
CALCIUM SILICATE	BLOCK	2	NO	(A)(C)

INTERIOR EXPOSED REFRIGERATED DRINKING WATER EQUIPMENT, TANKS, PUMPS, AND HEAT EXCHANGERS

MATERIAL	FORM	THICKNESS IN INCHES	VAPOR BARRIER REQ'D	FIELD-APPLIED JACKET
GLASS FIBER	BLOCK	2	YES	(A)(P)(C)

3.16 DUCT SYSTEMS INSULATION SCHEDULE

INTERIOR CONCEALED UNLINED HVAC SUPPLY, COMBUSTION, AND OUTSIDE AIR DUCTS

MATERIAL	FORM	THICKNESS IN INCHES	VAPOR BARRIER REQ'D	FIELD-APPLIED JACKET
GLASS FIBER	BLANKET	1-1/2	YES	NONE

INTERIOR EXPOSED UNLINED HVAC SUPPLY, COMBUSTION, AND OUTSIDE AIR DUCTS

MATERIAL	FORM	THICKNESS IN INCHES	VAPOR BARRIER REQ'D	FIELD-APPLIED JACKET
GLASS FIBER	BOARD - RECT.	1-1/2	YES	NONE
GLASS FIBER	PIPE - ROUND	1-1/2	YES	NONE

END OF SECTION 15080

SECTION 15110 - VALVES July 10, 2007

PART 1 - GENERAL

1.1 RELATED DOCUMENTS

A. Drawings and general provisions of the Contract, including General and Supplementary Conditions and Division 1 Specification Sections, apply to this Section.

1.2 SUMMARY

A. This Section includes general duty valves common to several mechanical piping systems.

B. Related Sections: The following Sections contain requirements that relate to this Section:
1. Special purpose valves are specified in Division 15 piping system Sections.
2. Valve tags and charts are specified in Division 15 Section "Mechanical Identification."

1.3 SUBMITTALS

A. General: Submit each item in this Article according to the Conditions of the Contract and Division 1 Specification Sections.

B. Product Data for each valve type. Include body material, valve design, pressure and temperature classification, end connection details, seating materials, trim material and arrangement, dimensions and required clearances, and installation instructions. Include list indicating valve and its application.

C. Maintenance data for valves to include in the operation and maintenance manual. Include detailed manufacturer's instructions on adjusting, servicing, disassembling, and repairing.

1.4 QUALITY ASSURANCE

A. Single-Source Responsibility: Comply with the requirements specified in Division 1 Section "Materials and Equipment," under "Source Limitations" Paragraph.

B. ASME Compliance: Comply with ASME B31.9 for building services piping and ASME B31.1 for power piping.

C. MSS Compliance: Comply with the various MSS Standard Practice documents referenced.

1.5 DELIVERY, STORAGE, AND HANDLING

A. Prepare valves for shipping as follows:
1. Protect internal parts against rust and corrosion.
2. Protect threads, flange faces, grooves, and weld ends.
3. Set globe and gate valves closed to prevent rattling.
4. Set ball and plug valves open to minimize exposure of functional surfaces.
5. Block check valves in either closed or open position.

B. Use the following precautions during storage:

1. Maintain valve end protection.
2. Store indoors and maintain valve temperature higher than ambient dew-point temperature. If outdoor storage is necessary, store valves off the ground in watertight enclosures.

C. Use a sling to handle large valves. Rig to avoid damage to exposed parts. Do not use handwheels and stems as lifting or rigging points.

PART 2 - PRODUCTS

2.1 MANUFACTURERS

A. Manufacturers: Subject to compliance with requirements, provide products by one of the following:

1. Ball Valves:
   a. Conbraco Industries, Inc.; Apollo Division.
   b. Crane Company; Valves and Fitting Division.
   c. Hammond Valve Corporation.
   d. Jamesbury.
   e. Jenkins Valve.
   f. Lunkenheimer/Cincinnati Valve Co.
   g. Milwaukee Valve Company, Inc.
   h. NIBCO Inc.
   i. Powell: Wm. Powell Company (The).
   j. Stockham Valves & Fittings, Inc.
   k. Tyco, Keystone.
   l. Tyler Pipe.
   m. Victaulic Company of America.
   n. Watts Industries, Inc.

2.2 BASIC, COMMON FEATURES

A. Pressure and Temperature Ratings: As indicated in the "Application Schedule" of Part 3 of this Section and as required to suit system pressures and temperatures.

B. Sizes: Same size as upstream pipe, unless otherwise indicated.

C. Operators: Use specified operators, except provide the following special operator features:
   1. Handwheels: For valves other than quarter turn.
   2. Lever Handles: For quarter-turn valves 6 inches (DN150) and smaller, except for plug valves, which shall have square heads. Furnish Owner with 1 wrench for every 10 plug valves.

D. Bypass and Drain Connections: Comply with MSS SP-45 bypass and drain connections.

E. Threads: ASME B1.20.1.

F. Flanges: ASME B16.1 for cast iron, ASME B16.5 for steel, and ASME B16.24 for bronze valves.

G. Solder Joint: ASME B16.18.

1. Caution: Where soldered end connections are used, use solder having a melting point below 840 deg F (450 deg C) for gate, globe, and check valves; below 421 deg F (216 deg C) for ball valves.

2.3 BALL VALVES

A. Ball Valves, 4 Inches (DN100) and Smaller: MSS SP-110, Class 150, 600-psi (4140-kPa) CWP, ASTM B 584 bronze body and bonnet, 2-piece construction; chrome-plated brass ball, standard port for 1/2-inch (DN15) valves and smaller and conventional port for 3/4-inch (DN20) valves and larger; blowout proof; bronze or brass stem; teflon seats and seals; threaded or soldered end connections:
   1. Operator: Vinyl-covered steel lever handle.
   2. Operator: Lever operators with lock where used for throttling duty.
   3. Stem Extension: For valves installed in insulated piping.
   4. Memory Stop: For operator handles where used for throttling duty.

PART 3 - EXECUTION

3.1 EXAMINATION

A. Examine piping system for compliance with requirements for installation tolerances and other conditions affecting performance of valves. Do not proceed with installation until unsatisfactory conditions have been corrected.

B. Examine valve interior for cleanliness, freedom from foreign matter, and corrosion. Remove special packing materials, such as blocks, used to prevent disc movement during shipping and handling.

C. Operate valves from fully open to fully closed positions. Examine guides and seats made accessible by such operation.

D. Examine threads on valve and mating pipe for form and cleanliness.

E. Examine mating flange faces for conditions that might cause leakage. Check bolting for proper size, length, and material. Check gasket material for proper size, material composition suitable for service, and freedom from defects and damage.

F. Do not attempt to repair defective valves; replace with new valves.

3.2 INSTALLATION

A. Install valves as indicated, according to manufacturer's written instructions.

B. Piping installation requirements are specified in other Division 15 Sections. Drawings indicate the general arrangement of piping, fittings, and specialties.

C. Install valves with unions or flanges at each piece of equipment arranged to allow servicing, maintenance, and equipment removal without system shutdown.

D. Locate valves for easy access and provide separate support where necessary.

E. Install valves in horizontal piping with stem at or above the center of the pipe.

F. Install valves in a position to allow full stem movement.

3.3 SOLDERED CONNECTIONS

A. Cut tube square and to exact lengths.

B. Clean end of tube to depth of valve socket with steel wool, sand cloth, or a steel wire brush to a bright finish. Clean valve socket.

C. Apply proper soldering flux in an even coat to inside of valve socket and outside of tube.

D. Protect valves from damage while soldering.

E. Remove the cap and disc holder of swing check valves having composition discs.

F. Insert tube into valve socket, making sure the end rests against the shoulder inside valve. Rotate tube or valve slightly to ensure even distribution of the flux.

G. Apply heat evenly to outside of valve around joint until solder melts on contact. Feed solder until it completely fills the joint around tube. Avoid hot spots or overheating valve. Once the solder starts cooling, remove excess amounts around the joint with a cloth or brush.

3.4 THREADED CONNECTIONS

A. Note the internal length of threads in valve ends and proximity of valve internal seat or wall to determine how far pipe should be threaded into valve.

B. Align threads at point of assembly.

C. Apply appropriate tape or thread compound to the external pipe threads, except where dry seal threading is specified.

D. Assemble joint, wrench tight. Wrench on valve shall be on the valve end into which the pipe is being threaded.

3.5 FLANGED CONNECTIONS

A. Align flange surfaces parallel.

B. Assemble joints by sequencing bolt tightening to make initial contact of flanges and gaskets as flat and parallel as possible. Use suitable lubricants on bolt threads. Tighten bolts gradually and uniformly with a torque wrench.

C. For dead-end service, butterfly valves require flanges both upstream and downstream for proper shutoff and retention.

3.6 VALVE END SELECTION

A. Select valves with the following ends or types of pipe/tube connections:
   1. Copper Tube Size, 2-1/2 Inches (DN65) and Smaller: Solder ends, except provide threaded ends for heating hot water, chilled water, condenser water, low-pressure steam, and high-pressure steam service.
   2. Steel Pipe Sizes, 2-1/2 Inches (DN65) and Smaller: Threaded or grooved end.
   3. Steel Pipe Sizes, 3 Inches (DN80) and Larger: Grooved end or flanged.

3.7 APPLICATION SCHEDULE

A. General Application: Use gate, ball, and butterfly valves for shutoff duty; globe, ball, and butterfly for throttling duty. Refer to piping system Specification Sections for specific valve applications and arrangements.

B. Domestic Water Systems: Use the following valve types:
   1. Ball Valves: Class 150, 600-psi (4140-kPa) CWP, with stem extension.

3.8 ADJUSTING

A. Adjust or replace packing after piping systems have been tested and put into service, but before final adjusting and balancing. Replace valves if leak persists.

END OF SECTION 15110

SECTION 15122 - METERS AND GAGES July 10, 2007

PART 1 - GENERAL

1.1 RELATED DOCUMENTS

A. Drawings and general provisions of the Contract, including the General and Supplementary Conditions and Division 1 Specification Sections, apply to this Section.

1.2 SUMMARY

A. This Section includes meters and gages used in mechanical systems.

B. Related Sections: Division 15 piping Sections contain requirements that relate to this Section.

1. Meters and gages furnished as part of factory-fabricated equipment are specified as part of the equipment assembly in other Division 15 Sections.

1.3 SUBMITTALS

A. General: Submit the following according to the Conditions of the Contract and Division 1 Specification Sections.

B. Product data for each type of meter, gage, and fitting specified. Include scale range, ratings, and calibrated performance curves, certified where indicated. Submit a meter and gage schedule showing manufacturer's figure number, scale range, location, and accessories for each meter and gage.

C. Product certificates signed by manufacturers of meters and gages certifying accuracies under specified operating conditions and compliance with specified requirements.

1.4 QUALITY ASSURANCE

A. Comply with applicable portions of American Society of Mechanical Engineers (ASME) and Instrument Society of America (ISA) standards pertaining to construction and installation of meters and gages.

B. Design Criteria: The Drawings indicate types, sizes, capacities, ranges, profiles, connections, and dimensional requirements of meters and gages and are based on the specific manufacturer types and models indicated. Meters and gages having equal performance characteristics by other manufacturers may be considered, provided that deviations do not change the design concept or intended performance as judged by the Architect. The burden of proof for equality of meters and gages is on the proposer.

PART 2 - PRODUCTS

2.1 MANUFACTURERS

A. Manufacturers: Subject to compliance with requirements, provide products by one of the following:

1. Liquid-in-Glass Thermometers:

a. Marsh Instrument Co.
b. Marshalltown Instruments, Inc.
c. Miljoco.
d. H.O. Trerice Co.
e. Weiss Instruments, Inc.
f. Weksler Instruments Corp.

2. Direct-Mounting Filled-System Dial Thermometers:
   a. Ashcroft Instrument Div. of Dresser Industries.
   b. Marsh Instrument Co.
   c. Miljoco.
   d. H.O. Trerice Co.
   e. Weiss Instruments, Inc.
   f. Weksler Instruments Corp.

3. Bimetal Dial Thermometers:
   a. Ashcroft by Dresser Industries, Instrument Div.
   b. Marsh Instrument Co.
   c. Marshalltown Instruments, Inc.
   d. Miljoco
   e. Reotemp Instrument Corp.
   f. Tel-Tru Manufacturing Co., Inc.
   g. H.O. Trerice Co.
   h. Weiss Instruments, Inc.
   i. Weksler Instruments Corp.

4. Insertion Dial Thermometers:
   a. Ashcroft by Dresser Industries, Instrument Div.
   b. Miljoco.
   c. Reotemp Instrument Corp.
   d. Tel-Tru Manufacturing Co., Inc.
   e. H.O. Trerice Co.
   f. Weiss Instruments, Inc.
   g. Weksler Instruments Corp.

2.2 THERMOMETERS, GENERAL

A. Scale Range: Temperature ranges for services listed as follows:
   1. Domestic Hot Water: 30 to 240 deg F, with 2-degree scale divisions (0 to 115 deg C, with 1-degree scale divisions).
   2. Domestic Cold Water: 0 to 100 deg F, with 2-degree scale divisions (minus 18 to 38 deg C, with 1-degree scale divisions).

B. Accuracy: Plus or minus 1 percent of range span or plus or minus one scale division to maximum of 1.5 percent of range span.

2.3 LIQUID-IN-GLASS THERMOMETERS

A. Description: ASTM E 1, liquid-in-glass thermometer.

B. Case: Die-cast and aluminum-finished in baked-epoxy enamel, glass front, spring secured, 9 inches (230 mm) long.

C. Adjustable Joint: Finished to match case, 180-degree (3.1rad) adjustment in vertical plane, 360-degree (6.3rad) adjustment in horizontal plane, with locking device.

D. Tube: Red-reading liquid-filled with magnifying lens.

E. Scale: Satin-faced nonreflective aluminum with permanently etched markings.

F. Stem: Copper-plated, steel, aluminum, or brass for a separable socket of length to suit installation.

2.4 DIRECT-MOUNTING FILLED-SYSTEM DIAL THERMOMETERS

A. Description: Vapor-actuated universal-angle dial thermometer.

B. Case: Drawn steel or cast aluminum, with 4-1/2-inch (115mm) -diameter glass lens.

C. Adjustable Joint: Finish to match case, 180-degree (3.1rad) adjustment in vertical plane, 360-degree (6.3rad) adjustment in horizontal plane, with locking device.

D. Thermal Bulb: Copper with phosphor-bronze Bourdon pressure tube.

E. Movement: Brass, precision geared.

F. Scale: Progressive satin-faced nonreflective aluminum with permanently etched markings.

G. Stem: Copper-plated steel, aluminum, or brass for a separable socket of length to suit installation.

2.5 REMOTE-READING, FILLED-SYSTEM DIAL THERMOMETERS

A. Description: Vapor-actuated remote-reading dial thermometer.

B. Case: Drawn steel or cast aluminum, with 4-1/2-inch (115mm) -diameter glass lens.

C. Movement: Brass, precision geared.

D. Scale: Progressive satin-faced nonreflective aluminum with permanently etched markings.

E. Tubing: Bronze double-braided armor-over-copper capillary of length to suit installation.

F. Bulb: Copper with separable socket for liquids; averaging element for air.

2.6 BIMETAL DIAL THERMOMETERS

A. Description: Direct-mounted universal-angle bimetal dial thermometer.

B. Case: Stainless steel with 5-inch (125mm) -diameter glass lens.

C. Adjustable Joint: Finish to match case, 180-degree (3.1rad) adjustment in vertical plane, 360-degree (6.3rad) adjustment in horizontal plane, with locking device.

D. Element: Bimetal coil.

E. Scale: Satin-faced nonreflective-aluminum with permanently etched markings.

F. Stem: Stainless steel for separable socket, of length to suit installation.

2.7 INSERTION DIAL THERMOMETERS

A. Description: Bimetal dial thermometer.

B. Dial: 1-inch (25mm) diameter.

C. Case: Stainless steel.

D. Stem: Dustproof and leakproof 1/8-inch (3mm) -diameter tapered-end stem with nominal length of 5 inches (125 mm).

2.8 THERMOMETER WELLS

A. Description: Brass or stainless-steel thermometer well.

B. Pressure Rating: Not less than piping system design pressure.

C. Stem Length: To extend 2 inches (50 mm) into fluid.

D. Extension for Insulated Piping: 2 inches (50 mm) nominal, but not less than thickness of insulation.

E. Threaded Cap Nut: With chain permanently fastened to well and cap.

PART 3 - EXECUTION

3.1 METER AND GAGE APPLICATIONS

A. General: Where indicated, install meters and gages of types, sizes, capacities, and with features indicated.

3.2 METER AND GAGE INSTALLATION, GENERAL

A. Install meters, gages, and accessories according to manufacturers' written instructions for applications where used.

3.3 THERMOMETER INSTALLATION

A. Install thermometers and adjust vertical and tilted positions.

B. Install in the following locations and elsewhere as indicated:
   1. At inlet and outlet of each thermal storage tank.

C. Thermometer Wells: Install in vertical position in piping tees where thermometers are indicated.
   1. Install wells with stem extending minimum of 2 inches (50 mm) into fluid.
   2. Fill wells with oil or graphite and secure caps.

3.4 CONNECTIONS

A. Piping installation requirements are specified in other Division 15 Sections. The Drawings indicate the general arrangement of piping, fittings, and specialties.

B. Install meters and gages adjacent to machines and equipment to allow servicing and maintenance.

C. Make electrical connections to power supply and electrically operated meters and devices.

3.5 ADJUSTING AND CLEANING

A. Calibrate meters according to manufacturer's written instructions, after installation.

B. Adjusting: Adjust faces of meters and gages to proper angle for best visibility.

C. Cleaning: Clean windows of meters and gages and factory-finished surfaces. Replace cracked and broken windows and repair scratched and marred surfaces with manufacturer's touchup paint.

END OF SECTION 15122

SECTION 15183 - REFRIGERANT PIPING July 10, 2007

PART 1 - GENERAL

1.1 RELATED DOCUMENTS

A. Drawings and general provisions of Contract, including General and Supplementary Conditions and Division 1 Specification Sections, apply to this Section.

B. Requirements of the following Division 15 Sections apply to this section:
1. Basic Mechanical Requirements.
2. Basic Mechanical Materials and Methods.
3. Supports and Anchors.

1.2 SUMMARY

A. This Section includes refrigerant piping used for air conditioning applications. This Section includes:
1. Pipes, tubing, fittings, and specialties.
2. Special duty valves.
3. Refrigerants.

B. Related Sections: The following sections contain requirements that relate to this section:
1. Division 7, Section "Roof Accessories" for roof curbs, piping supports, and roof penetration boots.
2. Division 7, Section "Joint Sealant" for materials and methods for sealing pipe penetrations through basement walls and fire/smoke barriers.
3. Division 15, Section "Mechanical Identification" for labeling and identification of refrigerant piping.
4. Division 15, Section "Mechanical Insulation" for pipe insulation.

C. Products installed but not furnished under this Section include pre-charged tubing, refrigerant specialties, and refrigerant accessories furnished as an integral part of or separately with packaged air conditioning equipment.

1.3 SUBMITTALS

A. Product data for the following products:
1. Each type valve specified.
2. Each type refrigerant piping specialty specified.

B. Shop Drawings showing layout of refrigerant piping, specialties, and fittings including, but not necessarily limited to, pipe and tube sizes, valve arrangements and locations, slopes of horizontal runs, wall and floor penetrations, and equipment connection details. Show interface and spatial relationship between piping and proximate to equipment.

C. Brazer's Certificates signed by Contractor certifying that brazers comply with requirements specified under "Quality Assurance" below.

D. Maintenance data for refrigerant valves and piping specialties, for inclusion in Operating and Maintenance Manual.

1.4 QUALITY ASSURANCE

A. Qualify brazing processes and brazing operators in accordance with ASME "Boiler and Pressure Vessel Code," Section IX, "Welding and Brazing Qualifications".

B. Regulatory Requirements: Comply with provisions of the following codes:
   1. ANSI B31.5: ASME Code for Pressure Piping - Refrigerant Piping.
   2. ANSI/ASHRAE Standard 15: Safety Code for Mechanical Refrigeration.
   3. International Mechanical Code.

1.5 SEQUENCING AND SCHEDULING

A. Coordinate the installation of roof piping supports, and roof penetrations. Roof specialties are specified in Division 7.

PART 2 - PRODUCTS

2.1 MANUFACTURERS

A. Manufacturers: Subject to compliance with requirements, provide products by one of the following:
   1. Refrigerant Valves and Specialties:
      a. Alco Controls Div, Emerson Electric.
      b. Danfoss Electronics, Inc.
      c. EATON Corporation, Control Div.
      d. Henry Valve Company.
      e. Parker-Hannifin Corporation, Refrigeration and Air Conditioning Division.
      f. Sporlan Valve Company.

2.2 PIPE AND TUBING MATERIALS

A. General: Refer to Part 3, Article "PIPE APPLICATION" for identification of systems where the below specified pipe and fitting materials are used.

B. Copper Tubing: ASTM B 280, Type ACR, hard-drawn straight lengths, and soft-annealed coils, seamless copper tubing. Tubing shall be factory cleaned, ready for installation, and have ends capped to protect cleanliness of pipe interiors prior to shipping.

C. Copper Tubing: ASTM B 88, Type L, hard-drawn straight lengths, and soft-annealed coils, seamless copper tubing.

2.3 FITTINGS

A. Wrought-Copper Fittings: ANSI B16.22, streamlined pattern.

2.4 JOINING MATERIALS

A. Brazing Filler Metals: AWS A5.8, Classification BAg-7 (Silver).

2.5 VALVES

A. General: Complete valve assembly shall be UL-listed and designed to conform to ARI 760.

B. Globe: 450 psig maximum operating pressure, 275 deg. F maximum operating temperature; cast bronze body, with cast bronze or forged brass wing cap and bolted bonnet; replaceable resilient seat disc; plated steel stem. Valve shall be capable of being repacked under pressure. Valve shall be straight through or angle pattern, with solder-end connections.

C. Check Valves - Smaller Than 7/8 inch: 500 psig maximum operating pressure, 300 deg. F maximum operating temperature; cast brass body, with removable piston, Teflon seat, and stainless steel spring; straight through globe design. Valve shall be straight through pattern, with solder-end connections.

D. Solenoid Valves: 250 deg. F temperature rating, 400 psig working pressure; forged brass, with Teflon valve seat, two-way straight through pattern, and solder end connections. Provide manual operator to open valve. Furnish complete with NEMA 1 solenoid enclosure with 1/2 inch conduit adapter, and 24 volt, 60 Hz. normally closed holding coil.

E. Evaporator Pressure Regulating Valves: pilot-operated, forged brass or cast bronze; complete with pilot operator, stainless steel bottom spring, pressure gage tappings, 24 volts DC, 50/60 Hz, standard coil; and wrought copper fittings for solder end connections.

F. Thermal Expansion Valves: thermostatic adjustable, modulating type; size as required for specific evaporator requirements, and factory set for proper evaporator superheat requirements. Valves shall have copper fittings for solder end connections; complete with sensing bulb, a distributor having a side connection for hot gas bypass line, and an external equalizer line.

G. Hot Gas Bypass Valve: adjustable type, sized to provide capacity reduction beyond the last step of compressor unloading; and wrought copper fittings for solder end connections.

2.6 REFRIGERANT PIPING SPECIALTIES

A. General: Complete refrigerant piping specialty assembly shall be UL-listed and designed to conform to ARI 760.

B. Strainers: 500 psig maximum working pressure; forged brass body with monel 80-mesh screen, and screwed cleanout plug; Y-pattern, with solder end connections.

C. Moisture/liquid Indicators: 500 psig maximum operation pressure, 200 deg. F maximum operating temperature; forged brass body, with replaceable polished optical viewing window, and solder end connections.

D. Filter-driers: 500 psig maximum operation pressure; steel shell, flange ring, and spring, ductile iron cover plate with steel capscrews, and wrought copper fittings for solder end connections. Furnish complete with replaceable filter-drier core kit, including gaskets, as follows:
   1. Standard capacity desiccant sieves to provide micronic filtration.
   2. High capacity desiccant sieves to provide micronic filtration and extra drying capacity.

E. Suction Line Filter-Drier: 350 psig maximum operation pressure, 225 deg. F maximum operating temperature; steel shell, and wrought copper fittings for solder end connections. Permanent filter element shall be molded felt core surrounded by a desiccant. for removal of acids and moisture for refrigerant vapor.

F. Suction Line Filters: 500 psig maximum operation pressure; steel shell, flange ring, and spring, ductile iron cover plate with steel capscrews, and wrought copper fittings for solder end connections. Furnish complete with replaceable filter core kit, including gaskets:

G. Flanged Unions: 400 psig maximum working pressure, 330 deg. F maximum operating temperature; two brass tailpiece adapters for solder end connections to copper tubing; flanges for 7/8 inch through 1-5/8 inch unions shall be forged steel, and for 2-1/8 inch through 3-1/8 inch shall be ductile iron; four plated steel bolts, with silicon bronze nuts and fiber gasket. Flanges and bolts shall have factory-applied rust-resistant coating.

H. Flexible Connectors: 500 psig maximum operating pressure; seamless tin bronze or stainless steel core, high tensile bronze braid covering, solder connections, and synthetic covering; dehydrated, pressure tested, minimum 7 inch in length.

2.7 REFRIGERANT

A. Refrigerant No. 410A.

PART 3 - EXECUTION

3.1 EXAMINATION

A. Examine rough-in for refrigerant piping systems to verify actual locations of piping connections prior to installation.

3.2 PIPE APPLICATIONS

A. Use Type L, or Type ACR drawn copper tubing with wrought copper fittings and brazed joints above ground, within building. Use Type K, annealed temper copper tubing for 2 inch and smaller without joints, below ground and within slabs. Mechanical fittings (crimp or flair) are not permitted.
1.Install annealed temper tubing in pipe duct. Vent pipe duct to the outside.

B. If other than Type ACR tubing is used, clean and protect inside of tubing as specified in Article "CLEANING" below.

3.3 PIPING INSTALLATIONS

A. General: Install refrigerant piping in accordance with ASHRAE Standard 15 - "The Safety Code for Mechanical Refrigeration."

B. Install piping in as short and direct arrangement as possible to minimize pressure drop.

C. Install piping for minimum number of joints using as few elbows and other fitting as possible.

D. Arrange piping to allow normal inspection and servicing of compressor and other equipment. Install valves and specialties in accessible locations to allow for servicing and inspection.

E. Provide adequate clearance between pipe and adjacent walls and hanger, or between pipes for insulation installation. Use sleeves through floors, walls, or ceilings, sized to permit installation of full thickness insulation.

F. Insulate suction lines. Liquid line are not required to be insulated, except where they are installed adjacent and clamped to suction lines, where both liquid and suction lines shall be insulated as a unit.
   1. Do not install insulation until system testing has been completed and all leaks have been eliminated.

G. Install branch tie-in lines to parallel compressors equal length, and pipe identically and symmetrically.

H. Install copper tubing in rigid or flexible conduit in locations where copper tubing will be exposed to mechanical injury.

I. Slope refrigerant piping as follows:
   1. Install horizontal hot gas discharge piping with 1/2" per 10 feet downward slope away from the compressor.
   2. Install horizontal suction lines with 1/2 inch per 10 feet downward slope to the compressor, with no long traps or dead ends which may cause oil to separate from the suction gas and return to the compressor in damaging slugs.
   3. Install traps and double risers where indicated, and where required to entrain oil in vertical runs.
   4. Liquid lines may be installed level.

J. Use fittings for all changes in direction and all branch connections.

K. Install exposed piping at right angles or parallel to building walls. Diagonal runs are not permitted, unless expressly indicated.

L. Install piping free of sags or bends and with ample space between piping to permit proper insulation applications.

M. Conceal all pipe installations in walls, pipe chases, utility spaces, above ceilings, below grade or floors, unless indicated to be exposed to view.

N. Install piping tight to slabs, beams, joists, columns, walls, and other permanent elements of the building. Provide space to permit insulation applications, with 1 inch clearance outside the insulation. Allow sufficient space above removable ceiling panels to allow for panel removal.

O. Locate groups of piping parallel to each other, spaced to permit applying insulation and servicing of valves.

P. Exterior Wall Penetrations: Seal pipe penetrations through exterior walls using sleeves and mechanical sleeve seals. Pipe sleeves smaller than 6 inch shall be steel; pipe sleeves 6 inch and larger shall be sheet metal.

Q. Fire Barrier Penetrations: Where pipes pass through fire rated walls, partitions, ceilings, and floors, maintain the fire rated integrity. Refer to Division 7 for special sealers and materials.

R. Make reductions in pipe sizes using eccentric reducer fittings installed with the level side down.

S. Install strainers immediately ahead of each expansion valve, solenoid valve, hot gas bypass valve, compressor suction valve, and as required to protect refrigerant piping system components.

T. Install moisture/liquid indicators in liquid lines between filter/driers and thermostatic expansion valves and in liquid line to receiver.
   1. Install moisture/liquid indicators in lines larger than 2-1/8 inch OD, using a bypass line.

U. Install unions to allow removal of solenoid valves, pressure regulating valves, expansion valves, and at connections to compressors and evaporators.

V. Install flexible connectors at the inlet and discharge connection of compressors.

3.4 HANGERS AND SUPPORTS

A. General: Hanger, supports, and anchors are specified in Division 15 Section "HANGERS AND SUPPORTS." Conform to the table below for maximum spacing of supports:

B. Install the following pipe attachments:
   1. Adjustable steel clevis hangers for individual horizontal runs less than 20 feet in length.
   2. Roller hangers and spring hangers for individual horizontal runs 20 feet or longer.
   3. Pipe rollers complete supports for multiple horizontal runs, 20 feet or longer supported by a trapeze.
   4. Spring hangers to support vertical runs.

C. Install hangers with the following minimum rod sizes and maximum spacing:

NOM. PIPE SIZE	MAX. SPAN-FT	MIN. ROD SIZE - INCHES
1	7	3/8
1-1/2	9	3/8
2	10	3/8
3	12	1/2
3-1/2	13	1/2
4	14	5/8
5	16	5/8
6	17	3/4
8	19	7/8
10	22	7/8
12	23	7/8

D. Support vertical runs at each floor.

3.5 PIPE JOINT CONSTRUCTION

A. Brazed Joints: Comply with the procedures contained in the AWS "Brazing Manual."
   1. WARNING: Some filler metals contain compounds which produce highly toxic fumes when heated. Avoid breathing fumes. Provide adequate ventilation.
   2. CAUTION: When solenoid valves are being installed, remove the coil to prevent damage. When sight glasses are being installed, remove the glass. Remove stems, seats, and packing of valves, and accessible internal parts of refrigerant specialties before brazing. Do not apply heat near the bulb of the expansion valve.

B. Fill the pipe and fittings during brazing, with an inert gas (ie., nitrogen or carbon dioxide) to prevent formation of scale.

C. Heat joints using oxy-acetylene torch. Heat to proper and uniform brazing temperature.

3.6 VALVE INSTALLATIONS

A. General: Install refrigerant valves where indicated, in accordance with manufacturer's instructions, and in accordance with the International Mechanical Code.

B. Install globe valves on each side of strainers and driers, in liquid and suction lines at evaporators, and elsewhere as indicated.

C. Install a full sized, 3-valve bypass around each drier.

D. Install solenoid valves ahead of each expansion valve and hot-gas bypass valve. Install solenoid valves in horizontal lines with coil at the top.
   1. Electrical wiring for solenoid valves is specified in Division 16. Coordinate electrical requirements and connections.

E. Thermostatic expansion valves may be mounted in any position, as close as possible to the evaporator.
   1. Where refrigerant distributors are used, mount the distributor directly on the expansion valve outlet.
   2. Install the valve in such a location so that the diaphragm case is warmer than the bulb.
   3. Secure the bulb to a clean, straight, horizontal section of the suction line using two bulb straps. Do not mount bulb in a trap or at the bottom of the line.
   4. Where external equalizer lines are required make the connection where it will clearly reflect the pressure existing in the suction line at the bulb location.

F. Install pressure regulating and relieving valves as required by ASHRAE Standard 15.

3.7 EQUIPMENT CONNECTIONS

A. The Drawings indicate the general arrangement of piping, fittings, and specialties.

B. Install piping adjacent to machine to allow servicing and maintenance.

3.8 FIELD QUALITY CONTROL

A. Inspect, test, and perform corrective action of refrigerant piping in accordance with ASME Code B31.5, Chapter VI and the International Mechanical Code.

B. Repair leaking joints using new materials, and retest for leaks.

3.9 CLEANING

A. Before installation of copper tubing other than Type ACR tubing, clean the tubing and fitting using following cleaning procedure:
   1. Remove coarse particles of dirt and dust by drawing a clean, lintless cloth through the tubing by means of a wire or an electrician's tape.
   2. Draw a clean, lintless cloth saturated with trichloroethylene through the tube or pipe. Continue this procedure until cloth is not discolored by dirt.
   3. Draw a clean, lintless cloth, saturated with compressor oil, squeezed dry, through the tube or pipe to remove remaining lint. Inspect tube or pipe visually for remaining dirt and lint.
   4. Finally, draw a clean, dry, lintless cloth through the tube or pipe.

3.10 ADJUSTING AND CLEANING

A. Verify actual evaporator applications and operating conditions, and adjust thermostatic expansion valve to obtain proper evaporator superheat requirements.

B. Clean and inspect refrigerant piping systems in accordance with requirements of Division-15 Basic Mechanical Materials and Methods.

C. Adjust controls and safeties. Replace damaged or malfunctioning controls and equipment with new materials and products.

3.11 COMMISSIONING

A. Charge system using the following procedure:
   1. Install core in filter dryer after leak test but before evacuation.
   2. Evacuate refrigerant system with vacuum pump; until temperature of -20 deg F is indicated on vacuum dehydration indicator or 500 microns.
   3. During evacuation, apply heat to pockets, elbows, and low spots in piping.
   4. Maintain vacuum on system for minimum of 5 hours after closing valve between vacuum pump and system.
   5. Break vacuum with refrigerant gas, allow pressure to build up to 2 psi then evacuate refrigerant system a second time.
   6. Complete charging of system, using new filter dryer core in charging line. Provide full operating charge.

B. Train Owner's maintenance personnel on procedures and schedules related to start-up and shut-down, troubleshooting, servicing, and preventative maintenance of refrigerant piping valves and refrigerant piping specialties.

C. Review data in Operating and Maintenance Manuals. Refer to Division 1 section "Contract Closeout."

D. Schedule training with Owner through the Architect, with at least 7 days advance notice.

END OF SECTION 15183

SECTION 15410 - PLUMBING FIXTURES July 10, 2007

PART 1 - GENERAL

1.1 RELATED DOCUMENTS

A. Drawings and general provisions of Contract, including General and Supplementary Conditions and Division 1 Specification Sections, apply to this Section.

B. Requirements of the following Division 15 Sections apply to this Section:
1. "Basic Mechanical Requirements."
2. "Basic Mechanical Materials and Methods."

1.2 SUMMARY

A. This Section includes plumbing fixtures and trim, fittings, and accessories, appliances, appurtenances, equipment, and supports associated with plumbing fixtures.

B. Related Sections: The following Sections contain requirements that relate to this Section:
1. Division 15 Section "Valves" for valves used as supply stops.

C. Products furnished but not installed under this Section include:
1. Plumbing fittings (including faucets) and piping indicated, for fixtures, appliances, appurtenances, and equipment provided by Owner.
2. Plumbing fittings (including faucets) and piping indicated, for fixtures, appliances, appurtenances, and equipment specified in other sections.

D. Products installed but not furnished under this Section include:
1. Owner-supplied fixtures, as indicated.
2. Accessories, appliances, appurtenances, and equipment specified in other sections, requiring plumbing services or fixture-related devices, as indicated.

1.3 DEFINITIONS

A. Accessible: Describes a plumbing fixture, building, facility, or portion thereof that can be approached, entered, and used by physically handicapped people.

B. Accessory: Device that adds effectiveness, convenience, or improved appearance to a fixture but is not essential to its operation.

C. Appliance: Device or machine designed and intended to perform a specific function.

D. Appurtenance: Device or assembly designed to perform some useful function when attached to or used with a fixture.

E. Equipment: Device used with plumbing fixtures or plumbing systems to perform a certain function for plumbing fixtures but that is not part of the fixture.

F. Fitting: Fitting installed on or attached to a fixture to control the flow of water into or out of the fixture.

G. Fixture: Installed receptor connected to the water distribution system, that receives and makes available potable water and discharges the used liquid or liquid-borne wastes

directly or indirectly into the drainage system. The term "Fixture" means the actual receptor, except when used in a general application where terms "Fixture" and "Plumbing Fixture" include associated trim, fittings, accessories, appliances, appurtenances, support, and equipment.

H. Roughing-In: Installation of piping and support for the fixture prior to the actual installation of the fixture.

I. Support: Device normally concealed in building construction, for supporting and securing plumbing fixtures to walls and structural members. Supports for urinals, lavatories, and sinks are made in types suitable for fixture construction and the mounting required. Categories of supports are:
   1. Carrier: Floor-mounted support for wall-mounted water closet, and support fixed to wall construction for wall-hung fixture.
   2. Chair Carrier: Support for wall-hung fixture, having steel pipe uprights that transfer weight to the floor.
   3. Chair Carrier, Heavy Duty: Support for wall-hung fixture, having rectangular steel uprights that transfer weight to the floor.
   4. Reinforcement: Wood blocking or steel plate built into wall construction, for securing fixture to wall.

J. Trim: Hardware and miscellaneous parts, specific to a fixture and normally supplied with it required to complete fixture assembly and installation.

1.4 SUBMITTALS

A. General: Submit the following in accordance with Conditions of Contract and Division 1 Specification Sections.

B. Product data for each type of plumbing fixture specified, including fixture and trim, fittings, accessories, appliances, appurtenances, equipment, supports, construction details, dimensions of components, and finishes.

C. Wiring diagrams for field-installed wiring of electrically operated units.

D. Submit color samples of all fixtures to Architect.

E. Maintenance data for inclusion in “Operating and Maintenance Manual” specified in Division 1 Section “Project Closeout” and Division 15 Section “Basic Mechanical Requirements,” for each type of plumbing fixture specified, including fixture and trim, fittings, accessories, appliances, appurtenances, equipment, and supports.

1.5 QUALITY ASSURANCE

A. Regulatory Requirements: Comply with requirements of ANSI Standard A117.1, "Buildings and Facilities -- Providing Accessibility and Useability for Physically Handicapped People," and Public Law 90-480, "Architectural Barriers Act, 1968," with respect to plumbing fixtures for the physically handicapped. Americans with Disabilities Act.

B. Regulatory Requirements: Comply with requirements of ATBCB (Architectural and Transportation Barriers Compliance Board) "Uniform Federal Accessibility Standards (UFAS) - 1985-494-187" with respect to plumbing fixtures for the physically handicapped.

C. Listing and Labeling: Provide electrically operated fixtures specified in this Section that are listed and labeled.
   1. The terms "listed" and "labeled" shall be as defined in the National Electrical Code, Article 100.
   2. Listing and Labeling Agency Qualifications: A "Nationally Recognized Testing Laboratory" (NRTL) as defined in OSHA Regulation 1910.7.

1.6 DELIVERY, STORAGE, AND HANDLING

A. Deliver plumbing fixtures in manufacturer's protective packing, crating, and covering.

B. Store plumbing fixtures on elevated platforms in a dry location.

1.7 EXTRA MATERIALS

A. Deliver extra materials to Owner. Furnish extra materials described below matching products installed, packaged with protective covering for storage, and identified with labels clearly describing contents.
   1. Faucet Washers and O-rings: Furnish quantity of identical units not less than 10 percent of amount of each installed.
   2. Faucet Cartridges and O-rings: Furnish quantity of identical units not less than 5 percent of amount of each installed.
   3. Flushometer Repair Kits: Furnish quantity of identical units not less than 10 percent of amount of each flushometer installed.
   4. Provide a hinged-top wood or metal box, or individual metal boxes, having a separate compartment for each type and size of above extra materials.
   5. Water Closet Tank Repair Kits: Furnish quantity of identical flush valve units not less than 5 percent of amount of each type installed.
   6. Toilet Seats: Furnish quantity of identical units not less than 5 percent of amount of each type toilet seat installed.

PART 2 - PRODUCTS

2.1 MANUFACTURERS

A. Manufacturers: Subject to compliance with requirements, provide products in each category, by one of the following listed for that category:

   1. Water Closets:
      a. American Standard, Inc.
      b. Barclay Products Ltd.
      c. Briggs Div.; Briggs Industries, Inc.
      d. Crane Plumbing/Fiat Products.
      e. Eljer; A Household International Co.
      f. Gerber Plumbing Fixture Corp.
      g. Kohler Co.
      h. Mansfield Plumbing Products, Inc.

   2. Urinals:
      a. American Standard, Inc.
      b. Briggs Div.; Briggs Industries, Inc.
      c. Crane Plumbing/Fiat Products.
      d. Eljer; A Household International Co.
      e. Gerber Plumbing Fixture Corp.

f. Kohler Co.
g. Mansfield Plumbing Products, Inc.
h. Universal-Rundle Corp.
i. Urinette, Inc.

3. Lavatories:
   a. Acorn Engineering Co.
   b. American Standard, Inc.
   c. Barclay Products Ltd.
   d. Briggs Div.; Briggs Industries, Inc.
   e. CECO.
   f. Crane Plumbing/Fiat Products.
   g. Eljer; A Household International Co.
   h. Elkay Manufacturing Co.
   i. Gerber Plumbing Fixture Corp.
   j. International Sanitary Ware Manufacturing Co.
   k. Just Manufacturing Co.
   l. Koch.
   m. Kohler Co.
   n. Mansfield Plumbing Products, Inc.
   o. Universal-Rundle Corp.

4. Sinks:
   a. American Standard, Inc.
   b. Briggs Div.; Briggs Industries, Inc.
   c. CECO.
   d. Crane Plumbing/Fiat Products.
   e. Eljer; A Household International Co.
   f. Elkay Manufacturing Co.
   g. Just Manufacturing Co.
   h. Koch.
   i. Kohler Co.
   j. Moen Group; Stanadyne Corp.
   k. Universal-Rundle Corp.
   l. Kindred

5. Service and Mop Sinks:
   a. Acorn Engineering Co.
   b. American Standard, Inc.
   c. CECO.
   d. Crane Plumbing/Fiat Products.
   e. Eljer; A Household International Co.
   f. Elkay Manufacturing Co.
   g. Just Manufacturing Co.
   h. Kohler Co.
   i. Universal-Rundle Corp.

6. Water Coolers:
   a. EBCO Manufacturing Co.
   b. Elkay Manufacturing Co.
   c. Filtrine Manufacturing Co.
   d. Halsey Taylor; A Household International Co.
   e. Haws Drinking Faucet Co.
   f. Sunroc Corp.
   g. Western Drinking Fountains; Sunroc Corp.

7. Toilet Seats:
   a. Bemis Mfg. Co.
   b. Beneke Div.; Sanderson Plumbing Products, Inc.
   c. Centoco Mfg.
   d. Church Seat Co.
   e. Kohler Co.
   f. Olsonite Corp.
   g. Sperzel Industries, Inc.

8. Flushometers:
   a. Cambridge Brass Div.; EMCO Products; Masco Corp.
   b. Hydrotek International, Inc.
   c. Sloan Valve Co.
   d. Watrous Flush Valve Co.; Polaris Industries.
   e. Zurn Industries, Inc.; Flush Valve Operations.

9. Commercial/Industrial Cast-Brass Faucets and Gas Cocks:
   a. American Standard, Inc.
   b. Briggs Div.; Briggs Industries, Inc.
   c. Cambridge Brass.
   d. Chicago Faucet Co.
   e. Crane Plumbing/Fiat Products.
   f. Eljer; A Household International Co.
   g. Fisher Manufacturing Co.
   h. Grohe America, Inc.
   i. Kohler Co.
   j. Moen Group; Stanadyne Corp.
   k. Royal Brass Mfg. Co.
   l. Speakman Co.
   m. T & S Brass and Bronze Works, Inc.
   n. n.Zurn Industries Inc.

10. Commercial/Residential Cast-Brass and Cast-Brass Underbody Faucets:
   a. American Standard, Inc.
   b. Brass Craft Subsidiary; Masco Corp.
   c. Briggs Div.; Briggs Industries, Inc.
   d. Central Brass Manufacturing Co.
   e. Chicago Faucet Co.
   f. Crane Plumbing/Fiat Products
   g. Delta Faucet Co.; Div. of Masco Corp.
   h. Eljer; A Household International Co.
   i. Elkay Manufacturing Co.
   j. Gerber Plumbing Fixtures Corp.
   k. Grohe America, Inc.
   l. Indiana Brass
   m. Kohler Co.
   n. Moen Group; Stanadyne Corp.
   o. Price Pfister, Inc.
   p. Royal Brass Mfg. Co.
   q. Speakman Co.
   r. Symmons Industries, Inc.
   s. T & S Brass and Bronze Works, Inc.
   t. Valley Faucets Div.; U.S. Brass.

11. Thermostatic Mixing Valve Bath/Shower Faucets:
    a. Bradley Corp.
    b. Grohe America, Inc.
    c. Lawler Manufacturing Co., Inc.
    d. Leonard Valve Co.
    e. Powers Process Controls; A Unit of Mark Controls Corp.
    f. Symmons Industries, Inc.
    g. T & S Brass and Bronze Works, Inc.

12. Sensor-Operated Faucets and Devices:
    a. Acorn Engineering Co.
    b. Bradley Corp.
    c. Chicago Faucet Co.
    d. DAL American, Inc.
    e. Hydrotek International, Inc.
    f. International Sanitary Ware Manufacturing Co.
    g. Sloan Valve Co.
    h. Speakman Co.
    i. Zurn Industries, Inc.

13. Miscellaneous Fittings (Except Faucets):
    a. Aquaflo Corp.
    b. Beaton & Corbin Mfg. Co.
    c. Brass Craft Subsidiary; Masco Co.
    d. Bridgeport Plumbing Products, Inc.
    e. Central Brass Manufacturing Co.
    f. Chicago Faucet Co.
    g. Connecticut Stamping & Bending Co.
    h. Crane Plumbing/Fiat Products.
    i. Eljer; A Household International Co.
    j. Engineered Brass Co.
    k. Jamac Industries, Inc.
    l. Kohler Co.
    m. McGuire Manufacturing Co., Inc.
    n. Price Pfister, Inc.
    o. Royal Brass Mfg. Co.
    p. T & S Brass and Bronze Works, Inc.
    q. Teledyne Ansonia.
    r. Watts Brass and Tubular.

14. Supports:
    a. Ancon, Inc.
    b. Josam Co.
    c. Smith (Jay R.) Mfg. Co.
    d. Wade Div.; Tyler Pipe.
    e. Zurn Industries, Inc.; Hydromechanics Div.

15. Disposers:
    a. General Electric Co.
    b. Hotpoint; General Electric Co.
    c. In-Sink-Erator Div.; Emerson Electric Co.
    d. Jenn-Air Co.
    e. KitchenAid, Inc.
    f. Thermador/Waste King; A Masco Co.

16. Accessible Fixture Supply and Trap Insulation:
    a. Brocar Products, Inc.
    b. Truebro Inc.

2.2 PLUMBING FIXTURES, GENERAL

A. Provide plumbing fixtures and trim, fittings, other components, and supports as specified in "Fixture Schedule" at the end of Part 3 of this Section.

B. Plumbing fixtures shall be the manufacturer's standard color unless specific colors are noted. Submit color samples to Architect for approval.

2.3 FAUCETS

A. Provide Faucets as specified in "Fixture Schedule" at the end of Part 3 of this Section.

2.4 FITTINGS, EXCEPT FAUCETS

A. Fittings General: Unless otherwise specified, provide fittings fabricated of brass, with a polished chrome plated finish.

B. Lavatory Supplies and Stops, Type 3: Wheel handle angle stop, having 1/2-inch NPS inlet with wall flange and 3/8-inch by 12-inch flexible tubing riser outlet.

C. Lavatory Traps, Type 2: Cast-brass, 1-1/4-inch by 1-1/2-inch NPS adjustable P-trap with cleanout, 17-gage tubular waste to wall, and wall flange.

D. Sink Supplies and Stops, Type 2: Wheel handle angle stop, having 1/2-inch NPS inlet with wall flange and 1/2-inch by 12-inch flexible tubing riser outlet.

E. Sink Traps, Type 1: Cast-brass, 1-1/2-inch NPS adjustable P-trap with cleanout, 17-gage tubular waste to wall, and wall flange.

F. Sink Continuous Wastes, Type 4: Polished chrome-plated, tubular brass, 2 inches, 17 gage, with brass nuts on slip inlets, and of configurations indicated.

G. Water Closet Supplies and Stops, Type 2: Wheel handle angle stop, having 1/2-inch NPS inlet with wall flange and 1/2-inch by 12-inch flexible tubing riser outlet with collar.

H. Urinal Traps, Type 1: 1-1/2-inch NPS adjustable P-trap with cleanout, 17-gage tubular waste to wall, and wall flange.

I. Supply and drain plumbing service fittings not listed above shall be as specified and as scheduled.

J. Fittings installed concealed within wall construction may be without chrome plate finish.

K. Escutcheons: Wall flange with set screw.

L. Escutcheons: Polished chrome-plated, sheet steel wall flange with friction clips.

M. Deep Pattern Escutcheons: Wall flange with set screw or sheet steel wall flange with friction clips, of depth adequate to conceal protruding roughing-in fittings.

N. Provide fittings specified as part of a fixture description, in lieu of fitting requirements above.

2.5 FLUSHOMETERS

A. Provide flushometers as specified in "Fixture Schedule" at the end of Part 3 of this Section.

2.6 TOILET SEATS

A. General: Provide toilet seats compatible with water closets, and of type, color, and features indicated.

B. Toilet Seats Type 3: Heavy-duty, commercial/industrial type, elongated open front, solid plastic, with self sustaining check hinge.

2.7 DISPOSERS

A. Disposers: As specified with fixtures.

2.8 PLUMBING FIXTURE SUPPORTS

A. Supports: ASME A112.6.1M, categories and types as required for wall-hanging fixtures specified, and wall reinforcement.

B. Support categories are:
   1. Carriers: Supports for wall-hanging water closets and fixtures supported from wall construction. Water closet carriers shall have an additional faceplate and coupling when used for wide pipe spaces. Provide tiling frame or setting gage with carriers for wall-hanging water closets. Provide carriers matching wall and chase space available.
   2. Chair Carriers: Supports with steel pipe uprights for wall-hanging fixtures. Urinal chair carriers shall have bearing plates.
   3. Chair Carriers, Heavy Duty: Supports with rectangular steel uprights for wall-hanging fixtures.
   4. Reinforcement: 2-inch by 4-inch wood blocking between studs or 1/4-inch by 6-inch steel plates attached to studs, in wall construction, to secure floor-mounted and special fixtures to wall.

C. Support Types: Provide support of category specified, of type having features required to match fixture.

D. Provide supports specified as part of fixture description, in lieu of category and type requirements above.

2.9 ACCESSIBLE FIXTURE INSULATION

A. Insulation: Molded closed cell vinyl insulation preformed for supplies, stops and "P" traps.

2.10 LOW VOLTAGE WIRING

A. Provide all low voltage wiring required for operation of sensor faucets and flush valves.

2.11 TRANSFORMERS

A. Provide 120 volt to low voltage (24 volt or 6 volt) transformers for sensor faucets and flush valves. Transformers shall be provided by faucet and flush valve manufacturer. See plans for number of valves served by transformer.

PART 3 - EXECUTION

3.1 EXAMINATION

A. Examine roughing-in for potable cold water and hot water supplies and soil, waste, and vent piping systems to verify actual locations of piping connections prior to installing fixtures.

B. Examine walls, floors, and cabinets for suitable conditions where fixtures are to be installed.

C. Do not proceed until unsatisfactory conditions have been corrected.

3.2 APPLICATION

A. Install plumbing fixtures and specified components, in accordance with designations and locations indicated on Drawings.

B. Install supports for plumbing fixtures in accordance with categories indicated, and of type required:
   1. Carriers for following fixtures:
      a. Wall-hanging water closets.
      b. Wall-hanging fixtures supported from wall construction.
   2. Chair carriers for the following fixtures:
      a. Wall-hanging urinals.
      b. Wall-hanging lavatories and sinks.
      c. Wall-hanging drinking fountains and electric water coolers.
   3. Heavy-duty chair carriers for the following fixtures:
      a. Accessible lavatories.
      b. Fixtures where specified.
   4. Reinforcement for the following fixtures:
      a. Floor-mounted lavatories required to be secured to wall.
      b. Floor-mounted sinks required to be secured to wall.
      c. Recessed, box-mounted electric water coolers.

3.3 INSTALLATION OF PLUMBING FIXTURES

A. Install plumbing fixtures level and plumb, in accordance with fixture manufacturers' written installation instructions, roughing-in drawings, and referenced standards.

B. Install wall-hanging, back-outlet water closets with support manufacturer's tiling frame or setting gage.

C. Install wall-hanging, back-outlet urinals with gasket seals.

D. Fasten wall-hanging plumbing fixtures securely to supports attached to building substrate when supports are specified, and to building wall construction where no support is indicated.

E. Fasten floor-mounted fixtures and special fixtures having holes for securing fixture to wall construction, to reinforcement built into walls.

F. Fasten wall-mounted fittings to reinforcement built into walls.

G. Fasten counter-mounting-type plumbing fixtures to casework.

H. Secure supplies behind wall or within wall pipe space, providing rigid installation.

I. Install stop valve in an accessible location in each water supply to each fixture.

J. Install trap on fixture outlet except for fixtures having integral trap.

K. Install escutcheons at each wall, floor, and ceiling penetration in exposed finished locations and within cabinets and millwork. Use deep pattern escutcheons where required to conceal protruding pipe fittings.

L. Seal fixtures to walls, floors, and counters using a sanitary-type, one-part, mildew-resistant, silicone sealant in accordance with sealing requirements specified in Division 7 Section "Joint Sealant." Match sealant color to fixture color.

M. Install insulation on supplies, stops and "P" traps at all accessible fixtures.

N. Install low voltage wiring to sensor operated faucets and flush valves. Wiring shall be installed in conduit in accordance with Division 16.

O. Install transformers as shown on drawings.

3.4 CONNECTIONS

A. Piping installation requirements are specified in other sections of Division 15. The Drawings indicate general arrangement of piping, fittings, and specialties. The following are specific connection requirements:
   1. Install piping connections between plumbing fixtures and piping systems and plumbing equipment specified in other sections of Division 15.
   2. Install piping connections indicated between appliances and equipment specified in other sections, direct connected to plumbing piping systems.

3.5 FIELD QUALITY CONTROL

A. Inspect each installed fixture for damage. Replace damaged fixtures and components.

B. Test fixtures to demonstrate proper operation upon completion of installation and after units are water pressurized. Replace malfunctioning fixtures and components, then retest. Repeat procedure until all units operate properly.

C. Verify that installed plumbing fixtures are categories and types specified for locations where installed.

D. Check that plumbing fixtures are complete with trim, faucets, fittings, and other specified components.

E. Install fresh batteries in sensor-operated mechanisms.

3.6 ADJUSTING AND CLEANING

A. Operate and adjust faucets and controls. Replace damaged and malfunctioning fixtures, fittings, and controls.

B. Operate and adjust disposers and controls. Replace damaged and malfunctioning units and controls.

C. Adjust water pressure at drinking fountains, electric water coolers, faucets, shower valves, and flushometers having controls, to provide proper flow and stream.

D. Replace washers of leaking and dripping faucets and stops.

E. Clean fixtures, fittings, and spout and drain strainers with manufacturers' recommended cleaning methods and materials.

F. Review the data in Operating and Maintenance Manuals. Refer to Division 1 Section "Contract Closeout."

3.7 PROTECTION

A. Provide protective covering for installed fixtures and fittings.

B. Do not allow use of fixtures for temporary facilities, except when approved in writing by the Owner.

3.8 FIXTURE SCHEDULE

L Accessible Lavatory: Kohler K-2006 Kingston 21" X 18" vitreous china, wall hung lavatory with 8" faucet centers, drilling for floor mounted carriers with concealed arm brackets; K-7715 open grid strainer; Chicago No. 785-E3 Hi-Lite Quaturn fitting with No. 317 4" wrist blade handles and No. GN-1A-E3 rigid gooseneck spout with E-3 aerator. Provide thermostatic mixing valve and adjust setpoint to provide tempered water. Install compliant with ADA requirements.

WC Water Closet: Kohler K-4330 Kingston Lite vitreous china siphon jet, elongated bowl, wall hung with 1-1/2" top spud. Sloan 111 flush valve.

MS Mop Sink: Kohler K-6710 Whitby enameled cast iron corner service sink; K-8940 coated wire rim guard; K-9146 strainer; 3" cast iron "P" trap; Chicago No. 897 combination service sink fitting with vacuum breaker, 3/4" hose thread and pail hook on spout, No. 369 handles, wall brace and No. R 1/2" flanged female adjustable arms with integral stops. Polished chrome plated finish. Provide 5'-0" of 3/8" diameter white rubber hose on spout outlet and chrome plated wall hook.

EWC Water Cooler: Oasis model P8ACSL wall mounted barrier free split level water cooler. Stainless steel top, galvanized steel frame and panels with powder coated paint; cooler shall deliver 8.0 gph of 50ºF drinking water with 80ºF inlet temperature and 90ºF room temperature. Install compliant with ADA requirements.

WC-A Accessible Water Closet: Kohler K-4330 Kingston Lite vitreous china siphon jet, elongated bowl, wall hung with 1-1/2" top spud. Sloan 111 flush valve. Install compliant with ADA requirements.

UR Accessible Urinal: Kohler K-4972-T Stanwell Water-Guard vitreous china blowout action

urinal with 1-1/4" top spud inlet and 2" I.P.S. outlet. Sloan 180 flush valve. Install compliant with ADA requirements.

IMB Guy Gray model BIM875 Galvanized ice maker box furnished with 1/2" FIP Inlet x 1/4" OD Outlet Comperssion Angle Valve. Supply Connection is 1/2" MPT or 5/8" OD Sweat Connection.

BS (2) Compartment Sink: Elkay LR-3319 18 ga. type 302 stainless steel (2) compartment sink; 33" X 19" X 8" deep; self rimming; (2) faucet holes on 8" centers; (2) LK-35 duo strainer; Chicago No. 1100 Classic Quaturn top mount deck sink fitting with No. L8 8" swing spout, No. E3 Softflo aerator and No. 1000 handles; In-Sink-Erator Classic LC disposer; 1/2 HP 115/1/60.

END OF SECTION 15410

SECTION 15411 - PLUMBING PIPING July 10, 2007

PART 1 - GENERAL

1.1 RELATED DOCUMENTS

A. Drawings and general provisions of the Contract, including General and Supplementary Conditions and Division 1 Specification Sections, apply to this Section.

1.2 SUMMARY

A. This Section includes plumbing piping systems to a point 5 feet outside the building. Systems include the following:
   1. Potable water distribution, including cold- and hot-water supply.
   2. Drainage and vent systems, including sanitary.

B. Related Sections: The following sections contain requirements that relate to this Section:
   1. Division 15 Section "Basic Mechanical Materials and Methods" for piping joining materials, joint construction, and installation requirements not specified in this Section.
   2. Division 15 Section "Meters and Gages" for thermometers, pressure gages, and fittings.
   3. Division 15 Section "Plumbing Specialties" for plumbing system components.

1.3 SYSTEM PERFORMANCE REQUIREMENTS

A. Provide components and installation capable of producing piping systems with the following minimum working pressure ratings, except where indicated otherwise:
   1. Water Distribution Systems, Above Ground: 125 psig.
   2. Soil, Waste, and Vent Systems: 10-foot head of water.
   3. Storm Drainage Systems: 10-foot head of water.

1.4 SUBMITTALS

A. General: Submit the following in accordance with Conditions of Contract and Division 1 Specification Sections.

B. Product data for the following plumbing piping products:
   1. Couplings and fittings for grooved-end steel pipe and grooved-end ferrous fittings.
   2. Couplings and fittings for grooved-end copper tube and grooved-end copper fittings.

C. Water samples, test results, and reports specified in "Field Quality Control" and "Cleaning" Articles.

1.5 COORDINATION DRAWINGS

A. Coordination drawings, drawn accurately to scale and coordinating penetrations. Do not submit. Prepare drawings and retain at job site for coordination.

1.6 QUALITY ASSURANCE

A. Comply with the provisions of ASME B31.9 "Building Services Piping" for materials, products, and installation.

B. Provide listing/approval stamp, label, or other marking on piping made to specified standards.

PART 2 - PRODUCTS

2.1 MANUFACTURERS

A. Manufacturers: Subject to compliance with requirements, provide products by one of the following:

1. Couplings for Grooved-End Copper Tube and Grooved-End Copper Fittings:
   a. Victaulic Co. of America.
   b. Gruvlok.

2.2 PIPES AND TUBES

A. General: The application of the following pipe, tube, and fitting materials and joining methods required for plumbing piping systems are indicated in Part 3 Article "Pipe and Fittings Applications."

B. Hard Copper Tube: ASTM B 88, Types K and L, water tube, drawn temper.

C. Soft Copper Tube: ASTM B 88, Types K and L, water tube, annealed temper.

D. Hub and Spigot, Cast-Iron Soil Pipe: ASTM A 74, Service Class.

E. Hubless, Cast-Iron Soil Pipe: CISPI 301 ATSM A-888.

2.3 PIPE FITTINGS AND TUBE FITTINGS

A. Wrought-Copper, Solder-Joint Pressure Fittings: ASME B16.22.

B. Cast-Copper-Alloy, Solder-Joint Pressure Fittings: ASME B16.18.

C. Wrought-Copper and Bronze, Grooved-End Fittings: ASTM B 75 Tube and ASTM B 584 Bronze Castings.

D. Copper Tube, Grooved-End Mechanical Fittings: ASTM B 75, copper tube and ASTM B 584 bronze castings.

E. Bronze Flanges: ASME B16.24, Classes 150 and 300.

F. Copper Unions: ASME B16.18, cast-copper-alloy body, hexagonal stock, with ball-and-socket joint, metal-to-metal seating surfaces, and solder-joint, threaded, or solder-joint and threaded ends.
   1. Threaded Ends: Threads conforming to ASME B1.20.1.

G. Cast-Iron Threaded Flanges: ASME B16.1, Classes 125 and 300.

H. Ductile-Iron and Gray-Iron Gasketed Fittings: AWWA C110 standard pattern or ductile-iron AWWA C153 compact pattern, 250 psig minimum pressure rating, with AWWA C104 cement-mortar lining and AWWA C111 rubber gaskets.

I. Ductile-Iron and Gray-Iron Flanged Fittings: AWWA C110, 250-psig minimum pressure rating, with AWWA C104 cement-mortar lining.

J. Ductile-Iron, Flexible Expansion Joints: Compound fitting with combination of flanged and mechanical-joint ends conforming to AWWA C110 or AWWA C153. Units have 2 gasketed ball-joint sections and 1 or more gasketed sleeve sections, rated for 250 psig minimum working pressure and with FDA-approved epoxy interior coating, for offset and expansion indicated.

K. Ductile-Iron Deflection Fittings: Compound coupling fitting with sleeve and flexing sections, gaskets, and restrained-joint ends conforming to AWWA C110 or AWWA C153. Units rated for 250 psig minimum working pressure, and with cement lining or FDA-approved epoxy interior coating, for up to 20-degrees deflection.

L. Ductile-Iron Expansion Joints: 3-piece assembly consisting of telescoping sleeve with gaskets and restrained-type, ductile-iron bell and spigot end sections conforming to AWWA C110 or AWWA C153. Units rated for 250 psig minimum working pressure, and with cement lining or FDA-approved epoxy interior coating, for expansion indicated.

M. Steel Expansion Joints: Compound galvanized steel pipe fitting consisting of telescoping body and slip-pipe sections, packing ring, packing, limit rods, flanged ends, and chrome-plated finish on slip pipe telescoping section.
   1. Pressure Rating: 150 psig minimum.
   2. Interior Lining: FDA-approved epoxy coating.

N. Hub and Spigot, Cast-Iron Soil Pipe Fittings: ASTM A 74, Service Class.

O. Hubless, Cast-Iron Soil Pipe Fittings: CISPI 301.

2.4 JOINING MATERIALS

A. Solder, brazing, and welding filler metals are specified in Division 15 Section "Basic Mechanical Materials and Methods."

B. Cast-Iron Soil Pipe and Fittings: ASTM C 564 neoprene rubber gaskets and lubricant.

C. Ductile-Iron Pipe and Ductile-Iron or Cast-Iron Fittings: The following materials apply:
   1. Push-On Joints: AWWA C111 rubber gaskets and lubricant.
   2. Mechanical Joints: AWWA C111 ductile-iron or gray-iron glands, high-strength steel bolts and nuts, and rubber gaskets.
   3. Flanged Joints: AWWA C115 ductile-iron or gray-iron pipe flanges, rubber gaskets, and high-strength steel bolts and nuts.

D. CISPI Couplings for Hubless Cast-Iron Soil Pipe and Fittings: CISPI 310, having ASTM C 564 neoprene sealing sleeve, with 300 Series stainless-steel corrugated shield-and-clamp assembly.

E. Stainless Steel, Heavy-Duty Couplings for Hubless Cast-Iron Soil Pipe and Fittings: ASTM C 564 neoprene sealing gasket, with Type 304 stainless-steel housing or shield and stainless-steel clamps. Coupling shall be 3 inches wide in sizes 1-1/2 to 4 inches and 4 inches wide in sizes 5 to 10 inches.

F. Cast-Iron, Heavy-Duty Couplings for Hubless Cast-Iron Soil Pipe and Fittings: ASTM C 564 neoprene sealing gasket, with cast-iron housing and stainless steel bolts.

G. FM-Type, Heavy-Duty Couplings for Hubless Cast-Iron Soil Pipe and Fittings: FM-approved, ASTM C 564 elastomeric sleeve, with stainless steel band and strips or cast-iron housing and corrosion-resistant bolts.

H. Sleeve-Type Couplings for Plain-End, Nonpressure System Pipe: Rubber or elastomeric sleeve and stainless steel band assembly, fabricated to match outside diameters of pipes to be joined.
   1. Sleeves: ASTM C 564, rubber for cast-iron soil pipe and ASTM F 477, elastomeric seal for plastic pipe. Sleeves for dissimilar or other pipe materials shall be compatible with pipe materials being joined.
   2. Bands: Stainless steel, one at each pipe insert.

I. Gasket-Type Couplings for Plain-End, Nonpressure System Pipe: Rubber or elastomeric compression gasket, made to match pipe inside diameter or hub and adjoining pipe outside diameter.
   1. Gaskets: ASTM C 564, rubber for cast-iron soil pipe and ASTM F 477, elastomeric seal for plastic pipe. Gaskets for dissimilar or other pipe materials shall be compatible with pipe materials being joined.

J. Couplings for Grooved-End Steel Pipe and Grooved-End Ferrous Fittings: ASTM A 536 ductile-iron or ASTM A 47 malleable-iron housing having enamel finish, with synthetic-rubber gasket having central-cavity, pressure-responsive design, with ASTM A 183 carbon-steel bolts and nuts, locking pin or toggle, or lugs to secure grooved pipe and fittings and gasket suitable for hot water, except where otherwise indicated.

K. Couplings for Grooved-End Ductile-Iron Pipe and Fittings: AWWA C606, consisting of ASTM A 536 ductile-iron housing having enamel finish, with synthetic-rubber gasket having central-cavity, pressure-responsive design, with ASTM A 183 carbon-steel bolts and nuts to secure grooved pipe and fittings and gasket suitable for hot water, except where otherwise indicated.

L. Couplings for Grooved-End Copper Tube and Grooved-End Copper Fittings: ASTM A 536 ductile-iron or ASTM A 47 malleable-iron housing having copper-colored enamel finish, with synthetic-rubber gasket having central-cavity, pressure-responsive design and suitable for hot water, with ASTM A 183 carbon-steel bolts and nuts.

2.5 VALVES

A. Refer to Division 15 Section "Valves" for globe, ball, butterfly, and check valves.

B. Refer to Division 15 Section "Plumbing Specialties" for special-duty valves.

PART 3 - EXECUTION

3.1 EXCAVATION

A. Excavation, trenching, and backfilling are specified in Division 2 Section "Earthwork."

3.2 PREPARATION OF FOUNDATION FOR BURIED PIPING

A. Grade trench bottom to provide smooth, firm, stable, and rock-free foundation throughout length of piping.

B. Remove unstable, soft, and unsuitable materials at surface on which piping is to be laid and backfill with clean sand or pea gravel to indicated level.

C. Shape bottom of trench to fit bottom of piping. Fill unevenness with tamped-sand backfill. Dig bell holes at each pipe joint to relieve bells of loads and to ensure continuous bearing of pipe barrel on foundation.

3.3 PIPE AND FITTINGS APPLICATIONS

A. General: Use pipe, tube, fittings, and joining methods for piping systems according to the following applications.

B. Water Distribution Piping Above Ground: Use the following:
   1. 3-1/2 Inches and Smaller: Hard copper tube, Type L; wrought-copper or cast-copper-alloy pressure fittings; copper unions; bronze flanges; and solder joints with lead free solder.

C. Soil, Waste, and Vent Piping Below Ground: Use the following:
   1. 5 to 15 Inches: Hub-and-spigot cast-iron soil pipe, hub-and-spigot cast-iron soil pipe fittings, neoprene rubber gaskets, and compression joints.
   2. 5 to 10 Inches: Hubless cast-iron soil pipe; hubless cast-iron soil pipe fittings; cast-iron, heavy-duty couplings for hubless cast-iron soil pipe and fittings; and hubless joints.
   3. 2 to 4 Inches: Hub-and-spigot cast-iron soil pipe, hub-and-spigot cast-iron soil pipe fittings, neoprene rubber gaskets, and compression joints.
   4. 2 to 4 Inches: Hubless cast-iron soil pipe; hubless cast-iron soil pipe fittings; cast-iron, heavy-duty couplings for hubless cast-iron soil pipe and fittings; and hubless joints.
   5. 2 to 4 Inches: Poly(vinyl chloride) (PVC) plastic DWV pipe; PVC socket-type drain, waste, and vent pipe pattern fittings; and solvent-cemented joints.

D. Soil, Waste, and Vent Piping Above Ground: Use the following:
   1. 5 to 15 Inches: Hub-and-spigot cast-iron soil pipe, hub-and-spigot cast-iron soil pipe fittings, neoprene rubber gaskets, and compression joints.
   2. 5 to 10 Inches: Hubless cast-iron soil pipe; hubless cast-iron soil pipe fittings; stainless-steel, cast-iron, or FM-type heavy-duty couplings for hubless cast-iron soil pipe and fittings; and hubless joints.
   3. 5 to 10 Inches: Hubless cast-iron soil pipe, hubless cast-iron soil pipe fittings, CISPI-type couplings for hubless cast-iron soil pipe and fittings, and hubless joints.
   4. 2 to 4 Inches: Hub-and-spigot cast-iron soil pipe, hub-and-spigot cast-iron soil pipe fittings, neoprene rubber gaskets, and compression joints.
   5. 2 to 4 Inches: Hubless cast-iron soil pipe; hubless cast-iron soil pipe fittings; stainless-steel, cast-iron, or FM-type heavy-duty couplings for hubless cast-iron soil pipe and fittings; and hubless joints.
   6. 2 to 4 Inches: Hubless cast-iron soil pipe, hubless cast-iron soil pipe fittings, CISPI-type couplings for hubless cast-iron soil pipe and fittings, and hubless joints.

3.4 VALVE APPLICATIONS

A. Drawings indicate valve types to be used. Where specific valve types are not indicated, the following requirements apply:
   1. Shutoff Duty: Use ball or butterfly valves.

3.5 PIPING INSTALLATION, GENERAL

A. Basic piping installation requirements are specified in Division 15 Section "Basic Mechanical Materials and Methods."

3.6 WATER DISTRIBUTION PIPING INSTALLATION

A. Install piping level without pitch.

3.7 DRAINAGE AND VENT PIPING INSTALLATION

A. Install cast-iron soil pipe and cast-iron soil pipe fittings according to CISPI 1990 revised and edited edition of "Cast Iron Soil Pipe and Fittings Handbook, Volume I," Chapter IV, "Installation of Cast Iron Soil Pipe and Fittings."

B. Make changes in direction for drainage and vent piping using appropriate Y branches, Y branches with 1/8 bends, and long-sweep 1/4, 1/5, 1/6, 1/8, and 1/16 bends. Sanitary tees and short-sweep quarter bends may be used on vertical stacks of drainage lines where change in direction of flow is from horizontal to vertical. Use long-turn double-Y-branch and 1/8-bend fittings where 2 fixtures are installed back to back or side by side and have a common drain. Straight tees, elbows, and crosses may be used on vent lines. Make no change in direction of flow greater than 90 degrees. Where different sizes of drainage pipes and fittings are connected, use proper size standard increasers and reducers. Reduction of the size of drainage piping in the direction of flow is prohibited.

C. Lay buried building drains beginning at low point of each system, true to grades and alignment indicated, with unbroken continuity of invert. Place hub or bell ends of piping facing upstream. Install required gaskets according to manufacturer's recommendations for use of lubricants, cements, and other special installation requirements. Maintain swab or drag in piping and pull past each joint as completed.

D. Install drainage and vent piping at the following minimum slopes, except where another slope is indicated:
   1. Sanitary Building Drain: 1/4 inch per foot (2 percent). 1/8 inch per foot (1 percent) for piping 4 inches and larger if first approved by Administrative Authority.
   2. Horizontal Sanitary Drainage Piping: 1/4 inch per foot (2 percent).
   3. Storm Building Drain: 1/8 inch per foot (1 percent).
   4. Horizontal Storm Drainage Piping: 1/8 inch per foot (1 percent).
   5. Vent Piping: 1 percent down toward vertical fixture vent or toward vent stack.

E. Install engineered sanitary drainage and vent systems in locations indicated and as follows:
   1. Combination Waste and Vent Systems: Comply with standards of authority having jurisdiction.

F. Sleeves are not required for cast-iron soil pipes passing through concrete slab, without membrane waterproofing, on grade.

3.8 JOINT CONSTRUCTION

A. Basic piping joint construction is specified in Division 15 Section "Basic Mechanical Materials and Methods."

B. Grooved Pipe and Grooved-Pipe Fitting Joints: Assemble joints with coupling, gasket, lubricant, and bolts according to coupling and fitting manufacturer's written instructions.

C. Grooved Copper Tube and Grooved-Tube Fitting Joints: Assemble joints with coupling, gasket, lubricant, and bolts according to coupling and fitting manufacturer's written instructions.

D. Cast-Iron Soil Pipe and Cast-Iron Soil Pipe Fitting Joints: Make joints according to recommendations in CISPI 1990 revised and edited edition of "Cast Iron Soil Pipe and Fittings Handbook, Volume I," Chapter IV, "Installation of Cast Iron Soil Pipe and Fittings."
   1. Compression Joint: Make with neoprene gasket matching class of pipe and fittings.
   2. Hubless Joint: Make with neoprene gasket and sleeve or clamp.

3.9 INSTALLATION OF VALVES

A. Sectional Valves: Install sectional valves close to main on each branch and riser serving 2 or more plumbing fixtures or equipment connections and where indicated. Use ball valves for sectional valves 4 inches and smaller. Use butterfly valves for sectional valves larger than 4 inches.

B. Shutoff Valves: Install shutoff valves on inlet to each plumbing equipment item, on each supply to each plumbing fixture not having stops on supplies, and elsewhere as indicated. For shutoff valves 4 inches and smaller, use ball valves; for shutoff valves larger than 4 inches, use butterfly valves.

C. Drain Valves: Install drain valves specified in Division 15 Section "Plumbing Specialties" on each plumbing equipment item located to drain equipment for service and repair. Install drain valve at base of each riser, at low points of horizontal runs, and where required to drain water distribution piping system.
   1. Install hose-end drain valves at low points in water mains, risers, and branches.
   2. Install stop and waste drain valves where indicated.

3.10 HANGERS AND SUPPORTS INSTALLATION

A. Hanger and support devices are specified in Division 15 Section "Hangers and Supports."

B. Install hangers for horizontal piping with following maximum spacing and minimum rod sizes:

Nom. Pipe Size (Inches)	Steel Pipe Max. Span (Feet)	Copper Tube Max. Span (Feet)	Min. Rod Diameter (Inches)
Up to 3/4	10	6	3/8
1	12	6	3/8
1-1/4	12	6	3/8
1-1/2	12	6	3/8
2	12	12	3/8

2-1/2	12	12	1/2
3	12	12	1/2
3-1/2	12	12	1/2
4	12	12	5/8, 1/2 for copper
5	12	12	5/8, 1/2 for copper
6	12	12	3/4, 5/8 for copper
8	12	12	7/8, 3/4 for copper
10	12	12	7/8, 3/4 for copper
12	12	12	7/8, 3/4 for copper

1. Support vertical steel pipe and copper tube at each floor.

C. Conform to table below for maximum spacing of supports:

Pipe Material	Horizontal In Feet	Vertical In Feet
ABS Plastic Pipe	4	4
Cast-Iron Soil Pipe	5	15
CPVC Plastic Pipe	3	3
Copper Tubing - 1-1/4 Inches and Smaller	6	10
Copper Tubing - 1-1/2 Inches and Larger	10	10
PVC Plastic Pipe	4	4
Steel Pipe	12	15

D. Pipe Attachments: Install the following:
1. Riser Clamps: MSS Type 8 or Type 42 for vertical runs.
2. Adjustable Steel Clevis Hangers: MSS Type 1 for individual straight horizontal runs 100 feet and less.
3. Adjustable Roller Hangers: MSS Type 43 for individual straight horizontal runs longer than 100 feet.
4. Spring Cushion Rolls: MSS Type 49, where indicated, for individual straight horizontal runs longer than 100 feet.
5. Pipe Rolls: MSS Type 44 for multiple straight horizontal runs 100 feet or longer. Support pipe rolls on trapeze.
6. Spring Hangers: MSS Type 52 for support of base of vertical runs.

E. Support cast-iron soil pipe and fittings not included in table, at maximum horizontal spacing of 5 feet, except 10-foot sections of pipe may be supported at 10-foot spacing and at maximum vertical spacing of 15 feet.

F. Support plastic pipe and tubing not included in table according to manufacturer's recommendations.

3.11 CONNECTIONS

A. Supply Runouts to Fixtures: Install hot- and cold-water supply piping runouts of sizes indicated, but not smaller than required by plumbing code to fixtures.

B. Drainage Runouts to Fixtures: Provide drainage and vent piping runouts, with approved trap, of sizes indicated, but not smaller than required by plumbing code, to plumbing fixtures and drains.

C. Locate drainage piping runouts as close as possible to bottom of floor slab supporting fixtures or drains.

D. Mechanical Equipment Connections: Connect hot- and cold-water supply piping system to mechanical equipment as indicated. Provide shutoff valve and union for each connection; provide drain valve on drain connection. Use flanges instead of unions for connections 2-1/2 inches and larger.

3.12 FIELD QUALITY CONTROL

A. Inspect water distribution piping as follows:
   1. Do not enclose, cover, or put into operation water distribution piping system until it has been inspected and approved by the authority having jurisdiction.
   2. During progress of the installation, notify the plumbing official having jurisdiction at least 24 hours prior to time inspection must be made. Perform tests specified below in presence of the plumbing official.
      a. Roughing-In Inspection: Arrange for inspection of piping system before concealed or closed-in after system roughing-in and prior to setting fixtures.
      b. Final Inspection: Arrange for final inspection by plumbing official to observe tests specified below and to ensure compliance with requirements of plumbing code.
   3. Reinspections: When a plumbing official finds that piping system will not pass test or inspection, make required corrections and arrange for reinspection by the plumbing official.
   4. Reports: Prepare inspection reports signed by plumbing official.

B. Test water distribution piping as follows:
   1. Test for leaks and defects in new water distribution piping systems and parts of existing systems that have been altered, extended, or repaired. If testing is performed in segments, submit separate report for each test, complete with diagram of portion of system tested.
   2. Leave uncovered and unconcealed in new, altered, extended, or replaced water distribution piping until it has been tested and approved. Expose work that has been covered or concealed before it has been tested and approved for testing.
   3. Cap and subject the piping system to a static water pressure of 50 psig above the operating pressure without exceeding pressure rating of piping system materials. Isolate test source and allow to stand for 4 hours. Leaks and loss in test pressure constitute defects that must be repaired.
   4. Repair leaks and defects with new materials and retest system or portion thereof until satisfactory results are obtained.
   5. Prepare reports for tests and required corrective action.

C. Inspect drainage piping as follows:
   1. Do not enclose, cover, or put into operation drainage and vent piping system until it has been inspected and approved by the authority having jurisdiction.
   2. During progress of installation, notify the plumbing official having jurisdiction at least 24 hours prior to time such inspection must be made. Perform tests specified below in presence of the plumbing official.
      a. Roughing-In Inspection: Arrange for inspection of piping system after system roughing-in, before concealing, and prior to setting fixtures.
      b. Final Inspection: Arrange for final inspection by plumbing official to observe tests specified below and to ensure compliance with requirements of plumbing code.

3. Reinspections: Make required corrections and arrange for reinspection by plumbing official when piping system fails to pass test or inspection.
4. Reports: Prepare inspection reports signed by the plumbing official.

D. Drainage and Vent Piping System Tests: Test drainage and vent systems according to procedures of authority having jurisdiction or, in absence of published procedure, as follows:
1. Test for leaks and defects in new drainage and vent piping systems and parts of existing systems that have been altered, extended, or repaired. If testing is performed in segments, submit a separate report for each test, complete with a diagram of the portion of the system tested.
2. Leave uncovered and unconcealed in new, altered, extended, or replaced drainage and vent piping until it has been tested and approved. Expose for testing work that has been covered or concealed before it has been tested and approved.
3. Rough Plumbing Test Procedure: Except for outside leaders and perforated or open-jointed drain tile, test piping of plumbing drainage and venting systems on completion of roughing-in piping installation. Tightly close all openings in piping system and fill with water to point of overflow, but not less than 10 feet head of water. Water level shall not drop during the period from 15 minutes before inspection starts through completion of inspection. Inspect joints for leaks.
4. Finished Plumbing Test Procedure: After plumbing fixtures have been set and their traps filled with water, test connections and prove gastight and watertight. Plug stack openings on roof and building drain where it leaves the building and introduce air into the system equal to pressure of 1-inch water column. Use a U tube or manometer inserted in the trap of a water closet to measure this pressure. Air pressure shall remain constant without introducing additional air throughout period of inspection. Inspect plumbing fixture connections for gas and water leaks.
5. Repair leaks and defects using new materials and retest system or portion thereof until satisfactory results are obtained.
6. Prepare reports for tests and required corrective action.

3.13 CLEANING

A. Clean and disinfect water distribution piping as follows:
1. Purge new potable water distribution piping systems and parts of existing potable water systems that have been altered, extended, or repaired prior to use.
2. Use purging and disinfecting procedure prescribed by authority having jurisdiction or, if a method is not prescribed by that authority, the procedure described in either AWWA C651 or AWWA C652 or as described below:
   a. Flush piping system with clean, potable water until dirty water does not appear at outlets.
   b. Fill system or part thereof with water/chlorine solution containing at least 50 parts per million of chlorine. Isolate (valve off) and allow to stand for 24 hours.
   c. Drain system or part thereof of previous solution and refill with water/chlorine solution containing at least 200 parts per million of chlorine. Isolate and allow to stand for 3 hours.
   d. Flush system with clean, potable water until chlorine does not remain in water coming from system following allowed standing time.
   e. Submit water samples in sterile bottles to authority having jurisdiction. Repeat procedure if biological examination made by the authority shows evidence of contamination.

B. Prepare and submit reports for purging and disinfecting activities.

C. Clean interior of piping system. Remove dirt and debris as work progresses.

3.14 COMMISSIONING

A. Fill water systems. Check compression tanks to determine that they are not air bound and that system is completely full of water.

B. Before operating systems, perform these steps:
   1. Close drain valves, hydrants, and hose bibbs.
   2. Open shutoff valves to full open position.
   3. Open throttling valves to proper setting.
   4. Remove plugs used during testing of piping systems and plugs used for temporary sealing of piping during installation.
   5. Remove and clean strainer screens. Close drain valves and replace drain plugs.
   6. Remove filter cartridges from housings and verify that cartridges are as specified for application where used, clean, and ready for use.

C. Check plumbing equipment and verify proper settings, adjustments, and operation. Do not operate water heaters before filling with water.

D. Check plumbing specialties and verify proper settings, adjustments, and operation.

3.15 PROTECTION

A. Protect drains during remainder of construction period to avoid clogging with dirt and debris and to prevent damage from traffic and construction work.

B. Place plugs in ends of uncompleted piping at end of day or when work stops.

END OF SECTION 15411

SECTION 15430 - PLUMBING SPECIALTIES July 10, 2007

PART 1 - GENERAL

1.1 RELATED DOCUMENTS

A. Drawings and general provisions of the Contract, including General and Supplementary Conditions and Division 1 Specification Sections, apply to this Section.

1.2 SUMMARY

A. This Section includes plumbing specialties for water distribution systems; soil, waste, and vent systems; and storm drainage systems.

B. Products installed but not furnished under this Section include water meters that will be furnished by the utility company to the site and ready for installation. This is the name and address of the utility company:

C. Related Sections: The following sections contain requirements that relate to this Section:
1. Division 15 Section "Basic Mechanical Materials and Methods" for piping-joining materials, joint construction, basic installation requirements, and labeling and identifying requirements.
2. Division 15 Section "Valves" for ball, butterfly, globe, and check valves.
3. Division 15 Section "Meters and Gages" for thermometers, pressure gages, and fittings.
4. Division 15 Section "Plumbing Piping" for piping and connections.

1.3 SYSTEM PERFORMANCE REQUIREMENTS

A. Provide components and installation capable of producing piping systems with following minimum working pressure ratings, except where otherwise indicated:
1. Water Distribution Systems, Above Ground: 125 psig.
2. Soil, Waste, and Vent Systems: 10-foot head of water.

1.4 SUBMITTALS

A. General: Submit the following in accordance with Conditions of Contract and Division 1 Specification Sections.

B. Submit product data including rated capacities of selected models and weights (shipping, installation, and operation). Indicate materials, finishes, dimensions, required clearances, and methods of assembly of components; and piping and wiring connections for the following plumbing specialty products:
1. Thermostatic water-mixing valves and water-tempering valves.
2. Water hammer arresters.
3. Trap seal primer valves.
4. Cleanouts, cover plates, and access panels.
5. Vent caps, vent terminals, and roof flashing assemblies.
6. Floor drains, open receptors, trench drains, and roof drains.

C. Maintenance data for inclusion in Operating and Maintenance manuals as specified in Division 1 Section "Contract Closeout" for the following:
1. Thermostatic water-mixing valves and water-tempering valves.

2. Trap seal primer valves.

1.5 QUALITY ASSURANCE

A. Comply with ASME B31.9, "Building Services Piping," for materials, products, and installation.

B. Electrical Component Standard: NFPA 70, "National Electrical Code."

C. Listing and Labeling: Provide equipment that is listed and labeled.
   1. The Terms "Listed" and "Labeled": As defined in the "National Electrical Code," Article 100.
   2. Listing and Labeling Agency Qualifications: A "Nationally Recognized Testing Laboratory" (NRTL) as defined in OSHA Regulation 1910.7.

1.6 EXTRA MATERIALS

A. Deliver extra materials to Owner. Furnish extra materials matching products installed as described below. Package them with protective covering for storage and identify with labels clearly describing contents.

PART 2 - PRODUCTS

2.1 MANUFACTURERS

A. Manufacturers: Subject to compliance with requirements, provide products by one of the following:

   1. Water-Tempering Valves:
      a. Cash by A.W. Cash Valve Mfg. Corp.
      b. Holby Valve Co., Inc.
      c. Heat-Timer Corp.
      d. Honeywell Braukman.
      e. Leonard Valve Co.
      f. Sparco, Inc.
      g. Watts Regulator Co.

   2. Water Hammer Arrestors:
      a. Amtrol, Inc.
      b. Jones Manufacturing Co., Inc.
      c. Josam Co.
      d. Precision Plumbing Products, Inc.
      e. Sioux Chief Manufacturing Co., Inc.
      f. Smith by Jay R. Smith Mfg. Co. Div., Smith Industries, Inc.
      g. Wade Div., Tyler Pipe.
      h. Watts.
      i. Watts Regulator Co.
      j. Zurn by Hydromechanics Div., Zurn Industries, Inc.

   3. Trap Seal Primer Valves:
      a. Jones Manufacturing Co., Inc.
      b. Josam Co.
      c. Precision Plumbing Products.
      d. Smith by Jay R. Smith Mfg. Co. Div., Smith Industires, Inc.

e. Souix Chief Manufacturing Co., Inc.
f. Wade Div., Tyler Pipe.
g. Watts.
h. Watts Regulator Co.
i. Zurn by Hydromechanics Div., Zurn Industries, Inc.

4. Floor Drains:
   a. Jones Manufacturing Co., Inc.
   b. Josam Co.
   c. Mifab.
   d. Smith by Jay R. Smith Mfg. Co. Div., Smith Industries, Inc.
   e. Wade Div., Tyler Pipe.
   f. Watts.
   g. Zurn by Hydromechanics Div., Zurn Industries, Inc.

5. Cleanouts:
   a. Jones Manufacturing Co., Inc.
   b. Josam Co.
   c. Mifab.
   d. Smith by Jay R. Smith Mfg. Co. Div., Smith Industries, Inc.
   e. Wade Div., Tyler Pipe.
   f. Watts.
   g. Zurn by Hydromechanicas Div., Zurn Industries, Inc.

2.2 WATER-TEMPERING VALVES

A. General: Manually-adjustable, thermostatically-controlled water-tempering valve, bronze body, and adjustable temperature setting.

B. System Water-Tempering Valves: Piston or discs controlling both hot-water and cold-water flow, capable of limited antiscald protection. Include threaded inlets and outlet, and capacity at pressure loss, and temperature range or setting as indicated.
   1. Finish: Rough bronze, except where chrome-plated finish is indicated.

C. Limited-Volume Water-Tempering Valves: Solder-joint inlets and outlet, capacity indicated at pressure loss indicated.

2.3 MISCELLANEOUS PIPING SPECIALTIES

A. Piping specialties such as escutcheons, dielectric fittings, sleeves, and sleeve seals are specified in Division 15 Section "Basic Mechanical Materials and Methods."

B. Water Hammer Arresters: ASME A112.26.1M, ASSE 1010, or PDI WH-201, bellows or piston type with pressurized cushioning chamber. Sizes are based on water-supply fixture units, ASME A112.26.1M sizes "A" through "F" and PDI WH-201 sizes "A" through "F."

C. Trap Seal Primer Valves: ASSE 1018, water-supply-fed type, with the following characteristics:
   1. 125-psig minimum working pressure.
   2. Bronze body with atmospheric-vented drain chamber.
   3. Inlet and Outlet Connections: 1/2-inch threaded, union, or solder joint.
   4. Gravity Drain Outlet Connection: 1/2-inch threaded or solder joint.

5. Finish: Chrome plated, or rough bronze for units used with pipe or tube that is not chrome finished.

D. Trap Seal Primer Valves: ASSE 1044, trap-supply-fed type, Smith figure 2698 chrome plated bronze P-trap with ground slip joint inlet, threaded wall tube, slip joint nuts, washers and escutcheons, 1/2" primer tube with compression fitting connection at wall.

E. Drainage-Type Basket Strainers: Non-pressure rated, cast-iron or coated-steel body, with bolted flange or clamp cover, drain with plug.
1. Basket: Bronze or stainless steel with 1/8- or 3/16-inch diameter holes and lift-out handle.
2. Female threaded ends for sizes 2 inches and smaller, and flanged ends for sizes 2-1/2 inches and larger.

F. Stack Flashing Fittings: Counterflashing-type, cast-iron fitting, with bottom recess for termination of roofing membrane, and with threaded or hub top for extension of vent pipe.

G. Vent Caps: Cast-iron body with threaded or hub inlet and vandal-proof design. Include vented hood and set-screws to secure to vent pipe.

H. Vent Terminals: Commercially manufactured, shop-fabricated or field-fabricated, frost-proof assembly constructed of galvanized steel, copper, or lead-coated copper. Size to provide 1-inch enclosed air space between outside of pipe and inside of flashing collar extension, with counterflashing, as indicated.

I. Roof Flashing Assemblies: Manufactured assembly consisting of 4-psf lead flashing collar with boot and skirt extending at least 8 inches from pipe, with galvanized steel boot reinforcement and counterflashing fitting.
1. Option 1: Open top.
2. Option 2: Low-silhouette model with vandal-proof vent cap.
3. Option 3: Extended model with field-installed, vandal-proof vent cap.

2.4 CLEANOUTS

A. General: Size cleanouts as indicated on drawings, or where not indicated, same size as connected drainage piping. Cleanouts larger than 4 inches are not required except where indicated.

B. Cleanouts: ASME A112.36.2M, cast-iron body with straight threads and gasket seal or taper threads for plug, flashing flange and clamping ring, and a brass closure plug. Cleanouts for installation in floors not having membrane waterproofing may be furnished without clamping ring. See Product Data Sheet at end of Part 3 of this Section for deck plate shape, top-loading classification, access cover, finish, and other specific features.

2.5 FLOOR DRAINS

A. General: Size outlets as indicated on drawings.

B. Floor Drains: ASME A112.21.1M, cast-iron body, with seepage flange and clamping device. Floor drains for installation in floors not having membrane waterproofing may have seepage flange without clamping device. Floor drains for use as area drains in exterior slab on grade may be furnished with anchor flange instead of seepage flange and clamping device. See Product Data Sheet at end of Part 3 of this Section for shape, dimensions, strainer and body top finish, top-loading classification, sump size, and specific features.

C. Open Drains: Shop- or field-fabricate from ASTM A 74, Service Class, hub-and-spigot, cast-iron, soil-pipe fittings. Include P trap, hub-and-spigot riser section of length to provide depth indicated, and where indicated increaser fitting of size indicated, joined with ASTM C 564 neoprene gaskets. Size P trap as indicated on drawings.

D. Deep Seal Traps: Cast iron or bronze, with inlet and outlet matching connected piping, cleanout where indicated, and trap seal primer valve connection where indicated.
   1. 2-Inch Size: 4-inch-minimum water seal.
   2. 2-1/2 Inches and Larger: 5-inch-minimum water seal.

E. Inlet Fittings: Cast iron, with threaded inlet and threaded or spigot outlet, and trap seal primer valve connection.

F. Air Gap Fittings: ASME A112.1.2, cast iron or cast bronze, with fixed air gap, inlet for drain pipe or tube, and threaded or spigot outlet.

2.6 FLASHING MATERIALS

A. Lead: ASTM B 749, Type L51121, copper-bearing sheet, at least 4 psf (0.0625-inch thick) for general use, and at least 6 psf (0.0937-inch thick) for burning (welding), except as otherwise indicated.

B. Elastic Membrane: Nonreinforced flexible, black elastic, sheet, 50 to 65-mils thick and complying with the following:
   1. Shore A Hardness: ASTM D 2240, 50 to 70.
   2. Tensile Strength: ASTM D 412, 1200 psi.
   3. Tear Resistance: ASTM D 624, Die C, 20 lb per linear inch.
   4. Ultimate Elongation: ASTM D 412, 250 percent.
   5. Low-Temperature Brittleness: ASTM D 746, minus 30 deg F (minus 35 deg C).
   6. Resistance to Ozone Aging: ASTM D 1149, no cracks for 10 percent elongated sample for 100 hours in 50-mPa ozone at 104 deg F (70 deg C).
   7. Resistance to Heat Aging: ASTM D 573, maximum hardness increase of 15 points, elongation reduction of 40 percent, and tensile strength reduction of 30 percent, for 70 hours at 212 deg F (100 deg C).

C. Copper: ASTM B 370, sheet, 16 oz. per sq. ft. (0.0216-inch thick) except as otherwise indicated.
   1. General Use: Temper H00 (formerly cold-rolled).
   2. Forming Use: Temper 060 (formerly soft).

D. Zinc-Coated Steel: ASTM A 526, sheet, with 0.20 percent copper, G90 hot-dip galvanized, mill phosphatized where indicated for painting; 0.0359-inch thick (20 gage) except as otherwise indicated.

E. Fasteners: Metal compatible with material and substrate being fastened.

F. Metal Accessories: Sheet metal strips, clamps, anchoring devices, and similar accessory units as required for installation; matching or compatible with material being installed.

G. Solder: ASTM B 32, Alloy Sn50.

H. Bituminous Coating: SSPC-12, solvent type, bituminous mastic.

PART 3 - EXECUTION

3.1 PIPING SPECIALTY INSTALLATION

A. Install trap seal primer valves with valve outlet piping pitched down toward drain trap a minimum of 1/8 inch per foot (1 percent) and connect to floor drain body, trap, or inlet fitting. Adjust valve for proper flow.

B. Install expansion joints on vertical risers, stacks, and conductors as indicated.

C. Install cleanouts in above-ground piping and building drain piping as indicated, and where not indicated, according to the following:
   1. Size same as drainage piping up to 4-inch size. Use 4-inch size for larger drainage piping except where larger size cleanout is indicated.
   2. Locate at each change in direction of piping greater than 90 degrees.
   3. Locate at maximum intervals of 50 feet for piping 4 inches and smaller and 75 feet for larger piping.
   4. Locate at base of each vertical soil, waste, or roof drainage stack.
   5. Locate at upper terminal of each branch waste line 5'-0" long or longer.
   6. Install cleanout at each plumbing fixture.

D. Install cleanout deck plates (covers), with top flush with finished floor, for floor cleanouts for piping below floors.

E. Install cleanout wall access covers, with frame and cover flush with finished wall, for cleanouts located in concealed piping.

F. Install flashing flange and clamping device with each stack and cleanout passing through floors having waterproof membrane.

G. Install vent flashing sleeves on stacks passing through roof. Secure over stack flashing according to the manufacturer's written instructions.

H. Install frost-proof vent caps on each vent pipe passing through roof. Maintain 1-inch clearance between vent pipe and roof substrate.

I. Install vandal proof vent caps on each vent pipe passing through roof.

3.2 FLOOR DRAIN INSTALLATION

A. Install floor drains according to manufacturer's written instructions, in locations indicated.

B. Install floor drains at low points of surface areas to be drained, or as indicated. Set tops of drains flush with finished floor.

C. Set drain elevation depressed below finished slab elevation as listed below to provide proper floor slope to drain:
   1. 5-Foot Drain Area Radius: 1/2-inch depression.
   2. 10-Foot Drain Area Radius: 3/4-inch depression.
   3. 15-Foot Drain Area Radius: 1-inch depression.
   4. 20-Foot Drain Area Radius: 1-1/4-inch depression.
   5. 25-Foot Drain Area Radius: 1-1/2-inch depression.

D. Trap drains connected to sanitary building drain.

E. Install drain flashing collar or flange so that no leakage occurs between drain and adjoining flooring. Maintain integrity of waterproof membranes, where penetrated.

F. Position drains for easy accessibility and maintenance.

3.3 CONNECTIONS

A. Supply Runouts to Fixtures: Install hot- and cold-water supply piping runouts to fixtures of sizes indicated, but not smaller than required by plumbing code.

B. Drainage Runouts to Fixtures: Provide drainage and vent piping runouts to plumbing fixtures and drains, with approved trap, of sizes indicated, but not smaller than required by plumbing code.

C. Locate drainage piping runouts as close as possible to bottom of floor slab supporting fixtures or drains.

D. Electrical Connections: Power wiring and disconnect switches are specified in Division 16.
   1. Grounding: Connect unit components to ground according to the National Electrical Code and Division 16 Section "Grounding."

3.4 FLASHING INSTALLATION

A. Provide flashing manufactured in a single piece except where large pans, sumps, or other drainage shapes are required.

B. Install 4-psf lead flashing or 16-oz.-per sq. ft. copper, except when another weight or material is specified.

C. Install 6-psf lead flashing or heavier where burning (welding) of lead sheets is required.

D. Solder joints of copper sheets where required.

E. Install sheet flashing on pipes, sleeves, and specialties passing through or embedded in floors and roofs with membrane waterproofing.
   1. Pipe Flashing: Sleeve type, matching pipe size, with minimum sleeve length of 10 inches, and skirt or flange extending at least 8 inches around pipe.
   2. Sleeve Flashing: Flat sheet, with skirt or flange extending at least 8 inches around sleeve.
   3. Embedded Specialty Flashing: Flat sheet, with skirt or flange extending at least 8 inches around specialty.

F. Set flashing on floors and roofs in solid coating of bituminous cement.

G. Secure flashing into sleeve and specialty clamping ring or device.

H. Install flashing for piping passing through roofs with counter flashing or commercially made flashing fittings, according to Division 7 Section "Sheet Metal Flashing and Trim."

I. Extend flashing up vent pipe passing through roofs and secure flashing into cast-iron sleeve having calking recess.

J. Fabricate and install lead sheet flashing and pans, sumps, and other drainage shapes as indicated. Install drain connection when indicated. Provide 36" X 36" 4-psf lead flashing at each roof drain.

K. Fabricate and install galvanized-steel sheet flashing and pans, sumps, and other drainage shapes as indicated. Install drain connection when indicated. Provide 36" X 36" flashing at each roof drain.

3.5 COMMISSIONING

A. Preparation: Perform the following checks before start-up:
   1. Systems tests are complete.
   2. Damaged and defective specialties and accessories have been replaced or repaired.
   3. There is clear space for servicing of specialties.

B. Before operating systems, perform these steps:
   1. Close drain valves, hydrants, and hose bibbs.
   2. Open valves to full open position.
   3. Remove and clean strainers.
   4. Verify drainage and vent piping are clear of obstructions. Flush with water until clear.

C. Starting Procedures: Follow manufacturer's written procedures. If no procedures are prescribed by manufacturer, proceed as follows:
   1. Energize circuits for grease recovery units. Start and run units through complete sequence of operations.

3.6 ADJUSTING

A. Adjust operation and correct deficiencies discovered during commissioning.

3.7 DEMONSTRATION

A. Train Owner's maintenance personnel on procedures related to startup and servicing of interceptors.

3.8 PROTECTION

A. Protect drains during remainder of construction period to avoid clogging with dirt and debris and to prevent damage from traffic and construction work.

B. Place plugs in ends of uncompleted piping at end of day or when work stops.

3.9 PLUMBING SPECIALTY DATA SHEETS

A. Cleanouts:
   1. Finished Wall Cleanouts: Smith figure 4472 complete with cast bronze taper threaded plug, stainless steel cover and screw.
   2. Floor Cleanouts (Unfinished Areas): Smith figure 4223 Duco cast iron cleanout with round adjustable scoriated secured cast iron top, taper threaded bronze plug and spigot outlet.
   3. Finished Floor Cleanouts (Concrete Floors): Smith figure 4023 Duco cast iron cleanout with adjustable scoriated secured nickel bronze top, taper threaded cast bronze plug and spigot outlet.

4. Finished Floor Cleanouts (Carpeted Floors): Smith figure 4023-Y same as concrete floors with carpet marker.
5. Finished Floor Cleanouts (Tile Floors): Smith figure 4163 Duco cast iron cleanout with square adjustable secured nickel bronze top with 1/8" recess, taper threaded bronze plug and spigot outlet.
6. Exterior Cleanouts (Cleanout to Grade): Smith figure 4253 Duco cast iron cleanout and double flanged housing with heavy duty secured scoriated cast iron cover with lifting device, taper threaded bronze plug and spigot outlet.

B. Floor Drains:

FD Floor Drain: Smith figure 2010-BP cast iron body and flashing collar with protective cap and square nickel bronze adjustable strainer head with secured square hole grate, and trap primer connection.

END OF SECTION 15430

SECTION 15480 - DOMESTIC WATER HEATERS July 10, 2007

PART 1 - GENERAL

1.1 GENERAL

A. Submit product data including rated capacities of selected models, weights (shipping, installed, and operating), furnished specialties, and accessories and indicating dimensions, required clearances, methods of component assembly, and piping and wiring connections.

B. Submit wiring diagrams from manufacturers detailing electrical requirements for electrical power supply wiring to water heaters. Include ladder-type wiring diagrams for interlock and control wiring required for final installation of water heaters and controls. Differentiate between portions of wiring that are factory installed and portions that are to be field installed.

C. Submit certificates of shop inspection and data report as required by provisions of the ASME Boiler and Pressure Vessel Code.

D. NSF Standards: Provide water heaters complying with NSF No. 5, "Standard for Hot Water Generating Equipment for Food Service Establishments using Spray Type Dishwashing Machines," and bearing NSF label.

E. Electrical Component Standard: Provide components complying with NFPA 70 "National Electrical Code."

F. Listing and Labeling: Provide water heaters that are listed and labeled.
   1. The Terms "Listed" And "Labeled": As defined in the National Electrical Code, Article 100.
   2. Listing and Labeling Agency Qualifications: A "Nationally Recognized Testing Laboratory" (NRTL) as defined in OSHA Regulation 1910.7.

G. ASME Code Compliance: Provide water heaters and safety relief valves that comply with ASME Boiler and Pressure Vessel Code and that bear the appropriate code symbols.

H. ASHRAE Standards: Provide water heaters with performance efficiencies not less than prescribed in ASHRAE 90.1, "Energy Conservation in New Building Design."

1.2 PRODUCTS

A. Manufacturers: Provide products by one of the following:

   1. Commercial Electric Water Heaters:
      a. American Appliance.
      b. Bock Waters Heaters, Inc.
      c. Bradford-White Corp.
      d. Bryan Steam Corp.
      e. Cemline Corp.
      f. GSW Water Products Co.
      g. Lochinvar Water Heater Corp.
      h. Precision Parts Corp.
      i. PVI Industries, Inc.

j. Rheem Mfg.
k. Ruud Mfg. Div.; Rheem Mfg.
l. A.O. Smith Water Products Co. Div.; A.O. Smith Corp.
m. State Industries, Inc.

2. Earthquake Bracing Assemblies:
a. Quake Safe, Inc.

B. Electric Water Heaters: Automatic, commercial, electric, with vertical, ASME-labeled, 150-psig-rated storage tank, integral controls, drain valve, and relief valve.
1. Insulation: Fiberglass or polyurethane foam, surrounding tank.
2. Jacket: Steel, with baked-on enamel finish.
3. Tank: Glass-lined steel with anode rods and drain valve.
4. Heating Elements: Screw-in or flanged bolt-in immersion type, in multiples of 3 elements.
5. Controls: Adjustable immersion thermostat.
6. Safety Controls: Automatic, high-temperature-limit cutoff and low-water cutoff.
7. Temperature and Pressure Relief Valve: AGA rated and labeled.
8. Vacuum Relief Valve: ANSI Z21.22.

C. Provide concrete bases as indicated.
1. Concrete: Portland cement; mix to a 4000-psi, 28-day compressive strength.
a. Cement: ASTM C 150, Type I.
b. Fine Aggregate: ASTM C 33, sand.
c. Coarse Aggregate: ASTM C 33, crushed gravel.
2. Reinforcement Fabric: ASTM A 185, welded wire fabric, plain.
3. Reinforcement Bars: ASTM A 615, Grade 60, deformed.

D. Earthquake Bracing Assemblies: Commercial concrete floor mounted steel angle bracing with steel water heater straps.

1.3 EXECUTION

A. Form concrete equipment bases using framing lumber with form release compounds. Chamfer top edges and corners.
1. Install reinforcing bars, and place anchor bolts and sleeves using manufacturer's installation template.
2. Place concrete and allow to cure before installation of equipment.

B. Install water heaters level and plumb on bases in accordance with manufacturer's written installation instructions. Firmly anchor units in locations indicated, and maintain manufacturer's recommended clearances. Orient so controls and devices needing servicing are accessible.

C. Install thermometers on water heater inlet and outlet piping.

D. Piping Installation Requirements: The Drawings indicate general arrangement of piping, fittings, and specialties. The following are specific connection requirements:
1. Install piping adjacent to equipment arranged to allow servicing and maintenance.
2. Connect hot and cold water piping to units with shutoff valves and unions. Extend relief valve discharge to closest floor drain.
a. Where water heater piping connections are dissimilar metals, make connections with dielectric fittings. specified in Division 15 Section "Basic Piping Materials and Methods."

b. Install vacuum relief valve in cold water inlet piping.

3. Install drain as indirect waste to spill into open drain or over floor drain.
   a. Install drain valve at low point in water piping, for water heaters not having tank drain.
4. Electrical Connections: Power wiring and disconnect switches are specified in electrical Work.
   a. Grounding: Connect unit components to ground in accordance with the National Electrical Code.
5. Earthquake Bracing Assemblies: Install earthquake bracing secure to structural members per the manufacturer's installation requirements.

E. Field Quality Control: Provide the services of a factory-authorized service representative to test and inspect unit installation, provide start-up service, and demonstrate and train Owner's maintenance personnel as specified below.
   1. Test and adjust operating and safety controls. Replace damaged and malfunctioning controls and equipment.
   2. Perform the following before start-up final checks:
      a. Fill water heaters with water.
      b. Check piping systems test complete.
      c. Check for piping connections leaks.
      d. Test operation of safety controls and devices.
   3. Perform the following start-up procedures:
      a. Energize circuits.
      b. Adjust operating controls.
      c. Adjust hot water outlet temperature setting.

END OF SECTION 15480

SECTION 15738 - SPLIT SYSTEM AIR CONDITIONING UNITS July 10, 2007

PART 1 - GENERAL

1.1 RELATED DOCUMENTS

A. Drawings and general provisions of Contract, including General and Supplementary Conditions and Division 1 Specification Sections, apply to this Section.

1.2 SUMMARY

A. This Section includes split system ductless air conditioning units and accessories listed below, complete with controls.
   1. Cooling Only Split System Ductless Air Conditioning Unit.

1.3 DEFINITIONS

A. SEER: Seasonal energy efficiency ratio.

B. Control Wiring: Wire, conduit, and miscellaneous materials for mounting and connecting electric control devices.

1.4 SUBMITTALS

A. General: Submit the following in accordance with Conditions of Contract and Division 1 Specification Sections.

B. Product data including weights and dimensions and data on features and components. Include plan and elevation views of units, minimum clearances, methods of assembly of components, furnished specialties and accessories, installation and start-up instructions, and data on ratings and capacities.

C. Three copies of Operation and Maintenance data for products.

D. Wiring diagrams from manufacturers detailing electrical requirements for power and control wiring. Include ladder-type wiring diagrams for interlock and control wiring required for field installation. Differentiate between portions of wiring that are factory installed and portions that are to be field installed.

1.5 QUALITY ASSURANCE

A. Comply with NFPA 70, "National Electrical Code."

B. NRTL Listing: Provide electrical components specified in this Section that are listed and labeled.
   1. Terms "Listed" and "Labeled": As defined in the "National Electrical Code," Article 100.
   2. Listing and Labeling Agency Qualifications: A "Nationally Recognized Testing Laboratory" (NRTL) as defined in OSHA Regulation 1910.7.

1.6 WARRANTY

A. Provide five-year warranty on compressors with permanent label on unit showing expiration date.

1.7 DELIVERY, STORAGE, AND HANDLING

A. Handle units and components carefully to prevent damage. Follow manufacturer's written instructions for rigging. Replace damaged units or components.

B. Store units and components in clean dry place off the ground. Protect from weather, water, and physical damage.

PART 2 - PRODUCTS

2.1 MANUFACTURED UNITS

A. General:
1. Split system ductless air conditioning units with indoor section, outdoor section, controls, and connecting refrigeration tubing.
2. Units listed by Electrical Testing Laboratories (ETL) and bear the ETL label.
3. All wiring in accordance with the National Electrical Code (N.E.C.).
4. Units rated in accordance with ARI Standard 240 and bear the ARI label.
5. Full charge of R-410A for 100 feet of refrigerant tubing in the condensing unit.
6. Dry nitrogen holding charge in the evaporator.
7. System SEER meeting or exceeding 1992 Federal Standards.
8. Power requirements as scheduled.

B. Indoor Section:
1. Factory assembled, tested, piped, and wired.
2. Casing fabricated of galvanized steel, bonderized and finished with baked enamel.
3. Multiple, high performance, double inlet, forward curve fans direct driven by a single permanently lubricated, multispeed motor with thermal overload protection.
4. Fans statically and dynamically balanced with permanently lubricated bearings.
5. Adjustable air outlet system providing uniform air distribution.
6. Easily removable washable return air filter.
7. Provisions for a field installed filtered outside air intake.
8. Evaporator coil of nonferrous construction with smooth plate fins bonded to copper tubing. All tube joints brazed with phoscopper or silver alloy and pressure tested at the factory.
9. Condensate pan and drain under the coil.
10. Integral condensate pump capable of lifting condensate 20 inches above condensate outlet with cabinet housing section to conceal pump and piping.

C. Outdoor Section:
1. Factory assembled, tested, piped, and wired.
2. Casing fabricated of galvanized steel, bonderized and finished with baked enamel.
3. Direct drive statically and dynamically balanced propeller type fans arranged for horizontal discharge with guard screen.
4. Permanently lubricated motors with thermal overload protection and resilient mounting.

5. Hermetic compressor with crankcase heater, accumulator, internal thermal overloads, and vibration isolation mountings.
6. Refrigeration system with high pressure switch and capability to operate with a maximum height difference of 164 feet and overall refrigerant tubing length of 164 feet between indoor and outdoor sections without the need for line size changes, traps or additional oil. Refrigerant flow from the condenser controlled by means of a capillary tube. Condenser coil of nonferrous construction with smooth plate fins bonded to copper tubing with nitrogen holding charge. Coil protected with an integral metal guard. Unit controlled by the micro-processor located in the indoor matching unit. A built-in, low-ambient controller allowing cooling to 23 degrees F outdoor temperature.
7. Refrigerant circuit components consisting of liquid line service valve, suction line service valve with service gage connection port, discharge line service port, accumulator, cooling capillary tubes, pressure relief, and an operating charge of refrigerant.

D. Controls:
1. Microprocessor control system.
2. One microprocessor factory wired and located within the indoor section to sense return air temperature and indoor coil temperature; receive and process commands from the remote controller; provide emergency operation; control the outdoor unit; and provide system control power.
3. Microprocessor within the wall mounted remote controller to provide automatic cooling; display set point and room temperature; 24 hour on/off timer to set automatic operation at one hour intervals from one to twenty-four hours; self-diagnostic function display; check mode for memory of most recent problem; operation of the air sweep louvers; and on/off and system/mode function switching.
4. Controls and Safeties: Operating controls and safeties shall be factory selected, assembled, and tested. The minimum control function shall include:
   a. Controls:
      1) Time delay restart to prevent compressor short cycling.
      2) Automatic restart on power failure.
      3) Twenty function self diagnostics with totalization of compressor run time.
   b. Safeties:
      1) High temperature protection.
      2) Freeze-up protection.
      3) System diagnostics.
      4) Compressor motor current and temperature over-load protection.
      5) High pressure relief.
      6) Condenser fan failure protection.

E. Refrigerant Piping:
1. Manufactured line sets in sizes and lengths as required for each system.
2. Copper tubing with nitrogen holding charge, closed cell neoprene insulation, and accessories for complete installation.

F. Manufacturers: Subject to compliance with requirements, provide units of one of the following:
1. Carrier Air Conditioning; Div Carrier Corp.
2. Mitsubishi Electric.
3. Sanyo Electric.
4. Toshiba America Consumer Products.

PART 3 - EXECUTION

3.1 INSTALLATION AND CONNECTION

A. Install units and systems in accordance with applicable local codes and regulations, and manufacturer's published installation instructions.
   1. Connect condensate drain pans using Type M copper tubing with streamline drainage fittings and soldered joints. Extend to nearest equipment drain or floor drain or outside or as indicated. Construct vented, deep trap at connection to drain pan and install cleanouts at changes in direction. Terminate to suit local code requirements, except where stricter methods are indicated.
   2. Install refrigeration piping line sets.

B. Suspended Units: Suspend from structure using threaded rods, and building attachments. Secure rods to unit hanger attachments. Adjust hangers so unit is plumb and level.

C. Base-Mounted Units: Secure units to substrate. Provide optional bottom closure base where installation conditions require.

D. Controls: Install controls where indicated.
   1. Control Wiring: Install in compliance with NEC and Division 16. Install cables and conductors simultaneously where more than one can be installed with the same routing. Bundle cables neatly together. Conceal all cable in finished spaces. Install exposed cable parallel and perpendicular to surfaces or exposed structural members, and follow surface contours, where possible. Make splices and connections only within junction boxes and equipment enclosures. Use connectors which are compatible with conductor material. Make terminations so there is no bare conductor at terminals. Provide substantial support for wiring and run clear of equipment access paths. Cable in return air plenum shall be plenum rated cable.

3.2 IDENTIFICATION

A. Identify units and connections in accordance with Division 15 Section "Mechanical Identification."

3.3 COMMISSIONING

A. Test functions, operations, and control sequences and protective features. Adjust to assure operation is in accordance with specification. Use manufacturer's start-up check list and submit completed check list.

B. Correct deficiencies identified by tests and observations and retest until specified requirements are met.

3.4 CLEANING AND ADJUSTING

A. Cleaning: Upon completion of installation, inspect units and associated components. Remove paint splatters and other spots, dirt, and debris. Touch up scratches and mars of finish to match original finish. Clean unit internally using methods and materials recommended by manufacturer.

B. Adjusting: Make control and other adjustments for optimum performance and efficiency. Adjust distribution features, including shutters, dampers, and relays to provide optimum performance and system efficiency.

3.5 DEMONSTRATION

A. Training: Arrange and pay for the services of a factory-authorized service representative to demonstrate adjustment, operation, and maintenance of units and to train Owner's personnel.

END OF SECTION 15738

SECTION 15784 - ROOFTOP UNITS July 10, 2007

PART 1 - GENERAL

1.1 RELATED DOCUMENTS

A. Drawings and general provisions of the Contract, including General and Supplementary Conditions and other Division 1 Specification Sections, apply to this Section.

1.2 SUMMARY

A. This Section includes rooftop heating and cooling units.

B. Related Sections include the following:
1. Division 7 Section "Manufactured Roof Specialties" for type and style of roof curbs and equipment supports.
2. Division 15 Section "Mechanical Vibration Controls and Seismic Restraints" for manufactured isolation bases.
3. Division 15 Section "Control Systems Equipment" for temperature-control devices, and control wiring and control devices connected to energy recovery units.

1.3 SUBMITTALS

A. Product Data: Include manufacturer's technical data for each model indicated, including rated capacities of selected model clearly indicated; dimensions; required clearances; shipping, installed, and operating weights; furnished specialties; accessories; and installation and startup instructions.

B. Shop Drawings: Detail equipment assemblies and indicate dimensions, weights, loadings, required clearances, method of field assembly, components, and location and size of each field connection. Detail mounting, securing, and flashing of roof curb to roof structure. Indicate coordinating requirements with roof membrane system.
1. Wiring Diagrams: Detail wiring for power, signal, and control systems and differentiate between manufacturer-installed and field-installed wiring.

C. Commissioning Reports: Indicate results of startup and testing commissioning requirements. Submit copies of completed and signed checklists and include in maintenance manuals.

D. Maintenance Data: For equipment to include in the maintenance manuals. Include installation and startup instructions, completed and signed checklists, parts list, operating instructions, and technical data.

E. Warranties: Special warranties specified in this Section.

1.4 QUALITY ASSURANCE

A. Fabricate and label refrigeration system to comply with ASHRAE 15, "Safety Code for Mechanical Refrigeration."

B. Energy Efficiency Ratio: Equal to or greater than prescribed by ASHRAE 90.1, "Energy Efficient Design of New Buildings except Low-Rise Residential Buildings."

C. Coefficient of Performance: Equal to or greater than prescribed by ASHRAE 90.1, "Energy Efficient Design of New Buildings except Low-Rise Residential Buildings."

D. Listing and Labeling: Provide electrically operated components specified in this Section that are listed and labeled.
   1. The Terms "Listed" and "Labeled": As defined in the National Electrical Code, Article 100.
   2. Listing and Labeling Agency Qualifications: A "Nationally Recognized Testing Laboratory" as defined in OSHA Regulation 1910.7.

E. Comply with AGA Z223.1 for gas-fired furnace section.

F. Comply with NFPA 70.

1.5 DELIVERY, STORAGE, AND HANDLING

A. Deliver rooftop units as factory-assembled units with protective crating and covering.

B. Coordinate delivery of units in sufficient time to allow movement into building.

C. Handle rooftop units to comply with manufacturer's written rigging and installation instructions for unloading and moving to final location.

1.6 COORDINATION

A. Coordinate installation of roof curbs, equipment supports, and roof penetrations with roof construction. Roof specialties are specified in Division 7 Sections.

1.7 WARRANTY

A. General Warranty: The special warranty specified in this Article shall not deprive the Owner of other rights the Owner may have under other provisions of the Contract Documents and shall be in addition to, and run concurrent with, other warranties made by the Contractor under requirements of the Contract Documents.

B. Special Warranty: A written warranty, executed by the manufacturer and signed by the Contractor, agreeing to replace components that fail in materials or workmanship, within the specified warranty period. Replacement to include component and labor to remove and install.
   1. Warranty Period, Compressors: Manufacturers standard, but not less than 5 years after date of Substantial Completion.
   2. Warranty Period, Heat Exchangers: Manufacturers standard, but not less than 10 years after date of Substantial Completion.

1.8 EXTRA MATERIALS

A. Furnish extra materials described below that match products installed, are packaged with protective covering for storage, and are identified with labels describing contents.
   1. Fan Belts: One set for each belt-drive fan.
   2. Filters: One set of filters for each unit.

PART 2 - PRODUCTS

2.1 MANUFACTURERS

A. Manufacturers: Subject to compliance with requirements, provide products by one of the following:

1. Rooftop Units, 6 Tons (21 kW) and Smaller:
   a. Aaon.
   b. Bryant.
   c. Carrier Corp.; Carrier Air Conditioning Div.
   d. Lennox Industries Inc.
   e. McQuay International.
   f. Trane Company (The); North American Commercial Group.
   g. York International Corp.

2. Rooftop Units, 7-1/2 to 20 Tons (26 to 70 kW):
   a. Aaon.
   b. Bryant.
   c. Carrier Corp.; Carrier Air Conditioning Div.
   d. Engineered Air.
   e. Lennox Industries Inc.
   f. McQuay International.
   g. Trane Company (The); North American Commercial Group.
   h. York International Corp.

2.2 ROOFTOP UNITS SMALLER THAN 6 TONS (21 kW)

A. Description: Factory assembled and tested; designed for roof or slab installation; and consisting of compressors, condensers, evaporator coils, condenser and evaporator fans, refrigeration and temperature controls, filters, and dampers.

B. Casing: Manufacturer's standard construction with corrosion-protection coating and exterior finish, removable panels or access doors with neoprene gaskets for inspection and access to internal parts, minimum 1/2-inch- (13-mm-) thick thermal insulation, knockouts for electrical and piping connections, exterior condensate drain connection, lifting lugs. Condenser coil guard.

C. Evaporator Fans: Forward curved, centrifugal, directly driven with permanently lubricated motor bearings.

D. Condenser Fans: Propeller type, directly driven with permanently lubricated motor bearings, and personnel protection guard.

E. Refrigerant Coils: Aluminum-plate fin and seamless copper tube in galvanized steel casing with equalizing-type vertical distributor.

F. Compressors: Hermetic with integral vibration isolators and crankcase heaters.

G. Heat Exchangers: Manufacturer's standard construction for gas-fired heat exchangers and burners with the following controls:
   1. Redundant gas valves.
   2. Intermittent pilot ignition.
   3. Electronic-spark ignition system.

4. High-limit cutout.
5. Forced-draft proving switch.

H. Electric Heat: Manufacturer's standard construction, factory wired for single-point wiring connection, with overcurrent and overheat protection devices.

I. Economizer Control: Return- and outside-air dampers, outside-air filter, fully modulating electronic-control system with adjustable mixed-air thermostat and automatic changeover.

J. Low Ambient Control: Head-pressure control, designed to operate at temperatures as low as 30 deg F (minus 1 deg C).

K. Thermostat: Staged heating and cooling with manual or automatic changeover on standard subbase.

L. Thermostat: Programmable, electronic; with heating setback and cooling setup with 7-day programming.

M. Heat Recovery Section:
1. The rooftop unit shall have a factory mounted and tested heat wheel. The heat wheel shall be mounted in a rigid frame containing the wheel drive motor, drive belt, wheel seals and bearings. These components will form a cassette which shall be removable from the unit without the use of tools.
2. The energy recovery cassette shall contain a total energy recovery heat wheel constructed of a light weight polymer material with permanently bonded desiccant coating. The energy recovery wheel media shall be capable of removal from the cassette and replacement without the use of tools. Wheel media shall be cleanable using hot water or light detergent without degrading the latent efficiency.
3. The exhaust fan shall have an adjustable V-belt drive. A back draft damper shall be included with the exhaust fan. Outside air filters shall be disposable. The filter track shall be capable of either 2" or 4" filters.

2.3 ROOFTOP UNITS, 7-1/2 TO 20 TONS (26 TO 70 kW)

A. Description: Factory assembled and tested; designed for roof or slab installation; and consisting of compressors, condensers, evaporator coils, condenser and evaporator fans, refrigeration and temperature controls, filters, and dampers.

B. Casing: Manufacturer's standard construction with corrosion-protection coating and exterior finish, removable panels or access doors with neoprene gaskets for inspection and access to internal parts, minimum 1/2-inch- (13-mm-) thick thermal insulation, knockouts for electrical and piping connections, exterior condensate drain connection, and lifting lugs.

C. Evaporator Fans: Forward curved, centrifugal, belt driven with adjustable sheaves or direct-drive fans; and with permanently lubricated motor bearings.

D. Exhaust/Relief Fans: Forward-curved, centrifugal or propeller type, directly driven with permanently lubricated motor bearings.

E. Condenser Fans: Propeller type, directly driven with permanently lubricated motor bearings.

F. Refrigerant Coils: Aluminum-plate fin and seamless copper tube in galvanized steel casing with equalizing-type vertical distributor.

G. Compressors: Serviceable, semihermetic, or fully hermetic compressors with integral vibration isolators and crankcase heaters.
   1. Safety Controls: Manual-reset type for low pressure, high pressure, and compressor motor overload protection.
   2. Hot-Gas Bypass: Factory-installed valve.
   3. Timed-Off Control: Automatic-reset control shuts compressor off after 5 minutes.

H. Heat Exchangers: Manufacturer's standard construction for gas-fired heat exchangers and burners with the following controls:
   1. Redundant, dual gas valves (2-stage heating).
   2. Intermittent pilot ignition.
   3. Electronic-spark ignition system.
   4. High-limit cutout.
   5. Forced-draft proving switch.

I. Electric Heat: Manufacturer's standard construction, electric resistance, factory wired for single-point wiring connection, with overcurrent and overheat protection devices.

J. Economizer Control: Return- and outside-air dampers, outside-air filter, fully modulating electronic-control system with adjustable mixed-air thermostat and automatic changeover through adjustable enthalpy-control device.

K. Variable-Air-Volume Control: Electric discharge-air-temperature step controller and electronic-control system.

L. Low Ambient Control: Head-pressure control, designed to operate at temperatures as low as 30 deg F (minus 1 deg C).

M. Thermostat: Staged heating and cooling with manual or automatic changeover on standard subbase.

N. Thermostat: Programmable, electronic; with heating setback and cooling setup with 7-day programming. (Honeywell T-7300)

O. Smoke Detectors: Photoelectric detector located in discharge air stream downstream of air filters and fan, to de-energize unit.

P. Operating Controls: Factory-installed microprocessor controls and monitors unit and communicates with central control processor.
   1. Control Outputs: 2-stage heating, 2-stage cooling; and automatic or continuous fan operation and economizer damper operation.
   2. Control Sensors: Return-air-temperature sensor, fan airflow-proving switch, dirty-filter switch, discharge-air-temperature sensor, room-temperature sensor, and night-setback-override switch.
   3. Control Features: Day/occupied modes for high or low enthalpy and night/unoccupied mode.

Q. Heat Recovery Section:
   1. The rooftop unit shall have a factory mounted and tested heat wheel. The heat wheel shall be mounted in a rigid frame containing the wheel drive motor, drive belt, wheel seals and bearings. These components will form a cassette which shall be removable from the unit without the use of tools.

2. The energy recovery cassette shall contain a total energy recovery heat wheel constructed of a light weight polymer material with permanently bonded desiccant coating. The energy recovery wheel media shall be capable of removal from the cassette and replacement without the use of tools. Wheel media shall be cleanable using hot water or light detergent without degrading the latent efficiency.
3. The exhaust fan shall have an adjustable V-belt drive. A back draft damper shall be included with the exhaust fan. Outside air filters shall be disposable. The filter track shall be capable of either 2" or 4" filters.

2.4 ROOF CURBS

A. Manufacturer's standard, insulated with corrosion-protection coating, gasketing, factory-installed wood nailer, according to NRCA standards.
   1. Curb Height: Minimum 16 inches (400 mm).
   2. Isolation Curb: Rigid upper and lower steel structure with vibration isolation springs and vertical and horizontal seismic restraints; with elastomeric waterproof membrane. 2-inch (50-mm) static deflection.

2.5 MOTORS

A. Refer to Division 15 Section "Motors" for general requirements for factory-installed motors.

B. Motor Construction: NEMA MG 1, general purpose, continuous duty, Design B.

C. Enclosure Type: Open, dripproof.

2.6 SOURCE QUALITY CONTROL

A. Verification of Performance: Rate capacity according to ARI 210/240, "Unitary Air-Conditioning and Air Source Heat Pump Equipment."

B. Verification of Performance: Rate capacity according to ARI 360, "Commercial and Industrial Unitary Air-Conditioning Equipment."
   1. Sound Power Level Ratings: Comply with ARI 270, "Standard for Sound Rating of Outdoor Unitary Equipment."

PART 3 - EXECUTION

3.1 EXAMINATION

A. Examine roof for compliance with requirements for conditions affecting installation and performance of rooftop units. Do not proceed with installation until unsatisfactory conditions have been corrected.

3.2 INSTALLATION

A. Install units according to manufacturer's written instructions.

B. Install units level and plumb, maintaining manufacturer's recommended clearances.

C. Curb Support: Install and secure roof curb on roof structure, level, according to NRCA's written installation instructions. Install and secure rooftop units on curbs and coordinate roof penetrations and flashing with roof construction.

D. Unit Support: Install unit on structural curbs and level. Coordinate wall penetrations and flashing with wall construction.

3.3 CONNECTIONS

A. Piping installation requirements are specified in other Division 15 Sections. Drawings indicate the general arrangement of piping, fittings, and specialties. The following are specific connection requirements:
   1. Install piping to allow service and maintenance.
   2. Gas Piping: Conform to applicable requirements of Division 15 Section "Natural Gas Piping." Connect gas piping to burner, full size of gas train inlet, and provide union with sufficient clearance for burner removal and service.

B. Duct installation requirements are specified in other Division 15 Sections. Drawings indicate the general arrangement of ducts. The following are specific connection requirements:
   1. Install ducts to termination in roof mounting frames. Where indicated, terminate return-air duct through roof structure and insulate space between roof and bottom of unit.

C. Electrical: Conform to applicable requirements in Division 16 Sections.

D. Ground equipment.
   1. Tighten electrical connectors and terminals according to manufacturer's published torque-tightening values. Where manufacturer's torque values are not indicated, use those specified in UL 486A and UL 486B.

3.4 COMMISSIONING

A. Verify that installation is as indicated and specified.

B. Complete manufacturer's installation and startup checks and perform the following:
   1. Level unit on housekeeping base, and flash curbs to unit and to roof.
   2. Inspect for visible damage to unit casing.
   3. Inspect for visible damage to furnace combustion chamber.
   4. Inspect for visible damage to compressor, air-cooled condenser coil, and fans.
   5. Verify that clearances have been provided for servicing.
   6. Check that labels are clearly visible.
   7. Clean furnace flue and condenser and inspect for construction debris.
   8. Verify that controls are connected and operable.
   9. Remove shipping bolts, blocks, and tie-down straps.
   10. Verify that filters are installed.
   11. Adjust vibration isolators.
   12. Connect and purge gas line.
   13. Check that burner and controls are suitable to operate at temperatures as low as minus 40 deg F (minus 40 deg C).
   14. Check acoustic insulation.
   15. Check operation of barometric dampers.

C. Lubricate bearings on fan.

D. Check fan-wheel rotation for correct direction without vibration and binding.

E. Adjust fan belts to proper alignment and tension.

F. Start unit according to manufacturer's written instructions.
   1. Perform starting of refrigeration in summer only.
   2. Complete startup sheets and attach signed copy with Contractor's startup report.

G. Check and record performance of interlocks and protection devices; verify sequences.

H. Operate unit for an initial period as recommended or required by manufacturer.

I. Perform the following operations for both minimum and maximum firing, and adjust burner for peak efficiency. Adjust pilot to stable flame.
   1. Measure gas pressure on manifold.
   2. Measure combustion-air temperature at inlet to combustion chamber.
   3. Measure flue-gas temperature at furnace discharge.
   4. Perform flue-gas analysis. Measure and record flue-gas carbon dioxide and oxygen concentration.
   5. Measure supply-air temperature and volume when burner is at maximum firing rate and when burner is off. Calculate useful heat to supply air.
   6. Check for backdraft under full operation.

J. Calibrate thermostats.

K. Adjust and check high-temperature limits.

L. Check internal isolators.

M. Check outside-air damper for proper stroke and interlock with return-air dampers.

N. Check controls for correct sequencing of heating, mixing dampers, refrigeration, and normal and emergency shutdown.

O. Start refrigeration and measure and record the following:
   1. Coil leaving-air, dry- and wet-bulb temperatures.
   2. Coil entering-air, dry- and wet-bulb temperatures.
   3. Outside-air, dry-bulb temperature.
   4. Air-cooled-condenser, discharge-air, dry-bulb temperature.

P. Measure and record the following minimum and maximum airflows. Plot fan volumes on fan curve.
   1. Supply-air volume.
   2. Return-air volume.
   3. Relief-air volume.
   4. Outside-air intake volume.

Q. Simulate maximum cooling demand and check the following:
   1. Compressor refrigerant suction and hot-gas pressures.
   2. Short circuiting air through condenser or from condenser to outside-air intake.

R. Verify operation of remote panel, including pilot-light operation and failure modes. Check the following:
   1. High-limit heat exchanger.
   2. Warm-up for morning cycle.

3. Freezestat operation.
4. Free-cooling mode, outside-air changeover.
5. Alarms.

S. After starting and performance testing, change filters, vacuum heat exchanger and cooling and condenser coils, lubricate bearings, adjust belt tension, and check operation of power vents.

3.5 DEMONSTRATION

A. Engage a factory-authorized service representative to train Owner's maintenance personnel as specified below:
1. Train Owner's maintenance personnel on procedures and schedules related to startup and shutdown, troubleshooting, servicing, and preventive maintenance.
2. Review data in the maintenance manuals. Refer to Division 1.
3. Schedule training with Owner, through Architect, with at least 7 days' advance notice.

END OF SECTION 15784

SECTION 15815 - METAL DUCTS July 10, 2007

PART 1 - GENERAL

1.1 RELATED DOCUMENTS

A. Drawings and general provisions of Contract, including General and Supplementary Conditions and Division 1 Specification Sections, apply to this Section.

B. Requirements of the following Division 15 Sections apply to this section:
1. "Basic Mechanical Requirements."
2. "Basic Mechanical Materials and Methods."

1.2 SUMMARY

A. This Section includes rectangular, round, and flat-oval metal ducts and plenums for heating, ventilating, and air conditioning systems in pressure classes from minus 2 inches to plus 10 inches water gage.

B. Related Sections: The following sections contain requirements that relate to this Section:
1. Division 7 Section "Joint Sealant" for fire-resistant sealants for use around duct penetrations and fire damper installations in fire rated floors, partitions, and walls.
2. Division 8 Section "Access Doors and Frames" for wall- and ceiling-mounted access panels and doors for access to concealed ducts.
3. Division 15 Section "Mechanical Insulation" for exterior duct and plenum insulation.
4. Division 15 Section "Duct Accessories" for flexible duct materials, dampers, duct-mounted access panels and doors, and turning vanes.
5. Division 15 Section "Fibrous Glass Duct Systems."
6. Division 15 Section "Diffusers, Registers, and Grilles."
7. Division 15 Section "Testing, Adjusting, and Balancing."

1.3 DEFINITIONS

A. Sealing Requirements Definitions: For the purposes of duct systems sealing requirements specified in this Section, the following definitions apply:
1. Seams: A seam is defined as joining of two longitudinally (in the direction of airflow) oriented edges of duct surface material occurring between two joints. All other duct surface connections made on the perimeter are deemed to be joints.
2. Joints: Joints include girth joints; branch and subbranch intersections; so-called duct collar tap-ins; fitting subsections; louver and air terminal connections to ducts; access door and access panel frames and jambs; duct, plenum, and casing abutments to building structures.

1.4 SYSTEM PERFORMANCE REQUIREMENTS

A. The duct system design, as indicated, has been used to select and size air moving and distribution equipment and other components of the air system. Changes or alterations to the layout or configuration of the duct system must be specifically approved in writing. Accompany requests for layout modifications with calculations showing that the proposed layout will provide the original design results without increasing the system total pressure.

1.5 SUBMITTALS

A. General: Submit the following in accordance with Conditions of Contract and Division 1 Specification Sections.

B. Duct shop drawings and duct work coordination drawings shall not be submitted to the architect, but shall be available at the job site for coordination, with the exception of exposed ducts in finished areas. Submit shop drawings to Architect showing exposed ducts in all finished areas.

C. Product data including details of construction relative to materials, dimensions of individual components, profiles, and finishes for the following items:
   1. Duct Liner.
   2. Sealing Materials.
   3. Fire-Stopping Materials.

D. Shop drawings from duct fabrication shop, drawn to a scale not smaller than 1/4 inch equals 1 foot, on drawing sheets same size as the Contract Drawings, detailing:
   1. Fabrication, assembly, and installation details, including plans, elevations, sections, details of components, and attachments to other work.
   2. Duct layout, indicating pressure classifications and sizes in plan view. For exhaust ducts systems, indicate the classification of the materials handled as defined in this Section.
   3. Fittings.
   4. Reinforcing details and spacing.
   5. Seam and joint construction details.
   6. Penetrations through fire-rated and other partitions.
   7. Terminal unit, coil, and humidifier installations.
   8. Hangers and supports, including methods for building attachment, vibration isolation, and duct attachment.

E. Coordination drawings for ductwork installation in accordance with Division 15 Section "Basic Mechanical Requirements." In addition to the requirements specified in "Basic Mechanical Requirements" show the following:
   1. Coordination with ceiling suspension members.
   2. Special coordination with other systems installed in the same space with the duct systems.
   3. Coordination of ceiling- and wall-mounted access doors and panels required to provide access to dampers and other operating devices.
   4. Coordination with ceiling-mounted lighting fixtures and air outlets and inlets.

F. Welding certificates including welding procedures specifications, welding procedures qualifications test records, and welders' qualifications test records complying with requirements specified in "Quality Assurance" below.

G. Record drawings including duct systems routing, fittings details, reinforcing, support, and installed accessories and devices, in accordance with Division 15 Section "Basic Mechanical Requirements" and Division 1.

H. Maintenance data for volume control devices, fire dampers, and smoke dampers, in accordance with Division 15 Section "Basic Mechanical Requirements."

1.6 QUALITY ASSURANCE

A. Qualify welding processes and welding operators in accordance with AWS D1.1 "Structural Welding Code - Steel" for hangers and supports and AWS D9.1 "Sheet Metal Welding Code."

B. Qualify each welder in accordance with AWS qualification tests for welding processes involved. Certify that their qualification is current.

C. NFPA Compliance: Comply with the following NFPA Standards:
   1. NFPA 90A, "Standard for the Installation of Air Conditioning and Ventilating Systems," except as indicated otherwise.
   2. NFPA 96, "Standard for the Installation of Equipment for the Removal of Smoke and Grease-Laden Vapors for Commercial Cooking Equipment," Chapter 3, "Duct System," for kitchen hood duct systems, except as indicated otherwise.

1.7 DELIVERY, STORAGE, AND HANDLING

A. Deliver sealant and fire-stopping materials to site in original unopened containers or bundles with labels informing about manufacturer, product name and designation, color, expiration period for use, pot life, curing time, and mixing instructions for multi-component materials.

B. Store and handle sealant fire-stopping materials in compliance with manufacturers' recommendations to prevent their deterioration or damage due to moisture, high or low temperatures, contaminants, or other causes.

C. Deliver and store stainless steel sheets with mill-applied adhesive protective paper, maintained through fabrication and installation.

D. Store duct liner to protect from moisture. Wet duct liner, even though dried, must be replaced with new material. No exceptions.

PART 2 - PRODUCTS

2.1 SHEET METAL MATERIALS

A. Sheet Metal, General: Provide sheet metal in thicknesses indicated (minimum 26 gauge), packaged and marked as specified in ASTM A 700.

B. Galvanized Sheet Steel: Lock-forming quality, ASTM A 527, Coating Designation G 90. Provide mill phosphatized finish for exposed surfaces of ducts exposed to view.

C. Carbon Steel Sheets: ASTM A 366, cold-rolled sheets, commercial quality, with oiled, exposed matte finish.

D. Aluminum Sheets: ASTM B 209, Alloy 3003, Temper H14, sheet form; with standard, one-side bright finish where ducts are exposed to view, and mill finish for concealed ducts.

E. Reinforcement Shapes and Plates: Unless otherwise indicated, provide galvanized steel reinforcing where installed on galvanized sheet metal ducts. For aluminum and stainless steel ducts provide reinforcing of compatible materials.

F. Tie Rods: Galvanized steel, 1/4-inch minimum diameter for 36-inch length or less; 3/8-inch minimum diameter for lengths longer than 36 inches.

2.2 DUCT LINER

A. General: Comply with NFPA Standard 90A and TIMA Standard AHC-101.

B. Materials: ASTM C 1071, Type II, fiberglass duct liner with acrylic coated surface exposed to airstream to prevent erosion of glass fibers and treated with EPA registered anti-microbial agent proven to resist microbial growth as determined by ASTM G21 and G22.
   1. Thickness: 1 inch.
   2. Density: 2 pounds.
   3. Thermal Performance: "K-Factor" equal to 0.28 or better, at a mean temperature of 75 deg F, ASTM C 518.
   4. Noise Reduction Coefficient: 0.55 or higher based on "Type A Mounting" and tested in accordance to ASTM C 423. (1.5 pcf, 1" thickness)
   5. Fire Hazard Classification: Flame spread rating of not more than 25 without evidence of continued progressive combustion and a smoke developed rating of no higher than 50, when tested in accordance with ASTM C 411.
   6. Liner Adhesive: Comply with NFPA Standard 90A and ASTM C 916.
   7. Maximum Velocity: 5,000 ft./min.
   8. Mechanical Fasteners: Galvanized steel, suitable for adhesive attachment, mechanical attachment, or welding attachment to duct. Provide fasteners that do not damage the liner when applied as recommended by the manufacturer, that do not cause leakage in the duct, and will indefinitely sustain a 50-pound tensile dead load test perpendicular to the duct wall.
      a. Fastener Pin Length: As required for thickness of insulation, and without projecting more than 1/8 inch into the airstream.
      b. Adhesive For Attachment of Mechanical Fasteners: Comply with the "Fire Hazard Classification" of duct liner system.

2.3 SEALING MATERIALS

A. Joint and Seam Sealants, General: The term sealant used here is not limited to materials of adhesive or mastic nature, but also includes tapes and combinations of open weave fabric strips and mastics.

B. Tape Sealing System: Woven-fiber tape impregnated with a gypsum mineral compound and a modified acrylic/silicone activator to react exothermically with the tape to form a hard, durable, airtight seal.

C. Joint and Seam Sealant: One-part, nonsag, solvent- release-curing, polymerized butyl sealant complying with FS TT-S-001657, Type I; formulated with a minimum of 75 percent solids.

D. Flanged Joint Mastics: One-part, acid-curing, silicone elastomeric joint sealants, complying with ASTM C 920, Type S, Grade NS, Class 25, Use O.

2.4 FIRE-STOPPING

A. Fire-Resistant Sealant: Fire-resistant sealant products are Specified in Division 7 Section "Firestopping."

2.5 HANGERS AND SUPPORTS

A. Building Attachments: Concrete inserts, powder actuated fasteners, or structural steel fasteners appropriate for building materials. Do not use powder actuated concrete fasteners for lightweight aggregate concretes or for slabs less than 4 inches thick.

B. Hangers: Galvanized sheet steel, or round, uncoated steel, threaded rod.
   1. Hangers Installed In Corrosive Atmospheres: Electro-galvanized, all-thread rod or hot-dipped- galvanized rods with threads painted after installation.
   2. Straps and Rod Sizes: Conform with Tables 4-1, 4-1M, and 4-2 in SMACNA "HVAC Duct Construction Standards," 1995 Edition, for sheet steel width and gage and steel rod diameters.

C. Duct Attachments: Sheet metal screws, blind rivets, or self-tapping metal screws; compatible with duct materials.

D. Trapeze and Riser Supports: Steel shapes conforming to ASTM A 36.
   1. Where galvanized steel ducts are installed, provide hot-dipped-galvanized steel shapes and plates.
   2. For stainless steel ducts, provide stainless steel support materials.
   3. For aluminum ducts, provide aluminum support materials, except where materials are electrolytically separated from ductwork.

2.6 RECTANGULAR DUCT FABRICATION

A. General: Except as otherwise indicated, fabricate rectangular ducts with galvanized sheet steel, in accordance with SMACNA "HVAC Duct Construction Standards," 1995 Edition, Tables 1-3 through 1-25, including their associated details. Conform to the requirements in the referenced standard for metal thickness (minimum 26 gauge), reinforcing types and intervals, tie rod applications, and joint types and intervals.
   1. Fabricate rectangular ducts in lengths appropriate to reinforcement and rigidity class required for pressure classification.
   2. Provide materials that are free from visual imperfections such as pitting, seam marks, roller marks, stains, and discolorations.
   3. All rectangular low pressure supply air, transfer air, relief air, and return air ducts shall be acoustically lined on the inside with 1" thick duct liner unless otherwise noted. All elbows and fittings shall be insulated. Exterior ducts shall be lined with 2" duct liner. Exhaust air ducts are not to be lined unless otherwise noted.

B. Crossbreaking or Cross Beading: Crossbreak or bead duct sides that are 19 inches and larger and are 20 gage or less, with more than 10 sq. ft. of unbraced panel area, as indicated in SMACNA "HVAC Duct Construction Standard," Figure 1-8.

2.7 RECTANGULAR DUCT FITTINGS

A. Fabricate elbows, transitions, offsets, branch connections, and other duct construction in accordance with SMACNA "HVAC Duct Construction Standard," 1995 Edition, Figures 2-1 through 2-18.
   1. Elbows:
      a. Type RE-1 radius elbow with 1-1/2 W radius.
      b. Type RE-2 square throat elbow with single thickness turning vanes.
      c. Type RE-5 dual radius elbow.

2.8 SHOP APPLICATION OF LINER IN RECTANGULAR DUCTS

A. Adhere a single layer of indicated thickness of duct liner with 90 percent coverage of adhesive at liner contact surface area. Multiple layers of insulation to achieve indicated thickness is prohibited.

B. Apply a coat of adhesive to transverse and longitudinal liner edges.

C. Butt transverse joints without gaps and coat joint with adhesive.

D. Fold and compress liner in corners of rectangular ducts or cut and fit to assure butted edge overlapping.

E. Longitudinal joints in rectangular ducts shall not occur except at corners of ducts, unless the size of the duct and standard liner product dimensions make longitudinal joints necessary.
   1. Apply an adhesive coating on longitudinal seams.

F. Secure liner with mechanical fasteners 4 inches from corners and at intervals not exceeding 12 inches transversely around perimeter; at 3 inches from transverse joints and at intervals not exceeding 18 inches longitudinally.

G. Secure transversely oriented liner edges facing the airstream with metal nosings that are either channel or "Z" profile or are integrally formed from the duct wall at the following locations:
   1. Fan discharge.
   2. Intervals of lined duct preceding unlined duct.

H. Where noted on drawings, secure insulation liner with perforated sheet metal liner of the same gage specified for the duct, secured to ducts with mechanical fasteners that maintain metal liner distance from duct without compressing insulation. Provide 3/32-inch-diameter perforations, with an overall open area of 23 percent.

I. Terminate liner with duct buildouts installed in ducts to attach dampers, turning vane assemblies, and other devices. Fabricated buildouts (metal hat sections) or other buildout means are optional; when used, secure buildouts to the duct wall with bolts, screws, rivets, or welds. Terminate liner at fire dampers at connection to fire damper sleeve through fire separation.

2.9 ROUND AND FLAT OVAL DUCT FABRICATION

A. General: "Basic Round Diameter" as used in this article is the diameter of the size of round duct that has a circumference equal to the perimeter of a given sized of flat oval duct. Except where interrupted by fittings, provide round and flat oval ducts in lengths not less than 12 feet.

B. Round Ducts: Fabricate round supply ducts with spiral lockseam construction, except where diameters exceed 72 inches. Fabricate ducts having diameters greater than 72 inches with longitudinal butt-welded seams. Comply with SMACNA "HVAC Duct Construction Standards," 1995 Edition, Table 3-2 for galvanized steel gages(minimum 26 gauge).

C. Flat Oval Ducts: Fabricate flat oval supply ducts with standard spiral lockseams or with butt-welded longitudinal seams in gages (minimum 26 gauge) listed in SMACNA "HVAC Duct Construction Standards," 1995 Edition, Table 3-4.

D. Single Wall Lined Ducts: All interior exposed low pressure supply air round ducts and fittings shall be double wall or lined with 1" thick duct liner unless noted otherwise.
   1. Install the duct liner in accordance with the manufacturer's recommendations.

E. Double-Wall Insulated Ducts: Fabricate double-wall insulated ducts with an outer shell, insulation, and an inner liner as specified below. Dimensions indicated on internally insulated ducts are nominal inside dimensions.
   1. Thermal Conductivity: 0.28 Btu/sq.ft./deg F/inch thickness at 75 deg F mean temperature.
   2. Outer Shell: Base outer shell gage on actual outer shell dimensions. Provide outer shell lengths 2 inches longer than inner shell and insulation, and in gages specified above for single-wall duct.
   3. Insulation: Unless otherwise indicated, provide 2-inch-thick fiber-glass insulation. Provide insulation ends where internally insulated duct connects to single-wall duct or noninsulated components. The insulation end shall terminate the insulation and reduce the outer shell diameter to the inner liner diameter.
   4. Solid Inner Liner: Construct round and flat oval inner liners with solid sheet metal of the gages listed below. For flat oval ducts, the diameter indicated in the table below is the "basic round diameter."
   5. Perforated Inner Liner: Construct round and flat oval inner liners with perforated sheet metal of the gages listed below. Provide 3/32-inch-diameter perforations, with an overall open area of 23 percent. For flat oval ducts, the diameter indicated below is the "basic round diameter."
      a. 3 to 8 inches: 28 gage with standard spiral construction.
      b. 9 to 42 inches: 28 gage with single-rib spiral construction.
      c. 44 to 60 inches: 26 gage with single-rib spiral construction.
      d. 62 to 88 inches: 22 gage with standard spiral construction.
   6. Maintain concentricity of liner to outer shell by mechanical means. Retain insulation from dislocation by mechanical means.

2.10 ROUND AND FLAT OVAL SUPPLY AND EXHAUST FITTINGS FABRICATION

A. 90-Degree Tees and Laterals and Conical Tees: Fabricate to conform to SMACNA "HVAC Duct Construction Standards," 1995 Edition, Figures 3-4 to 3-6 and with metal thicknesses (minimum 26 gauge) specified for longitudinal seam straight duct.
   1. Tees: 90° tee with oval to round tap. Conical tees.

B. Diverging-Flow Fittings: Fabricate with a reduced entrance to branch taps with no excess material projecting from the body onto branch tap entrance.

C. Elbows: Fabricate in die-formed, gored, pleated, or mitered construction. Fabricate the bend radius of die-formed, gored, and pleated elbows 1.5 times the elbow diameter. Unless elbow construction type is indicated, provide elbows meeting the following requirements:
   1. Mitered Elbows: Fabricate mitered elbows with welded construction in gages specified below.
      a. Mitered Elbows Radius and Number of Pieces: Unless otherwise indicated, construct elbow to comply with SMACNA "HVAC Duct Construction Standards," 1995 Edition, Table 3-1.
      b. Round Mitered Elbows: Solid welded and with metal thickness listed below for pressure classes from minus 2 inches to plus 2 inches:
         1) 3 to 26 inches: 24 gage.
         2) 27 to 36 inches: 22 gage.
         3) 37 to 50 inches: 20 gage.
         4) 52 to 60 inches: 18 gage.

5) 62 to 84 inches: 16 gage.

c. Round Mitered Elbows: Solid welded and with metal thickness listed below for pressure classes from 2 inches to 10 inches:

1) 3 to 14 inches: 24 gage.
2) 15 to 26 inches: 22 gage.
3) 27 to 50 inches: 20 gage.
4) 52 to 60 inches: 18 gage.
5) 62 to 84 inches: 16 gage.

d. Flat Oval Mitered Elbows: Solid welded and with the same metal thickness as longitudinal seam flat oval duct.

e. 90-Degree, 2-Piece, Mitered Elbows: Use only for supply systems, or exhaust systems for material handling classes A and B; and only where space restrictions do not permit the use of 1.5 bend radius elbows. Fabricate with a single-thickness turning vanes.

2. Round Elbows - 8 Inches and Smaller: Die-formed or stamped elbows for 45- and 90-degree elbows and pleated elbows for 30, 45, 60, and 90 degrees only. Fabricate nonstandard bend angle configurations or 1/2-inch-diameter (e.g. 3-1/2- and 4-1/2-inch) elbows with gored or segmented construction.
3. Round Elbows - 9 Through 14 Inches: Gored or segmented or pleated elbows for 30, 45, 60, and 90 degrees, except where space restrictions require a mitered elbow. Fabricate nonstandard bend angle configurations or 1/2-inch-diameter (e.g. 9-1/2- and 10-1/2-inch) elbows with gored or segmented construction.
4. Round Elbows - Larger Than 14 Inches and All Flat Oval Elbows: Gored or segmented elbows, except where space restrictions require a mitered elbow.
5. Die-Formed or Stamped Elbows for Sizes Through 8 Inches and All Pressures: 20 gage with 2-piece welded construction.
6. Round Gored or Segmented Elbows Gages: Same as for nonelbow fittings specified above.
7. Flat Oval Elbows Gages: Same as longitudinal seam flat oval duct.
8. Pleated Elbows Sizes Through 14 Inches and Pressures Through 10 Inches: 26 gage.

D. Single Wall Lined Ducts: All interior exposed low pressure supply air round ducts and fittings shall be double wall or lined with 1" thick duct liner unless noted otherwise.

1. Install the duct liner in accordance with the manufacturer's recommendations.

E. Double-Wall Insulated Fittings: Fabricate double-wall insulated fittings with an outer shell, insulation, and an inner liner as specified below. Dimensions indicated on internally insulated ducts are nominal inside dimensions.

1. Thermal Conductivity: 0.28 Btu/sq.ft./deg F/inch thickness at 75 deg F mean temperature.
2. Outer Shell: Base outer shell gage on actual outer shell dimensions. Provide outer shell lengths 2 inches longer than inner shell and insulation. Gages for outer shell shall be same as for uninsulated fittings specified above.
3. Insulation: Unless otherwise indicated, provide 2-inch-thick fiber-glass insulation. Provide insulation ends where internally insulated duct connects to single-wall duct or noninsulated components. The insulation end shall terminate the insulation and reduce the outer shell diameter to the nominal single-wall size.
4. Solid Inner Liner: Construct round and flat oval inner liners with solid sheet metal of the gages listed below. For flat oval ducts, the diameter indicated in the table below is the "basic round diameter."
5. Perforated Inner Liner: Construct round and flat oval inner liners with perforated sheet metal of the gages listed below. Provide 3/32-inch-diameter perforations, with an overall open area of 23 percent. For flat oval ducts, the diameter indicated in the table below is the "basic round diameter."

a. 3 to 34 inches: 24 gage.
b. 35 to 58 inches: 22 gage.
c. 60 to 88 inches: 20 gage.

6. Maintain concentricity of liner to outer shell by mechanical means. Retain insulation from dislocation by mechanical means.

PART 3 - EXECUTION

3.1 DUCT INSTALLATION, GENERAL

A. Duct System Pressure Class: Construct and install each duct system for the specific duct pressure classification indicated.
   1. Low pressure supply duct between terminal boxes and room outlets: 1 inch w.g. positive.
   2. Exhaust air duct when fan rated at 2 inches w.g. sp or lower, return air duct, transfer air duct, combustion air duct, outside air duct: 2 inches w.g. negative.

B. Install ducts with the fewest possible joints.

C. Use fabricated fittings for all changes in directions, changes in size and shape, and connections.

D. Install couplings tight to duct wall surface with projections into duct at connections kept to a minimum.

E. Locate ducts, except as otherwise indicated, vertically and horizontally, parallel and perpendicular to building lines; avoid diagonal runs. Install duct systems in shortest route that does not obstruct useable space or block access for servicing building and its equipment.

F. Install ducts close to walls, overhead construction, columns, and other structural and permanent enclosure elements of building.

G. Provide clearance of 1 inch where furring is shown for enclosure or concealment of ducts, plus allowance for insulation thickness, if any.

H. Install insulated ducts with 1-inch clearance outside of insulation.

I. Conceal ducts from view in finished and occupied spaces by locating in mechanical shafts, hollow wall construction, or above suspended ceilings. Do not encase horizontal runs in solid partitions, except as specifically shown.

J. Coordinate layout with suspended ceiling and lighting layouts and similar finished work.

K. Electrical Equipment Spaces: Route ductwork to avoid passing through transformer vaults and electrical equipment spaces and enclosures.

L. Non-Fire-Rated Partition Penetrations: Where ducts pass through interior partitions and exterior walls, and are exposed to view, conceal space between construction opening and duct or duct insulation with sheet metal flanges of same gage as duct. Overlap opening on 4 sides by at least 1-1/2 inches.

M. Fire-Rated Penetrations: Comply with Division 7 Section "Firestopping."

N. Protect lined duct from moisture. Wet duct liner, even though dried, must be replaced. No exceptions.

O. Install automatic temperature control dampers, air flow measuring stations and other duct mounted devices.

P. Interior of ducts shall be kept clean. Protect ducts from dust, dirt, debris, etc., by covering exposed ends of ducts during storage and construction. Ducts which become dirty shall be cleaned to satisfaction of the Engineer and Owner.

3.2 SEAM AND JOINT SEALING

A. General: Seal duct seams and joints as follows:

B. Pressure Classification Less than 2 Inches Water Gage: Transverse joints only and duct penetrations.

C. Seal externally insulated ducts prior to insulation installation.

D. Ducts exposed to view shall have tape sealer in a neat manner. Paint tape sealer on unpainted ducts to match duct.

3.3 HANGING AND SUPPORTING

A. Install rigid round, rectangular, and flat oval metal duct with support systems indicated in SMACNA "HVAC Duct Construction Standards," 1995 Edition, Tables 4-1 through 4-3 and Figures 4-1 through 4-9.

B. Support horizontal ducts within 2 feet of each elbow and within 4 feet of each branch intersection.

C. Support vertical ducts at a maximum interval of 16 feet and at each floor.

D. Upper attachments to structures shall have an allowable load not exceeding 1/4 of the failure (proof test) load but are not limited to the specific methods indicated.

E. Install concrete insert prior to placing concrete.

F. Install powder actuated concrete fasteners after concrete is placed and completely cured.

G. Steel roof deck shall not be used to support loads from ductwork or equipment, unless noted otherwise.

H. Ducts exposed to view shall be supported using threaded rod or some other method that is neat in appearance. Straps are not an acceptable method of hanging ducts that are exposed to view.

I. Seismic bracing for ducts exposed to view must be neat in appearance. Proposed method shall be submitted to the Architect prior to duct installation.

3.4 CONNECTIONS

A. Equipment Connections: Connect equipment with flexible connectors in accordance with Division 15 Section "Duct Accessories."

B. Branch Connections: Comply with SMACNA "HVAC Duct Construction Standards," 1995 Edition, Figures 2-5 and 2-6.

C. Outlet and Inlet Connections: Comply with SMACNA "HVAC Duct Construction Standards," 1995 Edition, Figures 2-14 through 2-17.

3.5 FIELD QUALITY CONTROL

A. Disassemble, reassemble, and seal segments of the systems as required to accommodate leakage testing, and as required for compliance with test requirements.

B. Conduct tests, in the presence of the Architect or Owner's representative, at static pressures equal to the maximum design pressure of the system or the section being tested. If pressure classifications are not indicated, test entire system at the maximum system design pressure. Do not pressurize systems above the maximum design operating pressure. Check duct system for audible leaks. Give 7 days' advanced notice for testing.

C. Maximum Allowable Leakage: As described in ASHRAE 2005 Handbook, "Fundamentals" Volume, Chapter 35, Table 6 and Figure 13. Comply with requirements for leakage classification 3 for round and flat oval ducts, leakage classification 12 for rectangular ducts in pressure classifications less than and equal to 2 inches water gage (both positive and negative pressures), and leakage classification 6 for pressure classifications greater than 2 inches water gage and less than and equal to 10 inches water gage.

D. Remake leaking joints as required and apply sealants to achieve specified maximum allowable leakage.

E. Leakage Test: Perform volumetric measurements and adjust air systems as described in ASHRAE 2003 "HVAC Systems and Applications" Volume, Chapter 37 and ASHRAE 1997 "Fundamentals" Volume, Chapter 14, and Division 15 Section "TESTING, ADJUSTING, AND BALANCING."

3.6 ADJUSTING AND CLEANING

A. Adjust volume control devices as required by the testing and balancing procedures to achieve required air flow. Refer to Division 15 Section "TESTING, ADJUSTING, AND BALANCING" for requirements and procedures for adjusting and balancing air systems.

B. Vacuum duct systems prior to final acceptance to remove dust and debris.

END OF SECTION 15815

SECTION 15820 - DUCT ACCESSORIES July 10, 2007

PART 1 - GENERAL

1.1 RELATED DOCUMENTS

A. Drawings and general provisions of the Contract, including General and Supplementary Conditions and Division 1 Specification Sections, apply to this Section.

1.2 SUMMARY

A. This Section includes the following:
1. Backdraft dampers.
2. Manual volume control dampers.
3. Fire and smoke dampers.
4. Combination fire/smoke dampers.
5. Actuators.
6. Turning vanes.
7. Duct-mounted access doors and panels.
8. Flexible connectors.
9. Flexible ducts.
10. Accessories hardware.

B. Related Sections: The following Sections contain requirements that relate to this Section:
1. Division 8 Section "Access Doors and Frames" for ceiling- and wall-mounted access panels and doors.

1.3 SUBMITTALS

A. General: Submit the following in accordance with Conditions of Contract and Division 1 Specification Sections.

B. Product data including details for materials, dimensions of individual components, profiles, and finishes for the following items:
1. Backdraft dampers.
2. Manual volume control dampers.
3. Fire and smoke dampers.
4. Combination fire/smoke dampers.
5. Duct-mounted access panels and doors.
6. Duct silencers.
7. Flexible ducts.

C. Shop drawings from manufacturer detailing assemblies. Include dimensions, weights, loadings, required clearances, method of field assembly, components, and location and size of each field connection. Detail the following:
1. Special fittings and volume control damper installation (both manual and automatic) details.
2. Fire and smoke damper installations, including sleeves and duct-mounted access door and panel installations.

D. Product Certification: Submit certified test data on dynamic insertion loss; self-noise power levels; and airflow performance data, static pressure loss, and dimensions and weights.

1.4 QUALITY ASSURANCE

A. NFPA Compliance: Comply with the following NFPA Standards:
   1. NFPA 90A, "Standard for the Installation of Air Conditioning and Ventilating Systems."
   2. NFPA 90B, "Standard for the Installation of Warm Air Heating and Air Conditioning Systems."

1.5 EXTRA MATERIALS

A. Furnish extra materials matching products installed as described below, packaged with protective covering for storage and identified with labels describing contents. Deliver extra materials to Owner.
   1. Fusible Links: Furnish quantity equal to 10 percent of amount installed.

PART 2 - PRODUCTS

2.1 BACKDRAFT DAMPERS

A. Description: Suitable for horizontal or vertical installation.

B. Frame: 18-gage galvanized steel, with welded corners, or 0.063-inch-thick 6063T extruded aluminum.

C. Blades: 0.025-inch-thick roll-formed aluminum, or 0.050-inch-thick 6063T extruded aluminum.

D. Blade Seals: Vinyl or neoprene.

E. Blade Axles: Nonferrous or galvanized steel.

F. Tie Bars and Brackets: Aluminum or galvanized steel.

G. Return Spring: Adjustable tension.

H. Chain Operator: 15-foot-long galvanized-steel sash chain and pulley.

I. Wing-Nut Operator: Galvanized steel, with 1/4-inch galvanized-steel rod.

2.2 MANUAL VOLUME CONTROL DAMPERS

A. General: Provide factory-fabricated volume-control dampers, complete with required hardware and accessories. Stiffen damper blades to provide stability under operating conditions. Provide locking device to hold dampers in a fixed position without vibration. Close duct penetrations for damper components to seal duct consistent with pressure class. Provide end bearings or other seals for ducts with pressure classifications of 3 inches or higher. Extend axles full length of damper blades. Provide bearings at both ends of operating shaft.

B. Standard Volume Control Dampers: Multiple- or single-blade, parallel- or opposed-blade design as indicated, standard leakage rating, and suitable for horizontal or vertical applications.
   1. Steel Frames: Hat-shaped, galvanized-steel channels, minimum of 16 gage, and with mitered and welded corners. Provide frames with flanges where indicated

for attaching to walls. Provide flangeless frames where indicated for installation in ducts.

2. Roll-Formed Steel Blades: 16-gage galvanized steel.
3. Blade Axles: Galvanized steel.
4. Tie Bars and Brackets: Galvanized steel.

C. Jackshaft: 1-inch-diameter, galvanized-steel pipe rotating within a pipe bearing assembly mounted on supports at each mullion and at each end of multiple damper assemblies. Provide appropriate length and number of mounting to connect linkage of each damper of a multiple damper assembly.

D. Damper Control Hardware: Zinc-plated, die-cast core with a heavy-gage dial and handle made of 3/32-inch-thick zinc-plated steel, and a 3/4-inch hexagon locking nut. Provide center hole to suit damper operating rod size. Provide elevated platform for insulated duct mounting. Provide gasketing to reduce air leakage.

E. Concealed Damper Regulators: Provide for each damper located above a non-accessible type ceiling a concealed damper regulator with zinc finished cover plate for field painting. Provide additional hardware such as couplings, bearing, or rods that may be required to connect the concealed damper regulator to the damper.

2.3 FIRE DAMPERS

A. General: UL labeled according to UL Standard 555 "Standard for Fire Dampers." Fire dampers to be dynamic with ability to close with fan system on.

B. Fire Rating: 1-1/2 hours for fire resistive assemblies rated 2 hours or less, 3 hours for fire resistive assemblies rated 3 hours or more.

C. Frame: Type A, Type B, or Type C; fabricated with roll-formed, galvanized-steel; with mitered and interlocking corners. Type C frame sealed air tight.

D. Mounting Sleeve: Factory-installed or field-installed galvanized steel.

1. Minimum Thickness: Thickness to meet UL listing requirements, and length to suit application.

E. Mounting Orientation: Vertical or horizontal as indicated.

F. Blades: Roll-formed, interlocking, galvanized steel. In place of interlocking blades, provide full-length, galvanized-steel blade connectors.

G. Dynamic Closing: Include a blade lock and stainless steel negator closure spring for all units.

H. Fusible Link: Replaceable, 165 deg F rated unless otherwise indicated.

2.4 CEILING FIRE DAMPERS

A. General: UL listed and labeled according to UL 555C "Standard for Ceiling Radiation Dampers"; comply with the construction details for the tested floor/roof-ceiling assemblies as indicated in the UL Fire Resistance Directory.

B. Fire Rating: 3 hours for fire resistive assemblies rated 3 hours or less.

C. Frame: Rectangular or round, galvanized steel; style to suit ceiling construction.

D. Blades: Galvanized steel with nonasbestos refractory insulation.

E. Fusible Link: Replaceable, 165 deg F rated.

2.5 SMOKE DAMPERS

A. General: UL-labeled according to UL Standard 555S, "Standard for Leakage Rated Dampers for Use in Smoke Control Systems." Leakage Class II, 350 deg F temperature category.

B. Frame and Blades: Galvanized steel.

C. Mounting Sleeve: Factory-installed, galvanized steel, thickness to meet UL listing requirements, length to suit application.

D. Actuator: UL listed smoke damper actuator, factory installed, 2 position action, normally closed, electric 120/1/60.

2.6 COMBINATION FIRE/SMOKE DAMPERS

A. General: UL-labeled according to UL Standard 555 "Standard for Fire Dampers" and UL Standard 555S "Standard for Leakage Rated Dampers for Use in Smoke Control Systems." Leakage Class II, 350 deg. F temperature category. Dampers to be dynamic with ability to close with fan system on.

B. Fire Rating: 1-1/2 hours for fire resistive assemblies rated 2 hours or less, 3 hours for fire resistive assemblies rated 3 hours or more.

C. Leakage Class: Class II.

D. Temperature Category: 350 deg. F.

E. Thermal Link: 165 deg. F rated, resetable.

F. Frame and Blades: Galvanized steel.

G. Mounting Sleeve: Factory-installed, galvanized steel, thickness to meet UL listing requirements.

H. Length to suit application.

I. Mounting: Vertical or horizontal.

J. Actuator: UL listed smoke damper actuator, factory installed, 2 position action, normally closed, electric 120/1/60.

K. Smoke Detector: UL listed ionization duct smoke detector, factory installed. 120/1/60 power requirement, wired to close damper when smoke detected in duct.

2.7 TURNING VANES

A. Fabricate turning vanes according to SMACNA HVAC Duct Construction Standards, Figures 2-2 through 2-7 except trailing edge turning vanes not allowed.

B. Manufactured Turning Vanes: Fabricate of 1-1/2-inch-wide, curved blades set at 3/4 inch on center, support with bars perpendicular to blades set at 2 inches on center, and set into side strips suitable for mounting in ducts.

C. Acoustic Turning Vanes: Fabricate of airfoil-shaped aluminum extrusions with perforated faces and fiber glass fill.

2.8 DUCT-MOUNTED ACCESS DOORS AND PANELS

A. General: Refer to the Access Door Materials Schedule at the end of this Section for frame and door thickness, number of hinges and locks, and location of locks. Provide construction and airtightness suitable for duct pressure class.

B. Frame: Galvanized sheet steel. Provide with bend-over tabs and foam gaskets.

C. Door: Double-wall, galvanized sheet metal construction with insulation fill and thickness, number of hinges and locks as indicated for duct pressure class. Provide vision panel where indicated. Provide 1-inch by 1-inch butt hinge or piano hinge and cam latches.

D. Seal around frame attachment to duct and door to frame with neoprene or foam rubber seals.

E. Insulation: 1-inch thick fiber glass or polystyrene foam board.

F. Size: 12" X 12" minimum size or 2" narrower X 12" for duct 24" wide or narrower. 18" X 18" minimum size for duct larger than 24".

2.9 FLEXIBLE CONNECTORS

A. General: Flame-retarded or noncombustible fabrics, coatings, and adhesives complying with UL Standard 181, Class 1.

B. Metal-Edged Connectors: Factory-fabricated with a strip of fabric 3-1/2 inches wide attached to 2 strips of 24-gage, galvanized sheet steel or 0.032-gage aluminum sheets. Select metal compatible with connected duct system. Fold and crimp metal edge strips onto fabric as illustrated in SMACNA HVAC Duct Standard, 1st Edition, Figure 2-19.

C. Indoor System Flexible Connectors Fabric: Glass fabric double coated with polychloroprene.
   1. Minimum Weight: 26 oz. per sq yd.
   2. Tensile Strength: 480 lb per inch in the warp and 360 lb per inch in the filling.

D. Outdoor System Flexible Connectors Fabric: Glass fabric double coated with Du Pont's HYPALON or other synthetic-rubber weatherproof coating resistant to the sun's ultraviolet rays and ozone environment.
   1. Minimum Weight: 26 oz. per sq yd.
   2. Tensile Strength: 530 lb per inch in the warp and 440 lb per inch in the filling.

E. High-Temperature System Flexible Connectors Fabric: Glass fabric coated with silicone rubber and having a minimum weight of 16 oz. per sq yd and tensile strength of 285 lb per inch in the warp, and 185 lb per inch in the filling.

F. High-Corrosive-Environment System Flexible Connectors Fabric: Glass fabric coated with a chemical-resistant coating.
   1. Minimum Weight: 14 oz. per sq yd.

2. Tensile Strength: 450 lb per inch in the warp and 340 lb per inch in the filling.

2.10 FLEXIBLE DUCTS

A. General: Comply with UL 181, Class 1.

B. Flexible Ducts - Insulated: Factory-fabricated, insulated, corrugated aluminum, round duct, with an outer jacket enclosing 1-1/2-inch-thick, glass fiber insulation around a continuous inner liner.
   1. Outer Jacket: Glass-reinforced, silver mylar with a continuous hanging tab, integral fiber glass tape, and nylon hanging cord.

C. Spin Collars:
   1. All round take-offs shall be made with spin collar type with damper. The mounting groove shall be dieformed to assure constant fit control. Balancing dampers shall be furnished with positive adjustable quadrant with locking nut for easy adjustment. Provide shafts to accommodate a concealed damper regulator where located above a non-accessible ceiling.
   2. Holes for spin-ins shall be cut with jigged tool for precise opening preparation. Joint shall be sealed air tight per 1985 SMACNA Class C Duct Sealing.

2.11 ACCESSORIES HARDWARE

A. Instrument Test Holes: Cast iron or cast aluminum to suit duct material, including screw cap and gasket and a flat mounting gasket. Size to allow insertion of pitot tube and other testing instruments and provide in length to suit duct insulation thickness.

B. Splitter Damper Accessories: Zinc-plated damper blade bracket, 1/4-inch, zinc-plated operating rod, and a duct-mounted, ball-joint bracket with flat rubber gasket and square-head set screw.

C. Flexible Duct Clamps: Stainless steel band with cadmium-plated hex screw to tighten band with a worm-gear action. Provide in sizes from 3 to 18 inches to suit duct size.

D. Adhesives: High strength, quick setting, neoprene based, waterproof and resistant to gasoline and grease.

PART 3 - EXECUTION

3.1 EXAMINATION

A. Examine areas and conditions for compliance with requirements for installation tolerances and other conditions affecting performance of duct accessories. Do not proceed with installation until unsatisfactory conditions are corrected.

3.2 INSTALLATION

A. Install duct accessories according to manufacturer's installation instructions and applicable portions of details of construction as shown in SMACNA standards.

B. Install volume control dampers in lined duct with methods to avoid damage to liner and to avoid erosion of duct liner.

C. Provide test holes at fan inlet and outlet and elsewhere as indicated.

D. Install fire and smoke dampers according to the manufacturer's UL-approved printed instructions.

E. Install fusible links in fire dampers.

F. Label fire damper, smoke damper, and combination fire/smoke damper access doors according to IMC-Current with letters not less than 1/2 inch in height reading "FIRE DAMPER", "SMOKE DAMPER", or "FIRE/SMOKE DAMPER."

G. Maximum allowable length of flex duct shall be 3'-0" at diffuser terminations.

H. Provide duct-mounted access doors as required for access at each fire damper, smoke damper, combination fire/smoke damper and ceiling fire damper, motorized control damper.

3.3 ADJUSTING

A. Adjust duct accessories for proper settings.

B. Adjust fire and smoke dampers for proper action.

C. Final positioning of manual dampers is specified in Division 15 Section "Testing, Adjusting, and Balancing."

ACCESS DOOR MATERIALS SCHEDULE

DUCT PRESSURE CLASS	DOOR SIZE INCHES	NUMBER OF HINGES	NUMBER OF LOCKS	METAL GAGE FRAME	DOOR	BACK
2 INCHES & LESS	12X12	2	1-S	24	26	26
	16X20	2	2-S	22	24	26
	24X24	3	2-S	22	22	26

S: SIDE
T: TOP
B: BOTTOM

END OF SECTION 15820

SECTION 15850A - AIR HANDLING July 10, 2007

PART 1 - GENERAL

1.1 RELATED DOCUMENTS

A. Drawings and general provisions of Contract, including General and Supplementary Conditions and Division 1 Specification Sections, apply to this Section.

B. Requirements of the following Division 15 Sections apply to this section:
1. "Basic Mechanical Requirements."
2. "Basic Mechanical Materials and Methods."

1.2 SUMMARY

A. This Section includes the following types of air-handling units:
1. Centrifugal roof ventilators

B. Related Sections: The following sections contain requirements that relate to this section:
1. Division 7 Section "Roof Accessories" for roof curbs and equipment supports.
2. Division 15 Section "Mechanical Vibration and Seismic Controls" for vibration hangers and supports.
3. Division 15 Section "Air Handling" for package units that include fans.
4. Division 15 Section "Automatic Temperature Controls" for electric control devices and control sequence descriptions.
5. Division 15 Section "Controls" for control sequence descriptions.
6. Division 15 Section "Testing, Adjusting, and Balancing" for air-handling systems testing, adjusting, and balancing requirements and procedures.
7. Division 15 Section "Motors."
8. Division 16 Section "Motor and Circuit Disconnects" for disconnect switches.
9. Division 16 Section "Motor Control Centers" for starters and fusible switches.

1.3 SUBMITTALS

A. General: Submit the following in accordance with Conditions of Contract and Division 1 Specification Sections:
1. Product data for selected models, including specialties, accessories, and the following:
   a. Certified fan performance curves with system operating conditions indicated.
   b. Certified fan sound power ratings.
   c. Motor ratings and electrical characteristics plus motor and fan accessories.
   d. Materials gages and finishes, including color charts.
   e. Dampers, including housings, linkages, and operators.
2. Shop drawings from manufacturer detailing equipment assemblies and indicating dimensions, weights, required clearances, components, and location and size of field connections.
3. Coordination drawings, in accordance with Division 15 Section "Basic Mechanical Requirements," for fan room layouts, roof penetration requirements, and reflected ceiling plans drawn accurately to scale and coordinating penetrations and units mounted above ceiling. Show the following:
   a. Roof framing and support members relative to duct penetrations.

b. Ceiling suspension members.
c. Method of attaching hangers to building structure.
d. Size and location of initial access modules for acoustical tile.
e. Ceiling-mounted items including light fixtures, diffusers, grilles, speakers, sprinkler heads, access panels, and special moldings.

4. Wiring diagrams that detail power, signal, and control wiring. Differentiate between manufacturer-installed wiring and field-installed wiring.
5. Product certificates, signed by manufacturers of air-handling units, certifying that their products comply with specified requirements.
6. Maintenance data for air-handling units, for inclusion in Operating and Maintenance Manual.

1.4 QUALITY ASSURANCE

A. UL Compliance: Fans shall be designed, manufactured, and tested in accordance with UL 705 "Power Ventilators."

B. UL Compliance: Fans and components shall be UL listed and labeled. Fans serving kitchen hoods and dishwasher hoods shall be UL listed for the removal of smoke and grease laden vapors.

C. Nationally Recognized Testing Laboratory and NEMA Compliance (NRTL): Fans and components shall be NRTL listed and labeled. The term "NRTL" shall be as defined in OSHA Regulation 1910.7.

D. NEMA Compliance: Motors and electrical accessories shall comply with NEMA standards. Motors greater than 5 HP shall be Premium Efficiency.

E. Electrical Component Standard: Components and installation shall comply with NFPA 70 "National Electrical Code."

1.5 DELIVERY, STORAGE, AND HANDLING

A. Lift and support units with the manufacturer's designated lifting or supporting points.

B. Disassemble and reassemble units as required for movement into the final location following manufacturer's written instructions.

C. Deliver fan units as a factory-assembled unit to the extent allowable by shipping limitations, with protective crating and covering.

1.6 SEQUENCING AND SCHEDULING

A. Coordinate the size and location of concrete equipment pads. Cast anchor bolt inserts into pad.

B. Coordinate the installation of roof curbs, equipment supports, and roof penetrations.

C. Coordinate the size and location of structural steel support members.

1.7 EXTRA MATERIALS

A. Furnish one additional complete set of belts for each belt-driven fan.

B. Provide one drive change if required to meet installed conditions.

PART 2 - PRODUCTS

2.1 MANUFACTURERS

A. Manufacturers: Subject to compliance with requirements, provide products by one of the following:

1. Centrifugal Roof Ventilators:
   a. ACME.
   b. Ammerman Company, Inc.
   c. Captive Aire.
   d. Carnes Company, Inc.
   e. Central Blower Co.
   f. Cincinnati Fan & Ventilator Co.
   g. Cook (Loren) Co.
   h. Essick Air Products, Breidert.
   i. Greenheck Fan Corp.
   j. ILG Industries, Inc.
   k. Jenn Industries, Inc.
   l. Penn Ventilator.
   m. Quietaire Corp.

2.2 SOURCE QUALITY CONTROL

A. Testing Requirements: The following factory tests are required:
   1. Sound Power Level Ratings: Comply with AMCA Standard 301 "Method for Calculating Fan Sound Ratings From Laboratory Test Data." Test fans in accordance with AMCA Standard 300 "Test Code for Sound Rating." Fans shall be licensed to bear the AMCA Certified Sound Ratings Seal.
   2. Fan Performance Ratings: Establish flow rate, pressure, power, air density, speed of rotation, and efficiency by factory tests and ratings in accordance with AMCA Standard 210/ASHRAE Standard 51 - Laboratory Methods of Testing Fans for Rating.

2.3 FANS, GENERAL

A. General: Provide fans that are factory fabricated and assembled, factory tested, and factory finished, with indicated capacities and characteristics.

B. Fans and Shafts: Statically and dynamically balanced and designed for continuous operation at the maximum rated fan speed and motor horsepower.
   1. Fan Shaft: Turned, ground, and polished steel designed to operate at no more than 70 percent of the first critical speed at the top of the speed range of the fan's class.

C. Belt Drives: Factory mounted, with final alignment and belt adjustment made after installation.
   1. Service Factor: 1.4.

D. Belts: Oil-resistant, nonsparking, and nonstatic.

E. Motors and Fan Wheel Pulleys: Adjustable pitch for use with motors through 15 HP; fixed pitch for use with motors larger than 15 HP. Select pulley so that pitch adjustment is at the middle of the adjustment range at fan design conditions.

1. Belt Guards: Provide steel belt guards for motors mounted on the outside of the fan cabinet.

F. Shaft Bearings: Provide type indicated, having a median life "Rating Life" (AFBMA L(50)) of 200,000, calculated in accordance with AFBMA Standard 9 for ball bearings and AFBMA Standard 11 for roller bearings.

G. Factory Finish: The following finishes are required:
1. Sheet Metal Parts: Prime coating prior to final assembly.
2. Exterior Surfaces: Baked-enamel finish coat after assembly.

2.4 CENTRIFUGAL ROOF VENTILATORS

A. General Description: Belt-driven or direct-drive as indicated, centrifugal consisting of housing, wheel, fan shaft, bearings, motor and disconnect switch, drive assembly, curb base, and accessories.

B. Housing: Heavy-gage, removable, spun-aluminum, dome top and outlet baffle; square, one-piece, hinged, aluminum base with venturi inlet cone.
1. Upblast Units: Provide spun-aluminum discharge baffle to direct discharge air upward, with rain and snow drains.

C. Fan Wheel: Aluminum hub and wheel with backward-inclined blades.

D. Belt-Driven Drive Assembly: Resiliently mounted to the housing, with the following features:
1. Pulleys: Cast-iron, adjustable-pitch.
2. Shaft Bearings: Permanently lubricated, permanently sealed, self-aligning ball bearings.
3. Fan Shaft: Turned, ground, and polished steel drive shaft keyed to wheel hub.
4. Fan motor isolated from exhaust air stream.

E. Accessories: The following items are required as indicated:
1. Disconnect Switch: Nonfusible type, with thermal overload protection mounted inside fan housing, factory-wired through an internal aluminum conduit.
2. Bird Screens: Removable 1/2-inch mesh, 16-gage, aluminum or brass wire.
3. Dampers: Counterbalanced, parallel-blade, backdraft dampers mounted in curb base, factory set to close when fan stops, motor-operated, parallel-blade, volume control dampers mounted in curb base, as indicated.
   a. Blades: Die-formed sheet aluminum.
   b. Frame: Extruded aluminum, with waterproof, felt blade seals.
   c. Linkage: Nonferrous metals, connecting blades to counter weight or operator.
   d. Operators: Manufacturer's standard electric motor.
4. Roof Curbs: Prefabricated, heavy-gage, galvanized steel; mitered and welded corners; 2-inch-thick, rigid, fiberglass insulation adhered to inside walls; built-in cant and mounting flange for flat roof decks; and 2-inch wood nailer. Size as required to suit roof opening and fan base.
   a. Overall Height: 12 inches.

2.5 MOTORS

A. Torque Characteristics: Sufficient to accelerate the driven loads satisfactorily.

B. Motor Sizes: Minimum sizes and electrical characteristics as indicated. If not indicated, large enough so that the driven load will not require the motor to operate in the service factor range.

C. Temperature Rating: 50 deg C maximum temperature rise at 40 deg C ambient for continuous duty at full load (Class A Insulation).

D. Service Factor: 1.15 for polyphase motors and 1.35 for single-phase motors.

E. Motor Construction: NEMA Standard MG 1, general purpose, continuous duty, Design B. Provide permanent-split capacitor classification motors for shaft-mounted fans and capacitor start classification for belted fans.
   1. Bases: Adjustable.
   2. Bearings: The following features are required:
      a. Ball or roller bearings with inner and outer shaft seals.
      b. Grease lubricated.
      c. Designed to resist thrust loading where belt drives or other drives produce lateral or axial thrust in motor.
   3. Enclosure Type: The following features are required:
      a. Open dripproof motors where satisfactorily housed or remotely located during operation.
      b. Guarded dripproof motors where exposed to contact by employees or building occupants.
   4. Overload protection: Built-in, automatic reset, thermal overload protection.
   5. Noise rating: Quiet.
   6. Efficiency: Energy-efficient motors shall have a minimum efficiency as scheduled in accordance with IEEE Standard 112, Test Method B. If efficiency not specified, motors shall have a higher efficiency than "average standard industry motors" in accordance with IEEE Standard 112, Test Method B. Motors greater than 5 HP shall be Premium Efficiency.
   7. Nameplate: Indicate the full identification of manufacturer, ratings, characteristics, construction, and special features.
   8. Motors used with a variable frequency drive shall be compatible with the VFD manufacturer and shall be NEMA Standard MG-1 Part 31, definite purpose inverter fed polyphase.

F. Starters, Electrical Devices, and Wiring: Electrical devices and connections are specified in Division 16.

PART 3 - EXECUTION

3.1 EXAMINATION

A. Examine areas and conditions, with Installer present, for compliance with requirements for installation tolerances, housekeeping pads, and other conditions affecting performance of fans.

B. Do not proceed until unsatisfactory conditions have been corrected.

3.2 INSTALLATION, GENERAL

A. Install fans level and plumb, in accordance with manufacturer's written instructions. Support units as described below, using the vibration control devices indicated. Vibration

control devices are specified in Division 15 Section "Mechanical Vibration and Seismic Controls."

1. Support floor-mounted units on concrete equipment bases using indicated vibration isolation. Secure units to anchor bolts installed in concrete equipment base.
2. Secure roof-mounted fans to roof curbs with cadmium-plated hardware and install roof curbs.
3. Suspended Units: Suspend units from structural steel support frame using threaded steel rods and indicated vibration isolation springs.

B. Arrange installation of units to provide access space around air-handling units for service and maintenance.

C. Wire and connect motorized backdraft dampers.

3.3 CONNECTIONS

A. Duct installations and connections are specified in other Division 15 sections. Make final duct connections with flexible connections.

B. Electrical Connections: The following requirements apply:

1. Electrical power wiring is specified in Division 16.
2. Temperature control wiring and interlock wiring are specified in Division 15 Section "Automatic Temperature Controls."
3. Grounding: Connect unit components to ground in accordance with the National Electrical Code.

3.4 FIELD QUALITY CONTROL

A. Manufacturer's Field Inspection: Arrange and pay for a factory-authorized service representative to perform the following:

1. Inspect the field assembly of components and installation of fans including ductwork and electrical connections.
2. Prepare a written report on findings and recommended corrective actions.

3.5 ADJUSTING, CLEANING, AND PROTECTING

A. Adjust damper linkages for proper damper operation.

B. Clean unit cabinet interiors to remove foreign material and construction dirt and dust. Vacuum clean fan wheel and cabinet.

3.6 COMMISSIONING

A. Final Checks Before Start-Up: Perform the following operations and checks before start-up:

1. Remove shipping blocking and bracing.
2. Verify unit is secure on mountings and supporting devices and that connections for piping, ductwork, and electrical are complete. Verify proper thermal overload protection is installed in motors, starters, and disconnects.
3. Perform cleaning and adjusting specified in this Section.
4. Disconnect fan drive from motor, verify proper motor rotation direction, and verify fan wheel free rotation and smooth bearings operations. Reconnect fan drive system, align belts, and install belt guards.

5. Lubricate bearings, pulleys, belts, and other moving parts with factory-recommended lubricants.
6. Verify manual and automatic volume control and that fire and smoke dampers in connected ductwork systems are in the full-open position.
7. Disable automatic temperature control operators.

B. Starting procedures for fans:
1. Energize motor; verify proper operation of motor, drive system, and fan wheel. Adjust fan to indicated RPM.
a. Replace fan and motor pulleys as required to achieve design conditions.
2. Measure and record motor electrical values for voltage and amperage.

C. Shut unit down and reconnect automatic temperature control operators.

D. Refer to Division 15 Section "Testing, Adjusting, and Balancing" for procedures for air-handling-system testing, adjusting, and balancing.

3.7 DEMONSTRATION

A. Demonstration Services: Arrange and pay for a factory-authorized service representative to train Owner's maintenance personnel on the following:
1. Procedures and schedules related to start-up and shutdown, troubleshooting, servicing, preventative maintenance, and how to obtain replacement parts.
2. Familiarization with contents of Operating and Maintenance Manuals.

B. Schedule training with at least 7 days' advance notice.

END OF SECTION 15850A

SECTION 15950 - TESTING, ADJUSTING, & BALANCING & MECHANICAL July 10, 2007

O&M MANUALS

PART 1 - GENERAL

1.1 RELATED DOCUMENTS

A. Drawings and general provisions of Contract, including General and Supplementary Conditions and Division 1 Specification sections, apply to work of this section.

B. Related sections include the following:
   1. Division 1 Section "Quality Control" for (general requirements of testing agencies).
   2. Division 15 Sections specify balancing devices and their installation, and materials and installations of mechanical systems.
   3. Division 15 system sections specifying leak testing requirements and procedures.
   4. Division 15 Section "System Commissioning."

1.2 SYSTEM AIR & WATER BALANCE & TESTING

A. Division 15 shall be responsible for the mechanical system balancing and manuals and shall include in his bid the cost of a Professional Balancing Firm to do the work as outlined. The balancing work shall be under the direction of a Professional Engineer, NEBB--certified TAB supervisor--or AABC--certified TAB supervisor--with experience in balancing systems of similar types and size. Approved balancing companies are Quality Balancing Co., BTC Services, Diamond Test and Balance, Certified Testing & Balancing, RS Analysis, and Bonneville Test & Balance Company.

B. The balancing work shall include but not be limited to the following:
   1. All system air and water balance work and reports.

C. The HVAC Sheet Metal Installer & Control Installer are to provide men to assist with problems related to the air and water balance and atrium smoke control system test. The Plumbing Installer is to provide men to assist with problems related to the water balance. The Balancing Firm shall provide all other manpower required to accomplish the balancing work.

D. Professional Balancing Firm shall furnish all necessary tools, scaffolding and ladders that are required and shall provide all required instruments, record all readings and see that any necessary adjustments are made.

E. Instruments shall be used and applied which are best suited to the system function being tested. Instruments shall be in first class state of repair and will have calibration certified prior to starting the job. Instruments shall be recalibrated during the balancing process if required to prove reliability.

F. Provide a suitable single line drawing for each fan system. Large fan systems may be broken into suitable zones. Drawings shall be on 8-1/2" X 11" sheets of graph paper with system and zone heading the sheet. Drawings may be free hand but must be neat and legible.

G. For each system locate on the drawing each main duct damper and each branch duct damper.

H. Identify each main duct, branch duct, and air outlet by number or letter, together with its required CFM.

I. Prepare test report sheets coordinated with contract drawings and zone sketch.

J. Make sure that all calculations and tests are based only on complete equipment data and on approved drawings.

K. All air and hydronic systems shall be balanced using an applicable proportionate procedure.

L. After all adjustments are made, a detailed written report shall be prepared and submitted for approval. Final acceptance will not be made until a satisfactory report is received and field verified.

M. The Owner's representative will field verify the report in the following manner:
   1. Select points to be tested at random. (Quantity shall not exceed 10% of total.)
   2. Require Balancing firm to read the quantities in his presence.

N. Air Balancing Procedures:
   1. Before any adjustments are made, the systems are to be checked for such items as dirty filters, duct leakage, damper leakage, equipment vibrations, correct damper operation, etc. All fan systems, major duct sections, registers, diffusers, etc., are to be adjusted to deliver design air quantities with plus or minus 10%. Individual air outlets, when one of three or more serve a space, may have a tolerance of 15% above average. Design CFM is based on filters being approximately 50% loaded with dirt. Pressure drop across filters during balancing shall be simulated to that condition. After balancing is completed, check motor amperage with the filters clean.
   2. Exhaust and recirculation air systems shall be adjusted for air quantities shown on drawings and proper relationship between supply and exhaust established. Fans shall be balanced to within plus or minus 5% of design.
   3. Distribution system shall be adjusted to obtain uniform space temperatures free from objectionable drafts and noise within the capabilities of the system.
   4. Sheaves and/or belts shall be exchanged as required to adjust the rpm of all fans so they handle specified air quantity.

O. Miscellaneous:
   1. All installed thermal overload protection shall be observed and noted in the data sheets. If the starter equipment is incorrect, such information shall be tabulated, including required size thermal overloads, and included in the report. If thermal overload protection is incorrect, it shall be the responsibility of the balancing firm to notify in writing the Contractor and Architect so that proper overload protection is installed.
   2. The adjusting crew shall measure and set any special conditions such as minimum outside air quantities; check and adjust outside and return air intakes so that the system will deliver substantially the same volume on either; make test and record data as required in "REPORT."
   3. It will be the responsibility of the balancing firm to work with the Control Contractor during the fan system's air flow calibration. The air balance firm shall verify the flows for supply, exhaust, and return systems.

4. All balancing devices, i.e., dampers and valves, shall be clearly marked as to the final balanced position. Plug all test holes, replace access doors and belt guards.
5. When deemed necessary by the Architect or Engineer, 24 hour space temperature recording shall be taken and any required partial rebalance of the system shall be performed without additional cost. If adjustments are required to produce other than design requirements shown on drawings because of job conditions, these adjustments shall be made without extra cost.
6. The balancing contractor shall be responsible to set the correct flow at all variable volume and constant volume valves.

P. Report:
1. A bound report shall be provided in the Operation and Maintenance Manual which shall contain a general information sheet listing instruments used, method of balancing, altitude correction, and manufacturer's grille, register and diffuser data.
2. Provide equipment data sheets listing make, size, serial number, rating, etc., of all mechanical equipment, including fans, pumps, motors, starters and drives. Operating data shall include rotational speed, inlet and outlet pressures, pressure drop across filters, coils and other system components, pump heads and measured motor current and voltage.
3. Balancing data sheets shall indicate the required and actual CFM of all supply, return and exhaust outlets or inlets, and shall be totaled and summarized by systems.
4. Reports shall contain single line drawings or reduced set of contract drawings with outlets marked thereon for easy identification of the designation used in the data sheets.
5. The report shall outline any abnormal or notable conditions not covered in the above.
6. The report shall include all measurements made under the "System Checks" section.

Q. System Checks as Applicable:
1. Central Air Handlers:
   a. Record room or duct thermostat setpoint. Measure room temperature at thermostat and middle of room. Measure duct temperature at control sensor.
   b. Check each fan unit with the Control Contractor. Record as applicable within 30 minute period:
      1) Outside air temperature.
      2) Supply air temperature.
      3) Return air temperature.
      4) Mixed air temperature.
      5) Cooling coil discharge temperature.
      6) Air flow CFM supply and return fans for variable volume system with volume measuring stations.
   c. Set outside and return dampers at minimum position by adjusting economizer control. Measure outside air, return air and mixed air temperatures and calculate amount of outside air (measure amount of outside air if possible). This should preferably be done with outside air above freezing. With unit outside air and return air dampers under control of discharge sensor, have Control Contractor set discharge control to a call for full cooling. (This should not be done in freezing weather.) After 30 minutes, read and record all temperatures as required

under first item above. Check to make sure outside air damper has opened wide.

d. Set discharge control on a call for full heating. After 15 minutes read and record all temperatures as required. Check to make sure outside air damper had closed or has closed to minimum.

e. Check outside air damper and heating valve to make sure they are operating in proper sequence.

f. With System in Cooling Mode, Repeat as Specified for Heating Mode:

1) Check outside air damper and heating valve to make sure they are operating in proper sequence.

2. Outside Temperature: Put outside air bulb in ice water and record instrument reading.

3. Domestic Water Systems:

a. Record supply water temperature.

b. Record return water temperature.

1.3 OPERATION AND MAINTENANCE MANUALS

A. General:

1. Division 15 shall be responsible for the Mechanical Operation and Maintenance Manuals and shall include costs for manuals in his bid.
2. Provide five (5) copies of Operations and Maintenance Manuals to the Owner.
3. Manuals must be approved by the Architect prior to turning them over to the Owner.
4. The Manuals shall be prepared by the Balancing Contractor.

B. Binders:

1. Binders shall be Red Buckram binders with easy view metal for sheet size 11" X 8-1/2" with expandable metal capacity as required for the project, rivet through construction with library corners using #12 BB and lining with same materials as cover, front cover and back-bone foil stamped in white. Print as follows:

OPERATING & MAINTENANCE
MANUAL
FOR THE
(LIST PROJECT NAME)

(LIST PROJECT ARCHITECT) ARCHITECT
SPECTRUM ENGINEERS MECHANICAL ENGINEERS

2. Binders shall be as manufactured by Hiller Bookbinding or equal.
3. The master index sheet and each tabbed index sheet shall be AICO Gold-Line Indexes or equal.

C. The manuals shall be organized as follows:

SECTION I: Start-Up & Operation

Contractors and Vendors
General System Description
Detailed Start-Up Procedure
Automatic Temperature Controls

SECTION II: Maintenance Instructions

Plumbing & Piping
Heating & Ventilating
Maintenance & Lube Table

SECTION III: Balance & Test Report

Air Balance Report
Water Balance Report
Test Run Report
Equipment Data Sheets
System Checks
System Commissioning Check List

D. The master index will list all items sequentially in the manual, including Section heading, sub-headings and groups of equipment.

E. The Contractor's and Vendor's sheet will list the name, address and phone number of the Mechanical Contractor and his subcontractors. It shall also include a complete list of equipment used, with name, address and phone number of the vendor.

F. The General System Description will consist of an overall general description of the Heating, Ventilating and Air Conditioning Systems and components.

G. The Detailed Start-Up Procedure will cover the step-by-step startup procedure for each piece of mechanical equipment. It shall be coordinated with the actual equipment on the job such as switches, starters, relays, automatic controls, etc. It shall include precautions and controls that must be actuated for equipment to operate properly.

H. The Automatic Temperature Controls shall include for each system and component the following:
1. Written sequence of operation
2. Complete ATC Control diagrams
3. Complete control panel diagrams

I. The Maintenance Instructions shall consist of manufacturer's maintenance instructions for each piece of mechanical equipment installed. Instructions shall include installation; instructions, complete parts lists with numbers, recommended operation instructions, wiring diagrams, trouble shooting, maintenance and lubrication instructions and name of vendor,and any other material published by the manufacturer applicable to the installed equipment shall be included.

J. The maintenance and lube table shall be a summary list of the mechanical equipment requiring lubrication. It shall show the name of the equipment location and type and frequency of lubrication.

K. The Balance and Test Reports shall be as specified in the Balance and Test Section.

L. The Equipment Data Sheets shall be provided for each motor-driven piece of equipment. Use standard form with all pertinent information provided such as rated and measured amps, volts, RPM, pressure drops, etc.

1.4 SYSTEM STARTUP CHECKLIST

A. The system startup shall consist of field verifying and certifying that the mechanical system is properly installed and is fully operational prior to beginning balancing.

B. Mark each item on the check list either "Complete" or "Not Applicable." Prepare Check List similar to the following list. Under "General Items," check list shall be completed for each piece of equipment such as Pump P/1, Supply Fan SF/1, Relief Fan RF/1, etc. When System Startup is complete submit check list and written certification to Architect. The Final Mechanical Inspection shall not be scheduled until the System Startup check list is acceptable to the Architect.

C. Check List:

	Completed	N.A.
1. General Items:		
Bearings Lubricated	[ ]	[ ]
Rotation Correct and Free	[ ]	[ ]
Correct Size Thermal Overload Installed	[ ] [ ]	
Shipping Restraints Removed	[ ] [ ]	
Equipment Secured in Place and Seismically Braced	[ ]	[ ]
Equipment Clean and Free of Debris	[ ]	[ ]
Vibration Isolators Correctly Located with Proper Springs	[ ] [ ]	
Motors Not Overloaded	[ ] [ ]	
Equipment Nameplates Clean and Accessible	[ ]	[ ]
2. Life Safety Items:		
Systems Completely Tested and Signed Off by All Appropriate Authorities	[ ] [ ]	
Pipe and Equipment Identified	[ ] [ ]	
Valves Tagged	[ ]	[ ]
3. Piping Systems:		
All Service and Balancing Valves in Place, Open, & Accessible	[ ] [ ]	
Air Vents in Place and System Free of Air	[ ]	[ ]
Expansion Tank Properly Located and Charged with Air	[ ]	[ ]
Air Eliminator Properly Located and Piped	[ ]	[ ]
No Leakage in Piping Systems	[ ] [ ]	
Water Treatment Systems in Service	[ ]	[ ]
Thermometer Wells in Place and Properly Located Insulation Completed	[ ]	[ ]
Pressure/Temperature Taps Installed	[ ] [ ]	
System Completely Filled and Static Pressure Proper	[ ]	[ ]
System Thoroughly Flushed and Clean	[ ] [ ]	
Start-Up Strainers Removed	[ ]	[ ]
Permanent Strainers Installed with Proper Sleeves Strainer Sleeves Clean	[ ]	[ ]
Strainers Piped for Easy Removal of Sleeves. Service Valves in Place.		

	No Insulation Over Caps.	[ ]	[ ]
	Dirt Pockets Installed	[ ]	[ ]
	Flow Measuring Stations in Place. Proper Flow Direction. Gauge Tappings Turned Up. Nameplate Accessible. Correct Piping Length from Disturbances.	[ ]	[ ]

4. Duct System:

	Ductwork Clean	[ ]	[ ]
	Access Door Tightly Closed, Gasketed with Proper Hardware	[ ]	[ ]
	Fire Dampers and Smoke Dampers Open	[ ]	[ ]
	Balancing Dampers in Place, Open and Locked with Accessible Operators	[ ]	[ ]
	All Terminals in Place	[ ]	[ ]
	Minimum Allowable Duct Leakage has been Tested and Verified	[ ]	[ ]
	Minimum Friction and Dynamic Loss	[ ]	[ ]
	Openings in Walls & Shafts for Air Transfer	[ ]	[ ]
	Insulation Completed	[ ]	[ ]

5. Fans:

	Correct V-Belt Drive Installed	[ ]	[ ]
	V-Belt Drive Aligned	[ ]	[ ]
	Drive Screws and Keyways Tight	[ ]	[ ]
	Proper Belt Tension	[ ]	[ ]
	Flexible Connection Properly Installed	[ ]	[ ]
	Belt Guards in Place	[ ]	[ ]
	Minimum of Negative System Effect	[ ]	[ ]

6. Filters:

	Clean, Specified Cells Installed	[ ]	[ ]
	No Bypass Around Filters	[ ]	[ ]
	Filter Gauge Installed and Calibrated	[ ]	[ ]
	Spare Cells on Site	[ ]	[ ]

7. Automatic Control System:

	Control System in Operation	[ ]	[ ]
	All Controls Installed, Piped and/or Wired	[ ]	[ ]
	Controls Set and Calibrated	[ ]	[ ]
	Control Sequence Verified (In Conjunction with Control Sub-contractor)	[ ]	[ ]
	Automatic Valves Properly Piped	[ ]	[ ]
	Automatic Dampers OK	[ ]	[ ]
	Tight Closing	[ ]	[ ]
	Smooth Operation	[ ]	[ ]
	Full Stroking	[ ]	[ ]
	No Air Leaks	[ ]	[ ]

8. Exhaust Fans:

Correct V-Belt Drive Installed		[ ]	[ ]
V-Belt Drive Aligned		[ ]	[ ]
Drive Screws & Keyways Tight	[ ]	[ ]	
Proper Belt Tension		[ ]	[ ]
Backdraft Damper Wired if Required & Functioning Properly	[ ]	[ ]	
Rotation Correct		[ ]	[ ]

END OF SECTION 15950

DIVISION 16 - ELECTRICAL

Electrical General Provisions	16001
Electrical Connections for Equipment	16070
Demolition	16080
Conduit Raceways	16110
Raceway Systems	16111
Conductors and Cables	16120
Electrical Boxes and Fittings	16135
Supporting Devices	16136
Wiring Devices	16140
Panelboards	16160
Overcurrent Protective Devices	16180
Grounding	16452
Interior and Exterior Building Lighting	16510
Lighting Control Equipment	16560
Occupancy Lighting Control and Equipment	16561
Fire Alarm and Detection Systems	16721
Telephone/Data Systems (Raceways)	16740
Security Systems (Raceways)	16782

SECTION 16001 - ELECTRICAL GENERAL PROVISIONS

July 11, 2007

PART 1 – GENERAL

1.1 RELATED DOCUMENTS:

A. Drawings and general provisions of Contract, including General and Supplementary Conditions and Division-1 Specification sections, apply to work of this section.

B. Architectural, Structural, Mechanical and other applicable documents are considered a part of the electrical documents insofar as they apply as if referred to in full.

1.2 DESCRIPTION OF WORK:

A. The extent of electrical work is indicated on drawings and/or specified in Division 16 sections of the specification. Provide all labor, materials, equipment, supervision and service necessary for a complete electrical system. Work includes, but is not necessarily limited to, the following items.

	ITEM	SECTION
1.	Electrical General Provisions	16001
2.	Electrical Connections for Equipment	16070
3.	Demolition	16080
4.	Conduit Raceways	16110
5.	Raceway Systems	16111
6.	Conductors and Cables	16120
7.	Electrical Boxes and Fittings	16135
8.	Supporting Devices	16136
9.	Wiring Devices	16140
10.	Panelboards	16160
11.	Overcurrent Protective Devices	16180
12.	Grounding	16452
13.	Interior and Exterior Building Lighting	16510
14.	Lighting Control Equipment	16560
15.	Occupancy Lighting Control and Equipment	16561
16.	Fire Alarm and Detection Systems	16721
17.	Telephone/Data Systems (Raceways)	16740
18.	Security Systems (Raceways)	16782

B. Use of standard industry symbols together with the special symbols, notes, and instructions indicated on the drawings describe the work, materials, apparatus and systems required as a portion of this work.

C. Visit the site during the bidding period to determine existing conditions affecting electrical and other work. All costs arising from site conditions and/or preparation shall be included in the base bid. No additional charges will be allowed due to inadequate site inspection.

1.3 DEFINITION OF TERMS

A. The following terms used in Division 16 documents are defined as follows:

1. "Provide": Means furnish, install and connect, unless otherwise indicated.
2. "Furnish": Means purchase and deliver to project site.
3. "Install": Means to physically install the items in-place.

© BNA Consulting, Inc.

4. "Connect": Means make final electrical connections for a complete operating piece of equipment.

1.4 RELATED SECTIONS:

A. Consult all other sections, determine the extent and character of related work and properly coordinate work specified herein with that specified elsewhere to produce a complete installation.

B. General and Supplementary Conditions: Drawings and general provisions of contract and Division 1 of the Specifications, apply to all Division 16 sections.

C. Earthwork:

1. Provide trenching, backfilling, boring and soil compaction as required for the installation of underground conduit, buried cable, in-grade pull boxes, manholes, lighting pole foundations, etc. See Division 2, Sitework, and other portions of Division 16, for material and installation requirements.

D. Concrete Work:

1. Provide forming, steel bar reinforcing, cast-in-place concrete, finishing and grouting as required for under ground conduit encasement, light pole foundations, pull box slabs, vaults, equipment pads, etc.See Division 3, Concrete for material and installation requirements.

E. Miscellaneous Metal Work:

1. Provide fittings, brackets, backing, supports, rods, welding and pipe as required for support and bracing of raceways, lighting fixtures, panelboards, distribution boards, switchboards, motor controls centers, etc. See Division 5, Metals for material and installation requirements.

F. Miscellaneous Lumber and Framing Work:

1. Provide wood grounds, nailers, blocking, fasteners, and anchorage for support of electrical materials and equipment. See Division 6, Rough Carpentry for material and installation requirements.

G. Moisture Protection:

1. Provide membrane clamps, sheet metal flashing, counter flashing, caulking and sealants as required for waterproofing of conduit penetrations and sealing penetrations in or through fire walls, floors and ceiling slabs and foundation walls. All penetrations through vapor barriers at slabs on grade shall be taped and made vaportight. See Division 7, Thermal and Moisture Protection for material and installation requirements.

H. Access panels and doors:

1. Provide in walls, ceiling, and floors for access to electrical devices and equipment. See Division 8, Doors and Windows for material and installation requirements.

© BNA Consulting, Inc.

I. Painting:

1. Provide surface preparation, priming and finish coating as required for electrical cabinets, exposed conduit, pull and junction boxes, poles, surface metal raceways, etc. See Division 9, Finishes for material and installation requirements.

1.5 WORK FURNISHED AND INSTALLED UNDER ANOTHER SECTION REQUIRING CONNECTIONS UNDER THIS SECTION:

A. Provide electrical service, make requisite connections and perform operational test. Items furnished and installed under other sections and connected under this section, include but are not limited to the following:

1. Electric motors.
2. Package mechanical equipment: fans, fan coil units, pumps, boilers, duplex compressors, etc.
3. Flow switches and valve monitors.
4. Motorized dampers.
5. Fire and smoke dampers
6. Duct mounted smoke detectors.
7. Elevator/Escalator Controllers.
8. Irrigation controllers.
9. Door hold-open/release devices.
10. Motorized projection screens.
11. Wheel chair lifts.
12. Roll down doors.
13. Electric hardware.
14. Laboratory equipment including hoods, cold rooms, autoclaves, drying ovens, glassware washers and dryers, refrigerators, freezers, etc.
15. Shop equipment including saw dust collectors, saws, lathes, grinders, welders, planers, presses, etc.
16. Temperature control panels.
17. Variable frequency controllers.
18. Chiller starters.
19. Motorized Chalkboards/Markerboards/Whiteboards.
20. Display cases.
21. Water coolers.
22. Kitchen equipment including ovens, fryers, mixers, disposers, dishwashers, etc.
23. Paint spray booths.
24. Fire sprinkler alarm bells.
25. Electric heat trace cable for domestic and industrial hot water piping systems.
26. Electric heat trace cable for guttering, drainlines, etc.
27. Anti-sweat heaters, fan coils, etc for walk-in coolers and freezers.
28. Hand dryers, hair dryers.
29. Dock levelers.

1.6 ITEMS FURNISHED UNDER ANOTHER DIVISION, BUT INSTALLED AND CONNECTED UNDER THIS DIVISION:

A. Items furnished under other Divisions, but turned over to Division 16 for installation and final connection include, but are not necessarily limited to, the following.

1. Wall mounted control stations for motorized roll-up doors/grills.
2. Wall mounted control stations for motorized projection screens.
3. Wall mounted control stations for handicap lift.
4. Lighting fixtures for paint spray booths.

© BNA Consulting, Inc.

5. Lighting fixtures, receptacles, and switches for fume hoods.
6. Lighting fixtures for kitchen hoods.
7. Lighting fixtures for walk-in freezers and coolers.

1.7 WORK NOT INCLUDED IN THIS DIVISION:

A. Items of work provided under another contract include, but are not necessarily limited to, the following:

1. Telephone cables and electronic equipment.
2. Data system cables, fittings, coverplates and electronic equipment.
3. Control wires for irrigation control valves.
4. Energy management/temperature control system; both line and low voltage including conductors and conduit.
5. Television monitors and projection equipment.
6. Security system equipment, cables, fittings, and coverplates.
7. CCTV and MATV cabling and electronic equipment.

1.8 INTERPRETATION OF DRAWINGS AND SPECIFICATIONS:

A. Before bidding, Contractor shall familiarize himself with the drawings, specifications and project site. Submit requests for clarification to Architect/Engineer in writing prior to issuance of final addendum. After signing the contract, the Contractor shall meet the intent, purpose, and function of the Contract Documents. Any costs of materials, labor and equipment arising therefrom, to make each system complete and operable, is the responsibility of the Contractor.

1.9 QUALITY ASSURANCE:

A. Reference to codes, standards, specifications and recommendations of technical societies, trade organizations and governmental agencies refers to the latest edition of such publications adopted and published prior to submittal of the bid proposed, unless noted otherwise herein. Such codes or standards are considered a part of this specification as though fully repeated herein.

B. When codes, standards, regulations, etc. allow work of lesser quality or extent than is specified under this Division, nothing in said codes shall be construed or inferred as reducing the quality, requirements or extent of the Drawings and Specifications. Perform work in accordance with applicable requirements of all governing codes, rules and regulations including the following minimum standards, whether statutory or not:

1. National Electric Code (NEC).
2. International Building Code (IBC).
3. International Fire Code (IFC).
4. International Mechanical Code (IMC).

C. Standards: Comply with the following standards where applicable for equipment and materials specified under this Division.

1.	UL	Underwriters' Laboratories
2.	ASTM	American Society for Testing Materials
3.	CBN	Certified Ballast Manufacturers
4.	IPCEA	Insulated Power Cable Engineers Association
5.	NEMA	National Electrical Manufacturer's Association
6.	ANSI	American National Standards Institute
7.	ETL	Electrical Testing Laboratories

© BNA Consulting, Inc.

D. All electrical apparatus furnished under this Section shall conform to (NEMA) standards and the NEC and bear the Underwriters' Laboratories (UL) label where such label is applicable.

E. Comply with requirements of State and Local Ordinances. If a conflict occurs between these requirements and the Contract Documents, the most stringent requirements shall govern. The Contractor accepts this responsibility upon submitting his bid, and no extra charge will be allowed after the contract is awarded. This shall not be construed as relieving the Contractor from complying with any requirements of the Contract Documents which may be in excess of the aforementioned requirements, and not contrary to same.

F. Obtain all permits, inspections, etc. required by authority having jurisdiction. Include all fees in bid. Furnish a certificate of approval to the Owner's Representative from the Inspection Authority at completion of the work.

G. Employ only qualified craftsmen with at least three years of experience. Workmanship shall be neat, have a good mechanical appearance and conform to best electrical construction practices. Provide a competent superintendent to direct the work at all times. Any person found incompetent shall be discharged from the project and replaced by satisfactory personnel.

H. Contractor shall have a current state contracting license applicable to type of work to be performed under this contract.

1.10 SUBMITTALS:

A. SHOP DRAWINGS AND PRODUCT DATA:

1. After the Contract is awarded but prior to manufacture or installation of any equipment, prepare complete Shop Drawings and Brochures for materials and equipment as required by each section of the specification. Submit 8 complete sets for review. All sets of shop drawing material shall be bound. Prior to submission of the Shop Drawings and Project Data, review and certify that they are in compliance with the Contract Documents. Verify all dimensional information to insure proper clearance for installation of equipment. Check all materials and equipment after arrival on the job site and verify compliance with the Contract Documents. A minimum period of two weeks, exclusive of transmittal time, will be required each time Shop Drawing and/or Brochure is submitted or resubmitted for review. This time period shall be considered by the Contractor when scheduling submittal data. If the shop drawings are rejected twice, the contractor shall reimburse the engineer the sum of $200.00 for the third review and any additional reviews required.

2. Review of Shop Drawings and Brochures shall not relieve the Contractor of responsibility for dimensions and/or errors that may be contained therein, or deviations from the Contract Document's requirements. It shall be clearly understood that the noting of some errors but overlooking others does not grant the Contractor permission to proceed in error. Regardless of any information contained in the Shop Drawings and Brochures, the requirements of the Contract Document's shall govern and are not waived, or superseded in any way by the review of the Shop Drawings and Brochures.

3. Certifications shall be written or in the form of rubber stamp impressions as follows:

© BNA Consulting, Inc.

4. I hereby certify that this Shop Drawing and/or Brochure has been checked prior to submittal and that it complies in all respects with the requirements of the Contract Drawings and Specifications for this Project.

(Name of Electrical Subcontractor)

Signed_____.

Position_____ Date

5. Observe the following rules when submitting the Shop Drawings and Brochures.

a. Each Shop Drawing shall indicate in the lower right hand corner, and each Brochure shall indicate on the front cover the following: Title of the sheet or brochure, name and location of the building; names of the Architect and Electrical Engineer, Contractor, Subcontractors, Manufacturer, Supplier/Vendor, etc., date of submittal, and the date of correction and revision. Unless the above information is included the submittal will be returned for resubmittal.

b. Shop Drawings shall be done in an easily legible scale and shall contain sufficient plans, elevations, sections, and isometrics to clearly describe the equipment or apparatus, and its location. Drawings shall be prepared by an Engineer/Draftsmen skilled in this type of work. Shop Drawings shall be drawn to at least 1/4" = 1'0" scale.

c. Brochures to be submitted shall be published by the Manufacturers and shall contain complete and detailed engineering and dimensional information. Brochures submitted shall contain only information relevant to the particular equipment or materials to be furnished. The Contractor shall not submit catalogs which describe several different items in addition to those items to be used, unless all irrelevant information is marked out, or unless relevant information is clearly marked. Brochures from each manufacturer shall be identified and submitted separately.

1.11 OPERATION AND MAINTENANCE MANUALS:

A. Provide operating instruction and maintenance data books for all equipment and materials furnished under this Division.

B. Submit four copies of operating and maintenance data books for review at least four weeks before final review of the project. Assemble all data in a completely indexed volume or volumes and identify the size, model, and features indicated for each item. The binder (sized to the material) shall be a 2" slide lock unit (Wilson-Jones B3-367-44). The cover shall be engraved with the job title in 1/2" high letters and the name and address of the Contractor in 1/4" high letters. Provide the same information in 1/8" letters on the spine.

C. Include complete cleaning and servicing data compiled in clearly and easily understandable form. Show serial numbers of each piece of equipment, complete lists of replacement parts, motor ratings, etc. Each unit shall have its own individual sheet. (Example: If two items of equipment A and D appear on the same sheet, an individual sheet shall be provided for each unit specified).

D. Include the following information where applicable.

© BNA Consulting, Inc.

1. Identifying name and mark number.
2. Certified outline Drawings and Shop Drawings.
3. Parts lists.
4. Performance curves and data.
5. Wiring diagrams.
6. Light fixture schedule with the lamps and ballast data used on the project for all fixtures
7. Manufacturer's recommended operating and maintenance instructions.
8. Vendor's name and address for each item.

E. The engineer shall review the manuals and when approved, will forward the manuals on to the architect. If the manuals are rejected twice, the contractor shall reimburse the engineer the sum of $200.00 for each review afterwards.

1.12 RECORD DRAWINGS:

A. Maintain, on a daily basis, a complete set of “Record Drawings”, reflecting an accurate record of work in accordance with the following:

1. Show the complete routing and location of all feeders rated 100 amps and larger. Locate work buried below grade or under slab, work concealed above ceilings, and work in concealed spaces, dimensionally from fixed structural elements (not partition walls, etc.)

2. Show the complete routing and location of all telecommunications conduits, systems raceways, and empty raceways, 1-1/4" and larger. Locate work buried below grade or under slab, work concealed above ceilings, and work in concealed spaces, dimensionally from fixed structural elements (not partition walls, etc.).

3. Show all changes, deviations, addendum items, change orders, job instructions, etc., which change the work from that shown on the contract documents, including wall relocations, fixtures and device changes, branch circuiting changes, etc. Where locations of boxes, raceways, equipment, etc. are adjusted in the field to fit conditions, but such new locations may not be obvious by referring to the contract document, show new locations on the record drawings.

B. At the discretion of the Architect/Engineer, the drawings will be reviewed on a periodic basis and used as a pre-requisite for progress payments. This requirement shall not be construed as authorization for the Contractor to make changes in the layout, or work without written authorization for such changes. The “Record Drawings” for daily recording shall consist of a set of blue line prints of the Contract Drawings.

C. Upon completion of the work, purchase a complete set of electronic drawings. Transfer all “Record” information from the blue line prints to the drawings via the current CAD program in which it was written. The Architect/Engineer shall review the drawings and the Contractor shall incorporate the resulting comments into the final record drawings. The Contractor shall make two complete copies of the drawings electronically and forward this to the Engineer.

D. Certify the “Record Drawings” for correctness by placing and signing the following certifications of the first sheet of the sepia:

© BNA Consulting, Inc.

1. "CERTIFIED CORRECT (3/8" high letters)

(Name of General Contractor)

By _____ Date

(Name of Electrical Contractor)

By_____ Date

1.13 GUARANTEE:

A. Ensure that electrical system installed under this contract is in proper working order and in compliance with drawings, specifications, and/or authorized changes. Without additional charge, replace any work or materials which develop defect, except from ordinary wear and tear, within one year from the date of substantial completion. Exception: Incandescent and fluorescent lamps shall be guaranteed for a period of two months from the date of substantial completion.

PART 2 – PRODUCTS

2.1 GENERAL:

A. Products are specified by manufacturer name, description, and/or catalog number. Discrepancies between equipment specified and the intended function of equipment shall be brought to the attention of the Architect/Engineer in writing prior to bidding. Failure to report any conflict, including catalog numbers, discontinued products, etc., does not relieve the Contractor from meeting the intent of the contract documents nor shall it change the contract cost. If the Contractor is unable to interpret any part of the plans and/or specifications, or should he find discrepancies therein, he shall bring this to the attention of the Architect/Engineer who will issue interpretation and/or additional instructions to Bidders before the project is bid.

2.2 MANUFACTURERS:

A. Provide products of manufacturers specified. Manufacturers catalog numbers and descriptions establish the quality of product required. Substitutions will be considered if a duplicate written application (2-copies) is at the office of the Architect/Engineer eight (8) working days prior to the day of the bidding. The application shall include the following: 1) A statement certifying that the equipment proposed is equal to that specified; that it has the same electrical and physical characteristics, compatible dimensions, and meets the functional intent of the contract documents; 2) The specified and submittal catalog numbers of the equipment under consideration; 3) A pictorial and specification brochure.

B. Any conflict arising from the use of substituted equipment shall be the responsibility of the Contractor, who shall bear all costs required to make the equipment comply with the intent of the contract documents.

C. Samples may be required for non-standard or substituted items before installation during construction. Provide all samples as required.

D. No materials or apparatus may be substituted after the bid opening except where the equipment specified has been discontinued.

E. Provide only equipment specified in the Contract Documents or approved by addendum.

© BNA Consulting, Inc.

2.3 SPARE PARTS:

A. Provide spare parts (fuses, diffusers, lamps, etc.) as specified. Transmit all spare parts to Owner's Representative prior to substantial completion.

PART 3 – EXECUTION

3.1 INSTALLATION:

A. Layout electrical work in advance of construction to eliminate unnecessary cutting, drilling, channeling, etc. Where such cutting, drilling, or channeling becomes necessary for proper installation; perform with care. Use skilled mechanics of the trades involved. Repair damage to building and equipment at no additional cost to the contract. Cutting work of other Contractors shall be done only with the consent of that Contractor. Cutting structural members shall not be permitted.

B. Since the drawings of floor, wall, and ceiling installation are made at small scale; outlets, devices, equipment, etc., are indicated only in their approximate location unless dimensioned. Locate outlets and apparatus symmetrically on floors, walls and ceilings where not dimensioned, and coordinate such locations with work of other trades to prevent interferences. Verify all dimensions on the job. Do not scale the electrical drawings, but refer to the architectural and mechanical shop drawings and project drawings for dimensions as applicable.

C. Perform for other trades, the electrical wiring and connection for all devices, equipment or apparatus. Consult Architectural, Mechanical, and other applicable drawings, and all applicable shop drawings to avoid switches, outlets, and other equipment from being hidden behind doors, cabinets, counters, heating equipment, etc., or from being located in chalkboards, tackboards, glass panels, etc. Relocate buried electrical devices and/or connections as directed at no additional cost.

D. Coordinate the location of outlets, devices, connections, and equipment with the supplier of the systems furniture prior to rough-in.

E. Where conduit, outlets or apparatus are to be encased in concrete, it must be located and secured by a journeyman or foreman present at the point of installation. Check locations of the electrical items before and after concrete and/or masonry installation and relocate displaced items.

F. Provide block-outs, sleeves, demolition work, etc., required for installation of work specified in this division.

3.2 CLEAN:

A. Clean up all equipment, conduit, fittings, packing cartons and other debris that is a direct result of the installation of the work of this Division.

B. Clean fixtures, interiors and exteriors of all equipment, and raceways. Replace all filters in electrical equipment upon request for Substantial Completion.

3.3 POWER OUTAGES:

A. All power outages required for execution of this work shall occur during non-standard working hours and at the convenience of the Owner. Include all costs for overtime work in bid.

© BNA Consulting, Inc.

B. Submit written request at least 7 days in advance of scheduled outage and proceed with outage only after receiving authorization from the Owner's Representative.

C. Keep all outages to an absolute minimum.

3.4 STORAGE AND PROTECTION OF MATERIALS:

A. Provide storage space for storage of materials and apparatus and assume complete responsibility for all losses due to any cause whatsoever. In no case shall storage interfere with traffic conditions in any public thoroughfare or constitute a hazard to persons in the vicinity. Protect completed work, work underway, and apparatus against loss or damage.

3.5 EXCAVATING FOR ELECTRICAL WORK:

A. General: Locate and protect existing utilities and other underground work in manner which will ensure that no damage or service interruption will result from excavating and backfilling. Perform excavation in a manner which protects walls, footings, and other structural members from being disturbed or damaged in any way. Burial depths must comply with NEC Section 300-5 (or State of Utah requirement, whichever is more stringent), unless noted otherwise on drawings.

B. Protect persons from injury at excavations, by barricades, warnings and illumination.

C. Coordinate excavations with weather conditions, to minimize possibility of washouts, settlements and other damages and hazards.

D. Provide temporary covering or enclosure and temporary heat as necessary to protect bottoms of excavations from freezing and frost action. Do not install electrical work on frozen excavation bases or subbases.

E. Do not excavate for electrical work until the work is ready to proceed without delay, so that total time lapse from excavation to completion of backfilling will be minimum. See other sections of specification for additional requirements for excavating.

F. Store excavated material (temporarily) near excavation, in manner which will not interfere with or damage excavation or other work. Do not store under trees (within drip line).

G. Retain excavated material which complies with requirements for backfill material. Dispose of excavated material which is either in excess of quantity needed for backfilling or does not comply with requirements for backfill material. Remove unused material from project site, and dispose of in lawful manner.

3.6 BACKFILL MATERIALS:

A. For buried conduit or cable (other than below slab-on-grade, or concrete encased) - 2" thickness of well graded sand on all side of conduit or cable.

B. For trench backfill to within 6" of final grade - soil material suitable for compacting to required densities.

C. For top 6" of excavation - Top soil.

D. Backfill excavations in 8" high courses of backfill material, uniformly compacted to the following densities (percent of maximum density, ASTM D 1557), using power-driven hand-operated compaction equipment.

© BNA Consulting, Inc.

1. Lawn/Landscaped Areas: 85 percent for cohesive soils, 95 percent for cohesionless soils.
2. Paved Areas, Other than Roadways (90 percent for cohesive soils, 95 percent for cohesionless soils).

E. Subsidence: Where subsidence is measurable or observable at electrical work excavations during general project warranty period, remove surface (pavement, lawn or other finish), add backfill material, compact, and replace surface treatment. Restore appearance, quality and condition of the surface or finish to match adjacent work, and eliminate evidence of restoration to greatest extent possible.

3.7 CONCRETE BASES:

A. Unless otherwise noted, provide 4" high reinforced concrete bases for all floor mounted or floor standing electrical equipment, including generators, transformers, switchgear, battery racks, motor control centers, etc. Extend bases 6" beyond equipment or mounting rails on all sides or as shown on the drawings. Not withstanding this requirement, coordinate with equipment manufacturer, shop drawings, and height of base to ensure compliance with NEC 404.8.

B. Concrete bases shall be provided under Division-16. Coordinate size and location of all bases and furnish all required anchor bolts, sleeves, reinforcing and templates as required to obtain a proper installation.

C. Provide and locate properly sized concrete pads for power company furnished pad mounted transformers in accordance with power company clearance requirements. Where the serving utility is Utah Power, the electrical contractor shall conform to the requirements of Electrical Service Requirements, Section 6.4.

3.8 ROOF PENETRATIONS:

A. Where raceways penetrate roofing or similar structural area, provide appropriate roof jack coordinate with the roofing contractor and the Architect in order to match the vent with the roof construction. The jack shall be sized to fit tightly to raceway for weather-tight seal, and with flange extending a minimum of 9" under roofing in all sides or as required by the roof type of construction. Completely seal opening between inside diameter of roof flashing and outside diameter of penetrating raceways. Coordinate all work with work required under roofing section of specifications.

3.9 FIRE PENETRATION SEALS:

A. Seal all penetrations for work of this section through fire rated floors, walls and ceilings to prevent the spread of smoke, fire, toxic gas or water through the penetration either before, during or after fire. The fire rating of the penetration seal shall be at least that of the floor, wall or ceiling into which it is installed, so that the original fire rating of the floor or wall is maintained as required by Article 300-21 of the National Electrical Code. Where applicable, provide OZ Type CFSF/I and CAFSF/I fire seal fittings for conduit and cable penetrations through concrete and masonry walls, floors, slabs, and similar structures. Where applicable, provide 3M fire barrier sealing penetration system, and/or IPC Flame Safe Fire Stop System, and/or Chase Foam fire stop system, including wall wrap, partitions, caps, and other accessories as required. All materials to comply with UL 1479 (ASTM E-814). Comply with manufacturer's instructions and recommendations for installation of sealing fittings and barrier sealing systems.

© BNA Consulting, Inc.

3.10 PROJECT FINALIZATION AND START-UP:

A. Upon completion of equipment and system installation, assemble all equipment Factory Representatives and Subcontractors for system start-up.

B. Each Representative and Subcontractor shall assist in start-up and check out their respective system and remain at the site until the total system operation is accepted by the Owner's representative.

C. The Factory Representative and/or System Subcontractor shall give personal instruction on operating and maintenance of their equipment to the Owner's maintenance and/or operation personnel. To certify acceptance of operation and instruction by the Owner's Representative, the contractor shall prepare a written statement as follows:

D. This is to certify that the Factory Representative and System Subcontractor for each of the systems listed below have performed start-up and final check out of their respective systems.

E. The Owner's Representative has received complete and thorough instruction in the operation and maintenance of each system.

1.	SYSTEM	FACTORY REPRESENTATIVE
	(List systems included)	(List name and address of Factory Representative).
	_____	_____
	Owner's Representative	Contractor

F. Send copy of acceptance to Architect/Engineer.

3.11 FINAL REVIEW:

A. At the time of final review, the project foreman shall accompany the reviewing party, and remove coverplates, panel covers and other access panels as requested, to allow review of the entire electrical system.

END OF SECTION 16001

© BNA Consulting, Inc.

SECTION - 16070 - ELECTRICAL CONNECTIONS FOR EQUIPMENT July 11, 2007

PART 1 – GENERAL

1.1 RELATED DOCUMENTS:

A. Drawings and general provisions of Contract, including General and Supplementary Conditions and Division-1 Specification sections, apply to work of this section.

B. This section is a Division-16 Basic Materials and Methods section, and is part of each Division-16 section making reference to electrical connections.

1.2 DESCRIPTION OF WORK:

A. Extent of electrical connection for equipment includes final electrical connection of all equipment having electrical requirements. Make final connections for all owner furnished equipment. See other applicable portions of specification for building temperature control wiring requirements.

B. Refer to Division-15 sections for motor starters and controls furnished integrally with equipment; not work of this section.

C. Refer to Division-15 section for control system wiring; not work of this section.

D. Refer to sections of other Divisions for specific individual equipment power requirements.

1.3 QUALITY ASSURANCE:

A. NEC COMPLIANCE: Comply with applicable portions of NEC as to type products used and installation of electrical power connections.

B. UL LABELS: Provide electrical connection products and materials which have been UL-listed and labeled.

PART 2 – PRODUCTS

2.1 GENERAL:

A. For each electrical connection indicated, provide complete assembly of materials, including but not necessarily limited to, raceways, conductors, cords, cord caps, wiring devices, pressure connectors, terminals (lugs), electrical insulating tape, heat-shrinkable insulating tubing, cable ties, solderless wire nuts, and other items and accessories as needed to complete splices, terminations, and connections as required. Crimp on or slip-on type splicing materials (insulation displacement type) designed to be used without wire stripping are not acceptable. See Section 16110, Conduit Raceways; Section 16140 Wiring Devices: and Section 16120 Wire and Cable for additional requirements. Provide final connections for equipment consistent with the following:

B. Permanently installed fixed equipment - flexible seal-tite conduit from branch circuit terminal equipment, or raceway; to equipment, control cabinet, terminal junction box or wiring terminals. Totally enclose all wiring in raceway.

C. Movable and/or portable equipment - wiring device, cord cap, and multi-conductor cord suitable for the equipment and in accordance with NEC requirements (Article 400).

© BNA Consulting, Inc.

D. Other methods as required by the National Electrical Code and/or as required by special equipment or field conditions.

PART 3 – EXECUTION

3.1 INSTALLATION OF ELECTRICAL CONNECTIONS:

A. Make electrical connections in accordance with connector manufacturer's written instructions and with recognized industry practices, and complying with requirements of NEC and NECA's "Standard of Installation" to ensure that products fulfill requirements.

B. Connect electrical power supply conductors to equipment conductors in accordance with equipment manufacturer's written instructions and wiring diagrams.

C. Coordinate installation of electrical connections for equipment with equipment installation work.

D. Verify all electrical loads (voltage, phase, full load amperes, number and point of connections, minimum circuit ampacity, etc.) for equipment furnished under other Divisions of this specification, by reviewing respective shop drawings furnished under each division. Meet with each subcontractor furnishing equipment requiring electrical service and review equipment electrical characteristics. Report any variances from electrical characteristics noted on the electrical drawings to Architect before proceeding with rough-work.

E. Obtain and review the equipment shop drawings to determine particular final connection requirements before rough-in begins for each equipment item.

F. Refer to basic materials and methods Section 16120, Conductors, for identification of electrical power supply conductor terminations.

END OF SECTION 16070

© BNA Consulting, Inc.

SECTION 16080 – DEMOLITION July 11, 2007

PART 1 – GENERAL

1.1 RELATED DOCUMENTS:

A. Drawings and general provisions of Contract, including General and Special Provisions, Division 1 and Division-2A Specification sections, apply to work of this section.

B. This section is a Division-16 Basic Materials and Methods section, and is part of each Division-16 section making reference to demolition.

1.2 DESCRIPTION OF WORK:

A. Extent of major items of demolition work is indicated by drawings. Other demolition work shall be performed as required to maintain system operation.

B. The intent of the drawings is to indicate major items affected and not to show every device, outlet, fixture, etc. affected by demolition work.

C. The drawings do not necessarily reflect as-built conditions. The contractor shall visit the jobsite prior to bidding to determine the overall scope of demolition work.

D. Refer to sections of other Divisions for applicable requirements affecting demolition work.

E. Refer to Section 16001 for requirements with regard to power outages affecting the operation of existing electrical systems.

1.3 QUALITY ASSURANCE:

A. NEC COMPLIANCE:

1. Comply with applicable portions of NEC as to methods used for demolition work.

PART 2 - PRODUCTS

2.1 GENERAL:

A. Demolition work shall be laid out in advance to eliminate unnecessary cutting, drilling, channeling, etc. Where such cutting, drilling, or channeling becomes necessary, perform with care, use skilled mechanics of the trades involved. Repair damage to building and equipment. Cutting work of other Contractors shall be done only with the consent of that Contractor. Cutting of structural members shall not be permitted.

2.2 PATCHING AND REPAIR

A. The Contractor is responsible for all demolition, patching and repair of all finished interior surfaces pertaining to the installation of this particular phase of work. All surfaces shall be finished (painted, etc.) to match the adjacent materials, finishes and colors.

B. Hard surfaces: Whenever demolition or excavation is required for the installation of the electrical system, it shall be the responsibility of this contractor to make repairs and/or replacements of hard finish surfaces such as concrete, asphalt, roofing, etc.

C. The method of patching and repair shall follow good construction practices and all finished surfaces shall match materials and finish wherein the demolition occurred.

© BNA Consulting, Inc.

2.3 EXISTING EQUIPMENT

A. The following is a part of this project and all costs pertaining thereto shall be included in the base bid.

B. The new electrical equipment and apparatus shall be coordinated and connected into the existing system as required. Auxiliary systems shall comply, unless otherwise specified.

C. The existing electrical devices, conduit and/or equipment that for any reason obstructs construction shall be relocated. Provide conduit, wiring, junction boxes, etc. as required to extend existing circuits and systems to relocated devices or equipment.

D. The new fixtures indicated for existing outlets shall be installed in accordance with the fixture specifications.

E. When installing equipment in the existing building, it shall be concealed.

F. All existing electrical equipment and systems in portions of the building not being remodeled shall be kept operational, in service and in working condition throughout the entire construction period. Restore any circuits and systems interrupted. Provide temporary panels, temporary wiring and conduit, etc. as required.

G. Maintain circuit integrity and continuity of all existing circuits and systems that interfere with or are interrupted by remodel work unless those circuits are to be abandoned completely. Maintain all circuits and systems in operation during construction. Provide temporary panels, temporary wiring and conduit, etc. as required.

H. Existing raceways may be used where possible in place, except as noted. All circuits, conduit and wire that are not used in the remodeled area shall be removed back to the panelboard, where it shall be labeled a spare with circuit number indicated. Re-used raceway shall meet all requirements for new installations.

I. The existing light fixtures which are not used in the remodeled area shall be carefully removed, and turned over to the owner or properly disposed of. Those fixtures indicated for re-use shall be thoroughly cleaned, repaired as required, relamped and installed as indicated.

J. Obtain permission from the Architect and Owner's representative before penetrating any ceiling, floor, and wall surfaces.

K. Any and all equipment having electrical connections that require disconnecting and reconnection at the same or another location throughout the course of construction shall be included as part of this contract.

END OF SECTION 16080

© BNA Consulting, Inc.

SECTION 16110 - CONDUIT RACEWAYS July 11, 2007

PART 1 – GENERAL

1.1 RELATED DOCUMENTS:

A. Drawings and general provisions of Contract, including General and Supplementary Conditions and Division 1 Specification sections, apply to work of this section.

B. This section is a Division-16 Basic Materials and Methods section, and is part of each Division-16 section making reference to electrical raceways and specified herein.

1.2 DESCRIPTION OF WORK:

A. Extent of raceways is indicated by drawings and schedules.

B. Types of raceways in this section include the following:

1. Electrical Metallic Tubing
2. Flexible Metal Conduit
3. Intermediate Metal Conduit
4. Liquid-tight Flexible Metal Conduit
5. Rigid Metal Conduit
6. Rigid Non-metallic Conduit

1.3 QUALITY ASSURANCE:

A. MANUFACTURERS: Firms regularly engaged in manufacture of raceway systems of types and sizes required, whose products have been in satisfactory use in similar service for not less than three (3) years.

B. STANDARDS: Comply with applicable portions of NEMA standards pertaining to raceways. Comply with applicable portions of UL safety standards pertaining to electrical raceway systems; and provide products and components which have been UL-listed and labeled. Comply with NEC requirements as applicable to construction and installation of raceway systems.

C. SUBMITTALS: Not required.

PART 2 – PRODUCTS

2.1 METAL CONDUIT AND TUBING:

A. GENERAL:

1. Provide metal conduit, tubing and fittings of types, grades, sizes and weights (wall thicknesses) as indicated; with minimum trade size of 3/4".

B. RIGID METAL CONDUIT (RMC): FS WW-C-0581 and ANSI C80.1.

C. INTERMEDIATE STEEL CONDUIT (IMC): FS WW-C-581.

D. PVC EXTERNALLY COATED RIGID STEEL CONDUIT: ANSI C80.1 and NEMA Std. Pub. No. RN 1.

E. ALUMINUM CONDUIT: Not acceptable.

© BNA Consulting, Inc.

F. MC CABLE: Not acceptable.

G. RIGID AND INTERMEDIATE STEEL CONDUIT FITTINGS:

1. Provide fully threaded malleable steel couplings; raintight and concrete tight where required by application. Provide double locknuts and metal bushings at all conduit terminations. Install OZ Type B bushings on conduits 1-1/4" and larger.

H. ELECTRICAL METALLIC TUBING (EMT): FS WW-C-563 and ANSI C80.3.

I. EMT FITTINGS:

1. Provide insulated throat nylon bushings with non-indenter type malleable steel fittings at all conduit terminations. Install OZ Type B bushings on conduits 1" larger. Cast or indenter type fittings are not acceptable.

J. FLEXIBLE METAL CONDUIT: FS WW-C-566, of the following type;

1. Zinc-coated steel.

K. FLEXIBLE METAL CONDUIT FITTINGS: FS W-F-406, Type 1, Class 1, and Style A.

L. LIQUID TIGHT FLEXIBLE METAL CONDUIT:

1. Provide liquid-tight, flexible metal conduit; constructed of single strip, flexible continuous, interlocked, and double-wrapped steel; galvanized inside and outside; coated with liquid-tight jacket of flexible polyvinyl chloride (PVC).

M. LIQUID-TIGHT FLEXIBLE METAL CONDUIT FITTINGS: FS W-F-406, Type 1, Class 3, Style G.

N. EXPANSION FITTINGS: OZ Type AX, or equivalent to suit application.

2.2 NON-METALLIC CONDUIT AND DUCTS:

A. GENERAL:

1. Provide non-metallic conduit, ducts and fittings of types, sizes and weights as indicated; with minimum trade size of 3/4".

B. UNDERGROUND PVC PLASTIC UTILITIES DUCT:

1. Minimum requirements shall be schedule 40 for encased burial in concrete and for Type II for direct burial.

C. PVC AND ABS PLASTIC UTILITIES DUCT FITTINGS:

D. ANSI/NEMA TC 9, match to duct type and material.

E. HDPE CONDUIT: Not acceptable.

2.3 CONDUIT; TUBING; AND DUCT ACCESSORIES:

A. Provide conduit, tubing and duct accessories of types and sizes, and materials, complying with manufacturer's published product information, which mate and match conduit and tubing. Provide manufactured spacers in all duct bank runs.

© BNA Consulting, Inc.

2.4 SEALING BUSHINGS:

A. Provide OZ Type FSK, WSK, or CSMI as required by application. Provide OZ type CSB internal sealing bushings.

2.5 CABLE SUPPORTS:

A. Provide OZ cable supports for vertical risers, type as required by application.

PART 3 - EXECUTION

3.1 INSTALLATION OF ELECTRICAL RACEWAYS:

A. Install electrical raceways where indicated; in accordance with manufacturer's written instructions, applicable requirements of NEC and NECA "Standard of Installation", and in accordance with the following:

1. SERVICE ENTRANCE CONDUCTORS, AND CONDUCTORS OVER 600 VOLTS:
   a. Install in rigid metal conduit (RMC), or intermediate metal conduit (IMC); except where buried below grade, install in non-metallic conduit or duct, individually encased in concrete. See duct banks.

2. FEEDERS UNDER 600 VOLTS:
   a. Install feeders to panels and motor control centers and individual equipment feeders rated 100 amps and greater, in rigid metal conduit (RMC), or intermediate metal conduit (IMC); except where buried below grade, install in non-metallic conduit or duct. Encase feeders 1-1/4" and larger, individually in concrete where installed below grade. See duct banks.

3. BRANCH CIRCUITS, SIGNAL AND CONTROL CIRCUITS, AND INDIVIDUAL EQUIPMENT CIRCUITS RATED LESS THAN 100 AMPS:
   a. Install in electric metallic tubing (EMT); except in poured walls, with one side in contact with grade, below concrete slab-on-grade or in earth fill, install in non-metallic plastic duct. In areas exposed to weather, moisture, or physical damage, install in GRC or IMC. In suspended slabs, install in EMT. Encase non-metallic duct 1-1/4" and larger in concrete. See duct banks.

B. Provide 1000 feet of 3/4" conduit with 3 #12 conductors and 1000 feet of 3/4" conduit with 3 #10 conductors. Provide all supports, fittings, boxes, terminations, etc. as required for installation. Install only as directed by engineer. Credit back all unused material and labor to the Owner.

C. Coordinate with other work including metal and concrete deck work, as necessary to interface installation of electrical raceways and components.

D. Install raceway in accordance with the following:

1. Provide a minimum of 12" clearance measured from outside of insulation from flues, steam and hot water piping, etc. Avoid installing raceways in immediate vicinity of boilers and similar heat emitting equipment. Conceal raceways in finished walls, ceilings and floor (other than slab-on-grade), except in mechanical, electrical and/or communication rooms, conceal all conduit and connections to motors, equipment, and surface mounted cabinets unless

© BNA Consulting, Inc.

exposed work is indicated on the drawings. Run concealed conduits in as direct a line as possible with gradual bends. Where conduit is exposed in mechanical spaces, etc., install parallel with or at right angles to building or room structural lines. Do not install lighting raceway until piping and duct work locations have been determined in order to avoid fixtures being obstructed by overhead equipment.

2. Where cutting raceway is necessary, remove all inside and outside burrs; make cuts smooth and square with raceway. Paint all field threads (or portions of raceway where corrosion protection has been damaged) with primer and enamel finish coat to match adjacent raceway surface.

E. Comply with NEC for requirements for installation of pull boxes in long runs.

F. Cap open ends of conduits and protect other raceways as required against accumulation of dirt and debris. Pull a mandril and swab through all conduit before installing conductors. Install a 200 lb. nylon pull cord in each empty conduit run.

G. Replace all crushed, wrinkled or deformed raceway before installing conductors.

H. Do not use flame type devices as a heat application to bend PVC conduit. Use a heating device which supplies uniform heat over the entire area without scorching the conduit.

I. Provide rigid metal conduit (RMC) for all bends greater than 22 degrees in buried conduit. Provide protective coating for RMC bend as specified herein.

J. Where raceways penetrate building, area ways, manholes or vault walls and floors below grade, install rigid metal conduit (RMC) for a minimum distance of 10 feet on the exterior side of the floor or wall. Provide OZ, Type FSK, WSK or CSMI sealing bushings (with external membrane clamps as applicable) for all conduit penetrations entering walls or slabs below grade. Provide segmented type CSB internal sealing bushings in all raceways penetrating building walls and slabs below grade, and in all above grade raceway penetrations susceptible to moisture migration into building through raceway.

K. Install liquid-tight flexible conduit for connection of motors, transformers, and other electrical equipment where subject to movement and vibration.

L. Install spare 3/4" conduits (capped) from each branch panelboard into the ceiling and floor space. Run five into the ceiling space and five into the floor space. Where the floor is not accessible run six conduits into the ceiling space. Run conduits the required distance necessary to reach accessible ceiling space.

M. Provide OZ expansion fittings on all conduits crossing building expansion joints, both in slab and suspended.

N. Provide OZ cable supports in all vertical risers in accordance with NEC 300-19; type as required by application.

O. Complete installation of electrical raceways before starting installation of cables/conductors within raceways.

P. Raceway installation below grade:

1. Apply protective coating to metallic raceways in direct contact with earth or fill of any type; consisting of spirally wrapped PVC tape (1/2" minimum overlap of scotch wrap tape or equal); or factory applied vinyl cladding (minimum thickness

© BNA Consulting, Inc.

.020 inches). Completely wrap and tape all field joints.

2. Mark all buried conduits which do not require concrete encasement by placing yellow plastic marker tape (minimum 6" wide) along entire length of run 12" below final grade. Where multiple small lines are buried in a common trench and do not exceed an overall width of 16", install a single line marker.

3. Burial depths must comply with NEC Section 300-5 but in no case be less than 24", unless noted otherwise on drawings.

Q. Raceway installation below slab-on-grade, or below grade:

1. For slab-on-grade construction, install runs of rigid plastic conduit (PVC) below slab. All raceway shall be located a minimum of 4” below gravel sub-base. Install RMC (with protective coating) for raceways passing vertically through slab-on-grade. Slope raceways as required to drain away from electrical enclosures and to avoid collection of moisture in raceway low points.

2. Apply protective coating to metallic raceways in direct contact with earth or fill of any type; consisting of spirally wrapped PVC tape (1/2" minimum overlap of scotch wrap tape or equal); or factory applied vinyl cladding (minimum thickness .020 inches). Completely wrap and tape all field joints.

3. Mark all buried conduits which do not require concrete encasement by placing yellow plastic marker tape (minimum 6" wide) along entire length of run 12" below final grade. Where multiple small lines are buried in a common trench and do not exceed an overall width of 16", install a single line marker.

4. Burial depths must comply with NEC Section 300-5 but in no case be less than 24", unless noted otherwise on drawings.

R. Raceway installation in suspended slabs:

1. Install conduit as close to the middle of concrete slab as practicable without disturbing reinforcement. Do not install conduits of diameter greater than 1/3 of the slab thickness. Space conduits not less than 3 diameters on center (except at stub up locations). Provide OZ expansion fittings at all expansion joints. All raceways shall be installed with concrete tight fittings. Include copper ground conductor in all raceways installed in suspended slabs.

S. Raceway installation in hazardous locations:

1. Install RMC in all hazardous locations as defined by NEC. Provide suitable fittings, seal-offs, boxes, etc. to comply with requirements.

2. Engage at least five full threads on all fittings. Provide inspection fittings with explosion proof drains to prevent water accumulation in conduit runs. Install seal-offs for arcing or high temperature equipment, at housing with splices or taps and where conduits enter or leave the hazardous area. Provide seal-offs of the appropriate type for vertical or horizontal installation. Ground all metallic parts.

T. DUCTBANKS:

1. Provide ductbank construction as indicated using 3000 psi at 28 day strength concrete, with red marker dye. Use Type II low alkali per ASTM C150. Use

© BNA Consulting, Inc.

ASTM C-33 aggregate gradation with maximum size of 3/4". Use W/C ratio of 0.50. Install #4 reinforcing bar per ASTM 615 grade 50 in each corner of ductbank. Provide minimum 4" concrete cover on all sides of exterior conduits. Provide polypropylene pull rope in all spare duct.

END OF SECTION 16110

© BNA Consulting, Inc.

SECTION 16111 - RACEWAY SYSTEMS July 11, 2007

PART 1 – GENERAL

1.1 RELATED DOCUMENTS:

A. Drawings and general provisions of Contract, including General and Supplementary Conditions and Division-1 Specification sections, apply to work of this section.

B. This section is a Division-16 Basic Materials and Methods section, and is part of each Division-16 Section making reference to electrical raceways specified herein.

1.2 DESCRIPTION OF WORK:

A. Extent of raceways is indicated by drawings and schedules.

B. Types of raceways in this section include the following:

1. Cable tray systems
2. Overhead metal raceways
3. Surface metal raceways

1.3 QUALITY ASSURANCE:

A. STANDARDS:

1. Comply with applicable portions of NEMA standards pertaining to raceways. Comply with applicable portions of UL safety standards pertaining to electrical raceway systems; and provide products and components which have been UL-listed and labeled. Comply with NEC requirements as applicable to construction and installation of raceway systems.

1.4 SUBMITTALS:

A. PRODUCT DATA:

1. Submit manufacturer's data including specifications, installation instructions and general recommendations, for each type of raceway as follows:

   a. Surface Metal Raceways
   b. Cable Tray Systems
   c. Overhead metal raceways

B. SHOP DRAWINGS:

1. Submit dimensioned drawings of raceway systems showing layout of raceways and fittings, spatial relationships to associated equipment, and adjoining raceways, for each type of raceway as follows:

   a. Surface metal Raceways
   b. Cable Tray Systems
   c. Overhead metal raceways

© BNA Consulting, Inc.

PART 2 - PRODUCTS

2.1 MANUFACTURED RACEWAY SYSTEMS:

A. GENERAL:

1. Provide electrical raceways of types, grades, sizes, weights [wall thicknesses], and number of channels, for each service indicated. Provide complete assembly of raceway including, but not necessarily limited to, couplings, offsets, elbows, expansion joints, adapters, holddown straps, end caps, and other components and accessories as needed for complete system.

B. SURFACE METAL RACEWAYS:

1. Provide galvanized steel surface metal raceways of sizes and channels indicated. Provide fittings indicated which match and mate with raceway. Paint with manufacturer's standard prime coating and finish color as indicated. Provide receptacles on centers as indicated on drawings or as directed by engineer.

C. MANUFACTURER:

1. Subject to compliance with requirements, provide surface metal raceways of one of the following:

   a. Wiremold Company
   b. Hubbell Incorporated

D. CABLE TRAY SYSTEMS:

1. Provide UL-listed tray systems of sizes, types and capacities indicated, and meeting all requirements of NEMA VE-1. Trays to be provided include but are not necessarily limited to the following:

Type	Width	Depth	Rung Spacing	NEMA Class
Ladder		3" 4"	6" 9"	1
	18" 24"	5" 6"	12" 18"	

2. Provide radius as indicated, and in no case smaller than required to comply with minimum radius requirement of cable manufacturer.

3. Provide all fittings including elbows, intersections, expansion joints, transition fittings, reducers, barrier strips, conduit-to-tray clamps, hangers, supports, retaining clips, etc. Bond each expansion joint in tray system by means of 1/O copper jumper (with crimped lug connectors) at each joint. Provide cantilever, single-rod or trapeze support systems as indicated. Provide all rod or trapeze supported tray systems with rigid unistrut support to structure; laterally at intervals not to exceed 25 feet on center, and longitudinally at intervals not to exceed 50 feet on center.

4. Provide tray with hot-dip (after fabrication) galvanized corrosion-resistant finish. Grind all rough edges, drip concentrations, etc, to smooth finish. Apply cold zinc spray to all field cut surfaces.

© BNA Consulting, Inc.

E. MANUFACTURER:

1. Subject to compliance with requirements, provide cable tray systems of one of the following:

   a. B-Line Systems
   b. P/W Industries
   c. Globe Metal Products, U.S.Gypsum Co.
   d. T.J. Cope, Inc.
   e. Square D Company
   f. Chalfant

PART 3 - EXECUTION

3.1 INSTALLATION OF ELECTRICAL RACEWAYS:

A. Install electrical raceways where indicated; in accordance with manufacturer's written instructions, applicable requirements of NEC and NECA "Standard of Installation", and complying with recognized industry practices.

B. Coordinate with other work including metal and concrete deck work, as necessary to interface installation of electrical raceways and components.

C. Seal joints of underfloor ducts with sealing compound or tape prior to placing concrete.

D. Level and square raceway runs, and install at proper elevations/heights.

3.2 ADJUSTING AND CLEANING:

A. Upon completion of installation of raceways, inspect interiors of raceways; remove burrs, dirt and construction debris.

END OF SECTION 16111

© BNA Consulting, Inc.

SECTION 16120 - CONDUCTORS AND CABLES (600V AND BELOW) July 11, 2007

PART 1 – GENERAL

1.1 RELATED DOCUMENTS:

A. Drawings and general provisions of Contract, including General and Supplementary Conditions and Division-1 Specification sections, apply to work of this section.

B. This section is a Division-16 Basic Materials and Methods section, and is part of each Division-16 section making reference to conductors and cables specified herein.

1.2 DESCRIPTION OF WORK:

A. Extent of electrical conductor and electrical cable work is indicated by drawings and schedules.

B. Types of conductors and cables in this section include the following:

1. Copper Conductors (600V)

C. Applications for conductors and cables required for project include:

1. Power Distribution
2. Feeders
3. Branch Circuits

1.3 QUALITY ASSURANCE:

A. Comply with NEC as applicable to construction and installation of electrical conductors and cable. Comply with UL standards and provide electrical conductors and cables which have been UL-listed and labeled.

B. Comply with applicable portions of NEMA/Insulated Cable Engineers Association standards pertaining to materials, construction and testing of conductors and cable.

C. Comply with applicable portions of ANSI/ASTM and IEEE standards pertaining to construction of conductors and cable.

1.4 SUBMITTALS:

A. FIELD TEST DATA:

1. Submit megohmmeter test data for circuits under 600 volts.

PART 2 - PRODUCTS

2.1 COPPER CONDUCTORS (600V):

A. Provide factory-fabricated conductors of sizes, ratings, materials, and types indicated for each service. Where not indicated provide proper selection to comply with project's installation requirements and NEC standards. Provide conductors in accordance with the following:

1. Distribution and Panelboard Feeders; and Other Conductors, #2 AWG and Larger – Copper conductor; see drawings for insulation type.

© BNA Consulting, Inc.

2. Branch Circuit Conductors and All Conductors #3 AWG and Smaller - Copper conductor, with THHN/THWN insulation. Size all conductors in accordance with NEC; minimum size to be #12 AWG. Provide stranded conductors for #8 AWG and larger.

B. Provide color and coding of conductors as follows:

120/208V	277/480V
A-Phase - Black	A-Phase - Brown
B-Phase - Red	B-Phase - Purple
C-Phase - Blue	C-Phase - Yellow
Neutral - White	Neutral - Gray
Ground - Green	Ground - Green

C. Provide colors for switch legs, travelers and other wiring for branch circuits different than listed above.

D. Provide #10 AWG neutral conductor for all three and four wire fluorescent circuit home runs.

PART 3 - EXECUTION

3.1 INSTALLATION:

A. General: Install electric conductors and cables as indicated, in compliance with manufacturer's written instructions, applicable requirements of NEC and NECA's "Standards of Installation", and in accordance with recognized industry practices.

B. Coordinate installation work with electrical raceway and equipment installation work, as necessary for proper interface.

C. Cables may be pulled by direct attachment to conductors or by use of basket weave pulling grip applied over cables. Attachment to pulling device shall be made through approved swivel connection. Nonmetallic jacketed cables of small size may be pulled directly by conductors by forming them into a loop to which pull wire can be attached; remove insulation from conductors before forming the loop. Larger sizes of cable may be pulled by using basket weave pulling grip, provided the pulling force does not exceed limits recommended by manufacturer; if pulling more than one cable, bind them together with friction tape before applying the grip. For long pulls requiring heavy pulling force, use pulling eyes attached to conductors.

D. Do not exceed manufacturer's recommendations for maximum allowable pulling tension, side wall pressure, and minimum allowable bending radius. In all cases, pulling tension applied to the conductors shall be limited to 0.008 lbs. per circular mil of conductor cross-section area.

E. Pull in cable from the end having the sharpest bend; i.e. bend shall be closest to reel.

© BNA Consulting, Inc.

Keep pulling tension to minimum by liberal use of lubricant, and turning of reel, and slack feeding of cable into duct entrance. Employ not less than one man at reel and one in pullhole during this operation.

F. For training of cables, minimum bend radius to inner surface of cable shall be 12 times cable diameter.

G. Where cable is pulled under tension over sheaves, conduit bends, or other curved surfaces, make minimum bend radius 50% greater than specified above for training.

H. Use only wire and cable pulling compound recommended by the specific cable manufacturer, and which is listed by UL.

I. Seal all cable ends unless splicing is to be done immediately. Conduit bodies shall not contain splices.

J. Support all cables in pullholes, concrete trenches, and similar locations by cable racks and secure to rack insulators with nylon cord or self-locking nylon cable ties. Place each cable on separate insulator. In manholes, pullholes, concrete trenches, and similar locations, wrap strips of fire-proofing tape (approx. 1/16 inch thick by 3 inches wide) tightly around each cable spirally in half-lapped wrapping or in two butt-joined wrappings with the second wrapping covering the joints in the first. Apply tape with the coated side toward the cable, and extend tape one inch into the ducts. To prevent unraveling, random wrap the fireproofing tape the entire length of the fireproofing with pressure sensitive glass cloth tape. Provide fireproofing tape of a flexible, conformable fabric having one side coated with flame retardant, flexible, polymeric coating and/or a chlorinated elastomer not less than 0.050 inch thick weighing not less than 2.5 pounds per square yard. Provide tape which is noncorrosive to cable sheath, self-extinguishing, and which will not support combustion. Construct tape of materials which do not deteriorate when subjected to oil, water, gases, salt water, sewage and fungus.

K. Follow manufacturer's instructions for splicing and cable terminations.

3.2 AFTER INSTALLATION TEST FOR CABLE 600 VOLTS AND BELOW:

A. Prior to energization, test cable and wire for continuity of circuitry, and for short circuits, Megger all circuits of 100 amp and greater rating. Correct malfunctions. Submit record in triplicate of megohmmeter readings to Architect/Engineer.

B. Subsequent to wire and cable connections, energize circuitry and demonstrate functioning in accordance with requirements.

C. IDENTIFICATION OF FEEDERS: Each cable at each entry to and exit for each manhole, pullhole, pullbox, cable tray switchgear and switch, shall have a marker affixed, upon which is stamped or embossed the feeder designation; i.e. "MCCI", "PANEL L", "CHILLER", "NO. 1", etc. Identification letters shall be 1/8 inch minimum size. Markers shall be rigid, non-corrosive material, attached to the feeder cables with feeder identification. Nylon straps shall be used to tie the markers.

END OF SECTION 16120

© BNA Consulting, Inc.

SECTION 16135 - ELECTRICAL BOXES AND FITTINGS July 11, 2007

PART 1 – GENERAL

1.1 RELATED DOCUMENTS:

A. Drawings and general provisions of Contract, including General and Supplementary Conditions and Division-1 Specifications sections, apply to work of this section.

B. This section is a Division-16 Basic Materials and Methods section, and is a part of each Division-16 section making reference to electrical wiring boxes and fittings specified herein. See Section 16110, Raceways, for additional requirements.

1.2 DESCRIPTION OF WORK:

A. The extent of electrical box and electrical fitting work is indicated by drawings and schedules.

B. Types of electrical boxes and fittings in this section include the following:

1. Outlet Boxes
2. Junction Boxes
3. Pull Boxes
4. Floor Boxes
5. Conduit Bodies
6. Bushings
7. Locknuts
8. Knockout Closures
9. Miscellaneous Boxes and Fittings

1.3 QUALITY ASSURANCE:

A. Comply with NEC as applicable to construction and installation of electrical boxes and fittings. Comply with ANSI C 134,1 (NEMA Standards Pub No. OS 1) as applicable to sheet-steel outlet boxes, device boxes, covers and box supports. Provide electrical boxes and fittings which have been UL-listed and labeled.

1.4 SUBMITTALS: None required

PART 2 - PRODUCTS

2.1 FABRICATED MATERIALS:

A. INTERIOR OUTLET BOXES:

1. Provide one piece, galvanized flat rolled sheet steel interior outlet wiring boxes with accessory rings, of types, shapes and sizes, including box depths, to suit each respective location and installation, construct with stamped knockouts in back and sides, and with threaded screw holes with corrosion-resistant screws for securing box and covers and wiring devices; minimum size 4"x4"x1-1/2". Provide minimum 2-1/8" depth for boxes with three or more conduit entries.
2. Provide an ‘FS’ box, with no knockouts when surface mounted in a finished, non-utility space. Surface mounting is only acceptable when approved by the Architect.

© BNA Consulting, Inc.

B. INTERIOR OUTLET BOX ACCESSORIES:

1. Provide outlet box accessories as required for each installation, including mounting brackets, hangers, extension rings, fixture studs, cable clamps and metal straps for supporting outlet boxes, which are compatible with outlet boxes being used and fulfilling requirements of individual wiring applications.

C. WEATHERPROOF OUTLET BOXES:

1. Provide corrosion-resistant cast-metal weatherproof outlet wiring boxes, of types, shapes and sizes (including depth) required, with threaded conduit ends, cast-metal face plates with spring-hinged waterproof caps suitably configured for each application, with face plate gaskets and corrosion-resistant fasteners.

D. JUNCTION AND PULL BOXES:

1. Provide code-gage sheet steel junction and pull boxes, with screw-on covers; of types, shapes and sizes to suit each respective location and installation; with welded seams and equipped with stainless steel nuts, bolts, screws and washers.

E. FLOOR BOXES:

1. Provide leveling and fully adjustable floor service receptacle outlets and fittings of types and ratings indicated; and with finish as selected by Architect. Equip with wiring devices as specified in section 16140. Provide boxes compatible with floor system; provide cast iron boxes for slab-on-grade construction. Equip with tile and/or carpet flanges to accommodate floor finish material. Provide equipment as follows:

F. MANUFACTURER:

1. Subject to compliance with requirements, provide floor boxes of one of the following:

   a. Bell Electric/Square D Co.
   b. Crouse-Hinds Co.
   c. Harvey Hubbell, Inc.
   d. Steel City/Midland-Ross Corp.

G. CONDUIT BODIES:

1. Provide galvanized cast-metal conduit bodies, of types, shapes and sizes to suit respective locations and installation, construct with threaded-conduit-entrance ends, removable covers, and corrosion-resistant screws.

H. BUSHINGS, KNOCKOUT CLOSURES AND LOCKNUTS:

1. Provide corrosion-resistant punched-steel box knockout closures, conduit locknuts and malleable steel conduit bushings and offset connectors, of types and sizes to suit respective uses and installation.

© BNA Consulting, Inc.

PART 3 - EXECUTION

3.1 INSTALLATION OF ELECTRICAL BOXES AND FITTINGS:

A. GENERAL:

1. Install electrical boxes and fittings where indicated, complying with manufacturer's written instructions, applicable requirements of NEC and NECA's "Standard of Installation", and in compliance with recognized industry practices to ensure that products fulfill requirements.

2. Coordinate installation of electrical boxes and fittings with wire/cable and raceway installation work.

3. Provide coverplates for all boxes. See Section 16140, Wiring Devices.

4. Provide weatherproof outlets for interior and exterior locations exposed to weather or moisture.

5. Provide knockout closures to cap unused knockout holes where blanks have been removed.

6. Install boxes and conduit bodies to ensure ready accessibility of electrical wiring. Do not install boxes above ducts or behind equipment. Install recessed boxes with face of box or ring flush with adjacent surface. Seal between switch, receptacle and other outlet box openings and adjacent surfaces with plaster, grout, or similar suitable material.

7. Fasten boxes rigidly to substrates or structural surfaces to which attached, or solidly embed electrical boxes in concrete or masonry. Use bar hangers for stud construction. Use of nails for securing boxes is prohibited. Set boxes on opposite sides of common wall with minimum 10" of conduit between them.

8. Provide electrical connections for installed boxes.

END OF SECTION 16135

© BNA Consulting, Inc.

SECTION 16136 - SUPPORTING DEVICES July 11, 2007

PART 1 – GENERAL

1.1 RELATED DOCUMENTS:

A. Drawings and general provisions of Contract, including General and Supplementary Conditions and Division-1 Specification section, apply to work of this section.

B. This section is a Division-16 Basic Materials and Methods section, and is a part of each Division-16 section making reference to supports, anchors, sleeves, and seals, specified herein.

1.2 DESCRIPTION OF WORK:

A. Extent of supports, anchors, and sleeves is indicated by drawings and schedules and/or specified in other Division-16 sections. See Section 16110, Raceways, for additional requirements.

B. Work of this section includes supports, anchors, sleeves and seals required for a complete raceway support system, including but not limited to: clevis hangers, riser clamps, C-clamps, beam clamps, one and two hole conduit straps, offset conduit clamps, expansion anchors, toggle bolts, threaded rods, U-channel strut systems, threaded rods and all associated accessories.

1.3 QUALITY ASSURANCE:

A. Comply with NEC as applicable to construction and installation of electrical supporting devices. Comply with applicable requirements of ANSI/NEMA Std. Pub No. FB 1, "Fittings and Supports for Conduit and Cable Assemblies". Provide electrical components which are UL-listed and labeled.

PART 2 - PRODUCTS

2.1 MANUFACTURED SUPPORTING DEVICES:

A. GENERAL:

1. Provide supporting devices; complying with manufacturer's standard materials, design and construction in accordance with published product information, and as required for a complete installation; and as herein specified. See drawings for additional requirements.

PART 3 - EXECUTION

3.1 INSTALLATION OF SUPPORTING DEVICES:

A. Install hangers, anchors, sleeves, and seals as required, in accordance with manufacturer's written instructions and with recognized industry practices to insure supporting devices comply with requirements. Comply with requirements of NECA, NEC and ANSI/NEMA for installation of supporting devices.

B. Coordinate with other electrical work, including raceway and wiring work, as necessary to interface installation of supporting devices with other work.

C. Install hangers, supports, clamps and attachments to support piping properly from

© BNA Consulting, Inc.

building structures. Arrange for grouping of parallel runs of horizontal conduits to be supported together on trapeze type hangers where possible. For pre-and post tensioned construction, use pre-set inserts for support of all electrical work. Do not use toggle bolts, moly bolts, wood plugs or screws in sheetrock or plaster as support for any equipment or raceway.

D. RACEWAYS:

1. Support raceways which are rigidly attached to structure at intervals not to exceed 8 feet on center, minimum of two straps per 10 foot length of raceway, and within 12" of each junction box, coupling, outlet or fitting. Support raceway at each 90 degree bend. Support raceway (as it is installed) in accordance with the following:

NUMBER OF RUNS	3/4" TO 1-1/4" 0	1-1/2" & LARGER 0
1	Full straps, clamps or hangers.	Hanger
2	Full straps, clamps or hangers.	Mounting Channel
3 or more	Mounting Channel	Mounting Channel

2. Support suspended raceways on trapeze hanger systems; or individually by means of threaded rod and straps, clamps, or hangers suitable for the application. Do not use "tie wire" as a portion of any raceway support system; do not support raceway from ceiling support wires.

E. FLOOR MOUNTED EQUIPMENT:

1. Provide rigid attachment of all floor mounted equipment to the floor slab or structural system. Provide 5/8" bolts or expansion anchors at each 90 degree corner and at intervals not to exceed 48" on center along entire perimeter of the equipment. Provide rigid attachment for all floor mounted switchboards, panelboards, power and control equipment, motor control centers, dimmer cabinets, transformers (provide neoprene vibrations isolators at anchor points), oil switches, battery packs and racks, and similar equipment furnished under Section 16.

F. WIREWAYS, BUS DUCTS AND CABLE TRAYS:

1. Provide vertical and lateral support systems for all wireways, busway, and cable trays which are supported from overhead structure. See Sections 16111 and 16145 for additional requirements.

END OF SECTION 16136

© BNA Consulting, Inc.

SECTION 16140 - WIRING DEVICES July 11, 2007

PART 1 – GENERAL

1.1 RELATED DOCUMENTS

A. Drawings and general provisions of Contract, including General and Supplementary Conditions and Division-1 Specification sections, apply to work of this section.

B. This section is a Division-16 Basic Materials and Methods section, and is part of each Division-16 section making reference to wiring devices specified herein.

1.2 DESCRIPTION OF WORK:

A. The extent of wiring device work is indicated by drawings and schedules. Wiring devices are defined as single discrete units of electrical distribution systems which are intended to carry but not utilize electric energy.

B. Types of electrical wiring devices in this section include the following:

1. Receptacles
2. Switches
3. Dimmer controls
4. Cord caps
5. Cord connectors
6. Poke-through assemblies
7. Telephone/power poles

1.3 QUALITY ASSURANCE:

A. Comply with NEC and NEMA standards as applicable to construction and installation of electrical wiring devices. Provide electrical wiring devices which have been UL listed and labeled.

1.4 SUBMITTALS:

A. PRODUCT DATA:

1. Submit manufacturer's data on electrical wiring devices.

PART 2 - PRODUCTS

A. FABRICATED WIRING DEVICES:

B. GENERAL:

1. Provide factory-fabricated wiring devices, in types, and electrical ratings for applications indicated and complying with NEMA Stds. Pub No. WD 1.

2. Provide wiring devices (of proper voltage rating) as follows:

© BNA Consulting, Inc.

MFGR.	RECEPTACLE	SWITCHES 1-POLE	3-WAY	4-WAY	W-PILOT
Hubbell	HBL5352	HBL 1221	HBL 1223	HBL1224	HBL1221-PL
Bryant	5352	1221	1223	1224	1221-PL
Pass Seymour	5352	20AC1	20AC3	20AC4	20AC1-RPL
Leviton	5362	1221	1223	1224	
Cooper	5352	1221	1273	1224	1221-PL

3. Provide devices in colors selected by Architect. Provide red devices on all emergency circuits.

C. TRANSIENT VOLTAGE SURGE SUPPRESSION (TVSS) RECEPTACLES:

1. Provide TVSS receptacles having 4 series parallel 130V MOV's capable of a minimum of 140 joules suppression. Provide units with visual (and audible) surge status indicators to monitor condition of surge circuit; visual indicator to be "on" when power present and suppression circuit is fully functional. (Audible indicator shall sound a "beep" alarm approximately every 30 seconds if suppression circuit has been damaged.) Provide NEMA 5-20R, 20 amp, 125V receptacle of one of the following manufacturers:

SPECIFICATION GRADE	MANUFACTURER HUBBELL	PASS SEYMOUR
Duplex Recept-Visual only	5350	5352 XXXSP
Duplex Recept-Visual/Audible	5352	5362 XXXSP
Single Recept-Visual only	5351	N/A
Duplex Recept-Isol Gnd, Visual/Audible	IG5352S	IG5362 XXXSP
Single Recept-Isol Gnd, Visual only	IG5351S	N/A

2. Color of devices selected by Architect. Provide red devices on all emergency circuits.

D. GROUND-FAULT INTERRUPTER:

1. Provide general-duty, duplex receptacle, ground-fault circuit interrupters; feed-thru types, capable of protecting connected downstream receptacles on single circuit; grounding type UL-rated Class A, Group A, 20-amperes rating; 120-volts, 60 Hz; with solid-state ground-fault sensing and signaling; with 5 milliamperes ground-fault trip level; color as selected by Architect. Provide Hospital grade where required elsewhere by specification or drawings. Provide units of one of the following:

   a. P&S/Sierra
   b. Hubbell
   c. Leviton
   d. Square D

© BNA Consulting, Inc.

E. CORD CAPS AND CONNECTORS:

1. Provide 3, 4 and 5-wire grounding, cap plugs, and connectors of ampere and voltage rating required, for final equipment, and as indicated otherwise on drawings.

2. Provide products of one of the following:

   a. Cooper
   b. General Electric
   c. Hubbell
   d. Leviton
   e. P&S

F. INCANDESCENT LAMP DIMMERS:

1. Provide branch lighting solid-state AC dimmer controls for incandescent fixtures; wattage and voltage as indicated, 60 hertz, with continuously adjustable slider control. Dimmer shall match low voltage transformer. Color as selected by Architect. Provide devices manufactured by one of the following:

   a. Lutron (Nova Series)
   b. Hubbell (AS Series)

G. FLUORESCENT LAMP DIMMERS:

1. Provide single-pole, semi-conductor modular type AC dimmers for fluorescent fixtures; 60 hertz, with wattage and voltage as indicated, continuously adjustable slider control, and with electromagnetic filters to reduce noise and interference to minimum. Construct with continuously adjustable trim potentiometer for adjustment of low end dimming. Dimmer shall match lamp/ballast combination. Color as selected by Architect. Provide devices manufactured by one of the following:

   a. Lutron (Nova Series)

H. WIRING DEVICE ACCESSORIES:

1. WALL PLATES:

   a. Provide coverplates for wiring devices; plate color to match wiring devices to which attached. Provide nylon or Lexan coverplates in all finished areas. Provide galvanized steel plates in unfinished areas. Provide blank coverplates for all empty outlet boxes. Engrave all receptacle plates other than those serving 120 volt, single phase devices. State voltage and amperage characteristics. Example "208V, 30A".

I. WEATHER-PROTECTING DEVICE ENCLOSURES:

1. Where required for compliance with NEC 406-8 (receptacles installed outdoors for use other than with portable tools or equipment), provide weather-tight device covers which provide complete protection with the cord and cap inserted into the wiring device. Provide units which mount on either single or double gang devices. Provide device enclosures manufactured by one of the following:

© BNA Consulting, Inc.

a. Intermatic WP1020 or WP1030
b. P&S WIUC10C or WIUC20c

J. POKE-THROUGH ASSEMBLY DEVICES:

1. Provide factory-assembled poke-through assembly devices equipped with wiring devices as specified herein; capable of maintaining fire floor rating of 3 hours. Construct for installation in concrete floor with center tube, fire-stop wafers, spreader plates, service fitting base plate, and 4-11/16" conduit box. Provide service fitting with alignment adjustment screws for complete installation; finish as selected by Architect. Provide devices manufactured by one of the following:

a. Hubbell
b. Wiremold Co.

K. TELEPHONE/POWER POLES:

1. Provide factory-assembled telephone/power poles of types, sizes and ratings indicated; for use with telephone and power systems installed above suspended ceilings. Provide with 2 duplex receptacles as specified herein. Isolate power section from telephone compartment with separating steel enclosure. Extend wiring from receptacles to junction box at top of pole where connections are made above suspended ceiling. Provide pole foot with carpet pad and ceiling tile trim pad. Provide poles in color selected by Architect, manufactured by one of the following:

a. Hubbell
b. Wiremold Co.

PART 3 – EXECUTION

A. Install wiring devices as indicated, in compliance with manufacturer's written instructions, applicable requirements of NEC and NECA's "Standard of Installation" and in accordance with recognized industry practices to fulfill project requirements.

B. Coordinate with other work, including painting, electrical box and wiring work, as necessary to interface installation of wiring devices with other work. Install devices in boxes such that front of device is flush and square with coverplate. Drawings are small scale and, unless dimensioned, indicate approximate locations only of outlets, devices, equipment, etc. Locate outlets and apparatus symmetrically on floors, walls and ceilings where not dimensioned and coordinate with other work. Verify all dimensioned items on job site. Consult architectural cabinet, millwork, and equipment shop drawings before beginning rough-in of electrical work. Adjust locations of all electrical outlets as required to accommodate work in area, and to avoid conflicts with wainscoat, back splash, tackboards, and other items.

C. Provide receptacles in surface raceway at 24” on center unless indicated otherwise.

D. Install wiring devices only in electrical boxes which are clean; free from excess building materials, dirt, and debris. Mark each device box (for each type of wiring device) with a permanent ink felt tip marker, indicating the circuit to which the device is connected. Example: "CKT A-1".

E. Install blank plates on all boxes without devices.

© BNA Consulting, Inc.

F. Delay installation of wiring devices until wiring work and painting is completed. Provide separate neutral conductor from panel to each GFI receptacle.

G. Install GFI receptacles for all receptacles installed in restrooms, kitchens, outdoors or within six feet of any sink. Provide in elevator equipment rooms and pits.

H. Where wall box dimmers are specified, provide a separate neutral for each phase of the branch circuits on which dimmers are installed.

3.2 PROTECTION OF WALL PLATES AND RECEPTACLES:

A. At time of substantial completion, replace those items, which have been damaged, including those stained, burned and scored.

3.3 GROUNDING:

A. Provide electrically continuous, tight grounding connections for wiring devices, unless otherwise indicated.

3.4 TESTING:

A. Prior to energizing circuitry, test wiring devices for electrical continuity and proper polarity connections. After energizing circuitry, test wiring devices to demonstrate compliance with requirements.

END OF SECTION 16140

© BNA Consulting, Inc.

SECTION 16160 - PANELBOARDS July 11, 2007

PART 1 – GENERAL

1.1 RELATED DOCUMENTS:

A. Drawings and general provisions of Contract, including General and Supplementary Conditions and Division-1 Specification sections, apply to work of this section.

B. This section is a Division-16 Basic Materials and Methods section, and is part of each Division-16 section making reference to panelboards specified herein.

1.2 DESCRIPTION OF WORK:

A. The extent of panelboard and enclosure work, is indicated by drawings and schedules.

B. Types of panelboards and enclosures in this section include lighting and appliance panelboards, and power distribution panelboards.

1.3 QUALITY ASSURANCE:

A. Provide units which have been UL listed and labeled. Comply with NEC as applicable to installation of panelboards, cabinets, and cutout boxes. Comply with NEC pertaining to installation of wiring and equipment in hazardous locations. Comply with NEMA Stds. Pub No. 250, "Enclosures for Electrical Equipment (1000 volt maximum). Pub No. 1, "Instructions for Safe Installation, Operation and Maintenance of Panelboards Rated 600 Volts or Less".

1.4 SUBMITTALS:

A. PRODUCT DATA:

1. Submit manufacturer data including specifications, installation instructions and general recommendations, for each type of panelboard required.

B. SHOP DRAWINGS:

1. Submit dimensioned drawings of panelboards and enclosures showing accurately scaled layouts of enclosures and required individual panelboard devices, including but not necessarily limited to, circuit breakers, fusible switches, fuses, ground-fault circuit interrupters, and accessories.

PART 2 – PRODUCTS

ACCEPTABLE MANUFACTURERS:

2.1 MANUFACTURERS:

A. Subject to compliance with requirements, provide of one of the following:

1. Cutler Hammer Products, Eaton Corp.
2. General Electric Company
3. Square D Company

© BNA Consulting, Inc.

2.2 PANELBOARDS:

A. GENERAL:

1. Except as otherwise indicated, provide panelboards, enclosures and ancillary components, of types, sizes, and ratings indicated. Equip with number of unit panelboard devices as required for complete installation. Fully equip "spaces" with hardware to receive breaker or switch of size indicated. Provide CU/AL rated lugs of proper size to accommodate conductors specified.

B. POWER DISTRIBUTION PANELBOARDS:

1. Provide dead-front safety type power distribution panelboards as indicated, with switching and protective devices in quantities, ratings, types and with arrangement shown. Equip with copper bus bars, full-sized neutral bus and ground bus. Provide fusible or circuit breaker branch and main devices as indicated. Series rated systems are not acceptable. See Section 16180, Overcurrent Protection Devices.

C. LIGHTING AND APPLIANCE PANELBOARDS:

1. Provide dead-front safety type lighting and appliance panelboards as indicated, with switching and protective devices in quantities, ratings, types, and arrangement shown. Provide bolt-on thermal magnetic type branch breakers. Where multiple breakers are indicated, provide with common trip handle. Series rated systems are not acceptable. Equip with copper bus bars, full-sized neutral bus, and ground bus.

D. PANELBOARD ENCLOSURES:

1. Provide galvanized sheet steel cabinet type enclosures, in sizes and NEMA types as indicated, code-gage minimum 16-gage thickness. Provide door-in-door hinged fronts. Provide fronts with adjustable indicating trim clamps, and doors with flush locks and keys, all panelboard enclosures keyed alike, with concealed door hinges and door swings as indicated. Equip with interior circuit-directory frame, and card with clear plastic covering. Provide baked gray enamel finish over a rust inhibitor. Provide enclosures fabricated by same manufacturer as overcurrent devices contained therein Bolt engraved plastic laminate labels indicating panel name and voltage on the interior and exterior of panelboards.

E. FINISH:

1. Coat interior and exterior of surface with manufacturer's standard color; baked on enamel finish.

F. IDENTIFICATION:

1. Provide 1/16" thick black plastic laminate labels with 1/4" high lettering on the interior of each panelboard; include panelboard name and voltage. Provide red plastic laminate labels on emergency system panels.

© BNA Consulting, Inc.

PART 3 – EXECUTION

3.1 INSTALLATION OF PANELBOARDS:

A. GENERAL:

1. Install panelboards and enclosures where indicated, in accordance with manufacturer's written instructions, applicable requirements of NEC and NECA's "Standard of Installation", in compliance with recognized industry practices to ensure products fulfill requirements.

B. MOUNTING:

1. Provide 4" high concrete curb under floor standing distribution panelboards.

2. Coordinate installation of panelboards and enclosures with cable and raceway installation work. Anchor enclosures firmly to walls and structural surfaces, ensuring they are permanently and mechanically secure. Arrange conductors neatly within enclosure, and secure with suitable nylon ties. Fill out panelboard's circuit directory card upon completion of installation work. Utilize actual final building room numbers, not architectural numbers used on drawings. Identify individual lighting circuits and individual receptacle circuits by room served. Label circuit breakers to identify location of subpanel or equipment supplied using room numbers and equipment names. Include room number with equipment circuit designations. All directories to be typewritten.

END OF SECTION 16160

© BNA Consulting, Inc.

SECTION 16180 - OVERCURRENT PROTECTIVE DEVICES July 11, 2007

PART 1 – GENERAL

1.1 RELATED DOCUMENTS:

A. Drawings and general provisions of Contract, including General and Supplementary Conditions and Division-1 Specification sections, apply to work of this section.

B. This section is a Division-16 Basic Materials and Methods section, and is part of each Division-16 section making reference to overcurrent protective devices specified herein.

1.2 DESCRIPTION OF WORK:

A. Extent of overcurrent protective device work is indicated by drawings and schedules and specified herein. Overcurrent protective devices specified herein are for installation as individual components in separate enclosures; and for installation as integral components of switchboard and panelboards. See Section 16175, Switchgear and Switchboards, and Section 16160, Panelboards.

B. Types of overcurrent protective devices in this section include the following for operation at 600 Volts and below:

1. Molded case circuit breakers
2. Power circuit breakers
3. Molded case systems breakers

C. Refer to other Division-16 sections for cable/wire and connector work required in conjunction with overcurrent protective devices.

1.3 QUALITY ASSURANCE

A. Comply with NEC requirements and NEMA and ANSI standards as applicable to construction and installation of overcurrent devices.

1.4 SUBMITTALS:

A. PRODUCT DATA: Submit manufacturer's data on overcurrent protective devices, including catalog cuts, time-current trip characteristic curves, and mounting requirements.

B. SHOP DRAWINGS: Submit layout drawings of overcurrent protective devices, with layouts of circuit breakers, including spatial relationships to proximate equipment. Failure to submit said spatial layouts does not relieve contractor of responsibility to verify all required clearances before release of equipment for fabrication.

C. MAINTENANCE STOCK, FUSES: For types and ratings required, furnish additional fuses, amounting to one unit for every 5 installed units, but not less than two units of each size and type, unless specified otherwise in another section of these specifications.

PART 2 – PRODUCTS

2.1 ACCEPTABLE MANUFACTURERS:

A. Subject to compliance with requirements, provide products of one of the following (main and branch device manufacturer must be same as panelboard and/or switchboard manufacturer):

© BNA Consulting, Inc.

B. CIRCUIT BREAKERS AND FUSIBLE SWITCHES:

1. Cutler Hammer Products, Eaton Corp.
2. General Electric Co.
3. Square D Co.

C. MOLDED CASE CIRCUIT BREAKERS:

1. Provide factory-assembled, molded case circuit breaker for power distribution panelboards and switchboards; and for individual mounting, as indicated. Provide breakers of amperage, voltage, and RMS interrupting rating shown, with permanent thermal trip and adjustable instantaneous magnetic trip in each pole. Series rated systems are not acceptable. Construct with overcenter, trip-free, toggle type operating mechanisms with quick-make, quick-break action and positive handle indication. Construct breakers for mounting and operating in any physical position and in an ambient temperature of 40 degrees C. Provide with mechanical screw type removable connector lugs, AL/CU rated, of proper size to accommodate conductors specified.

D. MANUFACTURER: Subject to compliance with requirements, provide ground-fault sensing and relaying equipment of one of the following:

1. General Electric Co.
2. Brown Boveri Electric, Inc.
3. HI-Z Corporation
4. Pringle Electric Mfg. Co.
5. Square D Co.

2.2 FUSES

A. GENERAL: Except as otherwise indicated, provided fuses of type, sizes and ratings and electrical characteristics of a single manufacturer as follows. Provide fuses labeled UL Class L or UL Class R, current limiting and rated for up to 200,000 amperes. Provide Buss KAZ signal activating fuses where required elsewhere in specification.

B. Where fuses are shown feeding individual or groups of equipment items, comply with manufacturer's recommendation for fusing; adjust fuse size and type as necessary to comply with manufacturer's recommendation.

C. Provide and install spare fuse cabinet in main electrical room.

D. MAIN SERVICE AND FEEDER CIRCUITS: For fuse ratings over 600 amperes provide UL Class L Fuses (KRP-C, or A4BQ or LCL or KLPC). For fuse ratings up to 600 amperes, provide UL Class RK1 (KTN-R, KTS-R or A2K-R, A6K-R or NCCR, SCLR or KLN-R, KLS-R). If fuse directly feeds motors, transformers or other inductive load provide UL RK5 time delay (FRN-R, FRS-R or TR-R, TRS-R or ECN-R, ECS-R or FLN-R, FLS-R).

E. BRANCH CIRCUITS: For motor circuits, transformer circuits, or other inductive loads, provide UL Class RK5 (FRN-R, FRS-R or TR-R, TRS-R or ECN-R, ECN-S or FLN-R, FLS-A). For other circuits, provide UL Class RK1, (KTN-R, KTS-R OR A2K-R, A6K-R or NCLR, SCLR OR KLNR, KLSR).

F. MANUFACTURER: Subject to compliance with requirements, provide fuses of one of the following:

© BNA Consulting, Inc.

1. Bussman Mfg. Co.
2. Gould Shawmut, Gould Electric Fuse Division
3. Reliance Fuse Div./Brush Fuse Inc.
4. Littlefuse, Inc.

G. IDENTIFICATION: Provide 1/16" thick black plastic laminate labels with 1/4" high lettering on the exterior of all overcurrent devices which are furnished in separately mounted enclosures. Provide red labels for devices supplied with emergency power.

PART 3 – EXECUTION

3.1 INSTALLATION OF OVERCURRENT PROTECTIVE DEVICES:

A. Install overcurrent protective devices as indicated, in accordance with the manufacturer's written instructions and with recognized industry practices to ensure that protective devices comply with requirements. Comply with NEC and NEMA standards for installation of overcurrent protective devices.

B. Coordinate with work as necessary to interface installations of overcurrent protective devices with other work.

C. Set field-adjustable circuit breakers for trip settings as indicated, subsequent to installation of devices.

D. Install fuses in overcurrent protective devices. For motor circuits, fuse sizes shown on drawings are for general guidance only. Size fuses in accordance with fuse manufacturer's recommendation for given motor nameplate ampere rating. Test operation. If nuisance tripping occurs, increase fuse size and disconnect device (if necessary) as required to provide nuisance free tripping. Adjust fuse size properly for ambient temperature, frequent starting and stopping of motor loads, and for loads with long start times. Include all costs in bid.

E. Field test all ground fault protective devices for proper operation; test to be performed by representative of the manufacturer. Include verification of complete time current trip characteristics.

3.2 FIELD QUALITY CONTROL

A. Prior to energization of overcurrent protective devices, test devices for continuity of circuitry and for short-circuits. Correct malfunctioning units, and then demonstrate compliance with requirements.

END OF SECTION 16180

© BNA Consulting, Inc.

SECTION 16452 - GROUNDING July 11, 2007

PART 1 – GENERAL

1.1 RELATED DOCUMENTS

A. Drawings and general provisions of Contract, including General and Supplementary Conditions and Division-1 Specification sections, apply to work of this section.

B. Division-16 Basic Materials and Methods sections apply to work specified in this section.

1.2 DESCRIPTION OF WORK:

A. Provide grounding as specified herein, and as indicated on drawings.

B. Provide grounding and bonding of all electrical and communication apparatus, machinery, appliances, building components, and items required by the NEC to provide a permanent, continuous, low impedance, grounding system.

C. Unless otherwise indicated, ground the complete electrical installation including the system neutral, metallic conduits and raceways, boxes, fittings, devices, cabinets, and equipment in accordance with all code requirements.

D. Ground each separately derived system, as described in NEC Section 250-30, unless otherwise indicated.

E. Types of grounding in this section include the following:

1. Underground Metal Water Piping
2. Metal Building Frames
3. Grounding Electrodes
4. Grounding Rods
5. Reference Ground Buses
6. Isolated Grounding Systems
7. Separately Derived Systems
8. Service Equipment
9. Enclosures
10. Systems
11. Equipment
12. Other items indicated on drawings

F. Requirements of this section apply to electrical grounding work specified elsewhere in these specifications.

1.3 QUALITY ASSURANCE:

A. Comply with NEC as applicable to electrical grounding and ground fault protection systems. Comply with applicable ANSI and IEEE requirements. Provide products which have been UL listed and labeled.

B. Resistance from the service entrance ground bus, through the grounding electrode to earth, shall not exceed 5 ohms.

1.4 SUBMITTALS:

A. Submit the name of test agency to be used for testing specified in this section. Submit

© BNA Consulting, Inc.

results of tests specified in this section. Also include test results in Operation and Maintenance Manuals as specified.

PART 2 – PRODUCTS

2.1 MATERIALS AND COMPONENTS:

A. GENERAL: Except as otherwise indicated, provide each electrical grounding system as specified herein, and as shown on drawings, including but not necessarily limited to, cables/wires, connectors, terminals (solderless lugs), grounding rods/electrodes and plate electrodes, bonding jumper braid, and other items and accessories needed for complete installation. Where materials or components are not otherwise indicated, comply with NEC, NEMA and established industry standards for applications indicated.

B. ELECTRICAL GROUNDING CONDUCTORS: Unless otherwise indicated, provide electrical grounding conductors for grounding connections matching power supply wiring materials and sized according to NEC. Provide with green insulation.

PART 3 - EXECUTION

3.1 INSTALLATION OF GROUNDING SYSTEMS:

A. Install electrical grounding systems in accordance with manufacturer's written instructions and with recognized industry practices to ensure grounding devices comply with requirements.

B. Install clamp-on connectors only on thoroughly cleaned and metal contact surfaces, to ensure electrical conductivity and circuit integrity.

C. Provide grounding for the entire raceway, enclosure, equipment and device system in accordance with NEC. All non-metallic raceways shall include copper grounding conductor sized in accordance with NEC. Include copper grounding conductor in all raceway installed in suspended slabs.

D. Provide grounding conductors for dimming systems in accordance with manufacturer's requirement.

E. EQUIPMENT BONDING/GROUNDING: Provide a NEC sized conductor, whether indicated or not on the drawings, in raceways as follows:

1. Non-metallic conduits and ducts.
2. Distribution feeders.
3. Motor and equipment branch circuits.
4. Device and lighting branch circuits.
5. Provide grounding bushings and bonding jumpers for all conduit terminating in reducing washers, concentric, eccentric or oversized knockouts at panelboards, cabinets and gutters.

F. Provide bonding jumpers across expansion and deflection couplings in conduit runs, across pipe connections at water meters, and across dielectric couplings in metallic cold water piping system.

G. Provide bonding wire in all flexible conduit.

END OF SECTION 16452

© BNA Consulting, Inc.

SECTION 16510 - INTERIOR AND EXTERIOR BUILDING LIGHTING July 11, 2007

PART 1 – GENERAL

1.1 RELATED DOCUMENTS:

A. Drawings and general provisions of Contract, including General and Supplementary Conditions and Division-1 Specification sections, apply to work of this section.

B. Division-16 Basic Materials and Methods sections apply to work specified in this section.

1.2 DESCRIPTION OF WORK:

A. Types of lighting fixtures in this section are indicated by schedule and include the following:

1. High-Intensity-Discharge (HID)
2. Fluorescent
3. Incandescent/Halogen
4. LED (Light Emitting Diode)

1.3 QUALITY ASSURANCE:

A. Comply with NEC, NEMA and ANSI 132,1 as applicable to installation and construction of lighting fixtures. Comply with NEC 410-65C for all recessed incandescent light fixtures. Provide lighting fixtures which have been UL-listed and labeled.

1.4 SUBMITTALS:

A. PRODUCT DATA:

1. Submit manufacturer's data on interior and exterior building lighting fixtures.

B. SHOP DRAWINGS:

1. Submit dimensioned drawings of lighting fixtures. Submit fixture shop drawings in booklet form with separate sheet for each fixture, assembled in luminaire "type" alphabetical order, with proposed fixture and accessories clearly indicated on each sheet. Submit all available standard color samples with the shop drawings. If standard colors are not acceptable, a color sample will be provided to the fixture manufacturer. Return of the shop drawings will be delayed until color samples are provided. Submit ballast manufacturer cut sheets. Submit a list of all lamps used on all projects.

PART 2 – PRODUCTS

2.1 ACCEPTABLE MANUFACTURERS:

A. Subject to compliance with requirements, provide products of one of the following (for each type of fixture):

1. HID MAGNETIC BALLASTS:

a. Advance Transformer Co.
b. Universal Lighting Technologies Co.
c. Venture Lighting International

© BNA Consulting, Inc.

2. INCANDESCENT AND FLUORESCENT LAMPS:

a. General Electric Co.
b. Osram Sylvania
c. Phillips Lighting Corp.

3. HID LAMPS:

a. General Electric Co.
b. Osram Sylvania
c. Phillips Lighting Corp.
d. Venture Lighting International

2.2 INTERIOR AND EXTERIOR LIGHTING FIXTURES:

A. GENERAL:

1. Provide lighting fixtures, of sizes, types and ratings indicated complete with, but not necessarily limited to, housings, lamps, lamp holders, reflectors, ballasts, starters, and wiring. Label each fixture with manufacturer's name and catalog number. Provide all enclosed fixtures with positive latch mechanisms; spring tension clips not acceptable. Provide all exterior fixtures with damp or wet location label as required by application.

B. SUPPORT REQUIREMENTS:

1. Provide all pendant and stem hung fixtures with flexible ball joint hangers at all points of support. Equip hooks used to hang fixtures with safety latches. Provide all detachable fixture parts, luminous ceiling accessories, louvers, diffusers, lenses, and reflectors with locking catches, screws, safety chain, or safety cable.

2. Comply with manufacturer's written recommendations for all lamp ballast combinations.

3. Equip outdoor fixtures with low temperature starting ballasts.

C. BALLAST FUSING:

1. Provided in-line fusing for all fluorescent and HID ballasts. For fluorescent ballasts, provide GLR fuses and HLR -in-line fuse holders for each ballast. For HID fixtures provide KTK fuses and HPF fuse holders. Size fuses per ballast manufacturer's recommendation.

a. Comply with manufacturer's written recommendations for all lamp ballast combinations.
b. Equip outdoor fixtures with low temperature starting ballasts.

D. FLUORESCENT LAMP BALLASTS: - (ELECTRONIC):

1. Provide rapid start, fluorescent programmable start lamp ballasts capable of operating lamp types indicated, with power factor(ratio of actual power to apparent power) above 95%, ballast factor of .71, and operating with audible noise level lower than the quietest C.B.M. certified ballast for the same application, listed as class A. Provide ballasts which comply with applicable state, federal, and industry standards and:

© BNA Consulting, Inc.

a. Are UL listed,
b. Comply with FCC requirements governing electromagnetic and radio frequency interference.
c. Comply with IEEE standards for line voltage transient protection, and ANSI C.62.41 for location director A3 in the normal mode and location category A1 in the common mode.
d. Comply with ANSI and IEEE standards for harmonic distortion

2. Light output shall not vary by more than 1% over a plus or minus 10% variation in line voltage, and shall not vary more than 5% of light output of equivalent C.B.M. certified ballast. See drawings and schedules for input voltage requirements. Ballasts shall consistently start and operate lamps from a supply line voltage of plus or minus 10% from nominal line voltage.

3. Provide ballasts which operate at a frequency above 20K hz from an input frequency of 60 hz; have an efficacy factor (relative light output per watt consumed) at least 10% above the C.B.M. certified electromagnetic system for the same application; and have a lamp crest factor (ratio of peak to R.M.S. lamp current) of 1.7 or less. Ballasts shall have a total current harmonic distortion of less than 10%.

4. All T5 and Compact electronic ballasts shall be programmed rapid start for maximum lamp life on shorter start cycles. Filament voltage shall be applied prior to the application of open circuit voltage to allow adequate heating of the filaments and then open circuit voltage is applied to start the lamps. Ballasts shall provide for a minimum lamp starting temperature of 0 degrees F. T8 ballasts shall be rapid start unless specified on the fixture schedule otherwise.

5. Ballasts for lamps of T5, T4, and T2 diameter shall contain end-of-life sensing circuitry to prevent lamp, lamp base, or socket damage at end-of-life.

6. Ballast manufacturer shall warrant ballasts for T8 and T5 lamps to be free from defects in material or workmanship for at least 5 years from date of manufacture. Ballasts for T4 and smaller shall be 3 years. Contractor shall provide warrantee in accordance with other sections of this specification. Warranty shall include an allowance for nominal replacement labor and replacement of defective product.

7. Comply with manufacturer's written recommendations for all lamp ballast combinations. Provide electronic ballasts of one of the following:

a. Motorola
b. Advance Transformer Company
c. Howard Industries
d. Osram Sylvania
e. Universal Lighting Technologies Co.

8. CBM LABELS:

a. Provide fluorescent-lamp ballasts which comply with Certified Ballast Manufacturers Association standards and carry the CBM label.

E. FLUORESCENT LAMPS:

1. Equip interior fluorescent fixtures with full light output, T8 lamps where available

© BNA Consulting, Inc.

as standard products. Where applicable, equip fixtures with lamps as follows:

4' T8	3150	Initial Lumens, average life of 24,000 hours.

a. Sylvania Octron
b. General Electric
c. Phillips.

2. Provide fluorescent lamps with low levels of mercury, capable of acceptance of the Environmental Protection Agency (EPA) through the TCLP (Toxic Characteristic Leaching Procedure).

F. HIGH-INTENSITY-DISCHARGE-LAMP BALLASTS:

1. Provide HID ballasts, of ratings, types and makes as recommended by lamp manufacturer, which properly match lamps to power line by providing appropriate voltage and impedances for which lamps are designed. Equip exterior fixtures with low temperature starting ballasts. Provide high power factor, or power factor improved ballasts.

G. HID LAMPS:

1. Equip fixtures with HID lamps as specified. Provide coordinated lamp ballast combination to ensure full light output (rated lumens) of lamp. Where lamp manufacturer recommends operation of lamp in enclosed fixtures, provide suitable enclosure for fixtures specified. Include detailed drawing of enclosure with shop drawing submittal.

H. DIFFUSERS:

1. Where plastic diffusers are specified, provide 100 percent virgin acrylic compound; minimum thickness, .125 inches.

PART 3 - EXECUTION

3.1 INSTALLATION OF LIGHTING FIXTURES

A. Install lighting fixtures at locations and heights as indicated, in accordance with fixture manufacturer's written instructions, applicable requirements of NEC, NECA's "Standards of Installation", NEMA standards, and with recognized industry practices to ensure that lighting fixtures fulfill requirements.

B. Coordinate with other work as appropriate to properly interface installation of lighting fixtures with other work. Consult architectural reflected ceiling plan for exact location of all lighting fixtures.

C. Provide all necessary supports, brackets, and miscellaneous equipment for mounting of fixtures. Support all ceiling mounted fixtures from the building structure; independent of the ceiling system, unless noted. Support each recessed fixture (fluorescent incandescent, and/or HID) from the building structure with #12 ga. steel wire attached to each corner (in addition to supports normally provided for attachment to the ceiling system). Provide backing supports above (or behind) sheetrock, plaster and similar ceiling and wall materials. Support surface mounted ceiling fixtures from channel. Support ceiling mounted outlet boxes independent of the raceway system, and capable of supporting 200 pounds. Feed each recessed fixture directly from an outlet box with flex conduit as required; do not loop from fixture to fixture. See plans for additional details.

© BNA Consulting, Inc.

D. Provide each lay-in light fixture with at least 36" (Not to exceed 72") of 3/8" steel flexible conduit.

E. Coordinate lighting in mechanical room with duct and equipment locations.

F. Provide gypsum board protection as required, (acceptable to fire official having jurisdiction) to insure fire rating of each ceiling in which fixtures are installed.

G. COORDINATION MEETINGS:

1. Meet at least twice with the ceiling installer. Hold first meeting before submittal of shop drawings to coordinate each light fixture mounting condition with ceiling type. During second meeting, coordinate fixture layout in each area.

2. Meet at least once with the mechanical installer prior to fabrication and installation of duct work. Coordinate depth and location of all fixtures and duct work in all areas.

H. ADJUST AND CLEAN:

1. Clean lighting fixtures of dirt and debris upon completion of installation.

2. Protect installed fixtures from damage during remainder of construction period. Repair all nicks and scratches to appearance of original finish.

I. SPARE PARTS:

1. Provide a spare set of diffusers (acrylic and/or glass only) for each fixture type and one for each additional 10 fixtures of each type; not to exceed 10 spares for any single fixture type.
2. In addition, furnish stock of replacement lamps amounting to 15 percent (but not less than one lamp) of each type and size used. Deliver replacement stock as directed to Owner's storage space.

3.2 FIELD QUALITY CONTROL:

A. Upon completion of installation of lighting fixtures, and after building circuitry has been energized, apply electrical energy to demonstrate capability and compliance with requirements.

B. Where possible, correct malfunctioning units at site, then retest to demonstrate compliance; otherwise remove and replace with new units, and proceed with retesting.

C. At the time of Substantial Completion, replace lamps in interior lighting fixtures which are observed to be noticeably dimmed after the Contractor's use and testing, as judged by Architect/Engineer.

D. GROUNDING:

1. Provide equipment grounding connections for each lighting fixture.

END OF SECTION 16510

© BNA Consulting, Inc.

SECTION 16560 - LIGHTING CONTROL EQUIPMENT July 11, 2007

PART 1 - GENERAL

1.1 RELATED DOCUMENTS:

A. Drawings and general provisions of Contract, including General and Supplementary Conditions and Division-1 specification sections, apply to work of this section.

B. Division-16 Basic Materials and Methods sections apply to work specified in this section.

1.2 DESCRIPTION OF WORK:

A. Extent of lighting control equipment work is indicated by drawings and schedules, and is hereby defined to include, but not by way of limitation, lighting control panels, control stations and other user interface devices, wiring and ancillary equipment.

B. Type of lighting control equipment specified in this section includes the following:

1. Programmable Relay Panels
2. Over-ride switch stations

C. Requirements are indicated elsewhere in these specifications for work including, but not limited to, raceways, and electrical boxes and fittings, required for installation of lighting control equipment; not work of this section.

1.3 QUALITY ASSURANCE:

A. Manufacturers: Firms regularly engaged in manufacture of lighting control equipment and ancillary equipment, of types and capacities required, whose products have been in satisfactory use in similar service for not less than 5 years. To insure a uniform installation and single responsibility, all switching and dimming equipment described herein shall be supplied by a single manufacturer.

B. Installer: Qualified with at least 3 years of successful installation experience on projects with lighting control equipment installation work similar to that required for project.

C. NEC Compliance: Comply with applicable portions of NEMA standards pertaining to types of electrical equipment enclosures.

D. Codes and Standards: Provide units, which meet the requirements of I.E.E.E. Std. #587-1980 and IEEE Std. 2000.1-1998.

E. Independent Testing Laboratory: Provide units which have been tested and listed under UL 916 Energy Management Equipment Standards.

1.4 SUBMITTALS:

A. Product Data: Manufacturer's published catalog data sheets for all equipment and components of lighting control system.

B. Shop Drawings: Submit detailed drawings and documentation of lighting control components and interconnection including, but not necessarily limited to:

© BNA Consulting, Inc.

1. Electronic Controllers.
2. Control Stations.
3. Photo Sensors.
4. One-line schematic diagram with wire type details.
5. Network wiring details.
6. Lighting control panel load schedule.
7. Input and output wiring details.
8. Accurately scaled equipment layouts, wires/cables routing and connections to control wiring and electrical power feeders.

PART 2 PRODUCTS

2.1 ACCEPTABLE MANUFACTURERS:

A. Manufacturer: Subject to compliance with requirements, provide lighting control equipment of one of the following:

1. Total Lighting Control – GE
2. Lighting Control Solutions – Watt Stopper
3. Synergy Lighting Control – Lithonia Lighting
4. PCI – Lighting Control Systems

2.2 SYSTEM DESCRIPTION:

A. The lighting control system shall provide seamless control and monitoring of all lighting included in the scope of work regardless of whether it is relay switched or dimmed.

B. Low voltage switches and photocells shall be mounted in the interior spaces. Low voltage wiring from the switches and sensors to the relay panel shall be Class 2 or Class 2P (plenum rated) as required by the National Electric Code (NEC) and local standards. Each low voltage wire shall be labeled with the relay number (1-48) at each switch or sensor. Use only properly color coded, stranded #20 AWG (or as required by manufacturer) wire. All relays and switches shall be tested after installation to confirm proper operation and the loads recorded on the directory card in each panel.

2.3 EQUIPMENT:

A. Enclosure: Shall be NEMA 1 rated, code gauge steel cabinet. Enclosures and contents shall be designed to operate in interior spaces with temperatures of 32° - 104° F (0° - 40°C) and, 0-90% non-condensing humidity. Enclosure shall be available with optional recessed mounting hardware. See drawings for mounting requirements and refer to schedules on drawings for sizes.

B. Interior: Bracket and circuit board back plane with pre-mounted relays. Interiors shall be sized to accept relays and will provide true on/off indication of relay status through leds mounted on the circuit boards. Each relay shall be capable of direct on/off control by a low voltage switch or occupancy sensor. Relays shall be momentary – pulsed mechanically latching contractors rated at 20 amps, 120-277 vac. They shall attach to the interior by a single plug-in connector.

C. Power Supply: The enclosure shall be supplied with multi-tapped transformer and shall not require specification of voltage for each control location. Provide dedicated power feed to each enclosure. Transformer shall be 24 vac secondary to include internal overcurrent protection with automatic reset and metal oxide varistor

© BNA Consulting, Inc.

protection against power line spikes.

D. Cover: Provide surface cover with captive screws in hinged, lockable configuration. A wiring schedule directory card shall be affixed to the cover's back to allow identification of circuits/ relays/ loads controlled if the door is open or the cover is off. Schedules must be typed and related to final room names and numbers (not bid document room names and numbers), no exceptions.

E. System Controller: The system controller shall consist of the user interface panel (UIP) and system control electronics. The system controller shall plug-into the enclosure. Do not install system controller into the enclosure until after rough-in phase of installation is complete.

F. Indoor Controller:

1. Provide master on/off control of a relay group while still allowing individual relays to be overridden by their local switch.
2. Two independent switch input channels shall accept any 2 or 3 wire switch.
3. One master input to control all connected relays on on/off.
4. Occupied/ Unoccupied dry contact for interface to schedule control options for manual on/auto on, user-adjustable time delay for overrides and blink warn before off.

G. Outdoor Controller:

1. Works in combination with a single weatherproof photosensor to be powered via low voltage wiring from the panel.
2. Control unit provides occupied/ unoccupied dry contact for interface to schedule control, plus 3 separate intelligent outputs for on/off control of security, parking, and signage lighting. Each output shall;

    a. Have corresponding user-selectable foot candle set point with an additional selectable egress relay for parking.
    b. Is capable of driving up to 3 relays wired in parallel, or 1 smart input to another control unit.
    c. Is controlled using smart sceneries designed specifically for the three types of lighting.

H. Switches/Plates:

1. Provide specification grade standard, pilot or locator configuration momentary pushbutton type switches as shown on the plans for overriding the relays. Provide in color to match Wiring Devices (Section 16140).
2. Provide industrial grade non-pilot light toggle switches as shown on the plans for overriding the relays. Provide in color to match Wiring Devices (Section 16140).
3. Provide matched specification grade plates to match plates in Wiring Devices (Section 16140).

I. Low Voltage Wire:

1. All low voltage wiring shall be color coded to match the relays, switches and sensors. Wire shall be UL listed as conforming to Class 2 or Class 2P wire requirements.
2. Switch colors as follows:

    a. Red/Black/White
    b. Red/Black/White/Yellow (Pilot)

© BNA Consulting, Inc.

c. Red/Black/White/Blue (Locator)

PART 3 - EXECUTION:

3.1 INSTALLATION OF LIGHTING CONTROL EQUIPMENT:

A. Install lighting control system components and ancillary equipment as indicated, in accordance with equipment manufacturers written instructions, and with recognized industry practices, to ensure that lighting control equipment complies with requirements.

B. Comply with Requirements of NEC, and applicable portions of NECA's 'Standard of Installation' pertaining to general electrical installation practices.

C. Coordinate with other electrical work, including raceways, electrical boxes and fittings, as necessary to interface installation of lighting control equipment work with other work.

D. The contractor shall provide accurate 'As Built' drawings to the owner indicating the correct and latest program in each controller. The 'As Built' drawings shall clearly indicate the lighting control panel identification. The load controlled by each relay, and the device connected to each input.

3.2 FIELD QUALITY CONTROL:

A. Upon completion of installation and after circuitry has been energized, demonstrate capability and compliance of system with requirements.

B. Where possible, correct malfunctioning units at site, then retest to demonstrate compliance; otherwise, remove and replace with new units, and proceed with retesting.

3.3 PRODUCT SUPPORT AND SERVICES:

A. System Start-Up: Provide a factory authorized technician to verify the installation, test the system, and train the owner on proper operation and maintenance of the system. Before requesting start-up services, the installing contractor shall verify that:

1. The control system has been fully installed in accordance with manufacturer's installation instructions.
2. Low voltage wiring for overrides and sensors in completed.
3. Accurate 'as-built' load schedules have been prepared for each lighting control panel.
4. Proper notification of the impending start-up has been provided to the owner's representative.

B. Factory support: Factory telephone support shall be available at no cost to the owner during the warranty period. Factory assistance shall consist of assistance in solving programming or other application issues pertaining to the control equipment. The factory shall provide a toll free number for technical support.

© BNA Consulting, Inc.

3.4 WARRANTY:

A. Manufacturer shall provide a one (1) year limited warranty on lighting control system. A ten (10) year limited warranty shall be provided on the lighting control relays.

END OF SECTION 16560

© BNA Consulting, Inc.

SECTION 16561 – OCCUPANCY SENSORS July 11, 2007

PART 1 – GENERAL

1.1 RELATED DOCUMENTS:

A. Drawings and general provisions of Contract, including General and Supplementary Conditions and Division-1 Specification sections, apply to work of this section.

B. This section is a Division-16 Basic Materials and Methods section, and is part of each Division-16 section making reference to wiring devices specified herein.

1.2 DESCRIPTION OF WORK:

A. The extent of occupancy sensor work is indicated by drawings and schedules.

B. Types of occupancy sensors in this section include the following:

1. Ultrasonic Ceiling Sensors
2. Passive Infrared Ceiling and Wall Mount Sensors
3. Control Pack
4. Passive Infrared Wall Switch
5. Ultrasonic Wall Switch
6. Ultrasonic Ceiling Sensor with Daylight Control
7. Dimming Ballast Ambient Light Controller
8. Dual Technology Ceiling Sensor w/ Control Pack

1.3 QUALITY ASSURANCE:

A. Comply with NEC and NEMA standards as applicable to construction and installation of occupancy sensors. Provide occupancy sensors which have been UL listed and labeled.

B. All sensors shall be capable of operating normally with electronic ballasts, PL lamp systems, motor loads and any other passive infrared or microwave systems.

1.4 SUBMITTALS:

A. PRODUCT DATA: Submit manufacturer's data on occupancy sensors, control modules, wiring diagrams, interconnection diagrams and any related accessories.

B. Submit scaled drawings with lighting fixtures shown clearly marked by manufacturer showing proper product, location and orientation of each sensor.

PART 2 - PRODUCTS

2.1 MANUFACTURER: The manufacturer shall have a minimum of five years of experience in the sensor and lighting control industry. Sensors and related relays shall be compatible with the specific lighting types controlled. All sensors shall be of the same manufacturer, mixing brands of sensors is not acceptable.

A. ULTRASONIC (MICROPHONICS) CEILING SENSORS: Where units are indicated, provide a sensor that meets the following minimum requirements:

1. The sensor shall be Class 2, low voltage device capable of mounting to a wall or ceiling as required for optimum coverage.
2. Sensor shall incorporate one transmitter for each receiver oriented in the same direction.

© BNA Consulting, Inc.

3. Sensor shall be capable of being networked with additional units to achieve adequate coverage.
4. Sensor shall utilize a dry contact relay for control of lighting relay.
5. Sensor shall have adjustable sensitivity from 0% to 100% for coverage pattern.
6. Sensor shall have time out adjustment from 15 seconds to 32 minutes. Timer shall use a timer chip and be linear in adjustment.
7. Sensitivity and timer controls shall be accessible on the front of the sensor, but recessed to inhibit tampering.
8. Sensor shall incorporate an accessible, but recessed, ON override device.
9. Sensor shall be easily mounted to a suspended ceiling tile without using large holes, or to a standard 4 x 4 box.
10. Sensor shall be available with more than one pair of transmitters/receivers to achieve coverage required.
11. Sensor shall incorporate a real time motion indicator visible from the front of the unit.
12. Transmitters/receivers shall be protected from damage.
13. Subject to compliance with the above requirements, provide models of one of the following:

    a. Hubbell-ATU Series
    b. Sensor Switch-CM Series
    c. Wattstopper-WT Series
    d. Mytech – Omni- US Series
    e. Lithonia – LMTO Series
    f. Novitas – 01-160/100/110/180/190
    g. Leviton – OSC UOW Series

B. PASSIVE INFRARED CEILING AND WALL MOUNT SENSORS: Where units are indicated, provide a sensor that meets the following minimum requirements:

1. The sensor shall be Class 2, low voltage device capable of mounting to a wall or ceiling as required for optimum coverage.
2. Sensor shall utilize a dual element pyroelectric detector and a multi-segmented lens to achieve adequate coverage.
3. Sensor shall be capable of being networked with additional units to achieve adequate coverage.
4. Sensor shall utilize a dry contact relay for control of lighting relay.
5. Sensor shall have time out adjustment from 8 seconds to 32 minutes. Timer shall be linear in adjustment.
6. Sensor shall incorporate a motion indicator behind the lens array.
7. Ceiling mount sensor shall have a 360 degree field of view with a 34 foot diameter coverage pattern when mounted at a height of twelve feet.
8. Ceiling mount sensor shall protrude no more than 1.5 inches when surface mounted. Sensor shall be capable or recessed mounting without impairing field of view.
9. Wall mount sensor shall have a 117 degree field of view and cover up 1600 square feet when mounted at a height of eight feet.
10. Wall mount sensor shall have three adjustment positions for range control.
11. Subject to compliance with the above requirements, provide models of one of the following:

    a. Hubbell-ATP Series
    b. Sensor Switch-CM Series
    c. Wattstopper-CX Series
    d. Mytech-Omni-IR/LO-IR Series
    e. Lithonia - LIRO Series

© BNA Consulting, Inc.

f. Novitas – 01-340/500
g. Leviton – OSWWV/IOW Series

C. PASSIVE INFRARED WALL SWITCH: Where units are indicated provide a sensor that meets the following minimum requirements:

1. Sensor shall utilize a dual element pyroelectric detector behind a lens to detect the motion of infrared energy emitted by the human.
2. Lens shall be of the multi-element type that divides the field of view into forty zones of detection.
3. Sensor shall fit a single gang switch box and utilize a decorator cover plate.
4. Sensor shall not protrude more than 0.75 inches from switch box.
5. Sensor shall operate at 120VAC and 277VAC.
6. Sensor shall have a time-out delay, adjustable from 1 minute to 30 minutes.
7. Sensor shall have an Automatic/OFF switch on front of unit.
8. Sensor shall incorporate a daylight control. The adjustable ambient light control shall be adjustable from 20 to 420 foot-candles.
9. Sensor shall have a 170 degree field of view. Detection beam shall be horizontal.
10. Sensor shall use a dry contact relay to control the lighting load.
11. Sensor shall be rated for 0 to 600 watts at 120VAC and 277VAC and adapt automatically to the operating voltage.
12. Subject to compliance with the above requirements, provide models of one of the following:

    a. Hubbell-WS Series
    b. Sensor Switch-WSD-P Series
    c. Wattstopper-WS Series
    d. Mytech-LP Series
    e. Lithonia - LIRW Series
    f. Novitas – 01-400/DL401
    g. Leviton – ODS 10 – ID Series

D. ULTRASONIC (MICROPHONICS) WALL SWITCH: Where units are indicated provide a sensor that meets the following minimum requirements:

1. Sensor shall utilize active ultrasonics to detect motion.
2. Sensor shall have two ultrasonic transmitters and one receiver.
3. Sensor shall incorporate an inrush current limiter circuit to protect the relay contacts.
4. Sensor shall utilize a dry relay contact for control of the lighting load.
5. Sensor shall have a time out adjustment from 8 seconds to 32 minutes. Timer shall be linear and controlled by a timer chip.
6. Sensor shall have automatic sensitivity adjustment and be microprocessor controlled.
7. Sensor shall have automatic gain setback to reduce the sensitivity after the sensor has turned off the lighting to prevent false tripping.
8. Sensor shall have transmitter control adjustments to prevent false tripping from hallway traffic.
9. Sensor shall have a 180 degree field of view, coverage up to 800 square feet, and shall detect six inches of hand movement towards the sensor at a distance of 22 feet. Sensor shall detect body motion towards thesensor at a distance of 32 feet.
10. Sensor shall operate at 120VAC and 277VAC.
11. Sensor shall be rated for 40 to 740 watts at 120VAC and 90 to 1400 watts at 277VAC.
12. Sensor shall be automatic on and shall have an automatic to off override switch

© BNA Consulting, Inc.

on the unit. Switch shall be an air gap switch to disconnect power to the lighting load.

13. Sensor shall have a real time motion indicator on the front of the unit.
14. Sensor shall mount to a single or double gang switch box.
15. Subject to compliance with the above requirements, provide models of one of the following:

    a. Hubbell-ATU 1277 Series
    b. Sensorswitch-WSD-PDT-P Series
    c. Mytech LH-US Series
    d. Novitas – 01-250
    e. Leviton – OSSMT-MD Series

E. DUAL TECHNOLOGY CEILING SENSOR: Where units are indicated, provide a sensor that meets the following minimum requirements:

1. Sensor shall incorporate ultrasonic (microphonics) and infrared technologies in a single unit.
2. Sensor shall be Class 2, low voltage; capable of mounting in the ceiling for maximum coverage.
3. Sensor shall use internal microprocessor for motion signal analysis and automatic self-adjustment.
4. Sensor shall have automatic self-adjustment algorithm which adjusts timer and sensitivity settings to maximize performance and minimize energy usage.
5. Sensor shall have manual time-out adjustment from 8 minutes to 32 minutes and automatic time out from 8 minutes to 100 minutes.
6. Sensor shall have test time-out setting of 8 seconds, with automatic return to 8 minutes after one hour if sensor is left in test mode.
7. Sensor's microprocessor shall automatically extend timer by 1 hour in response to recognition to false off condition. After 5 hours, sensor reduces extended time by 30 minutes and continues to reduce by 30 minute increments over the next few days.
8. Sensor's microprocessor shall automatically reduce either PIR or ultrasonic sensitivity in response to false on condition.
9. Sensor microprocessor will automatically monitor PIR background threshold signal level and makes corresponding sensitivity adjustments automatically.
10. Sensor microprocessor algorithm shall incorporate automatic adaptation to continuous airflow.
11. For airflow which is so intense as to mask motion, sensor shall flash indicator LED code to indicate excessive airflow.
12. Sensor's microprocessor shall use a four week learning period and develop a circadian calendar.
13. An internal 24 hour 7 day clock establishes what periods the room is typically occupied, biasing sensor to keep lights on while normally occupied and off when normally unoccupied.
14. Sensor shall have selection settings for the following dual technology schemes:

    a. High Sensitivity and High Confidence (miser mode)

15. Sensor shall be available with either 180 degrees or 360 degrees coverage pattern.
16. Infrared lens shall have 360 degree field of view. Two types of lens shall be available, standard and extra dense.
17. Sensor shall have a variety of mask inserts for PIR coverage rejection to prevent false tripping.
18. Transducers shall be protected from tampering.

© BNA Consulting, Inc.

19. Sensor shall have manual adjustments for timer and sensitivities and override switches to force manual adjustment mode.
20. Sensor shall have adjustable sensitivity from 0% to 100% for both ultrasonic and infrared.
21. Controls shall be behind cover to resist tampering. All adjustments shall be accessible from the front of the sensor.
22. Sensor shall be available with a photocell adjustment from 20 to 3,000 Lux.
23. Sensor shall provide internal operating status and settings confirmation via LED motion lamp indicator.
24. Sensor shall have two (if 180 degree) or three (if 360 degree) real time LED motion indicators visible from the front of the unit: Red = infrared; green = ultrasonic.
25. Subject to compliance with the above requirements, provide models of one of the following:

    a. Hubbell-ATD Series
    b. Sensor Switch-CM-PDT Series
    c. Wattstopper-DT Series
    d. Mytech-Omni-DT Series
    e. Lithonia - LMTO Series
    f. Novitas – 01-300/310
    g. Leviton – OSC MOW Series

F. PASSIVE INFRARED CEILING SENSOR: Where units are indicated, provide a sensor that meets the following minimum requirements:

1. Sensor shall incorporate infrared sensing technology.
2. Sensor shall be Class 2, low voltage; capable of mounting in the ceiling for maximum coverage.
3. Sensor shall use internal microprocessor for signal analysis and automatic self-adjustment.
4. Sensor shall have automatic self-adjustment algorithm which adjusts timer and sensitivity settings to maximize performance and minimize energy usage.
5. Sensor shall have manual time-out adjustment from 8 minutes to 32 minutes and automatic time-out from 8 minutes to 100 minutes.
6. Sensor shall have test time-out setting of 8 seconds, with automatic return to 8 minutes after one hour if sensor is left in test mode.
7. Sensor microprocessor shall automatically extend timer by 1 hour in response to recognition of false off condition.
8. After 5 hours, sensor reduces extended time by 30 minutes and continues to reduce by 30 minute increments over the next few days.
9. Sensor's microprocessor will automatically monitor PIR background threshold signal level and makes corresponding sensitivity adjustments automatically.
10. Sensor's microprocessor shall use a four week learning period and develop a circadian calendar. An internal 24 hour 7 day clock establishes what periods the room is typically occupied, biasing sensor to keep lights on.
11. Sensor shall be available with a 360 degree coverage pattern. Infrared lens shall have 360 degree field of view. Two types of lens shall be available, standard and extra dense.
12. Sensor shall have mask inserts for PIR coverage rejection.
13. Sensor shall have manual adjustments for timer and sensitivities and override switches to force manual adjustment mode.
14. Sensor shall have adjustable sensitivity from 0% to 100% for infrared sensor.
15. Controls shall be behind cover to resist tampering. All adjustments shall be accessible from the front of the sensor.
16. Sensor shall be available with a photocell adjustment from 20 to 3,000 Lux.

© BNA Consulting, Inc.

17. Sensor shall have one real time LED motion indicator visible from the front of the unit: Red = infrared.
18. Subject to compliance with the above requirements, provide models of one of the following:

    a. Hubbell-ATP Series
    b. Sensor Switch-CM-9 Series
    c. Wattstopper-WPIR CX Series
    d. Mytech-Omni-IR
    e. Lithonia - LIRO Series
    f. Novitas – 01-340/500
    g. Leviton – OSC IOW Series

G. ULTRASONIC (MICROPHONICS) CEILING SENSOR: Where units indicated, provide a sensor that meets the following minimum requirements:

1. Sensor shall incorporate ultrasonic technology.
2. Sensor shall be Class 2, low voltage; capable of mounting in the ceiling for maximum coverage.
3. Sensor shall use microprocessor for signal analysis and automatic self-adjustment.
4. Sensor shall have automatic self-adjustment algorithm which adjusts timer and sensitivity settings to maximize performance and minimize energy usage.
5. Sensor shall have manual time-out adjustment from 8 minutes to 32 minutes and automatic time-out from 8 minutes to 100 minutes.
6. Sensor shall have test time-out setting of 8 seconds, with automatic return to 8 minutes after one hour if the sensor is left in test mode.
7. Sensor's microprocessor shall automatically extend timer by 1 hour response to recognition of false off condition. After 5 hours, sensor reduces extended time by 30 minutes and continues to reduce by 30 minute increments over the next few days.
8. Sensor's microprocessor shall automatically reduce ultrasonic sensitivity in response to a false off condition.
9. Sensor microprocessor algorithm shall incorporate automatic adaptation to continuous airflow.
10. For airflow which is so intense as to mask motion, sensor shall flash indicator LED code to indicate excessive airflow.
11. Sensor's microprocessor shall use a four week learning period and develop a circadian calendar. An internal 24 hour 7 day clock establishes what periods the room is typically occupied biasing sensor to keep lights on while normally occupied and off when normally unoccupied.
12. Sensor shall be available with either 180 degree or 360 degree coverage pattern.
13. Transducers shall be protected from tampering.
14. Sensor shall have manual adjustments for timer and sensitivities and override switches to force manual adjustment mode.
15. Sensor shall have adjustable sensitivity from 0% to 100%.
16. Controls shall be behind cover to resist tampering. All adjustments shall be accessible from the front of the sensor.
17. Sensor shall be available with photocell adjustment from 20 to 3,000 Lux.
18. Sensor shall have one (if 180 degrees) or two (if 360 degrees) real time LED motion indicators visible from the front of the unit: Green = ultrasonic.
19. Sensor shall provide internal operating status and settings confirmation via LED motion lamp indicator.
20. Subject to compliance with the above requirements, provide models of one of the following:

© BNA Consulting, Inc.

a. Hubbell-ATU Series
b. Sensor Switch-CM-PDT Series
c. Wattstopper-WT Series
d. Mytech-Omni-US Series
e. Lithonia - LUSO Series
f. Novitas – 01-160/100/110/180/190
g. Leviton – OSC UOW Series

H. 24 VDC POWER/CONTROL PACK: Where units are indicated, provide a power/control pack that meets the following minimum requirements:

1. Control module shall consist of a DC power supply and a dry contact relay for switching a lighting load.
2. Control module shall be available in versions to accept 120, and 277 VAC line voltages.
3. Output shall be 24VDC nominal, and shall be inherently safe, low voltage, limited power output (Class 2).
4. Output shall supply 100mA current, in addition to current consumed internally to operate internal relay.
5. Relay shall utilize normally open, silver alloy dry contacts, and shall be rated for a 20A ballast load at 120V and 277V.
6. Relay function shall not require more than 5 mA control current to operate.
7. Control module shall have line voltage wiring, consisting of input voltage and relay contact connections, exiting from one end, and low voltage DC connections, consisting of ground, power, and control wires, exiting from the other end.
8. Control module shall be sized to fit inside a standard 4” x 4” junction box.
9. Control module shall be equipped with a 1/2” EMT threaded male fitting on the line voltage end, such that it may be mounted to the outside of a junction box with the line voltage wiring internal to the box and the low voltage wiring external.
10. Control module shall be equipable with accessory 1/2” EMT threaded male fitting on the low voltage end, such that it may be mounted to the inside of a ballast cavity with the box and line voltage wiring internal to the cavity and the low voltage wiring external.
11. Slave module shall be available for switching additional circuits. Slave module has same construction and specifications as control module except without power supply function.
12. Subject to compliance with the above requirements, provide models of one of the following:

    a. Hubbell-CU Series
    b. Sensor Switch-PP-20 Series
    c. Wattstopper-BEP Series
    d. Mytech-MP Series
    e. Lithonia - LPCS Series
    f. Novitas – 13-051
    g. Leviton – OSC/OSA Series

PART 3 – EXECUTION

3.1 INSTALLATION OF LIGHTING CONTROL EQUIPMENT:

A. Install occupancy lighting control system components and ancillary equipment as indicated, in accordance with equipment manufacturer's written instructions, and with recognized industry practices, to ensure that lighting control equipment complies with requirements.

© BNA Consulting, Inc.

B. Comply with requirements of NEC, and applicable portions of NECA's "Standard of Installation" pertaining to general electrical installation practices.

C. Coordinate with other electrical work, including raceways, and electrical boxes and fittings, as necessary to interface installation of lighting control equipment work with other work.

D. Contractor shall be on site as required, to adjust lighting control units for proper operation.

E. Mount the switchpack in a standard 4" junction box or extension through a ½" KO in the cover plate. Refer to manufacturer supplied mounting instructions.

F. Provide 5 spare sensors for each type used on project.

3.2 FIELD QUALITY CONTROL:

A. Upon completion of installation and after circuitry has been energized, demonstrate capability and compliance of system with requirements.

B. Where possible, correct malfunctioning units at site, then retest to demonstrate compliance; otherwise, remove and replace with new units, and proceed with retesting.

C. Contractor shall visit the job site 3 months after the owner has taken occupancy and adjust any units not operating properly, otherwise remove and replace with new units.

3.3 MANUFACTURER AUTHORIZED PERSONNEL TRAINING:

A. Building Operating Personnel Training: Train Owner's building personnel in procedures for starting-up, testing and operating lighting control system equipment.

END OF SECTION 16561

© BNA Consulting, Inc.

SECTION 16721 - FIRE ALARM AND DETECTION SYSTEM July 11, 2007

PART 1 – GENERAL

1.1 RELATED DOCUMENTS:

A. Drawings and general provisions of Contract, including General and Supplementary Conditions and Division-1 Specification sections, apply to work of this section.

B. Division-16 Basic Materials and Methods sections apply to work specified in this section.

1.2 DESCRIPTION OF WORK:

A. Extent of fire alarm and detection systems work is indicated by drawings, schedules and as specified herein.

B. Comply with NEC as applicable to construction and installation of fire alarm and detection system components and accessories. Provide components and systems which are UL-listed and labeled for fire alarm. Provide fire alarm and detection systems and accessories which are FM approved. Comply with State and local requirements as applicable.

C. Comply with applicable provisions of current NFPA Standards 72A for Local Protective Signaling Systems, 72B Auxiliary Protective Signaling Systems, 72C Remote Station Protective Signaling Systems (as applicable), local building codes, and meet requirements of local authorities having jurisdiction.

1.3 SUBMITTALS:

A. PRODUCT DATA: Submit manufacturer's data on fire alarm and detection systems including, but not limited to, roughing-in diagrams and instructions for installation, operating and maintenance, suitable for inclusion in maintenance manuals.

B. SHOP DRAWINGS: Provide shop drawings showing equipment/device locations and connecting wiring of entire fire alarm and detection system. Include wiring diagrams and riser diagrams of panel. Provide dimensioned drawing of Fire Alarm Control Panel and Building Graphic.

C. CERTIFICATION: Submit a written statement to the Architect and the state and local Fire Marshal's Office that each device of the fire alarm system will be installed, inspected and tested in accordance with applicable requirements of NFPA Standard 72.

D. Provide to the Fire Marshall's office the following:

1. A complete set of shop drawings indicating:

   a. Location of all alarm-initiating and alarm-signaling devices.
   b. Point-to-point wiring diagrams for all alarm-initiating and alarm-signaling devices.

2. Wiring diagrams for:

   a. Alarm control panels.
   b. Auxiliary function relays and solenoids.
   c. Remote signaling equipment.
   d. Standby battery calculations, including voltage drop calculation.

© BNA Consulting, Inc.

3. A complete equipment list identifying:

   a. Type
   b. Model
   c. Manufacturer
   d. Manufacturer catalog data sheets
   e. UL Listing and/or FM approval showing compatibility of device with Fire Alarm Control Panel (FACP)

4. A complete zone list identifying all:

   a. Alarm-initiating and alarm-signaling devices.
   b. Remote signaling and auxiliary function zones.
   c. Specific devices associated with each zone.

E. Submit to State and Local Fire Marshall, a complete Certificate of Compliance

PART 2 – PRODUCTS

2.1 ACCEPTABLE MANUFACTURERS:

A. MANUFACTURER: Subject to compliance with requirements, provide fire alarm and detection systems compatible with the existing fire alarm system.

2.2 FIRE ALARM AND DETECTION SYSTEMS:

A. GENERAL: Provide an electrically operated, electrically supervised fire alarm system as described herein. Include control units, power supplies, alarm initiating and indicating devices, conduit, wire, fittings and accessories required to provide a complete operating system. Enclose entire system in raceway. Provide basic wiring materials which comply with Division 16, Basic Materials and Methods Sections for raceways, conductors, boxes, fittings, supports, etc. Minimum wire size to be #14 AWG copper.

B. SYSTEM TYPE: Analog addressable, non-coded. Either manual activation of a fire alarm station or activation of an automatic initiating device energizes all fire alarm signaling devices, sounding a non-coded alarm and providing device identification on an annunciator panel.

C. SYSTEM OPERATION: Provide system such that any manual station or automatic initiating device annunciates all alarm indicating units (bells, horns, buzzers, chimes, visual alarm lamps, etc.) continuously until the manual station or initiating device is restored to normal and the fire alarm control unit reset. Annunciate alarm signals by device at the control panel and all remote annunciators. Provide all conductors, raceway, equipment and labor to accomplish the following:

D. For fans which are not part of the smoke evacuation system, deactivate air supply and return fan units simultaneously by means of a supervised master fan shutdown relay with slave relays as required. Restart air units automatically after panel has been reset. Provide a bypass switch for master fan shut down relay for drill purposes, and indicate by a locked-in lamp that the circuit has been bypassed.

E. Selectively activate and/or deactivate fan units as required.

F. Release all magnetic door holders upon activation of an alarm from any device by use of

© BNA Consulting, Inc.

a master relay in the control panel.

G. Provide supervised circuits for the following:

1. Close dampers upon activation of an alarm from any device through the HVAC interface relays at the Fire Command Center.

H. Central Station Monitoring. Provide a UL listed fire control communicator in accordance with NFPA 71 with a minimum of two reporting zones to the central station. Provide a communicator with dual phone lines for central station reporting by using BFSK or pulsed single round fast format. Provide integral trouble annunciator. Provide with compatibility for automatic test reports every 24 hours. Provide system and components which comply with UL 2635 and UL 864.

I. Provide manual fire alarm stations in boiler rooms, and main administrative office. Provide external alarm horns sufficient to be heard in all parking areas.

J. Sprinkler Supervision. Provide a signal initiating and supervisory circuit to each PIV (post indicator) valve, and to each sprinkler riser and subdivision. Provide continuous alarm signal upon actuation of any water flow signal initiating device. Sound alarm until the condition has been corrected and the panel manually reset as required by UL864. Provide separate alarm zones for: (1) alarm zones from “waterflow alarms”, (2) alarm zones from “supervisory alarm” indicating sprinkler system trouble. Provide power to all alarm bells furnished under Division 15. Review final fire sprinkler drawings and coordinate for panel, flow and tamper switch locations.

K. Provide all required wiring from gas shut off valve to the hood suppression control panel. Make all connections to insure a properly operating system. Verify with Mechanical Contractor.

2.3 SCOPE OF THE WORK:

A. Provide all fire alarm devices.

B. Provide duct smoke detectors and fan relays at all fan units 2000 CFM and over. Shut down all supply and return fans upon a general alarm signal.

C. All initiating devices connected to the fire alarm control panel shall be analog addressable.

D. All wiring shall be in conduit (3/4" minimum). All conduit and connectors, shall be made of steel. All conduit runs shall form a complete loop from the fire alarm control panel.

E. Provide vandal resistant cages to protect horn/strobes, smoke and heat detectors as indicated and, in gyms whether shown or not. Securely fasten security cages as required. Provide backing and bracing as required to insure that attachment extends beyond the ceiling materials. Cages shall have two pieces, one backplate and one cover to attach to backplate.

2.4 MONITOR MODULE (FCI AMM-2):

A. Remote identification module devices shall be attached to any single normally open initiating device (heat detector, waterflow switch, duct detectors, sprinkler, tamper switches, kitchen hood, pull station, etc.). The modules shall supply addressing and status information to the Fire Alarm Control Panel through the dual loop module.

© BNA Consulting, Inc.

2.5 CONTROL POINT MODULE (FCI AOM):

A. The control point module shall be connected to the same loop as the initiating devices, and shall provide a relay output (Form "C" 2 Amp @ 24 VDC, resistive only).

B. This relay output shall be used to perform auxiliary functions.

C. When the AOM is activated, the red "ACTIVE" LED shall be on solid. Under normal conditions, the red "ON LINE" LED shall flash.

2.6 MANUAL FIRE ALARM STATION (FCI, MS-2, W/AMM-2):

A. Provide red enclosure, manual fire alarm stations with the following features:

1. Die-cast construction, for semi-flush mounting.
2. Addressable alarm type electrically compatible with system requirements.
3. Double Action
4. Break glass design requiring unit to be opened for resetting, and requiring resetting before closing. Provide one spare “glass” for each manual station. Key reset, keyed like fire control panel.

2.7 IONIZATION SMOKE DETECTORS (FCI ASD-I W/ADB-F BASE):

A. All ionization smoke detectors shall be capable of being replaced without disconnecting any wires or wire connectors from the base of the detector. Each detector shall be installed on a separate base. The detector base shall be capable of receiving a photoelectric, ionization, or electronic thermal detector. All ionization fire detectors shall be UL 268 listed. All detectors shall have (2) viewable LEDs to indicate the status of the device.

2.8 PHOTOELECTRIC DETECTORS (FCI ASD-P W/ADB-F BASE):

A. All photoelectric detectors shall be capable of being replaced without disconnecting any wires or wire connectors from the base of the detector. Each detector shall be installed on a separate base. The detector base shall be capable of receiving a photoelectric, ionization, or electronic thermal detector. All photoelectric detectors shall be UL 268 listed. All detectors shall have (2) viewable LEDs to indicate the status of the device.

2.9 DUCT FIRE DETECTORS (FCI DH500AC/DC WITH SAMPLING TUBE):

A. Provide ionization type with UL 268A listings. Each detector shall be equipped with a remote light. Each detector shall have (2) form "c" alarm contacts rated at 10 amps (at 120VAC).

2.10 THERMAL DETECTORS (FCI ATD WITH/ADB-F BASE):

A. Thermal detectors shall operate on the Rate-of-Rise principal. The detectors shall have a fixed temperature rating of 135 degrees Fahrenheit. Exception: in Boiler rooms, provide temperature rating of 200 degrees Fahrenheit.

1. The heat detector shall consist of a base and a head.
2. The base shall be capable of accepting either a smoke detector or a 135 (or 200) gegree heat detector.
3. The head shall automatically restore to its normal standby condition when the temperature returns to its normal range.

© BNA Consulting, Inc.

2.11 AUDIOVISUAL ALARM HORNS (FCI, HMF/STS SEMI-FLUSH MOUNTED OR EQUAL):

A. Provide audio-visual alarm horns with the following features:

1. Die cast or stamped steel construction, finished in red enamel, suitable for indoor or ourdoor application.
2. Capable of 90 db (UL rating) sound level at 10 feet.
3. Flush mounted
4. Integrally mounted flashing light unit, with Lexan lens with block letters “FIRE”, and minimum flash rate of ONE per second, and 110 candela minimum.
5. Electrically compatible with system requirements.
6. Horns shall sound the temporal pattern (code 3) until silenced.
7. Audiovisual alarm horns shall have the ability to silence horns while maintaining the strobe flash, until reset.
8. Mechanical horn mechanism only, electronic horns are not acceptable.
9. Maximum 24 horns per circuit, maximum 8 strobes per circuit.

B. Strobes shall be synchronized when there are three or more within sight and less than 55 feet of viewer.

2.12 STROBES (FCI Model STS, FLUSH MOUNT, WHITE):

A. Provide strobe with flashing light unit, with Lexan lens with block letters “FIRE”, and minimum flash rate of ONE per second, and high intensity 110 candela minimum. Strobes shall be synchronized when there are three or more within sight and less than 55 feet of viewer.

2.13 INITIATING MODULES:

A. Provide style "6" initiating modules capable of receiving and annunciating an alarm from any detector, even with a single fault condition on any initiating circuit.

B. Power all smoke detectors from the "Style 6" initiating loop wiring. For systems which power smoke detectors separately from the "Style 6" loop, provide monitoring for both the power source and the independent initiating wiring, so that complete trouble and alarm indication is achieved by loop. Provide capability to operate all smoke detectors, even with a single fault condition on the smoke detector power wiring. Provide one spare initiating circuit.

2.14 SIGNALING MODULES:

A. Provide signaling as required. Provide power adequate to sound all signaling devices concurrently. Provide supervised indicating circuits for polarized 24V D.C. alarm signaling devices. Provide 2 spare signaling circuits.

B. Each signal circuit shall have a separate disconnect switch for servicing the fire alarm system. Each and every indicating circuit shall have a distinct location description. Power supply shall be at fire alarm control panel. Remote power supplies and indicating circuits will not be acceptable.

2.15 SUPPLEMENTAL NOTIFICATION CIRCUITS (FCI SNAC-4):

A. Provide supplementary notification appliance circuit panel(s) as required. The ‘SNAC’ shall be capable of supplying up to four Class A, Style Z notification appliance circuits. The panel shall contain its own battery charger, regulated power supply, and shall be supervised for ground fault, overcurrent, open circuits and low battery conditions.

© BNA Consulting, Inc.

Ground fault, battery and circuit trouble conditions shall transmit a trouble signal to the main fire alarm control panel.

2.16 SYSTEM CONFIGURATION PROGRAMMING:

A. To help the owner in programming, system changes, and servicing, the fire alarm system shall have the following functions.

1. The FACP shall be capable of an auto-configuration, which via a password, all analog devices and panel modules are automatically programmed into the system. At this point the system will operate as a general alarm system without any other programming.
2. If any two devices are addressed the same, the LED's on both devices will light steady and the panel will read "extra address and the address number".
3. If any device is installed and not programmed into the system the LED will light steady and the panel will read the same as above.

2.17 BATTERIES/POWER SUPPLIES:

A. Verify that existing standby batteries are capable of operating fire alarm system for minimum of 24 hours, then operating all indicating units for at least five minutes. Locate batteries in fire alarm control unit, or in similar type enclosure located as directed. Provide all interconnecting wiring. Place batteries which vent hydrogen gas in separate enclosure. Provide additional battery capacity if needed to meet minimum requirements.

PART 3 – EXECUTION

3.1 GENERAL REQUIREMENTS:

A. Install fire alarm and detection systems as indicated, in accordance with equipment manufacturer's written instructions and complying with applicable portions of NEC and NECA's "standard of installation".

B. Install wiring, raceways, and electrical boxes and fittings in accordance with Division 16 Basic Materials and Methods section, "Raceways", "Wires and Cables", and "Electrical Boxes and Fittings", and in accordance with other sections, as applicable.

C. All wire used on the fire alarm system shall be U.L. Listed as fire alarm protective signaling circuit cable per NEC, Article 760.

D. If twisted or shielded wire is required or recommended by the manufacturer it must be used.

E. Review proper installation procedure for each type of device with equipment supplier before installation. Label each junction box throughout system, "fire alarm", and paint cover of junction boxes red.

F. Provide a minimum of one 3/4" conduit with (2) Cat 3 telephone cables from FACP to main telephone terminal.

G. Where smoke or heat detectors are specified, install device a minimum of three feet from adjacent air supply diffusers to ensure proper operation of device.

H. Refer to NFPA for spacing and exact placement of fire alarm devices.

© BNA Consulting, Inc.

PART 4 - FINAL ACCEPTANCE AND GUARANTEE

4.1 GUARANTEE:

A. Furnish a three-year guarantee for all equipment, materials and installation, including all labor, transportation, and equipment.

B. Emergency Response. The fire alarm equipment supplier shall provide an emergency response within four hours of any reported system failure to resolve the problem on a continuous basis.

4.2 PRE-TEST:

A. The contractor shall with a representative of the manufacturer conduct a test 3 days before the final test to verify operation of all devices. Any problems must be corrected before the final test.

4.3 FINAL TEST:

A. Before the installation shall be considered completed and acceptable, a test on the system shall be performed as follows:

1. The contractor's job foreman, a representative of the manufacturer, a representative of the owner, shall operate every building fire alarm device to ensure proper operation and correct annunciation at the control panel. Fan shutdown and door holder circuits shall operate.
2. Conduct a full 24 hour test of battery operation. System shall be put on the batteries for a full 24 hours and all notification appliances shall be operational for a period of 5 minutes.

B. The supervisory circuitry of the initiating and indicating circuits shall also be verified.

C. Provide the following spare devices:

1. 2 smoke detectors with base
2. 2 strobe/horns
3. 1 manual pull stations with addressable modules
4. 2 duct smoke detectors

D. Provide 20 feet of conduit with wiring (completely installed and wired) for each spare device

PART 5 - AS BUILT DRAWINGS AND OPERATION AND MAINTENANCE MANUALS:

5.1 LABELING:

A. All devices shall be labeled with their appropriate address. The labels shall be 18 point pressure sensitive labels.

B. All initiating devices shall be programmed to include the device address and a complete user text English location description, i.e. Device L4S76, Smoke Detector, 1st floor Rm.17

5.2 AS BUILT DRAWINGS:

© BNA Consulting, Inc.

A. A complete set of CAD "as-built" drawings showing installed wiring, color coding, specific interconnections between all equipment, and internal wiring of the equipment shall be delivered to the owner upon completion of the system. Vendor shall not request drawings from the Engineer. Vendor shall request current architectural drawings from the Architect and include all cost with bid.

B. A building map shall be supplied to the owner indicating the exact location of all devices along with the addresses of the individual devices. Install building fire alarm map adjacent to the fire alarm panel and all remote operating panels. Provide high quality plastic sign (map holder) with two layers. The back layer shall be painted black. The front layer shall be a clear center for viewing the CAD fire alarm drawing. Edges of the sign shall be colored to match the building interior. The building map shall indicate the various devices and wiring by the use of different colors (minimum of five colors).

C. Provide a CD to the Owner containing the information specified below. The CD shall include all information required to allow the Owner to change the fire alarm program themselves. The CD shall contain a minimum of the following:

1. CAD drawing files of building fire alarm map.
2. CAD drawing files of as-built fire alarm components and point to point connections.
3. General configuration programming.
4. Job specific configuration programming.
5. Tutorial file on complete programming of fire alarm system.

5.3 OPERATING AND MAINTENANCE MANUALS:

A. Operating and maintenance manuals shall be submitted prior to testing of the system. Manuals shall include all service, installation, and programming information.

5.4 TRAINING:

A. Provide four (4) hours training on the operation and installation of fire alarm system, at job site, at no cost to owner.

B. Provide programming training and software sub-licensing in owner's name. Sub-licensing agreement shall include the U.L. requirement to allow the owner to do any programming that the supplier is allowed to do during commissioning, testing, service and field additions or deletions to the fire alarm system. The fire alarm supplier shall provide this training and licensing at no cost to the owner, including transportation (if outside Salt Lake City), lodging, meals, and training manuals.

END OF SECTION 16721

© BNA Consulting, Inc.

SECTION 16740 – TELEPHONE/DATA SYSTEM July 11, 2007

PART 1 – GENERAL

1.1 RELATED DOCUMENTS:

A. Drawings and general provisions of Contract, including General and Supplementary Conditions and Division-1 Specification sections, apply to work of this section.

B. Division-16 Basic Materials and Methods sections apply to work specified in this section.

1.2 DESCRIPTION OF WORK:

A. The extent of telephone system work is indicated by drawings and is hereby defined to include, but not be limited to raceway, outlets, device plates, backboards, grounding and miscellaneous items required for complete raceway system.

B. Refer to other Division-16 sections for requirements for raceways, trays, boxes and fittings, wiring devices (plates), and supporting devices, and other sections, as applicable.

1.3 QUALITY ASSURANCE:

A. Comply with applicable portions of NEC as to type products used and installation of components. Provide products and materials which have been UL-listed and labeled.

PART 2 - PRODUCTS

A. GENERAL: Provide complete raceway system for telephone including but not limited to, raceway, outlets, device plates, backboards, grounding and miscellaneous items as required.

B. Provide 4" square box with appropriate plaster or tile ring.

C. Provide telephone/data coverplates for wall outlets to match color and material of wiring device plates; for floor outlets, match color and material of floor power outlet covers.

D. Provide fire treated, or hypalon coated plywood terminal backboards, 4' x 8' x ¾" unless noted otherwise.

E. Provide terminal cabinets of code gauge steel, flush or surface, as indicated, with concealed trim clamp, concealed hinges and flush lock, with gray baked enamel finish to match finish of panelboard covers. Construct back boxes of code gauge galvanized steel with removable endwalls.

PART 3 - EXECUTION

3.1 INSTALLATION OF TELEPHONE SYSTEM:

A. GENERAL: Install raceway system as indicated to comply with NEC and recognized industry practices. Run 1" EMT (No flex) conduit from each telephone/data outlet to backboard, tray, or terminal cabinet. Provide nylon pull cord in all empty raceway.

END OF SECTION 16740

© BNA Consulting, Inc.

SECTION 16782 - SECURITY SYSTEM (RACEWAY) July 11, 2007

PART 1 – GENERAL

1.1 RELATED DOCUMENTS:

A. Drawings and general provisions of Contract, including General and Supplementary Conditions and Division-1 Specification sections, apply to work of this section.

B. Division-16 Basic Materials and Methods sections apply to work specified in this section.

1.2 DESCRIPTION OF WORK

A. Extent of security system work is indicated by drawings and is hereby defined to include, but not be limited to raceway, outlets, coverplates, backboards, cabinets, grounding and miscellaneous items required for complete raceway system.

B. Refer to other Division-16 sections for requirements for raceways, trays, boxes and fittings, and supporting devices, and other sections, as applicable.

1.3 QUALITY ASSURANCE:

A. Comply with applicable portions of NEC as to type products used and installation of components. Provide products and materials which have been UL-listed and labeled.

PART 2 – PRODUCTS

A. GENERAL: Provide complete raceway system for security system including but not limited to, raceway, outlets, coverplates, backboards, cabinets, grounding and miscellaneous items as required.

B. Provide plywood terminal backboards, 4' x 8'x 3/4" unless noted otherwise.

C. Provide terminal cabinets of code gauge steel, flush or surface, as indicated, with concealed trim clamps, concealed hinges and flush lock, with gray baked enamel finish to match finish of panelboard covers. Construct back boxes of code gauge galvanized steel with removable endwalls.

PART 3 - EXECUTION

3.1 INSTALLATION OF SECURITY RACEWAY SYSTEM:

A. GENERAL: Install raceway system as indicated to comply with NEC and recognized industry practices. Run 3/4" conduit in a loop from each security device to terminal backboard , tray, or terminal cabinet. Provide nylon pull cord in all installed raceway.

B. GROUNDING: Provide one #6 bare copper ground from each security system terminal board to the service entrance ground. Enclose in suitable raceway for entire length. Coil six feet of conductor at each terminal board. Make connection at service entrance ground. See drawings for additional requirements.

C. POWER: Provide a minimum of one duplex receptacle on dedicated emergency powered circuit adjacent to each terminal backboard or cabinet. See drawings for additional power outlets.

END OF SECTION 16782

© BNA Consulting, Inc.

Detail Book

Project Number 0633
DFCM PROJECT # 07009370

DRIVERS LICENSE OFFICE
STATE FAIR PARK

Conference Center - 155 N.1000 West, SLC. Utah 84116

July 11, 2007

Axis Architects

DETAIL

INDEX ABBREVIATIONS

CL	**CEILING**
CW	**CASEWORK**
DR	**DOORS AND WINDOWS**
EX	**EXTERIOR**
IN	**INTERIOR**
S	**STRUCTURAL**
ST	**SITE**

The details included in this detail book are part of the Contract Documents. No part shall be detached. Any contractor, subcontractor, vendor, representative or any other person bidding the project shall be responsible for the information contained in all and any part of the construction documents. If the location or reference of any detail is not clear or not understood, the contractor shall contact the architect prior to bidding.

CL
CEILING

DETAIL NO.	DETAIL DESCRIPTION
CL-01	CEILING SEISMIC DETAIL
CL-02	CEILING SEISMIC DETAIL
CL-03	SUSPENDED GYPSUM BOARD CEILING DETAIL
CL-04	CEILING EDGE DETAIL

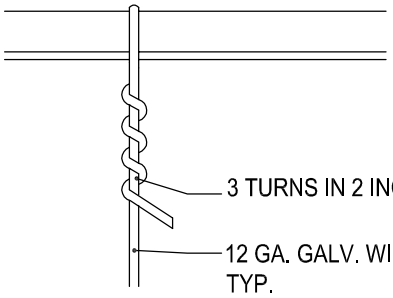

ATTACH TO BOTTOM CHORD OF STEEL JOISTS

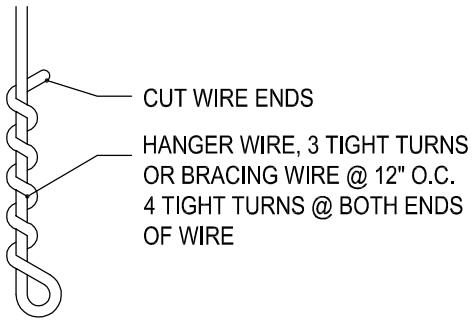

SUSPENDED ACOUSTICAL CEILING HANGER OR BRACE WIRE

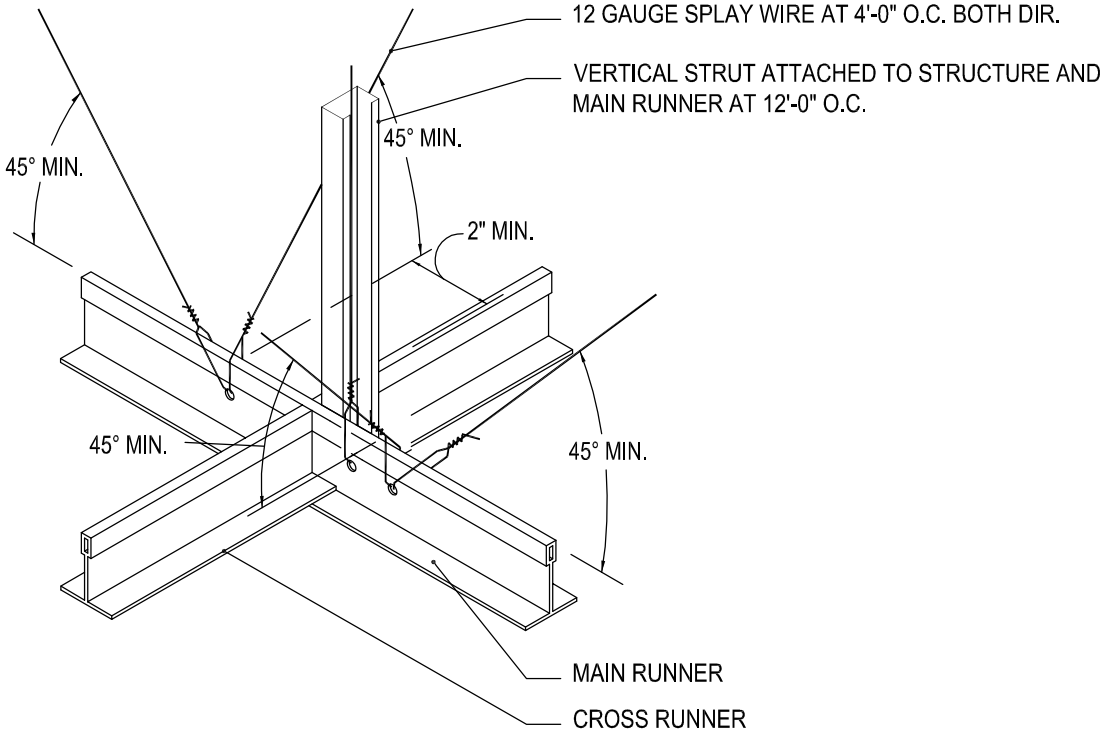

NOTE:

1. ALL SPLAY WIRE SHALL BE STRAIGHT - NO SPLAY WIRE SHOULD BEND AROUND EQUIPMENT, DUCTS OR OTHER WIRES.
2. ALL SPLAY WIRES TO BE IN LINE WITH ATTACHED RUNNER.
3. AREAS SMALLER THAN 144 SQ. FT. WITH 4 SIDES EXTENDING TO STRUCTURE DO NOT NEED BRACING.
4. ADDITIONAL SLAY WIRE ARE REQUIRED WITHIN 3" OF EACH CORNER OF LIGHT FIXTURES.
5. NO SPLAY WIRE SHALL BE CLOSER THAN 6" FROM ANY UNBRACED DUCT OR PIPE.

DET. NAME: CEILING BRACING DETAIL

DET NUMBER: CL-01

SCALE: 6""=1'-0"

ISSUED: 06.26.2007 REVISION:

PROJECT: DRIVERS LICENSE OFFICE STATE FAIR PARK

Axis Architects

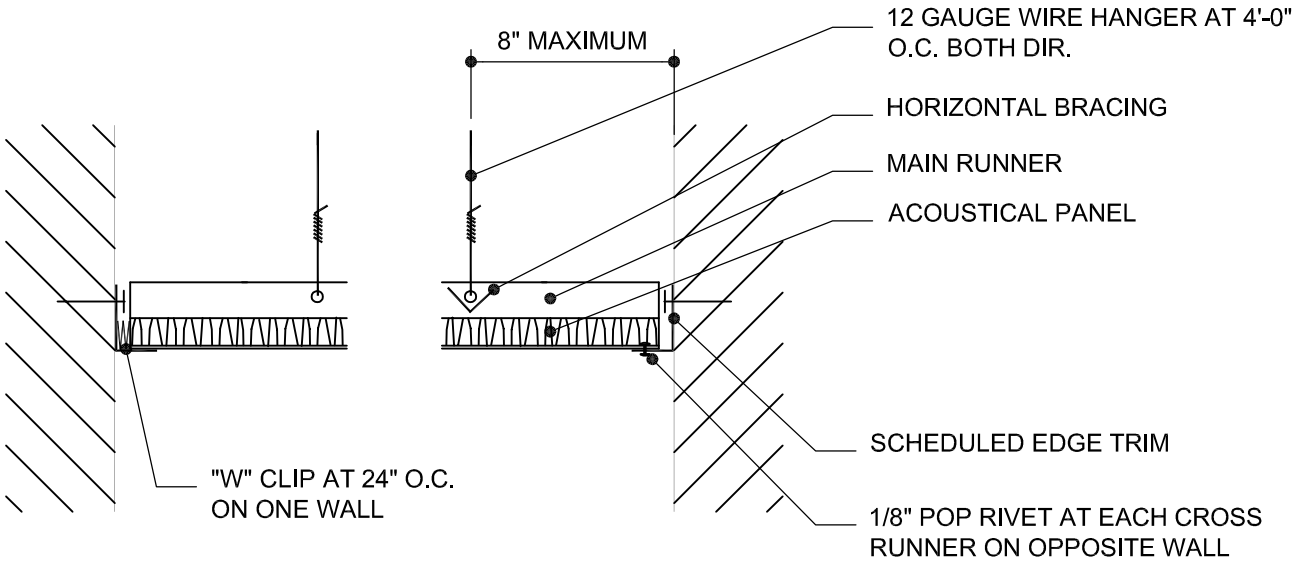

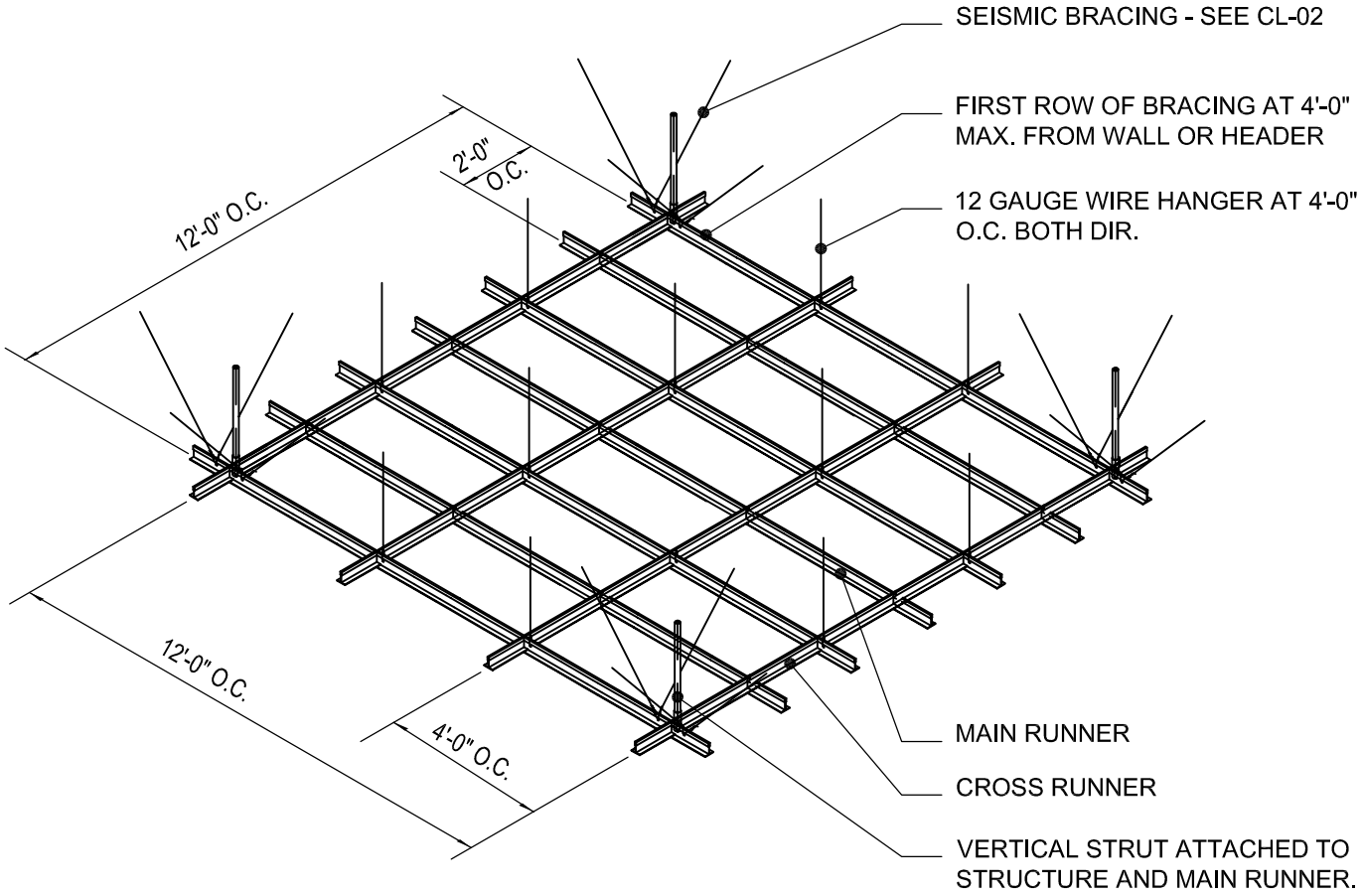

DET. NAME: CEILING SEISMIC DETAILS

DET NUMBER: CL-02

SCALE: N.T.S.

ISSUED: 06.26.2007 REVISION:

PROJECT: DRIVERS LICENSE OFFICE STATE FAIR PARK

Axis Architects

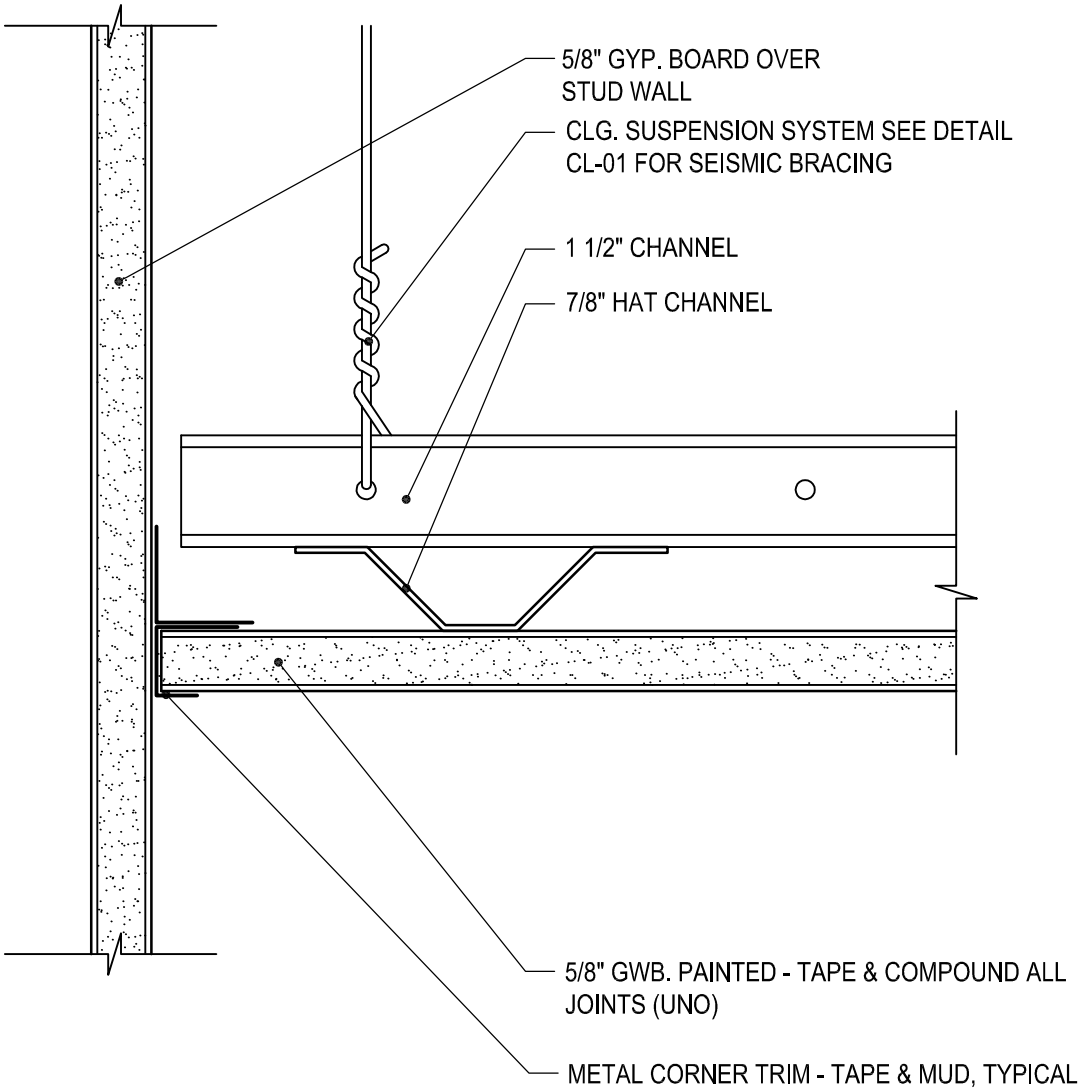

DET. NAME: SUSPENDED GYPSUM BOARD CEILING DETAIL

DET NUMBER: CL-03

SCALE: 6"=1'-0"

ISSUED: 06.26.2007 REVISION:

PROJECT: DRIVERS LICENSE OFFICE STATE FAIR PARK

Axis Architects

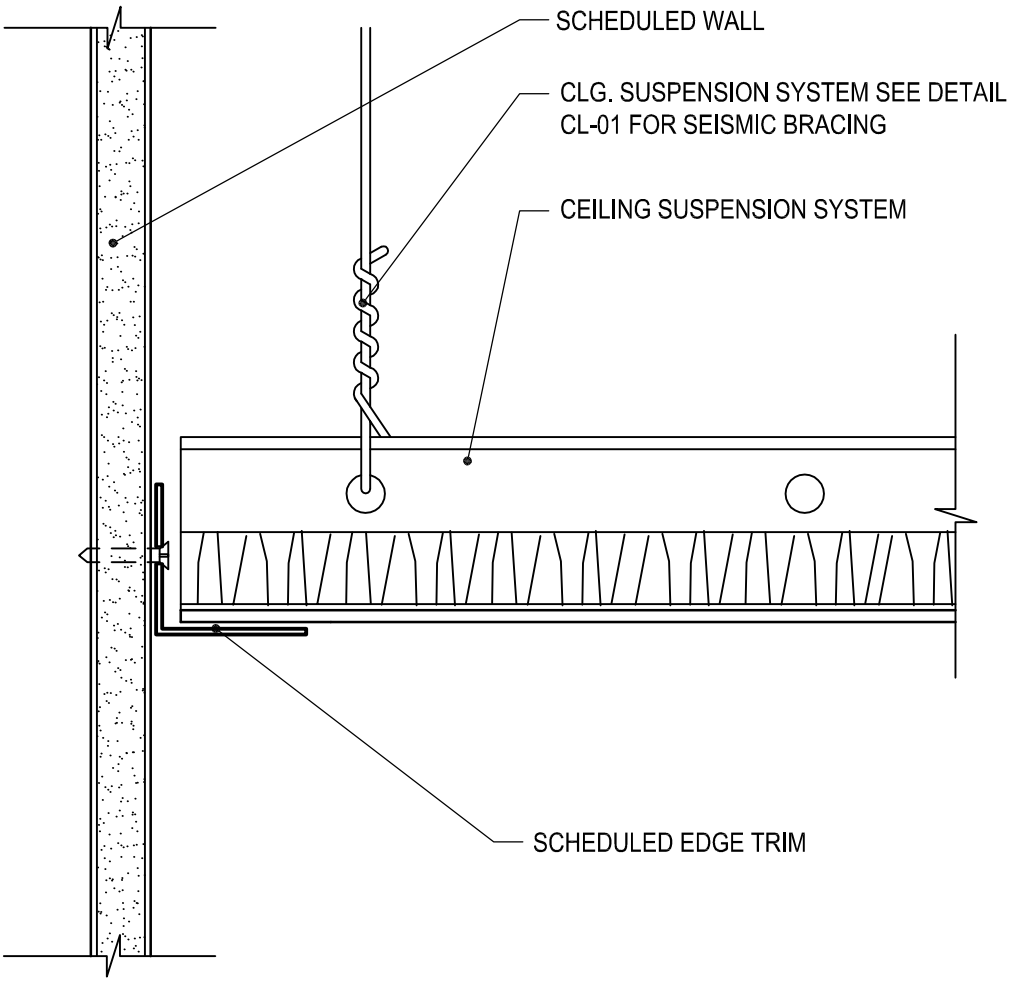

DET. NAME: CEILING EDGE DETAIL

DET NUMBER: CL-04

SCALE: 6"=1'-0"

ISSUED: 06.26.2007 REVISION:

PROJECT: DRIVERS LICENSE OFFICE STATE FAIR PARK

Axis Architects

CW
CASEWORK

DETAIL NO.	DETAIL DESCRIPTION
CW-01	CASEWORK DETAIL AT SINK
CW-02	CASEWORK DETAIL - TYPICAL

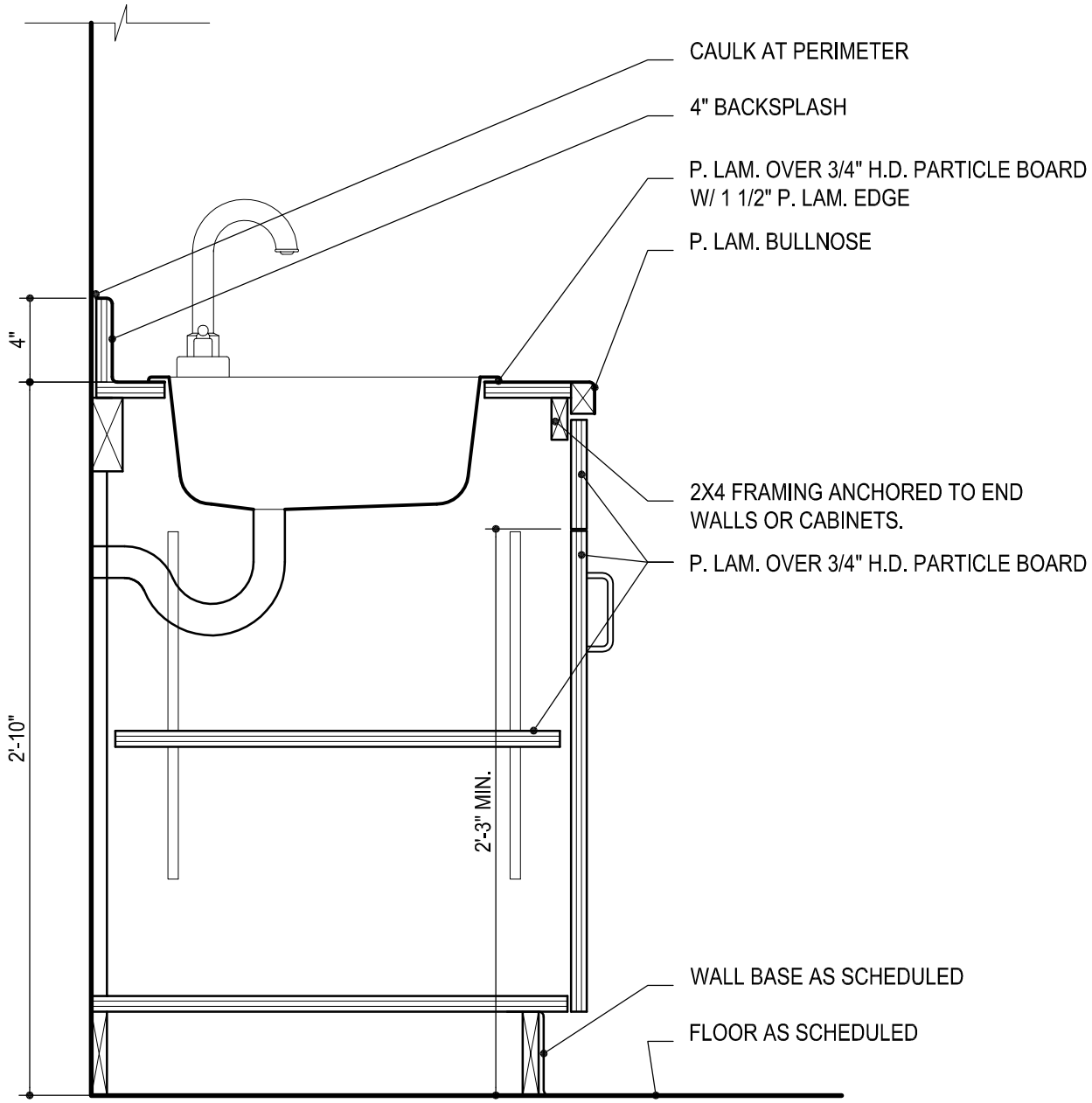

DET. NAME: CASEWORK DETAIL @ SINK

DET NUMBER: CW-01

SCALE: 1/2"=1'-0"

ISSUED: 06.26.2007 REVISION:

PROJECT: DRIVERS LICENSE OFFICE STATE FAIR PARK

Axis Architects

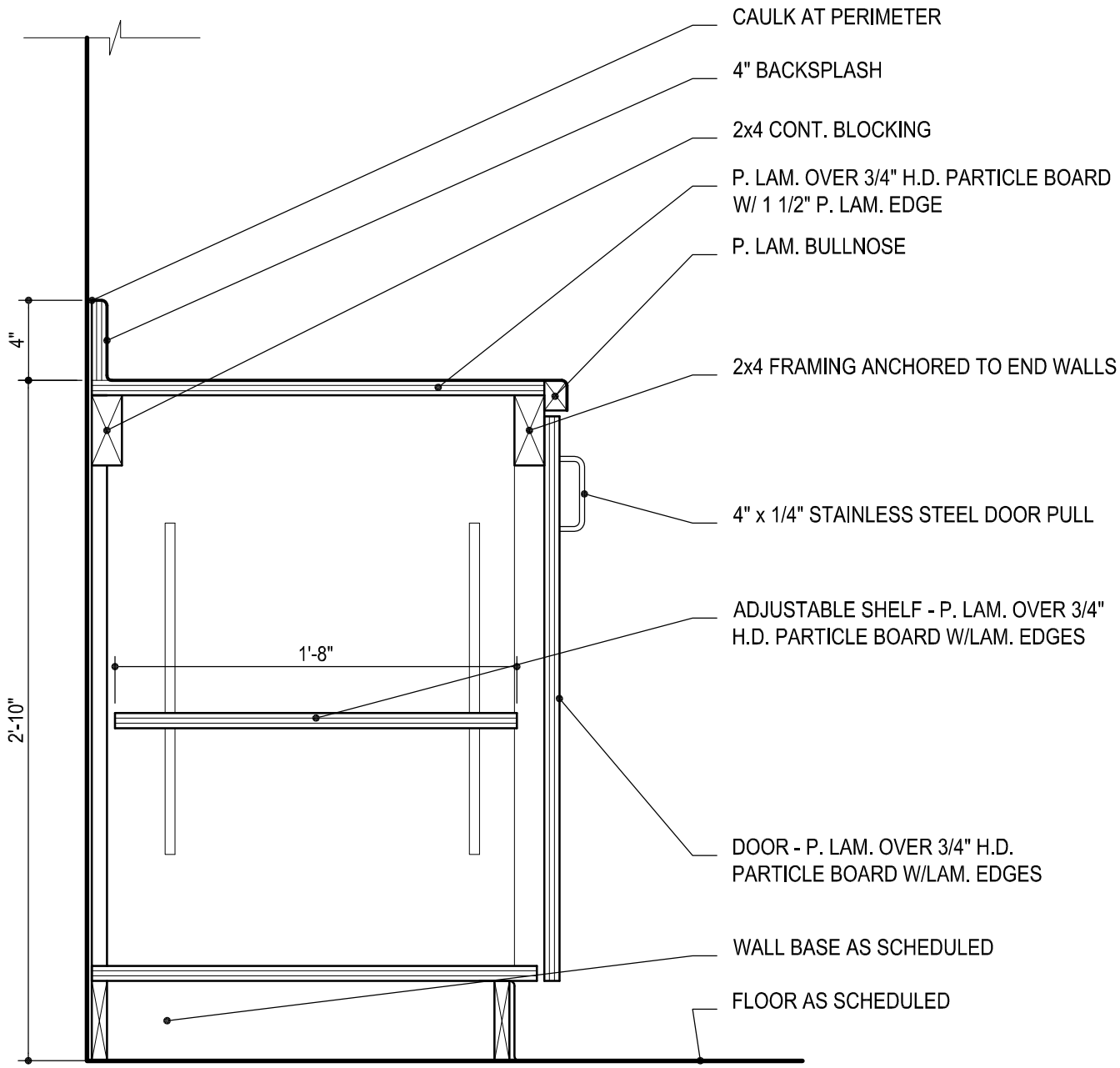

DET. NAME: CASEWORK DETAIL TYP.

DET NUMBER:

SCALE: 1/2"=1'-0"

ISSUED: 06.26.2007 REVISION:

PROJECT: DRIVERS LICENSE OFFICE STATE FAIR PARK

CW-02

Axis Architects

DR

DOORS AND WINDOWS

DETAIL NO.	DETAIL DESCRIPTION
DR-01	H.M. FRAME HEADER AT GYP BOARD WALL
DR-02	THRESHOLD DETAIL
DR-03	H.M. FRAME JAMB AT GYP BOARD WALL

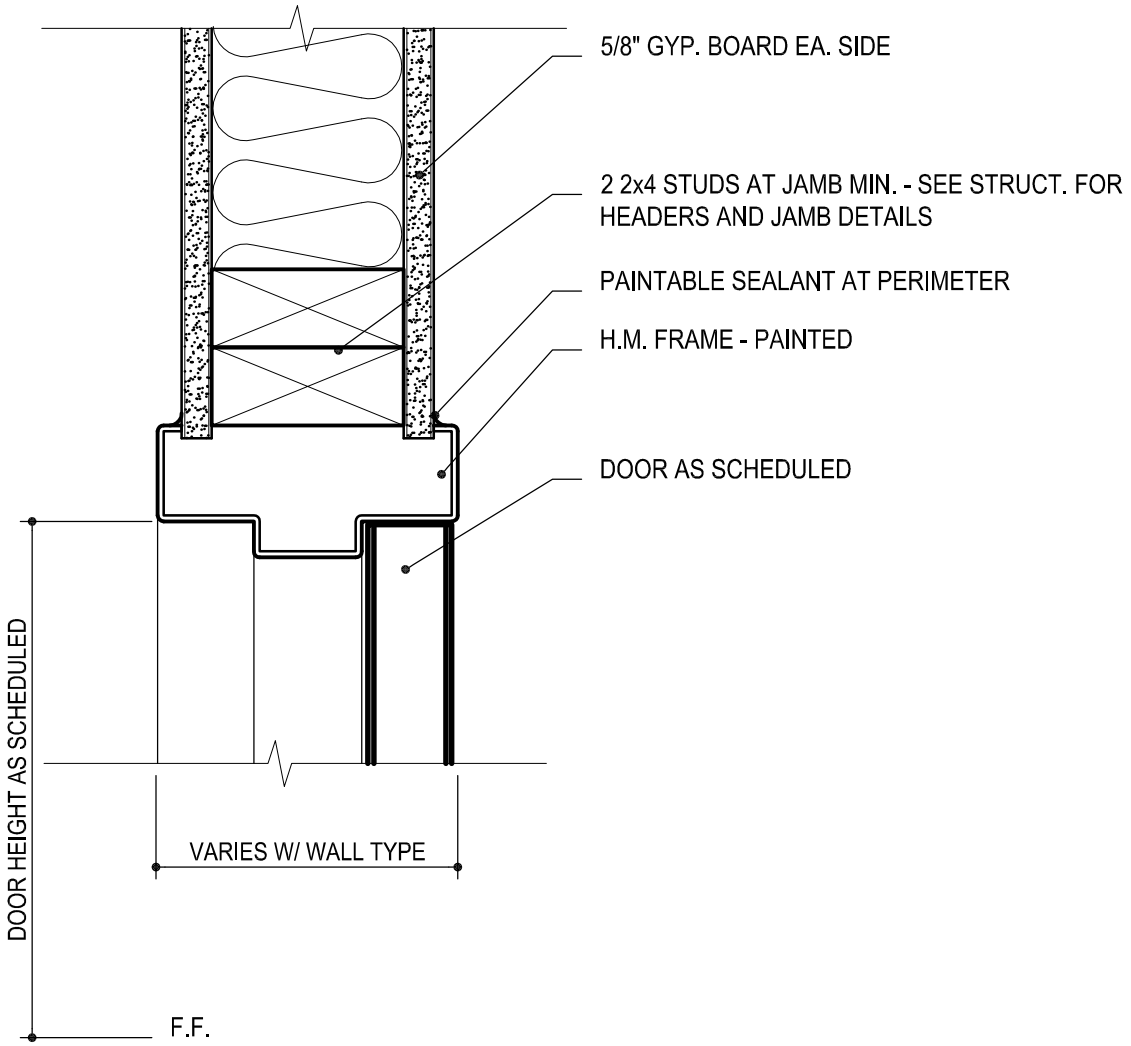

DET. NAME: DOOR HEADER DETAIL / JAMB SIM. DETAIL

DET NUMBER: DR-01

SCALE: 3"=1'-0"

ISSUED: 06.26.2007 REVISION:

PROJECT: DRIVERS LICENSE OFFICE STATE FAIR PARK

Axis Architects

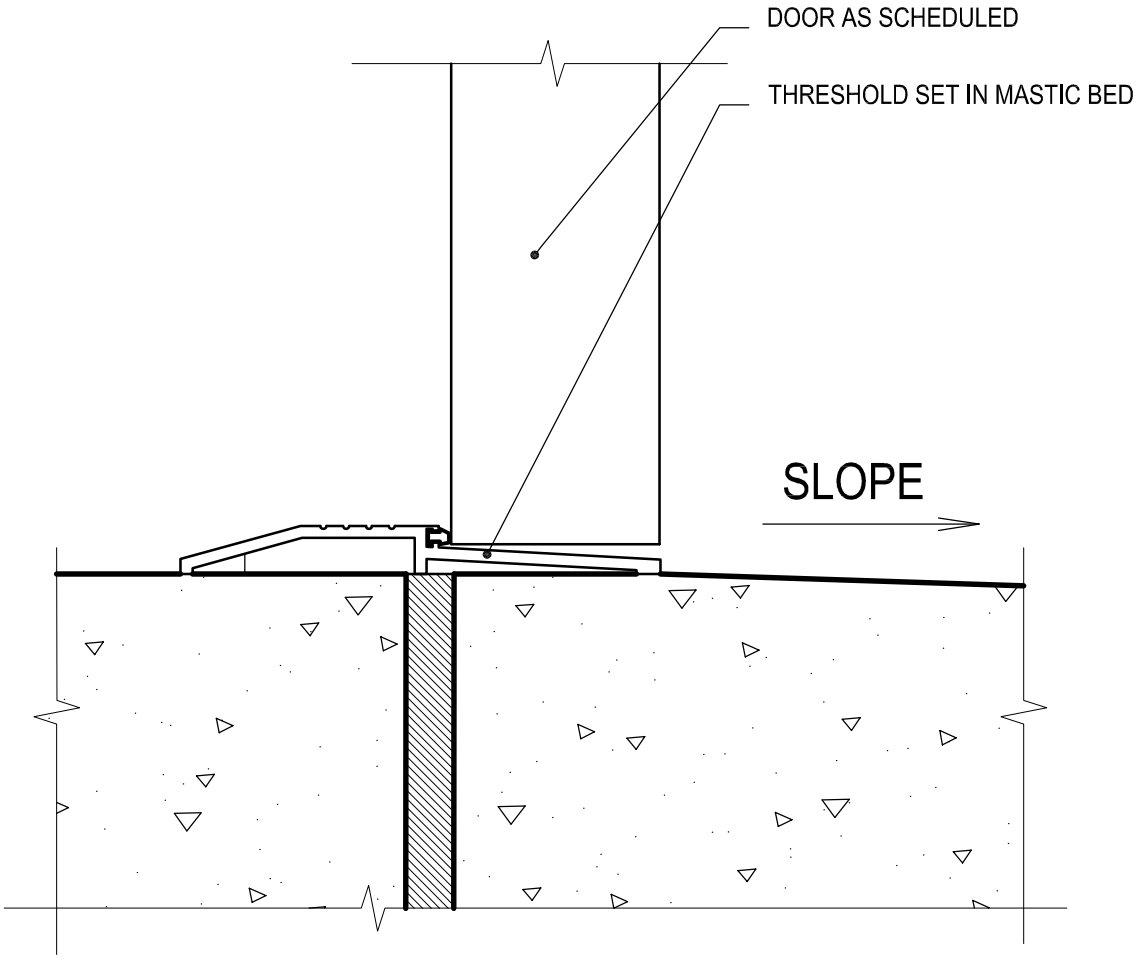

DET. NAME: THRESHOLD DETAIL

DET NUMBER:

SCALE: 6"=1'-0"

ISSUED: 06.26.2007 REVISION:

PROJECT: DRIVERS LICENSE OFFICE STATE FAIR PARK

DR-02

Axis Architects

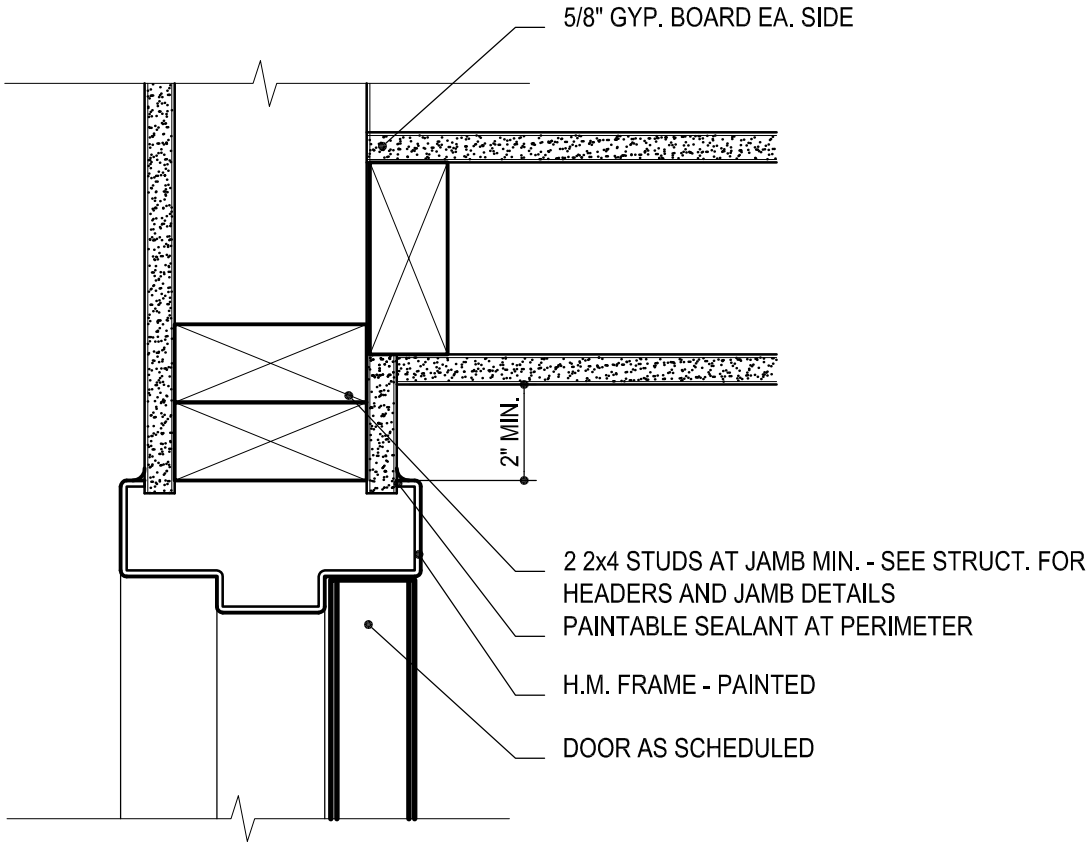

DET. NAME: DOOR JAMB DETAIL AT PERPENDICULAR WALL

DET NUMBER: DR-03

SCALE: 3"=1'-0"

ISSUED: 06.26.2007 REVISION:

PROJECT: DRIVERS LICENSE OFFICE STATE FAIR PARK

Axis Architects

EX
EXTERIOR

DETAIL NO.	DETAIL DESCRIPTION
EX-01	ENTRY CANOPY DETAIL

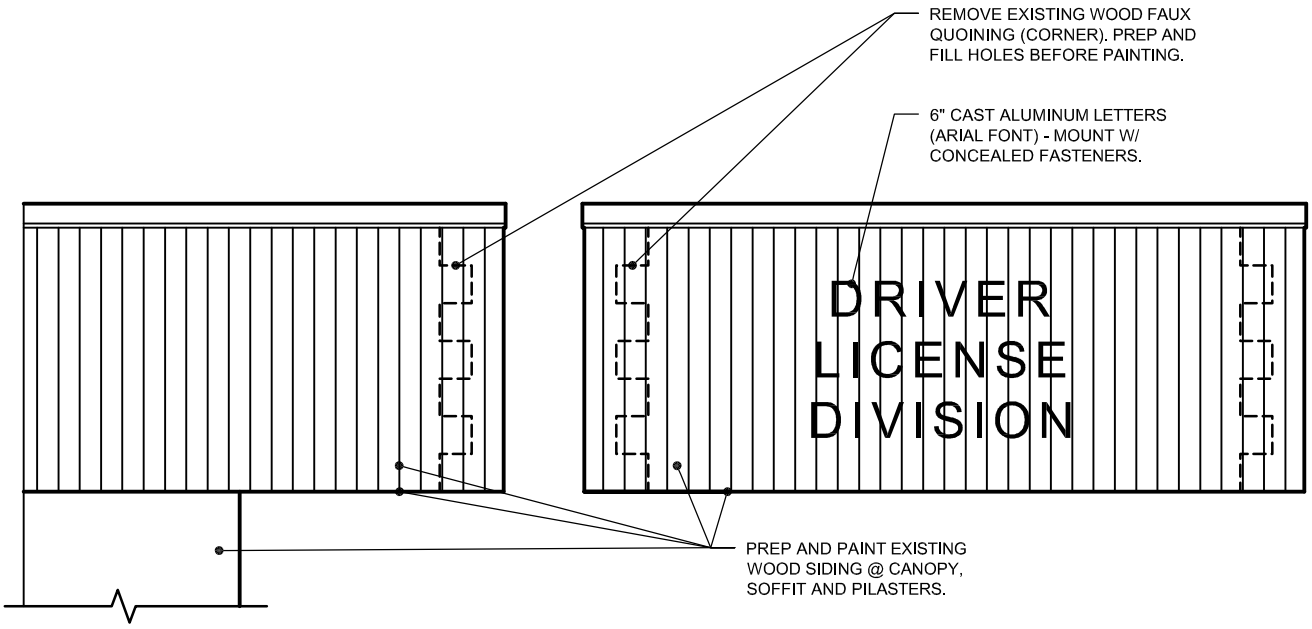

EAST & WEST ENTRY CANOPY ELEVATION (MIRRORED OF WEST)

NORTH CANOPY ELEVATION

DET. NAME: ENTRY CANOPY

DET NUMBER:

SCALE: 1/4"=1'-0"

ISSUED: 06.26.2007 REVISION:

PROJECT: DRIVERS LICENSE OFFICE STATE FAIR PARK

EX-01

Axis Architects

IN

INTERIOR

DETAIL NO.	DETAIL DESCRIPTION
IN-01	RESTROOM SIGN AT EA. RESTROOM ENTRANCE
IN-02	GRAB BAR ATTACHEMENT DETAIL
IN-03	THRESHOLD DETAIL
IN-04	COVED BASE DETAIL

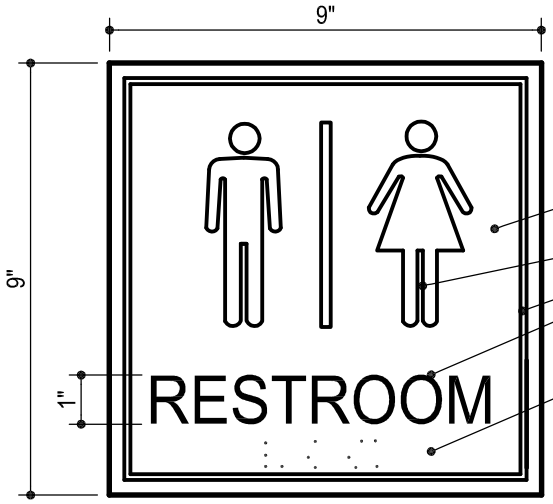

1/8" CLEAR PLEXIGLASS W/ METALIC GREY PAINT ON BACKSIDE

BLACK RAISED GRAPHIC, BORDER AND TEXT.

BLACK INTEGRALLY RAISED 1/32" GRADE 2 BRAILLE

1

UNISEX RESTROOM

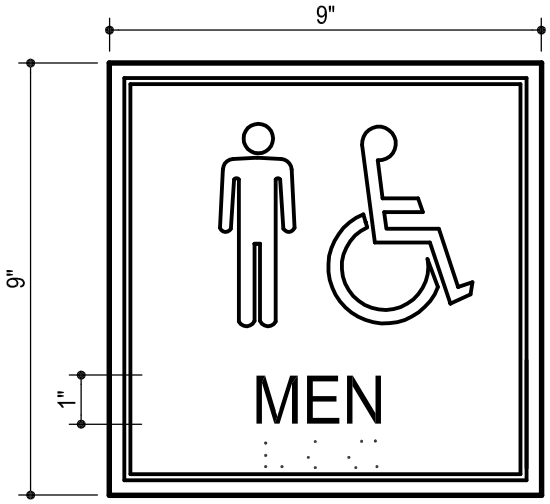

2

MENS RESTROOM

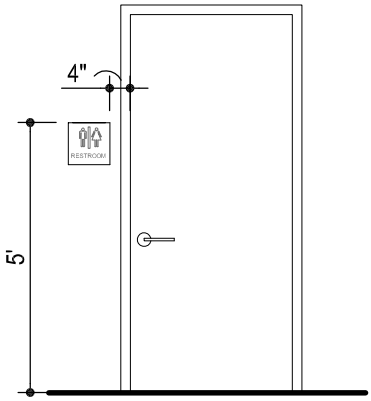

SIGN MOUNTING LOCATION

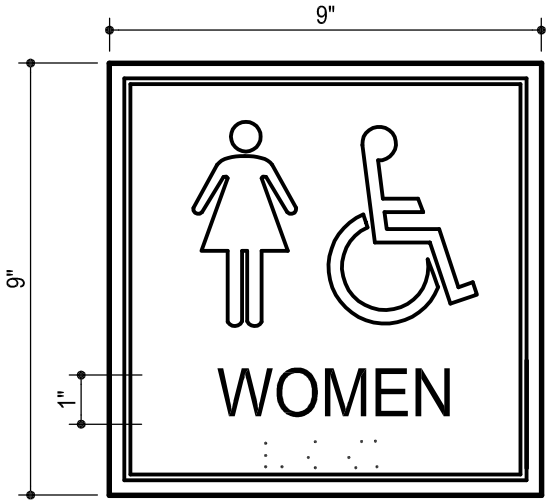

3

WOMENS RESTROOM

NOTE:
1 - SEE PLAN / COORDINATE ALL SIGNS WITH ARCHITECT.
2 - INSTALL W/ VINYL FOAM TAPE

DET. NAME: RESTROOM SIGNS

DET NUMBER:

SCALE: 6""=1'-0"

ISSUED: 06.26.2007 REVISION:

PROJECT: DRIVERS LICENSE OFFICE STATE FAIR PARK

IN-01

Axis Architects

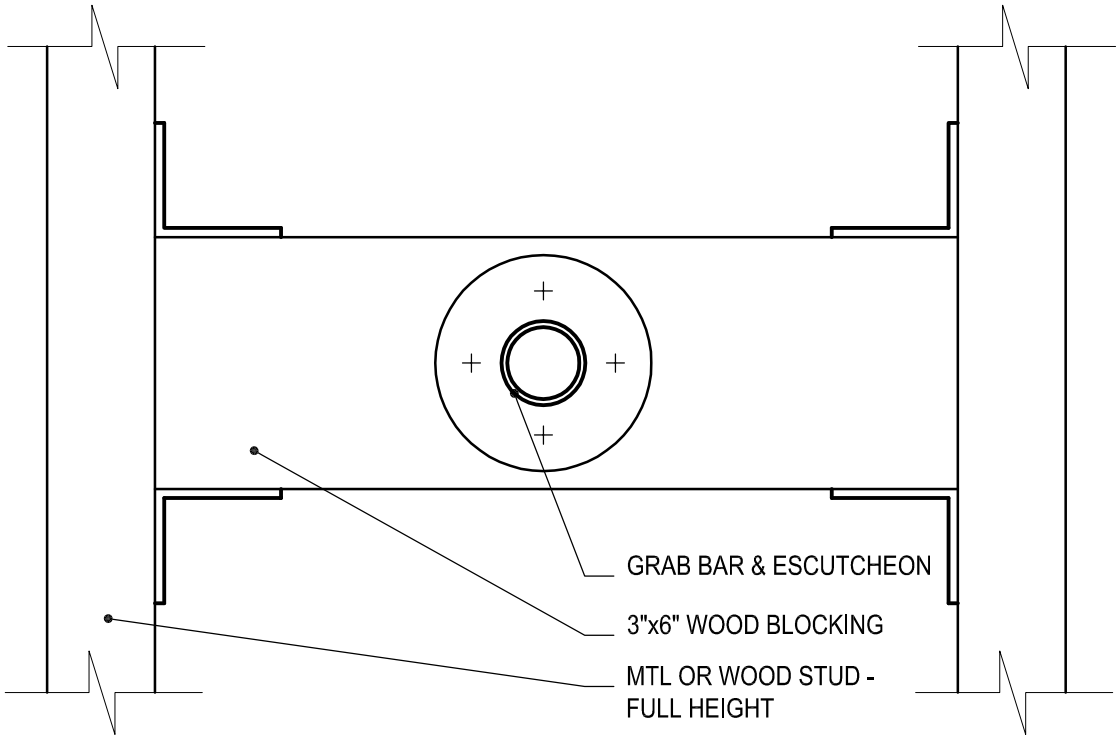

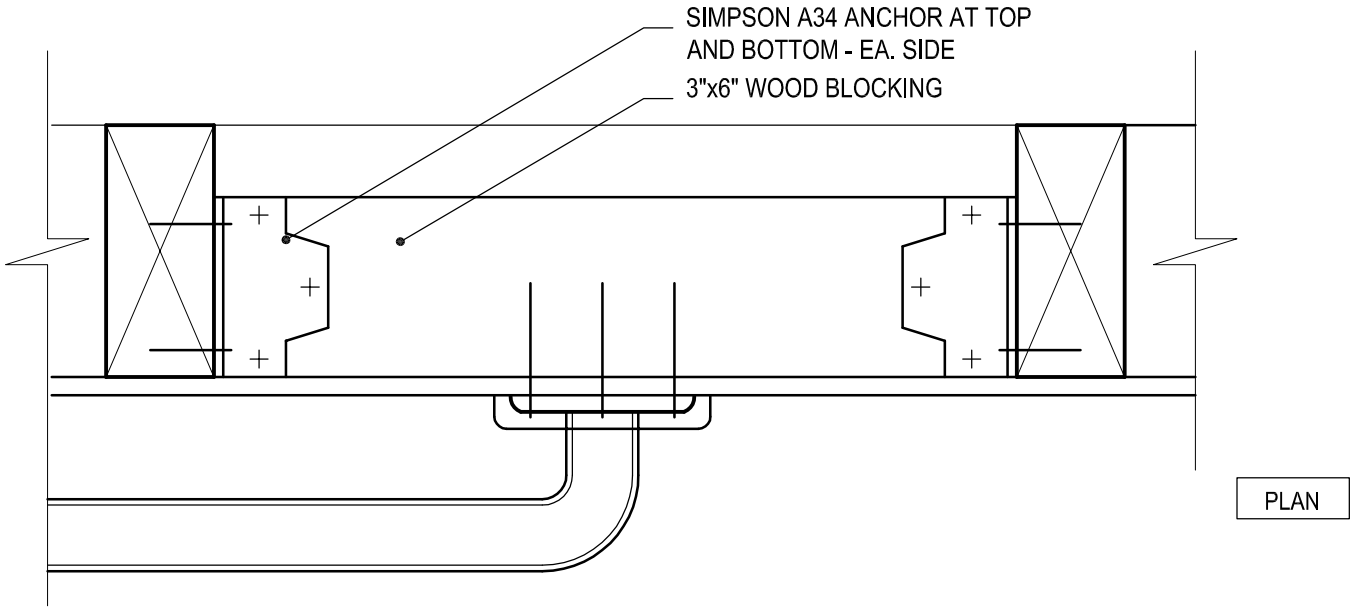

DET. NAME: GRAB BAR ATTACHMENT DETAIL

DET NUMBER: IN-02

SCALE: 3"=1'-0"

ISSUED: 06.26.2007 REVISION:

PROJECT: DRIVERS LICENSE OFFICE STATE FAIR PARK

Axis Architects

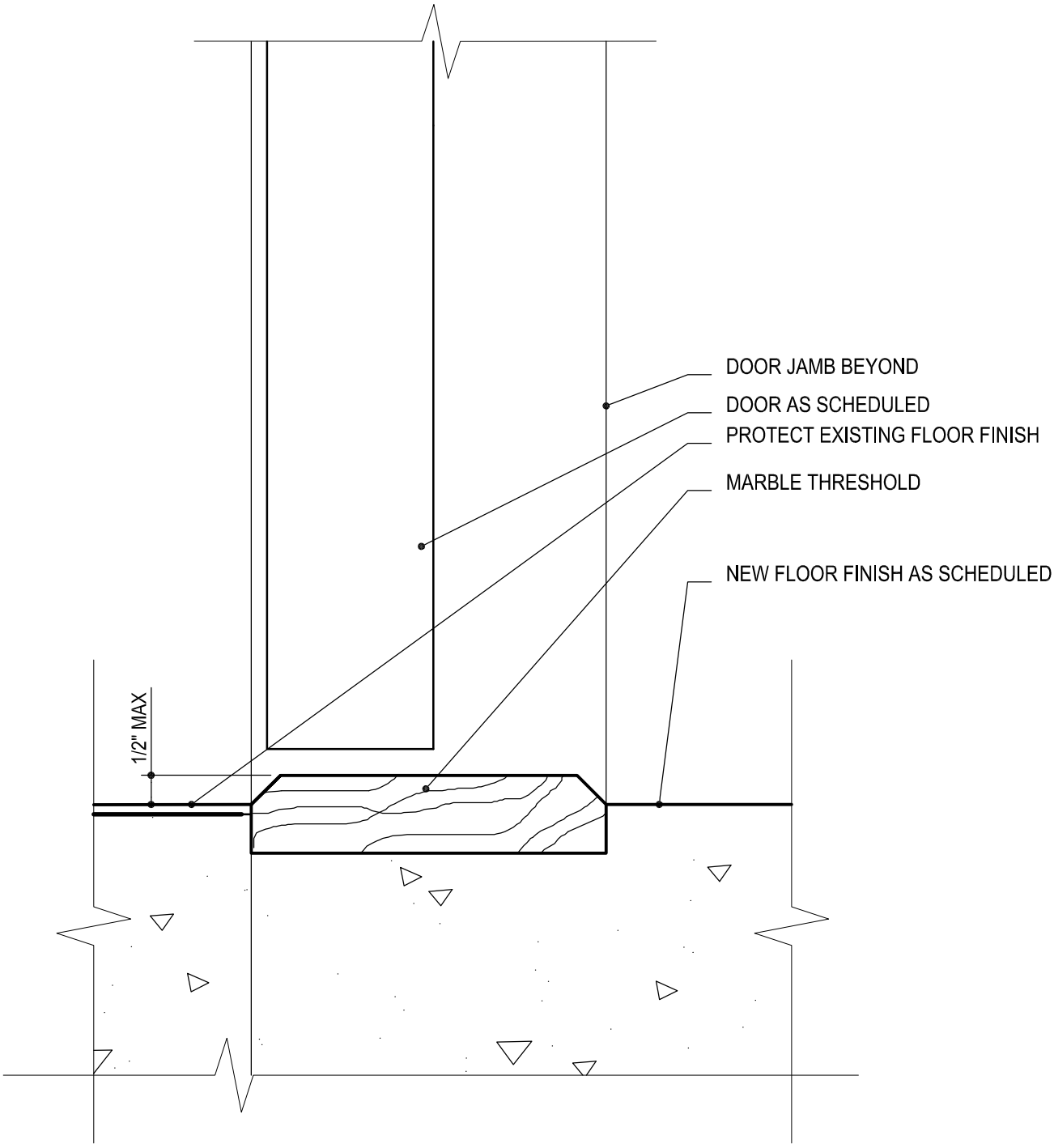

DET. NAME: THRESHOLD DETAIL

DET NUMBER: IN-03

SCALE: 3"=1'-0"

ISSUED: 06.26.2007 REVISION:

PROJECT: DRIVERS LICENSE OFFICE STATE FAIR PARK

Axis Architects

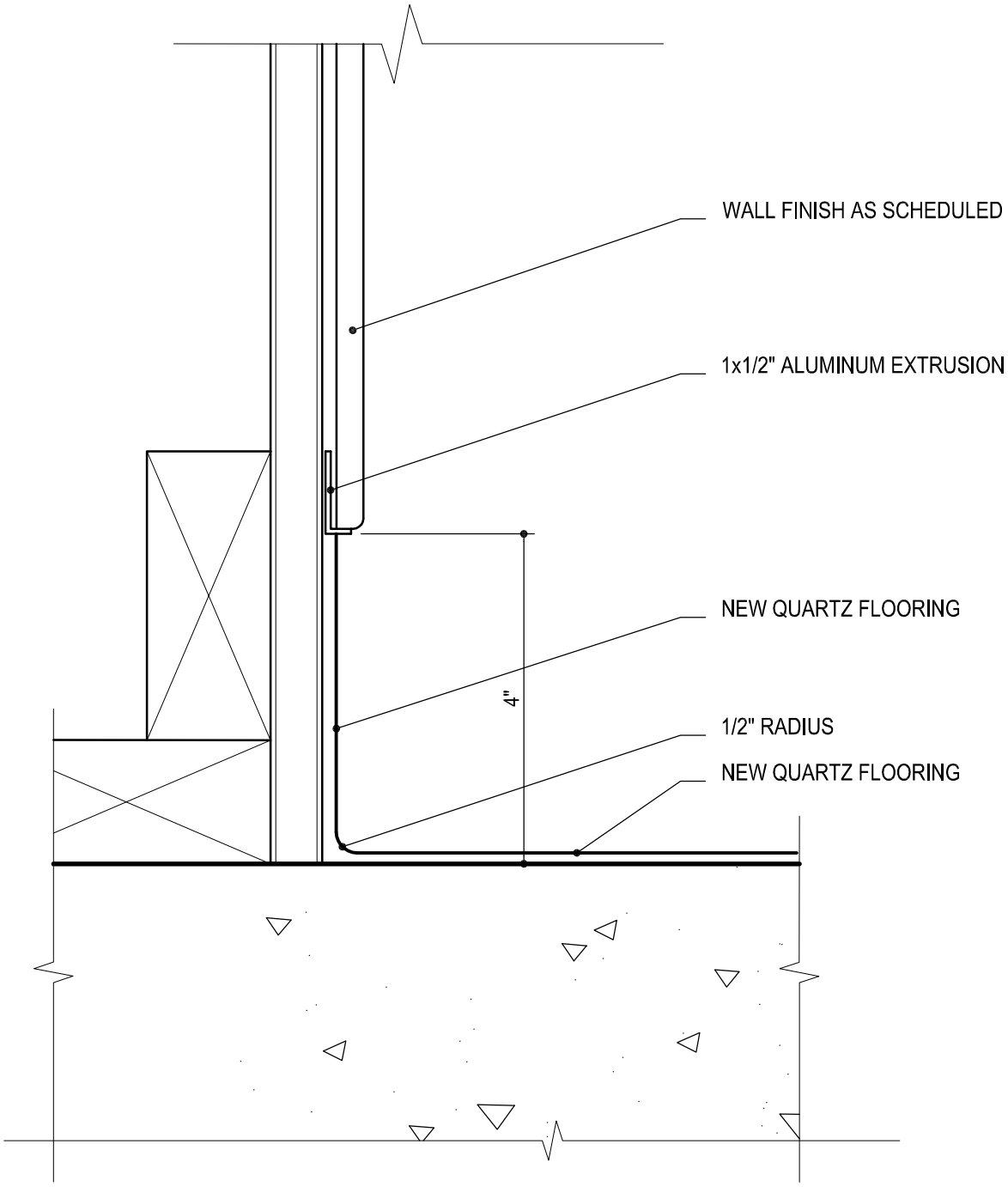

DET. NAME: COVE BASE DETAIL

DET NUMBER:

SCALE: 6"=1'-0"

ISSUED: 06.26.2007 REVISION:

PROJECT: DRIVERS LICENSE OFFICE STATE FAIR PARK

IN-04

Axis Architects

S
STRUCTURAL

DETAIL NO.	DETAIL DESCRIPTION
S-1	TYPICAL FRAMING FOR NEW ROOFTOP MECHANICAL UNITS
S-2	ROOFTOP MECHANICAL UNIT SUPPORT DETAIL
S-3	ROOFTOP MECHANICAL UNIT SUPPORT DETAIL

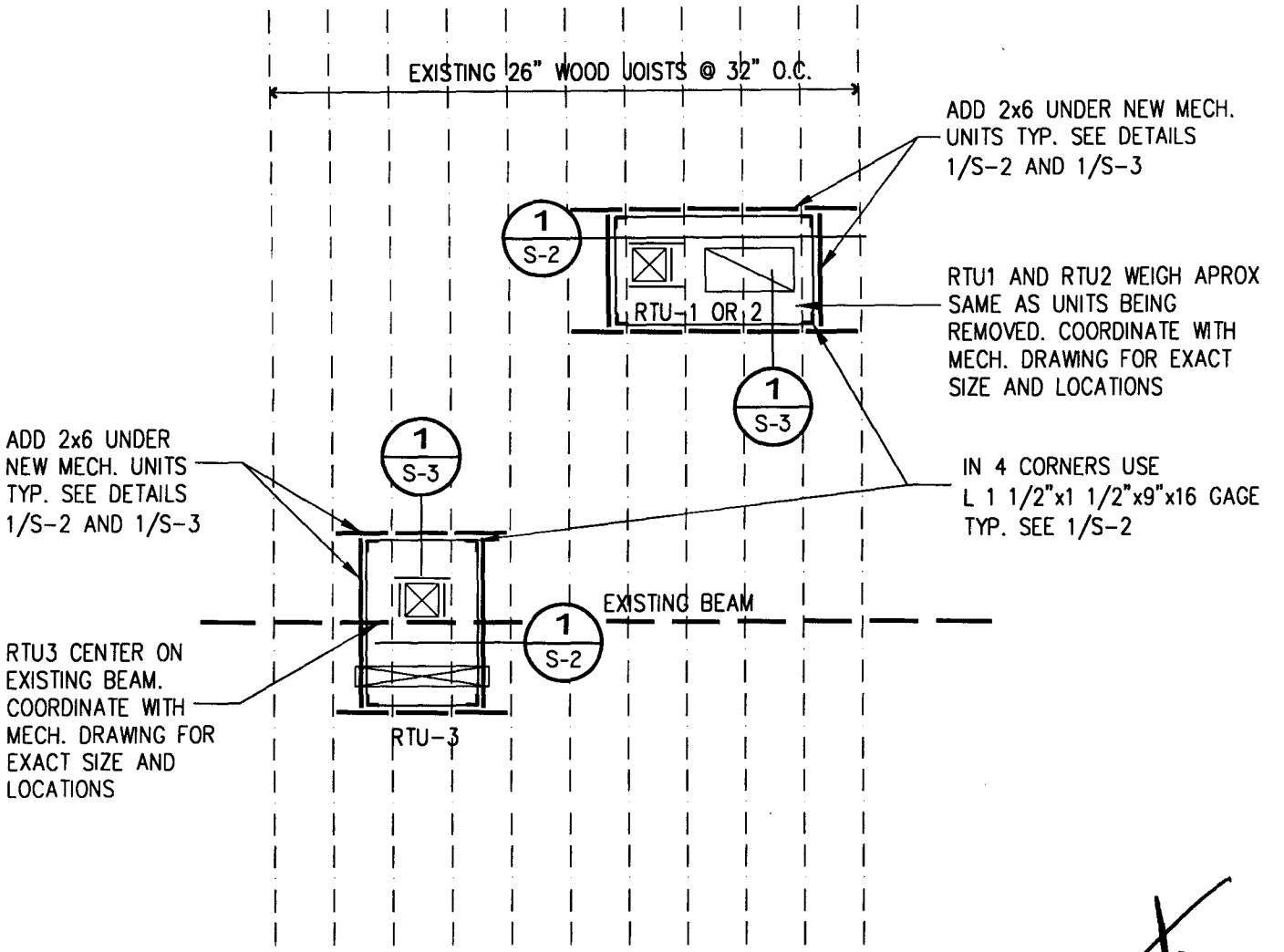

TYPICAL FRAMING FOR NEW
MECHANICAL UNITS RTU1, RTU2, RTU3.
SCALE: 1/8" = 1'-0"

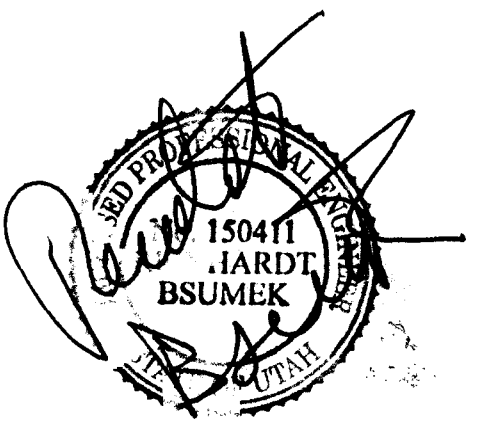

1
SCALE: 1/8" = 1'-0" S-1

DATE: JULY 16, 2007

DRIVER LICENSE OFFICE State Fairpark

Conference Center - 155 N. 1000 West, SLC Utah 84116

Bsumek Mu and Associates P.C.
CONSULTING ENGINEERS
345 South 400 East
Salt Lake City, Ut. 84111
801-575-8223
fax 801-532-3778
email: data@bsumekmu.com

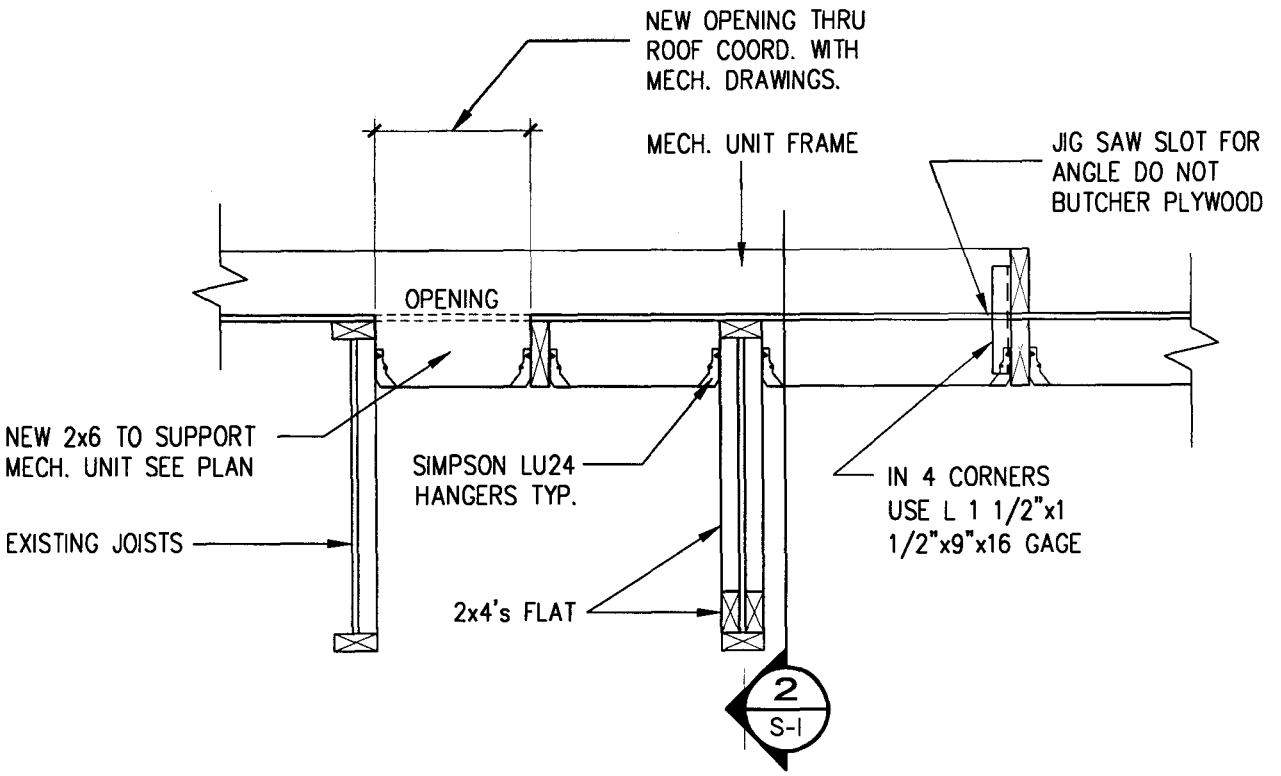

1
SCALE: 3/4" = 1'-0" S-2

DATE: JULY 16, 2007

DRIVER LICENSE OFFICE State Fairpark

Conference Center - 155 N. 1000 West, SLC Utah 84116

Bsumek Mu and Associates P.C.
CONSULTING ENGINEERS
345 South 400 East
Salt Lake City, Ut. 84111
801-575-8223
fax 801-532-3778
email: data@bsumekmu.com

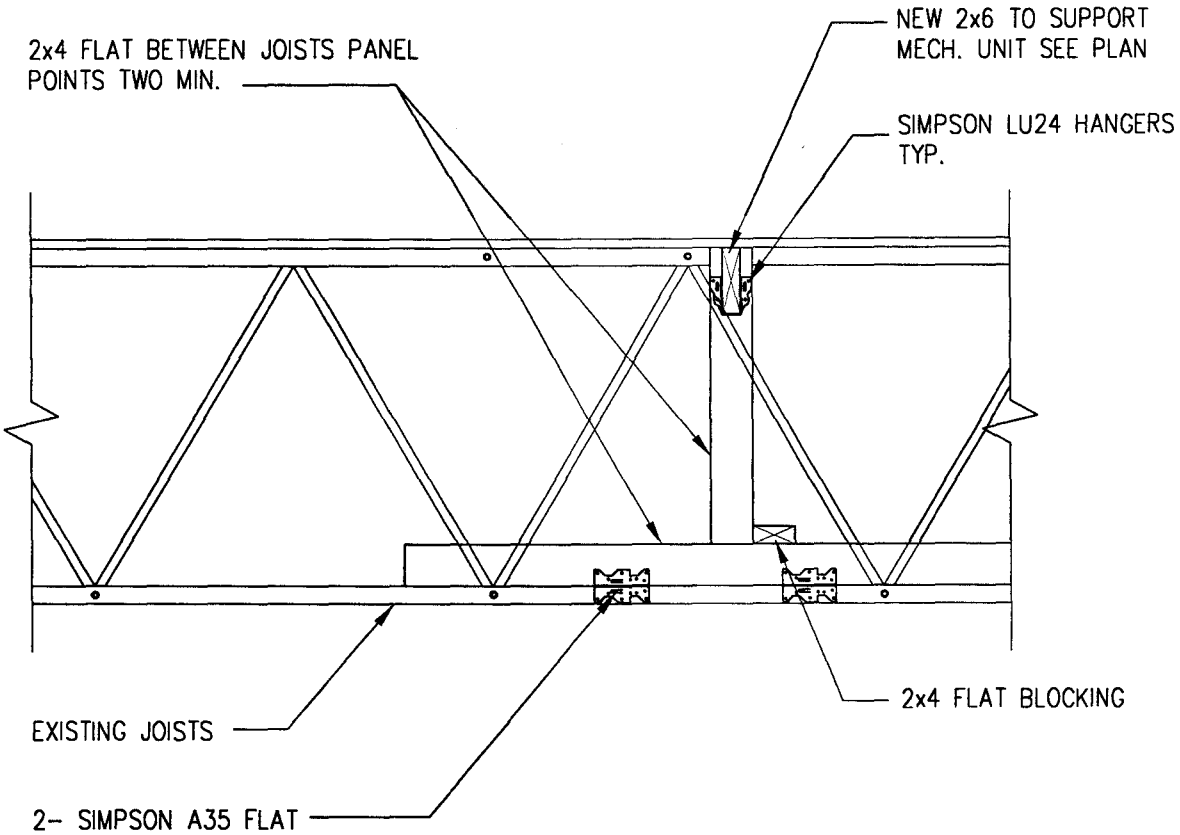

1

SCALE: 3/4" = 1'-0" S-3

DATE: JULY 16, 2007

DRIVER LICENSE OFFICE State Fairpark

Conference Center - 155 N. 1000 West, SLC Utah 84116

Bsumek Mu and Associates P.C.
CONSULTING ENGINEERS
345 South 400 East
Salt Lake City, Ut. 84111
801-575-8223
fax 801-532-3778
email: data@bsumekmu.com

ST
SITE

DETAIL NO.	DETAIL DESCRIPTION
ST-01	OUTDOOR SIGN – ACCESSIBLE PARKING STALL SIGN

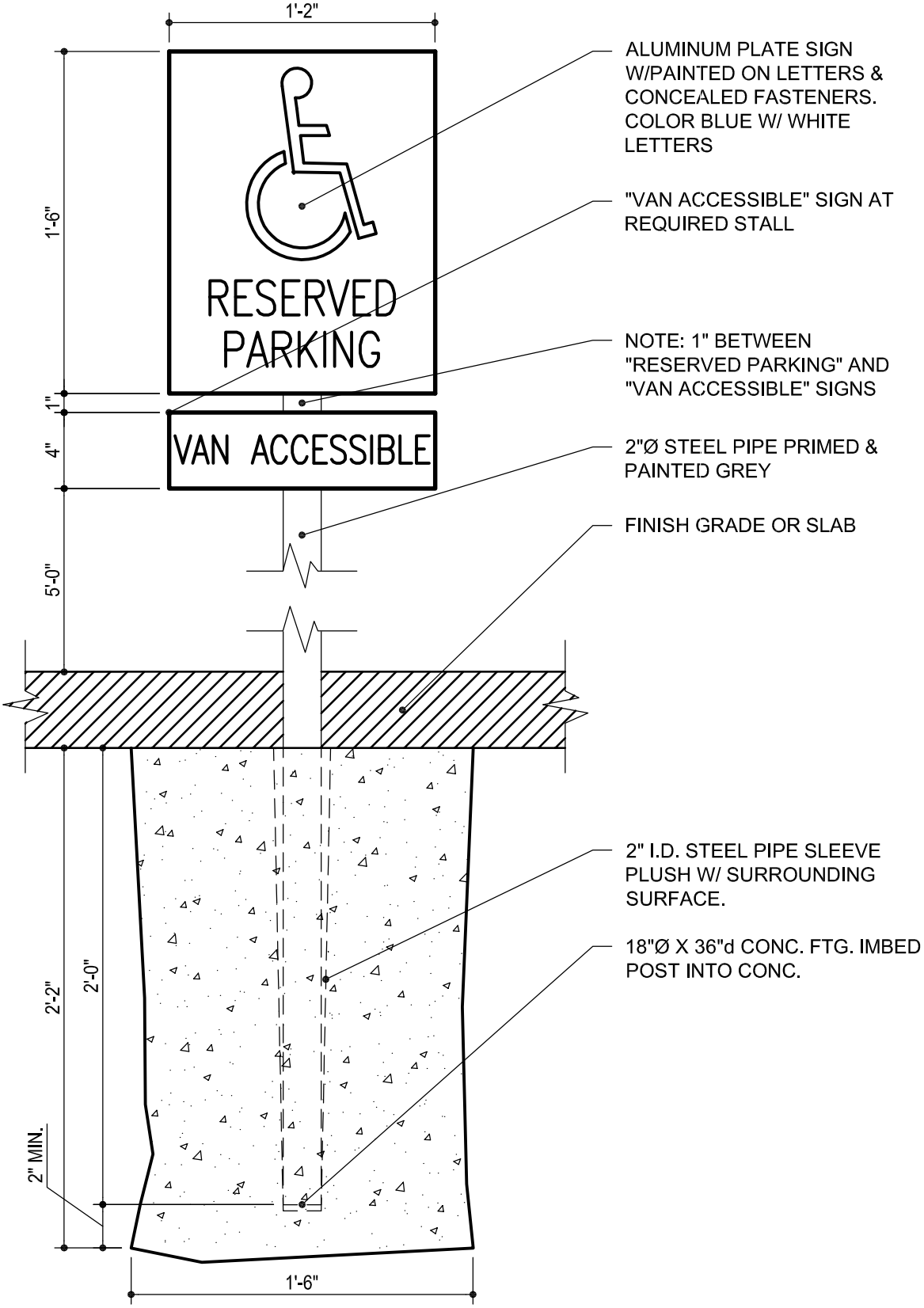

DET. NAME: OUTDOOR SIGN

DET NUMBER:

SCALE: 1/2"=1'-0"

ISSUED: 06.26.2007 REVISION:

PROJECT: DRIVERS LICENSE OFFICE STATE FAIR PARK

ST-01

Axis Architects