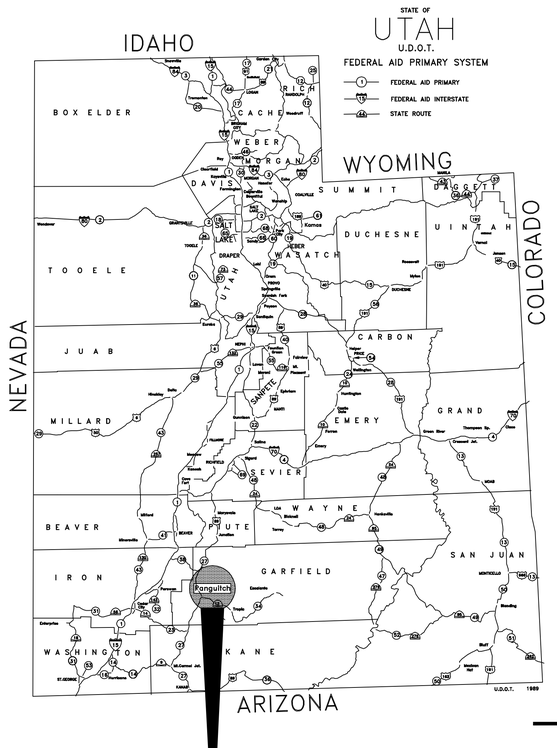

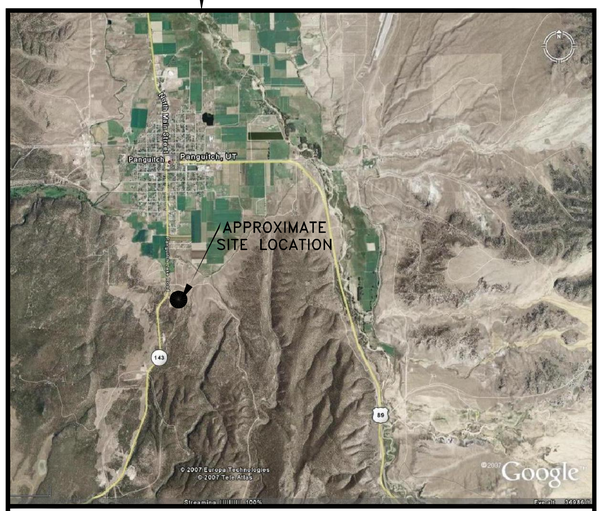

LOCATION MAP
NO SCALE

UDOT MAINTENANCE STATION #4325

PANGUITCH, UTAH

CONSTRUCTION DOCUMENTS

DFCM PROJECT #07010900
CONTRACT #077374
JANUARY, 2008

PREPARED BY

ARCHIPLEX GROUP
architecture • planning • design services
1135 South West Temple, Ste. A
Salt Lake City, UT 84101
P:(801) 961-7070
F:(801) 961-7373
Ralph Stanislaw

CONSULTANTS

CIVIL
PEPG Engineering
421 West 12300 South
Suite 400
Draper, Utah 84020
Telephone: (801) 562-2521
Fax: (801) 562-2551
Darrin Smith
Darrin@pepg.net

STRUCTURAL
BHB Consulting Engineers
244 West 300 North
Suite 202
Salt Lake City, Utah 84103
Telephone: (801) 355-5656
Fax: (801) 355-5950
Gerald McKenzie
gerald.mckenzie@bhbengineers.com

MECHANICAL
Van Boerum & Frank Assoc, Inc.
811 West Cedar
Pocatello, Idaho 83201
Telephone: (208) 478-4613
Fax: (208) 478-4617
Cliff Holmes
cholmes@vbfa.com

ELECTRICAL
Van Boerum & Frank Assoc, Inc.
811 West Cedar
Pocatello, Idaho 83201
Telephone: (208) 478-4613
Fax: (208) 478-4617
Vanessa Meyer
vmeyer@vbfa.com

CODE ANALYSIS

APPLICABLE CODES

	Year		Year
International Building Code	2006	National Electrical Code	2005
International Mechanical Code	2006	Uniform Code for	
International Plumbing Code	2006	Building Conservation	N.A.
International Fire Code	2006	ADA Accessibility	
International Energy		Guildelines	
Conservation Code	2006		

A. Occupancy and Group: S1 (REPAIR GARAGE) B (OFFICES ACCESSORY) S2 (OPEN STORAGE BUILDING)

Change in Use: Yes ____ No X Mixed Occupancy: Yes X No ____

Special Use and Occupancy (e.g. High Rise, Covered Mall): N.A.

B. Seismic Design Category: D Design Wind Speed: 90 MPH

C. Type of Construction (circle one):

I A | I B | II A | II B | III A | III B | IV HT | V A | (V B)

D. Fire Resistance Rating Requirements for the Exterior Walls based on the fire separation distance (in hours):

North: 0 South: 0 East: 0 West: 0

E. Mixed Occupancies: YES Nonseparated Uses: YES

F: Group S-1 Fire Area (Maintenance building) = 7,765
Group S-2 Fire Area (Open Storage Building) = 3,590

Sprinklers Required: NO Provided: NO Type of Sprinkler System: N.A.

G: Number of Stories: 1 Building Height: 24'-6"

H: Actual Area per Floor (square feet): 6956 SF

I: Tabular Area (Table 503): 9,000 SF (S1 and B Occupancies) 13,500 SF (S2 Occupancy)

J: Area Modifications (Section 506):

a) $A_a = A_t + \left[\frac{A_t\, I_f}{100}\right] + \left[\frac{A_t\, I_s}{100}\right]$ $\qquad I_f = 100\left[\frac{F}{P} - 0.25\right]\frac{W}{30}$

$$15750\ SF = 9000 + \left[\frac{9000\ (75)}{100}\right] + \left[\frac{9000\ (0)}{100}\right]$$

b) Sum of the Ratio Calculations for Mixed Occupancies:

$$S1/B = \frac{\text{Actual Area}}{\text{Allowable Area}} \leq 1 \text{ Per Story} \quad \frac{6956\ SF}{15750\ SF} = .442$$

c) Total Allowable Area for:

1) One Story: 15750 SF S1/B 23,625 SF S2
2) Two Story: A_a(2) N.A.
3) Three Story: A_a(3) N.A.

d) Unlimited Area Building: Yes ____ No X Code Section: ____

K. Fire Resistance Rating Requirements for Building Elements (hours).

Element	Hours	Assembly Listing	Element	Hours	Assembly Listing
Exterior Bearing Walls	0	N.A.	Floors - Ceiling Floors	0	N.A.
Interior Bearing Walls	0	N.A.	Roofs - Ceiling Roofs	0	N.A.
Exterior Non-Bearing Walls	0	N.A.	Exterior Doors and Windows	0	N.A.
Structural Frame	0	N.A.	Shaft Enclosures	0	N.A.
Partitions - Permanent	0	N.A.	Fire Walls	0	N.A.
Fire Barriers	0	N.A.	Fire Partitions	0	N.A.
			Smoke Partitions	0	N.A.

L. Design Occupant Load: 24* (Per IBC TABLE 1004.1.2 Using 500 S.F. per Occupant for garages, 100 S.F. for office areas)

Exit Width Required: 7.2" Exit Width Provided: 36"

M. Minimum Number of Required Plumbing Facilities: *UNISEX (IBC SECTION 2902.2 EXCEPTION 2)

Actual Occupant Load: 7 BASED ON ACTUAL UDOT STAFFING

a) Water Closets - Required (m) 1* (f) 1* Provided (m) 1* (f) 1*
b) Lavatories - Required (m) 1* (f) 1* Provided (m) 1* (f) 1*
c) Bath Tubs or Showers: 1 (EMERGENCY EYEWASH)
d) Drinking Fountains: 1 Service Sinks: 1

*MAXIMUM EMPLOYEES PERMITTED = 15

GENERAL NOTE:

1. CONSTRUCTION OF NEW STATE BUILDINGS AND REMODELING 0F EXISTING BUILDINGS SHALL COMPLY WITH ALL THE REQUIREMENTS OF THE DFCM STANDARDS, INCLUDING ENHANCED ACCESSIBILITY. THE DFCM STANDARDS CAN BE FOUND AT THE FOLLOWING WEB SITE: www.dfcm.utah.gov.

2. STEEL BUILDINGS SHALL COMPLY WITH IBC SECTION 106.3.4.2, DEFERRED SUBMITALS

1 3. EVERY STRUCTURE, AND PORTION THEREOF, INCLUDING NONSTRUCTURAL COMPONENTS THAT ARE PERMANENTLY ATTACHED TO STRUCTURES AND THEIR SUPPORTS AND ATTACHMENTS, SHALL BE DESIGNED AND CONSTRUCTED TO RESIST TO EFFECTS OF EARTHQUAKE MOTIONS IN ACCORDANCE WITH ASCE 7-05. REFERENCE IBC SECTION 1613.1

CLIENT

UDOT CONNECTING COMMUNITIES
STATION #4325
MILE MARKER 49.7 HIGHWAY 143
PANGUITCH UTAH

DESIGNER

ARCHIPLEX GROUP
architecture • planning • design services
1135 South West Temple, Ste. A
Salt Lake City, UT 84101
P:(801) 961-7070
F:(801) 961-7373

CONSULTANTS

PROFESSIONAL SEAL

STATE OF UTAH
RALPH M. STANISLAW
95-310818-0301
LICENSED ARCHITECT

ISSUE

MARK	DATE	DESCRIPTION
1	3-5-08	ADDENDUM #2
	01-2008	CONSTRUCTION DOCUMENTS

DFCM PROJECT NO:	07010900
DFCM CONTRACT NO:	077374
ARCHIPLEX PROJECT NO:	0709.01
DRAWN BY:	A. PHILLIPS
CHECKED BY:	R. STANISLAW
SCALE:	NONE
DATE:	JANUARY, 2008

SHEET TITLE

COVER SHEET

G000

GENERAL NOTES

1. CONTRACTOR IS RESPONSIBLE FOR VERIFYING ALL DIMENSIONS AND CONDITIONS AT THE SITE BEFORE SUBMITTING A BID OR PROCEEDING WITH ANY PORTION OF THE WORK.
2. WHENEVER QUESTIONS ARISE OR CONDITIONS ARE ENCOUNTERED WHICH ARE NOT COVERED BY OR ARE IN CONFLICT WITH THE CONTRACT DOCUMENTS, CONSULT WITH THE ARCHITECT PRIOR TO TAKING ANY FURTHER ACTION.
3. ALL DIMENSIONS ARE TO FACE OF CONCRETE OR FACE OF GYPSUM BOARD, U.N.O.
4. DO NOT SCALE DRAWINGS FOR DIMENSIONS.
5. DIMENSIONS NOTED AS N.T.S. ARE TO BE FIELD VERIFIED.
6. ALL WOOD IN CONTACT WITH OR WITHIN 8" OF SOILS IS TO BE FIELD TREATED FOR MOISTURE, RODENT AND INSECT PROTECTION.
7. THE CONTRACTOR SHALL COORDINATE THE SEQUENCING OF WORK WITH THE OWNER AND ARCHITECT TO MEET THE OWNERS SCHEDULE.
8. CONTRACTOR SHALL LEAVE WORK AREAS BROOM CLEAN AND FREE OF TOOLS, EQUIPMENT, ETC., AT THE END OF EACH SHIFT. ALL CONSTRUCTION ACTIVITY SHALL BE CONTAINED WITHIN CONSTRUCTION BARRICADES OR FENCES. CONTRACTOR SHALL PROTECT OWNERS EXISTING CONSTRUCTION AND EQUIPMENT ADJACENT TO NEW CONSTRUCTION. CONTRACTOR SHALL CLEAN ALL SURFACES TO "LIKE NEW" CONDITION AT THE COMPLETION OF
9. PROVIDE WATER SUPPLY ROUGH-IN AND ELECTRICAL SUPPLY TO IRRIGATION CONTROLS. PROVIDE PVC SLEEVE UNDER PAVEMENTS AND WALKS
10. THE DESIGN OF THE PRE MANUFACTURED STRUCTURAL ROOF SYSTEM INCLUDING THE STEEL DECK, JOISTS, GIRDERS, COLUMNS AND THE LATERAL FORCE RESISTING SYSTEM (INCLUDING RIGID FRAMES) IS THE RESPONSIBILITY OF THE PRE MANUFACTURED METAL BUILDING SUPPLIER. FOOTINGS, STEEL COLUMNS, CONCRETE PIER SIZES & LOCATIONS SHOWN ARE AN ESTIMATE OF ACTUAL SIZES. ACTUAL SIZES WILL BE PROVIDE AFTER PREFABRICATED METAL BUILDER IS SELECTED. ALL BIDDERS SHALL PROVIDE UNIT PRICES FOR ADDING OR SUBTRACTING VOLUME OF CONCRETE, WEIGHT OF REINFORCING STEEL AND VOLUME OF EARTHWORK.

GRAPHIC SYMBOLS

- EARTH
- SAND
- CONC. W/ FINISH
- TILE W/ BED
- BRICK
- CMU
- LIMESTONE
- WOOD (BLOCKING)
- WOOD FRAMING
- STEEL
- RIGID INSULATION
- PLASTER
- COMP. FILLER
- METAL LATH
- GRAVEL
- CONCRETE
- CAST STONE
- MARBLE
- GRANITE
- STONE
- PLYWOOD
- WOOD FINISH
- ALUMINUM
- BATT INSULATION
- ACOUSTICAL TILE
- BACKER ROD AND FILLER
- GYPSUM BOARD
- FENCE

ARCHITECTURAL LEGEND

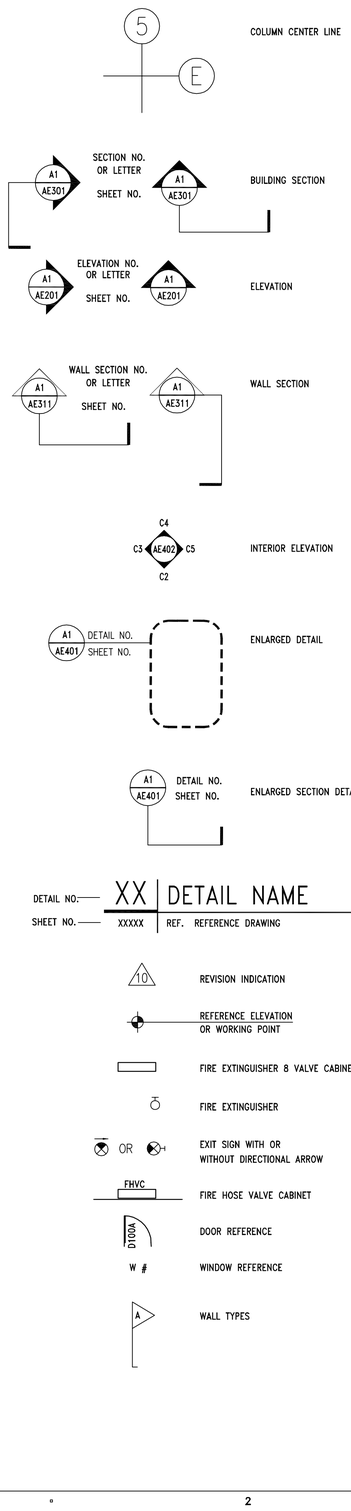

ABBREVIATIONS

ALT.	ALTERNATE
ALUM.	ALUMINUM
A.B.	ANCHOR BOLT
&	AND
ARCH.	ARCHITECTURAL
@	AT OR AT THE
BM.	BEAM
BLK.	BLOCK
BLKG.	BLOCKING
BD.	BOARD
BOT.	BOTTOM
BLDG.	BUILDING
CLKG.	CAULKING
C.I.	CAST IRON
CLG.	CEILING
CEM.	CEMENT
CTR.	CENTER
	CENTER LINE
CER.	CERAMIC
C.T.	CERAMIC TILE
CFCI	CONTRACTOR FURNISH, CONTRACTOR INSTALL
CFOI	CONTRACTOR FURNISH, OWNER INSTALLED
CLR.	CLEAR (...ANCE)
CLO.	CLOSET
COL.	COLUMN
CONC.	CONCRETE
CMU	CONCRETE MASONRY UNIT
CONN.	CONNECTION
CONSTR.	CONSTRUCTION
CONT.	CONTINUE/CONTINUOUS
CONTR.	CONTRACTOR
C.J.	CONTROL JOINT
CORR.	CORRIDOR
CNTR.	COUNTER
CTSK.	COUNTERSUNK
DET.	DETAIL
DIA.	DIAMETER
DIM.	DIMENSION
DN.	DOWN
D.S.	DOWNSPOUT
DWG.	DRAWING
D.F.	DRINKING FOUNTAIN
EA.	EACH
ELEC.	ELECTRIC (AL)
ELEV./EL.	ELEVATION
EQ.	EQUAL
EQUIP.	EQUIPMENT
EXP.	EXPANSION
EXT.	EXTERIOR
EW	EACH WAY
FIN.	FINISH
F.A.	FIRE ALARM
F.E.	FIRE EXTINGUISHER
F.E.C.	F.E. CABINET
FLR./FL.	FLOOR
F.D.	FLOOR DRAIN
FTG.	FOOTING
FDN.	FOUNDATION
GALV.	GALVANIZED
G.I.	GALVANIZED IRON
GA.	GAUGE
GL.	GLASS
GR.	GRADE
GND.	GROUND
GYP.	GYPSUM
GYP. BD.	GYPSUM BOARD
HDWR.	HARDWARE
HDWD.	HARDWOOD
HT.	HEIGHT
H.P.	HIGH POINT
HORIZ.	HORIZONTAL
H.B.	HOSE BIBB
HM	HOLLOW METAL
HR.	HOURS (FIRE RATING)
IN.	INCH
I.D.	INSIDE DIAMETER
INUSL.	INSULATION
INT.	INTERIOR
JAN.	JANITOR
JT.	JOINT
J-BOX	JUNCTION BOX
KIT.	KITCHEN
LAM.	LAMINATE
LAV.	LAVATORY
LT.	LIGHT
L.P.	LOW POINT
MAINT.	MAINTENANCE
MFR.	MANUFACTURER
M.O.	MASONRY OPENING
MAX.	MAXIMUM
MECH.	MECHANICAL
MEMB.	MEMBRANE
MEN	MEN'S TOILET
MTL./MET.	METAL
MIN.	MINIMUM
MIR.	MIRROR
MISC.	MISCELLANEOUS
MTD.	MOUNTED
MUL.	MULLION
NOM.	NOMINAL
N.	NORTH
N.I.C.	NOT IN CONTRACT
N.T.S.	NOT TO SCALE
NO. OR #	NUMBER
OFOI	OWNER FURNISH, OWNER INSTALL
OFCI	OWNER FURNISH, CONTRACTOR INSTALL
OFF.	OFFICE
O.C.	ON CENTER
OPNG.	OPENING
OPP.	OPPOSITE
OPP. H.	OPPOSITE HAND
O.D.	OUTSIDE DIAMETER
PTD.	PAINTED
PR.	PAIR
PART.	PARTITION
PED.	PEDESTRIAN
PLAS.	PLASTER
P. LAM.	PLASTIC LAMINATE
PL	PLATE
PM	PRESSED METAL
PLYWD.	PLYWOOD
PT.	POINT
Q.T.	QUARRY TILE
RAD.	RADIUS
R.W.L.	RAIN WATER LEADER
RE:	REFER TO
REFL.	REFLECTED
REINF.	REINFORCING
REQ.	REQUIRED
REV.	REVISED
R.	RISER
R.D.	ROOF DRAIN
RM.	ROOM
R.O.	ROUGH OPENING
SCHED.	SCHEDULE
SEAL.	SEALANT
SECT.	SECTION
S.SK.	SERVICE SINK
SHT.	SHEET
SIM.	SIMILAR
SL./SLP.	SLOPE
S.C.	SOLID CORE
SPEC.	SPECIFICATIONS
SQ.	SQUARE
STD.	STANDARD
STL.	STEEL
STOR.	STORAGE
STRUCT.	STRUCTURAL/STRUCTURE
SYM.	SYMMETRICAL
S.STL	STAINLESS STEEL
TEL.	TELEPHONE
TEMP.	TEMPORARY/TEMPERED
THK.	THICK (NESS)
T & G	TONGUE AND GROOVE
T/CONC.	TOP OF CONCRETE
T/CURB	TOP OF CURB
T.O.P.	TOP OF PLATE
T/WALL	TOP OF WALL
T.	TREAD
TYP.	TYPICAL
UNF.	UNFINISHED
U.N.O.	UNLESS NOTED OTHERWISE
VAR.	VARY OR VARIES
VERT.	VERTICAL
V.T.R.	VENT THROUGH ROOF
W/	WITH
WD.	WOOD
WP.	WATERPROOF
WSCT.	WAINSCOT
W/O	WITHOUT
W.P.	WORKING POINT
W.R.	WATER RESISTANT

INDEX OF DRAWINGS

G000 COVER SHEET
G001 GENERAL NOTES, ABBREVIATIONS, SYMBOLS, LEGEND & DRAWING INDEX
G002 MASTER KEYNOTE LIST

CIVIL

C100 SITE PLAN
C200 UTILITY PLAN
C300 GRADING AND DRAINAGE PLAN
C401 S.W.P.P. PLAN
C402 S.W.P.P.P. DETAILS
C403 S.W.P.P.P. DETAILS
C501 PLAN & PROFILE STA. 10 + 00 ~ 13 + 00
C502 PLAN & PROFILE STA. 13 + 00 ~ 16 + 44.80
C503 PLAN & PROFILE STA. 20 + 00 ~ 23 + 86.14
C600 TYPICAL SECTIONS & DETAILS

ARCHITECTURAL

AE101 FIRST FLOOR AND MEZZANINE PLANS
AE121 FIRST FLOOR AND MEZZANINE REFLECTED CEILING PLANS
AE141 ROOF PLAN
AE201 EXTERIOR ELEVATIONS
AE202 EXTERIOR ELEVATIONS
AE301 BUILDING SECTIONS
AE311 WALL SECTIONS
AE401 ENLARGED RESTROOM FLOOR PLAN, INTERIOR ELEVATIONS AND DETAILS
AE402 ENLARGED MAINTENANCE BAY AND INTERIOR ELEVATIONS
AE403 STAIR PLAN, SECTION ELEVATION & DETAILS
AE501 WALL TYPES
AE502 SIGNAGE AND MISC. DETAILS
AE503 MISC. DETAILS
AE601 DOOR SCHEDULE AND DETAILS
AE602 WINDOW FRAME TYPES, GLAZING & FINISH SCHEDULES AND DETAILS
AE700 SITE STRUCTURES, MOTORIZED GATE PLAN & ELEVATIONS.
AE701 SITE STRUCTURES, ADD ALT. #1 SANDER RACK PLAN, SECTION & ELEVS.
AE702 SITE STRUCTURES, ADD ALT. #2 WASH RACK PLAN, SECTION & ELEVS.
AE703 SITE STRUCTURES, ADD ALT. #3 SALT STORAGE PLAN AND ELEVATIONS.
AE704 SITE STRUCTURES, ADD ALT. #3 SALT STORAGE SEC. ELEV. AND DETAILS.
AE705 SITE STRUCTURES, ADD ALT #4 OPEN STORAGE PLAN, SECTIONS & ELEVS.

STRUCTURAL

S001 GENERAL STRUCTURAL NOTES
S101 FOOTING AND FOUNDATION PLAN
S102 OUT BUILDING PLANS
S201 SANDER AND WASH RACK DETAILS
S501 FOOTING AND FOUNDATION DETAILS
S502 FOOTING AND FOUNDATION DETAILS
S503 ADD ALT #3 SALT STORAGE FOOTING AND FOUNDATION DETAILS
S504 MEZZANINE STAIR DETAILS
S601 STRUCTURAL SCHEDULES

MECHANICAL

M001 MECHANICAL SYMBOLS AND SCHEDULES
M201 MECHANICAL FLOOR PLAN
M601 MECHANICAL DETAILS
M602 MECHANICAL DETAILS
M603 MECHANICAL DETAILS

P001 PLUMBING SYMBOLS AND SCHEDULES
P201 PLUMBING PLAN
P301 PLUMBING ENLARGEMENTS
P601 PLUMBING DETAILS
P602 PLUMBING DETAILS
P603 PLUMBING DETAILS

ELECTRICAL

E001 GENERAL NOTES, SCHEDULES AND RISER DIAGRAM
E002 ELECTRICAL PANELS AND LOAD CALCS
E101 SITE PLAN
E201 LIGHTING PLAN & FIRE ALARM
E202 OUT-BUILDINGS ELECTRICAL PLAN
E203 OUT-BUILDINGS ELECTRICAL PLAN
E301 POWER PLAN
E401 DETAILS

UTILITY CONTACT INFO

Questar
2270 N Industrial Park Road
Richfield Utah, 84701
Telephone: (435) 896-4111
Fax: (801) 324-4120
E-Mail: cheryl.huntsman@questar.com
Cheryl Huntsman

Questar
2270 N Industrial Park Road
Richfield Utah, 84701
Telephone: (435) 896-4107
Fax: (801) 324-4120
E-Mail: gary.stevens@questar.com
Gary Stevens

South Central Telephone
250 East Center
Panguitch, UT 84759-0432
Telephone: (435) 896-4107
Fax: (801) 324-4120
E-Mail: toddb@socen.com
Todd Breinholt
Field Engineer

Pangutich City
Telephone: (435) 676-8585
Fax:
E-Mail: allenhenrie@yahoo.com
Allen Henrie

Telephone: (425) 896-2265
Fax:
E-Mail: Bradleychristensen@pacificor.com
Bradley Christensen

CLIENT

UDOT CONNECTING COMMUNITIES

STATION #4325
MILE MARKER 49.7 HIGHWAY 143
PANGUITCH UTAH

DESIGNER

ARCHIPLEX GROUP
architecture · planning · design services
1135 South West Temple, Ste. A
Salt Lake City, UT 84101
P:(801) 961-7070
F:(801) 961-7373

CONSULTANTS

PROFESSIONAL SEAL

STATE OF UTAH
RALPH M. STANISLAW
95-310818-0301
LICENSED ARCHITECT

ISSUE

MARK	DATE	DESCRIPTION
1	3-5-08	ADDENDUM #2
	01-2008	CONSTRUCTION DOCUMENTS

DFCM PROJECT NO:	07010900
DFCM CONTRACT NO:	077374
ARCHIPLEX PROJECT NO:	0709.01
DRAWN BY:	A. PHILLIPS
CHECKED BY:	R. STANISLAW
SCALE:	NONE
DATE:	JANUARY, 2008

SHEET TITLE

GENERAL NOTES, ABBREVIATIONS, LEGENDS AND DRAWING INDEX

G001

MASTER KEYNOTE LIST – (APPLIES TO ARCHITECTURAL DRAWINGS ONLY)

DIVISION 1 GENERAL REQUIREMENTS

DIVISION 2 SITEWORK

02200 EARTHWORK

02200.A0 COMPACTED FILL
02200.B0 GRAVEL BASE
02200.C0 SAND

02512 ZERO VOIDS ASPHALT PAVING

02512.A0 ZERO VOIDS ASPHALT PAVING (THICKNESS)

02513 ASPHALT CONCRETE PAVING

02513.A0 ASPHALT CONCRETE PAVING

DIVISION 3 CONCRETE

03053 CONCRETE WATER PROOFING ADMIXTURE

03053.A0 CONCRETE WATER PROOFING ADMIXTURE

03054 OLIOPHOBIC TOPICAL CONCRETE SEALER

03054.A0 OLIOPHOBIC TOPICAL SEALER

03300 CAST-IN-PLACE CONCRETE

03300.A0 CONCRETE – SLAB ON GRADE
03300.A1 CONCRETE SLAB-ON-GRADE – SEE STRUCTURAL
03300.A2 CONCRETE SLAB-ON-GRADE (THICKNESS)
03300.B1 CONCRETE SLAB – RE:STRUCTURAL
03300.B2 CONCRETE SLAB (THICKNESS)
03300.C0 FOOTING
03300.C1 FOOTING – SEE STRUCTURAL
03300.D0 CONCRETE PAD
03300.E0 RETAINING WALL
03300.F0 CAST-IN-PLACE REINFORCED CONCRETE
03300.G0 CONCRETE OVER METAL DECK – SEE STRUCTURAL
03300.H0 FOUNDATION WALL – SEE STRUCTURAL
03300.H1 CONCRETE PIER – SEE STRUCTURAL
03300.J0 REINFORCING
03300.J1 REINFORCING – SEE STRUCTURAL
03300.J2 #4 BARS CONTINUOUS (QUANTITY)
03300.J3 #5 BARS CONTINUOUS (QUANTITY)
03300.K1 THICKENED SLAB – SEE STRUCTURAL
03300.L1 30# FELT
03300.M1 MOISTURE BARRIER
03300.N0 CONCRETE CURB
03300.P3 CONTROL JOINT – SEE STRUCTURAL
03300.P4 CONSTRUCTION JOINT
03300.P6 CHAMFER JOINT
03300.P7 SAWCUT CONSTRUCTION JOINT, TYP.
03300.Q1 CONCRETE BOLLARD PAINTED (SEE STRUTURAL)
03300.T1 CONCRETE @ STAIR TREAD

DIVISION 5 METALS

05120 STRUCTURAL STEEL

05120.A1 STEEL BEAM – SEE STRUCTURAL – GALVANIZED
05120.B1 STEEL COLUMN – SEE STRUCTURAL – GALVANIZED
05120.C1 TUBE STEEL BEAM – SEE STRUCTURAL – GALVANIZED
05120.D1 TUBE STEEL COLUMN – SEE STRUCTURAL

05310 STEEL DECK

05310.A1 METAL DECK – SEE STRUCTURAL

05400 COLD-FORMED METAL FRAMING

05400.A1 6" STRUCTURAL STEEL STUDS – SEE STRUCTURAL DRAWINGS FOR SPACING AND GAUGE
05400.A2 3 5/8" STRUCTURAL STEEL STUDS – SEE STRUCTURAL DRAWINGS FOR SPACING AND GAUGE
05400.X1 STEEL STUD
05400.X2 STEEL TRACK
05400.X3 STEEL JOIST – SEE STRUCTURAL

05500 METAL FABRICATIONS

05500.A1 ANGLE – SEE STRUCTURAL
05500.A2 STEEL ANGLE (SIZE) – GALVANIZED
05500.B0 CLIP ANGLE
05500.B2 CLIP ANGLE (SIZE)
05500.C1 SHEET METAL ANGLE – 22 GA. – GALVANIZED (SIZE)
05500.D0 CHANNEL (SIZE)
05500.D1 CHANNEL – SEE STRUCTURAL
05500.D2 HAT CHANNEL (SIZE)
05500.E0 PLATE (SIZE)
05500.E1 PLATE – SEE STRUCTURAL
05500.E2 PLATE (SIZE) – GALVANIZED
05500.E3 BENT PLATE – SEE STRUCTURAL
05500.F1 THRU BOLT (DIAMETER)
05500.G1 BENT BAR TAB (THICKNESS)
05500.G2 BARTAB (THICKNESS)
05500.H1 LAG BOLTS (DIAMETER)
05500.J1 PIPE BOLLARD (DIAMETER) – GALV. & PAINTED
05500.M1 CHECKERED PLATE (SIZE) GALVANIZED
05500.P0 ANCHOR BOLT(S)
05500.P1 ANCHOR BOLTS (DIAMETER, SPACING)

05500 METAL FABRICATIONS (CONT.)

05500.V0 FLOOR PLATE
05500.X1 STEEL STUD (SEE STRUCTURAL)
05500.X2 STEEL RUNNER (SEE STRUCTURAL)
05500.Y0 AIR DUCT SCREEN
05500.Y1 AIR DUCT SCREEN – SEE MECHANICAL – PAINTED
05500.Z0 CHAIN – GALVANIZED

05510 METAL STAIRS

05510.A1 LADDER RUNGS
05510.B0 LADDER RAILS
05510.C0 LADDER MOUNTING BRACKET
05510.D1 RUBBER SHOE AT BOTTOM OF EACH RAIL
05510.E1 NON SKID SURFACE @ NOSING
05510.F0 STEEL STRINGER – (SIZE)
05510.F1 STEEL STRINGER – (SIZE) – GALVANIZED
05510.G1 3/16" STEEL CLOSURE PLATE – GALVANIZED
05510.H0 CONC. FILLED METAL PAN STAIR – GALVANIZED
05510.H1 PRE-FORMED, CONC. FILLED METAL PAN STAIR TREAD – (SIZE) – GALVANIZED
05510.J1 METAL PAN STAIR SUPPORT – (SIZE) – GALVANIZED
05510.J2 PAN ANCHORAGE – (SIZE) – GALVANIZED
05510.K1 STEEL CHANNEL DECK SUPPORT – GALVANIZED

05521 PIPE & TUBE RAILINGS

05521.A1 1 1/2" O.D. STEEL GUARDRAIL
05521.A2 PIPE GUARDRAIL (DIAMETER) – GALVANIZED
05521.A3 1 1/2" O.D. PIPE GUARDRAIL – GALVANIZED
05521.B1 1 1/2" O.D. HANDRAIL
05521.B2 PIPE HANDRAIL (DIAMETER) – GALVANIZED
05521.B3 1 1/2" O.D. PIPE HANDRAIL – GALVANIZED
05521.C2 ESCUTCHEON WITH EASED EDGES (SIZE)
05521.D1 PIPE RAIL SUPPORT – GALVANIZED
05521.E1 1" I.D. PIPE RAILING ANCHOR – GALVANIZED
05521.F1 1/2" DIA. THRU BOLT

05530 GRATINGS

05530.A0 TRENCH FRAME – GALVANIZED
05530.A1 STEEL GRATE 22-W-4 (SIZE) GALVANIZED
05530.B0 ALUMINUM BAR PANELS
05530.C1 METAL GRATE PANEL – GALV.
05530.C2 METAL GRATE TREAD – GALV.

DIVISION 6 WOOD AND PLASTICS

06105 MISCELLANEOUS CARPENTRY

06105.L2 BLOCKING AS REQUIRED
06105.P1 2X4
06105.P2 2X6
06105.P6 4X4
06105.P9 2 x FRAMING, FIRE TREATED
06105.P10 PRESSURE TREATED WOOD TIMBER (SIZE)
06105.Q2 SHIM AS REQUIRED
06105.R2 SHEATHING – PLYWOOD (THICKNESS) GRADE (SIZE)
06105.R3 PLYWOOD PANEL (THICKNESS)
06105.V1 EXTERIOR GRADE PLYWOOD (THICKNESS)
06105.V6 PEGBOARD (THICKNESS)
06105.Z0 ANCHOR AS REQUIRED

06402 INTERIOR ARCHITECTURAL WOODWORK

06402.A0 SILL
06402.B1 PLASTIC LAMINATE BACKSPLASH (HEIGHT)
06402.C1 PAINT GRADE WOOD CAP (THICK)
06402.E1 WIRE PULL
06402.F1 PROVIDE WHITE MELAMINE FINISH @ ALL INTERIOR SURFACES
06402.H0 SHELF(VES)
06402.H1 ADJUSTABALE SHELVES (FINISH)
06402.H2 SHELVING (DEPTH)
06402.K0 BASE UNIT (FINISH)
06402.K2 BASE UNIT W/ADJ. SHELF(VES) (FINISH)
06402.K3 BASE UNIT W/DRAWERS (FINISH)
06402.K4 BASE UNIT W/DRAWER & ADJ. SHELF(VES) (FINISH)
06402.L2 WALL UNIT W/ADJ. SHELF(VES) (FINISH) 06402.P0 COUNTERTOP
06402.P2 COUNTERTOP – P. LAM. ON 3/4" PLYWOOD
06402.X0 WORKBENCH (DEPTH)

06651 SOLID SURFACE FABRICATIONS

06651.A0 1/2" WHITE SOLID SURFACE WINDOW SILL

DIVISION 7 THERMAL AND MOISTURE PROTECTION

07729 ROOF SNOW GUARDS

07729.A0 STANDING SEAM METAL ROOF 2 PIPE SNOWGUARD SYSTEM

07901 JOINT SEALANTS

07901.A0 CONT. SEALANT
07901.B0 ASPHALT SATURATED FIBERBOARD
07901.C0 CONT. CAULK
07901.D0 JOINT FILLER
07901.G0 BACKER ROD
07901.H1 CONCRETE JOINT WATER PROOF SEALANT
07901.H2 JOINT SEALANT

DIVISION 8 DOORS AND WINDOWS

08111 STANDARD STEEL DOORS AND FRAMES

08111.A0 PRESSED METAL FRAME
08111.A1 GROUT-FILLED PRESSED METAL FRAME
08111.B0 HOLLOW METAL DOOR
08111.C0 JAMB ANCHOR

08360 SECTIONAL OVERHEAD DOORS

08360.A0 HEAVY DUTY OVERHEAD SECTIONAL DOOR
08360.B0 3" HEAVY DUTY OVERHEAD SECTIONAL DOOR TRACK
08360.C0 WEATHERSTRIPPING
08360.D0 DOOR GUIDE

08521 HORIZONTAL VINYL (PVC) WINDOWS

08521.B0 FIXED VINYL WINDOW
08521.C0 VINYL WINDOW W/SLIDING GLASS PANEL

08710 DOOR HARDWARE

08710.A0 THRESHOLD
08710.B0 DOOR SWEEP
08710.C0 WEATHERSTRIPPING

08800 GLAZING

08800.C0 WIRE GLASS
08800.G1 CLEAR INSULATING GLASS (SIZE)
08800.G3 OPAGUE INSULATING GLASS

DIVISION 9 FINISHES

09255 GYPSUM BOARD ASSEMBLIES

09255.A1 GYPSUM BOARD (THICKNESS)
09255.A2 WATER RESISTANT GYPSUM BOARD (THICKNESS)
09255.B2 TYPE 'X' GYPSUM BOARD (THICKNESS)
09255.C3 CEMENT BOARD (THICKNESS)
09255.H0 METAL STUD
09255.H1 METAL STUDS (SIZE, SPACING)
09255.J0 METAL RUNNER
09255.K0 DOUBLE STUDS
09255.K1 DOUBLE STUDS (GAGE)
09255.L1 7/8" X 1-3/8" METAL ANGLE
09255.L2 2-1/2" X 2-1/2" METAL ANGLE
09255.M2 METAL CORNER BEAD (TYP)
09255.P0 Z-FURRING CHANNEL
09255.Q0 7/8" METAL FURRING CHANNEL
09255.R2 CHANNEL (SIZE, SPACING)
09255.S1 8 GA. WIRE HANGERS (SPACING)
09255.S2 18 GA. WIRE TIES
09255.S3 18 GA. METAL MOUNTING STRIPS
09255.S4 14 GA. STAINLESS STEEL COUNTER TOP (FINISH)
09255.U1 SUSPENDED CEILING SYSTEM
09255.V0 EDGE TRIM (TYP)
09255.V2 LC-BEAD (PREFERRED USG 200-A TRIM)
09255.V4 VINYL TRIM

09300 TILE

09300.A1 FLOOR TILE – SEE FINISH SCHED.
09300.B1 WALL TILE – SEE FINISH SCHED.
09300.B2 PROVIDE TILE FRAME AROUND FIXTURE
09300.C0 TILE BASE
09300.D1 BULLNOSE TRIM UNIT
09300.E1 1/2" x 6" TILE TRIM PIECE – SEE FINISH SCHED.
09300.G1 MORTAR BED
09300.G4 WATERPROOF MEMBRANE

09511 ACOUSTICAL PANEL CEILINGS

09511.A0 LAY-IN ACOUSTICAL CEILING SYSTEM

09660 RESILIENT TILE FLOORING

09660.A1 VINYL COMPOSITION TILE
09660.B1 VINYL TRANSITION STRIP

09678 RESILIENT WALL BASE AND ACCESSORIES

09678.E1 RUBBER BASE (SIZE)

09900 PAINTING

09900.A1 PAINT – SEE FINISH SCHED.
09900.B1 GALVANIZED METAL PRIMER

DIVISION 10 SPECIALTIES

10100 VISUAL DISPLAY BOARDS

10100.C0 MARKER BOARD

10425 SIGNS

10425.A0 ROOM SIGNAGE
10425.A1 OIL SIGNAGE
10425.B1 WELDING SIGNAGE
10425.C1 ACCESSIBLE SIGNAGE
10425.D1 ACCESSIBLE/UNISEX RESTROOM SIGNAGE

10500 METAL LOCKERS AND STORAGE CABINETS

10500.A0 METAL LOCKERS (WIDTH)
10500.B0 METAL STORAGE CABINETS

10522 FIRE EXTINGUISHERS, CABINETS, AND ACCESSORIES

10522.A0 FIRE EXTINGUISHER

10800 TOILET AND BATH ACCESSORIES

10800.B0 PAPER TOWEL DISPENSER & WASTE RECEPTACLE
10800.B1 SEMI-RECESSED PAPER TOWEL DISPENSER & WASTE RECEPTACLE
10800.C0 TOILET TISSUE DISPENSER
10800.C1 RECESSED TOILET TISSUE DISPENSER/SAN. NAP. DISPOSAL
10800.D0 MOP RACK
10800.E0 GRAB BAR
10800.E1 GRAB BAR (SHOWER)
10800.F0 ROBE HOOK
10800.F1 DOUBLE PRONG ROBE HOOK
10800.H0 SOAP DISPENSER
10800.H1 SOAP DISH
10800.P1 SHOWER CURTAIN ROD
10800.P2 SHOWER CURTAIN
10800.R1 FRAMED MIRROR (SIZE)
10800.T1 FOLDING SHOWER SEAT
10800.T0 METAL SHELF (SIZE)

DIVISION 11 EQUIPMENT

11151 MOBILE LIFT

11151.A0 MOBILE LIFT – NOT IN CONTRACT – OWNER FINISHED

DIVISION 12 FURNISHINGS

12511 HORIZONTAL LOUVER BLINDS

12511.A0 HORIZONTAL LOUVER BLINDS

DIVISION 13 SPECIAL CONSTRUCTION

13125 METAL ARCH BUILDING SYSTEM

13125.A0 METAL ARCH BUILDING SYSTEM
13125.B0 STANDING SEAM METAL ROOF – WITH THERMAL BLOCKS
13125.B1 STANDING SEAM METAL ROOF RIDGE
13125.B2 STANDING SEAM METAL CANOPY
13125.C0 METAL RAIN GUTTER W/DOWNSPOUTS
13125.C1 METAL RAIN GUTTER
13125.C2 DOWNSPOUT
13125.C3 GUTTER STRAP, INSTALL AT EVERY OTHER PANEL RIB
13125.D0 METAL FLASHING
13125.D1 METAL DRIP FLASHING
13125.D2 METAL HEAD FLASHING
13125.D3 METAL SILL FLASHING
13125.D4 METAL FLASHING, FINISH TO MATCH ROOF PANELS
13125.D5 RIDGE FLASHING, TO MATCH ROOF PANELS
13125.D6 DOOR HEAD FLASHING
13125.D7 JAMB FLASHING
13125.D8 CONTINUOUS PRE-FINISHED SHEET METAL CLOSURE
13125.D9 FLEXIBLE ROOF RIDGE
13125.D10 ROOF RIDGE SUPPORT
13125.E0 METAL TRIM
13125.E1 JAMB TRIM
13125.E2 PANEL TRIM
13125.E3 RAKE TRIM
13125.E4 RAKE SLIDE
13125.E5 METAL EAVE CLOSURE
13125.E6 WALL CLOSURE
13125.E7 METAL OUTSIDE CLOSURE
13125.E8 CORNER TRIM
13125.E9 FRAMED OPENING HEADER
13125.F0 METAL WALL PANEL
13125.F1 METAL WALL FASTENER
13125.F2 BLIND RIVET
13125.F3 POP RIVET
13125.G0 STANDING SEAM METAL FACIA
13125.H0 BREAK METAL
13125.H1 METAL ANGLE
13125.H2 HIGH RAKE SUPPORT ANGLE
13125.H3 RAKE ANGLE
13125.H4 4" x 4" CONT. ANGLE
13125.H5 BACKUP PLATE ANGLE
13125.H6 EAVE SUPPORT ANGLE
13125.H7 EAVE STRUT

13125 METAL ARCH BUILDING SYSTEM (CONT.)

13125.J0 STRUCTURAL MEMBER – PRIMED AND PAINTED
13125.J1 STRUCTURAL GIRT – PAINTED
13125.J2 ROOF PURLIN – PAINTED
13125.J3 STRUCTURAL GIRT
13125.J4 ROOF PURLIN – PRIMED
13125.J5 STRUCTURAL GIRT – PRIMED
13125.K0 CLIP
13125.K1 LOW PANEL CLIP
13125.L1 STEEL COLUMN – PAINTED
13125.L2 STEEL COLUMN – GALV. – PAINTED
13125.L3 STEEL COLUMN – GALVANIZED
13125.L4 STEEL COLUMN – PRIMED AND PAINTED
13125.L5 STEEL COLUMN –PRIMED
13125.M1 STEEL BEAM – PAINTED
13125.M2 STEEL BEAM – GALV. – PAINTED
13125.M3 STEEL BEAM – GALVANIZED
13125.M4 STEEL BEAM – PRIMED AND PAINTED
13125.M5 STEEL BEAM – PRIMED
13125.N1 ANCHOR
13125.N2 FASTENER (SPACING)
13125.P1 DOUBLE BEAD TAPE SEALER
13125.P2 SEALANT
13125.P3 THERMAL BREAK
13125.Q0 METAL VENT
13125.Q1 VENT MATERIAL
13125.R0 INSULATION & VAPOR BARRIER (R-VALUE)

DIVISION 14 CONVEYING SYSTEMS

14620 TROLLEY HOIST

14620.A0 TROLLEY HOIST (SIZE) – SEE STRUCTURAL

DIVISION 15 EQUIPMENT

15000 MECHANICAL

15050.A1 MECH. PENETRATIONS
15250.A1 PIPE INSULATION AT ALL EXPOSED PIPE
15410.A0 URINAL
15410.A1 URINAL, ACCESSIBLE
15410.B0 SINK FAUCET
15410.B1 SINK FAUCET W/ADA LEVER HANDLES
15410.C0 UTILITY SINK
15410.D1 FLOOR SINK
15410.E0 TRENCH DRAIN
15410.E1 DRAIN W/ SEDIMENT BUCKET
15410.E2 FLOOR DRAIN
15410.F0 TOILET
15412.A0 EMERGENCY SHOWER & EYE WASH
15452.A1 DRINKING FOUNTAIN
15486.A1 FUEL FIRED WATER HEATER
15460.A1 NATURAL GAS FIRED WATER HEATER
15490.A0 WASTE OIL PUMP
15490.B0 WASTE OIL CARTS
15490.C0 WASTE OIL PIT
15490.D0 600 GAL WASTE OIL TANK – C.F.C.I.
15491.A0 AIR COMPRESSOR
15491.B0 OVERHEAD LUBE REEL
15491.C0 OVERHEAD HOSE REEL
15600.A0 NATURAL GAS RADIANT HEATING SYSTEM
15611.A1 NATURAL GAS FIRED FURNACE
15670.A1 CONDENSER UNIT – SEE MECHANICAL
15838.A0 EXHAUST FAN – SEE MECHANICAL
15838.A1 EXHAUST FAN VENT
15861.A1 MECHANICAL DUCTWORK SEE MECHANICAL
15887.A1 LOUVER W/ BIRD SCREEN
15887.B1 INTAKE GRAVITY HOOD – SEE MECHANICAL

DIVISION 16 ELECTRICAL

16000 ELECTRICAL

16129.A0 CONTINUOUS HEAT TAPE IN DOWN SPOUTS AND GUTTERS
16210.A1 ELECTRICAL METER – SEE ELECTRICAL DRAWINGS
16442.A0 ELECTRICAL PANEL
16510.A0 INTERIOR LIGHTS
16510.B0 WALL MOUNTED INTERIOR LIGHTS
16520.B1 EXTERIOR WALL MOUNTED LIGHTS
16520.B2 EXTERIOR WALL MOUNTED FLOOD LIGHTS
16520.B3 EXTERIOR FLOOD LIGHTS – MOUNT TO STEEL COLUMN

CLIENT

UDOT CONNECTING COMMUNITIES

STATION #4325
MILE MARKER 49.7 HIGHWAY 143
PANGUITCH UTAH

DESIGNER

ARCHIPLEX GROUP
architecture · planning · design services
1135 South West Temple, Ste. A
Salt Lake City, UT 84101
P:(801) 961-7070
F:(801) 961-7373

CONSULTANTS

PROFESSIONAL SEAL

STATE OF UTAH
RALPH M. STANISLAW
95-310818-0301
LICENSED ARCHITECT

ISSUE

MARK	DATE	DESCRIPTION
1	3-5-08	ADDENDUM #2
	01-2008	CONSTRUCTION DOCUMENTS

DFCM PROJECT NO:	07010900
DFCM CONTRACT NO:	077374
ARCHIPLEX PROJECT NO:	0709.01
DRAWN BY:	A. PHILLIPS
CHECKED BY:	R. STANISLAW
SCALE:	NONE
DATE:	JANUARY, 2008

SHEET TITLE

MASTER KEYNOTE LIST

G002

INDEX OF SHEETS

SHEET NO.	SHEET DESCRIPTION
C100	SITE PLAN
C200	UTILITY PLAN
C300	GRADING & DRAINAGE PLAN
C401~C403	S.W.P.P. PLAN & DETAILS
C501~C503	PLAN AND PROFILES
C600	DETAIL SHEET

N

40 0 40 80

SCALE IN FEET
1" = 40'

LEGEND

- PROPERTY LINE
- PROPOSED EDGE OF ASPHALT
- EXISTING FENCE LINE
- EXISTING EDGE OF ASPHALT
- EXISTING DIRT ROAD
- PROPOSED 3/4" ASPHALT PAVING AREA
- PROPOSED 1/2" ZERO VOID ASPHALT PAVING AREA

PRIVATE ENGINEER'S NOTICE TO CONTRACTORS

THE CONTRACTOR AGREES THAT HE SHALL ASSUME SOLE AND COMPLETE RESPONSIBILITY FOR JOB SITE CONDITIONS DURING THE COURSE OF CONSTRUCTION OF THIS PROJECT, INCLUDING SAFETY OF ALL PERSONS AND PROPERTY; THAT THIS REQUIREMENT SHALL APPLY CONTINUOUSLY AND NOT BE LIMITED TO NORMAL WORKING HOURS; AND THAT THE CONTRACTOR SHALL DEFEND, INDEMNIFY, AND HOLD THE OWNER AND THE ENGINEER HARMLESS FROM ANY AND ALL LIABILITY, REAL OR ALLEGED, IN CONNECTION WITH THE PERFORMANCE OF WORK ON THIS PROJECT, EXCEPTING FOR LIABILITY ARISING FROM THE SOLE NEGLIGENCE OF THE OWNER OR THE ENGINEER.

NOTE:
UDOT PROVIDED THE TOPOGRAPHICAL SURVEY INFORMATION USED IN PREPARING THIS DRAWING. PEPG ENGINEERING MAKES NO CLAIMS THAT REGARDING THE ACCURACY OF THE INFORMATION PROVIDED BY UDOT.

ALL CONSTRUCTION TO CONFORM TO STATE STANDARDS AND SPECIFICATIONS IN RIGHT OF WAY

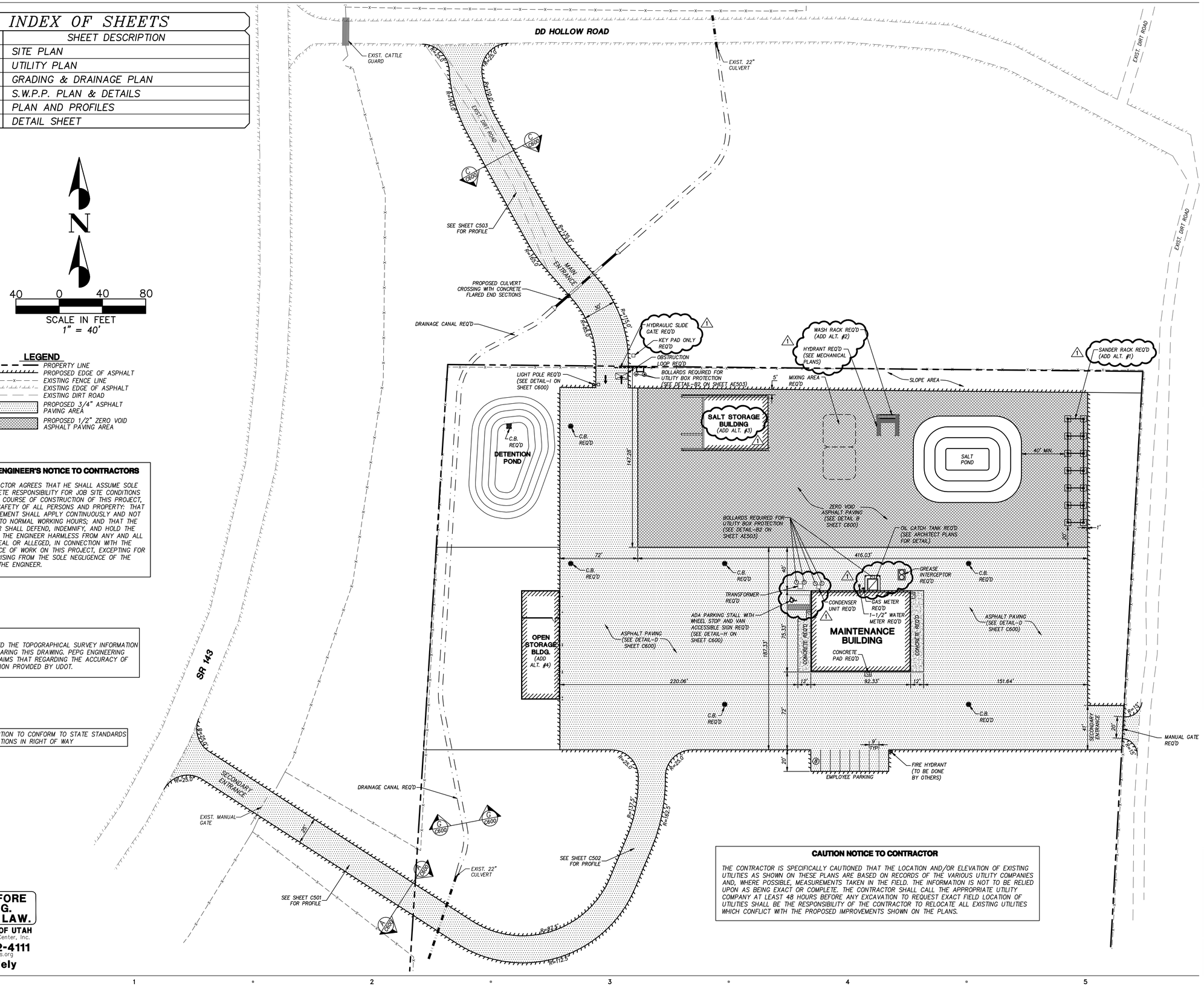

CAUTION NOTICE TO CONTRACTOR

THE CONTRACTOR IS SPECIFICALLY CAUTIONED THAT THE LOCATION AND/OR ELEVATION OF EXISTING UTILITIES AS SHOWN ON THESE PLANS ARE BASED ON RECORDS OF THE VARIOUS UTILITY COMPANIES AND, WHERE POSSIBLE, MEASUREMENTS TAKEN IN THE FIELD. THE INFORMATION IS NOT TO BE RELIED UPON AS BEING EXACT OR COMPLETE. THE CONTRACTOR SHALL CALL THE APPROPRIATE UTILITY COMPANY AT LEAST 48 HOURS BEFORE ANY EXCAVATION TO REQUEST EXACT FIELD LOCATION OF UTILITIES SHALL BE THE RESPONSIBILITY OF THE CONTRACTOR TO RELOCATE ALL EXISTING UTILITIES WHICH CONFLICT WITH THE PROPOSED IMPROVEMENTS SHOWN ON THE PLANS.

CALL BEFORE YOU DIG. IT'S THE LAW.
BLUE STAKES OF UTAH
Utility Notification Center, Inc.
1-800-662-4111
www.bluestakes.org
Dig Safely

CLIENT

UDOT CONNECTING COMMUNITIES

STATION #4325
MILE MARKER 49.7 HIGHWAY 143
PANGUITCH UTAH

DESIGNER

ARCHIPLEX GROUP
architecture · planning · design services
1135 South West Temple, Ste. A
Salt Lake City, UT 84101
P:(801) 961-7070
F:(801) 961-7373

CONSULTANTS

PEPG ENGINEERING, L.L.C.
421 W. 12300 S. #400 • DRAPER, UT 84020
PH: (801) 562-2521 • FAX: (801) 562-2551

PROFESSIONAL SEAL

REGISTERED PROFESSIONAL ENGINEER
No. 271207
DARRIN R. SMITH
3-3-2008
STATE OF UTAH

ISSUE

MARK	DATE	DESCRIPTION
1	3-5-08	ADDENDUM #2
	01-2008	CONSTRUCTION DOCUMENTS

DFCM PROJECT NO:	07010900
DFCM CONTRACT NO:	077374
ARCHIPLEX PROJECT NO:	0709.01
DRAWN BY:	BCB/DRS
CHECKED BY:	DRS
SCALE:	1"=40'
DATE:	JANUARY, 2008

SHEET TITLE

SITE PLAN

C100

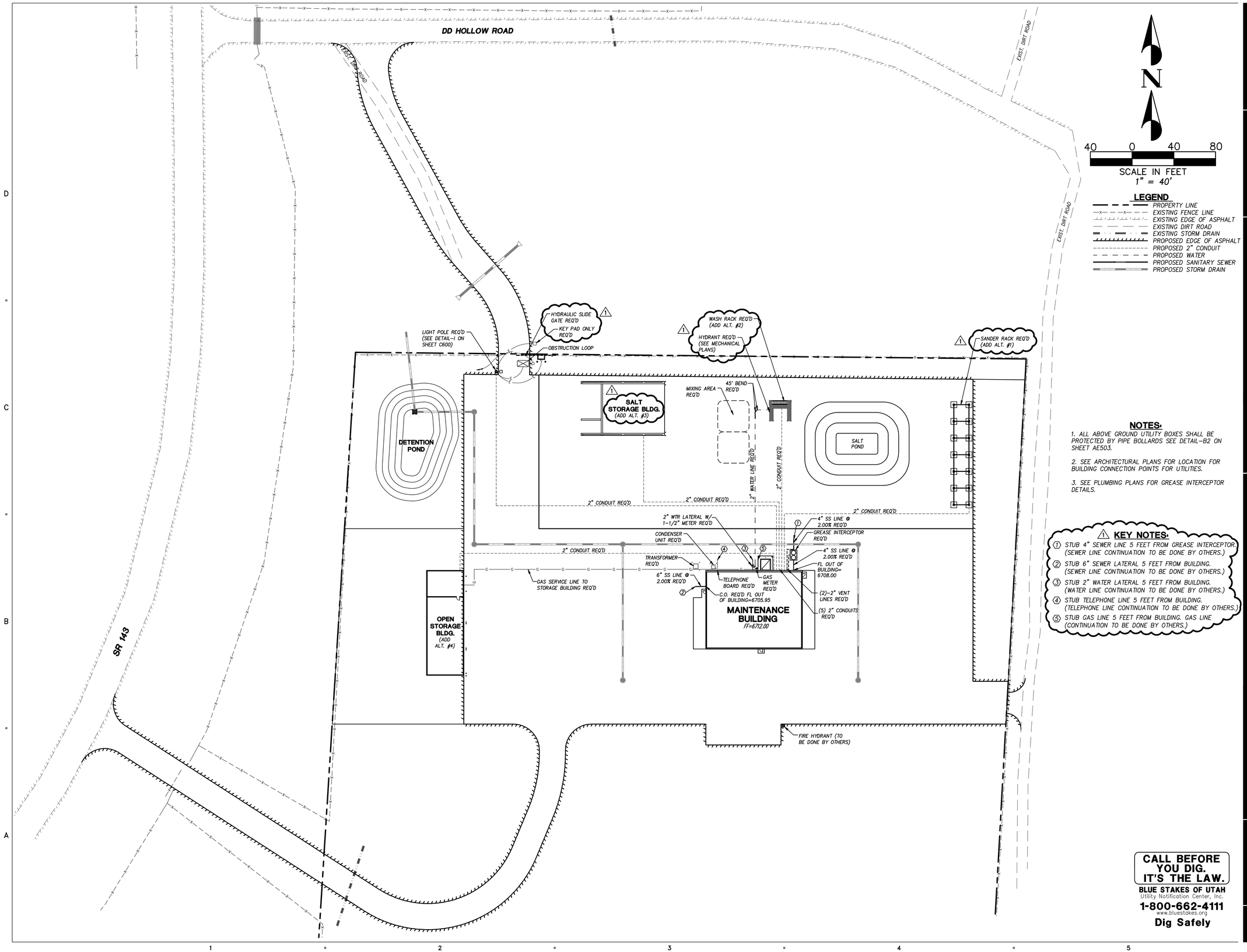

LEGEND

- PROPERTY LINE
- EXISTING FENCE LINE
- EXISTING EDGE OF ASPHALT
- EXISTING DIRT ROAD
- EXISTING STORM DRAIN
- PROPOSED EDGE OF ASPHALT
- PROPOSED 2" CONDUIT
- PROPOSED WATER
- PROPOSED SANITARY SEWER
- PROPOSED STORM DRAIN

NOTES:

1. ALL ABOVE GROUND UTILITY BOXES SHALL BE PROTECTED BY PIPE BOLLARDS SEE DETAIL-B2 ON SHEET AE503.
2. SEE ARCHITECTURAL PLANS FOR LOCATION FOR BUILDING CONNECTION POINTS FOR UTILITIES.
3. SEE PLUMBING PLANS FOR GREASE INTERCEPTOR DETAILS.

⚠ KEY NOTES:

1. STUB 4" SEWER LINE 5 FEET FROM GREASE INTERCEPTOR. (SEWER LINE CONTINUATION TO BE DONE BY OTHERS.)
2. STUB 6" SEWER LATERAL 5 FEET FROM BUILDING. (SEWER LINE CONTINUATION TO BE DONE BY OTHERS.)
3. STUB 2" WATER LATERAL 5 FEET FROM BUILDING. (WATER LINE CONTINUATION TO BE DONE BY OTHERS.)
4. STUB TELEPHONE LINE 5 FEET FROM BUILDING. (TELEPHONE LINE CONTINUATION TO BE DONE BY OTHERS.)
5. STUB GAS LINE 5 FEET FROM BUILDING. GAS LINE (CONTINUATION TO BE DONE BY OTHERS.)

CALL BEFORE YOU DIG. IT'S THE LAW.
BLUE STAKES OF UTAH
Utility Notification Center, Inc.
1-800-662-4111
www.bluestakes.org
Dig Safely

CLIENT

UDOT CONNECTING COMMUNITIES

STATION #4325
MILE MARKER 49.7 HIGHWAY 143
PANGUITCH UTAH

DESIGNER

ARCHIPLEX GROUP
architecture · planning · design services
1135 South West Temple, Ste. A
Salt Lake City, UT 84101
P:(801) 961-7070
F:(801) 961-7373

CONSULTANTS

PEPG ENGINEERING, L.L.C.
421 W. 12300 S. #400 • DRAPER, UT 84020
PH: (801) 562-2521 • FAX: (801) 562-2551

PROFESSIONAL SEAL

REGISTERED PROFESSIONAL ENGINEER
REC. #172007
DARRIN R. SMITH
3-3-2008
STATE OF UTAH

ISSUE		
1	3-5-08	ADDENDUM #2
	01-2008	CONSTRUCTION DOCUMENTS
MARK	DATE	DESCRIPTION

DFCM PROJECT NO:	07010900
DFCM CONTRACT NO:	077374
ARCHIPLEX PROJECT NO:	0709.01
DRAWN BY:	BCB/DRS
CHECKED BY:	DRS
SCALE:	1"=40'
DATE:	JANUARY, 2008

SHEET TITLE

UTILITY PLAN

C200

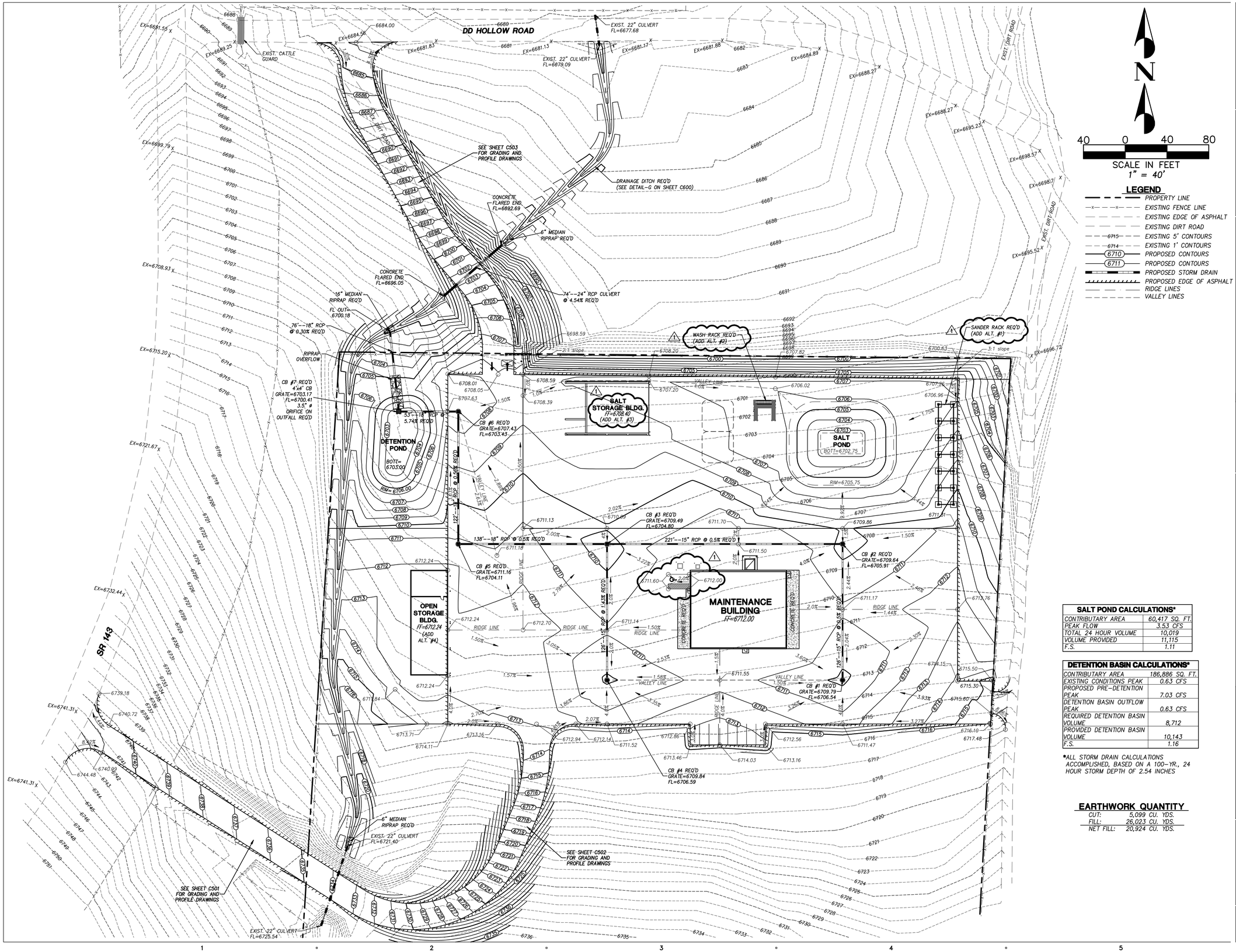

LEGEND

- PROPERTY LINE
- EXISTING FENCE LINE
- EXISTING EDGE OF ASPHALT
- EXISTING DIRT ROAD
- EXISTING 5' CONTOURS
- EXISTING 1' CONTOURS
- PROPOSED CONTOURS
- PROPOSED CONTOURS
- PROPOSED STORM DRAIN
- PROPOSED EDGE OF ASPHALT
- RIDGE LINES
- VALLEY LINES

SALT POND CALCULATIONS*	
CONTRIBUTARY AREA	60,417 SQ. FT.
PEAK FLOW	3.53 CFS
TOTAL 24 HOUR VOLUME	10,019
VOLUME PROVIDED	11,115
F.S.	1.11

DETENTION BASIN CALCULATIONS*	
CONTRIBUTARY AREA	186,886 SQ. FT.
EXISTING CONDITIONS PEAK	0.63 CFS
PROPOSED PRE-DETENTION PEAK	7.03 CFS
DETENTION BASIN OUTFLOW PEAK	0.63 CFS
REQUIRED DETENTION BASIN VOLUME	8,712
PROVIDED DETENTION BASIN VOLUME	10,143
F.S.	1.16

*ALL STORM DRAIN CALCULATIONS ACCOMPLISHED, BASED ON A 100-YR., 24 HOUR STORM DEPTH OF 2.54 INCHES

EARTHWORK QUANTITY

CUT:	5,099 CU. YDS.
FILL:	26,023 CU. YDS.
NET FILL:	20,924 CU. YDS.

CLIENT

UDOT CONNECTING COMMUNITIES

STATION #4325
MILE MARKER 49.7 HIGHWAY 143
PANGUITCH UTAH

DESIGNER

ARCHIPLEX GROUP
architecture • planning • design services
1135 South West Temple, Ste. A
Salt Lake City, UT 84101
P:(801) 961-7070
F:(801) 961-7373

CONSULTANTS

PEPG ENGINEERING, L.L.C.
421 W. 12300 S. #400 • DRAPER, UT 84020
PH: (801) 562-2521 • FAX: (801) 562-2551

PROFESSIONAL SEAL

REGISTERED PROFESSIONAL ENGINEER
REG. 272207
DARRIN R. SMITH
3-3-2008
STATE OF UTAH

ISSUE

MARK	DATE	DESCRIPTION
1	3-5-08	ADDENDUM #2
	01-2008	CONSTRUCTION DOCUMENTS

DFCM PROJECT NO:	07010900
DFCM CONTRACT NO:	077374
ARCHIPLEX PROJECT NO:	0709.01
DRAWN BY:	BCB/DRS
CHECKED BY:	DRS
SCALE:	1"=40'
DATE:	FEBRUARY, 2008

SHEET TITLE

GRADING AND DRAINAGE PLAN

C300

CONTRACTORS NOTES:

1. CONTRACTOR IS RESPONSIBLE FOR OBTAINING A NOTICE OF INTENT (NOI) FROM UTAH STATE, DIVISION OF WATER QUALITY.

2. CONTRACTOR IS RESPONSIBLE FOR SUBMITTING A APPROVAL ORDER (AO) TO PANGUITCH CITY, ENGINEERING DEPARTMENT.

3. CONTRACTOR IS RESPONSIBLE FOR COORDINATING WITH THE CITY INSPECTOR, THE SUBMITTAL OF A NOTICE OF TERMINATION (NOT) TO UTAH STATE, DIVISION OF WATER QUALITY.

4. CONTRACTOR SHALL PROVIDE STREET SWEEPING UPON OWNER/CITY REQUEST.

5. CONTRACTOR SHALL REMOVE ALL SWPPP ITEMS (AS APPROPRIATE) UPON FILING N.O.T.

N

40 0 40 80

SCALE IN FEET
1" = 40'

LEGEND

- EXISTING FENCE LINE
- EXISTING EDGE OF ASPHALT
- EXISTING DIRT ROAD
- PROPOSED EDGE OF ASPHALT
- PROPOSED STORM DRAIN
- PROPOSED SILT FENCE
- TEMP. STRAW WATTLE
- CHECK DAM
- CONSTRUCTION ENTRANCE

- A — SEE DETAIL A, SHEET C402
- B — SEE DETAIL B, SHEET C402
- C — SEE DETAIL C, SHEET C402
- D — SEE DETAIL D, SHEET C402
- E — SEE DETAIL E, SHEET C403

DD HOLLOW ROAD

SECONDARY ENTRANCE

WASH RACK REQ'D (ADD ALT. #2)

SANDER RACK REQ'D (ADD ALT. #1)

SALT STORAGE BLDG. (ADD ALT. #3)

SALT POND

DETENTION POND

OPEN STORAGE BLDG. (ADD ALT. #4)

MAINTENANCE BUILDING

PRIMARY ENTRANCE

TEMPORARY JERSEY BARRIERS CONSTRUCTION ENTRANCE REQUIRED IF LEFT OPEN.(NOT RECOMMENDED FOR CONSTRUCTION ACCESS)

SR 143

UTAH STATE UPDES =UTR

CLIENT

UDOT CONNECTING COMMUNITIES

STATION #4325
MILE MARKER 49.7 HIGHWAY 143
PANGUITCH UTAH

DESIGNER

ARCHIPLEX GROUP
architecture • planning • design services
1135 South West Temple, Ste. A
Salt Lake City, UT 84101
P:(801) 961-7070
F:(801) 961-7373

CONSULTANTS

PEPG ENGINEERING, L.L.C.
421 W. 12300 S. #400 • DRAPER, UT 84020
PH: (801) 562-2521 • FAX: (801) 562-2551

PROFESSIONAL SEAL

REGISTERED PROFESSIONAL ENGINEER
REC. 172207
DARRIN R. SMITH
3-3-2008
STATE OF UTAH

ISSUE		
1	3-5-08	ADDENDUM #2
	01-2008	CONSTRUCTION DOCUMENTS
MARK	DATE	DESCRIPTION

DFCM PROJECT NO:	07010900
DFCM CONTRACT NO:	077374
ARCHIPLEX PROJECT NO:	0709.01
DRAWN BY:	RER
CHECKED BY:	DRS
SCALE:	1"=40'
DATE:	JANUARY, 2008

SHEET TITLE

S.W.P.P. PLAN

C401

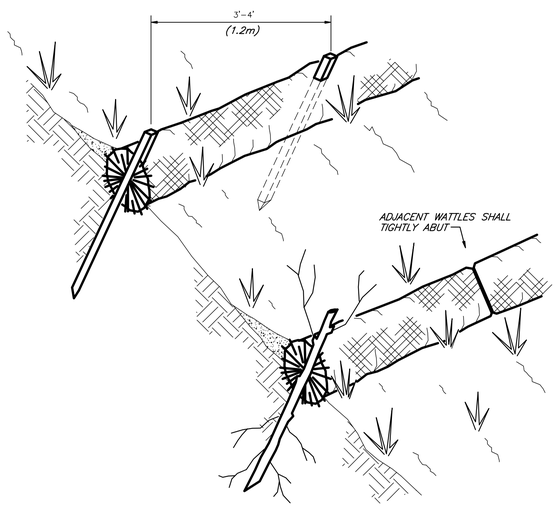

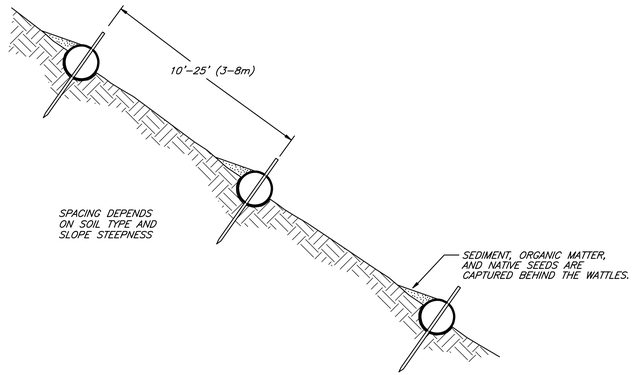

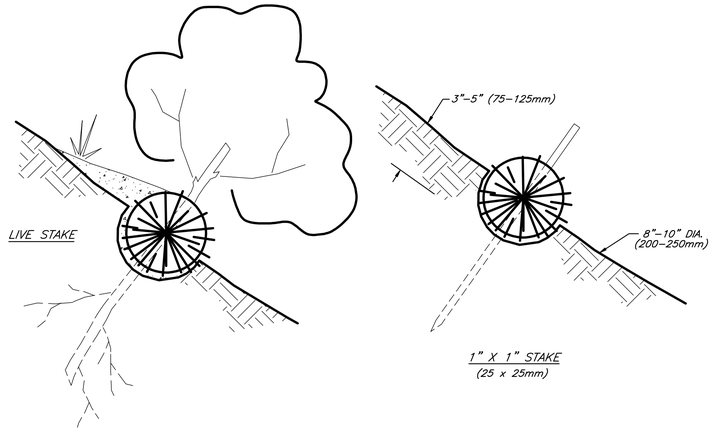

STRAW WATTLES (A)
NOT TO SCALE

NOTE:
1. STRAW WATTLE INSTALLATION REQUIRES THE PLACEMENT AND SECURE STAKING OF THE ROLL IN A TRENCH, 3"–5" (75–125mm) DEEP, DUG ON CONTOUR. RUNOFF MUST NOT BE ALLOWED TO RUN UNDER OR AROUND ROLL.
2. STRAW WATTLES MUST BE PLACED ALONG SLOPE CONTOURS
3. INSTALL A WATTLE NEAR SLOPE WHERE IT TRANSITIONS INTO A STEEPER SLOPE.

FIBER ROLL OPTION

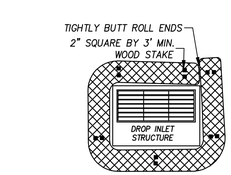

PLAN VIEW

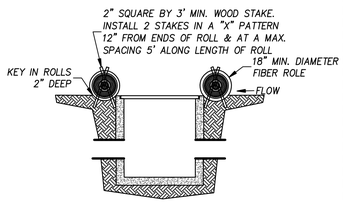

SECTION

STONE OPTION

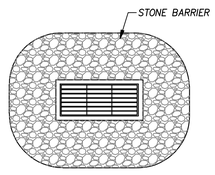

PLAN VIEW

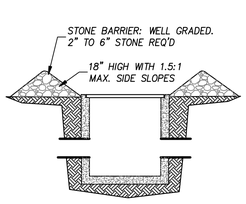

SECTION

DROP INLET BARRIERS DETAILS (B)
NOT TO SCALE

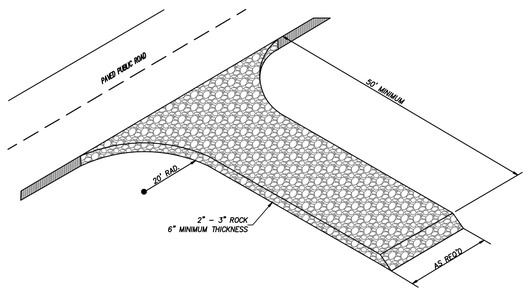

NOTES FOR STABILIZED CONSTRUCTION ENTRANCE:
1. PLACE STABILIZED CONSTRUCTION ENTRANCES AT LOCATIONS SHOWN ON THE PLANS OR AS DIRECTED BY THE ENGINEER.
2. MAINTAIN A PROPERLY FUNCTIONING CONSTRUCTION ENTRANCE THROUGHOUT CONSTRUCTION OR UNTIL DISTURBED AREAS HAVE BEEN PAVED.
3. DO NOT ALLOW VEHICLES LEAVING THE CONSTRUCTION SITE TO TRACK MUD ONTO PAVED ROADS.

STABILIZED CONSTRUCTION ENTRANCE (C)
NOT TO SCALE

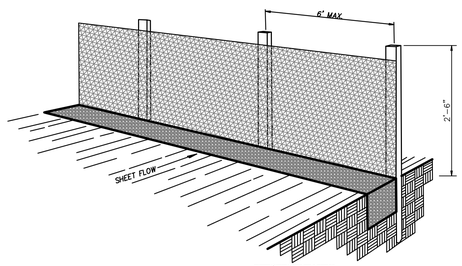

PERSPECTIVE VIEW

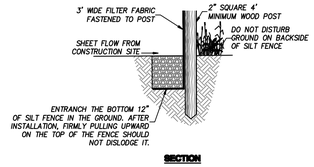

SECTION

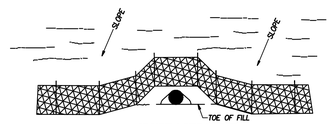

AROUND A PIPE OUTLET

SPLICES (TOP VIEW)

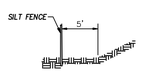

AT TOE OF FILL SLOPE

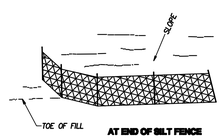

AT END OF SILT FENCE

NOTES FOR SILT FENCE:
1. WHERE PERMITTED, POSITION THE SILT FENCE 5' BEYOND THE TOP OF THE SLOPE.
2. TO AVOID CREATING LOW POINTS ALONG THE SILT FENCE, ALIGN THE FENCE ALONG THE CONTOUR AS MUCH AS POSSIBLE. WHERE EXCESSIVE RUNOFF WILL ACCUMULATE AT A LOW POINT, PROVIDE AN OPENING IN THE FENCE AND INSTALL A SEDIMENT TRAP.
3. WHEN EXCAVATING THE TRENCH, USE MACHINERY THAT WILL MINIMIZE DISTURBANCE.
4. TO PREVENT RUNOFF FROM FLOWING AROUND THE ENDS OF THE SILT FENCE, RUN THE ENDS OF THE FENCE UP SLOPE.
5. DO NOT PLACE SILT FENCE ACROSS POTENTIAL CONCENTRATED FLOW (E.G., PIPE OUTLETS, DRAINAGE CHANNELS, CUT DITCHES.)
6. AVOID USING SPLICES ALONG THE FENCE AS MUCH AS POSSIBLE. IF A SPLICE IS NECESSARY, BEFORE POUNDING IN THE END POSTS, OVERLAP THE END POSTS AND TWIST 180 DEGREES.
7. MAINTAIN A PROPERLY FUNCTIONING SILT FENCE THROUGHOUT DURATION OF THE PROJECT OR UNTIL DISTURBED AREAS HAVE BEEN VEGETATED.
8. WHEN A STORM EVENT DEPOSITS SEDIMENT BEHIND THE FENCE, REMOVE THE SEDIMENT AND PLACE IT IN A STABLE AREA APPROVED BY THE ENGINEER.
9. IN AREAS THAT HAVE BEEN SEEDED AND MULCHED, REMOVE SILT FENCE UNLESS THEY ARE PROTECTING A WETLAND OR WATER BODY.

SILT FENCE INSTALLATION (D)
NOT TO SCALE

CLIENT

UDOT CONNECTING COMMUNITIES

STATION #4325
MILE MARKER 49.7 HIGHWAY 143
PANGUITCH UTAH

DESIGNER

ARCHIPLEX GROUP
architecture · planning · design services
1135 South West Temple, Ste. A
Salt Lake City, UT 84101
P:(801) 961–7070
F:(801) 961–7373

CONSULTANTS

PEPG ENGINEERING, L.L.C.
421 W. 12300 S. #400 • DRAPER, UT 84020
PH: (801) 562–2521 • FAX: (801) 562–2551

PROFESSIONAL SEAL

REGISTERED PROFESSIONAL ENGINEER
No. 272207
DARRIN R. SMITH
3-3-2008
STATE OF UTAH

ISSUE

MARK	DATE	DESCRIPTION
1	3–5–08	ADDENDUM #2
	01–2008	CONSTRUCTION DOCUMENTS

DFCM PROJECT NO:	07010900
DFCM CONTRACT NO:	077374
ARCHIPLEX PROJECT NO:	0709.01
DRAWN BY:	RER
CHECKED BY:	DRS
SCALE:	N.T.S.
DATE:	JANUARY, 2008

SHEET TITLE

S.W.P.P.P. DETAILS

C402

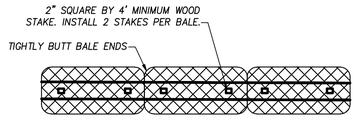

PLAN VIEW

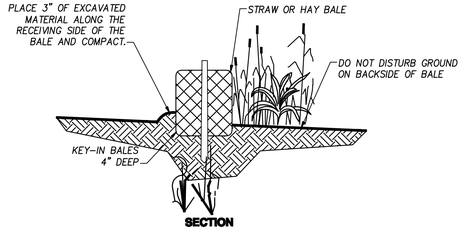

SECTION

NOTES STRAW BALE BARRIER

1. PLACE STRAW BALE BARRIERS BEFORE BEGINNING EARTH DISTURBING ACTIVITIES.
2. DO NOT PLACE STRAW BALE BARRIERS ACROSS NATURAL STREAM BEDS.
3. MAINTAIN A PROPERLY FUNCTIONING STRAW BALE BARRIER THROUGHOUT THE DURATION OF THE PROJECT OR UNTIL DISTURBED AREAS HAVE BEEN SEEDED AND MULCHED.
4. AFTER SURROUNDING AREAS HAVE BEEN STABILIZED, REMOVE BALES AND STAKES AND LEVEL AND SEED THE AREA. BALES MAY BE BUSTED APART AND SPREAD AS MULCH.

STRAW BALE CHECK DAM (E)
NOT TO SCALE

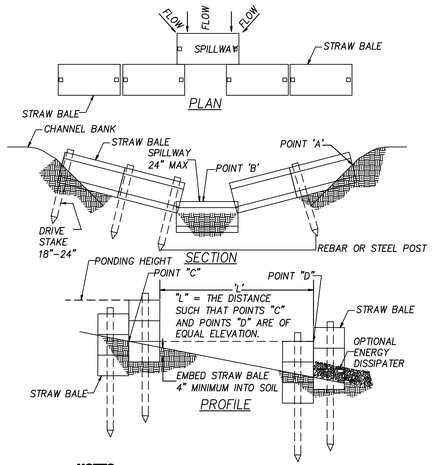

NOTES:

1. EMBED BALES 4" INTO THE SOIL AND "KEY" BALES INTO THE CHANNEL BANKS.
2. POINT 'A' MUST BE HIGHER THAN POINT 'B' (SPILLWAY HEIGHT).
3. PLACE BALES PERPENDICULAR TO THE FLOW WITH ENDS TIGHTLY ABUTTING.
4. SPILLWAY HEIGHT SHALL NOT EXCEED 24".
5. INSPECT AFTER EACH SIGNIFICANT STORM, MAINTAIN AND REPAIR PROMPTLY.

OPTION A
BMP C207
NOT TO SCALE

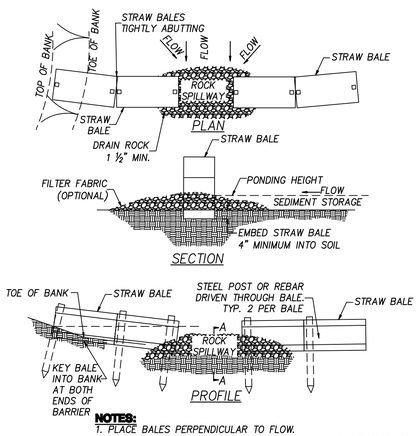

NOTES:

1. PLACE BALES PERPENDICULAR TO FLOW.
2. EMBED THE BALE 4" INTO THE SOIL AND "KEY" THE END BALES INTO THE CHANNEL BANKS TO PREVENT FLOW AROUND THE BALES.
3. BALES PLACED IN A ROW WITH ENDS TIGHTLY ABUTTING.
4. POINT "A" SHALL BE HIGHER THAN POINT "B".
5. SPILLWAY HEIGHT SHALL NOT EXCEED 24".

OPTION B
BMP C207
NOT TO SCALE

STRAW BALE BARRIER (E)
NOT TO SCALE

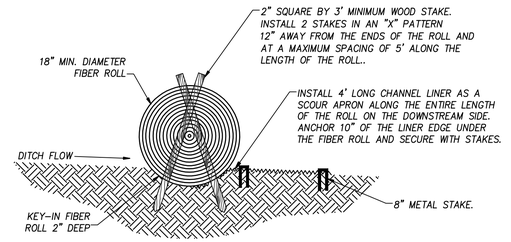

SECTION A-A

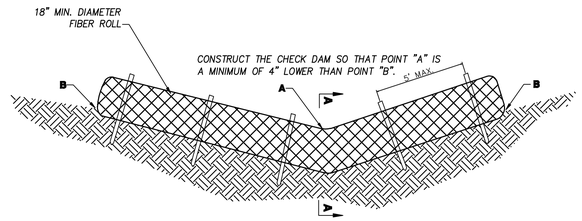

FIBER ROLL CHECK DAM

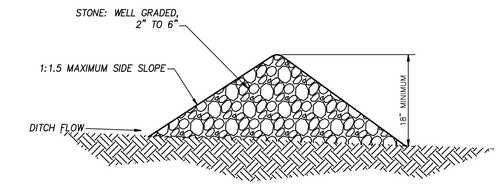

SECTION B-B

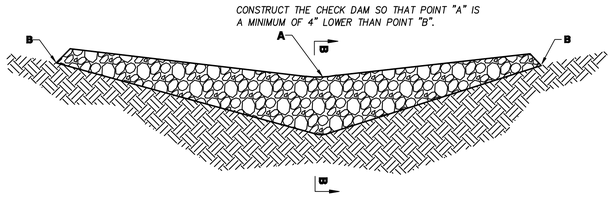

FIBER ROLL CHECK DAM

MATERIAL QUANTITY CHART		
DITCH SIDE SLOPE	LENGTH OF FIBER ROLL REQUIRED FOR HALF OF DITCH	CUBIC YARDS OF STONE REQUIRED FOR HALF OF DITCH
2:1	4.5'	0.25
3:1	6'	0.35
4:1	8'	0.5
6:1	11.5'	0.7
8:1	15'	1.0
10:1	18.5'	1.2
12:1	22.5'	1.4

EXAMPLE: A CUT DITCH WITH A 6:1 FORE SLOPE AND A 2:1 BACK SLOPE WOULD REQUIRE A 16' MIN. FIBER ROLL OR 0.95 CUBIC YARDS MIN. OF STONE

NOTES FOR CHECK DAMS:

1. PLACE A CHECK DAM AT EVERY 2' DROP IN ELEVATION ALONG THE CUT DITCH.
2. A 9" TO 12" DIAMETER FIBER ROLL CAN BE USED IN PLACE OF THE 18" ROLL PROVIDED A ROLL IS INSTALLED AT EVERY ONE-FOOT DROP IN ELEVATION ALONG THE CUT DITCH.
3. PLACE CHECK DAMS PERPENDICULAR TO THE FLOW LINE OF THE DITCH.
4. DO NOT PLACE CHECK DAMS ACROSS NATURAL STREAM BEDS.
5. DO NOT USE STONE CHECK DAMS WITHIN CLEAR ZONES.
6. CONSTRUCT CHECK DAMS SO THAT WATER DOES NOT FLOW AROUND THE ENDS OF THE DAM.
7. REMOVE SEDIMENT AS IT ACCUMULATES AND PLACE IT IN A STABLE AREA APPROVED BY THE ENGINEER.
8. after SURROUNDING AREAS HAVE BEEN SEEDED AND MULCHED, SPREAD ROCK FROM CHECK DAMS TO LINE CUT DITCH AND BREAK APART FIBER ROLLS AND SPREAD THE STRAW OVER SEEDED AREAS.

CHECK DAM DETAILS (E)
NOT TO SCALE

CLIENT

UDOT CONNECTING COMMUNITIES

STATION #4325
MILE MARKER 49.7 HIGHWAY 143
PANGUITCH UTAH

DESIGNER

ARCHIPLEX GROUP
architecture · planning · design services
1135 South West Temple, Ste. A
Salt Lake City, UT 84101
P:(801) 961-7070
F:(801) 961-7373

CONSULTANTS

PEPG ENGINEERING, L.L.C.
421 W. 12300 S. #400 • DRAPER, UT 84020
PH: (801) 562-2521 • FAX: (801) 562-2551

PROFESSIONAL SEAL

REGISTERED PROFESSIONAL ENGINEER
REG. #7207
DARRIN R. SMITH
3-3-2008
STATE OF UTAH

ISSUE

MARK	DATE	DESCRIPTION
1	3-5-08	ADDENDUM #2
	01-2008	CONSTRUCTION DOCUMENTS

DFCM PROJECT NO:	07010900
DFCM CONTRACT NO:	077374
ARCHIPLEX PROJECT NO:	0709.01
DRAWN BY:	RER
CHECKED BY:	DRS
SCALE:	N.T.S.
DATE:	JANUARY, 2008

SHEET TITLE

S.W.P.P.P. DETAILS

C403

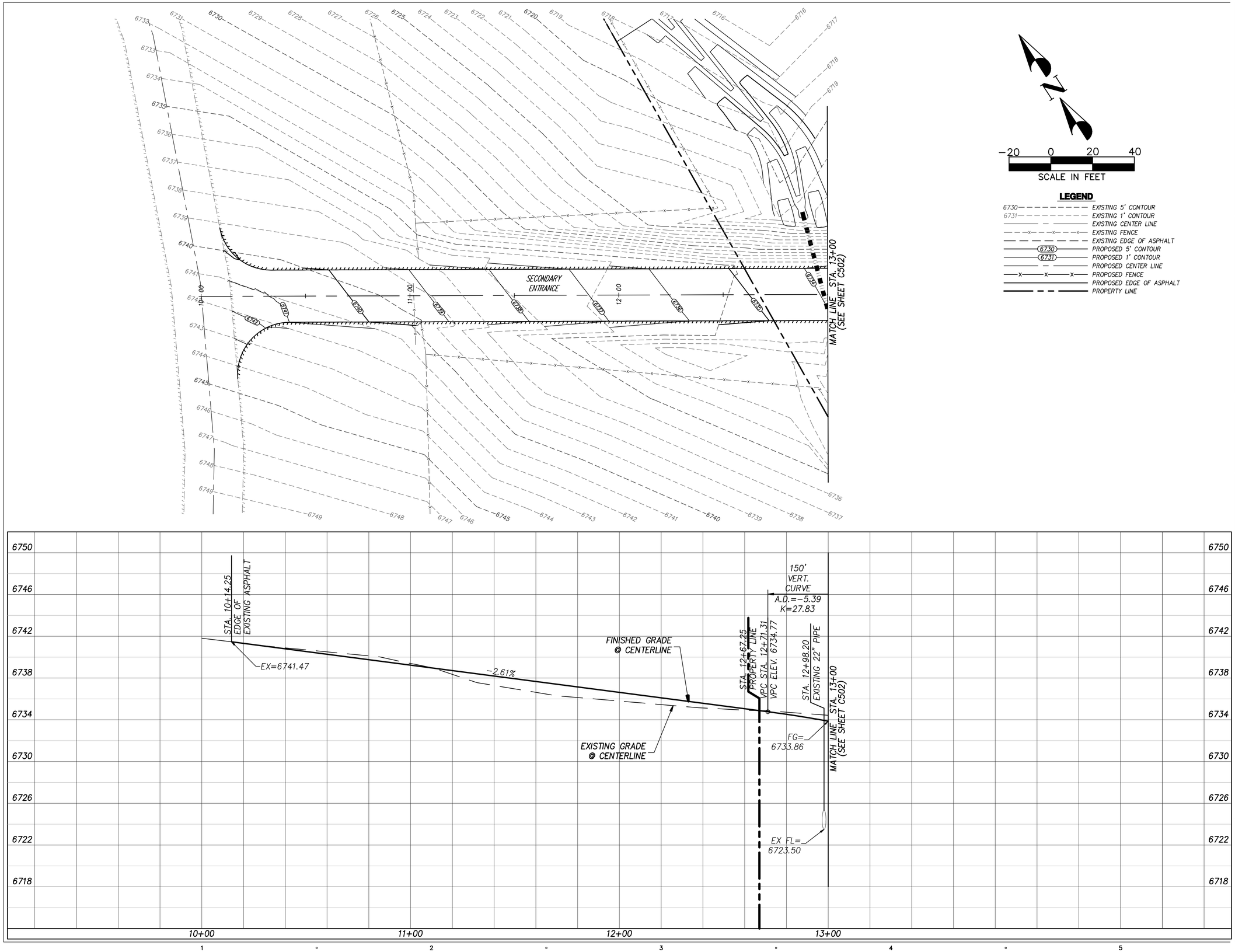

LEGEND

- 6730 — EXISTING 5' CONTOUR
- 6731 — EXISTING 1' CONTOUR
- EXISTING CENTER LINE
- EXISTING FENCE
- EXISTING EDGE OF ASPHALT
- PROPOSED 5' CONTOUR
- PROPOSED 1' CONTOUR
- PROPOSED CENTER LINE
- PROPOSED FENCE
- PROPOSED EDGE OF ASPHALT
- PROPERTY LINE

CLIENT

UDOT CONNECTING COMMUNITIES

STATION #4325
MILE MARKER 49.7 HIGHWAY 143
PANGUITCH UTAH

DESIGNER

ARCHIPLEX GROUP
architecture • planning • design services
1135 South West Temple, Ste. A
Salt Lake City, UT 84101
P:(801) 961-7070
F:(801) 961-7373

CONSULTANTS

PEPG ENGINEERING, L.L.C.
421 W. 12300 S. #400 • DRAPER, UT 84020
PH: (801) 562-2521 • FAX: (801) 562-2551

PROFESSIONAL SEAL

REGISTERED PROFESSIONAL ENGINEER
No. 272207
DARRIN R. SMITH
3-3-2008
STATE OF UTAH

ISSUE

MARK	DATE	DESCRIPTION
1	3-5-08	ADDENDUM #2
	01-2008	CONSTRUCTION DOCUMENTS

DFCM PROJECT NO:	07010900
DFCM CONTRACT NO:	077374
ARCHIPLEX PROJECT NO:	0709.01
DRAWN BY:	RER
CHECKED BY:	DRS
SCALE:	1"=20'
DATE:	JANUARY, 2008

SHEET TITLE

PLAN AND PROFILE STA. 10+00~13+00

C501

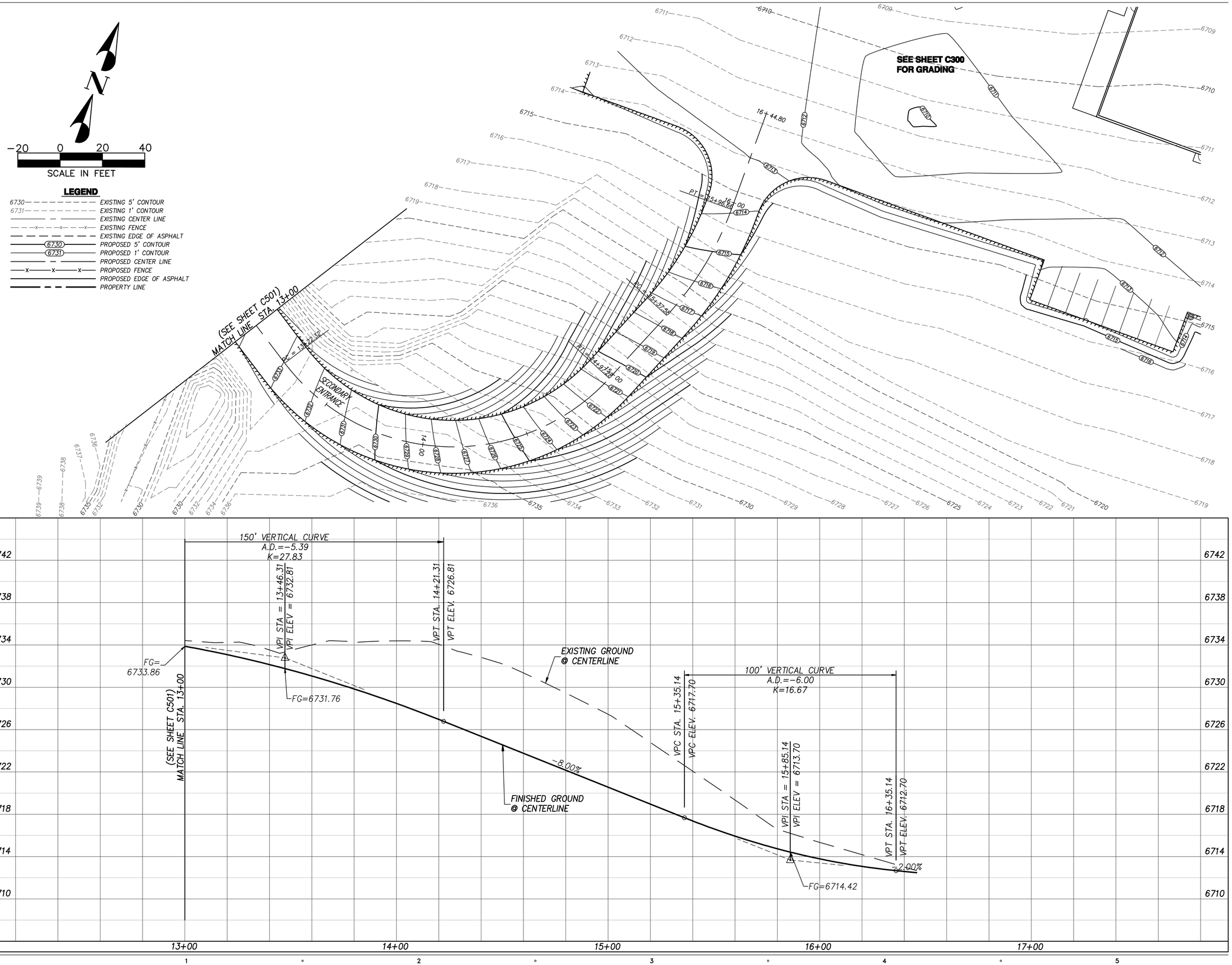

CLIENT

UDOT CONNECTING COMMUNITIES

STATION #4325
MILE MARKER 49.7 HIGHWAY 143
PANGUITCH UTAH

DESIGNER

ARCHIPLEX GROUP
architecture • planning • design services
1135 South West Temple, Ste. A
Salt Lake City, UT 84101
P:(801) 961-7070
F:(801) 961-7373

CONSULTANTS

PEPG ENGINEERING, L.L.C.
421 W. 12300 S. #400 • DRAPER, UT 84020
PH: (801) 562-2521 • FAX: (801) 562-2551

PROFESSIONAL SEAL

ISSUE

MARK	DATE	DESCRIPTION
1	3-5-08	ADDENDUM #2
	01-2008	CONSTRUCTION DOCUMENTS

DFCM PROJECT NO:	07010900
DFCM CONTRACT NO:	077374
ARCHIPLEX PROJECT NO:	0709.01
DRAWN BY:	RER
CHECKED BY:	DRS
SCALE:	1"=20'
DATE:	JANUARY, 2008

SHEET TITLE

PLAN AND PROFILE STA.13+00~16+44.80

C502

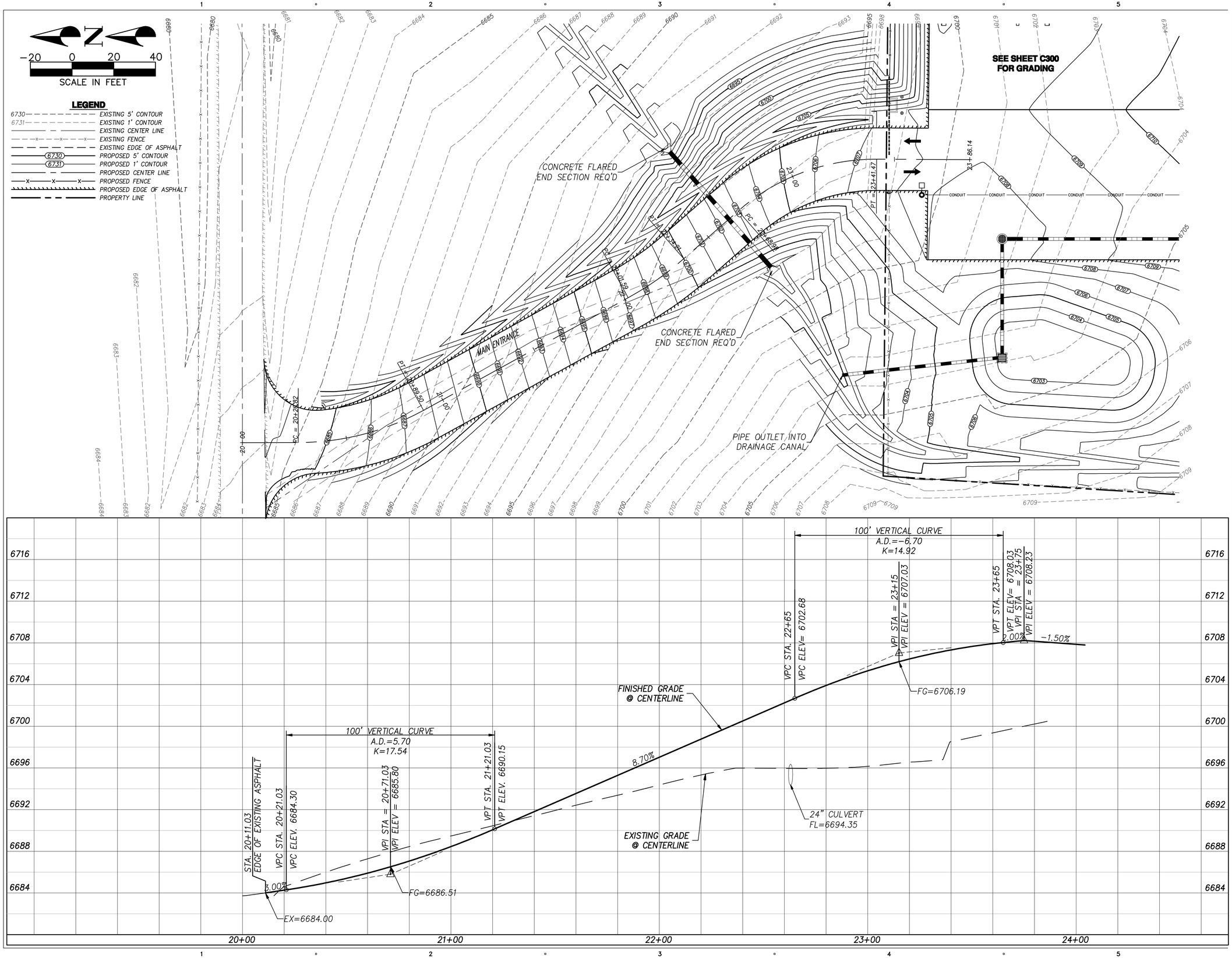

CLIENT

UDOT CONNECTING COMMUNITIES

STATION #4325
MILE MARKER 49.7 HIGHWAY 143
PANGUITCH UTAH

DESIGNER

ARCHIPLEX GROUP
architecture · planning · design services
1135 South West Temple, Ste. A
Salt Lake City, UT 84101
P:(801) 961-7070
F:(801) 961-7373

CONSULTANTS

PEPG ENGINEERING, L.L.C.
421 W. 12300 S. #400 • DRAPER, UT 84020
PH: (801) 562-2521 • FAX: (801) 562-2551

PROFESSIONAL SEAL

REGISTERED PROFESSIONAL ENGINEER
NO. 177207
DARRIN R. SMITH
3-3-2008
STATE OF UTAH

ISSUE		
1	3-5-08	ADDENDUM #2
	01-2008	CONSTRUCTION DOCUMENTS
MARK	DATE	DESCRIPTION

DFCM PROJECT NO:	07010900
DFCM CONTRACT NO:	077374
ARCHIPLEX PROJECT NO:	0709.01
DRAWN BY:	RER
CHECKED BY:	DRS
SCALE:	1"=20'
DATE:	JANUARY, 2008

SHEET TITLE

PLAN AND PROFILE STA.20+00~23+86.14

C503

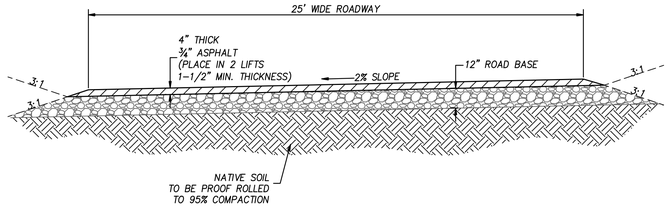

25' ROADWAY TYPICAL SECTION (A)
NOT TO SCALE

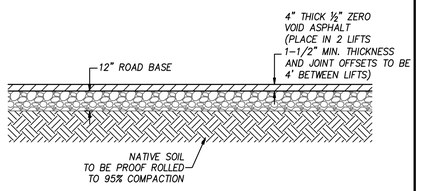

TYPICAL PAVEMENT SECTION
ZERO VOID PAVING (B)
NOT TO SCALE

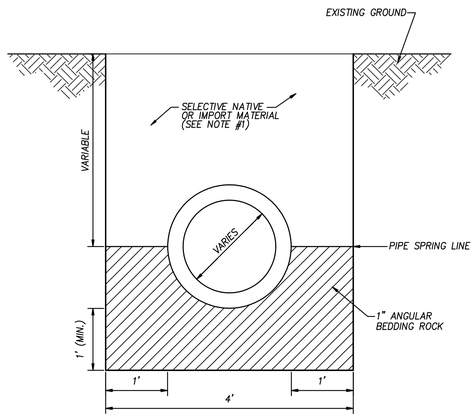

NOTE

1. NATIVE MATERIAL MAY BE USED AS LONG AS COMPACTION AND WATER CONTENT IS ACHIEVED. OTHERWISE BACKFILL MUST BE IMPORTED GRANULAR MATERIAL.

TYPICAL TRENCH DETAIL (E)
NOT TO SCALE

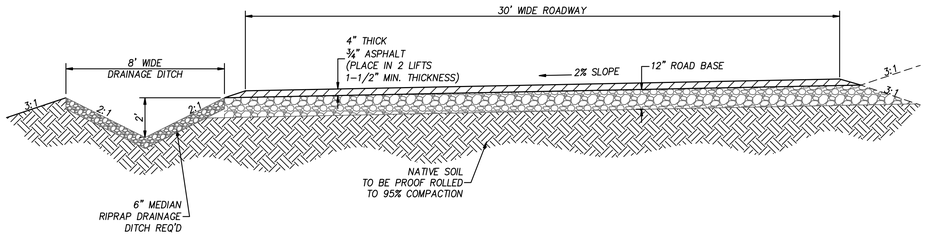

30' ROADWAY TYPICAL SECTION (C)
NOT TO SCALE

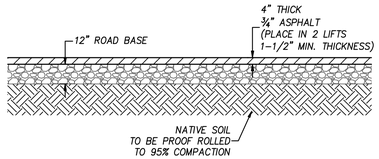

TYPICAL PAVEMENT SECTION
PARKING AREAS (D)
NOT TO SCALE

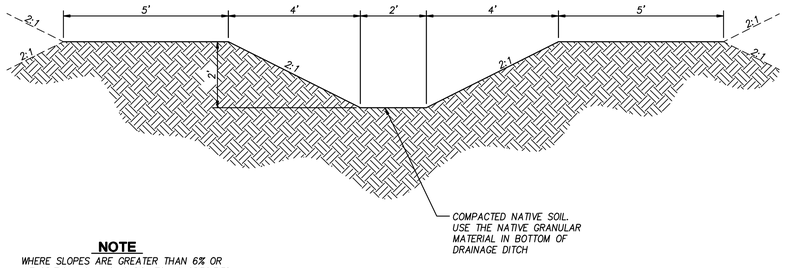

NOTE

WHERE SLOPES ARE GREATER THAN 6% OR AT CRITICAL CHANGING POINTS AS SPECIFIED ON PLAN, THE CHANNEL SHALL BE LINED WITH 6" MEDIAN RIP-RAP, 12" THICK.

DRAINAGE DITCH DETAIL (G)
NOT TO SCALE

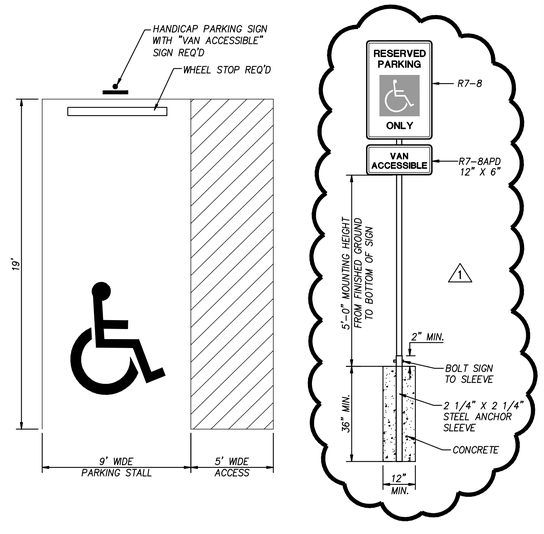

VAN ACCESSIBLE PARKING DETAIL (H)
NOT TO SCALE

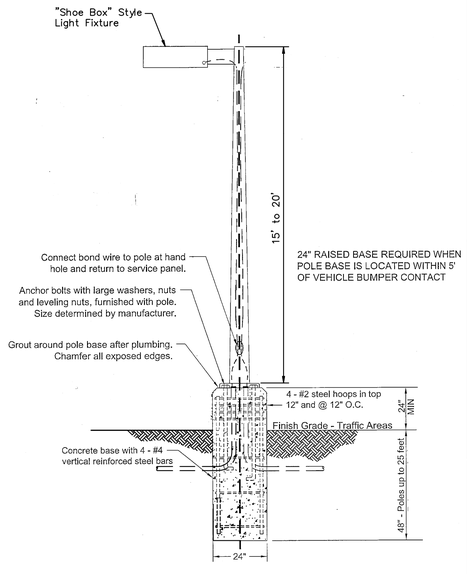

TYPICAL LIGHT POLE DETAIL (I)
NOT TO SCALE

CLIENT

UDOT CONNECTING COMMUNITIES

STATION #4325
MILE MARKER 49.7 HIGHWAY 143
PANGUITCH UTAH

DESIGNER

ARCHIPLEX GROUP
architecture · planning · design services
1135 South West Temple, Ste. A
Salt Lake City, UT 84101
P:(801) 961-7070
F:(801) 961-7373

CONSULTANTS

PEPG ENGINEERING, L.L.C.
421 W. 12300 S. #400 • DRAPER, UT 84020
PH: (801) 562-2521 • FAX: (801) 562-2551

PROFESSIONAL SEAL

REGISTERED PROFESSIONAL ENGINEER
REG. 277207
DARRIN R. SMITH
3-3-2008
STATE OF UTAH

ISSUE		
1	3-5-08	ADDENDUM #2
	01-2008	CONSTRUCTION DOCUMENTS
MARK	DATE	DESCRIPTION

DFCM PROJECT NO:	07010900
DFCM CONTRACT NO:	077374
ARCHIPLEX PROJECT NO:	0709.01
DRAWN BY:	RER
CHECKED BY:	DRS
SCALE:	N.T.S.
DATE:	JANUARY, 2008

SHEET TITLE

TYPICAL SECTIONS AND DETAILS

C600

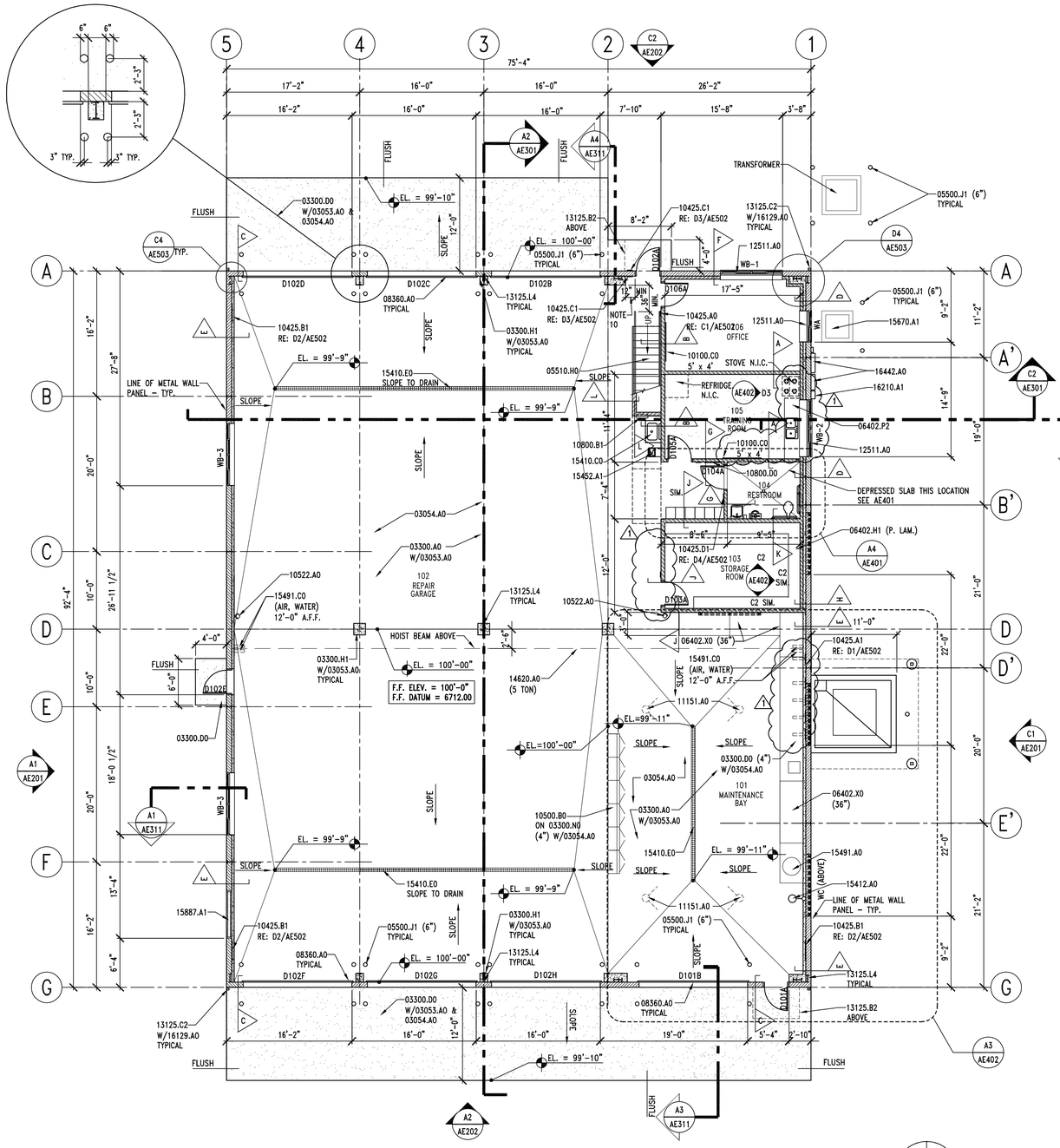

A1 FLOOR PLAN

AE101 | REF. | SCALE: 1/8" = 1'-0"

8' 6' 4' 2' 0' 4' 8' 16'

NORTH

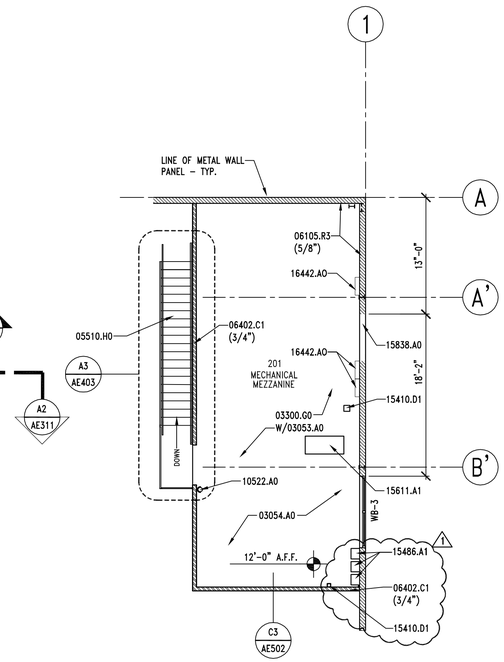

A4 MECH. MEZZANINE PLAN

AE141 | REF. | SCALE: 1/8" = 1'-0"

8' 6' 4' 2' 0' 4' 8'

NORTH

KEYNOTES

03053.A0	CONCRETE WATER PROOFING ADMIXTURE
03054.A0	OLIOPHOBIC TOPICAL SEALER
03300.A0	CONCRETE - SLAB ON GRADE
03300.D0	CONCRETE PAD
03300.G0	CONCRETE OVER METAL DECK - SEE STRUCTURAL
03300.H1	CONCRETE PIER - SEE STRUCTURAL
03300.N0	CONCRETE CURB
05500.J1	PIPE BOLLARD (DIAMETER) GALVANIZED & PAINTED
05510.H0	CONCRETE FILLED METAL PAN STAIR - GALVANIZED
06105.R3	PLYWOOD PANEL (THICKNESS)
06402.C1	PAINT GRADE WOOD CAP (THICK)
06402.H1	ADJUSTABLE SHELVES (FINISH)
06402.P2	COUNTERTOP - P. LAM. ON 3/4" PLYWOOD
06402.X0	WORKBENCH (DEPTH)
08360.A0	HEAVY DUTY OVERHEAD SECTIONAL DOOR
10100.C0	MARKER BOARD (L X H)
10425.A0	ROOM SIGNAGE
10425.A1	OIL SIGNAGE
10425.B1	WELDING SIGNAGE
10425.C1	ACCESSIBLE SIGNAGE
10425.D1	ACCESSIBLE/UNISEX RESTROOM SIGNAGE
10500.B0	METAL STORAGE CABINETS
10522.A0	FIRE EXTINGUISHER
10800.B1	SEMI-RECESSED PAPER TOWEL DISPENSER & WASTE RECEPTACLE
10800.D0	MOP RACK
11151.A0	MOBILE LIFT - NIC - OWNER FURNISHED
12511.A0	HORIZONTAL LOUVER BLINDS
13125.B2	STANDING SEEM METAL CANOPY
13125.C2	DOWNSPOUT
13125.L4	STEEL COLUMN - PRIMED AND PAINTED
14620.A0	TROLLEY HOIST (SIZE) SEE STRUCTURAL
15410.C0	UTILITY SINK
15410.D1	FLOOR SINK
15410.E0	TRENCH DRAIN
15412.A0	EMERGENCY SHOWER & EYE WASH
15452.A1	DRINKING FOUNTAIN
15486.A1	FUEL FIRED WATER HEATERS
15491.A0	AIR COMPRESSOR
15491.C0	OVERHEAD HOSE REELS
15611.A1	NATURAL GAS FIRED FURNACE
15670.A1	CONDENSER UNIT - SEE MECHANICAL
15838.A0	EXHAUST FAN - SEE MECHANICAL
15887.A1	LOUVER WITH BIRD SCREEN
16129.A0	CONTINUOUS HEAT TAPE IN DOWN SPOUTS AND GUTTERS
16210.A1	ELECTRICAL METER - SEE ELECTRICAL DRAWINGS
16442.A0	ELECTRICAL PANEL - SEE ELECTRICAL DRAWINGS

GENERAL NOTES

1. FIELD VERIFY ALL EXISTING CONDITIONS AND THEIR COMPATIBILITY WITH NEW CONSTRUCTION PRIOR TO THE COMMENCEMENT OF WORK. COORDINATE DISCREPANCIES WITH ARCHITECT.

2. DO NOT SCALE DRAWINGS.

3. SEE CIVIL, STRUCTURAL, MECHANICAL AND ELECTRICAL DRAWINGS FOR MORE INFORMATION.

4. PROVIDE BACKING BEHIND ALL SURFACE MOUNTED EQUIPMENT AND/OR FIXTURES PER DETAIL C3/AE401

5. SEE SHEET A1/AE501 FOR WALL TYPES.

6. TWO BOLLARDS REQUIRED PER SECTIONAL DOOR JAMB. ALIGN WITH DOOR JAMB, SEE DETAILS A2 & B2/AE503.

7. SEE SHEET AE602 FOR WINDOW FRAME TYPES & DETAILS.

8. SEE STRUCTURAL DRAWINGS FOR CONSTRUCTION/CONTROL JOINT LOCATIONS IN CONCRETE SLAB.

9. ALL DIMENSIONS ARE TO FACE OF WALL, UNLESS NOTED OTHERWISE.

10. COORDINATE LOCATION & SIZE OF CONCRETE PIER WITH THE STRUCTURAL ENGINEER AND THE METAL BUILDING MANUFACTURER TO MEET ALL ADA REQUIREMENTS.

11. COLUMNS SHOWN ON PLAN ARE SCHEMATIC ONLY. CONTRACTOR TO GET EXACT SIZES AND LOCATIONS FROM APPROVED METAL BUILDING SHOP DRAWINGS.

12. PROVIDE 03053.A0 AT ALL CONCRETE CURBS, PIERS, SLABS, STEM WALL ETC. U.N.O.

13. PROVIDE 03054.A0 OVER ENTIRE FLOOR SLAB AT ROOMS 101, 102, 103 & CONCRETE MEZZANINE & STAIRS.

14. CONTRACTOR TO ENSURE THAT METAL BUILDING MANUF. PROVIDES STRUCTURAL GIRTS IN SUFFICIENT QUANTITY TO SUPPORT INTERIOR FINISHES.

CLIENT

UDOT CONNECTING COMMUNITIES

STATION #4325
MILE MARKER 49.7 HIGHWAY 143
PANGUITCH UTAH

DESIGNER

ARCHIPLEX GROUP
architecture · planning · design services
1135 South West Temple, Ste. A
Salt Lake City, UT 84101
P:(801) 961-7070
F:(801) 961-7373

CONSULTANTS

PROFESSIONAL SEAL

STATE OF UTAH
RALPH M. STANISLAW
95-310818-0301
LICENSED ARCHITECT

ISSUE

MARK	DATE	DESCRIPTION
1	3-5-08	ADDENDUM #2
	01-2008	CONSTRUCTION DOCUMENTS

DFCM PROJECT NO:	07010900
DFCM CONTRACT NO:	077374
ARCHIPLEX PROJECT NO:	0709.01
DRAWN BY:	A. PHILLIPS
CHECKED BY:	R. STANISLAW
SCALE:	1/8" = 1'-0"
DATE:	JANUARY, 2008

SHEET TITLE

FIRST FLOOR AND MEZZANINE PLANS

AE101

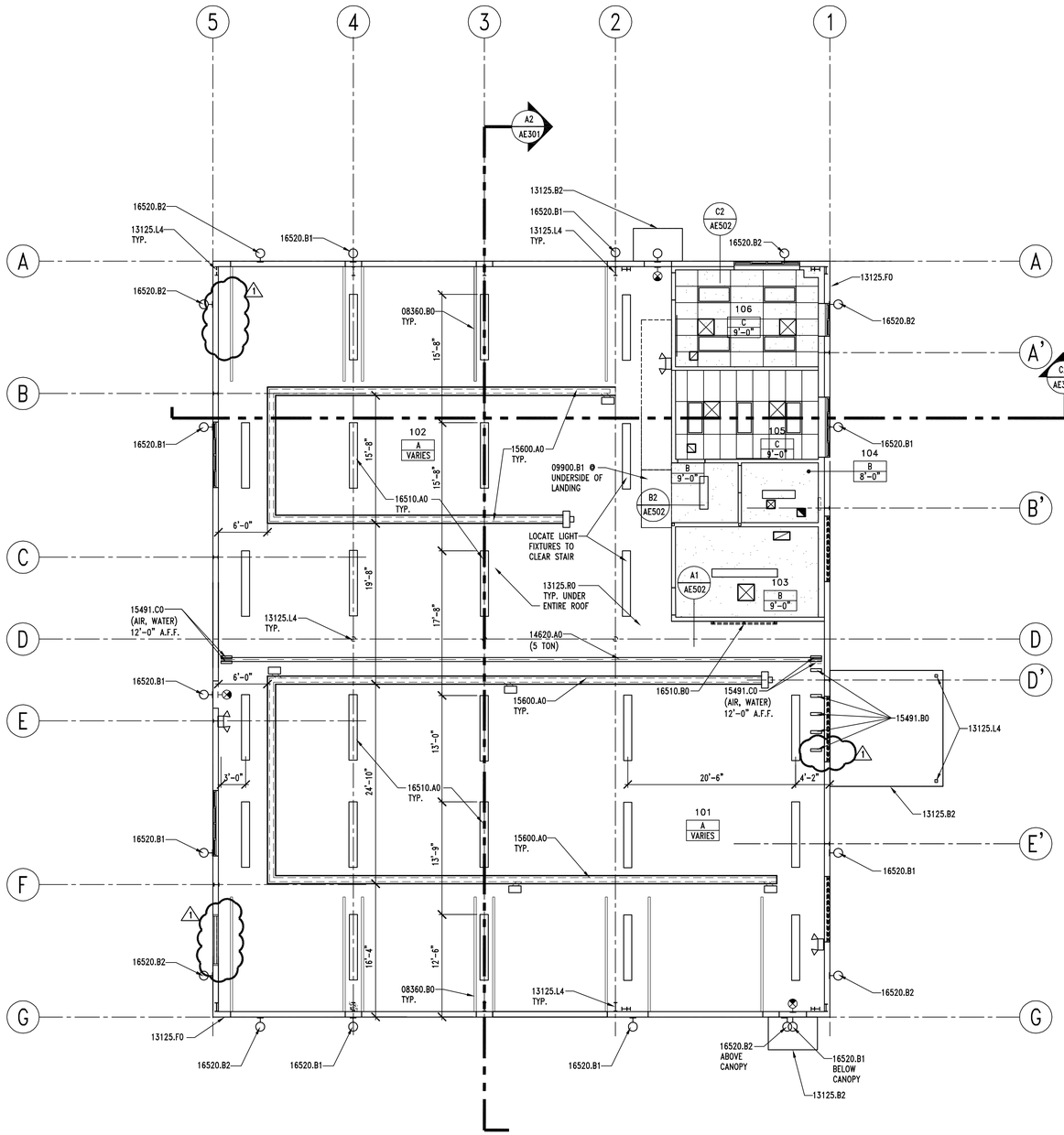

A1 | FIRST FLOOR REFLECTED CEILING PLAN

AE121 | REF. | SCALE: 1/8" = 1'-0"

8' 6' 4' 2' 0' 4' 8' 16'

NORTH

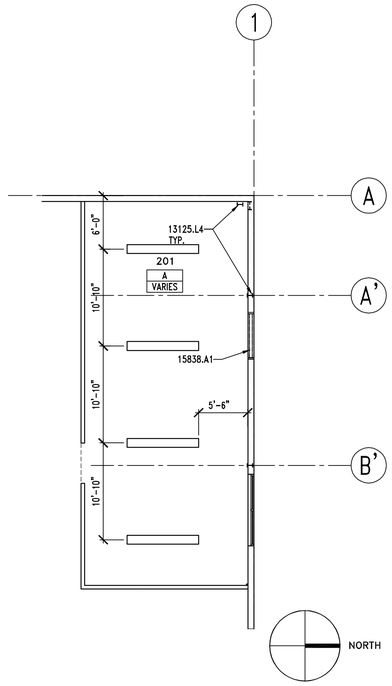

B4 | MECH. MEZZ. REF. CEILING PLAN

AE121 | REF. | SCALE: 1/8" = 1'-0"

8' 6' 4' 2' 0' 4' 8' 16'

NORTH

REFLECTED CEILING PLAN LEGEND

ROOM # 131
TYPE E
ELEVATION VARIES
A.F.F.

TYPE A	EXPOSED STRUCTURE – PAINTED
TYPE B	5/8" GYPSUM BOARD ON METAL SUSPENSION SYSTEM – PAINTED
TYPE C	2' X 4' LAY – IN CEILING GRID SYSTEM WITH ACOUSTICAL PANELS

GENERAL NOTES

1. SEE MECHANICAL AND ELECTRICAL DRAWINGS FOR ADDITIONAL LIGHTING AND DIFFUSER INFORMATION.
2. CEILING HEIGHT SHOWN IN ROOM TAG INDICATES HEIGHT OF DOMINANT CEILING FINISH. SEE NOTES FOR ADDITIONAL CEILING FINISH INFORMATION.
3. SEE DETAIL B1 & B2/AE502 FOR SEISMIC BRACING DETAIL.
4. ROOF STRUCTURE NOT SHOWN FOR CLARITY.
5. COORDINATE LOCATION OF OVERHEAD DOOR TRACKS WITH LIGHTING FIXTURES TO INSURE PROPER OPERATION OF OVERHEAD DOORS.

KEYNOTES

08360.B0	3" HEAVY DUTY OVERHEAD SECTIONAL DOOR TRACK
09900.B1	GALVANIZED METAL PRIMER
13125.B2	STANDING SEAM METAL CANOPY
13125.F0	METAL WALL PANEL
13125.L4	STEEL COLUMN – PRIMED AND PAINTED
13125.R0	INSULATION & VAPOR BARRIER (R-VALUE)
14620.A0	TROLLEY HOIST (SIZE) SEE STRUCTURAL
15491.B0	OVERHEAD LUBE REELS
15491.C0	OVERHEAD HOSE REELS
15600.A0	NATURAL GAS RADIANT HEATING SYSTEM
15838.A1	EXHAUST FAN – SEE MECHANICAL
16510.A0	INTERIOR LIGHTS
16510.B0	WALL MOUNTED INTERIOR LIGHTS
16520.B1	EXTERIOR WALL MOUNTED LIGHTS
16520.B2	EXTERIOR WALL MOUNTED FLOOD LIGHTS

CEILING SYMBOLS

- PAINTED GYP. BD. CEILING
- 2' x 4' FLUORESCENT LIGHT FIXTURE, SEE ELECT. DRAWINGS FOR TYPE.
- 1' x 4' FLUORESCENT LIGHT FIXTURE
- 1' x 8' FLUORESCENT LIGHT FIXTURE
- RETURN AIR GRILLE – HORIZONTAL (SEE MECH. DRAWINGS)
- SUPPLY AIR GRILLE – HORIZONTAL (SEE MECH. DRAWINGS)
- RADIANT HEAT SYSTEM (SEE MECH. DRAWINGS)
- EXHAUST FAN (SEE MECH. DRAWINGS)
- EXIT SIGN
- EMERGENCY FLOOD LIGHTS
- EXTERIOR WALL MOUNTED LIGHTS

CLIENT

UDOT CONNECTING COMMUNITIES

STATION #4325
MILE MARKER 49.7 HIGHWAY 143
PANGUITCH UTAH

DESIGNER

ARCHIPLEX GROUP
architecture • planning • design services
1135 South West Temple, Ste. A
Salt Lake City, UT 84101
P:(801) 961-7070
F:(801) 961-7373

CONSULTANTS

PROFESSIONAL SEAL

STATE OF UTAH
RALPH M. STANISLAW
95-310818-0301
LICENSED ARCHITECT

ISSUE

MARK	DATE	DESCRIPTION
1	3-5-08	ADDENDUM #2
	01-2008	CONSTRUCTION DOCUMENTS

DFCM PROJECT NO:	07010900
DFCM CONTRACT NO:	077374
ARCHIPLEX PROJECT NO:	0709.01
DRAWN BY:	A. PHILLIPS
CHECKED BY:	R. STANISLAW
SCALE:	1/8" = 1'-0"
DATE:	JANUARY, 2008

SHEET TITLE

FIRST FLOOR AND MEZZANINE REFLECTED CEILING PLANS

AE121

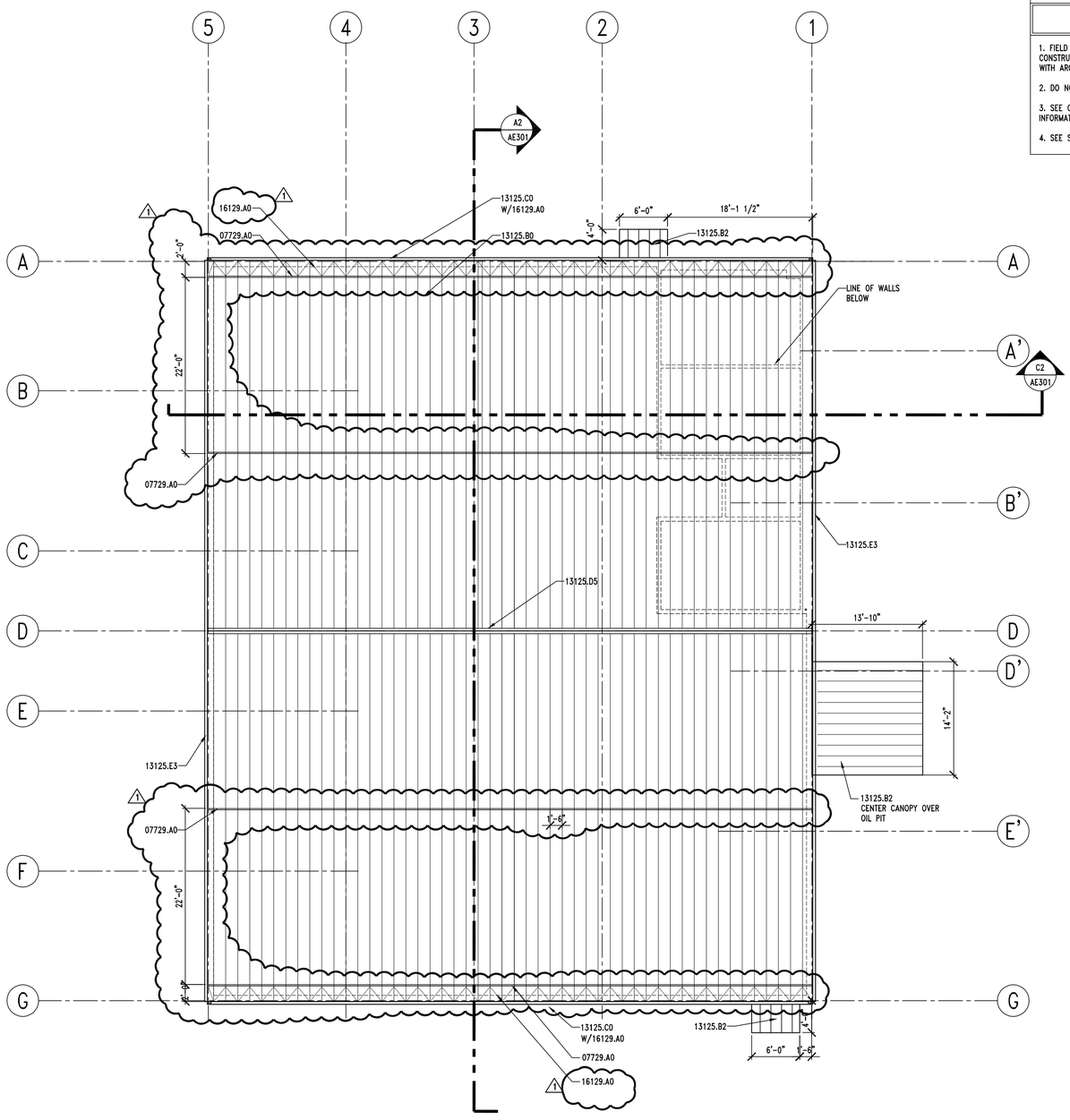

KEYNOTES

07729.A0 STANDING SEAM METAL ROOR 2 PIPE SNOWGAURD SYSTEM

13125.B0 STANDING SEAM METAL ROOF WITH THERMAL BLOCKS
13125.B2 STANDING SEAM METAL CANOPY
13125.D5 RIDGE FLASHING, TO MATCH ROOF PANELS
13125.C0 METAL RAIN GUTTER WITH DOWNSPOUTS
13125.E3 RAKE TRIM

16129.A0 CONTINUOUS HEAT TAPE IN DOWNSPOUTS AND GUTTER

GENERAL NOTES

1. FIELD VERIFY ALL EXISTING CONDITIONS AND THEIR COMPATIBILITY WITH NEW CONSTRUCTION PRIOR TO THE COMMENCEMENT OF WORK. COORDINATE DISCREPANCIES WITH ARCHITECT.

2. DO NOT SCALE DRAWINGS.

3. SEE CIVIL, STRUCTURAL, MECHANICAL AND ELECTRICAL DRAWINGS FOR MORE INFORMATION.

4. SEE SHEET AE201 FOR EXTERIOR FINISH COLORS.

A2 | ROOF PLAN
AE141 | REF.

SCALE: 1/8" = 1'-0"

8' 6' 4' 2' 0' 4' 8' 16'

NORTH

CLIENT

UDOT CONNECTING COMMUNITIES

STATION #4325
MILE MARKER 49.7 HIGHWAY 143
PANGUITCH UTAH

DESIGNER

ARCHIPLEX GROUP
architecture · planning · design services
1135 South West Temple, Ste. A
Salt Lake City, UT 84101
P:(801) 961-7070
F:(801) 961-7373

CONSULTANTS

PROFESSIONAL SEAL

STATE OF UTAH
RALPH M. STANISLAW
95-310818-0301
LICENSED ARCHITECT

ISSUE

MARK	DATE	DESCRIPTION
1	3-5-08	ADDENDUM #2
	01-2008	CONSTRUCTION DOCUMENTS

DFCM PROJECT NO:	07010900
DFCM CONTRACT NO:	077374
ARCHIPLEX PROJECT NO:	0709.01
DRAWN BY:	A. PHILLIPS
CHECKED BY:	R. STANISLAW
SCALE:	1/8" = 1'-0"
DATE:	JANUARY, 2008

SHEET TITLE

ROOF PLAN

AE141

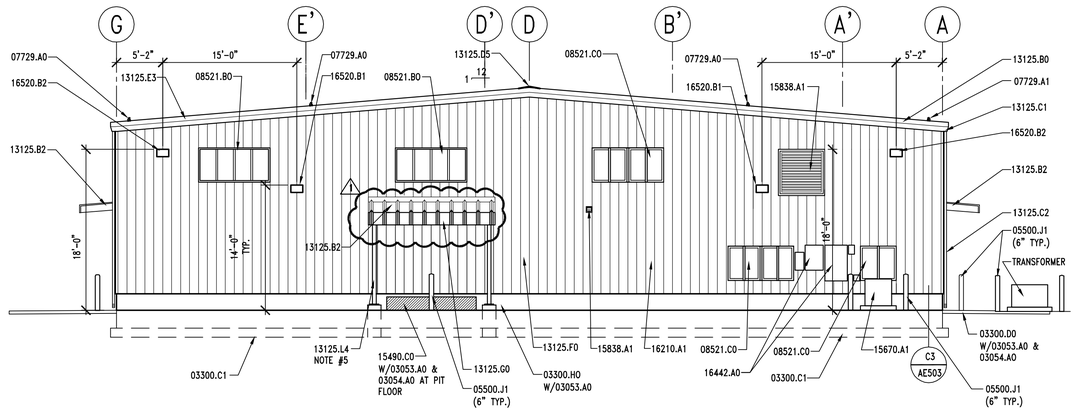

C1 | EXTERIOR ELEVATION – SOUTH

AE201 | REF. AE101 | SCALE: 1/8" = 1'-0"

8' 6' 4' 2' 0' 4' 8' 16'

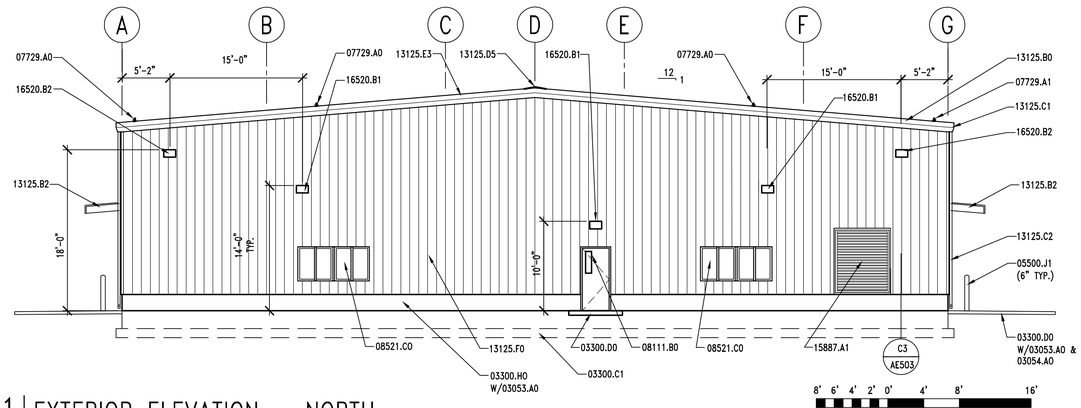

A1 | EXTERIOR ELEVATION – NORTH

AE201 | REF. AE101 | SCALE: 1/8" = 1'-0"

8' 6' 4' 2' 0' 4' 8' 16'

EXTERIOR ELEVATION KEYNOTES

03053.A0	CONCRETE WATER PROOFING ADMIXTURE
03054.A0	OLIOPHOBIC TOPICAL SEALER
03300.C1	FOOTING – SEE STRUCTURAL
03300.D0	CONCRETE PAD
03300.H0	FOUNDATION WALL – SEE STRUCTURAL
05500.J1	PIPE BOLLARD (DIAMETER) GALV. AND PAINTED
07729.A0	STANDING SEAM METAL ROOF 2 PIPE SNOWGUARD SYSTEM
08111.A0	PRESSED METAL FRAME
08111.B0	HOLLOW METAL DOOR
08360.A0	HEAVY DUTY OVERHEAD SECTIONAL DOOR
08521.B0	FIXED VINYL WINDOW
08521.C0	VINYL WINDOW W/ SLIDING GLASS PANEL
10425.C1	ACCESSIBLE SIGNAGE
13125.B0	STANDING SEAM METAL ROOF – WITH THERMAL BLOCKS
13125.B2	STANDING SEAM METAL CANOPY
13125.C1	METAL RAIN GUTTER
13125.C2	DOWNSPOUT
13125.D5	RIDGE FLASHING TO MATCH ROOF PANELS
13125.E3	RAKE TRIM
13125.F0	METAL WALL PANEL
13125.G0	METAL FACIA
13125.L4	STEEL COLUMN – PRIMED AND PAINTED
15490.C0	WASTE OIL PIT
15670.A1	CONDENSING UNIT – SEE MECHANICAL
15838.A1	EXHAUST FAN VENT
15887.A1	LOUVER WITH BIRD SCREEN
16129.A0	CONTINUOUS HEAT TAPE IN DOWN SPOUTS AND GUTTERS
16210.A1	ELECTRICAL METER – SEE ELECTRICAL
16442.A0	ELECTRICAL PANEL
16520.B1	EXTERIOR WALL MOUNTED LIGHTS
16520.B2	EXTERIOR WALL MOUNTED FLOOD LIGHTS

GENERAL NOTES

1. FIELD VERIFY ALL EXISTING CONDITIONS AND THEIR COMPATIBILITY WITH NEW CONSTRUCTION PRIOR TO THE COMMENCEMENT OF WORK. COORDINATE DISCREPANCIES WITH ARCHITECT.

2. DO NOT SCALE DRAWINGS.

3. SEE SHEET AE602 FOR WINDOW TYPES AND DETAILS.

4. SEE CIVIL, STRUCTURAL, MECHANICAL AND ELECTRICAL DRAWINGS FOR MORE INFORMATION.

5. PAINT ALL EXPOSED, EXTERIOR STEEL AT OIL PIT CANOPY – COLOR TO MATCH WALL PANELS – SEE SPEC SECTION 09900.

6. EXTERIOR ELEVATION KEYNOTES ARE FOR ALL EXTERIOR ELEVATIONS, THEREFOR NOT ALL KEYNOTES MAY BE USED ON EACH SHEET.

7. EXTERIOR LIGHTS MUST BE SUPPORTED BY SUITABLE STRUCTURAL BRACING TO BE PROVIDED BY THE METAL BUILDING MANUFACTURER.

EXTERIOR COLOR SCHEDULE

(05500.J1) BOLLARDS: OSHA SAFETY YELLOW
(08111.A0, B0 & 08360.A0) DOORS & FRAMES: KYNAR 500 "BONE WHITE" OR EQUAL
(08521.B0 & C0) WINDOW FRAMES: KYNAR 500 "BONE WHITE" OR EQUAL
(13125.B0) METAL ROOF: GALVALUME METAL ROOF
(13125.C1 & E3) GUTTERS & RAKE TRIM: SILICONIZED POLYESTER FINISH – COLOR "B" BY ARCHITECT
(13125.C2) DOWN SPOUTS: PRE-FINISHED TO MATCH CORNER TRIM.
(13125.F0) METAL WALL PANEL: SILICONIZED POLYESTER FINISH – COLOR "A" BY ARCHITECT
(13125.G0) METAL FASCIA: SILICONIZED POLYESTER FINISH – COLOR "A" BY ARCHITECT

1 (15490.C0) WASTE OIL PIT: OSHA SAFETY RED
(15838.A1) EXHAUST VENTS: PREFINISHED KYNAR 500 "BONE WHITE" OR EQUAL
(15887.A1) LOUVERS: PREFINISHED KYNAR 500 "BONE WHITE" OR EQUAL
(16520.B1 & B2) EXTERIOR LIGHT FIXTURES: KYNAR 500 "BONE WHITE" OR EQUAL

CLIENT

UDOT CONNECTING COMMUNITIES

STATION #4325
MILE MARKER 49.7 HIGHWAY 143
PANGUITCH UTAH

DESIGNER

ARCHIPLEX GROUP
architecture · planning · design services
1135 South West Temple, Ste. A
Salt Lake City, UT 84101
P:(801) 961-7070
F:(801) 961-7373

CONSULTANTS

PROFESSIONAL SEAL

STATE OF UTAH
RALPH M. STANISLAW
95-310818-0301
LICENSED ARCHITECT

ISSUE

MARK	DATE	DESCRIPTION
1	3-5-08	ADDENDUM #2
	01-2008	CONSTRUCTION DOCUMENTS

DFCM PROJECT NO:	07010900
DFCM CONTRACT NO:	077374
ARCHIPLEX PROJECT NO:	0709.01
DRAWN BY:	A. PHILLIPS
CHECKED BY:	R. STANISLAW
SCALE:	1/8" = 1'-0"
DATE:	JANUARY, 2008

SHEET TITLE

EXTERIOR ELEVATIONS

AE201

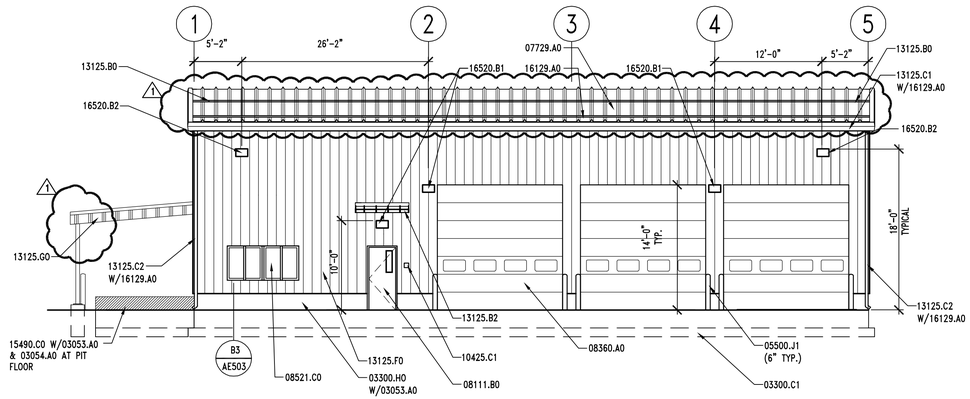

C2 | EXTERIOR ELEVATION – WEST

AE202 | REF. AE101 | SCALE: 1/8" = 1'-0"

8' 6' 4' 2' 0' 4' 8' 16'

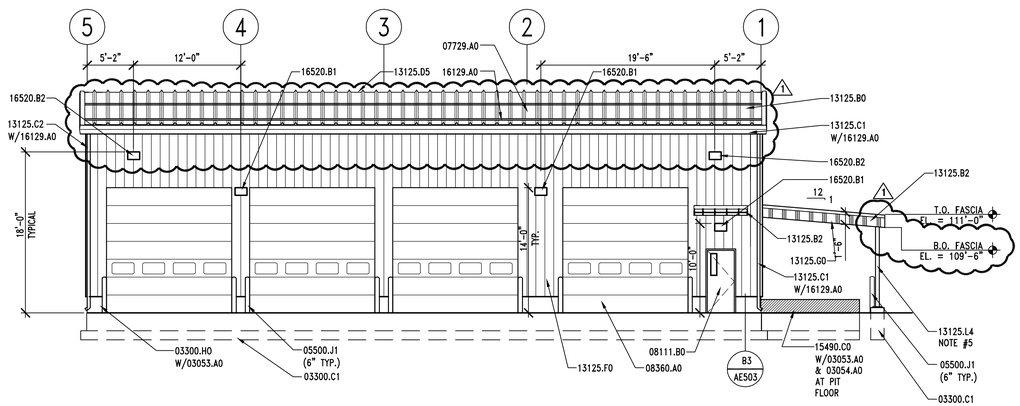

A2 | EXTERIOR ELEVATION – EAST

AE202 | REF. AE101 | SCALE: 1/8" = 1'-0"

8' 6' 4' 2' 0' 4' 8' 16'

EXTERIOR ELEVATION KEYNOTES

03053.A0	CONCRETE WATER PROOFING ADMIXTURE
03054.A0	OLIOPHOBIC TOPICAL SEALER
03300.C1	FOOTING – SEE STRUCTURAL
03300.D0	CONCRETE PAD
03300.H0	FOUNDATION WALL – SEE STRUCTURAL
05500.J1	PIPE BOLLARD (DIAMETER) GALV. AND PAINTED
07729.A0	STANDING SEAM METAL ROOF 2 PIPE SNOWGUARD SYSTEM
08111.A0	PRESSED METAL FRAME
08111.B0	HOLLOW METAL DOOR
08360.A0	HEAVY DUTY OVERHEAD SECTIONAL DOOR
08521.B0	FIXED VINYL WINDOW
08521.C0	VINYL WINDOW W/ SLIDING GLASS PANEL
10425.C1	ACCESSIBLE SIGNAGE
13125.B0	STANDING SEAM METAL ROOF – WITH THERMAL BLOCKS
13125.B2	STANDING SEAM METAL CANOPY
13125.C1	METAL RAIN GUTTER
13125.C2	DOWNSPOUT
13125.D5	RIDGE FLASHING TO MATCH ROOF PANELS
13125.E3	RAKE TRIM
13125.F0	METAL WALL PANEL
13125.G0	METAL FACIA
13125.L4	STEEL COLUMN – PRIMED AND PAINTED
15490.C0	WASTE OIL PIT
15670.A1	CONDENSING UNIT – SEE MECHANICAL
15838.A1	EXHAUST FAN VENT
15887.A1	LOUVER WITH BIRD SCREEN
16129.A0	CONTINUOUS HEAT TAPE IN DOWN SPOUTS AND GUTTERS
16210.A1	ELECTRICAL METER – SEE ELECTRICAL
16442.A0	ELECTRICAL PANEL
16520.B1	EXTERIOR WALL MOUNTED LIGHTS
16520.B2	EXTERIOR WALL MOUNTED FLOOD LIGHTS

GENERAL NOTES

1. FIELD VERIFY ALL EXISTING CONDITIONS AND THEIR COMPATIBILITY WITH NEW CONSTRUCTION PRIOR TO THE COMMENCEMENT OF WORK. COORDINATE DISCREPANCIES WITH ARCHITECT.

2. DO NOT SCALE DRAWINGS.

3. SEE SHEET AE602 FOR WINDOW TYPES AND DETAILS.

4. SEE CIVIL, STRUCTURAL, MECHANICAL AND ELECTRICAL DRAWINGS FOR MORE INFORMATION.

5. PAINT ALL EXPOSED, EXTERIOR STEEL AT OIL PIT CANOPY – COLOR TO MATCH WALL PANELS – SEE SPEC SECTION 09900.

6. EXTERIOR ELEVATION KEYNOTES ARE FOR ALL EXTERIOR ELEVATIONS, THEREFOR NOT ALL KEYNOTES MAY BE USED ON EACH SHEET.

7. EXTERIOR LIGHTS MUST BE SUPPORTED BY SUITABLE STRUCTURAL BRACING TO BE PROVIDED BY THE METAL BUILDING MANUFACTURER.

EXTERIOR COLOR SCHEDULE

(05500.J1) BOLLARDS: OSHA SAFETY YELLOW
(08111.A0, B0 & 08360.A0) DOORS & FRAMES: KYNAR 500 "BONE WHITE" OR EQUAL
(08521.B0 & C0) WINDOW FRAMES: KYNAR 500 "BONE WHITE" OR EQUAL
(13125.B0) METAL ROOF: GALVALUME METAL ROOF
(13125.C1 & E3) GUTTERS & RAKE TRIM: SILICONIZED POLYESTER FINISH – COLOR "B" BY ARCHITECT
(13125.C2) DOWN SPOUTS: PRE-FINISHED TO MATCH CORNER TRIM.
(13125.F0) METAL WALL PANEL: SILICONIZED POLYESTER FINISH – COLOR "A" BY ARCHITECT
(13125.G0) METAL FASCIA: SILICONIZED POLYESTER FINISH – COLOR "A" BY ARCHITECT

1 (15490.C0) WASTE OIL PIT: OSHA SAFETY RED
(15838.A1) EXHAUST VENTS: PREFINISHED KYNAR 500 "BONE WHITE" OR EQUAL
(15887.A1) LOUVERS: PREFINISHED KYNAR 500 "BONE WHITE" OR EQUAL
(16520.B1 & B2) EXTERIOR LIGHT FIXTURES: KYNAR 500 "BONE WHITE" OR EQUAL

CLIENT

UDOT CONNECTING COMMUNITIES

STATION #4325
MILE MARKER 49.7 HIGHWAY 143
PANGUITCH UTAH

DESIGNER

ARCHIPLEX GROUP
architecture · planning · design services
1135 South West Temple, Ste. A
Salt Lake City, UT 84101
P:(801) 961-7070
F:(801) 961-7373

CONSULTANTS

PROFESSIONAL SEAL

STATE OF UTAH
RALPH M. STANISLAW
95-310818-0301
LICENSED ARCHITECT

ISSUE

MARK	DATE	DESCRIPTION
1	3-5-08	ADDENDUM #2
	01-2008	CONSTRUCTION DOCUMENTS

DFCM PROJECT NO:	07010900
DFCM CONTRACT NO:	077374
ARCHIPLEX PROJECT NO:	0709.01
DRAWN BY:	A. PHILLIPS
CHECKED BY:	R. STANISLAW
SCALE:	1/8" = 1'-0"
DATE:	JANUARY, 2008

SHEET TITLE

EXTERIOR ELEVATIONS

AE202

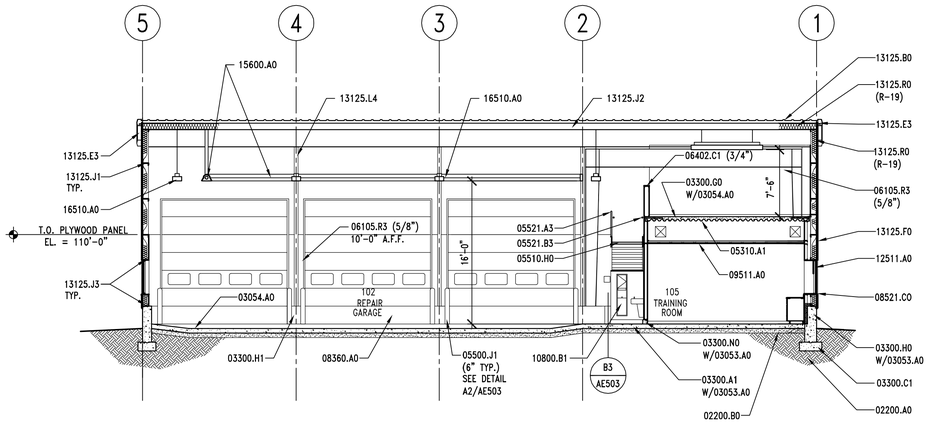

C2 | BUILDING SECTION

AE301 | REF. AE101 | SCALE: 1/8" = 1'-0"

8' 6' 4' 2' 0' 4' 8' 16'

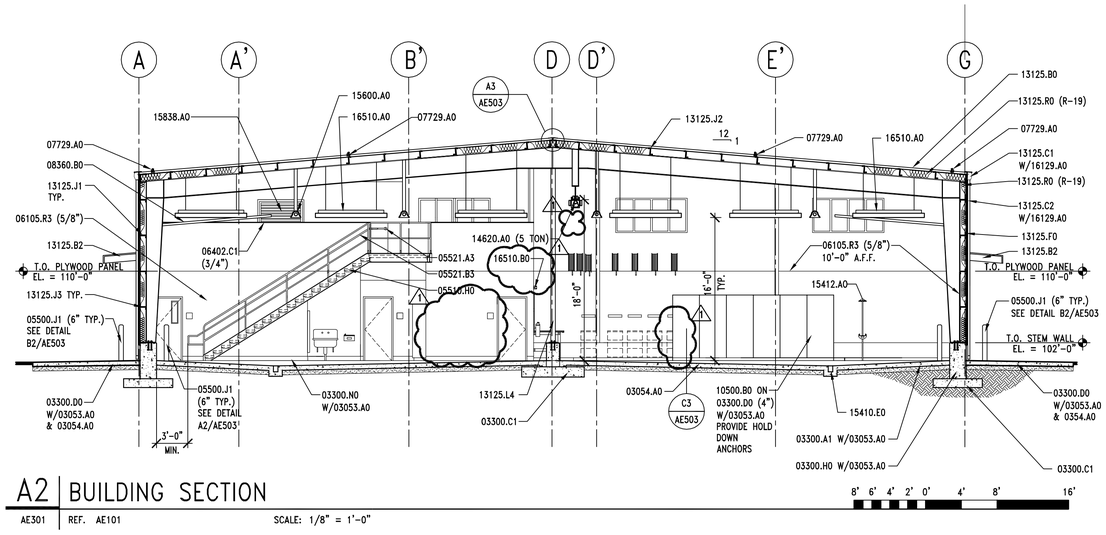

A2 | BUILDING SECTION

AE301 | REF. AE101 | SCALE: 1/8" = 1'-0"

8' 6' 4' 2' 0' 4' 8' 16'

BUILDING SECTION KEYNOTES

02200.A0 COMPACTED FILL
02200.B0 GRAVEL BASE

03053.A0 CONCRETE WATER PROOFING ADMIXTURE
03054.A0 OLIOPHOBIC TOPICAL SEALER
03300.A1 CONCRETE SLAB-ON-GRADE - SEE STRUCTURAL
03300.C1 FOOTING - SEE STRUCTURAL
03300.D0 CONCRETE PAD
03300.G0 CONCRETE OVER METAL DECK - SEE STRUCTURAL
03300.H0 FOUNDATION WALL - SEE STRUCTURAL
03300.H1 CONCRETE PIER - SEE STRUCTURAL
03300.N0 CONCRETE CURB

05310.A1 METAL DECK - SEE STRUCTURAL
05500.J1 PIPE BOLLARD (DIAMETER) GALV. AND PAINTED
05510.H0 CONC. FILLED METAL PAN STAIR - GALVANIZED
05521.A3 1 1/2" O.D. PIPE GUARDRAIL - GALVANIZED
05521.B3 1 1/2" O.D. HANDRAIL - GALVANIZED

06105.R3 PLYWOOD PANEL (THICKNESS)
06402.C1 PAINT GRADE WOOD CAP (THICK.)

07729.A0 STANDING SEAM METAL ROOF 2 PIPE SNOWGUARD SYSTEM

08360.A0 HEAVY DUTY OVERHEAD SECTIONAL DOOR
08360.B0 3" HEAVY DUTY OVERHEAD SECTIONAL DOOR TRACK
08521.C0 VINYL WINDOW WITH SLIDING GLASS PANEL

09511.A0 LAY-IN ACOUSTICAL CEILING SYSTEM

10500.A0 METAL LOCKERS (WIDTH)
10500.B0 METAL STORAGE CABINETS
10800.B1 SEMI-RECESSED PAPER TOWEL DISPENSER & WASTE RECEPTACLE

12511.A0 HORIZONTAL LOUVER BLINDS

13125.B0 STANDING SEAM METAL ROOF - WITH THERMAL BLOCKS
13125.B2 STANDING SEAM METAL CANOPY
13125.C1 METAL RAIN GUTTER
13125.C2 DOWNSPOUT
13125.E3 RAKE TRIM
13125.F0 METAL WALL PANEL
13125.J1 STRUCTURAL GIRT - PAINTED
13125.J2 ROOF PURLIN - PAINTED
13125.J3 STRUCTURAL GIRT
13125.L4 STEEL COLUMN - PRIMED & PAINTED
13125.R0 INSULATION & VAPOR BARRIER (R-VALUE)

14620.A0 TROLLEY HOIST (SIZE) - SEE STRUCTURAL

15410.E0 TRENCH DRAIN
15412.A0 EMERGENCY SHOWER & EYE WASH
15600.A0 NATURAL GAS RADIANT HEATING SYSTEM
15838.A0 EXHAUST FAN - SEE MECHANICAL

16129.A0 CONTINUOUS HEAT TAPE IN DOWNSPOUTS AND GUTTERS
16510.A0 INTERIOR LIGHTS
16510.B0 WALL MOUNTED INTERIOR LIGHTS

GENERAL NOTES

1. FIELD VERIFY ALL EXISTING CONDITIONS AND THEIR COMPATIBILITY WITH NEW CONSTRUCTION PRIOR TO THE COMMENCEMENT OF WORK. COORDINATE DISCREPANCIES WITH ARCHITECT.

2. DO NOT SCALE DRAWINGS.

3. SEE SHEET AE602 FOR WINDOW TYPES AND DETAILS.

4. SEE CIVIL, STRUCTURAL, MECHANICAL AND ELECTRICAL DRAWINGS FOR MORE INFORMATION.

5. PROVIDE 03053.A0 AT ALL CONCRETE CURBS, PIERS, SLABS, STEM WALL ETC. U.N.O.

6. PROVIDE 03054.A0 OVER ENTIRE FLOOR SLAB IN ROOMS 101, 102, 103 AND CONCRETE MEZZANINE AND STAIRS.

CLIENT

UDOT CONNECTING COMMUNITIES

STATION #4325
MILE MARKER 49.7 HIGHWAY 143
PANGUITCH UTAH

DESIGNER

ARCHIPLEX GROUP
architecture · planning · design services
1135 South West Temple, Ste. A
Salt Lake City, UT 84101
P:(801) 961-7070
F:(801) 961-7373

CONSULTANTS

PROFESSIONAL SEAL

STATE OF UTAH
RALPH M. STANISLAW
95-310818-0301
LICENSED ARCHITECT

ISSUE

MARK	DATE	DESCRIPTION
1	3-5-08	ADDENDUM #2
	01-2008	CONSTRUCTION DOCUMENTS

DFCM PROJECT NO:	07010900
DFCM CONTRACT NO:	077374
ARCHIPLEX PROJECT NO:	0709.01
DRAWN BY:	A. PHILLIPS
CHECKED BY:	R. STANISLAW
SCALE:	1/8" = 1'-0"
DATE:	JANUARY, 2008

SHEET TITLE

BUILDING SECTIONS

AE301

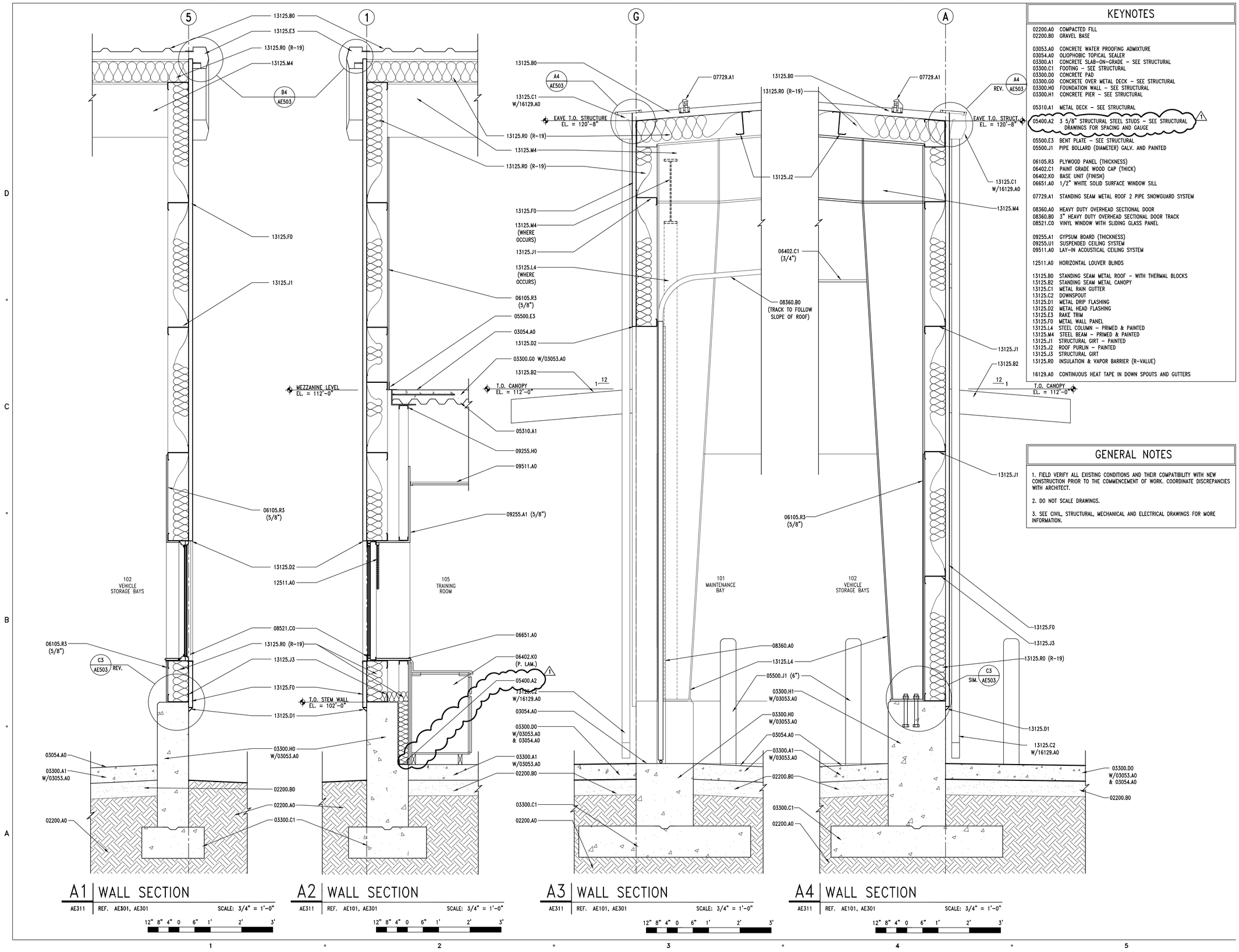

A1 WALL SECTION

AE311 | REF. AE301, AE301 | SCALE: 3/4" = 1'-0"

A2 WALL SECTION

AE311 | REF. AE101, AE301 | SCALE: 3/4" = 1'-0"

A3 WALL SECTION

AE311 | REF. AE101, AE301 | SCALE: 3/4" = 1'-0"

A4 WALL SECTION

AE311 | REF. AE101, AE301 | SCALE: 3/4" = 1'-0"

KEYNOTES

02200.A0	COMPACTED FILL
02200.B0	GRAVEL BASE
03053.A0	CONCRETE WATER PROOFING ADMIXTURE
03054.A0	OLIOPHOBIC TOPICAL SEALER
03300.A1	CONCRETE SLAB-ON-GRADE – SEE STRUCTURAL
03300.C1	FOOTING – SEE STRUCTURAL
03300.D0	CONCRETE PAD
03300.G0	CONCRETE OVER METAL DECK – SEE STRUCTURAL
03300.H0	FOUNDATION WALL – SEE STRUCTURAL
03300.H1	CONCRETE PIER – SEE STRUCTURAL
05310.A1	METAL DECK – SEE STRUCTURAL
05400.A2	3 5/8" STRUCTURAL STEEL STUDS – SEE STRUCTURAL DRAWINGS FOR SPACING AND GAUGE (1)
05500.E3	BENT PLATE – SEE STRUCTURAL
05500.J1	PIPE BOLLARD (DIAMETER) GALV. AND PAINTED
06105.R3	PLYWOOD PANEL (THICKNESS)
06402.C1	PAINT GRADE WOOD CAP (THICK)
06402.K0	BASE UNIT (FINISH)
06651.A0	1/2" WHITE SOLID SURFACE WINDOW SILL
07729.A1	STANDING SEAM METAL ROOF 2 PIPE SNOWGUARD SYSTEM
08360.A0	HEAVY DUTY OVERHEAD SECTIONAL DOOR
08360.B0	3" HEAVY DUTY OVERHEAD SECTIONAL DOOR TRACK
08521.C0	VINYL WINDOW WITH SLIDING GLASS PANEL
09255.A1	GYPSUM BOARD (THICKNESS)
09255.U1	SUSPENDED CEILING SYSTEM
09511.A0	LAY-IN ACOUSTICAL CEILING SYSTEM
12511.A0	HORIZONTAL LOUVER BLINDS
13125.B0	STANDING SEAM METAL ROOF – WITH THERMAL BLOCKS
13125.B2	STANDING SEAM METAL CANOPY
13125.C1	METAL RAIN GUTTER
13125.C2	DOWNSPOUT
13125.D1	METAL DRIP FLASHING
13125.D2	METAL HEAD FLASHING
13125.E3	RAKE TRIM
13125.F0	METAL WALL PANEL
13125.L4	STEEL COLUMN – PRIMED & PAINTED
13125.M4	STEEL BEAM – PRIMED & PAINTED
13125.J1	STRUCTURAL GIRT – PAINTED
13125.J2	ROOF PURLIN – PAINTED
13125.J3	STRUCTURAL GIRT
13125.R0	INSULATION & VAPOR BARRIER (R-VALUE)
16129.A0	CONTINUOUS HEAT TAPE IN DOWN SPOUTS AND GUTTERS

GENERAL NOTES

1. FIELD VERIFY ALL EXISTING CONDITIONS AND THEIR COMPATIBILITY WITH NEW CONSTRUCTION PRIOR TO THE COMMENCEMENT OF WORK. COORDINATE DISCREPANCIES WITH ARCHITECT.

2. DO NOT SCALE DRAWINGS.

3. SEE CIVIL, STRUCTURAL, MECHANICAL AND ELECTRICAL DRAWINGS FOR MORE INFORMATION.

CLIENT

UDOT CONNECTING COMMUNITIES

STATION #4325
MILE MARKER 49.7 HIGHWAY 143
PANGUITCH UTAH

DESIGNER

ARCHIPLEX GROUP
architecture · planning · design services
1135 South West Temple, Ste. A
Salt Lake City, UT 84101
P:(801) 961-7070
F:(801) 961-7373

CONSULTANTS

PROFESSIONAL SEAL

STATE OF UTAH
RALPH M. STANISLAW
95-310818-0301
LICENSED ARCHITECT

ISSUE

MARK	DATE	DESCRIPTION
1	3-5-08	ADDENDUM #2
	01-2008	CONSTRUCTION DOCUMENTS

DFCM PROJECT NO:	07010900
DFCM CONTRACT NO:	077374
ARCHIPLEX PROJECT NO:	0709.01
DRAWN BY:	A. PHILLIPS
CHECKED BY:	R. STANISLAW
SCALE:	3/4" = 1'-0"
DATE:	JANUARY, 2008

SHEET TITLE

WALL SECTIONS

AE311

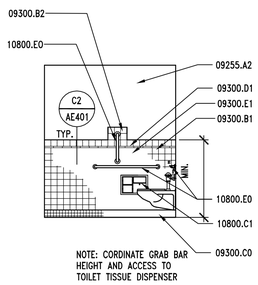

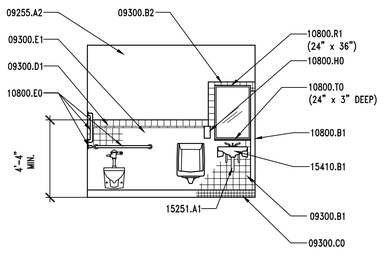

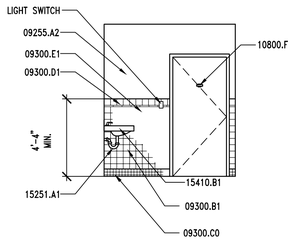

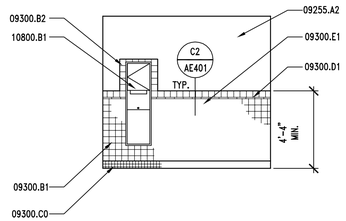

KEYNOTES

03053.A0	CONCRETE WATER PROOFING ADMIXTURE
03054.A0	OLIOPHOBIC TOPICAL SEALER
03300.A1	CONCRETE SLAB-ON-GRADE - SEE STRUCTURAL
03300.D0	CONCRETE PAD
05120.D1	TUBE STEEL COLUMN - SEE STRUCTURAL
06105.P9	2 x FRAMING, FIRE TREATED
06402.C1	PAINT GRADE WOOD CAP (THICK)
09255.A1	GYPSUM BOARD (THICKNESS)
09255.A2	WATER RESISTANT GYPSUM BOARD (THICKNESS)
09255.H1	METAL STUDS (SIZE, SPACING)
09255.S3	18 GA. METAL MOUNTING STRIPS
09300.A1	FLOOR TILE - SEE FINISH SCHEDULE
09300.B1	WALL TILE - SEE FINISH SCHEDULE
09300.B2	PROVIDE TILE FRAME AROUND FIXTURE
09300.C0	TILE BASE - SEE FINISH SCHEDULE
09300.D1	BULLNOSE TILE - SEE FINISH SCHEDULE
09300.E1	1/2" x 6" TILE TRIM PIECE - SEE FINISH SCHEDULE
09300.G1	MORTAR BED
09300.G4	WATERPROOF MEMBRANE
10100.C0	MARKER BOARD
10425.A0	ROOM SIGNAGE
10425.D1	ACCESSIBLE/UNISEX RESTROOM SIGNAGE
10500.A0	METAL LOCKERS (WIDTH)
10800.B1	SEMI-RECESSED PAPER TOWEL DISPENSER & WASTE RECEPTACLE
10800.C0	TOILET TISSUE DISPENSER
10800.C1	RECESSED TOILET TISSUE DISPENSER/SAN. NAP. DISPOSAL
10800.D0	MOP RACK
10800.E0	GRAB BAR
10800.F1	DOUBLE PRONG ROBE HOOK
10800.H0	SOAP DISPENSER
10800.R1	FRAMED MIRROR (SIZE)
10800.T0	METAL SHELF (SIZE)
15251.A1	PIPE INSULATION AT ALL EXPOSED PIPE
15410.A1	URINAL, ACCESSIBLE
15410.B1	SINK FAUCET WITH ADA LEVER HANDLES
15410.C0	UTILITY SINK
15410.E2	FLOOR DRAIN
15410.F0	TOILET
15452.A1	DRINKING FOUNTAIN

GENERAL NOTES

1. FIELD VERIFY ALL EXISTING CONDITIONS AND THEIR COMPATIBILITY WITH NEW CONSTRUCTION PRIOR TO THE COMMENCEMENT OF WORK. COORDINATE DISCREPANCIES WITH ARCHITECT.

2. DO NOT SCALE DRAWINGS.

3. SEE CIVIL, STRUCTURAL, MECHANICAL AND ELECTRICAL DRAWINGS FOR MORE INFORMATION.

4. PROVIDE BACKING BEHIND ALL SURFACE MOUNTED EQUIPMENT AND/OR FIXTURES PER DETAIL C3/AE401

5. SEE C1/AE401 FOR TYPICAL FIXTURE MOUNTING HEIGHTS.

6. SEE DETAILS A1, A2, B1 & B2/AE401 FOR ADA TYPICAL DETAILS

D1 | RESTROOM ELEVATION

AE401 | REF. AE401 | SCALE: 1/4" = 1'-0"

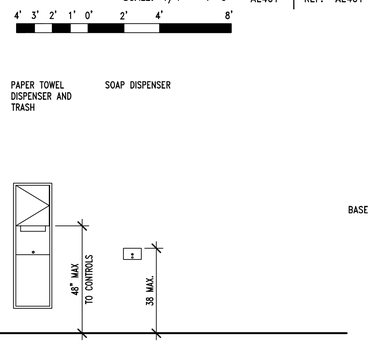

D2 | RESTROOM ELEVATION

AE401 | REF. AE401 | SCALE: 1/4" = 1'-0"

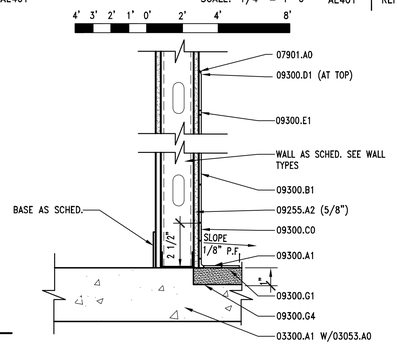

D3 | RESTROOM ELEVATION

AE401 | REF. AE401 | SCALE: 1/4" = 1'-0"

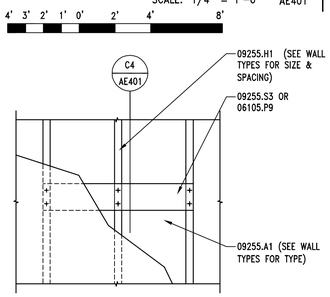

D4 | RESTROOM ELEVATION

AE401 | REF. AE401 | SCALE: 1/4" = 1'-0"

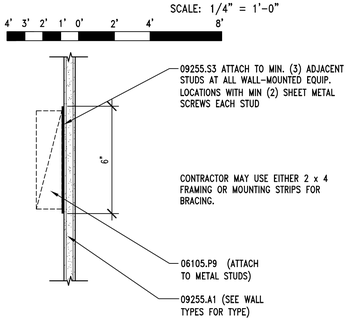

C1 | MOUNTING HEIGHTS

AE401 | REF. AE401 | SCALE: 3/8" = 1'-0"

FRONT ACCESS DRINKING FOUNTAIN

C2 | RECESSED SLAB DETAIL

AE401 | REF. AE401 | SCALE: 3" = 1'-0"

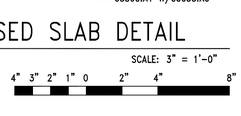

C3 | MOUNTING PLATE ELEV.

AE401 | REF. AE401 | SCALE: 3/4" = 1'-0"

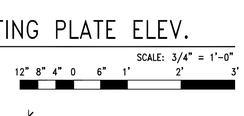

C4 | MOUNTING PLATE SECTION

AE401 | REF. AE401 | SCALE: 3" = 1'-0"

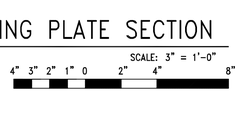

B1 | ACCESSIBLE DRINKING FOUNTAIN DETAIL

AE401 | REF. AE401 | SCALE: 3/8" = 1'-0"

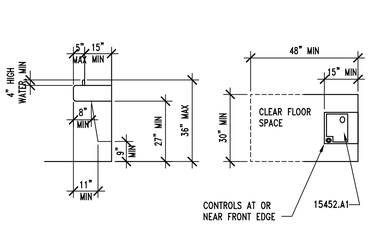

B2 | ACCESSIBLE TOILET DETAIL

AE401 | REF. AE401 | SCALE: 3/8"= 1'-0"

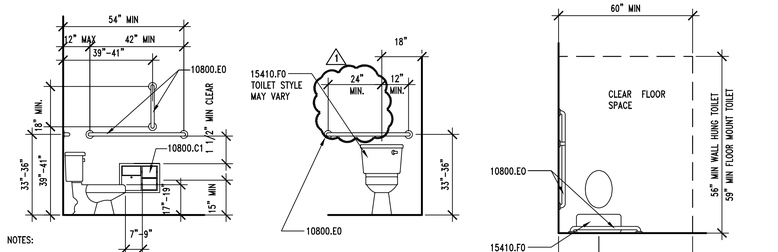

NOTES:

(1) ALL GRAB BARS MUST SUPPORT A LOAD OF 250 POUNDS MIN.

(2) MOUNT GRAB BARS TO MAINTAIN 1 1/2" CLEAR SPACE FROM WALL.

A1 | ACCESSIBLE URINAL DETAIL

AE401 | REF. AE401 | SCALE: 3/8" = 1'-0"

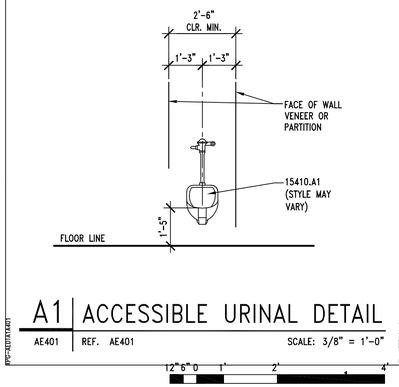

A2 | ACCESSIBLE SINK DETAIL

AE401 | REF. AE401 | SCALE: 3/8" = 1'-0"

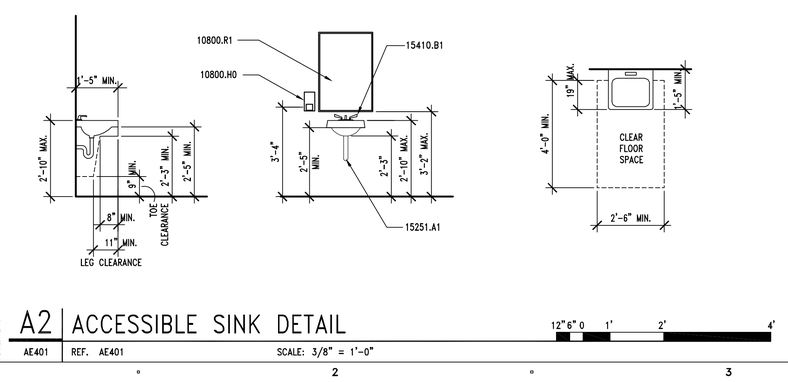

A4 | ENLARGED RESTROOM PLAN

AE401 | REF. AE101 | SCALE: 1/2" = 1'-0'

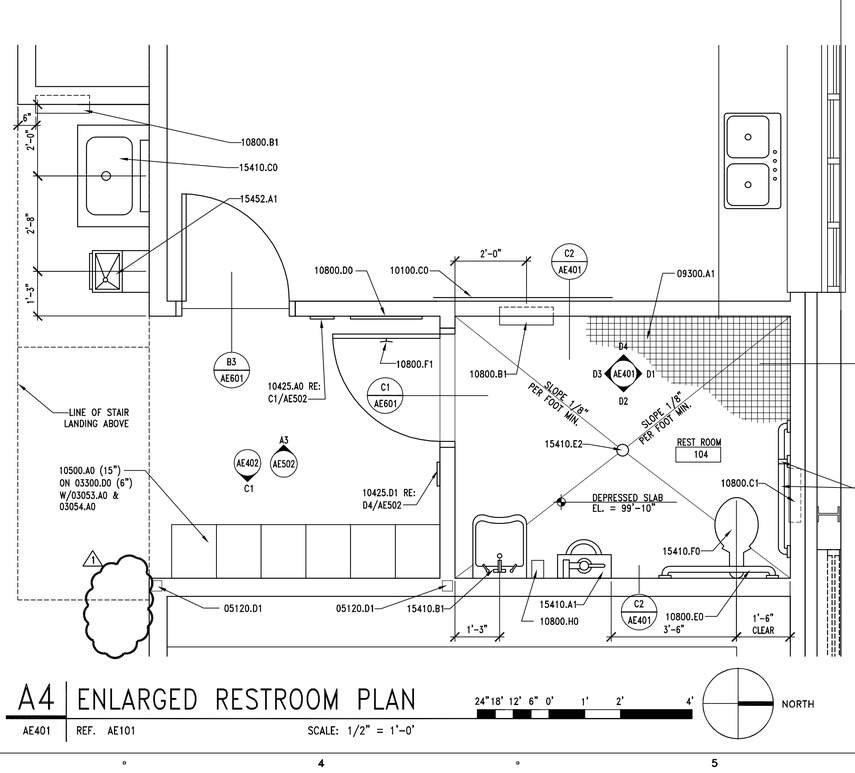

CLIENT

UDOT CONNECTING COMMUNITIES

STATION #4325
MILE MARKER 49.7 HIGHWAY 143
PANGUITCH UTAH

DESIGNER

ARCHIPLEX GROUP
architecture · planning · design services
1135 South West Temple, Ste. A
Salt Lake City, UT 84101
P:(801) 961-7070
F:(801) 961-7373

CONSULTANTS

PROFESSIONAL SEAL

STATE OF UTAH
RALPH M. STANISLAW
95-310818-0301
LICENSED ARCHITECT

ISSUE

MARK	DATE	DESCRIPTION
1	3-5-08	ADDENDUM #2
	01-2008	CONSTRUCTION DOCUMENTS

DFCM PROJECT NO:	07010900
DFCM CONTRACT NO:	077374
ARCHIPLEX PROJECT NO:	0709.01
DRAWN BY:	A. PHILLIPS
CHECKED BY:	R. STANISLAW
SCALE:	AS SHOWN
DATE:	JANUARY, 2008

SHEET TITLE

ENLARGED RESTROOM FLOOR PLAN, INTERIOR ELEVATIONS AND DETAILS

AE401

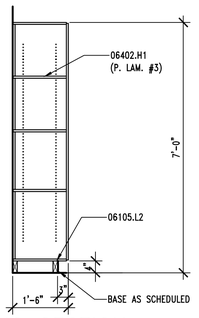

D1 | SHELVING SECTION

AE402 | REF. AE402 | SCALE: 1/2" = 1'-0"

24" 18" 12" 6" 0 1' 2' 4'

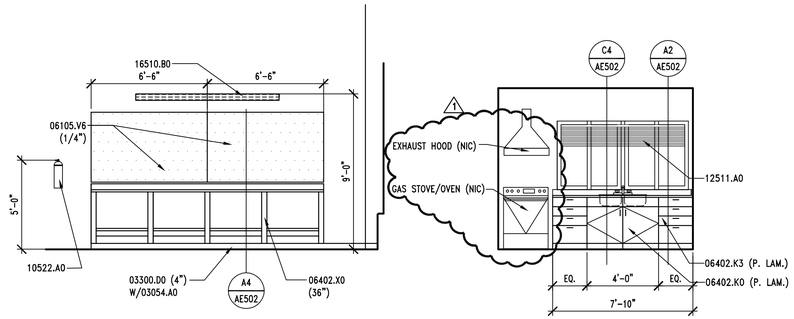

D2 | INTERIOR ELEVATION

AE402 | REF. AE402 | SCALE: 1/4" = 1' -0"

4' 3' 2' 1' 0' 2' 4' 8'

D3 | INTERIOR ELEVATION

AE402 | REF. AE101 | SCALE: 1/4" = 1' -0"

4' 3' 2' 1' 0' 2' 4' 8'

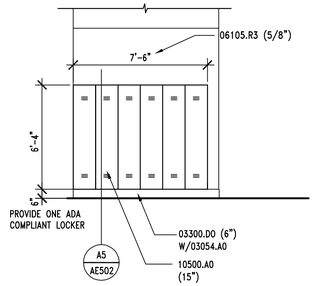

C1 | LOCKER ELEVATION

AE402 | REF. AE101 & AE401 | SCALE: 1/4" = 1'-0"

4' 3' 2' 1' 0' 2' 4' 8'

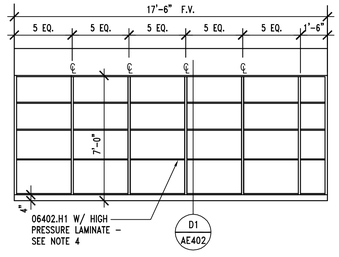

C2 | TYP. SHELVING ELEVATION

AE402 | REF. AE101 | SCALE: 1/4" = 1'-0"

4' 3' 2' 1' 0' 2' 4' 8'

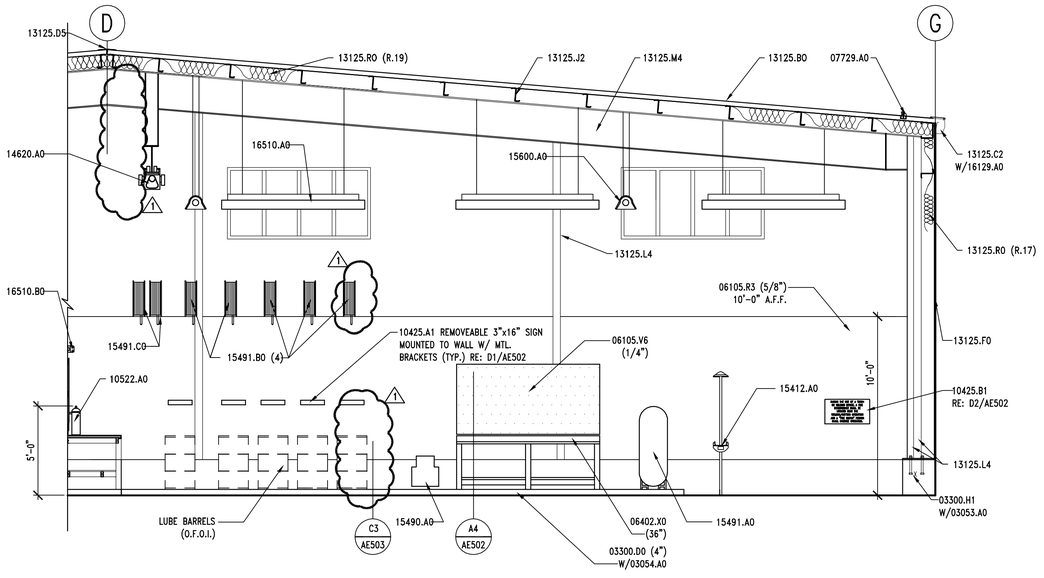

A1 | INTERIOR ELEVATION

AE402 | REF. AE402 | SCALE: 1/4" = 1' -0"

4' 3' 2' 1' 0' 2' 4' 8'

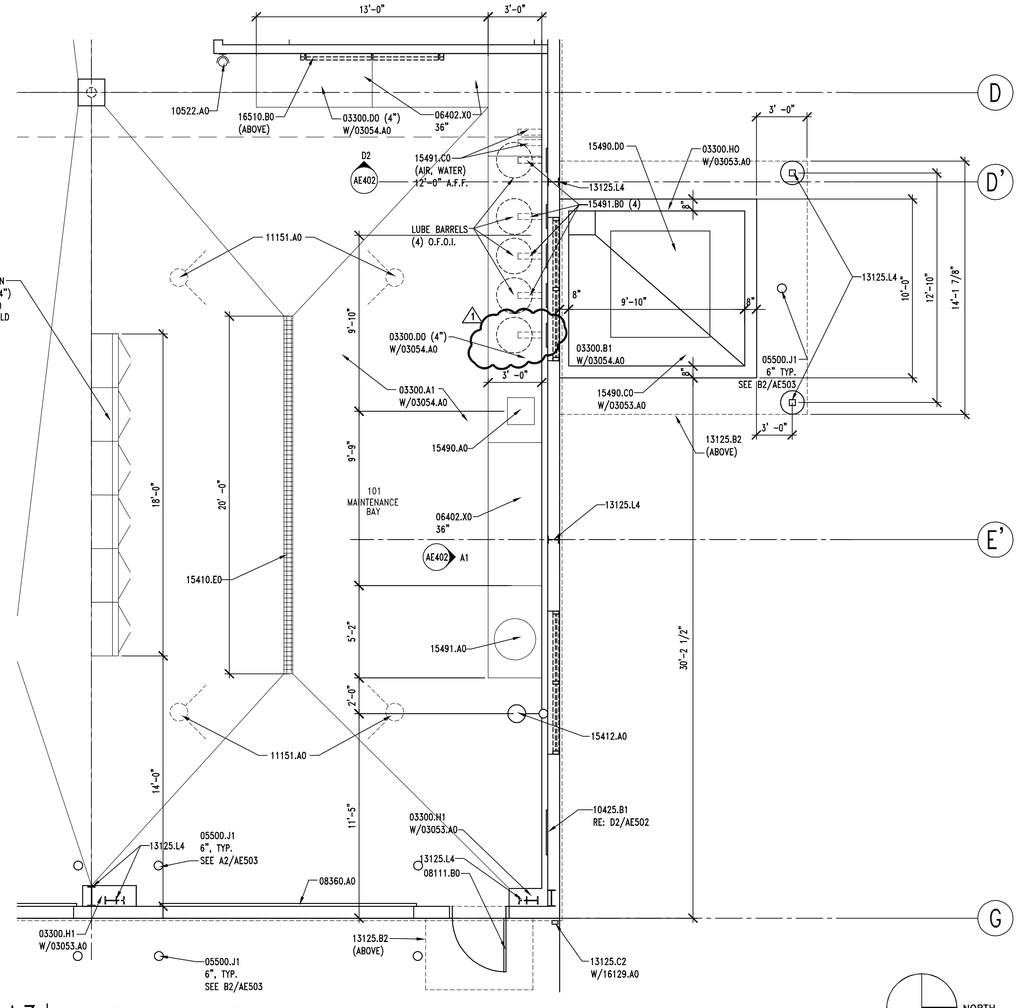

A3 | ENLARGED MAINTENANCE BAY

AE402 | REF. AE101 | SCALE: 1/4" = 1' -0"

4' 3' 2' 1' 0' 2' 4' 8'

KEYNOTES

03053.A0	CONCRETE WATER PROOFING ADMIXTURE
03054.A0	OLIOPHOBIC TOPICAL SEALER
03300.A1	CONCRETE SLAB-ON-GRADE - SEE STRUCTURAL
03300.B1	CONCRETE SLAB - SEE STRUCTURAL
03300.D0	CONCRETE PAD (SIZE)
03300.H0	FOUNDATION WALL - SEE STRUCTURAL
03300.H1	CONCRETE PIER - SEE STRUCTURAL
03300.N0	CONCRETE CURB (HEIGHT)
05500.J1	PIPE BOLLARD (DIAMETER) - GALV. & PAINTED
06105.L2	BLOCKING AS REQUIRED
06105.R3	PLYWOOD PANEL (THICKNESS)
06105.V6	PEGBOARD (THICKNESS)
06402.H1	ADJUSTABLE SHELVES (FINISH)
06402.K0	BASE UNIT (FINISH)
06402.K3	BASE UNIT WITH DRAWERS (FINISH)
06402.X0	WORKBENCH (DEPTH)
07729.A0	STANDING SEAM METAL ROOF SNOW GAURD 2 PIPE SYSTEM
08111.B0	HOLLOW METAL DOOR
08360.A0	HEAVY DUTY OVERHEAD SECTIONAL DOOR
10425.A0	ROOM SIGNAGE
10425.A1	OIL SIGNAGE
10425.B1	WELDING SIGNAGE
10500.A0	METAL LOCKERS (WIDTH)
10500.B0	METAL STORAGE CABINETS
10522.A0	FIRE EXTINGUISHER
11151.A0	MOBILE LIFT - NIC - OWNER FURNISHED
12511.A0	HORIZONTAL LOUVER BLINDS
13125.B0	STANDING SEAM METAL ROOF - WITH THERMAL BLOCKS
13125.B2	STANDING SEAM METAL CANOPY
13125.C2	DOWNSPOUT
13125.D5	RIDGE FLASHING, TO MATCH ROOF PANELS
13125.F0	METAL WALL PANEL
13125.J2	ROOF PURLIN - PAINTED

KEYNOTES - CONT.

13125.M4	STEEL BEAM - PRIMED AND PAINTED
13125.L4	STEEL COLUMN - PRIMED & PAINTED
13125.R0	INSULATION & VAPOR BARRIER (R-VALUE)
14620.A0	TROLLEY HOIST (SIZE) - SEE STRUCTURAL
15410.E0	TRENCH DRAIN
15412.A0	EMERGENCY SHOWER & EYE WASH
15490.A0	WASTE OIL PUMP
15490.B0	WASTE OIL PIT
15490.D0	600 GAL. WASTE OIL TANK - C.F.C.I 1
15491.A0	AIR COMPRESSOR
15491.B0	OVERHEAD LUBE REELS
15491.C0	OVERHEAD HOSE REELS
15600.A0	NATURAL GAS RADIANT HEATING SYSTEM
16129.A0	CONTINUOUS HEAT TAPE IN DOWNSPOUTS AND GUTTERS
16510.A0	INTERIOR LIGHTS
16510.B0	WALL MOUNTED INTERIOR LIGHTS

GENERAL NOTES

1. FIELD VERIFY ALL EXISTING CONDITIONS AND THEIR COMPATIBILITY WITH NEW CONSTRUCTION PRIOR TO THE COMMENCEMENT OF WORK. COORDINATE DISCREPANCIES WITH ARCHITECT.

2. DO NOT SCALE DRAWINGS.

3. SEE CIVIL, STRUCTURAL, MECHANICAL AND ELECTRICAL DRAWINGS FOR MORE INFORMATION.

4. PROVIDE QUANTITY OF ADJUSTABLE SHELVING AS SHOWN IN ELEVATION.

5. SEE SHEET AE602 FOR PLASTIC LAMINATE COLORS.

6. PROVIDE 03053.A0 AT ALL CONCRETE CURBS, PIERS, SLABS, STEM WALL ETC. U.N.O.

7. PROVIDE 03054.A0 OVER ENTIRE FLOOR SLAB AT ROOMS 101, 102, 103 & CONCRETE MEZZANINE & STAIRS.

CLIENT

UDOT CONNECTING COMMUNITIES

STATION #4325
MILE MARKER 49.7 HIGHWAY 143
PANGUITCH UTAH

DESIGNER

ARCHIPLEX GROUP
architecture · planning · design services
1135 South West Temple, Ste. A
Salt Lake City, UT 84101
P:(801) 961-7070
F:(801) 961-7373

CONSULTANTS

PROFESSIONAL SEAL

STATE OF UTAH
RALPH M. STANISLAW
95-310818-0301
LICENSED ARCHITECT

ISSUE

MARK	DATE	DESCRIPTION
1	3-5-08	ADDENDUM #2
	01-2008	CONSTRUCTION DOCUMENTS

DFCM PROJECT NO:	07010900
DFCM CONTRACT NO:	077374
ARCHIPLEX PROJECT NO:	0709.01
DRAWN BY:	A. PHILLIPS
CHECKED BY:	R. STANISLAW
SCALE:	AS SHOWN
DATE:	JANUARY, 2008

SHEET TITLE

ENLARGED MAINTENANCE BAY AND INTERIOR ELEVATIONS

AE402

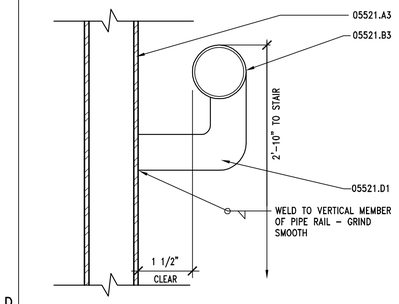

D1 | HANDRAIL ATTACHMENT DTL.

AE403 | REF. AE403 | SCALE: 6" = 1'-0"

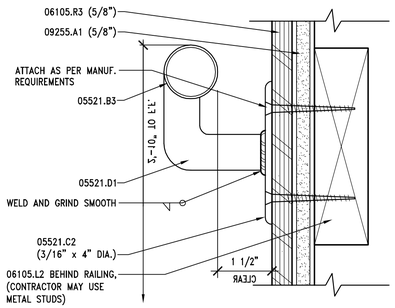

D2 | HANDRAIL ATTACHMENT DTL.

AE403 | REF. AE403 | SCALE: 6" = 1'-0"

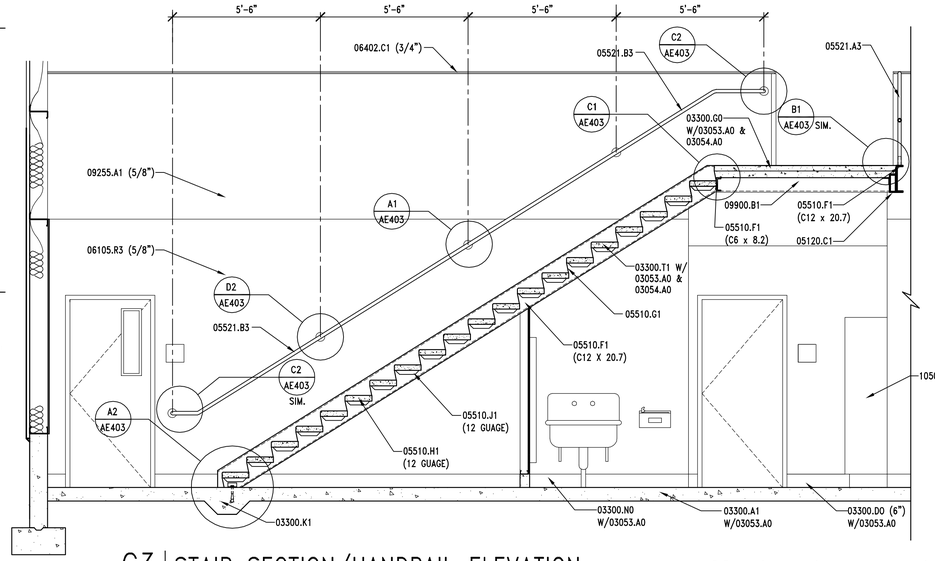

C3 | STAIR SECTION/HANDRAIL ELEVATION

AE403 | REF. AE403 | SCALE: 3/8" = 1'-0"

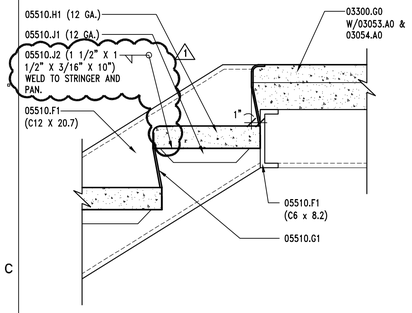

C1 | STAIR LANDING DETAIL

AE403 | REF. AE403 | SCALE: 1 1/2" = 1'-0"

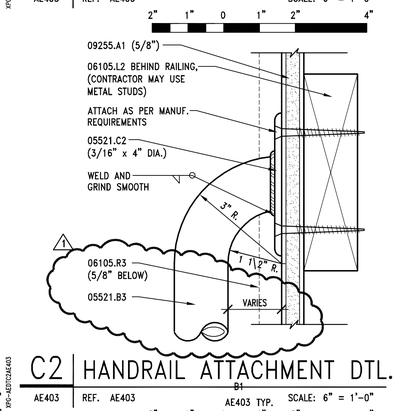

C2 | HANDRAIL ATTACHMENT DTL.

AE403 | REF. AE403 | SCALE: 6" = 1'-0"

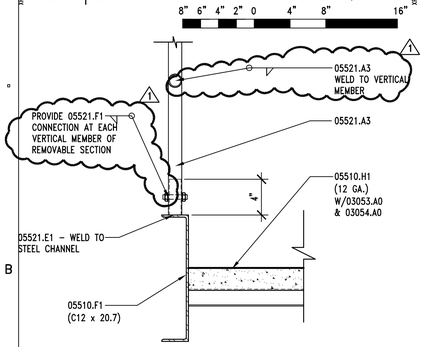

B1 | GUARDRAIL ATTACH. DETAIL

AE403 | REF. AE403 | SCALE: 1 1/2" = 1'-0"

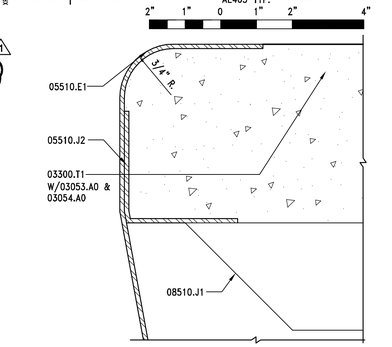

B2 | STAIR NOSING DETAIL

AE403 | REF. AE403 | SCALE: NONE

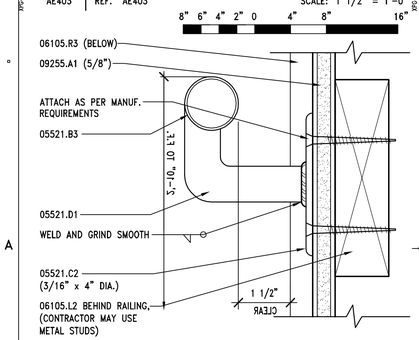

A1 | HANDRAIL ATTACHMENT DTL.

AE403 | REF. AE403 | SCALE: 6" = 1'-0"

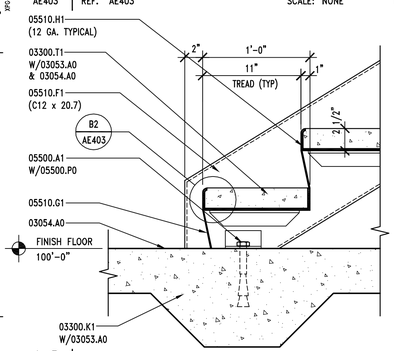

A2 | STAIR BASE DETAIL

AE403 | REF. AE403 | SCALE: 1 1/2" = 1'-0"

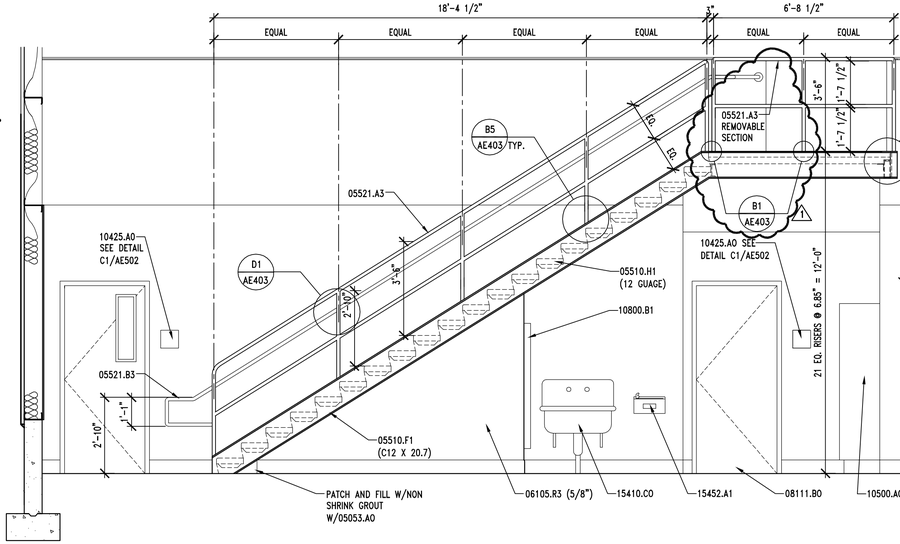

B3 | STAIR ELEVATION

AE403 | REF. AE403 | SCALE: 3/8" = 1'-0"

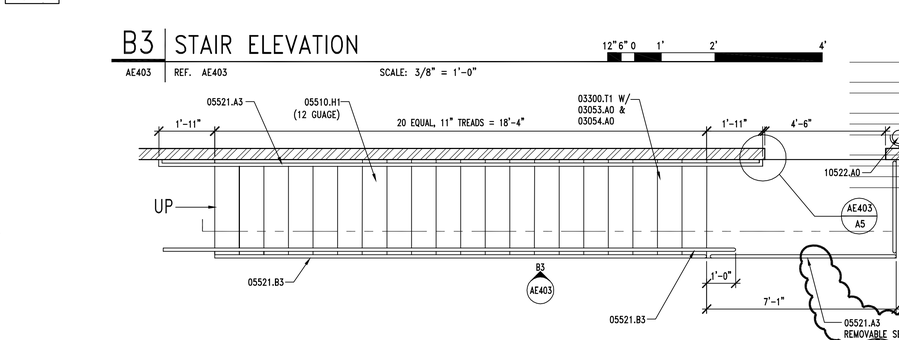

A3 | ENLARGED STAIR PLAN

AE403 | REF. AE101 | SCALE: 3/8" = 1'-0"

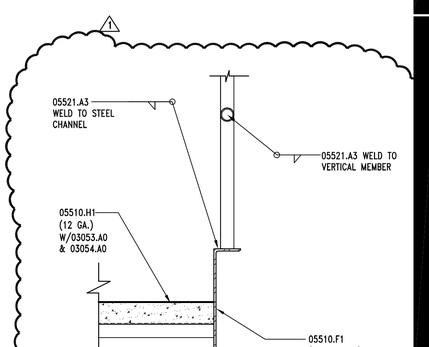

B5 | GUARDRAIL ATTACH. DETAIL

AE402 | REF. AE402 | SCALE: 1 1/2" = 1'-0"

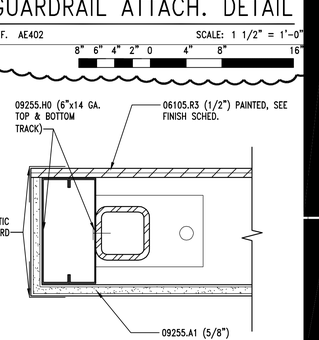

A5 | CORNER GUARD DTL.

AE403 | REF. AE403 | SCALE: 3" = 1'-0"

KEYNOTES

03053.A0	CONCRETE WATER PROOFING ADMIXTURE
03054.A0	OLIOPHOBIC TOPICAL SEALER
03300.A1	CONCRETE SLAB-ON-GRADE - SEE STRUCTURAL
03300.D0	CONCRETE PAD
03300.G0	CONCRETE OVER METAL DECK - SEE STRUCTURAL
03300.K1	THICKENED SLAB - SEE STRUCTURAL
03300.N0	CONCRETE CURB
03300.T1	CONCRETE AT STAIR TREAD
05120.C1	TUBE STEEL BEAM - SEE STRUCTURAL - GALVANIZED
05500.A1	ANGLE - SEE STRUCTURAL
05500.P0	ANCHOR BOLT(S)
05510.E1	NON SKID SURFACE @ NOSING
05510.F1	STEEL STRINGER - (SIZE) - GALVANIZED
05510.G1	3/16" STEEL CLOSURE PLATE - GALVANIZED
05510.H1	PRE-FORMED, CONC. FILLED METAL PAN STAIR TREAD - (SIZE) - GALV.
05510.J1	METAL PAN STAIR SUPPORT - (SIZE) - GALVANIZED
05510.J2	PAN ANCHORAGE - (SIZE) - GALVANIZED
05521.A3	1 1/2" O.D. PIPE GUARDRAIL - GALVANIZED
05521.B3	1 1/2" O.D. PIPE HANDRAIL - GALVANIZED
05521.C2	ESCUTCHEON WITH EASED EDGES (SIZE)
05521.D1	PIPE RAIL SUPPORT - GALVANIZED
05521.E1	1" DIA. PIPE RAILING ANCHOR - GALVANIZED
05521.F1	1/2" DIA. THRU BOLT
06105.L2	BLOCKING AS REQUIRED
06105.R3	PLYWOOD PANEL (THICKNESS)
06402.C1	PAINT GRADE WOOD CAP (THICK)
08111.B0	HOLLOW METAL DOOR
09900.B1	GALVANIZED METAL PRIMER
09255.A1	GYPSUM BOARD (THICKNESS)
09255.H0	METAL STUD
10425.A0	ROOM SIGNAGE
10500.A0	METAL LOCKERS (WIDTH)
10522.A0	FIRE EXTINGUISHER
10800.B1	SEMI - RECESSED PAPER TOWEL DISPENSER & WASTE RECEPTACLE
15452.A1	DRINKING FOUNTAIN
15410.C0	UTILITY SINK

GENERAL NOTES

1. FIELD VERIFY ALL EXISTING CONDITIONS AND THEIR COMPATIBILITY WITH NEW CONSTRUCTION PRIOR TO THE COMMENCEMENT OF WORK. COORDINATE DISCREPANCIES WITH ARCHITECT.
2. DO NOT SCALE DRAWINGS.
3. SEE STRUCTURAL DRAWINGS FOR MORE INFORMATION.

CLIENT

UDOT CONNECTING COMMUNITIES

STATION #4325
MILE MARKER 49.7 HIGHWAY 143
PANGUITCH UTAH

DESIGNER

ARCHIPLEX GROUP
architecture · planning · design services
1135 South West Temple, Ste. A
Salt Lake City, UT 84101
P:(801) 961-7070
F:(801) 961-7373

CONSULTANTS

PROFESSIONAL SEAL

STATE OF UTAH
RALPH M. STANISLAW
95-310818-0301
LICENSED ARCHITECT

ISSUE

MARK	DATE	DESCRIPTION
1	3-5-08	ADDENDUM #2
	01-2008	CONSTRUCTION DOCUMENTS

DFCM PROJECT NO:	07010900
DFCM CONTRACT NO:	077374
ARCHIPLEX PROJECT NO:	0709.01
DRAWN BY:	A. PHILLIPS
CHECKED BY:	R. STANISLAW
SCALE:	AS SHOWN
DATE:	JANUARY, 2008

SHEET TITLE

STAIR PLAN, SECTION ELEVATION AND DETAILS

AE403

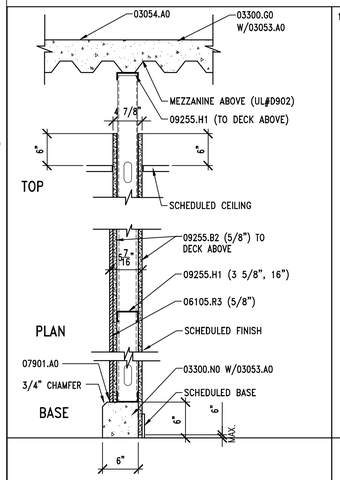

TYPE	OVERALL THICKNESS	STUD/ BLOCK SIZE	FIRE RATING	U.L. LISTING	S.T.C. RATING
G	AS NOTED	3 5/8"	N.R.	---	---

COMMENT

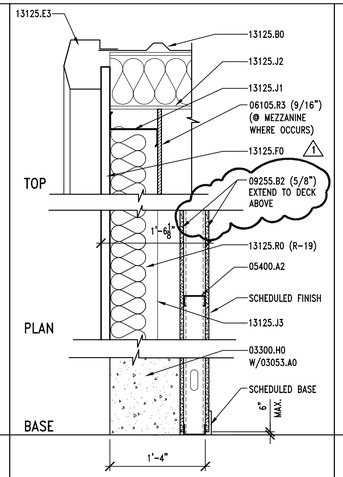

TYPE	OVERALL THICKNESS	STUD/ BLOCK SIZE	FIRE RATING	U.L. LISTING	S.T.C. RATING
H	AS NOTED	3-5/8"	1 HR.	UL419	---

COMMENT

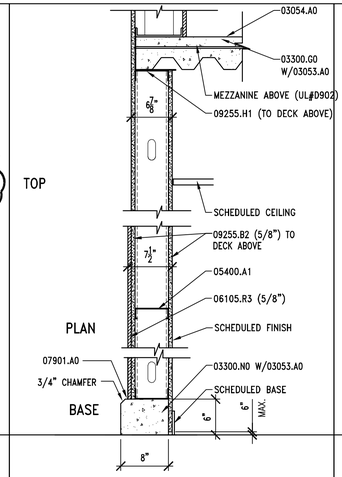

TYPE	OVERALL THICKNESS	STUD/ BLOCK SIZE	FIRE RATING	U.L. LISTING	S.T.C. RATING
J	AS NOTED	6"	1 HR.	UL419	---

COMMENT

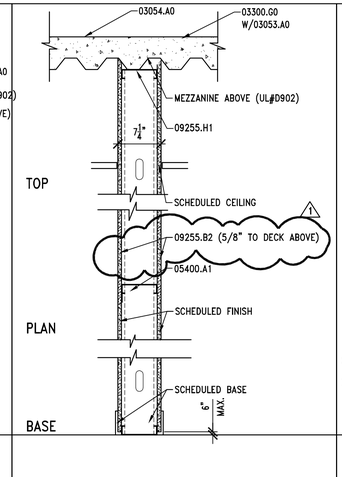

PROVIDE WATER RESISTANT GYPSUM BOARD AT RESTROOM

TYPE	OVERALL THICKNESS	STUD/ BLOCK SIZE	FIRE RATING	U.L. LISTING	S.T.C. RATING
K	AS NOTED	3 5/8"	1 HR.	UL419	---

COMMENT

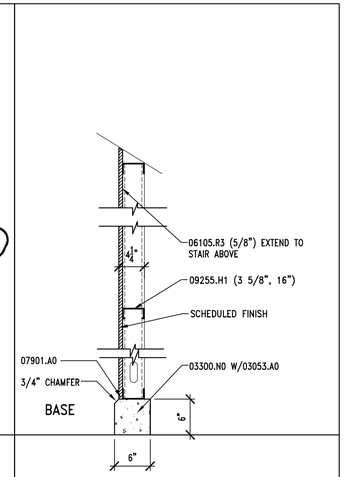

TYPE	OVERALL THICKNESS	STUD/ BLOCK SIZE	FIRE RATING	U.L. LISTING	S.T.C. RATING
L	AS NOTED	3 5/8"	N.R.	---	---

COMMENT

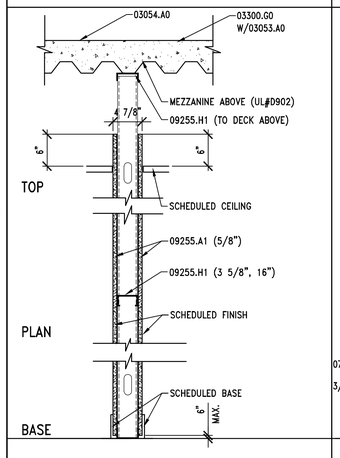

PROVIDE WATER RESISTANT GYPSUM BOARD AT RESTROOM

TYPE	OVERALL THICKNESS	STUD/ BLOCK SIZE	FIRE RATING	U.L. LISTING	S.T.C. RATING
A	AS NOTED	3 5/8"	N.R.	---	---

COMMENT

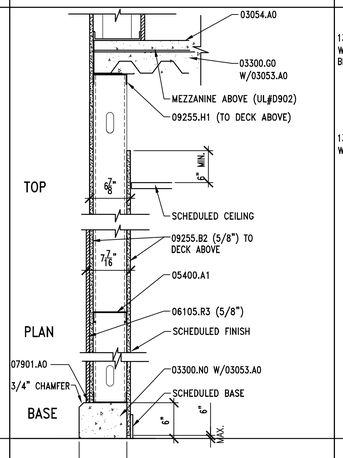

PROVIDE WATER RESISTANT GYPSUM BOARD AT RESTROOM

TYPE	OVERALL THICKNESS	STUD/ BLOCK SIZE	FIRE RATING	U.L. LISTING	S.T.C. RATING
B	AS NOTED	6"	N.R.	---	---

COMMENT

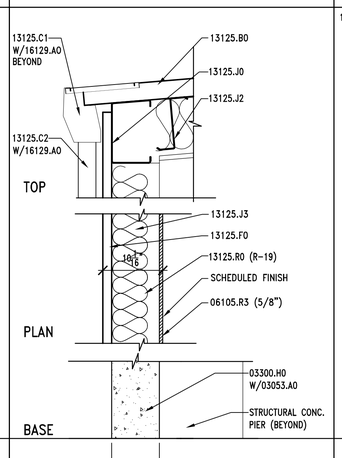

TYPE	OVERALL THICKNESS	STUD/ BLOCK SIZE	FIRE RATING	U.L. LISTING	S.T.C. RATING
C	AS NOTED	-	N.R.	---	---

COMMENT

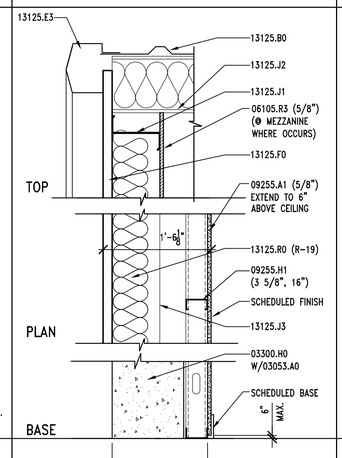

PROVIDE WATER RESISTANT GYPSUM BOARD AT RESTROOM

TYPE	OVERALL THICKNESS	STUD/ BLOCK SIZE	FIRE RATING	U.L. LISTING	S.T.C. RATING
D	AS NOTED	3-5/8"	N.R.	---	---

COMMENT

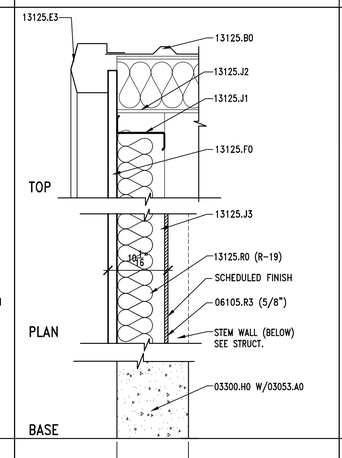

TYPE	OVERALL THICKNESS	STUD/ BLOCK SIZE	FIRE RATING	U.L. LISTING	S.T.C. RATING
E	AS NOTED	-	N.R.	---	---

COMMENT

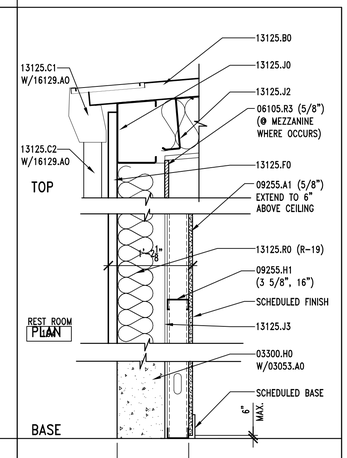

TYPE	OVERALL THICKNESS	STUD/ BLOCK SIZE	FIRE RATING	U.L. LISTING	S.T.C. RATING
F	AS NOTED	3-5/8"	N.R.	---	---

COMMENT

KEYNOTES

03053.A0	CONCRETE WATER PROOFING ADMIXTURE
03054.A0	OLIOPHOBIC TOPICAL SEALER
03300.G0	CONCRETE OVER METAL DECK - SEE STRUCTURAL
03300.H0	FOUNDATION WALL - SEE STRUCTURAL
03300.N0	CONCRETE CURB
05400.A1	6" STRUCTURAL STEEL STUDS - SEE STRUCTURAL DRAWINGS FOR SPACING AND GAUGE
05400.A2	3 5/8" STRUCTURAL STEEL STUDS - SEE STRUCTURAL DRAWINGS FOR SPACING AND GAUGE
06105.R3	PLYWOOD PANEL (THICKNESS)
06402.C1	PAINT GRADE WOOD CAP (THICK)
07901.A0	CONT. SEALANT
09255.A1	GYPSUM BOARD (THICKNESS)
09255.B2	TYPE 'X' GYPSUM BOARD (THICKNESS)
09255.H1	METAL STUDS (SIZE, SPACING)
13125.B0	STANDING SEAM METAL ROOF - WITH THERMAL BLOCKS
13125.C1	METAL RAIN GUTTER
13125.C2	DOWNSPOUT
13125.E3	RAKE TRIM
13125.F0	METAL WALL PANEL
13125.J0	STRUCTURAL MEMBER - PRIMED AND PAINTED
13125.J1	STRUCTURAL GIRT - PAINTED
13125.J2	ROOF PURLIN - PAINTED
13125.J3	STRUCTURAL GIRT
13125.R0	INSULATION & VAPOR BARRIER (R-VALUE)
16129.A0	CONTINUOUS HEAT TAPE IN DOWN SPOUTS AND GUTTERS

GENERAL NOTES

1. FIELD VERIFY ALL EXISTING CONDITIONS AND THEIR COMPATIBILITY WITH NEW CONSTRUCTION PRIOR TO THE COMMENCEMENT OF WORK. COORDINATE DISCREPANCIES WITH ARCHITECT.

2. DO NOT SCALE DRAWINGS.

3. SEE CIVIL, STRUCTURAL, MECHANICAL AND ELECTRICAL DRAWINGS FOR MORE INFORMATION.

4. CONTRACTOR TO ENSURE THAT METAL BUILDING MANUF. PROVIDES STRUCTURAL GIRTS IN SUFFICIENT QUANTITY TO SUPPORT INTERIOR FINISHES.

A1 | WALL TYPES

AE501 | REF. AE101 SCALE: 1" = 1'-0"

CLIENT

UDOT CONNECTING COMMUNITIES

STATION #4325
MILE MARKER 49.7 HIGHWAY 143
PANGUITCH UTAH

DESIGNER

ARCHIPLEX GROUP
architecture · planning · design services
1135 South West Temple, Ste. A
Salt Lake City, UT 84101
P:(801) 961-7070
F:(801) 961-7373

CONSULTANTS

PROFESSIONAL SEAL

STATE OF UTAH
RALPH M. STANISLAW
95-310818-0301
LICENSED ARCHITECT

ISSUE

MARK	DATE	DESCRIPTION
2	3-5-08	ADDENDUM #2
	01-2008	CONSTRUCTION DOCUMENTS

DFCM PROJECT NO:	07010900
DFCM CONTRACT NO:	077374
ARCHIPLEX PROJECT NO:	0709.01
DRAWN BY:	A. PHILLIPS
CHECKED BY:	R. STANISLAW
SCALE:	1" = 1'-0"
DATE:	JANUARY, 2008

SHEET TITLE

WALL TYPES

AE501

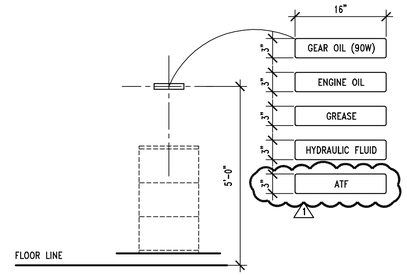

RE: SPECIFICATION – 10425 FOR MORE INFORMATION

D1 | SIGNAGE "A"

AE502 | REF. AE101, AE402 | SCALE: NONE

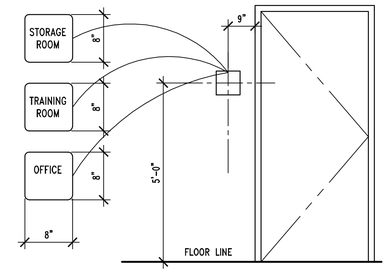

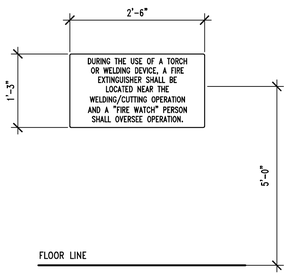

RE: SPECIFICATION – 10425 FOR MORE INFORMATION

D2 | SIGNAGE "B"

AE502 | REF. AE101, AE402 | SCALE: NONE

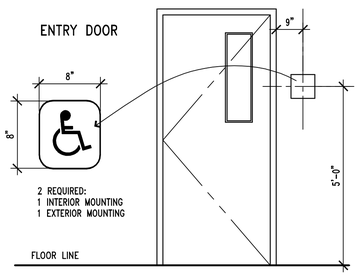

RE: SPECIFICATION – 10425 FOR INFO.

D3 | SIGNAGE "C"

AE502 | REF. AE101 | SCALE: NONE

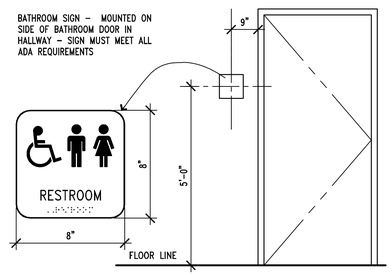

RE: SPECIFICATION – 10425 FOR INFO.

D4 | SIGNAGE "D"

AE502 | REF. AE101, AE401 | SCALE: NONE

RE: SPECIFICATION – 10425 FOR MORE INFORMATION

C1 | SIGNAGE "E"

AE502 | REF. AE101, AE403 | SCALE: NONE

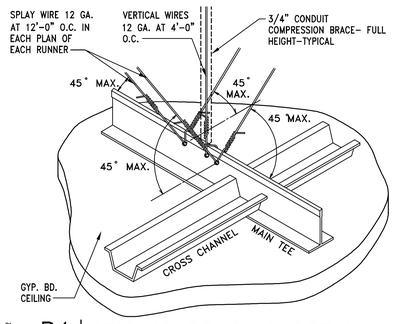

XPO-AE07B1AE502

B1 | SEISMIC BRACING DETAIL

AE502 | REF. AE121 | SCALE: NONE

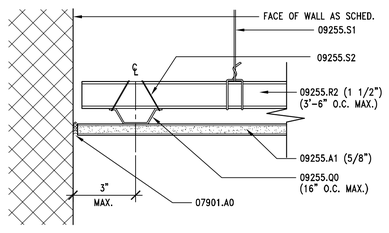

XPO-AE07A1AE502

A1 | CEILING DETAIL

AE502 | REF. AE121 | SCALE: 1/2" = 1'-0"

24" 18" 12" 6" 0 1' 2' 4'

XSH-AE05E2AE502.DWG

C2 | LAY-IN PANEL EDGE DTL.

AE502 | REF. | SCALE: 3" = 1'-0"

4" 3" 2" 1" 0 2" 4" 8"

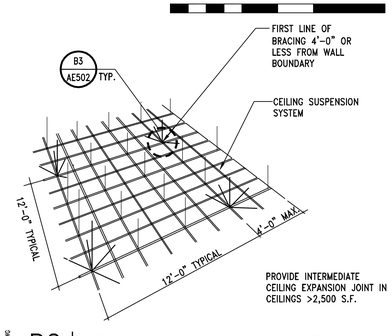

XSH-AE05E2AE502.DWG

B2 | SEISMIC BRACING DETAIL

AE502 | REF. AE121 | SCALE: NO SCALE

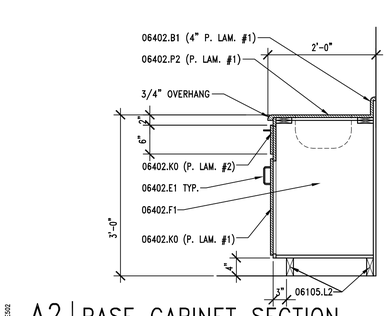

XPO-AE07A2AE502

A2 | BASE CABINET SECTION

AE502 | REF. AE402 | SCALE: 3/4" = 1'-0"

12" 8" 4" 0 6" 1' 2' 3'

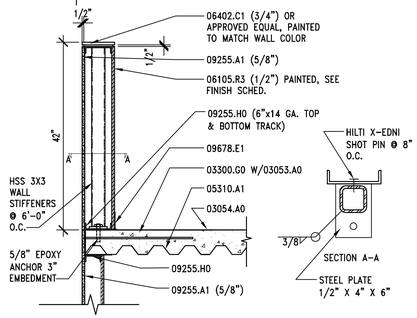

XSH-AE05E3AE502

C3 | LOW PARTITION WALL DTL.

AE502 | REF. AE101 | SCALE: 3/4" = 1'-0"

12" 8" 4" 0 6" 1' 2' 3'

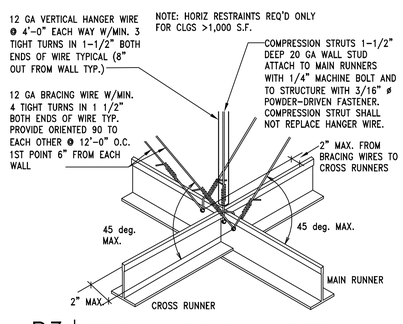

XSH-AE05E4AE502

B3 | SEISMIC BRACING DETAIL

AE502 | REF. AE121, AE502 | SCALE: NO SCALE

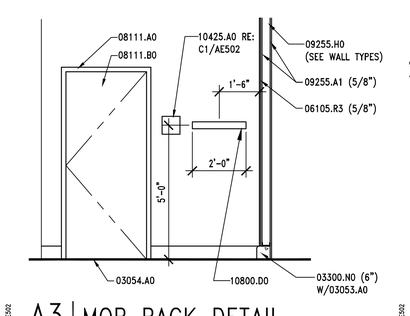

XPO-AE07A4AE502

A3 | MOP RACK DETAIL

AE502 | REF. AE401 | SCALE: 3/8" = 1'-0"

12" 6" 0 1' 2' 4'

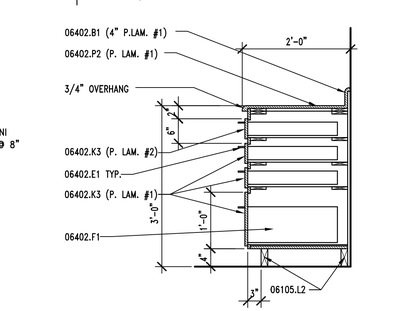

NOTE: ALL ROUGH WOOD MEMBERS SHALL BE PAINTED, SEE FINISH SCHEDULE.

XPO-AE07A5AE502

A4 | WORK BENCH SECTION

AE502 | REF. AE402 | SCALE: 3/4" = 1'-0"

12" 8" 4" 0 6" 1' 2' 3'

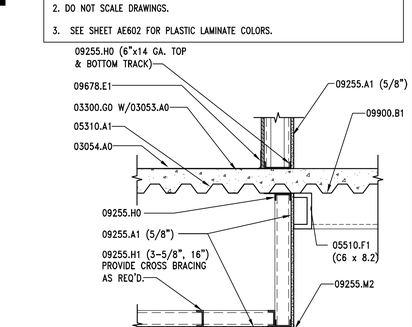

XPO-AE07B4AE502

B5 | CEILING DETAIL

AE502 | REF. AE121 | SCALE: 3/4" = 1'-0"

12" 8" 4" 0 6" 1' 2' 3'

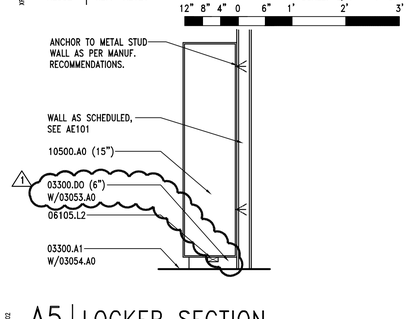

XPO-AE07A6AE502

A5 | LOCKER SECTION

AE502 | REF. AE402 | SCALE: 1/2" = 1'-0"

24" 18" 12" 6" 0 1' 2' 4'

KEYNOTES

03053.A0	CONCRETE WATER PROOFING ADMIXTURE
03054.A0	OLIOPHOBIC TOPICAL SEALER
03300.A1	CONCRETE SLAB–ON–GRADE – SEE STRUCTURAL
03300.B1	CONCRETE SLAB – SEE STRUCTURAL
03300.D0	CONCRETE PAD (SIZE)
03300.G0	CONCRETE OVER METAL DECK – SEE STRUCTURAL
03300.N0	CONCRETE CURB (HEIGHT)
05310.A1	METAL DECK – SEE STRUCTURAL
06105.L2	BLOCKING AS REQUIRED
06105.P1	2 x 4
06105.P6	4 x 4
06105.R2	SHEATHING – PLYWOOD (THICKNESS) GRADE (SIZE)
06105.R3	PLYWOOD PANEL (THICKNESS)
06105.V1	EXTERIOR GRADE PLYWOOD (THICKNESS)
06105.V6	PEGBOARD (THICKNESS)
06402.B1	PLASTIC LAMINATE BACK SPLASH (HEIGHT)
06402.C1	PAINT GRADE WOOD CAP (THICK.)
06402.E1	WIRE PULL
06402.F1	PROVIDE WHITE MELAMINE FINISH @ ALL INTERIOR SURFACES
06402.H1	ADJUSTABLE SHELVES (FINISH)
06402.K0	BASE UNIT (FINISH)
06402.K3	BASE UNIT WITH DRAWERS (FINISH)
06402.P2	COUNTERTOP – P. LAM. ON 3/4" PLYWOOD
07901.A0	CONT. SEALANT
08111.A0	PRESSED METAL FRAME
08111.B0	HOLLOW METAL DOOR
09255.A1	GYPSUM BOARD (THICKNESS)
09255.A2	WATER RESISTANT GYPSUM BOARD (THICKNESS)
09255.B2	TYPE "X" GYPSUM BOARD (THICKNESS)
09255.C3	CEMENT BOARD (THICKNESS)
09255.H0	METAL STUD
09255.H1	METAL STUDS, (SIZE, SPACING)
09255.M2	METAL CORNER BEAD (TYP.)
09255.Q0	7/8" METAL FURRING CHANNEL
09255.R2	CHANNEL (SIZE, SPACING)
09255.S1	8 GA. WIRE HANGERS
09255.S2	18 GA. WIRE TIES
09255.S4	14 GA. STAINLESS STEEL COUNTER TOP (FINISH)
09255.V4	VINYL TRIM
09300.A1	FLOOR TILE – SEE FINISH SCHEDULE
09300.B1	WALL TILE – SEE FINISH SCHEDULE
09300.C0	TILE BASE
09300.D1	BULL NOSE TRIM UNIT – SEE FINISH SCHEDULE
09300.E1	1/2" X 6" TILE TRIM PIECE – SEE FINISH SCHEDULE
09300.G1	MORTAR BED
09300.G4	WATERPROOF MEMBRANE
09678.E1	RUBBER BASE
09900.B1	GALVANIZED METAL PRIMER
10425.A0	ROOM SIGNAGE
10425.D1	ACCESSIBLE/UNISEX RESTROOM SIGNAGE
10500.A0	METAL LOCKERS (WIDTH)
10800.D0	MOP RACK
16510.B0	INTERIOR WALL MOUNTED LIGHT

GENERAL NOTES

1. FIELD VERIFY ALL EXISTING CONDITIONS AND THEIR COMPATIBILITY WITH NEW CONSTRUCTION PRIOR TO THE COMMENCEMENT OF WORK. COORDINATE DISCREPANCIES WITH ARCHITECT.
2. DO NOT SCALE DRAWINGS.
3. SEE SHEET AE602 FOR PLASTIC LAMINATE COLORS.

CLIENT

UDOT CONNECTING COMMUNITIES

STATION #4325
MILE MARKER 49.7 HIGHWAY 143
PANGUITCH UTAH

DESIGNER

ARCHIPLEX GROUP
architecture · planning · design services
1135 South West Temple, Ste. A
Salt Lake City, UT 84101
P:(801) 961-7070
F:(801) 961-7373

CONSULTANTS

PROFESSIONAL SEAL

STATE OF UTAH
RALPH M. STANISLAW
95–310818–0301
LICENSED ARCHITECT

ISSUE

MARK	DATE	DESCRIPTION
1	3–5–08	ADDENDUM #2
	01–2008	CONSTRUCTION DOCUMENTS

DFCM PROJECT NO:	07010900
DFCM CONTRACT NO:	077374
ARCHIPLEX PROJECT NO:	0709.01
DRAWN BY:	A. PHILLIPS
CHECKED BY:	R. STANISLAW
SCALE:	AS SHOWN
DATE:	JANUARY, 2008

SHEET TITLE

SIGNAGE AND MISC. DETAILS

AE502

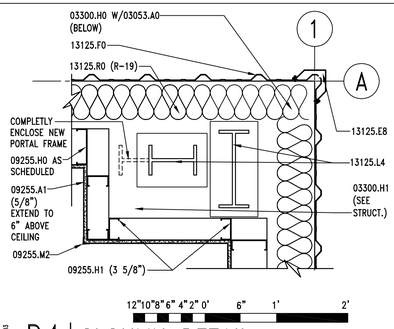

12" 10" 8" 6" 4" 2" 0' 6" 1' 2'

D4 | CLOUMN DETAIL

AE503 | REF. AE101 | SCALE: 1" = 1'-0"

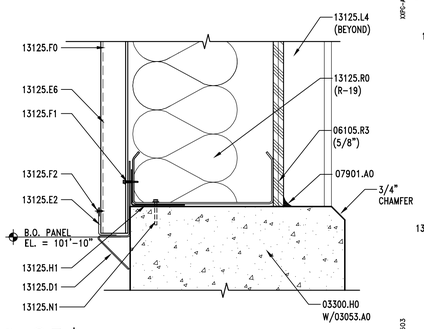

C3 | WALL PANEL @ STEM WALL

AE503 | REF. AE201, AE301, AE311 & AE402 | SCALE: 3" = 1'-0"

4" 3" 2" 1" 0 2" 4" 8"

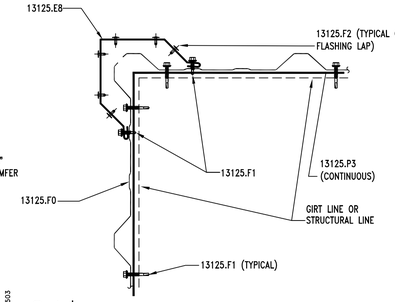

C4 | CORNER FLASHING DETAIL

AE503 | REF. AE101, AE201, AE202, AE705 | SCALE: 3" = 1'-0"

4" 3" 2" 1" 0 2" 4" 8"

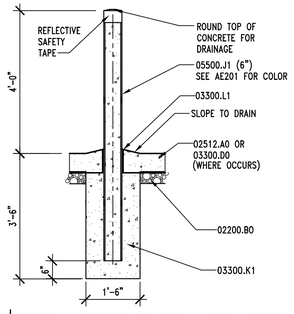

B2 | EXT. PIPE BOLLARD DTL.

AE503 | REF. AE101 & AE301 | SCALE: 1/2" = 1'-0"

24" 18" 12" 6" 0' 1' 2' 4'

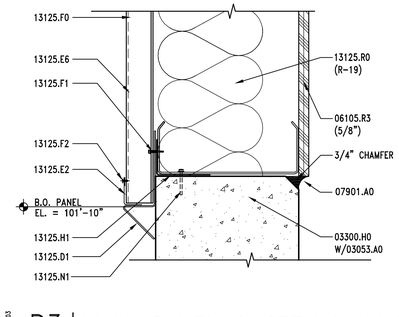

B3 | WALL PANEL @ STEM WALL

AE503 | REF. AE202, AE301, AE705 | SCALE: 3" = 1'-0"

4" 3" 2" 1" 0 2" 4" 8"

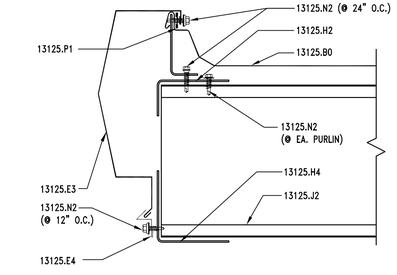

B4 | STARTING RAKE DETAIL

AE503 | REF. AE311 | SCALE: 3" = 1'-0"

4" 3" 2" 1" 0 2" 4" 8"

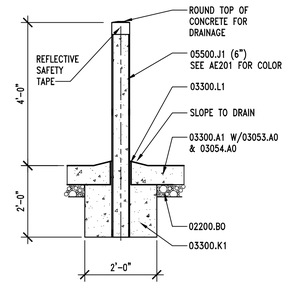

A2 | INT. PIPE BOLLARD DTL.

AE503 | REF. AE101 & AE301 | SCALE: 1/2" = 1'-0"

24" 18" 12" 6" 0' 1' 2' 4'

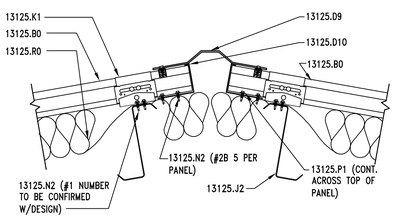

A3 | RIDGE DETAIL

AE503 | REF. AE301 | SCALE: 1 1/2" = 1'-0"

8" 6" 4" 2" 0 4" 8" 1'-4"

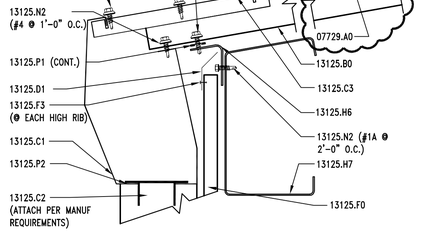

A4 | GUTTER DETAIL

AE503 | REF. AE311 | SCALE: 3" = 1'-0"

4" 3" 2" 1" 0 2" 4" 8"

KEYNOTES

02200.B0	GRAVEL BASE
02512.A0	ZERO VOIDS ASPHALT PAVING (THICKNESS)
03053.A0	CONCRETE WATERPROOFING ADMIXTURE
03054.A0	OLIOPHOBIC TOPICAL SEALER
03300.A1	CONCRETE SLAB-ON-GRADE - SEE STRUCTURAL
03300.D0	CONCRETE PAD
03300.H0	FOUNDATION WALL - SEE STRUCTURAL
03300.H1	CONCRETE PIER - SEE STRUCTURAL
03300.K1	CONCRETE PIPE BASE
03300.L1	30# FELT
05500.J1	PIPE BOLLARD (DIAMETER) - GALV. & PAINTED
06105.R3	PLYWOOD PANEL (THICKNESS)
07729.A0	STANDING SEAM METAL ROOF 2 PIPE SNOW GUARD SYSTEM
07901.A0	CONT. SEALANT
09255.A1	GYPSUM BOARD (THICKNESS)
09255.H0	METAL STUD
09255.H1	METAL STUDS (SIZE, SPACING)
09255.M2	METAL CORNER BEAD (TYP)
13125.B0	STANDING SEAM METAL ROOF - WITH THERMAL BLOCKS
13125.C1	METAL RAIN GUTTER
13125.C2	DOWN SPOUT
13125.C3	GUTTER STRAP, INSTALL AT EVERY OTHER PANEL RIB
13125.D1	METAL DRIP FLASHING
13125.D6	DOOR HEAD FLASHING
13125.D9	FLEXIBLE ROOF RIDGE
13125.D10	ROOF RIDGE SUPPORT
13125.E2	PANEL TRIM
13125.E3	RAKE TRIM
13125.E4	RAKE SLIDE
13125.E6	WALL CLOSURE
13125.E8	CORNER TRIM
13125.F0	METAL WALL PANEL
13125.F1	METAL WALL FASTENER
13125.F2	BLIND RIVET
13125.F3	POP RIVET
13125.H1	METAL ANGLE
13125.H4	4" X 4" CONTINUOUS ANGLE
13125.H7	EAVE STRUT
13125.J2	ROOF PURLIN - PAINTED
13125.K1	LOW PANEL CLIP
13125.L4	STEEL COLUMN - PRIMED AND PAINTED
13125.N1	ANCHOR
13125.N2	FASTENER (SPACING)
13125.P1	DOUBLE BEAD TAPE SEALER
13125.P2	SEALANT
13125.P3	THERMAL BREAK
13125.R0	INSULATION & VAPOR BARRIER (R-VALUE)

GENERAL NOTES

1. FIELD VERIFY ALL EXISTING CONDITIONS AND THEIR COMPATIBILITY WITH NEW CONSTRUCTION PRIOR TO THE COMMENCEMENT OF WORK. COORDINATE DISCREPANCIES WITH ARCHITECT.

2. DO NOT SCALE DRAWINGS.

CLIENT

UDOT CONNECTING COMMUNITIES

STATION #4325
MILE MARKER 49.7 HIGHWAY 143
PANGUITCH UTAH

DESIGNER

ARCHIPLEX GROUP
architecture · planning · design services
1135 South West Temple, Ste. A
Salt Lake City, UT 84101
P:(801) 961-7070
F:(801) 961-7373

CONSULTANTS

PROFESSIONAL SEAL

STATE OF UTAH
RALPH M. STANISLAW
95-310818-0301
LICENSED ARCHITECT

ISSUE

MARK	DATE	DESCRIPTION
1	3-5-08	ADDENDUM #2
	01-2008	CONSTRUCTION DOCUMENTS

DFCM PROJECT NO:	07010900
DFCM CONTRACT NO:	077374
ARCHIPLEX PROJECT NO:	0709.01
DRAWN BY:	A. PHILLIPS
CHECKED BY:	R. STANISLAW
SCALE:	AS SHOWN
DATE:	JANUARY, 2008

SHEET TITLE

MISC. DETAILS

AE503

D1 DOOR JAMB DETAIL

AE601 REF. AE601 SCALE: 3" = 1'-0"

4" 3" 2" 1" 0 2" 4" 8"

D2 DOOR HEAD DETAIL

AE601 REF. AE601 SCALE: 3" = 1'-0"

4" 3" 2" 1" 0 2" 4" 8"

D3 SECTIONAL DOOR HEAD DTL.

AE601 REF. AE601 SCALE: 3" = 1'-0"

4" 3" 2" 1" 0 2" 4" 8"

C4 DOOR JAMB DETAIL

AE601 REF. AE601 SCALE: 3" = 1'-0"

4" 3" 2" 1" 0 2" 4" 8"

KEYNOTES

03053.A0	CONCRETE WATER PROOFING ADMIXTURE
03054.A0	OLIOPHOBIC TOPICAL SEALER
03300.A1	CONCRETE SLAB ON GRADE – SEE STRUCTURAL
03300.H0	FOUNDATION WALL – SEE STRUCTURAL
03300.H1	CONCRETE PEIR – SEE STRUCTURAL
03300.P5	ISOLATION JOINT
06105.R3	PLYWOOD PANEL (THICKNESS)
07901.A0	CONT. SEALANT
08111.A0	PRESSED METAL FRAME
08111.B0	HOLLOW METAL DOOR
08111.C0	JAMB ANCHOR
08360.A0	HEAVY DUTY OVERHEAD SECTIONAL DOOR
08360.B0	3" HEAVY DUTY OVERHEAD SECTIONAL DOOR TRACK
08360.C0	WEATHERSTRIPPING
08360.D0	DOOR GUIDE
08710.A0	THRESHOLD
08710.B0	DOOR SWEEP
09255.A1	GYPSUM BOARD (THICKNESS)
09255.H1	METAL STUDS (SIZE)
09300.A1	FLOOR TILE – SEE FINISH SCHEDULE
09300.B1	WALL TILE – SEE FINISH SCHEDULE
09300.G1	MORTAR BED
09300.G4	WATERPROOF MEMBRANE
09660.A1	VINYL COMPOSITION TILE
09660.B1	VINYL TRANSITION STRIP
13125.D2	METAL HEAD FLASHING
13125.D6	DOOR HEAD FLASHING
13125.D7	JAMB FLASHING
13125.E6	WALL CLOSURE
13125.E7	METAL OUTSIDE CLOSURE
13125.E9	FRAMED OPENING HEADER
13125.F0	METAL WALL PANEL
13125.F1	METAL WALL FASTENER
13125.H1	METAL ANGLE
13125.J1	STRUCTURAL GIRT – PAINTED
13125.J3	STRUCTURAL GIRT
13125.N2	FASTENER (SPACING)
13125.P2	SEALANT
13125.P3	THERMAL BREAK
13125.R0	INSULATION & VAPOR BARRIER (R-VALUE)

GENERAL NOTES

1. FIELD VERIFY ALL EXISTING CONDITIONS AND THEIR COMPATIBILITY WITH NEW CONSTRUCTION PRIOR TO THE COMMENCEMENT OF WORK. COORDINATE DISCREPANCIES WITH ARCHITECT

2. DO NOT SCALE DRAWINGS.

3. SEE SPECIFICATIONS FOR GLAZING SCHEDULE.

4. SEE SPECIFICATIONS FOR DOOR HARDWARE GROUPS

C1 MARBLE THRESHOLD DETAIL

AE601 REF. AE401 SCALE: 3" = 1'-0"

4" 3" 2" 1" 0 2" 4" 8"

C2 SECTIONAL DOOR JAMB DTL.

AE601 REF. AE601 SCALE: 1 1/2" = 1'-0"

8" 6" 4" 2" 0 4" 8" 1'-4"

C3 SECTIONAL DOOR JAMB DTL.

AE601 REF. AE601 SCALE: 1 1/2" = 1'-0"

8" 6" 4" 2" 0 4" 8" 1'-4"

B1 THRESHOLD DETAIL

AE601 REF. AE601 SCALE: NONE

B2 DOOR HEAD DETAIL

AE601 REF. AE601 SCALE: 3" = 1'-0"

4" 3" 2" 1" 0 2" 4" 8"

B3 VCT–CONCRETE TRANSITION

AE601 REF. AE401 SCALE: 3" =1'-0"

4" 3" 2" 1" 0 2" 4" 8"

TYPE A

DOOR FRAME TYPES

TYPE 1 TYPE 2 TYPE 3 TYPE 4

DOOR TYPES

A1 DOOR JAMB DETAIL

AE601 REF. AE601 SCALE: 3" = 1'-0"

4" 3" 2" 1" 0 2" 4" 8"

A2 DOOR JAMB DETAIL

AE601 REF. AE601 SCALE: 3" = 1'-0"

4" 3" 2" 1" 0 2" 4" 8"

A3 DOOR JAMB DETAIL

AE601 REF. AE601 SCALE: 3" = 1'-0"

4" 3" 2" 1" 0 2" 4" 8"

DOOR SCHEDULE

		DOORS							FRAMES				DETAILS				REMARKS
DOOR #	ROOM #	TYPE	WIDTH	HEIGHT	THICK.	MATERIAL	FINISH	GLASS	TYPE	MATERIAL	WIDTH	FINISH (1)	HEAD	JAMB	THRESH.	LABEL	
D101A	101	3	3'-0"	7'-0"	1 3/4"	HM	PT	T	A	HM	8"	PT	D2/AE601	A3 & D1/AE601	B1/AE601	–	INSULATED
D101B	101	4	14'-0"	14'-0"	–	ST	–	T	–	ST	–	PT	D3/AE601	C2 & C3/AE601	–	–	SECTIONAL INSULATED DOOR
D102A	102	3	3'-0"	7'-0"	1 3/4"	HM	PT	T	A	HM	8"	PT	D2/AE601	A3, C4 & D1/AE601	B1/AE601	–	INSULATED
D102B	102	4	14'-0"	14'-0"	–	ST	–	T	–	ST	–	PT	D3/AE601	C2 & C3/AE601	–	–	SECTIONAL INSULATED DOOR
D102C	102	4	14'-0"	14'-0"	–	ST	–	T	–	ST	–	PT	D3/AE601	C2 & C3/AE601	–	–	SECTIONAL INSULATED DOOR
D102D	102	4	14'-0"	14'-0"	–	ST	–	T	–	ST	–	PT	D3/AE601	C2 & C3/AE601	–	–	SECTIONAL INSULATED DOOR
D102E	102	3	3'-0"	7'-0"	1 3/4"	HM	PT	T	A	HM	8"	PT	D2/AE601	A3, C4 & D1/AE601	B1/AE601	–	INSULATED
D102F	102	4	14'-0"	14'-0"	–	ST	–	T	–	ST	–	PT	D3/AE601	C2 & C3/AE601	–	–	SECTIONAL INSULATED DOOR
D102G	102	4	14'-0"	14'-0"	–	ST	–	T	–	ST	–	PT	D3/AE601	C2 & C3/AE601	–	–	SECTIONAL INSULATED DOOR
D102H	102	4	14'-0"	14'-0"	–	ST	–	T	–	ST	–	PT	D3/AE601	C2 & C3/AE601	–	–	SECTIONAL INSULATED DOOR
D103A	103	1	3'-0"	7'-0"	1 3/4"	HM	PT	–	A	HM	8"	PT	B2/AE601	A1 & A2/AE601	–	–	USE 8" HOLLOW METAL FRAME
D104A	104	1	3'-0"	7'-0"	1 3/4"	HM	PT	–	A	HM	6"	PT	B2/AE601	A1 & A2/AE601	C1/AE601	–	SECTIONAL INSULATED DOOR
D105A	105	2	3'-0"	7'-0"	1 3/4"	HM	PT	–	A	HM	6"	PT	B2/AE601	A1 & A2/AE601	B3/AE601	–	–
D106A	106	3	3'-0"	7'-0"	1 3/4"	HM	PT	T	A	HM	8"	PT	B2/AE601	A1 & A2/AE601	B3/AE601	–	USE 8" HOLLOW METAL FRAME
ADD ALT #4 OPEN STORAGE BUILDING																	
D1010SA	1010S	3	3'-0"	7'-0"	1 3/4"	HM	PT	T	A	HM	8"	PT	D2/AE601	A3 & D1/AE601	B1/AE601	–	INSULATED
D1010SB	1010S	3	3'-0"	7'-0"	1 3/4"	HM	PT	T	A	HM	8"	PT	D2/AE601	A3 & D1/AE601	B1/AE601	–	INSULATED
D1020SA	1020S	4	14'-0"	14'-0"	–	ST	–	T	–	ST	–	PT	D3/AE601	C2 & C3/AE601	–	–	SECTIONAL INSULATED DOOR
D1020SB	1020S	3	3'-0"	7'-0"	1 3/4"	HM	PT	T	A	HM	8"	PT	D2/AE601	A3 & D1/AE601	B1/AE601	–	INSULATED

HM = HOLLOW METAL P. FIN. = PRE-FINISHED T = TEMPERED ST = STEEL PT = PAINTED

CLIENT

UDOT CONNECTING COMMUNITIES

STATION #4325
MILE MARKER 49.7 HIGHWAY 143
PANGUITCH UTAH

DESIGNER

ARCHIPLEX GROUP
architecture · planning · design services
1135 South West Temple, Ste. A
Salt Lake City, UT 84101
P:(801) 961-7070
F:(801) 961-7373

CONSULTANTS

PROFESSIONAL SEAL

STATE OF UTAH
RALPH M. STANISLAW
95-310818-0301
LICENSED ARCHITECT

ISSUE

MARK	DATE	DESCRIPTION
1	3-5-08	ADDENDUM #2
	01-2008	CONSTRUCTION DOCUMENTS

DFCM PROJECT NO:	07010900
DFCM CONTRACT NO:	077374
ARCHIPLEX PROJECT NO:	0709.01
DRAWN BY:	A. PHILLIPS
CHECKED BY:	R. STANISLAW
SCALE:	AS SHOWN
DATE:	JANUARY, 2008

SHEET TITLE

DOOR SCHEDULE AND DETAILS

AE601

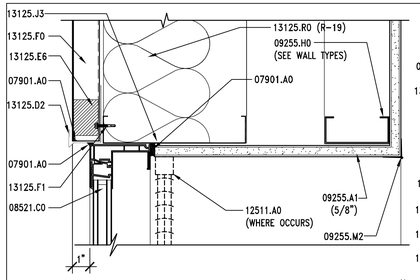

D1 WINDOW HEAD DETAIL

AE602 | REF. AE602 | SCALE: 3" = 1'-0"

4" 3" 2" 1" 0 2" 4" 8"

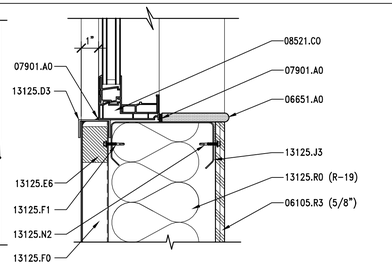

D2 WINDOW SILL DETAIL

AE602 | REF. AE602 | SCALE: 3" = 1'-0"

4" 3" 2" 1" 0 2" 4" 8"

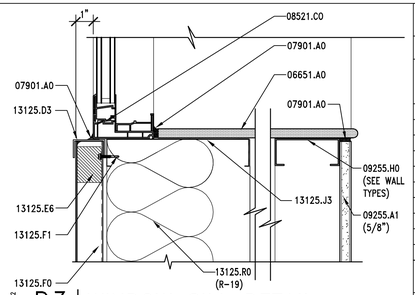

D3 WINDOW SILL DETAIL

AE602 | REF. AE602 | SCALE: 3" = 1'-0"

4" 3" 2" 1" 0 2" 4" 8"

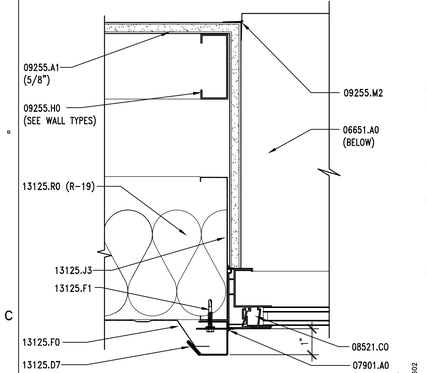

C1 WINDOW JAMB DETAIL

AE602 | REF. AE602 | SCALE: 3" = 1'-0"

4" 3" 2" 1" 0 2" 4" 8"

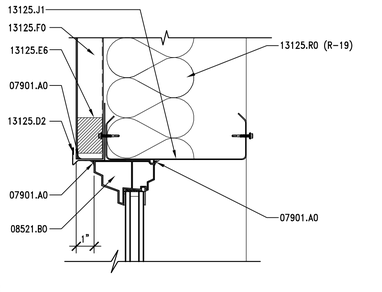

C2 WINDOW HEAD DETAIL

AE602 | REF. AE602 | SCALE: 3" = 1'-0"

4" 3" 2" 1" 0 2" 4" 8"

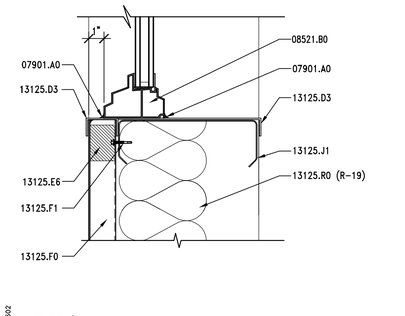

C3 WINDOW SILL DETAIL

AE602 | REF. AE602 | SCALE: 3" = 1'-0"

4" 3" 2" 1" 0 2" 4" 8"

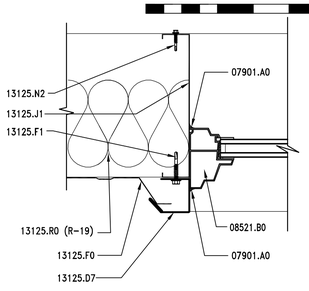

B1 WINDOW JAMB DETAIL

AE602 | REF. AE602 | SCALE: 3" = 1'-0"

4" 3" 2" 1" 0 2" 4" 8"

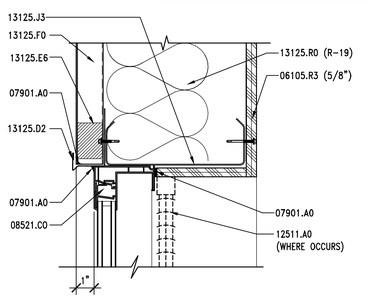

B2 WINDOW HEAD DETAIL

AE602 | REF. AE602 | SCALE: 3' = 1'-0"

4" 3" 2" 1" 0 2" 4" 8"

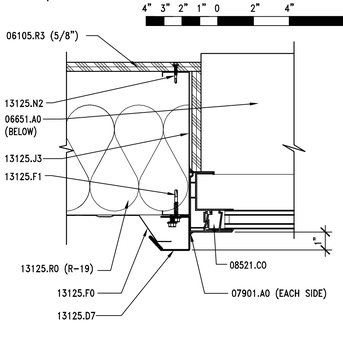

A1 WINDOW JAMB DETAIL

AE602 | REF. AE602 | SCALE: 3" = 1'-0"

4" 3" 2" 1" 0 2" 4" 8"

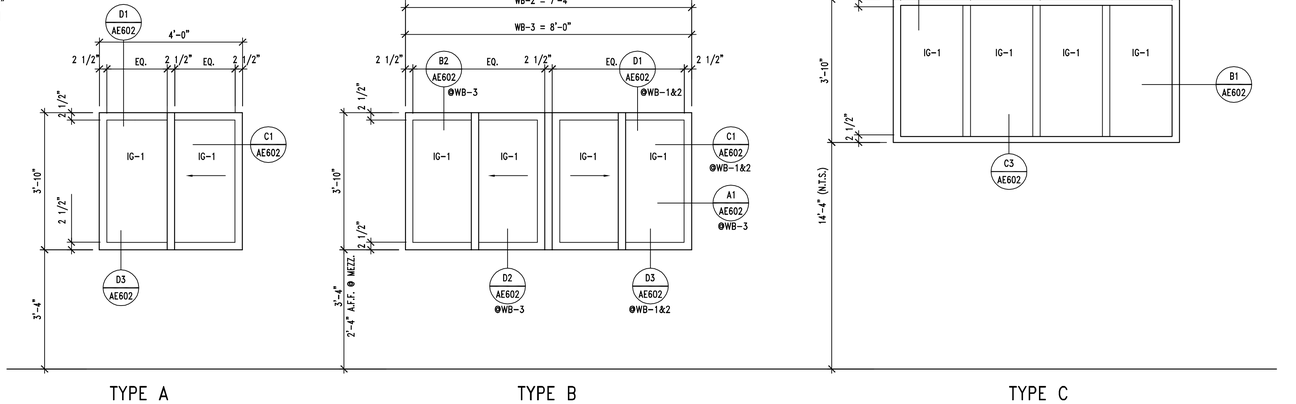

ROOM FINISH SCHEDULE

ROOM	NAME & NUMBER	FLOOR	BASE	WALLS				DOOR/FRAMES	P. LAM.	CEILING	REMARKS
				WEST	EAST	NORTH	SOUTH				
101	MAINTENANCE BAY	F1	–	W1 & W2	W1 & W4	W1 & W4	–	D1 & D2	–	C3	PAINT ALL EXPOSED WOOD @ WORKBENCH W1 OR EQUAL
102	REPAIR GARAGE	F1	–	W1 & W4	W1 & W4	W1 & W2	W1 & W4	D1 & D2	–	C3	–
103	STORAGE ROOM	F1	B1	W2	W2	W2	W2	D1	P1	C1	–
104	RESTROOM	F3	B2	W2 & W3	W2 & W3	W2 & W3	W2 & W3	D1	–	C1	USE BULLNOSE AT TOP OF WAINSCOT
105	TRAINING ROOM	F2	B1	W2	W2	W2	W2	D1	P1 & P2	C2	–
106	OFFICE	F2	B1	W2	W2	W2	W2	D1	–	C2	–
201	MEZZANINE	F1	B1	W1 & W4	W1	W1 & W4	W1	–	–	C3	PAINT LOW WALL, CAP & DECK ANGLE TO MATCH WALL COLOR W1
ADD ALT #4 OPEN STORAGE BUILDING											
1010S	OPEN BAYS	F1	–	W1 & W4	W1 & W4	W5	W1 & W4	D1 & D2	–	C3	–
1020S	ENCLOSED BAY	F1	–	W1 & W4	W1 & W4	W1 & W4	W1 & W4	D1 & D2	–	C3	–

ROOM FINISH LEGEND

FLOOR	BASE	WALL	DOOR & FRAMES	PLASTIC LAMINATE	CEILING
F1. CONCRETE FLOOR, WITH WATER PROOF ADD MIXTURE & OLIOPHOBIC TOPICAL SEALER. F2. 12" x 12" VINYL COMPOSITION TILE – ARMSTRONG STANDARD EXCELON IMPERIAL TEXTURE #51858–SANDRIFT WHITE OR EQUAL F3. 2" x 2" CERAMIC TILE – DALTILE, KEYSTONES, MEXICAN SAND SPECKLE W/MAPEI GROUT #05 – CHAMOIS OR EQUAL	B1. 4" RUBBER BASE – JOHNSONITE #49 – BEIGE OR EQUAL B2. 2" x 2" COVED TILE BUILT UP BASE – DALTILE, #MB5B – KEYSTONES, MEXICAN SAND SPECKLE OR EQUAL	W1. PLYWOOD PANEL: CDX PLYWOOD – PAINTED BENJAMIN MOORE – NAVAJO WHITE OR EQUAL W2. GYPSUM BOARD – PAINTED BENJAMIN MOORE – NAVAJO WHITE OR EQUAL W3. 4 1/4" x 4 1/4" CERAMIC WALL TILE – DALTILE #X735 – ALMOND – MATTE FINISH W/1/2" x 6" FLAT TOP LINER – DALTILE #K174 – MEXICAN SAND – SEMI-GLOSS FINISH OR EQUAL W/MAPEI GROUT #39 – IVORY OR EQUAL W4. METAL BUILDING EXPOSED STRUCTURE – PAINTED BENJAMIN MOORE – NAVAJO WHITE OR EQUAL. W5. SILICONIZED POLYESTER METAL BUILDING PANELS – COLOR TO MATCH EXTERIOR.	D1. PAINTED – ICI #427 – DEERFIELD OR EQUAL D2. MATCH EXTERIOR COLOR SCHEDULE – SEE SHEET AE201	P1. COUNTER TOP/CABINET FACE – WILSONART #4781–60 SUNSTONE OR EQUAL P2. CABINET FACE – WILSONART #4794–60 WINDSWEPT BRONZE OR EQUAL	C1. GYPSUM BOARD – PAINTED BENJAMIN MOORE – NAVAJO WHITE OR EQUAL C2. ARMSTRONG ALTIMA WITH TEGULAR EDGE OR EQUAL COLOR: WHITE C3. METAL BUILDING EXPOSED STRUCTURE – PAINTED BENJAMIN MOORE – NAVAJO WHITE OR EQUAL.

GENERAL NOTES

1. FIELD VERIFY ALL EXISTING CONDITIONS AND THEIR COMPATIBILITY WITH NEW CONSTRUCTION PRIOR TO THE COMMENCEMENT OF WORK. COORDINATE DISCREPANCIES WITH ARCHITECT.
2. DO NOT SCALE DRAWINGS
3. ALL FLASHING TO BE PAINTED TO MATCH WINDOW FRAMES
4. SEE SPECIFICATIONS FOR ALL GLAZING TYPES.
5. ALL INTERIOR WALL AND CEILING FINISHES SHALL BE CLASS C: FLAME SPREAD 76–200; SMOKE–DEVELOPED 0–450. EXCEPTION: MATERIALS, OTHER THAN TEXTILES, TESTED IN ACCORDANCE WITH SECTION 803.2.
6. AS PER SPECIFICATION SECTION 09900.1.2.B CONTRACTOR TO FIELD PAINT ALL EXPOSED BARE AND COVERED PIPES AND DUCTS (INCLUDING COLOR CODING), HANGERS, EXPOSED STEEL AND IRON WORK, AND PRIMED METAL SURFACES OF MECHANICAL AND ELECTRICAL EQUIPMENT.

KEYNOTES

06105.R3 PLYWOOD PANEL (THICKNESS)
06651.A0 1/2" WHITE SOLID SURFACE WINDOW SILL

07901.A0 CONT. SEALANT

08521.B0 FIXED VINYL WINDOW
08521.C0 VINYL WINDOW W/SLIDING GLASS PANEL

09255.A1 GYPSUM BOARD (THICKNESS)
09255.H0 METAL STUD
09255.M2 METAL CORNER BEAD (TYP)

12511.A0 HORIZONTAL LOUVER BLINDS

13125.D2 METAL HEAD FLASHING
13125.D3 METAL SILL FLASHING
13125.D7 JAMB FLASHING
13125.E6 WALL CLOSURE
13125.F0 METAL WALL PANEL
13125.F1 METAL WALL FASTENER
13125.J1 STRUCTURAL GIRT – PAINTED
13125.J3 STRUCTURAL GIRT
13125.N2 FASTENER (SPACING)
13125.R0 INSULATION & VAPOR BARRIER (R-VALUE)

CLIENT

UDOT CONNECTING COMMUNITIES

STATION #4325
MILE MARKER 49.7 HIGHWAY 143
PANGUITCH UTAH

DESIGNER

ARCHIPLEX GROUP
architecture · planning · design services
1135 South West Temple, Ste. A
Salt Lake City, UT 84101
P:(801) 961–7070
F:(801) 961–7373

CONSULTANTS

PROFESSIONAL SEAL

STATE OF UTAH
RALPH M. STANISLAW
95–310818–0301
LICENSED ARCHITECT

ISSUE

MARK	DATE	DESCRIPTION
1	3–5–08	ADDENDUM #2
	01–2008	CONSTRUCTION DOCUMENTS

DFCM PROJECT NO:	07010900
DFCM CONTRACT NO:	077374
ARCHIPLEX PROJECT NO:	0709.01
DRAWN BY:	A. PHILLIPS
CHECKED BY:	R. STANISLAW
SCALE:	AS SHOWN
DATE:	JANUARY, 2008

SHEET TITLE

WINDOW FRAME TYPES, GLAZING & FINISH SCHEDULES AND DETAILS

AE602

GENERAL NOTES

1. FIELD VERIFY ALL EXISTING CONDITIONS AND THEIR COMPATIBILITY WITH NEW CONSTRUCTION PRIOR TO THE COMMENCEMENT OF WORK. COORDINATE DISCREPANCIES WITH ARCHITECT.

2. DO NOT SCALE DRAWINGS.

3. SEE CIVIL AND ELECTRICAL DRAWINGS FOR MORE INFORMATION.

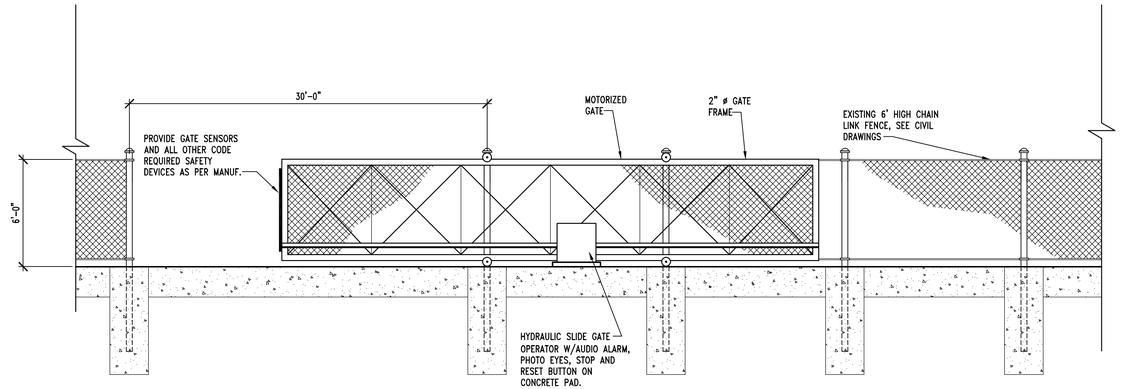

B2 | MOTORIZED GATE ELEVATION

AE700 | REF. AE700 | SCALE: 1/4" = 1'-0"

4' 3' 2' 1' 0' 2' 4' 8'

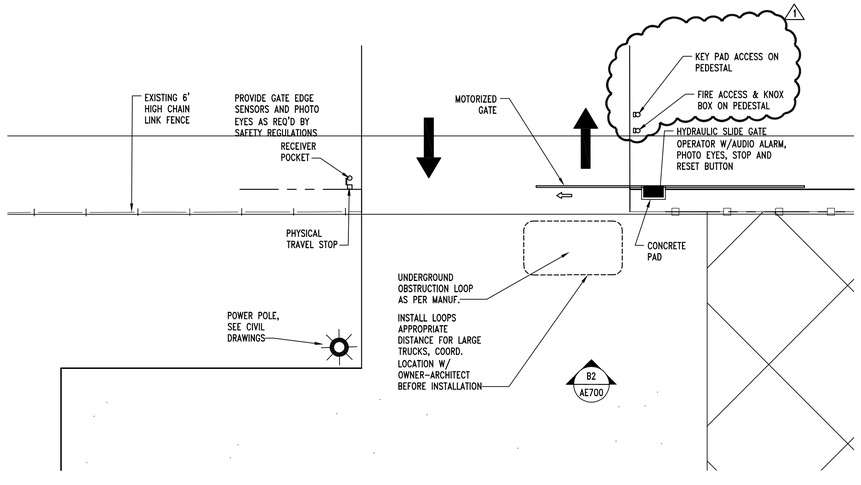

A2 | NORTH GATE PLAN

AE700 | REF. | SCALE: 1/8" = 1'-0"

8' 6' 4' 2' 0' 4' 8' 16'

NORTH

CLIENT

UDOT CONNECTING COMMUNITIES

STATION #4325
MILE MARKER 49.7 HIGHWAY 143
PANGUITCH UTAH

DESIGNER

ARCHIPLEX GROUP
architecture · planning · design services
1135 South West Temple, Ste. A
Salt Lake City, UT 84101
P:(801) 961-7070
F:(801) 961-7373

CONSULTANTS

PROFESSIONAL SEAL

STATE OF UTAH
RALPH M. STANISLAW
95-310818-0301
LICENSED ARCHITECT

ISSUE

MARK	DATE	DESCRIPTION
1	3-5-08	ADDENDUM #2
	01-2008	CONSTRUCTION DOCUMENTS

DFCM PROJECT NO:	07010900
DFCM CONTRACT NO:	077374
ARCHIPLEX PROJECT NO:	0709.01
DRAWN BY:	A. PHILLIPS
CHECKED BY:	R. STANISLAW
SCALE:	AS SHOWN
DATE:	JANUARY, 2008

SHEET TITLE

SITE STRUCTURES, MOTORIZED GATE PLAN & ELEVATIONS

AE700

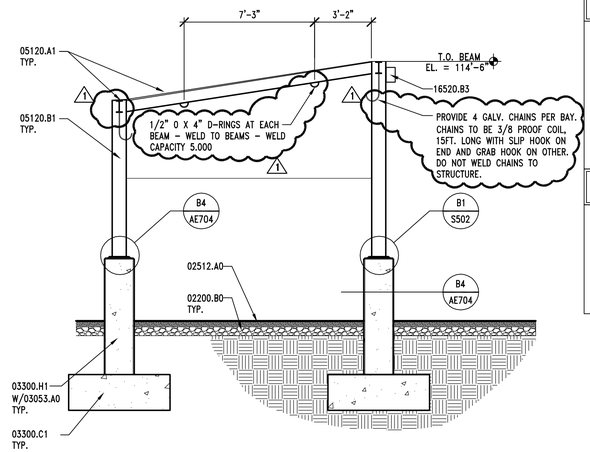

C3 | SANDER RACK SECTION

AE701 | REF. AE701 | SCALE: 1/4" = 1'-0"

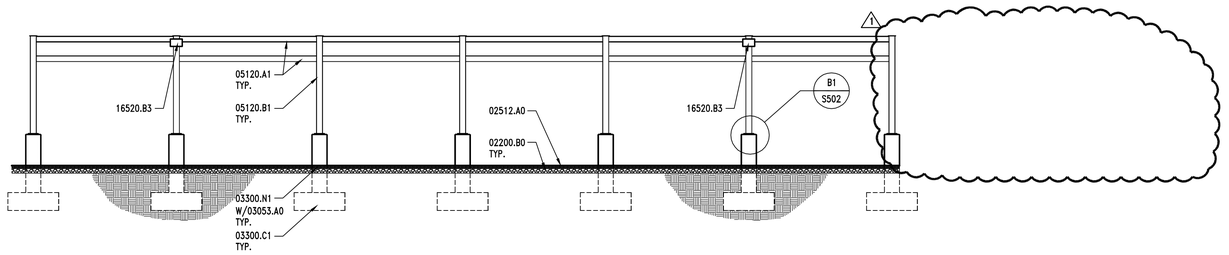

B3 | SANDER RACK ELEVATION

AE701 | REF. AE701 | SCALE: 1/8" = 1'-0"

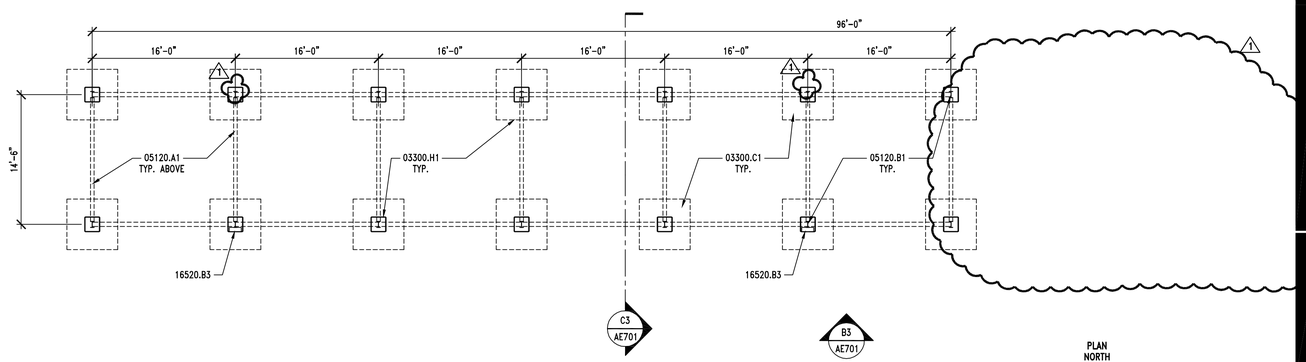

A3 | SANDER RACKS. - FLOOR PLAN

AE701 | REF. AE701 | SCALE: 1/8" = 1'-0"

KEYNOTES

02200.B0	GRAVEL BASE
02512.A0	ZERO VOIDS ASPHALT PAVING (THICKNESS)
03053.A0	CONCRETE WATER PROOFING ADMIXTURE
03300.C1	FOOTING - SEE STRUCTURAL
03300.H1	CONCRETE PIER - SEE STRUCTURAL
05120.A1	STEEL BEAM GALVANIZED - SEE STRUCTURAL
05120.B1	STEEL COLUMN GALVANIZED - SEE STRUCTURAL
16520.B3	EXTERIOR FLOOD LIGHTS - MOUNT TO COLUMN

GENERAL NOTES

1. FIELD VERIFY ALL EXISTING CONDITIONS AND THEIR COMPATIBILITY WITH NEW CONSTRUCTION PRIOR TO THE COMMENCEMENT OF WORK. COORDINATE DISCREPANCIES WITH ARCHITECT.

2. DO NOT SCALE DRAWINGS.

3. SEE CIVIL, STRUCTURAL & ELECTRICAL DRAWINGS FOR MORE INFORMATION.

CLIENT

UDOT CONNECTING COMMUNITIES

STATION #4325
MILE MARKER 49.7 HIGHWAY 143
PANGUITCH UTAH

DESIGNER

ARCHIPLEX GROUP
architecture · planning · design services
1135 South West Temple, Ste. A
Salt Lake City, UT 84101
P:(801) 961-7070
F:(801) 961-7373

CONSULTANTS

PROFESSIONAL SEAL

STATE OF UTAH
RALPH M. STANISLAW
95-310818-0301
LICENSED ARCHITECT

ISSUE

MARK	DATE	DESCRIPTION
1	3-5-08	ADDENDUM #2
	01-2008	CONSTRUCTION DOCUMENTS

DFCM PROJECT NO:	07010900
DFCM CONTRACT NO:	077374
ARCHIPLEX PROJECT NO:	0709.01
DRAWN BY:	A. PHILLIPS
CHECKED BY:	R. STANISLAW
SCALE:	AS SHOWN
DATE:	JANUARY, 2008

SHEET TITLE

SITE STRUCTURES ADD ALT #1 SANDER RACK PLAN, SECTION & ELEVATION

AE701

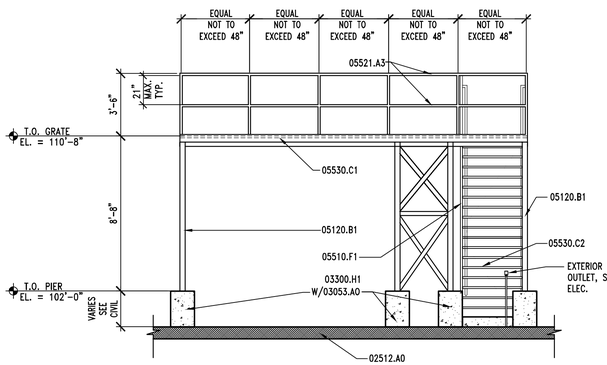

B1 | WASH RACK ELEVATION

AE702 | REF. AE702 | SCALE: 1/4" = 1'-0"

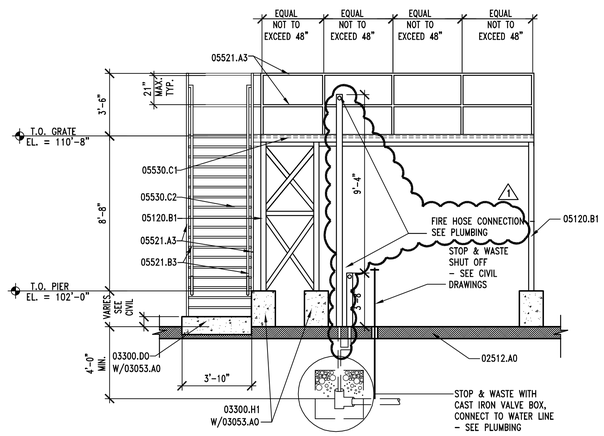

B2 | WASH RACK ELEVATION

AE702 | REF. AE702 | SCALE: 1/4" = 1'-0"

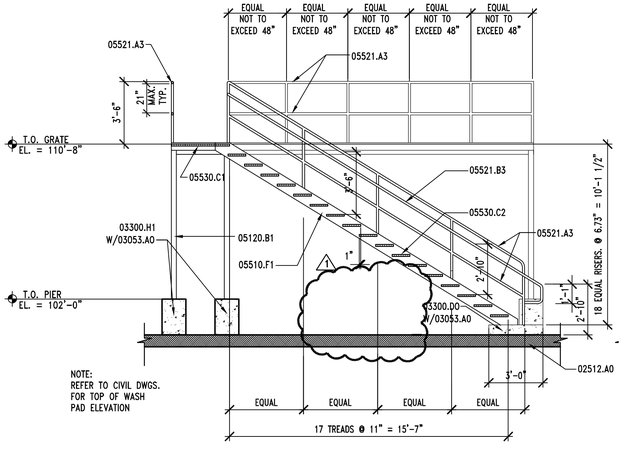

A1 | WASH RACK SECTION

AE702 | REF. AE702 | SCALE: 1/4" = 1'-0"

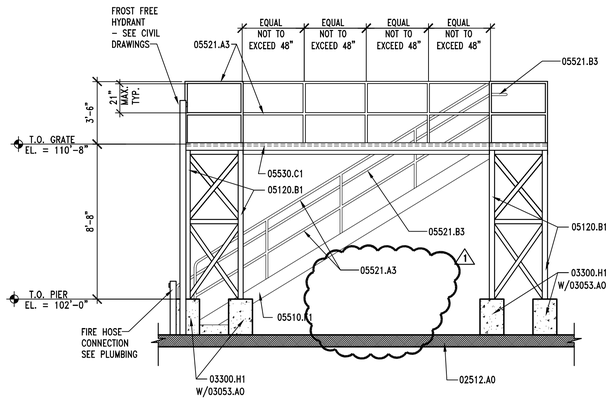

A2 | WASH RACK ELEVATION

AE702 | REF. AE702 | SCALE: 1/4" = 1'-0"

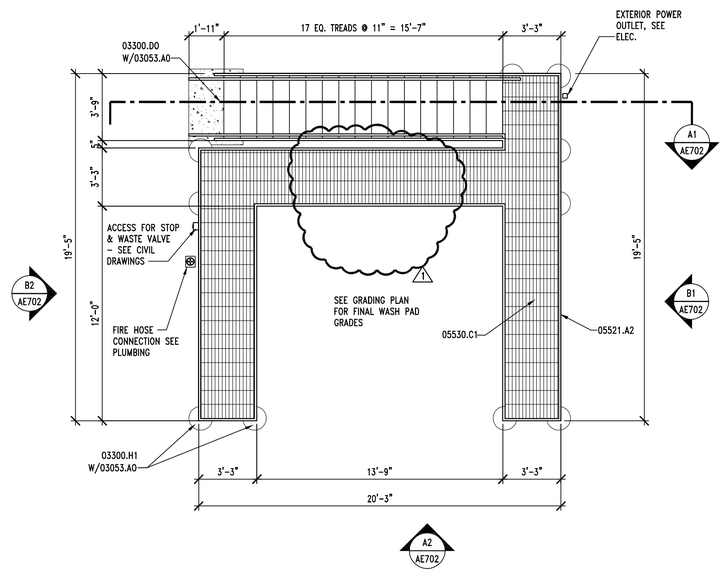

A3 | WASH RACK PLAN

AE702 | REF. AE702 | SCALE: 1/4" = 1'-0"

PLAN NORTH

KEYNOTES

02512.A0	ZERO VOIDS ASPHALT PAVING – SEE CIVIL
03053.A0	CONCRETE WATER PROOFING ADMIXTURE
03300.D0	CONCRETE PAD
03300.H1	CONCRETE PIER – SEE STRUCTURAL)
05120.B1	STEEL COLUMN – SEE STRUCTURAL – GALVANIZED
05510.F1	STEEL STRINGER – (SIZE) – GALVANIZED
05521.A3	1 1/2" O.D. PIPE GUARDRAIL – GALVANIZED
05521.B3	1 1/2" O.D. PIPE HANDRAIL – GALVANIZED
05530.C1	METAL GRATE PANEL – GALV.
05530.C2	METAL GRATE TREAD – GALV.

GENERAL NOTES

1. FIELD VERIFY ALL EXISTING CONDITIONS AND THEIR COMPATIBILITY WITH NEW CONSTRUCTION PRIOR TO THE COMMENCEMENT OF WORK. COORDINATE DISCREPANCIES WITH ARCHITECT.

2. DO NOT SCALE DRAWINGS.

3. SEE CIVIL, STRUCTURAL, PLUMBING & ELECTRICAL DRAWINGS FOR MORE INFORMATION.

CLIENT

UDOT CONNECTING COMMUNITIES

STATION #4325
MILE MARKER 49.7 HIGHWAY 143
PANGUITCH UTAH

DESIGNER

ARCHIPLEX GROUP
architecture · planning · design services
1135 South West Temple, Ste. A
Salt Lake City, UT 84101
P:(801) 961-7070
F:(801) 961-7373

CONSULTANTS

PROFESSIONAL SEAL

STATE OF UTAH
RALPH M. STANISLAW
95-310818-0301
LICENSED ARCHITECT

ISSUE

MARK	DATE	DESCRIPTION
1	3-5-08	ADDENDUM #2
	01-2008	CONSTRUCTION DOCUMENTS

DFCM PROJECT NO:	07010900
DFCM CONTRACT NO:	077374
ARCHIPLEX PROJECT NO:	0709.01
DRAWN BY:	A. PHILLIPS
CHECKED BY:	R. STANISLAW
SCALE:	1/4"=1'-0"
DATE:	JANUARY, 2008

SHEET TITLE

SITE STRUCTURES ADD ALT #2 WASH RACK PLAN, SECTION & ELEVS.

AE702

GENERAL NOTES

1. FIELD VERIFY ALL EXISTING CONDITIONS AND THEIR COMPATIBILITY WITH NEW CONSTRUCTION PRIOR TO THE COMMENCEMENT OF WORK. COORDINATE DISCREPANCIES WITH ARCHITECT.

2. DO NOT SCALE DRAWINGS.

3. SEE CIVIL, STRUCTURAL AND ELECTRICAL DRAWINGS FOR MORE INFORMATION.

1

4. PROVIDE 3/4" CHAMFER AT ALL OUTSIDE CORNERS. SEE DETAIL B4/AE704.

5. EXTERIOR LIGHTS MUST BE SUPPORTED BY SUITABLE STRUCTURAL BRACING TO BE PROVIDED BY THE METAL BUILDING MANUFACTURERER.

6. SALT STORAGE KEYNOTES ARE FOR ALL SALT STORAGE SHEETS, THEREFOR NOT ALL KEYNOTES MAY BE USED ON EACH SHEET.

EXTERIOR COLOR SCHEDULE

(05500.J1) BOLLARDS: OSHA SAFETY YELLOW
(13125.B0) METAL ROOF: GALVALUME METAL ROOF
(13125.E3) RAKE TRIM: SILICONIZED POLYESTER FINISH – COLOR "B" BY ARCHITECT
(13125.F0) METAL WALL PANEL: SILICONIZED POLYESTER FINISH –COLOR BY ARCHITECT
(13125.G0) METAL FASCIA: SILICONIZED POLYESTER FINISH – COLOR "A" BY ARCHITECT.

1

(15887.A1) LOUVERS: PREFINISHED KYNAR 500 "BONE WHITE" OR EQUAL
(16520.B1 & B2) EXTERIOR LIGHT FIXTURES: PREFINISHED KYNAR 500 "BONE WHITE" OR EQUAL

KEYNOTES

02200.B0	GRAVEL BASE
02512.A0	ZERO VOIDS ASPHALTIC PAVING (THICKNESS)
03053.A0	CONCRETE WATER PROOFING ADMIXTURE
03300.C1	FOOTING – SEE STRUCTURAL
03300.H0	FOUNDATION WALL – SEE STRUCTURAL
03300.P3	CONTROL JOINT – SEE STRUCTURAL DETAIL B2/S503
05500.J1	PIPE BOLLARD (DIAMETER) GALVANIZED & PAINTED – SEE DETAIL B2/AE503
13125.B0	STANDING SEAM METAL ROOF – WITH THERMAL BLOCKS
13125.D1	METAL DRIP FLASHING
13125.D5	RIDGE FLASHING, TO MATCH ROOF PANELS
13125.D8	CONTINUOUS PRE-FINISHED SHEET METAL CLOSURE
13125.E2	PANEL TRIM
13125.E3	RAKE TRIM
13125.E6	WALL CLOSURE
13125.E8	CORNER TRIM
13125.F0	METAL WALL PANEL
13125.F1	METAL WALL FASTENER
13125.F2	BLIND RIVET
13125.H1	METAL ANGLE
13125.J4	ROOF PURLIN – PRIMED
13125.J5	STRUCTURAL GIRT – PRIMED
13125.L5	STEEL COLUMN – PRIMED
13125.M5	STEEL BEAM – PRIMED
13125.N1	ANCHOR
15887.A1	LOUVER W/ BIRD SCREEN
16510.A0	INTERIOR LIGHTS
16520.B2	EXTERIOR WALL MOUNTED FLOOD LIGHTS

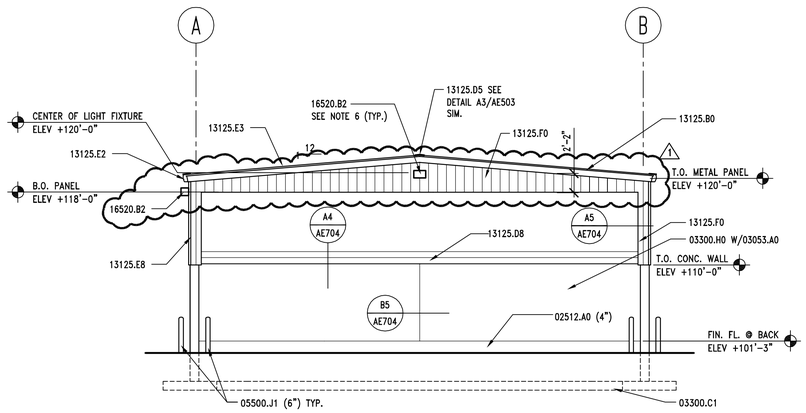

B1 | SALT STORAGE BLDG. – EAST ELEVATION

AE703 | REF. AE703 | SCALE: 1/8" = 1'-0"

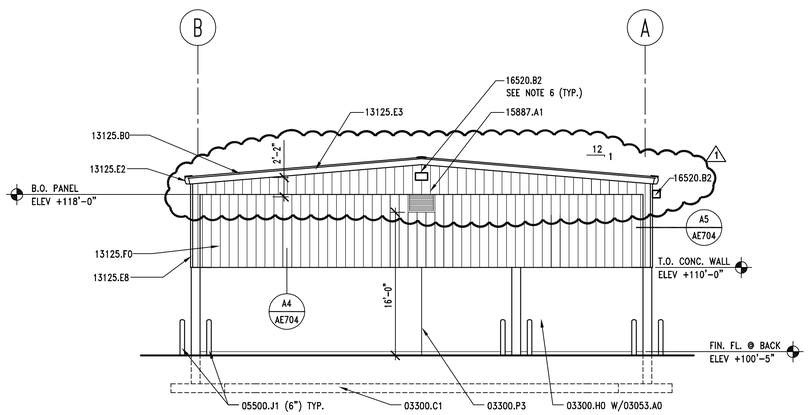

A1 | SALT STORAGE BLDG. – WEST ELEVATION

AE703 | REF. AE703 | SCALE: 1/8" = 1'-0"

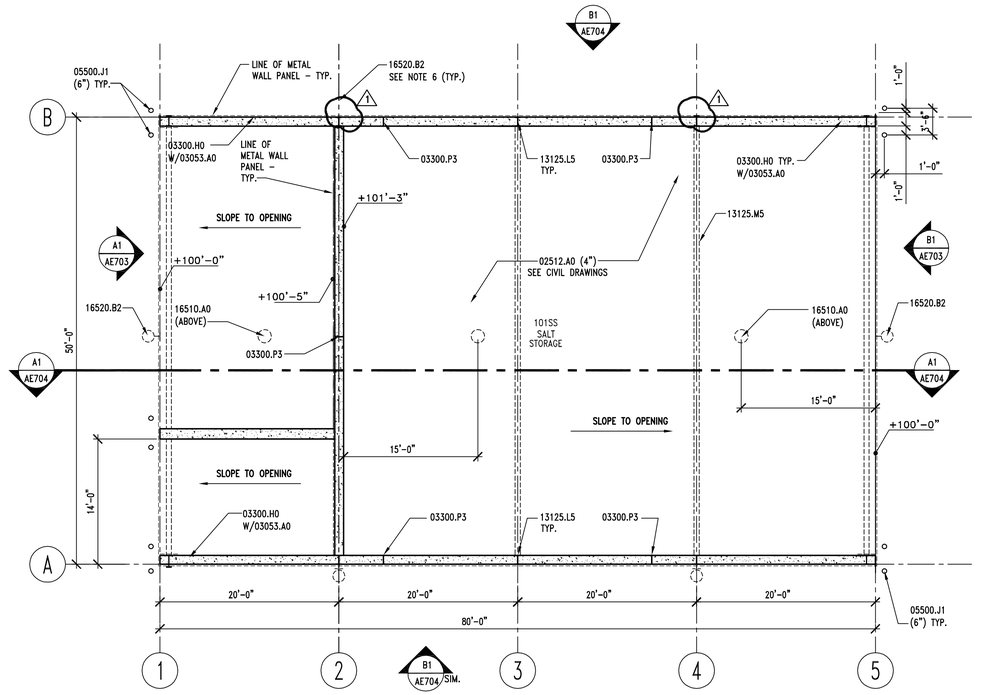

A3 | SALT STORAGE BLDG. – FLOOR PLAN

AE703 | REF. AE703 | SCALE: 1/8" = 1'-0"

NORTH

CLIENT

UDOT CONNECTING COMMUNITIES

STATION #4325
MILE MARKER 49.7 HIGHWAY 143
PANGUITCH UTAH

DESIGNER

ARCHIPLEX GROUP
architecture · planning · design services
1135 South West Temple, Ste. A
Salt Lake City, UT 84101
P:(801) 961-7070
F:(801) 961-7373

CONSULTANTS

PROFESSIONAL SEAL

STATE OF UTAH
RALPH M. STANISLAW
95-310818-0301
LICENSED ARCHITECT

ISSUE

MARK	DATE	DESCRIPTION
1	3-5-08	ADDENDUM #2
	01-2008	CONSTRUCTION DOCUMENTS

DFCM PROJECT NO:	07010900
DFCM CONTRACT NO:	077374
ARCHIPLEX PROJECT NO:	0709.01
DRAWN BY:	A. PHILLIPS
CHECKED BY:	R. STANISLAW
SCALE:	1/8" = 1'-0"
DATE:	JANUARY, 2008

SHEET TITLE

SITE STRUCTURES ADD ALT. #3 SALT STORAGE PLAN AND ELEVATIONS

AE703

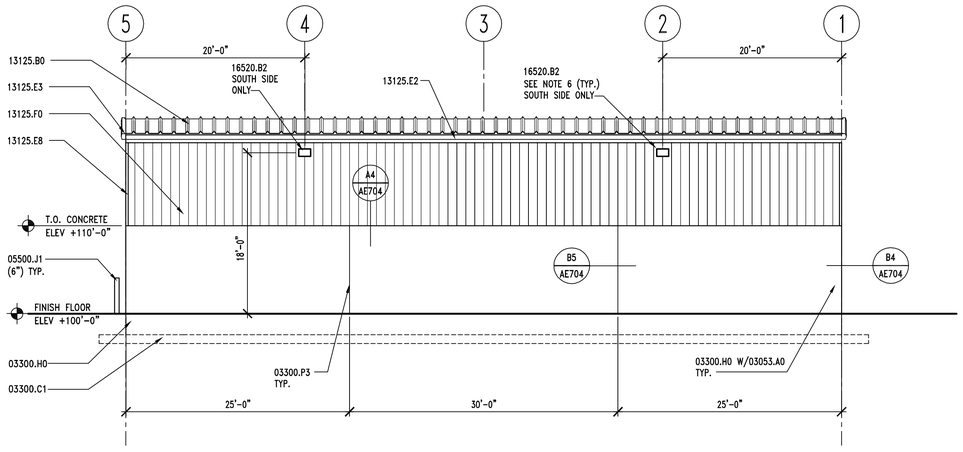

B1 | SALT STORAGE BLDG. – NORTH/SOUTH ELEVATION

AE704 | REF. AE703 | SCALE: 1/8" = 1'-0"

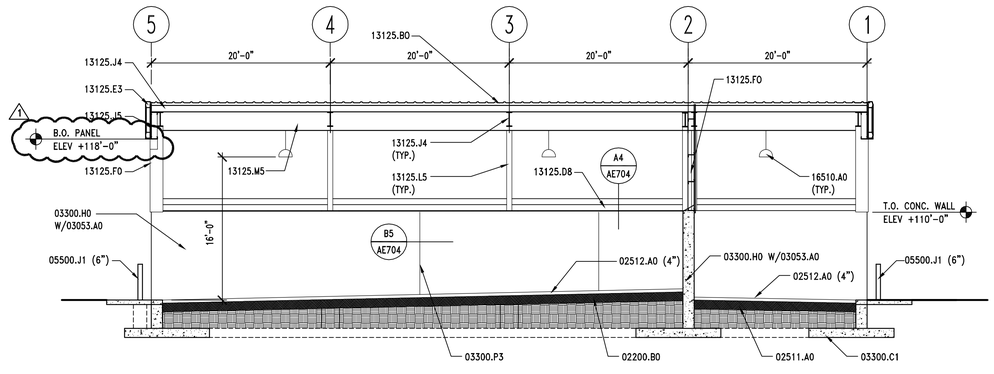

A1 | SALT STORAGE BLDG. – SECTION

AE704 | REF. AE703 | SCALE: 1/8" = 1'-0"

GENERAL NOTES

1. FIELD VERIFY ALL EXISTING CONDITIONS AND THEIR COMPATIBILITY WITH NEW CONSTRUCTION PRIOR TO THE COMMENCEMENT OF WORK. COORDINATE DISCREPANCIES WITH ARCHITECT.

2. DO NOT SCALE DRAWINGS.

3. SEE CIVIL, STRUCTURAL, AND ELECTRICAL DRAWINGS FOR MORE INFORMATION.

4. PROVIDE 3/4" CHAMFER AT ALL OUTSIDE CORNERS. SEE DETAIL B4/AE704.

5. EXTERIOR LIGHTS MUST BE SUPPORTED BY SUITABLE STRUCTURAL BRACING TO BE PROVIDED BY THE METAL BUILDING MANUFACTURERER.

6. SALT STORAGE KEYNOTES ARE FOR ALL SALT STORAGE SHEETS, THEREFOR NOT ALL KEYNOTES MAY BE USED ON EACH SHEET.

EXTERIOR COLOR SCHEDULE

(05500.J1) BOLLARDS: OSHA SAFETY YELLOW
(13125.B0) METAL ROOF: GALVALUME METAL ROOF
(13125.E3) RAKE TRIM: SILICONIZED POLYESTER FINISH – COLOR "B" BY ARCHITECT
(13125.F0) METAL WALL PANEL: SILICONIZED POLYESTER FINISH –COLOR BY ARCHITECT
(13125.G0) METAL FASCIA: SILICONIZED POLYESTER FINISH – COLOR "A" BY ARCHITECT.
(15887.A1) LOUVERS: PREFINISHED KYNAR 500 "BONE WHITE" OR EQUAL
(16520.B1 & B2) EXTERIOR LIGHT FIXTURES: PREFINISHED KYNAR 500 "BONE WHITE" OR EQUAL

KEYNOTES

02200.B0	GRAVEL BASE
02512.A0	ZERO VOIDS ASPHALTIC PAVING (THICKNESS)
03053.A0	CONCRETE WATER PROOFING ADMIXTURE
03300.C1	FOOTING – SEE STRUCTURAL
03300.H0	FOUNDATION WALL – SEE STRUCTURAL
03300.P3	CONTROL JOINT – SEE STRUCTURAL DETAIL B2/SS03
05500.J1	PIPE BOLLARD (DIAMETER) GALVANIZED & PAINTED – SEE DETAIL B2/AE503
07901.H1	CONCRETE JOINT WATER PROOF SEALANT
07901.H2	JOINT SEALANT
13125.B0	STANDING SEAM METAL ROOF – WITH THERMAL BLOCKS
13125.D1	METAL DRIP FLASHING
13125.D5	RIDGE FLASHING, TO MATCH ROOF PANELS
13125.D8	CONTINUOUS PRE-FINISHED SHEET METAL CLOSURE
13125.E2	PANEL TRIM
13125.E3	RAKE TRIM
13125.E6	WALL CLOSURE
13125.E8	CORNER TRIM
13125.F0	METAL WALL PANEL
13125.F1	METAL WALL FASTENER
13125.F2	BLIND RIVET
13125.H1	METAL ANGLE
13125.J4	ROOF PURLIN – PRIMED
13125.J5	STRUCTURAL GIRT – PRIMED
13125.L5	STEEL COLUMN – PRIMED
13125.M5	STEEL BEAM – PRIMED
13125.N1	ANCHOR
15887.A1	LOUVER W/ BIRD SCREEN
16510.A0	INTERIOR LIGHTS
16520.B2	EXTERIOR WALL MOUNTED FLOOD LIGHTS

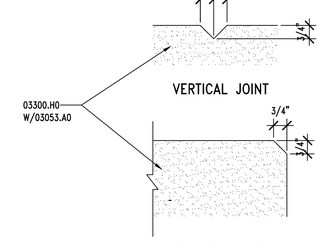

B4 | CHAMFER DETAILS

AE704 | REF. AE704 & AE705 | SCALE: 3" = 1'-0"

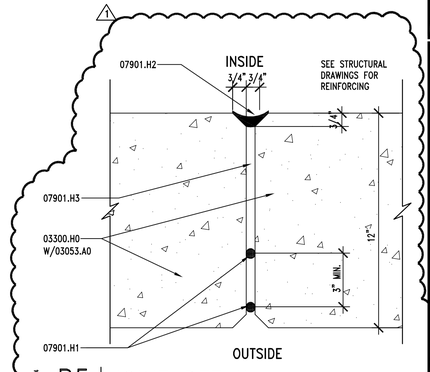

B5 | JOINT DETAIL

AE704 | REF. AE703 | SCALE: 3" = 1'-0"

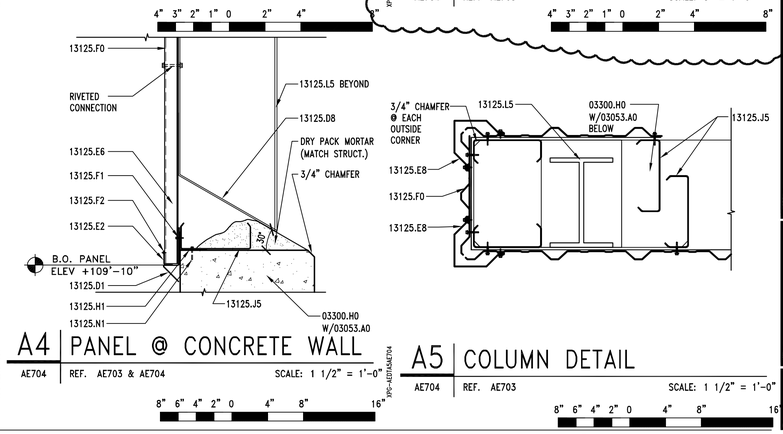

A4 | PANEL @ CONCRETE WALL

AE704 | REF. AE703 & AE704 | SCALE: 1 1/2" = 1'-0"

A5 | COLUMN DETAIL

AE704 | REF. AE703 | SCALE: 1 1/2" = 1'-0"

CLIENT

UDOT CONNECTING COMMUNITIES

STATION #4325
MILE MARKER 49.7 HIGHWAY 143
PANGUITCH UTAH

DESIGNER

ARCHIPLEX GROUP
architecture · planning · design services
1135 South West Temple, Ste. A
Salt Lake City, UT 84101
P:(801) 961-7070
F:(801) 961-7373

CONSULTANTS

PROFESSIONAL SEAL

STATE OF UTAH
RALPH M. STANISLAW
95-310818-0301
LICENSED ARCHITECT

ISSUE

MARK	DATE	DESCRIPTION
1	3-5-08	ADDENDUM #2
	01-2008	CONSTRUCTION DOCUMENTS

DFCM PROJECT NO:	07010900
DFCM CONTRACT NO:	077374
ARCHIPLEX PROJECT NO:	0709.01
DRAWN BY:	A. PHILLIPS
CHECKED BY:	R. STANISLAW
SCALE:	AS SHOWN
DATE:	JANUARY, 2008

SHEET TITLE

SITE STRUCTURES ADD ALT #3 SALT STORAGE SEC. ELEV. AND DETAILS

AE704

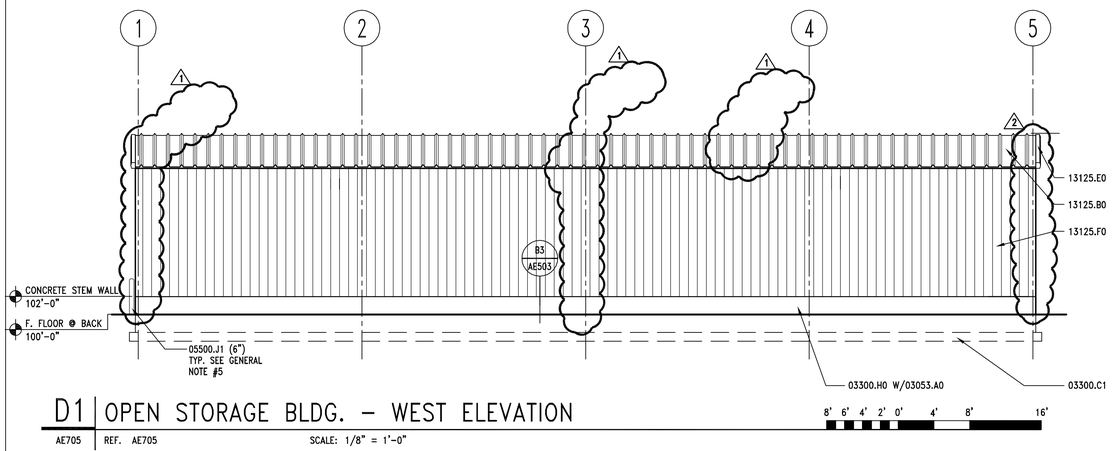

D1 | OPEN STORAGE BLDG. - WEST ELEVATION

AE705 | REF. AE705 | SCALE: 1/8" = 1'-0"

8' 6' 4' 2' 0' 4' 8' 16'

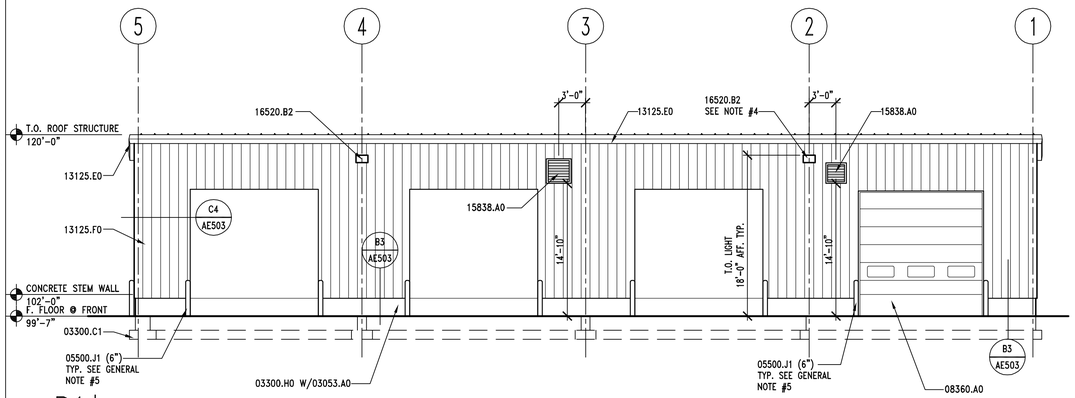

B1 | OPEN STORAGE BLDG. - EAST ELEVATION

AE705 | REF. AE705 | SCALE: 1/8" = 1'-0"

8' 6' 4' 2' 0' 4' 8' 16'

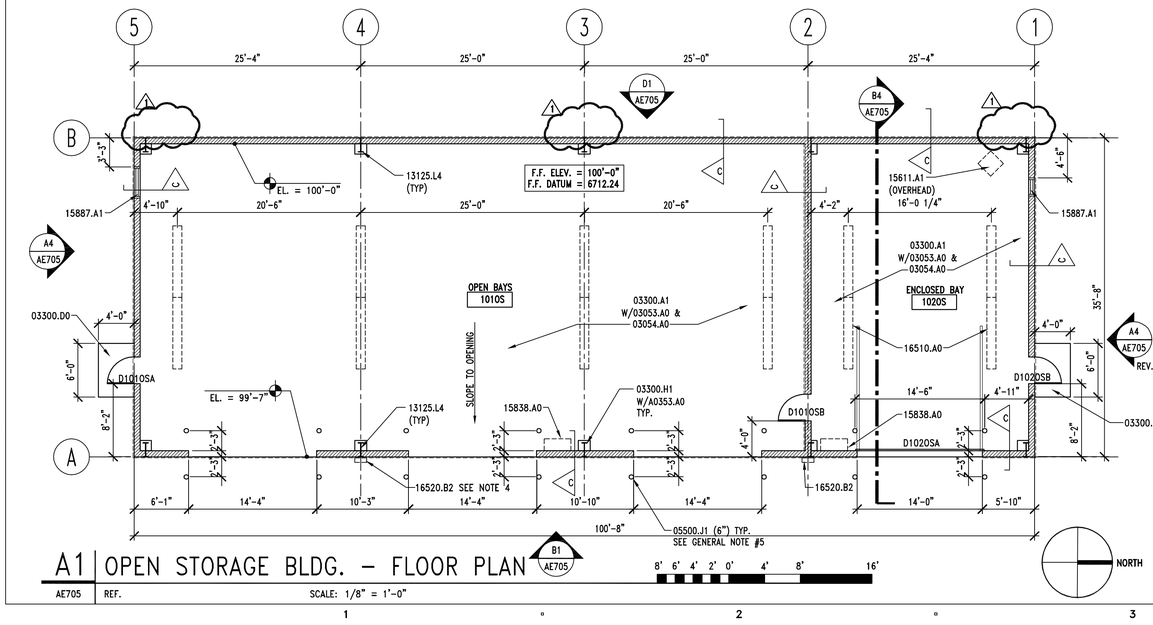

A1 | OPEN STORAGE BLDG. - FLOOR PLAN

AE705 | REF. | SCALE: 1/8" = 1'-0"

8' 6' 4' 2' 0' 4' 8' 16'

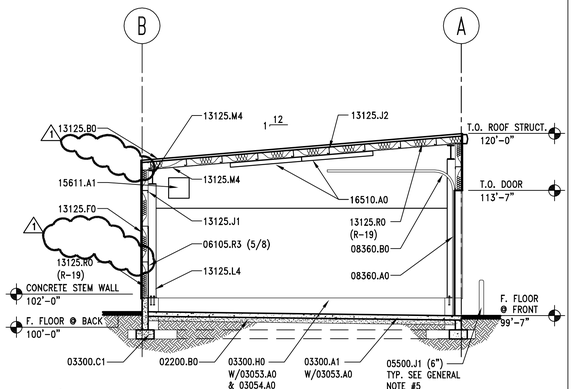

B4 | OPEN STORAGE BLDG. - SECTION

AE705 | REF. AE705 | SCALE: 1/8" = 1'-0"

8' 6' 4' 2' 0' 4' 8' 16'

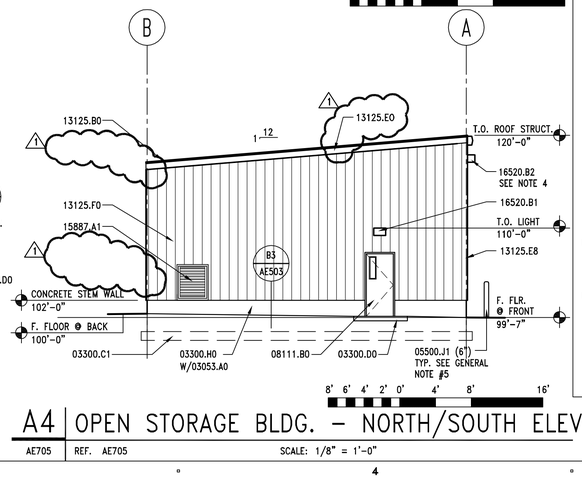

A4 | OPEN STORAGE BLDG. - NORTH/SOUTH ELEV.

AE705 | REF. AE705 | SCALE: 1/8" = 1'-0"

GENERAL NOTES

1. FIELD VERIFY ALL EXISTING CONDITIONS AND THEIR COMPATIBILITY WITH NEW CONSTRUCTION PRIOR TO THE COMMENCEMENT OF WORK. COORDINATE DISCREPANCIES WITH ARCHITECT.

2. DO NOT SCALE DRAWINGS.

3. SEE CIVIL, STRUCTURAL, MECHANICAL AND ELECTRICAL DRAWINGS FOR MORE INFORMATION.

4. EXTERIOR LIGHTS MUST BE SUPPORTED BY SUITABLE STRUCTURAL BRACING TO BE PROVIDED BY THE METAL BUILDING MANUFACTURERER.

5. SEE DETAILS A2 & B2/AE503 FOR BOLLARD DETAILS.

EXTERIOR COLOR SCHEDULE

(05500.J1) BOLLARDS: OSHA SAFETY YELLOW
(08111.A0, B0 & 08360.A0) DOORS & FRAMES: KYNAR 500 "BONE WHITE" OR EQUAL
(13125.B0) METAL ROOF: GALVALUME METAL ROOF
(13125.E0) METAL TRIM: SILICONIZED POLYESTER FINISH - COLOR "B" BY ARCHITECT
(13125.F0) METAL WALL PANEL: SILICONIZED POLYESTER FINISH - COLOR "A" BY ARCHITECT
(13125.G0) METAL FASCIA: SILICONIZED POLYESTER FINISH - COLOR "A" BY ARCHITECT.

1 (15838.A1) EXHAUST VENTS: PRE FINISHED KYNAR 500 "BONE WHITE" OR EQUAL
(15887.A1) LOUVERS: PRE FINISHED KYNAR 500 "BONE WHITE" OR EQUAL
(16520.B1 & B2) EXTERIOR LIGHT FIXTURES: PRE FINISHED KYNAR 500 "BONE WHITE" OR EQUAL

KEYNOTES

02200.B0 GRAVEL BASE

03053.A0 CONCRETE WATER PROOFING ADMIXTURE
03054.A0 OLIOPHOBIC SEALER
03300.A1 CONCRETE SLAB-ON-GRADE - SEE STRUCTURAL
03300.C1 FOOTING - SEE STRUCTURAL
03300.D0 CONCRETE PAD
03300.H0 FOUNDATION WALL - SEE STRUCTURAL
03300.H1 CONCRETE PIER - SEE STRUCTURAL

05500.J1 PIPE BOLLARD (DIAMETER) - GALV. & PAINTED

06105.R3 PLYWOOD PANEL (THICKNESS)

08111.B0 HOLLOW METAL DOOR
08360.A0 HEAVY DUTY OVERHEAD SECTIONAL DOOR
08360.B0 3" HEAVY DUTY DOOR TRACK

13125.B0 STANDING SEAM METAL ROOF - WITH THERMAL BLOCKS
13125.E0 METAL TRIM 1
13125.E8 CORNER TRIM
13125.F0 METAL WALL PANEL
13125.J1 STRUCTURAL GIRT - PAINTED
13125.J2 ROOF PURLIN - PAINTED
13125.L4 STEEL COLUMN - PRIMED AND PAINTED
13125.M4 STEEL BEAM - PRIMED AND PAINTED
13125.R0 INSULATION & VAPOR BARRIER (R-VALUE)

15611.A1 NATURAL GAS FIRED FURNACE
15838.A0 EXHAUST FAN - SEE MECHANICAL
15887.A1 LOUVER W/ BIRD SCREEN 1

16510.A0 INTERIOR LIGHTS
16520.B1 EXTERIOR WALL MOUNTED LIGHTS
16520.B2 EXTERIOR WALL MOUNTED FLOOD LIGHTS

CODE ANALYSIS

APPLICABLE CODES

	Year		Year
International Building Code	2006	National Electrical Code	2005
International Mechanical Code	2006	Uniform Code for	
International Plumbing Code	2006	Building Conservation	N.A.
International Fire Code	2006	ADA Accessibility	
International Energy Conservation Code	2006	Guidelines	2006

A. Occupancy and Group: S2 (VEHICLE STORAGE)

Change in Use: Yes ____ No X Mixed Occupancy: Yes ____ No X
Special Use and Occupancy (e.g. High Rise, Covered Mall): N.A.

B. Seismic Design Category: D Design Wind Speed: 90 mph

C. Type of Construction (circle one):

I A | I B | II A | II B | III A | III B | IV HT | V A | (V B)

Fire Resistance Rating Requirements for the Exterior Walls based on the fire separation distance (in hours):

D. North: 0 South: 0 East: 0 West: 0

E. Mixed Occupancies: NO Nonseparated Uses: NO

F: Sprinklers:

Required: NO Provided: NO Type of Sprinkler System: N.A.

G: Number of Stories: 1 Building Height: 20'-0"

H: Actual Area per Floor (square feet): 3374 SF

I: Tabular Area: 13,500 SF

J: Area Modifications:

$$A_a = A_1 + \left[\frac{A_1 I_f}{100}\right] + \left[\frac{A_s I_s}{100}\right] \qquad I_f = 100\left[\frac{F}{P} - 0.25\right]\frac{W}{30}$$

a)

$$23{,}625\ SF = 13{,}500\left[\frac{13500\ (75)}{100}\right] + \left[\frac{13500\ (0)}{100}\right]$$

b) Sum of the Ratio Calculations for Mixed Occupancies:

$$\frac{\text{Actual Area}}{\text{Allowable Area}} \le 1 \qquad \frac{3374\ SF}{23625\ SF} = .143$$

c) Total Allowable Area for:
1) One Story: 23,625 SF
2) Two Story: $A_a(2)$ N.A.
3) Three Story: $A_a(3)$ N.A.

d) Unlimited Area Building: Yes ____ No X Code Section: ____

K. Fire Resistance Rating Requirements for Building Elements (hours).

Element	Hours	Assembly Listing	Element	Hours	Assembly Listing
Exterior Bearing Walls	0	N.A.	Floors - Ceiling Floors	0	N.A.
Interior Bearing Walls	0	N.A.	Roofs - Ceiling Roofs	0	N.A.
Exterior Non-Bearing Walls	0	N.A.	Exterior Doors and Windows	0	N.A.
Structural Frame	0	N.A.	Shaft Enclosures	0	N.A.
Partitions - Permanent	0	N.A.	Fire Walls	0	N.A.
Fire Barriers	0	N.A.	Fire Partitions	0	N.A.
			Smoke Partitions	0	N.A.

L. Design Occupant Load: 7* *MAX. OCCUPANTS BASED ON UDOT STAFFING FOR FACILITY
Exit Width Required: 8" Exit Width Provided: 3'-0"
*Actual occupants Ø = storage facility only

M. Minimum Number of Required Plumbing Facilities:
a) Water Closets - Required (m) 1* (f) 1* Provided (m) 1* (f) 1*
b) Lavatories - Required (m) 1* (f) 1* Provided (m) 1* (f) 1*
c) Bath Tubs or Showers: 1*
d) Drinking Fountains: 1* Service Sinks: 1*

*PLUMBING FACILITIES LOCATED IN ADJACENT MAINTENANCE STATION. TRAVEL DISTANCE LESS THAN 500 FEET - SEE SITE PLAN

CLIENT

UDOT CONNECTING COMMUNITIES

STATION #4325
MILE MARKER 49.7 HIGHWAY 143
PANGUITCH UTAH

DESIGNER

ARCHIPLEX GROUP
architecture · planning · design services
1135 South West Temple, Ste. A
Salt Lake City, UT 84101
P:(801) 961-7070
F:(801) 961-7373

CONSULTANTS

PROFESSIONAL SEAL

STATE OF UTAH
RALPH M. STANISLAW
95-310818-0301
LICENSED ARCHITECT

ISSUE

MARK	DATE	DESCRIPTION
1	3-5-08	ADDENDUM #2
	01-2008	CONSTRUCTION DOCUMENTS

DFCM PROJECT NO:	07010900
DFCM CONTRACT NO:	077374
ARCHIPLEX PROJECT NO:	0709.01
DRAWN BY:	A. PHILLIPS
CHECKED BY:	R. STANISLAW
SCALE:	AS SHOWN
DATE:	JANUARY, 2008

SHEET TITLE

SITE STRUCTURES ADD ALT #4 OPEN STORAGE PLAN, SECTIONS & ELEVS.

AE705

GENERAL STRUCTURAL NOTES

GENERAL

1. The structural notes are intended to complement the project specifications. Specific notes and details in the drawings shall govern over the structural notes and typical details.
2. Typical details and sections shall apply where specific details are not shown.
3. The contractor shall verify all site conditions and dimensions. If actual conditions differ from those shown in the contract drawings, the contractor shall immediately notify the architect/engineer before proceeding with the fabrication or construction of any effected elements.
4. Omissions or conflicts between the contract drawings and/or specifications shall be brought to the attention of the architect/engineer before proceeding with any work involved. In case of conflict, follow the most stringent requirement as directed by the architect/engineer at no additional cost to the owner.
5. The contractor shall submit a written request to the architect/engineer before proceeding with any changes, substitutions or modifications. Any work done by the contractor before receiving written approval will be at the contractor's risk.
6. The contractor shall coordinate with all trades any items that are to be integrated into the structural system such as openings, penetrations, mechanical and electrical equipment, etc. Sizes and locations of mechanical and other equipment that differs from those shown on the contract drawings shall be reported to the architect/engineer.
7. The contractor shall provide adequate shoring and bracing as required for his method of erection. Shoring and bracing shall remain in place until final connections for the permanent members are completed. The building shall not be considered stable until all connections are completed. Walls shall not be considered self-supporting and shall be braced until the floor/roof system is completed.
8. Site observations by BHB Consulting Engineers, P.C.'s field representative shall not be construed as approval of construction procedures nor special inspection.
9. Detailing and shop drawing production for structural elements will require information (including dimensions) contained in the architectural, structural and/or other consultants' drawings. The structural drawings shall be used in conjunction with the architectural and other consultant's drawings. Some dimensions and elements such as elevations, depressions, slopes, mechanical housekeeping pads, etc. are not shown in the structural drawings. All dimensions shown on structural drawings shall be verified by contractor with architectural, mechanical and electrical drawings.
10. Review of shop drawing submittals by BHB Consulting Engineers, P.C. is for general compliance only and is not intended for approval. The shop drawing review shall not relieve the contractor from the responsibility of completing the project according to the contract documents.
11. Shop drawings made from reproductions of the contract drawings will be rejected unless the contractor signs a release agreement prior to the shop drawings being reviewed.
12. Only an authorized representative of BHB Consulting Engineers, P.C. may make changes to these contract drawings. BHB Consulting Engineers, P.C. shall not be held responsible or liable for any claims arising directly or indirectly from changes made without written authorization by an authorized representative of BHB Consulting Engineers, P.C.

BASIS OF DESIGN

1. Governing Building Code — International Building Code 2006
2. Roof Snow Load
   a. Ground Snow Load — P_g = 64 psf
   b. Snow Importance Factor — I_s = 1.0
   c. Snow Exposure Coefficient — C_e = 1.0
   d. Maintenance Building Thermal Exposure Coefficient — C_t = 1.0
   e. Open and Salt StorageThermal Exposure Coefficient — C_t = 1.2
   f. Roof Snow Load — $P_f = 0.7 * C_e * C_t * I_s * P_g$ =
      i. Maintenance Building — 45 psf plus Snow Drift
      ii. Open Storage and Salt Storage — 54 psf plus Snow Drift

⚠1

3. Mezzanine Floor Loads
   a. Dead — 54 psf
   b. Live — 125 psf
4. Seismic Loads
   a. Short Period Mapped Spectral Acceleration — S_S = 0.881
   b. Soil Site Class — D
   c. Short Period Site Coefficient — F_a = 1.17
   d. 5% Damped Design Spectral Response Acceleration — $S_{DS} = 2/3 * F_a * S_S$
   e. Seismic Importance Factor — I_e = 1.00
   f. Response Modification Coefficient
      i. Mezzanine — R = 4.0
      ii. Wash Rack — R = 3.25
      iii. Sander Rack — R = 3.5
   g. Seismic Response Coefficient — $C_s = S_{DS} * I_e / R$
   h. W — Dead Loads of Structure
   i. Building Seismic Design Category — D
   j. System Overstrength Factor — 3.0
   k. Deflection Amplification Factor — 3.0
   l. Base Shear — $V = C_S * W$ (Strength Design)
      i. Mezzanine — V = 0.172
      ii. Wash Rack — V = 0.211
      iii. Sander Rack — V = 0.196
4. Wind Loads
   a. Wind Velocity (3 Second Gust) — 90 mph
   b. Exposure Type — C
   c. Wind Importance Factor — 1.00

FOUNDATION

1. Soils Investigation Report: PEPG Engineering, LLC, dated July 30, 2007
2. Soil bearing pressure: 50,000 psf on undisturbed native soil or properly compacted structural fill.
3. Frost Protection: 33 inches minimum.
4. Clear excavations of debris and loose soil prior to placing footings. All footings shall bear on undisturbed natural sub-grade or engineered compacted fill as noted in the soils report.

EARTHWORK

1. Consult the project specifications and soils report for further earthwork requirements.

CONCRETE

1. Materials, unless noted otherwise:
   a. Normal weight aggregates — ASTM C 33
   b. Reinforcing Steel — ASTM 615 Grade 60 (Fy = 60 ksi). Use Grade 40 (Fy = 40 ksi) for field bent dowels with spacings indicated reduced by 1/3.
   c. Deformed Bar Anchors (DBA) — ASTM A496
   d. Admixtures:
      i. Air-entraining admixtures comply with ASTM C 260 (when used).
      ii Calcium chloride shall not be added to the concrete mix.
   e. Type I cement complying with ASTM C-150 shall be used for all concrete.
   f. The water/cement ratios shall meet the requirements of ACI 318.
   g. Provide air entraining as recommended by ACI 318.
   h. No aluminum conduit or product containing aluminum or any other material injurious to concrete shall be embedded in concrete.
2. Compressive strengths of concrete at 28 days shall be as follows:
   a. Footings ....3,000 psi
   b. Interior Slabs on Grade ....4,000 psi
   c. ~~Walls ....3,000 psi~~ ⚠1
   d. Salt Storage Building Walls (w/c=0.45 max) ....4,500 psi
   e. ~~Normal Weight concrete over Steel Deck ....3,500 psi~~
   f. All Site Concrete ....4,000 psi
3. 5 1/2" thick (total thickness) normal weight concrete slab shall be poured over the steel deck. Reinforce slab with 6" x 6" - W2.1/W2.1 welded wire fabric minimum, unless noted otherwise. Welded Wire Fabric shall be placed 1" to 1-1/2" below the top of the slab.
   a. At contractor's option, the welded wire fabric may be substituted with 100% virgin polypropylene synthetic fiber containing no reprocessed olefin materials and specifically manufactured to an optimum gradation for use as concrete secondary reinforcement. Application shall be 1.5 lbs minimum per cubic yard.
4. Only one grade or type of concrete shall be poured on the site at any given time.
5. The contractor shall be responsible for the design, detailing, care, placement and removal of all formwork and shores.
   a. Supporting forms and shoring shall not be removed until structural members have acquired sufficient strength to safely support their own weight and any construction load to which they may be subjected. In no case, however, shall forms and shoring be removed in less than 24 hours after concrete placement.
   b. Suspended slabs shall be re-supported after form removal until concrete reaches its 28-day specified compressive strength.
6. Reinforcement shall have the following concrete cover:
   Cast-in-place Concrete: .... Clear Cover
   a. Cast against and permanently exposed to earth ....3"
   b. Formed concrete exposed to earth or weather:
      #6 thru #18 bars ....2"
      #5 and smaller bars ....1-1/2"
   c. Concrete not exposed to weather or in contact with ground:
      Slabs, Walls, Joists; #11 bars and smaller ....3/4"
      Beams, Columns: Primary Reinf., Ties, Stirrups, Spirals ....1-1/2"
7. Construction Joints and Control Joints:
   a. Provide a formed and beveled 2 x 4 x continuous keyway in all horizontal and vertical construction joints including between top of footing and foundation walls, unless noted otherwise. In addition, all joints shall be intentionally roughened to a full amplitude of approximately 1/4 inch.
   b. Control joints shall be installed in slabs on grade so the length to width ratio of the slab is no more than 1.25:1. Control joints shall be completed within 12 hours of concrete placement. Control joints may be installed by:
      i. Saw cut a depth of 1/4 the thickness of the slab
      ii. Tooled joints a depth of 1/4 the thickness of the slab
   c. Install construction or control joints in slabs on grade at a spacing not to exceed 75 times the slab thickness in any direction for reinforced slabs, unless noted otherwise. Construction joints shall not exceed a distance of 125'-0" o.c. in any direction.
   d. In exposed areas, install construction or control joints in concrete over metal deck at a spacing not to exceed 10 feet o/c. Coordinate location with architectural drawings.
8. Construction
   a. Use chairs or other support devices recommended by the CRSI to support and tie reinforcement bars and WWF prior to placing concrete. WWF shall be continuously supported at 36" o.c. maximum. Reinforcing steel for slabs on grade shall be adequately supported on precast concrete units. Lifting the reinforcing off the grade during placement of concrete is not permitted.
   b. Concrete to be mechanically consolidated during placement per ACI standards.
   c. Contractor shall coordinate placement of all openings, curbs, dowels, sleeves, conduits, bolts, inserts and other embedded items prior to concrete placement.
   d. All embeds and dowels shall be securely tied to formwork or to adjacent reinforcing prior to the placement of concrete.
   e. No pipes, ducts, sleeves, etc shall be placed in structural concrete unless specifically detailed or approved by the structural engineer. Penetrations through walls when approved shall be built into the wall prior to concrete placement. Penetrations will not be allowed in footings or grade beams unless detailed. Piping shall be routed around these elements and footings stepped to avoid piping.
   f. Reinforcing Bars shall not be welded. Do not substitute reinforcing bars for DBAs or HSAs.
9. Detailing:
   a. Lap splice lengths shall be detailed to comply with the "Reinforcing Bar Lap Splice Schedule" on sheet S601. Splices may be made with mechanical splices capable of 125% tension capacity of the bar being spliced. Mechanical splices shall be the positive connecting type coupler and shall meet all Uniform Building Code requirements. Use "Cadweld", "Lenton" Standard Couplers, "Bar-Lock" or equal with internal protector. If mechanical splices are used, splices or couplers on adjacent bars shall be staggered a minimum of 24" apart along the longitudinal axis of the reinforcing bars.
   b. At joints provide reinforcing dowels to match the member reinforcing, unless noted otherwise.
   c. At all discontinuous control or construction slab on grade joints, provide 2 - #4 x 48 inches.
   d. Provide corner bars at intersecting wall corners using the same bar size and spacing as the horizontal wall reinforcing.
   e. All vertical reinforcing shall be doweled to footings, or to the structure below with the same size and spacing as the vertical reinforcing for the element above. Dowels extending into footings shall terminate with a 90 degree standard hook and shall extend to within 4" of the bottom of the footing. Footing dowels (#8 bars and smaller) with hooks need not extend more than 20" into footings.
   f. Horizontal wall reinforcing shall terminate at ends of walls and openings into the far end of the jamb column with a 90-degree standard hook plus a 6 bar diameter extension. Horizontal wall reinforcing shall be continuous through construction and control joints.
   g. See detail B2/S501 for reinforcing around miscellaneous openings (8" to 36" wide). For openings wider than 36", contact the engineer. All recesses that interrupt reinforcing shall be reinforced the same as an opening.

⚠1

EPOXY

1. Epoxy shall be "HIT HY 150 MAX or HIT RE 500 by Hilti Corporation, HSS-200 by Adhesives Technology Corporation, "Epcon Injection System" by Ramset/Redhead, "Power-Fast" by Power-Fasteners or approved equal.
2. All drilled holes for bars or anchors rods 1" diameter and smaller shall be 1/8 inch larger than the bar of anchor rod being installed. For bars or anchor rods greater than 1" diameter shall be smaller 1/4 inch larger than the bar or anchor rod being installed.
3. After drilling the proper size hole, clean the walls and bottom of the drilled hole of all dust and debris using a nylon brush in conjunction with oil free compressed air. The hole shall be free of dust, debris and standing water.
4. Follow all of the manufacturer's recommendations for epoxy installation.

STRUCTURAL STEEL

1. Material:
   a. Other shapes & Plates — ASTM A36
   b. Deformed Bar Anchors (DBA) — ASTM A496
   c. Bolted Connections: — ASTM A325
2. Fabrication and construction shall comply with the latest edition of the following Codes and Standards:
   a. American Institute of Steel Construction (AISC), "Specification for the Design, Fabrication and Erection of Structural Steel for Buildings," with "Commentary".
   b. AISC "Code of Standard Practice" excluding the following: Section 3.4, Section 4.4, Section 4.4.1,
   c. AISC "Specification for Structural Joints Using ASTM A325 or A490 Bolts"
   d. American Welding Society (AWS), Structural Welding Code (specific items do not apply when they conflict with the AISC requirements).
   e. AISC "Seismic Provision for Structural Steel Buildings"
3. Welding
   a. All welding and cutting shall be performed by AWS certified welders.
   b. Use E-70 XX or as noted otherwise.
   c. All intersecting steel shapes which are not bolted shall be connected by a fillet weld all around, unless noted otherwise. Where fillet weld sizes are not shown they shall be 1/16" less than the thinnest of the connected parts for thicknesses 1/4" and larger. Fillet welds on plates less than 1/4" shall be of the same size as the thinnest of the connected part.
   d. Reinforcing Bars: Do not weld rebar. Do not substitute reinforcing bars for deformed bar anchors (DBAs), machine bolts, or headed stud anchors(HSAs).
   e. Do not weld anchor bolts, including "tack" welds.
   f. Headed Stud Anchors (HSAs) welding and deformed bar anchor welding shall conform to the manufacturer's specifications.
4. Bolted Connections:
   a. Use ASTM A325N bolts for steel to steel connections, as noted herein or as noted on the drawings. A325N bolts shall be used in connections for simple span framing and beam (or girder) to bearing plate connections. Tighten bolts to a snug tight condition.
   b. Use hardened washers beneath the turned element of all bolts or nuts. Use hardened beveled washers, to compensate for the lack of parallelism, where the outer face of the bolted parts has a slope greater than one in twenty with respect to the plane normal to the bolt axis. At oversized holes hardened washers or plates shall conform with ASTM F-436 and shall completely cover the slot after installation.
   c. Where a steel to steel beam connection is not shown, provide a standard AISC framed connection for one half the total uniform load capacity of the beam for the span and steel specified.
   d. Bolts, nuts and washers shall not be reused.

METAL DECKING

1. Steel deck shall comply with the latest requirements of the Steel Deck Institute.
2. All deck shall be 3-span continuous minimum. In areas where 3-span conditions are not possible, the contractor shall provide heavier gauge deck as required to provide the equivalent loading of the deck under a three span condition.
3. All deck supporting members shall be dry before welding.
4. Crimp seams before button punching or welding interlocking seams.
5. Where deck is to receive sprayed-on fire proofing, deck shall be coated, as required, with special paint that will allow the sprayed-on fire proofing to adhere to the deck.

Steel Floor Deck
   a. Steel floor deck shall be 2" deep X 20 gauge minimum Non-Composite Formlock deck with interlocking side seams and #10 screws at 8" o.c. with the following properties:

	20 Gauge
Minimum S ($in^3/_{ft}$) =	0.361
Minimum I ($in^4/_{ft}$) =	0.423

   b. Steel deck with 5 1/2" thick (overall thickness) normal weight concrete slab shall have a minimum diaphragm shear capacity of 450 lbs/ft. for a 1 deck span.
   c. Deck Attachment:
      i. Frame Fastening: #12 STS @ 36/4 Pattern.
      ii Stitch Fastening: (1) # 10 STS per plan.
   d. Attach interlocking seams with 3/16" Ø button punch at 18" o.c., or with 1 1/2" top seam weld at 36" o.c. or with Verco PunchLok System at 36" o.c. or with ASC DeltaGrip Sytsem at 36"o/c Closer spacings may be used to develop minimum shear requirements.
   e. Provide a 2-inch minimum bearing at supports.

COLD-FORMED STEEL

1. All cold-formed steel shall meet the requirements of "Specifications for the Design of Cold-Formed Steel Structural Members" by American Iron and Steel Institute (AISI).
2. Light Gauge Steel Framing:
   a. Galvanized steel must meet the minimum requirements of ASTM A446 Grade D (Fy = 50 ksi) for 12, 14 and 16-gauge and ASTM A446 Grade A (Fy = 33 ksi) for 18-gauge and lighter. Galvanized coatings must meet the ASTM A525 specification.
   b. Follow all manufacturers' recommendations for the use of these products.
   c. Unless noted otherwise, all welded connections shall be done according to AWS standards.
   d. All interior non-bearing steel-stud walls that extend above the ceiling but do not attach to the structure above shall be brace with diagonal metal-stud braces (45 degrees). The kl/r ratio of the brace shall not exceed 200 and shall not be spaced further apart than 10'-0" o/c. Connect diagonal braces to the top of the steel stud walls and to the top flange of the steel beams with two #10 tek screws minimum. Where a concrete deck occurs above, use two powder-driven fasteners per diagonal brace. Other approved methods may be used.
3. Prefabricated Systems: Submit complete shop drawings and calculations of all elements for review. Shop Drawings shall bear the stamp of a Professional Engineer registered in the State of Utah.

PREFABRICATED METAL BUILDING

1. The design, fabrication and erection of all prefabricated elements and associated hardware shall comply with the latest requirements of the IBC, AISC, SDI and AISI.
2. Prior to fabrication and installation of anchor bolts, the metal building supplier shall submit complete shop drawings and calculations including reactions bearing the stamp of a Registered Design Professional licensed in the State of Utah. Complete calculations shall be submitted with the shop drawings.
3. Do not modify any structural element of the prefabricated metal building without the written consent and direction from the manufacturer. Send copies of the consent and modifications to the Architect and Engineer.
4. The design of the premanufactured structural roof system including the steel deck, joists, girders, columns, and the lateral force resisting system (including rigid frames) is the responsibility of the premanufactured metal building supplier. Refer to the prefabricated structural roof system supplier's drawings and calculations for the exact gravity roof load values and for the design of the roof and lateral systems.

SPECIAL INSPECTION AND QUALITY ASSURANCE

Special inspection and quality assurance, as required by section 1704 of the IBC, shall be provided by an independent agency employed by the owner unless waived by the building official. The contractor shall coordinate and cooperate with the required inspections. All testing and inspection reports shall be sent within 24 hours of the test to the architect, engineer and contractor for review. Special inspection during fabrication is ~~not required if the fabricator is registered and approved to perform such work without special inspection~~. Approved fabricators shall submit a certificate of compliance at the completion of the fabrication to the building official. Items requiring special inspection and quality assurance are: ⚠1

1. Soils (IBC 1704.7)
   a. Prior to placement of the prepared fill, the special inspector shall determine that the site has been prepared in accordance with the soils report.
   b. During placement and compaction of the fill material, the special inspector shall determine that the material being used and the maximum lift thickness comply with the soils report.
   c. The special inspector shall determine that the in-place dry density of the compacted fill material complies with the soils report.
      i. Continuous Footing Backfill: At each compacted backfill layer, at least one test for each 25 linear feet or less of wall length, but no fewer than 2 tests.
      ii. Spot Footing Backfill: Minimum of one compaction test for each lift for each spot footing.
   d. See specifications for further requirements.
2. Concrete placement (IBC Section 1704.4)
   a. Continuous special inspection shall be provided
   b. Cylinders, slump, temperature and air-entrainment shall be done for every 50 cubic yards or each day's production if less than 50 cubic yards.
   c. See specifications for further concrete testing requirements.
3. Bolts installed in concrete (IBC Section 1704.4)
   a. All bolts shall be inspected prior to and during concrete placement.
4. Embeds and Inserts installed in concrete (IBC Section 1704.4)
   a. All embeds and inserts shall be inspected prior to and during concrete placement.
5. Concrete reinforcing steel placement (IBC Section 1704.4)
   a. All Reinforcing shall be inspected prior to concrete placement.
6. Structural welding, including steel deck (IBC 1704.3)
   a. Periodic special inspection of metal floor prior to concrete placement and roof decks.
   b. Periodic special inspection of single pass fillet welds less than or equal to 5/16"
   c. Continuous special inspection of single pass fillet welds greater than 5/16" and multi-pass fillet welds.
   d. Continuous special inspection of complete and partial penetration welds.
7. High Strength bolted connections (IBC Section 1704.3.3)
   a. Periodic special inspection of bearing type connections.
   b. Continuous special inspection of slip critical connections. Special inspector shall be present to observe the pre-installation testing and calibration procedures.
8. Epoxy Anchors (IBC Section 1704.13)
   a. Special inspection shall verify all drilled holes' size and depth prior to installation of epoxy and anchor rod.
9. Prefabricated Metal Building (IBC Section 1704.2)
   a. Periodic special inspection of shop fabrications unless fabricator is an approved fabricator by the State Building Official.
   b. Approved fabricators shall submit a certificate of compliance at the completion of the fabrication to the building official.
10. Cold-formed steel framing (IBC Section 1707.4)
   a. Periodic special inspection of welding of seismic-force-resisting element.
   b. Periodic special inspection of screw attachments, bolting, anchoring, etc. of seismic braces, drags, and holddowns.

⚠1

DEFERRED SUBMITTALS

For the purpose of this section, deferred submittals are defined as per section 106.3.4.2 of the IBC. Submittal documents for deferred submittal items shall be submitted to the engineer/architect for their review for general conformance with the design of the building. Deferred structural submittals for this project are:

1. Prefabricated Metal Building

LEGEND OF MARKS AND ABREVIATIONS

AB	ANCHOR BOLT(S)	JST	JOIST
ABV	ABOVE		
ALT	ALTERNATE	k	KIP(S) = 1000 POUNDS
APPROX	APPROXIMATE	KLF	KIPS PER LINEAL FOOT
ARCH	ARCHITECT(URAL)	KSF	KIPS PER SQUARE FOOT
BLDG	BUILDING	LBS	POUNDS
BLW	BELOW	LF	LINEAL FOOT
BM	BEAM	LLH	LONG LEG HORIZONTAL
BOT	BOTTOM	LLV	LONG LEG VERTICAL
BRG	BEARING	LSV	LONG SIDE VERTICAL
BTWN	BETWEEN		
		MAX	MAXIMUM
CC.	CENTER-TO CENTER	MECH	MECHANICAL
C.J.	CONST/CONTROL JOINT	MFR	MANUFACTURER
COL	COLUMN	MIN	MINIMUM
CONC	CONCRETE	MISC	MISCELLANEOUS
CONST	CONSTRUCTION		
CTR	CENTER	NIC	NOT IN CONTRACT
CW-x	CONCRETE WALL	NTS	NOT TO SCALE
DBA	DEFORMED BAR ANCHOR	O.C.	ON CENTER
DBE	DECK BEARING ELEVATION	O.F.	OUTSIDE FACE
DBL	DOUBLE	OPNG	OPENING
DET	DETAIL	OPP	OPPOSITE
DIA	DIAMETER		
DIM	DIMENSION	PCF	POUNDS PER CUBIC FOOT
DN	DOWN	PL	PLATE
DWG	DRAWING	PLF	POUNDS PER LINEAL FOOT
DWL	DOWEL	PSF	POUNDS PER SQUARE FOOT
		PSI	POUNDS PER SQUARE INCH
EA	EACH	PT	POINT
E.F.	EACH FACE		
ELEC	ELECTRICAL	REINF	REINFORCING
ELEV	ELEVATION	REQD	REQUIRED
EQUIP	EQUIPMENT		
EQ	EQUAL		
E.W.	EACH WAY	SHT	SHEET
EXST	EXISTING	SI	SPECIAL INSPECTION
EXP	EXPANSION	SIM	SIMILAR
EXT	EXTERIOR	SOG	SLAB-ON-GRADE
		SQ	SQUARE
FC-x	CONTINUOUS FOOTING MARK	STAG	STAGGERED
F.D.	FLOOR DRAIN	STD	STANDARD
FDN	FOUNDATION	STL	STEEL
F.F.	FINISHED FLOOR	STR	STRUCTURAL
FS-x	SQUARE FOOTING MARK	STS	SELF TAPPING SCREWS
FT	FOOT		
FTG	FOOTING	T&B	TOP AND BOTTOM
FTS-x	THICKEN SLAB MARK	TEMP	TEMPERATURE
		THDS	THREADS
GA	GAUGE	T.O.	TOP OF
GALV	GALVANIZED	TOC	TOP OF CONCRETE
GSN	GENERAL STRUCTURAL NOTES	TOD	TOP OF DECK
		TOF	TOP OF FOOTING
HORIZ	HORIZONTAL	TOW	TOP OF WALL
HT	HEIGHT	TYP	TYPICAL
ICBO	INTERNATIONAL CONFERENCE OF BUILDING OFFICIALS	UNO	UNLESS NOTED OTHERWISE
IBC	INTERNATIONAL BUILDING CODE		
I.F.	INSIDE FACE	VERT	VERTICAL
IN.	INCH		
INT	INTERIOR	W/	WITH
		WWF	WELDED WIRE FABRIC
JT	JOINT	WWM	WELDED WIRE MESH

CLIENT

UDOT CONNECTING COMMUNITIES

STATION #4325
MILE MARKER 49.7 HIGHWAY 143
PANGUITCH UTAH

DESIGNER

ARCHIPLEX GROUP
architecture · planning · design services
1135 South West Temple, Ste. A
Salt Lake City, UT 84101
P:(801) 961-7070
F:(801) 961-7373

CONSULTANTS

"Engineering Results"
BHB Consulting Engineers
A Professional Corporation
2766 South Main Street
Salt Lake City, Utah 84115
Phone: 801.355.5656
Fax: 801.355.5950
Email: bhb@bhbengineers.com

PROFESSIONAL SEAL

LICENSED PROFESSIONAL ENGINEER
No. 323922
GERALD R. McKENZIE
STATE OF UTAH

ISSUE

MARK	DATE	DESCRIPTION
⚠1	3/5/08	ADDENDUM 2
	01-2008	CONSTRUCTION DOCUMENTS

DFCM PROJECT NO:	07010900
DFCM CONTRACT NO:	077374
BHB PROJECT NO:	07150
DRAWN BY:	CHRIS B.
CHECKED BY:	GERALD M.
SCALE:	
DATE:	JANUARY, 2008

SHEET TITLE

GENERAL STRUCTURAL NOTES

S001

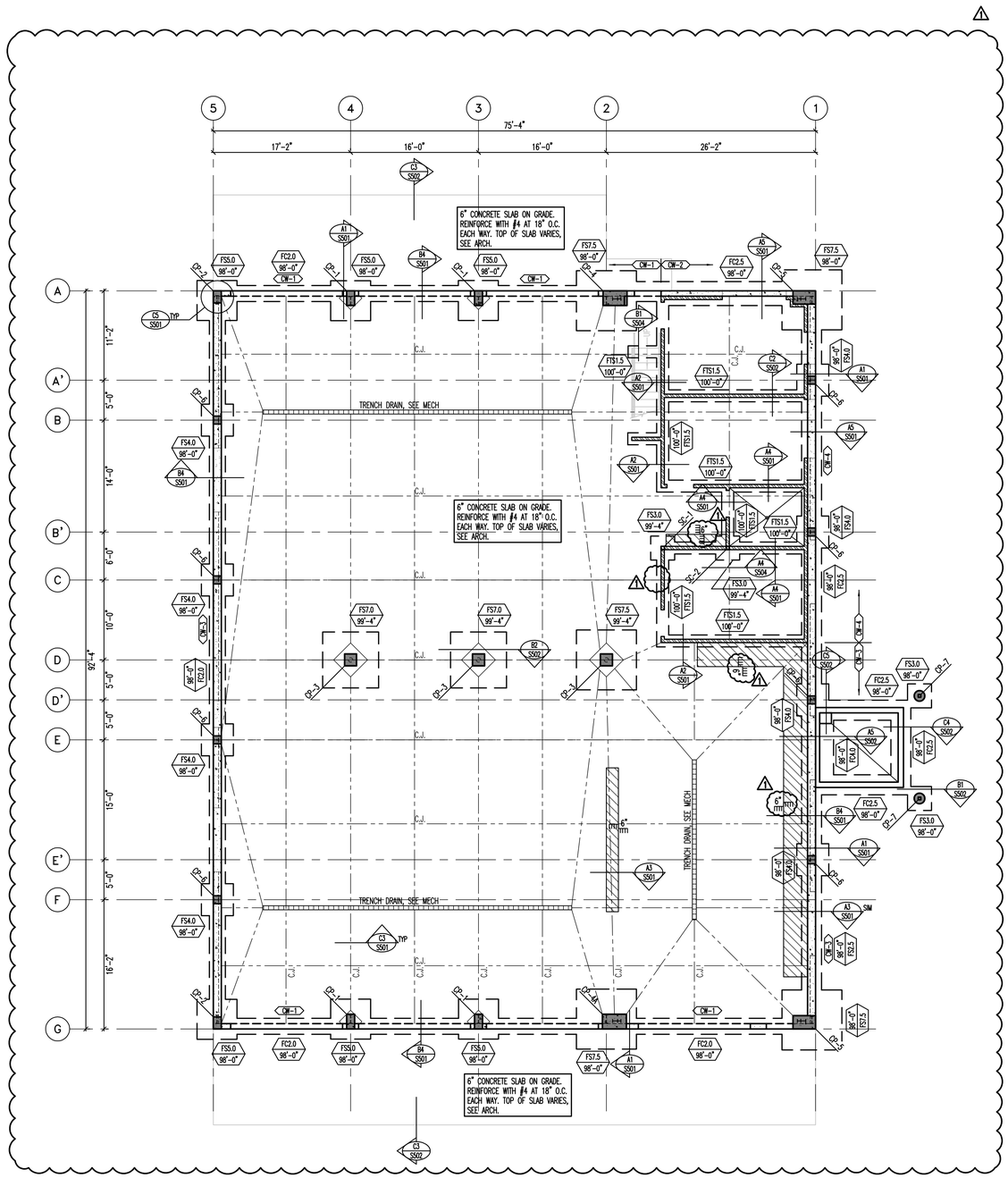

FOOTING AND FOUNDATION PLAN

SCALE: 1/8"=1'-0"

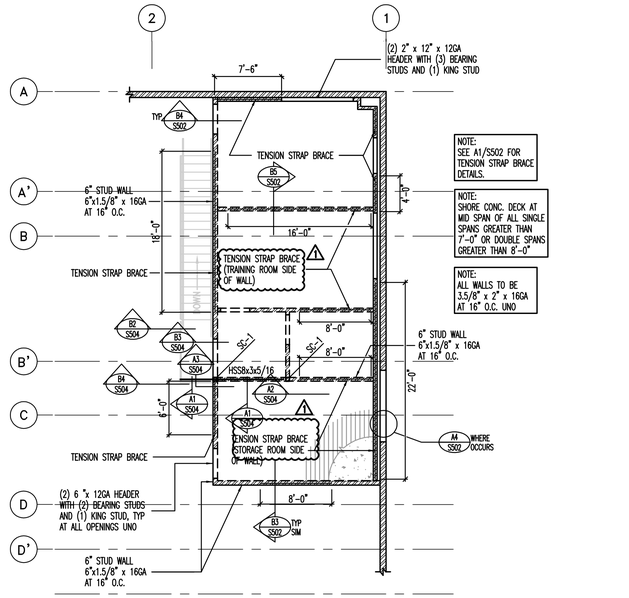

MEZZANINE FRAMING PLAN

SCALE: 1/8"=1'-0"

FOOTING NOTE: IF FOOTING DEPTHS CANNOT BE ACHIEVED DUE TO SUBGRADE LAVA ROCK BEDROCK THEN EPOXY (1) #5 x 30" FOR EVERY 3FT² OF FOOTING AREA (4) MIN PER FOOTING TO SECURE SPOT FOOTINGS TO LAVA BEDROCK.

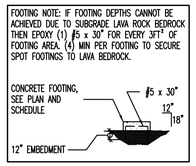

MARKS AND SYMBOLS LEGEND

- SECTION MARK / SHEET NUMBER
- FOOTING DESIGNATION / TOP OF FOOTING ELEVATION
- INDICATES CONCRETE WALL.
- DEPRESS FOUNDATION WALL AND POUR SLAB OVER. SEE DETAIL B4/SS01
- INDICATES CONCRETE OVER METAL FLOOR DECK. SEE GENERAL STRUCTURAL NOTES ON SHEET S001.
- INDICATES 4" THICK CONCRETE HOUSE-KEEPING PAD. REINF WITH #4 BARS AT 12" O.C. EACH WAY. SEE DETAIL A3/SS01.
- CWx — INDICATES CONCRETE FOUNDATION WALL TYPE, SEE SCHEDULE ON SHEET S601.
- FCxx — INDICATES CONTINUOUS FOOTING. SEE SCHEDULE ON SHEET S601.
- FSxx — INDICATES SPOT FOOTING. SEE SCHEDULE ON SHEET S601.
- CPx — INDICATES CONCRETE PIER TYPE, SEE SCHEDULE ON SHEET S601.
- C.J. — INDICATES CONTROL/CONSTRUCTION JOINT. SEE DETAILS C3/SS01 AND C4/SS01.
- SC-x — INDICATES STEEL COLUMN. SEE SCHEDULE ON SHEET S601.

FOOTING AND FOUNDATION PLAN NOTES

1. COORDINATE LOCATION OF DEPRESSED SLABS, SLOPED SLABS, AND FLOOR DRAINS WITH ARCHITECTURAL AND MECHANICAL DRAWINGS.
2. SEE ARCHITECTURAL AND CIVIL DRAWINGS FOR EXTERIOR CONCRETE WORK AT DOORS, SIDEWALKS, ETC.
4. ALL SPOT FOOTINGS SHALL BE CENTERED UNDER COLUMNS (UNO).
5. SEE DETAILS C1/SS01 AND C2/SS01 FOR CONDITION WHERE BURIED PIPES RUN PARALLEL AND PERPENDICULAR TO FOOTINGS.
6. SEE DETAIL C3/SS01 AND C4/SS01 FOR TYPICAL CONTROL/CONSTRUCTION JOINTS IN CONCRETE SLAB ON GRADE AND AT SLAB DEPRESSIONS.
7. SEE DETAIL B1/SS01 FOR SLAB REINFORCING WHERE CONTROL JOINTS ARE DISCONTINUOUS.
8. SEE DETAIL B2/SS01 FOR ADDITIONAL REINFORCING AT MISCELLANEOUS OPENINGS IN CONCRETE WALLS.
9. SEE DETAIL A3/SS01 FOR ANCHORAGE OF HOUSEKEEPING PADS.
10. SEE ARCHITECTURAL DRAWINGS FOR DIMENSIONS TO ALL STEEL COLUMNS.
11. FOOTING AND CONCRETE PIER SIZES SHOWN ARE AN ESTIMATE OF ACTUAL SIZES. ACTUAL SIZES WILL BE PROVIDED AFTER PREFABRICATED METAL BUILDER IS SELECTED. ALL BIDDERS SHALL PROVIDE UNIT PRICES FOR ADDING OR SUBTRACTING VOLUME OF CONCRETE, WEIGHT OF REINFORCING STEEL AND VOLUME OF EARTHWORK.
12. SEE "EARTHWORK" NOTES ON SHEET S001 AND DETAIL C1/SS02 FOR MINIMUM FILL REQUIRED BENEATH FOOTINGS.

CLIENT

UDOT CONNECTING COMMUNITIES

STATION #4325
MILE MARKER 49.7 HIGHWAY 143
PANGUITCH UTAH

DESIGNER

ARCHIPLEX GROUP
architecture · planning · design services
1135 South West Temple, Ste. A
Salt Lake City, UT 84101
P:(801) 961-7070
F:(801) 961-7373

CONSULTANTS

"Engineering Results"
BHB Consulting Engineers
A Professional Corporation
2766 South Main Street
Salt Lake City, Utah 84115
Phone: 801.355.5656
Fax: 801.355.5950
Email: bhb@bhbengineers.com

PROFESSIONAL SEAL

LICENSED PROFESSIONAL ENGINEER — No. 323922 — GERALD R. McKENZIE — STATE OF UTAH

ISSUE

MARK	DATE	DESCRIPTION
1	3/5/08	ADDENDUM 2
	01-2008	CONSTRUCTION DOCUMENTS

DFCM PROJECT NO:	07010900
DFCM CONTRACT NO:	077374
BHB PROJECT NO:	07150
DRAWN BY:	CHRIS B.
CHECKED BY:	GERALD M.
SCALE:	
DATE:	JANUARY, 2008

SHEET TITLE

FOOTING AND FOUNDATION PLAN

S101

G:\2007\07150\Structural\07150_S-101.dwg, 3/4/2008 10:41:18 AM, jlynn

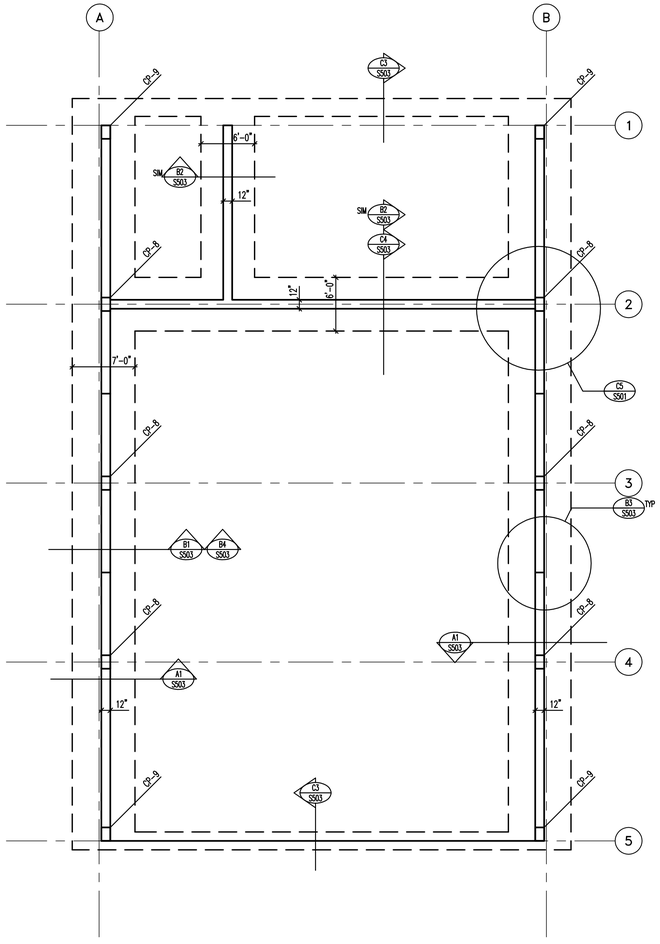

SALT STORAGE BLD FOOTING AND FOUNDATION PLAN
ADD ALT #3

SCALE: 1/8"=1'-0"

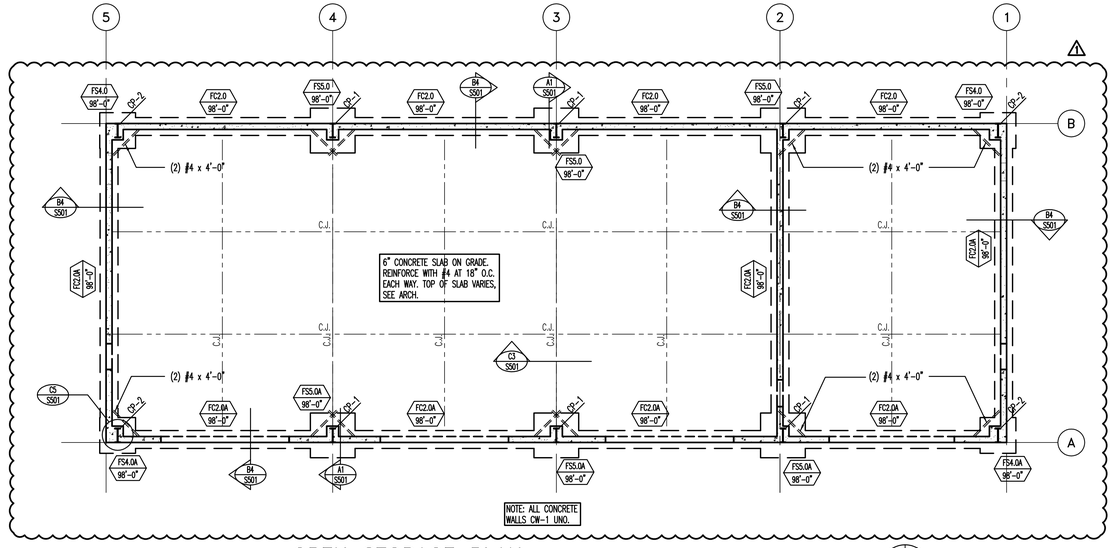

OPEN STORAGE PLAN
ADD ALT #4

SCALE: 1/8"=1'-0"

NOTE: SANDER RACK IS TO BE GALVANIZED.

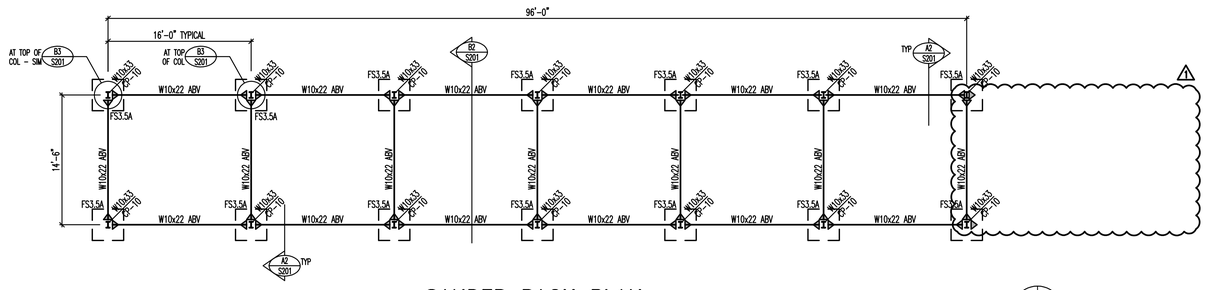

SANDER RACK PLAN
ADD ALT #1

SCALE: 1/8"=1'-0"

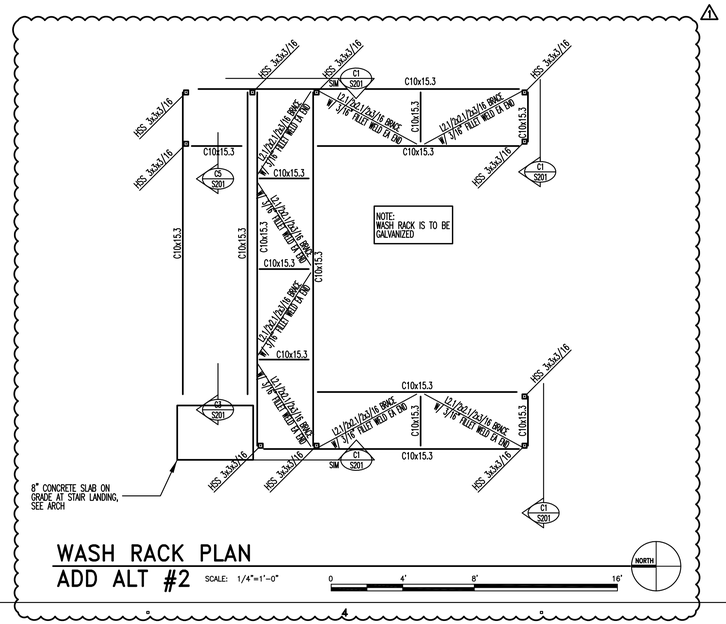

WASH RACK PLAN
ADD ALT #2

SCALE: 1/4"=1'-0"

NOTE: SEE FOOTING NOTE ON S101 FOR FOOTING DEPTH CONFLICTS WITH BEDROCK.

MARKS AND SYMBOLS LEGEND

- SECTION MARK / SHEET NUMBER
- FOOTING DESIGNATION / TOP OF FOOTING ELEVATION
- INDICATES CONCRETE WALL.
- DEPRESS FOUNDATION WALL AND POUR SLAB OVER. SEE DETAIL B4/S501
- INDICATES CONCRETE OVER METAL FLOOR DECK. SEE GENERAL STRUCTURAL NOTES ON SHEET S001.
- INDICATES 4" THICK CONCRETE HOUSE-KEEPING PAD. REINF WITH #4 BARS AT 12" O.C. EACH WAY. SEE DETAIL A3/S501.
- CWx — INDICATES CONCRETE FOUNDATION WALL TYPE, SEE SCHEDULE ON SHEET S601.
- FCxx — INDICATES CONTINUOUS FOOTING. SEE SCHEDULE ON SHEET S601.
- FSxx — INDICATES SPOT FOOTING. SEE SCHEDULE ON SHEET S601.
- CPx — INDICATES CONCRETE PIER TYPE, SEE SCHEDULE ON SHEET S601.
- C.J. — INDICATES CONTROL/CONSTRUCTION JOINT. SEE DETAILS C3/S501 AND C4/S501.
- SC-x — INDICATES STEEL COLUMN. SEE SCHEDULE ON SHEET S601.

FOOTING AND FOUNDATION PLAN NOTES

1. COORDINATE LOCATION OF DEPRESSED SLABS, SLOPED SLABS, AND FLOOR DRAINS WITH ARCHITECTURAL AND MECHANICAL DRAWINGS.
2. SEE ARCHITECTURAL AND CIVIL DRAWINGS FOR EXTERIOR CONCRETE WORK AT DOORS, SIDEWALKS, ETC.
4. ALL SPOT FOOTINGS SHALL BE CENTERED UNDER COLUMNS (UNO).
5. SEE DETAILS C1/S501 AND C2/S501 FOR CONDITION WHERE BURIED PIPES RUN PARALLEL AND PERPENDICULAR TO FOOTINGS.
6. SEE DETAIL C3/S501 AND C4/S501 FOR TYPICAL CONTROL/CONSTRUCTION JOINTS IN CONCRETE SLAB ON GRADE AND AT SLAB DEPRESSIONS.
7. SEE DETAIL B1/S501 FOR SLAB REINFORCING WHERE CONTROL JOINTS ARE DISCONTINUOUS.
8. SEE DETAIL B2/S501 FOR ADDITIONAL REINFORCING AT MISCELLANEOUS OPENINGS IN CONCRETE WALLS.
9. SEE DETAIL A3/S501 FOR ANCHORAGE OF HOUSEKEEPING PADS.
10. SEE ARCHITECTURAL DRAWINGS FOR DIMENSIONS TO ALL STEEL COLUMNS.
11. FOOTING AND CONCRETE PIER SIZES SHOWN ARE AN ESTIMATE OF ACTUAL SIZES. ACTUAL SIZES WILL BE PROVIDED AFTER PREFABRICATED METAL BUILDER IS SELECTED. ALL BIDDERS SHALL PROVIDE UNIT PRICES FOR ADDING OR SUBTRACTING VOLUME OF CONCRETE, WEIGHT OF REINFORCING STEEL AND VOLUME OF EARTHWORK.
12. SEE "EARTHWORK" NOTES ON SHEET S001 AND DETAIL C1/S502 FOR MINIMUM FILL REQUIRED BENEATH FOOTINGS.

CLIENT

UDOT CONNECTING COMMUNITIES

STATION #4325
MILE MARKER 49.7 HIGHWAY 143
PANGUITCH UTAH

DESIGNER

ARCHIPLEX GROUP
architecture · planning · design services
1135 South West Temple, Ste. A
Salt Lake City, UT 84101
P:(801) 961-7070
F:(801) 961-7373

CONSULTANTS

"Engineering Results"
BHB Consulting Engineers
A Professional Corporation
2766 South Main Street
Salt Lake City, Utah 84115
Phone: 801.355.5656
Fax: 801.355.5950
Email: bhb@bhbengineers.com

PROFESSIONAL SEAL

LICENSED PROFESSIONAL ENGINEER
No. 323922
GERALD R. McKENZIE
STATE OF UTAH

ISSUE		
1	3/5/08	ADDENDUM 2
	01-2008	CONSTRUCTION DOCUMENTS
MARK	DATE	DESCRIPTION

DFCM PROJECT NO:	07010900
DFCM CONTRACT NO:	077374
BHB PROJECT NO:	07150
DRAWN BY:	CHRIS B.
CHECKED BY:	GERALD M.
SCALE:	
DATE:	JANUARY, 2008

SHEET TITLE

OUT BUILDING PLANS

S102

Q:\2007\07150\50\rvt\07150_S-102.dwg, 3/4/2008 10:41:13 AM, ilynn

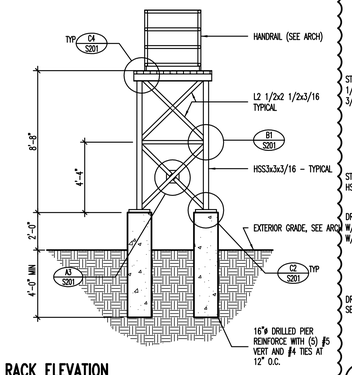

C1 WASH RACK ELEVATION
ADD ALT #2
NO SCALE

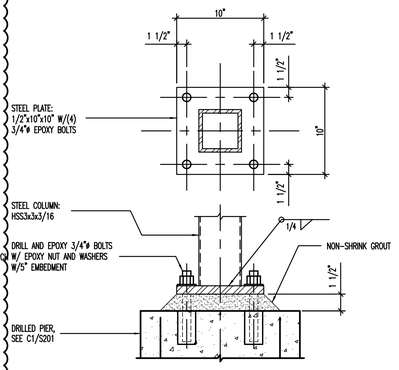

C2 ADD ALT #2
NO SCALE

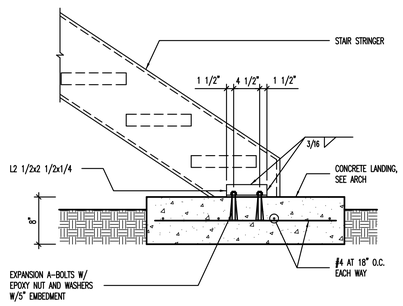

C3 STRINGER ANCHORAGE DETAIL - WASH RACK
ADD ALT #2
NO SCALE

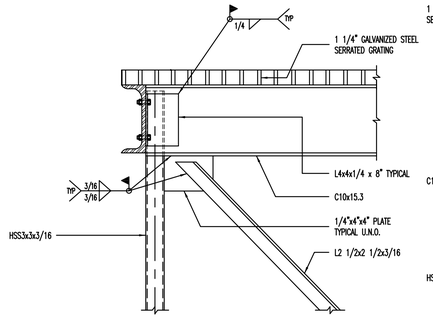

C4 TYPICAL BRACE DETAIL - WASH RACK
ADD ALT #2
NO SCALE

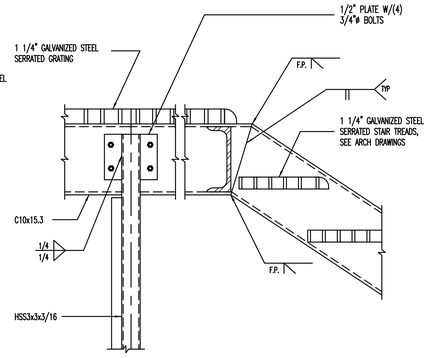

C5 STAIR SUPPORT DETAIL - WASH RACK
ADD ALT #2
NO SCALE

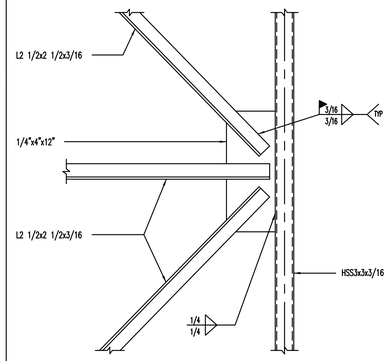

B1 BRACE DETAIL - WASH RACK
ADD ALT #2
NO SCALE

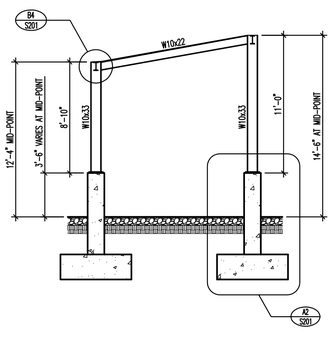

B2 SECTION AT SANDER RACK
ADD ALT #1
NO SCALE

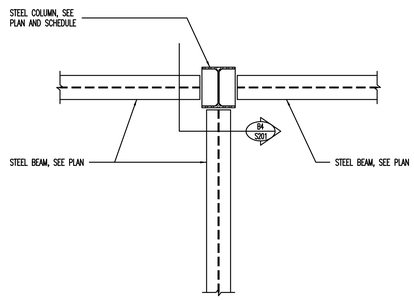

B3 MOMENT CONNECTION DETAIL AT SANDER RACK
[PLAN VIEW] ADD ALT #1
NO SCALE

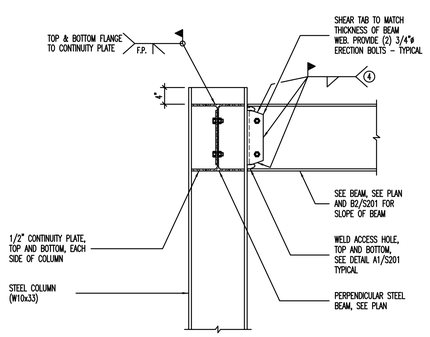

B4 WELDED UNREINFORCED FLANGE-WELDED WEB MOMENT CONNECTION DETAIL AT SANDER RACK
ADD ALT #1
NO SCALE

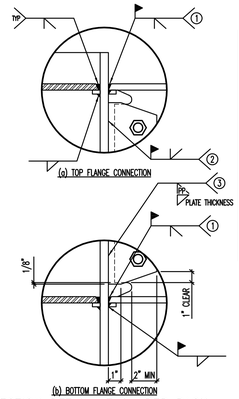

NOTES:
1. CJP GROOVE WELD AT TOP AND BOTTOM FLANGES. AT TOP FLANGE, EITHER (1) REMOVE WELD BACKING, BACKGOUGE, AND ADD 5/16" MIN FILLET WELD, OR (2) LEAVE BACKING IN PLACE AND ADD 5/16" FILLET UNDER BACKING. AT BOTTOM FLANGE, REMOVE WELD BACKING, BACKGOUGE, AND ADD 5/16" MIN FILLET WELD.
2. CJP GROOVE WELD FULL LENGTH OF WEB BETWEEN WELD ACCESS HOLES. PROVIDE NON-FUSIBLE WELD TABS. REMOVE WELD TABS AFTER WELDING AND GRIND END OF WELD SMOOTH AT WELD ACCESS HOLE.
3. FULL DEPTH PARTIAL PENETRATION FROM FAR SIDE.
4. FILLET WELD SHEAR TAB TO BEAM WEB. WELD SIZE SHALL BE EQUAL TO THICKNESS OF SHEAR TAB MINUS 1/16". WELD SHALL EXTEND OVER THE TOP AND BOTTOM ONE-THIRD OF THE SHEAR TAB HEIGHT AND ACROSS THE TOP AND BOTTOM.

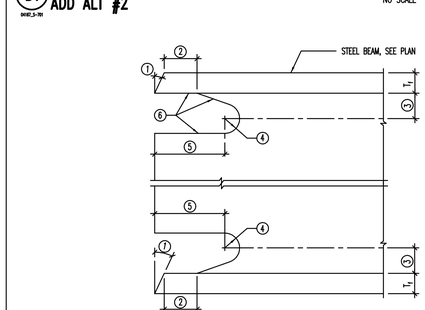

NOTES:
1. BEVEL AS REQUIRED BY AWS D1.1 FOR SELECTED GROOVE WELD PROCEDURE.
   A. TOLERANCES SHALL NOT ACCUMULATE TO THE EXTENT THAT THE ANGLE OF THE ACCESS HOLE CUT TO THE FLANGE SURFACE EXCEEDS 25°.
2. LARGER OF T_1 OR 1/2".
3. 3/4 T_1 TO T_2, 3/4" MIN.
4. 3/8" MINIMUM RADIUS.
5. 3 T_1.
6. SEE *FEMA-353, Recommended Specifications and Quality Assurance Guidelines for Steel Moment-Frame Construction for Seismic Applications*, FOR FABRICATION DETAILS INCLUDING CUTTING METHODS AND SMOOTHNESS REQUIREMENTS.

A1 RATHOLE DETAIL AT MOMENT CONNECTION AT SANDER RACK ADD ALT #1
NO SCALE

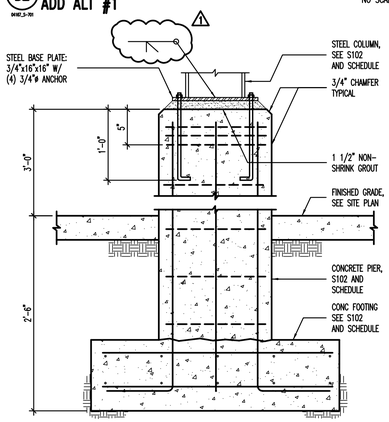

A2 SANDER RACK FOOTING DETAIL
ADD ALT #1
NO SCALE

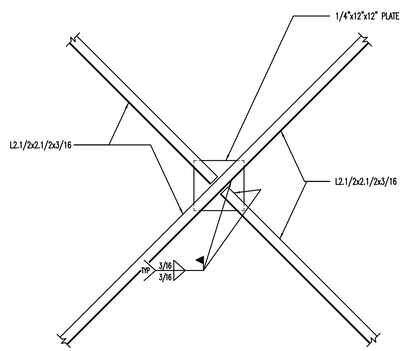

A3 DETAIL
ADD ALT #2
NO SCALE

CLIENT

UDOT CONNECTING COMMUNITIES

STATION #4325
MILE MARKER 49.7 HIGHWAY 143
PANGUITCH UTAH

DESIGNER

ARCHIPLEX GROUP
architecture · planning · design services
1135 South West Temple, Ste. A
Salt Lake City, UT 84101
P:(801) 961-7070
F:(801) 961-7373

CONSULTANTS

"Engineering Results"
BHB Consulting Engineers
A Professional Corporation
2766 South Main Street
Salt Lake City, Utah 84115
Phone: 801.355.5656
Fax: 801.355.5950
Email: bhb@bhbengineers.com

PROFESSIONAL SEAL

LICENSED PROFESSIONAL ENGINEER
No. 323922
GERALD R. McKENZIE
STATE OF UTAH

ISSUE		
1	3/5/08	ADDENDUM 2
	01-2008	CONSTRUCTION DOCUMENTS
MARK	DATE	DESCRIPTION

DFCM PROJECT NO:	07010900
DFCM CONTRACT NO:	077374
BHB PROJECT NO:	07150
DRAWN BY:	CHRIS B.
CHECKED BY:	GERALD M.
SCALE:	
DATE:	JANUARY, 2008

SHEET TITLE

SANDER AND WASH RACK DETAILS

S201

I:\2007\07150\Structural\07150_S-201.dwg, 3/4/2008 2:25:48 PM, chrisb

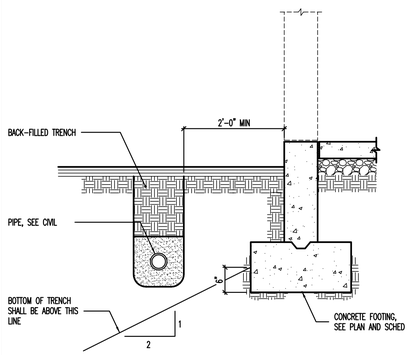

C1 CONDITION AT PIPE PARALLEL TO CONCRETE FOOTING
NO SCALE

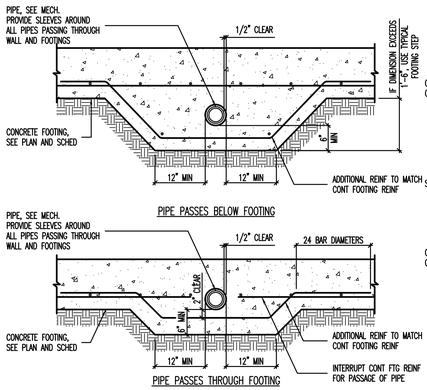

C2 CONDITIONS AT PIPE PERPENDICULAR TO FOOTING
NO SCALE

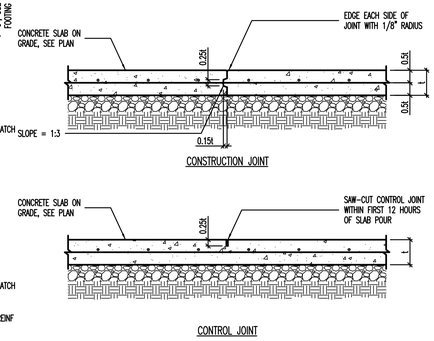

C3 TYPICAL SLAB ON GRADE JOINT DETAILS
NO SCALE

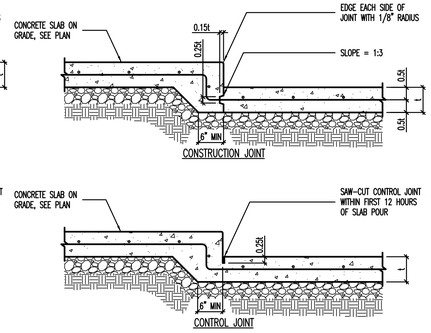

C4 JOINT DETAILS AT SLAB DEPRESSIONS
NO SCALE

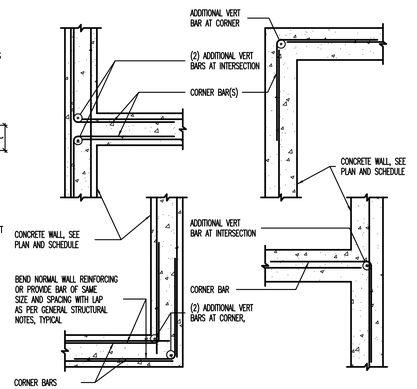

C5 TYPICAL CORNER WALL REINFORCING AT CONCRETE WALLS [PLAN VIEW]
NO SCALE

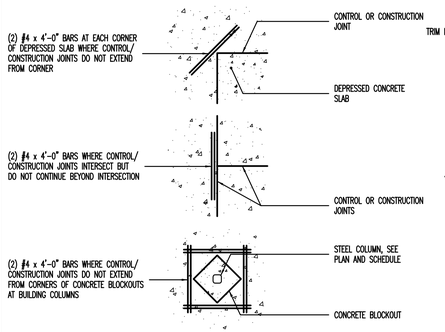

B1 LOCATIONS REQUIRING ADDITIONAL SLAB REINFORCING [PLAN VIEW]
NO SCALE

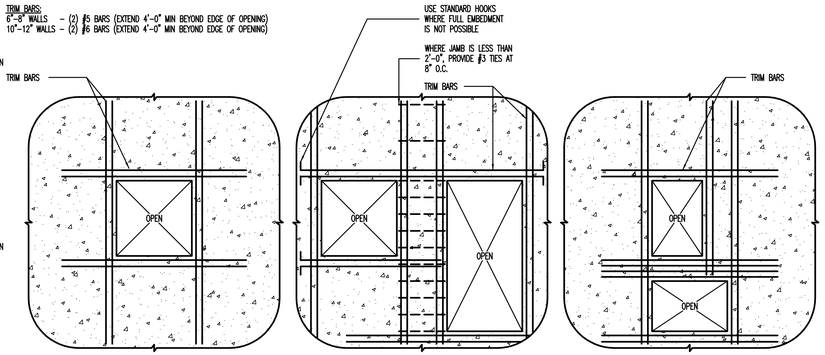

B2 TYPICAL REINFORCING FOR MISCELLANEOUS OPENINGS LESS THAN 3'-0" IN CONCRETE WALLS
WHERE MISCELLANEOUS OPENING WIDTH IS GREATER THAN 3'-0" WIDE, CONTACT STRUCTURAL ENGINEER.
NO SCALE

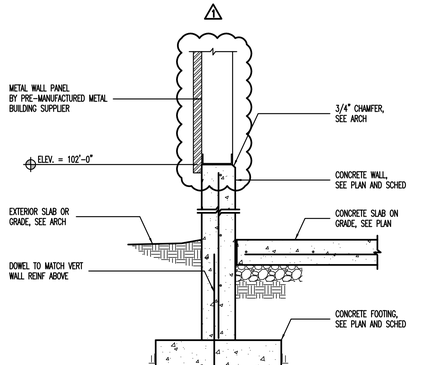

B4 FOUNDATION WALL DETAIL
NO SCALE

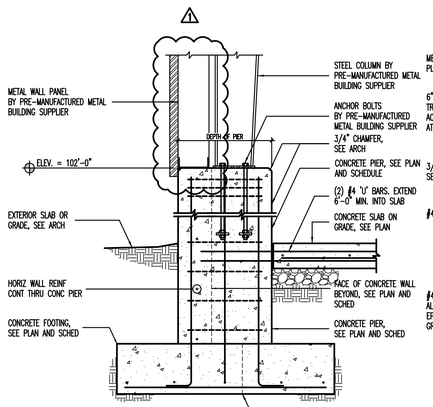

A1 STEEL COLUMN BEARING AT CONCRETE PIER/FOOTING
NO SCALE

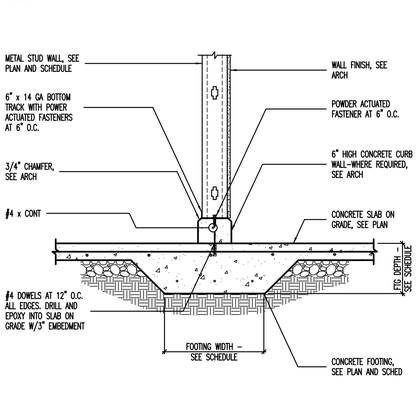

A2 THICKENED SLAB FOOTING AT INTERIOR STUD WALL
NO SCALE

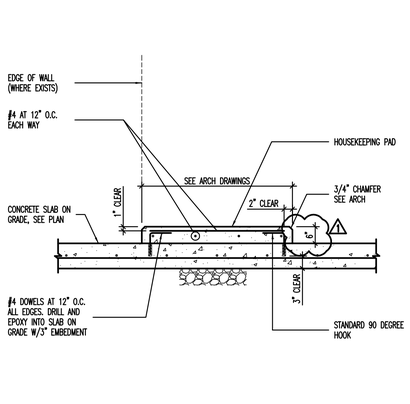

A3 TYPICAL HOUSEKEEPING PAD
NO SCALE

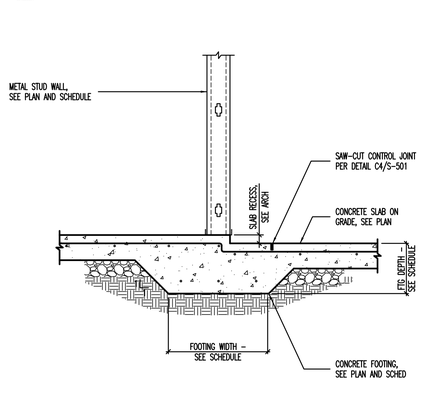

A4 RECESSED SLAB AT THICKENED SLAB FOOTING
NO SCALE

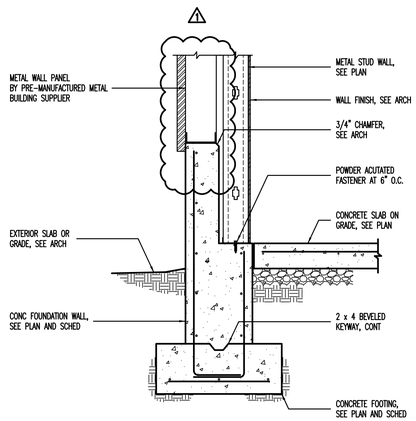

A5 METAL STUD WALL AT FOOTING
NO SCALE

CLIENT

UDOT CONNECTING COMMUNITIES

STATION #4325
MILE MARKER 49.7 HIGHWAY 143
PANGUITCH UTAH

DESIGNER

ARCHIPLEX GROUP
architecture · planning · design services
1135 South West Temple, Ste. A
Salt Lake City, UT 84101
P:(801) 961-7070
F:(801) 961-7373

CONSULTANTS

"Engineering Results"
BHB Consulting Engineers
A Professional Corporation
344 West 300 North
Suite 202
Salt Lake City, Utah 84103
Phone: 801.355.3656
Fax: 801.355.3950
Email: bhb@bhbengineers.com

PROFESSIONAL SEAL

ISSUE		
1	3/5/08	ADDENDUM 2
	01-2008	CONSTRUCTION DOCUMENTS
MARK	DATE	DESCRIPTION

DFCM PROJECT NO:	07010900
DFCM CONTRACT NO:	077374
BHB PROJECT NO:	07150
DRAWN BY:	CHRIS B.
CHECKED BY:	GERALD M.
SCALE:	
DATE:	JANUARY, 2008

SHEET TITLE

FOOTING AND FOUNDATION DETAILS

S501

Q:\2007\07150\Struct\07150_S-501.dwg, 3/3/2008 1:38:49 PM, rvan

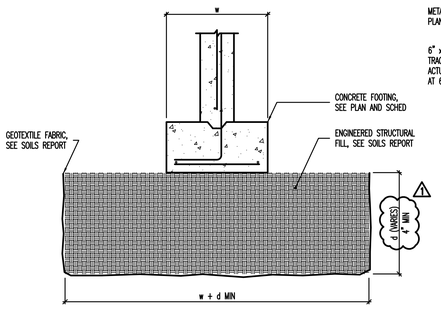

C1 ENGINEERED STRUCTURAL FILL DETAIL

NO SCALE

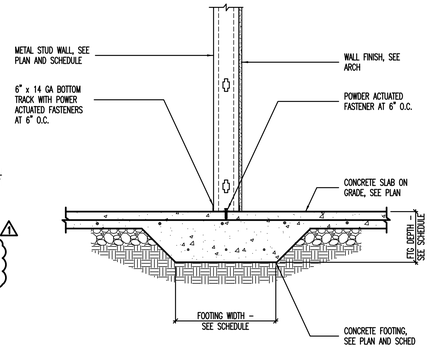

C2 THICKENED SLAB FOOTING AT INTERIOR STUD WALL

NO SCALE

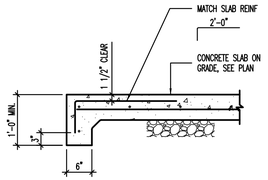

C3 SLAB TURNDOWN DETAIL

NO SCALE

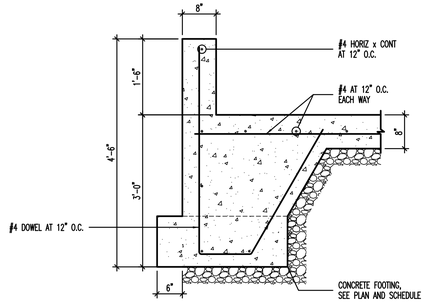

C4 WASTE OIL SLAB DETAIL

NO SCALE

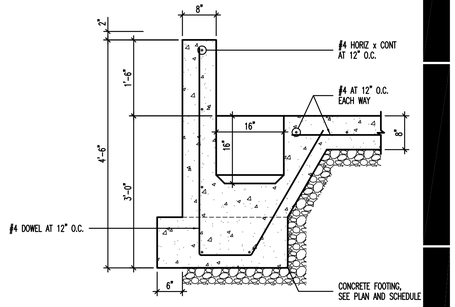

C5 WASTE OIL SLAB DETAIL

NO SCALE

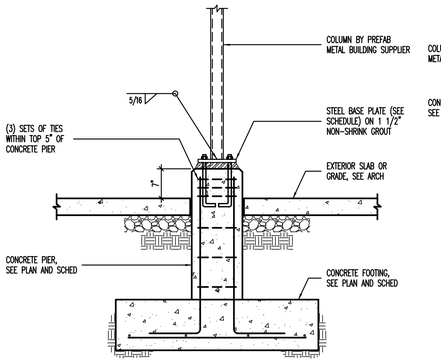

B1 EXTERIOR STEEL COLUMN BEARING ON CONCRETE PIER

NO SCALE

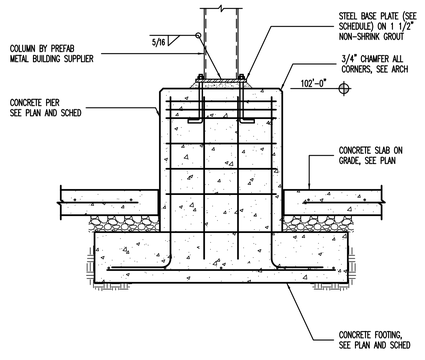

B2 TYPICAL INTERIOR STEEL COLUMN TO FOOTING DETAIL

NO SCALE

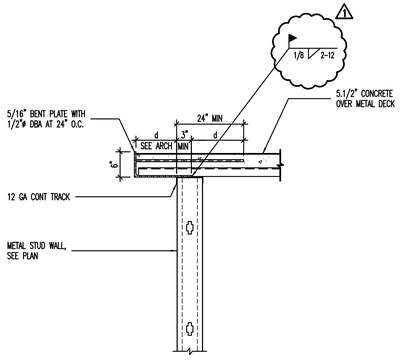

B3 STEEL DECK EDGE DETAIL PERPENDICULAR TO WALL

NO SCALE

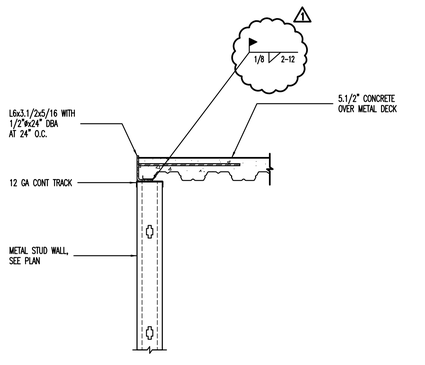

B4 STEEL DECK EDGE DETAIL PERPENDICULAR TO WALL

NO SCALE

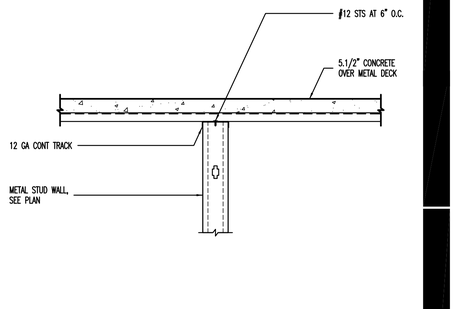

B5 STEEL DECK ON INTERIOR BEARING WALL

NO SCALE

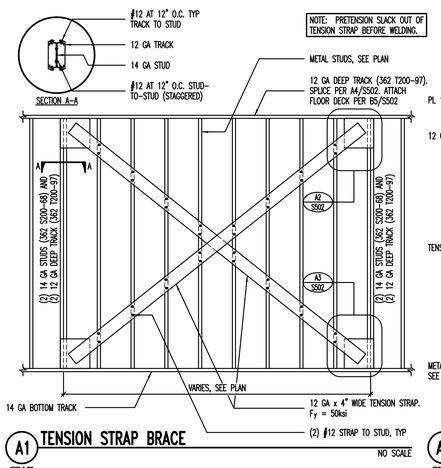

A1 TENSION STRAP BRACE

NO SCALE

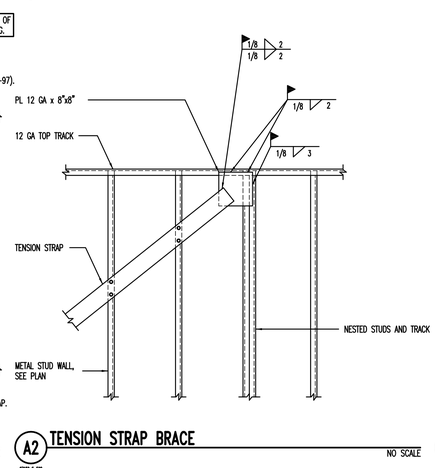

A2 TENSION STRAP BRACE

NO SCALE

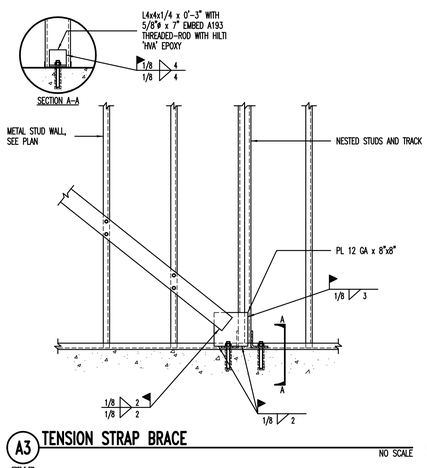

A3 TENSION STRAP BRACE

NO SCALE

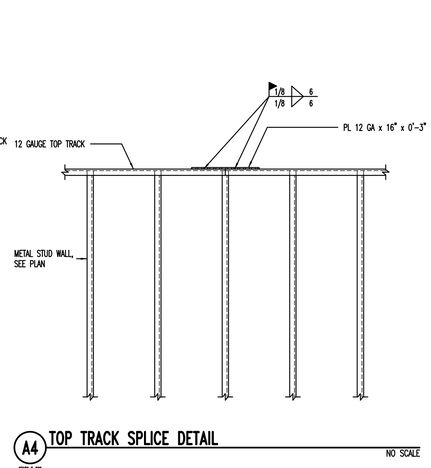

A4 TOP TRACK SPLICE DETAIL

NO SCALE

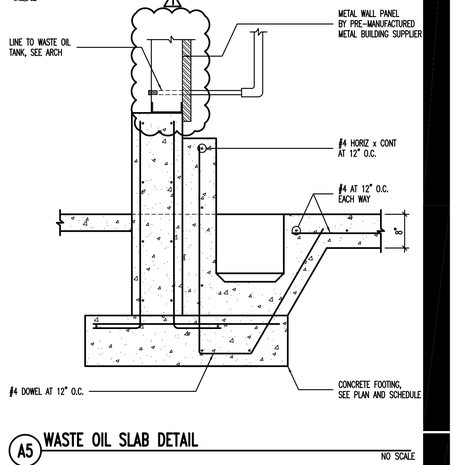

A5 WASTE OIL SLAB DETAIL

NO SCALE

CLIENT

UDOT CONNECTING COMMUNITIES

STATION #4325
MILE MARKER 49.7 HIGHWAY 143
PANGUITCH UTAH

DESIGNER

ARCHIPLEX GROUP
architecture · planning · design services
1135 South West Temple, Ste. A
Salt Lake City, UT 84101
P:(801) 961-7070
F:(801) 961-7373

CONSULTANTS

"Engineering Results"
BHB Consulting Engineers
A Professional Corporation
2766 South Main Street
Salt Lake City, Utah 84115
Phone: 801.355.5656
Fax: 801.355.5950
Email: bhb@bhbengineers.com

PROFESSIONAL SEAL

LICENSED PROFESSIONAL ENGINEER
No. 323922
GERALD R. McKENZIE
STATE OF UTAH

ISSUE		
1	3/5/08	ADDENDUM 2
	01-2008	CONSTRUCTION DOCUMENTS
MARK	DATE	DESCRIPTION

DFCM PROJECT NO:	07010900
DFCM CONTRACT NO:	077374
BHB PROJECT NO:	07150
DRAWN BY:	CHRIS B.
CHECKED BY:	GERALD M.
SCALE:	
DATE:	JANUARY, 2008

SHEET TITLE

FOOTING AND FOUNDATION DETAILS

S502

Q:\2007\07150\Struct\07150_S-502.dwg, 3/4/2008 10:41:29 AM, jlynn

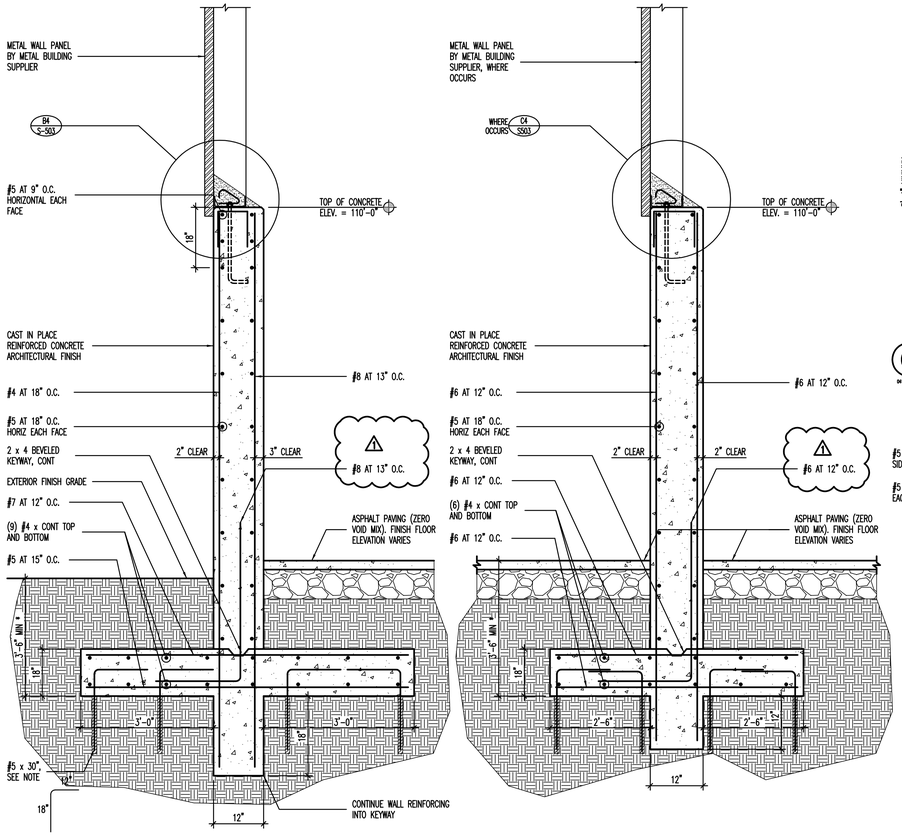

B1 WALL AND FOOTING DETAIL – SALT STORAGE
NO SCALE

B2 WALL AND FOOTING DETAIL – SALT STORAGE
NO SCALE

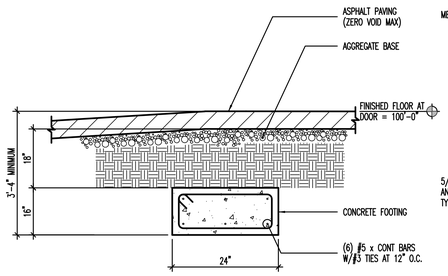

C3 FOOTING DETAIL – SALT STORAGE
NO SCALE

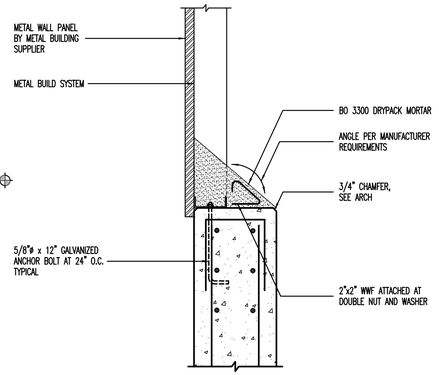

C4 WALL SECTION AT GRID 2 – SALT STORAGE
NO SCALE

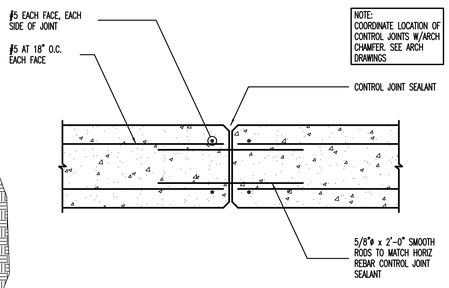

B3 JOINT DETAIL – SALT STORAGE
NO SCALE

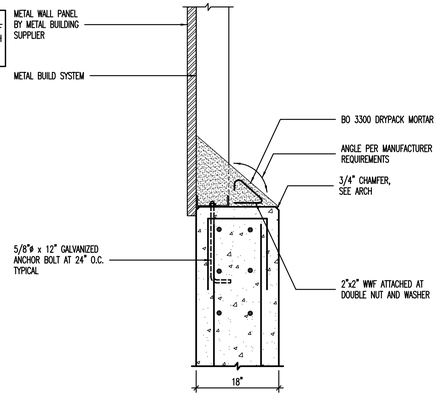

B4 WALL SECTION AT GRIDS A & B SALT STORAGE
NO SCALE

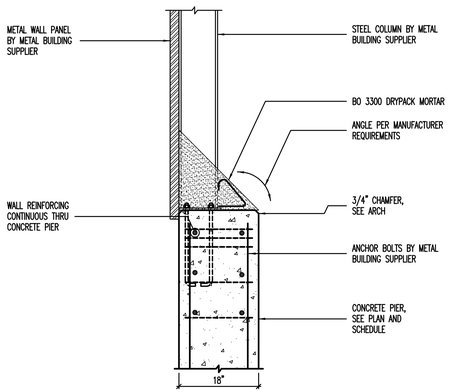

A1 WALL SECTION AT COLUMNS AT GRIDS A AND D – SALT STORAGE
NO SCALE

NOTE: IF FOOTING DEPTHS SHOWN CANNOT BE ACHIEVED DUE TO LAVA ROCK BEDROCK, THEN REMOVE LAVA ROCK AS REQ'D TO A DEPTH OF 24". ELIMINATE KEYWAY AND EPOXY VERT WALL REINFORCING (12" EMBEDMENT) INTO LAVA ROCK. EPOXY (2) #5 x 30" WITH 12" EMBEDMENT AT 18" O.C. ON BOTH SIDES OF WALL.

CLIENT

UDOT CONNECTING COMMUNITIES

STATION #4325
MILE MARKER 49.7 HIGHWAY 143
PANGUITCH UTAH

DESIGNER

ARCHIPLEX GROUP
architecture · planning · design services
1135 South West Temple, Ste. A
Salt Lake City, UT 84101
P:(801) 961-7070
F:(801) 961-7373

CONSULTANTS

"Engineering Results"
BHB Consulting Engineers
A Professional Corporation
2766 South Main Street
Salt Lake City, Utah 84115
Phone: 801.355.5656
Fax: 801.355.5950
Email: bhb@bhbengineers.com

PROFESSIONAL SEAL

LICENSED PROFESSIONAL ENGINEER
No. 323922
GERALD R. McKENZIE
STATE OF UTAH

ISSUE

MARK	DATE	DESCRIPTION
1	3/5/08	ADDENDUM 2
	01-2008	CONSTRUCTION DOCUMENTS

DFCM PROJECT NO:	07010900
DFCM CONTRACT NO:	077374
BHB PROJECT NO:	07150
DRAWN BY:	CHRIS B.
CHECKED BY:	GERALD M.
SCALE:	
DATE:	JANUARY, 2008

SHEET TITLE

ADD ALT #3
SALT STORAGE FOOTING FOUNDATION DETAILS

S503

Q:\2007\07150\Drw\07150_S-503.dwg Larissa

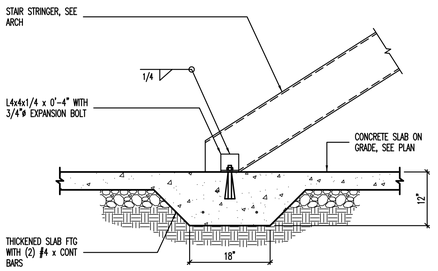

B1 TYPICAL STAIR STRINGER BEARING DETAIL
NO SCALE

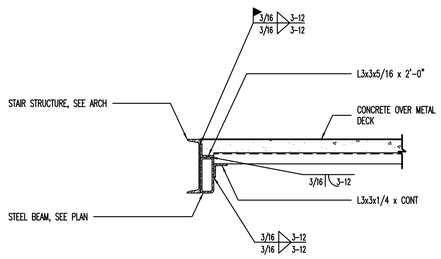

B2 STAIR LANDING DETAIL
NO SCALE

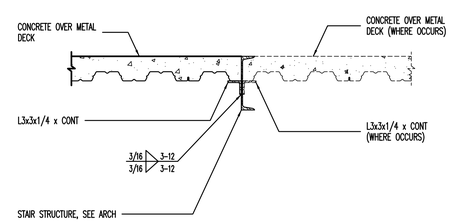

B3 STAIR LANDING DETAIL
NO SCALE

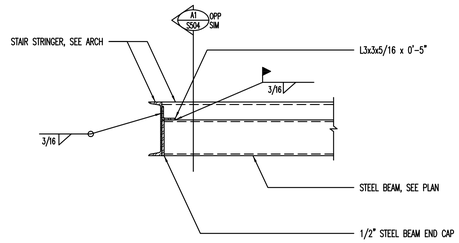

B4 STAIR LANDING DETAIL
NO SCALE

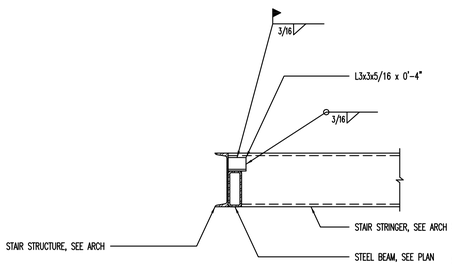

A1 STAIR STRINGER CONNECTION
NO SCALE

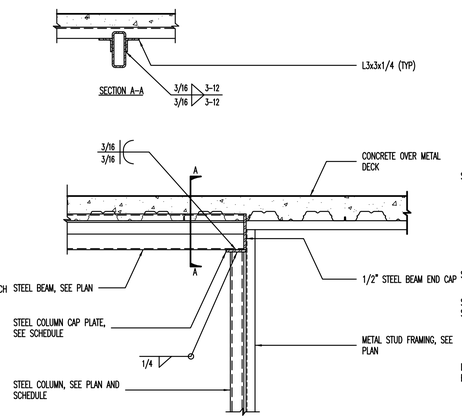

A2 DETAIL
NO SCALE

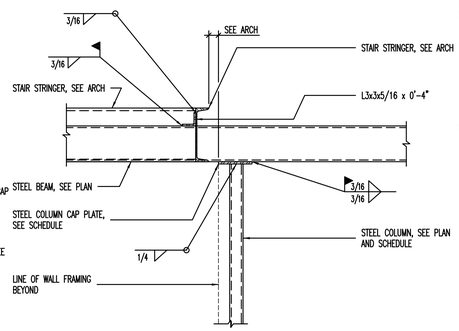

A3 STRINGER TO BEAM AND BEAM TO COLUMN CONNECTION
NO SCALE

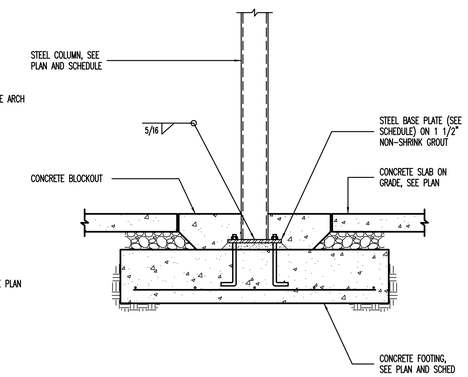

A4 TYPICAL INTERIOR STEEL COLUMN TO FOOTING DETAIL
NO SCALE

8/15/07

CLIENT

UDOT CONNECTING COMMUNITIES

STATION #4325
MILE MARKER 49.7 HIGHWAY 143
PANGUITCH UTAH

DESIGNER

ARCHIPLEX GROUP
architecture · planning · design services
1135 South West Temple, Ste. A
Salt Lake City, UT 84101
P:(801) 961-7070
F:(801) 961-7373

CONSULTANTS

"Engineering Results"
BHB Consulting Engineers
A Professional Corporation
2766 South Main Street
Salt Lake City, Utah 84115
Phone: 801.355.5656
Fax: 801.355.5950
Email: bhb@bhbengineers.com

PROFESSIONAL SEAL

LICENSED PROFESSIONAL ENGINEER
No. 323922
GERALD R. McKENZIE
STATE OF UTAH

ISSUE

MARK	DATE	DESCRIPTION
1	3/5/08	ADDENDUM 2
	01-2008	CONSTRUCTION DOCUMENTS

DFCM PROJECT NO:	07010900
DFCM CONTRACT NO:	077374
BHB PROJECT NO:	07150
DRAWN BY:	CHRIS B.
CHECKED BY:	GERALD M.
SCALE:	
DATE:	JANUARY, 2008

SHEET TITLE

MEZZANINE STAIR DETAILS

S504

CONCRETE FOOTING SCHEDULE

MARK	WIDTH	LENGTH	DEPTH	REINFORCING CROSSWISE				REINFORCING LENGTHWISE				COMMENTS
				No.	SIZE	LENGTH	SPACING	No.	SIZE	LENGTH	SPACING	
FTS1.5	1'-6"	CONT	12"	–	–	–	–	2	#4	CONT	EQ	THICKENED SLAB
FC2.0	2'-0"	CONT	12"	–	–	–	–	3	#4	CONT	EQ	
FC2.0A	2'-0"	CONT	14"	–	–	–	–	3	#4	CONT	EQ	
FC2.5	2'-6"	CONT	12"	–	#5	2'-0"	14"	3	#5	CONT	EQ	
FC4.0	4'-0"	CONT	12"	–	#5	3'-6"	14"	4	#5	CONT	EQ	
FS2.5	2'-6"	2'-6"	12"	3	#5	2'-0"	EQ	3	#5	2'-0"	EQ	
FS3.0	3'-0"	3'-0"	12"	3	#5	2'-6"	EQ	3	#5	2'-6"	EQ	
FS3.5	3'-6"	3'-6"	12"	3	#5	3'-0"	EQ	3	#5	3'-0"	EQ	
FS3.5A	3'-6"	3'-6"	12"	3	#5	3'-0"	EQ	3	#5	3'-0"	EQ	REINFORCE TOP AND BOTTOM
FS4.0	4'-0"	4'-0"	12"	4	#5	3'-6"	EQ	4	#5	3'-6"	EQ	
FS4.0A	4'-0"	4'-0"	14"	4	#5	3'-6"	EQ	4	#5	3'-6"	EQ	
FS4.5	4'-6"	4'-6"	12"	4	#5	4'-0"	EQ	4	#5	4'-0"	EQ	
FS5.0	5'-0"	5'-0"	12"	5	#5	4'-6"	EQ	5	#5	4'-6"	EQ	
FS5.0A	5'-0"	5'-0"	14"	5	#5	4'-6"	EQ	5	#5	4'-6"	EQ	
FS5.5	5'-6"	5'-6"	12"	5	#5	5'-0"	EQ	5	#5	5'-0"	EQ	
FS6.0	6'-0"	6'-0"	12"	6	#5	5'-6"	EQ	6	#5	5'-6"	EQ	
FS7.0	7'-0"	7'-0"	14"	8	#5	6'-6"	EQ	8	#5	6'-6"	EQ	
FS7.5	7'-6"	7'-6"	14"	8	#5	7'-0"	EQ	8	#5	7'-0"	EQ	

CONCRETE FOOTING NOTES:
1. PLACE ALL FOOTING REINFORCING IN THE BOTTOM OF THE FOOTING WITH 3" CLEAR CONCRETE COVER (UNO).
2. TOP REINFORCING, WHERE OCCURS, SHALL BE PLACED IN THE TOP OF THE FOOTING WITH 2" MINIMUM CONCRETE COVER.
3. IF FOOTINGS ARE EARTH-FORMED, FOOTINGS SHALL BE 6" LONGER AND WIDER THAN SCHEDULED.
4. SEE GENERAL STRUCTURAL NOTES FOR ADDITIONAL REQUIREMENTS.
5. SOME SCHEDULED FOOTINGS MAY NOT BE USED, SEE FOOTING AND FOUNDATION PLAN FOR FOOTING MARKS.

C1 CONCRETE FOOTING SCHEDULE
SCHED_CONC_FTG-C3000-5100
NO SCALE

CONCRETE PIER SCHEDULE

MARK	PIER SIZE	REINFORCING		TYPE	COMMENTS
		VERTICAL	TIES		
CP-1	12" x 22"	(10) #5 BARS	(3) #3 AT 8" O.C.	A	
CP-2	18" x 12"	(10) #5 BARS	(3) #3 AT 8" O.C.	C	
CP-3	18" x 18"	(12) #5 BARS	(3) #3 AT 8" O.C.	B	
CP-4	22" x 32"	(20) #5 BARS	(3) #3 AT 8" O.C.	F	
CP-4A	22" x 36"	(20) #5 BARS	(3) #3 AT 8" O.C.	G	
CP-5	20" x 34"	(20) #5 BARS	(3) #3 AT 8" O.C.	D	
CP-6	12" x 12"	(8) #5 BARS	(3) #3 AT 8" O.C.	C	
CP-7	16"ø	(4) #5 BARS	#3 AT 8" O.C.	E	
CP-8	12" x 12"	(9) #5	(3) #3 AT 8" O.C.	C	
CP-9	12" x 12"	(9) #5	(3) #3 AT 8" O.C.	C	
CP-10	20" x 20"	(8) #8	(3) #3 AT 8" O.C.	J	

CONCRETE PIER NOTES:
1. INSTALL (3) SETS OF TIES AT 3" O.C. AT TOP OF ALL PIERS (UNO).
2. RUN HORIZONTAL CONCRETE WALL REINFORCING CONTINUOUS THROUGH PIER WHEN PIER IS POURED MONOLITHICALLY WITH CONCRETE WALL.
3. SEE GENERAL STRUCTURAL NOTES FOR ADDITIONAL REQUIREMENTS.

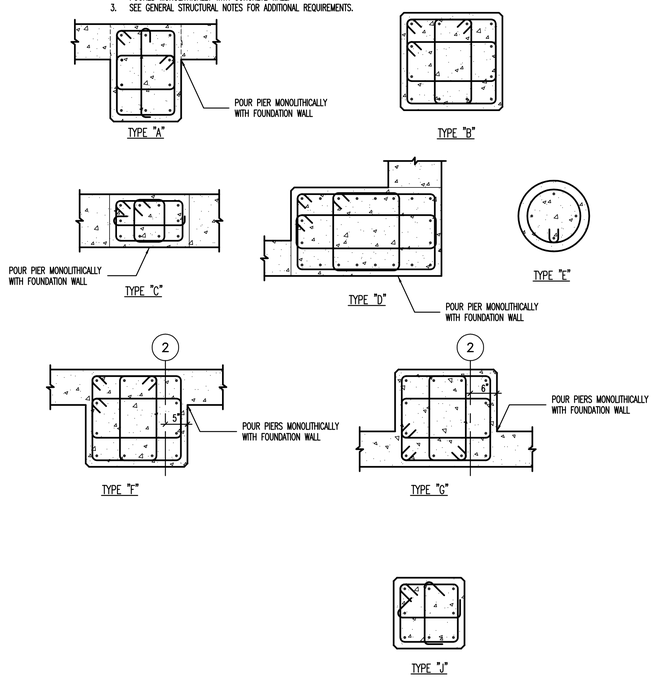

B2 CONCRETE PIER SCHEDULE
SCHED_CONC_PIER-01
NO SCALE

EPOXY DOWEL EMBED SCHEDULE

DOWEL SIZE	MINIMUM EMBEDMENT INTO EXISTING CONCRETE
#4	6 1/2"
#5	7 1/2"
#6	10"
#7	1'-1"
#8	1'-4"

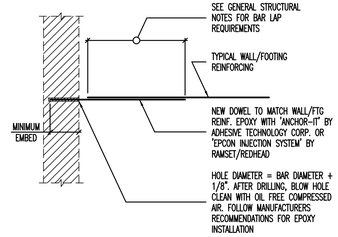

C4 EPOXY DOWEL EMBED SCHEDULE
SCHED_MISC_RNG-01
NO SCALE

CONCRETE WALL SCHEDULE

MARK	THICKNESS	REINFORCING			WALL TYPE	COMMENTS
		VERTICAL	HORIZONTAL	TOP AND BOTTOM		
CW-1	8"	#4 AT 18" O.C.	#4 AT 12" O.C.	(1) #4	A	-
CW-2	8"	#4 AT 18" O.C.	#4 AT 12" O.C.	(1) #4	A	ABV. ELEV. 100'-0"
	16"	#4 AT 18" O.C. E.F.	#4 AT 12" O.C. E.F.	(2) #4	C	BELOW ELEV. 100'-0"
CW-3	12"	#4 AT 18" O.C. E.F.	#4 AT 12" O.C. E.F.	(2) #4	C	
CW-4	12"	#4 AT 18" O.C. E.F.	#4 AT 12" O.C. E.F.	(1) #4	C	ABV. ELEV. 100'-0"
	16"	#4 AT 18" O.C. E.F.	#4 AT 12" O.C. E.F.	(2) #4	C	BELOW ELEV. 100'-0"

CONCRETE FOUNDATION WALL NOTES:
1. SEE GENERAL STRUCTURAL NOTES FOR ADDITIONAL REQUIREMENTS.
2. CONCRETE FOUNDATION WALLS NOT DESIGNATED ON PLANS SHALL BE REINFORCED AS FOLLOWS:

THICKNESS	VERTICAL REINFORCING	HORIZONTAL REINFORCING
6"	#4 BARS AT 18" O.C.	#4 BARS AT 16" O.C.
8"	#4 BARS AT 18" O.C.	#4 BARS AT 12" O.C.
10"	#4 BARS AT 16" O.C.	#5 BARS AT 15" O.C.
12"	#4 BARS AT 18" O.C. E.F.	#4 BARS AT 16" O.C. E.F.

ABBREVIATIONS:
E.F. EACH FACE
I.F. INSIDE FACE
O.F. OUTSIDE FACE

WALL REINFORCING PLACEMENT TYPES:

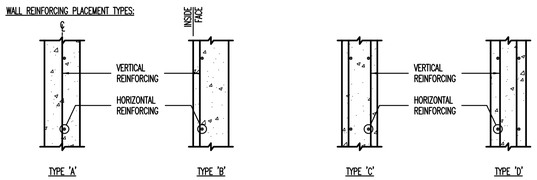

A1 CONCRETE WALL SCHEDULE
SCHED_CONC_WALL-01
NO SCALE

CONCRETE REINFORCING BAR LAP SPLICE SCHEDULE

BAR SIZE	f'c = 3000psi				f'c = 4000psi				f'c = 5000psi				f'c = 6000psi			
	REGULAR		TOP		REGULAR		TOP		REGULAR		TOP		REGULAR		TOP	
	CLASS		CLASS		CLASS		CLASS		CLASS		CLASS		CLASS		CLASS	
	A	B	A	B	A	B	A	B	A	B	A	B	A	B	A	B
#3	13"	17"	17"	21"	12"	16"	16"	21"	12"	16"	16"	21"	12"	16"	16"	21"
#4	17"	22"	22"	28"	15"	19"	19"	25"	13"	17"	17"	22"	12"	16"	16"	21"
#5	21"	27"	27"	35"	18"	24"	24"	31"	16"	21"	21"	27"	15"	19"	19"	25"
#6	27"	36"	36"	46"	24"	31"	31"	40"	21"	28"	28"	36"	20"	25"	25"	33"
#7	37"	48"	48"	63"	32"	42"	42"	54"	29"	38"	38"	49"	27"	34"	34"	44"
#8	49"	64"	64"	82"	42"	55"	55"	71"	38"	49"	49"	64"	35"	45"	45"	58"
#9	62"	80"	80"	104"	54"	70"	70"	90"	48"	62"	62"	81"	44"	57"	57"	74"
#10	78"	102"	102"	132"	68"	88"	88"	115"	61"	79"	79"	102"	56"	72"	72"	94"
#11	96"	125"	125"	162"	83"	108"	108"	141"	76"	97"	97"	126"	68"	88"	88"	115"

CONCRETE REINFORCING BAR LAP SPLICE NOTES:
1. THIS SCHEDULE SHALL BE USED FOR ALL BAR SPLICES IN CONCRETE WALLS, UNLESS NOTED OTHERWISE.
2. CLASS 'A' SPLICES MAY BE USED ONLY IN CASES WHERE 50% OR LESS OF THE BARS ARE SPLICED WITHIN THE LAP SPLICE LENGTH.
3. CLASS 'B' SPLICES SHALL BE USED FOR ALL SPLICES UNLESS THE REQUIREMENTS OF NOTE No. 2 ABOVE ARE MET.
4. TIES AND STIRRUPS SHALL NOT BE SPLICED.
5. SPLICES FOR BUNDLED BARS:
   a. FOR BUNDLED BARS OF THREE OR LESS, LAP SPLICE LENGTHS SHALL BE MULTIPLIED BY 1.2.
   b. FOR BUNDLED BARS OF FOUR OR MORE, LAP SPLICE LENGTHS SHALL BE MULTIPLIED BY 1.33.
   c. INDIVIDUAL BAR SPLICES WITHIN A BUNDLE SHALL NOT OVERLAP.
   d. ENTIRE BUNDLES SHALL NOT BE LAP SPLICED.
6. FOR ALL LIGHTWEIGHT CONCRETE, LAP LENGTHS SHALL BE MULTIPLIED BY 1.3.
7. FOR ALL EPOXY COATED BARS, LAP LENGTHS SHALL BE MULTIPLIED BY 1.3 FOR TOP BARS AND 1.5 FOR REGULAR BARS.
8. TOP BARS ARE CLASSIFIED AS HORIZONTAL BARS WHERE 12", OR MORE, OF FRESH CONCRETE IS CAST BELOW THE REINFORCING BAR.
9. SEE GENERAL STRUCTURAL NOTES FOR ADDITIONAL REQUIREMENTS.

A4 CONCRETE REINFORCING BAR LAP SPLICE SCHEDULE
SCHED_CONC_REINF-01
NO SCALE

CLIENT

UDOT CONNECTING COMMUNITIES

STATION #4325
MILE MARKER 49.7 HIGHWAY 143
PANGUITCH UTAH

DESIGNER

ARCHIPLEX GROUP
architecture · planning · design services
1135 South West Temple, Ste. A
Salt Lake City, UT 84101
P:(801) 961-7070
F:(801) 961-7373

CONSULTANTS

"Engineering Results"
BHB Consulting Engineers
A Professional Corporation
2766 South Main Street
Salt Lake City, Utah 84115
Phone: 801.355.5656
Fax: 801.355.5950
Email: bhb@bhbengineers.com

PROFESSIONAL SEAL

LICENSED PROFESSIONAL ENGINEER
No. 323922
GERALD R. McKENZIE
STATE OF UTAH

ISSUE

MARK	DATE	DESCRIPTION
1	3/5/08	ADDENDUM 2
	01-2008	CONSTRUCTION DOCUMENTS

DFCM PROJECT NO:	07010900
DFCM CONTRACT NO:	077374
BHB PROJECT NO:	07150
DRAWN BY:	CHRIS B.
CHECKED BY:	GERALD M.
SCALE:	
DATE:	JANUARY, 2008

SHEET TITLE

STRUCTURAL SCHEDULES

S601

Q:\2007\07150\Shot\07150_S-601.dwg, 3/4/2008 10:41:36 AM, jsym

SYMBOL SCHEDULE

RT 1	SPECIFIED MECHANICAL EQUIPMENT (SEE SCHEDULE)
A 150	SPECIFIED REGISTER OR GRILLE & DESIGN CFM (SEE SCHEDULE)
3	REFERENCE TO GENERAL NOTES FOR CLARIFICATION
6'ø	DUCTWORK INSIDE DIMENSION (ROUND)
12X10	DUCTWORK INSIDE DIMENSIONS (RECTANGULAR - WIDTH/HEIGHT)
	SUPPLY AIR TOWARDS
	SUPPLY AIR AWAY
	RETURN AIR OR EXHAUST AIR TOWARDS
	RETURN AIR OR EXHAUST AIR AWAY
	DIRECTION OF AIR FLOW
3/4"-S	REFRIGERATION PIPE SIZE (SUCTION)
3/8"-L	REFRIGERATION PIPE SIZE (LIQUID)
	CEILING DIFFUSER
VD	VOLUME DAMPER
FD	FIRE DAMPER
SD	SMOKE DETECTOR
UC	UNDERCUT DOOR
T	THERMOSTAT
S	SENSOR
M	MOTORIZED DAMPER

FURNACE

MARK	MANUFACTURER CATALOG No.	CFM	INPUT BTU	OUTPUT BTU	V	PHASE	HP	S.P.	RPM	DRIVE	FILTER SIZE	NOTES
F 1	TRANE #TUX1C100A936A	1400	100,000	93,000	115	1	3/4	0.5	1100	DIRECT	24"X25"X1"	(1)

(1) AFUE - 93; R-22; PROVIDE W/TXC030C4HPD EVAPORATOR; CONCENTRIC VENT KIT, CONDENSER, EVAPORATOR AND FURNACE BY SAME MANUFACTURER; NATURAL GAS.

EXHAUST FAN SCHEDULE

MARK	SERVES	CFM	STATIC PRESS.	HP	RPM	V	PHASE	SONES	WEIGHT	MAKE & MODEL	NOTES
EF 1	RESTROOM	120	0.15	BOW	1200	120	1	1.7	22	COOK #SC-240	(4) (5) (6)
EF 2	VEHICLE SVC BAY	9,000	0.25	1 1/2	842	115	1	18.5	648	COOK XMP 54	(1) (2) (3) (7) (8) (9) (10)
EF 3	CLOSED STORAGE	1250	0.25	1/3	923	120	1	18.0	180	COOK XLP 20	(1) (2) (3) (7) (8) (9) (10)
EF 4	OPEN STORAGE	3900	0.25	3/4	916	120	1	20	222	COOK XLP 24	(1) (2) (3) (7) (8) (9) (10)

(1) PROVIDE WALL FAN AS PACKED UNIT
(2) CONTROL WITH CARBON MONOXIDE DETECTOR THROUGH ON/AUTO SWITCH
(3) INNER LOCK LOUVER MOTOR WITH FAN MOTOR
(4) CEILING GRILLE
(5) COOK WCA-2 WALL CAP AND DAMPER
(6) CONTROL WITH MOTION DETECTOR
(7) INTEGRAL EXHAUST SHUTTER
(8) MOTORIZED INLET LOUVER, INTERLOCK LOUVER WITH FAN MOTOR. SEE PLANS FOR LOCATION
(9) SAFETY INLET SCREEN
(10) FAN LOUVER TO HAVE WHITE FINISH

CONDENSING UNIT SCHEDULE

MARK	MANUFACTURER CATALOG No.	SEN. MBH	AMB. TEMP.	V	PHASE	MCA	MOCP	FLA	SEER	SUCTION TEMP.	NOTES
CU 1	TRANE #2TTB3042A100	20.5	95	208/230	1	23	40	18.8	13	45	(1)

(1) PROVIDE WITH FUSED DISCONNECT, CONNECT TO EVAPORATOR COIL IN F-1, ANTI-SHORT CYCLE, PROGRAMMABLE THERMOSTAT, HIGH/LOW PRESSURE SWITCH, FACTORY INSTALLED ACCUMULATOR, NOMINAL 3.5 TON UNIT, CONDENSER, EVAPORATOR AND FURNACE BY SAME MANUFACTURER.

GAS-FIRED RADIANT HEATERS

MARK	MODEL MANUFACTURER	INPUT BTUH	UNIT WEIGHT	AFUE RATING	GAS CONNECTION	ELEC. REQ.	AMPS	FLUE SIZE	REMARKS
B 1	ROBERTS GORDON CO-RAY-VAC #B-6	60,000	55	80%	1/2"	120/1/60	1.0	4"ø	(1) (2)
B 2	ROBERTS GORDON CO-RAY-VAC #B-8	80,000	55	80%	1/2"	120/1/60	1.0	4"ø	(1) (2)

(1) ROBERS GORDON #EP-200 VACUUM PUMP (VP 1), 3/4HP, 120 VOLT; PROVIDE FRESH AIR INTAKE; 7-DAY PROGRAMMABLE THERMOSTAT, HEAT TREATED ALUMIZED STEEL TUBE AND POLISHED ALUMINUM REFLECTOR; NATURAL GAS.
(2) 7 DAY PROGRAMMING THERMOSTAT.

REGISTER, LOUVER & GRILLE SCHEDULE

MARK	TYPE	NECK/SIZE	SERVICE	MAX CFM	NOMINAL SIZE	REMARKS
1	CEILING DIFFUSER	6"ø	SUPPLY	176	12X12	PRICE #SCDA (1) (3) (4)
2	CEILING DIFFUSER	8"ø	SUPPLY	280	24X24	PRICE #SCDA (2) (3) (4)
3	CEILING DIFFUSER	10"ø	SUPPLY	456	24X24	PRICE #SCDA (1) (2) (3) (4)
4	RETURN GRILLE	12" X 12"	RETURN	650	12X12	PRICE #80D
5	TRANSFER GRILLE	12" X 12"	TRANSFER	N.A.	12X12	PRICE #80D
L1	INLET LOUVER	72" X 60"	TRANSFER	N.A.	72X60	RUSKIN ELM-811D (6)
L2	COMBINATION LOUVER	24" X 36"	TRANSFER	N.A.	24X36	RUSKIN ELC-445D (6)
L3	COMBINATION LOUVER	42" X 48"	SUPPLY	N.A.	42X48	RUSKIN ELC-445D (6)
L4	INLET LOUVER	36" X 36"	TRANSFER	N.A.	36X36	RUSKIN ELF-211 (5) (6)

(1) 12" X 12" FACE MODULE.
(2) 24" X 24" FACE MODULE.
(3) 3 CONCENTRIC CONES.
(4) SET FOR HORIZONTAL DISCHARGE.
(5) FOR USE IN SALT STORAGE BUILDING COORDINATE LOCATION WITH ARCHITECT. (1)
(6) LOUVERS SHALL HAVE A WHITE FINISH.

UNIT-HEATER SCHEDULE

PLAN CODE	MOUNTING	MANUFACTURER & MODEL NO.	HEATING CAP. MBH (INPUT) @ SEA LEVEL.	HEATING CAP. MBH (OUTPUT) @ ALT.	EFFICIENCY (%)	FLUE SIZE (IN.)	FLUE TYPE	UNIT WEIGHT (LBS.)	MOTOR HP	MOTOR V/PH	COMMENTS
UH 1	VERTICAL	REXNOR UDAS-45	45,000	37,350	83%	4"ø	B	60	1/20	115/1	SEPARATE COMBUSTION WITH ROOF INLET TERMINAL AND ADAPTER

GENERAL NOTES CONTINUED

23. ALL EQUIPMENT, PIPING, DUCTWORK, ETC., SHALL BE SUPPORTED AS DETAILED, SPECIFIED, AND REQUIRED TO PROVIDE A VIBRATION FREE INSTALLATION.
24. ALL DUCTWORK, PIPING AND EQUIPMENT SUPPORTED FROM STRUCTURAL STEEL SHALL BE COORDINATED WITH GENERAL CONTRACTOR. ALL ATTACHMENTS TO STEEL BAR JOISTS, TRUSSES, OR JOIST GIRDERS SHALL BE AT PANEL POINTS. PROVIDE BEAM CLAMPS MEETING MSS STANDARDS. WELDING TO STRUCTURAL MEMBERS SHALL NOT BE PERMITTED. THE USE OF C-CLAMPS SHALL NOT BE PERMITTED.
25. MECHANICAL EQUIPMENT, DUCTWORK, AND PIPING SHALL NOT BE SUPPORTED FROM METAL DECK.
26. ALL ROOF MOUNTED EQUIPMENT CURBS FOR EQUIPMENT PROVIDED BY THE MECHANICAL CONTRACTOR SHALL BE FURNISHED BY THE MECHANICAL CONTRACTOR AND INSTALLED BY THE GENERAL CONTRACTOR.
27. LOCATIONS AND SIZES OF ALL FLOOR, WALL, AND ROOF OPENINGS SHALL BE COORDINATED WITH ALL OTHER TRADES INVOLVED.
28. ALL OPENINGS IN FIRE WALLS DUE TO DUCTWORK, PIPING, CONDUIT, ETC., SHALL BE FIRE STOPPED WITH A PRODUCT SIMILAR TO 3M OR APPROVED EQUAL.
29. ALL AIR CONDITIONING CONDENSATE DRAIN LINES FROM EACH AIR HANDLING UNIT AND ROOFTOP UNIT SHALL BE PIPED FULL SIZE OF THE UNIT DRAIN OUTLET, WITH "P" TRAP, AND PIPED TO NEAREST DRAIN. SEE DETAILS SHOWN ON THE DRAWINGS OR THE CONTRACT SPECIFICATIONS FOR DEPTH OF AIR CONDITIONING CONDENSATE TRAP.
30. REFER TO TYPICAL DETAILS FOR DUCTWORK, PIPING, AND EQUIPMENT INSTALLATION.
31. DO NOT INSTALL EXPOSED PIPING ABOVE OR WITHIN THE CODE REQUIRED WORKING CLEARANCES OF ANY ELECTRICAL PANEL BOARD OR SWITCH GEAR (30" WIDE OR THE WIDTH OF THE PANEL, WHICHEVER IS GREATER AND 36" IN FRONT - FLOOR TO CEILING.) COORDINATE WITH ELECTRICAL CONTRACTOR.

GENERAL NOTES

1. PROVIDE ALL MATERIALS AND EQUIPMENT AND PERFORM ALL LABOR REQUIRED TO INSTALL COMPLETE AND OPERABLE MECHANICAL SYSTEMS AS INDICATED ON THE DRAWINGS, AS SPECIFIED AND AS REQUIRED BY CODE.
2. CONTRACT DOCUMENT DRAWINGS FOR MECHANICAL WORK (HVAC, PLUMBING, AND FIRE PROTECTION) ARE DIAGRAMMATIC AND ARE INTENDED TO CONVEY SCOPE AND GENERAL ARRANGEMENT ONLY.
3. INSTALL ALL MECHANICAL EQUIPMENT AND APPURTENANCES IN ACCORDANCE WITH MANUFACTURERS' RECOMMENDATIONS, CONTRACT DOCUMENTS, AND APPLICABLE CODES AND REGULATIONS.
4. PROVIDE VIBRATION ISOLATION FOR ALL MECHANICAL EQUIPMENT TO PREVENT TRANSMISSION OF VIBRATION TO BUILDING STRUCTURE.
5. PROVIDE VIBRATION ISOLATORS FOR ALL PIPING SUPPORTS CONNECTED TO AND WITHIN 50 FEET OF ISOLATED EQUIPMENT (EXCEPT AT BASE ELBOW SUPPORTS AND ANCHOR POINTS) THROUGHOUT MECHANICAL EQUIPMENT ROOMS. DO THE SAME FOR SUPPORTS OF STEAM MAINS WITHIN 50 FEET OF BOILER OR PRESSURE REDUCING VALVES.
6. PROVIDE VIBRATION ISOLATORS FOR ALL PIPING SUPPORTS OF STEAM MAINS WITHIN 50 FEET OF BOILERS AND PRESSURE REDUCING VALVES.
7. THE LOCATION OF EXISTING UNDERGROUND UTILITIES IS SHOWN IN AN APPROXIMATE WAY ONLY. THE CONTRACTOR SHALL DETERMINE THE EXACT LOCATION OF ALL EXISTING UTILITIES BEFORE COMMENCING WORK. THE CONTRACTOR SHALL PAY FOR AND REPAIR ALL DAMAGES CAUSED BY FAILURE TO EXACTLY LOCATE AND PRESERVE ANY AND ALL UNDERGROUND UTILITIES UNLESS OTHERWISE INDICATED.
8. COORDINATE CONSTRUCTION OF ALL MECHANICAL WORK WITH ARCHITECTURAL, STRUCTURAL, CIVIL, ELECTRICAL WORK, ETC., SHOWN ON OTHER CONTRACT DOCUMENT DRAWINGS.
9. MAINTAIN A MINIMUM OF 6'-8" CLEARANCE TO UNDERSIDE OF PIPES, DUCTS, CONDUITS, SUSPENDED EQUIPMENT, ETC., THROUGHOUT ACCESS ROUTES IN MECHANICAL ROOMS.
10. ALL TESTS SHALL BE COMPLETED BEFORE ANY MECHANICAL EQUIPMENT OR PIPING INSULATION IS APPLIED.
11. LOCATE ALL TEMPERATURE, PRESSURE, AND FLOW MEASURING DEVICES IN ACCESSIBLE LOCATIONS WITH STRAIGHT SECTION OF PIPE OR DUCT UP- AND DOWNSTREAM AS RECOMMENDED BY THE MANUFACTURER FOR GOOD ACCURACY.
12. TESTING, ADJUSTING, AND BALANCING AGENCY SHALL BE A MEMBER OF THE ASSOCIATED AIR BALANCE COUNCIL (AABC) OR THE NATIONAL ENVIRONMENTAL BALANCING BUREAU (NEBB). TESTING, ADJUSTING, AND BALANCING SHALL BE PERFORMED IN ACCORDANCE WITH THE AABC STANDARDS.
13. WHERE TWO OR MORE ITEMS OF THE SAME TYPE OF EQUIPMENT ARE REQUIRED, THE PRODUCT OF ONE MANUFACTURER SHALL BE USED.
14. REINFORCEMENT, DETAILING, AND PLACEMENT OF CONCRETE SHALL CONFORM TO ASTM 315 AND ACI 318. CONCRETE SHALL CONFORM TO ASTM C94. CONCRETE WORK SHALL CONFORM TO ACI 318, PART ENTITLED "CONSTRUCTION REQUIREMENTS." COMPRESSIVE STRENGTH IN 28 DAYS SHALL BE 3,000 PSI. TOTAL AIR CONTENT OF EXTERIOR CONCRETE SHALL BE BETWEEN 5 AND 7 PERCENT BY VOLUME. SLUMP SHALL BE BETWEEN 3 AND 4 INCHES. CONCRETE SHALL BE CURED FOR 7 DAYS AFTER PLACEMENT.
15. COORDINATE ALL EQUIPMENT CONNECTIONS WITH MANUFACTURERS' CERTIFIED DRAWINGS. COORDINATE AND PROVIDE ALL DUCT AND PIPING TRANSITIONS REQUIRED FOR FINAL EQUIPMENT CONNECTIONS TO FURNISHED EQUIPMENT. FIELD VERIFY AND COORDINATE ALL DUCT AND PIPING DIMENSIONS BEFORE FABRICATION.
16. ALL CONTROL WIRE AND CONDUIT SHALL COMPLY WITH THE NATIONAL ELECTRIC CODE AND DIVISION 16 OF THE SPECIFICATION.
17. CONCRETE HOUSEKEEPING PADS TO SUIT MECHANICAL EQUIPMENT SHALL BE SIZED AND LOCATED BY THE MECHANICAL CONTRACTOR. MINIMUM CONCRETE PAD THICKNESS SHALL BE 6 INCHES. PAD SHALL EXTEND BEYOND THE EQUIPMENT A MINIMUM OF 6 INCHES ON EACH SIDE. CONCRETE HOUSEKEEPING PADS SHALL BE PROVIDED BY THE GENERALS CONTRACTOR. IT SHALL BE THE RESPONSIBILITY OF THE MECHANICAL CONTRACTOR TO COORDINATE SIZE AND LOCATION OF CONCRETE HOUSEKEEPING PADS WITH GENERAL CONTRACTOR.
18. WHERE BEAMS ARE INDICATED TO BE PENETRATED WITH DUCTWORK OR PIPING COORDINATE DUCTWORK AND PIPING LAYOUT WITH BEAM OPENING SIZE AND OPENING LOCATIONS. COORDINATION SHALL BE DONE PRIOR TO FABRICATION OF DUCTWORK, CUTTING OF PIPING, OR FABRICATION OF BEAMS.
19. WHEN MECHANICAL WORK (HVAC, PLUMBING, SHEET METAL, FIRE PROTECTION, ETC.) IS SUBCONTRACTED, IT SHALL BE THE MECHANICAL CONTRACTOR'S RESPONSIBILITY TO COORDINATE SUBCONTRACTORS AND THE ASSOCIATED CONTRACTS. WHEN DISCREPANCIES ARISE PERTAINING TO WHICH CONTRACTOR PROVIDES A PARTICULAR ITEM OF THE MECHANICAL CONTRACT OR WHICH CONTRACTOR PROVIDES FINAL CONNECTION FOR A PARTICULAR ITEM OF THE MECHANICAL CONTRACT, IT SHALL BE BROUGHT TO THE ATTENTION OF THE MECHANICAL CONTRACTOR, WHOSE DECISION SHALL BE FINAL.
20. THE LOCATIONS OF ALL ITEMS SHOWN ON THE DRAWINGS OR CALLED FOR IN THE SPECIFICATIONS THAT ARE NOT DEFINITELY FIXED BY DIMENSIONS ARE APPROXIMATE ONLY. THE EXACT LOCATIONS NECESSARY TO SECURE THE BEST CONDITIONS AND RESULTS MUST BE DETERMINED BY THE PROJECT SITE CONDITIONS AND SHALL HAVE THE APPROVAL OF THE ENGINEER BEFORE BEING INSTALLED. DO NOT SCALE DRAWINGS.
21. ALL MISCELLANEOUS STEEL REQUIRED TO ENSURE PROPER INSTALLATION AND AS SHOWN IN DETAILS FOR PIPING, DUCTWORK, AND EQUIPMENT (UNLESS OTHERWISE NOTED) SHALL BE FURNISHED AND INSTALLED BY THE MECHANICAL CONTRACTOR.
22. PROVIDE ACCESS PANELS FOR INSTALLATION IN WALLS AND CEILINGS, WHERE REQUIRED, TO SERVICE DAMPERS, VALVES, SMOKE DETECTORS, AND OTHER CONCEALED MECHANICAL EQUIPMENT. ACCESS PANELS SHALL BE TURNED OVER TO GENERAL CONTRACTOR FOR INSTALLATION.

CLIENT

UDOT CONNECTING COMMUNITIES

STATION #4325
MILE MARKER 49.7 HIGHWAY 143
PANGUITCH UTAH

DESIGNER

ARCHIPLEX GROUP
architecture • planning • design services
1135 South West Temple, Ste. A
Salt Lake City, UT 84101
P:(801) 961-7070
F:(801) 961-7373

CONSULTANTS

VAN BOERUM & FRANK ASSOCIATES INC.
WWW.VBFA.COM CONSULTING ENGINEERS
Salt Lake City • Logan • St. George • Tempe • Pocatello
811 West Cedar St., Pocatello, ID 83201-6139
208.478.4613 T
208.478.4617 F

PROFESSIONAL SEAL

LICENSED PROFESSIONAL ENGINEER
CLIFFORD DEE HOLMES
03/04/08
NUMBER 309570
STATE OF UTAH

ISSUE

MARK	DATE	DESCRIPTION
1	3-5-08	ADDENDUM #2
	01-2008	CONSTRUCTION DOCUMENTS

DFCM PROJECT NO:	07010900
ARCHIPLEX PROJECT NO:	0709.01
DRAWN BY:	LCM
CHECKED BY:	CDH
SCALE:	NONE
DATE:	JANUARY, 2008

SHEET TITLE

MECHANICAL SYMBOLS AND SCHEDULES

M001

J:\Archiplex\UDOT\UDOT Panguitch\Mech\PANM001.dwg, 3/4/2008 11:53:08 AM

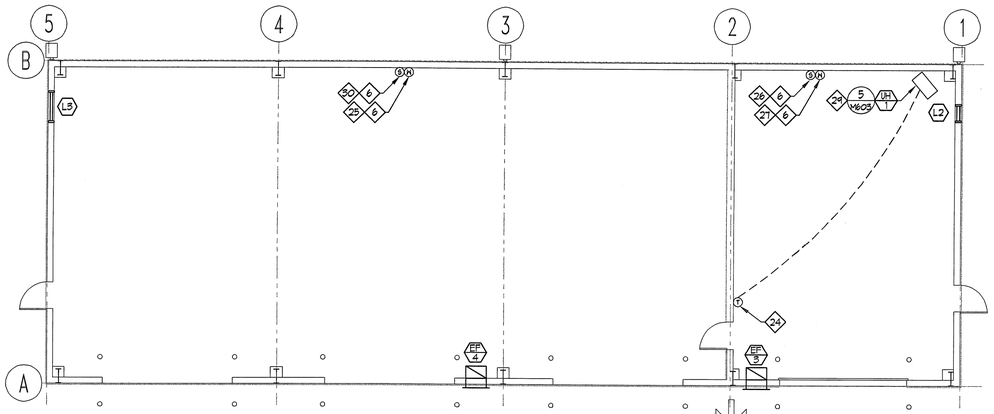

OPEN STORAGE BUILDING PLAN - ADD ALTERNATE #4

SCALE: 1/8" = 1'-0"

NORTH

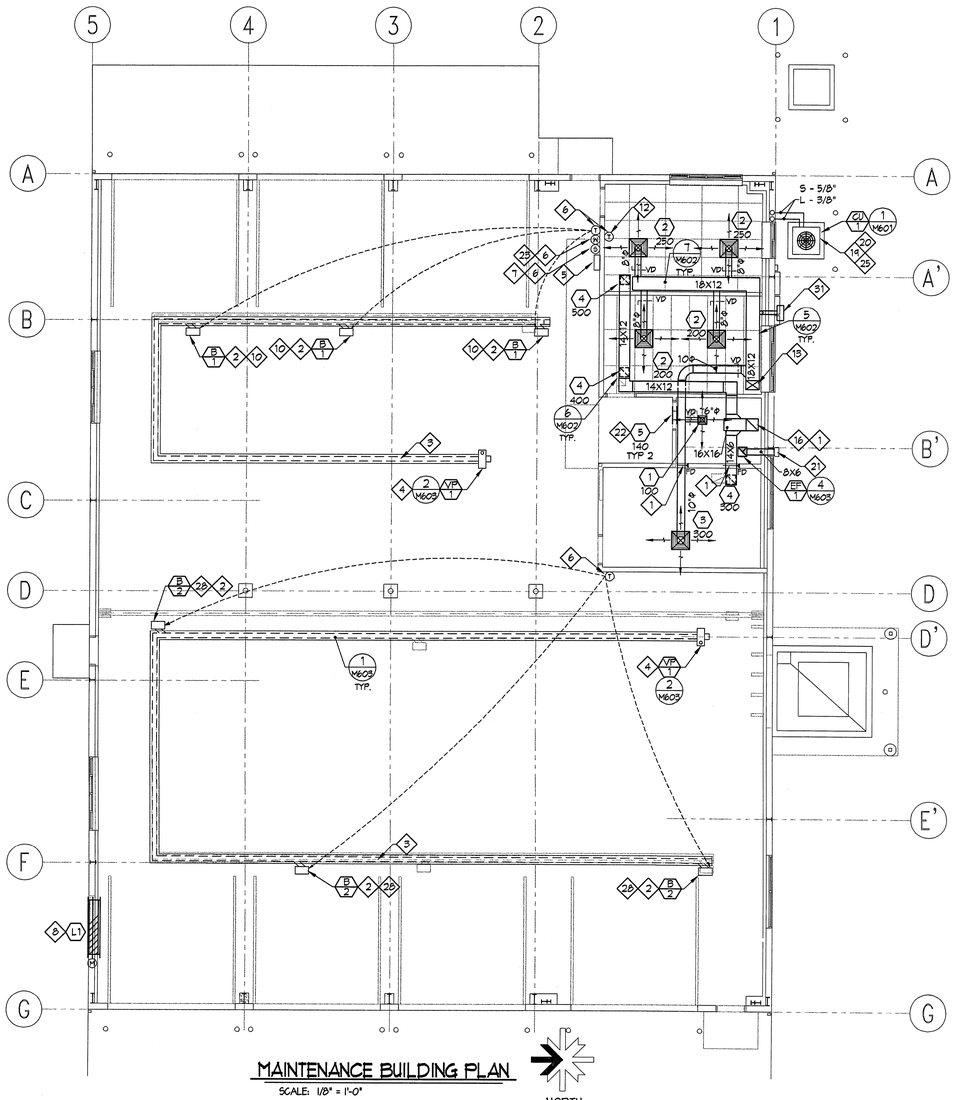

MAINTENANCE BUILDING PLAN

SCALE: 1/8" = 1'-0"

NORTH

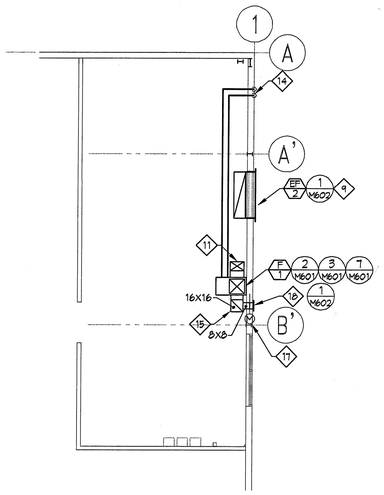

MEZZANINE FLOOR PLAN

SCALE: 1/8" = 1'-0"

NORTH

KEY NOTES

1. PROVIDE FIRE DAMPER AND DUCT ACCESS DOOR.
2. 4" COMBUSTION AIR THROUGH ROOF.
3. MOUNT RADIANT HEATERS PERPENDICULAR TO ROLL UP DOORS (TYPICAL).
4. 4" TYPE B FLUE THROUGH ROOF. INSTALL PER MANUFACTURERS RECOMMENDATIONS.
5. RADIANT HEAT SYSTEM CONTROL PANELS. SEE SCHEDULE.
6. MOUNT 5'-0" AFF.
7. CARBON MONOXIDE DETECTOR. INTERLOCK THROUGH AUTO/ON SWITCH WITH EXHAUST FAN EF-2.
8. INLET LOUVER. PROVIDE WITH ACTUATOR. INTERLOCK ACTUATOR WITH EF-2 REFER TO ARCHITECTURAL DRAWINGS FOR LOCATION.
9. REFERENCE ARCHITECTURAL DRAWINGS FOR LOCATION.
10. RADIANT TUBE HEATER BURNERS TO BE LOCATED 20' APART.
11. DROP 18" X 12" DUCT DOWN THROUGH FLOOR.
12. THERMOSTAT TO CONTROL F-1.
13. 18" X 12" DUCT UP THROUGH MEZZANINE FLOOR.
14. RISE IN EXTERIOR WALL WITH REFRIGERATION PIPING TO MEZZANINE LEVEL.
15. 16" X 16" RETURN DOWN THROUGH FLOOR.
16. 16" X 16" RETURN DUCT UP THROUGH MEZZANINE FLOOR.
17. INTERLOCK DAMPER MOTOR WITH F-1.
18. 16" X 16" O.S.A. LOUVER. RUSKIN #ELF611DD. PROVIDE INSECT SCREEN AND BALANCING DAMPER. SET DAMPER TO 200 CFM. SEE DETAIL 9/M602.
19. MOUNT CONDENSING UNIT ON CONCRETE PAD.
20. REFRIGERATION LINE SIZES ARE FOR BIDDING PURPOSES ONLY. PROVIDE REFRIGERATION LINE SETS PER MANUFACTURER'S RECOMMENDATIONS.
21. EXHAUST FAN WALL CAP. REFER TO SCHEDULE.
22. MOUNT TRANSFER GRILLE ABOVE DOOR WITH CHANNEL BORDER ON BOTH SIDES OF THE WALL.
23. MANUAL OVERRIDE SWITCH LOCATION FOR EF-2. SEE ELECTRICAL DRAWINGS.
24. MOUNT THERMOSTAT 5'-0" AFF. MOUNT THERMOSTAT ON INSULATED BASE. SEE DETAIL 8/M601.
25. MANUAL OVERRIDE SWITCH LOCATION FOR EF-4. SEE ELECTRICAL DRAWINGS.
26. CARBON MONOXIDE DETECTOR. INTERLOCK THROUGH AUTO/ON SWITCH WITH EXHAUST FAN EF-3.
27. MANUAL OVERRIDE SWITCH LOCATION FOR EF-3. SEE ELECTRICAL DRAWINGS.
28. RADIANT TUBE HEATER BURNERS TO BE LOCATED 45' APART.
29. UNIT HEATER TO BE MOUNTED 2'-0" BELOW CEILING COORDINATE WITH ARCHITECT.
30. CAREON MONOXIDE DETECTOR. INTERLOCK THROUGH AUTO/ON SWITCH WITH EXHAUST FAN EF-4.
31. MAKE CONNECTION TO OWNER PROVIDED RANGE HOOD WITH 5"ø EXHAUST DUCT AND ROUTE TO EXTERIOR; TERMINATE WITH WALL CAP. CONFIRM EXACT LOCATION AND ROUTING. COORDINATE NECESSARY CLEARANCES FROM ELECTRICAL EQUIPMENT WITH ELECTRICAL CONTRACTOR.

CLIENT

UDOT CONNECTING COMMUNITIES

STATION #4325
MILE MARKER 49.7 HIGHWAY 143
PANGUITCH UTAH

DESIGNER

ARCHIPLEX GROUP
architecture • planning • design services
1135 South West Temple, Ste. A
Salt Lake City, UT 84101
P:(801) 961-7070
F:(801) 961-7373

CONSULTANTS

VAN BOERUM & FRANK ASSOCIATES INC. CONSULTING ENGINEERS
WWW.VBFA.COM
Salt Lake City · Logan · St. George · Tempe · Pocatello
811 West Cedar St., Pocatello, ID 83201-6139
208.478.4613 T
208.478.4617 F

PROFESSIONAL SEAL

LICENSED PROFESSIONAL ENGINEER
CLIFFORD DEE HOLMES
03/04/08
NUMBER 309570
STATE OF UTAH

ISSUE

MARK	DATE	DESCRIPTION
1	3-5-08	ADDENDUM #2
	01-2008	CONSTRUCTION DOCUMENTS

DFCM PROJECT NO:	07010900
ARCHIPLEX PROJECT NO:	0709.01
DRAWN BY:	LCM
CHECKED BY:	CDH
SCALE:	1/8"=1'-0"
DATE:	JANUARY, 2008

SHEET TITLE

MECHANICAL FLOOR PLAN

M201

J:\Archiplex\UDOT\UDOT Panguitch\Mech\PANM201.dwg, 3/4/2008 11:42:24 AM

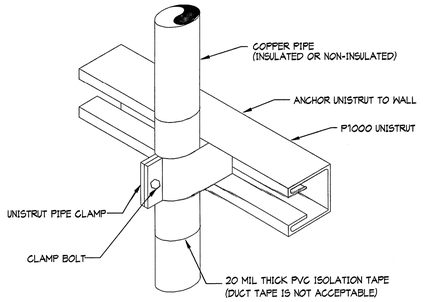

PIPE SUPPORT DETAIL

SCALE: NO SCALE — (6)

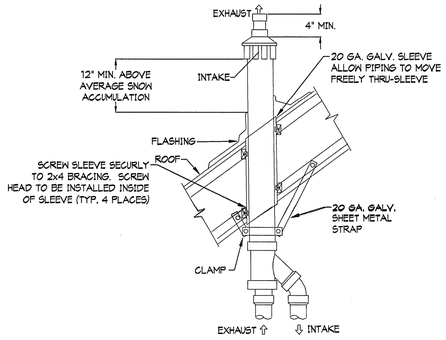

CONCENTRIC ROOF TERMINATION DETAIL

SCALE: NO SCALE — (3)

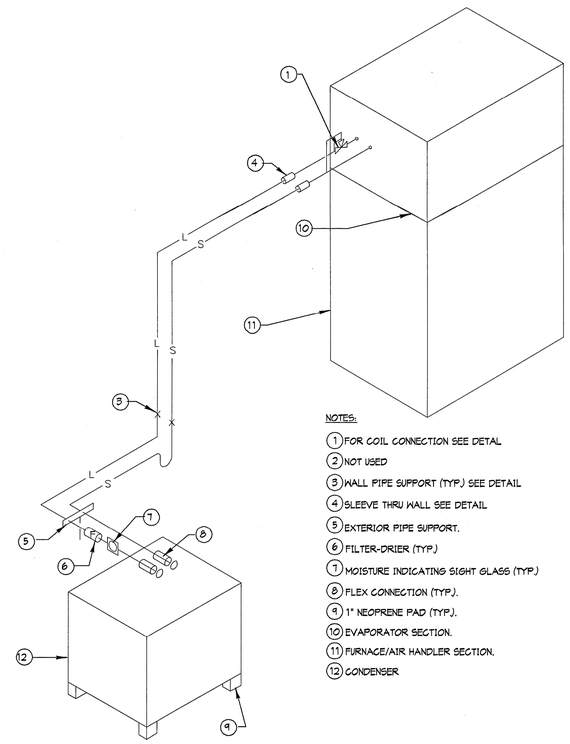

NOTES:

1. FOR COIL CONNECTION SEE DETAL
2. NOT USED
3. WALL PIPE SUPPORT (TYP.) SEE DETAIL
4. SLEEVE THRU WALL SEE DETAIL
5. EXTERIOR PIPE SUPPORT.
6. FILTER-DRIER (TYP.)
7. MOISTURE INDICATING SIGHT GLASS (TYP.)
8. FLEX CONNECTION (TYP.).
9. 1" NEOPRENE PAD (TYP.).
10. EVAPORATOR SECTION.
11. FURNACE/AIR HANDLER SECTION.
12. CONDENSER

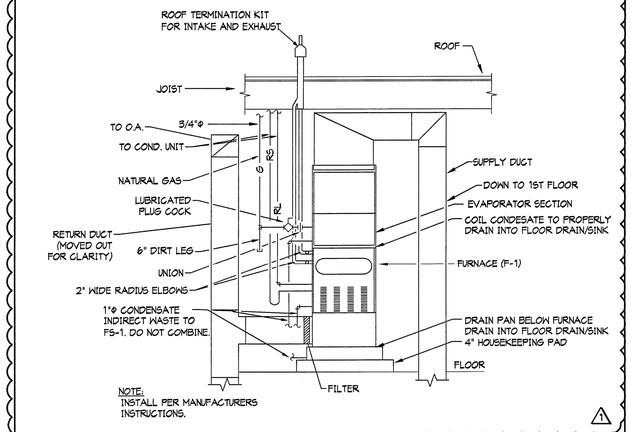

FURNACE INSTALLATION DETAIL

SCALE: NO SCALE — (7)

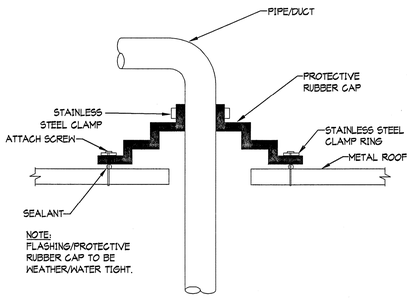

METAL ROOF PENETRATION DETAIL

SCALE: NO SCALE — (4)

REFRIGERANT PIPING SCHEMATIC DETAIL

SCALE: NO SCALE — (1)

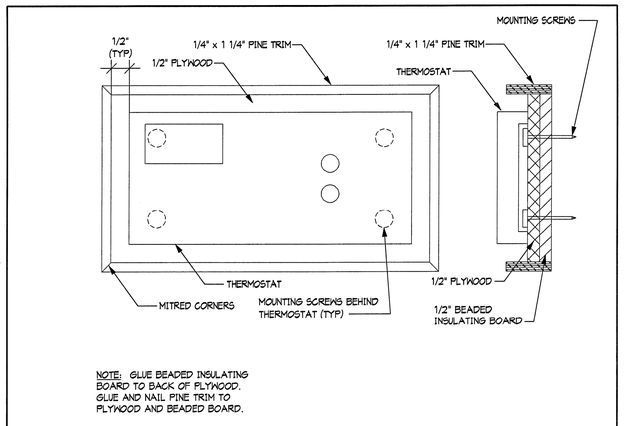

INSULATED BASE FOR THERMOSTAT

SCALE: NO SCALE — (8)

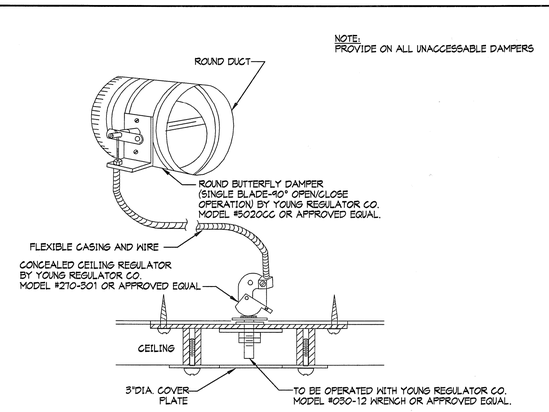

DAMPER AND REGULATOR DETAIL

SCALE: NO SCALE — (5)

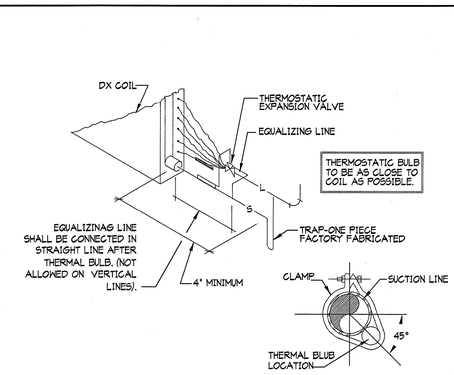

REFRIGERANT COIL CONNECTION DETAIL

SCALE: NO SCALE — (2)

J:\Archiplex\UDOT\UDOT Pangnitch\Mech\PANM601.dwg, 3/4/2008 11:42:19 AM

CLIENT

UDOT CONNECTING COMMUNITIES

STATION #4325
MILE MARKER 49.7 HIGHWAY 143
PANGUITCH UTAH

DESIGNER

ARCHIPLEX GROUP
architecture • planning • design services
1135 South West Temple, Ste. A
Salt Lake City, UT 84101
P:(801) 961-7070
F:(801) 961-7373

CONSULTANTS

VAN BOERUM & FRANK ASSOCIATES INC.
WWW.VBFA.COM CONSULTING ENGINEERS
Salt Lake City · Logan · St. George · Tempe · Pocatello
811 West Cedar St., Pocatello, ID 83201-6139
208.478.4613 T
208.478.4617 F

PROFESSIONAL SEAL

LICENSED PROFESSIONAL ENGINEER — CLIFFORD DEE HOLMES — 03/04/08 — NUMBER 309570 — STATE OF UTAH

ISSUE

MARK	DATE	DESCRIPTION
1	3-5-08	ADDENDUM #2
	01-2008	CONSTRUCTION DOCUMENTS

DFCM PROJECT NO:	07010900
ARCHIPLEX PROJECT NO:	0709.01
DRAWN BY:	LCM
CHECKED BY:	CDH
SCALE:	NONE
DATE:	JANUARY, 2008

SHEET TITLE

MECHANICAL DETAILS

M601

DUCT LINER DETAIL

SCALE: NO SCALE — 7

METAL FASTENERS:
OMARC INSUL-PINS, DURO DYNE FASTENERS OR GRIP NAILS.

GRIP NAILS SHALL BE INSTALLED BY "GRIPNAIL AIR HAMMER" OR BY "AUTOMATIC FASTENER EQUIP."

NOTE:
ALL SUPPLY AIR DUCTS SHALL BE WRAPPED EXTERNALLY AS PER SPECIFICATIONS

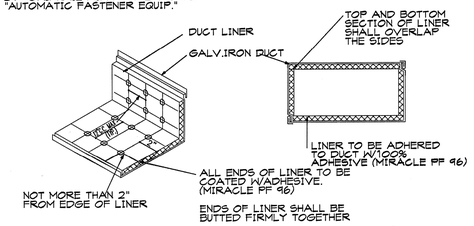

INTAKE VENT PIPE DETAIL

SCALE: NO SCALE — 4

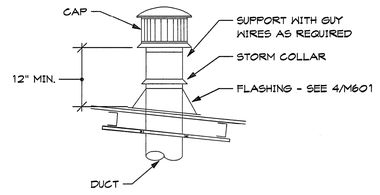

OUTLET / INLET LOUVER DETAIL

SCALE: NO SCALE — 1

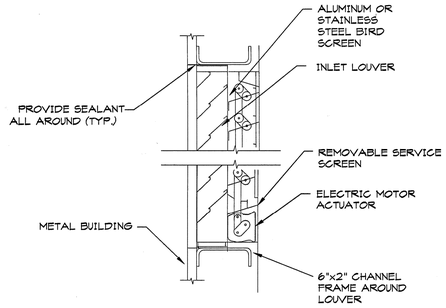

CONVERGING AND DIVERGING TRANSITIONS

SCALE: NO SCALE — 8

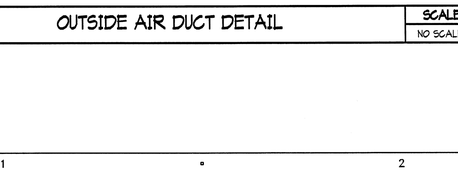

NOTE:
THE 15° MAXIMUM TRANSITION ANGLE NOTED ON THIS DETAIL IS MORE RESTRICTIVE THAN THE SMACNA ALLOWANCE OF 20°.

DUCT CONSTRUCTION DETAIL

SCALE: NO SCALE — 5

DIMENSION OF LONGEST SIDE, INCHES	SHEET METAL GAGE (ALL FOUR SIDES)	TRANSVERSE REINFORCING ① MINIMUM REINFORCING ANGLE SIZE & MAXIMUM LONGITUDINAL SPACING BETWEEN JOINTS &/OR INTERMEDIATE REINFORCING	MIN. H, IN.	AT JOINTS: DRIVE SLIP / PLAIN S SLIP — RECOMMENDED GAGE	HEMMED S SLIP — RECOMMENDED GAGE	ALTERNT. BAR SLIP — RECOMMENDED GAGE	REINFOR. BAR SLIP — RECOMMENDED GAGE	BAR SLIP / ANGLE SLIP — RECOMMENDED GAGE	BAR SLIP / ANGLE SLIP — REINFORCED ANGLE SIZE	STAND. SEAM / ANGLE REINFOR. STAND SEAM — REINFORCED ANGLE SIZE	POCKET LOCK / ANGLE REINFORCED POCKET LOCK — RECOMMENDED GAGE	POCKET LOCK / ANGLE REINFORCED POCKET LOCK — REINFORCED ANGLE SIZE
UP THRU 12	26	NONE REQ.	1	26	26	24	24	24	NOT REQ.	NOT REQ.	24	NOT REQ.
13 - 18	24	NONE REQ.	1	24	24	24	24	24	NOT REQ.	NOT REQ.	24	NOT REQ.
19 - 30	24	1X1X1/8 @ 60"	1	-	24	24	24	24	NOT REQ.	NOT REQ.	24	NOT REQ.
31 - 42	22	1X1X1/8 @ 60"	1	-	-	22	22	22	NOT REQ.	NOT REQ.	22	NOT REQ.
43 - 54	22	1.5X1.5X1/8@60"	1 1/2	-	-	22	22	22	1.5X1.5X1/8	NOT REQ.	22	NOT REQ.
55 - 60	20	1.5X1.5X1/8@60"	1 1/2	-	-	-	22	22	1.5X1.5X1/8	NOT REQ.	22	NOT REQ.
61 - 84	20	1.5X1.5X1/8@30"	1 1/2	-	-	-	22	22	1.5X1.5X1/8	1.5X1.5X1/8	22	1.5X1.5X1/8

① TRANSVERSE REINFORCING SIZE IS DETERMINED BY DIMENSION OF SIDE TO WHICH ANGLE IS APPLIED

PIPE THRU WALL ABOVE GRADE

SCALE: NO SCALE — 2

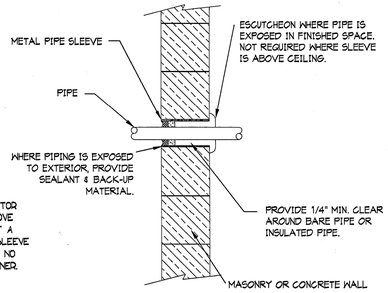

NOTE:
PIPE SLEEVES ARE REQUIRED ON THIS PROJECT. CONTRACTOR SHALL BE REQUIRED TO REMOVE ANY PIPE INSTALLED WITHOUT A PIPE SLEEVE, INSTALL THE SLEEVE AND REINSTALL THE PIPE AT NO ADDITIONAL COST TO THE OWNER.

OUTSIDE AIR DUCT DETAIL

SCALE: NO SCALE — 9

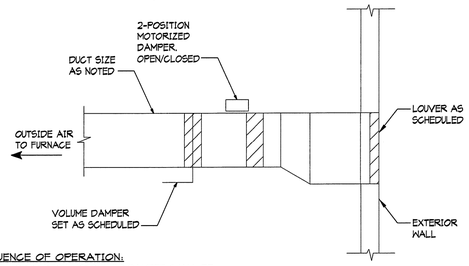

SEQUENCE OF OPERATION:
OCCUPIED MODE: 2-POSITION MOTORIZED DAMPER SHALL BE ELECTRONICALLY TIED TO FURNACE SUCH THAT WHEN THE FURNACE CALLS FOR HEATING OR COOLING, DAMPER OPENS.
UNOCCUPIED MODE: 2-POSITION MOTORIZED REMAINS CLOSED. (NIGHT OR WEEKEND SET BACK)

DUCT STRAP HANGER DETAIL

SCALE: NO SCALE — 6

HANGER SIZES FOR RECTANGULAR DUCT

MAX. SIDE	HANGER	HORIZANTAL SUPPORT ANGLE	MAXIMUM SPACING
30"	1"X18" GAGE STRAP	WHERE REQUIRED	10'-0"
36"	1/4" ROUND ROD	1 1/2" X 1 1/2" X 1/8"	8'-0"
48"	1/4" ROUND ROD	2" X 2" X 1/8"	8'-0"
60"	5/16" ROUND ROD	2" X 2" X 1/8"	8'-0"
84"	3/8" ROUND ROD	2" X 2" X 1/8"	8'-0"

NO POP RIVETS ALLOWED

SELF TAPPING CADMIUM PLATED HEX HEAD SHEET METAL SCREW STRAPS TO BE TIGHT AGAINST DUCT.

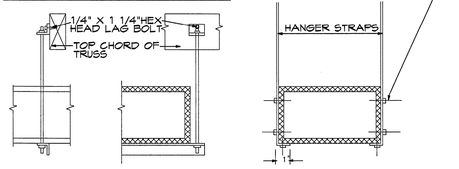

COMBINATION LOUVER/DAMPER DETAIL

SCALE: NO SCALE — 3

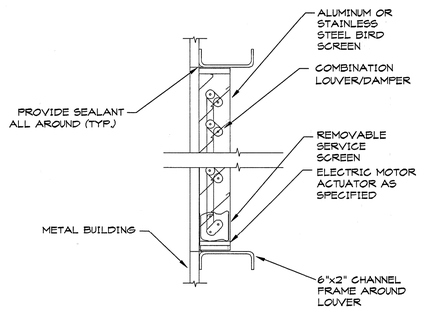

CLIENT

UDOT CONNECTING COMMUNITIES

STATION #4325
MILE MARKER 49.7 HIGHWAY 143
PANGUITCH UTAH

DESIGNER

ARCHIPLEX GROUP
architecture • planning • design services
1135 South West Temple, Ste. A
Salt Lake City, UT 84101
P:(801) 961-7070
F:(801) 961-7373

CONSULTANTS

VAN BOERUM & FRANK ASSOCIATES INC.
WWW.VBFA.COM CONSULTING ENGINEERS
Salt Lake City · Logan · St. George · Tempe · Pocatello
811 West Cedar St., Pocatello, ID 83201-6139
208.478.4613 T
208.478.4617 F

PROFESSIONAL SEAL

LICENSED PROFESSIONAL ENGINEER — CLIFFORD DEE HOLMES — 03/04/08 — NUMBER 309570 — STATE OF UTAH

ISSUE

MARK	DATE	DESCRIPTION
1	3-5-08	ADDENDUM #2
	01-2008	CONSTRUCTION DOCUMENTS

DFCM PROJECT NO:	07010900
ARCHIPLEX PROJECT NO:	0709.01
DRAWN BY:	LCM
CHECKED BY:	CDH
SCALE:	NONE
DATE:	JANUARY, 2008

SHEET TITLE

MECHANICAL DETAILS

M602

J:\Archiplex\UDOT\UDOT Panguitch\Mech\PANM602.dwg, 3/4/2008 11:42:15 AM

COM*check* Software Version 3.5.1

Mechanical Compliance Certificate

2006 IECC

Report Date: 03/04/08

Data filename: J:\Archiplex\UDOT\UDOT Panguitch\Elec\panguitch.cck

Section 1: Project Information

Project Title: UDOT Maintenance Facility

Construction Site:
Panguitch, UT

Owner/Agent:

Designer/Contractor:
Van Boerum and Frank Associates
811 West Cedar
Pocatello, ID 83201
208-478-4613
beng@benglic.com

Section 2: General Information

Building Location (for weather data):	**Panguitch, Utah**
Climate Zone:	**5b**
Heating Degree Days (base 65 degrees F):	**7600**
Cooling Degree Days (base 50 degrees F):	**1527**
Project Type:	**New Construction**

Section 3: Mechanical Systems List

Quantity	System Type & Description
1	HVAC System 1: Heating: Central Furnace, Gas / Cooling: Split System, Capacity <54 kBtu/h, Air-Cooled Condenser / Single Zone
1	HVAC System 2: Heating: Unit Heater, Gas
6	HVAC System 3: Heating: Radiant Heater, Gas / Single Zone
3	Instantaneous Water Heater 1: Gas Instantaneous Water Heater, Capacity: 1 gallons, Input Rating: 180000 Btu/h

Section 4: Requirements Checklist

Requirements Specific To: HVAC System 1 :

☐ 1. Newly purchased heating equipment meets the heating efficiency requirements
☐ 2. Equipment minimum efficiency: Split System: 10.0 SEER

Requirements Specific To: HVAC System 2 :

☐ 1. Equipment minimum efficiency: Unit Heater (Gas): 80% Ec

Requirements Specific To: HVAC System 3 :

None

Requirements Specific To: Instantaneous Water Heater 1 :

☐ 1. Hot water system sized per manufacturer's sizing guide
☐ 2. Gas Instantaneous Water Heater efficiency >= 0.67 EF
☐ 3. First 8 ft of outlet piping is insulated

Generic Requirements: Must be met by all systems to which the requirement is applicable:

☐ 1. Load calculations per 2001 ASHRAE Fundamentals
☐ 2. Plant equipment and system capacity no greater than needed to meet loads

- Exception: Standby equipment automatically off when primary system is operating
- Exception: Multiple units controlled to sequence operation as a function of load

☐ 3. Minimum one temperature control device per system
☐ 4. Minimum one humidity control device per installed humidification/dehumidification system
☐ 5. Thermostatic controls has 5 degrees F deadband
- Exception: Thermostats requiring manual changeover between heating and cooling

☐ 6. Automatic Controls: Setback to 55 degrees F (heat) and 85 degrees F (cool); 7-day clock, 2-hour occupant override, 10-hour backup
- Exception: Continuously operating zones
- Exception: 2 kW demand or less, submit calculations

☐ 7. Outside-air source for ventilation; system capable of reducing OSA to required minimum
☐ 8. R-5 supply and return air duct insulation in unconditioned spaces R-8 supply and return air duct insulation outside the building R-8 Insulation between ducts and the building exterior when ducts are part of a building assembly
- Exception: Ducts located within equipment
- Exception: Ducts with interior and exterior temperature difference not exceeding 15 degrees F.
- Exception: Continuously welded and locking-type longitudinal joints and seams on ducts operating at static pressures less than 2 inches w.g. pressure classification

☐ 9. Mechanical fasteners and sealants used to connect ducts and air distribution equipment
☐ 10. Ducts sealed - longitudinal seams on rigid ducts; transverse seams on all ducts; UL 181A or 181B tapes and mastics
☐ 11. Hot water pipe insulation: 1 in. for pipes <=1.5 in. and 2 in. for pipes >1.5 in. Chilled water/refrigerant/brine pipe insulation: 1 in. for pipes <=1.5 in. and 1.5 in. for pipes >1.5 in. Steam pipe insulation: 1.5 in. for pipes <=1.5 in. and 3 in. for pipes >1.5 in.
- Exception: Piping within HVAC equipment
- Exception: Fluid temperatures between 55 and 105 degrees F
- Exception: Fluid not heated or cooled
- Exception: Runouts <4 ft in length

☐ 12. Operation and maintenance manual provided to building owner
☐ 13. Balancing devices provided in accordance with IMC 603.15
☐ 14. Piping, insulated to 1/2 in. if nominal diameter of pipe is <1.5 in.; Larger pipe insulated to 1 in. thickness
☐ 15. Lavatory faucet outlet temperatures in public restrooms limited to 110 degrees F (43 degrees C)
☐ 16. Motorized, automatic shutoff dampers required on exhaust and outdoor air supply openings
- Exception: Gravity dampers acceptable in buildings <3 stories
- Exception: Gravity dampers acceptable in systems with outside or exhaust air flow rates less than 300 cfm where dampers are interlocked with fan

☐ 17. Stair and elevator shaft vents are equipped with motorized dampers

Section 5: Compliance Statement

Compliance Statement: The proposed mechanical design represented in this document is consistent with the building plans, specifications and other calculations submitted with this permit application. The proposed mechanical systems have been designed to meet the 2006 IECC requirements in COM*check* Version 3.5.1 and to comply with the mandatory requirements in the Requirements Checklist.

Neil Jenkins - Mechanical Designer — Neil Jenkins — 3/4/08
Name - Title — Signature — Date

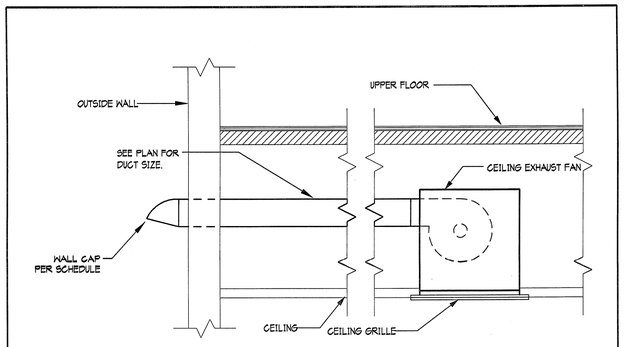

EXHAUST FAN — SCALE 4

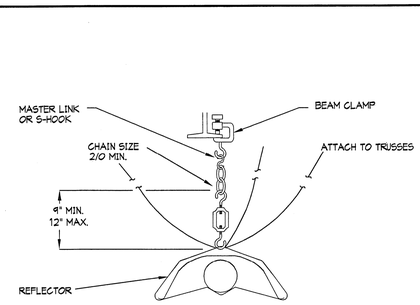

TYPICAL SUSPENSION WITH SEISMIC BRACING. HANG FROM EVERY BURNER AT APPROX. EVERY 30 FEET.

RADIANT HEATING SEISMIC DETAIL — SCALE NO SCALE 1

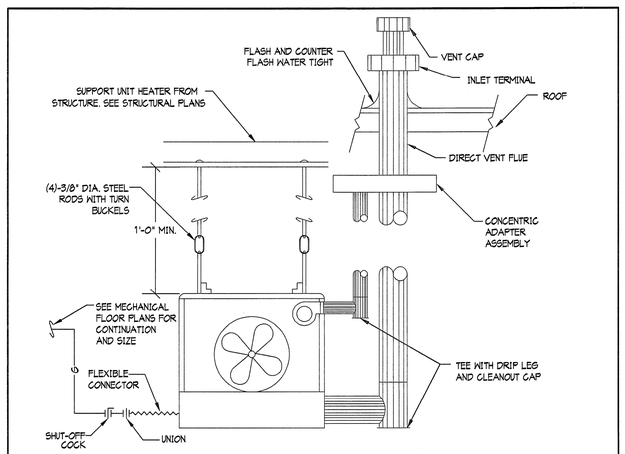

GAS UNIT HEATER — SCALE NO SCALE 5

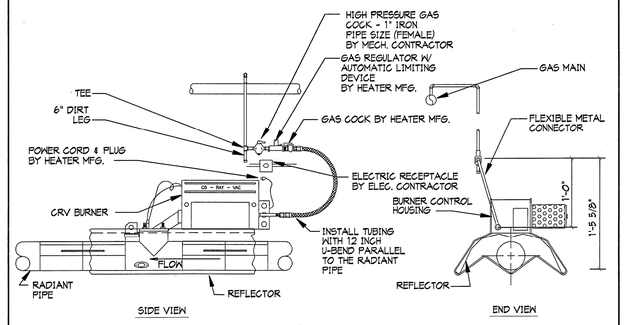

GAS CONNECTION TO CRV BURNER DETAIL — SCALE NO SCALE 2

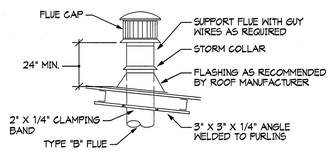

FLUE CAP DETAIL — SCALE NO SCALE 3

CLIENT

UDOT CONNECTING COMMUNITIES

STATION #4325
MILE MARKER 49.7 HIGHWAY 143
PANGUITCH UTAH

DESIGNER

ARCHIPLEX GROUP
architecture • planning • design services
1135 South West Temple, Ste. A
Salt Lake City, UT 84101
P:(801) 961-7070
F:(801) 961-7373

CONSULTANTS

VAN BOERUM & FRANK ASSOCIATES INC.
WWW.VBFA.COM CONSULTING ENGINEERS
Salt Lake City • Logan • St. George • Tempe • Pocatello
811 West Cedar St., Pocatello, ID 83201-6139
208.478.4613 T
208.478.4617 F

PROFESSIONAL SEAL

LICENSED PROFESSIONAL ENGINEER — CLIFFORD DEE HOLMES — 03/04/08 — NUMBER 309570 — STATE OF UTAH

ISSUE

MARK	DATE	DESCRIPTION
1	3-5-08	ADDENDUM #2
	01-2008	CONSTRUCTION DOCUMENTS

DFCM PROJECT NO:	07010900
ARCHIPLEX PROJECT NO:	0709.01
DRAWN BY:	LCM
CHECKED BY:	CDH
SCALE:	NONE
DATE:	JANUARY, 2008

SHEET TITLE

MECHANICAL DETAILS

M603

J:\Archiplex\UDOT\UDOT Panguitch\Mech\PANM603.dwg, 3/4/2008 3:42:14 PM

PLUMBING SYMBOL SCHEDULE

SYMBOL	ABBREVIATION	DESCRIPTION
	CW	COLD WATER LINE
	HW	HOT WATER LINE
	HWR	HW RECIRCULATION LINE
— CW —	CW	CW LINE UNDER FLOOR
— HW —	HW	HW LINE UNDER FLOOR
— HWR —	HWR	HWR LINE UNDER FLOOR
	SAN	SANITARY WASTE LINE (BELOW FLOOR OR GRADE)
	SAN	SANITARY WASTE LINE (ABOVE FLOOR OR GRADE)
	SAN(E)	EXISTING SANITARY WASTE LINE
	V	VENT LINE
C	COND	A/C CONDENSATE LINE (SIZED TO DISCHARGE)
	UP	PIPE RISER UP (VIENED CEILING TO FLOOR)
	DN	PIPE RISER DOWN (VIENED CEILING TO FLOOR
	SOV / GV	SHUT-OFF VALVE / GATE VALVE
	SOV / BV	SHUT-OFF VALVE / BALL VALVE
	SOV / GV (NC)	SOV / GV (NORMALLY CLOSED)
	SOV /BV (NC)	SOV / BV (NORMALLY CLOSED)
	SOV / GC	SHUT-OFF VALVE /GAS COCK
	CK V	CHECK VALVE
	UN	UNION
	PRV	PRESSURE REGULATING VALVE
	P&T	PRESS. & TEMP. RELIEF VALVE
	STR	'Y' STRAINER
	PR GA	PRESSURE GAUGE
	WTR MTR	WATER METER
	GAS MTR	GAS METER
RH	RH	RAIN WATER LINE (ABOVE FLOOR)
G	G	NATURAL GAS LINE
LP	LP	LIQUID PROPANE LINE
F	F	FIRE SPRINKLER LINE
SH	SHT	SOFT WATER LINE
CA	CA	COMPRESSED AIR LINE
CA	CA	COMPRESSED AIR LINE (BELOW FLOOR)
DN	DN	DEDICATED WASTE LINE
SOV IN YB	SOV	SHUT-OFF VALVE IN YARD BOX
FH	FH	FIRE HYDRANT
FDC	FDC	FIRE DEPT. CONNECTION
WMG	WMG	WATER MOTOR GONG
PIV	PIV	POST INDICATOR VALVE
POC	POC	POINT OF CONNECTION
W	W	UTILITY WATER MAIN - SIZE
SAN	SAN	SANITARY SEWER MAIN - SIZE
G	G	UTILITY GAS MAIN - SIZE
SD	SD	UTILITY STORM DRAIN - SIZE
GC	GC	AIR CONNECTION

ABBREVIATION SCHEDULE

SYMBOL	DESCRIPTION
A/C	AIR CONDITIONING
ASR	AUTOMATIC SPRINKLER RISER
AVG	AVERAGE
BFP	BACKFLOW PREVENTER
BTU	BRITISH THERMAL UNITS
CB	CATCH BASIN
CFH	CUBIC FEET PER HOUR
CL	CENTERLINE
CO	CLEANOUT
CONC	CONCRETE
CONT'D	CONTINUED
CONTR	CONTRACTOR
COTG	CLEANOUT TO GRADE
DN	DOWN
DS	DOWNSPOUT
(E)	EXISTING
(ER)	EXISTING TO BE REMOVED
EC	ELECTRICAL CONTRACTOR
ELEV	ELEVATION
EXIST	EXISTING
FCO	FLOOR CLEANOUT
FD	FLOOR DRAIN
FE	FIRE EXTINGUISHER
FEC	FE & CABINET
FHB	FLOOR HOSE BOX
FHC	FIRE HOSE AND CABINET
FL	FLOOR
FPS	FEET PER SECOND
FS	FLOOR SINK
FT.HD	FEET OF HEAD
FTR	FLUE THRU ROOF
FU	FIXTURE UNIT
GC	GENERAL CONTRACTOR
GPM	GALLONS PER MINUTE
GR	GRADE
HB	HOSE BIBB
HD	HUB DRAIN
HTR	HEATER
IE	INVERT ELEVATION
IW	INDIRECT WASTE
MAX	MAXIMUM
MHB	THOUSAND BTU'S PER HOUR
MC	MECHANICAL CONTRACTOR
MECH	MECHANICAL
MH	MANHOLE
MIN	MINIMUM
(N)	NEW
NIC	NOT IN CONTRACT
OD	OVERFLOW DRAIN
PC	PLUMBING CONTRACTOR
PIV	POST INDICATOR VALVE
POC	POINT OF CONNECTION
PSI	POUNDS PER SQUARE INCH
PSIL	PSI LOSS
RD	ROOF DRAIN
REG	REGULATOR
REQ'D	REQUIRED
RI & C	ROUGH-IN AND CONNECT
STA	STATION
VEL	VELOCITY
VTR	VENT THRU ROOF
W/	WITH
W/O	WALL CLEANOUT
WF	WALL FAUCET
WTR	WATER

GENERAL NOTES TO ALL SHEETS

1. PROVIDE ALL MATERIALS AND EQUIPMENT AND PERFORM ALL LABOR REQUIRED TO INSTALL COMPLETE AND OPERABLE PLUMBING SYSTEMS AS INDICATED ON THE DRAWINGS, AS SPECIFIED AND AS REQUIRED BY CODE.
2. RUN ALL SOIL WASTE AND VENT PIPING WITH 2% MINIMUM GRADE UNLESS OTHERWISE NOTED. HORIZONTAL VENT PIPING SHALL BE GRADED TO DRIP BACK TO THE SOIL OR WASTE PIPE BY GRAVITY.
3. ELEVATIONS AS SHOWN ON THE DRAWINGS ARE TO THE CENTERLINE OF ALL PRESSURE PIPING AND TO THE INVERT OF ALL GRAVITY PIPING.
4. ADJUST SEWER INVERTS TO KEEP TOPS OF PIPE IN LINE WHERE PIPE SIZE CHANGES.
5. MAINTAIN A MINIMUM OF 4'-0" OF GROUND COVER OVER ALL UNDERGROUND WATER MAINS AND A MINIMUM OF 3'-0" OF GROUND COVER OVER ALL UNDERGROUND SEWERS AND DRAINS.
6. PROVIDE SHUTOFF VALVES IN ALL DOMESTIC WATER PIPING SYSTEM BRANCHES IN WHICH BRANCH PIPING SERVES TWO OR MORE FIXTURES.
7. ALL MECHANICAL SYSTEM SHALL BE INSTALLED IN ACCORDANCE WITH THE CURRENT ADOPTED EDITION OF THE BUILDING CODES, MECHANICAL CODES AND PLUMBING CODES.
8. UNLESS OTHERWISE NOTED, ALL PIPING SHALL BE HELD, TIGHT TO STRUCTURE, WITH SPACE FOR INSULATION.
9. INSTALL PIPING SO THAT ALL VALVES, STRAINERS, UNION, TRAPS, FLANGES, AND OTHER APPURTENANCES REQUIRING ACCESS ARE ACCESSIBLE.
10. WHERE DOMESTIC COLD AND HOT WATER PIPING DROPS INTO A PIPE CHASE, THE SIZE SHOWN FOR THE PIPE DROPS SHALL BE USED TO THE LAST FIXTURE.
11. INSTALL ALL PIPING WITHOUT FORCING OR SPRINGING.
12. ALL PIPING SHALL CLEAR DOORS AND WINDOWS.
13. ALL PIPING SHALL GRADE TO LOW POINTS. PROVIDE HOSE END DRAIN VALVES AT THE BOTTOM OF ALL RISERS AND LOW POINTS.
14. UNIONS AND/OR FLANGES SHALL BE INSTALLED AT EACH PIECE OF EQUIPMENT, IN BYPASSES, AND IN LONG PIPING RUNS (100 FEET OR MORE) TO PERMIT DISASSEMBLY FOR ALTERATION AND REPAIRS.
15. ALL VALVES SHALL BE ADJUSTED FOR SMOOTH AND EASY OPERATION.
16. ALL VALVES (EXCEPT CONTROL VALVES) AND STRAINERS SHALL BE FULL SIZE OF PIPE BEFORE REDUCING SIZE TO MAKE CONNECTIONS TO EQUIPMENT AND CONTROLS.
17. THIS CONTRACTOR SHALL PROVIDE SUBMITTALS ON ITEMS IN MECHANICAL EQUIPMENT LIST TO THE ENGINEER FOR REVIEW PRIOR TO THE ORDER, PURCHASE OR INSTALLATION.
18. PROVIDE ALL PLUMPING FIXTURES AND EQUIPMENT WITH ACCESSIBLE STOPS.
19. UNLESS OTHERWISE NOTED, DRAINS SHALL BE INSTALLED AT THE LOW POINT OF ROOFS, AREAWAYS, FLOORS, ETC.
20. PROVIDE CLEANOUTS IN SANITARY AND STORM DRAINAGE SYSTEMS AT ENDS OF RUNS, AT CHANGES IN DIRECTION, NEAR THE BASE OF STACKS, EVERY 50 FEET IN HORIZONTAL RUNS AND ELSEWHERE AS INDICATED. ALL CLEANOUTS TO BE CAST IRON.
21. ALL CLEANOUTS SHALL BE FULL SIZE OF PIPE FOR PIPE SIZES 6 INCHES AND SMALLER AND SHALL BE 6 INCHES FOR PIPE SIZES LARGER THAN 6 INCHES.
22. ALL BALANCING VALVES AND BUTTERFLY VALVES SHALL BE PROVIDED WITH POSITION INDICATORS AND MAXIMUM ADJUSTABLE STOPS (MEMORY STOPS).
23. ALL VALVES SHALL BE INSTALLED SO THAT VALVE REMAINS IN SERVICE WHEN EQUIPMENT OR PIPING ON EQUIPMENT SIDE OF VALVE IS REMOVED.
24. ALL PIPING WORK SHALL BE COORDINATED WITH ALL TRADES INVOLVED. OFFSETS IN PIPING AROUND OBSTRUCTIONS SHALL BE PROVIDED AT NO ADDITIONAL COST TO THE OWNER.
25. PROVIDE FLEXIBLE CONNECTION IN ALL PIPING SYSTEMS CONNECTED TO PUMPS AND OTHER EQUIPMENT WHICH REQUIRE VIBRATION ISOLATION. FLEXIBLE CONNECTIONS SHALL BE PROVIDED AS CLOSE TO THE EQUIPMENT AS POSSIBLE OR AS INDICATED ON THE DRAWINGS.
26. DO NOT INSTALL EXPOSED PIPING ABOVE OR WITHIN THE CODE REQUIRED WORKING CLEARANCES OF ANY ELECTRICAL PANEL BOARD OR SWITCH GEAR (30" WIDE OR THE WIDTH OF THE PANEL, WHICHEVER IS GREATER AND 36" IN FRONT - FLOOR TO CEILING.) COORDINATE WITH ELECTRICAL CONTRACTOR.
27. COORDINATE ALL AIR DEVICE LOCATIONS WITH REFLECTED CEILING PLANS AND ELECTRICAL DRAWINGS.
28. DUCTWORK AND PIPE ROUTING AS SHOWN ON DRAWINGS IS DIAGRAMMATIC AND IS NOT TO BE SCALED. WHERE ALTERNATE ROUTING, OFFSETS AND TRANSITIONS ARE REQUIRED FOR COORDINATION OF WORK, THIS CONTRACTOR SHALL MAKE CHANGES WITHOUT ADDITIONAL COSTS.
29. THIS CONTRACTOR SHALL CLOSELY COORDINATE NEW MECHANICAL WITH NEW ELECTRICAL, ARCHITECTURAL, AND BUILDING STRUCTURE INCLUDING ANY EQUIPMENT CHANGES.
30. THIS CONTRACTOR SHALL FIELD VERIFY ALL MECHANICAL ITEMS PRIOR TO STARTING NEW WORK. ADDITIONAL COST WILL NOT BE ALLOWED FOR CONTRACTOR'S FAILURE TO BECOME FAMILAR WITH SITE CONDITIONS.

PLUMBING FIXTURE SCHEDULE

EQUIPMENT AND INSTALLATION BY PLUMBING CONTRACTOR
PROVIDE SPECIFIED ITEMS OR APPROVED EQUALS. (REFER TO SPECIFICATIONS)

MARK	DESCRIPTION	W	V	CW	HW
P1	WATER CLOSET (ADA) - FLOOR MOUNTED TANK TYPE, CRANE - HYMONT #311055, 18 INCH RIM HEIGHT, MAXIMUM WATER USAGE OF 1.6 GALLONS PER FLUSH. TANK TO HAVE PRESSURE ASSISTED FLUSH. SEAT - PROVIDE SPLIT FRONT TYPE WITH CHECK HINGE, BEMIS #1955C PROVIDE CHROME PLATED SUPPLY AND STOP.	4"	2"	1/2"	-
P2	LAVATORY - WALL MOUNTED, CRANE #1412V, HANDICAP TYPE, VITREOUS CHINA, SELF SUPPORTING FIXTURE, SIZE 24"X21". FAUCET AND DRAIN - SYMMONS S-6080 WITH DRAIN GRID, BATTERY OPERATED WITH BATTERY INSIDE BODY OF FAUCET. PROVIDE CHROME PLATED SUPPLIES AND STOPS. DEARBORN, 17 GA TUBE "P" TRAP, CHROME PLATED. FITTINGS AND TRAP TO BE INSULATED TO MEET ADA REQUIREMENTS PROVIDE MCGUIRES PROVRAP. PROVIDE WITH J.R. SMITH #0100 FLOOR MOUNTED CARRIER.	1 1/2"	1 1/2"	1/2"	1/2"
P3	UTILITY SINK - ELKAY ESSN 2520-C, WALL MOUNTED 304 14 GAUGE STAINLESS STEEL SERVICE SINK WITH HOSE THREAD, VACUUM BREAKER, WALL BRACKET AND PAIL HOOK SPOUT AND LK173 CAST IRON P-TRAP.	3"	2"	3/4"	3/4"
P4	EMERGENCY SHOWER AND EYE WASH - BRADLEY S14-310SBFW, FLOOR MOUNTED SAFETY STATION COMBINATION EYEWASH AND EMERGENCY SHOWER. ALUMINUM FLOOR FLANGE AND GALVANIZED INTERMEDIATE PIPE AND FITTINGS, TWO SOFT STREAM OUTLET HEADS, STAINLESS STEEL BOWL AND STAY OPEN TYPE VALVE ON EYEWASH, ORANGE CYCOLAC PLASTIC SHOWER HEAD WITH STAY OPEN VALVE (OPERATED BY PULL ROD AND HANDLE), 1-1/4" IPS FEMALE INLET AND OUTLET.	2"	2"	1 1/4"	1 1/4"
P5	TEMPERATURE MIXING VALVE - EMERGENCY FIXTURE THERMOSTATIC MIXING VALVE. BRADLEY #914-2100 COMPLETE WITH CHROME PLATED FINISH, STAINLESS STEEL SURFACE MOUNTED BOX, INTEGRAL STRAINER CHECK STOPS ON INLET BUILT IN COLD WATER BYPASS, HOT WATER SHUT OFF WHEN COLD SUPPLY IS LOST, OUTLET TEMPERATURE GAUGE. 25 GPM @ 15 PSI PRESSURE DROP. SET TEMPERATURE TO 85°.	-	-	1 1/4"	1 1/4"
P6	2 COMPARTMENT SINK - JUST #DL-ADA-2233-A-GR, STAINLESS STEEL DOUBLE COMPARTMENT, SELF RIMMING, SIZE 22"X33" OD WITH TWO COMPARTMENTS THAT ARE 16"X14"X8" DEEP, MATERIAL - 18 GAUGE TYPE 304 STAINLESS STEEL, SEAMLESS DIE DRAWN. INTERIOR SURFACES POLISHED TO A NON-POROUS FINISH. UNDERSIDE TO BE FULLY COATED INSULATED FOR SOUND AND CONDENSATION REDUCTION. FAUCET AND DRAIN - GOOSENECK WITH SPRAY, JUST JAF-201 WITH TEAR DROP HANDLES AND JB-99 DRAIN OR APPROVED EQUAL. PROVIDE WITH CHROME PLATED SUPPLY AND STOPS. DEARBORN 17 GA TUBE "P" TRAP, CHROME PLATED.	2"	1 1/2"	1/2"	1/2"
P7	URINAL - WALL MOUNTED URINAL CRANE #1191, 1.0 GPF. VITEROUS CHINA, MOUNT 17" A.F.F. TO MEET ADA REQUIREMENTS. PROVIDE WITH SLOAN #8186 G2 OPTIMA PLUS BATTERY OPERATED FLUSHMETER, FLUSHMETER TO HAVE MANUAL OVERRIDE (URINAL SHALL FIT SPACE AVAILABLE.) PROVIDE WITH J.R.SMITH #0631 URINAL SUPPORT	2"	1 1/2"	3/4"	-
P8	TRAP PRIMER - TRAP PRIMER MIFAB #500 COMPLETE WITH MIFAB MI-GAP AIR GAP FITTING AND STAINLESS STEEL ACCESS DOOR.	-	-	1/2"	-
P9	DRINKING FOUNTAIN - ELKAY E25B 115V, 575 WATTS, 5.0 AMP 8 GPH (1)	2"	1 1/2"	1/2"	-
TD	TRENCH DRAIN - J.R. SMITH #4931, COMPLETE WITH HEAVY DUTY FRAME, LOAD CLASS C CAST IRON SLOTTED GRATE, FULLY SLOPED CHANNELS.	4"	2"	-	-
HB	HOSE BIB - SINGLE SPOUT WITH HOSE CONNECTION. PROVIDE WITH VACUUM BREAKER AND METAL HANDLE. (PLASTIC HANDLES ARE NOT ACCEPTABLE). CHICAGO MODEL NO. 293 WITH E27 VACUUM BREAKER	-	-	3/4"	-
WH	WALL HYDRANT - WADE W8600,175, NON-FREEZE WALL HYDRANT WITH NICKEL BRONZE BOX, COMPLETE WITH CHROME PLATED LOCKING COVER AND BOX WITH INTEGRAL VACUUM BREAKER. WALL HYDRANT TO BE SIZED FOR WALL THICKNESS.	-	-	3/4"	-
HH	HOSE HYDRANT - POTTER-ROEMER #4045 1-1/2" FEMALE X MALE CAST BRASS VALVE WITH RISING STEM, ALUMINUM HAND WHEEL. CONFIRM THREAD REQUIREMENTS WITH OWNER.	-	-	1-1/2"	- (1)
FD1	FLOOR DRAIN - FLOOR DRAIN J.R. SMITH #2005-A. WITH NICKEL BRONZE STRAINER, TRAP PRIMER CONNECTION AND DEEP SEAL TRAP.	3"	1 1/2"	-	-
FS1	FLOOR SINK - FLOOR SINK J.R. SMITH #3020, COMPLETE WITH ACID RESISTANT COATED INTERIOR AND POLISHED ALUMINUM DOME BOTTOM STRAINER	2"	2"	-	-

GAS FIRED WATER HEATER SCHEDULE

MARK	MFR. CATALOG NO.	SERVICE	MAX GPM	FUEL GAS	INPUT BTU	RECOV GPH	VOLTS/PH	AMPS/ VOLTS	TEMP F IN/OUT	FLUE SIZE	REMARKS
WH 1	RINNAI V2520FFUC	HOT WATER	5.3	NAT GAS	180,000	-	120/1	-/15w	40°/140°	2"	(1) (2) (3)

1 INSTALL PER MANUFACTURERS REQUIREMENTS
2 87% EFFICIENCY
3 CONCENTRIC VENT KIT

AIR COMPRESSOR

MARK	DUTY	ACFM @ 175 PSI	RECEIVER CAP. (GAL)	ELECTRICAL VOLT/PH	ELECTRICAL HP	MANUFACTURER & MODEL NO
AC 1	SHOP AIR	25.8	80	208/1	7.5	CHAMPION HRV7-8
CA 1	COMPRESSED AIR CONNECTION					

(1) START/STOP, WITH PROVISION FOR NO LOAD START. INCLUDE MAGNETIC STARTER
(2) MOUNT AIR COMPRESSOR ON VIBRATION ISOLATORS. SEE SPEC.
(3) PROVIDE STORAGE TANK AUTOBLEEDER. ROUTE TO DRAIN.
(4) PROVIDE FLEXIBLE CONNECTOR BETWEEN AIR COMPRESSOR AND COMPRESSED AIR LINE

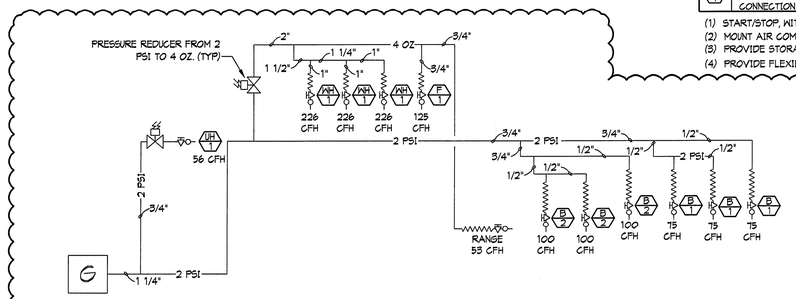

GAS RISER DIAGRAM
SCALE: NONE

JOB NAME: UDOT PANGUITCH #4325 DATE: 01/02/07
JOB ADDRESS: MILE MARKER 49.7 HIGHWAY 143, PANGUITCH, UT

COLD WATER DESIGN REQUIREMENTS

STREET MAIN TO PRV/LAST OUTLET

(A)	PRESSURE AVAILABLE:	MAXIMUM	60 PSI, MINIMUM	60 PSI
(B)	TOTAL FIXTURE UNITS:	FLUSH TANK	55.5 F.U. FLUSH VALVE	F.U.
(C)	WATER DEMAND:	1. DOMESTIC	30	GPM
		2. IRRIGATION - NIGHT USE ONLY	0	GPM
		3. MISC	0	GPM
		TOTAL:	30	GPM
(D)	RESIDUAL PRESSURE REQUIRES AT FARTHEST FIGURE:		15	PSI
(E)	PRESSURE LOSS DUE TO HEIGHT:	14 FT. X .434	6.1	PSI
(F)	PRESSURE LOSS THRU PRESSURE REDUCING VALVE: @ 60 PSI		1.0	PSI
(G)	PRESSURE LOSS THRU BACKFLOW PREVENTER:		5	PSI
(H)	PRESSURE LOSS THRU 2 " METER:		1	PSI
(I)	PRESSURE LOSS THRU WATER SOFTENER:		0	PSI
(J)	TOTAL PRESSURE LOSS FROM ABOVE (ITEM E, THRU I)		28.1	PSI
(K)	MINIMUM PRESSURE AVAILABLE (ITEM A ABOVE OR PRV. SET)		60	PSI
(L)	PRESSURE AVAILABLE FOR FRICTION LOSS (K MINUS J)		31.9	PSI
(M)	DEVELOPED PIPE LENGTH:			
	1. LENGTH OF RUN (MAIN TO LAST FIXTURE):		150	FT
	2. EQUIVALENT LENGTH FOR FITTINGS 40%:		60	FT
	3. TOTAL DEVELOPED LENGTH:		210	FT
(N)	FRICTION LOSS PER ONE HUNDRED (100) FEET OF PIPE:			
	1; 100' X (L) 31.9 DIVIDED BY (M3)	210 =	15.2	PSI/100'

PIPE SIZES BASED ON TYPE "L" COPPER @ 15.2 PSI/100 FT. & FPS MAX.

FIXTURE UNITS F.T.	F.V.	FIXTURE UNITS F.T.	F.V.	FIXTURE UNITS F.T.	F.V.
1/2"=	5	1-1/4"=	101	2-1/2"=	1124
3/4"=	14	1-1/2"=	215	3"=	
1"=	42	2"=	622	4"=	

UTILITY SCHEDULE

WATER	F.U. 55.5	G.P.M. 30	TOTAL GPM 30	METER 2 "	STREET PRESSURE 60 PSI
SEWER	F.U. 190	BUILDING SEWER 4 "		ANTICIPATED DEVELOPED GAS LENGTH 300'	

GAS LOADS	SPACE HEATING	WATER HEATING	TRAINING ROOM EQUIPMENT		OPERATING PRESSURE	
	B-1 75	226	RANGE	53	5 "WC	
	B-1 75	226				
	B-1 75	226				
	B-2 100					
	B-2 100					
	B-2 100					
	UH-1 56					
	F-1 125					TOTAL CFH
TOTALS	704 CFH	678 CFH		53 CFH	5 "WC	1434

CLIENT

UDOT CONNECTING COMMUNITIES
STATION #4325
MILE MARKER 49.7 HIGHWAY 143
PANGUITCH UTAH

DESIGNER

ARCHIPLEX GROUP
architecture • planning • design services
1135 South West Temple, Ste. A
Salt Lake City, UT 84101
P:(801) 961-7070
F:(801) 961-7373

CONSULTANTS

VAN BOERUM & FRANK ASSOCIATES INC.
WWW.VBFA.COM CONSULTING ENGINEERS
Salt Lake City • Logan • St. George • Tempe • Pocatello
811 West Cedar St., Pocatello, ID 83201-6139
208.478.4613 T
208.478.4617 F

PROFESSIONAL SEAL

LICENSED PROFESSIONAL ENGINEER
CLIFFORD DEE HOLMES
03/04/08
NUMBER 309570
STATE OF UTAH

ISSUE

MARK	DATE	DESCRIPTION
1	3-5-08	ADDENDUM #2
	01-2008	CONSTRUCTION DOCUMENTS

DFCM PROJECT NO:	07010900
ARCHIPLEX PROJECT NO:	0709.01
DRAWN BY:	LCM
CHECKED BY:	CDH
SCALE:	1/8"=1'-0"
DATE:	JANUARY, 2008

SHEET TITLE

PLUMBING SYMBOLS AND SCHEDULES

P001

J:\Archiplex\UDOT\UDOT Panguitch\Plum\PANP001.dwg, 3/4/2008 11:42:52 AM

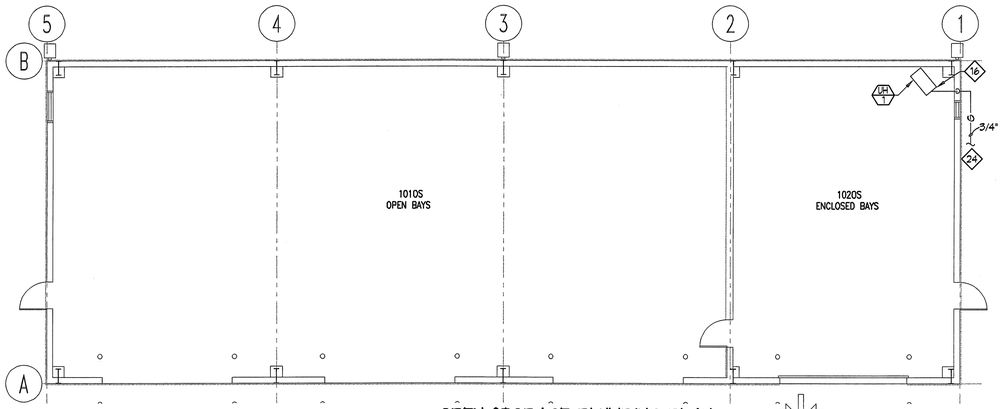

OPEN STORAGE PLUMBING PLAN

SCALE: 1/8" = 1'-0"

NORTH

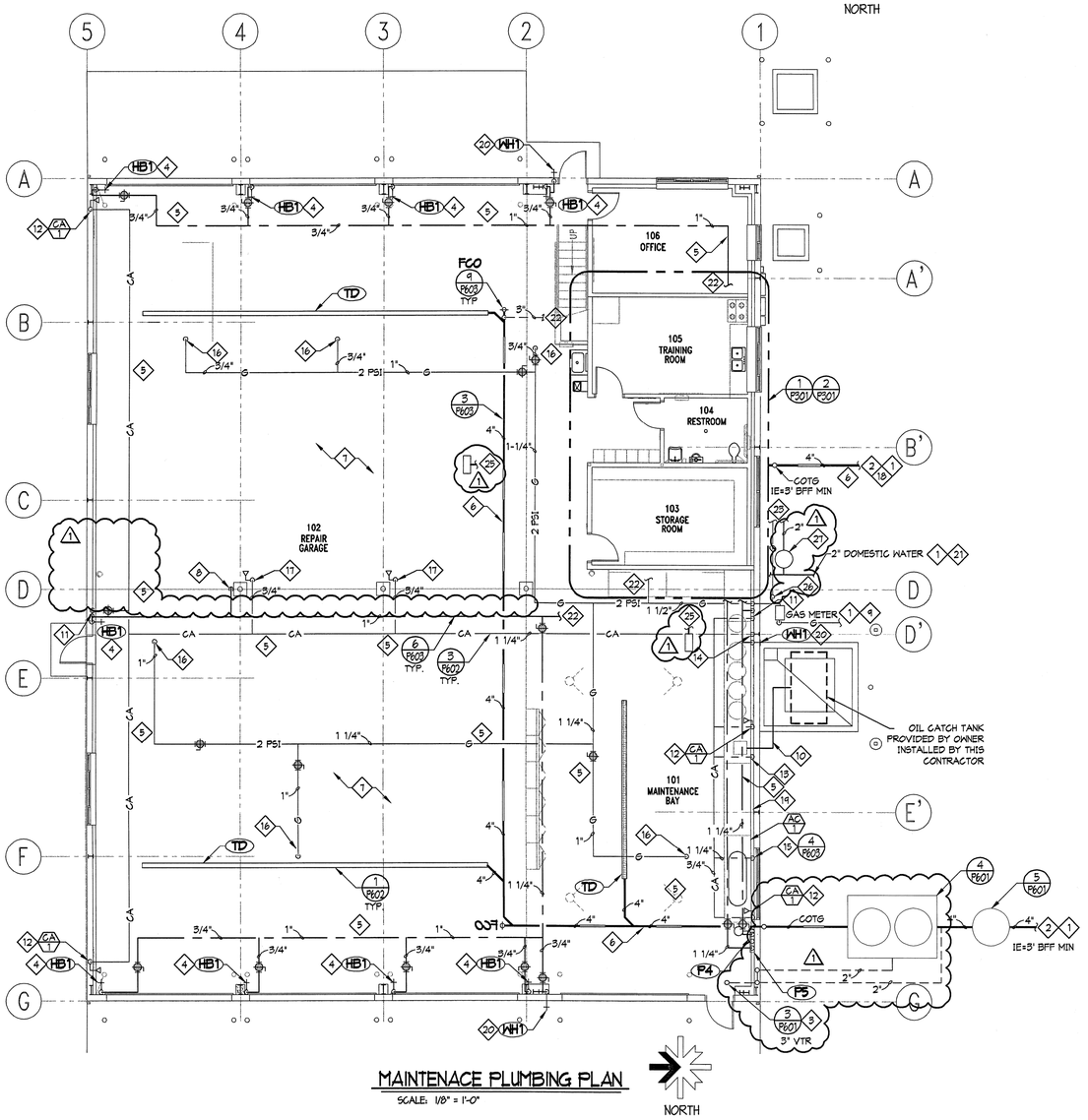

MAINTENACE PLUMBING PLAN

SCALE: 1/8" = 1'-0"

NORTH

KEY NOTES

1. SEE SITE DRAWINGS FOR CONTINUATION.
2. SEE CIVIL DRAWINGS FOR INVERT ELEVATION. GENERAL CONTRACTOR IS TO COORDINATE WITH ALL SUBCONTRACTORS TO VERIFY SITE SANITARY SEWER AND BUILDING SANITARY SEWER PIPE WILL PROPERLY CONNECT PRIOR TO INSTALLING ANY SANITARY PIPE IN THE SITE OR BUILDING. IF A PROBLEM EXISTS, THE CONTRACTOR IS TO INFORM THE ARCHITECT OF THE PROBLEM PRIOR TO INSTALLING ANY PIPE. IF PIPE IS INSTALLED AND A PROBLEM ARISES, THE CONTRACTOR, AT HIS EXPENSE, SHALL PERFORM ANY WORK REQUIRED SUCH THAT THE SANITARY PIPE CAN BE INSTALLED CORRECTLY TO CODE STANDARDS.
3. VENTS FROM SAND/OIL SEPARATOR MAY BE COMBINED AFTER THEY ARE 10' ABOVE FLOOD RIM OF SEPARATOR AND THEN CONNECTED TO VEHICLE STORAGE BAY WASTE SYSTEM VENT PIPE.
4. PROVIDE PVC COVER OVER INSULATION TO 8'-0" AFF. MOUNT HB-1 5'-0" AFF.
5. ROUTE PIPING HIGH IN STRUCTURE.
6. ALL WASTE PIPING 3" AND GREATER TO SLOPE 1/8" PER FOOT.
7. PIPE SLEEVES REQUIRED ON THIS PROJECT. IF CONTRACTOR FAILS TO INSTALL PIPE SLEEVES, THE CONTRACTOR SHALL REMOVE PIPE, INSTALL SLEEVE AND REINSTALL PIPE AT NO ADDITIONAL EXPENSE TO THE OWNER.
8. DROP WITH 1 1/2" WATER LINE ON COLUMN FACE. PROVIDE SHUT OFF VALVE AND 1 1/2" QUICK DISCONNECT AT 36" AFF. CONFIRM REQUIREMENTS WITH ARCHITECT.
9. 2 LB GAS METER SET. COORDINATE METER SIZE AND LOCATION WITH GAS COMPANY.
10. CONNECT OIL DRAIN LINE TO DRAIN PUMP. RUN DRAIN LINE OUT TO CATCH TANK. PROVIDE SHUT-OFF VALVE AND UNION. CATCH TANK FURNISHED BY OWNER, INSTALLED BY THIS CONTRACTOR. DRAIN PUMP BY THIS CONTRACTOR. VERIFY LOCATION.
11. CONNECT 1" COMPRESSED AIR LINE AND 3/4" GN LINE TO OVERHEAD HOSE REEL. PROVIDE SHUT-OFF AND UNION. HOSE REEL BY THIS CONTRACTOR.
12. 3/4" COMPRESSED AIR DROP DOWN TO QUICK DISCONNECT. PROVIDE SHUT-OFF VALVE. VERIFY MOUNTING HEIGHT WITH OWNER. REFER TO DETAIL 4/P603.
13. DROP 3/4" COMPRESSED AIR DOWN TO OIL DRAIN PUMP. PROVIDE SHUT-OFF VALVE.
14. DROP 1" COMPRESSED AIR LINE TO LUBE BARRELS. PROVIDE SHUT-OFF VALVE. LUBE BARRELS BY OWNER, INSTALLED BY THIS CONTRACTOR.
15. AIR COMPRESSOR BY THIS CONTRACTOR. CONNECT 1-1/4" COMPRESSED AIR LINE TO COMPRESSOR. PROVIDE SHUT-OFF VALVE AND UNION.
16. GAS LINE DOWN TO HEATER BURNER. PROVIDE SHUT-OFF VALVE, UNION AND APPLIANCE REGULATOR. REFERENCE DETAIL 2/M603.
17. DROP AIR LINE DOWN COLUMN FACE AND TERMINATE WITH QUICK COUPLER 3'-0" A.F.F.
18. CONNECT TO BUILDING SANITARY SEWER. FIELD VERIFY EXACT LOCATION AND INVERTED ELEVATION TO PROVIDE PROPER FLOW TO SEPTIC DRAIN FIELD.
19. 5 EACH TOTAL HOSE REELS FOR GREASE, OIL AND LUBE.
20. DROP WITH 3/4" GN LINE ON WARM SIDE OF INSULATION TO WH-1 AT 18" AFG.
21. PROVIDE DOMESTIC WATER METER AS REQUIRED BY LOCAL JURISDICTION.
22. CONTINUED ON SHEET P301.
23. ROUTE TO CLOSED STORAGE BUILDING. SEE CIVIL DRAWINGS FOR CONTINUATION.
24. GAS PIPING FROM MAIN BUILDING. SEE CIVIL DRAWINGS FOR CONTINUATION.
25. ROUTE CONDENSATE FROM VACUUM PUMP TO DRAIN INDIRECTLY INTO FLOOR SINK ON MEZZANINE. CONFIRM EXACT LOCATION AND ROUTING. (1)
26. FROM GAS METER DROP BELOW GRADE WITH GAS LINE AND ROUTE TO OPEN STORAGE BUILDING. SEE CONTINUATION THIS SHEET. CONFIRM EXACT LOCATION AND ROUTING.
27. 2" DOUBLE CHECK BACKFLOW PREVENTER IN 2" LINE TO WASH RACK. ADD ALTERNATE #2. PROVIDE MANHOLE AND COVER SIMILAR TO DETAIL 7/P602.

(1)

CLIENT

UDOT CONNECTING COMMUNITIES

STATION #4325
MILE MARKER 49.7 HIGHWAY 143
PANGUITCH UTAH

DESIGNER

ARCHIPLEX GROUP
architecture • planning • design services
1135 South West Temple, Ste. A
Salt Lake City, UT 84101
P:(801) 961-7070
F:(801) 961-7373

CONSULTANTS

VAN BOERUM & FRANK ASSOCIATES INC.
WWW.VBFA.COM CONSULTING ENGINEERS
Salt Lake City • Logan • St. George • Tempe • Pocatello
811 West Cedar St., Pocatello, ID 83201-6139
208.478.4613 T
208.478.4617 F

PROFESSIONAL SEAL

LICENSED PROFESSIONAL ENGINEER — CLIFFORD DEE HOLMES — 03/04/08 — NUMBER 309570 — STATE OF UTAH

ISSUE

MARK	DATE	DESCRIPTION
1	3-5-08	ADDENDUM #2
	01-2008	CONSTRUCTION DOCUMENTS

DFCM PROJECT NO:	07010900
ARCHIPLEX PROJECT NO:	0709.01
DRAWN BY:	LCM
CHECKED BY:	CDH
SCALE:	1/8"=1'-0"
DATE:	JANUARY, 2008

SHEET TITLE

PLUMBING PLAN

P201

J:\Archiplex\UDOT\UDOT Panguitch\Plum\PANP201a.dwg, 3/4/2008 11:42:48 AM

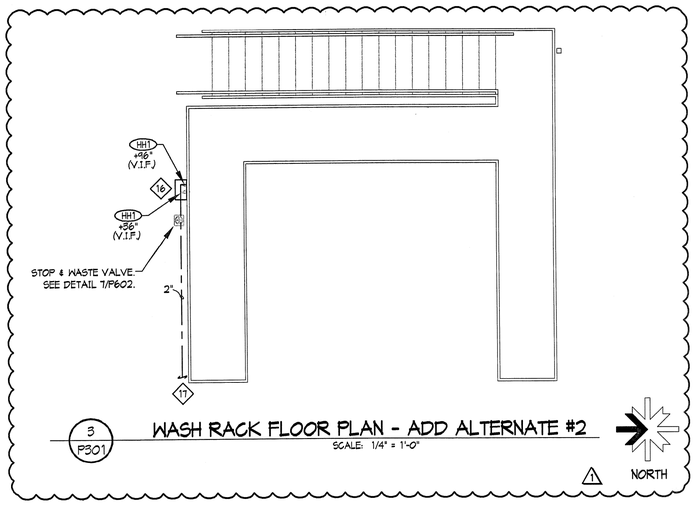

3 P301 WASH RACK FLOOR PLAN - ADD ALTERNATE #2

SCALE: 1/4" = 1'-0"

NORTH

KEY NOTES

1. 1/2" HOT WATER TO LAVATORY, P2.
2. 1" DRAIN LINE WITH AIR GAP TO FS-1.
3. 2" WATER LINE FROM BELOW.
4. 2" NATURAL GAS.
5. SEE CIVIL SITE PLAN FOR CONTINUATION.
6. DROP TO LEVEL BELOW WITH HOT AND COLD WATER LINES.
7. MAKE GAS CONNECTION TO GAS APPLIANCE THRU SHUT-OFF VALVE, UNION AND FLEXIBLE CONNECTOR. PROVIDE REGULATOR AT APPLIANCE.
8. CONTINUED ON PLUMBING PLAN P201.
9. HOT AND COLD WATER LINES FROM ABOVE.
10. ROUTE COLD WATER LINE TO SAFETY SHOWER. SEE CONTINUATION P201.
11. 3" VENT FOR COMBINATION WASTE AND VENT SYSTEM.
12. MAKE CONDENSATE CONNECTION TO FURNACE AND ROUTE TO DRAIN INDIRECTLY INTO FLOOR SINK. MIN 1" PVC.
13. MAKE MIN 1" PVC CONDENSATE DRAIN CONNECTION TO A/C COIL DRAIN PAN. PROVIDE MIN 3" DEEP P-TRAP. ROUTE TO DRAIN INDIRECTLY INTO FLOOR SINK. DO NOT COMBINE WITH FURNACE CONDENSATE DRAIN LINE.
14. DROP IN WALL WITH WATER LINE TO BELOW CABINET. RUN LINES UNDER CABINET TOP TO SINK. HOLD TIGHT TO WALL.
15. RISE IN WALL WITH VENT TO ABOVE CEILING OF THIS LEVEL. RUN VENT IN CEILING SPACE TO CONNECT WITH VENT SYSTEM OF THIS LEVEL.
16. MAKE CONNECTION TO FIXTURES THROUGH SHUT OFF VALVE AND STOP AND WASTE VALVE.
17. ROUTE 2" COLD WATER TO MAKE CONNECTION TO BUILDING WATER SYSTEM. CONFIRM EXACT LOCATION AND ROUTING.
18. INSTALL WATER PRESSURE REGULATING STATION BELOW WATER HEATERS AT 12" AFF. SEE DETAIL 6/P602. (1)

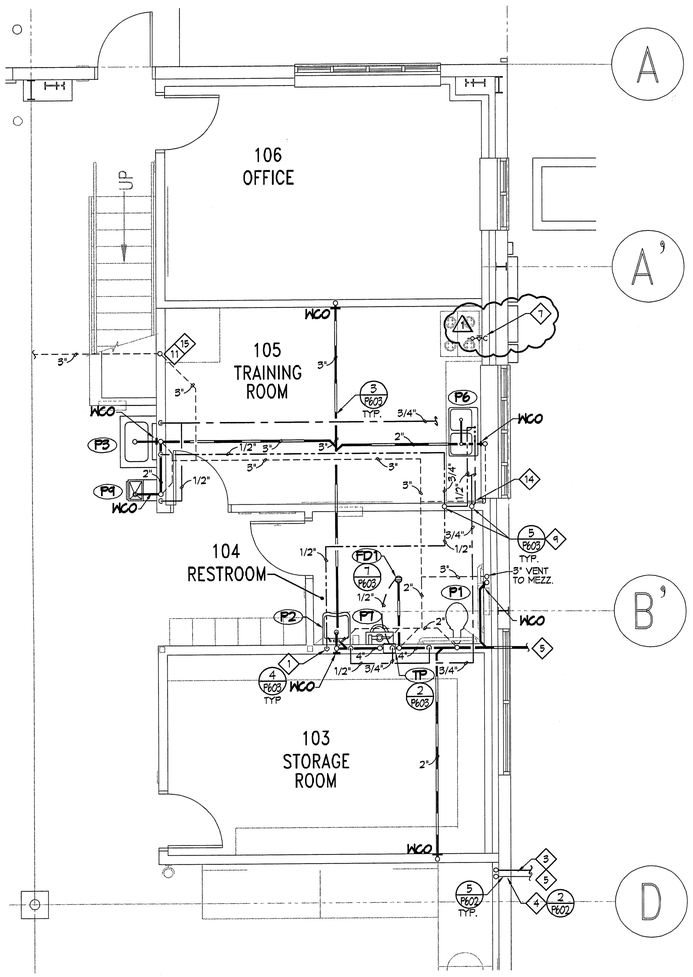

1 P301 PLUMBING ENLARGEMENT

SCALE: 1/4" = 1'-0"

NORTH

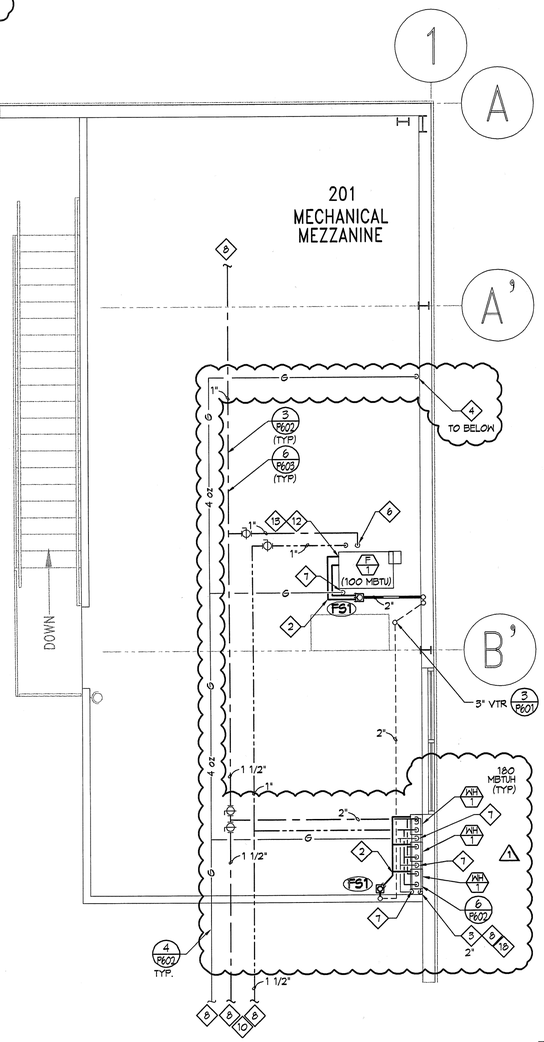

2 P301 MEZZANINE PLUMBING PLAN

SCALE: 1/4" = 1'-0"

NORTH

J:\Archiplex\UDOT\UDOT Panguitch\Plans\PANP301.dwg, 3/4/2008 11:42:43 AM

CLIENT

UDOT CONNECTING COMMUNITIES

STATION #4325
MILE MARKER 49.7 HIGHWAY 143
PANGUITCH UTAH

DESIGNER

ARCHIPLEX GROUP
architecture • planning • design services
1135 South West Temple, Ste. A
Salt Lake City, UT 84101
P:(801) 961-7070
F:(801) 961-7373

CONSULTANTS

VAN BOERUM & FRANK ASSOCIATES INC.
WWW.VBFA.COM CONSULTING ENGINEERS
Salt Lake City • Logan • St. George • Tempe • Pocatello
811 West Cedar St., Pocatello, ID 83201-6139
208.478.4613 T
208.478.4617 F

PROFESSIONAL SEAL

LICENSED PROFESSIONAL ENGINEER
CLIFFORD DEE HOLMES
03/04/08
NUMBER 309570
STATE OF UTAH

ISSUE

MARK	DATE	DESCRIPTION
1	3-5-08	ADDENDUM #2
	01-2008	CONSTRUCTION DOCUMENTS

DFCM PROJECT NO:	07010900
ARCHIPLEX PROJECT NO:	0709.01
DRAWN BY:	LCM
CHECKED BY:	CDH
SCALE:	1/4"=1'-0"
DATE:	JANUARY, 2008

SHEET TITLE

PLUMBING ENLARGEMENTS

P301

KEYED NOTES:

① C.I. PIPE SAME SIZE AS INLET PIPE.

② (2) 2" VENTS MAY BE CONNECTED TOGETHER +42" AFG WITH COMMON TO SEPERATE 2" VENT EXTEND TO 5" VTR AS REQUIRED BY BLDG DEPT.

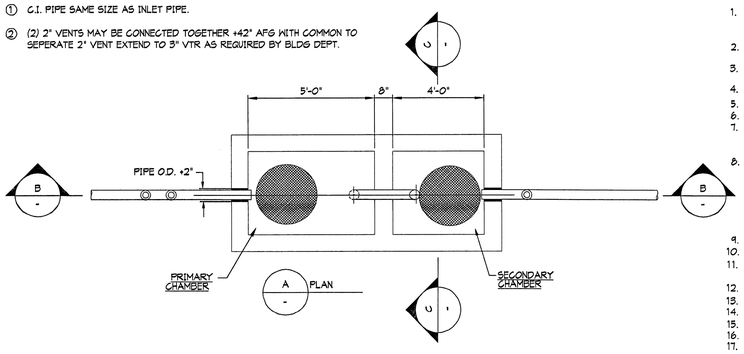

NOTES:

1. PIPING, CLEANOUT CONFIGURATION, SIZE AND TYPE OF PIPING MATERIAL AS PER CITY OR SANITARY DISTRICT. INSPECTION BY SOUTH VALLEY WATER RECLAMATION DISTRICT (SVWRF) PRIOR TO BACKFILLING IS REQUIRED.
2. INTERCEPTOR PIPING AND OTHER ASSOCIATED PIPING CHANGES THAT ARE NECESSARY TO INSTALL INTERCEPTOR MUST BE IN ACCORDANCE WITH LOCAL REGULATIONS.
3. INTERCEPTOR MUST BE PROPERLY VENTED IN ACCORDANCE WITH INTERNATIONAL PLUMBING CODE STANDARDS.
4. CONCRETE SHALL HAVE A MINIMUM 28 DAY COMPRESSIVE STRENGTH OF 4000 PSI.
5. REINFORCEMENT STEEL SHALL BE ASTEM A605 GRADE 60.
6. THE CONCRETE COVER OVER REINFORCEMENT STEEL SHALL BE A MINIMUM OF 1-½".
7. THE STRUCTURE SHALL BE DESIGNED BY A REGISTERED PROFESSIONAL ENGINEER LICENSED IN THE STATE OF UTAH. THE DESIGNED SHALL BE SUBMITTED FOR APPROVAL TO THE ARCHITECT PRIOR TO INSTALLATION.
8. THE STRUCTURE SHALL BE DESIGNED FOR THE FOLLOWING LOADING CRITERIA.
   A. WALL DESIGN FOR A SATURATED EQUIVALENT FLUID AT-REST SOIL PRESSURE OF 90 PCF PLUS TRUCK SURCHARGES.
   B. TRUCK LOADING USING AN AASHTO H-20 TRUCK LOAD.
9. MANWAY FRAME & COVER SHALL BE A TRAFFIC TYPE CASTING FOR H-20 TRUCK LOAD.
10. THE INLET PIPE SHALL BE AT AN ELEVATION 1" HIGHER THAN THE OUTLET PIPE.
11. WHERE THE SEWER LINE ALREADY EXIST, THE SEWER INVER INTO AND OUT OF THE INTERCEPTOR SHALL BE 4'-0" ABOVE THE INTERCEPTOR FLOOR.
12. THE BAFFLE IN THE INTERCEPTOR SHALL BE WITHIN 3" OF THE CEILING OF THE INTERCEPTOR. COVERS SHALL BE CIRCULAR AND BE SOLID.
13. SANITARY WASTE FROM TOILETS MUST NOT BE PLUMBED THROUGH THE INTERCEPTOR.
14. INTERCEPTOR MUST BE LOCATED IN SUCH A MANNER THAT IT IS READILY ACCESSIBLE FOR CLEANING.
15. FIELD VERIFY INVERT ELEVATIONS OF INLET AND OUTLET PIPING PRIOR TO INSTALLING INTERCEPTOR.
16. CONTRACTOR SHALL OBTAIN OFFICIAL LOCAL JURISDICTION WATER RECLAMATION DISTRICT INTERCEPTOR DESIGN AND INSTALL PER THEIR REQUIREMENTS.
17.

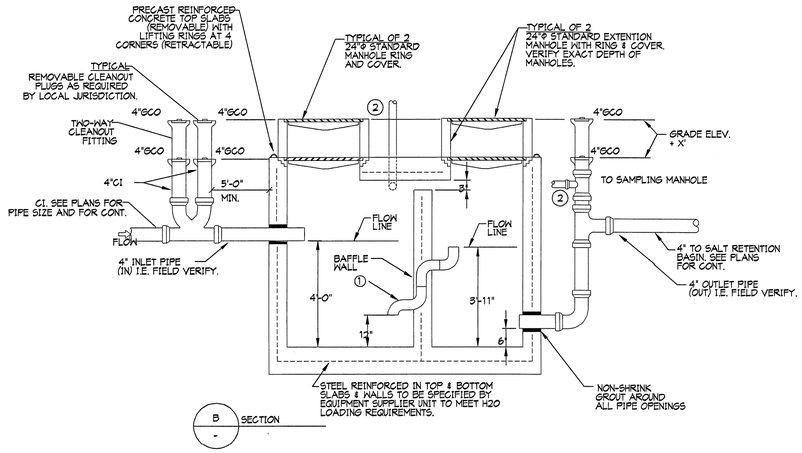

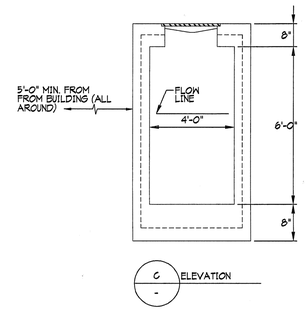

1000 GALLON GREASE INTERCEPTOR DETAIL-2 COMPARTMENT

SCALE: NO SCALE — 4

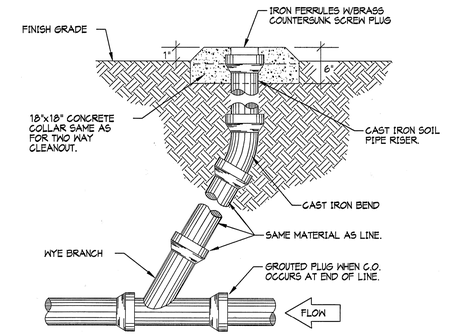

EXTERIOR CLEANOUT DETAIL

SCALE: NO SCALE — 1

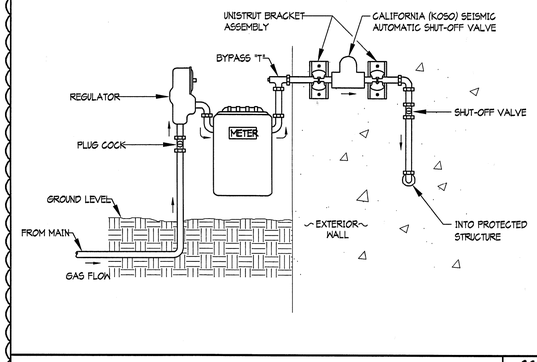

SEISMIC GAS VALVE

SCALE: NO SCALE — 2

NOTES:

1 PIPING, CLEANOUT CONFIGURATION, SIZE AND TYPE OF PIPING MATERIAL AS PER CITY OR SANITARY DISTRICT. INSPECTION BY SANITRAY DISTRICT PRIOR TO BACKFILLING.

2 WIDTH OF TROUGH IN MANHOLE MUST BE SAME SIZE AS THE INLET PIPE INTO MANHOLE. DEPTH OF TROUGH MUST BE THE SAME AS ½ OF INLET PIPE DIAMETER

3 CONCRETE SHALL HAVE A MINIMUM 28 DAY COMPRESSIVE STRENGTH OF 4000 PSI.

4 REINFORCEMENT STEEL SHALL BE ASTM A615 GRADE 60.

5 THE CONCRETE COVER OVER REINFORCEMENT STEEL SHALL BE A MINIMUM OF 1-½ INCHES.

6 THE STRUCTURE SHALL BE DESIGNED BY A REGISTERED PROFESSIONAL ENGINEER LICENSED IN THE STATE OF UTAH.

7 THE STRUCTURE SHALL BE DESIGNED FOR THE FOLLOWING LOADING CRITERIA:

A) WALLS DESIGNED FOR A SATURATED EQUIVALENT FLUID AT-REST SOIL PRESSURE OF 90 PCF PLUS TRUCK SURCHARGES
B) TRUCK LOADING USING AN AASHTO H-20 TRUCK LOAD.

8 MANHOLES WILL HAVE STAINLESS OR PLASTIC STEPS.

9 ALL MANHOLES MUST HAVE ROUND NOTCHED COVERS WITH PICK HOLE FOR REMOVAL

10 FOR NEW CONSTRUCTION BOTTOM OF INLET PIPE INTO MANHOLE MUST BE AT LEAST 3 INCHES ABOVE THE BOTTOM OF THE TROUGH THRU THE MANHOLE.

NOTE:
SANITARY PIPING FROM TOILETS MUST TIE IN DOWNSTREAM FROM SAMPLING MANHOLE.

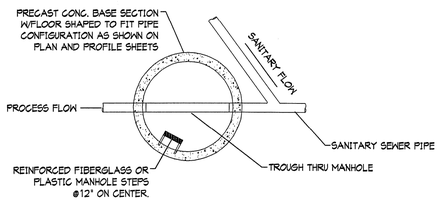

PLAN VIEW

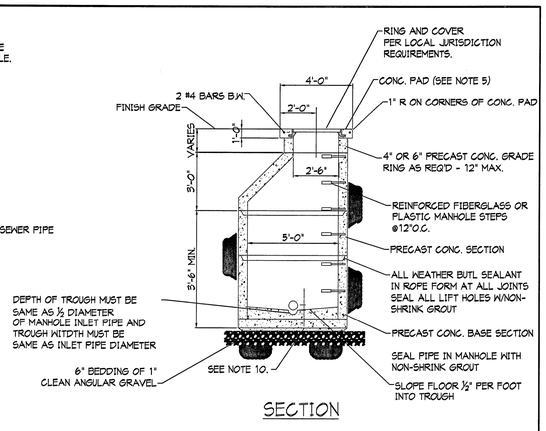

SECTION

SAMPLING MANHOLE DETAIL

SCALE: NO SCALE — 5

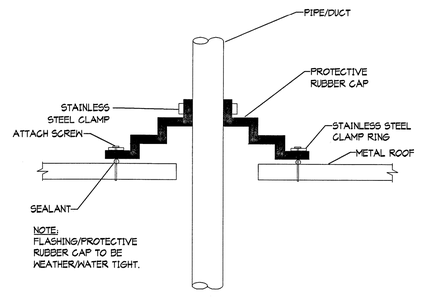

METAL ROOF PENETRATION DETAIL

SCALE: NO SCALE — 3

CLIENT

UDOT CONNECTING COMMUNITIES

STATION #4325
MILE MARKER 49.7 HIGHWAY 143
PANGUITCH UTAH

DESIGNER

ARCHIPLEX GROUP
architecture • planning • design services
1135 South West Temple, Ste. A
Salt Lake City, UT 84101
P:(801) 961-7070
F:(801) 961-7373

CONSULTANTS

VAN BOERUM & FRANK ASSOCIATES INC.
WWW.VBFA.COM CONSULTING ENGINEERS
Salt Lake City · Logan · St. George · Tempe · Pocatello
811 West Cedar St., Pocatello, ID 83201-6139
208.478.4613 T
208.478.4617 F

PROFESSIONAL SEAL

LICENSED PROFESSIONAL ENGINEER — CLIFFORD DEE HOLMES — 03/04/08 — NUMBER 309570 — STATE OF UTAH

ISSUE

MARK	DATE	DESCRIPTION
1	3-5-08	ADDENDUM #2
1	03/4/2008	CONSTRUCTION DOCUMENTS

DFCM PROJECT NO:	07010900
ARCHIPLEX PROJECT NO:	0709.01
DRAWN BY:	LCM
CHECKED BY:	CDH
SCALE:	NONE
DATE:	JANUARY, 2008

SHEET TITLE

PLUMBING DETAILS

P601

J:\Archiplex\UDOT\UDOT Panguitch\Plans\PANP601.dwg, 3/4/2008 11:42:39 AM

PIPING THRU GYPSUM WALL

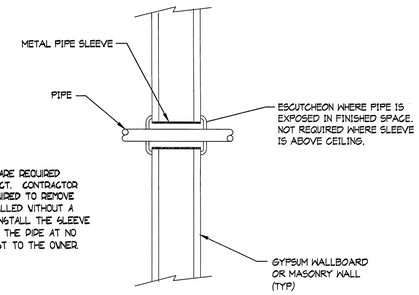

NOTE:
PIPE SLEEVES ARE REQUIRED ON THIS PROJECT. CONTRACTOR SHALL BE REQUIRED TO REMOVE ANY PIPE INSTALLED WITHOUT A PIPE SLEEVE, INSTALL THE SLEEVE AND REINSTALL THE PIPE AT NO ADDITIONAL COST TO THE OWNER.

SCALE: NO SCALE (4)

TYPICAL TRENCH DRAIN DETAIL

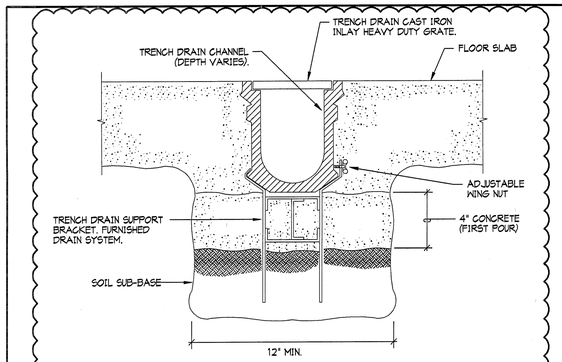

TRENCH DRAIN INSTALLATION

NOTE:
REFER TO ARCHITECTURAL DRAWINGS FOR WEATHERPROOF REQUIREMENTS.

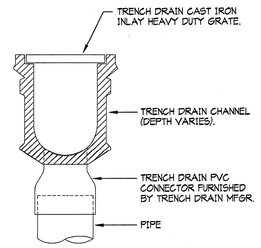

TRENCH DRAIN PIPING

SCALE: NO SCALE (1)

STOP VALVE & DRAIN DETAIL

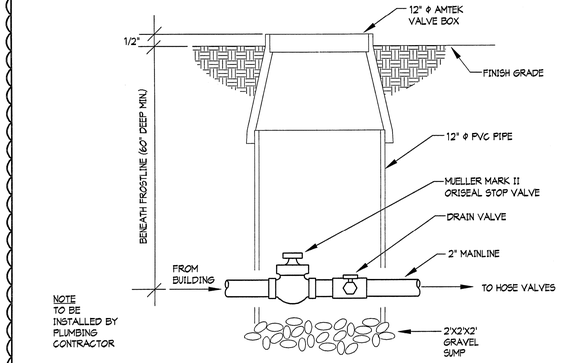

NOTE
TO BE INSTALLED BY PLUMBING CONTRACTOR

SCALE: NO SCALE (7)

PIPE THRU WALL - BELOW GRADE

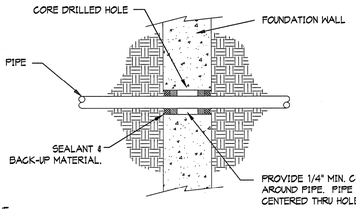

NOTE:
PIPE SLEEVES ARE REQUIRED ON THIS PROJECT. CONTRACTOR SHALL BE REQUIRED TO REMOVE ANY PIPE INSTALLED WITHOUT A PIPE SLEEVE, INSTALL THE SLEEVE AND REINSTALL THE PIPE AT NO ADDITIONAL COST TO THE OWNER.

SCALE: NO SCALE (5)

PIPE THRU WALL ABOVE GRADE

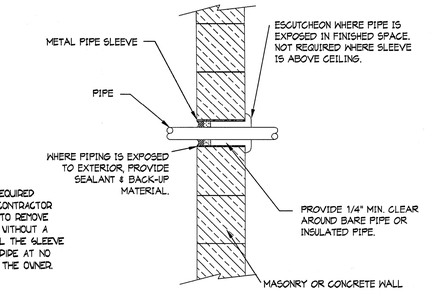

NOTE:
PIPE SLEEVES ARE REQUIRED ON THIS PROJECT. CONTRACTOR SHALL BE REQUIRED TO REMOVE ANY PIPE INSTALLED WITHOUT A PIPE SLEEVE, INSTALL THE SLEEVE AND REINSTALL THE PIPE AT NO ADDITIONAL COST TO THE OWNER.

SCALE: NO SCALE (2)

TYPICAL SEISMIC PIPE BRACING

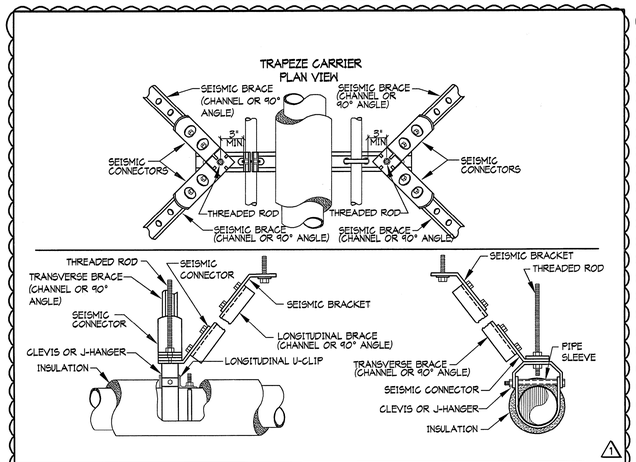

SCALE: NO SCALE (8)

PRV STATION DETAIL/ WATER HEATER DETIAL

PRV STATION SCHEDULE

PLAN CODE	SIZE	GPM	PRESSURE SETTING (PSIG)	MANUFACTURER & MODEL NO.
PRV-1	1"	25	5	WATTS 223S
PRV-2	1"	25	10	WATTS 223S
RPBP	2"	50	15	WATTS 009

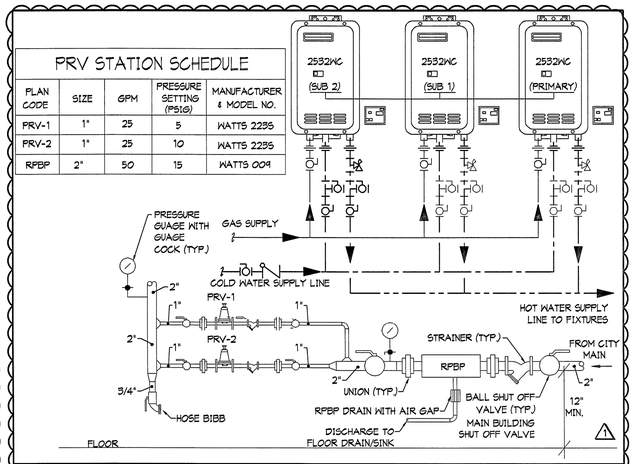

SCALE: NO SCALE (6)

PIPE IDENTIFICATION DETAIL

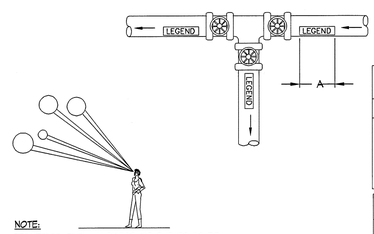

NOTE:
IDENDIFICATION MARKERS OR STRIPS TO BE PLACED ON ALL EXPOSED COVERED AND UNCOVERED PIPES AT 50'-0" INTERVALS AND AT ALL VALVES, BRANCHES, CHANGE IN DIRECTION OF FLOW AND ON BOTH SIDES OF WALLS WHERE PIPES PASS THROUGH SAME. ARROWS OF SAME COLOR AS IDENTIFICATION MARKERS SHALL ALSO BE PLACED ON PIPES POINTING AWAY FROM MARKER INDICATION DIRECTION OF FLOW.

OUTSIDE DIAMETER OF PIPE OR COVERING		LENGTH OF COLOR FIELD A		SIZE OF LETTERS B	
INCHES	MM	INCHES	MM	INCHES	MM
3/4" TO 1-1/4"	19 TO 32	8"	200	1/2"	13
1-1/2" TO 2"	38 TO 51	8"	200	3/4"	19
2-1/2" TO 6"	64 TO 150	12"	300	1-1/4"	32
8" TO 10"	200 TO 250	24"	600	2-1/2"	64
OVER 10"	OVER 250	32"	800	3-1/2"	89

SERVICE	BACKGROUND OR COLOR BAND	IDENTIFICATION MARKER
DOMESTIC COLD WATER	GREEN	WHITE ON GREEN
DOMESTIC HOT WATER	YELLOW	BLACK ON YELLOW
DOMESTIC HOT WATER RETURN	YELLOW	BLACK ON YELLOW
FIRE PROTECTION (SPRINKLER)	RED	WHITE ON RED
NATURAL GAS	YELLOW	BLACK ON YELLOW
SANITARY DRAIN	GREEN	WHITE ON GREEN
STORM WATER	GREEN	WHITE ON GREEN

SCALE: NO SCALE (3)

CLIENT

UDOT CONNECTING COMMUNITIES

STATION #4325
MILE MARKER 49.7 HIGHWAY 143
PANGUITCH UTAH

DESIGNER

ARCHIPLEX GROUP
architecture • planning • design services
1135 South West Temple, Ste. A
Salt Lake City, UT 84101
P:(801) 961-7070
F:(801) 961-7373

CONSULTANTS

VAN BOERUM & FRANK ASSOCIATES INC.
WWW.VBFA.COM CONSULTING ENGINEERS
Salt Lake City · Logan · St. George · Tempe · Pocatello
811 West Cedar St., Pocatello, ID 83201-6139
208.478.4613 T
208.478.4617 F

PROFESSIONAL SEAL

LICENSED PROFESSIONAL ENGINEER
CLIFFORD DEE HOLMES
03/04/08
NUMBER 309570
STATE OF UTAH

ISSUE

MARK	DATE	DESCRIPTION
1	3-5-08	ADDENDUM #2
	01-2008	CONSTRUCTION DOCUMENTS

DFCM PROJECT NO:	07010900
ARCHIPLEX PROJECT NO:	0709.01
DRAWN BY:	LCM
CHECKED BY:	CDH
SCALE:	NONE
DATE:	JANUARY, 2008

SHEET TITLE

PLUMBING DETAILS

P602

J:\Archiplex\UDOT\UDOT Panguitch\Plumb\PANP602.dwg, 3/4/2008 3:42:20 PM

FLOOR DRAIN DETAIL

SCALE: NO SCALE — (7)

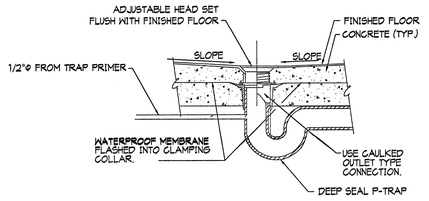

COMPRESSED AIR OUTLET CONNECTION DETAIL

SCALE: NO SCALE — (4)

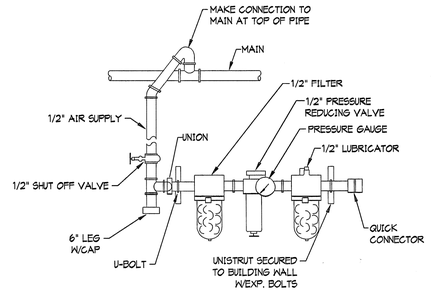

PIPING THRU FIRE-RATED WALL

SCALE: NO SCALE — (1)

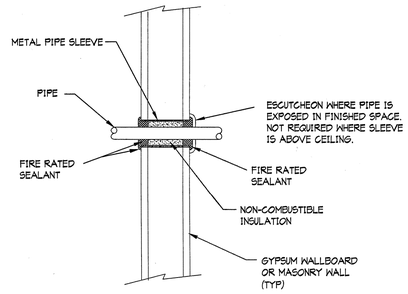

PIPING THRU ON GRADE FLOOR

SCALE: NO SCALE — (8)

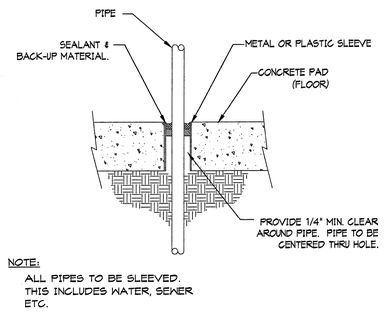

NOTE:
ALL PIPES TO BE SLEEVED. THIS INCLUDES WATER, SEWER ETC.

PIPE SUPPORT DETAIL

SCALE: NO SCALE — (5)

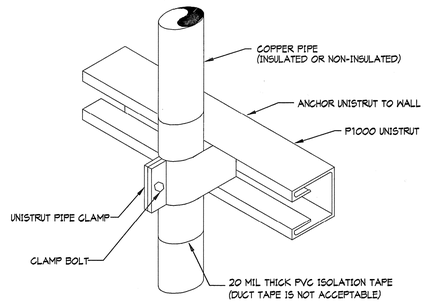

TRAP PRIMER DETAIL

SCALE: NO SCALE — (2)

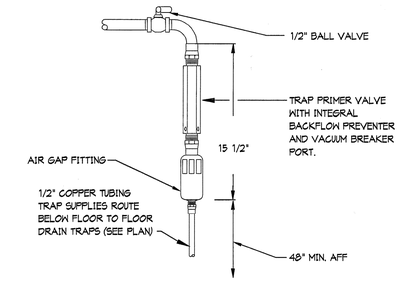

CLEANOUTS

SCALE: NO SCALE — (9)

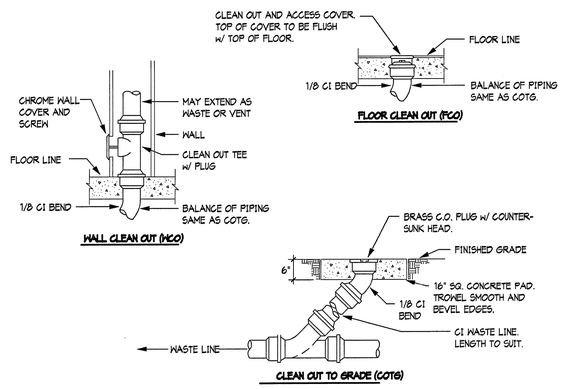

PIPE HANGERS DETAIL

SCALE: NO SCALE — (6)

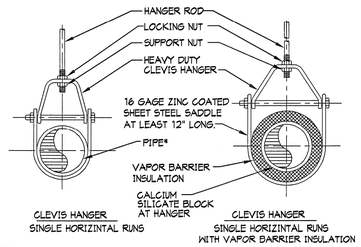

NOTE:

*INSTALL 20 MIL THICK PVC ISOLATION TAPE BETWEEN PIPE AND HANGER FOR DISSIMILAR MATERIAL. WRAP TAPE AROUND PIPE (DUCT TAPE OR ELECTRICIAN TAPE IS NOT ACCEPTABLE)

*PLUMBER'S TAPE IS NOT AN ACCEPTABLE METHOD TO HANG PIPE.

BURIED PIPE DETAIL

SCALE: NO SCALE — (3)

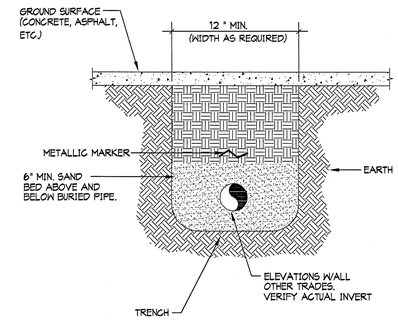

J:\Archiplex\UDOT\UDOT Panguitch\Plum\PANP603.dwg, 3/4/2008 11:42:30 AM

CLIENT

UDOT CONNECTING COMMUNITIES

STATION #4325
MILE MARKER 49.7 HIGHWAY 143
PANGUITCH UTAH

DESIGNER

ARCHIPLEX GROUP
architecture • planning • design services
1135 South West Temple, Ste. A
Salt Lake City, UT 84101
P:(801) 961-7070
F:(801) 961-7373

CONSULTANTS

VAN BOERUM & FRANK ASSOCIATES INC.
WWW.VBFA.COM CONSULTING ENGINEERS
Salt Lake City · Logan · St. George · Tempe · Pocatello
811 West Cedar St., Pocatello, ID 83201-6139
208.478.4613 T
208.478.4617 F

PROFESSIONAL SEAL

LICENSED PROFESSIONAL ENGINEER — CLIFFORD DEE HOLMES — 03/04/08 — NUMBER 309670 — STATE OF UTAH

ISSUE

MARK	DATE	DESCRIPTION
1	3-5-08	ADDENDUM #2
	01-2008	CONSTRUCTION DOCUMENTS

DFCM PROJECT NO:	07010900
ARCHIPLEX PROJECT NO:	0709.01
DRAWN BY:	LCM
CHECKED BY:	CDH
SCALE:	NONE
DATE:	JANUARY, 2008

SHEET TITLE

PLUMBING DETAILS

P603

MECHANICAL EQUIPMENT SCHEDULE

MARK	DESCRIPTION	ELECTRICAL V/PH/Hz	MCA	MOCP	LMHP	DISCONNECT SIZE/FOLE	FUSE SIZE	REMARKS
CU-1	CONDENSER	230/1/60	23.0	40.0		60/2		(1)
B-1, B-2	RADIANT HEATER	120/1/60	1.0					
ML-1	MOBILE LIFT	(2) 240/1	17	30.0				(6)
EF-1	EXHAUST FAN	120/1/60	0.4					(2)
EF-2	EXHAUST FAN	120/1/60	20.0	40.0	1.5			
EF-3	EXHAUST FAN	120/1/60	1.2	15.0	1/3	1.30/2	30	(4)
EF-4	EXHAUST FAN	120/1/60	18.8	25.0	3/4	1.30/2	30	(4)
H-1	HOIST	208/3	28 (11)	60 (1)				(8)
F-1	FURNACE	120/1/60	13.8	1. 25.0	3/4			
UH-1	UNIT HEATER	120/1/60	4.4	15.0	1.			
P-1	DRINKING FOUNTAIN	120/1/60	4.9					
VP-1	VACUUM PUMP	120/1/60	13.8	25.0	3/4	20A SWITCH/1	NF	
WH-1	WATER HEATER	120/1/60	0.6					
AC-1	AIR COMPRESSOR	240/1/60	40.0	80.0	7-1/2	100/2		(3)
G-1	AUTOGATE	240/1/60	8.0	20.0	1	30/2	20	(5)

V/PH/Hz = VOLTAGE / PHASE / HERTZ
MCA = MINIMU CIRCUIT AMPACITY
MOCP = MAXIMUM OVER CURRENT PROTECTION LISTED BY THE MANUFACTURER
NF = NON-FUSED
LMHP = LARGEST MOTOR HORSE POWER

(1) PROVIDE NEMA 3R DISCONNECT. FUSE TO MAX FUSE SIZE AS LISTED BY MANUFACTURER
(2) SWITCH WITH LIGHT FIXTURE
(3) PROVIDE NEMA 1 DISCONNECT. FUSE TO MAX FUSE SIZE AS LISTED BY MANUFACTURER
(4) INTERLOCK LOUVER MOTOR WITH FAN MOTOR. COORDINATE WITH MC.
(5) ASSUMED LOAD AND VOLTAGE EG. SHALL CONFIRM LOAD AND VOLTAGE
(6) BASED OFF OF STERTIL - KONI MANUFACTURER
(7) SINGLE PHASE RATING
(8) THREE PHASE HOIST TO COME EQUIPPED WITH VFD FOR SINGLE PHASE APPLICATION

CONDUIT/CONDUCTOR SCHEDULE

MARK	AMPS	CONDUIT CABLE	CONDUCTOR QTY	CONDUCTOR SIZE	CONDUCTOR INSUL.	REMARKS
20	30	3/4"	2	10	(1)	(2)
28	50	3/4"	2	8	(1)	(2)
26	65	1"	2	6	(1)	(2)
32	115	1 1/2"	3	2	(1)	(2)
31	85	1"	2	4	(1)	(2)
30	50	1"	2	10	(1)	(2)
212	20	3/4"	2	12	(1)	(2)
340	230	2 1/2"	3	4/0	(1)	(2)
888	510	3"	3	350	(1)	(2)
330	200	2 1/2"	3	3/0	(1)	(2)
29	50	1"	2	8	(1)	(2)
310	150	2"	3	1/0	(1)	(2)

NOTE:
(1) THHN/THWN-2.
(2) ALL CONDUIT SHALL CONTAIN A SEPARATE EQUIPMENT GROUNDING CONDUCTOR SIZED IN ACCORDANCE WITH THE NEC. ACCOUNT FOR PARALLEL RUNS.

SUFFIX:
"A" INDICATES ALUMINUM CONDUCTORS
"Y" INDICATES YELLOW ISOLATED GROUND CONDUCTOR IN ADDITION TO THE GROUND CONDUCTOR IN NOTE ABOVE.

ELECTRICAL SYMBOL SCHEDULE

SYMBOL	DEVICE/FIXTURE DESCRIPTION	MOUNTING	NOTES
▫	FLUORESCENT LIGHT FIXTURE		(1) (2) (3)
⊗	EXIT LIGHT FIXTURE - WALL MOUNT		(1) (2) (4) (5)
○	WALL LIGHT FIXTURE		(1) (2)
$	SINGLE POLE SWITCH		(6)
$3	THREE WAY SWITCH		(6)
$M	MOTION SENSING SWITCH		(7)
T	THERMOSTAT		
	DUPLEX CONVENIENCE OUTLET, GROUNDING TYPE		(6)
GFI	DUPLEX CONVENIENCE OUTLET - GFI		(6)
	SINGLE CONVENIENCE OUTLET		(6)
	DOUBLE DUPLEX OUTLET		(6)
	SINGLE PHASE SPECIAL OUTLET		(6)
J	JUNCTION BOX		(12)
J	JUNCTION BOX		(12) MOUNT AS NOTED
F	FAN MOTOR OUTLET - CEILING OR AS NOTED		
T	TELEPHONE OUTLET		(6)
M	VEHICLE EXHAUST FAN SWITCH		
S	CARBON MONOXIDE SENSOR		
	DISCONNECT SWITCH		(8) (13)
	MULTI-MEDIA STRUCTURED CABLING OUTLET		(11) USE (2) MX-CS-20
	MAIN POWER PANEL		
	PANEL BOARD		
	EMERGENCY LIGHT FIXTURE		(1) (2)
	OVERHEAD DOOR CONTROL		
	SINGLE PHASE SPECIAL OUTLET		(6)

NEMA - SUBSCRIPT MARKS TYPE	VOLTS	AMPS	OUTLET	PLUG	WIRE
1.	125	50	5-50R	5-50P	5H
2.	250	20	6-20R	6-20P	3H
3.	250	50			5H
4.	250	60			(13)

WIRING IN CND IN CEILING OR WALL	— — —	WIRING IN CND IN GROUND OR FLOOR	
CONDUIT TURNED UP	——●	CONDUIT TURNED DOWN	
CIRCUIT HOME RUN TO PANEL. 3 CONDUCTORS INCLUDING THE EQUIPMENT GROUND CONDUCTOR.			
CIRCUIT HOME RUN TO PANEL. NUMBER OF ARROW HEADS INDICATE NUMBER OF CIRCUITS. SLASH MARKS INDICATE NUMBER OF CONDUCTORS. EX. TWO CIRCUITS, FOUR CONDUCTORS, COMMON NEUTRAL AND THREE CIRCUITS WITH 7 CONDUCTORS (SEPERATE NEUTRAL PER CIRCUIT). BOTH EX. INCLUDE AN EQUIP. GROUND.			

INSTALL CONDUIT AS DRAWN ON THE PLANS. THE ONLY EXCEPTIONS ARE THOSE AUTHORIZED IN WRITING BY THE ENGINEER.
ALL CONDUITS SHALL INCLUDE AN EQUIPMENT GROUND CONDUCTOR SIZED PER NEC.

ABBREVIATIONS/NOTES

AFF - ABOVE FINISHED FLOOR, AFG - ABOVE FINISHED GRADE,
AIC - AMPS INTERUPTING CAPACITY, BC - BARE COPPER, BFC - BELOW FINISHED CEILING
BFG - BELOW FINISHED GRADE, GND. OR C. - CONDUIT, CT - CURRENT TRANSDUCER,
DFA - DROP FROM ABOVE, EC - ELECTRICAL CONTRACTOR, GC - GENERAL CONTRACTOR,
MC - MECHANICAL CONTRACTOR, MCA - MINIMUM CIRCUIT AMPS,
P.C. - PLUMBING CONTRACTOR, POC - POINT OF CONNECTION, POS - POINT OF SALES,
RMC - RIGID METAL CONDUIT, SCA - SHORT CIRCUIT AMPERES,
TC - TEMP. CONTROL CONTRACTOR, VA - VOLT/AMPS, VIF - VERIFY IN FIELD,
WP - WEATHER PROOF/NEMA 3R

(1) SEE LIGHTING FIXTURE SCHEDULE FOR TYPE AND SPECIFICS.
(2) SEE LIGHTING FIXTURE SCHEDULE FOR MOUNTING OF FIXTURE.
(3) WIRE FIXTURE FROM ADJACENT J-BOX
(4) DO NOT SWITCH
(5) PROVIDE DIRECTIONAL ARROWS AS SHOWN ON THE DRAWINGS BY THE DARKENED AREA
(6) ACCEPTABLE EQUALS ARE P&S, LEVITON, COOPER, HUBBELL
(7) ACCEPTABLE EQUALS ARE GENERAL ELECTRIC, ALLEN-BRADLEY, SQUARE D
(8) ACCEPTABLE EQUALS ARE LEVITON, P&S, HUBBELL, COOPER
(9) PROVIDE MUD RING AND/OR BOX COVER APPROPRIATE FOR DEVICE/FIXTURE SERVED
(10) USE HEAVY DUTY FOR 480 VOLT.
(11) ACCEPTABLE EQUALS ARE HUBBELL, ORTRONICS, SIEMON
(12) SWITCH WITH LIGHTS UNLESS INDICATED OTHERWISE.
(13) PROVIDE RECEPTACLE CONFIGURATION AND NUMBER OF CONDUCTORS REQUIRED WITH OWNER.

GENERAL NOTES CONT.

22. AFTER THE FACILITY IS COMPLETE AND BEEN IN FULL OPERATION FOR TWO WEEKS THE ELECTRICAL CONTRACTOR SHALL OBTAIN THE UTILITY DEMAND, THE SYSTEM VOLTAGE (PHASE TO PHASE AND PHASE TO GROUND) AND AN AMMETER READING (EACH PHASE) ON THE MAIN FEEDERS. THESE READINGS SHALL BE OBTAINED DURING NORMAL OPERATING HOURS FOR THE FACILITY AND SHALL BE RECORDED AND A COPY SENT TO THE ENGINEER.

LIGHT-FIXTURE SCHEDULE

	DESCRIPTION TYPE / MANUFACTURER	CATALOG NUMBER	LAMPS No	LAMPS TYPE	VOLTS	MOUNTING	REMARKS
8' 4-LAMP INDUSTRIAL FLUORESCENT FIXTURE							
L1	METALUX	8TDIM232-120V-EB82	4	F32T8SP35	120	PENDENT	(8) 1
							110 VA
RECESSED FLANGED 2'X4' 3-LAMP FLUORSCENT FIXTURE							
L2	METALUX	2FC8-332A-120VEB82	3	F32T8SP35	120	RECESSED	(1) (3)
							98 VA
SURFACE MOUNTED FLUORSCENT WRAP AROUND FIXTURE							
L3	METALUX	WS232A-120VEB81	2	F32T8SP35	120	SURFACE	
							68 VA
EMERGENCY BATTERY PACK							
L4	SURELITES	CCTNGSD-SM	2	C/W UNIT	120	SURFACE	
							32 VA
LED EXIT SIGN							
L5	SURELITES	LPX1ODGWH 1	-	LED	120	UNIV.	
							7 VA
OUTDOOR 250W METAL HALIDE WALLPACK							
L6	LUMARK	MHWL250-120V-WHT	1	250WMH	120	SURFACE	
							275 VA
OUTDOOR 400W METAL HALIDE FLOOD LIGHT							
L7	McGRAW EDISON	AMF-Y-400MH-120-TB-WH	1	400WMH	120	WALL	
							460 VA
100W METAL HALIDE FIXTURE							
L8	LUMARK	MHIP-T-100-120V-EM/SC/12V-F1-PE	1	15TIDC	120	WALL	(2) 1
							110 VA
250W METAL HALIDE FIXTURE							
L9	LUMARK	MHCL250-120V	1	250WMH	120		
							275 VA
POLE LIGHT - 30' POLE							
L10	McGRAW EDISON	CLM-AM-400MH-240-35-FGAP/ MA100T-AP-RS56MBOSV	1	400WMH	240	POLE	
							460 VA
4' 2-LAMP FLUORESCENT WALL FIXTURE							
L11	METALAX	BC232-120V-EB81	2	F32T8SP35			
							65 VA
BATTERY PACK							
L12	SURE-LITES	XRO			120	WALL 7'-6"	
							18 VA

NOTE: THE FIXTURES LISTED IN THIS SCHEDULE REPRESENT THE QUALITY AND TYPE OF FIXTURES DESIRED. EQUALS OF THOSE MANUFACTURERS NOTED IN THE REMARKS ARE ACCEPTED. FOR THOSE FIXTURES WITHOUT A MANUFACTURE DESIGNATION IN THE REMARK COLUMN THE SUPPLIER MAY SUBMIT A FIXTURE THEY BELIEVE TO BE EQUAL TO THE ONE SPECIFIED. TO BE ACCEPTABLE THE FIXTURES SUBMITTED MUST BE OF THE SAME TYPE AND MATERIAL AS THAT SPECIFIED AND MUST RECEIVE APPROVAL FROM THE ENGINEER BY ADDENDUM PRIOR TO BID.

(1) PROVIDE TWO BALLASTS FOR INBOARD/OUTBOARD SWITCHING.
(2) FROM GREENDALE.
(3) HANGING LIGHT FIXTURES SHALL BE INSTALLED ACCORDING TO ASCE/SEI 7-05 SECTION 13.6. 1

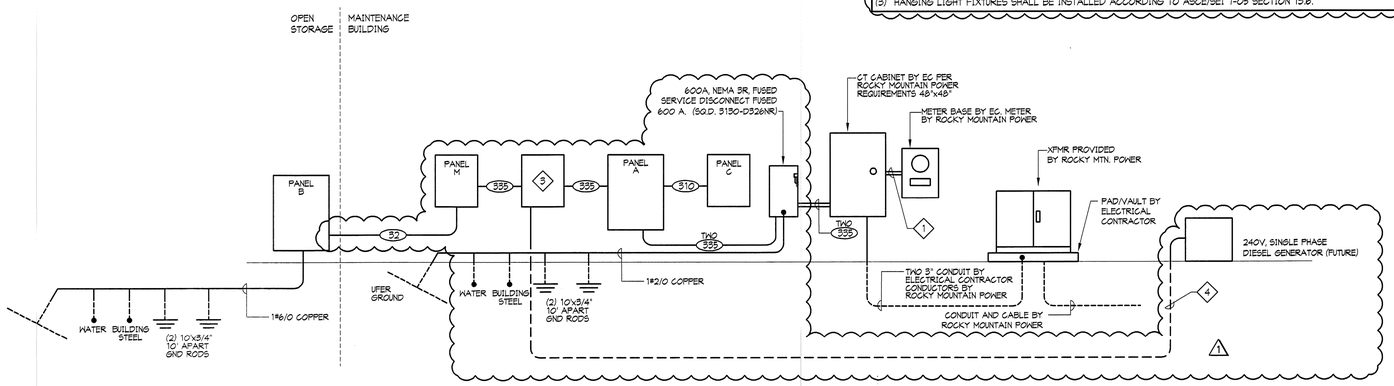

POWER RISER
SCALE: NONE

KEY NOTES

1. PROVIDE 1" CONDUIT WITH CONDUCTORS FROM CT CABINET TO METER SOCKET BASE. 1
2. PROVIDE A #4 COPPER EQUIPMENT GROUND CONDUCTOR IN THIS FEEDER.
3. AUTOMATIC TRANSFER SWITCH (CUMMINGS OHPC 240VAC, 2-POLE, 400A). EC SHALL CONNECT THE NEUTRALS FROM THE GENERATOR AND NORMAL POWER. 1
4. PROVIDE (1) 4" CONDUIT WITH PULL CORD FOR FUTURE FEEDER FROM GENERATOR. STUB AND CAP CONDUIT AT AN ACCESSIBLE LOCATION. CONFIRM LOCATION WITH OWNER PRIOR TO ROUGH-IN.

GENERAL NOTES

1. THE ELECTRICAL SYSTEMS DEFINED BY THESE PLANS AND SPECIFICATIONS ARE TO BE CONSTRUCTED AS COMPLETE AND OPERABLE SYSTEMS AND SHALL BE BID WITH THIS INTENT. THE CONTRACTOR SHALL VISIT THE SITE, READ ALL THE RELEVANT DOCUMENTS AND BECOME FAMILIAR WITH THE TYPE OF CONSTRUCTION AND WORK TO BE ACCOMPLISHED. SHOULD ANY ERROR, OMISSION OR CONFLICT EXIST IN EITHER THE PLANS OR SPECIFICATIONS, THE CONTRACTOR SHALL NOTIFY THE ENGINEER IN WRITING BEFORE SUBMITTING HIS BID PRICE SO A CHANGE CAN BE ISSUED IN A PRE-BID ADDENDUM. OTHERWISE, THE CONTRACTOR AND/OR EQUIPMENT SUPPLIER SHALL SUPPLY THE PROPER MATERIALS AND LABOR TO INSTALL COMPLETE AND OPERABLE SYSTEMS AT THEIR OWN EXPENSE. WHEN EACH ELECTRICAL SYSTEM IS COMPLETE, THE CONTRACTOR SHALL TEST AND CONFIRM IT'S PROPER OPERATION. ANY INCOMPLETE SYSTEM SHALL BE MADE COMPLETE AND OPERABLE.

2. THE ARCHITECTURAL AND MECHANICAL PLANS ARE CONSIDERED A PART OF THE ELECTRICAL DOCUMENTS SO FAR AS THEY APPLY. THE ELECTRICAL CONTRACTOR SHALL REFER TO AND COORDINATE WITH THEM. NO EXTRA COST SHALL BE ALLOWED FOR FAILURE TO COORDINATE THE CONTRACT DOCUMENTS WITH OTHER TRADES AND/OR IF EQUIPMENT DIMENSIONS ARE GREATER THAN SPECIFIED AND/OR DIMENSIONED ON THE PLANS.

3. NO ADDITIONS TO THE CONTRACTOR BID WILL BE ALLOWED FOR CHANGES MADE NECESSARY BY INTERFERENCE WITH OTHER WORK.

4. THE ELECTRICAL CONTRACTOR SHALL PROVIDE EQUIPMENT, MATERIALS AND LABOR FOR THE CONNECTIONS OF ALL EQUIPMENT SHOWN ON THE PLANS - ARCHITECTURAL, MECHANICAL, ETC.

5. THIS PROJECT IS TO BE INSTALLED IN STRICT ACCORDANCE WITH LOCAL AND STATE CODES AND THE NEC. IF AT ANY TIME DURING CONSTRUCTION OR AFTER, SOMETHING IS FOUND TO BE INSTALLED IN VIOLATION OF THE CODES LISTED ABOVE, IT SHALL BE CORRECTED AT THE CONTRACTORS EXPENSE.

6. ELECTRICAL CONTRACTOR SHALL CONFIRM THE EXACT LOCATION OF THE POWER COMPANY SERVICE TRANSFORMER, BEFORE INSTALLING THE PAD AND SERVICE CONDUIT.

7. THE ELECTRICAL CONTRACTOR SHALL COORDINATE THE SERVICE FEEDER TO THE BUILDING WITH THE LOCAL UTILITY. PROVIDE LABOR AND CONDUIT, CONDUCTORS, WIRE WAYS, TRANSFORMER LUGS, METER BASES, METER CONDUIT, CONDUCTORS, ETC., AS NEEDED FOR A COMPLETE ELECTRIC SERVICE TO THIS FACILITY.

8. THE EC SHALL INSTALL A SEPARATE EQUIPMENT GROUNDING CONDUCTOR IN EACH CONDUIT RUN. CONDUIT SHALL NOT BE USED AS AN EQUIPMENT GROUNDING CONDUCTOR. THE EC SHALL GROUND THE ELECTRICAL SYSTEM IN ACCORDANCE WITH LOCAL AND NATIONAL CODES.

9. THE CONTRACTOR SHALL NOTIFY THE MANUFACTURER THAT THE LAYOUT AND DIMENSIONS ARE CRITICAL FOR ALL PANELS, SWITCHGEAR, ETC. AND NO PIECE OF EQUIPMENT SHALL EXCEED THE PHYSICAL SIZE INDICATED ON THE PLANS.

10. ELECTRICAL CONTRACTOR SHALL CONFIRM MINIMUM CODE (NEC) WORKING CLEARANCE BEFORE INSTALLING ANY ELECTRICAL PANELS OR CABINETS AND SHALL MOVE THE PANELS AT HIS EXPENSE IF REJECTED BY AN INSPECTOR. IF CLEARANCE IS NOT POSSIBLE, THE DESIGNER SHALL BE NOTIFIED IMMEDIATELY IN WRITING.

11. THE CONTRACTOR SHALL ALLOW THE MOVEMENT, BEFORE ROUGH-IN, OF ANY ELECTRICAL PANEL, DEVICE, LIGHT FIXTURE, ETC. A DISTANCE OF 10 FEET WITHOUT REQUIRING ADDITIONAL COST TO THE PROJECT.

12. THE ELECTRICAL CONTRACTOR SHALL SECURE ALL CONDUIT TO THE STRUCTURE AS IT IS SET IN PLACE USING INDUSTRY STANDARD METHODS AND PRACTICES.

13. TO ASSURE ALL DEVICES ARE RIGIDLY SET, THE ELECTRICAL CONTRACTOR SHALL SECURE ALL DEVICE BOXES WITH BRACKETS, HANGERS, ETC. DESIGNED FOR THE APPLICATION. ANY DEVICE BOXES NOT SECURED WILL BE MADE SECURE AT THE CONTRACTORS EXPENSE.

14. THE ELECTRICAL CONTRACTOR SHALL PROVIDE THE TELEPHONE SERVICE CONDUIT WITH A NYLON PULL CORD INSTALLED. EC SHALL CONFIRM ROUTING, SIZE, AND LOCATION OF THE TELEPHONE SERVICE CONDUIT, AND THE MAIN TELEPHONE BOARD WITH THE TELEPHONE COMPANY AND EACH TELEPHONE OUTLET WITH OWNER PRIOR TO ROUGH-IN.

15. EC SHALL INSTALL A 3/4" CONDUIT WITH (1) #6 BARE COPPER CONDUCTOR FROM TELEPHONE PANEL TO THE MAIN GROUNDING BUS.

16. BEFORE ANY ELECTRICAL CONDUIT, BOXES, ETC. ARE COVERED (FLOOR, CEILINGS, WALLS, ETC.), THEY SHALL BE APPROVED BY THE INSPECTING OFFICER (INSPECTOR). THE UNCOVERING AND REPLACEMENT OF ELECTRICAL WORK FOR THE INSPECTION PURPOSES WILL BE AT THE COST OF THE ELECTRICAL CONTRACTOR.

17. LIGHT FIXTURES INSTALLED IN THE MECHANICAL ROOM SHALL BE PLACED SO THAT ALL EQUIPMENT IS ADEQUATELY ILLUMINATED AFTER THE MECHANICAL EQUIPMENT IS IN PLACE.

18. ALL FIXTURES SHALL BE SUPPORTED FROM THE BUILDING STRUCTURE AND NOT THE CEILING GRID.

19. ELECTRICAL CONTRACTOR SHALL PROVIDE CONDUIT WITH PULL CORD, FROM ALL HEATING/COOLING EQUIPMENT TO THE THERMOSTAT, FOR THE AUTOMATIC TEMPERATURE SYSTEM CONTROL. CONFIRM AND COORDINATE WITH THE MECHANICAL CONTRACTOR.

20. UNDERGROUND CONDUIT FOR SITE LIGHTING SHALL BE BURIED 24" B.F.G. AND SHALL HAVE ONE (1) #10 THHN GREEN GROUND CONDUCTOR TO GROUND ALL FIXTURES.

21. THE ELECTRICAL CONTRACTOR SHALL PROVIDE AND INSTALL THE STRUCTURED CABLING FROM EACH TELEPHONE OR MULTIMEDIA OUTLET TO THE TELEPHONE/DATA BOARD/RACK. THE CABLE SHALL BE LABELED ON EACH END FOR PROPER IDENTIFICATION BEFORE THE CABLE ENDS ARE TERMINATED. THE ELECTRICAL CONTRACTOR SHALL TERMINATE THE CABLES IN THE OUTLET AND IN THE PATCH PANEL OR BLOCK IN THE TELECOMMUNICATIONS CLOSET.

CLIENT

UDOT CONNECTING COMMUNITIES

STATION #4325
MILE MARKER 49.7 HIGHWAY 143
PANGUITCH UTAH

DESIGNER

ARCHIPLEX GROUP
architecture • planning • design services
1135 South West Temple, Ste. A
Salt Lake City, UT 84101
P:(801) 961-7070
F:(801) 961-7373

CONSULTANTS

VAN BOERUM & FRANK ASSOCIATES INC.
WWW.VBFA.COM CONSULTING ENGINEERS
Salt Lake City · Logan · St. George · Tempe · Pocatello
811 West Cedar St., Pocatello, ID 83201-6139
208.478.4613 T
208.478.4617 F

PROFESSIONAL SEAL

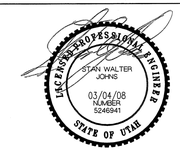

ISSUE

MARK	DATE	DESCRIPTION
1	3-5-08	ADDENDUM #2
	01-2008	CONSTRUCTION DOCUMENTS

DFCM PROJECT NO:	07010900
ARCHIPLEX PROJECT NO:	0709.01
DRAWN BY:	LCM
CHECKED BY:	SWJ
SCALE:	NONE
DATE:	JANUARY, 2008

SHEET TITLE

GENERAL NOTES, SCHEDULES AND RISER DIAGRAM

E001

LOAD CALCULATIONS

PANEL	DESCRIPTION	LOAD	DEMAND	NEW LOAD	AMPS
A	LIGHTING	18441	1.25	23051.25	
	HVAC	16594	1	16594	
	POWER	65385	1	65385	
	RECEPTACLES	11980	1	11980	
LARGEST NEW MOTOR	7.5HP	9600	0.25	2400	
TOTAL SERVICE LOAD (240 VOLTS)				119410 = 497.5	

PANEL A — TYPE NQOD — LOCATION MEZZANINE
VOLTAGE 240 / 120 — PHASE 1 WIRES 3 — AIC 22,000 AMPS
MOUNTING: FLUSH; X SURFACE — FEED: TOP; X BOTTOM
MAINS: 600 AMP; X LUGS; BREAKER — DIMS.: 26" W; 5.75" D; 35" H
SPECIAL EQUIPMENT: X GROUND BUS; X SUB-FEED BRKR; NEMA 3R; SURGE PROTECTOR; X SERIES RATED

CIR NO.	CIRCUIT DESCRIPTION	CODE	LTS	CO	MIS	P	AMP	WIRE SIZE	CIRCUIT LOAD	A	C	CIRCUIT LOAD	WIRE SIZE	BRKR AMP	P	MIS	CO	LTS	CODE	CIRCUIT DESCRIPTION	CIR NO.
1	E. DR. RECPS			2		1	20	12	360	1560		1200	10	20	1	1			6	E. HT CABLE	2
3	W. DR. RECP			1		1	20	12	180		180			--	-					-----	4
5	SPARE					1	20			1200		1200	10	20	1	1			6	E. HT CABLE	6
7	SPARE					1	20				0			--	-					-----	8
9	SPARE					1	20			1200		1200	10	20	1	1			6	ROOF SNOW MELT	10
11	SPARE					1	20				0			--	-					-----	12
13	DEFINITE PURPOSE	1			1	2	60		3500	3860		360	12	20	1		2			MEZZANINE	14
15	-----					-	--		3500		4100	1200	10	20	1	1			6	W. HT CABLE	16
17	DEFINITE PURPOSE	1			1	2	60		3500	3500				--	-					-----	18
19	-----					-	--		3500		4700	1200	10	20	1	1			6	W. HT CABLE	20
21	WASHRACK	1		1		2	30		200	200				--	-					-----	22
23	-----					-	--		200		1400	1200	10	20	1	1			6	ROOF SNOW MELT	24
25	SANDER RACK	1		2		1	20		360	360				--	-					-----	26
27	SANDER RACK	1			1	2	20		360		1660	1300	12	20	1	1	4			RM 103, 104 EXT	28
29	-----					-	--		360	900		540	10	20	1	1	3			S WALL	30
31	RM 105 S			3		1	20	12	540		1340	800	10	20	1	1				EXT SW	32
33	RM 105			2		1	20	12	360	1160		800	10	20	1	1				EXT NW	34
35	LOUVER				1	1	20	12	180		980	800	10	20	1	1				EXT NE	36
37	SPARE					1	20			540		540	12	20	1		3			COLUMN RECPS	38
39	PANEL M	1,3			1	2	300		24191		40871	16680		150	2	1			1,3	PANEL C	40
41	-----					-	--		25949	42089		16140		--	-					-----	42

NOTE:

PHASE TOTALS	A		C	CONN LOAD
VA	56569		55831	112 KVA
DIV				AV. AMPS
AMPS	471		465	468 A

CODES
1 = SEE DRAWINGS FOR CONDUIT & CONDUCTOR SIZE
2 = SHUNT-TRIP BREAKER 5 = GFCI BREAKER
3 = SUBFEED BREAKER 6 = GFEP BREAKER
4 = PROVIDE LOCK OFF DEVICE
THIS PANEL, ALL OF ITS LUGS, BREAKERS, ETC. SHALL BE RATED FOR 75° C

PANEL B — TYPE NQOD — LOCATION CLOSED STORAGE
VOLTAGE 240 / 120 — PHASE 1 WIRES 3 — AIC 10,000 AMPS
MOUNTING: FLUSH; X SURFACE — FEED: TOP; X BOTTOM
MAINS: 100 AMP; LUGS; X BREAKER — DIMS.: 20" W; 5.75" D; 23" H
SPECIAL EQUIPMENT: X GROUND BUS; SUB-FEED BRKR; NEMA 3R; SURGE PROTECTOR

CIR NO.	CIRCUIT DESCRIPTION	CODE	LTS	CO	MIS	P	AMP	WIRE SIZE	CIRCUIT LOAD	A	C	CIRCUIT LOAD	WIRE SIZE	BRKR AMP	P	MIS	CO	LTS	CODE	CIRCUIT DESCRIPTION	CIR NO.
1	SPARE					1	15			360		360	10	20	1		2			S CLOSED BAY	2
3	EF-3				1	1	15	10	864		1044	180	10	20	1		1			W CLOSED BAY	4
5	DOOR				1	1	20	10	1000	1360		360	10	20	1		2			N CLOSED BAY	6
7	SPARE					1	20				180	180	10	20	1		1			N OPEN BAY	8
9	SPARE					1	20			180		180	10	20	1		1			CNTR OPEN BAY	10
11	L6 EXT LTS		2			1	20	10	550		730	180	10	20	1		1			S OPEN BAY	12
13	L7 EXT LTS		2			1	20	10	920	1020		100	10	20	1	1				LIGHTING CONTROL	14
15	LIGHTS		19			1	20	12	1650		2346	696	12	15	1	1				UH-1	16
17	EF-4				1	1	25	10	1656	1656				20	1					SPARE	18
19	SPARE					1	20				0			20	1					SPARE	20

NOTE:

PHASE TOTALS	A		C	CONN LOAD
VA	4576		4300	9 KVA
DIV				AV. AMPS
AMPS	38		36	37 A

CODES
1 = SEE DRAWINGS FOR CONDUIT & CONDUCTOR SIZE
2 = SHUNT-TRIP BREAKER 5 = GFCI BREAKER
3 = SUBFEED BREAKER 6 = GFEP BREAKER
4 = PROVIDE LOCK OFF DEVICE
THIS PANEL, ALL OF ITS LUGS, BREAKERS, ETC. SHALL BE RATED FOR 75° C

PANEL C — TYPE NQOD — LOCATION SALT STORAGE
VOLTAGE 240 / 120 — PHASE 1 WIRES 4 — AIC 22,000 AMPS
MOUNTING: FLUSH; X SURFACE — FEED: TOP; X BOTTOM
MAINS: 225 AMP; X LUGS; BREAKER — DIMS.: 20" W; 5.75" D; 35" H
SPECIAL EQUIPMENT: X GROUND BUS; SUB-FEED BRKR; X NEMA 3R; SURGE PROTECTOR

CIR NO.	CIRCUIT DESCRIPTION	CODE	LTS	CO	MIS	P	AMP	WIRE SIZE	CIRCUIT LOAD	A	C	CIRCUIT LOAD	WIRE SIZE	BRKR AMP	P	MIS	CO	LTS	CODE	CIRCUIT DESCRIPTION	CIR NO.
1	RECP.-BENCHES			4		1	20	12	720	5520		4800		80	2	1			1	COMPRESSOR	2
3	ROOM 101			3		1	20	12	540		5340	4800		--	-					-----	4
5	ROOM 101			4		1	20	12	360	2400		2040		30	2	1			1	MOBILE LIFT A	6
7	DEFINITE PURPOSE	1			1	2	60		3500		5540	2040		--	-					-----	8
9	-----					-	--		3500	5540		2040		30	2	1			1	MOBILE LIFT B	10
11	SPARE					1	20				2040	2040		--	-					-----	12
13	SPARE					1	20			3220		3220		60	2	1			1	HOIST	14
15	SPARE					1	20				3220	3220		--	-					-----	16
17	SPARE					1	20			0				20	1					SPARE	18
19	SPARE					1	20				0			20	1					SPARE	20

NOTE:

PHASE TOTALS	A		C	CONN LOAD
VA	16680		16140	33 KVA
DIV				AV. AMPS
AMPS	139		135	137 A

CODES
1 = SEE DRAWINGS FOR CONDUIT & CONDUCTOR SIZE
2 = SHUNT-TRIP BREAKER 5 = GFCI BREAKER
3 = SUBFEED BREAKER 6 = GFEP BREAKER
4 = PROVIDE LOCK OFF DEVICE
THIS PANEL, ALL OF ITS LUGS, BREAKERS, ETC. SHALL BE RATED FOR 75° C

PANEL M — TYPE NQOD — LOCATION MEZZANINE
VOLTAGE 240 / 120 — PHASE 1 WIRES 3 — AIC 22,000 AMPS
MOUNTING: FLUSH; X SURFACE — FEED: TOP; X BOTTOM
MAINS: 400 AMP; X LUGS; BREAKER — DIMS.: 26" W; 5.75" D; 74" H
SPECIAL EQUIPMENT: X GROUND BUS; SUB-FEED BRKR; NEMA 3R; SURGE PROTECTOR

CIR NO.	CIRCUIT DESCRIPTION	CODE	LTS	CO	MIS	P	AMP	WIRE SIZE	CIRCUIT LOAD	A	C	CIRCUIT LOAD	WIRE SIZE	BRKR AMP	P	MIS	CO	LTS	CODE	CIRCUIT DESCRIPTION	CIR NO.
1	TELEPHONE BD.				1	1	20	12	180	1180		1000	12	20	1	1				REFRIG.	2
3	WATER HTRS				3	1	20	12	225		225			20	1					SPARE	4
5	LIGHTING CTL.				1	1	20	12	180	2825		2645		40	2	1			1	CU-1	6
7	MAINT. LTS		11		1	1	20	12	444		3589	2645		--	-					-----	8
9	SPARE					1	20	12		1656		1656	12	25	1	1				FURNACE	10
11	SANDER RACK LTS	1	2			1	20		420		3320	2400		40	1	1			1	EF2	12
13	SHOP LIGHTING		14			1	20	12	1310	2030		720	12	20	1	6				BURNERS	14
15	OFFICE, STOR LTS.		17		1	1	20	12	1533		3189	1656	10	25	1	1				VACUUM PUMP	16
17	SHOP LIGHTING		12			1	20	12	1054	2710		1656	10	25	1	1				VACUUM PUMP	18
19	DOORS				1	1	20	12	1000		2080	1080	12	20	1		6			OFFICE W.	20
21	DOORS				1	1	20	12	1000	2260		1260	12	20	1		7			OFFICE E	22
23	DOORS				1	1	20	12	1000		2840	1840	10	20	1			4		SALT STORAGE LTS	24
25	DOORS				1	1	20	12	1000	2100		1100	10	20	1			4		SALT STORAGE LTS	26
27	DOORS				1	1	20	10	1000		1960	960		20	2				1	GATE	28
29	DOORS				1	1	20	10	1000	1960		960		--	-					-----	30
31	DOORS				1	1	20	10	1000		1230	230		20	2			1	1	GATE LIGHT	32
33	TYPE L6 W. SIDE		4			1	20	10	1100	1330		230		--	-					-----	34
35	TYPE L6 E. SIDE		4			1	20	10	1100		1100			20	1					SPARE	36
37	TYPE L7 W. SIDE		4			1	20	10	1840	1840				20	1					SPARE	38
39	TYPE L7 E. SIDE		4			1	20	10	1840		6416	4576		100	2	1			1	PANEL B	40
41	SPARE					1	20			4300		4300		--	-					-----	42

NOTE:

PHASE TOTALS	A		C	CONN LOAD
VA	24191		25949	50 KVA
DIV				AV. AMPS
AMPS	202		216	209 A

CODES
1 = SEE DRAWINGS FOR CONDUIT & CONDUCTOR SIZE
2 = SHUNT-TRIP BREAKER 5 = GFCI BREAKER
3 = SUBFEED BREAKER 6 = GFEP BREAKER
4 = PROVIDE LOCK OFF DEVICE
THIS PANEL, ALL OF ITS LUGS, BREAKERS, ETC. SHALL BE RATED FOR 75° C

CLIENT

UDOT CONNECTING COMMUNITIES

STATION #4325
MILE MARKER 49.7 HIGHWAY 143
PANGUITCH UTAH

DESIGNER

ARCHIPLEX GROUP
architecture · planning · design services
1135 South West Temple, Ste. A
Salt Lake City, UT 84101
P:(801) 961-7070
F:(801) 961-7373

CONSULTANTS

VAN BOERUM & FRANK ASSOCIATES INC.
WWW.VBFA.COM CONSULTING ENGINEERS
Salt Lake City · Logan · St. George · Tempe · Pocatello
811 West Cedar St., 208.478.4613 T
Pocatello, ID 83201-6139 208.478.4617 F

PROFESSIONAL SEAL

LICENSED PROFESSIONAL ENGINEER
STAN WALTER JOHNS
03/04/08
NUMBER 5246941
STATE OF UTAH

ISSUE

MARK	DATE	DESCRIPTION
1	3-5-08	ADDENDUM #2
	01-2008	CONSTRUCTION DOCUMENTS

DFCM PROJECT NO:	07010900
ARCHIPLEX PROJECT NO:	0709.01
DRAWN BY:	LCM
CHECKED BY:	SWJ
SCALE:	NONE
DATE:	JANUARY, 2008

SHEET TITLE

ELECTRICAL PANELS AND LOAD CALCS

E002

KEY NOTES

1. POWER COMPANY TRANSFORMER. SEE RISER DIAGRAM ON SHEET E001. (1)
2. ROUTE CIRCUIT M-32 THROUGH LIGHTING CONTROL PANEL.
3. TELEPHONE POINT OF CONNECTION.
4. SEE SHEET E203 FOR LIGHTING AND POWER REQUIREMENTS.
5. SEE SHEET E202 FOR LIGHTING AND POWER REQUIREMENTS.
6. 2" CONDUIT 24" BELOW GRADE BY ELECTRICAL CONTRACTOR FOR TELEPHONE CABLES BY SOUTH CENTRAL COMMUNICATIONS. COORDINATE ALL REQUIREMENTS WITH SOUTH CENTRAL COMMUNICATIONS.
7. NOTE NOT USED.
8. CT CAN & METER BASE BY ELECTRICAL CONTRACTOR, SEE POWER RISER ON SHEET E001.
9. TELEPHONE TERMINAL BOARD ON MEZZANINE FLOOR. SEE SHEET E501.
10. PANEL 'M' ON MEZZANINE FLOOR. SEE SHEET E501.
11. COORDINATE ALL LOCATIONS & TRENCHING WITH CIVIL DRAWINGS, GAS & WATER SERVICE ALSO IN THIS AREA.
12. ALL MOTORIZED GATE EQUIPMENT SHALL BE PROVIDED BY THE ELECTRICAL CONTRACTOR. COORDINATE ALL CONNECTIONS AND ROUGH-IN WITH G.C. AND SHOP DRAWINGS. PROVIDE A JUNCTION/PULL BOX AS REQUIRED FOR THE INSTALLATION. SEE AE-T06

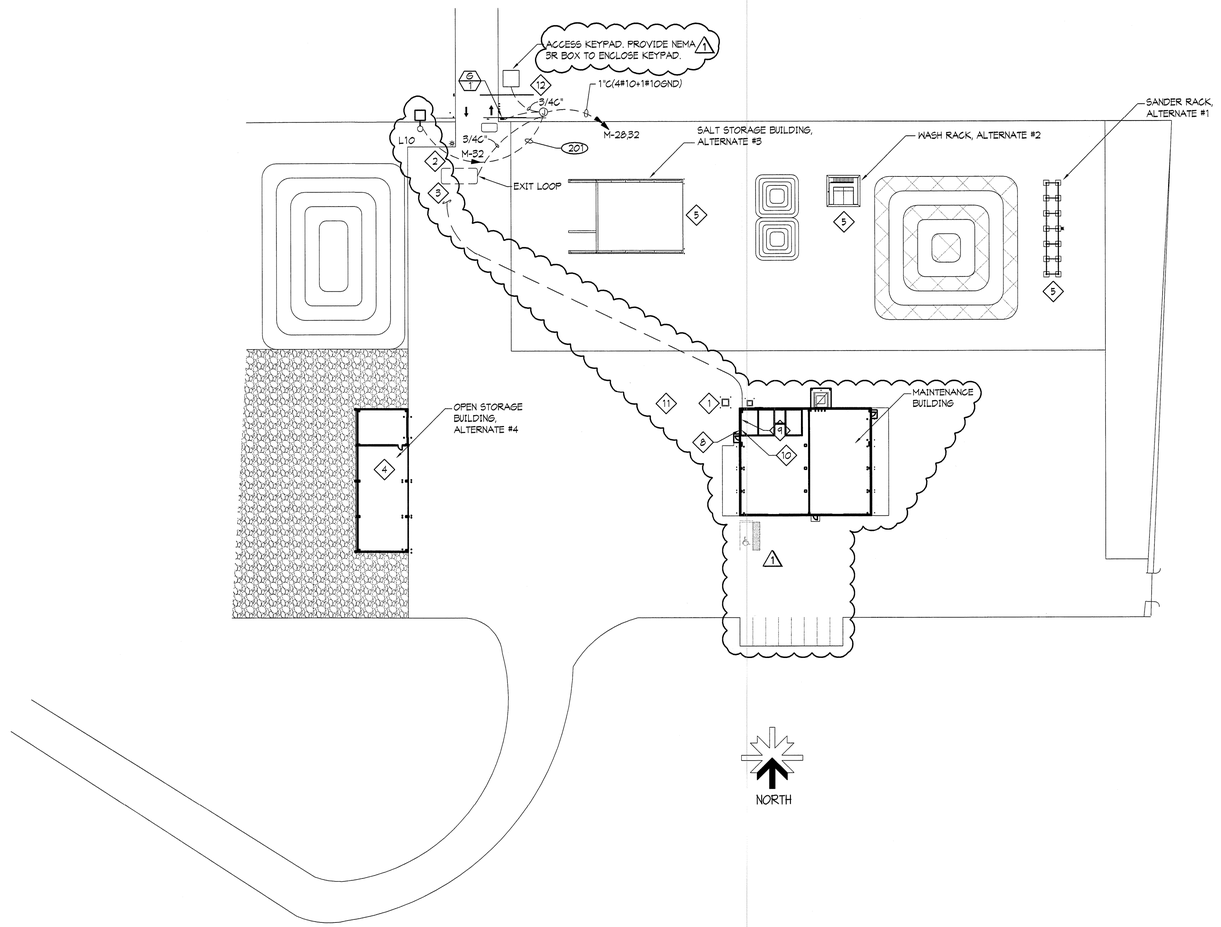

CLIENT

UDOT CONNECTING COMMUNITIES

STATION #4325
MILE MARKER 49.7 HIGHWAY 143
PANGUITCH UTAH

DESIGNER

ARCHIPLEX GROUP
architecture · planning · design services
1135 South West Temple, Ste. A
Salt Lake City, UT 84101
P:(801) 961-7070
F:(801) 961-7373

CONSULTANTS

VAN BOERUM & FRANK ASSOCIATES INC.
WWW.VBFA.COM CONSULTING ENGINEERS
Salt Lake City · Logan · St. George · Tempe · Pocatello
811 West Cedar St., Pocatello, ID 83201-6139
208.478.4613 T
208.478.4617 F

PROFESSIONAL SEAL

LICENSED PROFESSIONAL ENGINEER
STAN WALTER JOHNS
03/04/08
NUMBER 5246941
STATE OF UTAH

ISSUE

MARK	DATE	DESCRIPTION
1	3-5-08	ADDENDUM #2
	01-2008	CONSTRUCTION DOCUMENTS

DFCM PROJECT NO:	07010900
ARCHIPLEX PROJECT NO:	0709.01
DRAWN BY:	LCM
CHECKED BY:	SWJ
SCALE:	1"=50'-0"
DATE:	JANUARY, 2008

SHEET TITLE

SITE PLAN

E101

KEY NOTES

1. USE ONE WATTS STOPPER DATALINE SWITCH WITH A BUTTON FOR EACH LETTER SHOWN, SEE DETAIL 1/E401.
2. SEE ARCHITECTURAL ELEVATIONS FOR MOUNTING HEIGHTS. TYPICAL FOR ALL EXTERIOR LUMINAIRES.
3. USE WATTS STOPPER DATALINE SWITCHES TO CONTROL TYPE L7 LIGHTS AND TO OVERRIDE PHOTOCELL FOR TYPE L6 LIGHTS. SEE DETAIL 1/E401.
4. EC SHALL PROVIDE A LIGHTING CONTROL PANEL (WATT STOPPER LI 24S-12Q1GAC-115) WITH A ASTRONOMICAL NETWORK CLOCK AND PHOTO CELL, SEE DETAIL 1/E401.
5. INSTALL THROUGH THE LIGHTING CONTROL PANEL FOR CONTROL.
6. VIA LIGHTING CONTROL PANEL. WITH ONE UN-SWITCHED CONDUCTOR FOR EMERGENCY LIGHTING.
7. WIRE 12V AUXILIARY SOCKET, CONTAINED INSIDE TYPE L6 FIXTURE, TO BATTERY PACK FOR, L12, SUCH THAT 12V SOCKET IS ENERGIZED UPON POWER OUTAGE. (1)
8. USE WATTSTOPPER WA-300 DUAL RELAY AUTOMATIC WALL SWITCH. ONE RELAY SHALL CONTROL INNER LAMPS, THE OTHER SHALL CONTROL OUTER LAMPS.
9. SEE ARCH. PLANS FOR EXACT LOCATIONS FOR ALL LIGHT FIXTURES. (1)

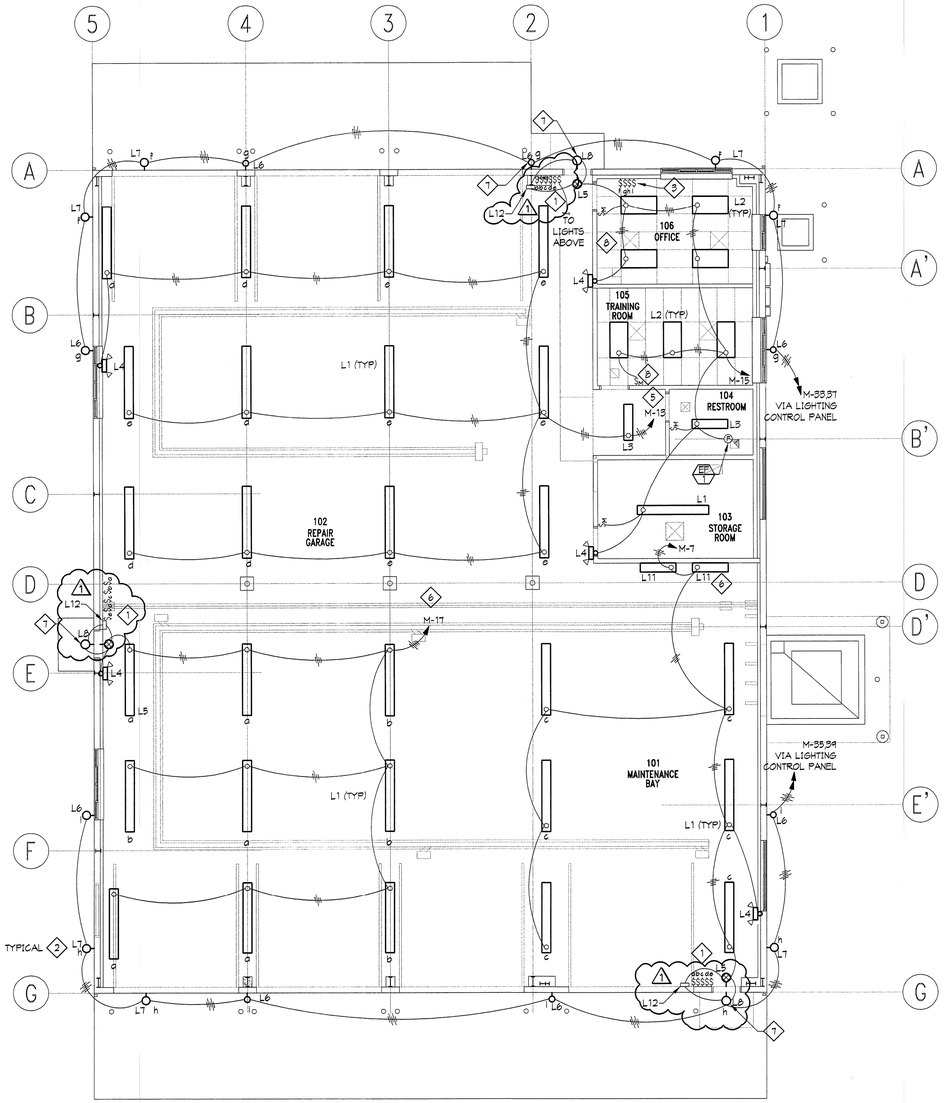

MAINTENANCE BUILDING PLAN (9)

NORTH

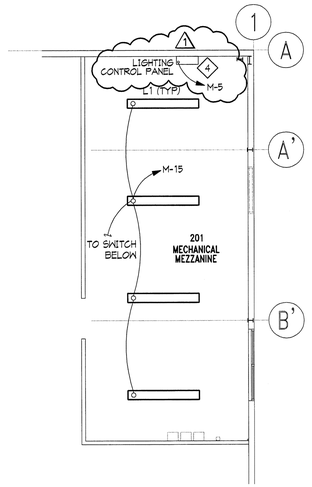

MEZZANINE FLOOR PLAN

NORTH

CLIENT

UDOT CONNECTING COMMUNITIES

STATION #4325
MILE MARKER 49.7 HIGHWAY 143
PANGUITCH UTAH

DESIGNER

ARCHIPLEX GROUP
architecture • planning • design services
1135 South West Temple, Ste. A
Salt Lake City, UT 84101
P:(801) 961-7070
F:(801) 961-7373

CONSULTANTS

VAN BOERUM & FRANK ASSOCIATES INC.
WWW.VBFA.COM CONSULTING ENGINEERS
Salt Lake City · Logan · St. George · Tempe · Pocatello
811 West Cedar St., Pocatello, ID 83201-6139
208.478.4613 T
208.478.4617 F

PROFESSIONAL SEAL

LICENSED PROFESSIONAL ENGINEER
STAN WALTER JOHNS
03/04/08
NUMBER 5246941
STATE OF UTAH

ISSUE

MARK	DATE	DESCRIPTION
1	3-5-08	ADDENDUM #2
	01-2008	CONSTRUCTION DOCUMENTS

DFCM PROJECT NO:	07010900
ARCHIPLEX PROJECT NO:	0709.01
DRAWN BY:	LCM
CHECKED BY:	SWJ
SCALE:	1/8"=1'-0"
DATE:	JANUARY, 2008

SHEET TITLE

LIGHTING PLAN AND FIRE ALARM

E201

KEY NOTES

1. PROVIDE WEATHERPROOF SWITCHES.
2. PROVIDE RECEPTACLE TO MATCH PRESSURE WASHER PROVIDED BY OWNER.
3. SEE ARCH. PLANS FOR EXACT LOCATIONS OF ALL LIGHT FIXTURES.

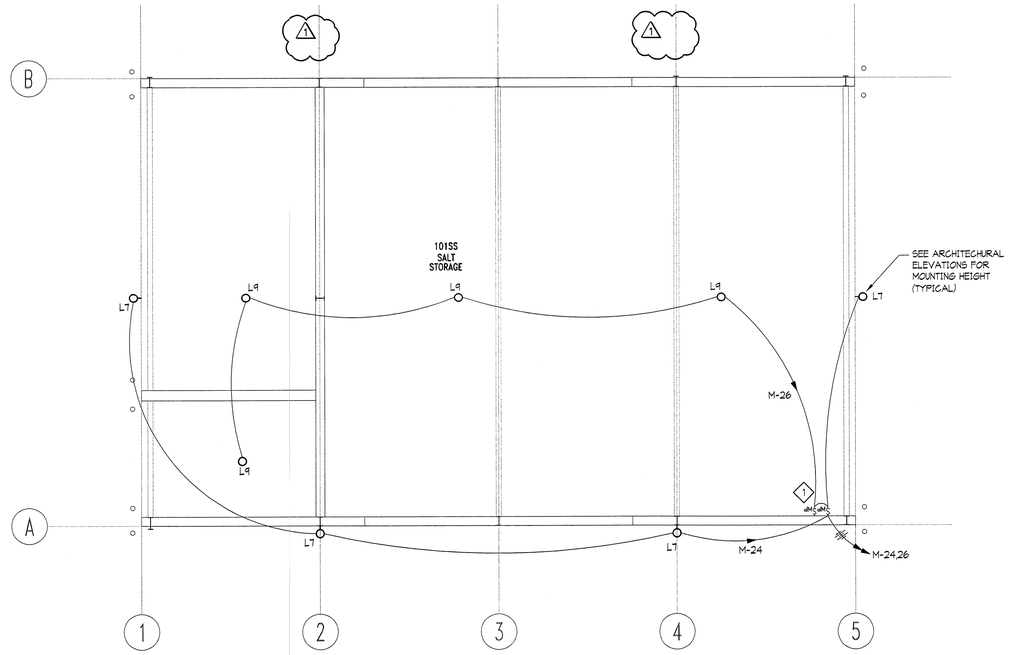

SALT STORAGE BUILDING ALTERNATE #3 PLAN

SCALE: 1/8" = 1'-0"

NORTH

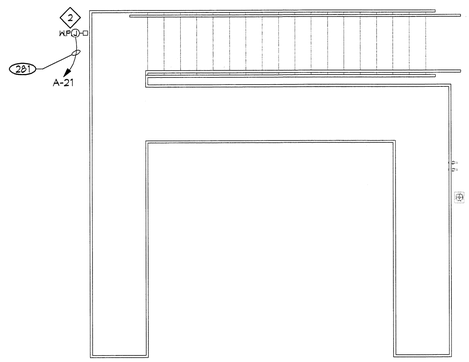

WASHRACK ALTERNATE #2 FLOOR PLAN

SCALE: 1/4" = 1'-0"

NORTH

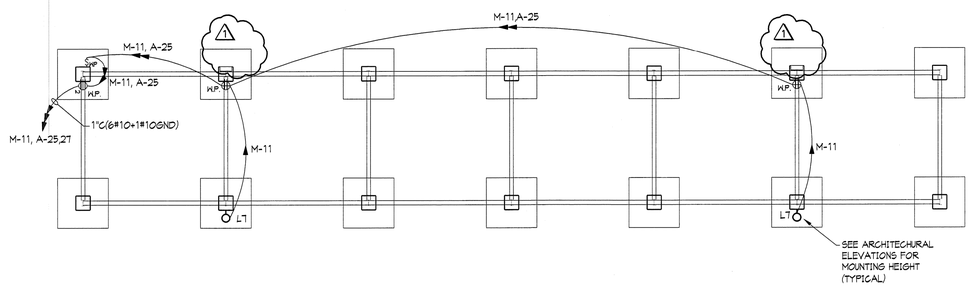

SANDER RACK ALTERNATE #1 FLOOR PLAN

SCALE: 1/8" = 1'-0"

NORTH

CLIENT

UDOT CONNECTING COMMUNITIES

STATION #4325
MILE MARKER 49.7 HIGHWAY 143
PANGUITCH UTAH

DESIGNER

ARCHIPLEX GROUP
architecture · planning · design services
1135 South West Temple, Ste. A
Salt Lake City, UT 84101
P:(801) 961-7070
F:(801) 961-7373

CONSULTANTS

VAN BOERUM & FRANK ASSOCIATES INC.
WWW.VBFA.COM CONSULTING ENGINEERS
Salt Lake City · Logan · St. George · Tempe · Pocatello
811 West Cedar St., Pocatello, ID 83201-6139
208.478.4613 T
208.478.4617 F

PROFESSIONAL SEAL

LICENSED PROFESSIONAL ENGINEER
STAN WALTER JOHNS
03/04/08
NUMBER 5240941
STATE OF UTAH

ISSUE

MARK	DATE	DESCRIPTION
1	3-5-08	ADDENDUM #2
	01-2008	CONSTRUCTION DOCUMENTS

DFCM PROJECT NO:	07010900
ARCHIPLEX PROJECT NO:	0709.01
DRAWN BY:	LCM
CHECKED BY:	SWJ
SCALE:	AS NOTED
DATE:	JANUARY, 2008

SHEET TITLE

OUT-BUILDINGS ELECTRICAL PLAN

E202

KEY NOTES

1. ALL RECEPTACLES IN VEHICLE STORAGE BAYS SHALL BE MOUNTED AT A MINIMUM OF 24" AFF AND BE GFI TYPE RECEPTACLES.
2. CARBON MONOXIDE SENSOR BY MC. PROVIDE 3/4" CONDUIT FROM SENSOR TO EXHAUST FAN. COORDINATE WITH MC.
3. PUSH BUTTON CONTROL FOR EF-3. PROVIDE CONDUIT, CONDUCTORS AND COORDINATE WITH MC FOR WIRING TO CARBON MONOXIDE SENSORS FOR EXHAUST SYSTEM.
4. HEATING CONTROLS BY MC. PROVIDE 3/4" CONDUIT FROM CONTROLS TO HEATER. WIRING TO BE PROVIDED BY MC.
5. ROUTE CIRCUITS FOR EXTERIOR LUMINAIRES THROUGH EC PROVIDED LIGHTING CONTROLS. SEE DETAIL 3/E401.
6. EXTERIOR LIGHT CONTROL. PROVIDE CONTROLS AS SHOWN IN DETAIL 3/E401.
7. SEE ARCH. PLANS FOR EXACT LOCATIONS OF ALL LIGHT FIXTURES.
8. WIRE 12V AUXILIARY SOCKET, CONTAINED INSIDE TYPE L8 FIXTURE TO BATTERY PACK, L12, SUCH THAT 12V SOCKET IS ENERGIZED UPON POWER OUTAGE. (1)

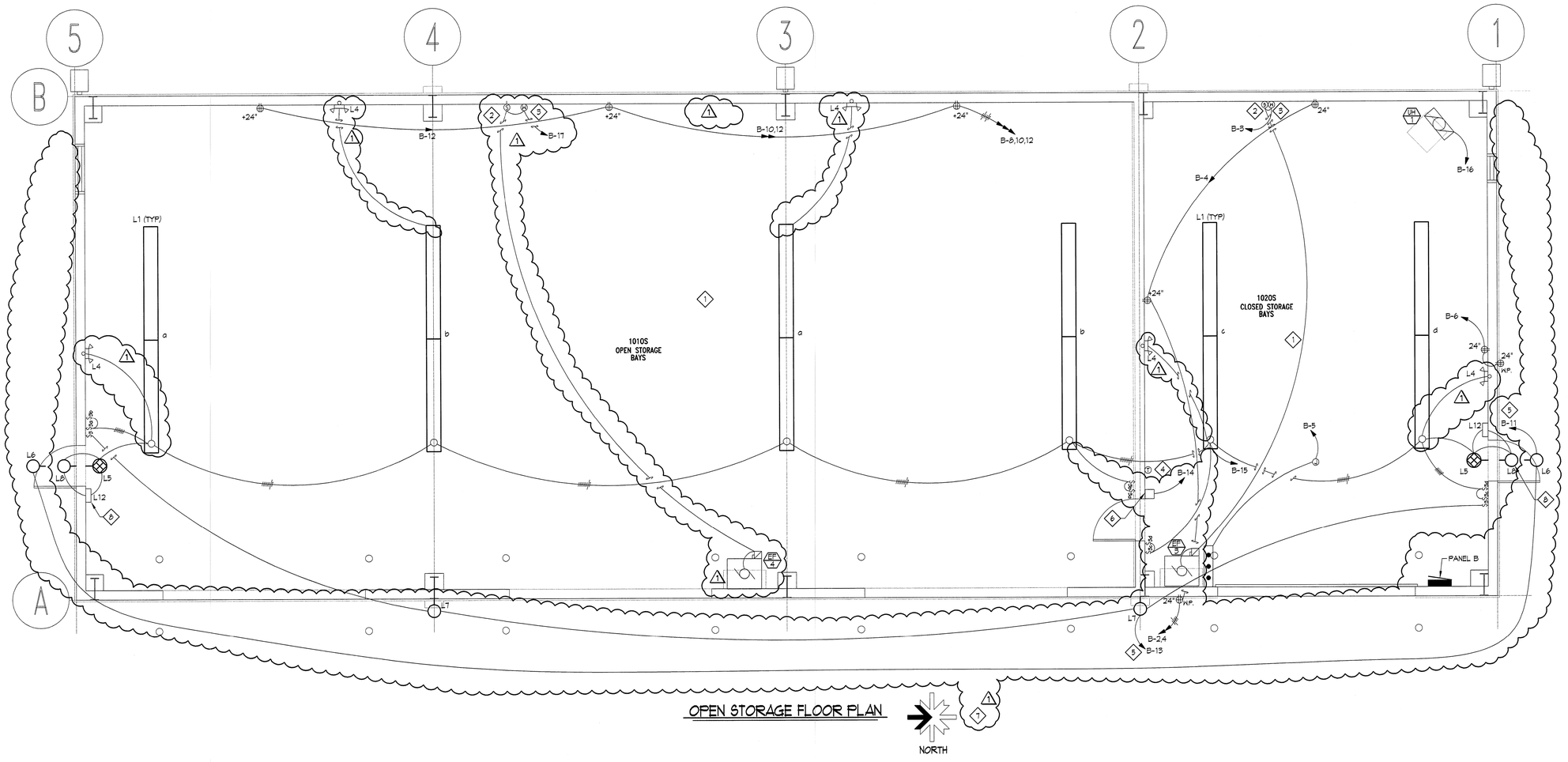

OPEN STORAGE FLOOR PLAN

CLIENT

UDOT CONNECTING COMMUNITIES

STATION #4325
MILE MARKER 49.7 HIGHWAY 143
PANGUITCH UTAH

DESIGNER

ARCHIPLEX GROUP
architecture • planning • design services
1135 South West Temple, Ste. A
Salt Lake City, UT 84101
P:(801) 961-7070
F:(801) 961-7373

CONSULTANTS

VAN BOERUM & FRANK ASSOCIATES INC.
WWW.VBFA.COM CONSULTING ENGINEERS
Salt Lake City · Logan · St. George · Tempe · Pocatello
811 West Cedar St., Pocatello, ID 83201-6139
208.478.4613 T
208.478.4617 F

PROFESSIONAL SEAL

LICENSED PROFESSIONAL ENGINEER
STAN WALTER JOHNS
03/04/08
NUMBER 5246941
STATE OF UTAH

ISSUE

MARK	DATE	DESCRIPTION
1	3-5-08	ADDENDUM #2
	01-2008	CONSTRUCTION DOCUMENTS

DFCM PROJECT NO:	07010900
ARCHIPLEX PROJECT NO:	0709.01
DRAWN BY:	LCM
CHECKED BY:	SWJ
SCALE:	1/4"=1'-0"
DATE:	JANUARY, 2008

SHEET TITLE

OUT-BUILDINGS ELECTRICAL PLAN

E203

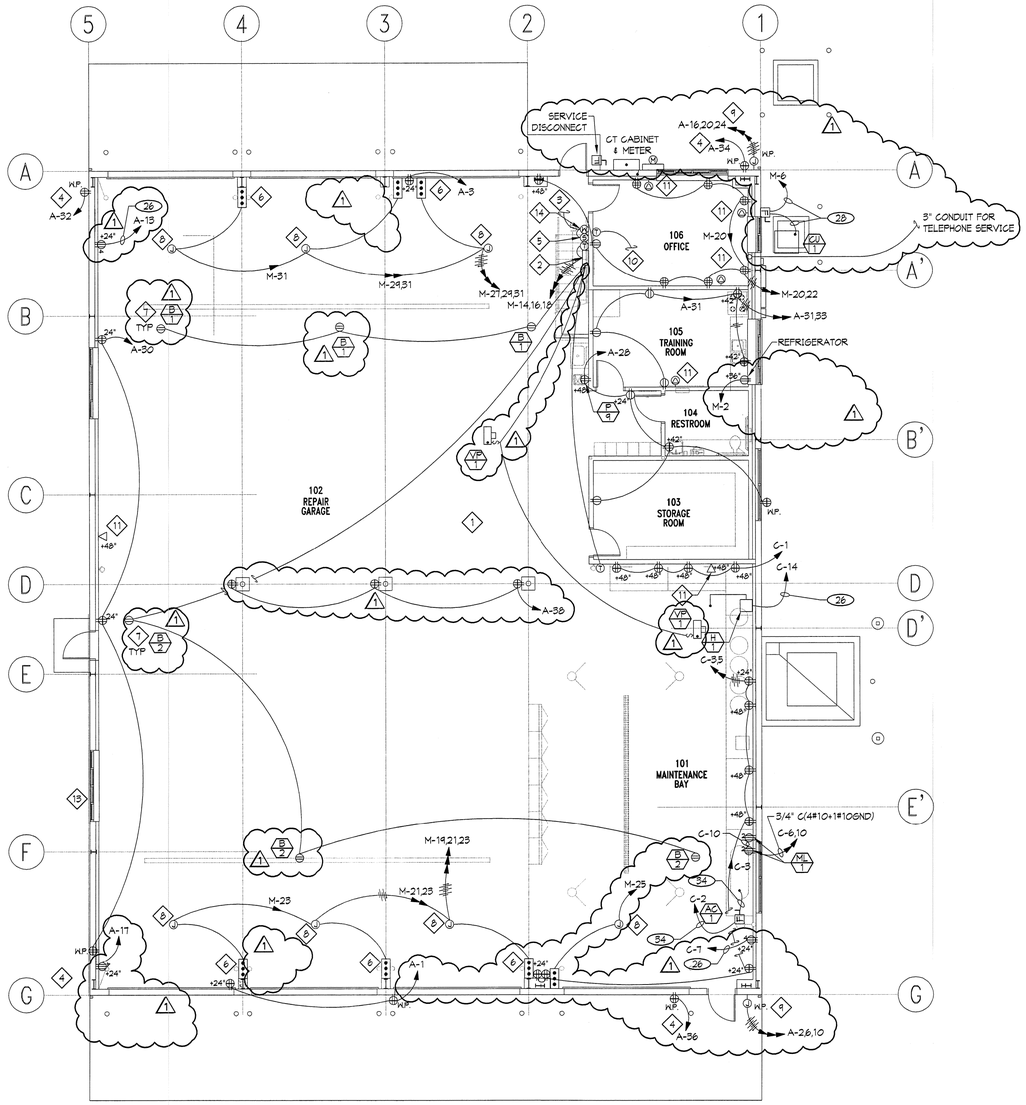

MAINTENANCE BUILDING PLAN

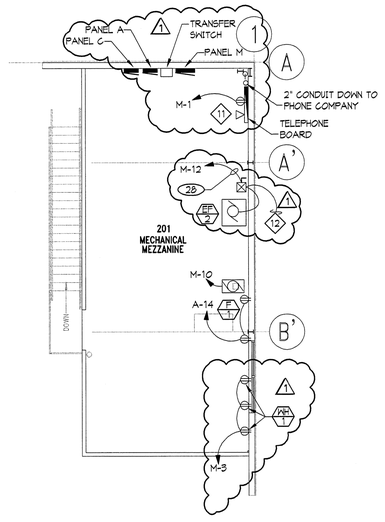

MEZZANINE FLOOR PLAN

KEY NOTES

1. ALL RECEPTACLES IN VEHICLE STORAGE BAYS AND MAINTENANCE BAY SHALL BE MOUNTED AT A MINIMUM OF 24" A.F.F. AND BE GFI TYPE RECEPTACLES.
2. RADIANT HEATING CONTROL PANEL FURNISHED BY MC. PROVIDE CONDUIT AND CONDUCTORS FROM THE PANEL TO THE B-1 UNITS AND TO VP-1. COORDINATE WITH MC AND PROVIDE ALL REQUIRED CONDUIT, CONDUCTORS AND CONNECTION FOR THE RADIANT HEATING SYSTEM.
3. PROVIDE CONNECTION TO EF-2 COMBINATION STARTER FOR REMOTE CONTROL FROM CARBON MONOXIDE SENSOR AND MANUAL OVERRIDE SWITCH. CONFIRM REQUIREMENTS WITH MC AND PROVIDE REQUIRED COMPONENTS FOR A FULLY FUNCTIONAL EXHAUST/VENTILATION SYSTEM.
4. OUTLETS FOR BLOCK HEATERS. INSTALL AT 36" A.F.F.
5. CARBON MONOXIDE SENSOR PROVIDED BY MC. PROVIDE CONNECTION FROM IT TO THE MANUAL OVERRIDE SWITCH AND EF-2 STARTER. COORDINATE WITH MC.
6. DOOR CONTROLS FURNISHED BY DOOR SUPPLIER. INSTALLED AND WIRED BY EC.
7. RECEPTACLE MOUNTED TO STRUCTURE FOR POWER TO B-1 AND B-2 UNITS. COORDINATE LOCATION WITH MC.
8. JUNCTION BOX FOR POWER TO OVERHEAD DOOR OPERATORS. CONFIRM LOCATION AND REQUIREMENTS WITH DOOR SUPPLIER.
9. JUNCTION BOX FOR POWER TO GUTTER DE-ICING CABLE, LOCATE UNDER EAVE. PROVIDE CABLE IN GUTTER AND DOWNSPOUTS. (RAYCHEM GM-1X 32"F CABLE) RUN CABLE TO THE BOTTOM OF EACH DOWNSPOUT. FOR DOWNSPOUTS IN THE CENTER OF THE RUN, LOOP THE CABLE AT THE BOTTOM OF THE DOWNSPOUT AND CONTINUE BACK UP TO THE ROOF. FOR ROOF CABLE, RUN LOOPS UP TO 8" FROM EDGE AND SPACE 2'-0" APART.
10. THERMOSTAT FOR CONTROL OF HEATING UNIT. PROVIDE 3/4" CONDUIT FROM THERMOSTAT TO HEATING UNIT. WIRING TO BE PROVIDED BY MC.
11. PROVIDE 3/4" CONDUIT WITH CAT5E CABLE FROM PHONE/DATA OUTLET TO TELEPHONE BOARD. CONFIRM REQUIREMENTS WITH OWNER.
12. INTERCONNECT THE EF-2 STARTER WITH THE LOUVER ACTUATOR THROUGH A NORMALLY OPEN CONTACT ON THE STARTER SO THE DAMPER OPENS WHEN EF-2 OPERATES.
13. LOUVER ACTUATOR. EC SHALL INTERCONNECT WITH EF-2 STARTER FOR SIMULTANEOUS OPERATION OF THEM BOTH. SEE KEY NOTE 24.
14. MANUAL OVERRIDE SWITCH FOR CONTROL OF EF-2. WIRE SO THAT IN AUTO THE CARBON MONOXIDE SENSOR STARTS AND STOPS EF-2 AND IN ON THE SWITCH STARTS AND STOPS EF-2.

CLIENT

UDOT CONNECTING COMMUNITIES

STATION #4325
MILE MARKER 49.7 HIGHWAY 143
PANGUITCH UTAH

DESIGNER

ARCHIPLEX GROUP
architecture • planning • design services
1135 South West Temple, Ste. A
Salt Lake City, UT 84101
P:(801) 961-7070
F:(801) 961-7373

CONSULTANTS

VAN BOERUM & FRANK ASSOCIATES INC.
WWW.VBFA.COM CONSULTING ENGINEERS
Salt Lake City · Logan · St. George · Tempe · Pocatello
811 West Cedar St., Pocatello, ID 83201-6139
208.478.4613 T
208.478.4617 F

PROFESSIONAL SEAL

LICENSED PROFESSIONAL ENGINEER
STAN WALTER JOHNS
03/04/08
NUMBER 5246941
STATE OF UTAH

ISSUE

MARK	DATE	DESCRIPTION
1	3-5-08	ADDENDUM #2
	01-2008	CONSTRUCTION DOCUMENTS

DFCM PROJECT NO:	07010900
ARCHIPLEX PROJECT NO:	0709.01
DRAWN BY:	LCM
CHECKED BY:	SWJ
SCALE:	1/8"=1'-0"
DATE:	JANUARY, 2008

SHEET TITLE

POWER PLAN

E301

COMcheck Software Version 3.4.1
Lighting Application Worksheet

2006 IECC

Report Date:

Data filename: J:\Archiplex\UDOT\UDOT Panguitch\Elec\PANGUITCH2.cck

Section 1: Allowed Lighting Power Calculation

A Area Category	B Floor Area (ft2)	C Allowed Watts / ft2	D Allowed Watts (B x C)
Automotive Facility	7739	0.9	6965
Warehouse	3443	0.8	2754
		Total Allowed Watts =	9720

Section 2: Actual Lighting Power Calculation

A Fixture ID : Description / Lamp / Wattage Per Lamp / Ballast	B Lamps/ Fixture	C # of Fixtures	D Fixture Watt.	E (C X D)
Automotive Facility (7739 sq.ft.)				
Linear Fluorescent 1: L1: 8' INDUSTRIAL / 48" T8 32W / Electronic	4	32	110	3520
Linear Fluorescent 2: L2: 2'X4' RECESSED / 48" T8 32W / Electronic	3	7	98	686
Linear Fluorescent 3: L3: 1'X4' WRAP / 48" T8 32W / Electronic	2	2	68	136
Linear Fluorescent 4: L11: WALL MOUNTED / 48" T8 32W / Electronic	2	2	65	130
Warehouse (3443 sq.ft.)				
Linear Fluorescent 5: L1: 8' INDUSTRIAL / 48" T8 32W / Electronic	4	12	110	1320
		Total Actual Watts =		5792

Section 3: Compliance Calculation

If the Total Allowed Watts minus the Total Actual Watts is greater than or equal to zero, the building complies.

Total Allowed Watts =	9720
Total Actual Watts =	5792
Project Compliance =	3928

Lighting PASSES: Design 40% better than code

Section 4: Compliance Statement

Compliance Statement: The proposed lighting design represented in this document is consistent with the building plans, specifications and other calculations submitted with this permit application. The proposed lighting system has been designed to meet the 2006 IECC requirements in COMcheck Version 3.4.1 and to comply with the mandatory requirements in the Requirements Checklist.

VANESSA MEYER - ELECT. ENGR — Name - Title

Vanessa K Meyer — Signature

2/29/08 — Date

1

DETAIL NOT USED — 2

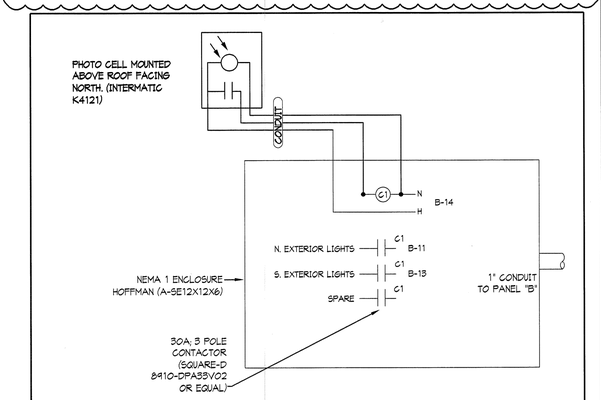

OPEN STORAGE EXTERIOR LIGHTING CONTROL — SCALE: NONE — 3

EC SHALL PROVIDE A COMPLETE LIGHTING CONTROL SYSTEM WITH ALL CABLING, SWITCHES, CABINETS, PHOTO CELLS ETC.

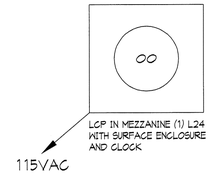

TYPICAL RELAY PANEL CONNECTIONS

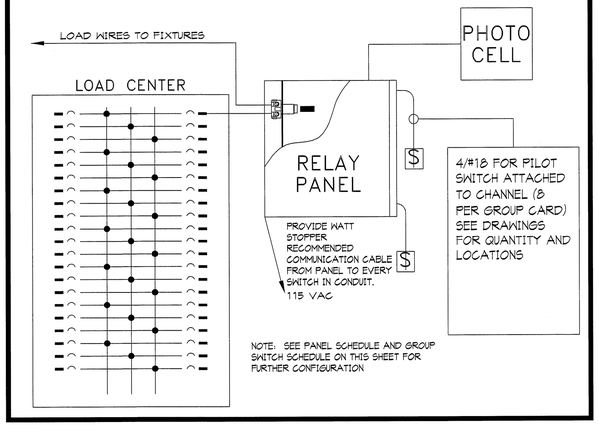

PANEL SCHEDULE - LCP

RELAY	CIRCUIT	DESCRIPTION	SWITCH/SENSOR
1	M-7	MAINT. LIGHTS	WALL SWITCH
2	M-13	SHOP LIGHTS	WALL SWITCH
3	M-13	SHOP LIGHTS	WALL SWITCH
4	M-17	SHOP LIGHTING	WALL SWITCH
5	M-17	SHOP LIGHTING	WALL SWITCH
6	M-33	L6 WALL LIGHTS	PHOTOCELL
7	M-35	L6 WALL LIGHTS	PHOTOCELL 1
8	M-37	L7 WALL LIGHTS	WALL SWITCH W/IND
9	M-39	L7 WALL LIGHTS	WALL SWITCH W/IND
10	M-32	GATE LIGHTING	PHOTOCELL
11		SPARE	
12		SPARE	

LCP ID: O
LOCATION: MEZZANINE
SUPPLY CIRCUIT: A-2

GROUP SWITCH SCHEDULE - LCP

CHANNEL	DESCRIPTION	FUNCTION	LOADS CONTROLLED
A	SHOP	ON/OFF	LCP O: 1-5
B	LIGHTS	ON/OFF	LCP O: 6,7
C	FLOOD LIGHTS	ON/OFF	LCP O: 8,9
D	OPEN STORAGE	ON/OFF	LCP O: 9

LCP ID: O
LOCATION: MEZZANINE

LIGHTING CONTROL PANEL CONFIGURATION — SCALE: NONE — 1

CLIENT

UDOT CONNECTING COMMUNITIES

STATION #4325
MILE MARKER 49.7 HIGHWAY 143
PANGUITCH UTAH

DESIGNER

ARCHIPLEX GROUP
architecture · planning · design services
1135 South West Temple, Ste. A
Salt Lake City, UT 84101
P:(801) 961-7070
F:(801) 961-7373

CONSULTANTS

VAN BOERUM & FRANK ASSOCIATES INC.
WWW.VBFA.COM CONSULTING ENGINEERS
Salt Lake City · Logan · St. George · Tempe · Pocatello
811 West Cedar St., Pocatello, ID 83201-6139
208.478.4613 T
208.478.4617 F

PROFESSIONAL SEAL

ISSUE

MARK	DATE	DESCRIPTION
1	3-5-08	ADDENDUM #2
	01-2008	CONSTRUCTION DOCUMENTS

DFCM PROJECT NO:	07010900
ARCHIPLEX PROJECT NO:	0709.01
DRAWN BY:	LCM
CHECKED BY:	SWJ
SCALE:	NONE
DATE:	JANUARY, 2008

SHEET TITLE

DETAILS

E401