1- REMOVE EXISTING ROOF TO DECK.

2- INSTALL 2 LAYERS OF 2" ISO FULLY ADHERED.

3- INSTALL CRICKETS BETWEEN DRAINS FOR POSITIVE DRAINAGE.

4- INSTALL NEW 60 MIL FULLY ADHERED PVC MEMBRANE.

5- CONTRACTOR TO FIELD VERIFY EXISTING CONDITIONS.

6- REMOVE UNUSED/UNNECESSARY ROOF PENETRATIONS AND EQUIPMENT. COORDINATE WITH USU.

7- SELECTION OF REPLACEMENT SKYLIGHTS AND ROOF DRAINS PER CONTRACTOR SUBMITTAL, SUBJECT TO APPROVAL BY USU AND DFCM.

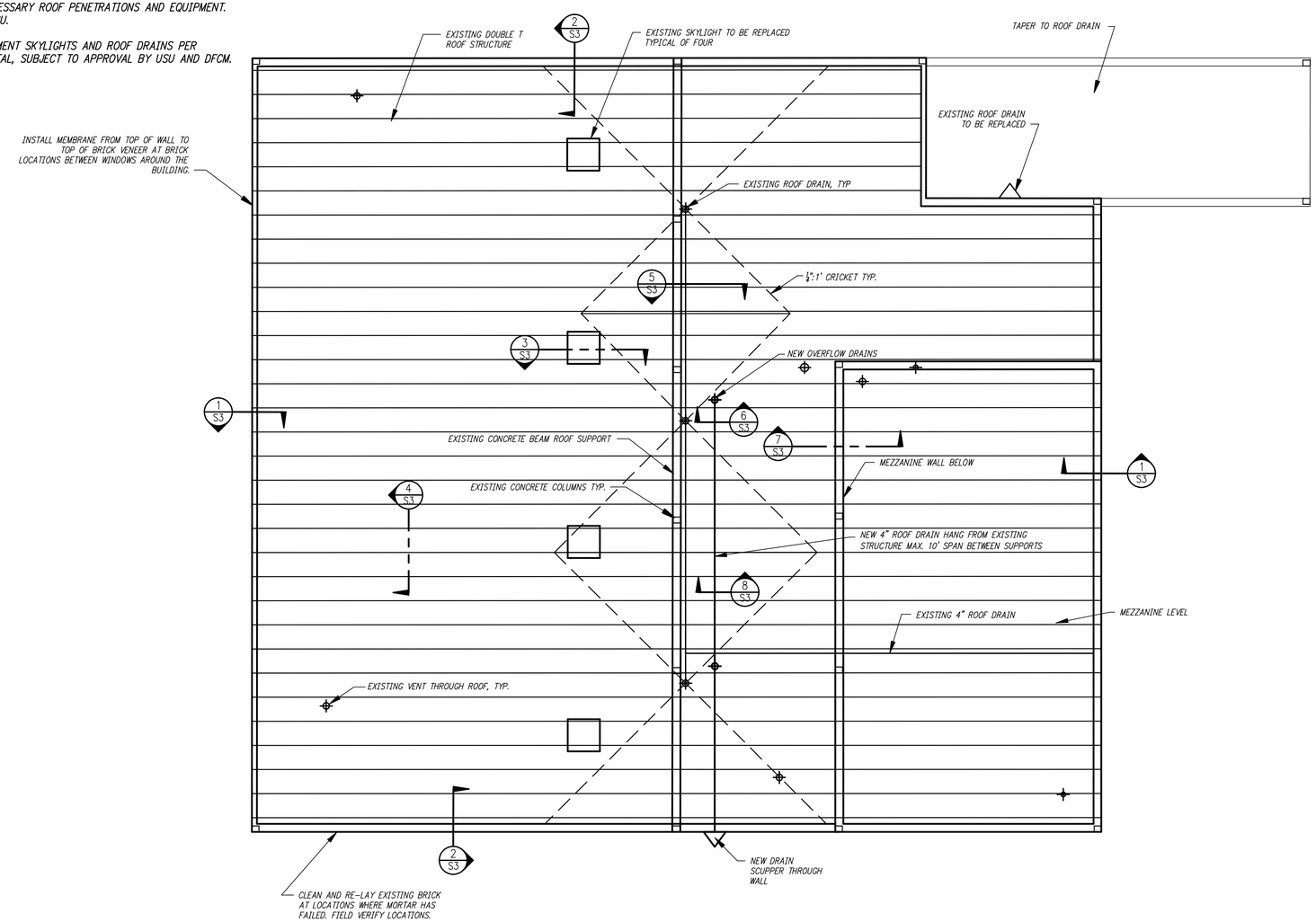

ROOF PLAN

Scale: 1/8" = 1'-0"

Rev.	Date	By	Description
.	.	.	

SARGENT
Sargent Engineers, Inc.
95 West 100 South, Suite 115
Logan, UT 84321
Tel. 435 753-7214 • Fax 435 753-7295

LICENSED PROFESSIONAL ENGINEER
8/23/07
No. 295553
CRAIG L. RASMUSSEN
STATE OF UTAH

USU MOTOR POOL ROOF REPAIR
DFCM
Logan, UT
Roof Plan

Designed by:	CMD
Checked by:	CLR
Prj. Drafter:	CMD
Drafter:	SDA
Issue Date:	.
Project Ref.:	C07110.00
Client Ref.:	.

SHEET NO. S2 OF 3 SHEETS

Layout: PLAN Drawing: G:\Projects 07\C07110 USU Motor Pool\originals\USU Motor Pool Roof.dwg
Last Detailer: . Time: . Plot: .

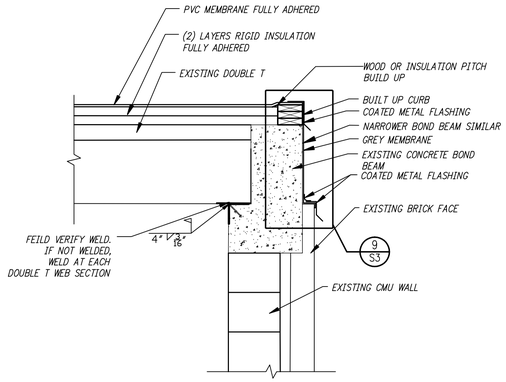

N-S ROOF TO WALL (1/S3)
Scale: NTS

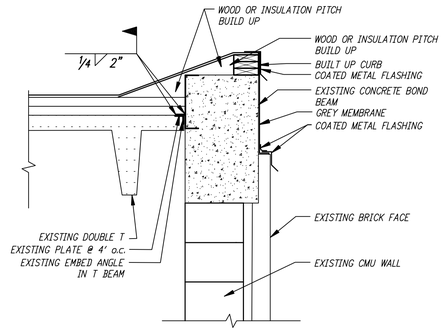

E-W ROOF TO WALL (2/S3)
Scale: NTS

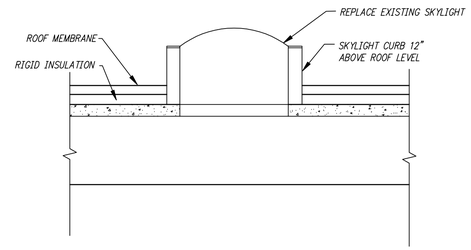

SKYLIGHT (3/S3)
Scale: NTS

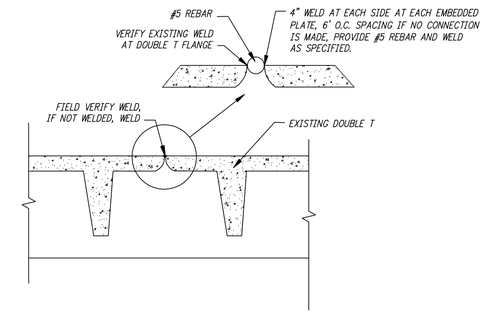

DOUBLE T CONNECTION (4/S3)
Scale: NTS

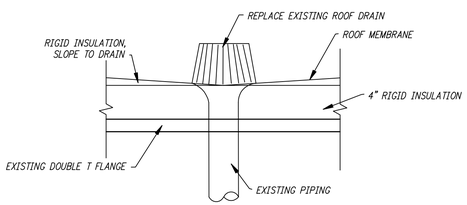

ROOF DRAIN (5/S3)
Scale: NTS

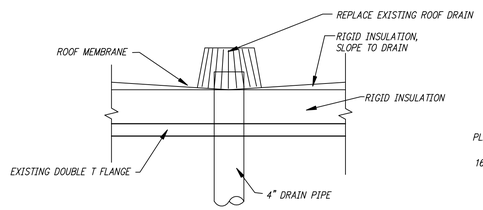

ROOF OVERFLOW DRAIN (6/S3)
Scale: NTS

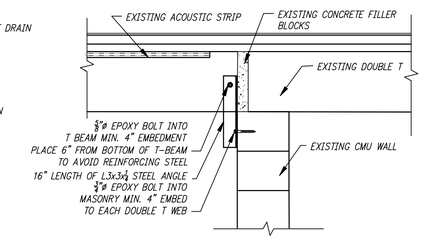

MEZZANINE WALL (7/S3)
Scale: NTS

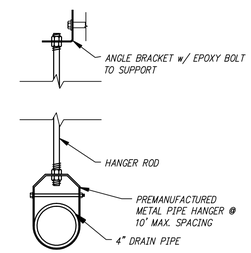

PIPE HANGER (8/S3)
Scale: NTS

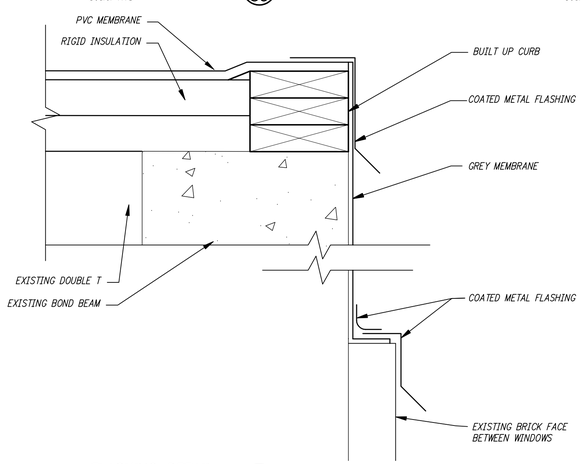

FLASHING DETAIL (9/S3)
Scale: NTS

Rev.	Date	By	Description
.	.	.	

SARGENT
Sargent Engineers, Inc.
95 West 100 South, Suite 115
Logan, UT 84321
Tel. 435 753-7214 • Fax 435 753-7295

LICENSED PROFESSIONAL ENGINEER
8/23/07
No. 295553
CRAIG L. RASMUSSEN
STATE OF UTAH

USU MOTOR POOL ROOF REPAIR
DFCM
Logan, UT
Roof Details

Designed by:	CMD
Checked by:	CLR
Prj. Drafter:	CMD
Drafter:	SDA
Issue Date:	.
Project Ref.:	C07110.00
Client Ref.:	.

SHEET NO. S3 OF 3 SHEETS

Layout: DETAILS Drawing: G:\Projects 07\C07110 USU Motor Pool\originals\USU Motor Pool Roof.dwg
Last Detailer: . Time: . Plot: .