STATE OF UTAH
DIVISION OF FACILITIES AND CONSTRUCTION MANAGEMENT
DEPARTMENT OF NATURAL RESOURCES

SAND HOLLOW STATE PARK MAINTENANCE SHED
SAND HOLLOW STATE PARK
4405 WEST 3600 SOUTH
HURRICANE, UTAH
DFCM NO.: 07025510

CONSTRUCTION DOCUMENT REVIEW DRAWINGS

VOL I OF II: ARCHITECTURAL

CONSULTANTS

CIVIL:

JOHANSEN & TUTTLE ENGINEERING
90 SOUTH 100 EAST
CASTLE DALE, UTAH 84513
435-381-2523 (PHONE)
435-381-2522 (FAX)

STRUCTURAL:

NUNLEY STRUCTURAL ENGINEERING
2231 EAST MURRAY HOLLADAY BLVD
SUITE 210
SALT LAKE CITY, UTAH 84117
801-424-0031 (PHONE)
801-424-0032 (FAX)

MECHANICAL

SPECTRUM ENGINEERS, INC.
2195 WEST STONEBRIDGE DRIVE
ST GEORGE, UTAH 84770
(435) 656-2429 (PHONE)
(435) 656-2519 (FAX)

ELECTRICAL

SPECTRUM ENGINEERS, INC.
175 SOUTH MAIN STREET
SALT LAKE CITY, UTAH 84111
(801) 328-5151 (PHONE)
(801) 401-9422 (FAX)

CONSULTANT STAMPS:

CIVIL **STRUCTURAL** **MECHANICAL** **ELECTRICAL**

RECOMMENDED FOR APPROVAL:

PROJECT ENGINEER DATE

APPROVALS:

STATE OF UTAH DATE
DIVISION OF FACILITIES CONSTRUCTION
AND MANAGEMENT

ISSUE / REVISIONS:
TO CONSULTANTS 9/10/07
CD REVIEW 11/2/07
DFCM REVIEW 11/30/07
CDD 1/2/08

TITLE: VOL I COVER SHEET
DRAWN BY: JTD
PROJECT NO.: DFC 0713
DATE: 7/30/07

PROJECT:
STATE OF UTAH
DIVISION OF PARKS AND RECREATION
SAND HOLLOW STATE PARK
MAINTENANCE SHED
DFCM PROJECT NO. 07025510

JAMES T. DRESSLAR
ARCHITECT, L.L.C.
387 PARK LANE
MOAB, UTAH 84532
435.259.1155 PHONE / FAX

SHEET: A0.1.1

© JAMES T DRESSLAR ARCHITECT, LLC. ALL RIGHTS RESERVED. UNAUTHORIZED REPRODUCTION, DISTRIBUTION, AND/OR USE IS PROHIBITED.

STATE OF UTAH
DIVISION OF FACILITIES AND CONSTRUCTION MANAGEMENT
DEPARTMENT OF NATURAL RESOURCES

SAND HOLLOW STATE PARK MAINTENANCE SHED
SAND HOLLOW STATE PARK
4405 WEST 3600 SOUTH
HURRICANE, UTAH
DFCM NO.: 07025510

VOL II OF II: CIVIL, STRUCTURAL, MECHANICAL, ELECTRICAL

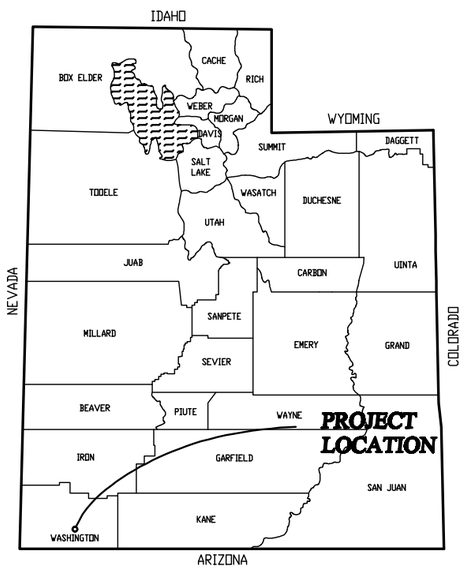

LOCATION MAP

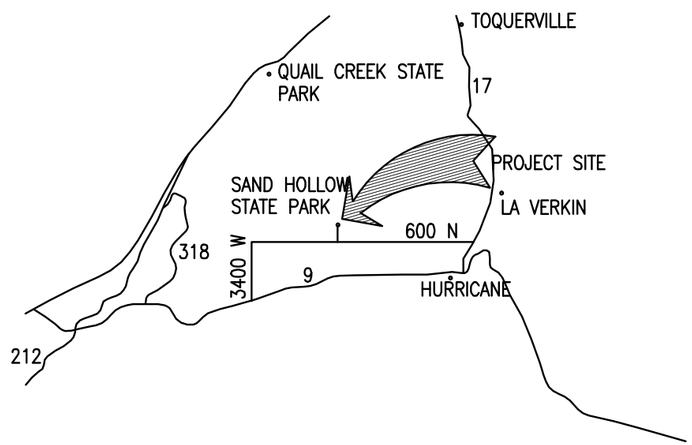

VICINITY MAP

LOCATION / VICINITY MAPS

NO SCALE

NORTH

RECOMMENDED FOR APPROVAL:

PROJECT ENGINEER DATE

APPROVALS:

STATE OF UTAH
DIVISION OF FACILITIES CONSTRUCTION
AND MANAGEMENT DATE

GENERAL NOTES:

1. FOR CONSULTANT STAMPS, SEE VOLUME I (– / A0.1.1)

© JAMES T DRESSLAR ARCHITECT, LLC. ALL RIGHTS RESERVED. UNAUTHORIZED REPRODUCTION, DISTRIBUTION, AND/OR USE IS PROHIBITED.

ISSUE / REVISIONS:
CD REVIEW 11/2/07
DFCM REVIEW 11/30/07
CDD 1/2/08

TITLE: VOL II COVER SHEET
DRAWN BY: JTD
PROJECT NO.: DFC 0713
DATE: 7/30/07

PROJECT:
STATE OF UTAH
DIVISION OF PARKS AND RECREATION
SAND HOLLOW STATE PARK
MAINTENANCE SHED
DFCM PROJECT NO. 07025510

JAMES T. DRESSLAR
ARCHITECT, L.L.C.
387 PARK LANE
MOAB, UTAH 84532
435.259.1155 PHONE / FAX

SHEET: A0.1.2

SYMBOL LEGEND

- 1 — REFERENCE NOTE SYMBOL
- 1 — REVISION SYMBOL
- 1 / A8.1 — DETAIL NUMBER; DETAIL REFERENCE; SHEET WHERE DETAIL IS SHOWN
- A / A6.1 — SECTION NUMBER; SECTION REFERENCE; SHEET WHERE SECTION IS SHOWN
- A / A6.1 — SECTION NUMBER; BUILDING SECTION REFERENCE; SHEET WHERE SECTION IS SHOWN
- 1 / A4.1 — ELEVATION NUMBER; ELEVATION REFERENCE; SHEET WHERE ELEVATION IS SHOWN
- 01 — SPECIALTY / ACCESSORY SYMBOL – FOR SCHEDULE, SEE – / A4.1
- S01 — SIGN SYMBOL – FOR SCHEDULE, SEE 3 / A9.1
- NORTH — PLAN NORTH
- ELEVATION DATUM
- SURFACE SLOPE – DOWN

- CONCRETE
- CONTINUOUS WOOD FRAMING
- WOOD BLOCKING
- STEEL
- CEMENT BACKER BOARD
- SOLID SURFACE MATERIAL
- WOOD SHEATHING
- BASE COURSE
- DRAINAGE FILL
- EARTH
- MEDIUM DENSITY FIBER BOARD
- FIBER BOARD
- HOT MIXED ASPHALT PAVING
- GRANULAR BORROW
- ENGINEERED COMPACTED FILL
- COLD FORMED METAL FRAMING FRAMED WALL
- INSULATED CONCRETE FORM WALL

ABBREVIATIONS

AHU	AIR HANDLING UNIT
B	BUSINESS
BDP	BRANCH DISTRIBUTION PANEL
B.O.	BOTTOM OF
CFMF	COLD FORMED METAL FRAMING
CJ	CONTROL JOINT
CW	CASEWORK
CO2P	CARBON DIOXIDE SENSOR PANEL
COMP	COMPRESSOR
D	DRYER / DEEP
DFCM	DIVISOIN OF FACILITIES AND CONTRUCTION MANAGEMENT
DL	DEEP LEG
DN	DOWN
EW	EYE WASH
EWC	ELECTRIC WATER COOLER
FACP	FIRE ALARM CONTROL PANEL
FC	FLOOR / CEILING
FD	FLOOR DRAIN
FEC	FIRE EXTINGUISHER CABINET
FRPP	FIBER REINFORCED PLASTIC PANEL
FS	FLOOR SINK
GA	GYPSUM ASSOCIATION
GM	GAS METER
HR	HOUR
HSA	HEADED STUD ANCHOR
HWH	HEX WASHER HEAD
ICC	INTERNATIONAL CODE COUNCIL
ICF	INSULATED CONCRETE FORM
IJ	ISOLATION JOINT
IM	ICE MACHINE
KSI	KIPS PER SQUARE INCH
LAV	LAVATORY
ORD	OVERFLOW ROOF DRAIN
PH	PHILLIPS HEAD
PRD	PRIMARY ROOF DRAIN
PRV	PRESSURE REDUCING VALVE
R	RISER
RCP	REFLECTED CEILING PLAN
S/T	SHOWER / TOILET
S	SHELF / STORAGE
SD	SELF DRILLER
SF	SQUARE FEET
SHELV	SHELVING
SIM	SIMILAR
SS	SERVICE SINK
T	TOILET / TREAD
(T)	TREATED
TD	TRENCH DRAIN
TMR	THERMOPLASTIC MEMBRANE ROOFING
T.O.	TOP OF
TTB	TELEPHONE TERMINAL BACKBOARD
TYP	TYPICAL
U	UTILITY
UNO	UNLESS NOTED OTHERWISE
UH	UNIT HEATER
W	WASHER
WH	WATER HEATER

ISSUE / REVISIONS:
TO CONSULTANTS 9/10/07
CD REVIEW 11/2/07
DFCM REVIEW 11/30/07
CDD 1/2/08

LICENSED ARCHITECT
No. 93-130352 0301
JAMES T. DRESSLAR
STATE OF UTAH

NOT VALID UNLESS SIGNED

TITLE: SYMBOL LEGEND ABBREVIATIONS

PROJECT NO.: DFC 0713

DRAWN BY: JTD

DATE: 7/30/07

PROJECT:
STATE OF UTAH
DIVISION OF PARKS AND RECREATION
SAND HOLLOW STATE PARK
MAINTENANCE SHED
DFCM PROJECT NO. 07025510

JAMES T. DRESSLAR
ARCHITECT, L.L.C.
387 PARK LANE
MOAB, UTAH 84532
435.259.1155 PHONE / FAX

SHEET: A0.3

© JAMES T DRESSLAR ARCHITECT, LLC. ALL RIGHTS RESERVED. UNAUTHORIZED REPRODUCTION, DISTRIBUTION, AND/OR USE IS PROHIBITED.

CODE SUMMARY

PROJECT SUMMARY
1. NEW MUNICIPAL VEHICLE MAINTENANCE FACILITY WITH ASSOCIATED SITE IMPROVEMENTS.

APPLICABLE PRESCRIPTIVE BUILDING CODES:
1. INTERNATIONAL BUILDING CODE; 2006.
2. INTERNATIONAL MECHANICAL CODE; 2006.
3. INTERNATIONAL PLUMBING CODE; 2006.
4. INTERNATIONAL FUEL GAS CODE; 2006.
5. NATIONAL ELECTRICAL CODE; 2005.
6. INTERNATIONAL FIRE CODE; 2006.
7. INTERNATIONAL ENERGY CONSERVATION CODE; 2006.
8. AMERICAN NATIONAL STANDARDS INSTITUTE 117.1-2003 ACCESSIBLE AND USABLE BUILDINGS AND FACILITIES.

LAND USE CODE:
1. NOT APPLICABLE.

DEFERRED SUBMITTALS (106.3.4.2):
1. STUCCO SYSTEM ICC RESEARCH REPORT: SUBMITTED BY GENERAL CONTRACTOR UPON NOTICE OF CONSIDERATON FOR AWARD OF CONTRACT.
2. INSULATED CONCRETE FORM ICC RESEARCH REPORT: SUBMITTED BY GENERAL CONTRACTOR UPON NOTICE OF CONSIDERATON FOR AWARD OF CONTRACT.
3. CONTRACTOR'S STATEMENT OF RESPONSIBILITY REGARDING CONSTRUCTION OF A MAIN WIND OR SEISMIC FORCE RESISTING SYSTEM, DESIGNATED SEISMIC SYSTEM OR A WIND OR SEISMIC RESISTING COMPONENT LISTED IN THE STATEMENT OF SPECIAL INSPECTIONS: SUBMITTED BY THE GENERAL CONTRACTOR UPON NOTICE OF AWARD OF CONTRACT.

USE AND OCCUPANCY CLASSIFICATION (302):
1. ACTUAL AREA OCCUPANCY CLASSIFICATION (302.1) W/ GROSS FLOOR AREAS COVERED BY ROOF:
   - A. B: BUSINESS (304.1): 223 SF
   - B. S-1: MODERATE HAZARD STORAGE (311.2): 3,723 SF
   - C. S-1: MODERATE HAZARD STORAGE MEZZANINE (311.2): 817 SF
   - D. UN-ASSIGNED EXTERIOR CANOPIES: 226 SF
   - E. TOTAL AREA: 4,989 SF

SPECIAL DETAILED REQUIREMENTS BASED ON USE AND OCCUPANCY - REPAIR GARAGES (406.6):
1. MIXED USE PERMITTED PER 508.3 (406.6.2).
2. MECHANICAL VENTILATION REQUIRED (406.6.3).
3. FLOOR SURFACE SHALL BE CONCRETE (406.6.4).

ALLOWABLE HEIGHT AND AREA (T 503):
1. MOST RESTRICTIVE HEIGHT AND AREA BASED ON S-1 OCCUPANCY GROUP, TYPE II-B CONSTRUCTION: 55' / THREE STORY, 17,500 SQUARE FEET.

MEZZANINES (505):
1. CLEAR HEIGHT ABOVE AND BELOW THE MEZZANINE FLOOR CONSTRUCTION SHALL NOT BE LESS THAN 7' (505.1).

2. AGGREGATE AREA OF A MEZZANINE SHALL NOT EXCEED 1/3 OF THE FLOOR AREA OF THAT ROOM OR SPACE IN WHICH THEY ARE LOCATED (505.2).

INCIDENTAL USE AREAS (508.2):
1. NOT USED. BUILDING CLASSIFIED AS MIXED OCCUPANCY, NON-SEPARATED, PER (508.3.2).

FIRE RESISTANCE RATING REQUIREMENTS FOR BUILDING ELEMENTS (T 601):
1. CONSTRUCTION TYPE II-B: NO REQUIREMENT.

TYPE OF CONSTRUCTION (602):
1. CONSTRUCTION TYPE: II-B (602.2).

FIRE RESISTANCE RATING REQUIREMENTS FOR EXTERIOR WALLS BASED ON FIRE SEPARATION DISTANCE (T 602):
1. >/= 30', CONSTRUCTION TYPE II-B, ALL OCCUPANCIES: NO REQUIREMENT.

COMBUSTIBLE MATERIAL IN TYPE II CONSTRUCTION (603):
1. BLOCKING SUCH AS FOR HANDRAILS, MILLWORK, CABINETS AND WINDOWS AND DOOR FRAMES (603.1, EX 11).
2. HEAVY TIMBER AS PERMITTED BY NOTE d TO TABLE 601 AND SECTION 602.4.7 AND 1406.3. (603.1, EX 16).
3. IN ALL OCCUPANCIES, HEAVY TIMBER SHALL BE ALLOWED (ROOF CONSTRUCTION) WHERE A 1 HR OR LESS FIRE RESISTIANCE RATING IS REQUIRED (T 601, NOTE d).
4. OTHER ROOF FRAMING WHICH DOES NOT SUPPORT FLOOR LOADS, SHALL HAVE MEMBERS NOT < 4" NOMINAL IN WIDTH AND NOT < 6" NOMINAL IN DEPTH (602.4.3).

MAXIMUM AREA OF EXTERIOR WALL OPENINGS (T 704.8):
1. FIRE SEPARATION DISTANCE >30': UNLIMITED, UNPROTECTED OPENINGS PERMITTED.

PARAPETS (704.11):
1. PARAPET NOT REQUIRED IF THE EXTERIOR WALL IS NOT REQUIRED TO BE FIRE RESTIVE RATED BY TABLE 602 BECAUSE OF FIRE SEPARATION DISTANCE.

FIRE DOOR RATINGS (T 715.4):
1. 1 HOUR EXIT ENCLOSURE: 1 HOUR FIRE DOOR ASSEMBLY.

WALL AND CEILING FINISHES (803):
1. INTERIOR WALL AND CEILING FINISH REQUIREMENTS BY OCCUPANCY (T 803.5):
   - A. B, S: CLASS C RATING AT EXIT ENCLOSURES, CORRIDORS, ROOMS AND SPACES (NOTE b.).

AUTOMATIC SPRINKLER SYSTEMS (903):
1. NO REQUIREMENT IF < 12,000 SF, SINGLE STORY (903.2.8.1).

MAXIMUM FLOOR AREA ALLOWANCES PER OCCUPANT (T 1004.1.1):
1. OCCUPANT LOAD FACTOR (S.F. PER OCCUPANT):
   - A. BUSINESS: 100 GROSS
   - B. ACCESSORY STORAGE & MECHANICAL EQUIPMENT ROOMS: 300 GROSS
   - C. INDUSTRIAL: 100 GROSS

DESIGN OCCUPANT LOAD (1004.1):
1. NUMBER OF OCCUPANTS: 41
2. NUMBER OF OCCUPANTS USED TO DETERMINE PLUMBING FIXTURE QUANTITIES: <16

EGRESS WIDTH (1005):
1. EGRESS WIDTH (INCHES / OCCUPANT) PER OCCUPANT SERVED (T 1005.1):
   - A. EGRESS COMPONENT WIDTH FACTOR PER OCCUPANT (WITHOUT SPRINKLER):
     - 1. STAIRWAY: .30"
     - 2. OTHER EGRESS COMPONENTS: .20"
     - 3. REQUIRED EGRESS COMPONENT WIDTH:
       - A. STAIRWAY: .30 X 2 = .6"
       - B. OTHER EGRESS COMPONENTS": .20 X 41 = 8.2"
     - 4. EGRESS COMPONENT WIDTH PROVIDED:
       - A. STAIRWAY: 42"
       - B. EXTERIOR DOORS: 128"

ENCLOSURES UNDER STAIRWAYS (1009.5.3):
1. WALLS AND SOFFITS WITHIN ENCLOSED USABLE SPACES UNDER UNENCLOSED STAIRWAYS SHALL BE PROTECTED BY 1 HOUR FIRE RESISTIVE CONSTRUCTION.

ROOF ACCESS (1009.11.1):
1. ROOF HATCH WITHIN 10' OF ROOF EDGE TO BE PROTECTED BY GUARDS.
2. GUARDS NOT PROPOSED. ROOF HATCH > 10' FROM ROOF EDGE.

EXIT AND EXIT ACCESS DOORWAYS (1015):
1. TWO EXITS OR EXIT ACCESS DOORWAYS SHALL BE PROVIDED FROM SPACES CONTAINING S OCCUPANCY IF >29 OCCUPANTS (T 1015.1).
2. WHERE TWO EXITS OR EXIT ACCESS DOORWAYS ARE REQUIRED FROM A SPACE, THEY SHALL NOT BE SPACED LESS THAN 1/2 OF THE LENGTH OF THE MAXIMUM OVERALL DIAGONAL DIMENSION OF THE AREA SERVED (1015.2.1).

EXIT ACCESS TRAVEL DISTANCE (1016):
1. MAXIMUM EXIT ACCESS TRAVEL DISTANCE FOR B & S OCCUPANCY: 200' (T 1016.1).

STRUCTURAL BASIS OF DESIGN:
1. SOIL BEARING CAPACITY: 3,000 PSF. OWNER HAS PROVIDED ENGINEERED COMPACTED FILL AT BUILDING AREA UNDER SEPARATE CONTRACT.
2 LOW SLOPE ROOF DESIGN LOAD:
   - A. ROOF LIVE LOAD (SNOW): 25 PSF
   - B. ROOF DEAD LOAD: 15 PSF
   - C. TOTAL ROOF DESIGN LOAD: 40 PSF
4. MEZZANINE FLOOR DESIGN LOAD:
   - A. FLOOR LIVE LOAD (LIGHT STORAGE) 125 PSF
   - B. FLOOR DEAD LOAD: 65 PSF
   - C. TOTAL FLOOR DESIGN LOAD: 190 PSF
5. SEISMIC DESIGN INFORMATION:
   - A. SEISMIC DESIGN CATEGORY: C
   - B. I: 1.0
   - C. R: 4.0
   - D. SDS: 39.2
   - E. SD1: 12.5
   - F. SITE CLASS: B
   - F. BASIC WIND SPEED: 90 MILES PER HOUR
6. MINIMUM FROST DEPTH BELOW FINISH GRADE: 24"

ISSUE / REVISIONS:
TO CONSULTANTS 9/10/07
CD REVIEW 11/2/07
DFCM REVIEW 11/30/07
CDD 1/2/08

LICENSED ARCHITECT
No. 93-130352 0301
JAMES T. DRESSLAR
STATE OF UTAH
NOT VALID UNLESS SIGNED

TITLE: BUILDING CODE SUMMARY
PROJECT NO.: DFC 0713
DRAWN BY: JTD
DATE: 7/30/07

PROJECT:
STATE OF UTAH
DIVISION OF PARKS AND RECREATION
SAND HOLLOW STATE PARK
MAINTENANCE SHED
DFCM PROJECT NO. 07025510

JAMES T. DRESSLAR
ARCHITECT, L.L.C.
387 PARK LANE
MOAB, UTAH 84532
435.259.1155 PHONE / FAX

SHEET: A0.4

© JAMES T DRESSLAR ARCHITECT, LLC. ALL RIGHTS RESERVED. UNAUTHORIZED REPRODUCTION, DISTRIBUTION, AND/OR USE IS PROHIBITED.

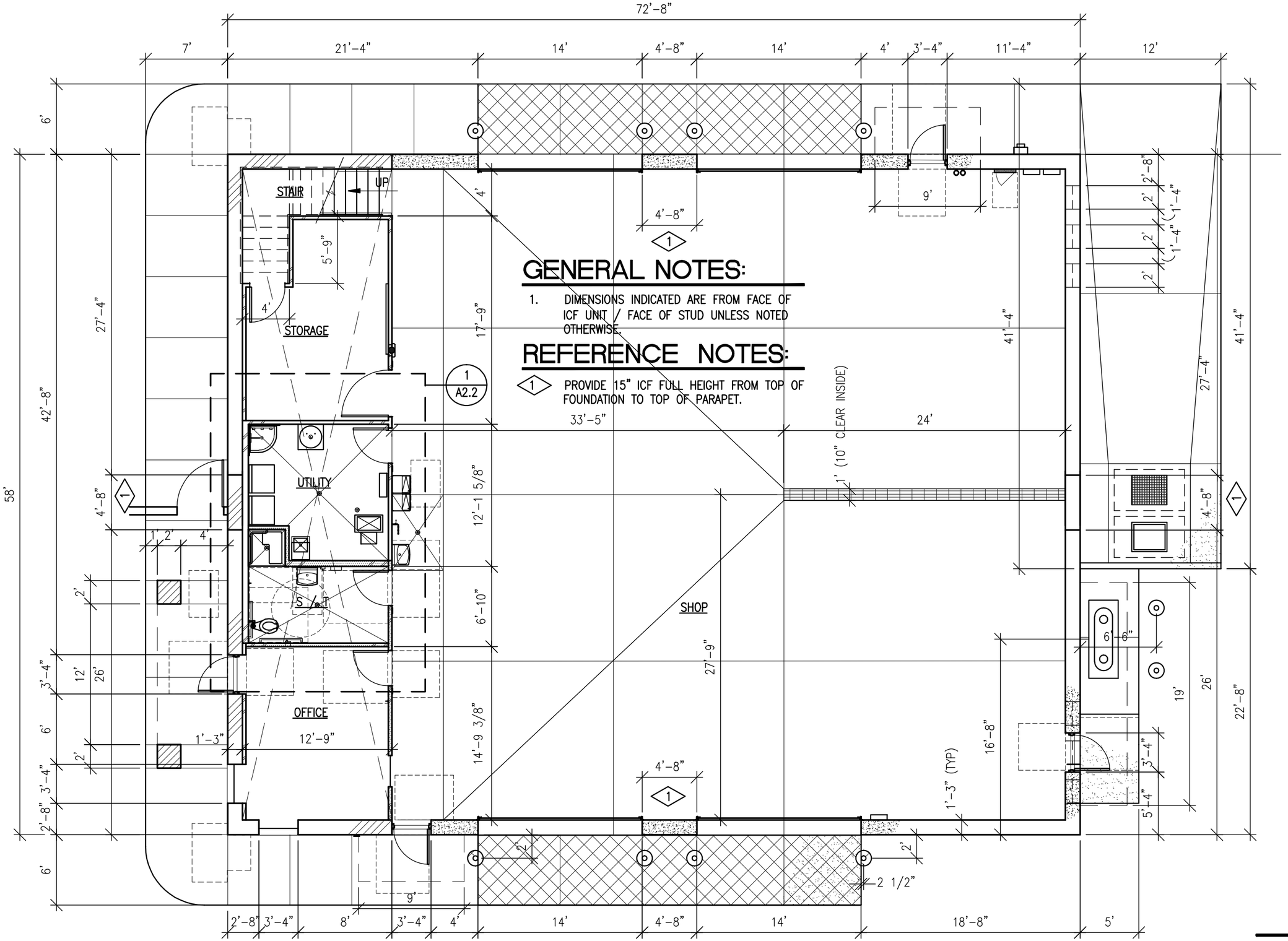

GENERAL NOTES:

1. DIMENSIONS INDICATED ARE FROM FACE OF ICF UNIT / FACE OF STUD UNLESS NOTED OTHERWISE.

REFERENCE NOTES:

1 PROVIDE 15" ICF FULL HEIGHT FROM TOP OF FOUNDATION TO TOP OF PARAPET.

NORTH

1/8" = 1'-0"

ISSUE / REVISIONS:
TO CONSULTANTS 9/10/07
CD REVIEW 11/2/07
DFCM REVIEW 11/30/07
CDD 1/2/08

LICENSED ARCHITECT
No. 93-130352 0301
JAMES T. DRESSLAR
STATE OF UTAH

NOT VALID UNLESS SIGNED

TITLE: DIMENSION PLAN

PROJECT NO.: DFC 0713

DRAWN BY: JTD

DATE: 7/30/07

PROJECT:
STATE OF UTAH
DIVISION OF PARKS AND RECREATION
SAND HOLLOW STATE PARK
MAINTENANCE SHED
DFCM PROJECT NO. 07025510

JAMES T. DRESSLAR
ARCHITECT, L.L.C.
397 PARK LANE
MOAB, UTAH 84532
435.259.1159 PHONE / FAX

SHEET: A2.1

© JAMES T DRESSLAR ARCHITECT, LLC. ALL RIGHTS RESERVED. UNAUTHORIZED REPRODUCTION, DISTRIBUTION, AND/OR USE IS PROHIBITED.

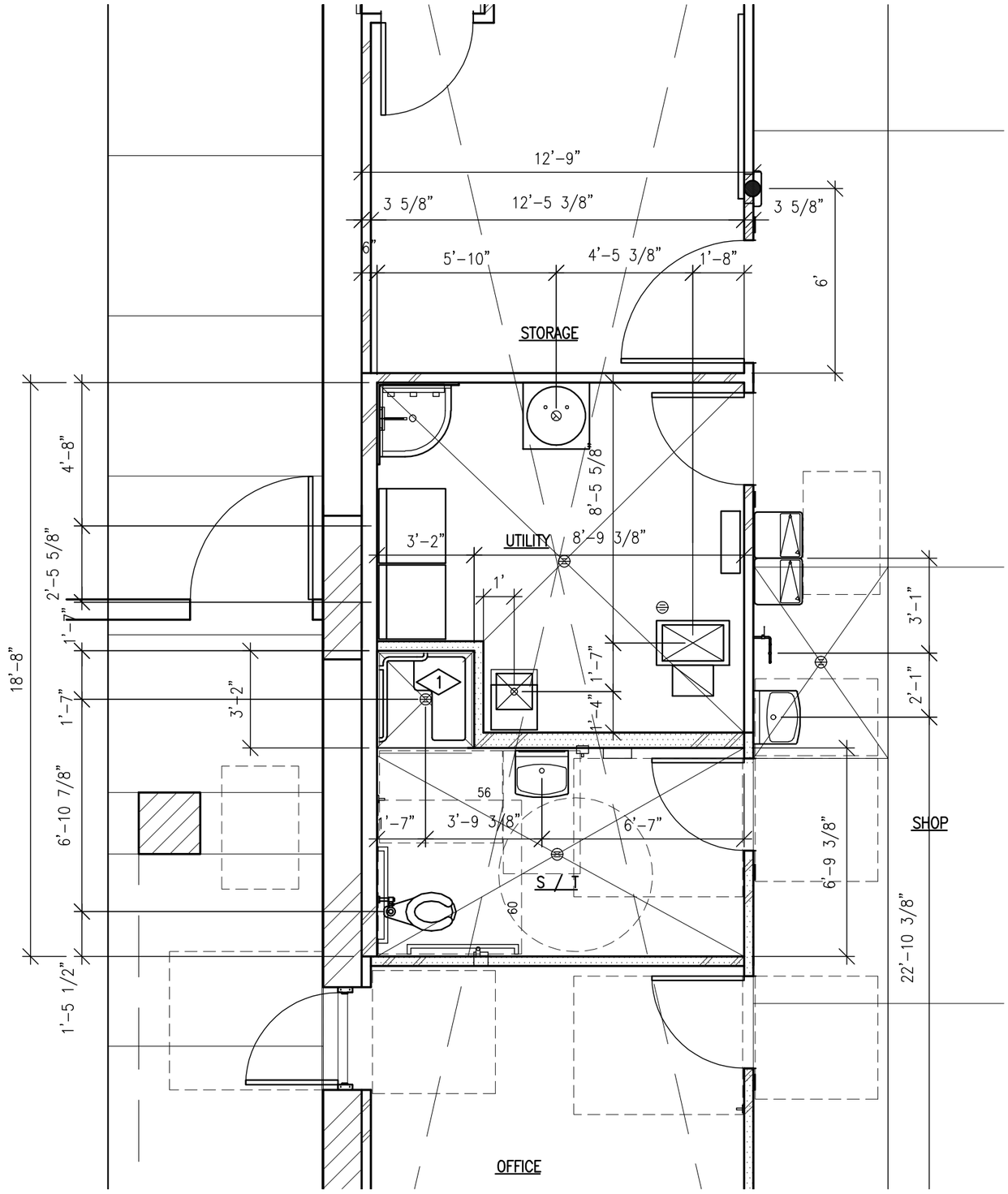

REFERENCE NOTES:

1. VERIFY STUD ROUGH IN DIMENSIONS WITH SHOWER SUBMITTAL PRIOR TO FRAMING WALL.

GENERAL NOTES:

1. DIMENSIONS INDICATED ARE FROM FACE OF ICF UNIT / FACE OF STUD UNLESS NOTED OTHERWISE.

NORTH

1/4" = 1'-0"

ISSUE / REVISIONS:	
TO CONSULTANTS	9/10/07
CD REVIEW	11/2/07
DFCM REVIEW	11/30/07
CDD	1/2/08

LICENSED ARCHITECT
No. 93-130352 0301
JAMES T. DRESSLAR
STATE OF UTAH

NOT VALID UNLESS SIGNED

TITLE: ENLARGED DIMENSION PLAN

PROJECT NO.: DFC 0713

DRAWN BY: JTD

DATE: 7/30/07

PROJECT:
STATE OF UTAH
DIVISION OF PARKS AND RECREATION
SAND HOLLOW STATE PARK
MAINTENANCE SHED
DFCM PROJECT NO. 07025510

JAMES T. DRESSLAR ARCHITECT, L.L.C.
387 PARK LANE
MOAB, UTAH 84532
435.259.1155 PHONE / FAX

SHEET: A2.2

© JAMES T DRESSLAR ARCHITECT, LLC. ALL RIGHTS RESERVED. UNAUTHORIZED REPRODUCTION, DISTRIBUTION, AND/OR USE IS PROHIBITED.

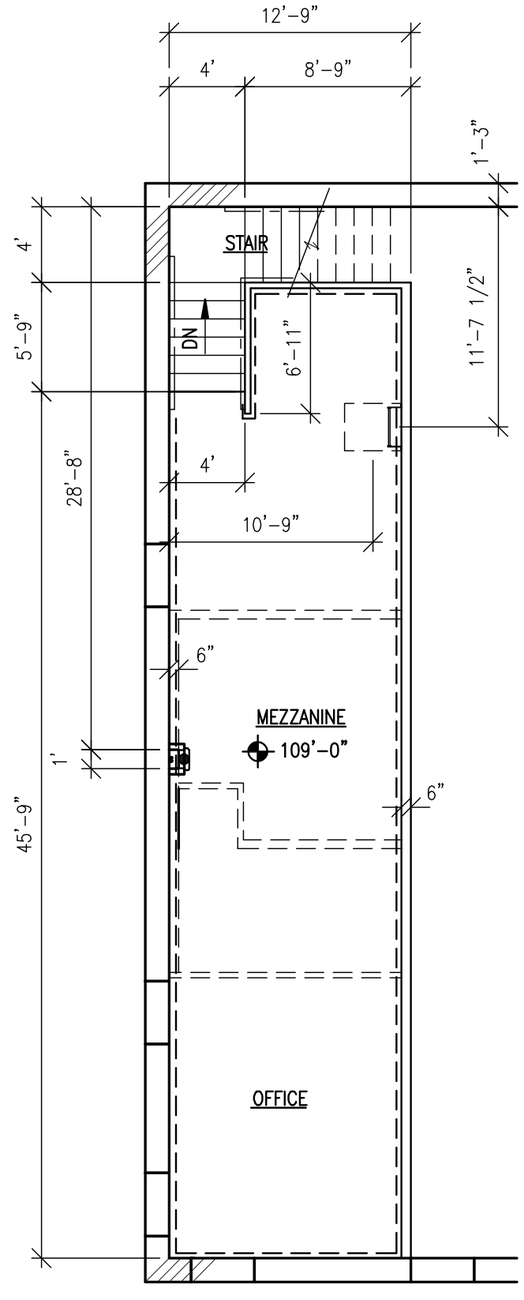

GENERAL NOTES:

1. DIMENSIONS INDICATED ARE FROM FACE OF ICF UNIT / FACE OF STUD UNLESS NOTED OTHERWISE.

NORTH

1/8" = 1'-0"

ISSUE / REVISIONS:
TO CONSULTANTS 9/10/07
CD REVIEW 11/2/07
DFCM REVIEW 11/30/07
CDD 1/2/08

LICENSED ARCHITECT
No. 93-130352 0301
JAMES T. DRESSLAR
STATE OF UTAH

NOT VALID UNLESS SIGNED

TITLE: MEZZANINE DIMENSION PLAN

DRAWN BY: JTD

PROJECT NO.: DFC 0713

DATE: 7/30/07

PROJECT:
STATE OF UTAH
DIVISION OF PARKS AND RECREATION
SAND HOLLOW STATE PARK
MAINTENANCE SHED
DFCM PROJECT NO. 07025510

JAMES T. DRESSLAR
ARCHITECT, L.L.C.
387 PARK LANE
MOAB, UTAH 84532
435.259.1155 PHONE / FAX

SHEET: A2.3

© JAMES T DRESSLAR ARCHITECT, LLC. ALL RIGHTS RESERVED. UNAUTHORIZED REPRODUCTION, DISTRIBUTION, AND/OR USE IS PROHIBITED.

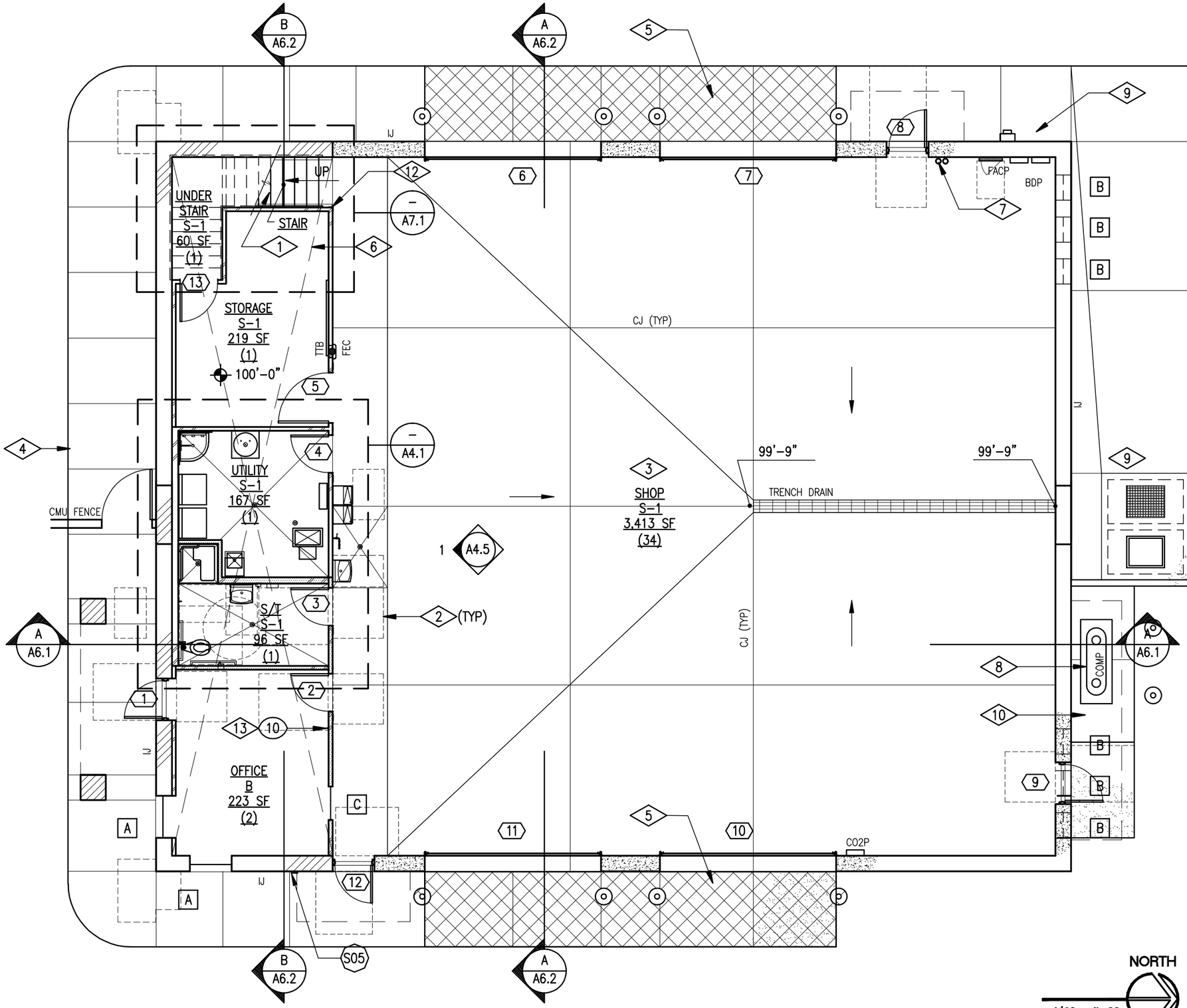

NORTH

1/8" = 1'-0"

REFERENCE NOTES:

1. CONCRETE FILLED STEEL STAIR ASSEMBLY.
2. DASHED LINE INDICATES ACCESSIBLE FLOOR MANEUVERING SPACE AT DOOR AND FOR WHEELCHAIR ACCESS PER (1 / A9.5)
3. 6" REINFORCED CONCRETE SLAB ON 6" DRAINAGE COURSE.
4. 4" CONCRETE WALK / LANDING / APRON ON 4" BASE COURSE. PROVIDE THICKENED, REINFORCED SLAB AT OVERHEAD DOOR OPENINGS INDICATED. PROVIDE REINFORCED WALK / LANDING AT AREA OF AIR COMPRESSOR.
5. HATCHED AREA INDICATES 6" THICK REINFORCED APRON SLAB ON 6" BASE COURSE AT OVERHEAD DOORS.
6. "X" HATCH INDICATES MEZZANINE ABOVE.
7. ROOF DRAIN LEADERS.
8. AIR COMPRESSOR ON 4" HIGH CONCRETE HOUSEKEEPING PAD REINFORCED WITH WIRE WOVEN MESH. SIZE PAD PER SUBMITTAL DRAWINGS OR ACTUAL UNIT DIMENSIONS.
9. VEHICLE WASH DOWN SUMP.
10. REINFORCE CONCRETE WALK / LANDING WITH WIRE WOVEN MESH.
11. POWER METER AND BASE.
12. CORNER GUARD ("L") PER (2 / A9.5)
13. PROVIDE HIGH AND LOW COAT HOOKS.

GENERAL NOTES:

1. FOR DIMENSIONS, SEE (– / A2.1)
2. TOP OF SLAB DATUM ELEVATION 100'-0" = 3024 PER CIVIL DRAWINGS.
3. PROVIDE JOINTS IN CONCRETE SLAB PER (2 / A9.1)
4. FOR LEGEND, SEE (– / A3.2)
5. ALL CFMF FRAMED WALLS ARE BEARING WALLS.

ISSUE / REVISIONS:	
TO CONSULTANTS	9/10/07
CD REVIEW	11/2/07
DFCM REVIEW	11/30/07
CDD	1/2/08

LICENSED ARCHITECT
No. 93-130352 0301
JAMES T. DRESSLAR
STATE OF UTAH

NOT VALID UNLESS SIGNED

© JAMES T DRESSLAR ARCHITECT, LLC. ALL RIGHTS RESERVED. UNAUTHORIZED REPRODUCTION, DISTRIBUTION, AND/OR USE IS PROHIBITED.

TITLE: FLOOR PLAN

PROJECT NO.: DFC 0713

DRAWN BY: JTD

DATE: 7/30/07

PROJECT:
STATE OF UTAH
DIVISION OF PARKS AND RECREATION
SAND HOLLOW STATE PARK
MAINTENANCE SHED
DFCM PROJECT NO. 07025510

JAMES T. DRESSLAR
ARCHITECT, L.L.C.
387 PARK LANE
MOAB, UTAH 84532
435.259.1159 PHONE / FAX

SHEET: A3.1

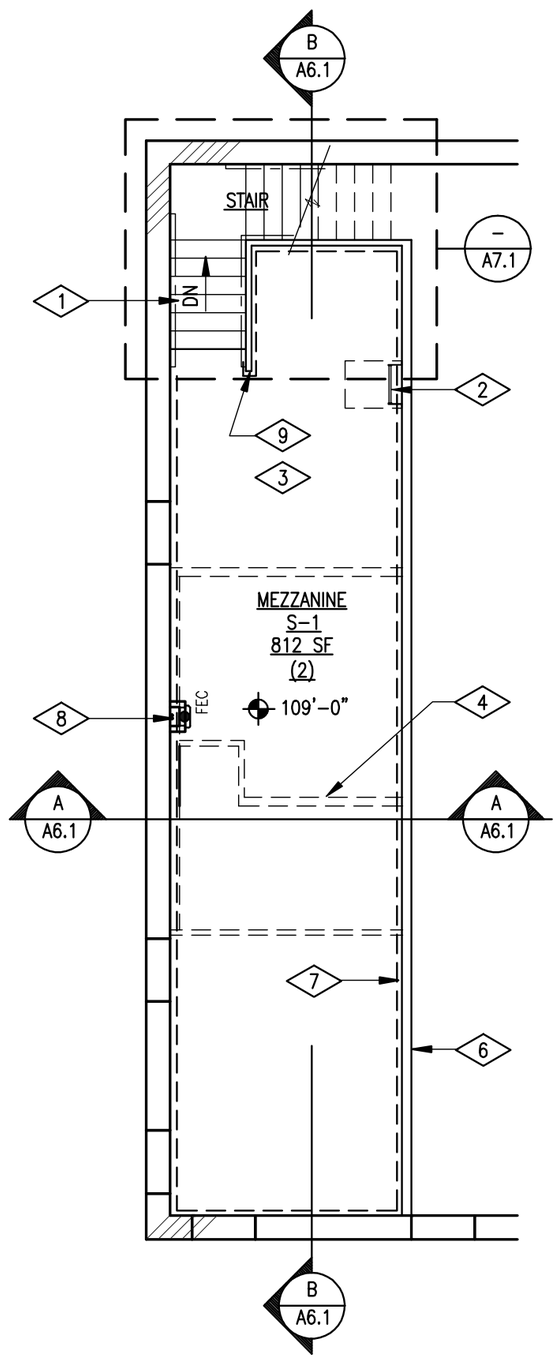

LEGEND:

NET FINISHED WALL THICKNESS

15 1/4"	CAST IN PLACE CONCRETE STEM WALL AT EXTERIOR SIDES OF SHOP AREA: STUCCO EXTERIOR FINISH / CAST IN PLACE CONCRETE STEM WALL W/ 15" ICF ABOVE / SCHEDULED WALL FINISH
4 7/8"	3 5/8" CFMF WALL ASSEMBLY: GYP BOARD EACH SIDE / CFMF STUDS AT 16" O.C. / SCHEDULED WALL FINISH EACH SIDE.
7 1/4"	6" CFMF WALL ASSEMBLY: GYP BOARD EACH SIDE / CFMF STUDS AT 16" O.C. (12" AT GUARD WALL) / SCHEDULED WALL FINISH EACH SIDE.
15 7/8"	INSULATED CONCRETE FORM WALL ASSEMBLY: STUCCO EXTERIOR FINISH / 15" ICF W/ 10" GROUTED & REINFORCED CORE TRANSITIONING TO 11 1/2" ICF W/ 6" GROUTED & REINFORCED CORE PARAPET / GYP BOARD / ADDITIONAL SCHEDULED WALL FINISH WHERE OCCURS.
7 7/8" OR 5 1/2"	SOUND ATTENUATED FRAMED WALL ASSEMBLY: SCHEDULED WALL FINISH EACH SIDE / GYP BOARD / INDICATED CFMF FRAMING / FULL DEPTH ACOUSTICAL BATT INSULATION / TWO LAYERS GYP BOARD ONE SIDE.
20 7/8"	6" CFMF FURRED WALL ASSEMBLY: ICF WALL / CFMF STUDS AT 16" O.C. / GYP BOARD / SCHEDULED WALL FINISH.
19 1/2"	3 5/8" CFMF FURRED WALL ASSEMBLY: ICF WALL ASSEMBLY / CFMF STUDS AT 16" O.C. / GYP BOARD / SCHEDULED WALL FINISH.

SHOP ← ROOM NAME
S-1 ← OCCUPANCY GROUP
3,413 SF ← GROSS AREA
(34) ← NUMBER OF OCCUPANTS

NOTES:

1. FOR ICF WALL COMPONENTS, SEE 1/A9.2

REFERENCE NOTES:

1. CONCRETE FILLED STEEL STAIR ASSEMBLY.
2. METAL FABRICATED LADDER TO ROOF SCUTTLE PER 1/A9.4
3. MEZZANINE FLOOR / CEILING ASSEMBLY: 6" CONCRETE AND STEEL COMPOSITE DECK / 8 1/2" AIR SPACE/ 3 1/2" CFMF JOISTS AT 24" O.C. / GYP BOARD CEILING / SCHEDULED CEILING FINISH.
4. DASHED LINE INDICATES WALL BELOW.
5. NOT USED.
6. FRAMED GUARD WALL AT OPEN SIDE OF MEZZANINE. PROVIDE DEEP LEG TRACK AT SILL.
7. DASHED LINE INDICATES FRPP WAINSCOT ABOVE BASE. TOP OF WAINSCOT +3'-6'.
8. PROVIDE FRAMED CHASE FOR AIR CONDITIONING LINESET FROM ROOF.
9. WRAP FRPP WAINSCOT AROUND END OF WALL TO PROVIDE 4" CORNER GUARD.

GENERAL NOTES:

1. FOR DIMENSIONS, SEE –/A2.3

NORTH
1/8" = 1'-0"

ISSUE / REVISIONS:
TO CONSULTANTS 9/10/07
CD REVIEW 11/2/07
DFCM REVIEW 11/30/07
CDD 1/2/08

LICENSED ARCHITECT
No. 93-130352 0301
JAMES T. DRESSLAR
STATE OF UTAH

NOT VALID UNLESS SIGNED

TITLE: MEZZANINE FLOOR PLAN
PROJECT NO.: DFC 0713
DRAWN BY: JTD
DATE: 7/30/07

PROJECT:
STATE OF UTAH
DIVISION OF PARKS AND RECREATION
SAND HOLLOW STATE PARK
MAINTENANCE SHED
DFCM PROJECT NO. 07025510

JAMES T. DRESSLAR
ARCHITECT, L.L.C.
387 PARK LANE
MOAB, UTAH 84533
435.259.1155 PHONE / FAX

SHEET: A3.2

© JAMES T DRESSLAR ARCHITECT, LLC. ALL RIGHTS RESERVED. UNAUTHORIZED REPRODUCTION, DISTRIBUTION, AND/OR USE IS PROHIBITED.

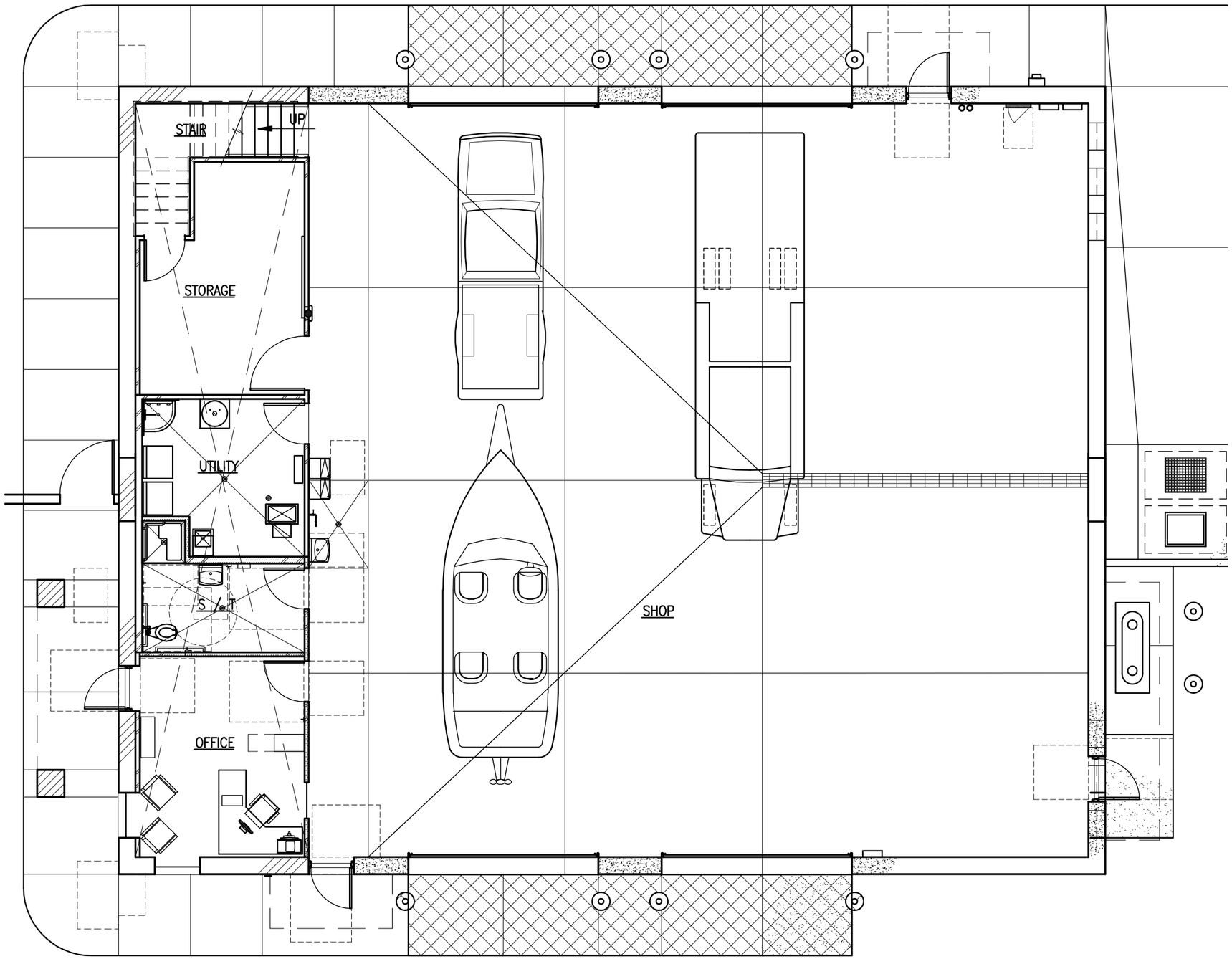

NORTH

1/8" = 1'-0"

ISSUE / REVISIONS:
TO CONSULTANTS 9/10/07
CD REVIEW 11/2/07
DFCM REVIEW 11/30/07
CDD 1/2/08

LICENSED ARCHITECT
No. 93-130352 0301
JAMES T. DRESSLAR
STATE OF UTAH

NOT VALID UNLESS SIGNED

TITLE: FURNITURE PLAN

PROJECT NO.: DFC 0713

DRAWN BY: JTD

DATE: 7/30/07

PROJECT:
STATE OF UTAH
DIVISION OF PARKS AND RECREATION
SAND HOLLOW STATE PARK
MAINTENANCE SHED
DFCM PROJECT NO. 07025510

JAMES T. DRESSLAR
ARCHITECT, L.L.C.
387 PARK LANE
MOAB, UTAH 84532
435.259.1155 PHONE / FAX

SHEET: A3.3

© JAMES T DRESSLAR ARCHITECT, LLC. ALL RIGHTS RESERVED. UNAUTHORIZED REPRODUCTION, DISTRIBUTION, AND/OR USE IS PROHIBITED.

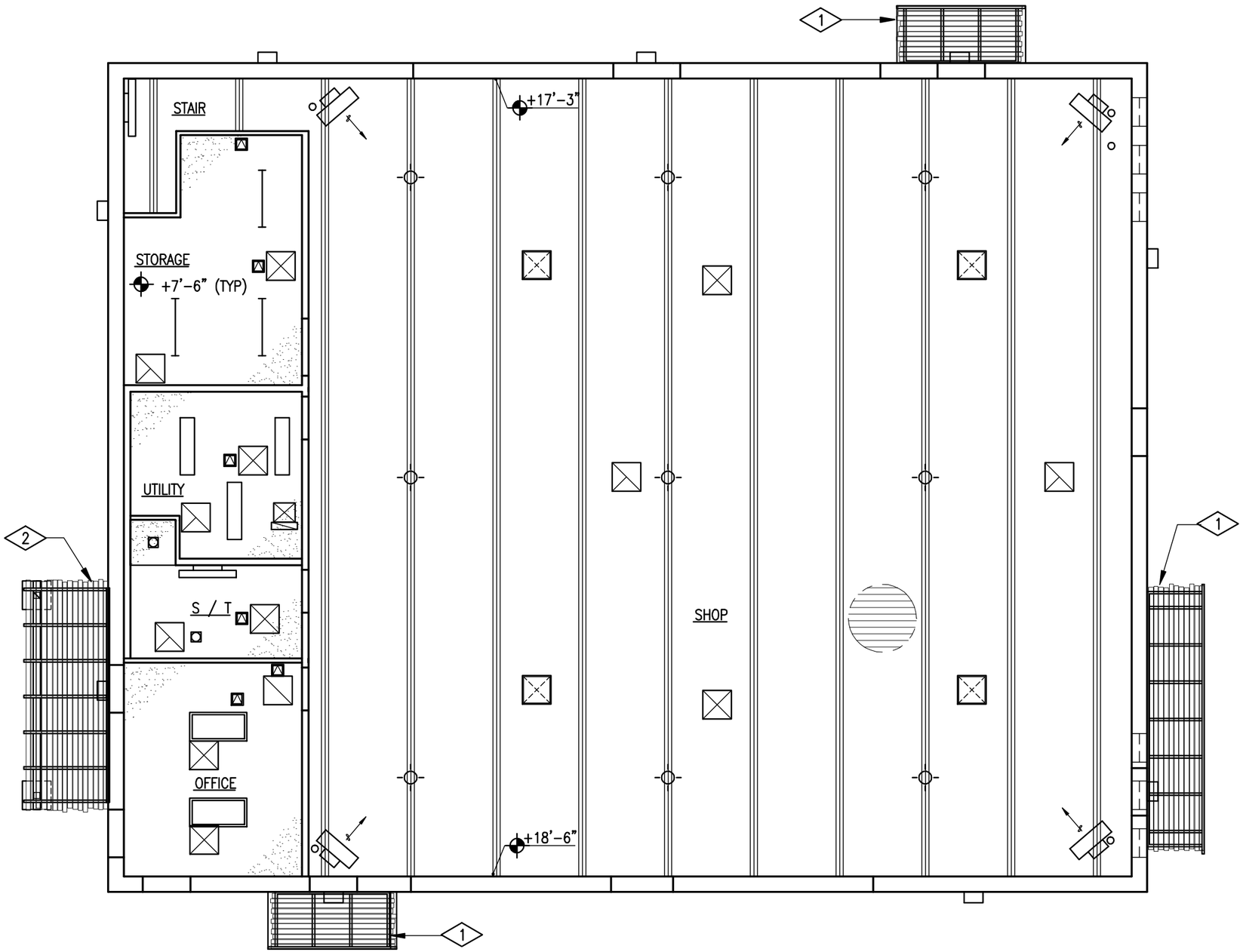

REFERENCE NOTES:

1 METAL FABRICATED DOOR CANOPY PER 1/A9.7

2 METAL FABRICATED ENTRY CANOPY PER 1/A9.8

LEGEND

36 X 30 ROOF SCUTTLE PER 1/A9.4

GYP BOARD CEILING

+7'-6" BOTTOM OF CEILING

MECHANICAL AIR TERMINAL

EXPOSED METAL ROOF DECK

EXPOSED ROOF STRUCTURE

METAL ACCESS DOOR IN CEILING AS REQUIRED BY SHUT OFF VALVE LOCATIONS – FRAME CEILING AND SIZE DOORS AS NECESSARY

SUSPENDED UNIT HEATER

SURFACE MOUNTED LIGHT FIXTURE

WALL MOUNTED LIGHT FIXTURE

RECESSED LIGHT FIXTURE

CHAIN HUNG LIGHT FIXTURE

24 X 24 SKYLIGHT

NORTH

1/8" = 1'-0"

ISSUE / REVISIONS:
TO CONSULTANTS 9/10/07
CD REVIEW 11/2/07
DFCM REVIEW 11/30/07
CDD 1/2/08

LICENSED ARCHITECT
No. 93-130352 0301
JAMES T. DRESSLAR
STATE OF UTAH

NOT VALID UNLESS SIGNED

TITLE: REFLECTED CEILING PLAN

PROJECT NO.: DFC 0713

DRAWN BY: JTD

DATE: 7/30/07

PROJECT:
STATE OF UTAH
DIVISION OF PARKS AND RECREATION
SAND HOLLOW STATE PARK
MAINTENANCE SHED
DFCM PROJECT NO. 07025510

JAMES T. DRESSLAR
ARCHITECT, L.L.C.
387 PARK LANE
MOAB, UTAH 84532
435.259.1195 PHONE / FAX

SHEET: A3.4.1

© JAMES T DRESSLAR ARCHITECT, LLC. ALL RIGHTS RESERVED. UNAUTHORIZED REPRODUCTION, DISTRIBUTION, AND/OR USE IS PROHIBITED.

REFERENCE NOTES:

1. DASHED LINE INDICATES GUARD WALL BELOW.
2. START ROOF JOIST LAYOUT WITH ROOF SCUTTLE CENTERED IN BAY.

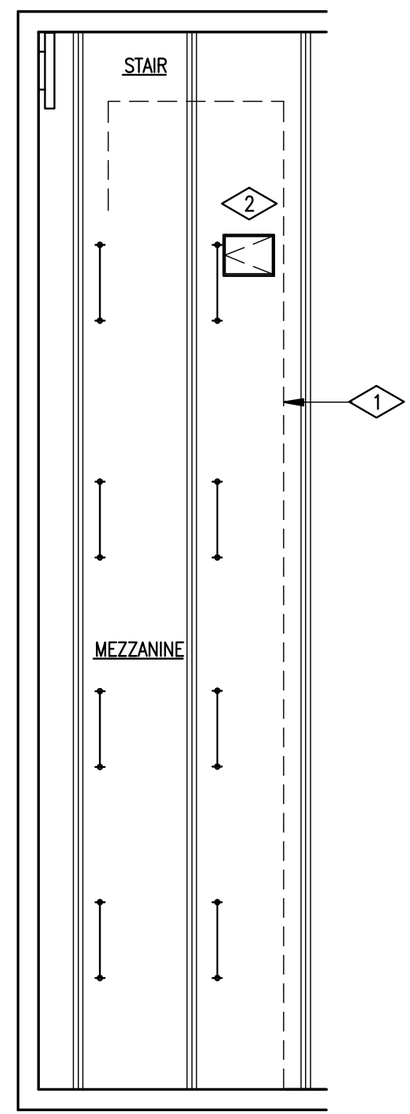

GENERAL NOTES:

1. FOR LEGEND, SEE –/A3.4.1
2. FOR DIMENSIONS, SEE –/A2.3

NORTH

1/8" = 1'-0"

ISSUE / REVISIONS:	
CD REVIEW	11/2/07
DFCM REVIEW	11/30/07
CDD	1/2/08

LICENSED ARCHITECT
No. 93-130352 0301
JAMES T. DRESSLAR
STATE OF UTAH

NOT VALID UNLESS SIGNED

TITLE: MEZZANINE RCP

PROJECT NO.: DFC 0713

DRAWN BY: JTD

DATE: 7/30/07

PROJECT:
STATE OF UTAH
DIVISION OF PARKS AND RECREATION
SAND HOLLOW STATE PARK
MAINTENANCE SHED
DFCM PROJECT NO. 07025510

JAMES T. DRESSLAR
ARCHITECT, L.L.C.
387 PARK LANE
MOAB, UTAH 84532
435.259.1159 PHONE / FAX

SHEET: A3.4.2

© JAMES T DRESSLAR ARCHITECT, LLC. ALL RIGHTS RESERVED. UNAUTHORIZED REPRODUCTION, DISTRIBUTION, AND/OR USE IS PROHIBITED.

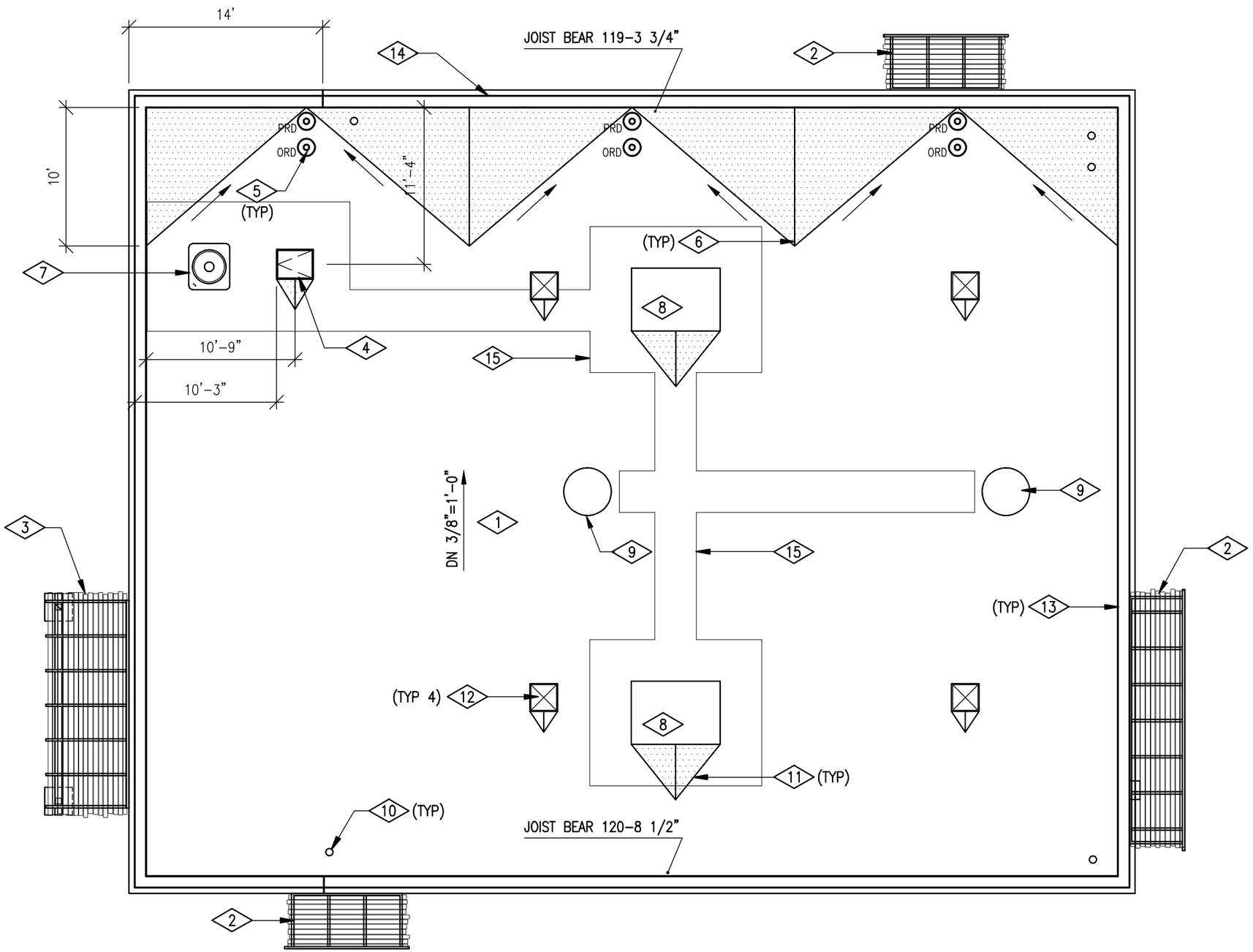

REFERENCE NOTES:

1. LOW SLOPE ROOF ASSEMBLY: THERMOPLASTIC MEMBRANE ROOFING / RIGID INSULATION / METAL DECK / 30" OPEN WEB STEEL JOISTS AT 60" O.C.
2. METAL FABRICATED DOOR CANOPY PER 1/A9.7
3. METAL FABRICATED ENTRY CANOPY PER 1/A9.8
4. 36 X 30 ROOF SCUTTLE WITH METAL FABRICATED LADDER PER 1/A9.4
5. ROOF DRAINS PER 1/A9.10
6. HATCHED AREA INDICATES ROOF CRICKET BUILT UP FROM RIGID INSULATION. PROVIDE POSITIVE SLOPE TO ROOF DRAINS.
7. CONDENSING UNIT.
8. EVAPORATIVE COOLER.
9. EXHAUST FAN.
10. EXHAUST FLUE THRU ROOF FOR UNIT HEATER.
11. PROVIDE RIGID INSULATION CRICKET AT ROOF MOUNTED EQUIPMENT AS REQUIRED TO MAINTAIN POSITIVE ROOF SLOPE AT HIGH SIDE.
12. 24 X 24 SKYLIGHT PER 4/A9.10
13. METAL COPING SYSTEM PER 2/A9.12
14. ROOF EDGE.
15. TMR WALKWAY PAD.

GENERAL NOTES:

1. FOR THERMOPLASTIC ROOF MEMBRANE DETAILS, SEE 3/A9.10 1/A9.11 1/A9.12

NORTH

1/8" = 1'-0"

ISSUE / REVISIONS:	
TO CONSULTANTS	9/10/07
CD REVIEW	11/2/07
DFCM REVIEW	11/30/07
CDD	1/2/08

LICENSED ARCHITECT
No. 93-130352 0301
JAMES T. DRESSLAR
STATE OF UTAH

NOT VALID UNLESS SIGNED

TITLE: ROOF PLAN

PROJECT NO.: DFC 0713

DRAWN BY: JTD

DATE: 7/30/07

PROJECT:
STATE OF UTAH
DIVISION OF PARKS AND RECREATION
SAND HOLLOW STATE PARK
MAINTENANCE SHED
DFCM PROJECT NO. 07025510

JAMES T. DRESSLAR
ARCHITECT, L.L.C.
387 PARK LANE
MOAB, UTAH 84532
435.259.1155 PHONE / FAX

SHEET: A3.5

© JAMES T DRESSLAR ARCHITECT, LLC. ALL RIGHTS RESERVED. UNAUTHORIZED REPRODUCTION, DISTRIBUTION, AND/OR USE IS PROHIBITED.

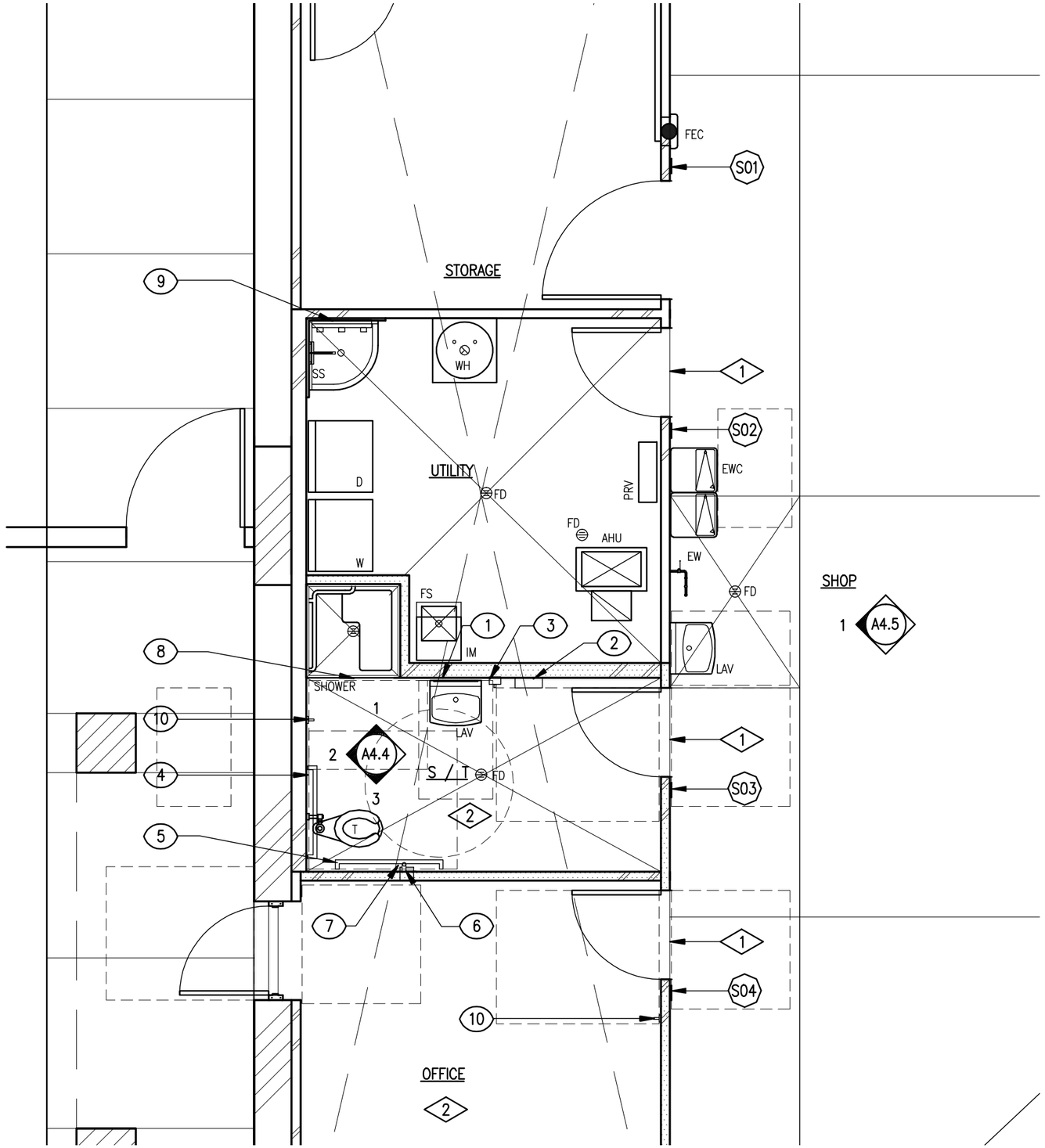

REFERENCE NOTES:

1. PROVIDE VINYL TRANSITION STRIP AT DOOR THRESHOLD.
2. PROVIDE SOUND ATTENUATED WALLS THIS ROOM.

REFERENCE NOTES:

1. FOR LEGEND, SEE – / A3.2

TOILET ACCESSORIES:

1. 18 X 30 MIRROR
2. *ACCESSIBLE PAPER TOWEL DISPENSER
3. *ACCESSIBLE LIQUID SOAP DISPENSER
4. 36" GRAB BAR
5. 42" GRAB BAR
6. *TOILET TISSUE DISPENSER
7. 18" GRAB BAR
8. SHOWER CURTAIN ROD
9. 24" MOP RACK
10. HAT AND COAT HOOK

*DENOTES ACCESSORIES PROVIDED BY OWNER

NORTH

1/4" = 1'-0"

ISSUE / REVISIONS:	
TO CONSULTANTS	9/10/07
CD REVIEW	11/2/07
DFCM REVIEW	11/30/07
CDD	1/2/08

LICENSED ARCHITECT
No. 93-130352 0301
JAMES T. DRESSLAR
STATE OF UTAH

NOT VALID UNLESS SIGNED

TITLE: ENLARGED FLOOR PLAN

PROJECT NO.: DFC 0713

DRAWN BY: JTD

DATE: 7/30/07

PROJECT:
STATE OF UTAH
DIVISION OF PARKS AND RECREATION
SAND HOLLOW STATE PARK
MAINTENANCE SHED
DFCM PROJECT NO. 07025510

JAMES T. DRESSLAR ARCHITECT, L.L.C.
387 PARK LANE
MOAB, UTAH 84532
435.259.1159 PHONE / FAX

SHEET: A4.1

© JAMES T DRESSLAR ARCHITECT, LLC. ALL RIGHTS RESERVED. UNAUTHORIZED REPRODUCTION, DISTRIBUTION, AND/OR USE IS PROHIBITED.

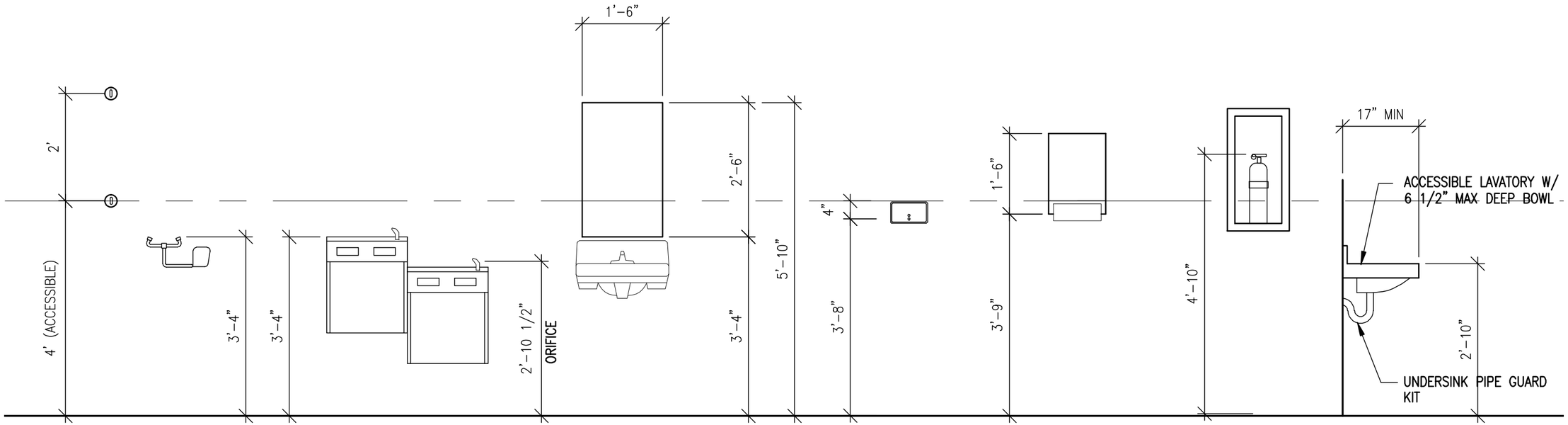

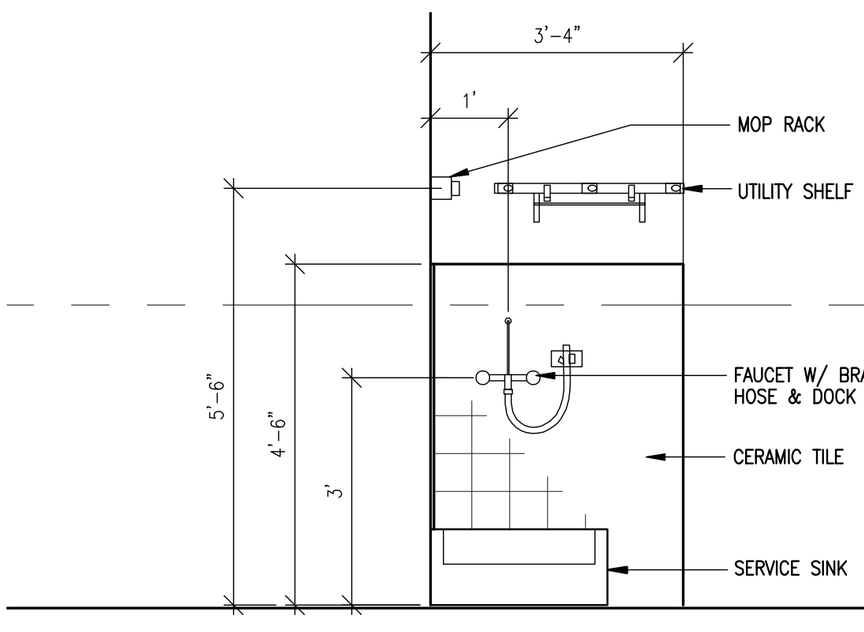

SERVICE SINK / MOP RACK

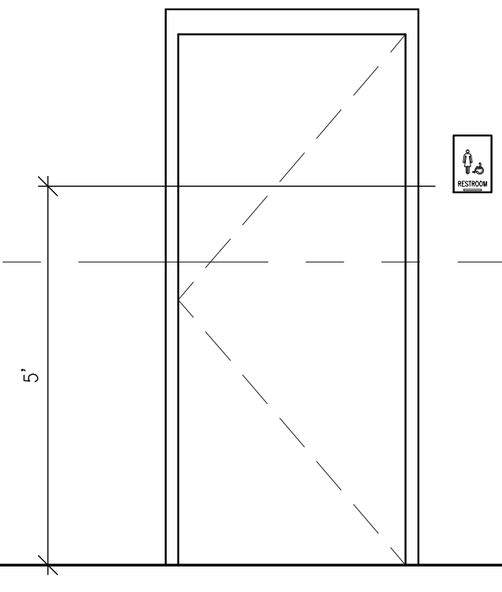

ADA TACTILE SIGNAGE

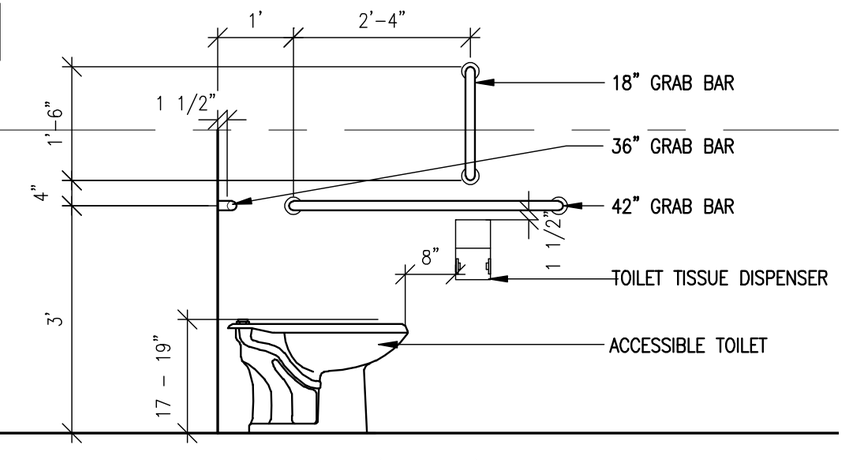

ACCESSIBLE TOILET/GRAB BAR/TOILET
TISSUE DISPENSER

TYPICAL MOUNTING HEIGHTS

1/2"= 1'-0"

ISSUE / REVISIONS:
TO CONSULTANTS 9/10/07
CD REVIEW 11/2/07
DFCM REVIEW 11/30/07
CDD 1/2/08

LICENSED ARCHITECT
No. 93-130352 0301
JAMES T. DRESSLAR
STATE OF UTAH

NOT VALID UNLESS SIGNED

TITLE: TYPICAL MOUNTING HEIGHTS

PROJECT NO.: DFC 0713

DRAWN BY: JTD

DATE: 7/30/07

PROJECT:
STATE OF UTAH
DIVISION OF PARKS AND RECREATION
SAND HOLLOW STATE PARK
MAINTENANCE SHED
DFCM PROJECT NO. 07025510

JAMES T. DRESSLAR
ARCHITECT, L.L.C.
367 PARK LANE
MOAB, UTAH 84532
435.259.1155 PHONE / FAX

SHEET: A4.2

© JAMES T DRESSLAR ARCHITECT, LLC. ALL RIGHTS RESERVED. UNAUTHORIZED REPRODUCTION, DISTRIBUTION, AND/OR USE IS PROHIBITED.

FINISH SCHEDULE

ROOM NAME	FLOOR		BASE		WALLS N		WALLS E		WALLS S		WALLS W		CEILING		CEILING HEIGHT	REMARKS
OFFICE	F1	VCT-1	B1	BC-1	W1	PC-1	W1	PC-3	W1	PC-1	W1	PC-1	C1	PC-2	7'-6"	-
TOILET	F2	SVC-1	B2	BC-2	W3	FRP-1	W3	FRP-1	W3	FRP-1	W3	FRP-1	C1	PC-2	7'-6"	-
UTILITY	F3	-	B1	BC-1	W1	PC-1	W1	PC-1	W1	PC-1	W1	PC-1	C1	PC-2	7'-6"	-
SHOP	F4	-	B1	BC-1	W1/W4	PC-1	W1/W4	PC-1	W1	PC-1	W1/W4	PC-1	C2	PC-2	16'-2"	1, 2, 3,
STORAGE	F3	-	B1	BC-1	W1	PC-1	W1	PC-1	W1	PC-1	W1	PC-2	C1	PC-2	7'-6"	-
UNDERSTAIR STORAGE	F3	-	B1	BC-1	W2	PC-2	W2	PC-2	W2	PC-2	W2	PC-2	C1	PC-2	VARIES	-
MEZZANINE	F3	-	B1	BC-1	W1	PC-1	W1/W3	PC-1/FRP1	W1/W3	PC-1/FRP1	W1/W3	PC-1/FRP1	C2	PC-2	7' MIN	1, 3
STAIR	F3	-	-	-	W2	PC-1	W2	PC-1	W2	PC-1	W2	PC-1	C2	PC-2	VARIES	-

REMARKS:

1. PAINT EXPOSED ROOF DECK AND ROOF JOISTS.
2. BASE AT SOUTH WALL ONLY.
3. FRPP WAINSCOT.

COLOR SUMMARY:

1. PROVIDE MATERIAL IN COLORS, PAINT, OR MATCH MANUFACTURER'S COLORS AS INDICATED:

A. DIVISION 4
   1. MANUFACTURED STONE PIER CAPSTONE: OWENS CORNING "TAUPE".

B. DIVISION 5
   1. METAL/STRUCTURAL FABRICATIONS:
      A. CANOPY TRELLIS, BOLLARDS: SHERWIN WILLIAMS SW 6461 "ISLE OF PINES".
      B. OVERHEAD DOOR JAMB GUARDS, LADDER, STAIRS & STAIR RAILINGS: MATCH STEEL DOOR FRAMES.

C. DIVISION 7
   1. STUCCO: MATCH EXISTING ENTRANCE STATION
   2. ROOF SCUTTLE: MATCH METAL FABRICATIONS
   3. WALL COPING: METAL ERA "DARK BRONZE"

D. DIVISION 8
   1. ALUMINUM WINDOWS & STOREFRONT: DARK BRONZE
   2. DOOR HARDWARE: STAINLESS STEEL
   3. STEEL DOORS: SHERWIN WILLIAMS "GROUNDED" (SW6089)
   4. STEEL DOOR FRAMES: SHERWIN WILLIAMS "ROYCROFT ADOBE" (SW0040)
   5. OVERHEAD DOORS: OVERHEAD DOOR CORPORATION "INDUSTRIAL BROWN" EXTERIOR, WHITE INTERIOR

E. DIVISION 9
   1. GYP BOARD: SCHEDULED
   2. SERVICE SINK SURROUND TILE: DALTILE "PEPPER WHITE" (0147)
   3. SERVICE SINK SURROUND GROUT: CUSTOM BUILDING PRODUCTS "BRIGHT WHITE" (381)
   4. VCT: SCHEDULED
   5. SHEET VINYL: SCHEDULED
   6. FIBER REINFORCED PLASTIC PANELS: SCHEDULED

F. DIVISION 10
   1. BATHROOM ACCESSORIES: STAINLESS STEEL
   2. FIRE EXTINGUISHER CABINETS: WHITE
   3. INTERIOR SIGNAGE: DARK BRONZE CORE, WHITE FACE

G. DIVISION 15
   1. BATHROOM FAUCETS: POLISHED CHROME
   2. EXPOSED EXTERIOR EXHAUST DUCT WALL CAP, CONCENTRIC VENTS: MATCH STEEL DOORS
   3. TOILET FIXTURES: WHITE PORCELAIN
   4. EXPOSED GAS (PROPANE) LINE: BLACK
   5. REFRIGERATED WATER COOLER: OASIS - STANDARD SANDSTONE FINISH.
   6. INTERIOR AIR TERMINALS: WHITE

H. DIVISION 16
   1. DEVICES AND INTERIOR LIGHT FIXTURES: WHITE
   2. COVER PLATES: STAINLESS STEEL
   3. INTERIOR LIGHT FIXTURE TRIM: WHITE / STAINLESS STEEL.
   4. EXTERIOR WALL MOUNTED LIGHT FIXTURES: DARK BRONZE
   5. EXTERIOR COLUMN MOUNTED LIGHT FIXTURES: POWDER COAT "VERDE GREEN".
   6. METER BASE AND EXPOSED CONDUIT: MATCH STEEL DOORS
   7. EXPOSED CONDUIT ON PAINTED SURFACES: MATCH BASE SURFACE

FINISHES:

B1 4" HIGH COVED RUBBER BASE

B2 SHEET VINYL

C1 PAINTED GYP BOARD - EGGSHELL ACRYLIC ENAMEL

C2 PAINTED STRUCTURE - FLAT WATERBORNE ACRYLIC DRY FALL

F1 VINYL COMPOSTION TILE ON CONCRETE

F2 SHEET VINYL ON CONCRETE

F3 SEALED CONCRETE - WATERBASE SEALER

F4 SEALED CONCRETE - EPOXY SEALER

W1 PAINTED GYP BOARD - SEMIGLOSS ACRYLIC ENAMEL

W2 PAINTED GYP BOARD - EGGSHELL ACRYLIC

W3 FIBERGLASS REINFORCED PLASTIC PANEL ON GYP BOARD

W4 PAINTED CONCRETE - SEMIGLOSS WATER BASED EPOXY

COLOR / MATERIAL

BC-1 (BASE COLOR):	JOHNSONITE -CINNAMON (76)
BC-2 (BASE COLOR):	ARMSTRONG SAFEGUARD SPA - "CORN" (39508)
PC-1 (PAINT COLOR):	SHERWIN WILLIAMS - "BUCKRAM BINDING" (SW0036)
PC-2 (PAINT COLOR):	SHERWIN WILLIAMS - "DOVER WHITE" (SW6385)
PC-3 (PAINT COLOR):	SHERWIN WILLIAMS - "ROYCROFT ADOBE" (SW0040)
SVC-1 (SHEET VINYL COLOR):	ARMSTRONG SAFEGUARD SPA - "CORN" (39508)
VCT-1 (VINYL COMPOSITION TILE COLOR):	ARMSTRONG STANDARD EXCELON - "CINNAMON BROWN" (51948)
FRP-1 (FIBERGLASS REINFORCED PLATIC PANEL COLOR):	KEMLITE GLASBORD P -"IVORY" (84)

ISSUE / REVISIONS:
TO CONSULTANTS 9/10/07
CD REVIEW 11/2/07
DFCM REVIEW 11/30/07
CDD 1/2/08

LICENSED ARCHITECT
No. 93-130352 0301
JAMES T. DRESSLAR
STATE OF UTAH

NOT VALID UNLESS SIGNED

TITLE: FINISH SCHEDULE / COLOR SUMMARY

PROJECT NO.: DFC 0713
DRAWN BY: JTD
DATE: 7/30/07

PROJECT:
STATE OF UTAH
DIVISION OF PARKS AND RECREATION
SAND HOLLOW STATE PARK
MAINTENANCE SHED
DFCM PROJECT NO. 07025510

JAMES T. DRESSLAR
ARCHITECT, L.L.C.
387 PARK LANE
MOAB, UTAH 84532
435.259.1155 PHONE / FAX

SHEET: A4.3

© JAMES T DRESSLAR ARCHITECT, LLC. ALL RIGHTS RESERVED. UNAUTHORIZED REPRODUCTION, DISTRIBUTION AND/OR USE IS PROHIBITED.

TOILET ACCESSORIES:

1. 18 X 30 MIRROR
2. *ACCESSIBLE PAPER TOWEL DISPENSER
3. *ACCESSIBLE LIQUID SOAP DISPENSER
4. 36" GRAB BAR
5. 42" GRAB BAR
6. *TOILET TISSUE DISPENSER
7. 18" GRAB BAR
8. SHOWER CURTAIN ROD
9. 24" MOP RACK
10. HAT AND COAT HOOK

*DENOTES ACCESSORIES PROVIDED BY OWNER

REFERENCE NOTES:

1. TRANSFER TYPE ACCESSIBLE SHOWER.
2. PROVIDE PIPE GUARD KIT AT LAVATORY.
3. FIBER REINFORCED PLASTIC PANEL ON GYP BOARD.
4. COVE SHEET VINYL FLOORING TO PROVIDE 4" HIGH BASE.

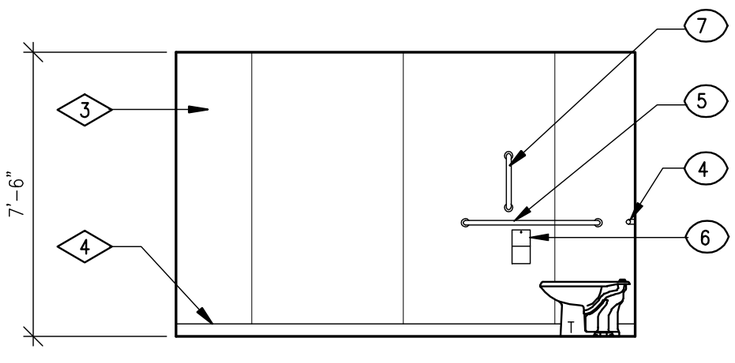

3
TOILET (SOUTH)

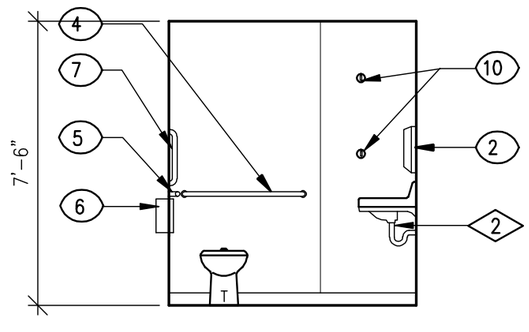

2
TOILET (WEST)

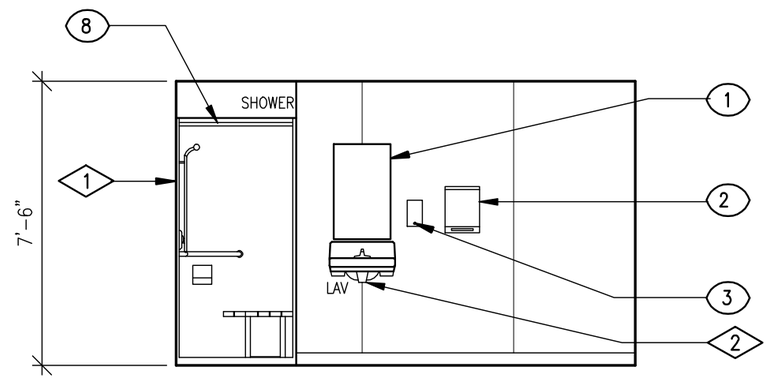

1
TOILET (NORTH)

INTERIOR ELEVATIONS

1/4" = 1'-0"

ISSUE / REVISIONS:
CD REVIEW 11/2/07
DFCM REVIEW 11/30/07
CDD 1/2/08

LICENSED ARCHITECT
No. 93-130352 0301
JAMES T. DRESSLAR
STATE OF UTAH

NOT VALID UNLESS SIGNED

TITLE: INTERIOR ELEVATIONS

PROJECT NO.: DFC 0713

DRAWN BY: JTD

DATE: 7/30/07

PROJECT:
STATE OF UTAH
DIVISION OF PARKS AND RECREATION
SAND HOLLOW STATE PARK
MAINTENANCE SHED
DFCM PROJECT NO. 07025510

JAMES T. DRESSLAR
ARCHITECT, L.L.C.
387 PARK LANE
MOAB, UTAH 84532
435.259.1155 PHONE / FAX

SHEET: A4.4

© JAMES T DRESSLAR ARCHITECT, LLC. ALL RIGHTS RESERVED. UNAUTHORIZED REPRODUCTION, DISTRIBUTION, AND/OR USE IS PROHIBITED.

REFERENCE NOTES:

1. HOLLOW METAL WINDOW ASSEMBLY.
2. HOLLOW METAL DOOR ASSEMBLY.
3. NOT USED.
4. METAL FABRICATED LADDER PER 1/A9.4
5. PROVIDE GYP BOARD CONTROL JOINT AT FLOOR ELEVATION.
6. FRAMED GUARD WALL AT OPEN SIDE OF MEZZANINE.
7. CONCRETE FILLED STEEL STAIR ASSEMBLY WITH METAL FABRICATED PIPE HANDRAIL EACH SIDE.
8. WRAP FRPP WAINSCOT UP, OVER AND DOWN 4" TO PROVIDE WALL COPING AT MEZZANINE GUARD WALL.
9. RUBBER BASE.
10. FIBER REINFORCED PLASTIC PANEL ON GYP BOARD.
11. NOT USED.
12. CORNER GUARD ("L") PER 2/A9.5
13. OVERHEAD DOOR OPERATOR PUSH PAD.

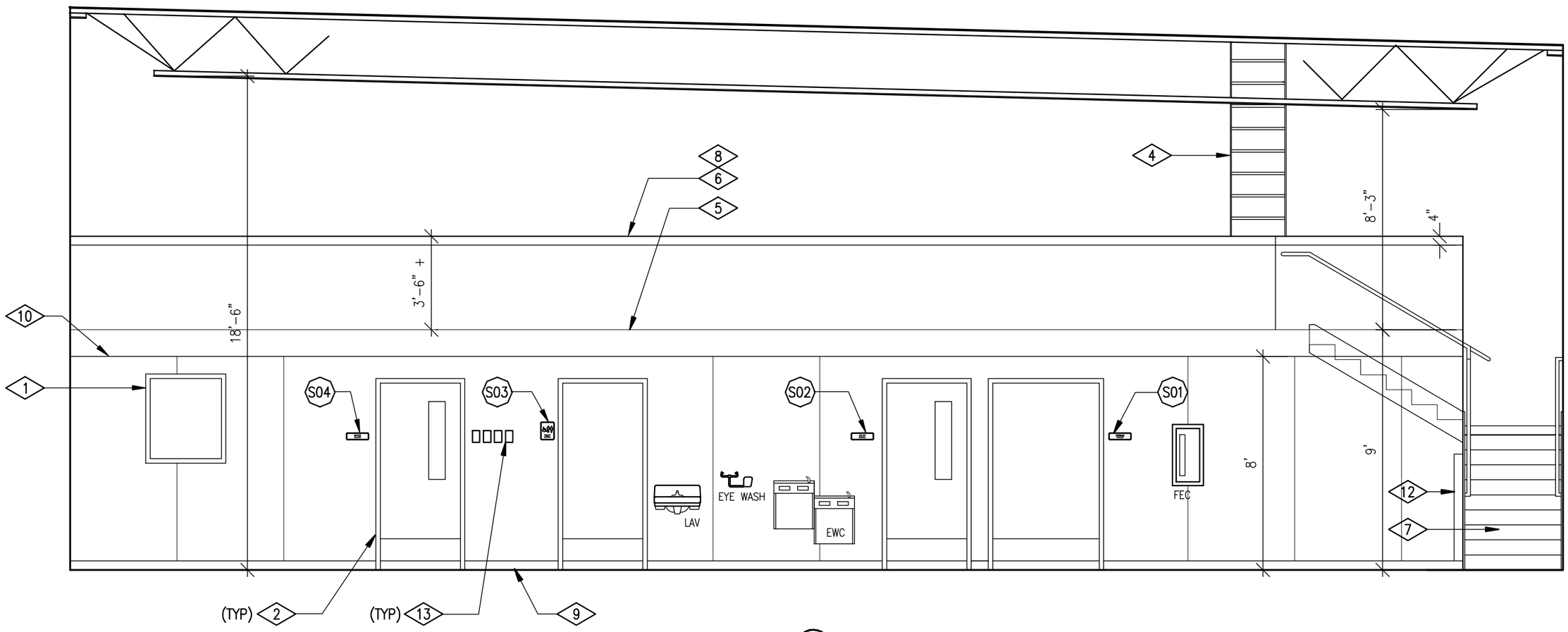

1
SHOP (WEST)

INTERIOR ELEVATIONS

1/4" = 1'-0"

1
A4.5

ISSUE / REVISIONS:
CD REVIEW 11/2/07
DFCM REVIEW 11/30/07
CDD 1/2/08

LICENSED ARCHITECT
No. 93-130352 0301
JAMES T. DRESSLAR
STATE OF UTAH

NOT VALID UNLESS SIGNED

TITLE: INTERIOR ELEVATIONS

PROJECT NO.: DFC 0713

DRAWN BY: JTD

DATE: 7/30/07

PROJECT:
STATE OF UTAH
DIVISION OF PARKS AND RECREATION
SAND HOLLOW STATE PARK
MAINTENANCE SHED
DFCM PROJECT NO. 07025510

JAMES T. DRESSLAR
ARCHITECT, L.L.C.
387 PARK LANE
MOAB, UTAH 84532
435.259.1155 PHONE / FAX

SHEET: A4.5

© JAMES T DRESSLAR ARCHITECT, LLC. ALL RIGHTS RESERVED. UNAUTHORIZED REPRODUCTION, DISTRIBUTION, AND/OR USE IS PROHIBITED.

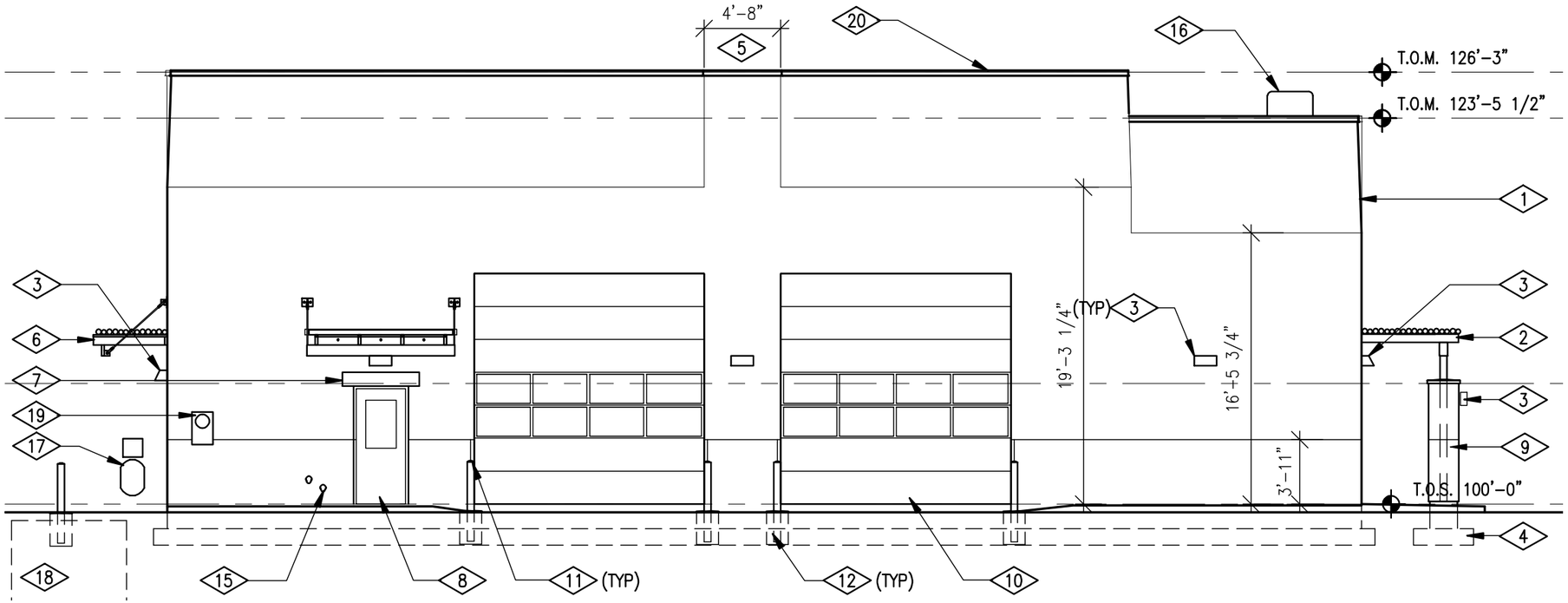

WEST ELEVATION

1/8" = 1'-0"

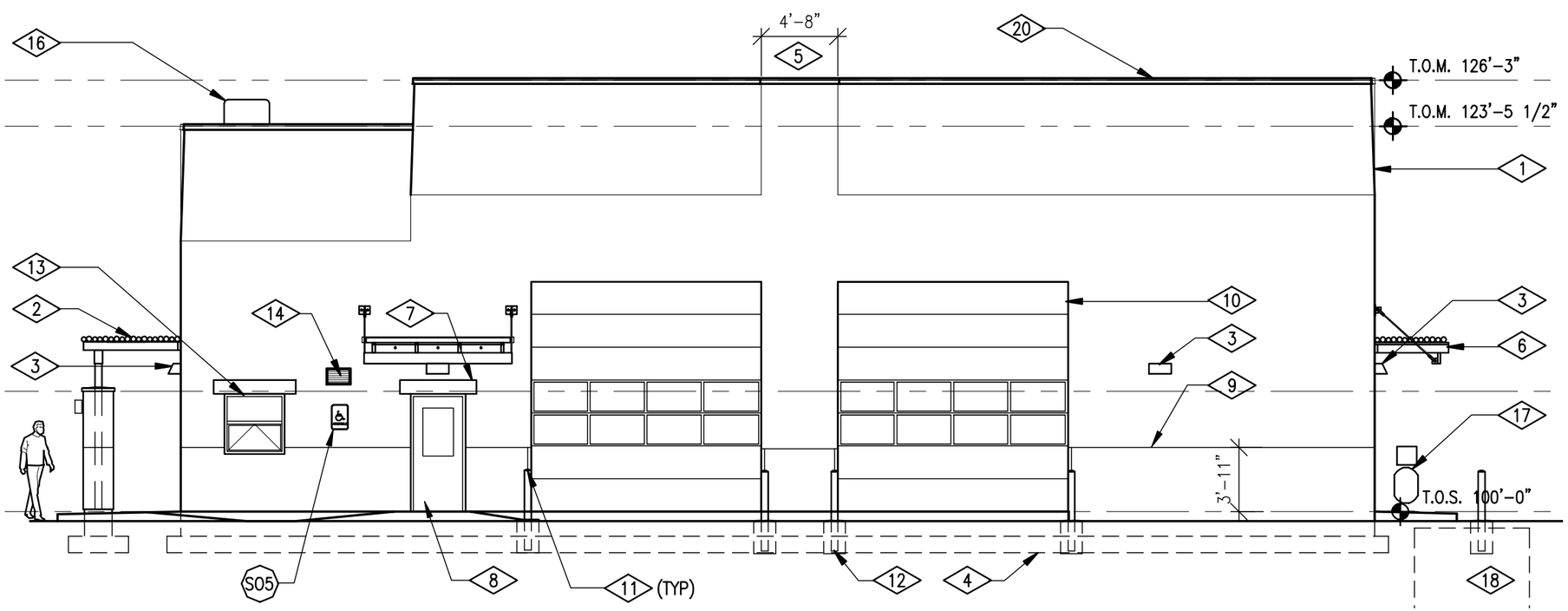

EAST ELEVATION

1/8" = 1'-0"

REFERENCE NOTES:

1. STUCCO SYSTEM ON INSULATED CONCRETE FORM.
2. ENTRY CANOPY PER (1/A9.8)
3. LIGHT FIXTURE.
4. CONCRETE FOUNDATION.
5. PROVIDE 15" ICF FULL HEIGHT FROM TOP OF FOUNDATION TO TOP OF PARAPET.
6. DOOR CANOPY PER (1/A9.7)
7. STUCCO SYSTEM HEAD TRIM FROM 3/4" RIGID INSULATION. MATCH WAINSCOT COLOR.
8. STEEL DOOR ASSEMBLY.
9. STUCCO SYSTEM WAINSCOT COLOR TO MATCH ENTRY STATION. V CUT ICF FOAM TO PROVIDE JOINT.
10. STEEL OVERHEAD SECTIONAL DOOR ASSEMBLY.
11. METAL FABRICATED JAMB GUARDS AT OVERHEAD DOOR PER (1/A8.4)
12. METAL FABRICATED CONCRETE FILLED STEEL PIPE BOLLARD PER (1/A9.1)
13. ALUMINMUM STOREFRONT WINDOW.
14. FRESH AIR INTAKE LOUVER.
15. ROOF DRAIN TERMINATIONS.
16. CONDENSING UNIT.
17. AIR COMPRESSOR.
18. VEHICLE WASH DOWN SUMP. ESTABLISH B.O. FOOTING ELEVATION FROM THIS LOCATION OF FINISH GRADE.
19. POWER METER & BASE.
20. METAL COPING PER (2/A9.12)

ISSUE / REVISIONS:	
TO CONSULTANTS	9/10/07
CD REVIEW	11/2/07
DFCM REVIEW	11/30/07
CDD	1/2/08

LICENSED ARCHITECT
No. 93-130352 0301
JAMES T. DRESSLAR
STATE OF UTAH

NOT VALID UNLESS SIGNED

TITLE: SOUTH + NORTH ELEVATIONS

PROJECT NO.: DFC 0713

DRAWN BY: JTD

DATE: 7/30/07

PROJECT:
STATE OF UTAH
DIVISION OF PARKS AND RECREATION
SAND HOLLOW STATE PARK
MAINTENANCE SHED
DFCM PROJECT NO. 07025510

JAMES T. DRESSLAR ARCHITECT, L.L.C.
387 PARK LANE
MOAB, UTAH 84532
435.259.1155 PHONE / FAX

SHEET: A5.1

© JAMES T DRESSLAR ARCHITECT, LLC. ALL RIGHTS RESERVED. UNAUTHORIZED REPRODUCTION, DISTRIBUTION, AND/OR USE IS PROHIBITED.

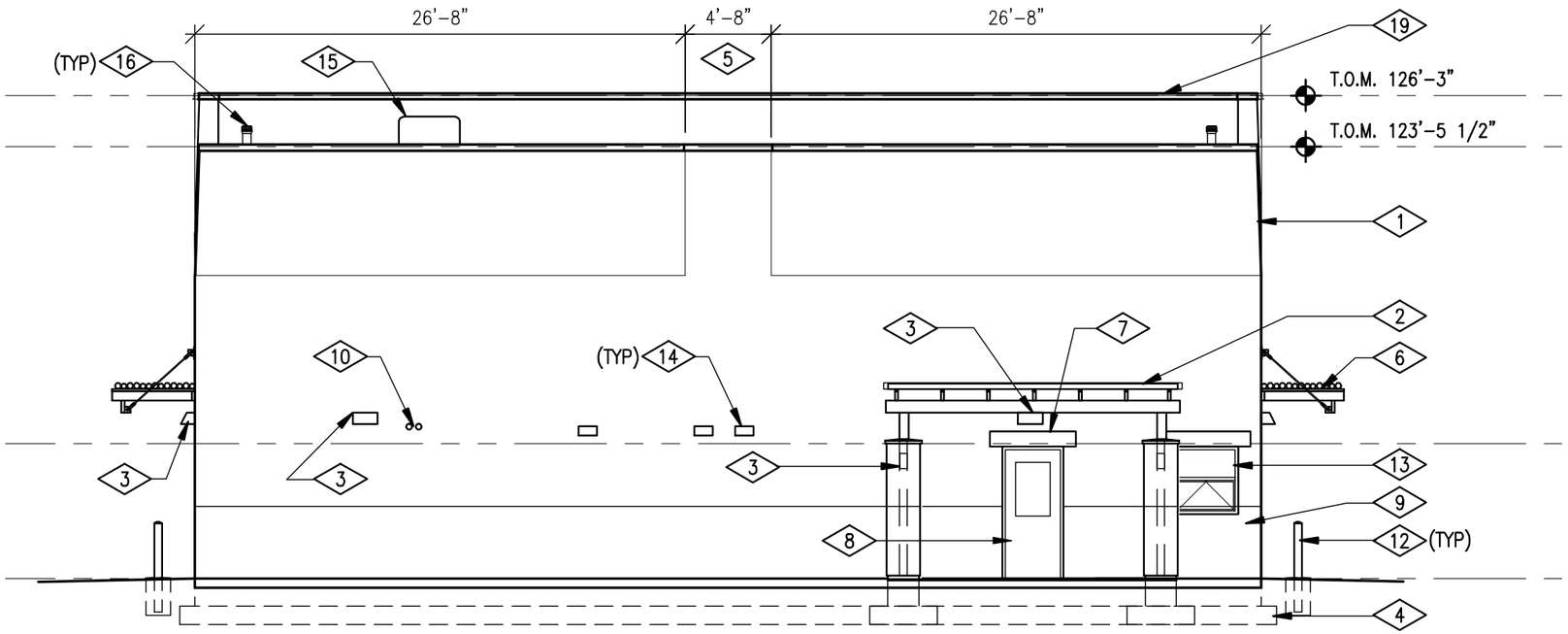

SOUTH ELEVATION

1/8" = 1'-0"

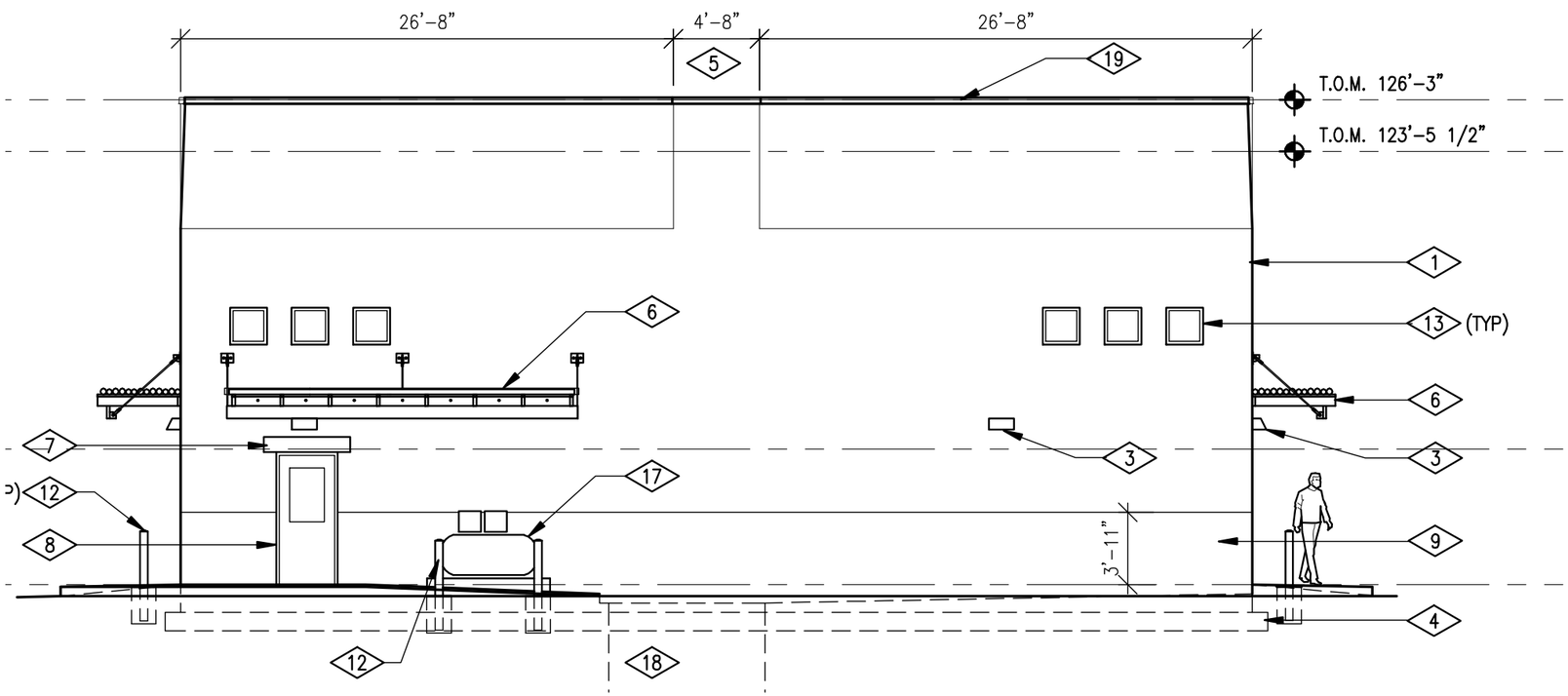

NORTH ELEVATION

1/8" = 1'-0"

REFERENCE NOTES:

1. STUCCO SYSTEM ON INSULATED CONCRETE FORM.
2. ENTRY CANOPY PER (1 / A9.8)
3. LIGHT FIXTURE.
4. CONCRETE FOUNDATION.
5. PROVIDE 15" ICF FULL HEIGHT FROM TOP OF FOUNDATION TO TOP OF PARAPET.
6. DOOR CANOPY PER (1 / A9.7)
7. STUCCO SYSTEM HEAD TRIM FROM 3/4" RIGID INSULATION. MATCH WAINSCOT COLOR.
8. STEEL DOOR ASSEMBLY.
9. STUCCO SYSTEM WAINSCOT COLOR TO MATCH ENTRY STATION. V CUT ICF FOAM TO PROVIDE JOINT.
10. CONCENTRIC VENTS FOR WATER HEATER AND FURNACE.
11. NOT USED.
12. METAL FABRICATED CONCRETE FILLED STEEL PIPE BOLLARD PER (1 / A9.1)
13. ALUMINMUM STOREFRONT WINDOW.
14. EXHAUST DUCT TERMINATION HOOD.
15. CONDENSING UNIT.
16. EXHAUST FLUE THRU ROOF.
17. AIR COMPRESSOR
18. VEHICLE WASH DOWN SUMP. ESTABLISH BOTTOM OF FOOTING ELEVATION FROM THIS LOCATION OF FINISH GRADE.
19. METAL COPING PER (2 / A9.12)

ISSUE / REVISIONS:	
TO CONSULTANTS	9/10/07
CD REVIEW	11/2/07
DFCM REVIEW	11/30/07
CDD	1/2/08

LICENSED ARCHITECT
No. 93-130352 0301
JAMES T. DRESSLAR
STATE OF UTAH

NOT VALID UNLESS SIGNED

TITLE: EAST + WEST ELEVATIONS

PROJECT NO.: DFC 0713

DRAWN BY: JTD

DATE: 7/30/07

PROJECT:
STATE OF UTAH
DIVISION OF PARKS AND RECREATION
SAND HOLLOW STATE PARK
MAINTENANCE SHED
DFCM PROJECT NO. 07025510

JAMES T. DRESSLAR
ARCHITECT, L.L.C.
387 PARK LANE
MOAB, UTAH 84532
435.259.1155 PHONE / FAX

SHEET: A5.2

© JAMES T DRESSLAR ARCHITECT, LLC. ALL RIGHTS RESERVED. UNAUTHORIZED REPRODUCTION, DISTRIBUTION, AND/OR USE IS PROHIBITED.

REFERENCE NOTES:

1. REINFORCED CONCRETE SLAB ON DRAINAGE COURSE.
2. LOW SLOPE ROOF ASSEMBLY: THERMOPLASTIC MEMBRANE ROOFING / RIGID INSULATION / METAL DECK / 30" OPEN WEB STEEL JOISTS AT 60" O.C.
3. MEZZANINE FLOOR / CEILING ASSEMBLY: 6" CONCRETE AND STEEL COMPOSITE DECK / 8 1/2" AIR SPACE/ 3 1/2" CFMFM JOISTS AT 24" O.C. / GYP BOARD CEILING / SCHEDULED CEILING FINISH.
4. EXTERIOR WALL ASSEMBLY: STUCCO SYSTEM / 15" INSULATED CONCRETE FORM WITH 11 1/2" ICF ABOVE / GYP BOARD/ SCHEDULED WALL FINISH.
5. FIBER REINFORCED PLASTIC PANEL WAINSCOT ON GYP BOARD.
6. ROOF DRAIN LEADERS.
7. EXISTING ENGINEERED COMPACTED FILL.
8. CONCRETE FOUNDATION WALL AT SHOP.
9. CONDENSING UNIT.
10. EVAPORATIVE COOLER.
11. EXHAUST DUCT THRU ROOF.
12. ROOF SCUTTLE.
13. PROVIDE CFMF BRIDGING AT MIDSPAN OF JOISTS.
14. METAL FABRICATED JAMB GUARDS AT OVERHEAD DOOR PER 1/A8.4

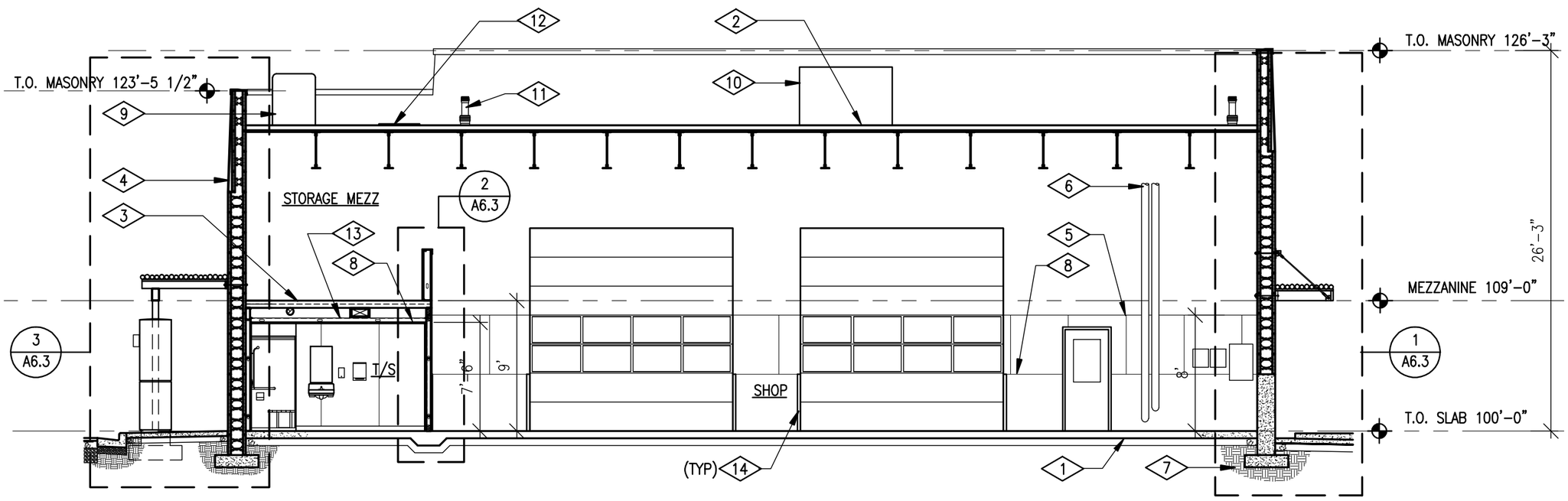

BUILDING SECTION

1/8" = 1'-0"

A / A6.1

ISSUE / REVISIONS:
TO CONSULTANTS 9/10/07
CD REVIEW 11/2/07
DFCM REVIEW 11/30/07
CDD 1/2/08

LICENSED ARCHITECT
No. 93-130352 0301
JAMES T. DRESSLAR
STATE OF UTAH

NOT VALID UNLESS SIGNED

TITLE: BUILDING SECTIONS

PROJECT NO.: DFC 0713

DRAWN BY: JTD

DATE: 7/30/07

PROJECT:
STATE OF UTAH
DIVISION OF PARKS AND RECREATION
SAND HOLLOW STATE PARK
MAINTENANCE SHED
DFCM PROJECT NO. 07025510

JAMES T. DRESSLAR
ARCHITECT, L.L.C.
387 PARK LANE
MOAB, UTAH 84532
435.259.1155 PHONE / FAX

SHEET: A6.1

© JAMES T DRESSLAR ARCHITECT, LLC. ALL RIGHTS RESERVED. UNAUTHORIZED REPRODUCTION, DISTRIBUTION, AND/OR USE IS PROHIBITED.

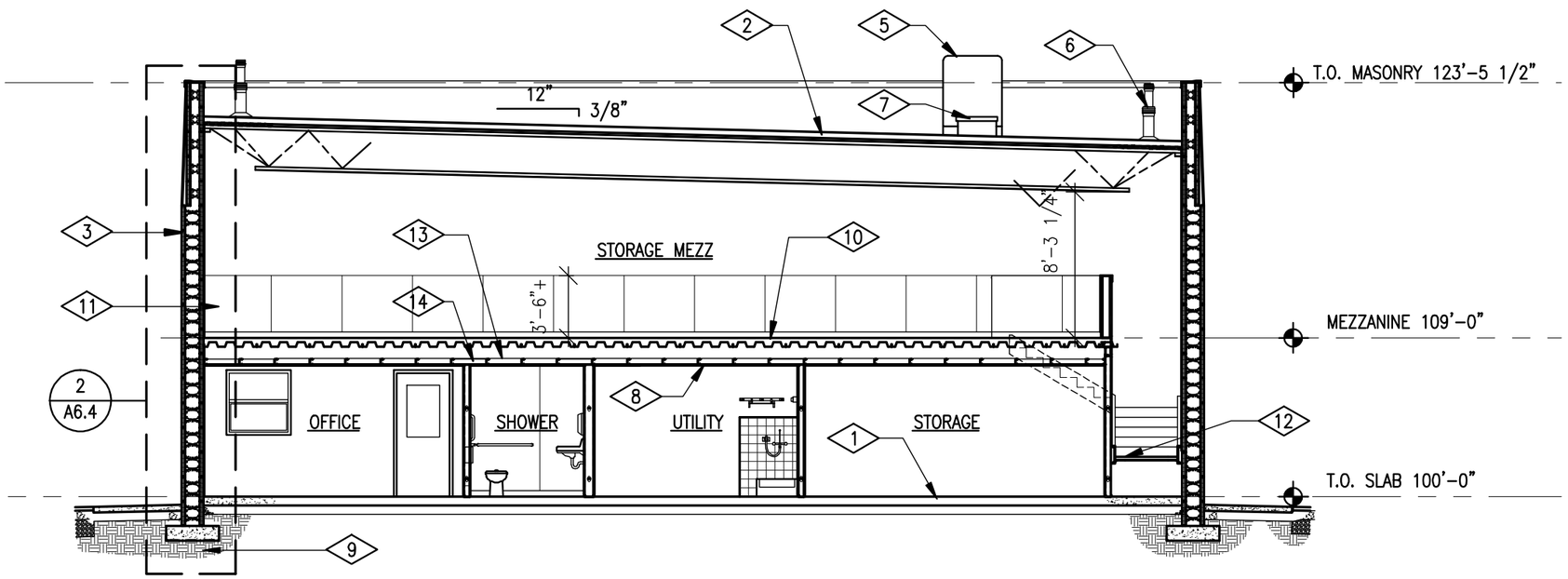

BUILDING SECTION

1/8" = 1'-0"

B
A6.2

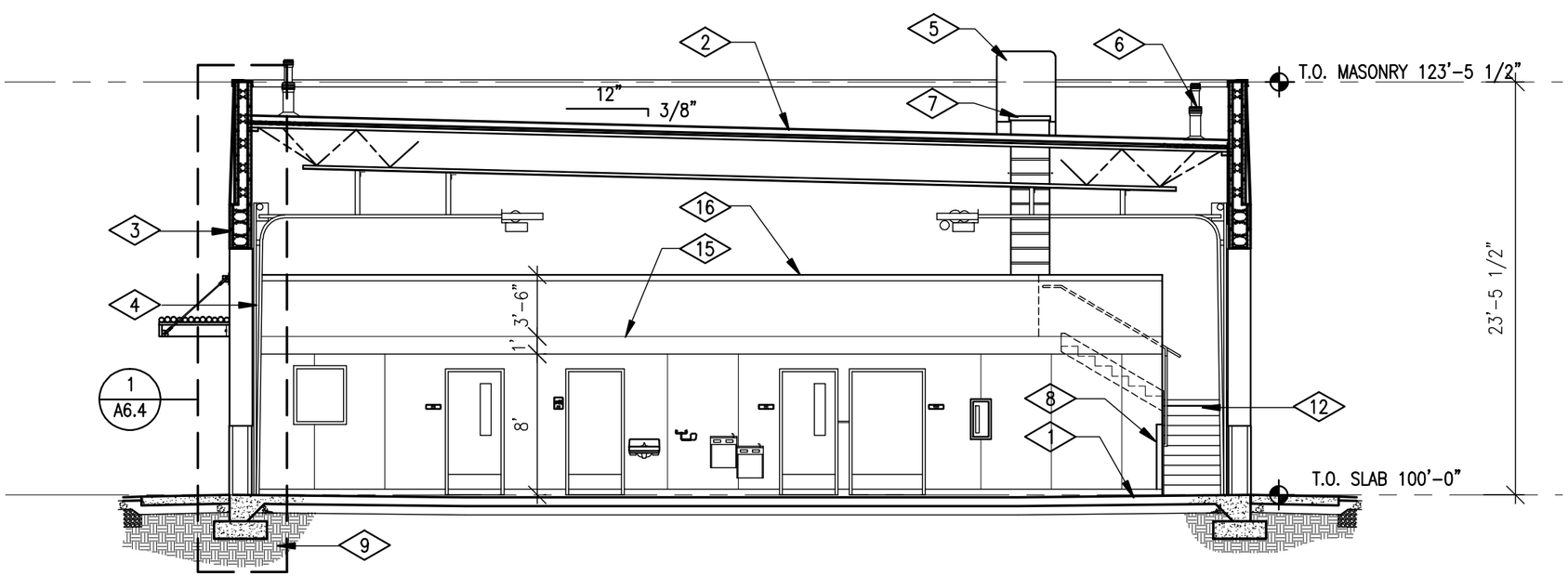

BUILDING SECTION

1/8" = 1'-0"

A
A6.2

REFERENCE NOTES:

1. REINFORCED CONCRETE SLAB ON DRAINAGE COURSE.
2. LOW SLOPE ROOF ASSEMBLY: THERMOPLASTIC MEMBRANE ROOFING / RIGID INSULATION / METAL DECK / 30" OPEN WEB STEEL JOISTS AT 60" O.C.
3. EXTERIOR WALL ASSEMBLY: STUCCO SYSTEM / 15" INSULATED CONCRETE FORM WITH 11 1/2" ICF ABOVE / GYP BOARD/ SCHEDULED WALL FINISH.
4. SECTIONAL OVERHEAD DOOR ASSEMBLY.
5. CONDENSING UNIT.
6. EXHAUST DUCT THRU ROOF.
7. ROOF SCUTTLE.
8. CORNER GUARD ("L") PER 2/A9.5
9. EXISTING ENGNEERED COMPACTED FILL.
10. MEZZANINE FLOOR / CEILING ASSEMBLY: 6" CONCRETE AND STEEL COMPOSITE DECK / 8 1/2" AIR SPACE/ 3 1/2" CFMFM JOISTS AT 24" O.C. / GYP BOARD CEILING / SCHEDULED CEILING FINISH.
11. FIBER REINFORCED PLASTIC PANEL WAINSCOT ON GYP BOARD.
12. CONCRETE FILLED STEEL STAIR ASSEMBLY.
13. PROVIDE CFMF BRIDGING AT MIDSPAN OF JOISTS.
14. CFMF BLOCKING AT 24" O.C. FOR WALL HEAD TRACK ATTACHMENT.
15. PROVIDE GYP BOARD CONTROL JOINT AT FLOOR LINE.
16. WRAP FRPP UP AND OVER WALL TO PROVIDE COPING.

ISSUE / REVISIONS:	
TO CONSULTANTS	9/10/07
CD REVIEW	11/2/07
DFCM REVIEW	11/30/07
CDD	1/2/08

LICENSED ARCHITECT
No. 93-130352 0301
JAMES T. DRESSLAR
STATE OF UTAH

NOT VALID UNLESS SIGNED

TITLE: BUILDING SECTIONS

PROJECT NO.: DFC 0713

DRAWN BY: JTD

DATE: 7/30/07

PROJECT:
STATE OF UTAH
DIVISION OF PARKS AND RECREATION
SAND HOLLOW STATE PARK
MAINTENANCE SHED
DFCM PROJECT NO. 07025510

JAMES T. DRESSLAR
ARCHITECT, L.L.C.
387 PARK LANE
MOAB, UTAH 84532
435.259.1155 PHONE / FAX

SHEET: A6.2

© JAMES T DRESSLAR ARCHITECT, LLC. ALL RIGHTS RESERVED. UNAUTHORIZED REPRODUCTION, DISTRIBUTION AND/OR USE IS PROHIBITED.

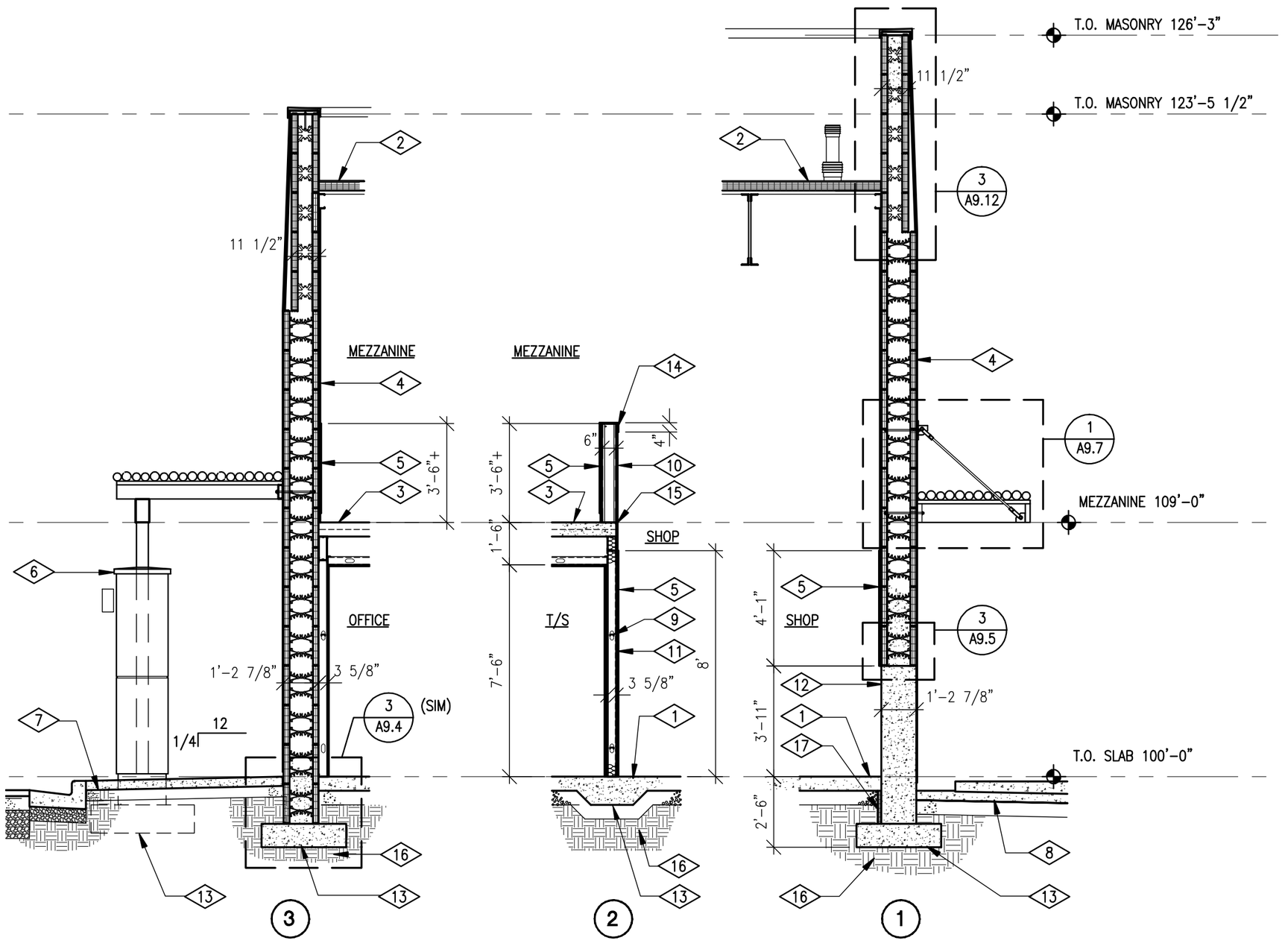

REFERENCE NOTES:

1. REINFORCED CONCRETE SLAB ON DRAINAGE COURSE.
2. LOW SLOPE ROOF ASSEMBLY: THERMOPLASTIC MEMBRANE ROOFING / RIGID INSULATION / METAL DECK / 30" OPEN WEB STEEL JOISTS AT 60" O.C.
3. MEZZANINE FLOOR / CEILING ASSEMBLY: 6" CONCRETE AND STEEL COMPOSITE DECK / 8 1/2" AIR SPACE/ 3 1/2" CFMF JOISTS AT 24" O.C. / GYP BOARD CEILING / SCHEDULED CEILING FINISH.
4. EXTERIOR WALL ASSEMBLY: STUCCO SYSTEM / 15" INSULATED CONCRETE FORM WITH 11 1/2" ICF ABOVE / GYP BOARD/ SCHEDULED WALL FINISH.
5. FIBER REINFORCED PLASTIC PANEL WAINSCOT.
6. ENTRY CANOPY PER 1/A9.8
7. CONCRETE WALK ON BASE COURSE.
8. REINFORCED CONCRETE WALK ON BASE COURSE WITH REINFORCED CONCRETE HOUSEKEEPING PAD CAST ON TOP FOR AIR COMPRESSOR.
9. U CHANNEL HORIZONTAL BRACING.
10. FRAMED GUARD WALL ASSEMBLY: SCHEDULED WALL FINISH EACH SIDE ON GYP BOARD / CFMF STUDS AT 12" O.C. WITH DEEP LEG TRACK AT SILL.
11. SOUND ATTENUATED FRAMED WALL ASSEMBLY: SCHEDULED WALL FINISH EACH SIDE / GYP BOARD / CFMF STUDS AT 16" O.C. / FULL DEPTH ACOUSTICAL BATT INSULATION / TWO LAYERS GYP BOARD ONE SIDE.
12. CONCRETE FOUNDATION WALL.
13. CONCRETE FOOTING.
14. WRAP FRPP UP AND OVER WALL TO PROVIDE COPING.
15. PROVIDE GYP BOARD CONTROL JOINT AT MEZZANINE FLOOR ELEVATION.
16. EXISTING ENGINEERED COMPACTED FILL.
17. RIGID INSULATION.

WALL SECTIONS

1/4" = 1'-0"

A6.3

ISSUE / REVISIONS:
TO CONSULTANTS 9/10/07
CD REVIEW 11/2/07
DFCM REVIEW 11/30/07
CDD 1/2/08

LICENSED ARCHITECT
No. 93-130352 0301
JAMES T. DRESSLAR
STATE OF UTAH

NOT VALID UNLESS SIGNED

TITLE: WALL SECTIONS

PROJECT NO.: DFC 0713

DRAWN BY: JTD

DATE: 7/30/07

PROJECT:
STATE OF UTAH
DIVISION OF PARKS AND RECREATION
SAND HOLLOW STATE PARK
MAINTENANCE SHED
DFCM PROJECT NO. 07025510

JAMES T. DRESSLAR
ARCHITECT, L.L.C.
387 PARK LANE
MOAB, UTAH 84532
435.259.1155 PHONE / FAX

SHEET: A6.3

© JAMES T DRESSLAR ARCHITECT, LLC. ALL RIGHTS RESERVED. UNAUTHORIZED REPRODUCTION, DISTRIBUTION, AND/OR USE IS PROHIBITED.

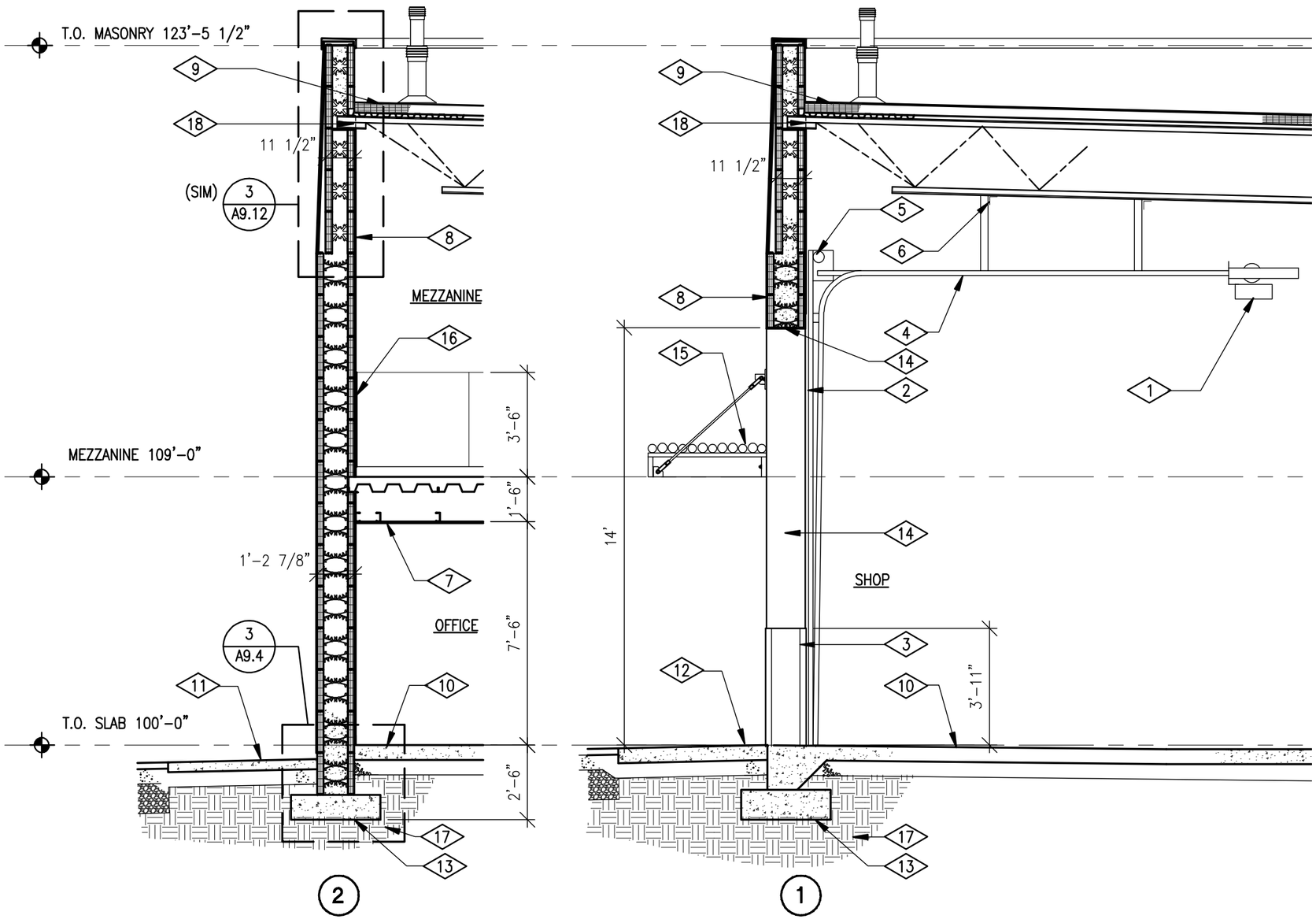

REFERENCE NOTES:

1. ELECTRIC DOOR OPERATOR – DRAWBAR TROLLEY TYPE.
2. SECTIONAL OVERHEAD DOOR ASSEMBLY.
3. METAL FABRICATED JAMB GUARD PER 1/A8.4
4. HORIZONTAL TRACK ASSEMBLY.
5. HEAD PLATE AND SHAFT.
6. PROVIDE ANGLE FRAMING FOR HORIZONTAL TRACK SUPPORT.
7. MEZZANINE FLOOR / CEILING ASSEMBLY: 6" CONCRETE AND STEEL COMPOSITE DECK / 8 1/2" AIR SPACE/ 3 1/2" CFMFM JOISTS AT 24" O.C. / GYP BOARD CEILING / SCHEDULED CEILING FINISH.
8. EXTERIOR WALL ASSEMBLY: STUCCO SYSTEM / 15" INSULATED CONCRETE FORM WITH 11 1/2" ICF ABOVE / GYP BOARD/ SCHEDULED WALL FINISH.
9. LOW SLOPE ROOF ASSEMBLY: THERMOPLASTIC MEMBRANE ROOFING / RIGID INSULATION / METAL DECK / 30" OPEN WEB STEEL JOISTS AT 60" O.C.
10. REINFORCED CONCRETE SLAB ON DRAINAGE COURSE.
11. CONCRETE WALK ON BASE COURSE.
12. REINFORCED CONCRETE APRON SLAB ON BASE COURSE AT OVERHEAD DOORS.
13. CONCRETE FOOTING.
14. WRAP STUCCO SYSTEM AROUND JAMB AND HEAD OF OPENING. TERMINATE AT JAMB WOOD DOOR BUCK. EXTEND UP 6" AT INTERIOR OF HEAD, TERMINATING AT GYP BOARD.
15. DOOR CANOPY BEYOND PER 1/A9.7
16. FIBER REINFORCED PLASTIC PANEL WAINSCOT.
17. EXISTING ENGINEERED COMPACTED FILL.
18. COPE GYP BOARD TIGHT TO JOIST TO MAINTAIN THERMAL BARRIER OVER RIGID ICF INSULATION.

WALL SECTIONS

1/4" = 1'-0"

–/A6.4

ISSUE / REVISIONS:	
TO CONSULTANTS	9/10/07
CD REVIEW	11/2/07
DFCM REVIEW	11/30/07
CDD	1/2/08

LICENSED ARCHITECT No. 93-130352 0301 JAMES T. DRESSLAR STATE OF UTAH

NOT VALID UNLESS SIGNED

TITLE: WALL SECTIONS

PROJECT NO.: DFC 0713

DRAWN BY: JTD

DATE: 7/30/07

PROJECT:
STATE OF UTAH
DIVISION OF PARKS AND RECREATION
SAND HOLLOW STATE PARK
MAINTENANCE SHED
DFCM PROJECT NO. 07025510

JAMES T. DRESSLAR ARCHITECT, L.L.C.
387 PARK LANE
MOAB, UTAH 84532
435.259.1155 PHONE / FAX

SHEET: A6.4

© JAMES T DRESSLAR ARCHITECT, LLC. ALL RIGHTS RESERVED. UNAUTHORIZED REPRODUCTION, DISTRIBUTION, AND/OR USE IS PROHIBITED.

REFERENCE NOTES:

1. LOW SLOPE ROOF ASSEMBLY: THERMOPLASTIC MEMBRANE ROOFING / GYP SHEATHING / RIGID INSULATION / METAL DECK / 30" OPEN WEB STEEL JOISTS AT 60" O.C.
2. EXTERIOR WALL ASSEMBLY: STUCCO SYSTEM / 15" INSULATED CONCRETE FORM WITH 11 1/2" ICF ABOVE / GYP BOARD/ SCHEDULED WALL FINISH.
3. 3" CONCRETE STAIR LANDING ON STEEL PAN.
4. 1 HOUR FIRE RESISTIVE RATED ENCLOSURE AT STAIR. PROVIDE TYPE "X" GYP BOARD ON 3 5/8" CFMF JOISTS AT 16" O.C. PER SCHEDULE AT – / A9.1
5. GYP BOARD SCREWED TO ICF WALL ASSEMBLY.
6. METAL FABRICATED PIPE HANDRAIL EACH SIDE OF STAIR PER 2 / A9.6
7. 2" CONCRETE STAIR TREAD ON STEEL PAN SPANNING MC12 CHANNEL STRINGERS.
8. REINFORCED CONCRETE SLAB ON DRAINAGE FILL.
9. 1 HOUR FIRE RESISTIVE RATED ENCLOSURE AT STAIR. PROVIDE TYPE "X" GYP BOARD EACH SIDE OF 3 5/8" CFMF STUDS AT 16" O.C. PER SCHEDULE AT – / A9.1

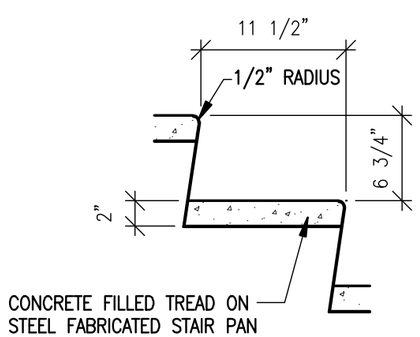

STAIR TREAD / RISER

2 / A7.1

1" = 1'-0"

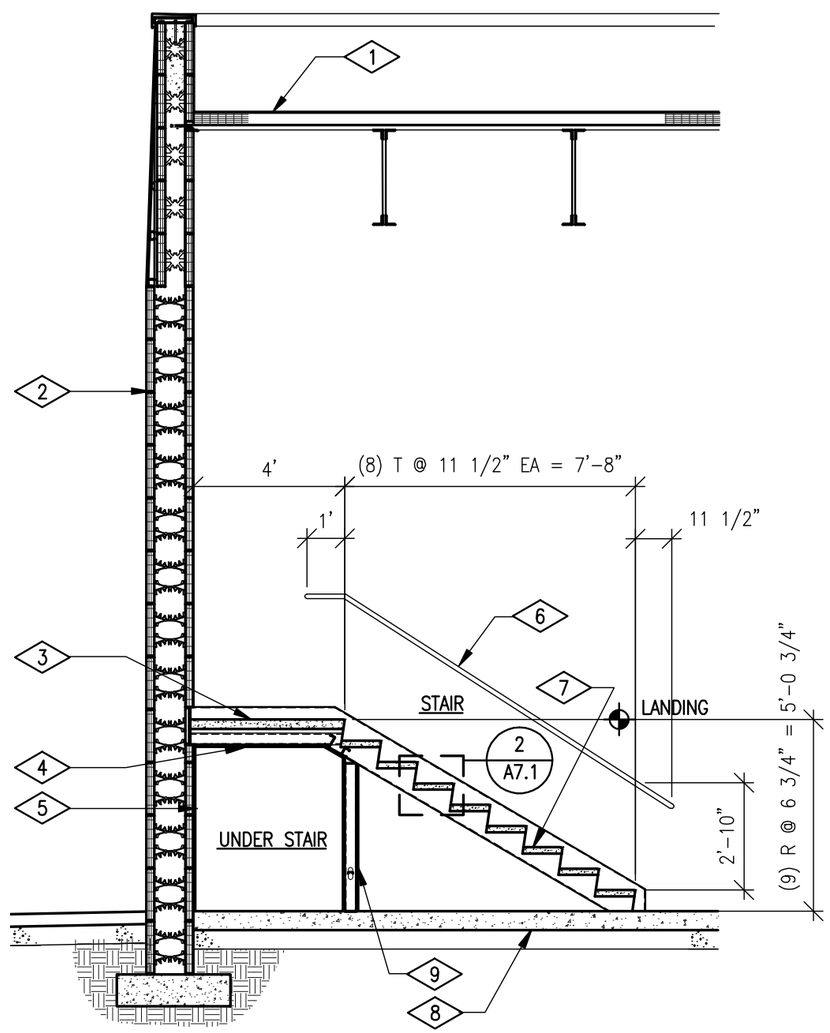

STAIR SECTION

1 / A7.1

1/4" = 1'-0"

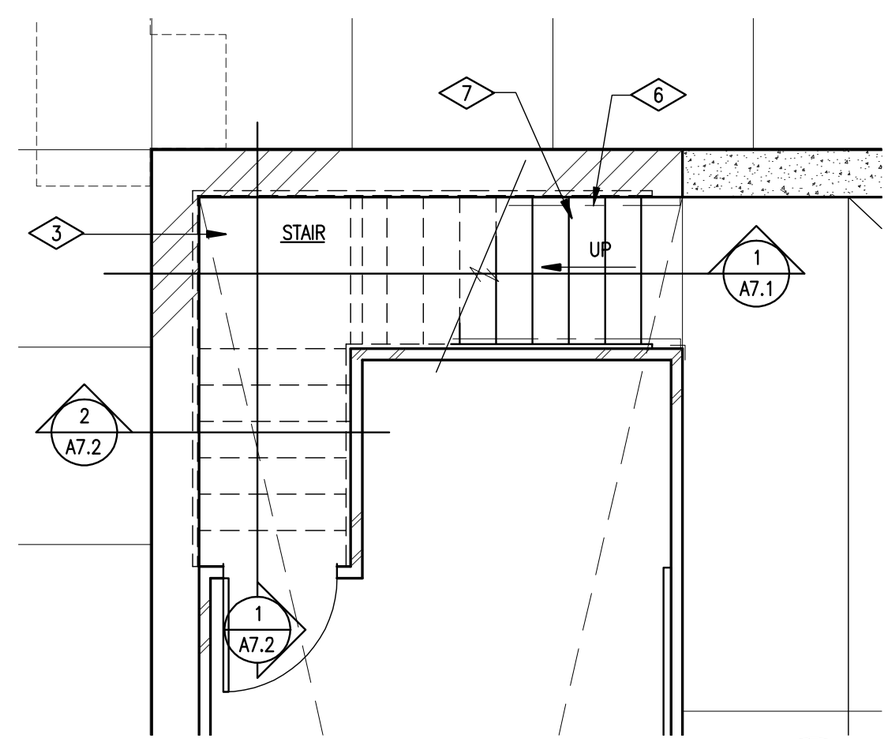

ENLARGED STAIR PLAN

1/4" = 1'-0"

NORTH

ISSUE / REVISIONS:
CD REVIEW 11/2/07
DFCM REVIEW 11/30/07
CDD 1/2/08

LICENSED ARCHITECT
No. 93-130352 0301
JAMES T. DRESSLAR
STATE OF UTAH

NOT VALID UNLESS SIGNED

TITLE: STAIR PLNA + SECTIONS

PROJECT NO.: DFC 0713

DRAWN BY: JTD

DATE: 7/30/07

PROJECT:
STATE OF UTAH
DIVISION OF PARKS AND RECREATION
SAND HOLLOW STATE PARK
MAINTENANCE SHED
DFCM PROJECT NO. 07025510

JAMES T. DRESSLAR
ARCHITECT, L.L.C.
387 PARK LANE
MOAB, UTAH 84532
435.259.1155 PHONE / FAX

SHEET: A7.1

© JAMES T DRESSLAR ARCHITECT, LLC. ALL RIGHTS RESERVED. UNAUTHORIZED REPRODUCTION, DISTRIBUTION, AND/OR USE IS PROHIBITED.

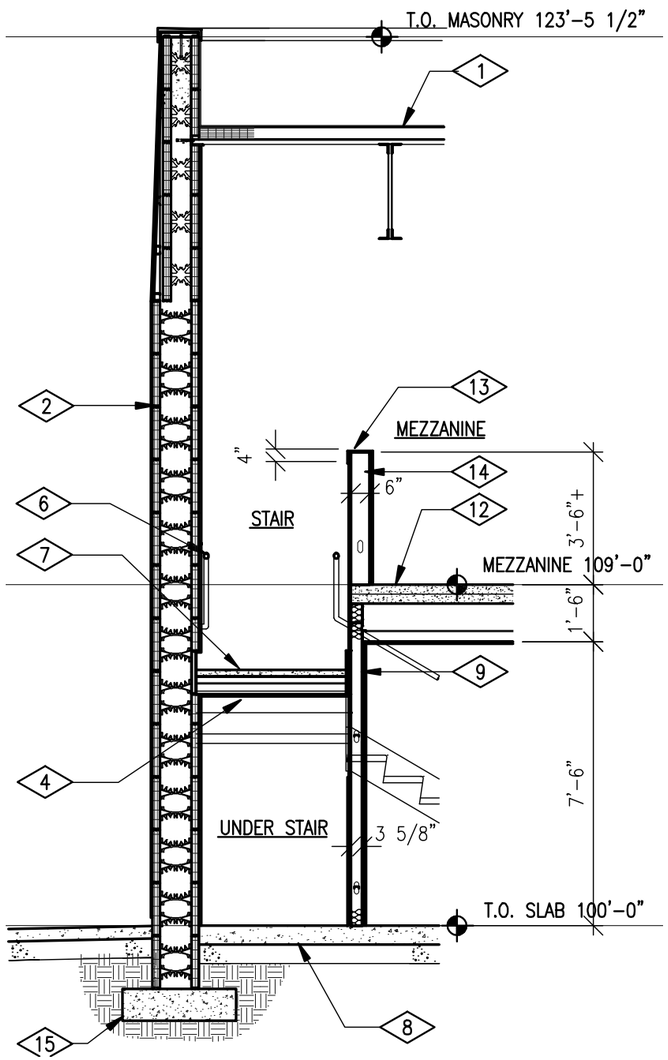

STAIR SECTION

1/4" = 1'-0"

2 / A7.2

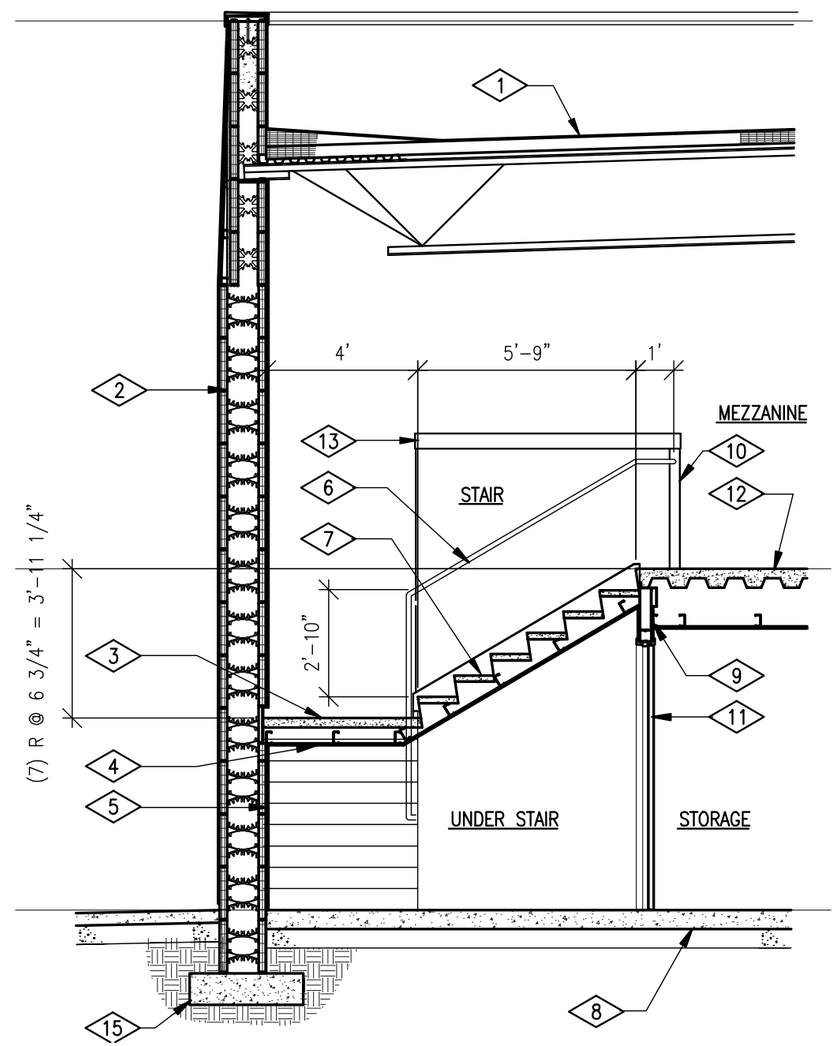

STAIR SECTION

1/4" = 1'-0"

1 / A7.2

REFERENCE NOTES:

1. LOW SLOPE ROOF ASSEMBLY: THERMOPLASTIC MEMBRANE ROOFING / GYP SHEATHING / RIGID INSULATION / METAL DECK / 30" OPEN WEB STEEL JOISTS AT 60" O.C.
2. EXTERIOR WALL ASSEMBLY: STUCCO SYSTEM / 15" INSULATED CONCRETE FORM WITH 11 1/2" ICF ABOVE / GYP BOARD/ SCHEDULED WALL FINISH.
3. 3" CONCRETE STAIR LANDING ON STEEL PAN.
4. 1 HOUR FIRE RESISTIVE RATED ENCLOSURE AT STAIR. PROVIDE (2) LAYERS TYPE "X" GYP BOARD ON 3 5/8" CFMF JOISTS AT 24" O.C. PER SCHEDULE AT (– / A9.1)
5. GYP BOARD SCREWED TO ICF WALL ASSEMBLY.
6. METAL FABRICATED PIPE HANDRAIL EACH SIDE OF STAIR PER (2 / A9.6)
7. 2" CONCRETE STAIR TREAD ON STEEL PAN SPANNING MC12 CHANNEL STRINGERS.
8. REINFORCED CONCRETE SLAB ON DRAINAGE COURSE.
9. 1 HOUR FIRE RESISTIVE RATED ENCLOSURE AT STAIR. PROVIDE TYPE "X" GYP BOARD EACH SIDE OF 3 5/8" CFMF STUDS AT 16" O.C. PER SCHEDULE AT (– / A9.1)
10. WRAP FRPP WAINSCOT AROUND END OF WALL TO PROVIDE 4" CORNER GUARD.
11. RATED STEEL DOOR ASSEMBLY.
12. MEZZANINE FLOOR / CEILING ASSEMBLY: 6" CONCRETE AND STEEL COMPOSITE DECK / 8 1/2" AIR SPACE / 3 5/8" CFMF JOISTS AT 24" O.C. / GYP BOARD CEILING / SCHEDULED CEILING FINISH.
13. WRAP FRPP WAINSCOT UP, OVER AND DOWN 4" TO PROVIDE WALL COPING AT MEZZANINE GUARD WALL.
14. FRAMED GUARD WALL ASSEMBLY: SCHEDULED WALL FINISH EACH SIDE ON GYP BOARD / 6" CFMF STUDS AT 16" O.C. WITH DEEP LEG TRACK.
15. CONCRETE FOOTING.

ISSUE / REVISIONS:	
CD REVIEW	11/2/07
DFCM REVIEW	11/30/07
CDD	1/2/08

LICENSED ARCHITECT
No. 93-130352
0301
JAMES T. DRESSLAR
STATE OF UTAH

NOT VALID UNLESS SIGNED

TITLE: STAIR SECTIONS

PROJECT NO.: DFC 0713

DRAWN BY: JTD

DATE: 9/18/07

PROJECT:
STATE OF UTAH
DIVISION OF PARKS AND RECREATION
SAND HOLLOW STATE PARK
MAINTENANCE SHED
DFCM PROJECT NO. 07025510

JAMES T. DRESSLAR ARCHITECT, L.L.C.
387 PARK LANE
MOAB, UTAH 84532
435.259.1155 PHONE / FAX

SHEET: A7.2

© JAMES T DRESSLAR ARCHITECT, LLC. ALL RIGHTS RESERVED. UNAUTHORIZED REPRODUCTION, DISTRIBUTION, AND/OR USE IS PROHIBITED.

DOOR SCHEDULE

MARK (1)	SIZE	DOOR TYPE	FRAME TYPE	DOOR MATL	FRAME MATL	FRAME DEPTH	HEAD	JAMB	THRESH	RATING	HDWR	REMARKS
1	3'-0" X 7'-0" X 1 3/4"	G	1	STEEL	STEEL	5 3/4"	2/A8.3	2/A8.3	1/A8.3	–	1	–
2	3'-0" X 7'-0" X 1 3/4"	N	1	STEEL	STEEL	6 1/2"	3/A8.3	3/A8.3	–	–	2	CLOSER W/ HOLD OPEN
3	3'-0" X 7'-0" X 1 3/4"	F	1	STEEL	STEEL	6 1/2"	3/A8.3	3/A8.3	–	–	3	CLOSER W/ HOLD OPEN
4	3'-0" X 7'-0" X 1 3/4"	N	1	STEEL	STEEL	5 7/8"	4/A8.3	4/A8.3	–	–	4	–
5	4'-0" X 7'-0" X 1 3/4"	F	1	STEEL	STEEL	5 7/8"	4/A8.3	4/A8.3	–	–	4	–
6	14' X 14'	OH	–	STEEL	–	5 3/4"	1/A6.4	1/A8.4	1/A6.4	–	5	POWER OPERATOR
7	14' X 14'	OH	–	STEEL	–	5 3/4"	1/A6.4	1/A8.4	1/A6.4	–	5	POWER OPERATOR
8	3'-0" X 7'-0" X 1 3/4"	G	1	STEEL	STEEL	5 3/4"	2/A8.3	2/A8.3	1/A8.3	–	6	–
9	3'-0" X 7'-0" X 1 3/4"	G	1	STEEL	STEEL	5 3/4"	2/A8.3	2/A8.3	1/A8.3	–	6	–
10	14' X 14'	OH	–	STEEL	–	5 3/4"	1/A6.4	1/A8.4	1/A6.4	–	5	POWER OPERATOR
11	14' X 14'	OH	–	STEEL	–	5 3/4"	1/A6.4	1/A8.4	1/A6.4	–	5	POWER OPERATOR
12	3'-0" X 7'-0" X 1 3/4"	G	1	STEEL	STEEL	5 3/4"	2/A8.3	2/A8.3	1/A8.3	–	6	–
13	3'-0" X 7'-0" X 1 3/4"	F	1	STEEL	STEEL	5 3/4"	4/A8.3	4/A8.3	–	1 HR	7	–

HARDWARE GROUPS:

1
1 1/2 PR BUTT HINGES
ENTRANCE LOCKSET
WEATHERSTRIP
THRESHOLD
CLOSER
SWEEP
FLOOR STOP

2
1 1/2 PR BUTT HINGES
ENTRANCE / OFFICE LOCKSET
CLOSER W/ STOP & HOLD OPEN
WALL STOP
KICKPLATES

3
1 1/2 PR BUTT HINGES
PRIVACY LOCKSET
CLOSER W/ STOP & HOLD OPEN
WALL STOP
KICKPLATES

4
1 1/2 PR BUTT HINGES
STOREROOM LOCKSET
WALL STOP
KICKPLATES

5
POWER OPERATOR WITH KEYPAD
WEATHERSTRIP

6
1 1/2 PR BUTT HINGES
ENTRANCE LOCKSET
CLOSER
WEATHERSTRIP
THRESHOLD
SWEEP
FLOOR STOP

7
1 1/2 PR BUTT HINGES
STOREROOM LOCKSET
SMOKE SEAL
CLOSER
WALL STOP
KICK PLATES

HARDWARE MANUFACTURERS:

1. HINGES: MCKINNEY TA 2714, 2 BALL BEARING, 4 1/2 X 4 1/2, STAINLESS STEEL. PROVIDE NRP AT EXTERIOR OUT-SWING DOORS.
2. ENTRANCE / OFFICE LOCKSET: SCHLAGE AL50PD
3. STOREROOM LOCKSET: SCHLAGE AL80PD.
4. THRESHOLD: PEMKO 171A
5. SWEEP: PEMKO 345AP
6. WALL STOP: HAGER 234W
7. KICKPLATE: IVES 8400 STAINLESS STEEL, 10" HIGH X DOOR WIDTH
8. CLOSER: LCN 1440 W/ STOP & HOLD OPEN WHERE INDICATED
9. FLOOR STOP W/ HOLD OPEN: IVES FS450

DOOR NOTES:

1. HARDWARE FINISH TO BE BHMA 626 (SATIN CHROMIUM PLATED) UNLESS NOTED OTHERWISE.

ISSUE / REVISIONS:
TO CONSULTANTS 9/10/07
CD REVIEW 11/2/07
DFCM REVIEW 11/30/07
CDD 1/2/08

LICENSED ARCHITECT
No. 93-130352 0301
JAMES T. DRESSLAR
STATE OF UTAH

NOT VALID UNLESS SIGNED

TITLE: DOOR SCHEDULE
PROJECT NO.: DFC 0713
DRAWN BY: JTD
DATE: 7/30/07

PROJECT:
STATE OF UTAH
DIVISION OF PARKS AND RECREATION
SAND HOLLOW STATE PARK
MAINTENANCE SHED
DFCM PROJECT NO. 07025510

JAMES T. DRESSLAR
ARCHITECT, L.L.C.
387 PARK LANE
MOAB, UTAH 84532
435.259.1155 PHONE / FAX

SHEET: A8.1

© JAMES T DRESSLAR ARCHITECT, LLC. ALL RIGHTS RESERVED. UNAUTHORIZED REPRODUCTION, DISTRIBUTION, AND/OR USE IS PROHIBITED.

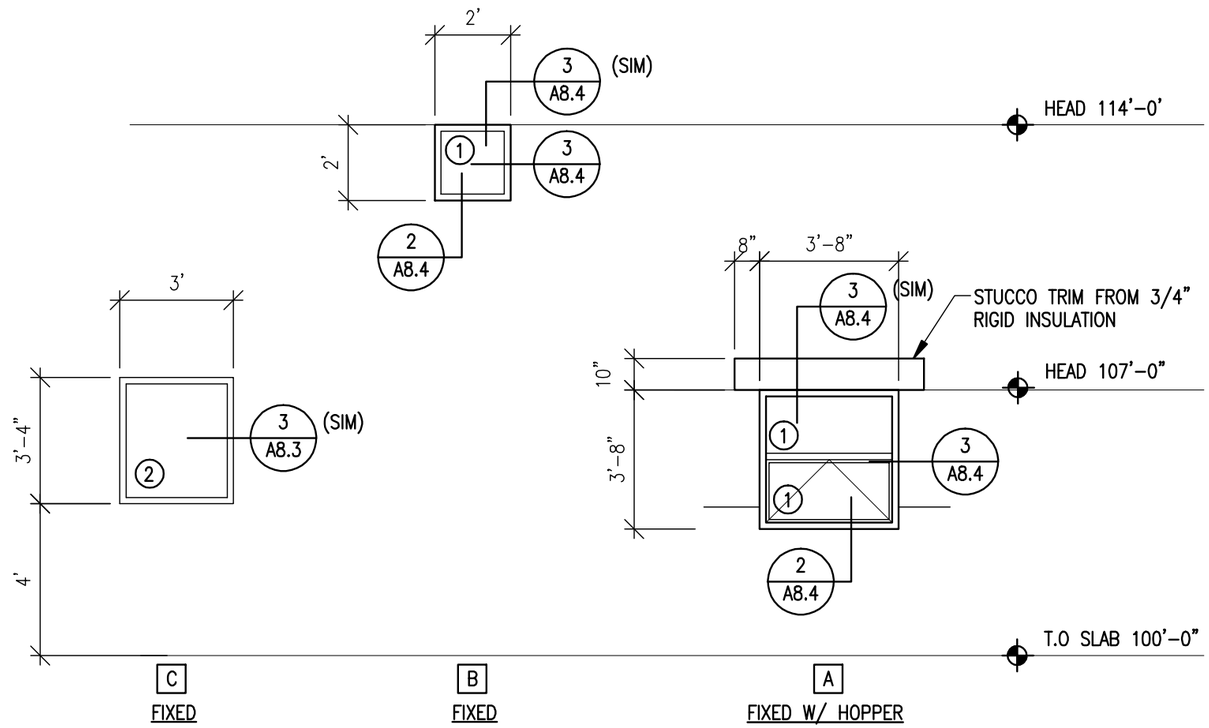

WINDOW GLASS TYPES:

1. TINTED, INSULATED
2. CLEAR, INSULATED

WINDOW SCHEDULE

1/4" = 1'-0"

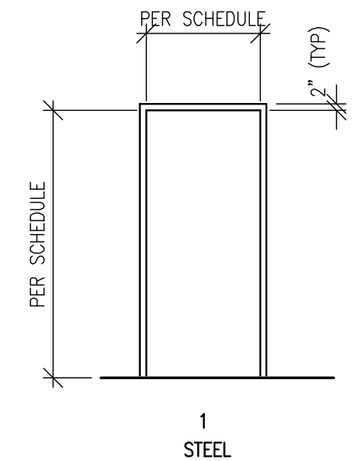

FRAME TYPES

1/4" = 1'-0"

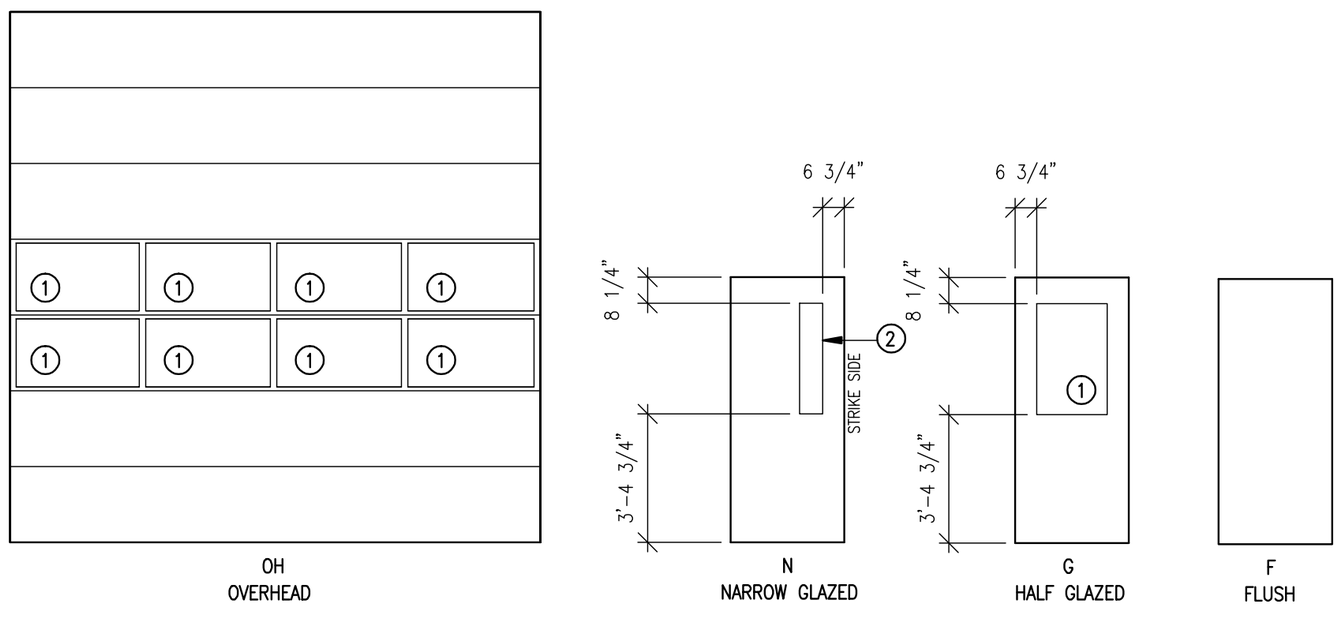

DOOR GLASS TYPES:

1. TINTED, INSULATED, TEMPERED
2. CLEAR, TEMPERED

DOOR TYPES

1/4" = 1'-0"

ISSUE / REVISIONS:
TO CONSULTANTS 9/10/07
CD REVIEW 11/2/07
DFCM REVIEW 11/30/07
CDD 1/2/08

LICENSED ARCHITECT
No. 93-130352 0301
JAMES T. DRESSLAR
STATE OF UTAH

NOT VALID UNLESS SIGNED

TITLE: DOOR + FRAME TYPES / WINDOW SCHEDULE

PROJECT NO.: DFC 0713

DRAWN BY: JTD

DATE: 9/9/07

PROJECT:
STATE OF UTAH
DIVISION OF PARKS AND RECREATION
SAND HOLLOW STATE PARK
MAINTENANCE SHED
DFCM PROJECT NO. 07025510

JAMES T. DRESSLAR
ARCHITECT, L.L.C.
397 PARK LANE
MOAB, UTAH 84532
435.259.1159 PHONE / FAX

SHEET: A8.2

JAMES T DRESSLAR ARCHITECT, LLC. ALL RIGHTS RESERVED. UNAUTHORIZED REPRODUCTION, DISTRIBUTION, AND/OR USE IS PROHIBITED. ©

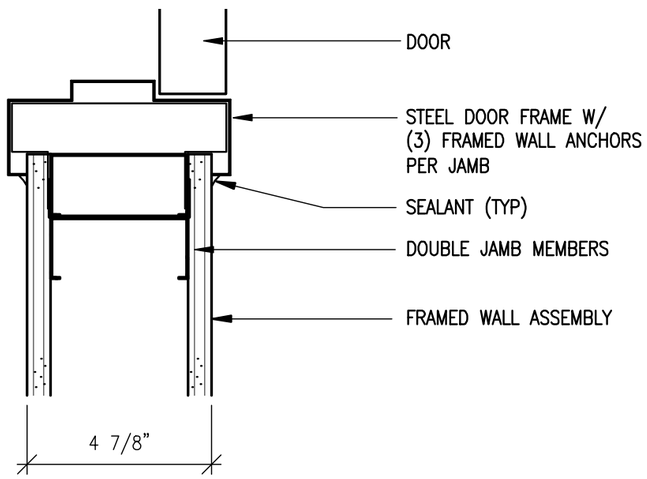

JAMB (HEAD SIM)

3" = 1'-0"

4 / A8.3

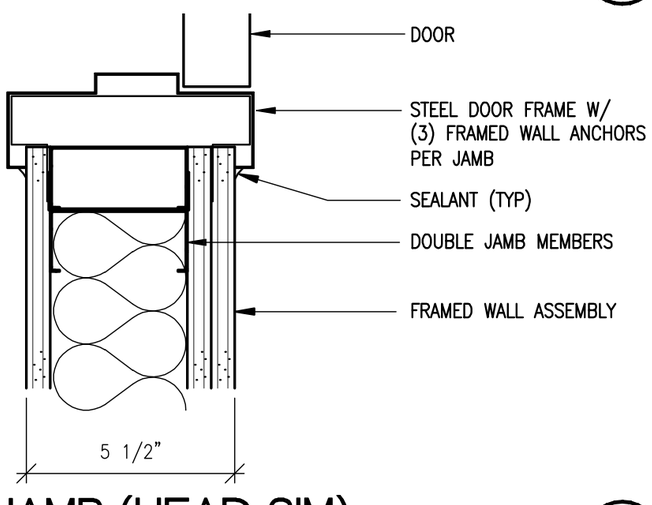

JAMB (HEAD SIM)

3 = 1'-0"

3 / A8.3

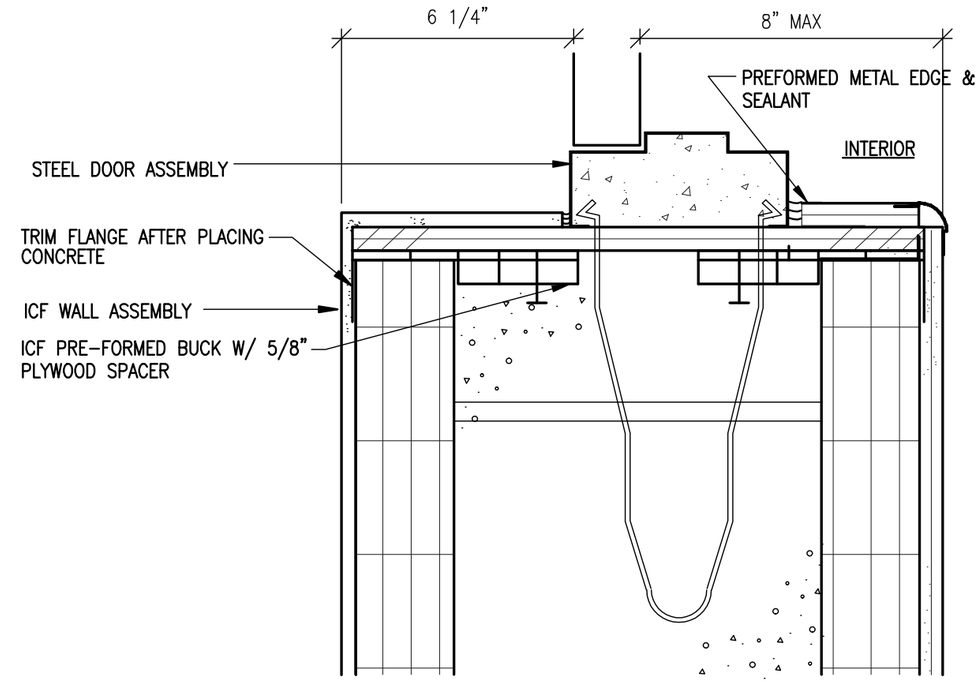

JAMB (HEAD SIM)

3" = 1'-0"

2 / A8.3

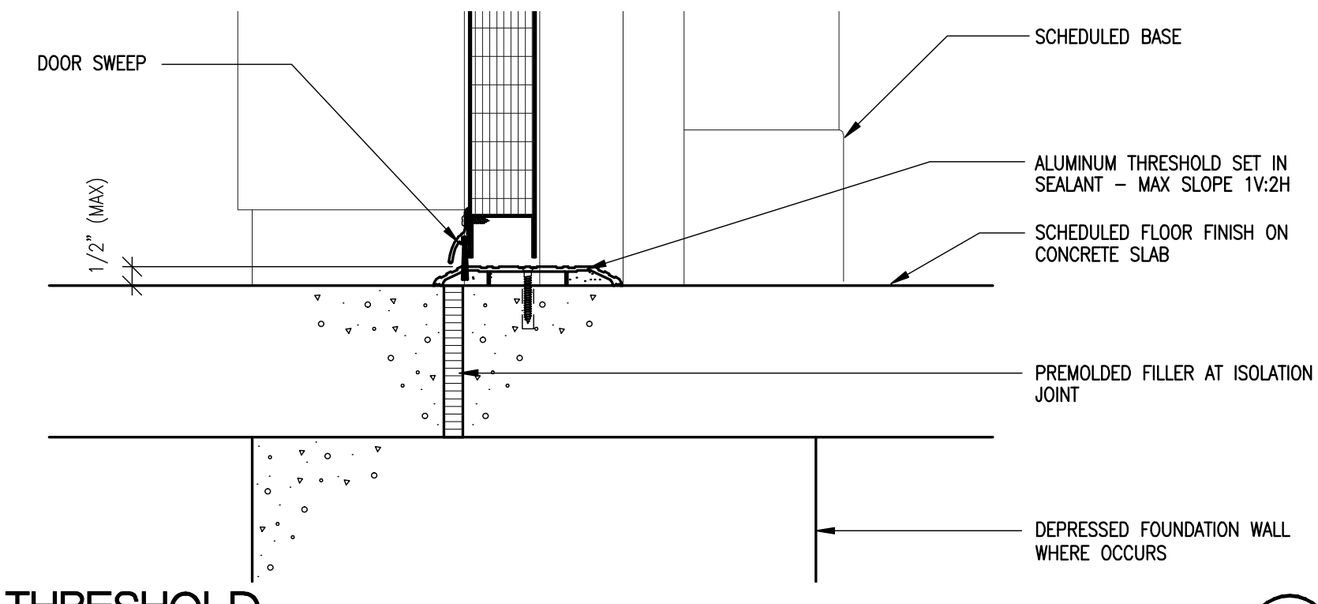

THRESHOLD

3 = 1'-0"

1 / A8.3

ISSUE / REVISIONS:	
TO CONSULTANTS	9/10/07
CD REVIEW	11/2/07
DFCM REVIEW	11/30/07
CDD	12/28/07

LICENSED ARCHITECT
No. 93-130352 0301
JAMES T. DRESSLAR
STATE OF UTAH

NOT VALID UNLESS SIGNED

TITLE: DOOR DETAILS

PROJECT NO.: DFC 0713

DRAWN BY: JTD

DATE: 7/30/07

PROJECT:
STATE OF UTAH
DIVISION OF PARKS AND RECREATION
SAND HOLLOW STATE PARK
MAINTENANCE SHED
DFCM PROJECT NO. 07025510

JAMES T. DRESSLAR
ARCHITECT, L.L.C.
387 PARK LANE
MOAB, UTAH 84532
435.259.1155 PHONE / FAX

SHEET: A8.3

© JAMES T DRESSLAR ARCHITECT, LLC. ALL RIGHTS RESERVED. UNAUTHORIZED REPRODUCTION, DISTRIBUTION, AND/OR USE IS PROHIBITED.

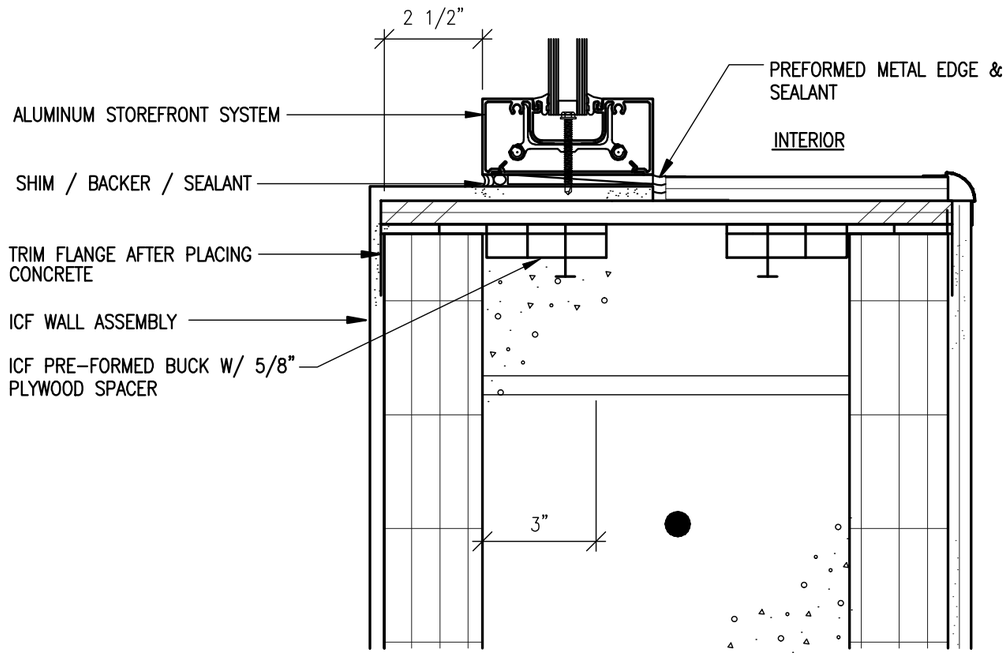

JAMB

3" = 1'-0"

3 / A8.4

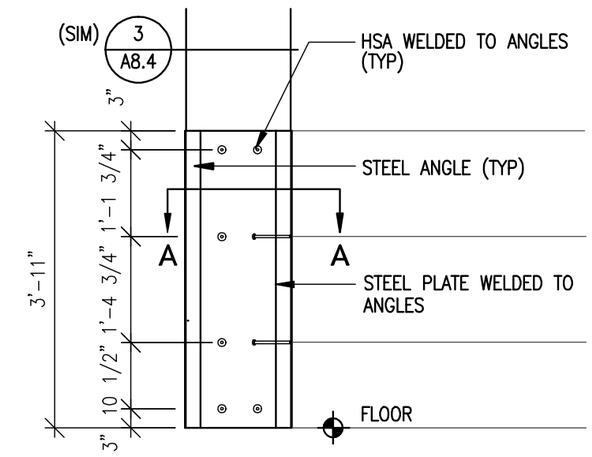

ELEVATION

1/2" = 1'-0"

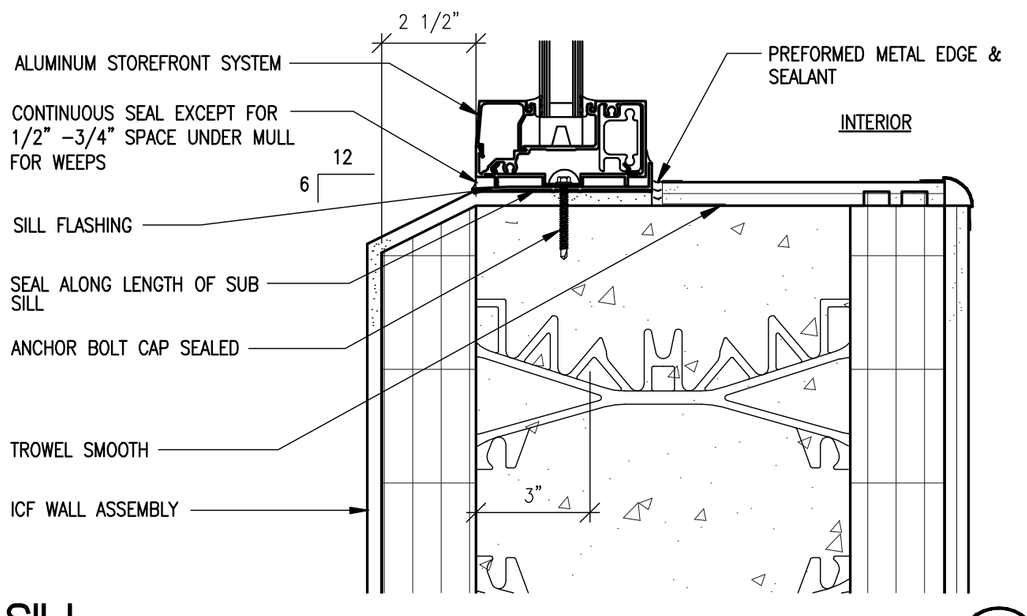

SILL

3" = 1'-0"

2 / A8.4

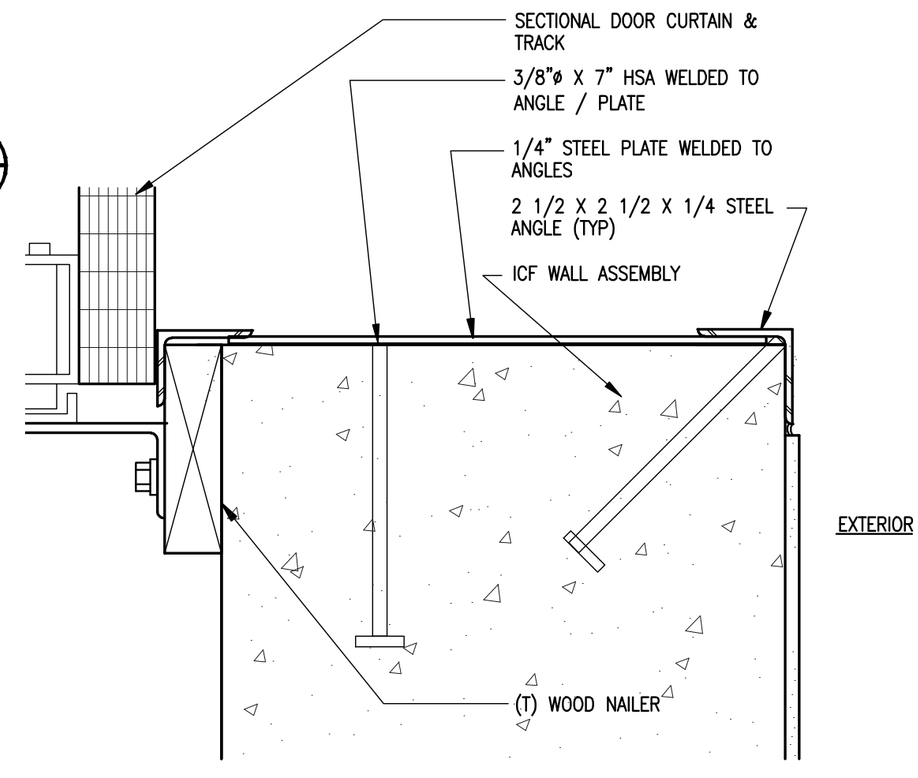

PLAN SECTION

3" = 1'-0"

JAMB

3 = 1'-0"

1 / A8.4

ISSUE / REVISIONS:	
TO CONSULTANTS	9/10/07
CD REVIEW	11/2/07
DFCM REVIEW	11/30/07

LICENSED ARCHITECT
No. 93-130352 0301
JAMES T. DRESSLAR
STATE OF UTAH

NOT VALID UNLESS SIGNED

TITLE: DOOR + WINDOW DETAILS

PROJECT NO.: DFC 0713

DRAWN BY: JTD

DATE: 7/30/07

PROJECT:
STATE OF UTAH
DIVISION OF PARKS AND RECREATION
SAND HOLLOW STATE PARK
MAINTENANCE SHED
DFCM PROJECT NO. 07025510

JAMES T. DRESSLAR ARCHITECT, L.L.C.
387 PARK LANE
MOAB, UTAH 84532
435.259.1155 PHONE / FAX

SHEET: A8.4

© JAMES T DRESSLAR ARCHITECT, LLC. ALL RIGHTS RESERVED. UNAUTHORIZED REPRODUCTION, DISTRIBUTION, AND/OR USE IS PROHIBITED.

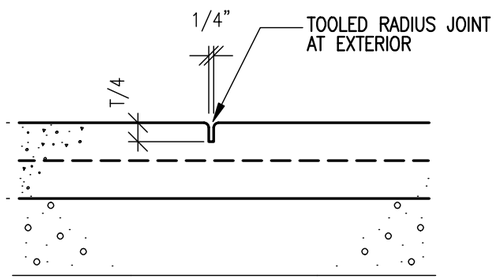

EXTERIOR CONTROL JOINT

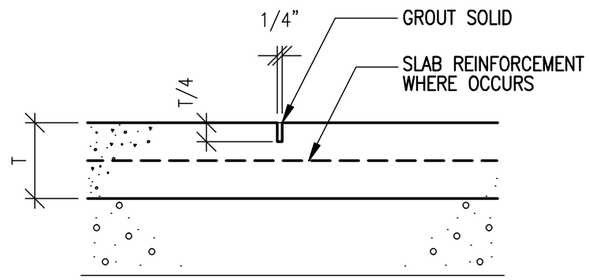

INTERIOR CONTROL JOINT

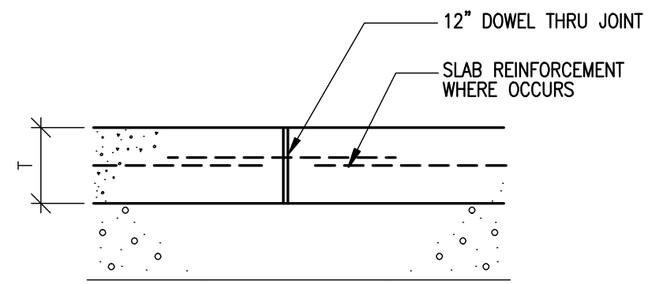

CONSTRUCTION JOINT

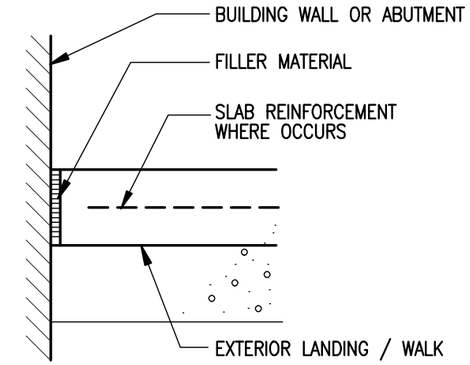

ISOLATION JOINT

CONCRETE SLAB JOINTS

1 1/2" = 1'-0"

2 / A9.4

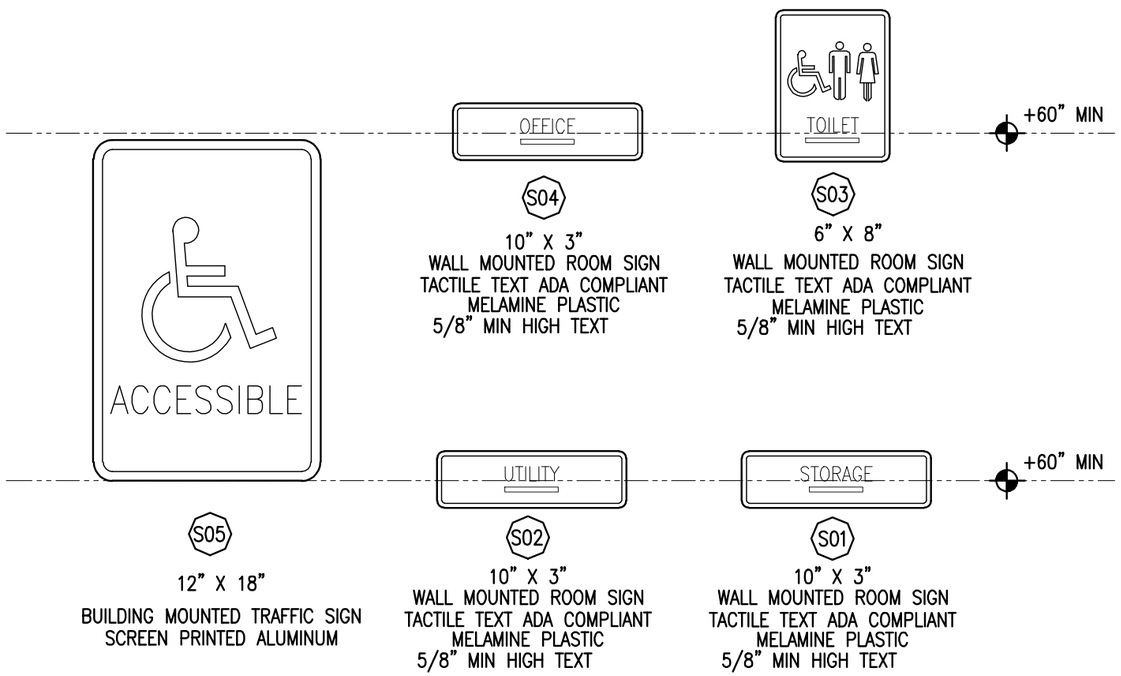

SIGNAGE

1 1/2" = 1'-0"

3 / A9.1

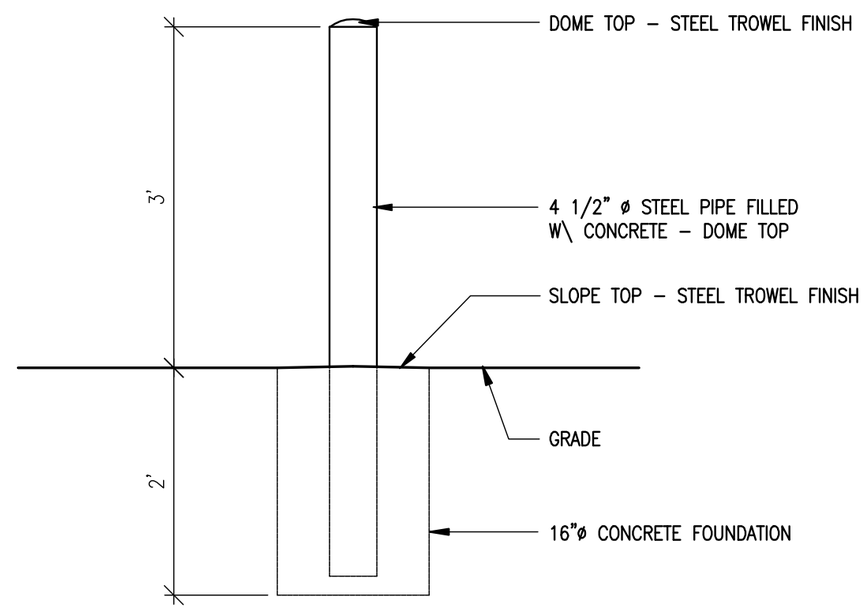

BOLLARD

3/4" = 1'-0"

1 / A9.1

RATED CONSTRUCTION ASSEMBLIES

ASSEMBLY	GYPSUM ASSOC DESIGN NUMBER	IBC DESIGN NUMBER	DESCRIPTION
1 HR VERTICAL FIRE BARRIER AT STAIRWAY ENCLOSURE	–	T 720.1(2) 13–1.1	5/8" TYPE X GYPSUM BOARD EACH SIDE 3 5/8" CFMF FRAMING AT 16" O.C.
1 HR HORIZONTAL FIRE BARRIER AT STAIRWAY ENCLOSURE	GA FC 1130	–	5/8" TYPE X GYPSUM BOARD CEILING / 3 5/8" CFMF HORIZONTAL JOISTS AT 16" O.C.

ISSUE / REVISIONS:
CD REVIEW 11/2/07
DFCM REVIEW 11/30/07
CDD 1/2/08

LICENSED ARCHITECT
No. 93-130352 0301
JAMES T. DRESSLAR
STATE OF UTAH

NOT VALID UNLESS SIGNED

TITLE: DETAILS
PROJECT NO.: DFC 0713
DRAWN BY: JTD
DATE: 9/19/07

PROJECT:
STATE OF UTAH
DIVISION OF PARKS AND RECREATION
SAND HOLLOW STATE PARK
MAINTENANCE SHED
DFCM PROJECT NO. 07025510

JAMES T. DRESSLAR
ARCHITECT, L.L.C.
387 PARK LANE
MOAB, UTAH 84532
435.259.1155 PHONE / FAX

SHEET: A9.1

© JAMES T DRESSLAR ARCHITECT, LLC. ALL RIGHTS RESERVED. UNAUTHORIZED REPRODUCTION, DISTRIBUTION, AND/OR USE IS PROHIBITED.

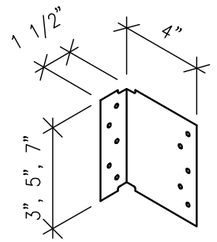

LONG LEG UTILITY CLIP ANGLE

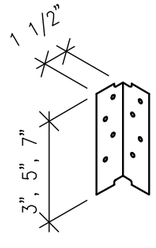

UTILITY CLIP ANGLE

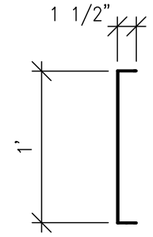

12" TRACK COPING NAILER

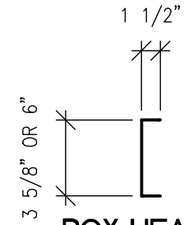

BOX HEADER TRACK

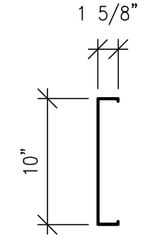

10" BOX HEADER

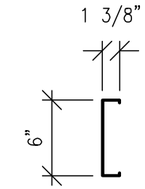

6" BOX HEADER

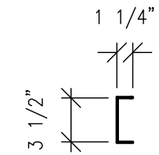

JOIST TRACK

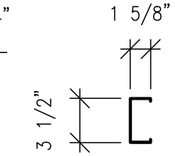

JOIST

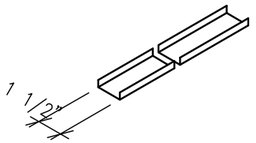

U-CHANNEL BRIDGING

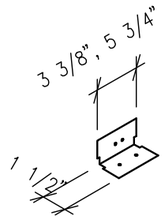

U-CHANNEL CLIP ANGLE

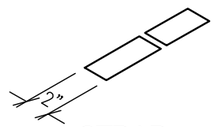

STRAP

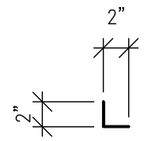

2" CORNER ANGLE

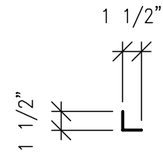

1 1/2" CORNER ANGLE

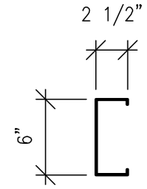

ROOF DECK LEDGER

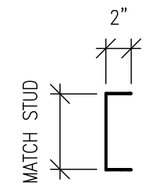

GUARD WALL LOAD BEARING DL TRACK

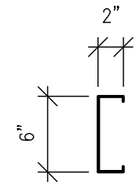

GUARD WALL LOAD BEARING STUD

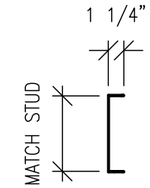

LOAD BEARING TRACK

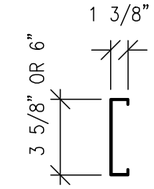

LOAD BEARING STUD

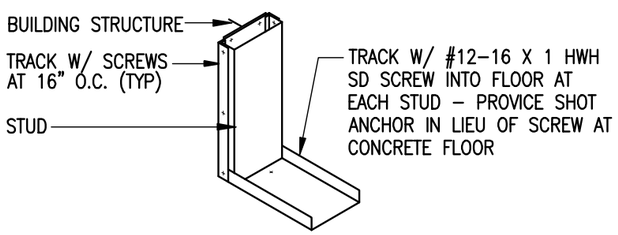

WALL TERMINATION AT BUILDING STRUCTURE
NO SCALE

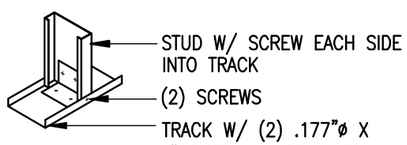

LOAD BEARING STUD AT SILL TRACK
NO SCALE

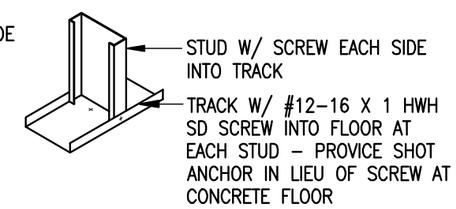

STUD AT SILL TRACK
NO SCALE

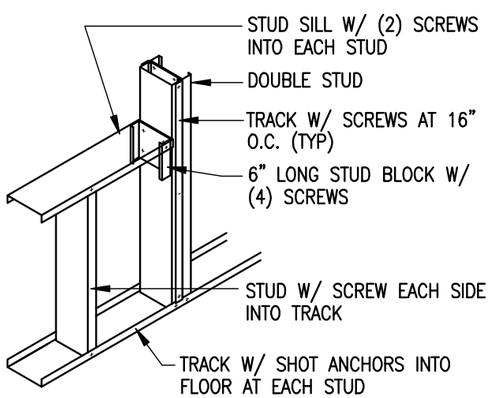

OPENING SILL
NO SCALE

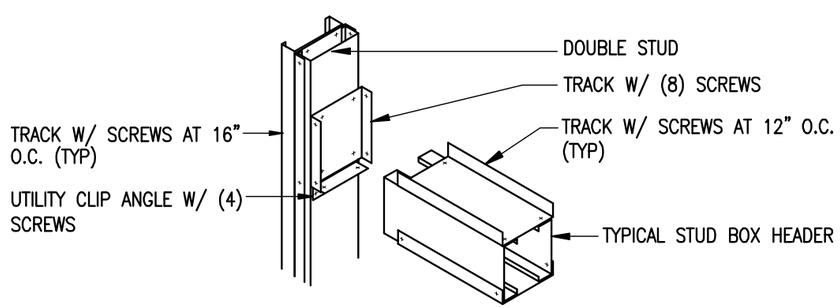

DOOR HEADER / JAMB
NO SCALE

NOTES:

1. FOR ADDITIONAL CFMF DETAILS, SEE 1/A9.3

CFMF MATERIAL:

1. MATERIAL (33 KSI STEEL):
   - A. CLIP ANGLES: 16 GAUGE
   - B. SCREWS: #10-16 X 5/8" HWH OR PH SD UNO
   - C. STRAP: 25 GAUGE
   - D. LOAD BEARING STUDS: 20 GAUGE
   - E. FURRING STUDS: 20 GAUGE
   - F. FURRING CHANNEL: 20 GAUGE
   - G. JOISTS: 18 GAUGE
   - H. TRACK: MATCH ASSOCIATED FRAMING MEMBERS UNO
   - I. CLIP ANGLES, U-CHANNEL BRIDGING: 16 GAUGE
   - J. CORNER ANGLE: MATCH ASSOCIATED FRAMING MEMBERS UNO
   - K. GUARD WALL STUDS: 16 GA
   - L. GUARD WALL TRACK: 16 GA
   - M. 10" BOX HEADER: 18 GA
   - N. 6" BOX HEADER: 20 GA
   - O. BOX HEADER TRACK: 20 GA
   - P. ROOF DECK LEDGER: 16 GA
   - Q. COPING NAILER TRACK: 20 GA

CFMF DETAILS

1 1/2" = 1'-0"

1 / A9.2

ISSUE / REVISIONS:
TO CONSULTANTS 9/10/07
CD REVIEW 11/2/07
DFCM REVIEW 11/30/07
CDD 1/2/08

LICENSED ARCHITECT
No. 93-130352 0301
JAMES T. DRESSLAR
STATE OF UTAH

NOT VALID UNLESS SIGNED

TITLE: DETAILS

PROJECT NO.: DFC 0713

DRAWN BY:

DATE: 8/9/07

PROJECT:
STATE OF UTAH
DIVISION OF PARKS AND RECREATION
SAND HOLLOW STATE PARK
MAINTENANCE SHED
DFCM PROJECT NO. 07025510

JAMES T. DRESSLAR
ARCHITECT, L.L.C.
387 PARK LANE
MOAB, UTAH 84532
435.259.1195 PHONE / FAX

SHEET: A9.2

© JAMES T DRESSLAR ARCHITECT, LLC. ALL RIGHTS RESERVED. UNAUTHORIZED REPRODUCTION, DISTRIBUTION, AND/OR USE IS PROHIBITED.

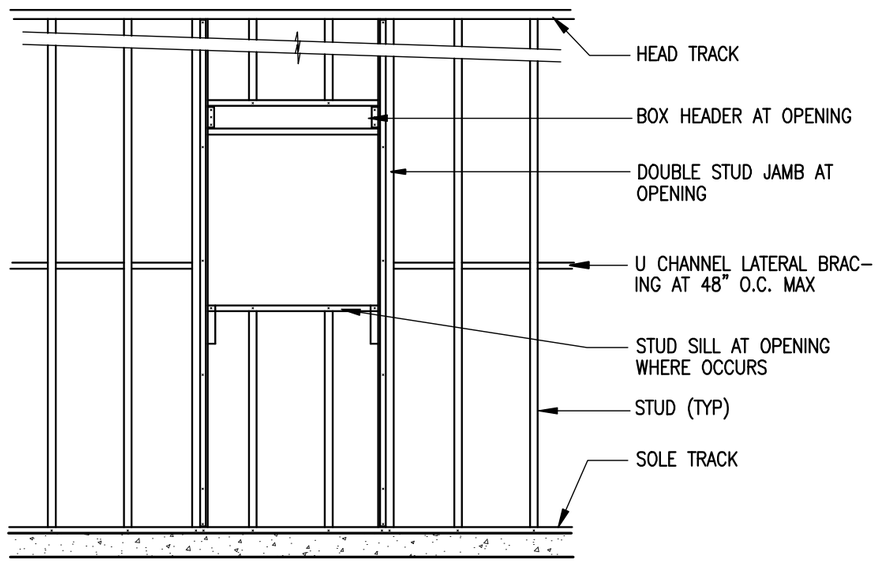

TYPICAL WALL FRAMING
3/8" = 1'-0"

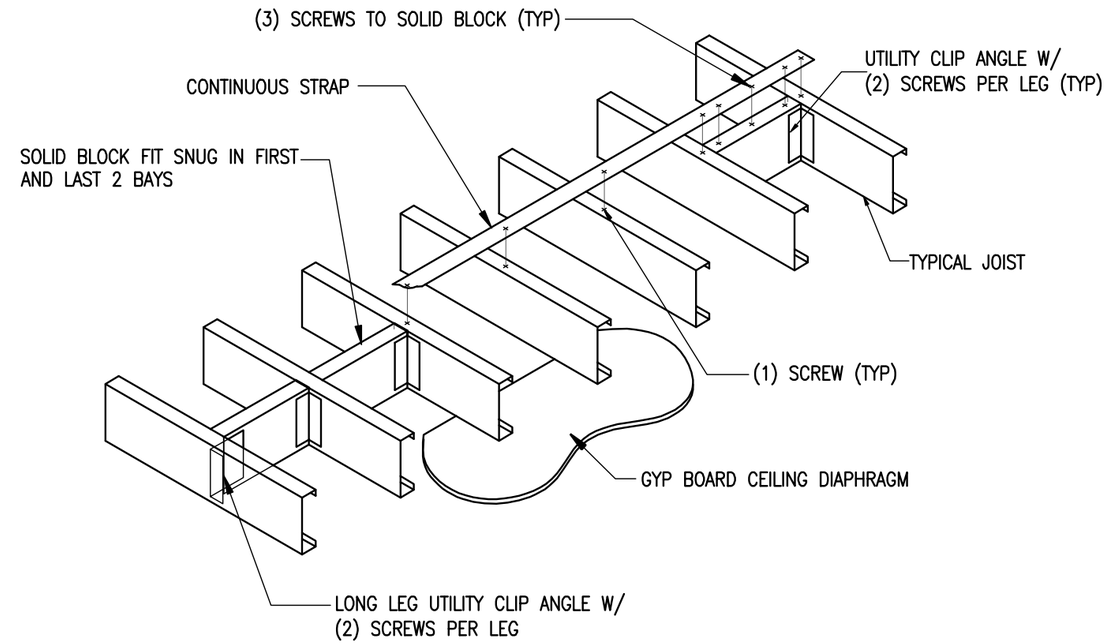

CEILING JOIST BLOCKING
NO SCALE

NOTES:
1. FOR ADDITIONAL CFMF DETAILS, SEE 1/A9.2

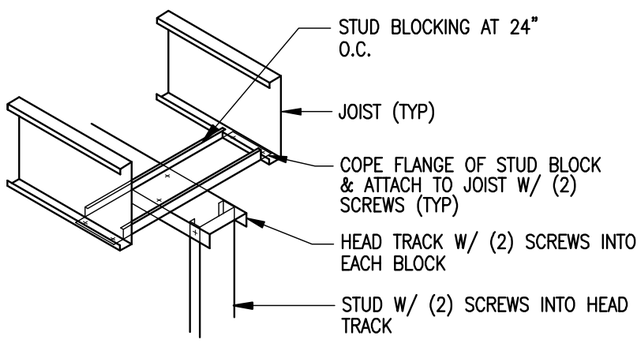

STUD AT CEILING FRAMING
NO SCALE

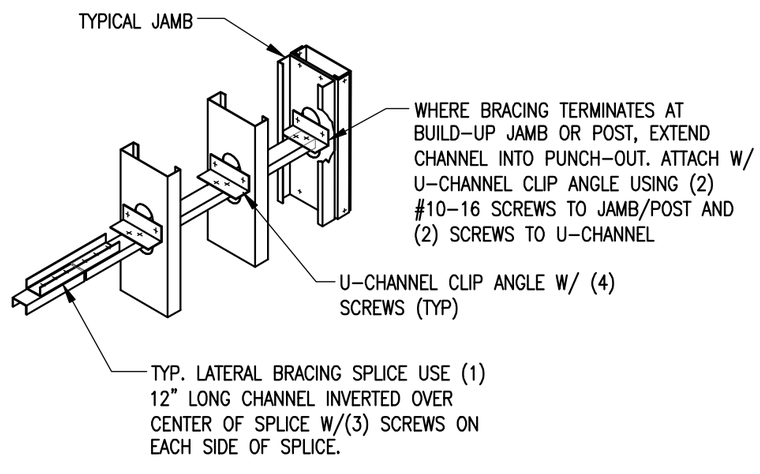

STUD U-CHANNEL BRACING
NO SCALE

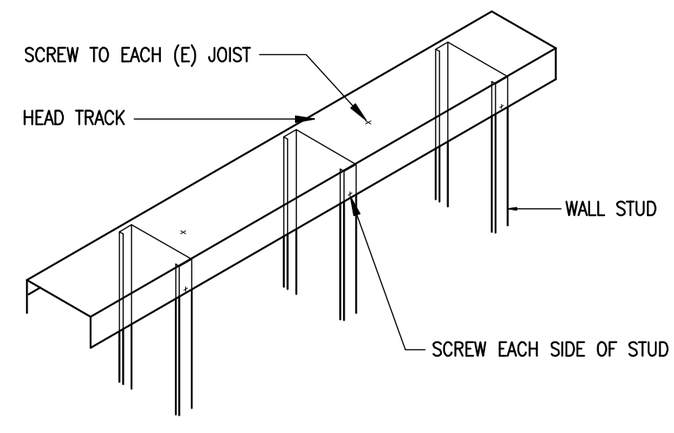

HEAD TRACK
NO SCALE

CFMF DETAILS
NO SCALE

1 / A9.3

ISSUE / REVISIONS:
TO CONSULTANTS 9/10/07
CD REVIEW 11/2/07
DFCM REVIEW 11/30/07
CDD 1/2/08

LICENSED ARCHITECT No. 93-130352 0301 JAMES T. DRESSLAR STATE OF UTAH

NOT VALID UNLESS SIGNED

TITLE: DETAILS
PROJECT NO.: DFC 0713
DRAWN BY:
DATE: 8/9/07

PROJECT:
STATE OF UTAH
DIVISION OF PARKS AND RECREATION
SAND HOLLOW STATE PARK
MAINTENANCE SHED
DFCM PROJECT NO. 07025510

JAMES T. DRESSLAR
ARCHITECT, L.L.C.
387 PARK LANE
MOAB, UTAH 84532
435.259.1155 PHONE / FAX

SHEET: A9.3

© JAMES T DRESSLAR ARCHITECT, LLC. ALL RIGHTS RESERVED. UNAUTHORIZED REPRODUCTION, DISTRIBUTION, AND/OR USE IS PROHIBITED.

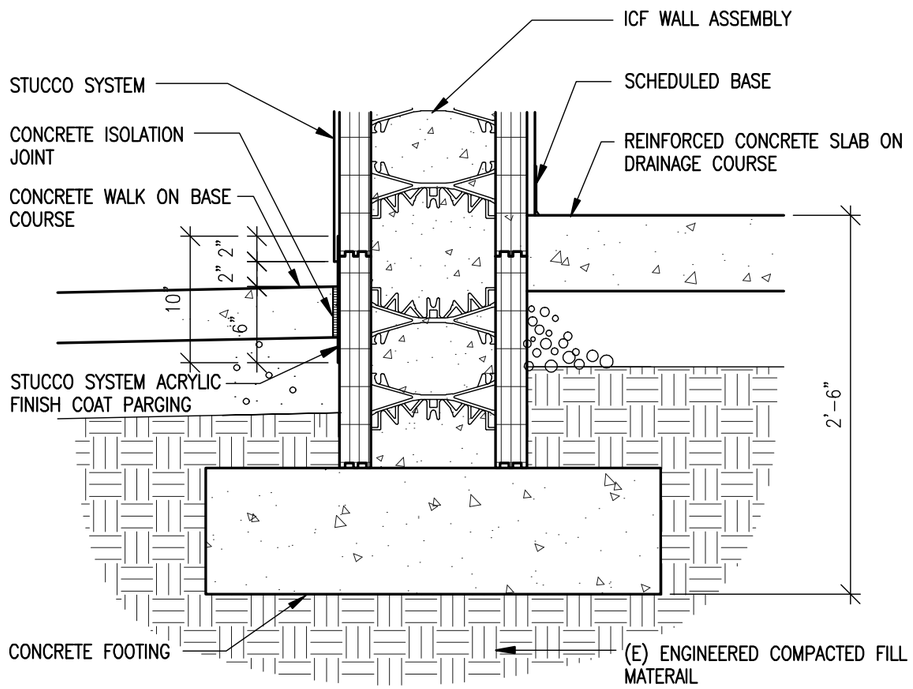

TYPICAL FOUNDATION

1" = 1'-0"

3 / A9.4

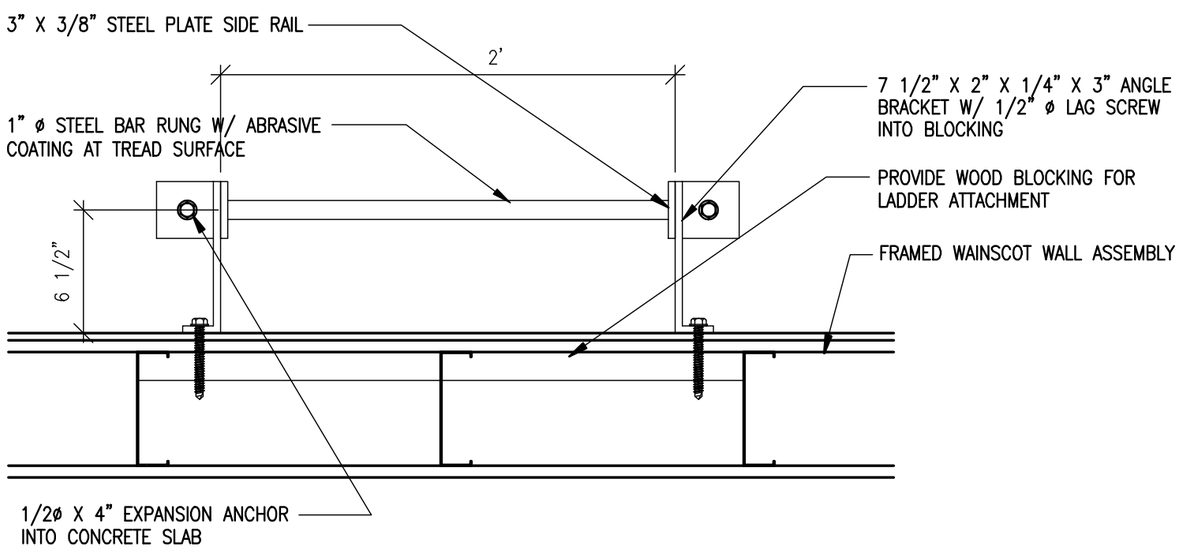

LADDER

1 1/2" = 1'-0"

2 / A9.4

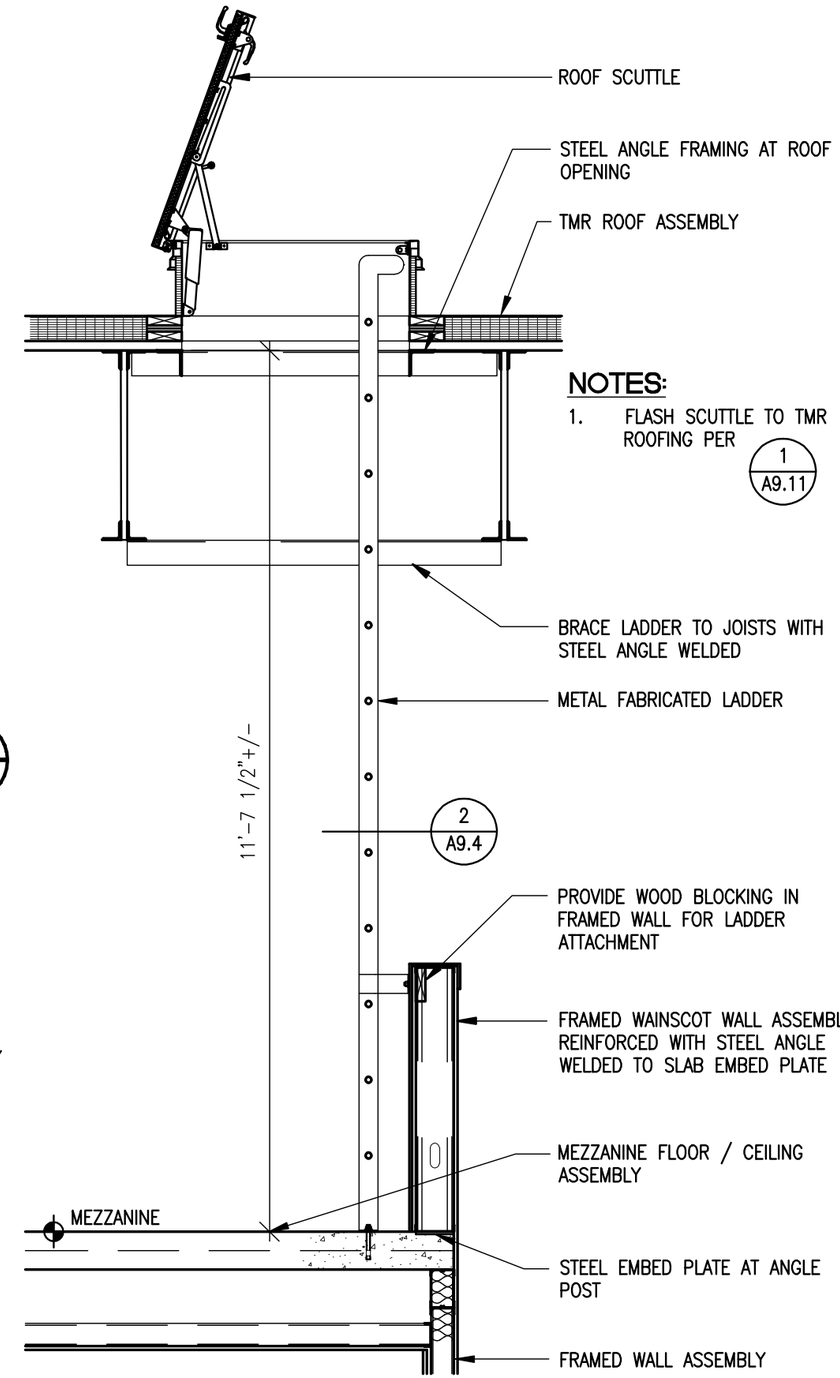

NOTES:

1. FLASH SCUTTLE TO TMR ROOFING PER 1 / A9.11

ROOF LADDER + SCUTTLE

1/2" = 1'-0"

1 / A9.4

ISSUE / REVISIONS:	
TO CONSULTANTS	9/10/07
CD REVIEW	11/2/07
DFCM REVIEW	11/30/07
CDD	1/2/08

LICENSED ARCHITECT No. 93-130352 0301 JAMES T. DRESSLAR STATE OF UTAH

NOT VALID UNLESS SIGNED

TITLE: DETAILS

PROJECT NO.: DFC 0713

DRAWN BY:

DATE: 8/9/07

PROJECT:
STATE OF UTAH
DIVISION OF PARKS AND RECREATION
SAND HOLLOW STATE PARK
MAINTENANCE SHED
DFCM PROJECT NO. 07025510

JAMES T. DRESSLAR ARCHITECT, L.L.C.
387 PARK LANE
MOAB, UTAH 84533
435.259.1155 PHONE / FAX

SHEET: A9.4

© JAMES T DRESSLAR ARCHITECT, LLC. ALL RIGHTS RESERVED. UNAUTHORIZED REPRODUCTION, DISTRIBUTION, AND/OR USE IS PROHIBITED.

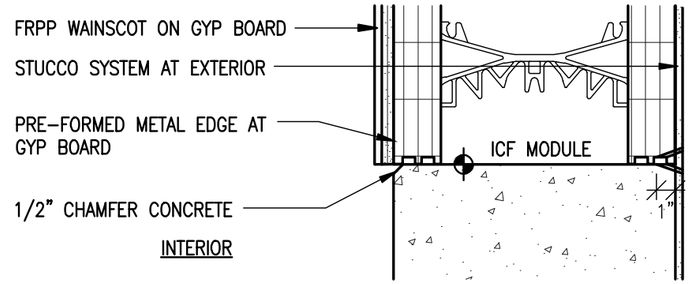

CONCRETE / ICF TRANSITION

3 / A9.5

1 1/2" = 1'-0"

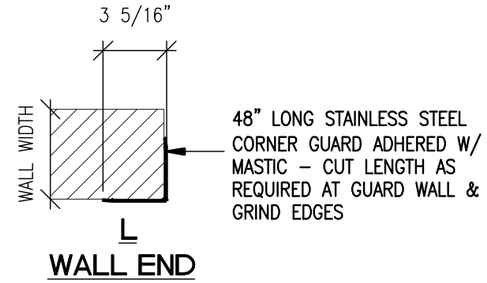

CORNER GUARD

2 / A9.5

1 1/2" = 1'-0" (UNO)

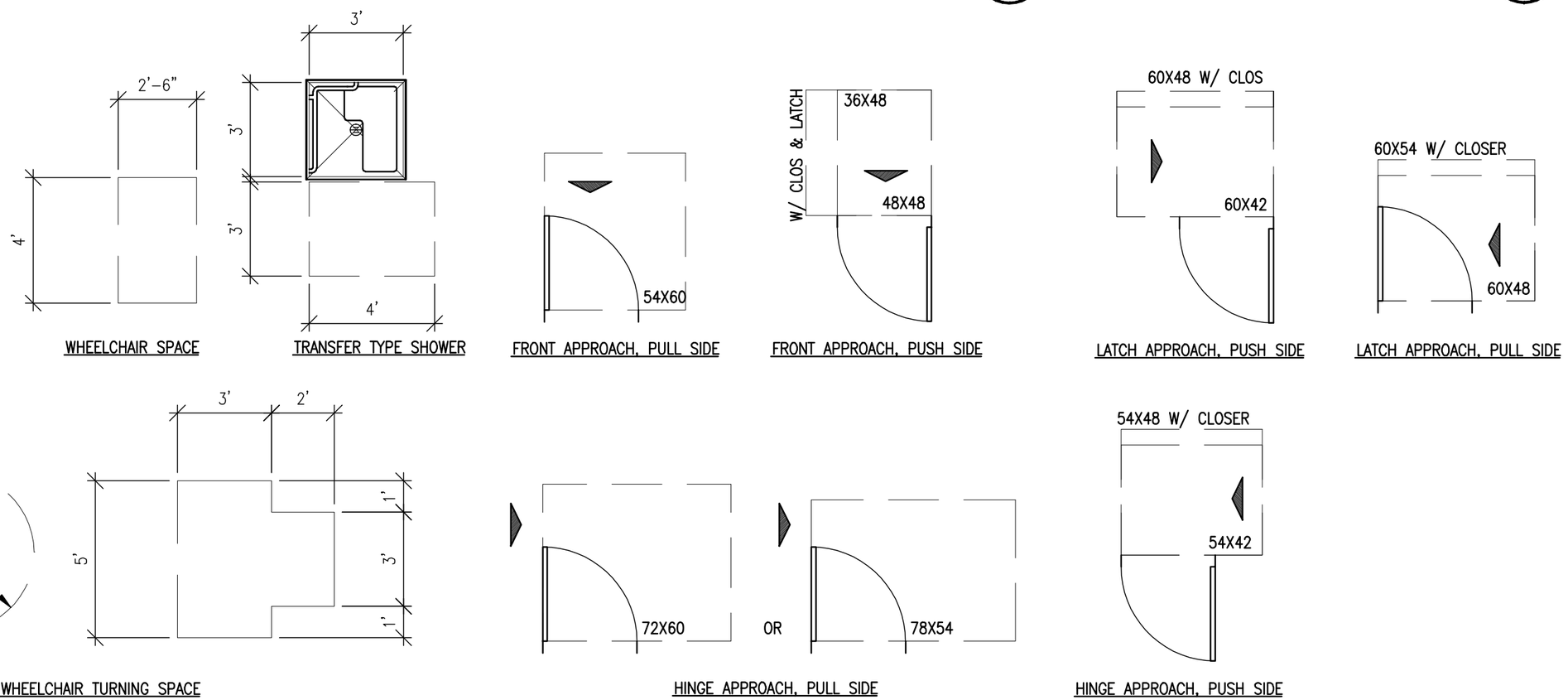

WHEELCHAIR MANEUVERING SPACE

MANEUVERING SPACE AT DOORS

ACCESSIBLE FLOOR MANEUVERING SPACE

1 / A9.5

1/4" = 1'-0"

ISSUE / REVISIONS:	
TO CONSULTANTS	9/10/07
CD REVIEW	11/2/07
DFCM REVIEW	11/30/07
CDD	1/2/08

LICENSED ARCHITECT
No. 93-130352 0301
JAMES T. DRESSLAR
STATE OF UTAH

NOT VALID UNLESS SIGNED

PROJECT NO.: DFC 0713

DRAWN BY:

TITLE: DETAILS

DATE: 8/9/07

PROJECT:
STATE OF UTAH
DIVISION OF PARKS AND RECREATION
SAND HOLLOW STATE PARK
MAINTENANCE SHED
DFCM PROJECT NO. 07025510

JAMES T. DRESSLAR ARCHITECT, L.L.C.
387 PARK LANE
MOAB, UTAH 84532
435.259.1155 PHONE / FAX

SHEET: A9.5

© JAMES T DRESSLAR ARCHITECT, LLC. ALL RIGHTS RESERVED. UNAUTHORIZED REPRODUCTION, DISTRIBUTION, AND/OR USE IS PROHIBITED.

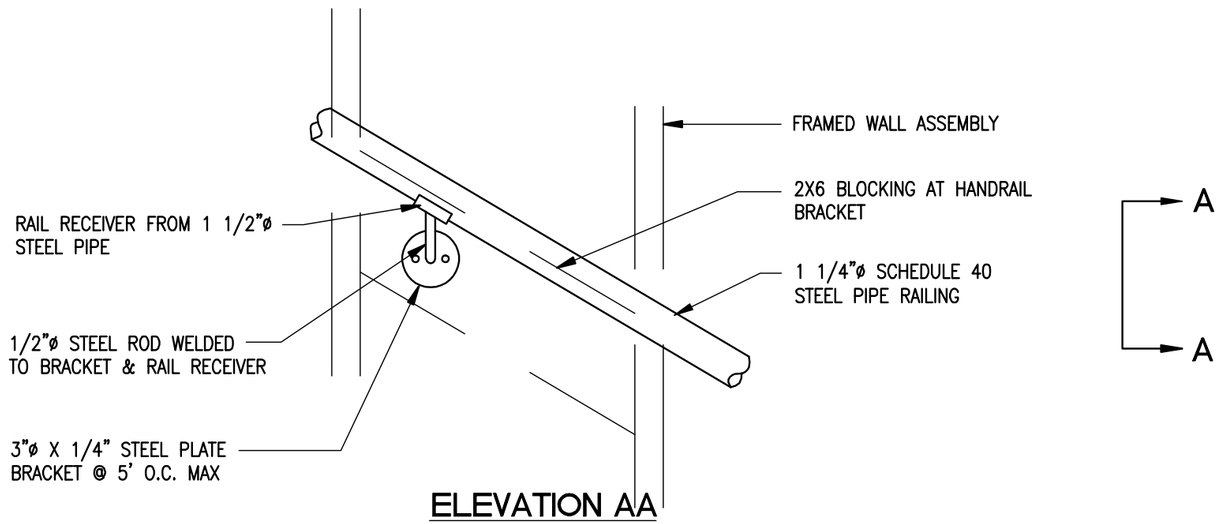

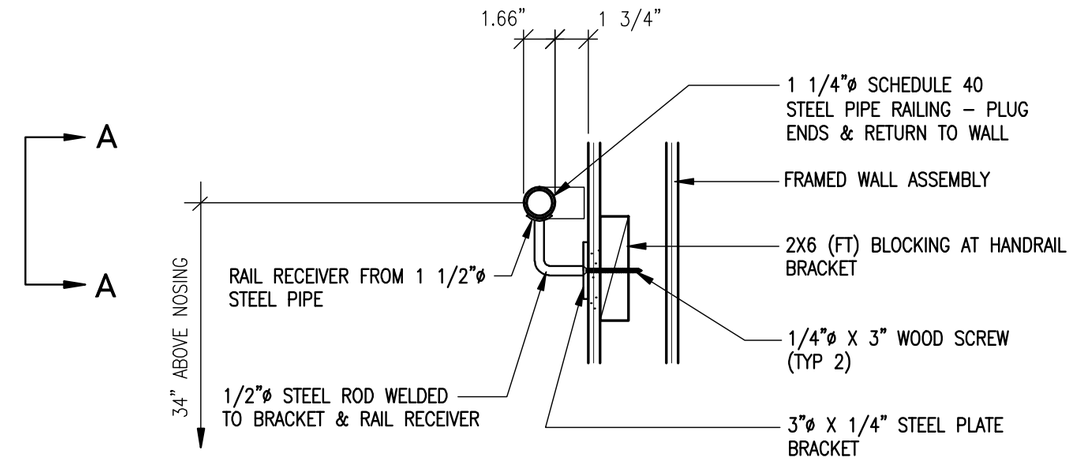

STAIR HANDRAIL

1 1/2" = 1'-0"

2
A9.6

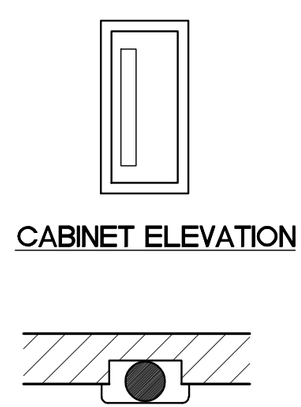

CABINET ELEVATION

PLAN

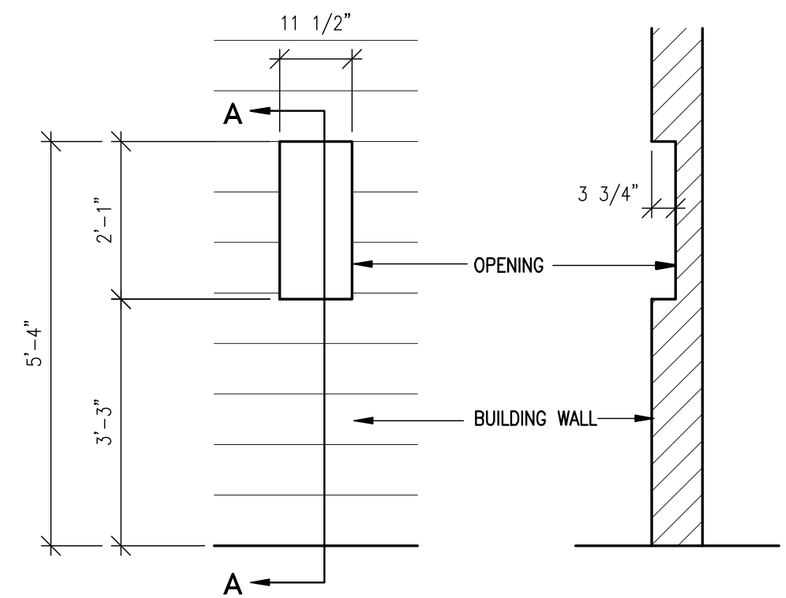

FRONT ELEVATION

SECTION AA

NOTES:

1. VERIFY OPENING DIMENSIONS WITH FIRE EXTINGUISHER CABINET MANUFACTURER'S PRODUCT DATA. OPENING SHOWN IS BASED ON JL INDUSTRIES "1027W10".

FIRE EXTINGUISHER

1/2" = 1'-0"

1
A9.6

ISSUE / REVISIONS:
CD REVIEW 11/2/07
DFCM REVIEW 11/30/07
CDD 1/2/08

LICENSED ARCHITECT
No. 93-130352 0301
JAMES T. DRESSLAR
STATE OF UTAH

NOT VALID UNLESS SIGNED

TITLE: DETAILS

PROJECT NO.: DFC 0713

DRAWN BY:

DATE: 8/9/07

PROJECT:
STATE OF UTAH
DIVISION OF PARKS AND RECREATION
SAND HOLLOW STATE PARK
MAINTENANCE SHED
DFCM PROJECT NO. 07025510

JAMES T. DRESSLAR
ARCHITECT, L.L.C.
387 PARK LANE
MOAB, UTAH 84532
435.259.1155 PHONE / FAX

SHEET: A9.6

© JAMES T DRESSLAR ARCHITECT, LLC. ALL RIGHTS RESERVED. UNAUTHORIZED REPRODUCTION, DISTRIBUTION, AND/OR USE IS PROHIBITED.

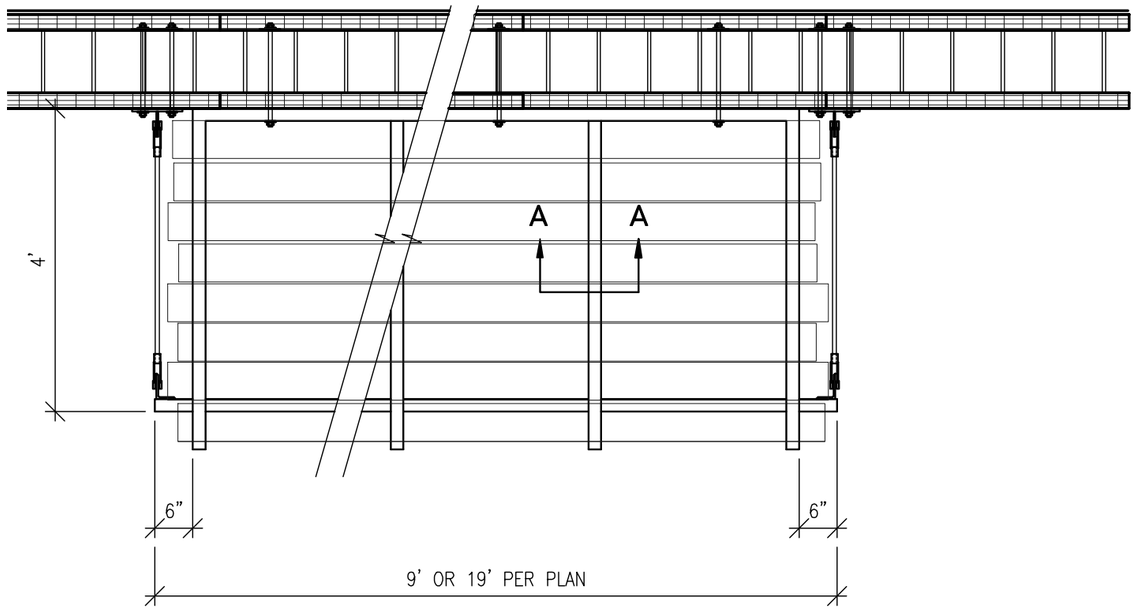

PLAN

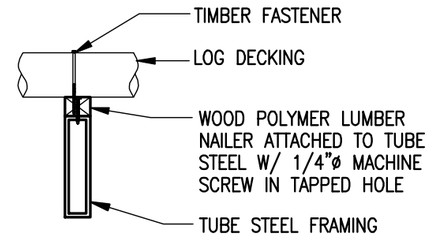

SECTION AA
1" = 1'-0"

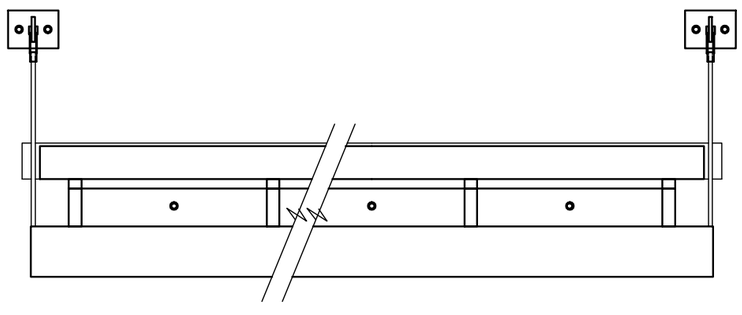

FRONT

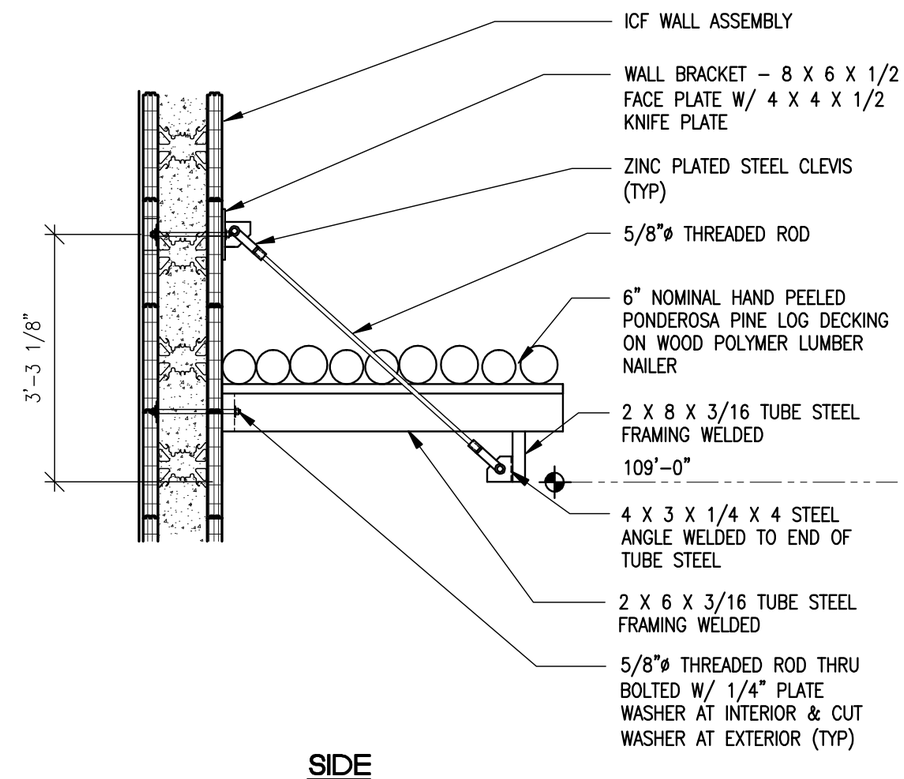

SIDE

DOOR CANOPY

1/2" = 1'-0"

1
A9.7

ISSUE / REVISIONS:
TO CONSULTANTS 9/10/07
CD REVIEW 11/2/07
DFCM REVIEW 11/30/07
CDD 1/2/08

LICENSED ARCHITECT
No. 93-130352 0301
JAMES T. DRESSLAR
STATE OF UTAH

NOT VALID UNLESS SIGNED

TITLE: DETAILS

PROJECT NO.: DFC 0713

DRAWN BY: JTD

DATE: 8/9/07

PROJECT:
STATE OF UTAH
DIVISION OF PARKS AND RECREATION
SAND HOLLOW STATE PARK
MAINTENANCE SHED
DFCM PROJECT NO. 07025510

JAMES T. DRESSLAR ARCHITECT, L.L.C.
387 PARK LANE
MOAB, UTAH 84532
435.259.1155 PHONE / FAX

SHEET: A9.7

© JAMES T DRESSLAR ARCHITECT, LLC. ALL RIGHTS RESERVED. UNAUTHORIZED REPRODUCTION, DISTRIBUTION AND/OR USE IS PROHIBITED.

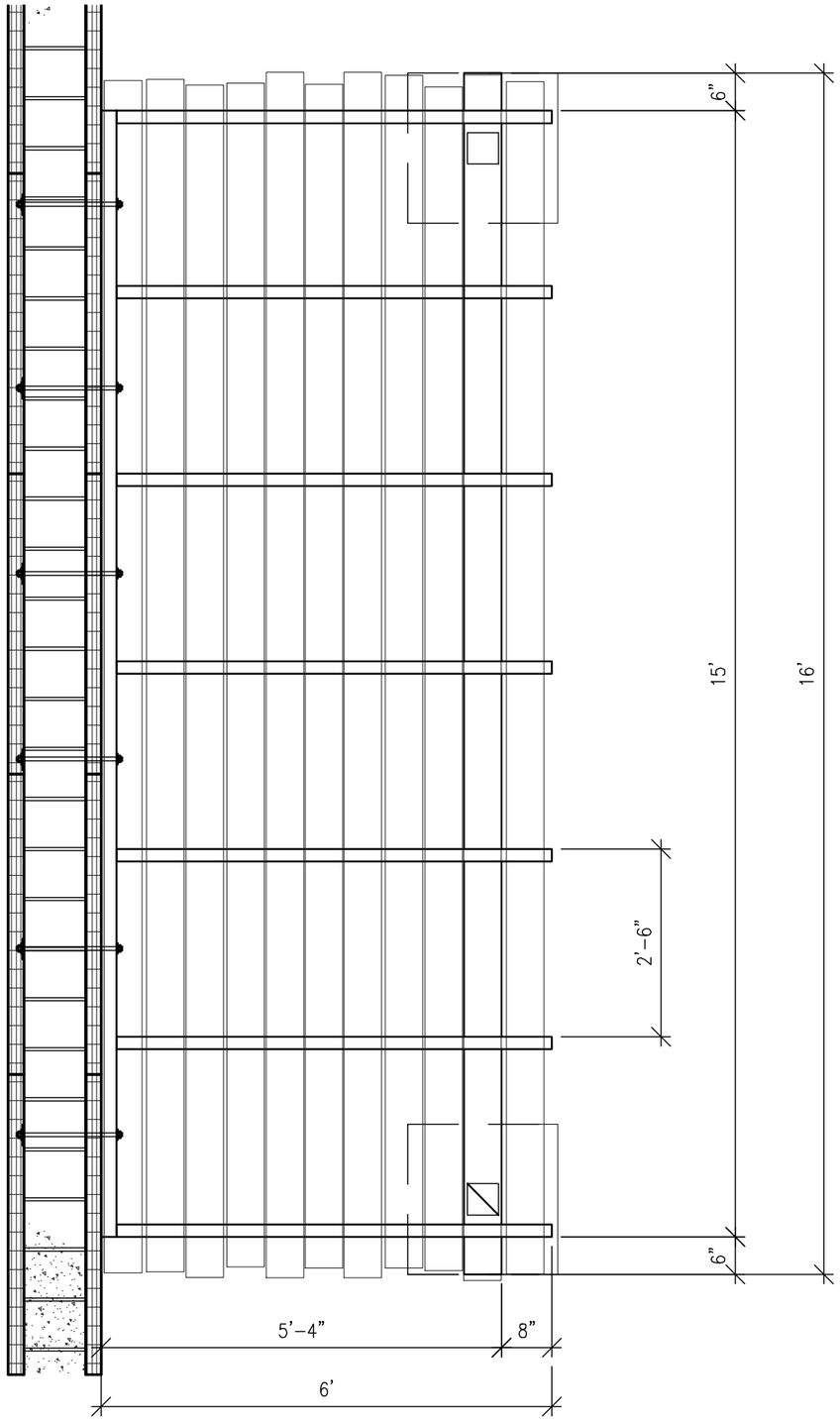

PLAN

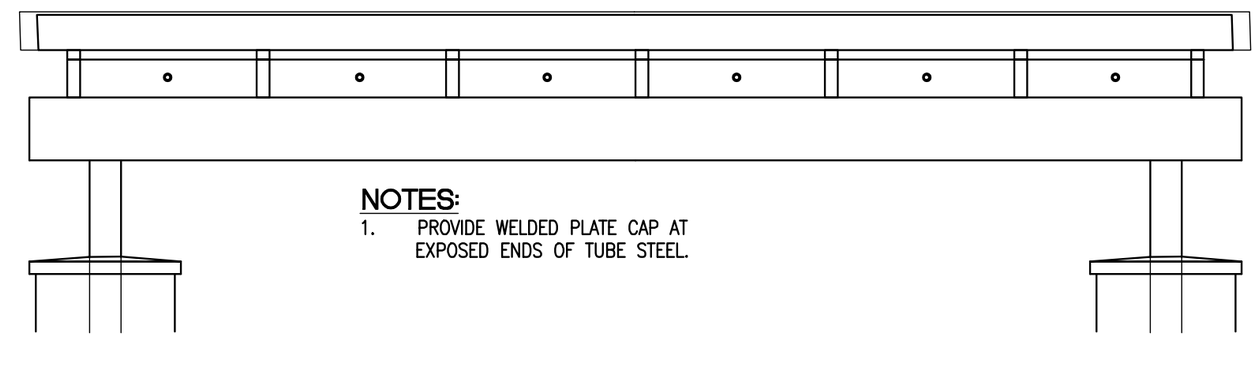

NOTES:

1. PROVIDE WELDED PLATE CAP AT EXPOSED ENDS OF TUBE STEEL.

FRONT

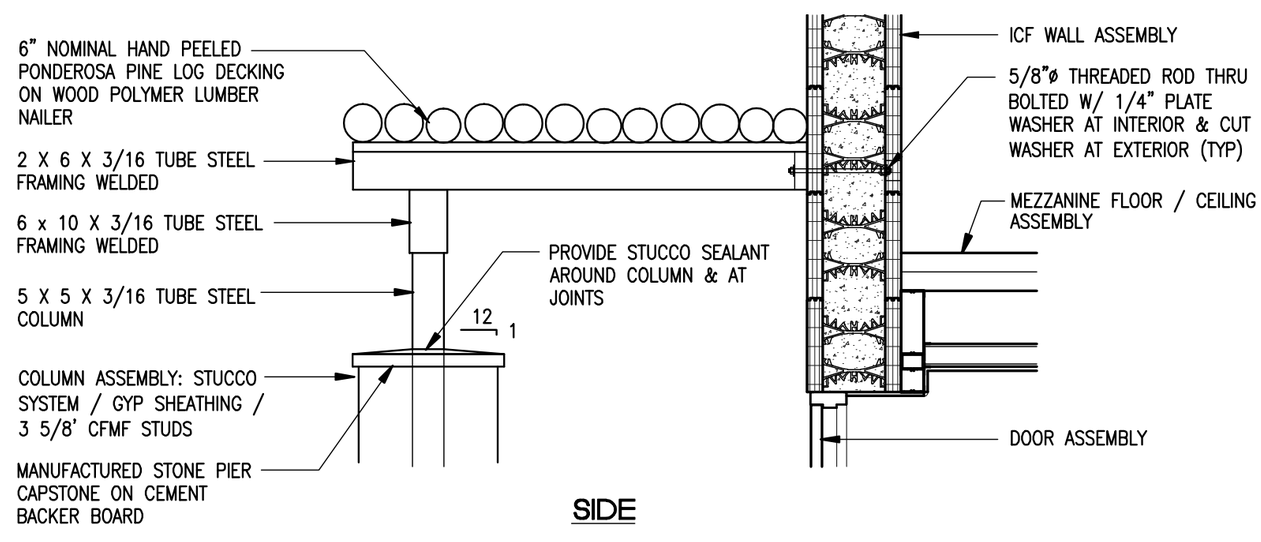

SIDE

ENTRY CANOPY

1/2" = 1'-0"

1
A9.8

ISSUE / REVISIONS:
CD REVIEW 11/2/07
DFCM REVIEW 11/30/07
CDD 1/2/08

LICENSED ARCHITECT
No. 93-130352 0301
JAMES T. DRESSLAR
STATE OF UTAH

NOT VALID UNLESS SIGNED

TITLE: DETAILS

PROJECT NO.: DFC 0713

DRAWN BY: JTD

DATE: 9/20/07

PROJECT:
STATE OF UTAH
DIVISION OF PARKS AND RECREATION
SAND HOLLOW STATE PARK
MAINTENANCE SHED
DFCM PROJECT NO. 07025510

JAMES T. DRESSLAR
ARCHITECT, L.L.C.
367 PARK LANE
MOAB, UTAH 84532
435.259.1155 PHONE / FAX

SHEET: A9.8

© JAMES T DRESSLAR ARCHITECT, LLC. ALL RIGHTS RESERVED. UNAUTHORIZED REPRODUCTION, DISTRIBUTION, AND/OR USE IS PROHIBITED.

REFERENCE NOTES:

1. STRUCTURAL STEEL FABRICATED ENTRY CANOPY WITH HEAVY TIMBER LOG DECKING PER 1/A9.8
2. MANUFACTURED STONE PIER CAPSTONE ON CEMENT BOARD.
3. LIGHT FIXTURE.
4. COLUMN WALL ASSEMBLY: STUCCO FINISH SYSTEM / GYP SHEATHING / 3 5/8" CFMF STUDS.
5. STUCCO SYSTEM TRIM FROM 3/4" RIGID INSULATION.
6. CONCRETE WALK ON BASE COURSE.
7. REINFORCED CONCRETE SLAB ON DRAINAGE COURSE.
8. STEEL DOOR ASSEMBLY.
9. MEZZANINE FLOOR / CEILING ASSEMBLY.
10. FRPP WAINSCOT ON ICF WALL ASSEMBLY.
11. BRACE TOP TRACK OF COLUMN WALL ASSEMBLY WITH CFMF BACK TO COLUMN.
12. CONCRETE CURB AND GUTTER.
13. CONCRETE FOUNDATION.
14. STUCCO SYSTEM WAINSCOT COLOR TO MATCH ENTRY STATION. V CUT ICF FOAM TO PROVIDE JOINT.

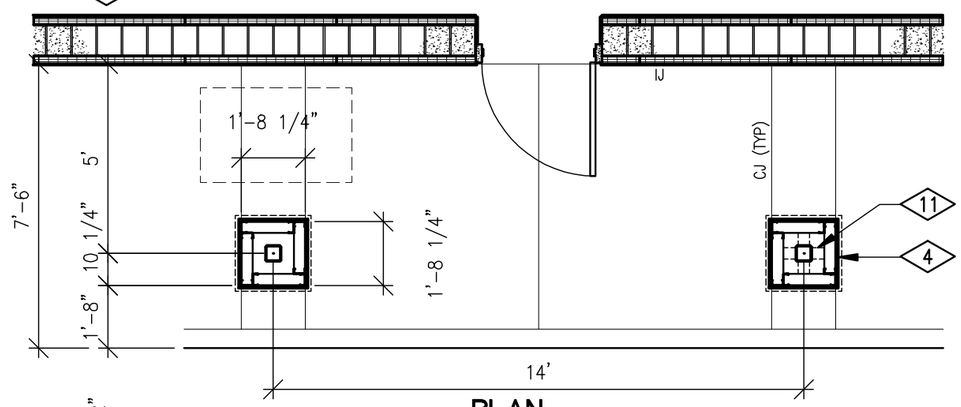

PLAN

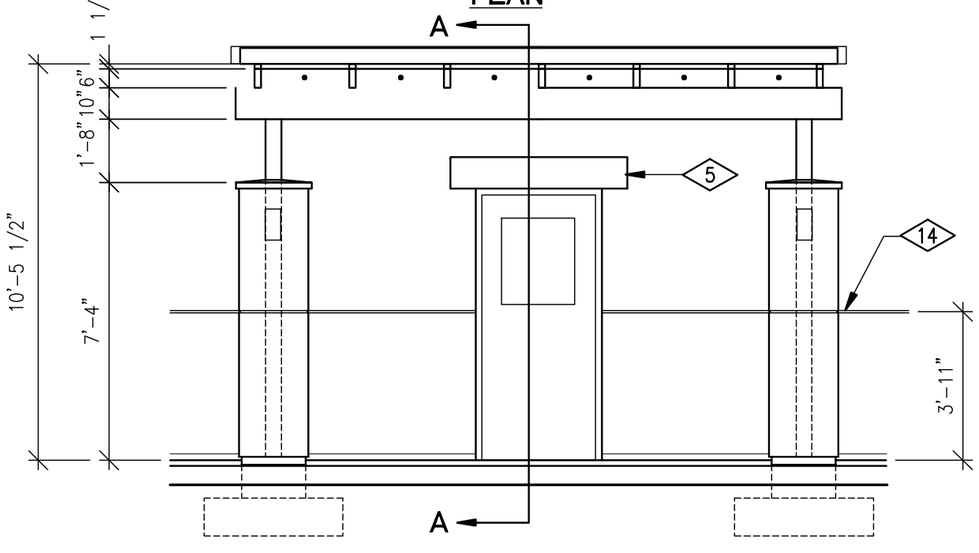

FRONT ELEVATION

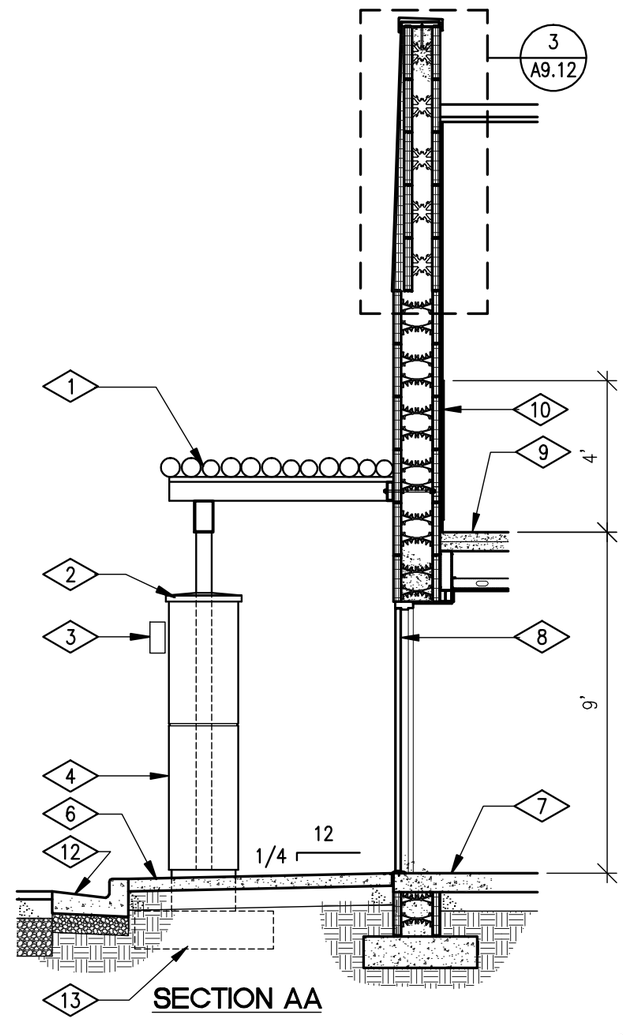

SECTION AA

ENTRY CANOPY

1/4" = 1'-0"

1
A9.9

ISSUE / REVISIONS:
CD REVIEW 11/2/07
DFCM REVIEW 11/30/07
CDD 1/2/08

LICENSED ARCHITECT
No. 93-130352 0301
JAMES T. DRESSLAR
STATE OF UTAH

NOT VALID UNLESS SIGNED

TITLE: DETAILS

PROJECT NO.: DFC 0713

DRAWN BY: JTD

DATE: 9/20/07

PROJECT:
STATE OF UTAH
DIVISION OF PARKS AND RECREATION
SAND HOLLOW STATE PARK
MAINTENANCE SHED
DFCM PROJECT NO. 07025510

JAMES T. DRESSLAR
ARCHITECT, L.L.C.
397 PARK LANE
MOAB, UTAH 84532
435.259.1155 PHONE / FAX

SHEET: A9.9

© JAMES T DRESSLAR ARCHITECT, LLC. ALL RIGHTS RESERVED. UNAUTHORIZED REPRODUCTION, DISTRIBUTION, AND/OR USE IS PROHIBITED.

NOTES:

1. FOR ADDITIONAL THERMOPLASTIC ROOFING DETAILS, SEE 1/A9.11 1/A9.12

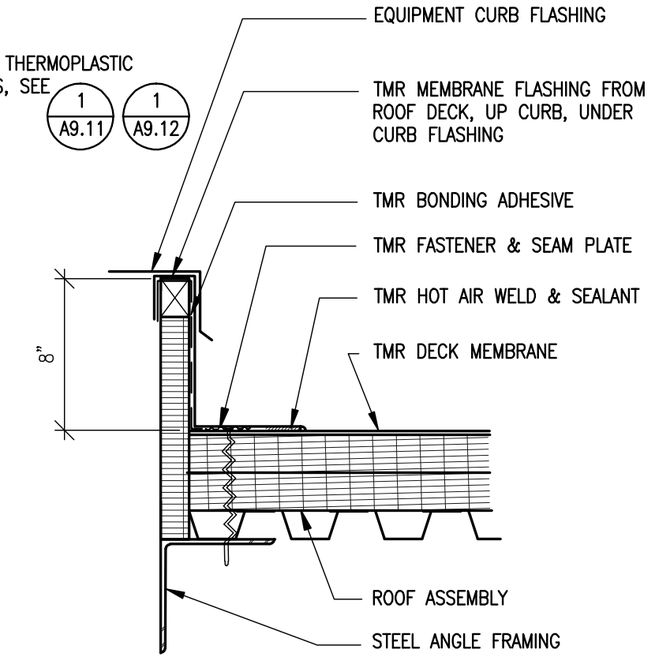

CURB

THERMOPLASTIC ROOFING DETAILS

1 1/2" = 1'-0"

3 A9.10

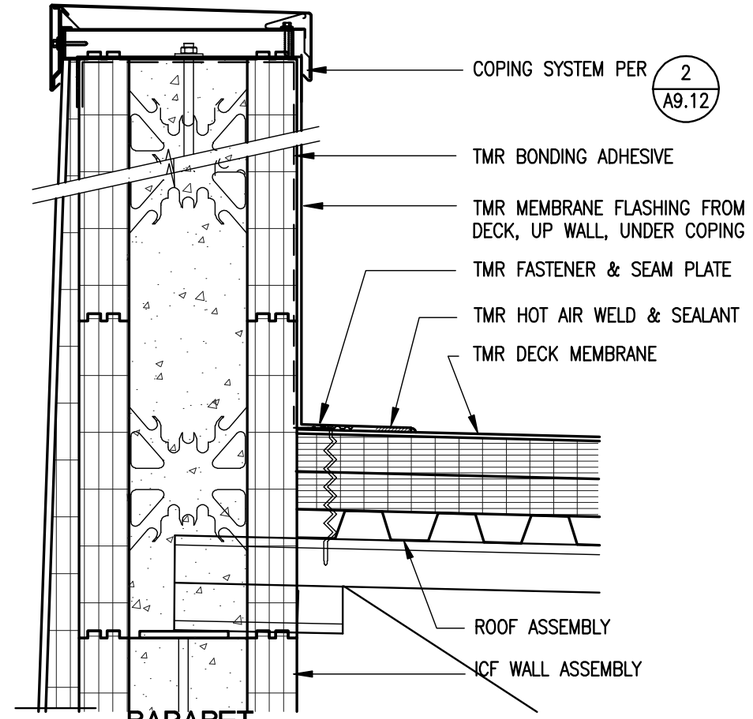

PARAPET

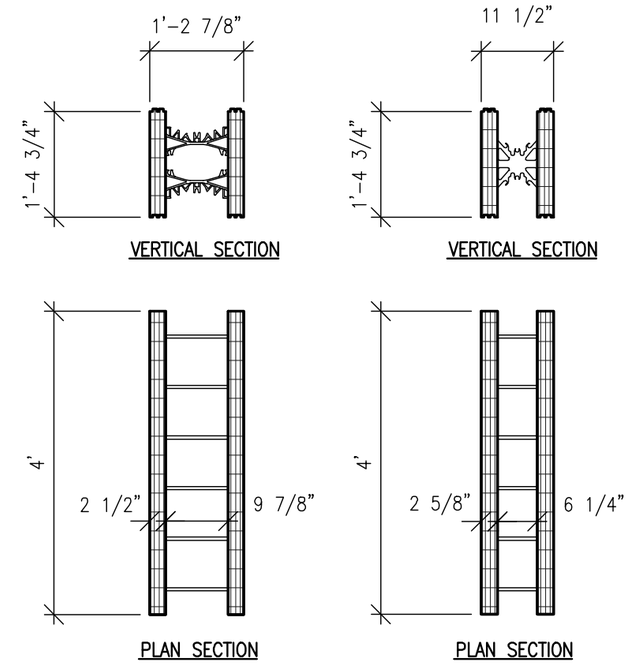

ICF UNITS

1/2" = 1'-0"

2 A9.10

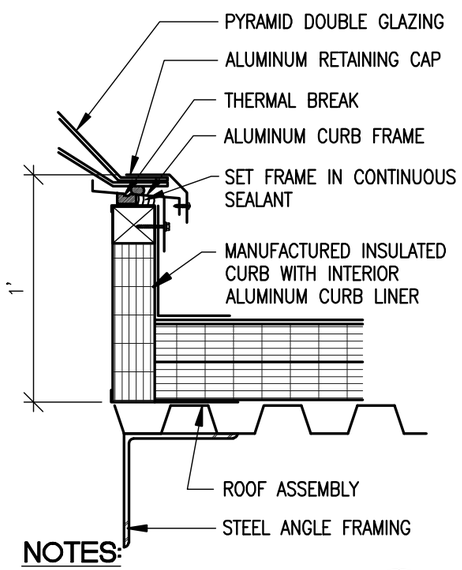

NOTES:

1. FLASH TMR ROOF TO CURB PER 3/A9.10

SKYLIGHT

1 1/2" = 1'-0"

4 A9.10

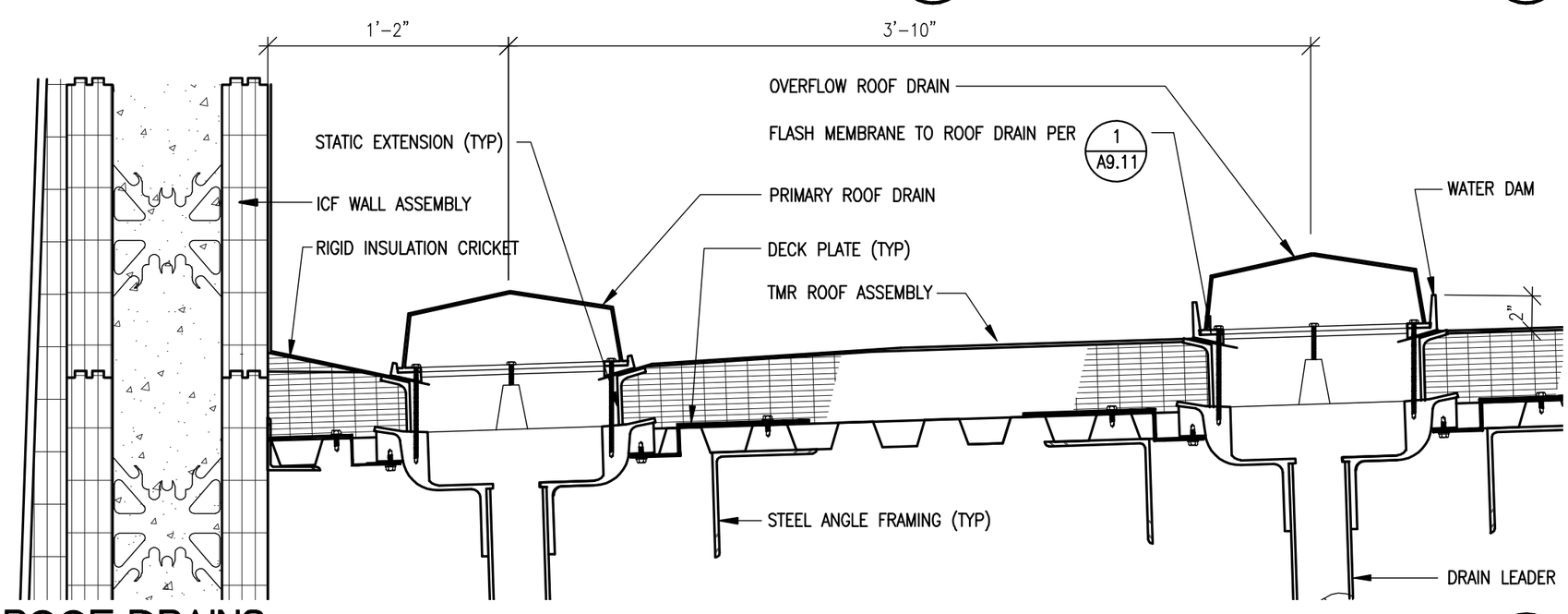

ROOF DRAINS

1 1/2" = 1'-0"

1 A9.10

© JAMES T DRESSLAR ARCHITECT, LLC. ALL RIGHTS RESERVED. UNAUTHORIZED REPRODUCTION, DISTRIBUTION, AND/OR USE IS PROHIBITED.

ISSUE / REVISIONS:	
CD REVIEW 11/2/07	
DFCM REVIEW 11/30/07	
CDD 1/2/08	

LICENSED ARCHITECT No. 93-130352 0301 JAMES T. DRESSLAR STATE OF UTAH

NOT VALID UNLESS SIGNED

TITLE: DETAILS

PROJECT NO.: DFC 0713

DRAWN BY: JTD

DATE: 9/20/07

PROJECT:
STATE OF UTAH
DIVISION OF PARKS AND RECREATION
SAND HOLLOW STATE PARK
MAINTENANCE SHED
DFCM PROJECT NO. 07025510

JAMES T. DRESSLAR
ARCHITECT, L.L.C.
387 PARK LANE
MOAB, UTAH 84532
435.259.1155 PHONE / FAX

SHEET: A9.10

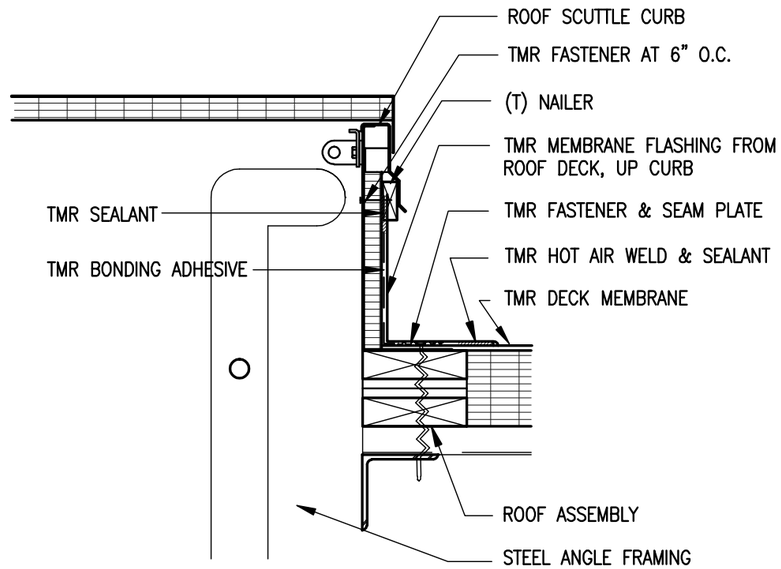

ROOF SCUTTLE

NOTES:

1. FOR ADDITIONAL THERMOPLASTIC ROOFING DETAILS, SEE 3/A9.10 1/A9.12

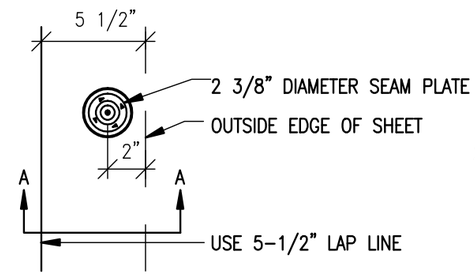

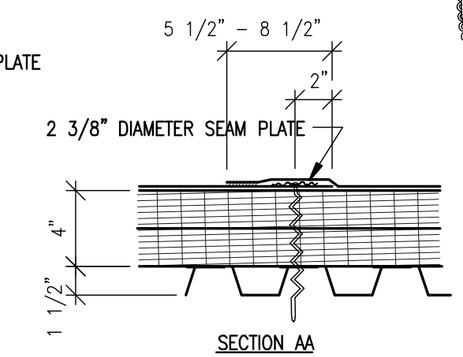

NOTES:

1. MAXIMUM SEAM OVERLAP IS 8-1/2".

SEAM PLATE

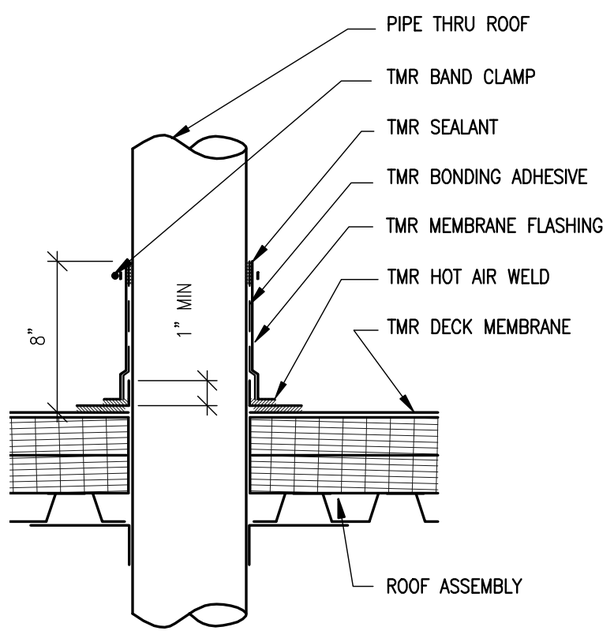

VENT THRU ROOF

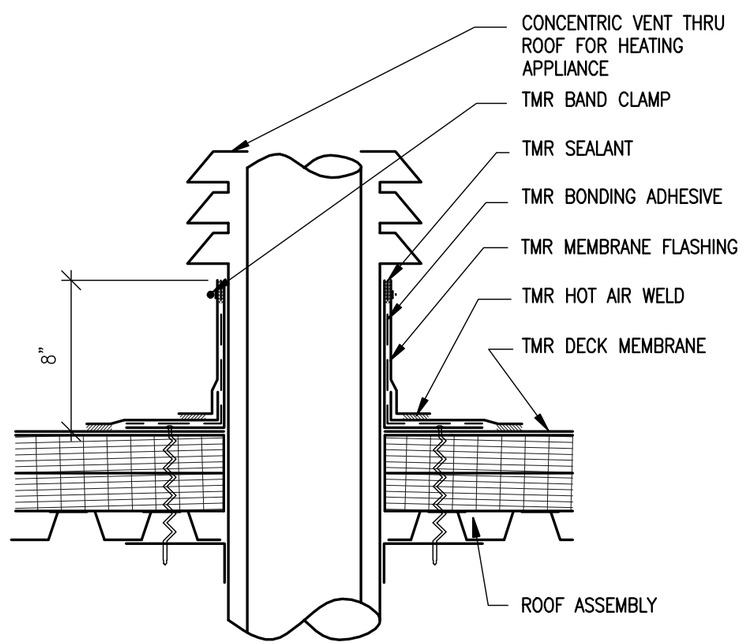

DUCT FLUE THRU ROOF

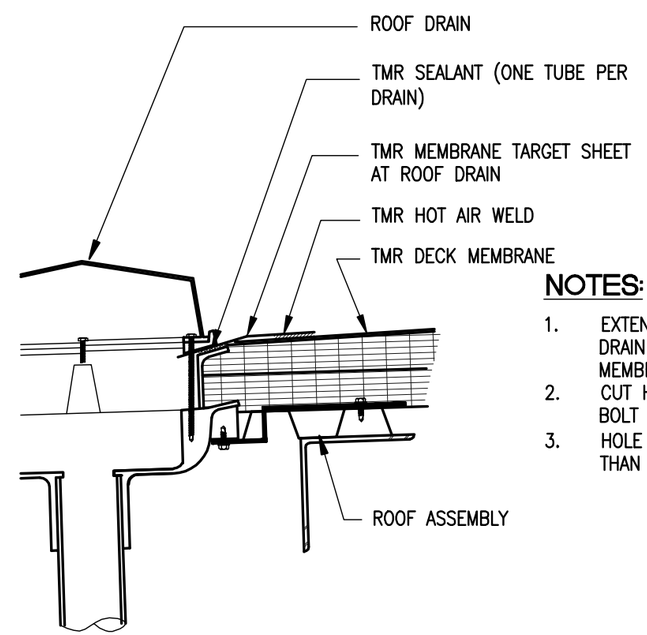

NOTES:

1. EXTEND MEMBRANE 1 1/2" BEYOND DRAIN BOLTS. DO NOT NOTCH MEMBRANE.
2. CUT HOLE IN MEMBRANE TO EQUAL BOLT DIAMETER & INSERT BOLT.
3. HOLE IN MEMBRANE SHALL BE =/> THAN DRAIN PIPE SIZE.

ROOF DRAIN

THERMOPLASTIC MEMBRANE ROOFING DETAILS

1 1/2" = 1'-0"

1 / A9.11

ISSUE / REVISIONS:
DFCM REVIEW 11/30/07
CDD 1/2/08

LICENSED ARCHITECT No. 93-130352 0301 JAMES T. DRESSLAR STATE OF UTAH

NOT VALID UNLESS SIGNED

TITLE: DETAILS

PROJECT NO.: DFC 0713

DRAWN BY: JTD

DATE: 9/20/07

PROJECT:
STATE OF UTAH
DIVISION OF PARKS AND RECREATION
SAND HOLLOW STATE PARK
MAINTENANCE SHED
DFCM PROJECT NO. 07025510

JAMES T. DRESSLAR
ARCHITECT, L.L.C.
387 PARK LANE
MOAB, UTAH 84533
435.259.1155 PHONE / FAX

SHEET: A9.11

© JAMES T DRESSLAR ARCHITECT, LLC. ALL RIGHTS RESERVED. UNAUTHORIZED REPRODUCTION, DISTRIBUTION, AND/OR USE IS PROHIBITED.

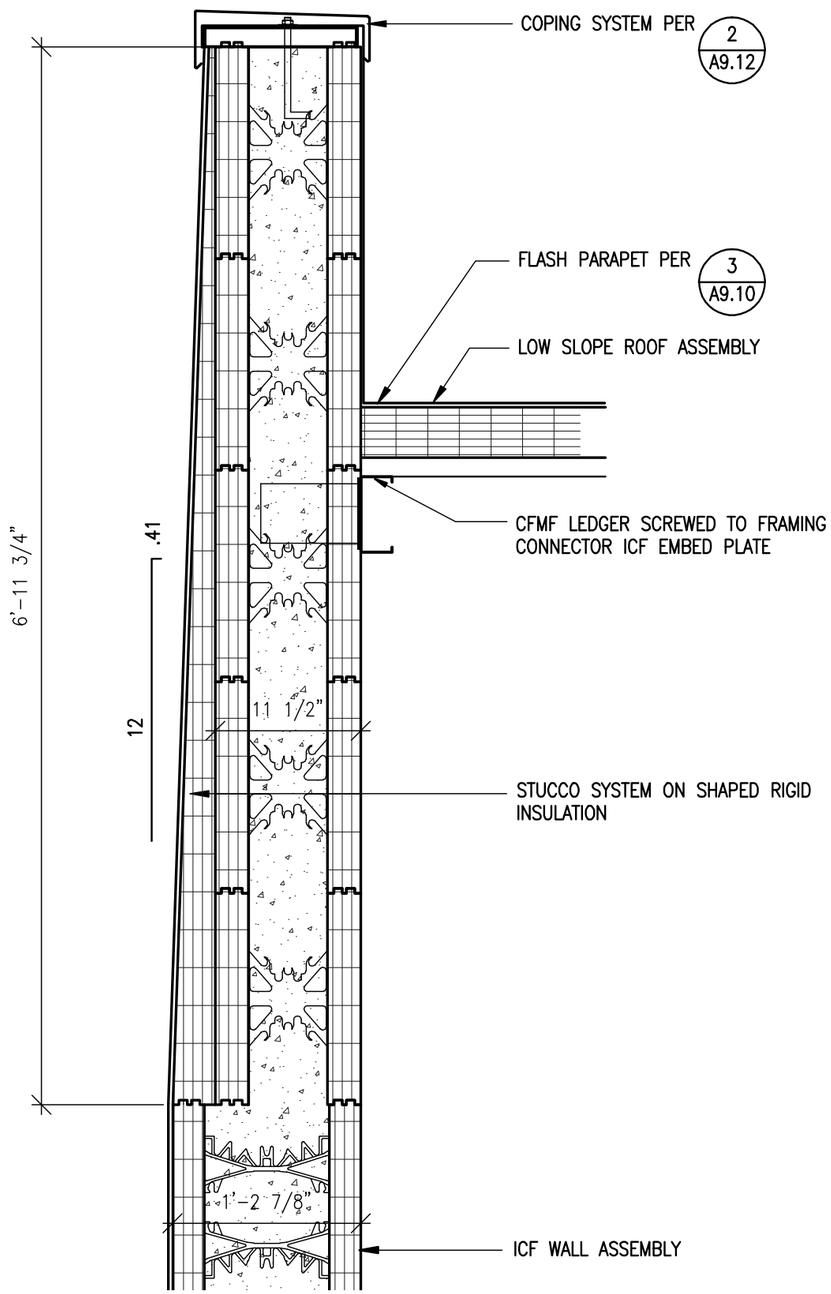

WALL CANT

1" = 1'-0"

3 / A9.12

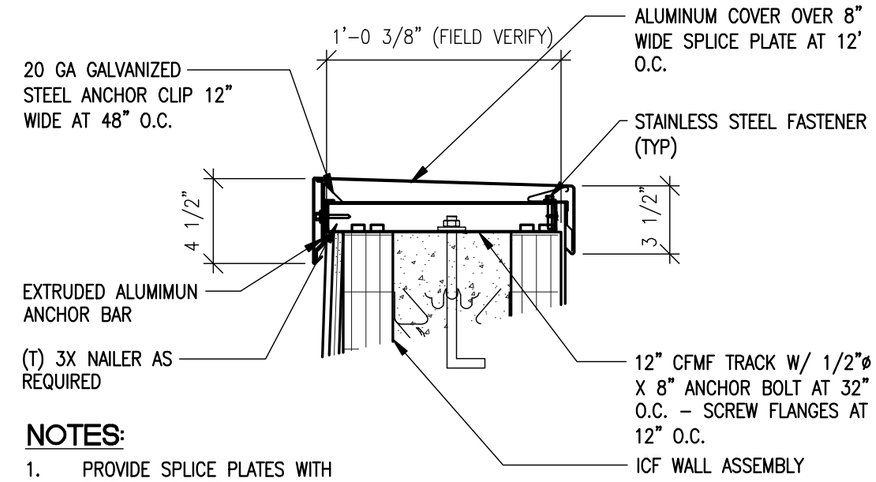

NOTES:

1. PROVIDE SPLICE PLATES WITH FACTORY APPLIED DUAL NON-CURING SEALANT STRIPS.

METAL COPING SYSTEM

1 1/2" = 1'-0"

2 / A9.12

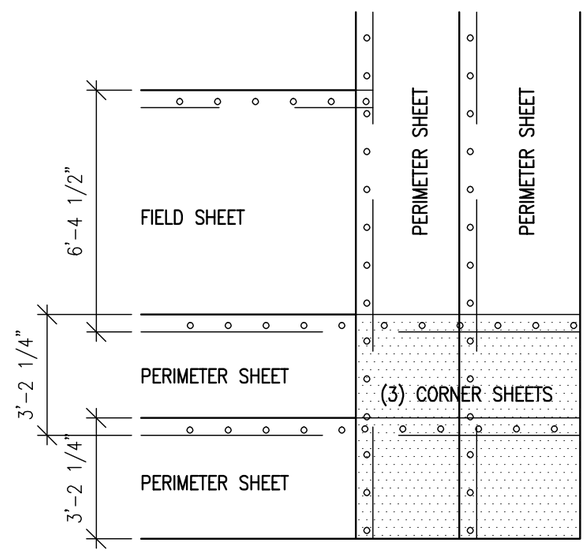

TMR SHEET LAYOUT

1/4"=1'-0"

NOTES:

1. FOR ADDITIONAL THERMOPLASTIC ROOFING DETAILS, SEE 1 / A9.11 1 / A9.12

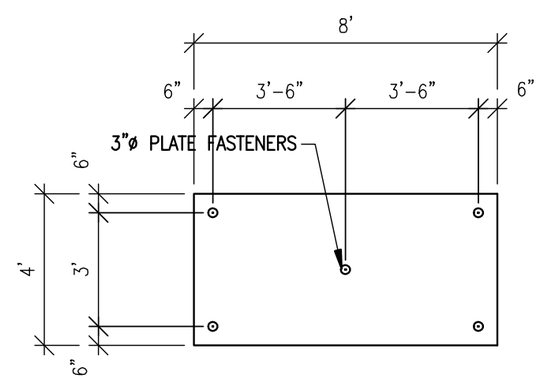

TMR INSULATION ATTACHMENT

1/4"=1'-0"

THERMOPLASTIC MEMBRANE ROOFING DETAILS

1/4" = 1'-0"

1 / A9.12

ISSUE / REVISIONS:
DFCM REVIEW 11/30/07
CDD 1/2/08

LICENSED ARCHITECT
No. 93-130352 0301
JAMES T. DRESSLAR
STATE OF UTAH

NOT VALID UNLESS SIGNED

TITLE: DETAILS

PROJECT NO.: DFC 0713

DRAWN BY:

DATE: 9/20/07

PROJECT:
STATE OF UTAH
DIVISION OF PARKS AND RECREATION
SAND HOLLOW STATE PARK
MAINTENANCE SHED
DFCM PROJECT NO. 07025510

JAMES T. DRESSLAR ARCHITECT, L.L.C.
387 PARK LANE
MOAB, UTAH 84532
435.259.1155 PHONE / FAX

SHEET: A9.12

© JAMES T DRESSLAR ARCHITECT, LLC. ALL RIGHTS RESERVED. UNAUTHORIZED REPRODUCTION, DISTRIBUTION, AND/OR USE IS PROHIBITED.