State of Utah

JON M. HUNTSMAN, JR.
Governor

GARY R. HERBERT
Lieutenant Governor

Department of Administrative Services
KIMBERLY K. HOOD
Executive Director

Division of Facilities Construction and Management
GREGG BUXTON
Director

ADDENDUM #2

Date: March 20, 2008

To: Contractors

From: Vic Middleton, Project Manager, DFCM

Reference: Greendale Maintenance Station Replacement
Utah Department of Transportation – Daggett County, Utah
DFCM Project No. 07029900

Subject: **Addendum No. 2**

Pages	Addendum	8	pages
	Table of Contents Addendum #2	3	pages
	Specification Section 02831	4	pages
	Specification Section 03052	5	pages
	Specification Section 10425	4	pages
	Specification Section 13100	15	pages
	Specification Section 13125	26	pages
	Specification Section 15491	2	pages
	Drawing Set Reissued	47	pages
	Total	**114**	**pages**

Note: This Addendum shall be included as part of the Contract Documents. Items in this Addendum apply to all drawings and specification sections whether referenced or not involving the portion of the work added, deleted, modified, or otherwise addressed in the Addendum. Acknowledge receipt of this Addendum in the space provided on the Bid Form. Failure to do so may subject the Bidder to disqualification.

2.1 SCHEDULE CHANGES:

There are no schedule changes per this addendum, the Revised Project Schedule dated February 26th, 2008 is current.

2.2 QUESTIONS RECEIVED:

Contractor Questions and Agency comments have been addressed and included in the revision of

the Construction Documents.

2.3 PRODUCT APPROVALS:

Listed products and manufactures are approved for bidding. This approval does not relieve the supplier, bidder or manufacture from satisfying the intent of the contract documents including addenda in every aspect. Failure to conform to the design quality may result in later disapproval. If any product is disapproved after bidding, the product supplier shall supply specified equipment at no extra cost to the owner. Items listed are approved in general and specific details of performance, ratings, model number, etc. are required as part of the shop drawing process and shall be as submitted.

2.3.1 Spec. Section 10100: Marker Boards
a. Visual Display Boards: AARCO

2.3.2 Mechanical Equipment:
a. Louvers: Cesco
b. Motorized Control Dampers: Cesco
c. Manual Volume Dampers: Air-Rite
d. Flexible Duct: Thermaflex

2.3.3 Plumbing Equipment:
a. Drainage Products: Mifab Engineered Drainage Products.
b. Plumbing products: Briggs/Sayco

2.3.4 Lighting Equipment:
a. Light fixtures: Lithonia, Day-Brite, Gardco, Emco
b. Lighting Control: PCI, Leviton
c. Occupancy Sensors: Novitas

2.4 DESCRIPTION OF GENERAL ADDENDUM ITEMS:

2.4.1 The complete **drawing set has been revised and is re-issued with this Addendum.** Owner requested the deletion of the mezzanine and mezzanine access. Walls around office area extend 18'-0" A.F.F. Building footprint has been revised to incorporate larger truck bays. All drawings for all disciplines have been revised showing new building footprint & layout.

2.4.2 No Metal Building Manufacturer will be allowed to incorporate mezzanine framing with Metal Building Structure.

2.4.3 Specification Sections: New Sections: Section 13100 Fuel Island Requirements; Section 15491 added due to the fact an Air Compressor was added to the scope of work. Section 03052 is included as contractor's options only, use of this system is in lieu of the sections or materials they replace as defined within the new specification section. The following Specification Sections have been updated and are re-issued as per this Addendum. Sections 02831, 10425 & 13125 modify the previously provided sections.

- 02831-Horizontal Sliding Gate Operators – Addendum #2
  - Updated Paragraph 2.2.F to delete references to 2 gates.
- 10425-Signs – Addendum #2
  - Coordinated Signage required for modified station.
- 13125-Metal Building Systems – Addendum #2
  - 13125.1.4.C.6: Clarified the application of the collateral load.
  - 13125.2.9.C: Changed the wall panel paint system to silicone polyester.
  - 13125.2.13.G: Snow Guards are required in this project.

2.4.4 Contractor to provide and install conduit and pull boxes for phone system. Wiring and installation will be provided by State ITS department.

2.5 CIVIL ADDENDUM ITEMS:

2.5.1 AD101:

a. Area of asphalt removal and saw cut revised around existing building.
b. Note about brine tanks and pump house relocation revised.
c. Note about salvage of existing fuel island added..

2.5.2 C100:

a. Revised site to show larger maintenance building.
b. New covered fuel island design and layout added.
c. Brine Tank relocation note revised.
d. General notes from DFCM added.
e. Water line that is being relocated around back of new building has been moved and extended to accommodate for the larger building and new building under drain pipe.
f. Handicap stall added.

2.5.3 C101:

a. Building under drain detail added.
b. Handicap stall and sign detail added.

2.5.4 C200:

a. Site grading revised to accommodate larger building.
b. Swale on north side of building re-aligned to north.
c. 4” Under drain added around north and west sides of new building.

2.5.5 C201:

a. New building footprint added.

2.5.6 C:300

a. New building footprint added.
b. Erosion control fence revised along north side of swale where under drain will be installed.

2.6 ARCHITECTURAL ADDENDUM ITEMS:

2.6.1 G000:

a. Revised Code Analysis; no emergency eye wash required at this facility.
b. Add General Note #3.

2.6.2 G001:

a. Revised Index of Drawings

2.6.3 AE101:

a. Added additional air & water hose reel.
b. Added compressor & pad near grid 7A.
c. Revised storage area layout
d. Revised building dimensions.
e. Increased size of concrete apron @ grid 7C
f. Deleted Mezzanine Plan
g. Deleted. Stair
h. Deleted Pipe bollards along grid A.

i. Deleted rain gutter, downspouts & snow guard at back of building only.

2.6.4 AE121:

a. Added dimensions to locate all light fixtures.
b. Added additional air & water hose reel.
c. Revised light layout in storage area.
d. Revised exterior light fixture layout.
e. Delete light fixture near grid 7C.
f. Deleted Mezzanine Plan

2.6.5 AE141:

a. Added second row of Snowguard system.
b. Deleted rain gutter, downspouts & snow guard at back of building only.

2.6.6 AE201:

a. Added second row of Snowguard system.
b. Revised exterior light fixture layout.
c. Relocated upper Exhaust fan/louver.
d. Relocated Emergency disconnect.
e. Deleted rain gutter, downspouts & snow guard at back of building only.
f. Deleted Upper mezzanine window.

2.6.7 AE202:

a. Added second row of Snowguard system.
b. Revised exterior light fixture layout.
c. Relocated Emergency disconnect.
d. Deleted rain gutter, downspouts & snow guard at back of building only.
e. Deleted center downspout at East elevation.

2.6.8 AE203:

a. Added second row of Snowguard system.
b. Revised exterior light fixture layout.
c. Relocated Emergency disconnect.
d. Relocated upper Exhaust fan/louver.
e. Deleted rain gutter, downspouts & snow guard at back of building only.
f. Deleted center downspout at East elevation.
g. Deleted Upper mezzanine window.

2.6.9 AE204:

a. Added second row of Snowguard system.
b. Revised exterior light fixture layout.
c. Relocated Emergency disconnect.
d. Relocated upper Exhaust fan/louver.
e. Deleted rain gutter, downspouts & snow guard at back of building only.
f. Deleted center downspout at East elevation.
g. Deleted Upper mezzanine window.

2.6.10 AE301:

a. Added enlarged Structural bracing section.
b. Revised top of wall condition.
c. Revised storage area layout.
d. Deleted mezzanine & stairs

2.6.11 AE311:

a. Revised A2/AE311 to delete Mezzanine & show structural bracing.

2.6.12 AE401:

a. Revised storage area layout.
b. Revise detail A2/AE401.

2.6.13 E402:

a. Delete entire sheet.

2.6.14 AE501 –

2.1 Added Wall type "J".
2.2 Revised wall types A, B, D, F, G & H.

2.6.15 AE502 -

a. Revised Interior Elevation A3/AE502.
b. Revised Ceiling Detail C4/AE502.
c. Deleted details B2 & A2/AE502.

2.6.16 AE503 -

a. Added Snowguard fence system in detail A4/AE503.
b. Deleted Details C2 & D3/AE503

2.6.17 AE601 –

a. Revised door schedule to show door frame widths.
b. Revised details A1, A2, B2 & D4/AE601 to show plywood panel.
c. Revised plywood attachment at column conditions – Detail C2/AE601.

2.6.18 AE602 -

a. Revised Room finish legend as shown.
b. Revised Room finish schedule as shown.
c. Delete upper window details A2, C3 & D3/AE601.
d. Delete upper window frame elevation.

2.6.19 AE 701

a. Added Motorized Gate plan.
b. Revised fuel island plan & elevation.
c. Revised Gate housing section.

2.7 STRUCTURAL ADDENDUM ITEMS:

2.7.1 S001:

a. Updated Basis of Design to clarify loading requirements to include the site elements.
b. Updated Metal Decking notes to remove mezzanine floor, but added metal roof decking because of the fuel island.
c. Updated various sections to remove references to soils report as non will be available for the project.

2.7.2 G001:

a. Revised Index of Drawings.

2.7.3 AE101:

a. Added additional

2.7.4 S101:

a. Updated entire plan due to change in building dimensions and the removal of the mezzanine.

2.7.5 S201:

a. Update entire sheet for a revised fuel island canopy design.

2.7.6 S501:

a. Added the slope marks to detail B4 “At opening in Wall” to emphasize the change in slope occurring in the slabs at the roll-up door locations.
b. Corrected the call out reference for detail A4.

2.7.7 S502

a. Updated entire sheet to change the fencing gate house design and to remove the mezzanine details.

2.7.8 S503:

a. Deleted this sheet.

2.7.9 S601

a. Added FC5.5 and FS6.5 to the footing schedule, Detail C 1
b. Updated the column schedule, Detail A3.

2.8 MECHANICAL ADDENDUM ITEMS:

2.8.1 M001 -

a. Removed Condensing Unit Schedule and furnace air conditioning coil.
b. Revised Register, Louver and Grille Schedule.
c. Added Mechanical ComCheck to plan.

2.8.2 M201 –

a Removed Mezzanine Plan.
b Removed Key notes associated with mezzanine work
c Relocated Furnace.
d Removed Condensing Unit and Air Conditioning coil.
e Revised Ductwork showing no mezzanine.
f Revised keynote 18.

2.8.3 M601 –

a Revised Furnace Detail 7.
b Added Detail 8, Outside Air Duct Detail.
c Deleted Details 1 & 2.

2.9 PLUMBING ADDENDUM ITEMS:

2.9.1 P001 -

a Added Air Compressor Specification
b Revised specification for drinking fountain in the Plumbing Fixture Schedule .

2.9.2 P201 –

a Added air compressor and air line piping.
b Added Air and water hose reels
c Deleted Mezzanine.
d Deleted keynote 8 regarding future piping.
e Revised Keynote 9.
f Revised Keynote 11.
g Revised Keynote 14.
h Added Keynotes 20 -22.

i Relocated Water heater.
j Relocated Pressure tank and pump.

2.9.3 P301 –

a Removed mezzanine plan.
b Removed keynotes associated with mezzanine plan.
c Revised drainage piping removing drains from mezzanine.
d Relocated water piping drops to sink in Training Room.

2.9.4 P601 –

a Added Detail 6, Seismic Restraint of Piping.

2.9.5 P602 –

a Added Seismic Gas Valve Detail.

2.9.6 P603 -

a Revised Detail 9, Water Pressure System.

2.9 ELECTRICAL ADDENDUM ITEMS:

2.9.1 E001 -

a Added L12 to the Light Fixture Schedule for the Fuel Island
b Deleted CU-1, Air Conditioner, from the Mechanical Equipment Schedule, Added AC-1, Air Compressor.

2.9.2 E002 -

a Removed Detail 1, Lighting Control Configuration.
b Added ComCheck Analysis Report.
c Updated Panel Schedules and load Calculations to incorporate changes in loads.

2.9.3 E101:

a Added power for fuel equipment: two circuits for pumps, four circuits for dispenser, one circuit for card reader, and one circuit for light. Also added fuel emergency stop switch.
b Added keynotes 11, 12, 13, 15 & 16 to clarify new equipment at fuel island.
c Added Detail 1 and keynote 14 to clarify fuel emergency stop switch installation.
d Relocated panels M & phone/data terminal board to North West corner of building. Rerouted service entrance conduit and cable to same location.
e Changed keynotes 7 & 8 to specify new location (Storage Area) for equipment.
f Reworded all references to gate “Card Reader” to “Key Pad”.

2.9.4 E201 -

a Removed Mezzanine plan from drawing.
b Deleted Exterior Lighting Control Panel and associated Keynote 8.
c Removed exterior light from West side of building, two L6’s from North side and two L7’s from East side. Relocated on L6 from East side of Building to Gridline 6. Changed one L7 on North side to L6.
d Relocated lights in Storage Area to be centered in room. Added home run to circuit A-7.
e Removed Keynote 3 reference in Office Area.
f Added three-way switches for lights in Repair Garage.
g Removed one L1 fixture from Repair Garage closest to South door.
h Relocated convenience outlet in Storage Area.
i Relocated all equipment and circuits from Mezzanine to Storage area.
j Removed two phone/data outlets form office area.

k Deleted CU-1 and all associated electrical equipment.
l Removed Gutter and Roof Heat Tap for back (West) of building.
m Added disconnect for AC-1 in SW corner of Repair Garage
n Removed Key Notes 2, 3, 4, 6, 7, 8 and 9. These notes all related to the mezzanine and Exterior Light Controls which were deleted.

End of Addendum #2

TABLE OF CONTENTS

DOCUMENTS
COVER SHEET
PROFESSIONAL STAMPS
LIST OF WARRANTIES
TABLE OF CONTENTS

TECHNICAL SPECIFICATIONS

DIVISION 1 - GENERAL REQUIREMENTS

01010	SUMMARY OF WORK
01027	APPLICATIONS FOR PAYMENT
01035	MODIFICATION PROCEDURES
01040	PROJECT COORDINATION
01045	CUTTING AND PATCHING
01050	FIELD ENGINEERING
01095	REFERENCE STANDARDS AND DEFINITIONS
01096	MATERIAL KEYNOTE LEGEND
01200	PROJECT MEETINGS
01300	SUBMITTALS
01400	QUALITY CONTROL SERVICES
01500	TEMPORARY FACILITIES
01600	MATERIALS AND EQUIPMENT
01631	PRODUCT SUBSTITUTIONS
01700	PROJECT CLOSEOUT
01740	WARRANTIES AND BONDS

DIVISION 2 - SITEWORK

02050	DEMOLITION
02051	GENERAL SITE CONSTRUCTION REQUIREMENTS
02110	SITE CLEARING
02200	EARTHWORK
02511	SLURRY COAT FOR ZERO VOIDS ASPHALT PAVING
02512	ZERO VOIDS ASPHALT PAVING
02513	ASPHALT CONCRETE PAVING
02514	PORTLAND CEMENT CONCRETE PAVING
02530	SANITARY SEWERAGE
02666	POTABLE WATER SYSTEMS
02720	STORM SEWERAGE SYSTEMS
02765	PAVEMENT MARKINGS
02822	CHAIN LINK FENCES AND GATES
02831	HORIZONTAL SLIDING GATE OPERATORS ² ADDENDUM #2

DIVISION 3 - CONCRETE

03052	CONCRETE WATERPROOFING SYSTEM ² ADDENDUM #2
03053	CONCRETE WATERPROOFING SYSTEM
03054	OLIOPHOBIC SEALER
03300	CAST-IN-PLACE CONCRETE

DIVISION 5 - METALS

05120 STRUCTURAL STEEL
05310 STEEL DECK
05400 COLD-FORMED METAL FRAMING
05500 METAL FABRICATIONS
05510 METAL STAIRS
05521 PIPE AND TUBE RAILINGS
05530 GRATINGS

DIVISION 6 - WOOD AND PLASTICS

06105 MISCELLANEOUS CARPENTRY
06402 INTERIOR ARCHITECTURAL WOODWORK
06651 SOLIDS SURFACE FABRICATIONS

DIVISION 7 - THERMAL AND MOISTURE PROTECTION

07122 HOT FLUID-APPLIED WATERPROOFING
07210 BUILDING INSULATION
07729 ROOF SNOW GUARDS
07901 JOINT SEALANTS

DIVISION 8 - DOORS AND WINDOWS

08111 STANDARD STEEL DOORS AND FRAMES
08360 SECTIONAL OVERHEAD DOORS
08521 HORIZONTAL SLIDING VINYL WINDOWS (PVC)
08710 DOOR HARDWARE
08800 GLAZING

DIVISION 9 - FINISHES

09255 GYPSUM BOARD ASSEMBLIES
09300 TILE
09511 ACOUSTICAL PANEL CEILINGS
09660 RESILIENT TILE FLOORING
09678 RESILIENT WALL BASE AND ACCESSORIES
09900 PAINTING

DIVISION 10 - SPECIALTIES

10100 VISUAL DISPLAY BOARDS
10425 SIGNS ² ADDENDUM #2
10522 FIRE EXTINGUISHERS, CABINETS, AND ACCESSORIES
10800 TOILET AND BATH ACCESSORIES

DIVISION 12 - FURNISHINGS

12511 HORIZONTAL LOUVER BLINDS

DIVISION 13 ² SPECIAL CONSTRUCTION

13100 FUEL ISLAND REQUIREMENTS ² ADDENDUM #2
13125 METAL BUILDING SYSTEMS ² ADDENDUM #2

DIVISION 15 - MECHANICAL

15000 GENERAL MECHANICAL
15050 BASIC MATERIALS & METHODS
15060 PIPE AND PIPE FITTINGS
15170 MOTORS
15180 PIPE AND EQUIPMENT IDENTIFICATION
15191 AIR SYSTEM TESTING AND BALANCING
15200 VIBRATION, NOISE CONTROL AND SEISMIC PROTECTION
15211 GENERAL SERVICE COMPRESSED AIR -PIPING
15250 INSULATION
15251 HOT WATER AND COLD WATER PIPE INSULATION
15258 DUCT INSULATION
15400 PLUMBING SYSTEMS
15410 PLUMBING FIXTURES
15411 HOT AND COLD WATER SYSTEMS AND DRAIN PAN PIPING SYSTEMS
15413 SOIL, WASTE AND VENT PIPING SYSTEM
15452 DRINKING WATER COOLING SYSTEM
15486 FUEL FIRED WATER HEATERS
15491 AIR COMPRESSORS ² ADDENDUM #2
15576 FLUES
15577 FURNACE AIR PIPING
15600 RADIANT TUBE HEATERS
15611 GAS-FIRED FURNACES
15670 CONDENSING UNITS
15820 DUCT ACCESSORIES
15838 POWER VENTILATORS
15855 DIFFUSERS, REGISTERS, AND GRILLES
15861 STEEL DUCT
15862 ROUND DUCTWORK
15867 DUCTWORK TESTING
15887 LOUVERS AND VENTILATORS
15970 CONTROL SYSTEMS
15985 SEQUENCE OF OPERATION

DIVISION 16 - ELECTRICAL

16001 ELECTRICAL GENERAL PROVISIONS
16060 GROUNDING AND BONDING
16070 ELECTRICAL HANGERS AND SUPPORTS
16075 ELECTRICAL INDENTIFICATION
16123 BUILDING WIRE AND CABLE
16129 ELECTRICAL HEAT TRACING SYSTEM
16130 RACEWAY AND BOXES
16140 WIRING DEVICES GENERAL
16210 ELECTRICAL UTILITY SERVICES
16411 ENCLOSED SWITCHES
16442 PANELBOARDS
16510 INTERIOR LUMINAIRES
16520 EXTERIOR LUMINAIRES

SECTION 02831 – HORIZONTAL SLIDING GATE OPERATORS

PART 1 - GENERAL

1.1 SECTION INCLUDES

A. Pre-wired, self-contained, slide gate operator for horizontal cantilever sliding gates, including selected attachments and accessory equipment.

1.2 RELATED DOCUMENTS

A. Drawings and general provisions of contract, including General and Supplementary Conditions.

1.3 RELATED SECTIONS

A. Division 1 Specification Sections including, but not limited to, following:
   1. Section 01300 Submittal Procedures.

B. Fencing: See Section 02815.

C. Cast-in-Place Concrete: See Section 03300

D. Division 16 Electrical: Electrical service and connections.

1.4 SUBMITTALS

A. General: Comply with requirements of Section 01300.

B. Shop drawings: Submit drawings showing connections to adjacent construction, range of travel, and all electrical and mechanical connections to operator. Drawings shall also show size and location of concrete mounting pad

C. Installation instructions.

D. Test reports:
   1. Submit affidavit(s) from manufacturer demonstrating that gate mechanism has been tested to 2,000,000 cycles without breakdown.
   2. Each Operator shall bear label indicating that operator mechanism has been tested for full power and pressure of all hydraulic components, full stress tests of all mechanical components and electrical tests of overload devices.

E. Operations and Maintenance Manual: Identify parts of equipment for future procurement.

1.5 QUALITY ASSURANCE

A. Manufacturer: company specializing in manufacture of hydraulic security gate operators of type specified, with minimum of 7 years experience with gate operators of this type and design.

B. Installer: Minimum of 3 years experience installing similar equipment.

C. Fence installer and gate operator installer are responsible to provide a coordinated and completely operational sliding gate design and installation with selected horizontal gate operator and accessories, and functionality requested.

1.6 CODES AND REGULATORY REQUIREMENTS

A. Operators shall be built to standards of Underwriters Laboratories UL325 Class III and bear U.L. Listed Label. Complete electrical work according to applicable codes including local codes and National Electrical code. Field work shall be performed in neat and professional manner, completed to journeyman standards.

B. Current safety standards require the use of multiple external sensors to be capable of reversing the gate in either direction upon sensing an obstruction.

1.7 PRODUCT DELIVERY AND STORAGE

A. Store products upright in the original shpping containers, covered, ventilated and protected from all weather conditions.

1.8 WARRANTY

A. Provide 5-year limited warranty against defects in materials or workmanship. Replace defective materials with comparable materials furnished by manufacturer at no cost to Owner.

PART 2 - PRODUCTS

2.1 GATE OPERATORS

A. Acceptable Manufacturers: Subject to compliance with requirements, manufacturers offering products that may be incorporated into Work include following:
1. Hy-Security Gate Operators 222 EX-ST.
2. The Tymetal Corporation.
3. or equal.

B. Basis for Design: Model 222 EX-ST Class III by Hy-Security Gate Operators.

2.2 OPERATION

A. Operation shall be by means of metal rail passing between pair of solid aluminum wheels with polyurethane threads. Operator motors shall be hydraulic, geroller type, and system shall not include belts gears, pulleys, roller chains or sprockets to transfer power from operator to gate panel. Operator shall generate minimum horizontal pull of 300 pounds without drive wheels slipping and without distortion of supporting arms. Gate panel velocity shall not be less than 3.3 feet per second and shall be stopped gradually to prevent shock loads to gate and operator assembly. “Soft stop” feature of fate operator shall be adjustable from minimum of 1 second, to accommodate gates.

B. Standard mechanical components shall include as minimum:
1. Supporting arms: Cast aluminum channel. Arms shall incorporate fully bushed, 1-1/2 inch bearing surface.
2. Arm pivots: ¾ inch diameter, stainless steel pins, in hinge configuration with supporting arm channel.
3. Tension spring: 2-1/2 inch heavy duty, 800 pound capacity.
4. Tension adjustment: Finger tightened nut, not requiring us of tools.
5. Drive release: instant release tension of both drive wheels and be capable of disengaging from contact with rail in single motion, for manual operation.
6. Push-button operation: 3 button station mounted permanently on exterior of electrical panel.
7. Limit switches: Fully adjustable, toggle type, NEMA 4.
8. Electrical enclosure: Oversized metal type with hinged lid and gasketed to provide protection from intrusion of foreign objects.

9. Chassis base: ¼ inch steel plate, welded and ground edges, powder paint finish smooth to touch.
10. Cover: 10 gage galvanized steel metal with zinc flame spray finish. Joints welded, filled and ground smooth. Finished corners square and true with no visible joints.
11. Drive wheels: Aluminum hub with polyurethane tread and durometer hardness not less than 80.
12. Drive rail: Extruded 6061 T6, not less than 1/8 inch thick. Incorporate alignment pins for ease of replacement, splicing and for break-away design. Pins shall provide perfect butt splice.
13. Hydraulic hose: ¼ inch synthetic, rated to 2750 psi.
14. Hydraulic valves: Individually replaceable in integrated hydraulic manifold.
15. Hose fittings: At manifold shall be quick disconnect type, swivel type at other locations.
16. Hydraulic fluids: High performance type with viscosity index greater than 375.

C. Minimum standard electrical components: Operator assembly shall be “Listed” by Underwriters Laboratories, Inc.
1. Pump motor: Minimum service factor of 1.15 HP. Standard voltages available, single or 3-phase.
2. Components: Overload protected.
3. Controls: Industrial grade relays, hard-wired with individually numbered wires.
4. Transformer: 75 VA, non jumpered taps, for common voltages.
5. Maximum run timer: Included in operators.
6. Control Circuit: 24 VAC.
7. Two pole “dry contact” output for interlocking 2 gate operators, and/or output for operation of secure/unsecured indication lights.
8. Sensitive, low current interface for connection of remotely located control stations.
9. Output contact to initiate unlocking operation of external solenoid locks.
10. Input terminals to allow interface connection of external solenoid interlocking contacts.
11. Start delay timer to allow external locks time to release before gate moves.

D. Safety devices: Provide all safety devices as necessary for compliance with applicable codes and regulations for intended use, including but not limited to: reversing edge, and for stopping or reversing gate travel: photo cell beams.

E. Adjustable brake valves to effect soft stop control for gates weighing up to 4000 pounds.

F. Additional Features:
1. Heater with thermostat control for cold or damp climates.
2. Weather-stripped operator covers.
3. Remote Control gate release devices. Places operator in “Manual mode” from remote location.
4. Remote control gate operators to automatically open and close the gates: 10 remotes
5. Special controls for extra duty or gates weighing in excess of 1000 pounds.
6. High speed operations for more than 1 foot per second travel.
7. Electrical 208 VAC, 3-phase
8. One Keypad
9. One Intercom at gate to receiving unit in office.
10. Ground obstruction safety loop for exit calls on station side of gate.
11. All controls necessary to operate features provided including controls which allow for systems functionality to be flexibly modified by User as their security and operational needs require.

2.3 FACTORY TESTING

A. Fully assemble and test, at factory, each gate operator to assure smooth operation, sequencing and electrical connection integrity. Apply physical loads to operator to simulate field conditions.

Tests shall simulate physical and electrical loads equal to fully rated capacity of operator components.

B. Check mechanical connections for tightness and alignment. Check welds for completeness and continuity. Check welded corners and edges to assure they are square and straight.

C. Inspect painted finish for completeness and gloss. Touch up any imperfections prior to shipment.

D. Check hydraulic hoses and electrical wires to assure that chafing cannot occur during shipping or operation.

PART 3 - EXECUTION

3.1 SITE EXAMINATION

A. Locate on existing concrete mounting pad in accordance with approved shop drawings.

B. Make sure that gate is operating smoothly under manual conditions before installation of gate operators. Do not proceed until gate panel is properly aligned and operates without binding.

C. Operators shall be built to standards of Underwriters Laboratories and bear U.L. Listed Label. Complete electrical work according to local codes and National Electrical code. Field work shall be performed in neat and professional manner, completed to journeyman standards.

3.2 INSTALLATION

A. Install gate operator in accordance with manufacturers printed instruction, current at the time of installation. Coordinate locations of operators with contract drawings, other trades and shop drawings.

B. Installer shall insure that electric service delivered to operator is at least 20 AMP

3.3 FIELD QUALITY CONTROL

A. Test gate operator through 10 full cycles and adjust for operation without binding, scraping or uneven motion. Test limit switches for proper “at rest” gate position. Installer shall return 6 months after substantial completion and fully adjust gates, operator and related components to function within manufacturer’s tolerances and optimum operating condition and safety.

B. Anchor bolts shall be fully concealed in finished installation.

3.4 CONTINUED SERVICE AND DOCUMENTATION

A. Train owner’s personnel in general maintenance of gate operator and accessories.

END OF SECTION 02831

SECTION 03052 – CONCRETE WATERPROOFING SYSTEM

PART 1 - GENERAL

1.01 DESCRIPTION

A. SECTION INCLUDES:

1. This section specifies an integral concrete waterproofing system that can be used as a contractor's option entirely in lieu of the 03053 CONCRETE WATERPROOFING ADMIXTURE previously specified.

2. This section includes: Furnishing of all labor, materials, services and equipment necessary for the supply and installation of cementitious crystalline waterproofing mixed in concrete prior to placement as indicated on drawings and/or as specified.

3. This section includes crystalline waterproofing treatment of construction joints between successive concrete pours.

4. This section includes: Cleaning of concrete surface.

1.02 RELATED SECTIONS:

A. Section 03300 – Cast In Place Concrete
B. REPLACES - Section 03053 – Concrete Waterproofing Admixture
C. Section 03054 – Oliophobic Sealer
D. Section 07901 – Caulking and Sealants

1.03 SYSTEM DESCRIPTION

A. The complete systems include Cementitious Crystalline Waterproofing a blend of Portland cement, fine treated silica sand and active proprietary chemicals. When mixed with water and applied as an integral admixture, the active chemicals cause a catalytic reaction which generates a non-soluble crystalline formation of dendritic fibers within the pores and capillary tracts of concrete. This process causes concrete to become permanently sealed against the penetration of liquids from any direction in conjunction with the crystalline waterproofing treatment of construction joints between successive concrete pours. In addition, the completed system shall be warranted for five (5) years as a total and complete system. When appropriately cured the system shall be sealed using the product as described in Section 03054 – Oliophobic Sealer.

1.04 REFERENCES

A. ACI 305R - Hot Weather Concreting; 1999.

B. ACI 306R - Cold Weather Concreting; 1988.

C. ACI 308 - Standard Practice for Curing Concrete; 1992 (Re-approved 1997).

D. ASTM C 39/C 39M - Standard Test Method for Compressive Strength of Cylindrical Concrete Specimens; 1999.

E. ASTM C 309 - Standard Specification for Liquid Membrane-Forming Compounds for Curing Concrete; 1998a.

F. ASTM C 666 - Standard Test Method for Resistance of Concrete to Rapid Freezing and Thawing; 1997.

G. ASTM E 329 - Standard Specification for Agencies Engaged in the Testing and/or Inspection of Materials Used in Construction; 1998a.

H. COE CRD-C 48 - Standard Test Method for Water Permeability of Concrete; 1992.

I. NSF 61 - Drinking Water System Components - Health Effects; 2000a.

1.05 SUBMITTALS

A. Submittals shall comply with the General Conditions and Division-1 Specification Sections. Submit the following:

1. Submit under provisions of Section 01300.

2. Product Data: Manufacturer's printed data sheet, for specified products.

3. Test Reports: Certified test reports showing compliance with specified performance characteristics and physical properties.

   i. Testing Agency: Independent laboratory meeting the requirements of ASTM E329 and certified by the United States Bureau of Standards, Army Corp of Engineers, and American Concrete Institute.

4. Certificates: Product certificates notarized by manufacturer certifying that:

   i. Materials comply with specified performance characteristics and physical requirements.

   ii. Installer is qualified and approved by manufacturer.

5. Manufacturer's installation instructions.

1.06 QUALITY ASSURANCE

A. MANUFACTURER QUALIFICATIONS: Minimum 10 years experience manufacturing and having at least 10 finished installations of crystalline waterproofing of the type and approximate project scope or greater specified.

B. CONCRETE BATCH OPERATOR QUALIFICATIONS: Certified by Manufacturer for mixing and use of Crystalline Waterproofing Admixture Products.

C. PRE-INSTALLATION MEETING: Prior to installation, conduct a meeting with the General Contractor, owner's representative, Architect, concrete installer, installers of adjacent work and work penetrating concrete, and admixture waterproofing manufacturer's representative to verify project requirements, substrate conditions, manufacturer's installation instructions, and manufacturer's warranty requirements; notify the Owner and Architect at least one week in advance of meeting.

D. APPLICATOR: Waterproofing applicator shall be experienced in the installation of cementitious crystalline waterproofing materials as demonstrated by at least 10 previous successful installations, and shall be approved by the manufacturer in writing.

E. TECHNICAL CONSULTATION: Provide minimum of 1 person who shall be present during execution of Work, who shall be thoroughly experienced in installation of specified materials, and who shall direct Work performed under this section. The waterproofing

manufacturer's representative shall provide technical consultation on waterproofing application.

F. INSTALLER CERTIFICATION: Upon completion of application of waterproofing, submit certification that specified materials were applied in accordance with approved manufacturer's recommended procedures.

1.07 DELIVERY, STORAGE AND HANDLING

A. DELIVERY: Deliver packaged waterproofing materials to project site in original undamaged containers, with manufacturer's name, labels, product identification and seals intact.

B. STORAGE: Store all material in a secure, dry and temperature controlled area on pallets maintaining temperatures as recommended by the manufacturer's until installed.

C. HANDLING: A sufficient quantity of all materials including but not limited to waterproofing and construction joint products shall be stored on site or be readily available prior to starting the work to insure that the work will be continuous from start to completion without delay due to material shortage or unavailability.

1.08 WARRANTY

A. MANUFACTURER'S WARRANTY: Manufacturer's Warranty: Provide manufacturer's standard warranty document executed by authorized company official; warranty period: minimum Ten (10) years, commencing on Date of Substantial Completion.

B. APPLICATOR'S WARRANTIES: Applicator shall warrant the waterproofing and construction joint system(s) against defects caused by faulty workmanship or materials for a period of Five (5) years from Date of Substantial Completion. The warranty will cover the surfaces treated and will bind the applicator to repair, at his expense, any and all leaks through the treated surfaces which are not due to structural weaknesses or other causes beyond applicator's control such as fire, earthquake, tornado and hurricane.

PART 2 - PRODUCTS

2.01 MANUFACTURERS/ MATERIALS

A. The following candidate manufacturers are capable of producing equipment and/or products that will satisfy the requirements of this Section. This statement, however, shall not be construed as an endorsement of a particular manufacturer's product, nor shall it be construed that a named manufacturer's standard product will comply with the requirements of this Section. Candidate manufacturers include, listed below.

1. ACCEPTABLE MANUFACTURERS:
Xypex Chemical Corporation
13731 Mayfield Place
Richmond, B.C., Canada
V6V 2G9
Tel: 800-961-4477 or 604-273-5265
Fax: 604-270-0451

2. Approved equals will be considered in accordance with provisions set forth in section 1600 of the project specifications.

3. Obtain all waterproofing products from a single source.

2.02 PRODUCTS:

A. Waterproofing Admixture: Xypex Admix C-500, C-1000 or C-2000; compound of Portland cement, fine treated silica sand and active chemicals; provide product and mix ratio of at least 2% Xypex with up to 15% fly ash that produce concrete that complies with specified requirements in Section 03300 and the following:

1. Chemically Resistant for pH Levels of 3 to 11 constant contact and pH Levels of 2 to 12 periodic contact per ASTM C267-77, ASTM C672-76.

2. Potable Water Approved per National Safety Foundation (ANSI/NSF) 61.

3. Freeze-Thaw and De-icing Chemical Resistance per ASTM C672-76.

4. Radiation Resistance per USANI N69-1967

5. Crack Sealing ability for re-sealing cracks up to .04 mm (1/64”) per ASTM C856-88.

6. Withstand 175 PSI water pressure penetration test per U.S. Army Corps of Engineers CRD-C-48-73.

7. Concrete Admixture shall not decrease the compressive strength of the concrete mix design (28 day compressive strength test), ASTM C 39/C 39M.

2.03 MIXES

A. GENERAL: Mix waterproofing material by volume with clean water which is free from salt and deleterious materials. Mix waterproofing material in quantities that can be applied within 20 to 30 minutes from time of mixing. As mixture thickens, stir frequently, but do not add additional water. Do not mix bonding agents or admixtures with crystalline waterproofing materials.

PART 3 - EXECUTION

3.01 CONCRETE MIXING AND PLACING

A. Comply with requirements of Section 03300.

B. Add waterproofing admixture at time of batching and blend thoroughly, following manufacturer's instructions.

C. Hot weather comply with ACI 305R; Cold weather comply with ACI 306R.

D. Moist cure concrete in accordance with ACI 308; if moist curing is not possible, use Xypex Gamma Cure curing compound complying with ASTM C 309.

E. Consult Manufacturer for mixing instructions, set times and retardation applications.

3.02 CONSTRUCTION JOINTS

A. Comply with manufacturer's instructions, including product data, technical bulletins, catalog installation instructions, and product packaging labels.

B. Verify substrate conditions, which have been previously installed under other sections, are acceptable for product installation in accordance with manufacturer's instructions,

C. Mix materials in accordance with manufacturer's instructions.

D. Wet cold joint surface and saturate with clean water to enhance the crystalline formation process within concrete; remove excess surface water before application of slurry coat.

E. Apply slurry coat if needed uniformly with semi-stiff bristle brush or spray under conditions and application rate recommended by manufacturer.

F. Place subsequent pour while slurry coat is still green, but after reaching initial set.

3.03 FIELD QUALITY CONTROL

A. Do not cover admixture treated concrete with other construction until it has been observed by Manufacturer's field representative and Architect/Engineer.

B. After removal of forms, repair honeycombing, rock pockets, tie holes, faulty construction joints, cold joints, and cracks using waterproofing admixture Manufacturer's products and recommended procedures.

C. MANUFACTURER'S FIELD SERVICES: Provide Manufacturer's field service consisting of product use recommendations and periodic site visits for inspection of concrete batching and product installation in accordance with Manufacturer's and Engineer’s instructions.

D. FLOOD TESTING:

1. Plug or dam drains and fill area with water to a depth of two inches (50 mm) or to within 0.5 inch (12.5 mm) of top of waterproofing treatment.
2. Let water stand for 24 hours.
3. If leaks are discovered, make repairs and repeat test until no leaks are observed.

3.04 CLEANING AND PROTECTION

A. Protect installed concrete from damage during construction.

B. Do not apply paint or other coatings for at least 21 days; before applying coatings neutralize waterproofed surface as recommended by waterproofing manufacturer.

C. CLEANING: Clean spillage and soiling from adjacent surfaces using appropriate cleaning agents and procedures.

D. PROTECTION: Take measures to protect completed treated concrete from damage after application.

END OF SECTION 03052

SECTION 10425 - SIGNS

PART 1 - GENERAL

1.1 RELATED DOCUMENTS

A. Drawings and general provisions of the Contract, including General and Supplementary Conditions and Division 1 Specification Sections, apply to this Section.

1.2 SUMMARY

A. This Section includes the following types of signs:
1. Panel signs, Dimensional letters and numbers.

1.3 SUBMITTALS

A. General: Submit the following according to the Conditions of the Contract and Division 1 Specification Sections.

B. Product data for each type of sign specified, including details of construction relative to materials, dimensions of individual components, profiles, and finishes.

C. Shop drawings showing fabrication and erection of signs. Include plans, elevations, and large-scale sections of typical members and other components. Show anchors, grounds, layout, reinforcement, accessories, and installation details.
1. Provide message list for each sign required, including large-scale details of wording and lettering layout.
2. For signs supported by or anchored to permanent construction, provide setting drawings, templates, and directions for installation of anchor bolts and other anchors to be installed as a unit of Work in other Sections.

D. Samples: Provide the following samples of each sign component for initial selection of color, pattern and surface texture as required and for verification of compliance with requirements indicated.
1. Samples for initial selection of color, pattern, and texture:
a. Cast Acrylic Sheet and Plastic Laminate: Manufacturer's color charts consisting of actual sections of material including the full range of colors available for each material required.
2. Samples for verification of color, pattern, and texture selected and compliance with requirements indicated:
a. Cast Acrylic Sheet and Plastic Laminate: Provide a sample panel not less than 8 inches by 8 inches for each material, color, texture, and pattern required. On each panel include a representative sample of the graphic image process required, showing graphic style, and colors and finishes of letters, numbers, and other graphic devices.

1.4 QUALITY ASSURANCE

A. Sign Fabricator Qualifications: Firm experienced in producing signs similar to those indicated for this Project, with a record of successful in-service performance, and sufficient production capacity to produce sign units required without causing delay in the Work.

B. Single-Source Responsibility: For each separate sign type required, obtain signs from one source of a single manufacturer.

C. Design Concept: The Drawings indicate sizes, profiles, and dimensional requirements of signs and are based on the specific types and models indicated. Sign units by other manufacturers may be considered provided deviations in dimensions and profiles do not change the design concept as judged by the Architect. The burden of proof of equality is on the Proposer.

1.5 PROJECT CONDITIONS

A. Field Measurements: Take field measurements prior to preparation of shop drawings and fabrication to ensure proper fitting. Coordinate fabrication schedule with construction progress to avoid delay.

PART 2 - PRODUCTS

2.1 MANUFACTURERS

A. Manufacturers: Subject to compliance with requirements, manufacturers offering products that may be incorporated in the Work include, but are not limited to, the following:
1. Manufacturers of Panel Signs:
a) Utah Correctional Industries
b) Allenite Signs; Allen Marking Products, Inc.
c) American Graphics Inc.
d) Andco Industries Corp.
e) APCO Graphics, Inc.
f) ASI Sign Systems, Inc.
g) Best Manufacturing Co.
h) Grimco, Inc.
i) Innerface Sign Systems, Inc.
j) Kaltech Industries Group, Inc.
k) Mills Manufacturing, Inc.
l) Mohawk Sign Systems.
m) Seton Identification Products.
n) Signature Signs, Inc.
o) Supersine Company (The).
p) Or, pre-approved equal.

2.2 MATERIALS

A. Cast Acrylic Sheet: Provide cast (not extruded or continuous cast) methyl methacrylate monomer plastic sheet, in sizes and thicknesses indicated, with a minimum flexural strength of 16,000 psi when tested according to ASTM D 790, with a minimum allowable continuous service temperature of 176 deg F (80 deg C), and of the following general types:
1. Transparent Sheet: Where sheet material is indicated as "clear," provide colorless sheet in matte finish, with light transmittance of 92 percent, when tested according to the requirements of ASTM D 1003.
2. White Translucent Sheet: Where sheet material is indicated as "white," provide white translucent sheet of density required to produce uniform brightness and minimum halation effects.
3. Opaque Sheet: Where sheet material is indicated as "opaque," provide colored opaque acrylic sheet in colors and finishes as selected from the manufacturer's standards.

B. Fasteners: Use concealed fasteners fabricated from metals that are not corrosive to the sign material and mounting surface.

C. Anchors and Inserts: Use nonferrous metal or hot-dipped galvanized anchors and inserts for exterior installations and elsewhere as required for corrosion resistance.

D. Colored Coatings for Acrylic Plastic Sheet: Use colored coatings, including inks and paints for copy and background colors that are recommended by acrylic manufacturers for optimum adherence to acrylic surface and are non-fading for the application intended.

2.3 PANEL SIGNS

A. Panel Signs: Comply with requirements indicated for materials, thicknesses, finishes, colors, designs, shapes, sizes, and details of construction.
   1. Produce smooth, even, level sign panel surfaces, constructed to remain flat under installed conditions within a tolerance of plus or minus 1/16 inch measured diagonally.

B. Unframed Panel Signs: Fabricate signs with edges mechanically and smoothly finished to conform with the following requirements:
   1. Edge Condition: Square cut.
   2. Corner Condition: Corners rounded to 3/4-inch radius unless indicated otherwise.

C. Graphic Content and Style: Provide sign copy that complies with the requirements indicated for size, style, spacing, content, position, material, finishes, and colors of letters, numbers, and other graphic devices.

D. Raised Copy: Machine-cut copy characters from matte-finished opaque acrylic sheet and chemically weld onto the acrylic sheet forming sign panel face. Produce precisely formed characters with square cut edges free from burrs and cut marks.
   1. Panel Material: Matte-finished opaque acrylic sheet.
   2. Raised Copy Thickness: Not less than 1/32 inch.

2.4 INFORMATION FOR SIGNS AS FOLLOWS:

A. 1. Message: "OFFICE/TRAINING ROOM" – On Three lines
   2. Letter Height: 1 1/4 inches.
   3. Letter Style: Helvetica.

B. 1. Message: "RESTROOM"
   2. Letter Height: 3/4 inches.
   3. Letter Style: Helvetica.
   4. Provide all ADA Compliant graphics & Braille Text

C. 1. Message: "ENTRANCE"
   2. Letter Height: 3/4 inches.
   3. Letter Style: Helvetica.
   4. Provide all ADA Compliant graphics & Braille Text

2.5 FINISHES

A. Colors and Surface Textures: For exposed sign material that requires selection of materials with integral or applied colors, surface textures or other characteristics related to appearance, provide color matches indicated, or if not indicated, as selected by the Architect from the manufacturer's standards.

PART 3 - EXECUTION

3.1 INSTALLATION

A. General: Locate sign units and accessories where indicated, using mounting methods of the type described and in compliance with the manufacturer's instructions.
   1. Install signs level, plumb, and at the height indicated, with sign surfaces free from distortion or other defects in appearance.

B. Wall-Mounted Panel Signs: Attach panel signs to wall surfaces using the methods indicated below:
   1. Vinyl-Tape Mounting: Use double-sided foam tape to mount signs to smooth, nonporous surfaces. Do not use this method for vinyl-covered or rough surfaces.
   2. Silicone-Adhesive Mounting: Use liquid silicone adhesive recommended by the sign manufacturer to attach sign units to irregular, porous, or vinyl-covered surfaces. Use double-sided vinyl tape where recommended by the sign manufacturer to hold the sign in place until the adhesive has fully cured.

3.2 CLEANING AND PROTECTION

A. After installation, clean soiled sign surfaces according to the manufacturer's instructions. Protect units from damage until acceptance by the Owner.

END OF SECTION 10425

SECTION 13100 š FUEL ISLAND REQUIREMENTS š ADDENDUM NO. 2

PART I š GENERAL

1.1 PROJECT SUMMARY

A. This Section includes the following:
1. The scope of this work is to provide a completed installation of a new fueling facility and all it² s required appearances in accordance with the State of Utah Fleet Services requirements. For location see civil plans.
2. The work scope includes a single split tank with capacity of 2,000 gallons unleaded fuel and 6,000 gallons diesel fuel. This tank to be a **Convault or equal UL 2085 fire protected Fuel Storage Tank**. All references to ¶Convault· within this specification are intended to be generic in nature only.
3. A single dispenser with a dual hose providing high flow dispensing of 22 gallons per minute will be provided;
4. These pages include general State of Utah installation guidelines for fuel island. These pages include equipment required and procedures to follow.

1.2 PERMITS AND APPROVALS

A. All permits and approvals for the fueling facility are the responsibility of the General Contractor. The work is to be coordinated and approved by the State of Utah Fleet Services.

1.3 INSTALLATION MANUAL:
The following pages include:

A. SCOPE

B. PERMITS AND APPROVALS

C. TANK SITE

D. FOUNDATIONS

E. TANK HANDLING

F. UNLOADING AND SETTING

G. GROUTING OF LEGS

H. ELECTRICAL

I. PIPING

J. DISPENSING APPLICATIONS

K. LIGHTNING PROTECTION INSTALLATION INSTRUCTIONS

A. SCOPE

1. These instructions apply to stationary, shop fabricated, aboveground, concrete encased steel tanks for the storage of stable, flammable and combustible liquids at normal atmospheric pressure. Because the tank installation is a specialized skill, it is assumed that those using these instructions will have knowledge of, and possess the skills and equipment necessary to install this type of aboveground storage tank properly and sa fely.

    - **Important Note: Consult the Authorities Having Jurisdiction to insure compliance with local codes and regulations prior to carrying out any instructions given herein.**

B. PERMITS AND APPROVALS

1. Because of the combustible and flammable nature of t he hydrocarbon liquids in the Aboveground Storage Tanks (AST), they are subject to various codes, and regulations. The codes and regulations govern the fabrication, testing, shipment, installation, operation, and maintenance of the tanks. The codes and reg ulations may originate from local fire authorities (e.g. Fire Marshals), local building jurisdictions (e.g. city or county building officials), state laws and regulations (e.g. Air Resource Board), Federal agencies (e.g. Environmental Protection Agency) and regional and national codes (e.g. National Fire Protection Association (NFPA) or Uniform Fire Code (UFC).
2. Installation, operation and maintenance of the tanks must be carried in accordance with the applicable codes and regulations. These aboveground sto rage tanks are intended for installation in accordance with NFPA 30, 30A, and 31 and UFC Appendix II -F.
3. System installation starts with obtaining the required state and local permits.
4. Typical approval process and documents needed are shown in the **Table 1, Product Description.** Specific local or jurisdictional requirements may slightly differ for different locations, but the list is a good reference and a guide for your permit requirements.
5. State and local permit applications must be made with the current forms.
6. Zoning permits may also be required.

C. TANK SITE

1. Tank location and foundation to comply with the current edition of the Uniform Building Code, UBC, and all applicable local codes and ordinances. For sites subject to ground frost, the foundation slab design should be reviewed to take into consideration frost line requirements.
2. The tanks should be located a minimum of 1/3 the height of the vault (40 feet maximum) away from down slopes - greater than 3:1, and 1/2 the height of the vault (15 feet maximum) away from up slopes smaller than 3:1.
3. Tanks located in areas subject to flooding must be protected against floatation. Flood resistant tie-down brackets are available for all tank sizes to resist floatation during complete submergence.
4. Aboveground tanks should not be located over underground utilities or directly beneath overhead power and telephone lines.
5. The tank should be protected from vandalism and accidental damage in accordance with all the applicable codes.
6. Fire department vehicle access should be provided within 150 feet of any tank.
7. The venting of a tank to a remote location must include the use of a steel pipe equal to or greater in size than the vent outlet, and the methods of supporting such piping against displacement must comply with local codes. Provide the vent piping with a slope to ensure that all condensed vapors drain back to the tank.
8. Collision protection is recommended on the sides of the tank exposed to traffic. This is generally accomplished with pipe bollards. Always check state and local codes for specific requirements. **See Figure No. 5 below** for sample installation.

    - **<u>NOTE</u>: The location of each ConVault° tank is stored in the central data bank. If the tank is to be relocated to a different location, ConVault° Inc. must be properly notified to update the data bank. The product limited warranty could be voided if ConVault° is not informed of tank relocation or if tank is not reinstalled in accordance with these installation instructions. It should be noted that ConVault° Warranty is conditional on installation of tanks in accordance with ConVault° Installation Instructions. Your attention is specifically drawn to the tank site selection and foundations requirements .**

SAMPLE BOLLARD INSTALLATION

Collision protection is recommended on sides of the tank exposed to traffic. This is generally accomplished with pipe bollards. Always check state and local codes. Sample installations are shown below:

Spacing from the tank should conform to code.

As an alternative to steel pipes, you may use precast concrete barriers. You can obtain the precast barriers from your ConVaultÇ representative.

Figure No. 5

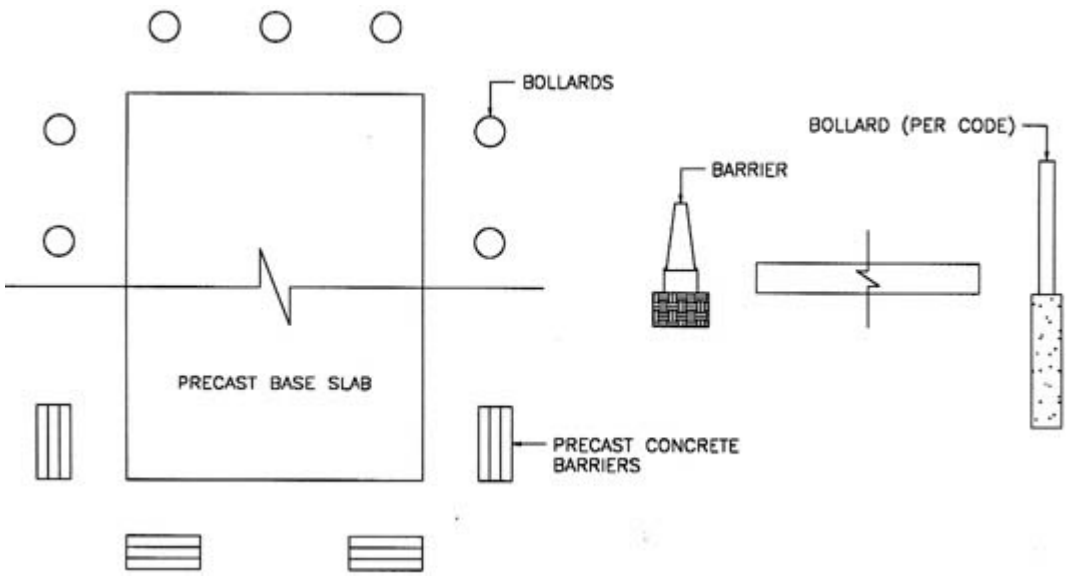

D. FOUNDATIONS

1. Tank location and foundation must comply with the current edition of Uniform Building Code requirements and all the applicable local codes and ordinances.
2. An alternative to pouring the slab in the field is to purc hase a precast slab from the manufacturer.
3. The foundation for the tank must be designed to support the tank plus the weight of the maximum amount of product the tank will be storing. The foundation design must also include provision for draining surface w ater away from the tank to minimize the risk of fuel accumulation under the tank from the overfill or spills.
4. Tanks located in areas subject to earthquake must be protected against seismic forces. Optional earthquake restraints are available. The restrain ts can be retrofitted to the slab should local requirements change. The restraints are mounted on the slab and are secured with anchor bolts directly into the slab. The tank feet rest in the restraints and do not require bolting directly to the tank.
5. The tank located in areas subject to hurricane must be provided with hurricane hold down

restraints.

6. The tank foundation is to sit on undisturbed earth or compacted fill, free of organic material.
7. The following minimum soil characteristics may be used if the ConVault tank is installed on a continuous solid slab which will uniformly distribute the weight of the tank and its contents to the soil:
    - Bearing Capacity: minimum 1,000 but preferably 2,000 lb. per sq. ft.
    - Total settlement: 1 inch maximum.
    - Differential settlement: 1/2 inch maximum.
    - Provide a minimum six inch (6") thick granular sub-grade, compacted and graded to a level uniform subsurface prior to the cast slab placement or pouring of the cast-in-place slab.
    - A geological engineer should evaluate the effect of the water table and frost lines if such unusual conditions exist at the site.
    - Soil surface under foundation should be flat within 1/16" per foot. Soil around foundation should be sloped away 1/8" per foot minimum for 5 feet.
    - **NOTE: If Bearing pads are used under the tank legs instead of grouting, the tank foundation and slab should be designed to withstand concentrated loads under the bearing pads.**
    - **NOTE: The above soil characteristics, foundation and slab design requirements may be revised by a qualified design engineer who would design the foundations and the slab on a site-specific basis.**
    - **NOTE: Some Authorities Having Jurisdiction require uplift restraints for areas subject to flooding and hurricanes.**

E. TANK HANDLING

1. DO NOT HANDLE OR INSTALL TANK WITHOUT HAVING KNOWLEDGE AND EXPERIENCE IN PROCEDURES INVOLVED WITH PROPER AND SAFE INSTALLATION OF AN ABOVEGROUND TANK USED FOR STORAGE OF STABLE, FLAMMABLE AND COMBUSTIBLE LIQUIDS. RELIANCE ON SKILLED AND PROFESSIONAL INSTALLERS IS AN IMPORTANT FACTOR IN AVOIDING DAMAGE TO TANK AND SYSTEM FAILURE.
2. Equipment required in the shipping and offloading of ConVaultÇ aboveground storage tanks include lifting straps, nylon tie-down straps, crane, forklift, and carpet remnants strategically placed on the bevels to prevent the tie-down straps from scraping the paint loose while the tank is en-route.
3. Do not handle or move the ConVault unless it is empty. Under no circumstances should a tank containing petroleum product be moved.
    1. **Do not drop or drag the tank**.
4. If petroleum product has been introduced in the tank, **the tank must be emptied first, then may be relocated using the Department of Transportation Guidelines for transport of fuel containers**. Normally, to relocate a tank previously containing flammable liquids, the Authorities Having Jurisdiction require the tank to be cleaned and then moved according to the following guidelines:
    - Remove the liquids from the tank.
    - Rinse the tank three times with an approved cleaning agent.
    - Allow sufficient time for vapors to escape from inside of the tank.
    - Move the tank under the supervision of the Authorities Having Jurisdiction.

F. UNLOADING AND SETTING

1. The unloading equipment and procedures are critical to setting the tank safely and without harming the people or damaging the tank.
2. **NOTE: The most important aspect of a job procedure is SAFETY. Please ensure that every step of this procedure is carried out with safety in mind, first.**
3. Tanks Weight and Dimensions.
   Please refer to Figures No. 2, 3 and 4 in **Product Description.** For actual tank weights and dimensions, please contact your ConVault distributor.
4. Equipment Required & Procedures

   a. A crane or a forklift of sufficient capacity to safely lift and place the unit.

   b. Slings minimum 20 feet long each and rated for the tank weight. The angles between the slings should be at least 50 degrees.

   c. 4-way spreader.

   d. Miscellaneous shackles, tag lines, and rigging tools.

   e.Plan the required crane and rigging capacity to safely unload the tank.

   f. Inspect the tank on the delivery truck prior to unloading. Report any damage in transit to the truck driver and note on the shipping ticket. If the tank is paint coated, it normally comes with two-1/2 pint, two-part touch up kits of paint. Please note that the touchup kit must be mixed prior to application.

   g. Allow sufficient crane time for installing the load block and organizing the rigging.

   h. During unloading and setting, allow one person in-charge to signal the crane operator. Keep people clear of the load and avoid being trapped between the load and building walls and equipment.

   i. Make sure there is no overhead wiring to interfere with crane or boom operation. Provide sufficient room for cranes and boom trucks to off load.

   j. Department of Transportation prohibits transportation of tanks with product and warning labels. Product and warning labels should be installed on site. If installed at the plant, they should be masked prior to shipment. Labels and decals must be placed on the tank in accordance with NFPA 709. **Figure No. 6** shows location of labels.

Figure No. 6

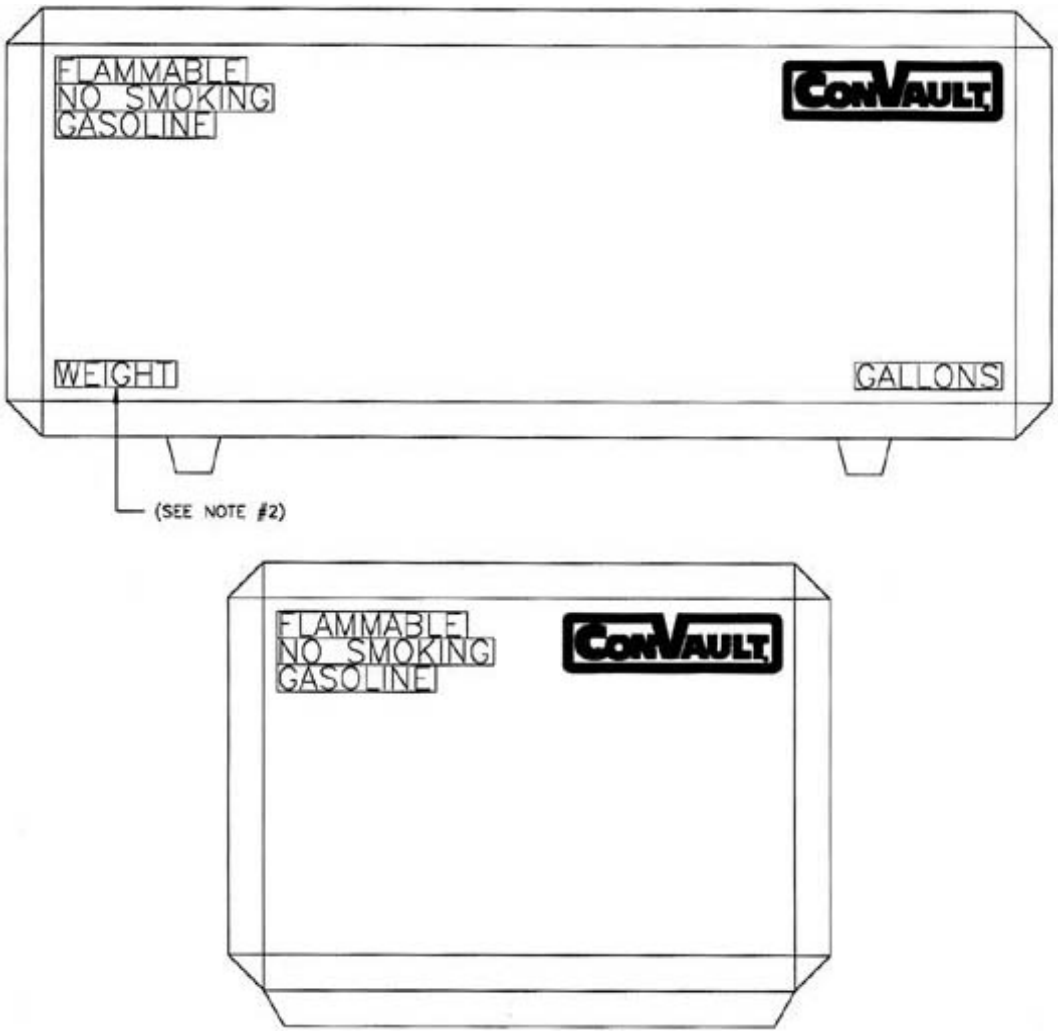

NOTES:

1. FOR BEST RESULTS, ATTACH AT 60-70 DEGREES F.
2. EMPTY WEIGHT
3. CONVAULT LOGO DECALS TO BE LOCATED IN UPPER RIGHT CORNER OF ALL SIDES (QTY 4).
4. NO SMOKING, FLAMMABLE AND "PRODUCT" TO BE LOCATED IN UPPER LEFT CORNER OF ALL SIDES (QTY 4).
5. CAPACITY DECALS TO BE LOCATED IN LOWER RIGHT CORNER OF LONG SIDES (QTY 2).
6. WEIGHT DECALS TO BE LOCATED IN LOWER LEFT CORNER OF LONG SIDES (QTY 2).
7. FILL, VENT, EMERGENCY VENT, LEAK DETECTOR TUBE, DO NOT DRILL..., CAUTION THIS TANK..., DECALS LOCATED ALONG UPPER BEVEL NEAR CORRESPONDING NIPPLE.
8. WARNING: DEATH MAY OCCUR..., DECAL TO BE LOCATED ON TOP OF TANK NEAR MANWAY IF APPLICABLE.

G. GROUTING OF LEGS

1. All tanks of 4,000 gallon and larger must be grouted with (non-shrink grout) or supported with alternative engineered pad interface.
2. We recommend to grout the legs of all tanks, which will provide a uniform load distribution on legs and foundations.

3. Neoprene pads may be used instead of grouting in accordance with the manufacturer² s recommendations. **Also see Note under FOUNDATIONS**.

H. ELECTRICAL

1. Electrical service and fuel piping to the pumps unit should be installed in accordance with the requirements of NEC and NFPA and local code requirements.
2. All electrical devices used with or located within twenty (20) feet of the ConVaultÇ tank should conform to NFPA 70 Hazardous Locations. All electric conduits and wiring connected to the tank should be explosion proof and in strict accordance with NEC Class -1, Division 1 or other local standards whichever is stricter.
3. An emergency shutoff switch is required to be mounted in a location visible from the dispenser. The switch is normally mounted on a building wall or a post. The per code switch must be marked as an emergency shutoff switch.
4. Electrical grounding is required for flammable liquid fuel tanks. ConVaultÇ tanks are provided with two grounding lugs welded to the nipples on tank top.
5. Pumps and all other equipment used in the hazardous area should be rated by UL or Factory Mutual, FM.

I. PIPING

1. Piping on ConVaultÇ tanks will mainly depend on dispensing method considered for your facilities. Several methods are suggested below. You should note that dispensin g methods suggested here are schematic only and they are not detailed installation drawings. You should engage an engineer/designer to design the piping arrangement and make sure they are in accordance with the applicable codes, rules and regulations. Plea se also make sure you check with your Authorities Having Jurisdiction and find out which codes and regulations are applicable to your area.
2. The following illustrations are provided to show you several different dispensing methods and to help you understand how they operate.

J.Dispensing Applications

On-Tank Suction-Type

Dispensing from the ConVaultÇ tank system is most simply accommodated by a top of tank pump. This arrangement eliminates leaking valves and fittings. Our recommended dispensing configurat ion is shown in **Figure No. 7 below**. Diagram provided is for those sites, which serve the end -user's internal fleet/vehicles.

1. Fuel tank shall be located with set backs from building and property lines in accordance with state and local codes.
2. Dispensing shall be by a UL-Listed tank top pump equipped with :

   a. vacuum breaker

   b. filter and adapter

   c. UL-Listed fuel hose

d. safety breakaway valve

e. auto-shutoff nozzle

3. Consult local Authority Having Jurisdiction
4. Fire extinguisher per code and cleanup kit sho uld be provided at the site.

Figure No. 7

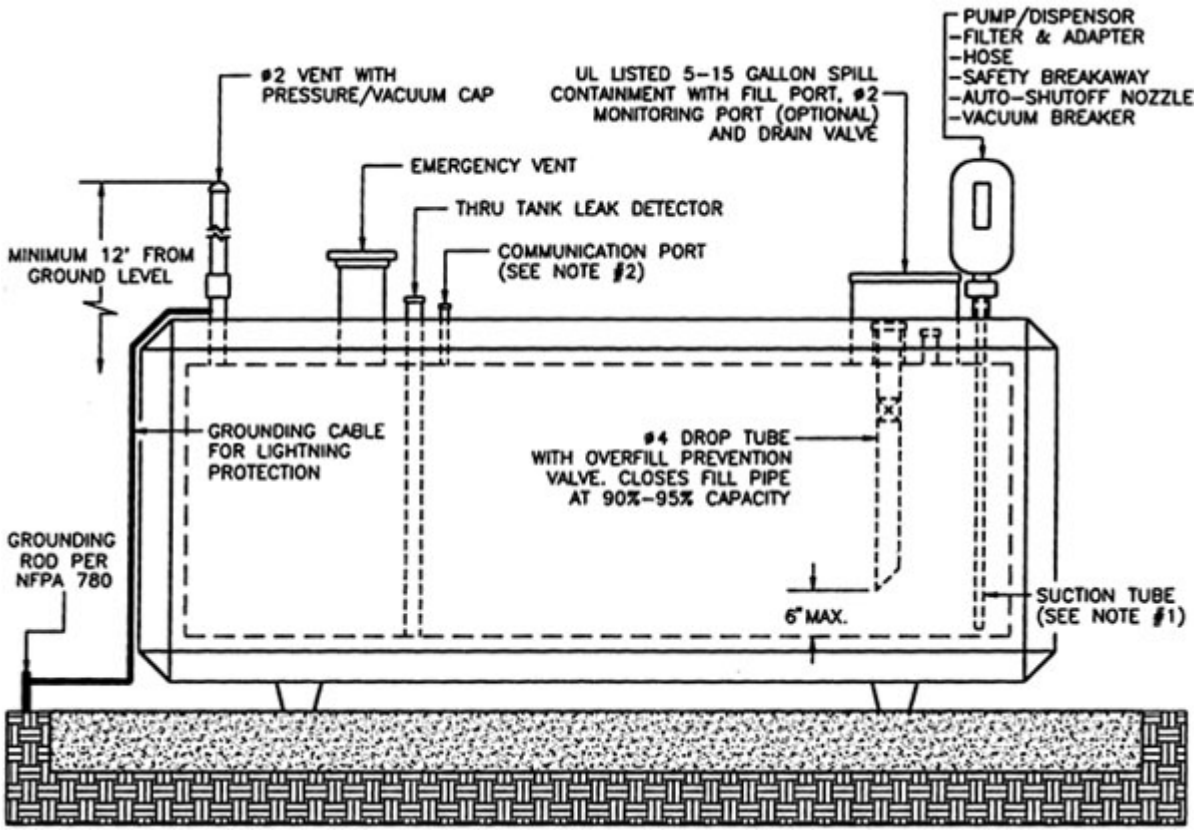

NOTES:

1. BOTTOM OF FOOT VALVE/STRAINER TO BE 1" FROM BOTTOM OF STEEL TANK.
2. COMMUNICATION PORT NOT NEEDED FOR DOU BLE WALL STEEL TANKS.
3. STAIRWAY ASSEMBLY TO FILL PORT (OPTIONAL).

Side Mount

The diagram provided is recommended for the sites to dispense fuel to private user or for fleet vehicles. **See Figure No. 8 below.**

1. Fuel tank shall be located with setbacks from b uilding and property lines in accordance with state and local codes.
2. Dispensing shall be by UL-Listed pump. The pump shall be equipped with the following:

   a. Anti siphon valve with pressure relief or solenoid valve

b. Filter and adapter

c. UL-Listed fuel hose

d.safety breakaway valve

e. Auto shutoff nozzle

f. Emergency shear valve may be required

3. Consult local codes.
4. Fire extinguisher per code.
5. Cleanup kit should be provided at site.

Figure No. 8

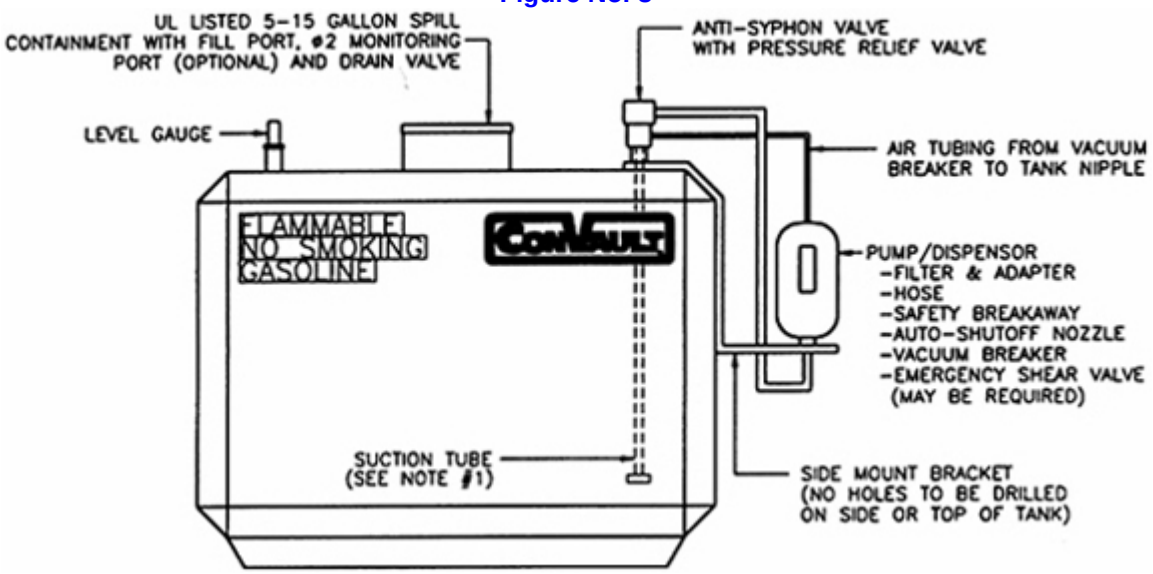

NOTES:

1. BOTTOM OF FOOT VALVE/STRAINER TO BE 1" FROM BOTTOM OF STEEL TANK.
2. STAIRWAY ASSEMBLY TO FILL PORT (OPTIONAL).

Off-Tank Suction System

The diagram provided is recommended for those sites authorized to either: dispense to motor vehicles for public use or fleet vehicles with high-speed dispensing accessories. **See Figure No. 9 below.**

1. Fuel tank shall be located with setbacks from buildings and property lines in accordance with state and local codes.
2. Dispensing shall be by an UL-Listed off-tank pump. The pump shall be equipped with:

   a. Angle check valve or anti-siphon valve with pressure relief

b. Filter and adapter

c. UL-Listed fuel hose

d. Safety, breakaway valve

e. Auto-shutoff nozzle

f. Under pump emergency shear valve (if required by local code)

3. Install pressure/vacuum vent cap.
4. Install phase 1 and phase 2 recovery system (if required by the local codes).
5. Consult local codes.
6. Fire extinguisher per code, cleanup kit should be provided at the site.

Figure No. 9

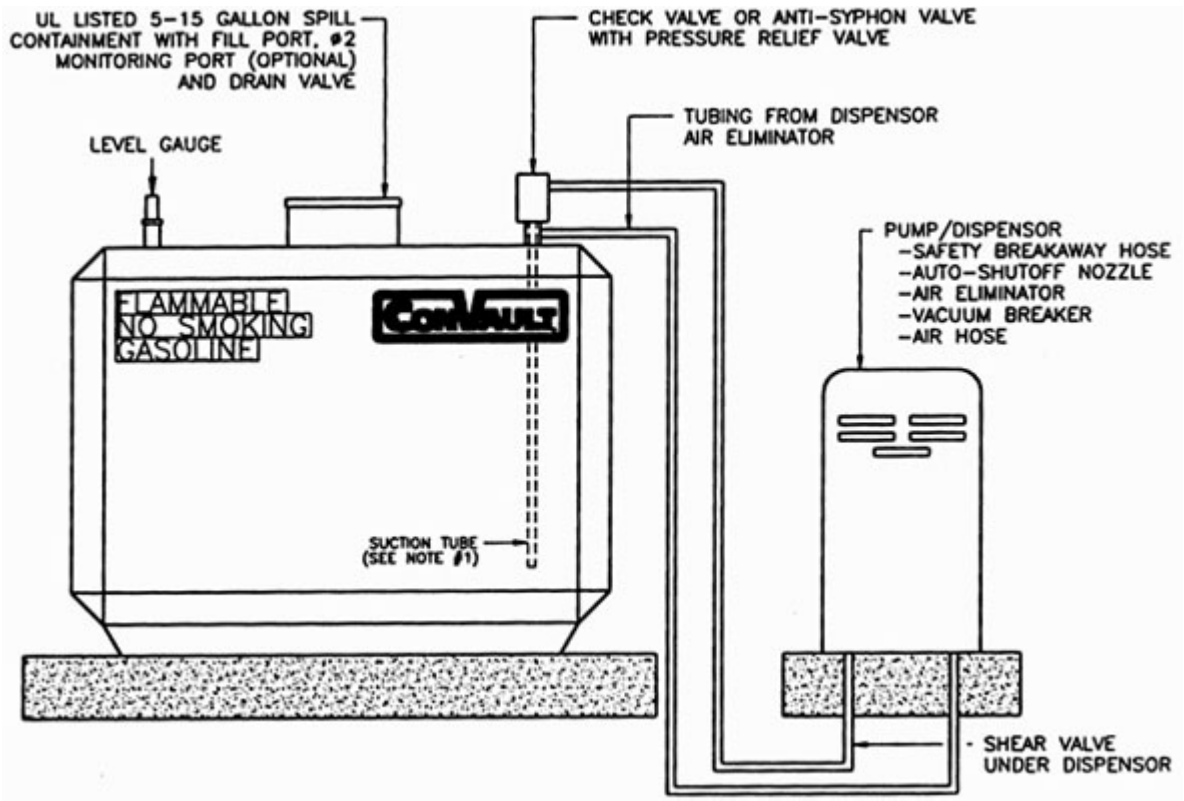

NOTES:

1. BOTTOM OF FOOT VALVE/STRAINER TO BE 1" FROM BOTTOM OF STEEL TANK.
2. STAIRWAY ASSEMBLY TO FILL PORT (OPTIONAL).

Submergible Pump

The diagram shown in **Figure No. 10 below** is recommended for those sites authorized to either:

dispense to motor vehicles for public use or fleet vehicles with high -speed dispensing accessories.

1. Fuel tank shall be located with setbacks from buildings and property li nes in accordance with the state, local, and fire codes.
2. Dispensing shall be by an UL-Listed submergible pump.
3. Solenoid valve with pressure relief valve.
4. Filter and adapter.
5. UL-Listed dispenser with:

   a. Listed fuel hose

   b. Safety, breakaway valve

   c. Auto-shutoff nozzle

   d. Emergency sheer valve under dispensing pump may be required

6. Fire extinguisher per code, cleanup kit should be provided at the site.
7. Requires 220-Volt electric supply.
8. Consult local codes.

Figure No. 10

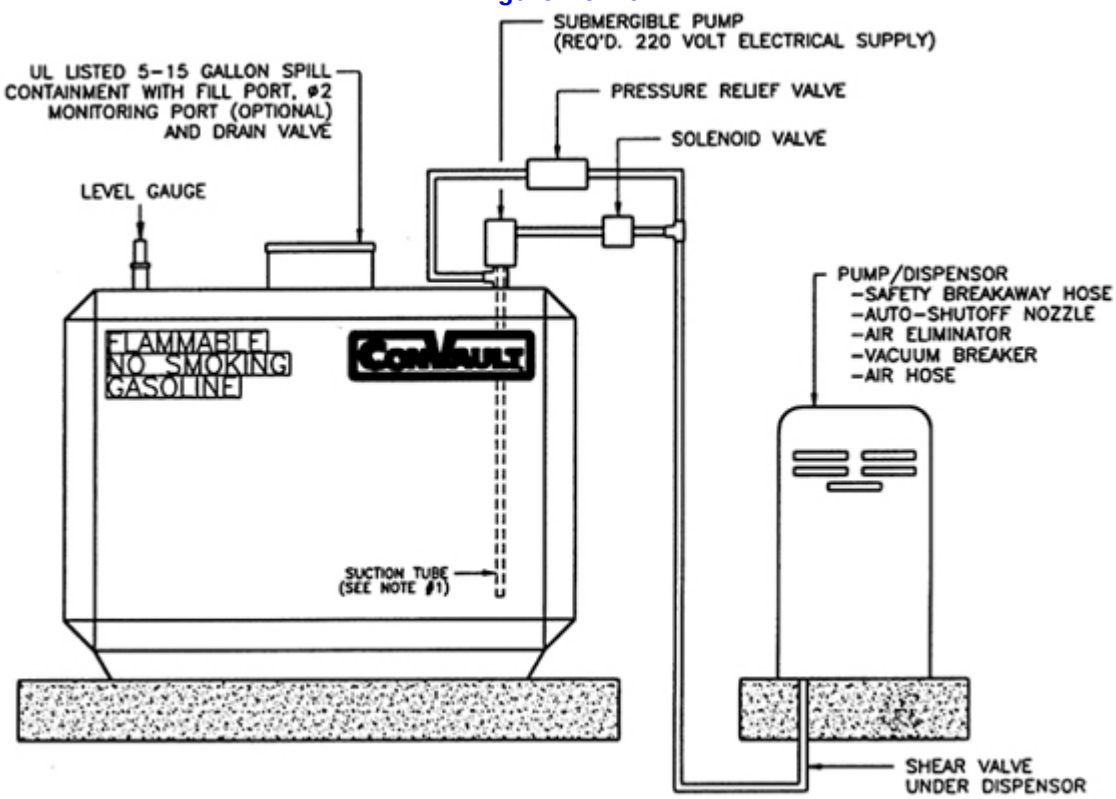

NOTES:

1. BOTTOM OF FOOT VALVE/STRAINER TO BE 1" FROM BOTTOM OF STEEL TANK.
2. STAIRWAY ASSEMBLY TO FILL PORT (OPTIONAL).

Generator Fuel Supply

The diagrams shown in **Figure No. 11 and 12 below** are recommended for those sites utilizing a ConVaultÇ AST to supply a generator, whether it is primary or standby in function.

1. Storage tank shall be located with setbacks from buildings and property lines in accordance with state and local codes.
2. Recommended piping shall include safety valves as follows:

   a. Angle check valve with pressure relief or foot valve and strainer

   b. Shutoff valve with fusible link on supply piping

   c. Provide Anti Siphon Valve if the level of suction piping fall below the high level of fuel in the tank.

3. Consult local codes.
4. Fire extinguisher and spill cleanup kit should be provided at site.

Figure No. 11

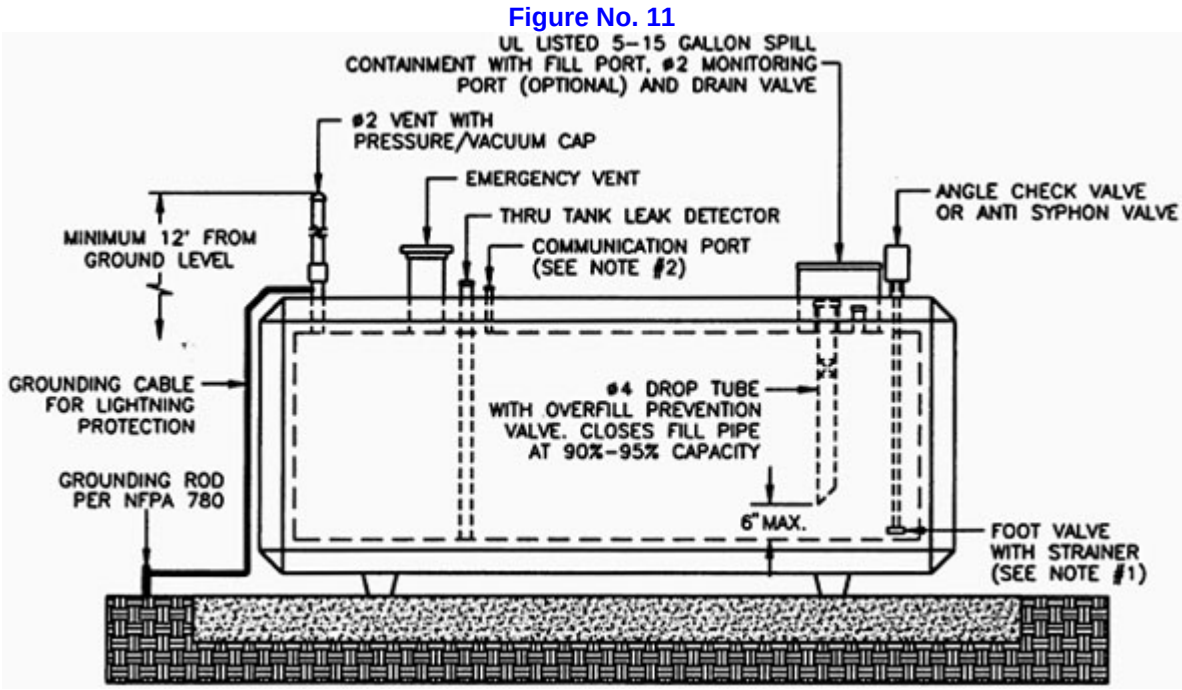

NOTES:

1. BOTTOM OF FOOT VALVE/STRAINER TO BE 1" FROM BOTTOM OF STEEL TANK.
2. COMMUNICATION PORT NOT NEEDED FOR DOUBLE WALL STEEL TANKS.
3. STAIRWAY ASSEMBLY TO FILL PORT (OPTIONAL).

Figure No. 12

Generator Fuel Supply

For directions and side view see Figure 11 above.

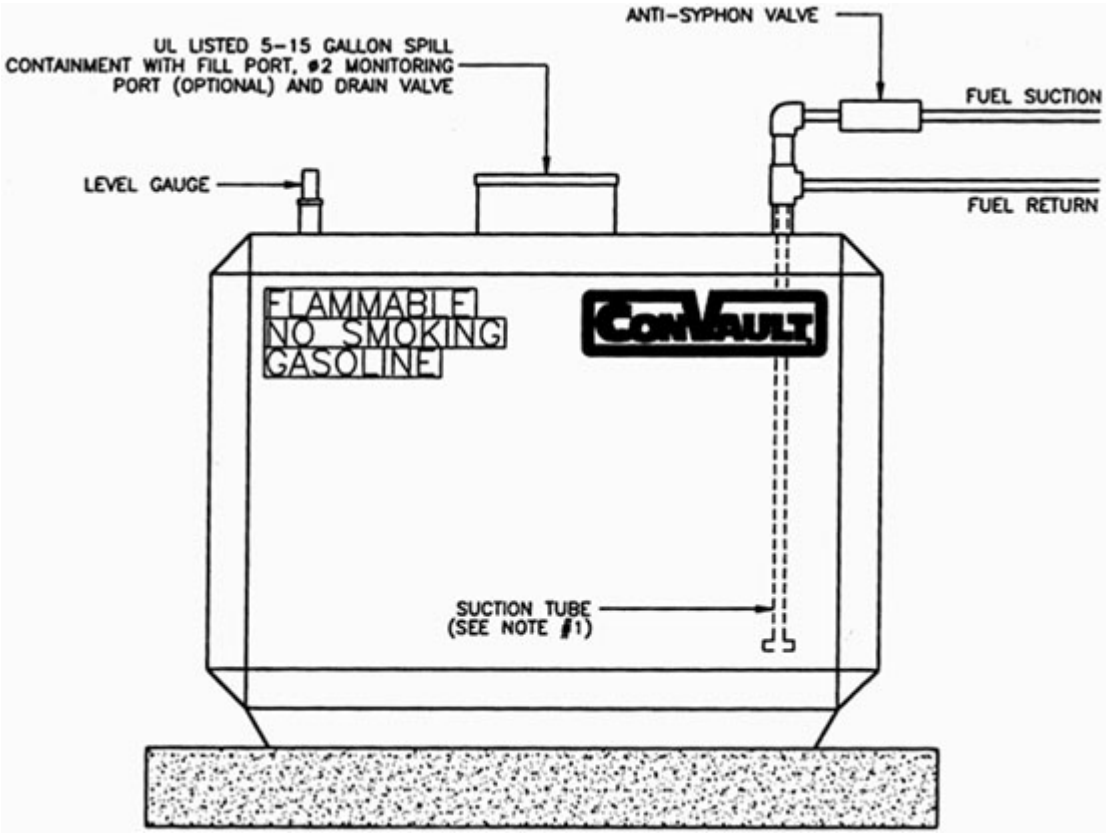

NOTES:

1. BOTTOM OF FOOT VALVE/STRAINER TO BE 1" FROM BOTTOM OF STEEL TANK.
2. STAIRWAY ASSEMBLY TO FILL PORT (OPTIONAL).

Used (Waste) Oil

The diagram provided is recommended for use with used oil storage and is not a requirement. Confirm with the local Authorities Having Jurisdiction and ensure that all pertinent operational requirements have been met in advance of installation. **See Figure No. 13 below**

ConVaultÇ recommends the use of a used-oil receptacle, stair clamps, and a step-platform for manual pouring sites; where the tank is filled by a remote pump, an overfill prevention system should be utilized; ConVaultÇ recommends the use of an audible alarm in conjunction wi th existing level indicator devices, as well as a solenoid valve in the fill pipe or shutoff switch to control the pump. Fire extinguisher and spill cleanup kit should be provided at the site.

Figure No. 13

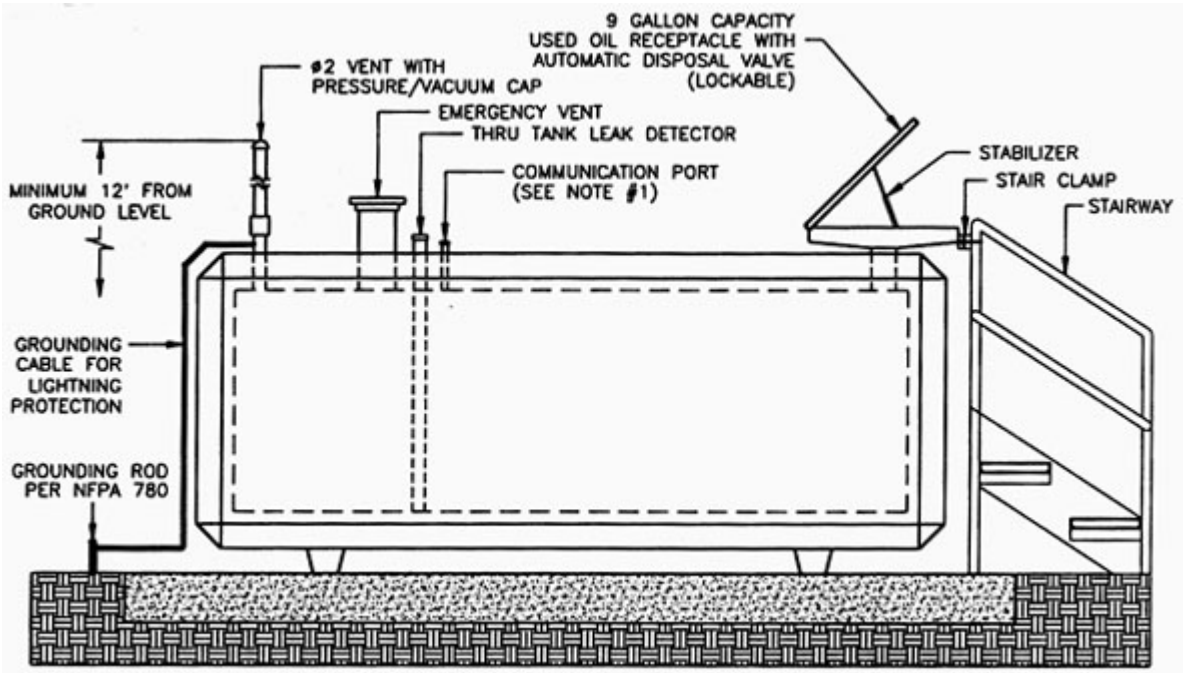

NOTES:

1. COMMUNICATION PORT NOT NEEDED FOR DOUBLE WALL STEEL TANKS.
2. STAIRWAY ASSEMBLY TO FILL PORT (OPTIONAL).

SECTION 13125 - METAL BUILDING SYSTEMS

PART I - GENERAL

1.1 RELATED DOCUMENTS

A. Drawings and general provisions of the Contract, including General and Supplementary Conditions and Division 1 Specification Sections, apply to this Section.

1.2 SUMMARY

A. This Section includes the following:
1. Structural framing.
2. Roof panels.
3. Wall panels.
4. Fascia and Soffit panels.
5. Insulation and vapor barrier.
6. Building components, as follows: provide and install misc. framing for mechanical units and grills, framing for lighting support, overhead door frames, doors, windows, equipment and other items not listed which will rely on the building for support.
7. Accessories and trim.

B. Related Sections include the following: List below only products, construction, and equipment that the reader might expect to find in this Section but are specified elsewhere.

1. Division 3 Section "Cast-in-Place Concrete" for concrete foundations and anchor-bolt installation including concrete waterproofing systems.

2. Division 8 Section "Sectional Overhead Doors." for requirements of support for overhead door.

3. Division 8 Section "Door Hardware" for finish door hardware and keying to be used with metal building system.

4. Division 8 Section "Glazing" for glass and glazing to be used with metal building system.

5. Division 9 Section "Painting" for shop-applied finishes not standard with metal building system manufacturer.

6. Division 9 Section "Gypsum board Assemblies" for application of fire rated assemblies to metal building systems.

7. Division 15 Section “Mechanical” for required coordination of equipment with wall, soffit and roof.

8. Division 16 Section “Interior Exterior Building Lighting” for required coordination of equipment with wall, and soffit.

1.3 DEFINITIONS

A. Bay Spacing: Dimension between main frames measured normal to frame (at centerline of frame) for interior bays, and dimension from centerline of first interior main frame measured perpendicular to end wall (outside face of end-wall girt).

B. Building Length: Dimension of the building measured perpendicular to main framing from end

wall to end wall (outside face of girt to outside face of girt).

C. Building Width: Dimension of the building measured parallel to main framing from sidewall to sidewall (outside face of girt to outside face of girt).

D. Clear Span: Distance between supports of beams, girders, or trusses (measured from lowest level of connecting area of a column and a rafter frame, or knee).

E. Eave Height: Vertical dimension from finished floor to eave (the line along the sidewall formed by intersection of the planes of the roof and wall).

F. Clear Height under Structure: Vertical dimension from finished floor to lowest point of any part of primary or secondary structure, not including crane supports, located within clear span.

G. Terminology Standard: Refer to MBMA's "Low Rise Building Systems Manual" for definitions of terms for metal building system construction not otherwise defined in this Section or in referenced standards.

1.4 SYSTEM PERFORMANCE REQUIREMENTS

A. General: Provide a complete, integrated set of metal building system manufacturer's standard mutually dependent components and assemblies that form a metal building system capable of withstanding structural and other loads, thermally induced movement, and exposure to weather without failure or infiltration of water into building interior. Include primary and secondary framing, roof and wall panels, and accessories complying with requirements indicated, including those in this Article.

B. Metal Building System Design: Of size, spacing, slope, and spans indicated, and as follows:

1. Primary Frame Type: Provide the following:Rigid Clear Span: Solid-member structural-framing system with interior columns as indicated.

2. End-Wall Framing: Manufacturer's standard, for buildings required to be expandable to the east, as follows:

a. Provide primary frame, capable of supporting one-half of a bay design load, and end-wall columns.

b. Flush-framed girts.

3. Eave Height: Manufacturer's standard height, as indicated by nominal height on Drawings.

4. Bay Spacing: See plans.

5. Roof Slope: 1 inch per 12 inches (See plans).

6. Roof System: Manufacturer's standard standing-seam roof panels with high clip, vapor barrier, thermal block, and insulation.

7. Exterior Wall System: Manufacturer's standard field-assembled insulated wall panels.

C. Structural Performance: Provide metal building systems capable of withstanding the effects of gravity loads and the following loads and stresses within limits and under conditions

indicated:

1. Engineer metal building systems according to procedures in MBMA's "Low Rise Building Systems Manual."

2. Design Loads: As indicated.

3. Live Loads: Include vertical loads induced by the building occupancy indicated on Drawings. Include loads induced by maintenance workers, materials, and equipment for roof live loads. Building Occupancy: (20 psf minimum).

4. Roof Snow Loads: Include vertical loads induced by the weight of snow (78 psf.-Ground; 55 psf Roof). Allow for unbalanced and drift loads.

5. Wind Loads: Include horizontal loads induced by a basic wind speed corresponding IBC 90 mph 3 second gust, Exposure C, Wind Importance Factor 1.0.

6. Collateral Loads: Include additional dead loads other than the weight of metal building system for permanent items such as sprinklers, mechanical systems, electrical systems, and ceilings. (5 psf minimum)

7. Load Combinations: Design metal building systems to withstand the most critical effects of load factors and load combinations.

8. Deflection Limits: Engineer assemblies to withstand design loads with deflections no greater than the following:

   a. Purlins and Rafters: Vertical deflection of 1/240 of the span.
   b. Girts: Horizontal deflection of 1/180 of the span.
   c. Roof Panels: Vertical deflection of 1/180 of the span.
   d. Wall Panels: Horizontal deflection of 1/180 of the span.

9. Design secondary framing system to accommodate deflection of primary building structure and construction tolerances, and to maintain clearances at openings.

D. Seismic Performance: Design and engineer metal building systems capable of withstanding the effects of earthquake motions determined according to the International Building Code, Soil Profile D.

E. Thermal Movements: Provide metal building roof and wall panel systems that allow for thermal movements resulting from the following maximum change (range) in ambient and surface temperatures by preventing buckling, opening of joints, overstressing of components, failure of joint sealants, failure of connections, and other detrimental effects. Base engineering calculation on surface temperatures of materials due to both solar heat gain and nighttime-sky heat loss.

   1. Temperature Change (Range): 120 deg F, ambient; 180 deg F, material surfaces.

F. Thermal Performance: Provide metal building roof and wall assemblies with the following thermal-resistance values (R-value):

   1. Roof Assemblies: R19.
   2. Wall Assemblies: R13.

G. Air Infiltration for Roof Panels: Provide roof panel assemblies with permanent resistance to air leakage through assembly of not more than 0.09 cfm/sq. ft. of fixed roof area when tested

according to ASTM E 1680 at a static-air-pressure difference of 4 lbf/sq. ft.

H. Air Infiltration for Wall and Soffit Panels: Provide wall panel assemblies with permanent resistance to air leakage through assembly of not more than 0.09 cfm/sq. ft. of fixed wall area when tested according to ASTM E 283 at a static-air-pressure difference of 4 lbf/sq. ft.

I. Water Penetration for Roof Panels: Provide roof panel assemblies with no water penetration as defined in the test method when tested according to ASTM E 1646 at a minimum differential pressure of 20 percent of inward-acting, wind-load design pressure of not less than 6.24 lbf/sq. ft. and not more than 24 lbf/sq. ft.

J. Water Penetration for Wall and Soffit Panels: Provide wall panel assemblies with no water penetration as defined in the test method when tested according to ASTM E 331 at a minimum differential pressure of 20 percent of inward-acting, wind-load design pressure of not less than 6.24 lbf/sq. ft. and not more than 12 lbf/sq. ft.

K. Wind-Uplift Resistance: Provide roof panel assemblies that meet requirements of UL 580 for the following wind-uplift resistance:

1. Class 90. With additional requirements for resistance to 95 mph winds.

1.5 SUBMITTALS

A. Product Data: Include construction details, material descriptions, dimensions of individual components and profiles, finishes and available colors as indicated on the drawings for each type of the following metal building system components:

1. Structural-framing system.
2. Roof panels.
3. Wall panels.
4. Insulation.
5. Vapor retarders.
6. Trim and closures.
7. Accessories.
8. Overhead door mounting details.
9. Mechanical louvers and fan mounting details.
10. Recessed soffit lighting.
11. Mechanical roof penetrations.
12. Doors and windows.

B. Shop Drawings: For the following metal building system components. Include plans, elevations, sections, details, and attachments to other Work.

1. For installed components indicated to comply with design loads, include structural analysis data signed and sealed by the qualified professional engineer responsible for their preparation.

2. Anchor-Bolt Plans: Include location, diameter, and projection of anchor bolts required to attach metal building to foundation. Indicate column reactions at each location.

3. Structural-Framing Drawings: Show complete fabrication of primary and secondary framing. Indicate welds and bolted connections, distinguishing between shop and field applications. Include transverse cross-sections.

4. Roof and Wall Panel Layout Drawings: Show layouts of panels on support framing,

details of edge conditions, joints, panel profiles, corners, custom profiles, supports, anchorages, trim, flashings, closures, and special details. Distinguish between factory- and field-assembled work.
Accessory Drawings: Include details of the following items, at a scale of not less than 2 inches per 12 inches: Include details of reinforcement and installation requirements for all accessories specified in other sections.

a. Ventilators. Coordinate with mechanical.
b. Louvers. Coordinate with mechanical.
c. Gutters.
d. Downspouts.
e. Lighting.

C. Samples for Initial Selection: Manufacturer's color charts showing the full range of colors available for each type of the following products with factory-applied color finishes as required to match the selected colors: Design intent is to match the colors of the existing open storage building on-site; roof, walls and trim & closure colors as used on existing building.

1. Roof panels.
2. Wall panels.
3. Soffit panels.
4. Trim, gutter and closures.
5. Accessories.

D. Samples for Verification: For the following products, in manufacturer's standard sizes, showing the full range of color, texture, and pattern variations expected, in the profile and style indicated. Prepare Samples from the same material to be used for the Work.

1. Roof Panels: 12-inches long by actual panel width (24"). Include clips, caps, battens, fasteners, closures, and other exposed panel accessories.

2. Architectural Wall Panels: 12-inches long by actual panel width (12"). Include clips, caps, battens, fasteners, closures, and other exposed panel accessories.

3. Soffit Panels: 12-inches long by actual panel width (12"). Include clips, caps, battens, fasteners, closures, and other exposed panel accessories.

4. Trim and Closures: 12-inches long. Include fasteners and other exposed accessories.

5. Vapor Retarders: 6-inch square samples.

6. Accessories: 12-inch long samples for each type of accessory.

E. Product Certificates: Signed by manufacturers of metal building systems certifying that products furnished comply with requirements.

1. Letter of Design Certification: Signed and sealed by a qualified professional engineer. Include the following:

a. Name and location of Project.
b. Order number.
c. Name of manufacturer.
d. Name of Contractor.
e. Building dimensions, including width, length, height, and roof slope.
f. Indicate compliance with AISC standards for hot-rolled steel and AISI

standards for cold-rolled steel, including edition dates of each standard.

g. Governing building code and year of edition.

h. Design Loads: Include dead load, roof live load, collateral loads, roof snow load, deflection, wind loads/speeds and exposure, seismic zone or effective peak velocity-related acceleration/peak acceleration, and auxiliary loads (cranes).

i. Load Combinations: Indicate that loads were applied acting simultaneously with concentrated loads, according to governing building code.

j. Building-Use Category: Indicate category of building use and its effect on load importance factors.

k. AISC Certification for Category MB: Include statement that metal building system and components were designed and produced in an AISC-Certified Facility by an AISC-Certified Manufacturer.

F. Welding Certificates: Copies of certificates for welding procedures and personnel.

G. Erector Certificates: Signed by manufacturer certifying that erectors comply with requirements.

H. Manufacturer Certificates: Signed by manufacturers certifying that they comply with requirements. Include evidence of manufacturing experience.

I. Qualification Data: For firms and persons specified in "Quality Assurance" Article to demonstrate their capabilities and experience. Include lists of completed projects with project names and addresses, names and addresses of architects and owners, and other information specified.

J. Material Certificates: Signed by manufacturers certifying that each of the following items complies with requirements:

1. Thermal insulation.

2. Vapor retarders.

K. Product Test Reports: Based on evaluation of comprehensive tests performed by manufacturer and witnessed by a qualified testing agency, indicating the following current products comply with requirements:

1. Insulation and Vapor Retarders: Include reports for thermal resistance, fire-test-response characteristics, water-vapor transmission, and water absorption.

L. Surveys: Show final elevations and locations of major members. Engage a qualified engineer or land surveyor to perform surveys and certify their accuracy. Indicate discrepancies between actual installation and the Contract Documents.

M. Warranties: Special warranties specified in the provisions of the contract documents.

1.6 QUALITY ASSURANCE

A. Erector Qualifications: An experienced erector who has specialized in erecting and installing work similar in material, design, and extent to that indicated for this Project and who is acceptable to manufacturer.

B. Professional Engineer Qualifications: A professional engineer who is legally qualified to practice in jurisdiction where Project is located and who is experienced in providing engineering services of the kind indicated. Engineering services are defined as those

performed for installations of metal building systems that are similar to those indicated for this Project in material, design, and extent.

C. Manufacturer Qualifications: A firm experienced in manufacturing metal building systems similar to those indicated for this Project and with a record of successful in-service performance.

1. Member of MBMA.

2. AISC Certification for Category MB: An AISC-Certified Manufacturer that designs and produces metal building systems and components, AISC-Certified Facility, Category I.

3. Engineering Responsibility: Preparation of Shop Drawings, testing program development, test result interpretation, and comprehensive engineering analysis by a qualified professional engineer.

D. Surveyor Qualifications: A land surveyor who is legally qualified to practice in jurisdiction where Project is located and who is experienced in providing surveying services of the kind indicated.

E. Source Limitations: Obtain each type of metal building system component through one source from a single manufacturer.

F. Product Options: Information on Drawings and in Specifications establishes requirements for system's aesthetic effects and performance characteristics. Aesthetic effects are indicated by dimensions, arrangements, alignment, and profiles of components and assemblies as they relate to sight lines, to one another, and to adjoining construction. Performance characteristics are indicated by criteria subject to verification by one or more methods including preconstruction testing, field testing, or in-service performance.

1. Do not modify intended aesthetic effects, as judged solely by Architect, except with Architect's approval. If modifications are proposed, submit comprehensive explanatory data to Architect for review.

G. Welding: Qualify procedures and personnel according to AWS D1.1, "Structural Welding Code--Steel"; and AWS D1.3, "Structural Welding Code--Sheet Steel." All welding shall be done by certified welders per AWS in the last 12 months.

H. Regulatory Requirements: Fabricate and label structural framing to comply with special inspection requirements at point of fabrication for welding and other connections required by authorities having jurisdiction.

I. Structural Steel: Comply with AISC S335, "Specification for Structural Steel Buildings--Allowable Stress Design, Plastic Design"; or AISC S342, "Load and Resistance Factor Design Specification for Structural Steel Buildings," for design requirements and allowable stresses.

J. Cold-Formed Steel: Comply with AISI SG-671, "Specification for the Design of Cold-Formed Steel Structural Members," and AISI SG-911, "Load and Resistance Facet Design Specification for Steel Structural Members," for design requirements and allowable stresses.

K. Preinstallation Conference: Conduct conference at Project site to comply with requirements in Division 1 Section "Project Meetings." Review methods and procedures related to metal building systems including, but not limited to, the following:

1. Inspect and discuss condition of foundations and other preparatory work performed by other trades.

2. Review structural load limitations.

3. Review and finalize construction schedule and verify availability of materials, Erector's personnel, equipment, and facilities needed to make progress and avoid delays.

4. Review required testing, inspecting, and certifying procedures.

5. Review weather and forecasted weather conditions and procedures for unfavorable conditions.

1.7 DELIVERY, STORAGE, AND HANDLING

A. Deliver components, sheets, panels, and other manufactured items so as not to be damaged or deformed. Package roof and wall panels for protection during transportation and handling.

B. Handling: Unload, store, and erect roof and wall panels to prevent bending, warping, twisting, and surface damage.

C. Stack materials on platforms or pallets, covered with tarpaulins or other suitable weathertight and ventilated covering. Store roof and wall panels to ensure dryness. Do not store panels in contact with other materials that might cause staining, denting, or other surface damage.

1.8 PROJECT CONDITIONS

A. Weather Limitations: Proceed with installation only when weather conditions permit roof and wall panel installation to be performed according to manufacturer's written instructions and warranty requirements.

B. Field Measurements: Verify metal building system foundations by field measurements before metal building fabrication and indicate measurements on Shop Drawings. Coordinate fabrication schedule with construction progress to avoid delaying the Work.

1. Established Dimensions for Foundations: Where field measurements cannot be made without delaying the Work, establish foundation dimensions and proceed with fabricating structural framing without field measurements. Coordinate anchor-bolt installation to ensure that actual anchorage dimensions correspond to established dimensions.

2. Established Dimensions for Panels: Where field measurements cannot be made without delaying the Work, either establish framing and opening dimensions and proceed with fabricating roof and wall panels without field measurements, or allow for field-trimming panels. Coordinate roof and wall construction to ensure that actual building dimensions, locations of structural members, and openings correspond to established dimensions.

1.9 COORDINATION

A. Coordinate size and location of concrete foundations and casting of anchor-bolt inserts into foundation walls and footings. Concrete, reinforcement, and form work requirements are specified in Division 3 Section "Cast-in-Place Concrete."

B. Coordinate installation of roof curbs, equipment supports, roof, wall and soffit penetrations.

1.10 WARRANTY

A. General Warranty: Special warranties specified in this Article shall not deprive Owner of other rights Owner may have under other provisions of the Contract Documents and shall be in addition to, and run concurrent with, other warranties made by Contractor under requirements of the Contract Documents.

B. Special Warranty on Panels: Written warranty, executed by manufacturer agreeing to repair or replace roof and wall panels that fail in materials or workmanship within specified warranty period.

1. Warranty Period: five years from date of Substantial Completion.

C. Special Warranty on Panel Finishes: Written warranty, signed by manufacturer agreeing to repair finish or replace metal panels that show evidence of deterioration of factory-applied finishes within specified warranty period. Deterioration of finish includes, but is not limited to, color fade, chalking, cracking, peeling, and loss of film integrity.

1. Warranty Period for Roof Panels: 20 years from date of Substantial Completion.

2. Warranty Period for Wall Panels: 20 years from date of Substantial Completion.

D. Special Warranty on Standing-Seam Roof Panel Weather tightness: Written warranty, signed by manufacturer agreeing to repair or replace standing-seam roof panel assemblies that fail to remain weather tight within specified warranty period.

1. Warranty Period: 20 years from date of Substantial Completion.

PART II – PRODUCTS

2.1 MANUFACTURERS

A. Available Manufacturers: Subject to compliance with requirements, manufacturers offering products that may be incorporated into the Work include, but are not limited to, the following:

1. American Buildings Company.

2. Butler Manufacturing Company.

3. Metallic Building Co.

4. Portland Systems.

5. Varco-Pruden Buildings; a United Dominion Company.

6. Other manufactures meeting the requirements may be accepted. Prior approval from the Architect required. See section 01631 for substitution requirements.

2.2 STRUCTURAL-FRAMING MATERIALS

A. Structural-Steel Shapes: ASTM A 36/A 36M or ASTM A 529/A 529M.

B. Steel Plate, Bar, or Strip: ASTM A 529/A 529M, ASTM A 570/A 570M, or ASTM A 572/A 572M; 50,000-psi minimum yield strength.

C. Steel Tubing or Pipe: ASTM A 500, Grade B or ASTM A 53, Grade B.

D. Structural-Steel Sheet: Hot-rolled, ASTM A 570/A 570M, Grade 50 or Grade 55; hot-rolled, ASTM 568/A 568M; or cold-rolled, ASTM A 611, structural-quality, matte (dull) finish.

E. Zinc-Coated (Galvanized) Steel Sheet: ASTM A 653/A 653M, structural quality, Grade 50, with G60 (Z180) coating designation; mill phosphatized.

F. Metallic-Coated Steel Sheet Prepainted with Coil Coating: Steel sheet metallic coated by the hot-dip process and prepainted by the coil-coating process to comply with ASTM A 755/A 755M and the following requirements:

1. Zinc-Coated (Galvanized) Steel Sheet: ASTM A 653/A 653M, G90 (Z275) coating designation; structural quality. Galvalume accepted.

G. High-Strength Bolts, Nuts, and Washers: ASTM A 325 (ASTM A 325M), Type 1, heavy hex steel structural bolts, heavy hex carbon-steel nuts, and hardened carbon-steel washers. Size bolts for primary systems shall be 5/8" diameter.

1. Finish: Hot-dip zinc coating, ASTM A 153, Class C.

H. Anchor Rods, Bolts, Nuts, and Washers: As follows:

1. Unheaded Rods: ASTM A 572/A 572M, Grade 50 (Grade 345).

2. Headed Bolts: ASTM A 325 (ASTM A 325M), Type 1, heavy hex steel structural bolts and heavy hex carbon-steel nuts.

3. Washers: ASTM A 36/A 36M.

I. Primers: As selected by manufacturer for resistance to normal atmospheric corrosion, compatibility with finish paint systems, capability to provide a sound foundation for field-applied topcoats despite prolonged exposure, and as follows:

!. Primer: Manufacturer's standard, lead- and chromate-free, nonasphaltic, rust-inhibiting primer.

2.3 PANEL MATERIALS

A. Metallic-Coated Steel Sheet Pre-painted with Coil Coating: Steel sheet metallic coated by the hot-dip process and pre-painted by the coil-coating process to comply with ASTM A 755/A 755M and the following requirements:

1. Zinc-Coated (Galvanized) Steel Sheet: ASTM A 653/A 653M, G90 (Z275) coating designation; structural quality. Aluminum-zinc alloy-coated steel accepted.

2. Surface: Smooth, flat, mill finish.

3. Trapezoidal Structural Standing Seam Roof System, field seamed system 3" High. Roof panels begin and end with a 3" high seam, and concealed fasteners as manufactured by MBCI, Model Double-Lok or prior approved equal.

4. Architectural wall panel, 12" wide, 24 gauge minimum, smooth with beads at 4" on center. Concealed fastener system. MBCI, model number FW120-2 or prior approved equal.

5. Architectural Soffit panel, 24 gauge minimum, smooth with beads at 4" on center. Concealed fastener system. MBCI, Artisan series L12 with beads or prior approved equal.

B. Panel Sealants: Provide the following:

1. Sealant Tape: Pressure-sensitive, 100 percent solids, gray polyisobutylene compound sealant tape with release-paper backing. Provide permanently elastic, nonsag, nontoxic, nonstaining tape 1/2 inch wide and 1/8 inch thick.

2. Joint Sealant: ASTM C 920; one-part elastomeric polyurethane, polysulfide, or silicone-rubber sealant; of type, grade, class, and use classifications required to seal joints in panels and remain weathertight; and as recommended by metal building system manufacturer. Non hardening.

2.4 INSULATION MATERIALS

A. Fire-Test-Response Characteristics for Insulation: Provide insulation and related materials with the fire-test-response characteristics indicated, as determined by testing identical products per test method indicated below by UL or another testing and inspecting agency acceptable to authorities having jurisdiction. Identify materials with appropriate markings of applicable testing and inspecting agency.

1. Surface-Burning Characteristics: ASTM E 84.

2. Combustion Characteristics: ASTM E 136.

B. Glass-Fiber-Blanket Insulation: Thermal insulation, complying with ASTM C 991, Type II, of 0.5-lb/cu. ft. density, thickness as indicated, with a flame-spread rating of 25 or less, and 2-inch wide, continuous, vapor-tight edge tabs.

1. Type II: Faced one side with nonreflective vapor-retarder membrane.
Class A: Membrane-faced surface with a flame-spread rating of 25 or less.

2. Type II: 1.35-lb/cu. ft. minimum density.

3. Type II: Applied with a water based liquid adhesive.

C. Vapor-Retarder Facing: Complying with ASTM C 1136, with permeance not greater than the following when tested according to ASTM E 96, Desiccant Method:

1. Composition: Semi-gloss White Polypropylene-faced, scrim-reinforced foil, with permeance not greater than 0.02 perm.

2. Available Manufacturers: Subject to compliance with requirements, manufacturers offering products that may be incorporated into the Work include, but are not limited to, the following:

a. CGI Silvercote, Inc.
b. Lamtec Corporation.
c. Owens-Corning Fiberglas Corporation.
d. Simple Saver System as designed by Thermal design, Inc. (800-255-0776).

D. Retainer Strips: 0.019-inch thick, formed, galvanized steel or PVC retainer clips colored to match insulation facing (White).

2.5 MISCELLANEOUS MATERIALS

A. Bituminous Coating: Cold-applied asphalt mastic, SSPC-Paint 12, compounded for 15-mil (0.4-mm) dry film thickness per coat. Provide inert-type noncorrosive compound free of asbestos fibers, sulfur components, and other deleterious impurities.

B. Nonmetallic, Shrinkage-Resistant Grout: Premixed, nonmetallic, noncorrosive, nonstaining grout containing selected silica sands, portland cement, shrinkage compensating agents, plasticizing and water-reducing agents, complying with ASTM C 1107, of consistency suitable for application, and with a 30-minute working time.

C. Shop Primer for Galvanized Metal Surfaces: Zinc dust, zinc-oxide primer selected by manufacturer for compatibility with substrate. Comply with FS TT-P-641.

D. Finish Painting: Refer to Division 9 Section "Painting." Coordinate primer that is required and compatible with the finish coat system.

E. Flexible weather resistant EPDM pipe flashing. Isolates piping from building movement. Acceptable product, Dektite as manufactured by ITW Buildex (708-595-3500) or prior approved equal.

F. Gypsum Board: Type X, of thicknesses indicated, complying with ASTM C 442 or ASTM C 36.

2.6 FABRICATION, GENERAL

A. General: Design components and field connections required for erection to permit easy assembly and disassembly.

1. Fabricate components in a manner that once assembled in the shop, they may be disassembled, repackaged, and reassembled in the field.

2. Mark each piece and part of the assembly to correspond with previously prepared erection drawings, diagrams, and instruction manuals.

3. Fabricate framing to produce clean, smooth cuts and bends. Punch holes of proper size, shape, and location. Cold-formed members shall be free of cracks, tears, and ruptures.

B. Primary Framing: Shop-fabricate framing components to indicated size and section with baseplates, bearing plates, stiffeners, and other items required for erection welded into place. Cut, form, punch, drill, and weld framing for bolted field assembly.

1. Make shop connections by welding continuous or by using high-strength bolts.

2. Join flanges to webs of continuous built-up members by a continuous submerged arc-welding process.

3. Brace compression flange of primary framing by angles connected between frame web and purlin or girt web, so flange compressive strength is within allowable limits for any combination of loadings.

4. Weld clips to frames for attaching secondary framing members.

5. Shop Priming: Prepare surfaces for shop priming according to SSPC-SP 2. Shop prime primary structural members with specified primer after fabrication.

C. Secondary Framing: Shop-fabricate framing components to indicated size and section by roll-forming or break-forming, with base plates, bearing plates, stiffeners, and other plates required for erection welded into place. Cut, form, punch, drill, and weld secondary framing for bolted field connections to primary framing.

1. Make shop connections by welding or by using high-strength bolts.

2. Shop Priming: Prepare surfaces for shop priming according to SSPC-SP 2. Shop prime secondary structural members with specified primer after fabrication.

D. Factory Priming for Field-Painted Finish: Where field painting after installation is indicated, apply the specified air-dried primer immediately after cleaning and pretreating.

1. Prime primary, secondary, and end-wall steel framing members with specified primer to a minimum dry film thickness of 1 mil.
Prime secondary steel framing formed from metallic-coated steel sheet with red-oxide polyester paint, with a minimum dry film thickness of 0.5 mil on each side.

2. Prime galvanized members, after phosphoric acid pretreatment, with manufacturer's standard zinc dust, zinc-oxide primer.

E. Tolerances: Comply with MBMA's "Low Rise Building Systems Manual": Chapter IV, Section 9, "Fabrication and Erection Tolerances."

2.7 STRUCTURAL FRAMING

A. Primary Framing: Manufacturer's standard structural primary framing system, designed to withstand required loads and specified requirements. Primary framing includes transverse and lean-to frames; rafter, rake, and canopy beams; sidewall, intermediate, end-wall, and corner columns; and wind bracing. If build-up sections are used out of plate, continuous welding shall be employed on at least one side and intermittent welds on the opposite side to suite design requirements.

1. General: Provide frames with attachment plates, bearing plates, and splice members. Factory drill for field-bolted assembly. Provide frame span and spacing indicated.

2. Rigid Frames: I-shaped frame sections fabricated from continuous shop-welded, built-up steel plates Minimum plate thickness of 1/4" or structural-steel shapes.

3. Frame Configuration: Two-directional sloped.

4. Exterior Column Type: Straight or Tapered

5. Rafter Type: Tapered.

B. End-Wall Framing: Manufacturer's standard primary end-wall framing fabricated for field-bolted assembly to comply with the following:

1. End-Wall and Corner Columns: I-shaped sections fabricated from structural-steel shapes; shop-welded, built-up steel plates; or C-shaped, cold-formed, structural-steel sheet; with minimum thickness of 0.125 inch.

2. End-Wall Rafters: C-shaped, cold-formed, structural-steel sheet; with minimum

thickness of 0.0598 inch.

C. Secondary Framing: Manufacturer's standard secondary framing members, including purlins, girts, eave struts, flange bracing, base members, gable angles, clips, headers, jambs, and other miscellaneous structural members. Fabricate framing from cold-formed, structural-steel sheet or roll-formed, metallic-coated steel sheet prepainted with coil coating, unless otherwise indicated, to comply with the following:

1. Purlins: C- or Z-shaped sections; fabricated from minimum 0.0598-inch thick steel sheet, built-up steel plates, or structural-steel shapes; minimum 2-1/2-inch wide flanges.

2. Girts: C- or Z-shaped sections; fabricated from minimum 0.0598-inch thick steel sheet, built-up steel plates, or structural-steel shapes. Form ends of Z-sections with stiffening lips angled 45 to 50 degrees to flange and with minimum 2-1/2-inch wide flanges.

3. Eave Struts: Unequal-flange, C-shaped sections; fabricated from 0.0598-inch thick steel sheet, built-up steel plates, or structural-steel shapes; to provide adequate backup for both roof and wall panels.

4. Flange and Sag Bracing: Minimum 1-5/8-by-1-5/8-inch structural-steel angles, with a minimum thickness of 0.0598 inch, to stiffen primary frame flanges.

5. Base or Sill Angles: Minimum 3-by-2-by-0.0747-inch zinc-coated (galvanized) steel sheet.

6. Purlin and Girt Clips: Minimum 0.0747-inch thick, zinc-coated (galvanized) steel sheet.

7. Secondary End-Wall Framing: Manufacturer's standard sections fabricated from minimum 0.0747-inch thick, zinc-coated (galvanized) steel sheet.

8. Framing for Openings: Channel shapes; fabricated from minimum 0.0598-inch thick, cold-formed, structural-steel sheet or structural-steel shapes. Frame head and jamb of door openings, and head, jamb, and sill of other openings.

9. Miscellaneous Structural Members: Manufacturer's standard sections fabricated from cold-formed, structural-steel sheet; built-up steel plates; or zinc-coated (galvanized) steel sheet; designed to withstand required loads.

D. Canopy Framing: Provide canopy framing as indicated on architectural drawings.

1. Type: Construct using standard secondary framing members indicated above.

E. Bracing: Provide adjustable wind bracing as follows:

1. Rods: ASTM A 36/A 36M; ASTM A 572/A 572M, Grade D; or ASTM A 529/A 529M, Grade 50; 1/2-inch diameter steel; threaded full length or threaded a minimum of 12 inches at each end.

2. Cable: Cable bracing is not allowed.

3. Angles: Fabricated from structural-steel shapes to match primary framing, of size required to withstand design loads.

4. Rigid Portal Frames: Fabricate from shop-welded, built-up steel plates or structural-steel shapes to match primary framing; of size required to withstand design loads.

5. Fixed-Base Columns: Fabricate from shop-welded, built-up steel plates or structural-steel shapes to match primary framing; of size required to withstand design loads.

6. Diaphragm Action of Panels: Design metal building to resist wind forces through diaphragm action of roof, wall panels and rod bracing.

7. Bracing: Provide wind bracing using any method specified above, at manufacturer's option.

F. Bolts: Provide shop-painted bolts unless structural-framing components are in direct contact with roof and wall panels. Provide zinc-plated bolts when structural-framing components are in direct contact with roof and wall panels. The primary frame shall use a minimum bolt size of 5/8" diameter A325 or higher strength.

2.8 ROOF PANELS

A. Structural Standing-Seam Roof Panels: Manufacturer's standard panels complying with the following:

1. Ribbed Roof Panels: Fabricate from metallic-coated steel sheets prepainted with coil coating, factory formed to provide 24-inch coverage; with 3-inch high (including seam), raised trapezoidal major ribs at panel edges, and intermediate stiffening ribe symmetrically spaced between major ribs for full lengh of panel. Field seamed. Comply with the following:
Material: Zinc-coated (galvanized) steel.
b. Yield Strength: 50 ksi.
c. Metal Thickness: 0.0239 inch minimum.
d. Joint Type: Folded, mechanically seamed type.
e. Clip System: Floating to accommodate thermal movement (high clip system).

B. Roof Panel Accessories: Provide components required for a complete roof panel assembly including trim, copings, fasciae, mullions, sills, corner units, ridge closures, clips, seam covers, battens, flashings, gutters, sealants, gaskets, fillers, closure strips, and similar items. Match materials and finishes of roof panels, unless otherwise indicated.

1. Closures: Provide closures at eave and ridge, fabricated of same metal as roof panels.

2. Clips: Minimum 0.0625-inch thick, stainless-steel panel clips designed to withstand negative-load requirements.

3. Cleats: Mechanically seamed cleats formed from minimum 0.0250-inch thick, stainless-steel or nylon-coated aluminum sheet.

4. Thermal Spacer Blocks: Where panels attach directly to purlins, provide 1-inch thick, thermal spacer blocks; fabricated from extruded polystyrene.

5. Backing Plates: Provide metal backing plates at panel end splices, fabricated from material recommended by manufacturer.

C. Exterior Finish: Unpainted natural finish.

D. Concealed Finish: Apply pretreatment and manufacturer's standard white or light-colored backer finish, consisting of prime coat and wash coat with a total minimum dry film thickness of 0.5 mil.

2.9 WALL PANELS

A. Uninsulated Wall Panels: Provide manufacturer's standard Architectural panels complying with the following:

1. Beaded Panels: Fabricate from metallic-coated steel sheets prepainted with coil coating, factory formed to provide 12-inch coverage, beads at 4-inches o.c. Design panels for mechanical attachment to structure using concealed fasteners, lapping major ribs at panel edges. Comply with the following:
Material: Zinc-coated (galvanized) steel. Or Aluminum-zinc alloy-coated steel
b. Yield Strength: 50 ksi.
c. Metal Thickness: 22 gauge minimum or as required for wind exposure.
d. Panel Thickness: 1.5 inches.

B. Wall Panel Accessories: Provide components required for a complete wall panel assembly, including trim, copings, mullions, sills, corner units, clips, seam covers, battens, flashings, sealants, gaskets, fillers, closure strips, and similar items. Match materials and finishes of panels.

1. Backing Plates: Provide metal backing plates at panel end splices, fabricated from material recommended by manufacturer.

C. Exposed Finish for Exterior Panels: Apply the following coil coating:

1. Silicone Polyester Two-Coat System: Manufacturer's standard two-coat, thermocured system consisting of specially formulated inhibitive primer and siliconized polyester color topcoat containing not less than 75 percent polyvinylidene fluoride resin by weight, with a total minimum dry film thickness of 1 mil and 30 percent reflective gloss when tested according to ASTM D 523.

a. Durability: Provide coating field tested under normal range of weather conditions for a minimum of 20 years without significant peel, blister, flake, chip, crack, or check in finish; without chalking in excess of a chalk rating of 8 according to ASTM D 4214; and without fading in excess of five Hunter units.

2. Colors, Textures, and Glosses: As selected by Architect from manufacturer's full range for these characteristics.

D. Concealed Finish: Apply pretreatment and manufacturer's standard white or light-colored backer finish, consisting of prime coat and wash coat with a total minimum dry film thickness of 0.5 mil.

2.10 FASCIA AND SOFFIT PANELS

A. Fascia Panels: Manufacturer's standard panels complying with the following:

1. Match roof panel profile and material and coloring.

2. Flat-Pan Panels: Fabricate from metallic-coated steel sheets prepainted with coil coating, factory formed to provide 12-inch coverage; with 1-inch high, inverted-L, standing-seam, vertical ribs at panel edges. Design panels for mechanical attachment to fascia supports using concealed clips in side laps. Factory apply sealant at each interlocking joint. Comply with the following:

   a. Material: Zinc-coated (galvanized) steel.
   b. Yield Strength: 50 ksi.
   c. Metal Thickness: 24 gauge minimum.
   d. Joint Type: As standard with manufacturer.
   f. Clip System: Floating to accommodate thermal movement.

2.11 OVERHEAD DOORS AND FRAMES

A. Overhead door support framing shall be designed to resist applicable wind loads and shall consist of channel or tube steel jambs as shown with a structural header at the top of the opening. Twenty four gauge galvanized steel flashing, color coordinated, provided to conceal panel edges around the opening unless otherwise specified. Provide weatherstripping at jambs and head.

b. Service Doors: Refer to Division 8 Section "Sectional Overhead Doors."

2.12 WINDOWS

A. N.A.

2.13 ACCESSORIES

A. General: Provide accessories as standard with metal building system manufacturer, and complying with the following:

   1. Provide sheet metal accessories of same material and in same finish as roof and wall panels, unless otherwise indicated.

B. Fasteners: Self-tapping screws, bolts, nuts, self-locking rivets and bolts, end-welded studs, and other suitable fasteners designed to withstand design loads. Provide fasteners with heads matching color of roof or wall sheets by means of plastic caps or factory-applied coating. Comply with the following:

   1. Fasteners for Roof and Wall Panels: Self-drilling or self-tapping 410 stainless or zinc-alloy steel hex washer head, with EPDM or PVC washer under heads of fasteners bearing on weather side of panels.

   2. Fasteners for Flashing and Trim: Blind fasteners or self-drilling screws with hex washer head.

   3. Blind Fasteners: High-strength aluminum or stainless-steel rivets.

C. Flashing and Trim: Form from 0.0179-inch thick, zinc-coated (galvanized) steel sheet or aluminum-zinc alloy-coated steel sheet prepainted with coil coating. Provide flashing and trim as required to seal against weather and to provide finished appearance. Locations include, but are not limited to, eaves, rakes, corners, bases, framed openings, ridges, fasciae, and fillers. Finish flashing and trim with same finish system as adjacent roof or wall panels.
   1. Opening Trim: Painted subframing of suitable thickness to protect overhead door operation. Trim head and jamb of door openings, and head, jamb, and sill of other

openings.

D. Gutters: Form from 0.0179-inch thick, zinc-coated (galvanized) steel sheet or aluminum-zinc alloy-coated steel sheet prepainted with coil coating. Match profile of gable trim, complete with end pieces, outlet tubes, and other special pieces as required. Fabricate in minimum 96-inch long sections, sized according to SMACNA's "Architectural Sheet Metal Manual." Furnish gutter supports spaced 36-inches o.c., fabricated from same metal as gutters. Provide bronze, copper, or aluminum wire ball strainers at outlets. Finish gutters to match roof fascia and rake trim.

1. See special detailing.

E. Downspouts: PVC piping 3" sealed water tight.

1. See special detailing.

F. Louvers: Refer to Division 10 Section "Louvers and Vents."

G. Snow Guards: Refer to Division 07 Section “Roof Snow Guards

H. Closures: Closed-cell, laminated polyethylene; minimum 1-inch thick, flexible closure strips; cut or premolded to match roof and wall panel profile. Provide closure strips where indicated or necessary to ensure weathertight construction.

I. Pipe Flashing: Premolded, EPDM pipe collar with flexible aluminum ring bonded to base.

2.14 FINISHES, GENERAL

A. Comply with NAAMM's "Metal Finishes Manual for Architectural and Metal Products" for recommendations for applying and designating finishes.

B. Appearance of Finished Work: Variations in appearance of abutting or adjacent pieces are acceptable if they are within one-half of the range of approved Samples. Noticeable variations in the same piece are not acceptable. Variations in appearance of other components are acceptable if they are within the range of approved Samples and are assembled or installed to minimize contrast.

2.15 SOURCE QUALITY CONTROL

A. Owner may employ an independent testing agency to perform source quality-control testing and special inspections, and to prepare test reports.

1. Testing agency will conduct and interpret tests and state in each report whether test specimens comply with or deviate from requirements.

2. Allow Owner's testing agency access to places where structural framing is being fabricated or produced. Cooperate with Owner's testing agency and provide samples of materials as may be requested for additional testing and evaluation.

3. Special inspections will not be required when fabrication is performed by a fabricator registered and approved by authorities having jurisdiction to perform such work without special inspection.

B. Correct deficiencies in or remove and replace structural framing that inspections and test reports indicate do not comply with requirements.

C. Additional testing, at Contractor's expense, will be performed to determine compliance of corrected Work with requirements.

D. Shop-bolted connections will be tested and inspected according to RCSC's "Allowable Stress Design Specification for Structural Joints Using ASTM A 325 or A 490 Bolts."

E. Shop-bolted connections will be tested and inspected according to RCSC's "Load and Resistance Factor Design Specification for Structural Joints Using ASTM A 325 or A 490 Bolts.

1. Direct-tension indicator gaps will be verified to comply with ASTM F 959, Table 2.

F. In addition to visual inspection, shop welding will be inspected and tested according to AWS D1.1 and the inspection procedures listed below, at testing agency's option:

1. Liquid-Penetrant Inspection: ASTM E 165.

G. In addition to visual inspection, shop-welded shear connectors will be inspected and tested according to requirements of AWS D1.1 for stud welding and as follows:

1. Bend tests may performed when visual inspections reveal either less than a continuous 360-degree flash or welding repairs to any shear connector.

2. Tests may be conducted on additional shear connectors when weld fracture occurs on shear connectors already tested, according to requirements of AWS D1.1.

H. Testing agency will report test results promptly and in writing to Owner, Contractor and Architect.

PART III – EXECUTION

3.1 EXAMINATION

A. Examine substrates, with Erector present, for compliance with requirements for installation tolerances and other conditions affecting performance of metal building system.

B. Before erection proceeds, survey elevations and locations of concrete and masonry bearing surfaces, baseplates, and anchor bolts to receive structural framing. Verify compliance with requirements and metal building system manufacturer's tolerances.

1. Engage land surveyor to perform surveying.

3.2 PREPARATION

A. Clean substrates of substances, including oil, grease, rolling compounds, incompatible primers, and loose mill scale, that impair bond of erection materials.

B. Surface Preparation: Clean and prepare surfaces to be painted according to manufacturer's written instructions for each particular substrate condition and as specified.

3.3 ERECTION

A. Erect metal building system according to manufacturer's written instructions and erection drawings.

B. Do not field cut, drill, or alter structural members without written approval from metal building system manufacturer's professional engineer.

C. Set structural framing in locations and to elevations indicated and according to AISC specifications referenced in this Section. Maintain structural stability of frame during erection.

D. Baseplates and Bearing Plates: Clean concrete and masonry bearing surfaces of bond-reducing materials and roughen surfaces before setting baseplates and bearing plates. Clean bottom surface of baseplates and bearing plates.

1. Set baseplates and bearing plates for structural members on wedges, shims, or setting nuts.

2. Tighten anchor bolts after supported members have been positioned and plumbed. Do not remove wedges or shims but, if protruding, cut off flush with edge of baseplate or bearing plate before packing with grout.

3. Pack grout solidly between bearing surfaces and plates so no voids remain. Finish exposed surfaces, protect installed materials, and allow to cure.

4. Comply with manufacturer's written instructions for proprietary grout materials.

E. Align and adjust framing members before permanently fastening. Before assembly, clean bearing surfaces and other surfaces that will be in permanent contact. Make adjustments to compensate for discrepancies in elevations and alignment.

1. Level and plumb individual members of structure.

2. Establish required leveling and plumbing measurements on mean operating temperature of structure. Make allowances for difference between temperature at time of erection and mean temperature at which structure will be when completed and in service.

F. Primary Framing and End Walls: Erect framing true to line, level, plumb, rigid, and secure. Level baseplates to a true even plane with full bearing to supporting structures, set with double-nutted anchor bolts. Use grout to obtain uniform bearing and to maintain a level base-line elevation. Moist cure grout for not less than seven days after placement.

1. Make field connections using high-strength bolts. Tighten bolts by turn-of-the-nut method.

G. Secondary Framing: Erect framing true to line, level, plumb, rigid, and secure. Fasten secondary framing to primary framing using clips with field connections using non-high-strength bolts. Hold rigidly to a straight line by sag rods.

1. Provide rake or gable purlins with tight-fitting closure channels and fasciae.

2. Locate and space wall girts to suit door and window arrangements and heights.

3. Locate canopy framing as indicated.

4. Provide supplemental framing at entire perimeter of openings, including doors, windows, louvers, ventilators, and other penetrations of roof and walls.

H. Bracing: Install bracing in roof and sidewalls where indicated on erection drawings.

1. Tighten rod and cable bracing to avoid sag.

2. Locate interior end bay bracing only where indicated.

I. Framing for Openings: Provide shapes of proper design and size to reinforce openings and to carry loads and vibrations imposed, including equipment furnished under mechanical and electrical work. Securely attach to building structural frame.

3.4 ROOF PANEL INSTALLATION

A. General: Provide roof panels of full length from eave to ridge when possible. Install panels perpendicular to purlins.

1. Field cutting by torch is not permitted.

2. Rigidly fasten eave end of roof panels and allow ridge end free movement due to thermal expansion and contraction. Predrill panels.

3. Provide weatherseal under ridge cap.

4. Flash and seal roof panels with weather closures at eaves, rakes, and at perimeter of all openings. Fasten with self-tapping screws.

5. Install screw fasteners with power tools having controlled torque adjusted to compress neoprene washer tightly without damage to washer, screw threads, or panels. Install screws in predrilled holes.

6. Use aluminum or stainless-steel fasteners for exterior applications and galvanized fasteners for interior applications.

7. Locate and space fastenings in true vertical and horizontal alignment.

8. Install ridge caps as roof panel work proceeds.

9. Locate panel splices over, but not attached to, structural supports. Stagger panel splices to avoid a four-panel lap splice condition.

10. Provide weather-resistant escutcheons for pipe and conduit penetrating roofing panels.

B. Standing-Seam Roof Panels: Fasten roof panels to purlins with concealed clips at each standing-seam joint. Install clips over top of insulation at location and spacing determined by manufacturer.

1. Install clips to supports with self-drilling fasteners.

2. Crimp standing seams with manufacturer-approved motorized seamer tool so clip, panel, and factory-applied side-lap sealant are completely engaged.

3. At panel splices, nest panels with minimum 6-inch end lap, sealed with butyl sealant and fastened together by interlocking clamping plates.

3.5 WALL PANEL INSTALLATION

A. General: Provide panels full height of building. Install panels perpendicular to girts.

1. Arrange and nest side-lap joints so prevailing winds blow over, not into, lapped joints.

Install panels with vertical edges plumb. Lap ribbed or fluted sheets one full rib corrugation. Apply panels and associated items for neat and weather tight enclosure. Avoid "panel creep" or application not true to line.

2. Unless otherwise indicated, begin panel installation at corners with center of rib lined up with line of framing.

3. Field cutting by torch is not permitted.

4. Align bottom of wall panels and fasten with blind rivets, bolts, or self-tapping screws.

5. Fasten flashing and trim around openings and similar elements with self-tapping screws.

6. When two rows of panels are required, lap panels 4 inches minimum. Locate panel splices over structural supports.

7. Install continuous thermal break on all girts.

8. Install screw fasteners with power tools having controlled torque adjusted to compress neoprene washer tightly without damage to washer, screw threads, or panels. Install screws in predrilled holes.

9. Provide weather-resistant escutcheons for pipe and conduit penetrating exterior walls.

10. Flash and seal wall panels with weather closures under eaves and rakes, along lower panel edges, and at perimeter of all openings.

11. Apply elastomeric sealant continuously between metal base channel (sill angle) and concrete, and elsewhere as necessary for waterproofing. Handle and apply sealant and backup according to sealant manufacturer's written instructions.

12. Use aluminum or stainless-steel fasteners for exterior applications and galvanized fasteners for interior applications.

13. Locate and space fastenings in true vertical and horizontal alignment.

14. Align wall panel joints with soffit panels and roof panel.

B. Uninsulated Panels: Install wall panels on exterior side of girts. Attach panels to supports with concealed fasteners as recommended by manufacturer.

3.6 FASCIA AND SOFFIT PANEL INSTALLATION

A. General: Provide panels full width of fasciae and soffits. Install panels perpendicular to support framing.

1. Arrange and nest side-lap joints so prevailing winds blow over, not into, lapped joints. Install panels with vertical edges plumb. Lap ribbed or fluted panels one full rib corrugation. Apply panels and associated items for neat and weathertight enclosure. Avoid "panel creep" or application not true to line.

2. Field cutting by torch is not permitted.

3. Fasten flashing and trim around openings and similar elements with self-tapping

screws.

4. Install screw fasteners with power tools having controlled torque adjusted to compress neoprene washer tightly without damage to washer, screw threads, or panels. Install screws in predrilled holes.

5. Use aluminum or stainless-steel fasteners for exterior applications and galvanized fasteners for interior applications.

6. Locate and space fastenings in true vertical and horizontal alignment.

7. Align all seams with wall panels.

B. Fascia Panels: Align bottom of panels and fasten with blind rivets, bolts, or self-tapping screws. Flash and seal panels with weather closures where fasciae meet soffits, along lower panel edges, and at perimeter of all openings.

3.7 INSULATION INSTALLATION

A. General: Install insulation concurrently with panel installation, according to manufacturer's written instructions and as follows:

1. Set vapor-retarder-faced units with vapor retarder to warm side of construction, unless otherwise indicated. Do not obstruct ventilation spaces, except for firestopping.

2. Tape joints and ruptures in vapor retarder, and seal each continuous area of insulation to surrounding construction to ensure airtight installation.

3. Replace any section of exposed vapor barrier / insulation that is exposed to view if the damage exceeds 1".

4. Fall protection requirements as required by authorities shall be maintained during installation.

B. Blanket Insulation: Install blankets straight and true in one-piece lengths. Install vapor retarder over insulation with both sets of facing tabs sealed to provide a complete vapor retarder. Comply with the following installation method:

1. Over-Framing Installation: Extend insulation and vapor retarder over and perpendicular to top flange of secondary framing members. Hold in place by panels fastened to secondary framing.

2. Two-Layers-between-Purlin-with-Spacer-Block Installation: Extend insulation and vapor retarder between purlins. Carry vapor-retarder facing tabs up and over purlin, overlapping adjoining facing of next insulation course maintaining continuity of retarder. Install layer of filler insulation over first layer to fill space between purlins formed by thermal spacer blocks. Hold in place with bands and crossbands below insulation.

3. Retainer Strips: Install retainer strips at each longitudinal insulation joint, straight and taut, nesting with secondary framing to hold insulation in place.

3.8 DOOR INSTALLATION

A. General: Comply with manufacturer's written instructions for installing doors, hardware,

operators, and other door components. Coordinate installation with wall flashings and other components. Seal perimeter of each door frame with elastomeric sealant used for panels.

B. Hardware: N.A.

C. Personnel Doors and Frames: N.A.

3.9 WINDOW INSTALLATION

A. General: Comply with manufacturer's written instructions for installing windows, hardware, Operators, and other door components. Coordinate installation with wall flashings and other components. Seal perimeter of each window frame with elastomeric sealant used for panels.

3.10 ACCESSORY INSTALLATION

A. General: Install gutters, downspouts, ventilators, louvers, and other accessories according to manufacturer's written instructions, with positive anchorage to building and weathertight mounting. Coordinate installation with flashings and other components.

1. Install gutter as shown on detail.

B. Flashing and Trim: Comply with performance requirements, manufacturer's written installation instructions, and SMACNA's "Architectural Sheet Metal Manual." Provide for thermal expansion of metal units; conceal fasteners where possible, and set units true to line and level as indicated. Install work with laps, joints, and seams that will be permanently watertight and weather resistant.

1. Install exposed flashing and trim that is without excessive oil canning, buckling, and tool marks and that is true to line and levels indicated, with exposed edges folded back to form hems. Install sheet metal flashing and trim to fit substrates and to result in waterproof and weather-resistant performance.

2. Expansion Provisions: Provide for thermal expansion of exposed flashing and trim. Space movement joints at a maximum of 10-feet with no joints allowed within 24-inches of corner or intersection. Where lapped or bayonet-type expansion provisions cannot be used or would not be sufficiently weather resistant and waterproof, form expansion joints of intermeshing hooked flanges, not less than 1-inch deep, filled with mastic sealant (concealed within joints).

3. Separations: Separate metal from incompatible metal or corrosive substrates by coating concealed surfaces, at locations of contact, with asphalt mastic or other permanent separation as recommended by manufacturer.

C. Gutters: Join sections with riveted and soldered or lapped and sealed joints. Attach gutters to eave with gutter hangers spaced not more than 4-feet o.c. using manufacturer's standard fasteners. Provide end closures and seal watertight with sealant. Provide for thermal expansion.

D. Downspouts: PVC down spouts as detailed. Join sections to provide a water tight Seal from gutter to birdsmooth flow into catch basin. Provide fasteners designed to hold downspouts securely 1-inch away from walls and structure; locate fasteners at top and bottom and at approximately 60-inches o.c. in between.

1. Provide elbow at base of downspout to direct water away from building.

E. Pipe Flashing: Form EPDM flashing around pipe penetration and roof panels. Fasten and seal to roof panel as recommended by manufacturer.

F. Continuous Roof Ventilators: Set ventilators complete with necessary hardware, anchors, dampers, weather guards, rain caps, and equipment supports according to manufacturer's written instructions. Join sections with splice plates and end-cap skirt assemblies where required to achieve indicated length. Install preformed filler strips at base to seal ventilator to roof panels.

G. Louvers: Set louvers complete with necessary hardware, anchors, dampers, weather guards, and equipment supports according to manufacturer's written instructions. Locate and place louver units level, plumb, and at indicated alignment with adjacent work.

1. Use concealed anchorages where possible. Provide brass or lead washers fitted to screws where required to protect metal surfaces and to make a weathertight connection.

2. Provide perimeter reveals and openings of uniform width for sealants and joint fillers.

3. Protect galvanized- and nonferrous-metal surfaces from corrosion or galvanic action by applying a heavy coating of bituminous paint on surfaces that will be in contact with concrete, masonry, or dissimilar metals.

4. Install concealed gaskets, flashings, joint fillers, and insulation, as louver installation progresses, where required to make louver joints weathertight. Comply with Division 7 Section "Joint Sealants" for sealants applied during louver installation.

3.11 ERECTION AND LOCATION TOLERANCES

A. Structural-Steel Erection Tolerances: Comply with erection tolerance limits of AISC S303, "Code of Standard Practice for Steel Buildings and Bridges."

B. Roof Panel Installation Tolerances: Shim and align units within installed tolerance of 1/4 inch in 20-feet on slope and location lines as indicated and within 1/8-inch offset of adjoining faces and of alignment of matching profiles.

C. Wall Panel Installation Tolerances: Shim and align units within installed tolerance of 1/4 inch in 20-feet on level, plumb, and location lines as indicated and within 1/8-inch offset of adjoining faces and of alignment of matching profiles.

D. Door Installation Tolerances: Fit doors in frames within clearances specified in SDI 100.

3.12 FIELD QUALITY CONTROL

A. Testing Agency: Owner will engage a qualified independent testing agency to perform field quality-control testing.

B. Extent and Testing Methodology: Testing and verification procedures will be required of high-strength bolted connections. AISC and RCSC allow turn-of-the-nut method, calibrated wrench, alternative design bolts, and direct-tension indicators for bolt-tension testing. Add actual requirements if other than AISC's "10 percent" will be inspected.

1. Bolted connections will be visually inspected.

2. High-strength, field-bolted connections will be tested and verified according to procedures in RCSC's "Load and Resistance Factor Design Specification for

Structural Joints Using ASTM A 325 or A 490 Bolts."

C. Testing agency will report test results promptly and in writing to Contractor and Architect.

3.13 ADJUSTING

A. N.A.Delete paragraph and subparagraph below if hardware is specified in Division 8 Section "Door Hardware."

3.14 CLEANING AND PROTECTION

A. Touchup Painting: Immediately after erection, clean, prepare, and prime or reprime welds, bolted connections, and abraded surfaces of prime-painted primary and secondary framing, accessories, and bearing plates.

1. Clean and prepare surfaces by hand-tool cleaning, SSPC-SP 2, or power-tool cleaning, SSPC-SP 3.

2. Apply compatible primer of same type as shop primer used on adjacent surfaces.

B. Repair damaged galvanized coatings on exposed surfaces with galvanized repair paint according to ASTM A 780 and manufacturer's written instructions.

C. Roof and Wall Panels: Remove temporary protective coverings and strippable films, if any, as soon as each panel is installed. On completion of panel installation, clean finished surfaces as recommended by panel manufacturer and maintain in a clean condition during construction.

1. Replace panels that have been damaged or have deteriorated beyond successful repair by finish touchup or similar minor repair procedures.

D. Windows: Clean metal surfaces promptly after installing windows. Exercise care to avoid damage to protective coatings and finishes. Remove excess glazing and sealant compounds, dirt, and other substances. Lubricate hardware and other moving parts. Clean glass promptly after installing windows.

END OF SECTION

SECTION 15491 – AIR COMPRESSOR AND EQUIPMENT

PART 1 GENERAL

1.1 RELATED DOCUMENTS

A. Drawings and general provisions of Contract, including General and Supplementary Conditions and Division 1 Specification Sections, apply to this Section.

B. Division 5 Metals.

1.2 DESCRIPTION

A. This section includes the following:
1. Hose reels.
2. Air compressor.
3. Shop equipment as shown on drawings.

B. Provide complete and functional installation in compliance with requirements of the state and local Fire Marshal offices, and all applicable codes and ordinances.
1. Design piping to meet operational pressures for each type of system.

1.3 SUBMITTALS

A. General: Submit the following in accordance with Conditions of Contract and Division 1 Specification Sections.
1. Diagram for bolt hole pattern for reel mounting.
2. Shop drawings indicating piping location and type of pipe used between barrels and reels.
3. Product data on reels, reel accessories, pumps, compressor, piping and necessary products for fully operational system.

PART 2 PRODUCTS

2.1 MANUFACTURERS

A. Available Suppliers: Provide equipment, piping and accessories from one of the following service station equipment suppliers, or an approved equal.

2.2 HOSE REELS

A. Provide hose reels.
1. Air Service:
a. Air hose reel package including reel, 50 ft. of 3/8 inch hose, ball stop, air coupler and air chuck. (Lincoln 85063 or equal).
2. Water Service:
a. Water hose reel package including reel, 50 ft. of 3/8 inch hose, ball stop, water bib and connecting hose. (Lincoln 85065 or equal).

B. Piping
1. Air and Water: Copper tube, ASTM B88, type L, drawn.
a. Fittings: Brass compression type, ANSI B16.26.

C. Provide reel support framing as required for attachment to lube reel wall support.

2.3 AIR COMPRESSOR

A. Air compressor to meet or exceed the following requirements:
1. Mounting: Vertical tank.
2. Type: Two-stage, reciprocating, air cooled with cast iron cylinder.
3. Receiver: 80-gallon capacity, minimum.
4. Capacity: 24.0 cfm free air, minimum.
5. Pressure: 140 to 175 psi.
6. Motor: 7.5 HP, 208 volt, three phase.
7. Control: Start/stop, with provision for no load start. Include magnetic starter.

B. Provide one complete set of replacement filters, and two complete sets of parts lists and shop (repair) manuals.

C. Submit warranty and Owner's manual at completion of project.

2.4 MISCELLANEOUS SHOP EQUIPMENT

A. Provide shop equipment, as specified and shown on the plans, complete with accessories.

B. Provide certified drawings for rough-in of all anchors and concrete forming.

PART 3 EXECUTION

3.1 INSTALLATION

A. Comply with manufacturer's installation instructions. Install equipment and systems to facilitate safe, trouble-free operation and maintenance.

B. Coordinate grades with the architectural plans.

C. Conform to requirements of the governing Fire Marshal.

D. Refer to Division 2 Section "Earthwork" for specifications on excavation and backfill.

3.2 COORDINATION

A. Coordinate all equipment with ductwork, plumbing fixtures, air lines, piping, etc.

B. All mounting and finish requirements.

C. Provide equipment as scheduled and shown on the plans.

END OF SECTION 15491

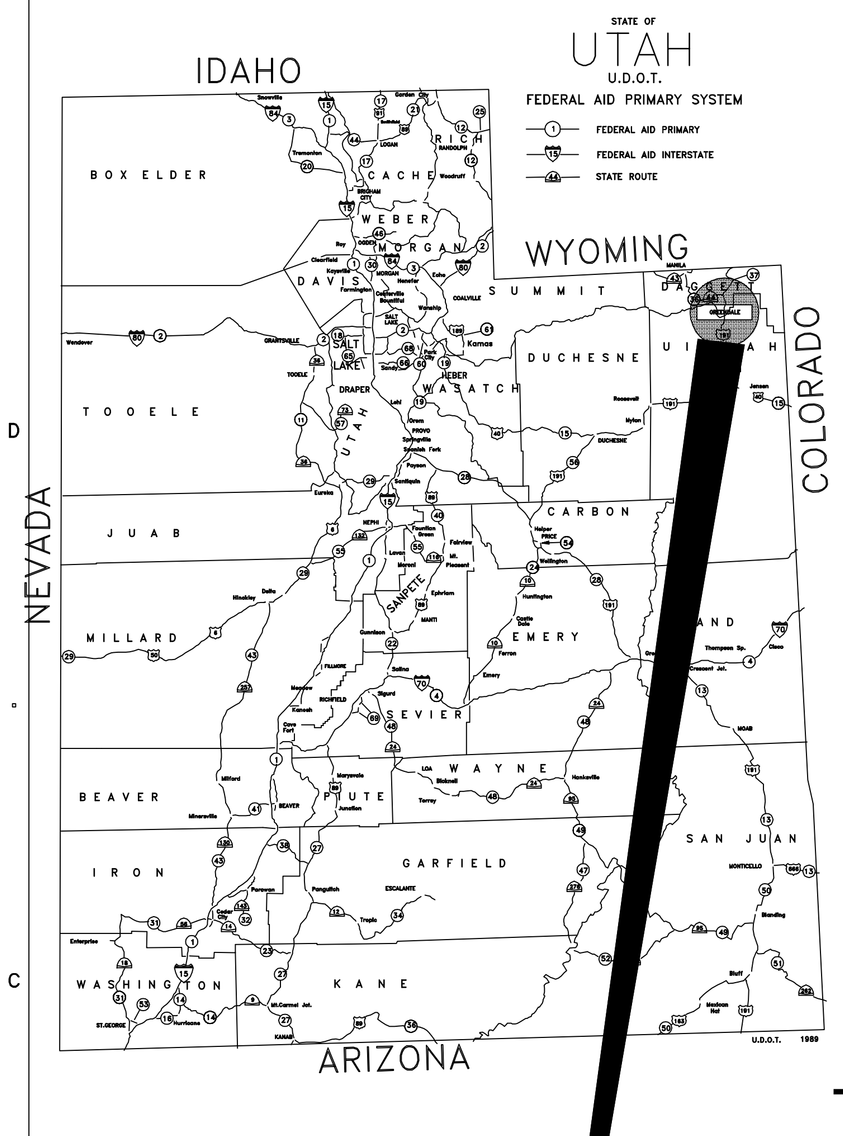

UDOT MAINTENANCE STATION #3437A

GREENDALE, UTAH

DFCM PROJECT #07029900
DFCM CONTRACT #077325

CONSTRUCTION DOCUMENTS

FEBRUARY, 2008

LOCATION MAP
NO SCALE

N

PREPARED BY

ARCHIPLEX GROUP
architecture • planning • design services
1135 South West Temple, Ste. A
Salt Lake City, UT 84101
P:(801) 961-7070
F:(801) 961-7373
Ralph Stanislaw

CONSULTANTS

STRUCTURAL
BHB Consulting Engineers 244 West 300 North Suite 202 Salt Lake City, Utah 84103
Telephone: (801) 355-5656
Fax: (801) 355-5950
Gerald McKenzie
gerald.mckenzie@bhbengineers.com

MECHANICAL
Van Boerum & Frank Assoc, Inc.
811 West Cedar
Pocatello, Idaho 83201
Telephone: (208) 478-4613
Fax: (208) 478-4617
Jason Hendricks
jhendricks@vbfa.com

ELECTRICAL
Van Boerum & Frank Assoc, Inc.
811 West Cedar
Pocatello, Idaho 83201
Telephone: (208) 478-4613
Fax: (208) 478-4617
Venessa Meyer
vmeyer@vbfa.com

CIVIL
PEPG Engineering
421 West 12300 South Suite 400
Draper, Utah 84020
Telephone: (801) 562-2521
Fax: (801) 562-2551
Darrin Smith
darrin@pepg.net

CODE ANALYSIS

APPLICABLE CODES

	Year		Year
International Building Code	2006	National Electrical Code	2005
International Mechanical Code	2006	Uniform Code for Building Conservation	N.A.
International Plumbing Code	2006	ADA Accessibility Guidelines	2006
International Fire Code	2006		
International Energy Conservation Code	2006		

A. Occupancy and Group: S2 (GARAGE) B (OFFICES ACCESSORY)

Change in Use: Yes ____ No X Mixed Occupancy: Yes X No ____
Special Use and Occupancy (e.g. High Rise, Covered Mall): N.A.

B. Seismic Design Category: B Design Wind Speed: 90 MPH, EXPOSURE C

C. Type of Construction (circle one):

I/A I/B II/A II/B III/A III/B IV/HT V/A (V/B)

D. Fire Resistance Rating Requirements for the Exterior Walls based on the fire separation distance (in hours):

North: 0 South: 0 East: 0 West: 0

E. Mixed Occupancies: YES Nonseparated Uses: YES

F: Sprinklers:

Required: NO Provided: NO Type of Sprinkler System: N.A.

G: Number of Stories: 1 Building Height: 24'-6"

H: Actual Area per Floor (square feet): 4,991 SF (4,643 S2 + 348 B)

I: Tabular Area (503): 13,500 SF

J: Area Modification (506.1):

a) $A_a = A_t + \left[\frac{A_t\ I_f}{100}\right] + \left[\frac{A_t\ I_s}{100}\right]$ $\quad I_f = 62.5\left[\frac{300}{300} - 0.25\right]\frac{25}{30}$

$$21{,}937\ SF = 13{,}500 + \left[\frac{13{,}500\ (62.5)}{100}\right] + \left[\frac{13{,}500\ (0)}{100}\right]$$

b) Sum of the Ratio Calculations for Mixed Occupancies:

$$\frac{\text{Actual Area}}{\text{Allowable Area}} \le 1 \quad \frac{4{,}991\ SF}{21{,}937\ SF} = .228$$

c) Total Allowable Area for:
1) One Story: 21937SF
2) Two Story: $A_a(2)$ N.A.
3) Three Story: $A_a(3)$ N.A.

d) Unlimited Area Building: Yes ____ No X Code Section: ____

K. Fire Resistance Rating Requirements for Building Elements (hours).

Element	Hours	Assembly Listing	Element	Hours	Assembly Listing
Exterior Bearing Walls	0	N.A.	Floors - Ceiling Floors	0	N.A.
Interior Bearing Walls	0	N.A.	Roofs - Ceiling Roofs	0	N.A.
Exterior Non-Bearing Walls	0	N.A.	Exterior Doors and Windows	0	N.A.
Structural Frame	0	N.A.	Shaft Enclosures	0	N.A.
Partitions - Permanent	0	N.A.	Fire Walls	0	N.A.
Fire Barriers	0	N.A.	Fire Partitions	0	N.A.
			Smoke Partitions	0	N.A.

L. Design Occupant Load: 14* (Per IBC TABLE 1004.1.2 Using 500 S.F. per Occupant for garages, 100 S.F. for office areas)

Exit Width Required: 3.9" Exit Width Provided: 36"

M. Minimum Number of Required Plumbing Facilities: *UNISEX (IBS SECTION 2902.2 EXPECTION 2)
Actual Occupant Load: 4 BASED ON ACTUAL UDOT STAFFING

a) Water Closets - Required (m) 1* (f) 1* Provided (m) 1* (f) 1*
b) Lavatories - Required (m) 1* (f) 1* Provided (m) 1* (f) 1*
c) Bath Tubs or Showers: NA
d) Drinking Fountains: 1 Service Sinks: 1

MAXIMUM EMPLOYEES PERMITTED = 15

GENERAL NOTE:

1. CONSTRUCTION OF NEW STATE BUILDINGS AND REMODELING 0F EXISTING BUILDINGS SHALL COMPLY WITH ALL THE REQUIREMENTS OF THE DFCM STANDARDS, INCLUDING ENHANCED ACCESSIBILITY. THE DFCM STANDARDS CAN BE FOUND AT THE FOLLOWING WEB SITE: www.dfcm.utah.gov.

2. STEEL BUILDINGS SHALL COMPLY WITH IBC SECTION 106.3.4.2, DEFERRED SUBMITTALS.

3. EVERY STRUCTURE, AND PORTION THEREOF, INCLUDING NONSTRUCTURAL COMPONENTS THAT ARE PERMANENTLY ATTACHED TO STRUCTURES AND THEIR SUPPORTS AND ATTACHMENTS, SHALL BE DESIGNED AND CONSTRUCTED TO RESIST TO EFFECTS OF EARTHQUAKE MOTIONS IN ACCORDANCE WITH ASCE 7-05. REFERENCE IBC SECTION 1613.1

CLIENT

UDOT CONNECTING COMMUNITIES
STATION #3437A
SR-44 @ M.P. 0.5 ±
GREENDALE UTAH

DESIGNER

ARCHIPLEX GROUP
architecture • planning • design services
1135 South West Temple, Ste. A
Salt Lake City, UT 84101
P:(801) 961-7070
F:(801) 961-7373

CONSULTANTS

PROFESSIONAL SEAL

STATE OF UTAH
RALPH M. STANISLAW
95-310818-0301
LICENSED ARCHITECT

ISSUE

MARK	DATE	DESCRIPTION
1	3-20-08	ADDENDUM #2
	02-2008	CONSTRUCTION DOCUMENTS

DFCM CONTRACT NO:	077325
DFCM PROJECT NO:	07029900
ARCHIPLEX PROJECT NO:	0708.01
DRAWN BY:	A. PHILLIPS
CHECKED BY:	R. STANISLAW
SCALE:	NONE
DATE:	FEBRUARY, 2008

SHEET TITLE

COVER SHEET

G000

GENERAL NOTES

1. CONTRACTOR IS RESPONSIBLE FOR VERIFYING ALL DIMENSIONS AND CONDITIONS AT THE SITE BEFORE SUBMITTING A BID OR PROCEEDING WITH ANY PORTION OF THE WORK.
2. WHENEVER QUESTIONS ARISE OR CONDITIONS ARE ENCOUNTERED WHICH ARE NOT COVERED BY OR ARE IN CONFLICT WITH THE CONTRACT DOCUMENTS, CONSULT WITH THE ARCHITECT PRIOR TO TAKING ANY FURTHER ACTION.
3. ALL DIMENSIONS ARE TO FACE OF CONCRETE OR FACE OF GYPSUM BOARD, U.N.O.
4. DO NOT SCALE DRAWINGS FOR DIMENSIONS.
5. DIMENSIONS NOTED AS N.T.S. ARE TO BE FIELD VERIFIED.
6. ALL WOOD IN CONTACT WITH OR WITHIN 8" OF SOILS IS TO BE FIELD TREATED FOR MOISTURE, RODENT AND INSECT PROTECTION.
7. THE CONTRACTOR SHALL COORDINATE THE SEQUENCING OF WORK WITH THE OWNER AND ARCHITECT TO MEET THE OWNERS SCHEDULE.
8. CONTRACTOR SHALL LEAVE WORK AREAS BROOM CLEAN AND FREE OF TOOLS, EQUIPMENT, ETC., AT THE END OF EACH SHIFT. ALL CONSTRUCTION ACTIVITY SHALL BE CONTAINED WITHIN CONSTRUCTION BARRICADES OR FENCES. CONTRACTOR SHALL PROTECT OWNERS EXISTING CONSTRUCTION AND EQUIPMENT ADJACENT TO NEW CONSTRUCTION. CONTRACTOR SHALL CLEAN ALL SURFACES TO "LIKE NEW" CONDITION AT THE COMPLETION OF
9. PROVIDE WATER SUPPLY ROUGH-IN AND ELECTRICAL SUPPLY TO IRRIGATION CONTROLS. PROVIDE PVC SLEEVE UNDER PAVEMENTS AND WALKS
10. THE DESIGN OF THE PRE MANUFACTURED STRUCTURAL ROOF SYSTEM INCLUDING THE STEEL DECK, JOISTS, GIRDERS, COLUMNS AND THE LATERAL FORCE RESISTING SYSTEM (INCLUDING RIGID FRAMES) IS THE RESPONSIBILITY OF THE PRE MANUFACTURED METAL BUILDING SUPPLIER. FOOTINGS, STEEL COLUMNS, CONCRETE PIER SIZES & LOCATIONS SHOWN ARE AN ESTIMATE OF ACTUAL SIZES. ACTUAL SIZES WILL BE PROVIDE AFTER PREFABRICATED METAL BUILDER IS SELECTED. ALL BIDDERS SHALL PROVIDE UNIT PRICES FOR ADDING OR SUBTRACTING VOLUME OF CONCRETE, WEIGHT OF REINFORCING STEEL AND VOLUME OF EARTHWORK.

GRAPHIC SYMBOLS

EARTH	GRAVEL
SAND	CONCRETE
CONC. W/ FINISH	CAST STONE
TILE W/ BED	MARBLE
BRICK	GRANITE
CMU	STONE
LIMESTONE	PLYWOOD
WOOD (BLOCKING)	WOOD FINISH
WOOD FRAMING	ALUMINUM
STEEL	BATT INSULATION
RIGID INSULATION	ACOUSTICAL TILE
PLASTER	BACKER ROD AND FILLER
COMP. FILLER	GYPSUM BOARD
METAL LATH	FENCE

ARCHITECTURAL LEGEND

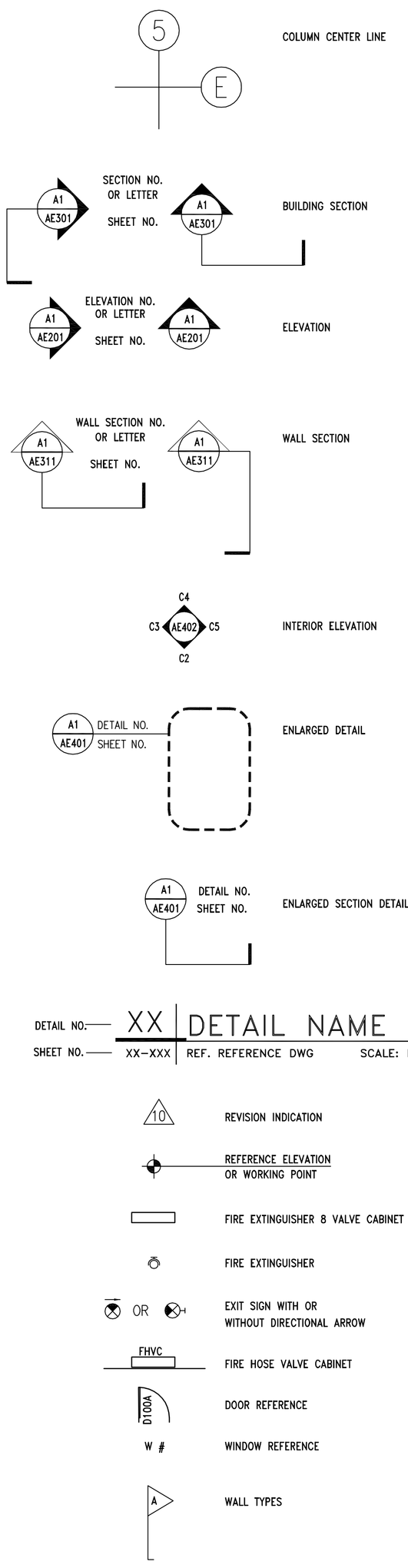

ABBREVIATIONS

ALT.	ALTERNATE
ALUM.	ALUMINUM
A.B.	ANCHOR BOLT
&	AND
ARCH.	ARCHITECTURAL
@	AT OR AT THE
BM.	BEAM
BLK.	BLOCK
BLKG.	BLOCKING
BD.	BOARD
BOT.	BOTTOM
BLDG.	BUILDING
CLKG.	CAULKING
C.I.	CAST IRON
CLG.	CEILING
CEM.	CEMENT
CTR.	CENTER
	CENTER LINE
CER.	CERAMIC
C.T.	CERAMIC TILE
CFCI	CONTRACTOR FURNISH, CONTRACTOR INSTALL
CFOI	CONTRACTOR FURNISH, OWNER INSTALLED
CLR.	CLEAR (...ANCE)
CLO.	CLOSET
COL.	COLUMN
CONC.	CONCRETE
CMU	CONCRETE MASONRY UNIT
CONN.	CONNECTION
CONSTR.	CONSTRUCTION
CONT.	CONTINUE/CONTINUOUS
CONTR.	CONTRACTOR
C.J.	CONTROL JOINT
CORR.	CORRIDOR
CNTR.	COUNTER
CTSK.	COUNTERSUNK
DET.	DETAIL
DIA.	DIAMETER
DIM.	DIMENSION
DN.	DOWN
D.S.	DOWNSPOUT
DWG.	DRAWING
D.F.	DRINKING FOUNTAIN
EA.	EACH
ELEC.	ELECTRIC (AL)
ELEV./EL.	ELEVATION
EQ.	EQUAL
EQUIP.	EQUIPMENT
EXP.	EXPANSION
EXT.	EXTERIOR
EW	EACH WAY
FIN.	FINISH
F.A.	FIRE ALARM
F.E.	FIRE EXTINGUISHER
F.E.C.	F.E. CABINET
FLR./FL.	FLOOR
F.D.	FLOOR DRAIN
FTG.	FOOTING
FDN.	FOUNDATION
GALV.	GALVANIZED
G.I.	GALVANIZED IRON
GA.	GAUGE
GL.	GLASS
GR.	GRADE
GND.	GROUND
GYP.	GYPSUM
GYP. BD.	GYPSUM BOARD
HDWR.	HARDWARE
HDWD.	HARDWOOD
HT.	HEIGHT
H.P.	HIGH POINT
HORIZ.	HORIZONTAL
H.B.	HOSE BIBB
HM	HOLLOW METAL
HR.	HOURS (FIRE RATING)
IN.	INCH
I.D.	INSIDE DIAMETER
INUSL.	INSULATION
INT.	INTERIOR
JAN.	JANITOR
JT.	JOINT
J-BOX	JUNCTION BOX
KIT.	KITCHEN
LAM.	LAMINATE
LAV.	LAVATORY
LT.	LIGHT
L.P.	LOW POINT
MAINT.	MAINTENANCE
MFR.	MANUFACTURER
M.O.	MASONRY OPENING
MAX.	MAXIMUM
MECH.	MECHANICAL
MEMB.	MEMBRANE
MEN	MEN'S TOILET
MTL./MET.	METAL
MIN.	MINIMUM
MIR.	MIRROR
MISC.	MISCELLANEOUS
MTD.	MOUNTED
MUL.	MULLION
NOM.	NOMINAL
N.	NORTH
N.I.C.	NOT IN CONTRACT
N.T.S.	NOT TO SCALE
NO. OR #	NUMBER
OFOI	OWNER FURNISH, OWNER INSTALL
OFCI	OWNER FURNISH, CONTRACTOR INSTALL
OFF.	OFFICE
O.C.	ON CENTER
OPNG.	OPENING
OPP.	OPPOSITE
OPP. H.	OPPOSITE HAND
O.D.	OUTSIDE DIAMETER
PTD.	PAINTED
PR.	PAIR
PART.	PARTITION
PED.	PEDESTRIAN
PLAS.	PLASTER
P. LAM.	PLASTIC LAMINATE
PL	PLATE
PM	PRESSED METAL
PLYWD.	PLYWOOD
PT.	POINT
Q.T.	QUARRY TILE
RAD.	RADIUS
R.W.L.	RAIN WATER LEADER
RE:	REFER TO
REFL.	REFLECTED
REINF.	REINFORCING
REQ.	REQUIRED
REV.	REVISED
R.	RISER
R.D.	ROOF DRAIN
RM.	ROOM
R.O.	ROUGH OPENING
SCHED.	SCHEDULE
SEAL.	SEALANT
SECT.	SECTION
S.SK.	SERVICE SINK
SHT.	SHEET
SIM.	SIMILAR
SL./SLP.	SLOPE
S.C.	SOLID CORE
SPEC.	SPECIFICATIONS
SQ.	SQUARE
STD.	STANDARD
STL.	STEEL
STOR.	STORAGE
STRUCT.	STRUCTURAL/STRUCTURE
SYM.	SYMMETRICAL
S.STL	STAINLESS STEEL
TEL.	TELEPHONE
TEMP.	TEMPORARY/TEMPERED
THK.	THICK (NESS)
T & G	TONGUE AND GROOVE
T/CONC.	TOP OF CONCRETE
T/CURB	TOP OF CURB
T.O.P.	TOP OF PLATE
T/WALL	TOP OF WALL
T.	TREAD
TYP.	TYPICAL
UNF.	UNFINISHED
U.N.O.	UNLESS NOTED OTHERWISE
VAR.	VARY OR VARIES
VERT.	VERTICAL
V.T.R.	VENT THROUGH ROOF
W/	WITH
WD.	WOOD
WP.	WATERPROOF
WSCT.	WAINSCOT
W/O	WITHOUT
W.P.	WORKING POINT
W.R.	WATER RESISTANT

INDEX OF DRAWINGS

G000	COVER SHEET
G001	GENERAL NOTES, ABBREVIATIONS, LEGEND & SHEET INDEX
G002	MASTER KEYNOTE LIST

CIVIL

AD101	SITE PLAN DEMOLITION
C100	SITE UTILITY PLAN
C101	SITE & DRAINAGE DETAILS
C200	GRADING PLAN
C201	DRAINAGE PLAN
C300	S.W.P.P.P. PLAN
C301	S.W.P.P.P. DETAILS

ARCHITECTURAL

AE101	FLOOR PLAN
AE121	FIRST FLOOR REFLECTED CEILING PLAN
AE141	ROOF PLAN
AE201	EXTERIOR ELEVATIONS
AE202	EXTERIOR ELEVATIONS
AE203	EXTERIOR ELEVATIONS ADD ALT #1
AE204	EXTERIOR ELEVATIONS ADD ALT #2
AE301	BUILDING SECTIONS
AE311	WALL SECTIONS
AE401	ENLARGED RESTROOM FLOOR PLAN, INT. ELEVTATIONS AND DETAILS
AE501	WALL TYPES
AE502	SIGNAGE, MISC. ELEVATIONS AND DETAILS
AE503	MISC. DETAILS
AE601	DOOR SCHEDULE, DOOR TYPES, AND DETAILS
AE602	WINDOW FRAME TYPES, FINISH SCHEDULE AND DETAILS
AE701	GATE PLAN, GATE HOUSING, ELEVATION AN FENCE DETAILS

STRUCTURAL

S001	GENRAL STRUCTURAL NOTES
S101	FOOTING AND FOUNDATION PLAN
S201	FUEL ISLAND DETAILS
S501	FOOTING AND FOUNDATION DETAILS
S502	FOOTING AND FOUNDATION DETAILS
S601	STRUCTURAL SCHEDULES

MECHANICAL

M001	MECHANICAL SYMBOLS AND SCHEDULES
M201	MECHANICAL FLOOR PLAN
M601	MECHANICAL DETAILS
M602	MECHANICAL DETAILS
M603	MECHANICAL DETAILS
P001	PLUMBING SYMBOLS AND SCHEDULES
P201	PLUMBING PLAN
P301	PLUMBING ENLARGEMENTS
P601	PLUMBING DETAILS
P602	PLUMBING DETAILS
P603	PLUMBING DETAILS

ELECTRICAL

E001	GENERAL NOTES, SCHEDULES
E002	ELECTRICAL PANELS, LOAD CALCS AND RISER DIAGRAM
E101	SITE PLAN
E201	LIGHTING AND POWER PLANS

CLIENT

UDOT CONNECTING COMMUNITIES

STATION #3437A
SR-44 @ M.P. 0.5 ±
GREENDALE UTAH

DESIGNER

ARCHIPLEX GROUP
architecture · planning · design services
1135 South West Temple, Ste. A
Salt Lake City, UT 84101
P:(801) 961-7070
F:(801) 961-7373

CONSULTANTS

PROFESSIONAL SEAL

STATE OF UTAH
RALPH M. STANISLAW
95-310818-0301
LICENSED ARCHITECT

ISSUE

MARK	DATE	DESCRIPTION
1	3-20-08	ADDENDUM #2
	02-2008	CONSTRUCTION DOCUMENTS

DFCM CONTRACT NO:	077325
DFCM PROJECT NO:	07029900
ARCHIPLEX PROJECT NO:	0708.01
DRAWN BY:	K. PHILLIPS
CHECKED BY:	R. STANISLAW
SCALE:	NONE
DATE:	FEBRUARY, 2008

SHEET TITLE

GENERAL NOTES, ABBREVIATIONS, LEGENDS AND DRAWING INDEX

G001

MASTER KEYNOTE LIST – (APPLIES TO ARCHITECTURAL DRAWINGS ONLY – NOT ALL KEYNOTES APPLY TO THIS FACILITY)

DIVISION 1 GENERAL REQUIREMENTS

DIVISION 2 SITEWORK

02200 EARTHWORK

02200.A0 COMPACTED FILL
02200.B0 GRAVEL BASE
02200.C0 SAND

02512 ZERO VOIDS ASPHALT PAVING

02512.A0 ZERO VOIDS ASPHALT PAVING (THICKNESS)

02513 ASPHALT CONCRETE PAVING

02513.A0 ASPHALT CONCRETE PAVING

02822 CHAIN LINK FENCES & GATES

02822.A1 CANTILEVERED GATE
02822.B1 2" ø GATE FRAME
02822.C1 NEW 6' HIGH CHAIN LINK FENCE – SEE CIVIL
02822.D1 TENSION TIE WIRE
02822.E1 LINE POSTS @ 10'-0" O.C.
02822.F1 2" DIAMOND MESH STEEL FABRIC

02831 HORIZONTAL SLIDING GATE OPERATORS

02831.A1 PHYSICAL TRAVEL STOP
02831.B1 HYDRAULIC SLIDE GATE OPERATOR W/AUDIO ALARM
02831.C1 UNDERGROUND OBSTRUCTION LOOP
02831.D1 GATE SENSORS
02831.E1 KEY PAD ACCESS ON PEDESTAL
02831.F1 CARD READER ON PEDESTAL
02831.G1 FIRE ACCESS & KNOX BOX ON PEDESTAL
02831.H1 GATE RECEIVER POCKET

DIVISION 3 CONCRETE

03053 CONCRETE WATER PROOFING ADMIXTURE

03053.A0 CONCRETE WATER PROOFING ADMIXTURE

03054 OLIOPHOBIC TOPICAL CONCRETE SEALER

03054.A0 OLIOPHOBIC TOPICAL SEALER

03300 CAST-IN-PLACE CONCRETE

03300.A0 CONCRETE – SLAB ON GRADE
03300.A1 CONCRETE SLAB-ON-GRADE – SEE STRUCTURAL
03300.A2 CONCRETE SLAB-ON-GRADE (THICKNESS)
03300.B1 CONCRETE SLAB – SEE STRUCTURAL
03300.B2 CONCRETE SLAB (THICKNESS)
03300.C0 FOOTING
03300.C1 FOOTING – SEE STRUCTURAL
03300.D0 CONCRETE PAD
03300.E0 RETAINING WALL
03300.F0 CAST-IN-PLACE REINFORCED CONCRETE
03300.G0 CONCRETE OVER METAL DECK – SEE STRUCTURAL
03300.H0 FOUNDATION WALL, SEE STRUCTURAL
03300.H1 CONCRETE PIER – SEE STRUCTURAL
03300.J0 REINFORCING
03300.J1 REINFORCING – SEE STRUCTURAL
03300.J2 #4 BARS CONTINUOUS (QUANTITY)
03300.J3 #5 BARS CONTINUOUS (QUANTITY)
03300.K1 THICKENED SLAB – SEE STRUCTURAL
03300.L1 30# FELT
03300.M1 MOISTURE BARRIER
03300.N0 CONCRETE CURB
03300.P3 CONTROL JOINT – SEE STRUCTURAL
03300.P4 CONSTRUCTION JOINT
03300.P6 CHAMFER JOINT
03300.P7 SAWCUT CONSTRUCTION JOINT, TYP.
03300.T1 CONCRETE @ STAIR TREAD

DIVISION 5 METALS

05120 STRUCTURAL STEEL

05120.A1 STEEL BEAM – SEE STRUCTURAL – GALVANIZED
05120.B1 STEEL COLUMN – SEE STRUCTURAL – GALVANIZED
05120.C1 TUBE STEEL BEAM – SEE STRUCTURAL – GALVANIZED
05120.D1 TUBE STEEL COLUMN – SEE STRUCTURAL
05120.D2 TUBE STEEL COLUMN – SEE STRUCTURAL – GALVANIZED

05310 STEEL DECK

05310.A1 METAL DECK – SEE STRUCTURAL

05400 COLD-FORMED METAL FRAMING

05400.A0 STRUCTURAL STEEL STUDS – SEE STRUCTURAL DRAWINGS FOR SIZE, SPACING AND GAUGE
05400.A1 6" STRUCTURAL STEEL STUDS – SEE STRUCTURAL DRAWINGS FOR SPACING AND GAUGE
05400.A2 3 5/8" STRUCTURAL STEEL STUDS – SEE STRUCTURAL DRAWINGS FOR SPACING AND GAUGE
05400.X1 STEEL STUD
05400.X2 STEEL TRACK
05400.X3 STEEL JOIST – SEE STRUCTURAL

05500 METAL FABRICATIONS

05500.A1 ANGLE – SEE STRUCTURAL
05500.A2 STEEL ANGLE (SIZE) – GALVANIZED
05500.B0 CLIP ANGLE
05500.B2 CLIP ANGLE (SIZE)
05500.C1 SHEET METAL ANGLE – 22 GA. – GALVANIZED (SIZE)
05500.D0 CHANNEL (SIZE)
05500.D1 CHANNEL – SEE STRUCTURAL
05500.D2 HAT CHANNEL (SIZE)
05500.E0 PLATE (SIZE)
05500.E1 PLATE – SEE STRUCTURAL
05500.E2 PLATE (SIZE) – GALVANIZED
05500.E3 BENT PLATE – SEE STRUCTURAL
05500.F1 THRU BOLT (DIAMETER)
05500.G1 BENT BAR TAB (THICKNESS)
05500.G2 BARTAB (THICKNESS)

05500 METAL FABRICATIONS CONTINUED

05500.G2 BARTAB (THICKNESS)
05500.H1 LAG BOLTS (DIAMETER)
05500.J1 PIPE BOLLARD (DIAMETER) – GALVANIZED & PAINTED
05500.K0 TUBE STEEL SUPPORTS – SEE STRUCTURAL
05500.K1 TUBE STEEL (SIZE, SPACING)
05500.L1 HILTI X-EDNI SHOT PIN (SPACING)
05500.M1 CHECKERED PLATE (SIZE) GALVANIZED
05500.P0 ANCHOR BOLT(S)
05500.P1 ANCHOR BOLTS (DIAMETER, SPACING)
05500.P2 EPOXY ANCHOR (SIZE)

05500 METAL FABRICATIONS (CONT.)

05500.V0 FLOOR PLATE
05500.X1 STEEL STUD – SEE STRUCTURAL
05500.X2 STEEL RUNNER – SEESTRUCTURAL
05500.Y0 AIR DUCT SCREEN
05500.Y1 AIR DUCT SCREEN – SEE MECHANICAL – PAINTED
05500.Z0 CHAIN – GALVANIZED

~~05510 METAL STAIRS~~ 1

~~05510.A1 LADDER RUNGS~~
~~05510.B0 LADDER RAILS~~
~~05510.C0 LADDER MOUNTING BRACKET~~
~~05510.D1 RUBBER SHOE AT BOTTOM OF EACH RAIL~~
~~05510.E1 NON SKID SURFACE @ NOSING~~
~~05510.F0 STEEL STRINGER – (SIZE)~~
~~05510.F1 STEEL STRINGER – (SIZE) – GALVANIZED~~
~~05510.G1 3/16" STEEL CLOSURE PLATE – GALVANIZED~~
~~05510.H0 CONC. FILLED METAL PAN STAIR – GALVANIZED~~
~~05510.H1 PRE-FORMED CONC. FILLED METAL PAN STAIR TREAD – (SIZE) – GALVANIZED~~
~~05510.J1 METAL PAN STAIR SUPPORT – (SIZE) – GALVANIZED~~
~~05510.J2 PAN ANCHORAGE – (SIZE) – GALVANIZED~~
~~05510.K1 STEEL CHANNEL DECK SUPPORT – GALVANIZED~~

NOT USED

~~05521 PIPE & TUBE RAILINGS~~

~~05521.A1 1 1/2" O.D. STEEL GUARDRAIL~~
~~05521.A2 PIPE GUARDRAIL (DIAMETER) – GALVANIZED~~
~~05521.A3 1 1/2" O.D. PIPE GUARDRAIL – GALVANIZED~~
~~05521.B1 1 1/2" O.D. HANDRAIL~~
~~05521.B2 PIPE HANDRAIL (DIAMETER) – GALVANIZED~~
~~05521.B3 1 1/2" O.D. PIPE HANDRAIL – GALVANIZED~~
~~05521.C2 ESCUTCHEON WITH ESED EDGES (SIZE)~~
~~05521.D1 WALL RAIL SUPPORT – GALVANIZED~~
~~05521.E1 1" I.D. PIPE RAILING ANCHOR – GALVANIZED~~
~~05521.F1 1/2" DIA. THRU BOLT~~

~~05530 GRATINGS~~

~~05530.A0 TRENCH FRAME – GALVANIZED~~
~~05530.A1 STEEL GRATE 22-W-4 (SIZE) GALVANIZED~~
~~05530.B0 ALUMINUM GRATE (SIZE)~~
~~05530.C1 METAL GRATE FRAME – GALV.~~
~~05530.C2 METAL GRATE TREAD – GALV.~~

NOT USED

DIVISION 6 WOOD AND PLASTICS

06105 MISCELLANEOUS CARPENTRY

06105.L2 BLOCKING AS REQUIRED
06105.P1 2X4
06105.P2 2X6
06105.P6 4X4
06105.P9 2 x FRAMING, FIRE TREATED
06105.P10 PRESSURE TREATED WOOD TIMBER (SIZE)
06105.Q2 SHIM AS REQUIRED
06105.R2 SHEATHING – PLYWOOD (THICKNESS) GRADE (SIZE)
06105.R3 PLYWOOD PANEL (THICKNESS)
06105.V1 EXTERIOR GRADE PLYWOOD (THICKNESS)
06105.V6 PEGBOARD (THICKNESS)
06105.Z0 ANCHOR AS REQUIRED

06402 INTERIOR ARCHITECTURAL WOODWORK

06402.A0 SILL
06402.B1 PLASTIC LAMINATE BACKSPLASH (HEIGHT)
06402.C1 PAINT GRADE WOOD CAP (THICK)
06402.E1 WIRE PULL
06402.F1 PROVIDE WHITE MELAMINE FINISH @ ALL INTERIOR SURFACES
06402.H0 SHELF(VES)
06402.H1 ADJUSTABLE SHELVES (FINISH)
06402.H2 SHELVING (DEPTH)
06402.K0 BASE UNIT (FINISH)
06402.K2 BASE UNIT W/ADJ. SHELF(VES) (FINISH)
06402.K3 BASE UNIT W/DRAWERS (FINISH)
06402.K4 BASE UNIT W/DRAWER & ADJ. SHELF(VES) (FINISH)
06402.L2 WALL UNIT W/ADJ. SHELF(VES) (FINISH)
06402.P0 COUNTERTOP
06402.P2 COUNTERTOP – P. LAM. ON 3/4" PLYWOOD
06402.X0 WORKBENCH (DEPTH)

06651 SOLID SURFACE FABRICATIONS

06651.A0 1/2" WHITE SOLID SURFACE WINDOW SILL

DIVISION 7 THERMAL AND MOISTURE PROTECTION

07122 HOT FLUID-APPLIED WATERPROOFING

07122.A0 HOT FLUID APPLIED MEMBRANE
07122.B0 RIGID INSULATION BOARD (THICKNESS)

07210 BUILDING INSULATION

07210.A1 BATT INSULATION (R-VALUE)
07210.B1 RIGID INSULATION (THICKNESS)
07210.D0 VAPOR BARRIER
07210.E0 FOUNDATION WALL INSULATION (THICKNESS)

07729 ROOF SNOW GUARDS

07729.A0 STANDING SEAM METAL ROOF 2 PIPE SNOWGUARD SYSTEM

07901 JOINT SEALANTS

07901.A0 CONT. SEALANT
07901.B0 ASPHALT SATURATED FIBERBOARD
07901.C0 CONT. CAULK
07901.D0 JOINT FILLER
07901.G0 BACKER ROD
07901.H1 CONCRETE JOINT WATER PROOF SEALANT
07901.H2 JOINT SEALANT

DIVISION 8 DOORS AND WINDOWS

08111 STANDARD STEEL DOORS AND FRAMES

08111.A0 PRESSED METAL FRAME
08111.A1 GROUT-FILLED PRESSED METAL FRAME
08111.B0 HOLLOW METAL DOOR
08111.C0 JAMB ANCHOR

08360 SECTIONAL OVERHEAD DOORS

08360.A0 HEAVY DUTY OVERHEAD SECTIONAL DOOR
08360.B0 3" HEAVY DUTY OVERHEAD SECTIONAL DOOR TRACK
08360.C0 WEATHERSTRIPPING
08360.D0 DOOR GUIDE

08521 HORIZONTAL SLIDING VINYL (PVC) WINDOWS

08521.B0 FIXED VINYL WINDOW
08521.C0 VINYL WINDOW W/SLIDING GLASS PANEL

08710 DOOR HARDWARE

08710.A0 THRESHOLD
08710.B0 DOOR SWEEP
08710.C0 WEATHERSTRIPPING

08800 GLAZING

08800.C0 WIRE GLASS
08800.G1 CLEAR INSULATING GLASS (SIZE)
08800.G2 TEMPERED GLASS
08800.G3 OPAQUE INSULATING GLASS

DIVISION 9 FINISHES

09255 GYPSUM BOARD ASSEMBLIES

09255.A1 GYPSUM BOARD (THICKNESS)
09255.A2 WATER RESISTANT GYPSUM BOARD (THICKNESS)
09255.B2 TYPE 'X' GYPSUM BOARD (THICKNESS)
09255.C3 CEMENT BOARD (THICKNESS)
09255.H0 METAL STUD
09255.H1 METAL STUDS (SIZE, SPACING)
09255.J0 METAL RUNNER
09255.K0 DOUBLE STUDS
09255.K1 DOUBLE STUDS (GAGE)
09255.L1 7/8" X 1-3/8" METAL ANGLE
09255.L2 2-1/2" X 2-1/2" METAL ANGLE
09255.M2 METAL CORNER BEAD (TYP)
09255.P0 Z-FURRING CHANNEL
09255.Q0 7/8" METAL FURRING CHANNEL
09255.R2 CHANNEL (SIZE, SPACING)
09255.S1 8 GA. WIRE HANGERS (SPACING)
09255.S2 18 GA. WIRE TIES
09255.S3 18 GA. METAL MOUNTING STRIPS
09255.S4 SPLAY WIRE (SIZE)
09255.S5 VERTICAL WIRES (SIZE)
09255.U1 SUSPENDED CEILING SYSTEM
09255.U2 MAIN TEE
09255.U4 CONDUIT COMPRESSION BRACE
09255.V0 EDGE TRIM (TYP)
09255.V2 LC-BEAD (PREFERRED USG 200-A TRIM)
09255.V4 VINYL TRIM

09300 TILE

09300.A1 FLOOR TILE – SEE FINISH SCHED.
09300.B1 WALL TILE – SEE FINISH SCHED.
09300.C0 TILE BASE
09300.D1 BULLNOSE TRIM UNIT
09300.E1 1/2" x 6" TILE TRIM PIECE – SEE FINISH SCHED.
09300.G1 MORTAR BED
09300.G4 WATERPROOF MEMBRANE

09511 ACOUSTICAL PANEL CEILINGS

09511.A0 LAY-IN ACOUSTICAL CEILING SYSTEM
09511.A1 HEAVY DUTY "T" BAR GRID SYSTEM
09511.A2 CEILING SUSPENSION SYSTEM – MAIN RUNNER
09511.A3 CEILING SUSPENSION SYSTEM – CROSS RUNNER
09511.B1 VERTICAL WIRE HANGER (SIZE)
09511.B2 BRACING WIRE (SIZE)
09511.C1 COMPRESSION STRUTS
09511.D1 METAL ANGLE EDGE
09511.E1 LAY IN ACOUSTICAL CEILING PANEL

09660 RESILIENT TILE FLOORING

09660.A1 VINYL COMPOSITION TILE
09660.B1 VINYL TRANSITION STRIP

09678 RESILIENT WALL BASE AND ACCESSORIES

09678.E1 RUBBER BASE (SIZE)

09900 PAINTING

09900.A1 PAINT – SEE FINISH SCHED.
09900.B1 GALVANIZED METAL PRIMER

DIVISION 10 SPECIALTIES

10100 VISUAL DISPLAY BOARDS

10100.C0 MARKER BOARD

10425 SIGNS

10425.A0 ROOM SIGNAGE
10425.A1 OIL SIGNAGE
10425.B1 WELDING SIGNAGE
10425.C1 ACCESSIBLE SIGNAGE
~~10425.D1 ACCESSIBLE/UNISEX RESTROOM SIGNAGE~~ 1

~~10500 METAL LOCKERS AND STORAGE CABINETS~~

~~10500.A0 METAL LOCKERS (WIDE)~~
~~10500.B0 METAL STORAGE CABINETS~~

NOT USED

~~10522 FIRE EXTINGUISHERS, CABINETS, AND ACCESSORIES~~

10522.A0 FIRE EXTINGUISHER

10800 TOILET AND BATH ACCESSORIES

10800.B0 PAPER TOWEL DISPENSER & WASTE RECEPTACLE
10800.B1 SEMI-RECESSED PAPER TOWEL DISPENSER & WASTE RECEPTACLE
10800.C0 TOILET TISSUE DISPENSER
10800.C1 RECESSED TOILET TISSUE DISPENSER/SAN. NAP. DISPOSAL
10800.D0 MOP RACK
10800.E0 GRAB BAR
10800.E1 GRAB BAR (SHOWER)
10800.F0 ROBE HOOK
10800.F1 DOUBLE PRONG ROBE HOOK
10800.H0 SOAP DISPENSER
10800.H1 SOAP DISH
10800.P1 SHOWER CURTAIN ROD
10800.P2 SHOWER CURTAIN
10800.R1 FRAMED MIRROR (SIZE)
10800.T1 FOLDING SHOWER SEAT
10800.T0 METAL SHELF (SIZE)

DIVISION 12 FURNISHINGS

12511 HORIZONTAL LOUVER BLINDS

12511.A0 HORIZONTAL LOUVER BLINDS

DIVISION 13 SPECIAL CONSTRUCTION

13125 METAL ARCH BUILDING SYSTEM

13125.A0 METAL ARCH BUILDING SYSTEM
13125.B0 STANDING SEAM METAL ROOF
13125.B1 STANDING SEAM METAL ROOF RIDGE
13125.B2 STANDING SEAM METAL CANOPY
13125.C0 METAL RAIN GUTTER W/DOWNSPOUTS
13125.C1 METAL RAIN GUTTER
13125.C2 DOWNSPOUT
13125.C3 GUTTER STRAP, INSTALL AT EVERY OTHER PANEL RIB
13125.D0 METAL FLASHING
13125.D1 METAL DRIP FLASHING
13125.D2 METAL HEAD FLASHING
13125.D3 METAL SILL FLASHING
13125.D4 METAL FLASHING, FINISH TO MATCH ROOF PANELS
13125.D5 RIDGE FLASHING, TO MATCH ROOF PANELS
13125.D6 DOOR HEAD FLASHING
13125.D7 JAMB FLASHING
13125.D8 CONTINUOUS PRE-FINISHED SHEET METAL CLOSURE
13125.D9 FLEXIBLE ROOF RIDGE
13125.D10 ROOF RIDGE SUPPORT
13125.E0 METAL TRIM
13125.E1 JAMB TRIM
13125.E2 PANEL TRIM
13125.E3 RAKE TRIM
13125.E4 RAKE SLIDE
13125.E5 METAL EAVE CLOSURE
13125.E6 WALL CLOSURE
13125.E7 METAL OUTSIDE CLOSURE
13125.E8 CORNER TRIM
13125.E9 FRAMED OPENING HEADER
13125.F0 METAL WALL PANEL
13125.F1 METAL WALL FASTENER
13125.F2 BLIND RIVET
13125.F3 POP RIVET
13125.F4 METAL WALL PANEL TRIM
13125.G0 STANDING SEAM METAL FACIA
13125.H0 BREAK METAL
13125.H1 METAL ANGLE
13125.H2 HIGH RAKE SUPPORT ANGLE
13125.H3 RAKE ANGLE
13125.H4 4" x 4" CONT. ANGLE
13125.H5 BACKUP PLATE ANGLE
13125.H6 EAVE SUPPORT ANGLE
13125.H7 EAVE STRUT

13125 METAL ARCH BUILDING SYSTEM (CONT.)

13125.J0 STRUCTURAL MEMBER – PRIMED AND PAINTED
13125.J1 STRUCTURAL GIRT – PAINTED
13125.J2 ROOF PURLIN – PAINTED
13125.J3 STRUCTURAL GIRT
13125.J4 ROOF PURLIN – PRIMED
13125.J5 STRUCTURAL GIRT – PRIMED
13125.K0 CLIP
13125.K1 LOW PANEL CLIP
13125.L1 STEEL COLUMN – PAINTED
13125.L2 STEEL COLUMN – GALV. – PAINTED
13125.L3 STEEL COLUMN – GALVANIZED
13125.L4 STEEL COLUMN – PRIMED AND PAINTED
13125.L5 STEEL COLUMN – PRIMED
13125.M1 STEEL BEAM – PAINTED
13125.M2 STEEL BEAM – GALV. – PAINTED
13125.M3 STEEL BEAM – GALVANIZED
13125.M4 STEEL BEAM – PRIMED AND PAINTED
13125.M5 STEEL BEAM – PRIMED
13125.N1 ANCHOR
13125.N2 FASTENER (SPACING)
13125.P1 DOUBLE BEAD TAPE SEALER
13125.P2 SEALANT
13125.P3 THERMAL BREAK
13125.Q0 METAL VENT
13125.Q1 VENT MATERIAL
13125.R0 INSULATION & VAPOR BARRIER (R-VALUE)

DIVISION 15 EQUIPMENT

15000 MECHANICAL

15050.A1 MECH. PENETRATIONS
15250.A1 PIPE INSULATION AT ALL EXPOSED PIPE
15410.A0 URINAL
15410.A1 URINAL, ACCESSIBLE
15410.B0 SINK FAUCET
15410.B1 SINK FAUCET W/ADA LEVER HANDLES
15410.C0 UTILITY SINK
15410.D1 FLOOR SINK
15410.E0 TRENCH DRAIN
15410.E1 DRAIN W/ SEDIMENT BUCKET
15410.E2 FLOOR DRAIN
15410.F0 TOILET
15412.A0 EMERGENCY SHOWER & EYE WASH
15452.A1 DRINKING FOUNTAIN
15486.A1 FUEL FIRED WATER HEATER
15490.A0 WASTE OIL PUMP
15490.B0 WASTE OIL CARTS
15490.C0 WASTE OIL PIT
15490.D0 600 GAL WASTE OIL TANK – O.F.C.I.
15491.A0 AIR COMPRESSOR
15491.B0 OVERHEAD LUBE REEL
15491.C0 OVERHEAD HOSE REEL
15600.A0 RADIANT HEATING SYSTEM
15611.A1 GAS FIRED FURNACE
15611.B1 GAS FIRED FURNACE EXHAUST VENT
15670.A1 CONDENSER UNIT – SEE MECHANICAL
15838.A0 EXHAUST FAN – SEE MECHANICAL
15838.A1 EXHAUST FAN VENT
15861.A1 MECHANICAL DUCTWORK SEE MECHANICAL
15887.A1 LOUVER W/ BIRD SCREEN
15887.B1 INTAKE GRAVITY HOOD – SEE MECHANICAL

DIVISION 16 ELECTRICAL

16000 ELECTRICAL

16129.A0 CONTINUOUS HEAT TAPE IN DOWN SPOUTS AND GUTTERS
16210.A1 ELECTRICAL METER – SEE ELECTRICAL DRAWINGS
16411.A1 EMERGENCY DISCONNECT – SEE ELECTRICAL
16442.A0 ELECTRICAL PANEL
16510.A0 INTERIOR LIGHTS
16510.B0 WALL MOUNTED INTERIOR LIGHTS
16520.B1 EXTERIOR WALL MOUNTED LIGHTS
16520.B2 EXTERIOR WALL MOUNTED FLOOD LIGHTS
16520.B3 EXTERIOR FLOOD LIGHTS – MOUNT TO STEEL COLUMN
16520.B4 EXTERIOR LIGHT – MOUNT TO STRUCTURE ABOVE

CLIENT

UDOT CONNECTING COMMUNITIES

STATION #3437A
SR-44 @ M.P. 0.5 ±
GREENDALE UTAH

DESIGNER

ARCHIPLEX GROUP
architecture · planning · design services
1135 South West Temple, Ste. A
Salt Lake City, UT 84101
P:(801) 961-7070
F:(801) 961-7373

CONSULTANTS

PROFESSIONAL SEAL

STATE OF UTAH
RALPH M. STANISLAW
95-310818-0301
LICENSED ARCHITECT

ISSUE

MARK	DATE	DESCRIPTION
1	3-20-08	ADDENDUM #2
	02-2008	CONSTRUCTION DOCUMENTS

DFCM CONTRACT NO:	077325
DFCM PROJECT NO:	07029900
ARCHIPLEX PROJECT NO:	0708.01
DRAWN BY:	K. PHILLIPS
CHECKED BY:	R. STANISLAW
SCALE:	NONE
DATE:	FEBRUARY, 2008

SHEET TITLE

MASTER KEYNOTE LIST

G002

INDEX OF SHEETS

SH. NO.	SHEET DESCRIPTION	REV	DATE
AD101	SITE DEMOLITION PLAN		
C100	SITE & UTILITY PLAN		
C101	SITE DETAILS		
C200	GRADING PLAN		
C201	DRAINAGE PLAN		
C300	S.W.P.P. PLAN		
C301	S.W.P.P. DETAILS		

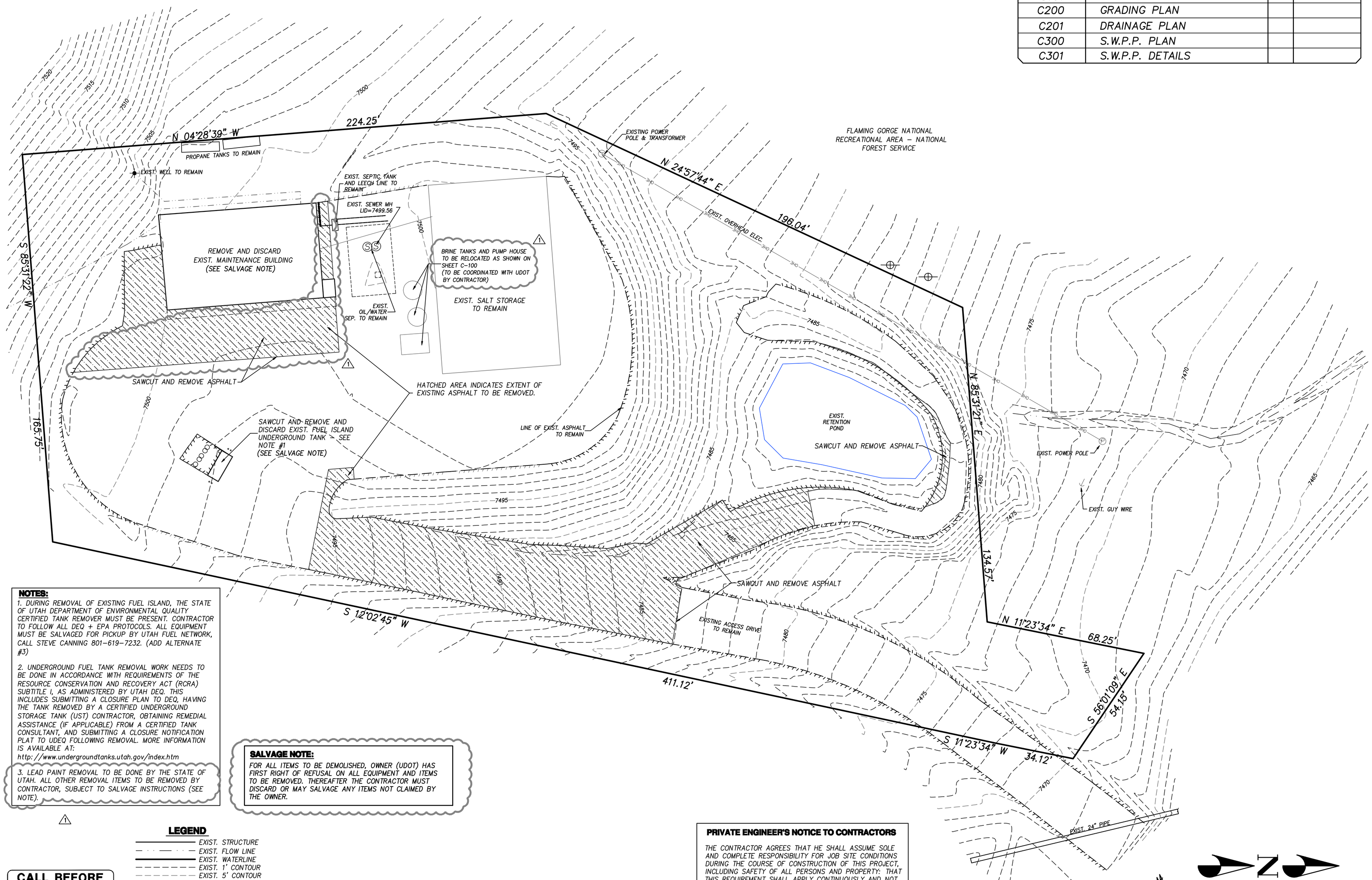

NOTES:

1. DURING REMOVAL OF EXISTING FUEL ISLAND, THE STATE OF UTAH DEPARTMENT OF ENVIRONMENTAL QUALITY CERTIFIED TANK REMOVER MUST BE PRESENT. CONTRACTOR TO FOLLOW ALL DEQ + EPA PROTOCOLS. ALL EQUIPMENT MUST BE SALVAGED FOR PICKUP BY UTAH FUEL NETWORK, CALL STEVE CANNING 801-619-7232. (ADD ALTERNATE #3)

2. UNDERGROUND FUEL TANK REMOVAL WORK NEEDS TO BE DONE IN ACCORDANCE WITH REQUIREMENTS OF THE RESOURCE CONSERVATION AND RECOVERY ACT (RCRA) SUBTITLE I, AS ADMINISTERED BY UTAH DEQ. THIS INCLUDES SUBMITTING A CLOSURE PLAN TO DEQ, HAVING THE TANK REMOVED BY A CERTIFIED UNDERGROUND STORAGE TANK (UST) CONTRACTOR, OBTAINING REMEDIAL ASSISTANCE (IF APPLICABLE) FROM A CERTIFIED TANK CONSULTANT, AND SUBMITTING A CLOSURE NOTIFICATION PLAT TO UDEQ FOLLOWING REMOVAL. MORE INFORMATION IS AVAILABLE AT: http://www.undergroundtanks.utah.gov/index.htm

3. LEAD PAINT REMOVAL TO BE DONE BY THE STATE OF UTAH. ALL OTHER REMOVAL ITEMS TO BE REMOVED BY CONTRACTOR, SUBJECT TO SALVAGE INSTRUCTIONS (SEE NOTE).

SALVAGE NOTE:

FOR ALL ITEMS TO BE DEMOLISHED, OWNER (UDOT) HAS FIRST RIGHT OF REFUSAL ON ALL EQUIPMENT AND ITEMS TO BE REMOVED. THEREAFTER THE CONTRACTOR MUST DISCARD OR MAY SALVAGE ANY ITEMS NOT CLAIMED BY THE OWNER.

LEGEND

- EXIST. STRUCTURE
- EXIST. FLOW LINE
- EXIST. WATERLINE
- EXIST. 1' CONTOUR
- EXIST. 5' CONTOUR
- EXIST. ASPHALT
- OHE — EXIST. OVERHEAD ELECTRIC
- (S) EXIST. SEWER MANHOLE
- (P) EXIST. POWER POLE
- HATCHED AREA INDICATES EXTENT OF EXISTING ASPHALT TO BE REMOVED. (ADD ALTERNATE #3)

CALL BEFORE YOU DIG. IT'S THE LAW.
BLUE STAKES OF UTAH
Utility Notification Center, Inc.
1-800-662-4111
www.bluestakes.org
Dig Safely

CAUTION NOTICE TO CONTRACTOR

THE CONTRACTOR IS SPECIFICALLY CAUTIONED THAT THE LOCATION AND/OR ELEVATION OF EXISTING UTILITIES AS SHOWN ON THESE PLANS ARE BASED ON DRAWINGS OF RECORD AND WHERE POSSIBLE, MEASUREMENTS TAKEN IN THE FIELD. THE INFORMATION IS NOT TO BE RELIED UPON AS BEING EXACT OR COMPLETE.

PRIVATE ENGINEER'S NOTICE TO CONTRACTORS

THE CONTRACTOR AGREES THAT HE SHALL ASSUME SOLE AND COMPLETE RESPONSIBILITY FOR JOB SITE CONDITIONS DURING THE COURSE OF CONSTRUCTION OF THIS PROJECT, INCLUDING SAFETY OF ALL PERSONS AND PROPERTY; THAT THIS REQUIREMENT SHALL APPLY CONTINUOUSLY AND NOT BE LIMITED TO NORMAL WORKING HOURS; AND THAT THE CONTRACTOR SHALL DEFEND, INDEMNIFY, AND HOLD THE OWNER AND THE ENGINEER HARMLESS FROM ANY AND ALL LIABILITY, REAL OR ALLEGED, IN CONNECTION WITH THE PERFORMANCE OF WORK ON THIS PROJECT, EXCEPTING FOR LIABILITY ARISING FROM THE SOLE NEGLIGENCE OF THE OWNER OR THE ENGINEER.

20 0 20 40
SCALE IN FEET
1" = 20'

CLIENT

UDOT CONNECTING COMMUNITIES
STATION #3437A
SR-44 @ M.P. 0.5 +/-
GREENDALE, UTAH

DESIGNER

ARCHIPLEX GROUP
architecture · planning · design services
1135 South West Temple, Ste. A
Salt Lake City, UT 84101
P:(801) 961-7070
F:(801) 961-7373

CONSULTANTS

PEPG ENGINEERING, L.L.C.
421 W. 12300 S. #400 • DRAPER, UT 84020
PH: (801) 562-2521 • FAX: (801) 562-2551

PROFESSIONAL SEAL

ISSUE

MARK	DATE	DESCRIPTION
1	3-20-08	ADDENDUM #2
	02-2008	CONSTRUCTION DOCUMENTS

DFCM CONTRACT NO:	077325
DFCM PROJECT NO:	07029900
ARCHIPLEX PROJECT NO:	0708.01
PEPG PROJECT NO:	6600.0712
DRAWN BY:	RSL
CHECKED BY:	DRS
SCALE:	1"=20'
DATE:	MARCH 2008

SHEET TITLE

SITE PLAN DEMOLITION

AD101

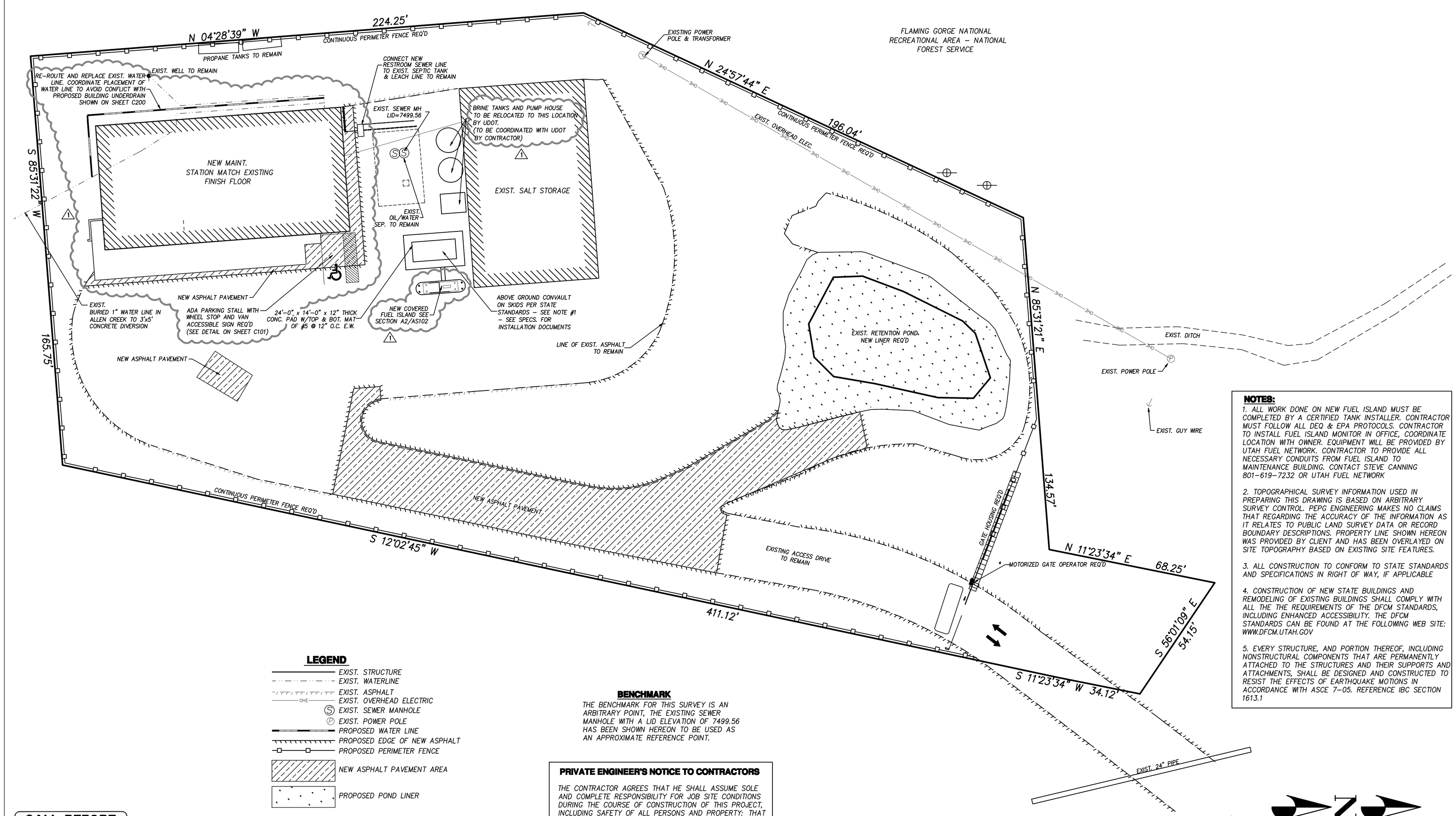

LEGEND

- EXIST. STRUCTURE
- EXIST. WATERLINE
- EXIST. ASPHALT
- EXIST. OVERHEAD ELECTRIC
- EXIST. SEWER MANHOLE
- EXIST. POWER POLE
- PROPOSED WATER LINE
- PROPOSED EDGE OF NEW ASPHALT
- PROPOSED PERIMETER FENCE
- NEW ASPHALT PAVEMENT AREA
- PROPOSED POND LINER

BENCHMARK

THE BENCHMARK FOR THIS SURVEY IS AN ARBITRARY POINT, THE EXISTING SEWER MANHOLE WITH A LID ELEVATION OF 7499.56 HAS BEEN SHOWN HEREON TO BE USED AS AN APPROXIMATE REFERENCE POINT.

NOTES:

1. ALL WORK DONE ON NEW FUEL ISLAND MUST BE COMPLETED BY A CERTIFIED TANK INSTALLER. CONTRACTOR MUST FOLLOW ALL DEQ & EPA PROTOCOLS. CONTRACTOR TO INSTALL FUEL ISLAND MONITOR IN OFFICE, COORDINATE LOCATION WITH OWNER. EQUIPMENT WILL BE PROVIDED BY UTAH FUEL NETWORK. CONTRACTOR TO PROVIDE ALL NECESSARY CONDUITS FROM FUEL ISLAND TO MAINTENANCE BUILDING. CONTACT STEVE CANNING 801-619-7232 OR UTAH FUEL NETWORK

2. TOPOGRAPHICAL SURVEY INFORMATION USED IN PREPARING THIS DRAWING IS BASED ON ARBITRARY SURVEY CONTROL. PEPG ENGINEERING MAKES NO CLAIMS THAT REGARDING THE ACCURACY OF THE INFORMATION AS IT RELATES TO PUBLIC LAND SURVEY DATA OR RECORD BOUNDARY DESCRIPTIONS. PROPERTY LINE SHOWN HEREON WAS PROVIDED BY CLIENT AND HAS BEEN OVERLAYED ON SITE TOPOGRAPHY BASED ON EXISTING SITE FEATURES.

3. ALL CONSTRUCTION TO CONFORM TO STATE STANDARDS AND SPECIFICATIONS IN RIGHT OF WAY, IF APPLICABLE

4. CONSTRUCTION OF NEW STATE BUILDINGS AND REMODELING OF EXISTING BUILDINGS SHALL COMPLY WITH ALL THE THE REQUIREMENTS OF THE DFCM STANDARDS, INCLUDING ENHANCED ACCESSIBILITY. THE DFCM STANDARDS CAN BE FOUND AT THE FOLLOWING WEB SITE: WWW.DFCM.UTAH.GOV

5. EVERY STRUCTURE, AND PORTION THEREOF, INCLUDING NONSTRUCTURAL COMPONENTS THAT ARE PERMANENTLY ATTACHED TO THE STRUCTURES AND THEIR SUPPORTS AND ATTACHMENTS, SHALL BE DESIGNED AND CONSTRUCTED TO RESIST THE EFFECTS OF EARTHQUAKE MOTIONS IN ACCORDANCE WITH ASCE 7-05. REFERENCE IBC SECTION 1613.1

PRIVATE ENGINEER'S NOTICE TO CONTRACTORS

THE CONTRACTOR AGREES THAT HE SHALL ASSUME SOLE AND COMPLETE RESPONSIBILITY FOR JOB SITE CONDITIONS DURING THE COURSE OF CONSTRUCTION OF THIS PROJECT, INCLUDING SAFETY OF ALL PERSONS AND PROPERTY; THAT THIS REQUIREMENT SHALL APPLY CONTINUOUSLY AND NOT BE LIMITED TO NORMAL WORKING HOURS; AND THAT THE CONTRACTOR SHALL DEFEND, INDEMNIFY, AND HOLD THE OWNER AND THE ENGINEER HARMLESS FROM ANY AND ALL LIABILITY, REAL OR ALLEGED, IN CONNECTION WITH THE PERFORMANCE OF WORK ON THIS PROJECT, EXCEPTING FOR LIABILITY ARISING FROM THE SOLE NEGLIGENCE OF THE OWNER OR THE ENGINEER.

CAUTION NOTICE TO CONTRACTOR

THE CONTRACTOR IS SPECIFICALLY CAUTIONED THAT THE LOCATION AND/OR ELEVATION OF EXISTING UTILITIES AS SHOWN ON THESE PLANS ARE BASED ON DRAWINGS OF RECORD AND WHERE POSSIBLE, MEASUREMENTS TAKEN IN THE FIELD. THE INFORMATION IS NOT TO BE RELIED UPON AS BEING EXACT OR COMPLETE.

CALL BEFORE YOU DIG. IT'S THE LAW.
BLUE STAKES OF UTAH
Utility Notification Center, Inc.
1-800-662-4111
www.bluestakes.org
Dig Safely

CLIENT

UDOT CONNECTING COMMUNITIES

STATION #3437A
SR-44 @ M.P. 0.5 +/-
GREENDALE, UTAH

DESIGNER

ARCHIPLEX GROUP
architecture · planning · design services
1135 South West Temple, Ste. A
Salt Lake City, UT 84101
P:(801) 961-7070
F:(801) 961-7373

CONSULTANTS

PEPG ENGINEERING, L.L.C.
421 W. 12300 S. #400 • DRAPER, UT 84020
PH: (801) 562-2521 • FAX: (801) 562-2551

PROFESSIONAL SEAL

ISSUE

MARK	DATE	DESCRIPTION
1	3-20-08	ADDENDUM #2
	02-2008	CONSTRUCTION DOCUMENTS

DFCM CONTRACT NO:	077325
DFCM PROJECT NO:	07029900
ARCHIPLEX PROJECT NO:	0708.01
PEPG PROJECT NO:	6600.0712
DRAWN BY:	RSL
CHECKED BY:	DRS
SCALE:	1"=20'
DATE:	MARCH 2008

SHEET TITLE

SITE & UTILITY PLAN

C100

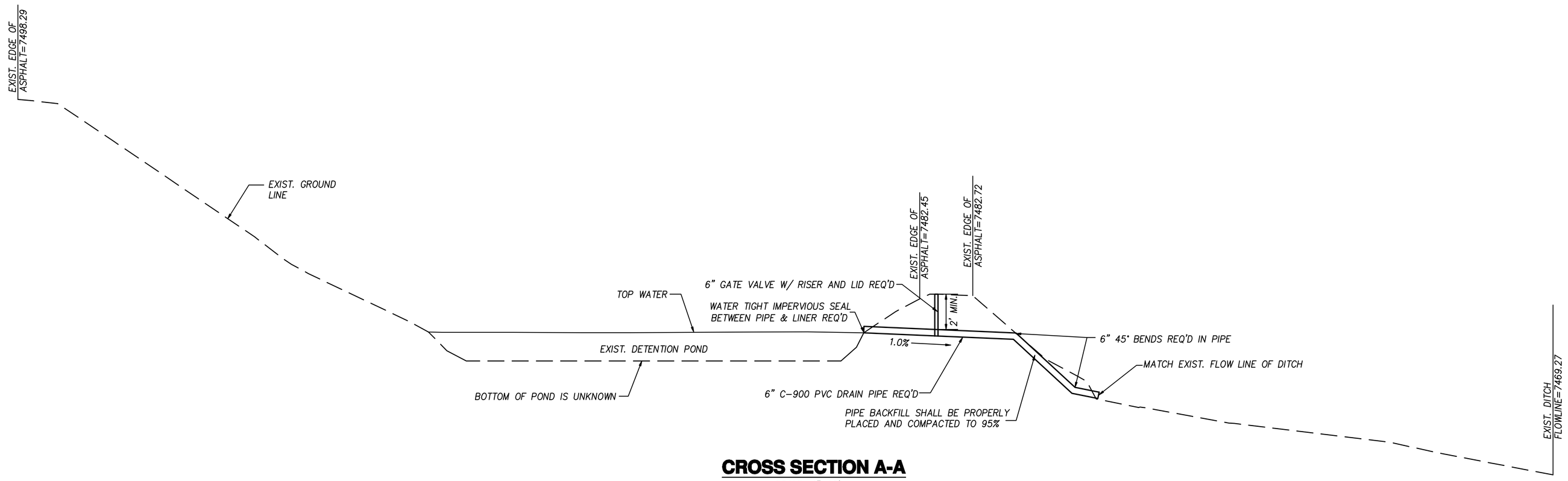

CROSS SECTION A-A

SCALE: 1"=10'
VERTICAL SCALE: 1"=10'

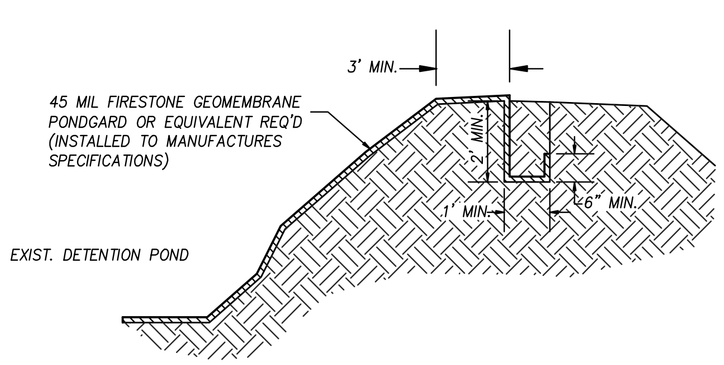

POND LINER DETAIL

N.T.S.

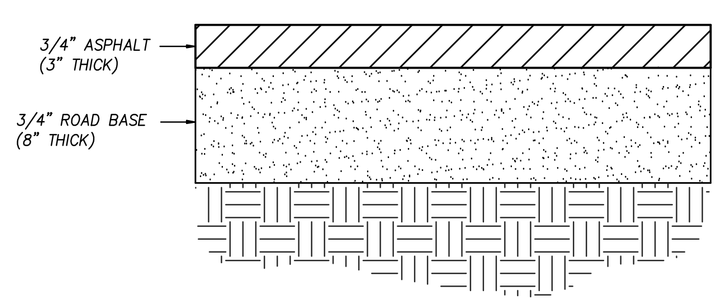

NOTE: MATCH EXISTING PAVEMENT SECTION IF GREATER THAN PAVEMENT SECTION SHOWN.

PAVEMENT SECTION

N.T.S.

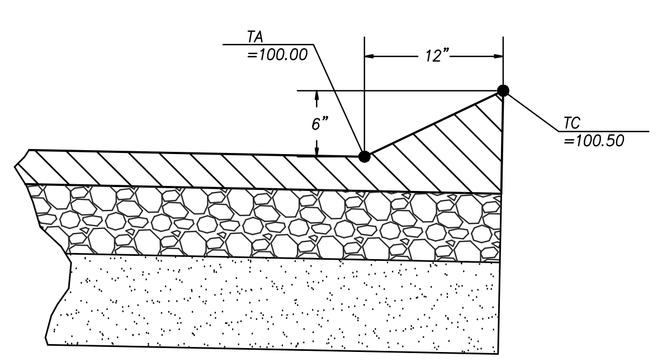

NOTE: RAISED PORTION SHALL BE HOT MIX ASPHALT PLACED AS PART OF THE ROAD PAVEMENT.

ASPHALT CURB DETAIL

N.T.S.

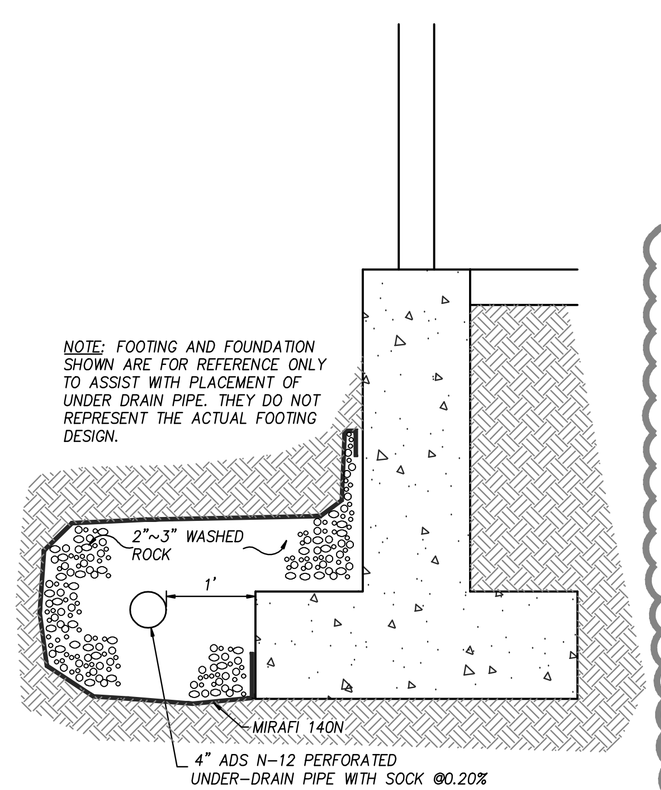

BUILDING UNDERDRAIN DETAIL

N.T.S.

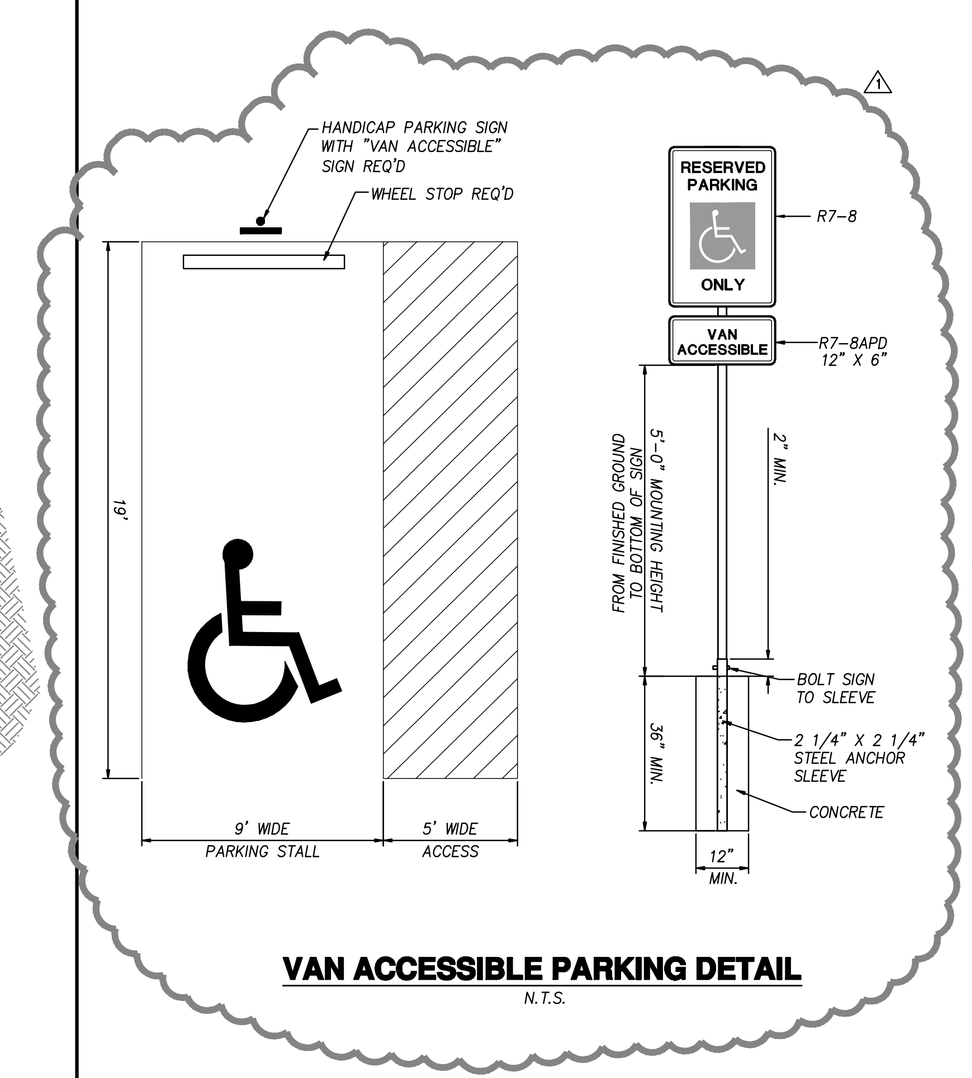

VAN ACCESSIBLE PARKING DETAIL

N.T.S.

CLIENT

UDOT CONNECTING COMMUNITIES

STATION #3437A
SR-44 @ M.P. 0.5 +/-
GREENDALE, UTAH

DESIGNER

ARCHIPLEX GROUP
architecture · planning · design services
1135 South West Temple, Ste. A
Salt Lake City, UT 84101
P:(801) 961-7070
F:(801) 961-7373

CONSULTANTS

PEPG ENGINEERING, L.L.C.
421 W. 12300 S. #400 • DRAPER, UT 84020
PH: (801) 562-2521 • FAX: (801) 562-2551

PROFESSIONAL SEAL

ISSUE

MARK	DATE	DESCRIPTION
1	3-20-08	ADDENDUM #2
	02-2008	CONSTRUCTION DOCUMENTS

DFCM CONTRACT NO:	077325
DFCM PROJECT NO:	07029900
ARCHIPLEX PROJECT NO:	0708.01
PEPG PROJECT NO:	6600.0712
DRAWN BY:	RSL
CHECKED BY:	DRS
SCALE:	1"=20'
DATE:	MARCH, 2008

SHEET TITLE

SITE & DRAINAGE DETAILS

C101

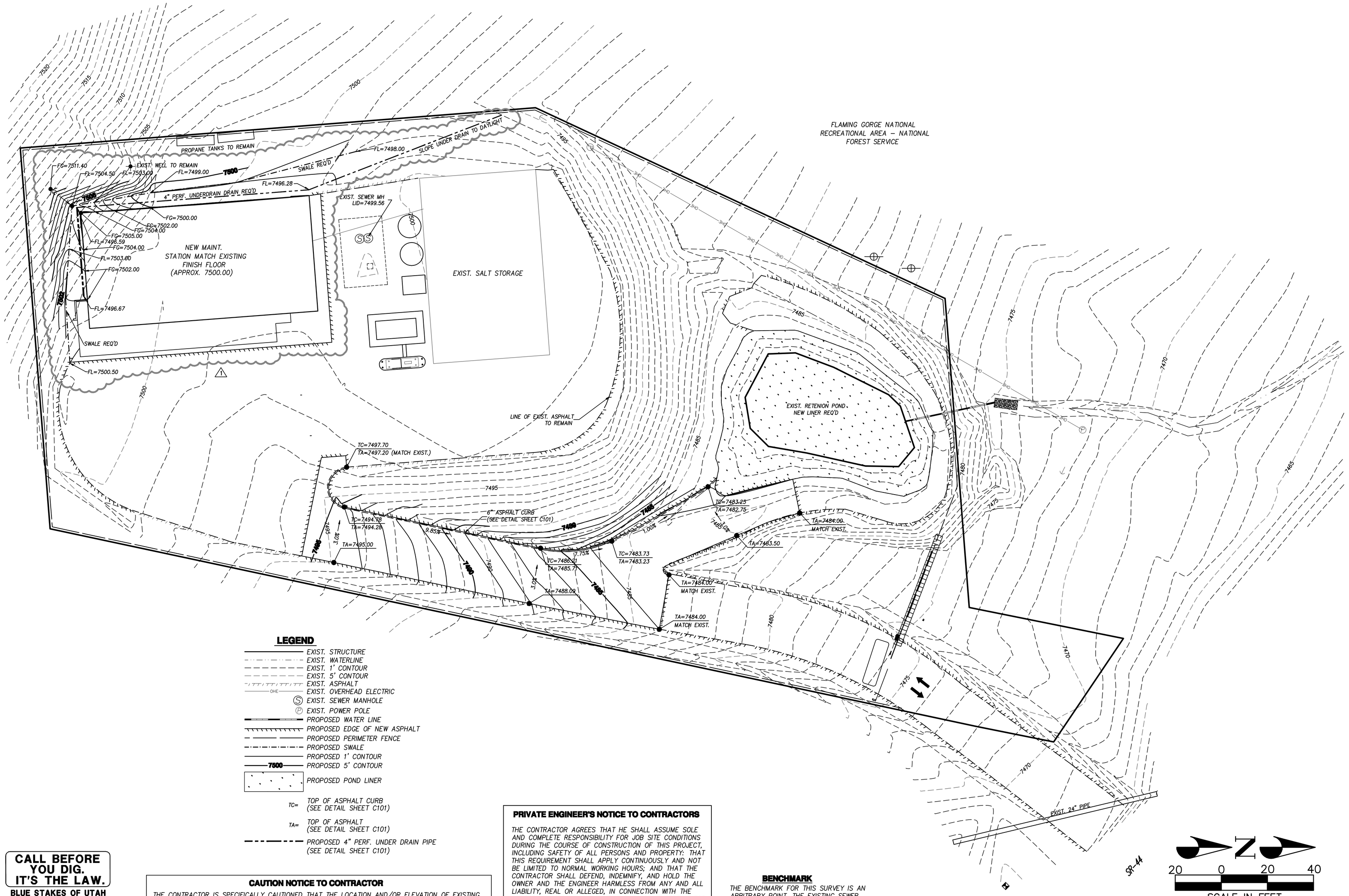

LEGEND

- EXIST. STRUCTURE
- EXIST. WATERLINE
- EXIST. 1' CONTOUR
- EXIST. 5' CONTOUR
- EXIST. ASPHALT
- EXIST. OVERHEAD ELECTRIC
- EXIST. SEWER MANHOLE
- EXIST. POWER POLE
- PROPOSED WATER LINE
- PROPOSED EDGE OF NEW ASPHALT
- PROPOSED PERIMETER FENCE
- PROPOSED SWALE
- PROPOSED 1' CONTOUR
- PROPOSED 5' CONTOUR
- PROPOSED POND LINER
- TC= TOP OF ASPHALT CURB (SEE DETAIL SHEET C101)
- TA= TOP OF ASPHALT (SEE DETAIL SHEET C101)
- PROPOSED 4" PERF. UNDER DRAIN PIPE (SEE DETAIL SHEET C101)

CALL BEFORE YOU DIG. IT'S THE LAW.
BLUE STAKES OF UTAH
Utility Notification Center, Inc.
1-800-662-4111
www.bluestakes.org
Dig Safely

CAUTION NOTICE TO CONTRACTOR

THE CONTRACTOR IS SPECIFICALLY CAUTIONED THAT THE LOCATION AND/OR ELEVATION OF EXISTING UTILITIES AS SHOWN ON THESE PLANS ARE BASED ON DRAWINGS OF RECORD AND WHERE POSSIBLE, MEASUREMENTS TAKEN IN THE FIELD. THE INFORMATION IS NOT TO BE RELIED UPON AS BEING EXACT OR COMPLETE.

PRIVATE ENGINEER'S NOTICE TO CONTRACTORS

THE CONTRACTOR AGREES THAT HE SHALL ASSUME SOLE AND COMPLETE RESPONSIBILITY FOR JOB SITE CONDITIONS DURING THE COURSE OF CONSTRUCTION OF THIS PROJECT, INCLUDING SAFETY OF ALL PERSONS AND PROPERTY; THAT THIS REQUIREMENT SHALL APPLY CONTINUOUSLY AND NOT BE LIMITED TO NORMAL WORKING HOURS; AND THAT THE CONTRACTOR SHALL DEFEND, INDEMNIFY, AND HOLD THE OWNER AND THE ENGINEER HARMLESS FROM ANY AND ALL LIABILITY, REAL OR ALLEGED, IN CONNECTION WITH THE PERFORMANCE OF WORK ON THIS PROJECT, EXCEPTING FOR LIABILITY ARISING FROM THE SOLE NEGLIGENCE OF THE OWNER OR THE ENGINEER.

BENCHMARK

THE BENCHMARK FOR THIS SURVEY IS AN ARBITRARY POINT, THE EXISTING SEWER MANHOLE WITH A LID ELEVATION OF 7499.56 HAS BEEN SHOWN HEREON TO BE USED AS AN APPROXIMATE REFERENCE POINT.

CLIENT

UDOT CONNECTING COMMUNITIES

STATION #3437A
SR-44 @ M.P. 0.5 +/-
GREENDALE, UTAH

DESIGNER

ARCHIPLEX GROUP
architecture • planning • design services
1135 South West Temple, Ste. A
Salt Lake City, UT 84101
P:(801) 961-7070
F:(801) 961-7373

CONSULTANTS

PEPG ENGINEERING, L.L.C.
421 W. 12300 S. #400 • DRAPER, UT 84020
PH: (801) 562-2521 • FAX: (801) 562-2551

PROFESSIONAL SEAL

ISSUE

MARK	DATE	DESCRIPTION
1	3-20-08	ADDENDUM #2
	02-2008	CONSTRUCTION DOCUMENTS

DFCM CONTRACT NO:	077325
DFCM PROJECT NO:	07029900
ARCHIPLEX PROJECT NO:	0708.01
PEPG PROJECT NO:	6600.0712
DRAWN BY:	RSL
CHECKED BY:	DRS
SCALE:	1"=20'
DATE:	MARCH, 2008

SHEET TITLE

GRADING PLAN

C200

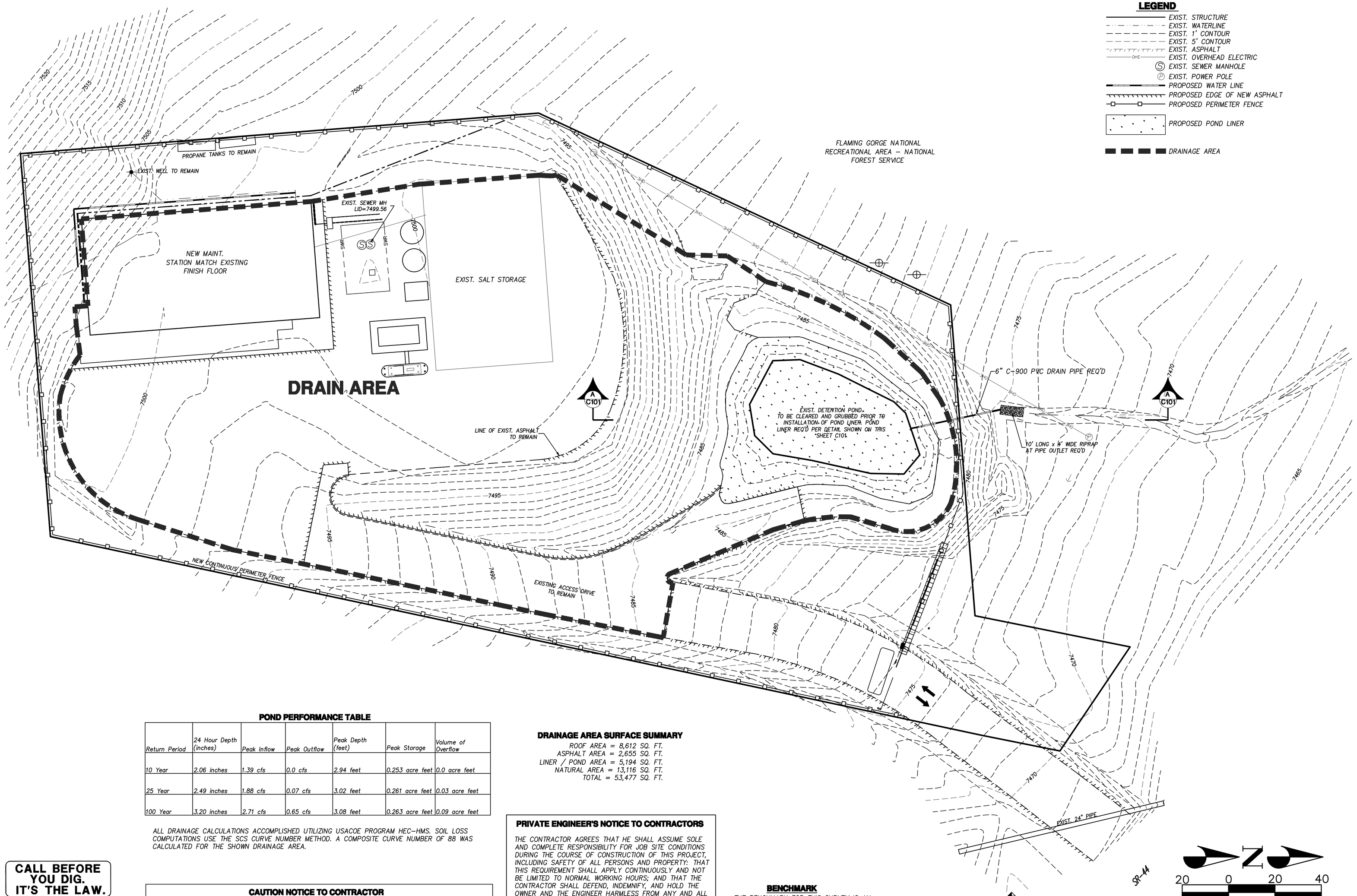

LEGEND

- EXIST. STRUCTURE
- EXIST. WATERLINE
- EXIST. 1' CONTOUR
- EXIST. 5' CONTOUR
- EXIST. ASPHALT
- OHE — EXIST. OVERHEAD ELECTRIC
- EXIST. SEWER MANHOLE
- EXIST. POWER POLE
- PROPOSED WATER LINE
- PROPOSED EDGE OF NEW ASPHALT
- PROPOSED PERIMETER FENCE
- PROPOSED POND LINER
- DRAINAGE AREA

POND PERFORMANCE TABLE

Return Period	24 Hour Depth (inches)	Peak Inflow	Peak Outflow	Peak Depth (feet)	Peak Storage	Volume of Overflow
10 Year	2.06 inches	1.39 cfs	0.0 cfs	2.94 feet	0.253 acre feet	0.0 acre feet
25 Year	2.49 inches	1.88 cfs	0.07 cfs	3.02 feet	0.261 acre feet	0.03 acre feet
100 Year	3.20 inches	2.71 cfs	0.65 cfs	3.08 feet	0.263 acre feet	0.09 acre feet

ALL DRAINAGE CALCULATIONS ACCOMPLISHED UTILIZING USACOE PROGRAM HEC-HMS. SOIL LOSS COMPUTATIONS USE THE SCS CURVE NUMBER METHOD. A COMPOSITE CURVE NUMBER OF 88 WAS CALCULATED FOR THE SHOWN DRAINAGE AREA.

DRAINAGE AREA SURFACE SUMMARY

ROOF AREA = 8,612 SQ. FT.
ASPHALT AREA = 2,655 SQ. FT.
LINER / POND AREA = 5,194 SQ. FT.
NATURAL AREA = 13,116 SQ. FT.
TOTAL = 53,477 SQ. FT.

PRIVATE ENGINEER'S NOTICE TO CONTRACTORS

THE CONTRACTOR AGREES THAT HE SHALL ASSUME SOLE AND COMPLETE RESPONSIBILITY FOR JOB SITE CONDITIONS DURING THE COURSE OF CONSTRUCTION OF THIS PROJECT, INCLUDING SAFETY OF ALL PERSONS AND PROPERTY; THAT THIS REQUIREMENT SHALL APPLY CONTINUOUSLY AND NOT BE LIMITED TO NORMAL WORKING HOURS; AND THAT THE CONTRACTOR SHALL DEFEND, INDEMNIFY, AND HOLD THE OWNER AND THE ENGINEER HARMLESS FROM ANY AND ALL LIABILITY, REAL OR ALLEGED, IN CONNECTION WITH THE PERFORMANCE OF WORK ON THIS PROJECT, EXCEPTING FOR LIABILITY ARISING FROM THE SOLE NEGLIGENCE OF THE OWNER OR THE ENGINEER.

CALL BEFORE YOU DIG. IT'S THE LAW.
BLUE STAKES OF UTAH
Utility Notification Center, Inc.
1-800-662-4111
www.bluestakes.org
Dig Safely

CAUTION NOTICE TO CONTRACTOR

THE CONTRACTOR IS SPECIFICALLY CAUTIONED THAT THE LOCATION AND/OR ELEVATION OF EXISTING UTILITIES AS SHOWN ON THESE PLANS ARE BASED ON DRAWINGS OF RECORD AND WHERE POSSIBLE, MEASUREMENTS TAKEN IN THE FIELD. THE INFORMATION IS NOT TO BE RELIED UPON AS BEING EXACT OR COMPLETE.

BENCHMARK

THE BENCHMARK FOR THIS SURVEY IS AN ARBITRARY POINT. THE EXISTING SEWER MANHOLE WITH A LID ELEVATION OF 7499.56 HAS BEEN SHOWN HEREON TO BE USED AS AN APPROXIMATE REFERENCE POINT.

20 0 20 40
SCALE IN FEET
1" = 20'

CLIENT

UDOT CONNECTING COMMUNITIES
STATION #3437A
SR-44 @ M.P. 0.5 +/-
GREENDALE, UTAH

DESIGNER

ARCHIPLEX GROUP
architecture · planning · design services
1135 South West Temple, Ste. A
Salt Lake City, UT 84101
P:(801) 961-7070
F:(801) 961-7373

CONSULTANTS

PEPG ENGINEERING, L.L.C.
421 W. 12300 S. #400 • DRAPER, UT 84020
PH: (801) 562-2521 • FAX: (801) 562-2551

PROFESSIONAL SEAL

ISSUE

MARK	DATE	DESCRIPTION
1	3-20-08	ADDENDUM #2
	02-2008	CONSTRUCTION DOCUMENTS

DFCM CONTRACT NO:	077325
DFCM PROJECT NO:	07029900
ARCHIPLEX PROJECT NO:	0708.01
PEPG PROJECT NO:	6600.0712
DRAWN BY:	RSL
CHECKED BY:	DRS
SCALE:	1"=20'
DATE:	MARCH, 2008

SHEET TITLE

DRAINAGE PLAN

C201

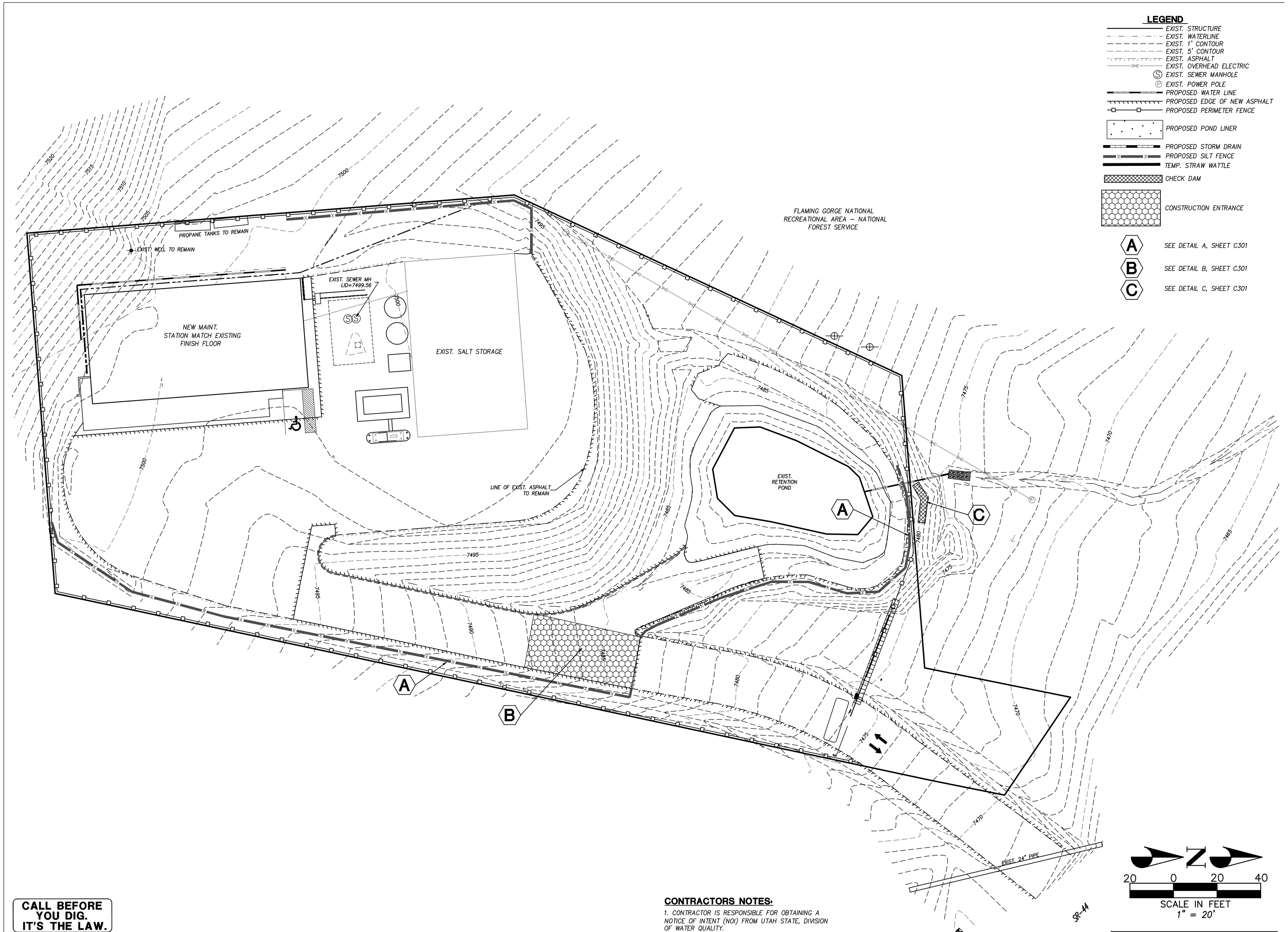

LEGEND

- EXIST. STRUCTURE
- EXIST. WATERLINE
- EXIST. 1' CONTOUR
- EXIST. 5' CONTOUR
- EXIST. ASPHALT
- EXIST. OVERHEAD ELECTRIC
- EXIST. SEWER MANHOLE
- EXIST. POWER POLE
- PROPOSED WATER LINE
- PROPOSED EDGE OF NEW ASPHALT
- PROPOSED PERIMETER FENCE
- PROPOSED POND LINER
- PROPOSED STORM DRAIN
- PROPOSED SILT FENCE
- TEMP. STRAW WATTLE
- CHECK DAM
- CONSTRUCTION ENTRANCE
- A — SEE DETAIL A, SHEET C301
- B — SEE DETAIL B, SHEET C301
- C — SEE DETAIL C, SHEET C301

SCALE IN FEET
1" = 20'

CALL BEFORE YOU DIG. IT'S THE LAW.
BLUE STAKES OF UTAH
Utility Notification Center, Inc.
1-800-662-4111
www.bluestakes.org
Dig Safely

CONTRACTORS NOTES:

1. CONTRACTOR IS RESPONSIBLE FOR OBTAINING A NOTICE OF INTENT (NOI) FROM UTAH STATE, DIVISION OF WATER QUALITY.

2. CONTRACTOR SHALL REMOVE ALL SWPPP ITEMS (AS APPROPRIATE) UPON FILING N.O.T.

UTAH STATE UPDES =UTR

CLIENT

UDOT CONNECTING COMMUNITIES

STATION #3437A
SR-44 @ M.P. 0.5 +/-
GREENDALE, UTAH

DESIGNER

ARCHIPLEX GROUP
architecture · planning · design services
1135 South West Temple, Ste. A
Salt Lake City, UT 84101
P:(801) 961-7070
F:(801) 961-7373

CONSULTANTS

PEPG ENGINEERING, L.L.C.
421 W. 12300 S. #400 • DRAPER, UT 84020
PH: (801) 562-2521 • FAX: (801) 562-2551

PROFESSIONAL SEAL

ISSUE

MARK	DATE	DESCRIPTION
1	3-20-08	ADDENDUM #2
	02-2008	CONSTRUCTION DOCUMENTS

DFCM CONTRACT NO:	077325
DFCM PROJECT NO:	07029900
ARCHIPLEX PROJECT NO:	0708.01
PEPG PROJECT NO:	6600.0712
DRAWN BY:	RSL
CHECKED BY:	DRS
SCALE:	1"=20'
DATE:	MARCH, 2008

SHEET TITLE

S.W.P.P.P.

C300

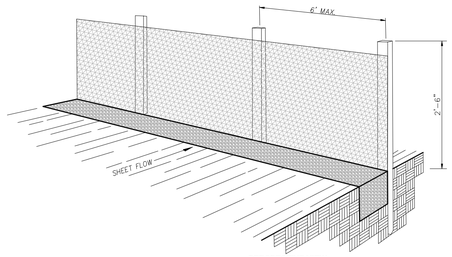

PERSPECTIVE VIEW

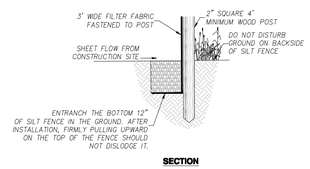

SECTION

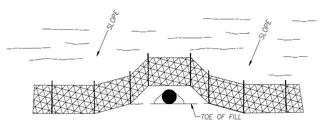

AROUND A PIPE OUTLET

SPLICES (TOP VIEW)

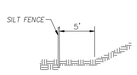

AT TOE OF FILL SLOPE

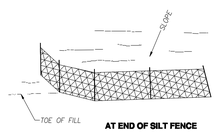

AT END OF SILT FENCE

NOTES FOR SILT FENCE:

1. WHERE PERMITTED, POSITION THE SILT FENCE 5' BEYOND THE TOP OF THE SLOPE.
2. TO AVOID CREATING LOW POINTS ALONG THE SILT FENCE, ALIGN THE FENCE ALONG THE CONTOUR AS MUCH AS POSSIBLE. WHERE EXCESSIVE RUNOFF WILL ACCUMULATE AT A LOW POINT, PROVIDE AN OPENING IN THE FENCE AND INSTALL A SEDIMENT TRAP.
3. WHEN EXCAVATING THE TRENCH, USE MACHINERY THAT WILL MINIMIZE DISTURBANCE.
4. TO PREVENT RUNOFF FROM FLOWING AROUND THE ENDS OF THE SILT FENCE, RUN THE ENDS OF THE FENCE UP SLOPE.
5. DO NOT PLACE SILT FENCE ACROSS POTENTIAL CONCENTRATED FLOW (E.G., PIPE OUTLETS, DRAINAGE CHANNELS, CUT DITCHES.)
6. AVOID USING SPLICES ALONG THE FENCE AS MUCH AS POSSIBLE. IF A SPLICE IS NECESSARY, BEFORE POUNDING IN THE END POSTS, OVERLAP THE END POSTS AND TWIST 180 DEGREES.
7. MAINTAIN A PROPERLY FUNCTIONING SILT FENCE THROUGHOUT DURATION OF THE PROJECT OR UNTIL DISTURBED AREAS HAVE BEEN VEGETATED.
8. WHEN A STORM EVENT DEPOSITS SEDIMENT BEHIND THE FENCE, REMOVE THE SEDIMENT AND PLACE IT IN A STABLE AREA APPROVED BY THE ENGINEER.
9. IN AREAS THAT HAVE BEEN SEEDED AND MULCHED, REMOVE SILT FENCE UNLESS THEY ARE PROTECTING A WETLAND OR WATER BODY.

SILT FENCE INSTALLATION (A)

NOT TO SCALE

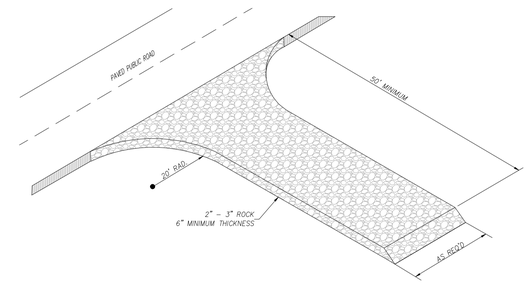

NOTES FOR STABILIZED CONSTRUCTION ENTRANCE:

1. PLACE STABILIZED CONSTRUCTION ENTRANCES AT LOCATIONS SHOWN ON THE PLANS OR AS DIRECTED BY THE ENGINEER.
2. MAINTAIN A PROPERLY FUNCTIONING CONSTRUCTION ENTRANCE THROUGHOUT CONSTRUCTION OR UNTIL DISTURBED AREAS HAVE BEEN PAVED.
3. DO NOT ALLOW VEHICLES LEAVING THE CONSTRUCTION SITE TO TRACK MUD ONTO PAVED ROADS.

STABILIZED CONSTRUCTION ENTRANCE (B)

NOT TO SCALE

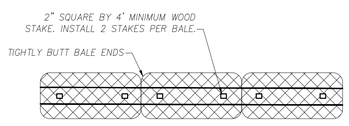

PLAN VIEW

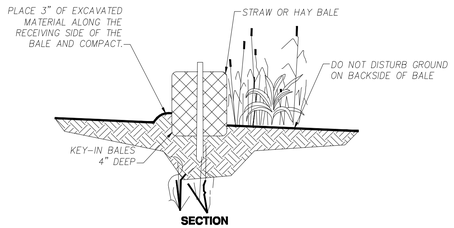

SECTION

NOTES STRAW BALE BARRIER

1. PLACE STRAW BALE BARRIERS BEFORE BEGINNING EARTH DISTURBING ACTIVITIES.
2. DO NOT PLACE STRAW BALE BARRIERS ACROSS NATURAL STREAM BEDS.
3. MAINTAIN A PROPERLY FUNCTIONING STRAW BALE BARRIER THROUGHOUT THE DURATION OF THE PROJECT OR UNTIL DISTURBED AREAS HAVE BEEN SEEDED AND MULCHED.
4. AFTER SURROUNDING AREAS HAVE BEEN STABILIZED, REMOVE BALES AND STAKES AND LEVEL AND SEED THE AREA. BALES MAY BE BUSTED APART AND SPREAD AS MULCH.

STRAW BALE CHECK DAM (C)

NOT TO SCALE

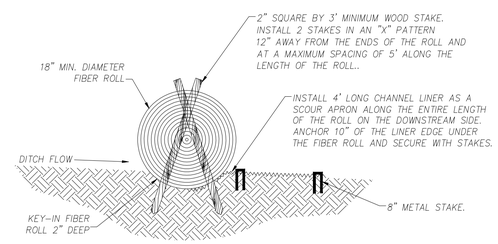

SECTION A-A

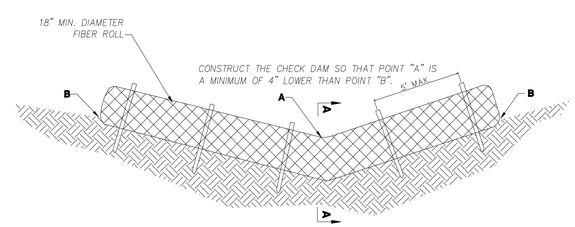

OPTIONAL STRAW BALE CHECK DAM (C)

NOT TO SCALE

CLIENT

UDOT CONNECTING COMMUNITIES

STATION #3737A
SR-44 @ M.P. 0.5 +/-
GREENDALE, UTAH

DESIGNER

ARCHIPLEX GROUP
architecture - planning - design services
1135 South West Temple, Ste. A
Salt Lake City, UT 84101
P:(801) 961-7070
F:(801) 961-7373

CONSULTANTS

PEPG ENGINEERING, L.L.C.
421 W. 12300 S. #400 • DRAPER, UT 84020
PH: (801) 562-2521 • FAX: (801) 562-2551

PROFESSIONAL SEAL

ISSUE

MARK	DATE	DESCRIPTION
1	3-20-08	ADDENDUM #2
	02-2008	CONSTRUCTION DOCUMENTS

DFCM CONTRACT NO:	077325
DFCM PROJECT NO:	07029900
ARCHIPLEX PROJECT NO:	0708.01
PEPG PROJECT NO:	6600.0712
DRAWN BY:	RSL
CHECKED BY:	DRS
SCALE:	1"=20'
DATE:	MARCH, 2008

SHEET TITLE

S.W.P.P.P. DETAILS

C301

GENERAL NOTES

1. FIELD VERIFY ALL EXISTING CONDITIONS AND THEIR COMPATIBILITY WITH NEW CONSTRUCTION PRIOR TO THE COMMENCEMENT OF WORK. COORDINATE DISCREPANCIES WITH ARCHITECT.

2. DO NOT SCALE DRAWINGS.

3. SEE CIVIL, STRUCTURAL, MECHANICAL AND ELECTRICAL DRAWINGS FOR MORE INFORMATION.

4. PROVIDE BACKING BEHIND ALL SURFACE MOUNTED EQUIPMENT AND/OR FIXTURES PER DETAIL C2/AE401

5. SEE SHEET A1/AE501 FOR WALL TYPES.

6. TWO BOLLARDS REQUIRED PER SECTIONAL DOOR JAMB. ALIGN WITH DOOR JAMB, SEE DETAILS A2 & B2/AE503.

7. SEE SHEET AE602 FOR WINDOW FRAME TYPES & DETAILS.

8. SEE STRUCTURAL DRAWINGS FOR CONSTRUCTION/CONTROL JOINT LOCATIONS IN CONCRETE SLAB.

9. ALL DIMENSIONS ARE TO FACE OF WALL, UNLESS NOTED OTHERWISE.

10. COORDINATE LOCATION & SIZE OF CONCRETE PIER WITH THE STRUCTURAL ENGINEER AND THE METAL BUILDING MANUFACTURER TO MEET ALL ADA REQUIREMENTS.

11. COLUMNS SHOWN ON PLAN ARE SCHEMATIC ONLY. CONTRACTOR TO GET EXACT SIZES AND LOCATIONS FROM APPROVED METAL BUILDING SHOP DRAWINGS.

12. PROVIDE 03053.A0 AT ALL CONCRETE CURBS, PIERS, SLABS, STEM WALL ETC. U.N.O.

KEYNOTES

03053.A0	CONCRETE WATER PROOFING ADMIXTURE
03054.A0	OLIOPHOBIC TOPICAL SEALER
03300.A0	CONCRETE – SLAB ON GRADE
03300.D0	CONCRETE PAD – (THICKNESS)
03300.E0	RETAINING WALL
03300.H0	FOUNDATION WALL – SEE STRUCTURAL
03300.H1	CONCRETE PIER – SEE STRUCTURAL
05500.J1	PIPE BOLLARD (DIAMETER) GALVANIZED & PAINTED
06105.R3	PLYWOOD PANEL (THICKNESS)
06402.P2	COUNTERTOP – P. LAM. ON 3/4" PLYWOOD
08360.A0	HEAVY DUTY OVERHEAD SECTIONAL DOOR
10100.C0	MARKER BOARD (L X H)
10425.A0	ROOM SIGNAGE
10425.C1	ACCESSIBLE SIGNAGE
10522.A0	FIRE EXTINGUISHER
12511.A0	HORIZONTAL LOUVER BLINDS
13125.C2	DOWNSPOUT
13125.L4	STEEL COLUMN – PRIMED AND PAINTED
13125.L5	STEEL COLUMN – PRIMED
15410.D1	FLOOR SINK
15410.E0	TRENCH DRAIN
15486.A1	FUEL FIRED WATER HEATER
15491.A0	AIR COMPRESSOR
15491.C0	OVERHEAD HOSE REELS
15611.A1	GAS FIRED FURNACE
15838.A0	EXHAUST FAN SEE MECHANICAL DRAWINGS
15887.A1	LOUVER WITH BIRD SCREEN
16129.A0	CONTINUOUSE HEAT TAPE IN DOWNSPOUTS AND GUTTERS
16411.A1	EMERGENCY DISCONNECT – SEE ELECTRICAL
16422.A0	ELECTRICAL PANEL

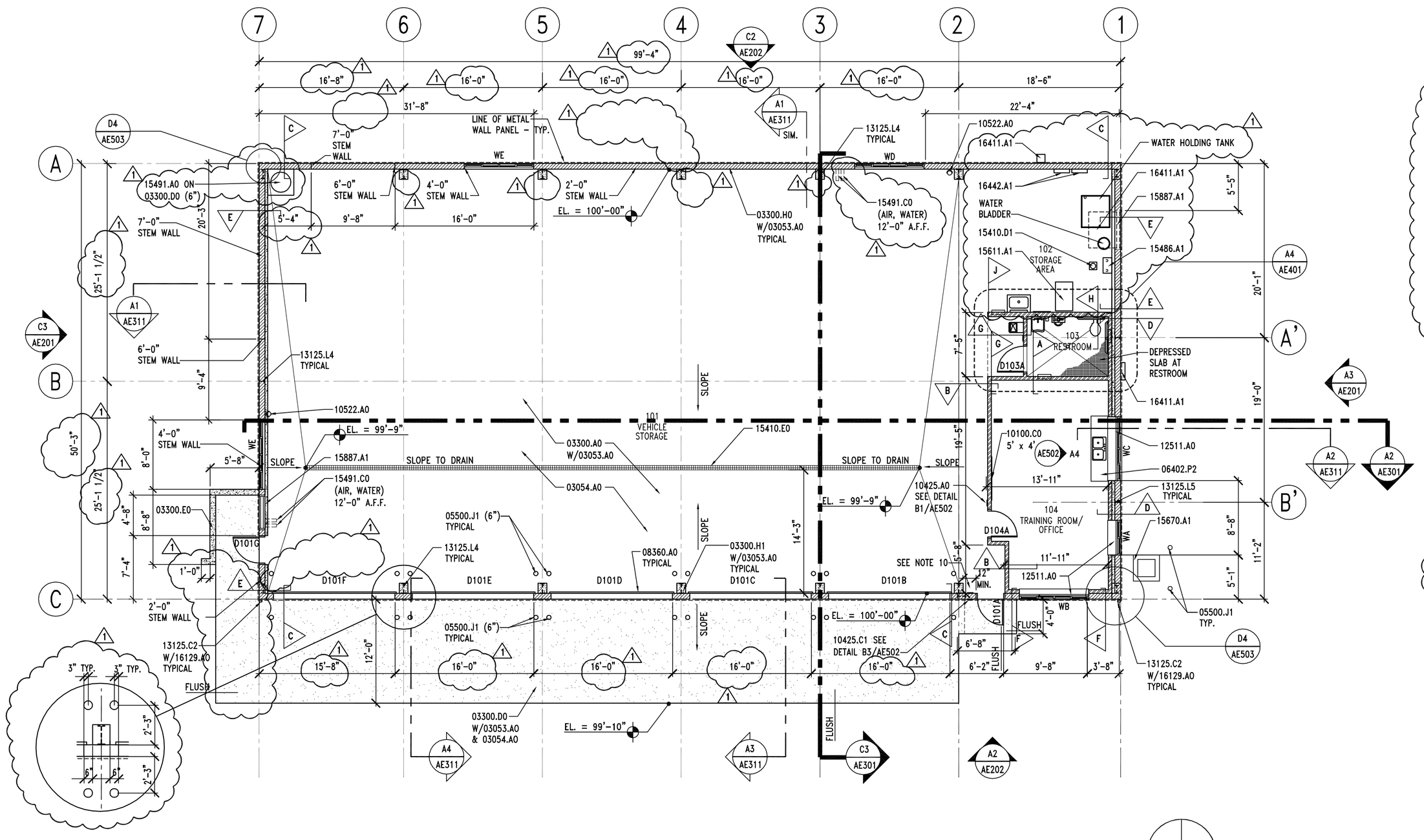

A1 FLOOR PLAN

AE101 REF.

SCALE: 1/8" = 1'-0"

CLIENT

UDOT CONNECTING COMMUNITIES

STATION #3437A
SR-44 @ M.P. 0.5 ±
GREENDALE UTAH

DESIGNER

ARCHIPLEX GROUP
architecture · planning · design services
1135 South West Temple, Ste. A
Salt Lake City, UT 84101
P:(801) 961-7070
F:(801) 961-7373

CONSULTANTS

PROFESSIONAL SEAL

STATE OF UTAH
RALPH M. STANISLAW
95-310818-0301
LICENSED ARCHITECT

ISSUE

MARK	DATE	DESCRIPTION
1	3-20-08	ADDENDUM #2
	02-2008	CONSTRUCTION DOCUMENTS

DFCM CONTRACT NO:	077325
DFCM PROJECT NO:	07029900
ARCHIPLEX PROJECT NO:	0708.01
DRAWN BY:	A. PHILLIPS
CHECKED BY:	R. STANISLAW
SCALE:	1/8"=1'-0"
DATE:	FEBRUARY, 2008

SHEET TITLE

FLOOR PLAN

AE101

CEILING SYMBOLS

- PAINTED GYP. BD. CEILING
- 2' x 4' FLUORESCENT LIGHT FIXTURE, SEE ELECT. DRAWINGS FOR TYPE.
- 1' x 4' FLUORESCENT LIGHT FIXTURE
- 1' x 8' FLUORESCENT LIGHT FIXTURE
- RETURN AIR GRILLE – HORIZONTAL (SEE MECH. DRAWINGS)
- SUPPLY AIR GRILLE – HORIZONTAL (SEE MECH. DRAWINGS)
- RADIANT HEAT SYSTEM (SEE MECH. DRAWINGS)
- EXHAUST FAN (SEE MECH. DRAWINGS)
- EXIT SIGN
- EMERGENCY FLOOD LIGHTS
- EXTERIOR WALL MOUNTED LIGHTS

REFLECTED CEILING PLAN LEGEND

ROOM # —— 131
TYPE —— E
ELEVATION A.F.F. —— VARIES

TYPE A	EXPOSED STRUCTURE – PAINTED
TYPE B	5/8" GYPSUM BOARD ON METAL SUSPENSION SYSTEM – PAINTED
TYPE C	2' X 4' LAY – IN CEILING GRID SYSTEM WITH ACOUSTICAL PANELS

GENERAL NOTES

1. SEE MECHANICAL AND ELECTRICAL DRAWINGS FOR ADDITIONAL LIGHTING AND DIFFUSER INFORMATION.
2. CEILING HEIGHT SHOWN IN ROOM TAG INDICATES HEIGHT OF DOMINANT CEILING FINISH. SEE NOTES FOR ADDITIONAL CEILING FINISH INFORMATION.
3. SEE DETAIL C1 & C2/AE502 FOR SEISMIC BRACING DETAILS.
4. ROOF STRUCTURE NOT SHOWN FOR CLARITY.
5. COORDINATE LOCATION OF OVERHEAD DOOR TRACKS WITH LIGHTING FIXTURES TO INSURE PROPER OPERATION OF OVERHEAD DOORS.

KEYNOTES

08360.B0	3" HEAVY DUTY OVERHEAD SECTIONAL DOOR TRACK
13125.B2	STANDING SEAM METAL CANOPY
13125.F0	METAL WALL PANEL
13125.L4	STEEL COLUMN – PRIMED AND PAINTED
13125.L5	STEEL COLUMN – PRIMED
13125.R0	INSULATION & VAPOR BARRIER (R-VALUE)
15491.C0	OVERHEAD HOSE REELS
15600.A0	RADIANT HEATING SYSTEM
15887.A1	LOUVER WITH BIRD SCREEN
16510.A0	INTERIOR LIGHTS
16520.B1	EXTERIOR WALL MOUNTED LIGHTS

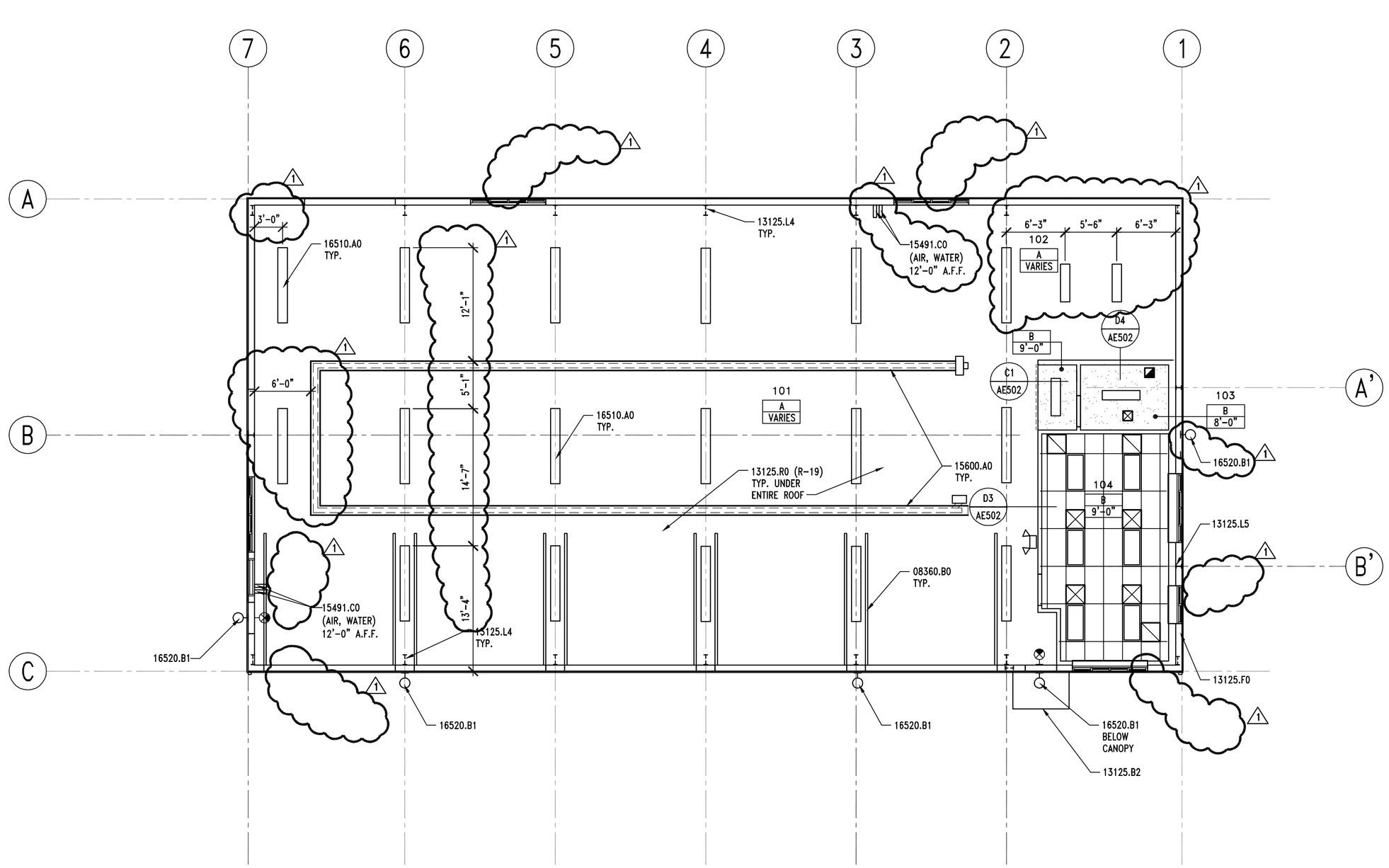

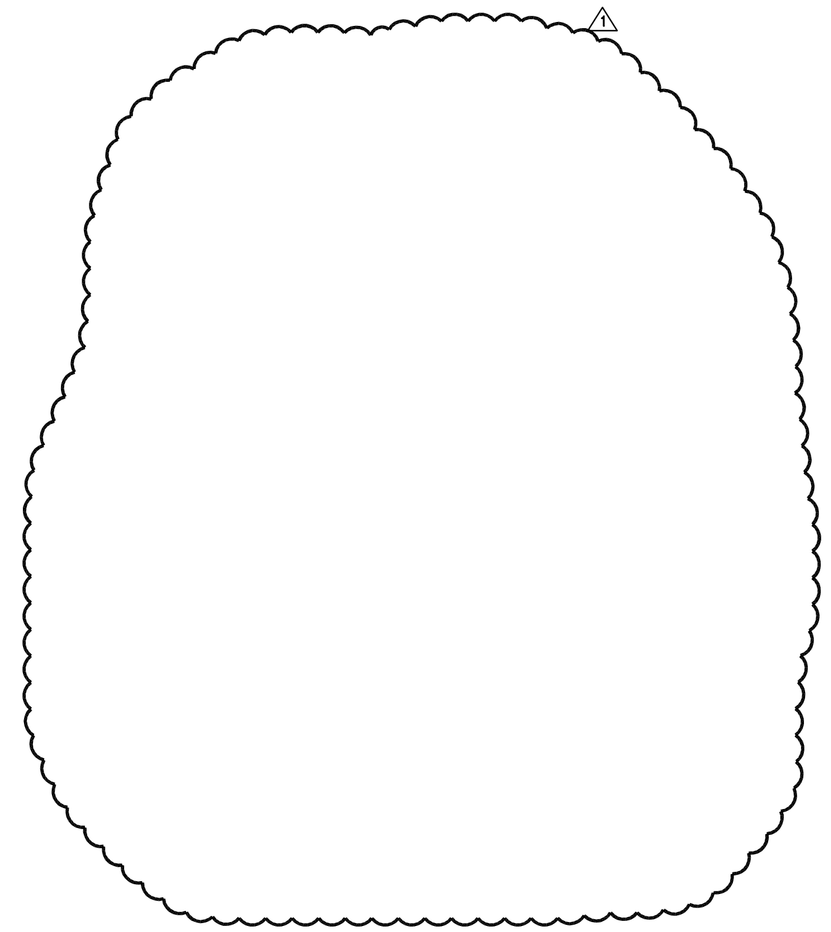

A2 | REFLECTED CEILING PLAN
AE121 | REF. | SCALE: 1/8" = 1'-0"

8' 6' 4' 2' 0' 4' 8' 16'

PLAN NORTH

CLIENT

UDOT CONNECTING COMMUNITIES

STATION #3437A
SR-44 @ M.P. 0.5 ±
GREENDALE UTAH

DESIGNER

ARCHIPLEX GROUP
architecture · planning · design services
1135 South West Temple, Ste. A
Salt Lake City, UT 84101
P:(801) 961-7070
F:(801) 961-7373

CONSULTANTS

PROFESSIONAL SEAL

STATE OF UTAH
RALPH M. STANISLAW
95-310818-0301
LICENSED ARCHITECT

ISSUE		
1	3-20-08	ADDENDUM #2
	02-2008	CONSTRUCTION DOCUMENTS
MARK	DATE	DESCRIPTION

DFCM CONTRACT NO:	077325
DFCM PROJECT NO:	07029900
ARCHIPLEX PROJECT NO:	0708.01
DRAWN BY:	A. PHILLIPS
CHECKED BY:	R. STANISLAW
SCALE:	1/8" = 1'-0"
DATE:	FEBRUARY, 2008

SHEET TITLE

REFLECTED CEILING PLAN

AE121

KEYNOTES

07729.A0 STANDING SEAM METAL ROOF 2 PIPE SNOWGAURD SYSTEM

13125.B0 STANDING SEAM METAL ROOF (SLOPE 1:12)
13125.B2 STANDING SEAM METAL CANOPY
13125.C0 METAL RAIN GUTTER WITH DOWNSPOUTS
13125.D9 FLEXIBLE ROOF RIDGE
13125.E3 RAKE TRIM

16129.A0 CONTINUOUS HEAT TAPE IN DOWN SPOUTS AND GUTTERS

GENERAL NOTES

1. FIELD VERIFY ALL EXISTING CONDITIONS AND THEIR COMPATIBILITY WITH NEW CONSTRUCTION PRIOR TO THE COMMENCEMENT OF WORK. COORDINATE DISCREPANCIES WITH ARCHITECT.

2. DO NOT SCALE DRAWINGS.

3. SEE, STRUCTURAL, MECHANICAL AND ELECTRICAL DRAWINGS FOR MORE INFORMATION.

4. SEE SHEET AE201 FOR EXTERIOR FINISH COLORS.

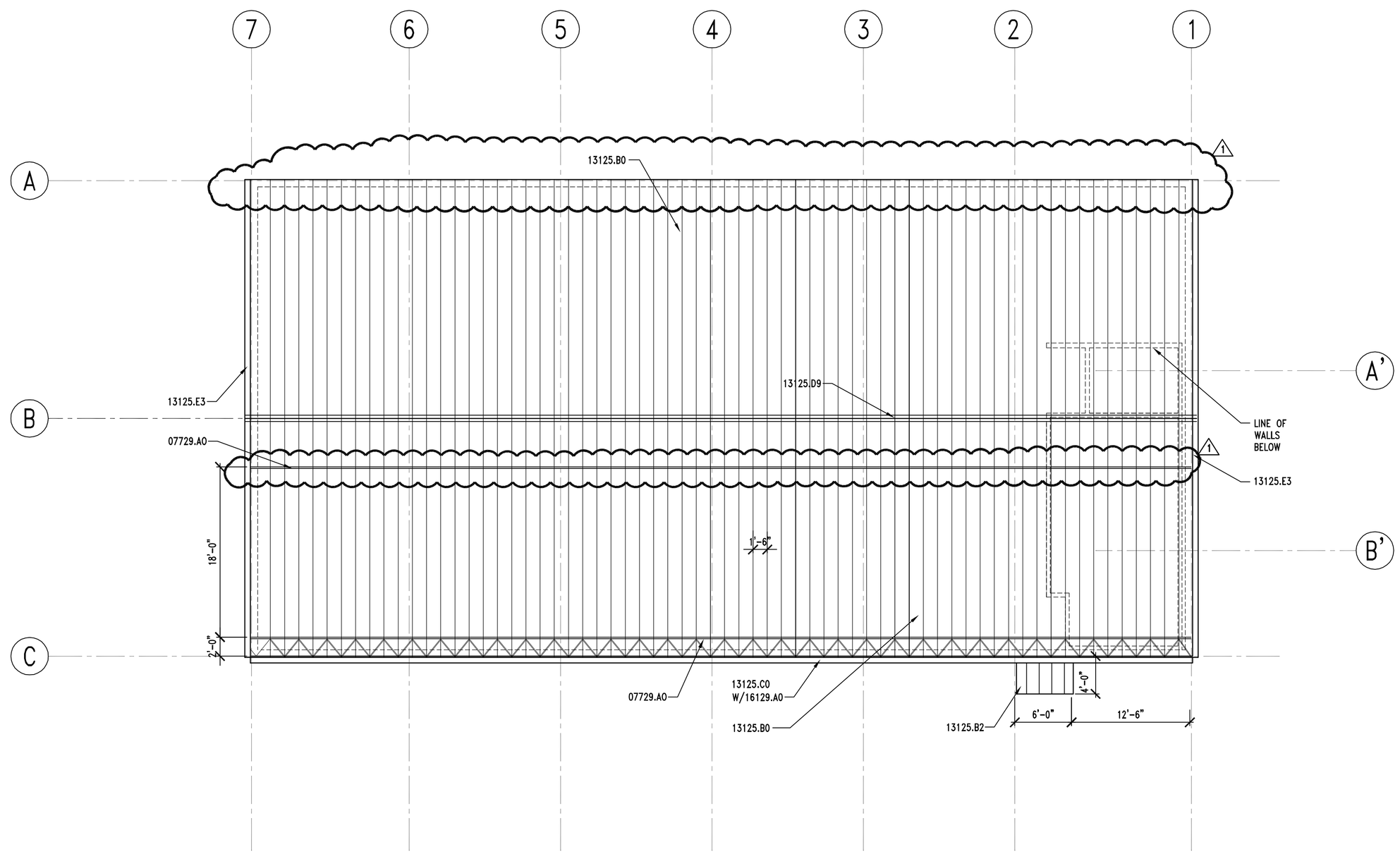

A2 | ROOF PLAN
AS102 | REF.
SCALE: 1/8" = 1'-0"

8' 6' 4' 2' 0' 4' 8' 16'

PLAN NORTH

CLIENT

UDOT CONNECTING COMMUNITIES

STATION #3437A
SR-44 @ M.P. 0.5 ±
GREENDALE UTAH

DESIGNER

ARCHIPLEX GROUP
architecture · planning · design services
1135 South West Temple, Ste. A
Salt Lake City, UT 84101
P:(801) 961-7070
F:(801) 961-7373

CONSULTANTS

PROFESSIONAL SEAL

STATE OF UTAH
RALPH M. STANISLAW
95-310818-0301
LICENSED ARCHITECT

ISSUE

MARK	DATE	DESCRIPTION
1	3-20-08	ADDENDUM #2
	02-2008	CONSTRUCTION DOCUMENTS

DFCM CONTRACT NO:	077325
DFCM PROJECT NO:	07029900
ARCHIPLEX PROJECT NO:	0708.01
DRAWN BY:	A.PHILLIPS
CHECKED BY:	R. STANISLAW
SCALE:	1/8"=1'-0"
DATE:	FEBRUARY, 2008

SHEET TITLE

ROOF PLAN

AE141

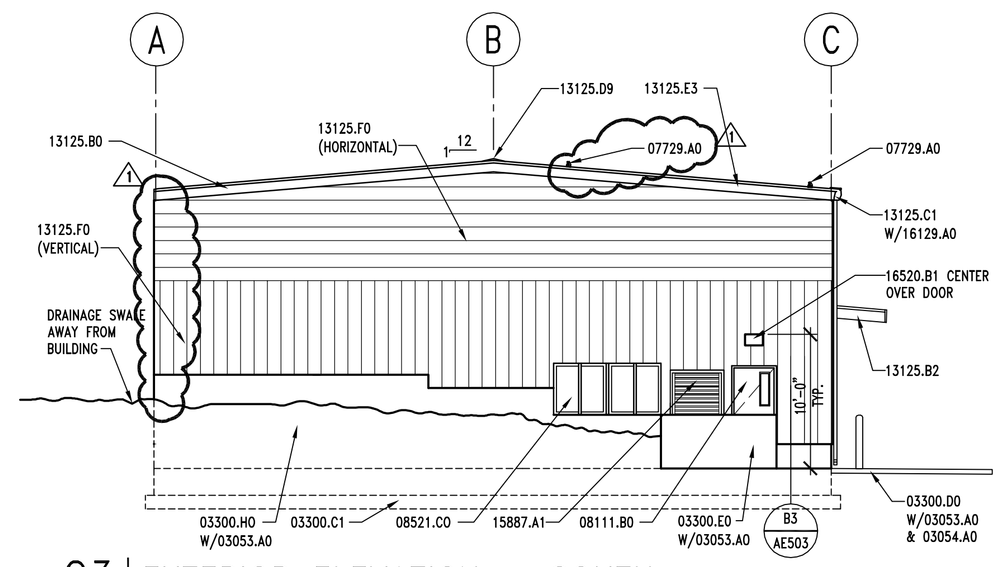

C3 | EXTERIOR ELEVATION – SOUTH

8' 6' 4' 2' 0' 4' 8' 16'

AE201 | REF. AE101 SCALE: 1/8" = 1'-0"

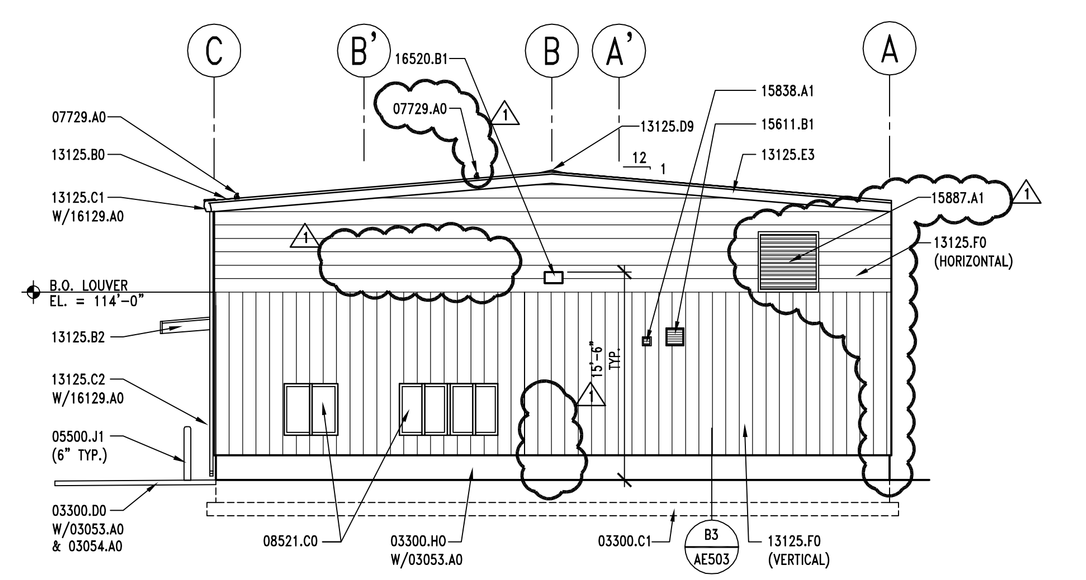

A3 | EXTERIOR ELEVATION – NORTH

8' 6' 4' 2' 0' 4' 8' 16'

AE201 | REF. AE101 SCALE: 1/8" = 1'-0"

EXTERIOR ELEVATION KEYNOTES

03053.A0 CONCRETE WATER PROOFING ADMIXTURE
03054.A0 OLIOPHOBIC TOPICAL SEALER
03300.C1 FOOTING – SEE STRUCTURAL
03300.D0 CONCRETE PAD
03300.E0 RETAINING WALL
03300.H0 FOUNDATION WALL – SEE STRUCTURAL

05500.J1 PIPE BOLLARD (DIAMETER) GALV. AND PAINTED

07729.A0 STANDING SEAM METAL ROOF 2 PIPE SNOWGUARD SYSTEM

08111.A0 PRESSED METAL FRAME
08111.B0 HOLLOW METAL DOOR
08360.A0 HEAVY DUTY OVERHEAD SECTIONAL DOOR
08521.C0 VINYL WINDOW WITH SLIDING GLASS PANEL

10425.C1 ACCESSIBLE SIGNAGE – SEE DETAIL B3/AE502

13125.B0 STANDING SEAM METAL ROOF
13125.B2 STANDING SEAM METAL CANOPY
13125.C1 METAL RAIN GUTTER
13125.C2 DOWNSPOUT
13125.D9 FLEXIBLE ROOF RIDGE
13125.E2 PANEL TRIM
13125.E3 RAKE TRIM
13125.F0 METAL WALL PANEL

15611.B1 GAS FIRED FURNCAE EXHAUST VENT
15838.A1 EXHAUST FAN VENT
15887.A1 LOUVER WITH BIRD SCREEN

16129.A0 CONTINUOUS HEAT TAPE IN DOWN SPOUTS AND GUTTERS
16411.A1 EMERGENCY DISCONNECT – SEE ELECTRICAL
16520.B1 EXTERIOR WALL MOUNTED LIGHTS

GENERAL NOTES

1. FIELD VERIFY ALL EXISTING CONDITIONS AND THEIR COMPATIBILITY WITH NEW CONSTRUCTION PRIOR TO THE COMMENCEMENT OF WORK. COORDINATE DISCREPANCIES WITH ARCHITECT.

2. DO NOT SCALE DRAWINGS.

3. SEE SHEET AE602 FOR WINDOW TYPES AND DETAILS.

4. SEE CIVIL, STRUCTURAL, MECHANICAL AND ELECTRICAL DRAWINGS FOR MORE INFORMATION.

5. EXTERIOR ELEVATION KEYNOTES ARE FOR ALL EXTERIOR ELEVATIONS, THEREFOR NOT ALL KEYNOTES MAY BE USED ON EACH SHEET.

6. EXTERIOR LIGHTS MUST BE SUPPORTED BY SUITABLE STRUCTURAL BRACING TO BE PROVIDED BY THE METAL BUILDING MANUFACTURER.

EXTERIOR COLOR SCHEDULE

(05500.J1) BOLLARDS: OSHA SAFETY YELLOW
(08111.A0, B0 & 08360.A0) DOORS & FRAMES: KYNAR 500 "BONE WHITE" OR EQUAL
(08521.B0 & C0) WINDOW FRAMES: KYNAR 500 "BONE WHITE" OR EQUAL
(13125.B0) METAL ROOF, FASCIA: KYNAR 500 "EMERALD GREEN" OR EQUAL
(13125.C1 & E3) GUTTERS & RAKE TRIM: KYNAR 500 "EMERALD GREEN" OR EQUAL
(13125.C2) DOWN SPOUTS: PRE FINISHED TO MATCH CORNER TRIM
(13125.F0) METAL WALL PANEL: SILICONIZED POLYESTER FINISH – COLOR "B" BY ARCHITECT
(13125.G0) METAL FASCIA: SILICONIZED POLYESTER FINISH – COLOR "A" BY ARCHITECT
(15838.A1) EXHAUST VENTS: PRE-FINISHED KYNAR 500 "BONE WHITE" OR EQUAL
(15887.A1) LOUVERS: PRE-FINISHED KYNAR 500 "BONE WHITE" OR EQUAL
(16520.B1 & B2) EXTERIOR LIGHT FIXTURES: KYNAR 500 "BONE WHITE" OR EQUAL

CLIENT

UDOT CONNECTING COMMUNITIES

STATION #3437A
SR-44 @ M.P. 0.5 ±
GREENDALE UTAH

DESIGNER

ARCHIPLEX GROUP
architecture · planning · design services
1135 South West Temple, Ste. A
Salt Lake City, UT 84101
P:(801) 961-7070
F:(801) 961-7373

CONSULTANTS

PROFESSIONAL SEAL

STATE OF UTAH
RALPH M. STANISLAW
95-310818-0301
LICENSED ARCHITECT

ISSUE

MARK	DATE	DESCRIPTION
1	3-20-08	ADDENDUM #2
	02-2008	CONSTRUCTION DOCUMENTS

DFCM CONTRACT NO:	077325
DFCM PROJECT NO:	07029900
ARCHIPLEX PROJECT NO:	0708.01
DRAWN BY:	A. PHILLIPS
CHECKED BY:	R. STANISLAW
SCALE:	1/8" = 1'-0"
DATE:	FEBRUARY, 2008

SHEET TITLE

EXTERIOR ELEVATIONS

AE201

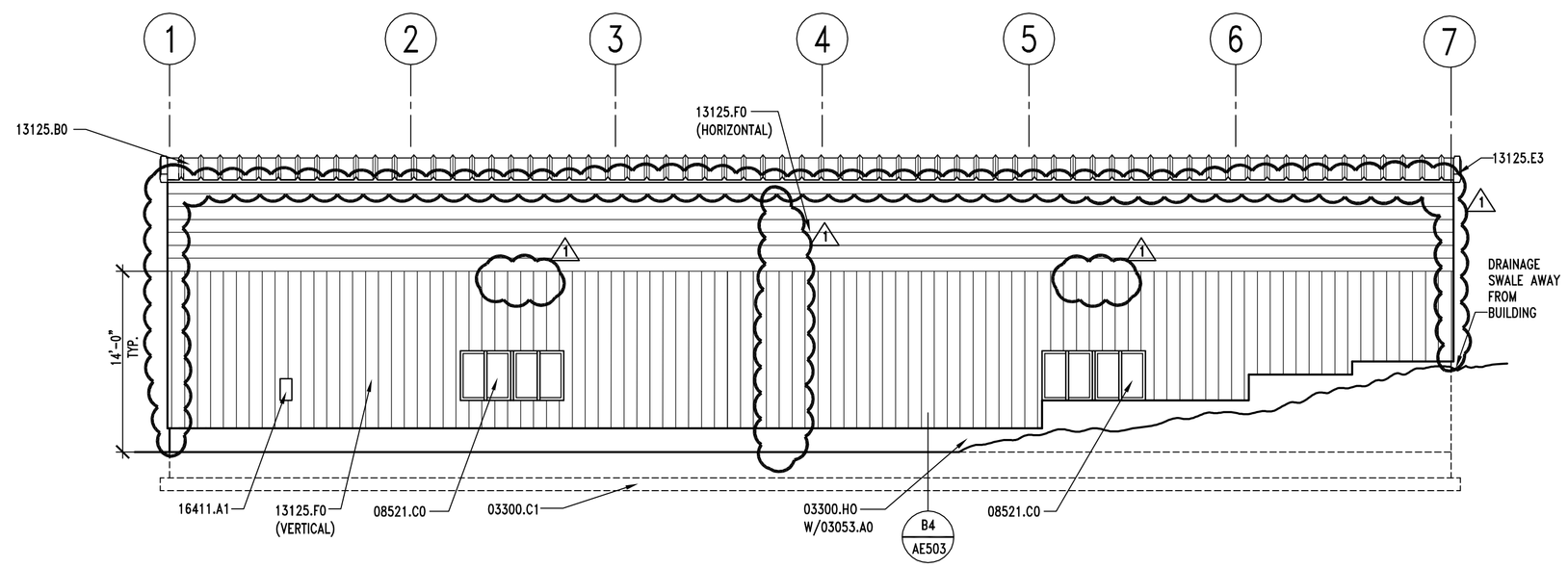

C2 | EXTERIOR ELEVATION – WEST

AE202 | REF. AE101 | SCALE: 1/8" = 1'-0"

8' 6' 4' 2' 0' 4' 8' 16'

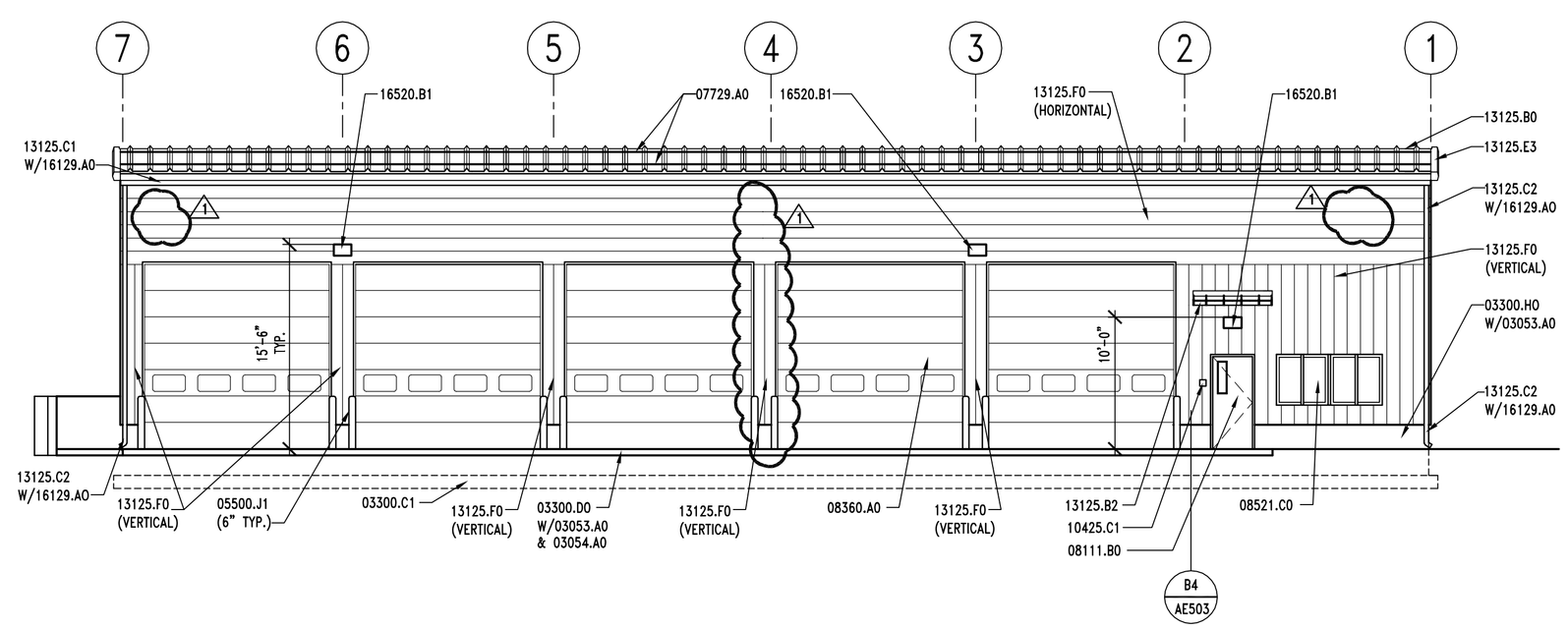

A2 | EXTERIOR ELEVATION – EAST

AE202 | REF. AE101 | SCALE: 1/8" = 1'-0"

8' 6' 4' 2' 0' 4' 8' 16'

EXTERIOR ELEVATION KEYNOTES

03053.A0	CONCRETE WATER PROOFING ADMIXTURE
03054.A0	OLIOPHOBIC TOPICAL SEALER
03300.C1	FOOTING – SEE STRUCTURAL
03300.D0	CONCRETE PAD
03300.E0	RETAINING WALL
03300.H0	FOUNDATION WALL – SEE STRUCTURAL
05500.J1	PIPE BOLLARD (DIAMETER) GALV. AND PAINTED
07729.A0	STANDING SEAM METAL ROOF 2 PIPE SNOWGUARD SYSTEM
08111.A0	PRESSED METAL FRAME
08111.B0	HOLLOW METAL DOOR
08360.A0	HEAVY DUTY OVERHEAD SECTIONAL DOOR
08521.C0	VINYL WINDOW WITH SLIDING GLASS PANEL
10425.C1	ACCESSIBLE SIGNAGE – SEE DETAIL B3/AE502
13125.B0	STANDING SEAM METAL ROOF
13125.B2	STANDING SEAM METAL CANOPY
13125.C1	METAL RAIN GUTTER
13125.C2	DOWNSPOUT
13125.D9	FLEXIBLE ROOF RIDGE
13125.E2	PANEL TRIM
13125.E3	RAKE TRIM
13125.F0	METAL WALL PANEL
15611.B1	GAS FIRED FURNCAE EXHAUST VENT
15838.A1	EXHAUST FAN VENT
15887.A1	LOUVER WITH BIRD SCREEN
16129.A0	CONTINUOUS HEAT TAPE IN DOWN SPOUTS AND GUTTERS
16411.A1	EMERGENCY DISCONNECT – SEE ELECTRICAL
16520.B1	EXTERIOR WALL MOUNTED LIGHTS

GENERAL NOTES

1. FIELD VERIFY ALL EXISTING CONDITIONS AND THEIR COMPATIBILITY WITH NEW CONSTRUCTION PRIOR TO THE COMMENCEMENT OF WORK. COORDINATE DISCREPANCIES WITH ARCHITECT.

2. DO NOT SCALE DRAWINGS.

3. SEE SHEET AE602 FOR WINDOW TYPES AND DETAILS.

4. SEE CIVIL, STRUCTURAL, MECHANICAL AND ELECTRICAL DRAWINGS FOR MORE INFORMATION.

5. EXTERIOR ELEVATION KEYNOTES ARE FOR ALL EXTERIOR ELEVATIONS, THEREFOR NOT ALL KEYNOTES MAY BE USED ON EACH SHEET.

6. EXTERIOR LIGHTS MUST BE SUPPORTED BY SUITABLE STRUCTURAL BRACING TO BE PROVIDED BY THE METAL BUILDING MANUFACTURER.

EXTERIOR COLOR SCHEDULE

(05500.J1) BOLLARDS: OSHA SAFETY YELLOW
(08111.A0, B0 & 08360.A0) DOORS & FRAMES: KYNAR 500 "BONE WHITE" OR EQUAL
(08521.B0 & C0) WINDOW FRAMES: KYNAR 500 "BONE WHITE" OR EQUAL
(13125.B0) METAL ROOF, FASCIA: KYNAR 500 "EMERALD GREEN" OR EQUAL
(13125.C1 & E3) GUTTERS & RAKE TRIM: KYNAR 500 "EMERALD GREEN" OR EQUAL
(13125.C2) DOWN SPOUTS: PRE FINISHED TO MATCH CORNER TRIM
(13125.F0) METAL WALL PANEL: SILICONIZED POLYESTER FINISH – COLOR "B" BY ARCHITECT
(13125.G0) METAL FASCIA: SILICONIZED POLYESTER FINISH – COLOR "A" BY ARCHITECT
(15838.A1) EXHAUST VENTS: PRE-FINISHED KYNAR 500 "BONE WHITE" OR EQUAL
(15887.A1) LOUVERS: PRE-FINISHED KYNAR 500 "BONE WHITE" OR EQUAL
(16520.B1 & B2) EXTERIOR LIGHT FIXTURES: KYNAR 500 "BONE WHITE" OR EQUAL

CLIENT

UDOT CONNECTING COMMUNITIES

STATION #3437A
SR-44 @ M.P. 0.5 ±
GREENDALE UTAH

DESIGNER

ARCHIPLEX GROUP
architecture · planning · design services
1135 South West Temple, Ste. A
Salt Lake City, UT 84101
P:(801) 961-7070
F:(801) 961-7373

CONSULTANTS

PROFESSIONAL SEAL

STATE OF UTAH
RALPH M. STANISLAW
95-310818-0301
LICENSED ARCHITECT

ISSUE

MARK	DATE	DESCRIPTION
1	3-20-08	ADDENDUM #2
	02-2008	CONSTRUCTION DOCUMENTS

DFCM CONTRACT NO:	077325
DFCM PROJECT NO:	07029900
ARCHIPLEX PROJECT NO:	0708.01
DRAWN BY:	A. PHILLIPS
CHECKED BY:	R. STANISLAW
SCALE:	1/8"=1'-0"
DATE:	FEBRUARY, 2008

SHEET TITLE

EXTERIOR ELEVATIONS

AE202

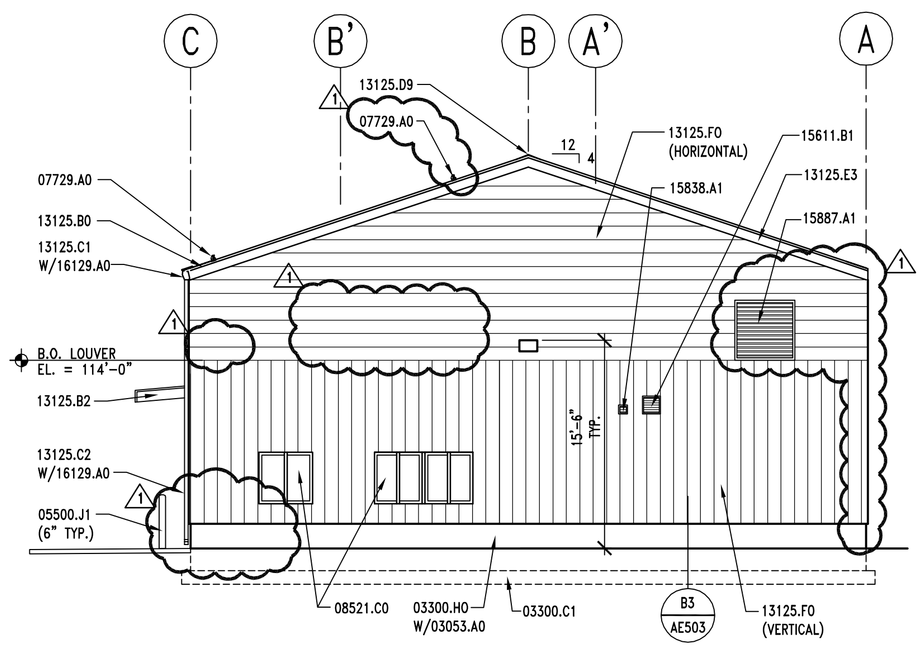

A3 | EXTERIOR ELEVATION – NORTH

AE203 | REF. AE101 | SCALE: 1/8" = 1'-0"

8' 6' 4' 2' 0' 4' 8' 16'

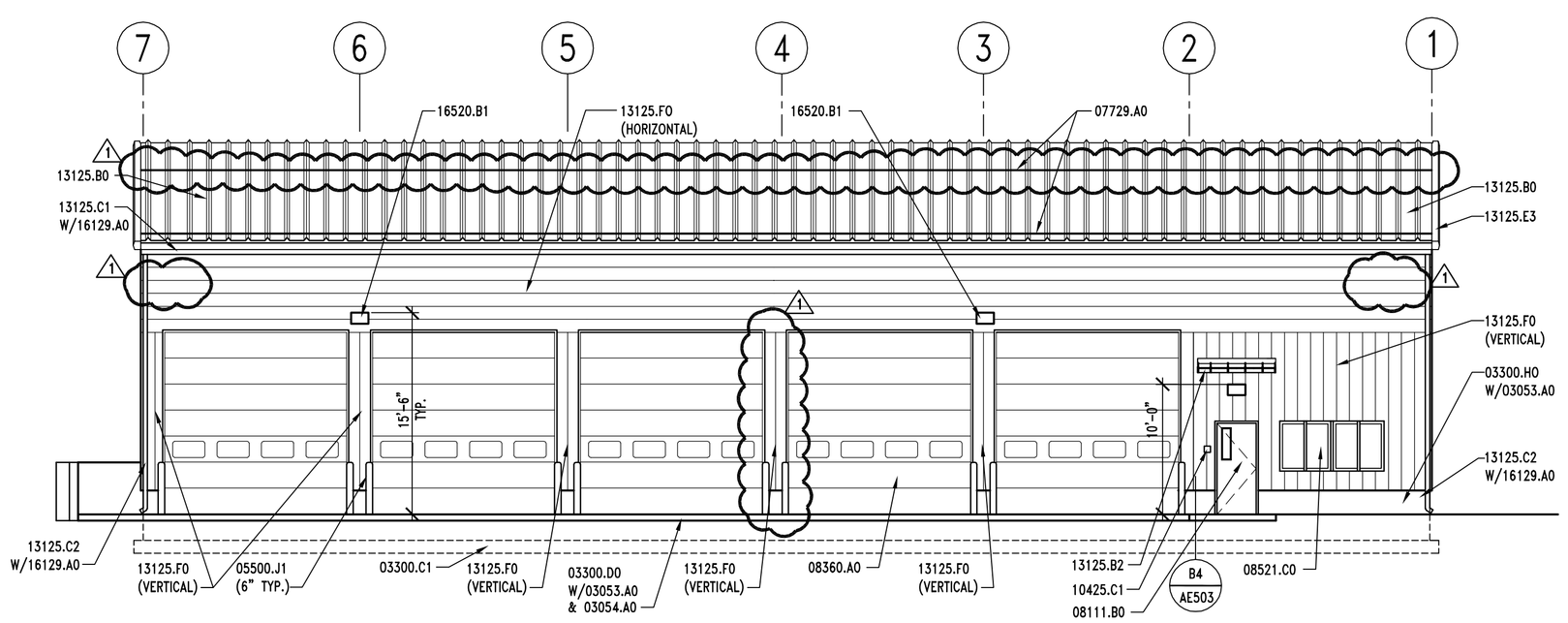

A2 | EXTERIOR ELEVATION – EAST

AE203 | REF. AE101 | SCALE: 1/8" = 1'-0"

8' 6' 4' 2' 0' 4' 8' 16'

EXTERIOR ELEVATION KEYNOTES

03053.A0	CONCRETE WATER PROOFING ADMIXTURE
03054.A0	OLIOPHOBIC TOPICAL SEALER
03300.C1	FOOTING – SEE STRUCTURAL
03300.D0	CONCRETE PAD
03300.E0	RETAINING WALL
03300.H0	FOUNDATION WALL – SEE STRUCTURAL
05500.J1	PIPE BOLLARD (DIAMETER) GALV. AND PAINTED
07729.A0	STANDING SEAM METAL ROOF 2 PIPE SNOWGUARD SYSTEM
08111.A0	PRESSED METAL FRAME
08111.B0	HOLLOW METAL DOOR
08360.A0	HEAVY DUTY OVERHEAD SECTIONAL DOOR
08521.C0	VINYL WINDOW WITH SLIDING GLASS PANEL
10425.C1	ACCESSIBLE SIGNAGE – SEE DETAIL B3/AE502
13125.B0	STANDING SEAM METAL ROOF
13125.B2	STANDING SEAM METAL CANOPY
13125.C1	METAL RAIN GUTTER
13125.C2	DOWNSPOUT
13125.D9	FLEXIBLE ROOF RIDGE
13125.E2	PANEL TRIM
13125.E3	RAKE TRIM
13125.F0	METAL WALL PANEL
15611.B1	GAS FIRED FURNCAE EXHAUST VENT
15838.A1	EXHAUST FAN VENT
15887.A1	LOUVER WITH BIRD SCREEN
16129.A0	CONTINUOUS HEAT TAPE IN DOWN SPOUTS AND GUTTERS
16411.A1	EMERGENCY DISCONNECT – SEE ELECTRICAL
16520.B1	EXTERIOR WALL MOUNTED LIGHTS

GENERAL NOTES

1. FIELD VERIFY ALL EXISTING CONDITIONS AND THEIR COMPATIBILITY WITH NEW CONSTRUCTION PRIOR TO THE COMMENCEMENT OF WORK. COORDINATE DISCREPANCIES WITH ARCHITECT.

2. DO NOT SCALE DRAWINGS.

3. SEE SHEET AE602 FOR WINDOW TYPES AND DETAILS.

4. SEE CIVIL, STRUCTURAL, MECHANICAL AND ELECTRICAL DRAWINGS FOR MORE INFORMATION.

5. EXTERIOR ELEVATION KEYNOTES ARE FOR ALL EXTERIOR ELEVATIONS, THEREFOR NOT ALL KEYNOTES MAY BE USED ON EACH SHEET.

6. EXTERIOR LIGHTS MUST BE SUPPORTED BY SUITABLE STRUCTURAL BRACING TO BE PROVIDED BY THE METAL BUILDING MANUFACTURER.

EXTERIOR COLOR SCHEDULE

(05500.J1) BOLLARDS: OSHA SAFETY YELLOW
(08111.A0, B0 & 08360.A0) DOORS & FRAMES: KYNAR 500 "BONE WHITE" OR EQUAL
(08521.B0 & C0) WINDOW FRAMES: KYNAR 500 "BONE WHITE" OR EQUAL
(13125.B0) METAL ROOF, FASCIA: KYNAR 500 "EMERALD GREEN" OR EQUAL
(13125.C1 & E3) GUTTERS & RAKE TRIM: KYNAR 500 "EMERALD GREEN" OR EQUAL
(13125.C2) DOWN SPOUTS: PRE FINISHED TO MATCH CORNER TRIM
(13125.F0) METAL WALL PANEL: SILICONIZED POLYESTER FINISH – COLOR "B" BY ARCHITECT
(13125.G0) METAL FASCIA: SILICONIZED POLYESTER FINISH – COLOR "A" BY ARCHITECT
(15838.A1) EXHAUST VENTS: PRE-FINISHED KYNAR 500 "BONE WHITE" OR EQUAL
(15887.A1) LOUVERS: PRE-FINISHED KYNAR 500 "BONE WHITE" OR EQUAL
(16520.B1 & B2) EXTERIOR LIGHT FIXTURES: KYNAR 500 "BONE WHITE" OR EQUAL

CLIENT

UDOT CONNECTING COMMUNITIES

STATION #3437A
SR-44 @ M.P. 0.5 ±
GREENDALE UTAH

DESIGNER

ARCHIPLEX GROUP
architecture · planning · design services
1135 South West Temple, Ste. A
Salt Lake City, UT 84101
P:(801) 961-7070
F:(801) 961-7373

CONSULTANTS

PROFESSIONAL SEAL

STATE OF UTAH
RALPH M. STANISLAW
95-310818-0301
LICENSED ARCHITECT

ISSUE

MARK	DATE	DESCRIPTION
1	3-20-08	ADDENDUM #2
	02-2008	CONSTRUCTION DOCUMENTS

DFCM CONTRACT NO:	077325
DFCM PROJECT NO:	07029900
ARCHIPLEX PROJECT NO:	0708.01
DRAWN BY:	A. PHILLIPS
CHECKED BY:	R. STANISLAW
SCALE:	1/8"=1'-0"
DATE:	FEBRUARY, 2008

SHEET TITLE

EXTERIOR ELEVATIONS ADD ALT #1

AE203

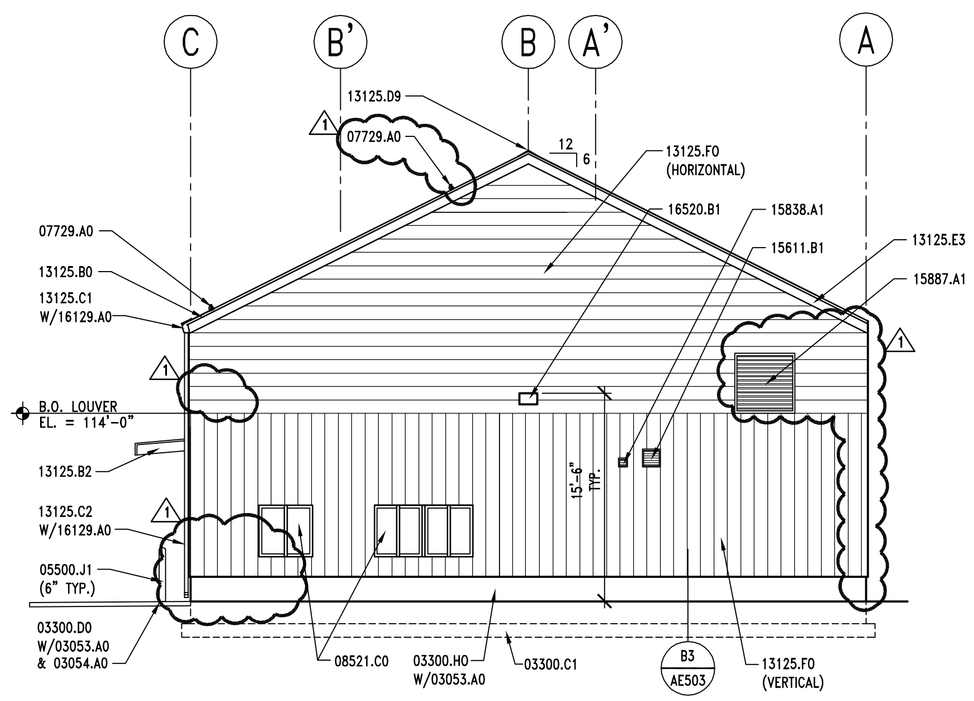

A3 | EXTERIOR ELEVATION – NORTH

AE204 | REF. AE101 SCALE: 1/8" = 1'-0"

8' 6' 4' 2' 0' 4' 8' 16'

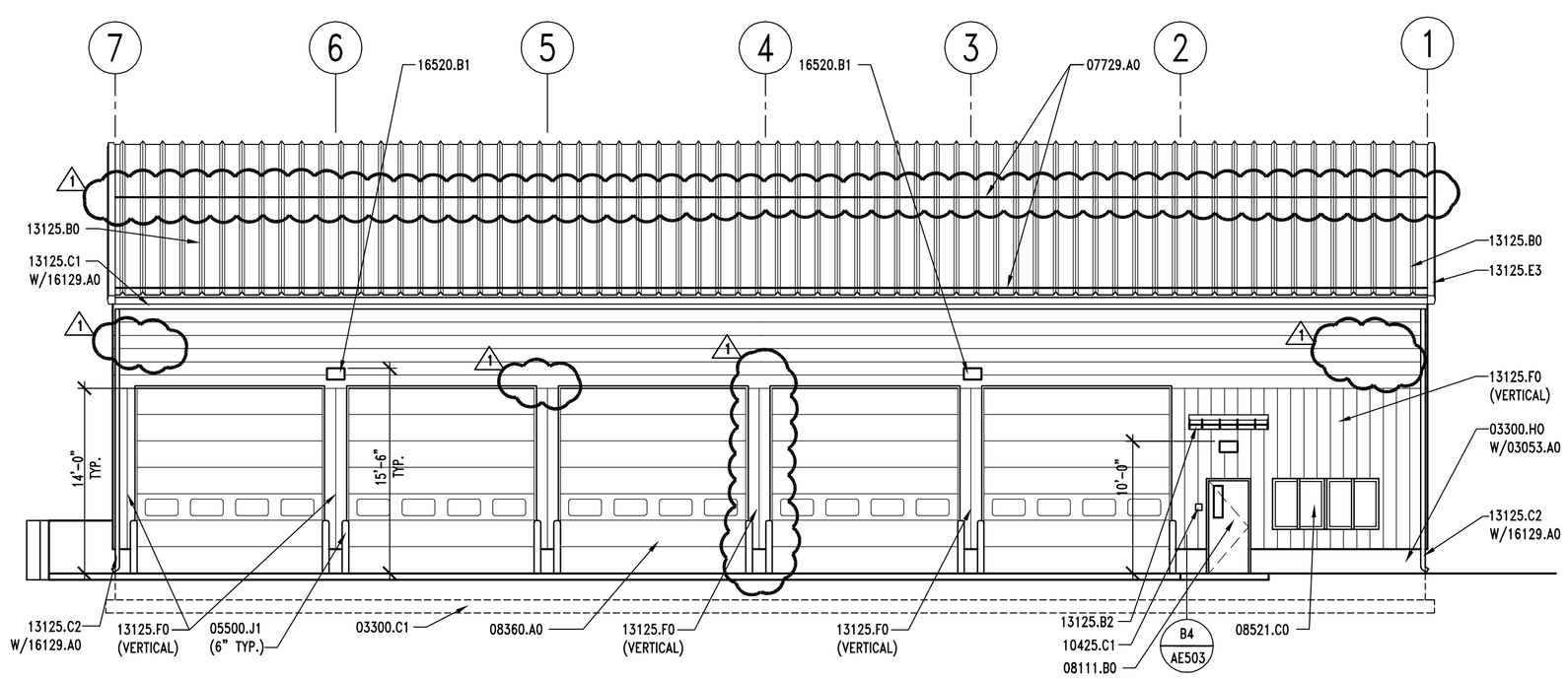

A2 | EXTERIOR ELEVATION – EAST

AE204 | REF. AE101 SCALE: 1/8" = 1'-0"

8' 6' 4' 2' 0' 4' 8' 16'

EXTERIOR ELEVATION KEYNOTES

03053.A0	CONCRETE WATER PROOFING ADMIXTURE
03054.A0	OLIOPHOBIC TOPICAL SEALER
03300.C1	FOOTING – SEE STRUCTURAL
03300.D0	CONCRETE PAD
03300.E0	RETAINING WALL
03300.H0	FOUNDATION WALL – SEE STRUCTURAL
05500.J1	PIPE BOLLARD (DIAMETER) GALV. AND PAINTED
07729.A0	STANDING SEAM METAL ROOF 2 PIPE SNOWGUARD SYSTEM
08111.A0	PRESSED METAL FRAME
08111.B0	HOLLOW METAL DOOR
08360.A0	HEAVY DUTY OVERHEAD SECTIONAL DOOR
08521.C0	VINYL WINDOW WITH SLIDING GLASS PANEL
10425.C1	ACCESSIBLE SIGNAGE – SEE DETAIL B3/AE502
13125.B0	STANDING SEAM METAL ROOF
13125.B2	STANDING SEAM METAL CANOPY
13125.C1	METAL RAIN GUTTER
13125.C2	DOWNSPOUT
13125.D9	FLEXIBLE ROOF RIDGE
13125.E2	PANEL TRIM
13125.E3	RAKE TRIM
13125.F0	METAL WALL PANEL
15611.B1	GAS FIRED FURNCAE EXHAUST VENT
15838.A1	EXHAUST FAN VENT
15887.A1	LOUVER WITH BIRD SCREEN
16129.A0	CONTINUOUS HEAT TAPE IN DOWN SPOUTS AND GUTTERS
16411.A1	EMERGENCY DISCONNECT – SEE ELECTRICAL
16520.B1	EXTERIOR WALL MOUNTED LIGHTS

GENERAL NOTES

1. FIELD VERIFY ALL EXISTING CONDITIONS AND THEIR COMPATIBILITY WITH NEW CONSTRUCTION PRIOR TO THE COMMENCEMENT OF WORK. COORDINATE DISCREPANCIES WITH ARCHITECT.

2. DO NOT SCALE DRAWINGS.

3. SEE SHEET AE602 FOR WINDOW TYPES AND DETAILS.

4. SEE CIVIL, STRUCTURAL, MECHANICAL AND ELECTRICAL DRAWINGS FOR MORE INFORMATION.

5. EXTERIOR ELEVATION KEYNOTES ARE FOR ALL EXTERIOR ELEVATIONS, THEREFOR NOT ALL KEYNOTES MAY BE USED ON EACH SHEET.

6. EXTERIOR LIGHTS MUST BE SUPPORTED BY SUITABLE STRUCTURAL BRACING TO BE PROVIDED BY THE METAL BUILDING MANUFACTURER.

EXTERIOR COLOR SCHEDULE

(05500.J1) BOLLARDS: OSHA SAFETY YELLOW
(08111.A0, B0 & 08360.A0) DOORS & FRAMES: KYNAR 500 "BONE WHITE" OR EQUAL
(08521.B0 & C0) WINDOW FRAMES: KYNAR 500 "BONE WHITE" OR EQUAL
(13125.B0) METAL ROOF, FASCIA: KYNAR 500 "EMERALD GREEN" OR EQUAL
(13125.C1 & E3) GUTTERS & RAKE TRIM: KYNAR 500 "EMERALD GREEN" OR EQUAL
(13125.C2) DOWN SPOUTS: PRE FINISHED TO MATCH CORNER TRIM
(13125.F0) METAL WALL PANEL: SILICONIZED POLYESTER FINISH – COLOR "B" BY ARCHITECT
(13125.G0) METAL FASCIA: SILICONIZED POLYESTER FINISH – COLOR "A" BY ARCHITECT
(15838.A1) EXHAUST VENTS: PRE-FINISHED KYNAR 500 "BONE WHITE" OR EQUAL
(15887.A1) LOUVERS: PRE-FINISHED KYNAR 500 "BONE WHITE" OR EQUAL
(16520.B1 & B2) EXTERIOR LIGHT FIXTURES: KYNAR 500 "BONE WHITE" OR EQUAL

CLIENT

UDOT CONNECTING COMMUNITIES

STATION #3437A
SR-44 @ M.P. 0.5 ±
GREENDALE UTAH

DESIGNER

ARCHIPLEX GROUP
architecture · planning · design services
1135 South West Temple, Ste. A
Salt Lake City, UT 84101
P:(801) 961-7070
F:(801) 961-7373

CONSULTANTS

PROFESSIONAL SEAL

STATE OF UTAH
RALPH M. STANISLAW
95-310818-0301
LICENSED ARCHITECT

ISSUE

MARK	DATE	DESCRIPTION
1	3-20-08	ADDENDUM #2
	02-2008	CONSTRUCTION DOCUMENTS

DFCM CONTRACT NO:	077325
DFCM PROJECT NO:	07029900
ARCHIPLEX PROJECT NO:	0708.01
DRAWN BY:	A. PHILLIPS
CHECKED BY:	R. STANISLAW
SCALE:	1/8"=1'-0"
DATE:	FEBRUARY, 2008

SHEET TITLE

EXTERIOR ELEVATIONS ADD ALT #2

AE204

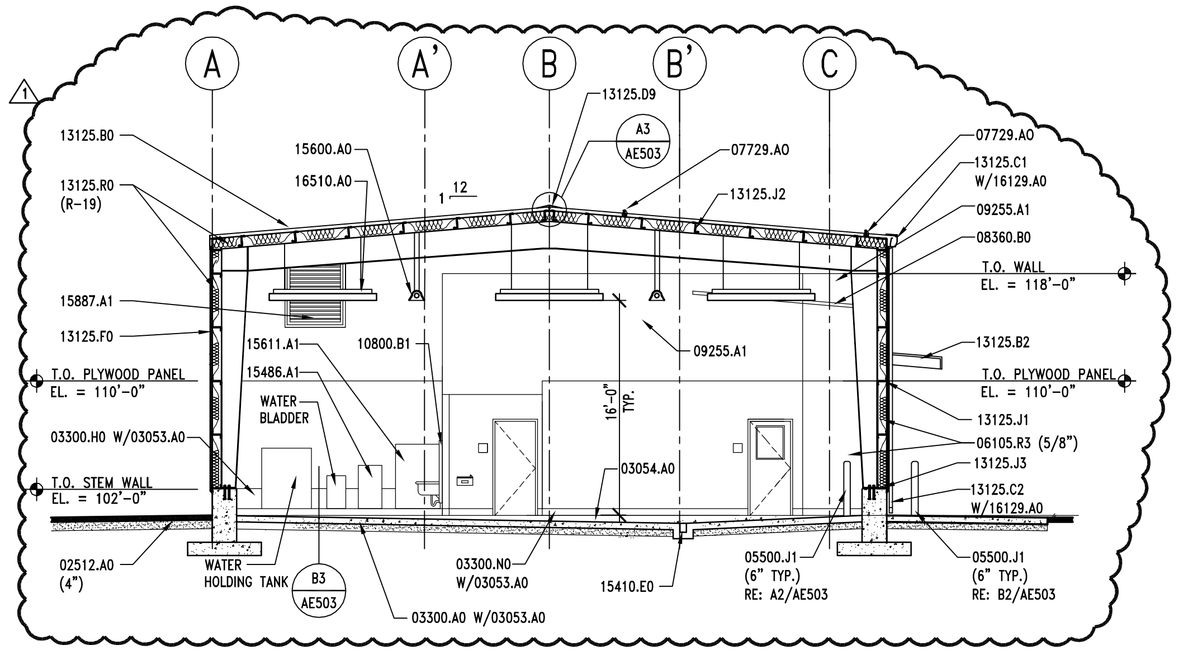

C3 | BUILDING SECTION

AE301 | REF. AE101 SCALE: 1/8" = 1'-0"

8' 6' 4' 2' 0' 4' 8' 16'

BUILDING SECTION KEYNOTES

02200.A0	COMPACTED FILL
02200.B0	GRAVEL BASE
02512.A0	ZERO VOIDS ASPHALT PAVING (THICKNESS)
03053.A0	CONCRETE WATER PROOFING ADMIXTURE
03054.A0	OLIOPHOBIC TOPICAL SEALER
03300.A0	CONCRETE – SLAB ON GRADE
03300.C1	FOOTING – SEE STRUCTURAL
03300.H0	FOUNDATION WALL – SEE STRUCTURAL
03300.N0	CONCRETE CURB
05500.J1	PIPE BOLLARD (DIAMETER) GALV. AND PAINTED
06105.R3	PLYWOOD PANEL (THICKNESS)
07729.A0	STANDING SEAM METAL ROOF 2 PIPE SNOWGAURD SYSTEM
08360.A0	HEAVY DUTY OVERHEAD SECTIONAL DOOR
08360.B0	3" HEAVY DUTY OVERHEAD SECTIONAL DOOR TRACK
08521.C0	VINYL WINDOW W/SLIDING GLASS PANEL
09255.A1	GYPSUM BOARD (THICKNESS)
09255.H1	METAL STUDS (SIZE, BRACING)
09511.A0	LAY-IN ACOUSTICAL CEILING SYSTEM
10800.B1	SEMI-RECESSED PAPER TOWEL DISPENSER & WASTE DISPOSAL
12511.A0	HORIZONTAL LOUVER BLINDS
13125.B0	STANDING SEAM METAL ROOF
13125.B2	STANDING SEAM METAL CANOPY
13125.C1	METAL RAIN GUTTER
13125.C2	DOWNSPOUT
13125.D9	FLEXIBLE ROOF RIDGE
13125.E3	RAKE TRIM
13125.F0	METAL WALL PANEL
13125.J1	STRUCTURAL GIRT – PAINTED
13125.J2	ROOF PURLIN – PAINTED
13125.J3	STRUCTURAL GIRT
13125.L4	STEEL COLUMN – PRIMED & PAINTED
13125.R0	INSULATION & VAPOR BARRIER (R-VALUE)
15410.E0	TRENCH DRAIN
15486.A1	FUEL FIRED WATER HEATER
15600.A0	RADIANT HEATING SYSTEM
15611.A1	GAS FIRED FURNACE
15861.A1	MECHANICAL DUCTWORK – SEE MECHANICAL
15887.A1	LOUVER WITH BIRD SCREEN
16129.A0	CONTINUOUS HEAT TAPE IN DOWN SPOUTS AND GUTTERS
16510.A0	INTERIOR LIGHTS

GENERAL NOTES

1. FIELD VERIFY ALL EXISTING CONDITIONS AND THEIR COMPATIBILITY WITH NEW CONSTRUCTION PRIOR TO THE COMMENCEMENT OF WORK. COORDINATE DISCREPANCIES WITH ARCHITECT.

2. DO NOT SCALE DRAWINGS.

3. SEE SHEET AE602 FOR WINDOW TYPES AND DETAILS.

4. SEE STRUCTURAL, MECHANICAL AND ELECTRICAL DRAWINGS FOR MORE INFORMATION.

5. PROVIDE 03053.A0 AT ALL CONCRETE CURBS, PIERS, SLABS, STEM WALL ETC. U.N.O.

6. PROVIDE 03054.A0 OVER ENTIRE FLOOR SLAB IN ROOMS 101, 102, CONCRETE MEZZANINE AND STAIRS.

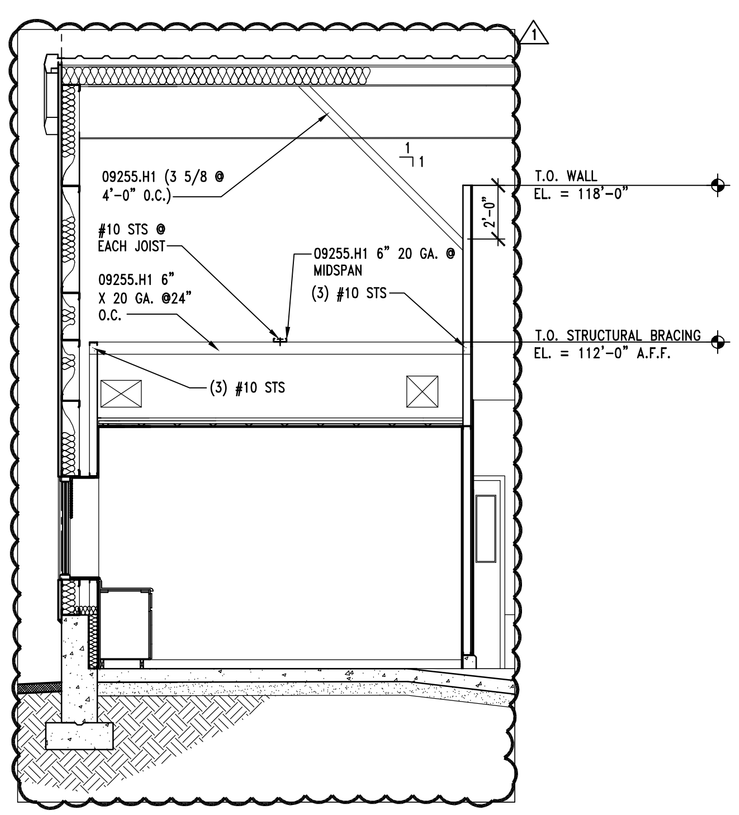

A1 | STRUCTURAL BRACING SECTION

AE301 | REF. AE101 SCALE: 1/4" = 1'-0"

4' 3' 2' 1' 0' 2' 4' 8'

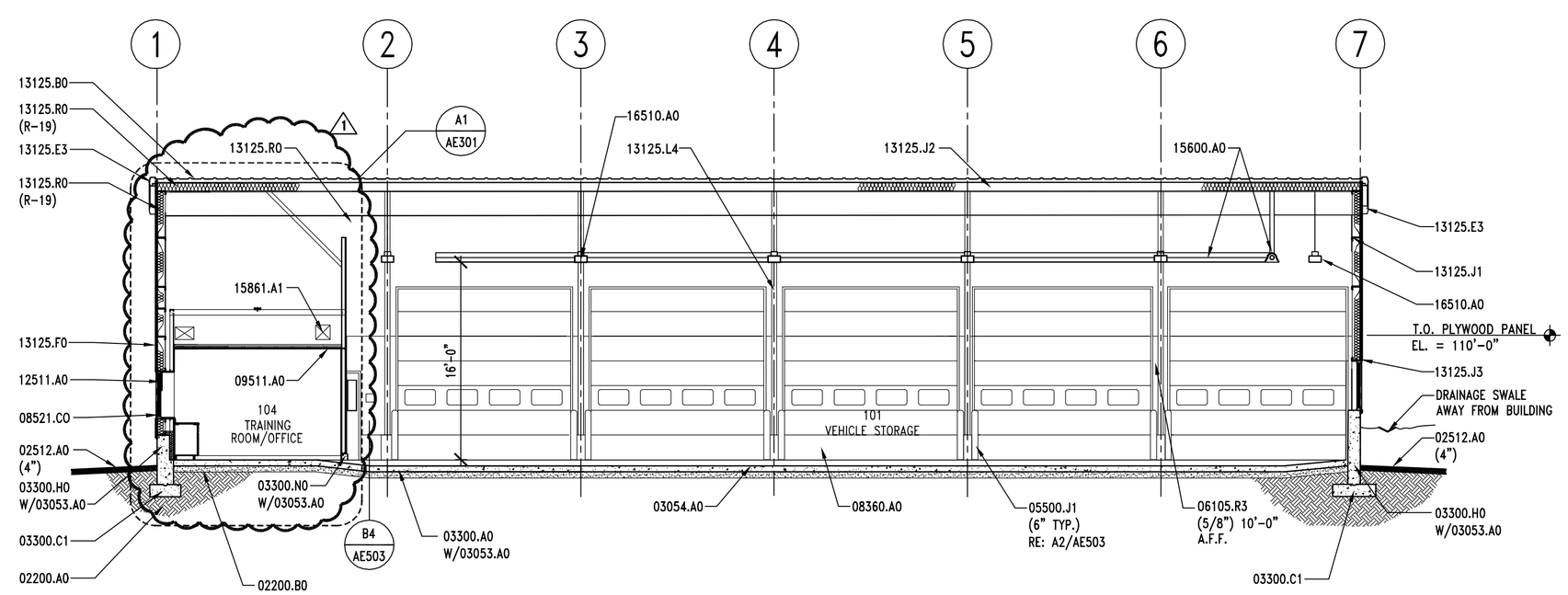

A2 | BUILDING SECTION

AE301 | REF. AE101 SCALE: 1/8" = 1'-0"

8' 6' 4' 2' 0' 4' 8' 16'

CLIENT

UDOT CONNECTING COMMUNITIES

STATION #3437A
SR-44 @ M.P. 0.5 ±
GREENDALE UTAH

DESIGNER

ARCHIPLEX GROUP
architecture · planning · design services
1135 South West Temple, Ste. A
Salt Lake City, UT 84101
P:(801) 961-7070
F:(801) 961-7373

CONSULTANTS

PROFESSIONAL SEAL

STATE OF UTAH
RALPH M. STANISLAW
95-310818-0301
LICENSED ARCHITECT

ISSUE

MARK	DATE	DESCRIPTION
1	3-20-08	ADDENDUM #2
	02-2008	CONSTRUCTION DOCUMENTS

DFCM CONTRACT NO:	077325
DFCM PROJECT NO:	07029900
ARCHIPLEX PROJECT NO:	0708.01
DRAWN BY:	A. PHILLIPS
CHECKED BY:	R. STANISLAW
SCALE:	1/8" = 1'-0"
DATE:	FEBRUARY, 2008

SHEET TITLE

BUILDING SECTIONS

AE301

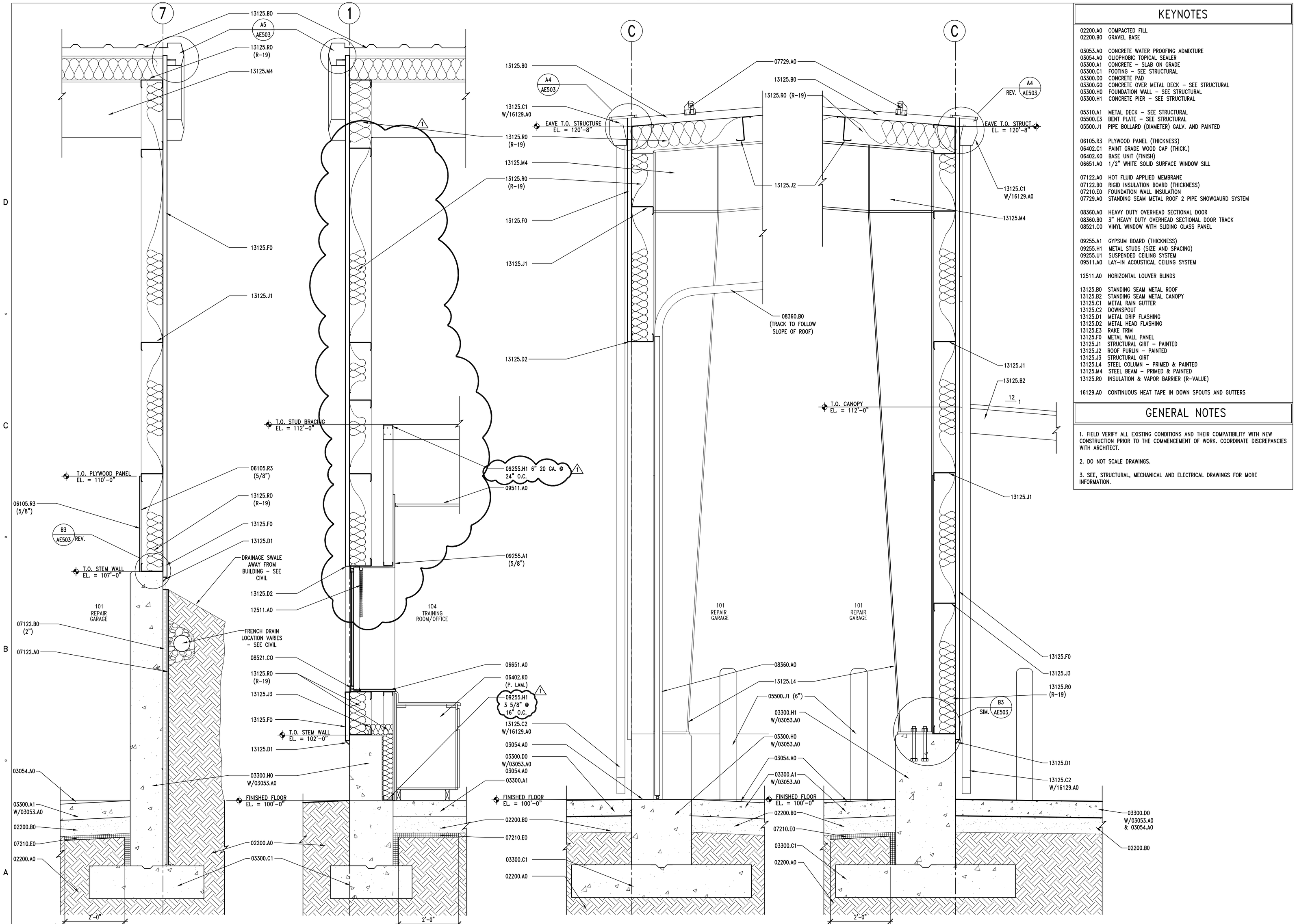

KEYNOTES

02200.A0 COMPACTED FILL
02200.B0 GRAVEL BASE

03053.A0 CONCRETE WATER PROOFING ADMIXTURE
03054.A0 OLIOPHOBIC TOPICAL SEALER
03300.A1 CONCRETE - SLAB ON GRADE
03300.C1 FOOTING - SEE STRUCTURAL
03300.D0 CONCRETE PAD
03300.G0 CONCRETE OVER METAL DECK - SEE STRUCTURAL
03300.H0 FOUNDATION WALL - SEE STRUCTURAL
03300.H1 CONCRETE PIER - SEE STRUCTURAL

05310.A1 METAL DECK - SEE STRUCTURAL
05500.E3 BENT PLATE - SEE STRUCTURAL
05500.J1 PIPE BOLLARD (DIAMETER) GALV. AND PAINTED

06105.R3 PLYWOOD PANEL (THICKNESS)
06402.C1 PAINT GRADE WOOD CAP (THICK.)
06402.K0 BASE UNIT (FINISH)
06651.A0 1/2" WHITE SOLID SURFACE WINDOW SILL

07122.A0 HOT FLUID APPLIED MEMBRANE
07122.B0 RIGID INSULATION BOARD (THICKNESS)
07210.E0 FOUNDATION WALL INSULATION
07729.A0 STANDING SEAM METAL ROOF 2 PIPE SNOWGAURD SYSTEM

08360.A0 HEAVY DUTY OVERHEAD SECTIONAL DOOR
08360.B0 3" HEAVY DUTY OVERHEAD SECTIONAL DOOR TRACK
08521.C0 VINYL WINDOW WITH SLIDING GLASS PANEL

09255.A1 GYPSUM BOARD (THICKNESS)
09255.H1 METAL STUDS (SIZE AND SPACING)
09255.U1 SUSPENDED CEILING SYSTEM
09511.A0 LAY-IN ACOUSTICAL CEILING SYSTEM

12511.A0 HORIZONTAL LOUVER BLINDS

13125.B0 STANDING SEAM METAL ROOF
13125.B2 STANDING SEAM METAL CANOPY
13125.C1 METAL RAIN GUTTER
13125.C2 DOWNSPOUT
13125.D1 METAL DRIP FLASHING
13125.D2 METAL HEAD FLASHING
13125.E3 RAKE TRIM
13125.F0 METAL WALL PANEL
13125.J1 STRUCTURAL GIRT - PAINTED
13125.J2 ROOF PURLIN - PAINTED
13125.J3 STRUCTURAL GIRT
13125.L4 STEEL COLUMN - PRIMED & PAINTED
13125.M4 STEEL BEAM - PRIMED & PAINTED
13125.R0 INSULATION & VAPOR BARRIER (R-VALUE)

16129.A0 CONTINUOUS HEAT TAPE IN DOWN SPOUTS AND GUTTERS

GENERAL NOTES

1. FIELD VERIFY ALL EXISTING CONDITIONS AND THEIR COMPATIBILITY WITH NEW CONSTRUCTION PRIOR TO THE COMMENCEMENT OF WORK. COORDINATE DISCREPANCIES WITH ARCHITECT.

2. DO NOT SCALE DRAWINGS.

3. SEE, STRUCTURAL, MECHANICAL AND ELECTRICAL DRAWINGS FOR MORE INFORMATION.

CLIENT

UDOT CONNECTING COMMUNITIES

STATION #3437A
SR-44 @ M.P. 0.5 ±
GREENDALE UTAH

DESIGNER

ARCHIPLEX GROUP
architecture · planning · design services
1135 South West Temple, Ste. A
Salt Lake City, UT 84101
P:(801) 961-7070
F:(801) 961-7373

CONSULTANTS

PROFESSIONAL SEAL

STATE OF UTAH
RALPH M. STANISLAW
95-310818-0301
LICENSED ARCHITECT

ISSUE

MARK	DATE	DESCRIPTION
1	3-20-08	ADDENDUM #2
	02-2008	CONSTRUCTION DOCUMENTS

DFCM CONTRACT NO:	077325
DFCM PROJECT NO:	07029900
ARCHIPLEX PROJECT NO:	0708.01
DRAWN BY:	A. PHILLIPS
CHECKED BY:	R. STANISLAW
SCALE:	3/4" = 1'-0"
DATE:	FEBRUARY, 2008

SHEET TITLE

WALL SECTIONS

AE311

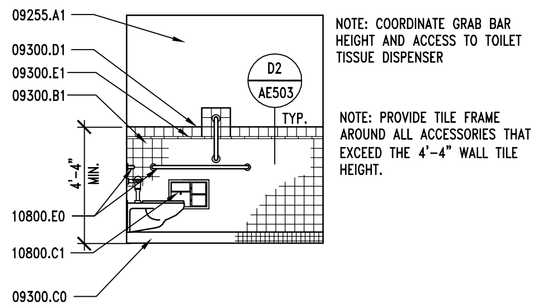

D1 | RESTROOM ELEVATION

AE401 | REF. AE401 | SCALE: 1/4" = 1'-0"

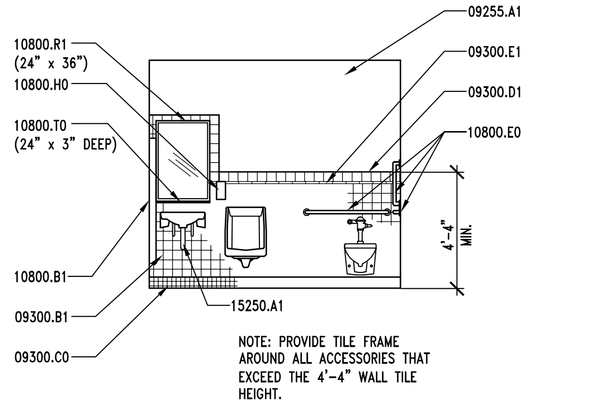

D2 | RESTROOM ELEVATION

AE401 | REF. AE401 | SCALE: 1/4" = 1'-0"

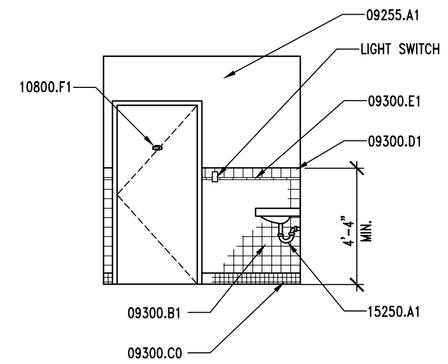

D3 | RESTROOM ELEVATION

AE401 | REF. AE401 | SCALE: 1/4" = 1'-0"

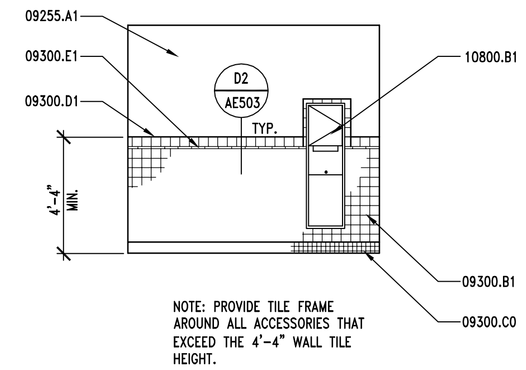

D4 | RESTROOM ELEVATION

AE401 | REF. AE401 | SCALE: 1/4" = 1'-0"

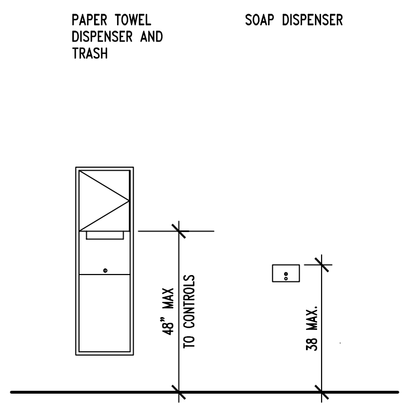

C1 | MOUNTING HEIGHTS

AE401 | REF. AE401 | SCALE: 3/8"= 1'-0"

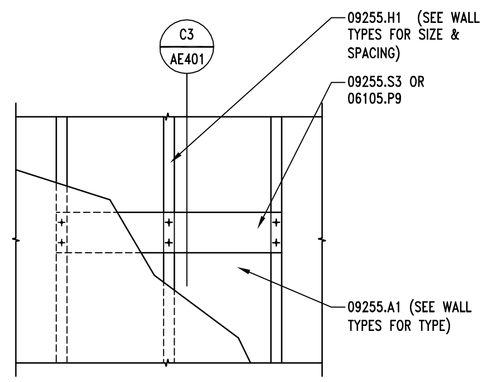

C2 | MOUNTING PLATE ELEV.

AE401 | REF. AE401 | SCALE: 3/4" = 1'-0"

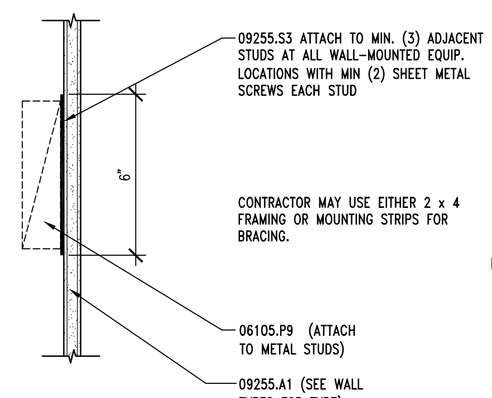

C3 | MOUNTING PLATE SECTION

AE401 | REF. AE401 | SCALE: 3" = 1'-0"

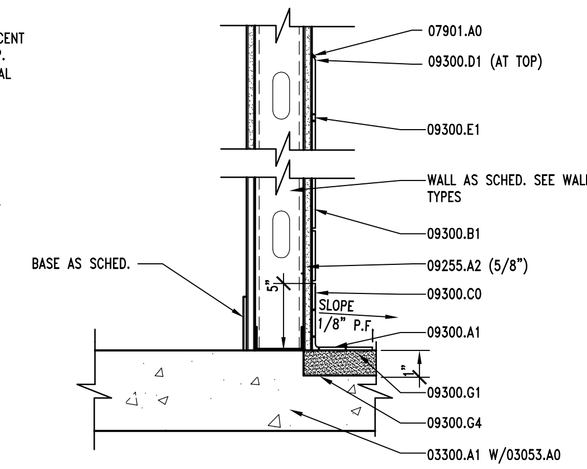

C4 | RECESSED SLAB DETAIL

AE401 | REF. AE401 | SCALE: 3" = 1'-0"

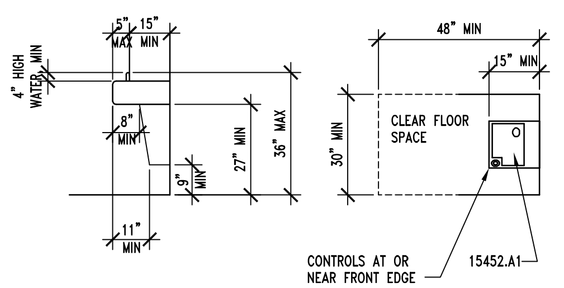

B1 | FRONT ACCESS DRINKING FOUNTAIN DETAIL

AE401 | REF. AE401 | SCALE: 3/8"= 1'-0"

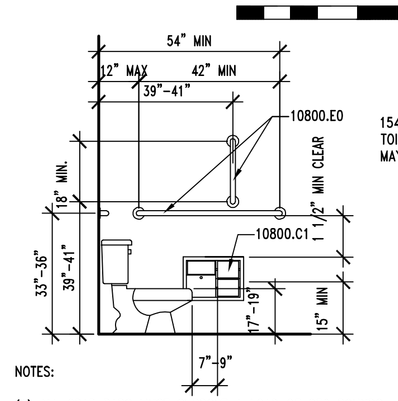

B2 | ACCESSIBLE TOILET DETAIL

AE401 | REF. AE401 | SCALE: 3/8"= 1'-0"

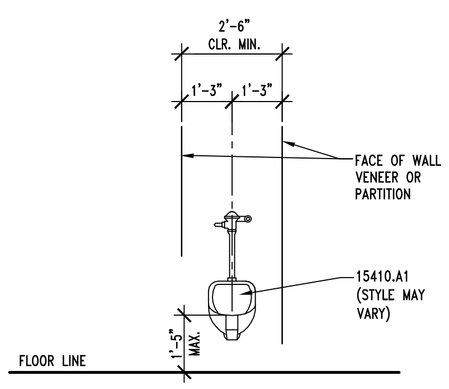

A1 | ACCESSIBLE URINAL DETAIL

AE401 | REF. AE401 | SCALE: 3/8" = 1'-0"

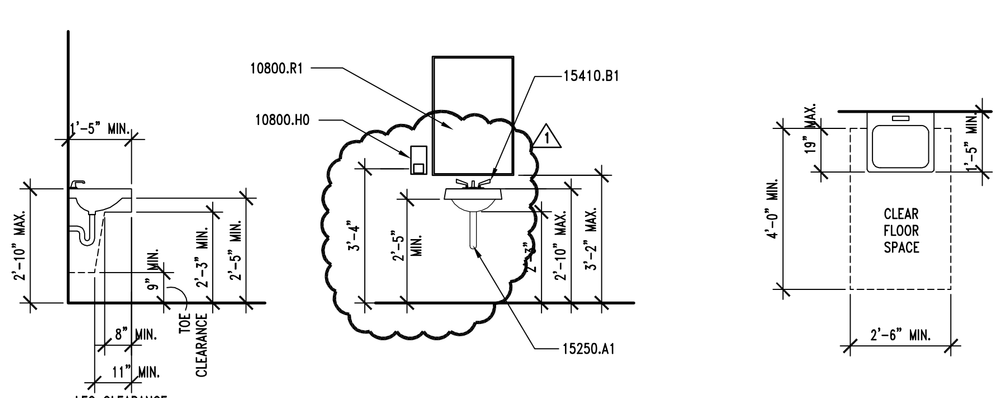

A2 | ACCESSIBLE SINK DETAIL

AE401 | REF. AE401 | SCALE: 3/8" = 1'-0"

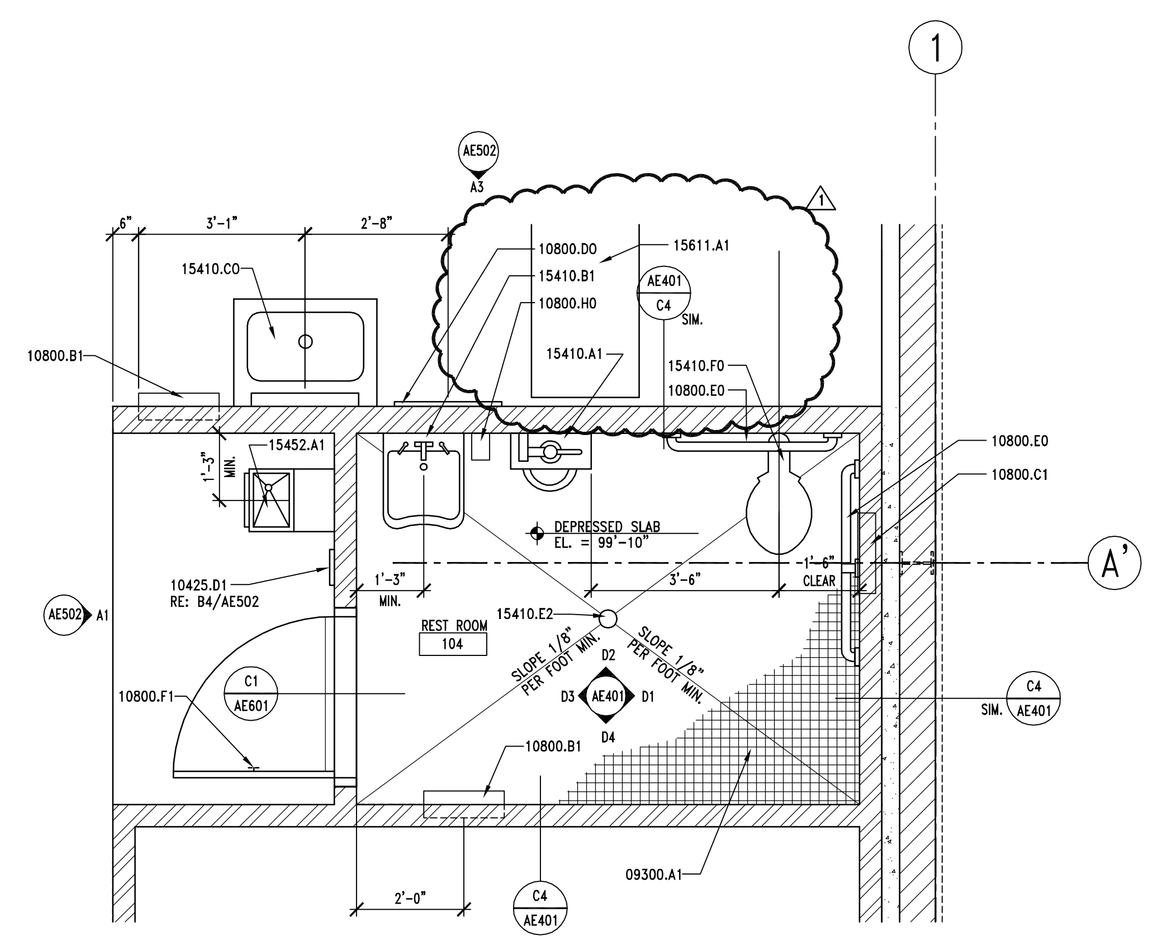

A4 | ENLARGED RESTROOM PLAN

AE401 | REF. AE101 | SCALE: 1/2" = 1'-0"

PLAN NORTH

KEYNOTES

03300.A1	CONCRETE SLAB-ON-GRADE- - SEE STRUCTURAL
03053.A0	CONCRETE WATER PROOFING ADMIXTURE
06105.P9	2 X FRAMING, FIRE TREATED
07901.A0	CONT. SEALANT
09255.A1	GYPSUM BOARD
09255.A2	WATER RESISTANT GYPSUM BOARD (THICKNESS)
09255.H1	METAL STUDS (SIZE, SPACING)
09255.S3	18 GA. METAL MOUNTING STRIPS
09300.A1	FLOOR TILE - SEE FINISH SCHED.
09300.B1	WALL TILE - SEE FINISH SCHED.
09300.C0	TILE BASE
09300.DI	BULLNOSE TILE
09300.E1	1/2" x 6" TILE TRIM PIECE - SEE FINISH SCHED.
09300.G1	MORTAR BED
09300.G4	WATERPROOF MEMBRANE
10425.D1	ACCESSIBLE/UNISEX RESTROOM SIGNAGE
10800.B1	SEMI-RECESSED PAPER TOWEL DISPENSER & WASTE RECEPTACLE
10800.C1	RECESSED TOILET TISSUE DISPENSER/SAN. NAP. DISPOSAL
10800.D0	MOP RACK
10800.E0	GRAB BAR
10800.F1	DOUBLE PRONG ROBE HOOK
10800.H0	SOAP DISPENSER
10800.R1	FRAMED MIRROR (SIZE)
10800.T0	METAL SHELF (SIZE)
15250.A1	PIPE INSULATION AT ALL EXPOSED PIPE
15410.A1	URINAL, ACCESSIBLE
15410.B1	SINK FAUCET W/ADA LEVER HANDLES
15410.C0	UTILITY SINK
15410.E2	FLOOR DRAIN
15410.F0	TOILET
15452.A1	DRINKING FOUNTAIN
15611.A1	GAS FIRED FRURNACE

GENERAL NOTES

1. FIELD VERIFY ALL EXISTING CONDITIONS AND THEIR COMPATIBILITY WITH NEW CONSTRUCTION PRIOR TO THE COMMENCEMENT OF WORK. COORDINATE DISCREPANCIES WITH ARCHITECT.

2. DO NOT SCALE DRAWINGS.

3. SEE STRUCTURAL, MECHANICAL AND ELECTRICAL DRAWINGS FOR MORE INFORMATION.

4. PROVIDE BACKING BEHIND ALL SURFACE MOUNTED EQUIPMENT AND/OR FIXTURES PER DETAIL C2/AE401

5. SEE C1/AE401 FOR TYPICAL FIXTURE MOUNTING HEIGHTS.

6. SEE DETAILS A1, A2, B1 & B2/AE401 FOR ADA TYPICAL DETAILS

CLIENT

UDOT CONNECTING COMMUNITIES

STATION #3437A
SR-44 @ M.P. 0.5 ±
GREENDALE UTAH

DESIGNER

ARCHIPLEX GROUP
architecture · planning · design services
1135 South West Temple, Ste. A
Salt Lake City, UT 84101
P:(801) 961-7070
F:(801) 961-7373

CONSULTANTS

PROFESSIONAL SEAL

STATE OF UTAH
RALPH M. STANISLAW
95-310818-0301
LICENSED ARCHITECT

ISSUE

MARK	DATE	DESCRIPTION
1	3-20-08	ADDENDUM #2
	02-2008	CONSTRUCTION DOCUMENTS

DFCM CONTRACT NO:	077325
DFCM PROJECT NO:	07029900
ARCHIPLEX PROJECT NO:	0708.01
DRAWN BY:	A. PHILLIPS
CHECKED BY:	R. STANISLAW
SCALE:	AS SHOWN
DATE:	FEBRUARY, 2008

SHEET TITLE

ENLARGED RESTROOM FLOOR PLAN, INTERIOR ELEVATION AND DETAILS

AE401

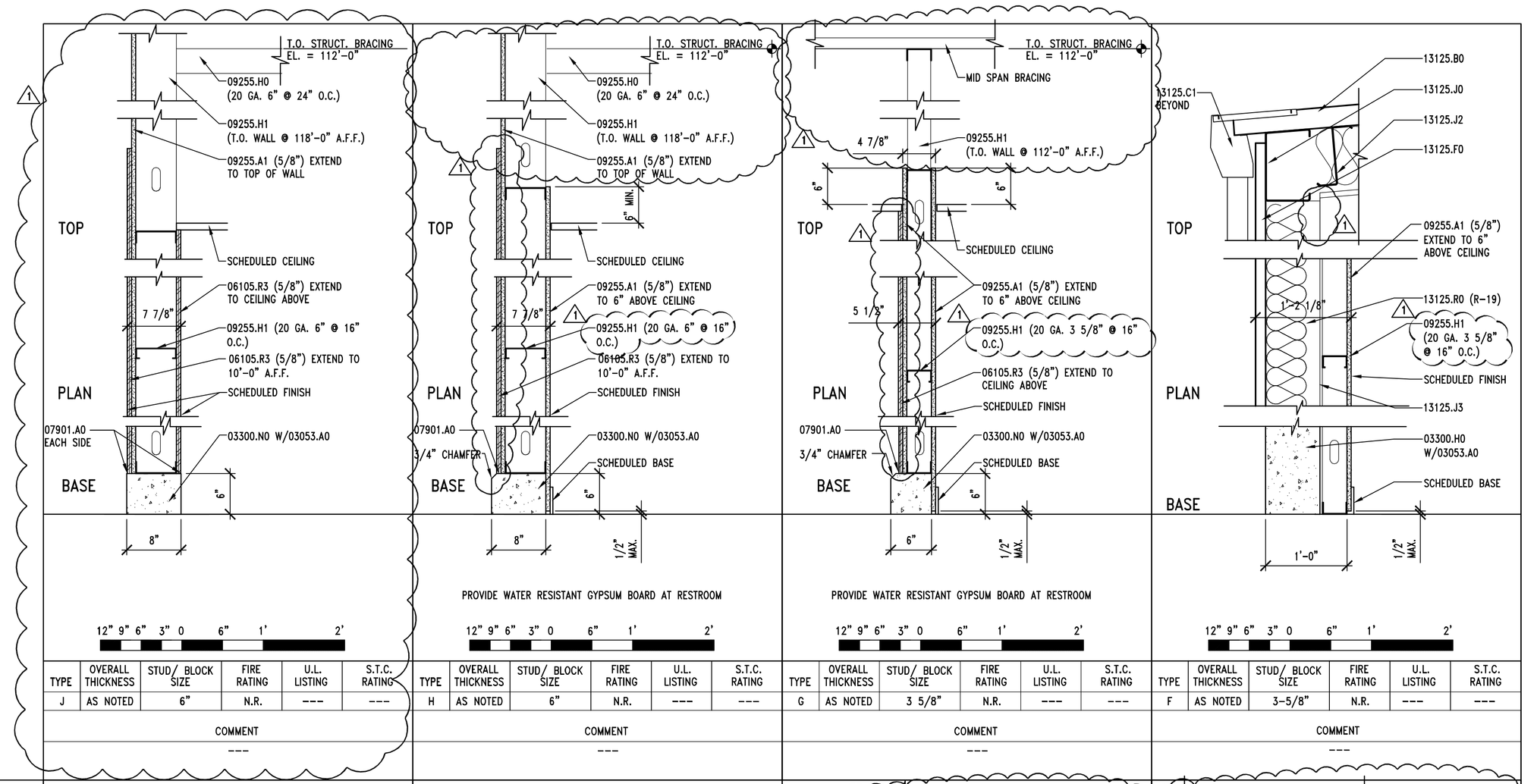

TYPE	OVERALL THICKNESS	STUD/ BLOCK SIZE	FIRE RATING	U.L. LISTING	S.T.C. RATING	COMMENT
J	AS NOTED	6"	N.R.	---	---	---
H	AS NOTED	6"	N.R.	---	---	---
G	AS NOTED	3 5/8"	N.R.	---	---	---
F	AS NOTED	3-5/8"	N.R.	---	---	---
E	AS NOTED	–	N.R.	---	---	---
D	AS NOTED	3-5/8"	N.R.	---	---	---
C	AS NOTED	–	N.R.	---	---	---
B	AS NOTED	3-5/8"	N.R.	---	---	---
A	AS NOTED	3 5/8"	N.R.	---	---	---

A1 WALL TYPES

AE501 | REF. AE101 | SCALE: 1" = 1'-0"

KEYNOTES

03053.A0 CONCRETE WATER PROOFING ADMIXTURE
03300.H0 FOUNDATION WALL – SEE STRUCTURAL
03300.N0 CONCRETE CURB

06105.R3 PLYWOOD PANEL (THICKNESS)

07901.A0 CONT. SEALANT

09255.A1 GYPSUM BOARD (THICKNESS)
09255.H0 METAL STUD
09255.H1 METAL STUDS (SIZE, SPACING)

13125.B0 STANDING SEAM METAL ROOF
13125.C1 METAL RAIN GUTTER
13125.E3 RAKE TRIM
13125.F0 METAL WALL PANEL
13125.J0 STRUCTURAL MEMBER – PRIMED AND PAINTED
13125.J1 STRUCTURAL GIRT – PAINTED (SEE GENERAL NOTE#4)
13125.J2 ROOF PURLIN – PAINTED
13125.J3 STRUCTURAL GIRT (SEE GENERAL NOTE #4)
13125.R0 INSULATION & VAPOR BARRIER (R-VALUE)

GENERAL NOTES

1. FIELD VERIFY ALL EXISTING CONDITIONS AND THEIR COMPATIBILITY WITH NEW CONSTRUCTION PRIOR TO THE COMMENCEMENT OF WORK. COORDINATE DISCREPANCIES WITH ARCHITECT.

2. DO NOT SCALE DRAWINGS.

3. SEE STRUCTURAL, MECHANICAL AND ELECTRICAL DRAWINGS FOR MORE INFORMATION.

4. CONTRACTOR TO ENSURE THAT METAL BUILDING MANUF. PROVIDES STRUCTURAL GIRTS IN SUFFICIENT QUANTITY TO SUPPORT INTERIOR FINISHES.

CLIENT

UDOT CONNECTING COMMUNITIES

STATION #3437A
SR-44 @ M.P. 0.5 ±
GREENDALE UTAH

DESIGNER

ARCHIPLEX GROUP
architecture · planning · design services
1135 South West Temple, Ste. A
Salt Lake City, UT 84101
P:(801) 961-7070
F:(801) 961-7373

CONSULTANTS

PROFESSIONAL SEAL

STATE OF UTAH
RALPH M. STANISLAW
95-310818-0301
LICENSED ARCHITECT

ISSUE

MARK	DATE	DESCRIPTION
1	3-20-08	ADDENDUM #2
	02-2008	CONSTRUCTION DOCUMENTS

DFCM CONTRACT NO:	077325
DFCM PROJECT NO:	07029900
ARCHIPLEX PROJECT NO:	0708.01
DRAWN BY:	A. PHILLIPS
CHECKED BY:	R. STANISLAW
SCALE:	AS SHOWN
DATE:	FEBRUARY, 2008

SHEET TITLE

WALL TYPES

AE501

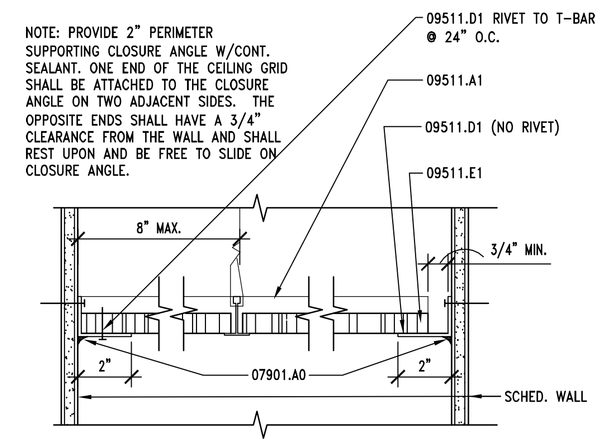

D3 | LAY-IN PANEL EDGE DTL.

AE502 | REF. | SCALE: 3" = 1'-0"

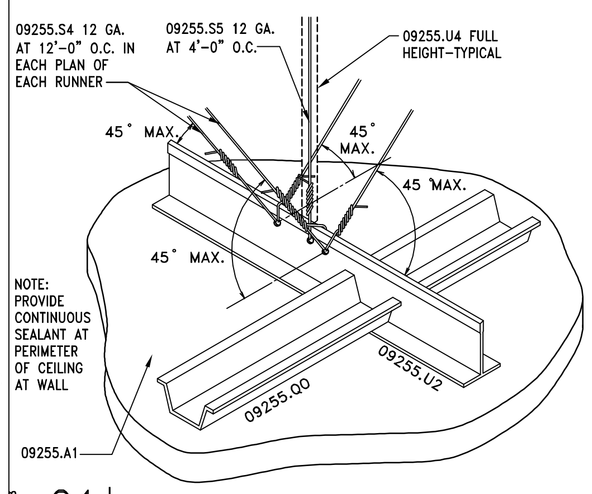

C1 | SEISMIC BRACING DETAIL

AE502 | REF. AE121 | SCALE: NONE

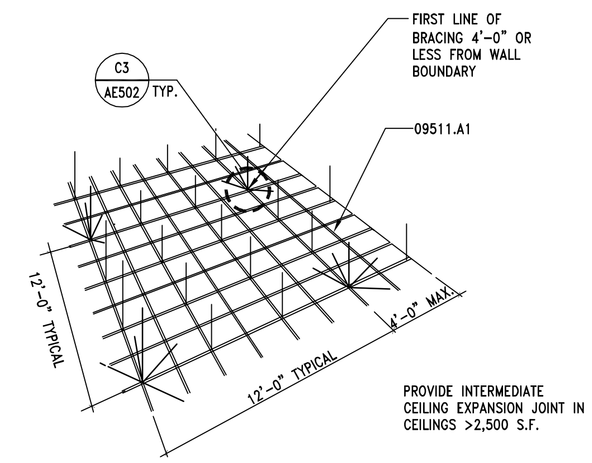

C2 | SEISMIC BRACING DETAIL

AE502 | REF. AE121 | SCALE: NO SCALE

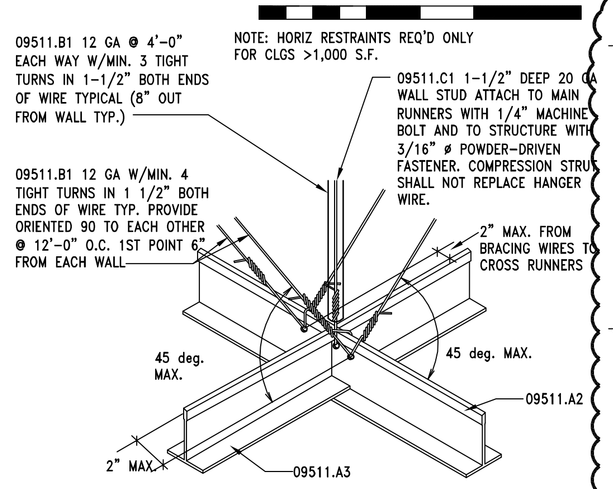

C3 | SEISMIC BRACING DETAIL

AE502 | REF. AE121, AE502 | SCALE: NO SCALE

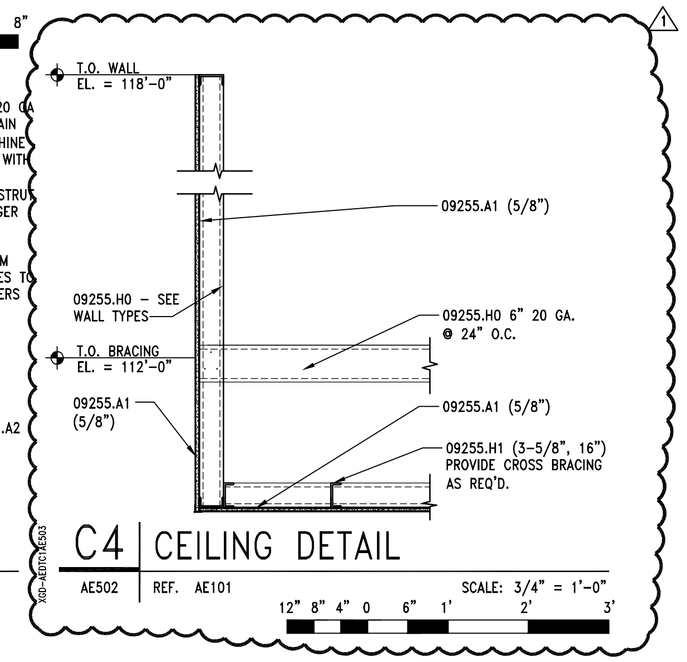

C4 | CEILING DETAIL

AE502 | REF. AE101 | SCALE: 3/4" = 1'-0"

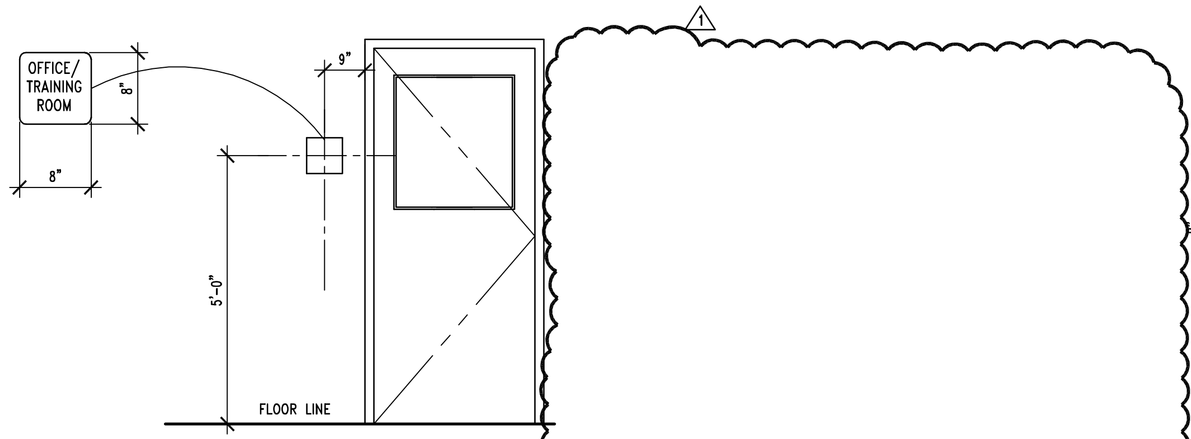

RE: SPECIFICATION - 10425 FOR MORE INFORMATION

B1 | SIGNAGE "A"

AE502 | REF. AE502 | SCALE: NONE

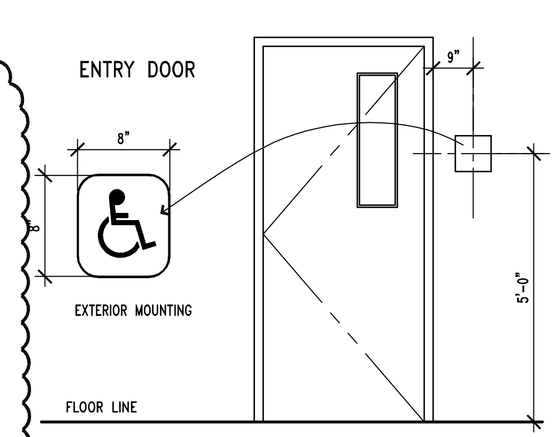

RE: SPECIFICATION - 10425 FOR INFO.

B3 | SIGNAGE "C"

AE502 | REF. AE101 | SCALE: NONE

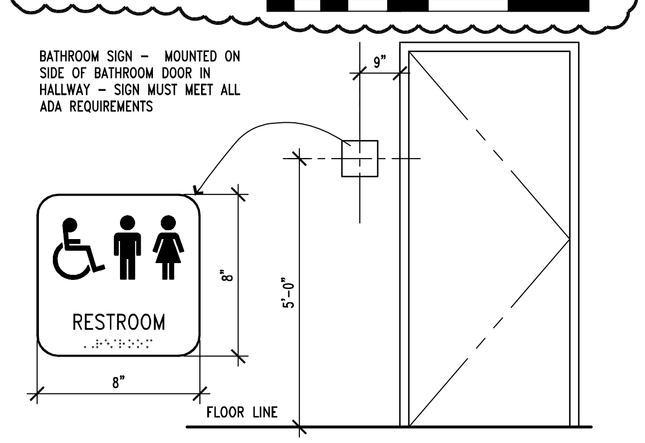

RE: SPECIFICATION - 10425 FOR INFO.

B4 | SIGNAGE "D"

AE502 | REF. AE101 | SCALE: NONE

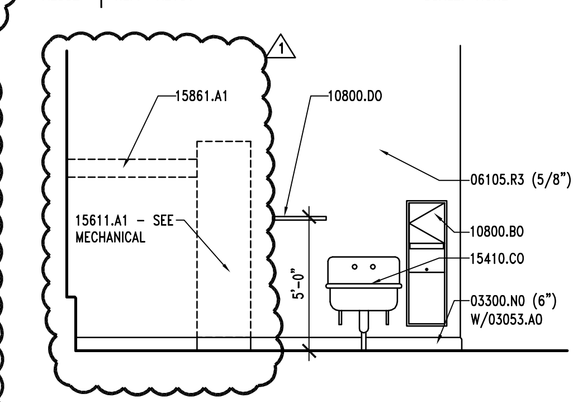

A3 | INTERIOR ELEVATION

AE502 | REF. AE101 | SCALE: 1/4" = 1'-0"

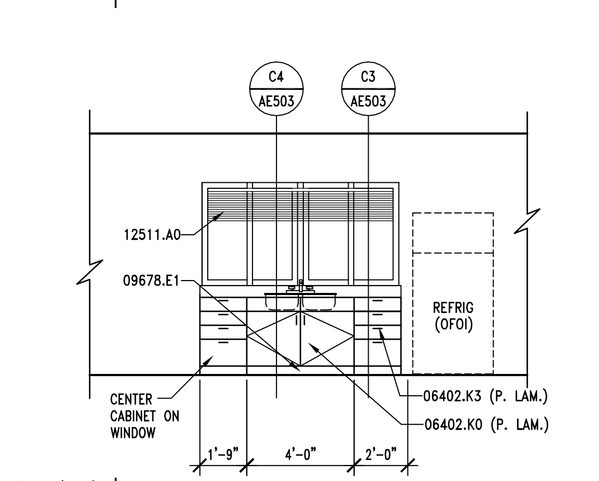

A4 | TRAINING ROOM ELEV.

AE502 | REF. AE101 | SCALE: 1/4" = 1'-0"

KEYNOTES

03053.A0	CONCRETE WATER PROOFING ADMIXTURE
03300.N0	CONCRETE CURB (6")
06105.R3	PLYWOOD PANEL (THICKNESS)
06402.K0	BASE UNIT (FINISH)
06402.K3	BASE UNIT WITH DRAWERS (FINISH)
07901.A0	CONTINUOUS SEALANT
09255.A1	GYPSUM BOARD (THICKNESS)
09255.H0	METAL STUD
09255.H1	METAL STUDS (SIZE, SPACING)
09255.M2	METAL CORNER BEAD (TYP)
09255.S4	SPLAY WIRE (SIZE)
09255.S5	VERTICAL WIRES (SIZE)
09255.U2	MAIN TEE
09255.U4	3/4" CONDUIT COMPRESSION BRACE
09511.A1	HEAVY DUTY "T" BAR GRID SYSTEM
09511.A2	CEILING SUSPENSION SYSTEM - MAIN RUNNER
09511.A3	CEILING SUSPENSION SYSTEM - CROSS RUNNER
09511.B1	VERTICAL WIRE HANGER (SIZE)
09511.C1	COMPRESSION STRUTS
09511.D1	METAL ANGLE EDGE
09511.E1	LAY IN ACOUSTICAL CEILING PANEL
09678.E1	RUBBER BASE (SIZE)
10425.C1	ACCESSIBLE SIGNAGE
10800.B0	PAPER TOWEL DISPENSER AND WASTE RECEPTACLE
10800.D0	MOP RACK
12511.A0	HORIZONTAL LOUVER BLINDS
15410.C0	UTILITY SINK
15611.A1	GAS FIRED FURNACE
15861.A1	MECHANICAL DUCTWORK - SEE MECHANICAL

GENERAL NOTES

1. FIELD VERIFY ALL EXISTING CONDITIONS AND THEIR COMPATIBILITY WITH NEW CONSTRUCTION PRIOR TO THE COMMENCEMENT OF WORK. COORDINATE DISCREPANCIES WITH ARCHITECT.

2. DO NOT SCALE DRAWINGS.

3. SEE SHEET AE602 FOR PLASTIC LAMINATE COLORS.

CLIENT

UDOT CONNECTING COMMUNITIES

STATION #3437A
SR-44 @ M.P. 0.5 ±
GREENDALE UTAH

DESIGNER

ARCHIPLEX GROUP
architecture · planning · design services
1135 South West Temple, Ste. A
Salt Lake City, UT 84101
P:(801) 961-7070
F:(801) 961-7373

CONSULTANTS

PROFESSIONAL SEAL

STATE OF UTAH
RALPH M. STANISLAW
95-310818-0301
LICENSED ARCHITECT

ISSUE

MARK	DATE	DESCRIPTION
1	3-20-08	ADDENDUM #2
	02-2008	CONSTRUCTION DOCUMENTS

DFCM CONTRACT NO:	077325
DFCM PROJECT NO:	07029900
ARCHIPLEX PROJECT NO:	0708.01
DRAWN BY:	A. PHILLIPS
CHECKED BY:	R. STANISLAW
SCALE:	AS SHOWN
DATE:	FEBRUARY, 2008

SHEET TITLE

SIGNAGE
MISC. ELEVATIONS
AND DETAILS

AE502

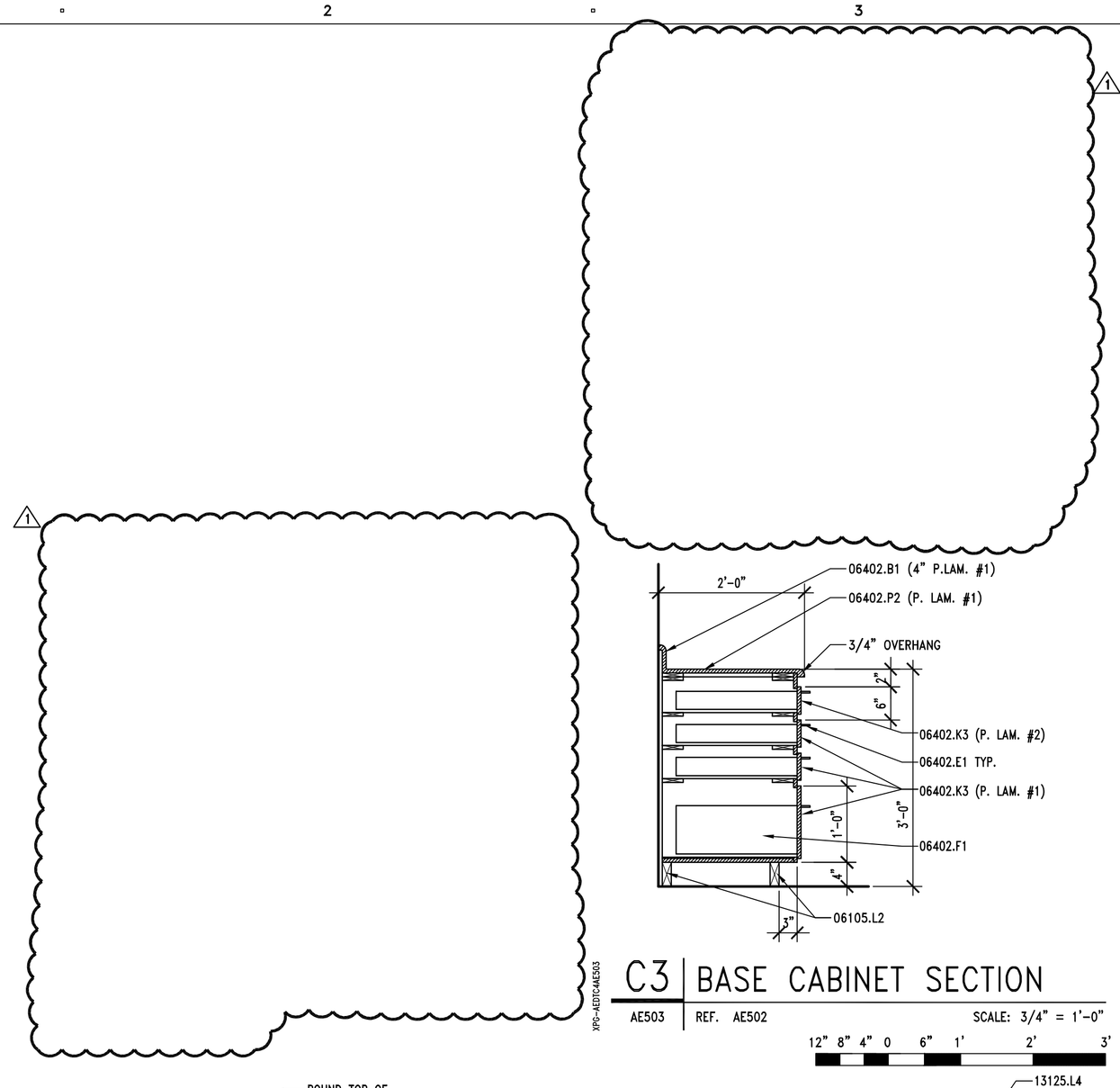

C3 | BASE CABINET SECTION

AE503 | REF. AE502 | SCALE: 3/4" = 1'-0"

12" 8" 4" 0 6" 1' 2' 3'

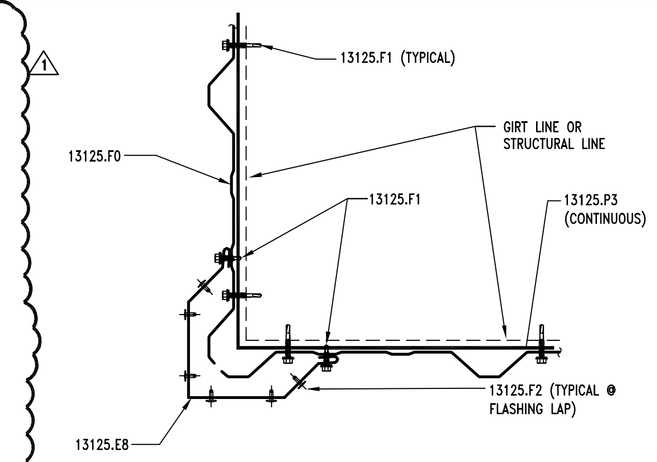

D4 | CORNER FLASHING DETAIL

AE503 | REF. AE101, AE201, AE202 | SCALE: 3" = 1'-0"

4" 3" 2" 1" 0 2" 4" 8"

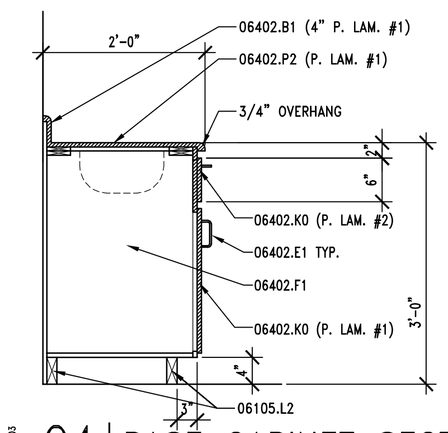

C4 | BASE CABINET SECTION

AE503 | REF. AE502 | SCALE: 3/4" = 1'-0"

12" 8" 4" 0 6" 1' 2' 3'

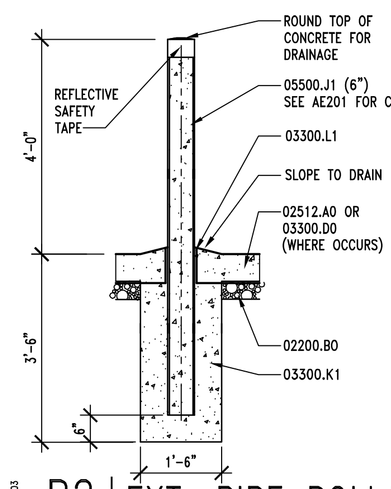

B2 | EXT. PIPE BOLLARD DTL.

AE503 | REF. AE101, AE201, AE202 & AE301 | SCALE: 1/2" = 1'-0"

24"18" 12" 6" 0' 1' 2' 4'

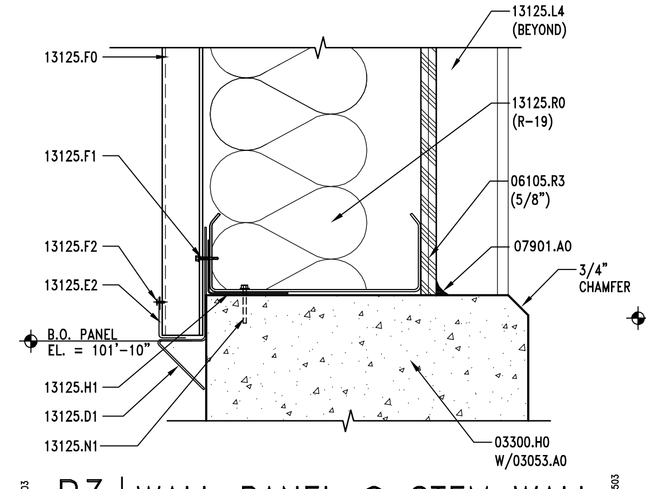

B3 | WALL PANEL @ STEM WALL

AE503 | REF. AE201, AE301, AE311 & AE402 | SCALE: 3" = 1'-0"

4" 3" 2" 1" 0 2" 4" 8"

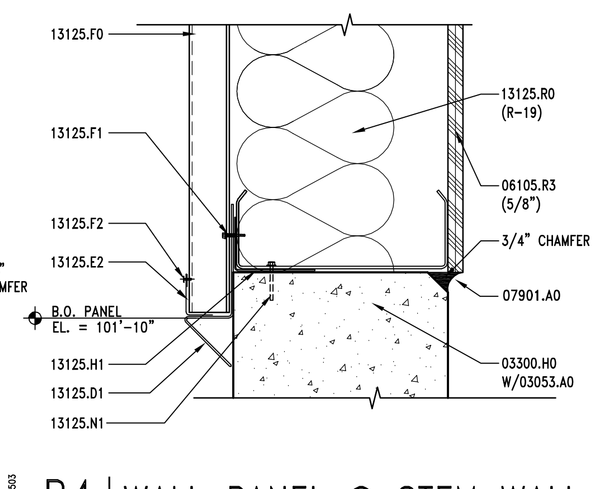

B4 | WALL PANEL @ STEM WALL

AE503 | REF. AE202, AE301 | SCALE: 3" = 1'-0"

4" 3" 2" 1" 0 2" 4" 8"

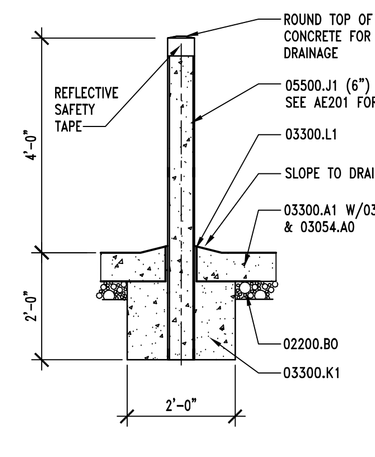

A2 | INT. PIPE BOLLARD DTL.

AE503 | REF. AE101, AE201, AE202 & AE301 | SCALE: 1/2" = 1'-0"

24"18" 12" 6" 0' 1' 2' 4'

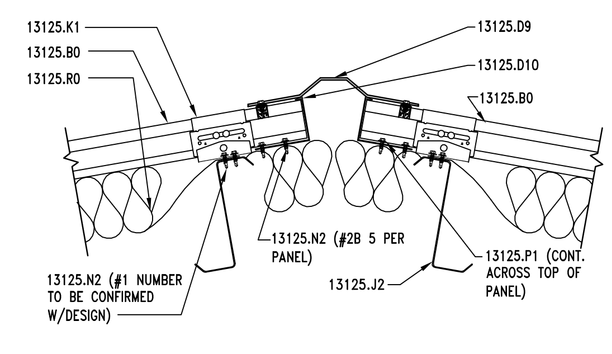

A3 | RIDGE DETAIL

AE503 | REF. AE301 | SCALE: 1 1/2" = 1'-0"

8" 6" 4" 2" 0 4" 8" 1'-4"

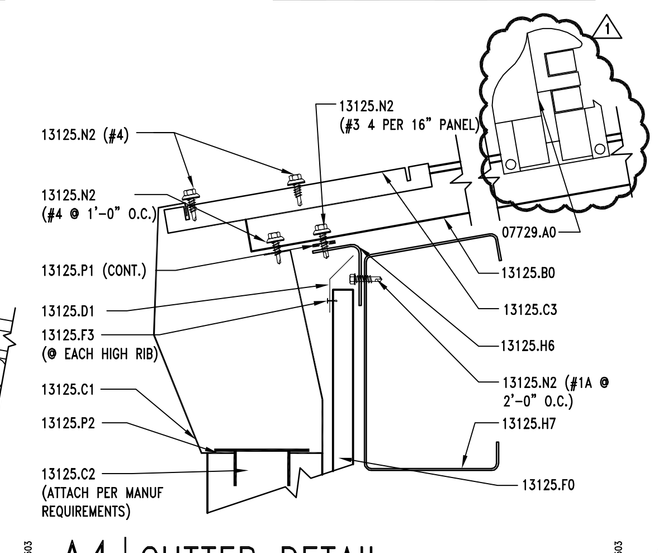

A4 | GUTTER DETAIL

AE503 | REF. AE311 | SCALE: 3" = 1'-0"

4" 3" 2" 1" 0 2" 4" 8"

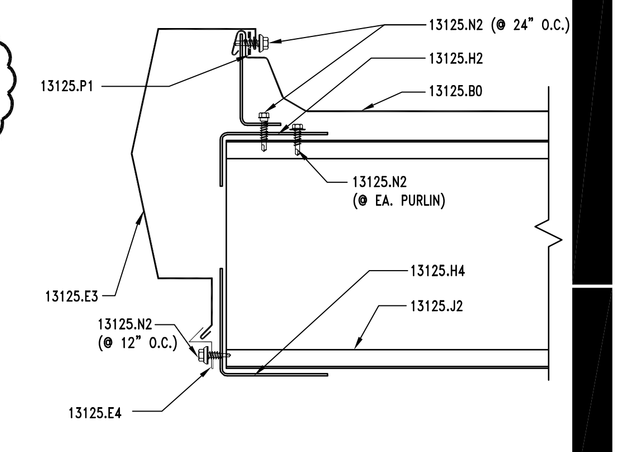

A5 | STARTING RAKE DETAIL

AE503 | REF. AE311 | SCALE: 3" = 1'-0"

4" 3" 2" 1" 0 2" 4" 8"

KEYNOTES

02200.B0	GRAVEL BASE
02512.A0	ZERO VOIDS ASPHALT PAVING (THICKNESS)
03053.A0	CONCRETE WATERPROOFING ADMIXTURE
03054.A0	OLIOPHOBIC TOPICAL SEALER
03300.A1	CONCRETE SLAB – ON – GRADE – SEE STRUCTURAL
03300.D0	CONCRETE PAD (HEIGHT)
03300.H0	FOUNDATION WALL – SEE STRUCTURAL
03300.K1	CONCRETE PIPE BASE
05500.J1	PIPE BOLLARD (DIAMETER) – GALV. & PAINTED
06105.R3	PLYWOOD PANEL (THICKNESS)
06402.B1	PLASTIC LAMINATE BACKSLAPSH (HEIGHT)
06402.E1	WIRE PULL
06402.F1	PROVIDE WHITE MELAMINE FINISH @ ALL INTERIOR SURFACES
06402.K0	BASE UNIT (FINISH)
06402.K3	BASE UNIT W/DRAWERS (FINISH)
06402.P2	COUNTERTOP – P. LAM. ON 3/4" PLYWOOD
07729.A0	STANDING SEAM METAL ROOF 2 PIPE SNOWGAURD SYSTEM
07901.A0	CONT. SEALANT
13125.B0	STANDING SEAM METAL ROOF
13125.C1	METAL RAIN GUTTER
13125.C2	DOWNSPOUT
13125.C3	GUTTER STRAP, INSTALL AT EVERY OTHER PANEL RIB
13125.D1	METAL DRIP FLASHING
13125.D9	FLEXIBLE ROOF RIDGE
13125.D10	ROOF RIDGE SUPPORT
13125.E2	PANEL TRIM
13125.E3	RAKE TRIM
13125.E4	RAKE SLIDE
13125.E8	CORNER TRIM
13125.F0	METAL WALL PANEL
13125.F1	METAL WALL FASTENER
13125.F2	BLIND RIVET
13125.F3	POP RIVET
13125.H1	METAL ANGLE
13125.H2	HIGH RAKE SUPPORT ANGLE
13125.H4	4" X 4" CONTINUIOUS ANGLE
13125.H6	EAVE SUPPORT ANGLE
13125.H7	EAVE STRUT
13125.J2	ROOF PURLIN – PAINTED
13125.K1	LOW PANEL CLIP
13125.L4	STEEL COLUMN – PRIMED AND PAINTED
13125.N1	ANCHOR
13125.N2	FASTENER (SPACING)
13125.P1	DOUBLE BEAD TAPE SEALER
13125.P2	SEALANT
13125.P3	THERMAL BREAK
13125.R0	INSULATION & VAPOR BARRIER (R-VALUE)

GENERAL NOTES

1. FIELD VERIFY ALL EXISTING CONDITIONS AND THEIR COMPATIBILITY WITH NEW CONSTRUCTION PRIOR TO THE COMMENCEMENT OF WORK. COORDINATE DISCREPANCIES WITH ARCHITECT.

2. DO NOT SCALE DRAWINGS.

CLIENT

UDOT CONNECTING COMMUNITIES

STATION #3437A
SR-44 @ M.P. 0.5 ±
GREENDALE UTAH

DESIGNER

ARCHIPLEX GROUP
architecture · planning · design services
1135 South West Temple, Ste. A
Salt Lake City, UT 84101
P:(801) 961-7070
F:(801) 961-7373

CONSULTANTS

PROFESSIONAL SEAL

STATE OF UTAH
RALPH M. STANISLAW
95-310818-0301
LICENSED ARCHITECT

ISSUE

MARK	DATE	DESCRIPTION
1	3-20-08	ADDENDUM #2
	02-2008	CONSTRUCTION DOCUMENTS

DFCM CONTRACT NO:	077325
DFCM PROJECT NO:	07029900
ARCHIPLEX PROJECT NO:	0708.01
DRAWN BY:	A. PHILLIPS
CHECKED BY:	R. STANISLAW
SCALE:	AS SHOWN
DATE:	FEBRUARY, 2008

SHEET TITLE

MISC. DETAILS

AE503

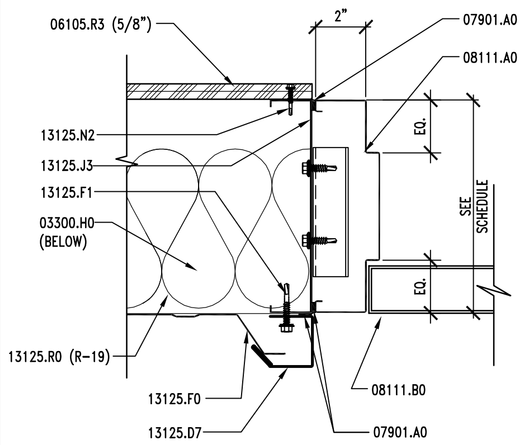

D1 | DOOR JAMB DETAIL

AE601 | REF. AE601 | SCALE: 3" = 1'-0"

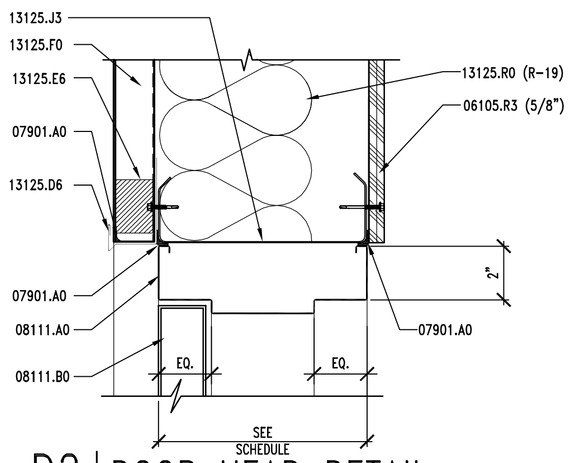

D2 | DOOR HEAD DETAIL

AE601 | REF. AE601 | SCALE: 3" = 1'-0"

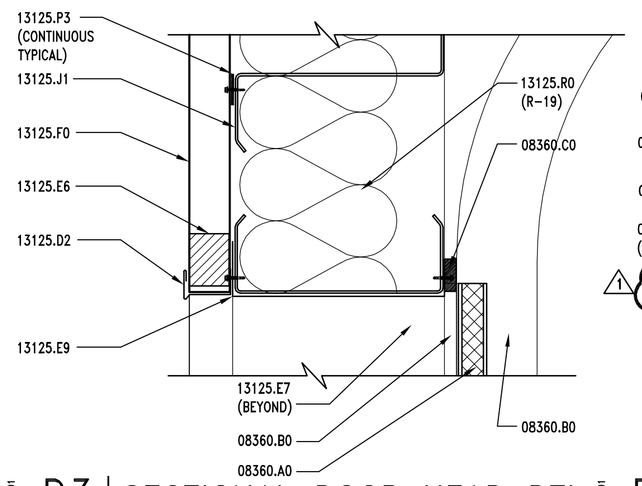

D3 | SECTIONAL DOOR HEAD DTL.

AE601 | REF. AE601 | SCALE: 3" = 1'-0"

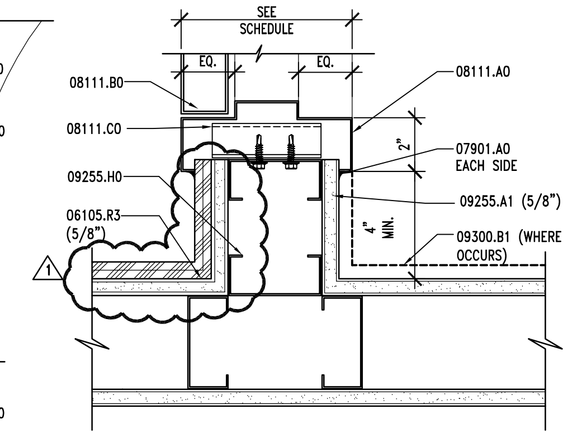

D4 | DOOR JAMB DETAIL

AE601 | REF. AE601 | SCALE: 3" = 1'-0"

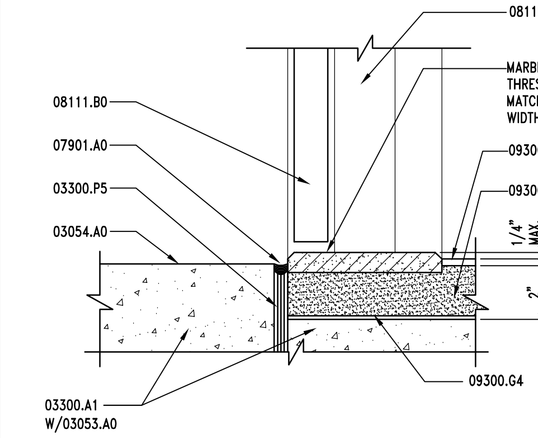

C1 | MARBLE THRESHOLD DETAIL

AE601 | REF. AE401 | SCALE: 3" = 1'-0"

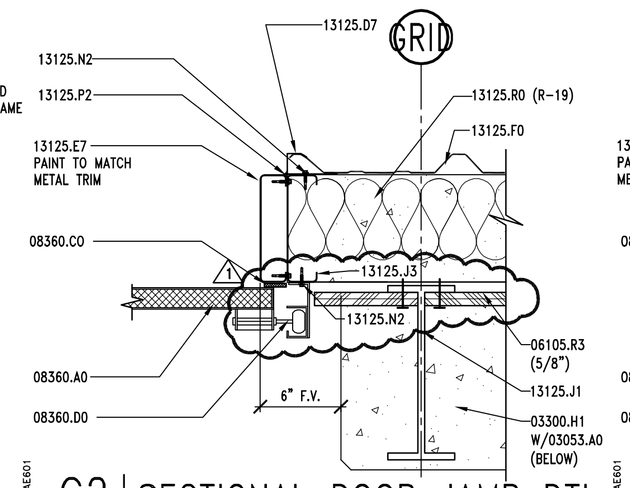

C2 | SECTIONAL DOOR JAMB DTL.

AE601 | REF. AE601 | SCALE: 1 1/2" = 1'-0"

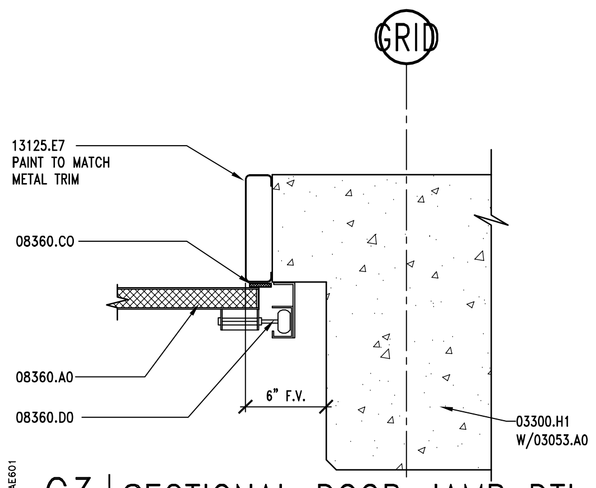

C3 | SECTIONAL DOOR JAMB DTL.

AE601 | REF. AE601 | SCALE: 1 1/2" = 1'-0"

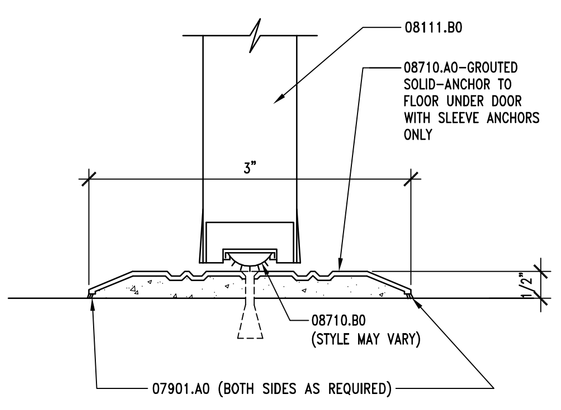

B1 | THRESHOLD DETAIL

AE601 | REF. AE601 | SCALE: NONE

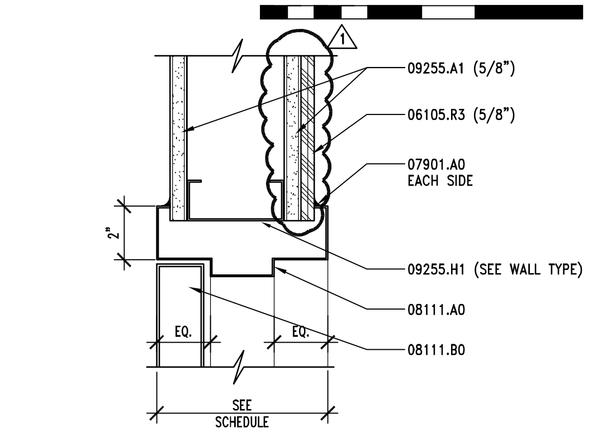

B2 | DOOR HEAD DETAIL

AE601 | REF. AE601 | SCALE: 3" = 1'-0"

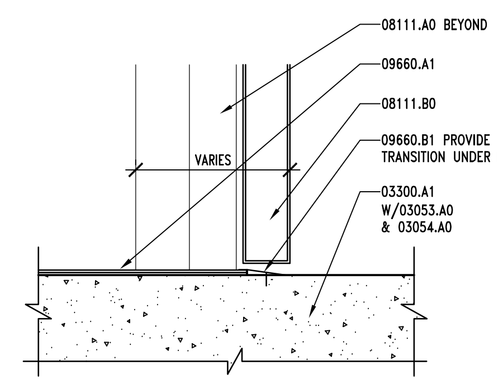

B3 | VCT-CONCRETE TRANSITION

AE601 | REF. AE601 | SCALE: 3" = 1' -0"

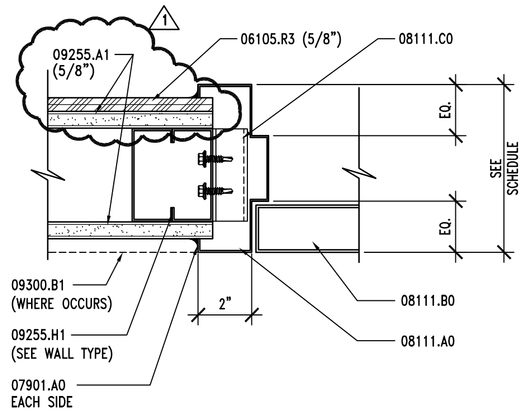

A1 | DOOR JAMB DETAIL

AE601 | REF. AE601 | SCALE: 3" = 1'-0"

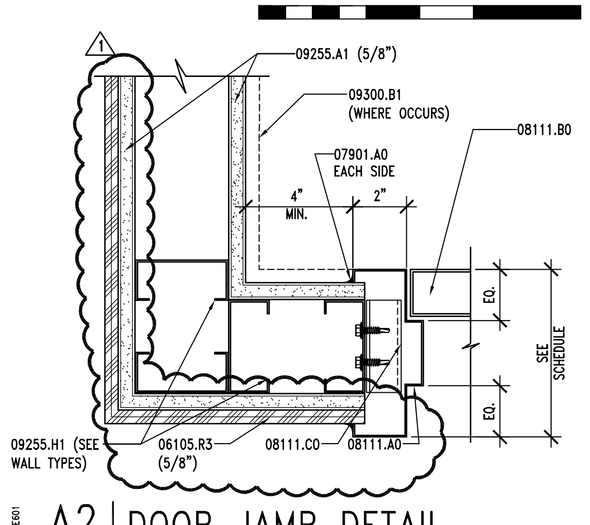

A2 | DOOR JAMB DETAIL

AE601 | REF. AE601 | SCALE: 3" = 1'-0"

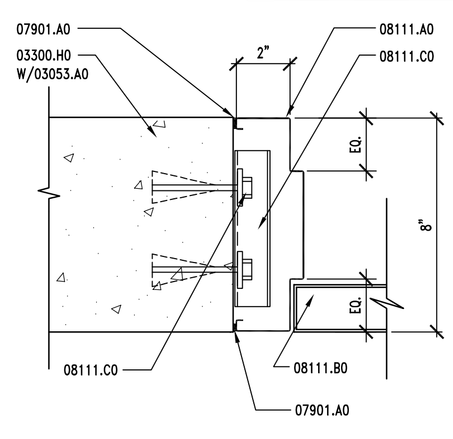

A3 | DOOR JAMB DETAIL

AE601 | REF. AE601 | SCALE: 3" = 1'-0"

KEYNOTES

03053.A0	CONCRETE WATER PROOFING ADMIXTURE
03054.A0	OLIOPHOBIC TOPICAL SEALER
03300.A1	CONCRETE SLAB ON GRADE – SEE STRUCTURAL
03300.H0	FOUNDATION WALL – SEE STRUCTURAL
03300.H1	CONCRETE PEIR – SEE STRUCTURAL
03300.P5	ISOLATION JOINT
06105.R3	PLYWOOD PANEL (THICKNESS)
07901.A0	CONT. SEALANT
08111.A0	PRESSED METAL FRAME
08111.B0	HOLLOW METAL DOOR
08111.C0	JAMB ANCHOR
08360.A0	HEAVY DUTY OVERHEAD SECTIONAL DOOR
08360.B0	3" HEAVY DUTY OVERHEAD SECTIONAL DOOR TRACK
08360.C0	WEATHERSTRIPPING
08360.D0	DOOR GUIDE
08710.A0	THRESHOLD
08710.B0	DOOR SWEEP
09255.A1	GYPSUM BOARD (THICKNESS)
09255.H0	METAL STUD
09300.A1	FLOOR TILE – SEE FINISH SCHEDULE
09300.B1	WALL TILE – SEE FINISH SCHEDULE
09300.G1	MORTAR BED
09300.G4	WATERPROOF MEMBRANE
09660.A1	VINYL COMPOSITION TILE
09660.B1	VINYL TRANSITION STRIP
13125.D2	METAL HEAD FLASHING
13125.D6	DOOR HEAD FLASHING
13125.D7	JAMB FLASHING
13125.E6	WALL CLOSURE
13125.E7	METAL OUTSIDE CLOSURE
13125.E9	FRAMED OPENING HEADER
13125.F0	METAL WALL PANEL
13125.F1	METAL WALL FASTENER
13125.J1	STRUCTURAL GIRT – PAINTED
13125.J3	STRUCTURAL GIRT
13125.N2	FASTENER (SPACING)
13125.P2	SEALANT
13125.P3	THERMAL BREAK
13125.R0	INSULATION & VAPOR BARRIER (R-VALUE)

GENERAL NOTES

1. FIELD VERIFY ALL EXISTING CONDITIONS AND THEIR COMPATIBILITY WITH NEW CONSTRUCTION PRIOR TO THE COMMENCEMENT OF WORK. COORDINATE DISCREPANCIES WITH ARCHITECT
2. DO NOT SCALE DRAWINGS.
3. SEE SPECIFICATIONS FOR GLAZING SCHEDULE.
4. SEE SPECIFICATIONS FOR DOOR HARDWARE GROUPS

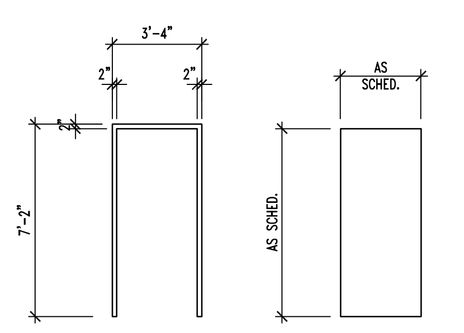

TYPE A

TYPE 1

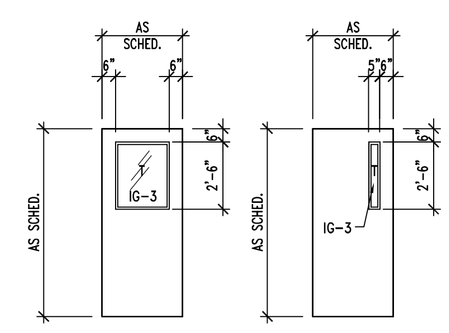

TYPE 2

TYPE 3

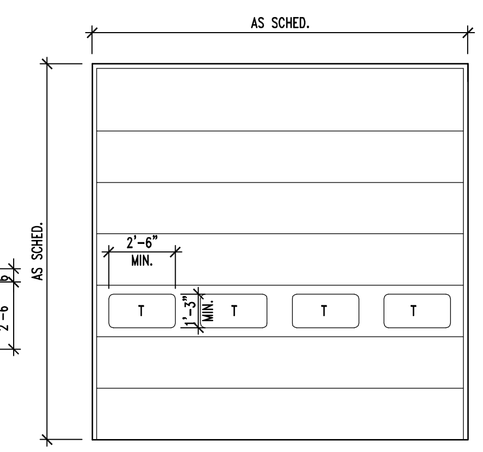

TYPE 4

DOOR FRAME TYPES

DOOR TYPES

DOOR SCHEDULE

DOOR #	ROOM #	DOORS TYPE	DOORS WIDTH	DOORS HEIGHT	DOORS THICK.	DOORS MATERIAL	DOORS FINISH	DOORS GLASS	FRAMES TYPE	FRAMES MATERIAL	FRAMES FINISH	1 WIDTH	DETAILS HEAD	DETAILS JAMB	DETAILS THRESH.	LABEL	REMARKS
D101A	101	3	3'-0"	7'-0"	1 3/4"	HM	PT	T	A	HM	PT	8"	D2/AE601	A3 & D1/AE601	B1/AE601	–	INSULATED
D101B	101	4	14'-0"	14'-0"	–	ST	–	T	–	ST	P. FIN	–	D3/AE601	C2 & C3/AE601	–	–	SECTIONAL INSULATED DOOR
D101C	101	4	14'-0"	14'-0"	–	ST	–	T	–	ST	P. FIN	–	D3/AE601	C2 & C3/AE601	–	–	SECTIONAL INSULATED DOOR
D101D	101	4	14'-0"	14'-0"	–	ST	–	T	–	ST	P. FIN	–	D3/AE601	C2 & C3/AE601	–	–	SECTIONAL INSULATED DOOR
D101E	101	4	14'-0"	14'-0"	–	ST	–	T	–	ST	P. FIN	–	D3/AE601	C2 & C3/AE601	–	–	SECTIONAL INSULATED DOOR
D101F	101	4	14'-0"	14'-0"	–	ST	–	T	–	ST	P. FIN	–	D3/AE601	C2 & C3/AE601	–	–	SECTIONAL INSULATED DOOR
D101G	101	3	3'-0"	7'-0"	1 3/4"	HM	PT	T	A	HM	PT	8"	D2/AE601	A3 & D1/AE601	B1/AE601	–	INSULATED
D103A	103	1	3'-0"	7'-0"	1 3/4"	HM	PT	–	A	HM	PT	6"	B2/AE601	A1 & D4/AE601	C1/AE601	–	–
D104A	104	2	3'-0"	7'-0"	1 3/4"	HM	PT	T	A	HM	PT	6"	B2/AE601	A1 & A2/AE601	B3/AE601	–	–

HM = HOLLOW METAL P. FIN. = PRE-FINISHED T = TEMPERED ST = STEEL PT = PAINTED

CLIENT

UDOT CONNECTING COMMUNITIES

STATION #3437A
SR-44 @ M.P. 0.5 ±
GREENDALE UTAH

DESIGNER

ARCHIPLEX GROUP
architecture · planning · design services
1135 South West Temple, Ste. A
Salt Lake City, UT 84101
P:(801) 961-7070
F:(801) 961-7373

CONSULTANTS

PROFESSIONAL SEAL

STATE OF UTAH
RALPH M. STANISLAW
95-310818-0301
LICENSED ARCHITECT

ISSUE

MARK	DATE	DESCRIPTION
1	3-20-08	ADDENDUM #2
	02-2008	CONSTRUCTION DOCUMENTS

DFCM CONTRACT NO:	077325
DFCM PROJECT NO:	07029900
ARCHIPLEX PROJECT NO:	0708.01
DRAWN BY:	A. PHILLIPS
CHECKED BY:	R. STANISLAW
SCALE:	AS SHOWN
DATE:	FEBRUARY, 2008

SHEET TITLE

DOOR SCHEDULE DOOR TYPES, AND DETAILS

AE601

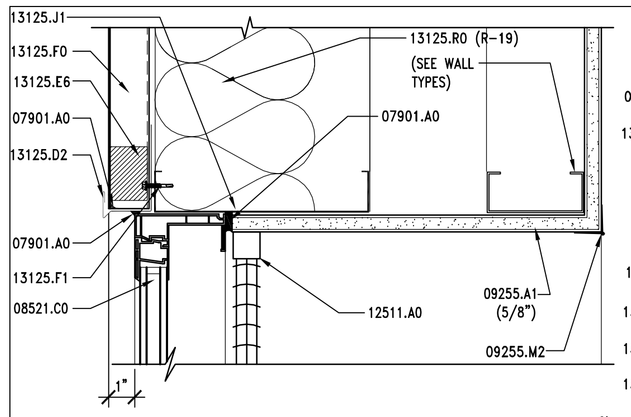

D1 | WINDOW HEAD DETAIL

AE602 | REF. AE602 | SCALE: 3" = 1'-0"

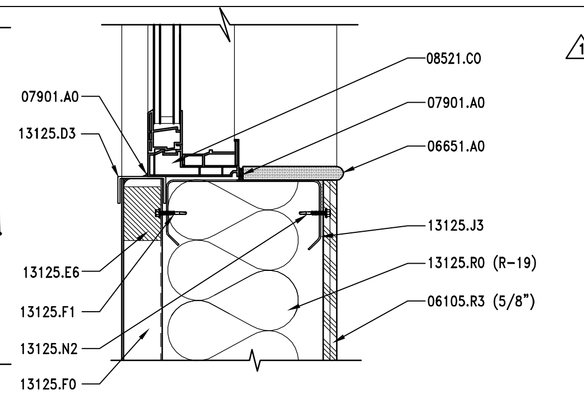

D2 | WINDOW SILL DETAIL

AE602 | REF. AE602 | SCALE: 3" = 1'-0"

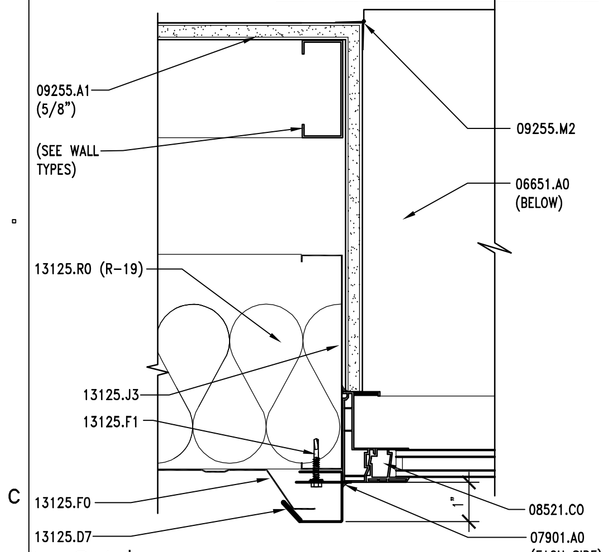

C1 | WINDOW JAMB DETAIL

AE602 | REF. AE602 | SCALE: 3" = 1'-0"

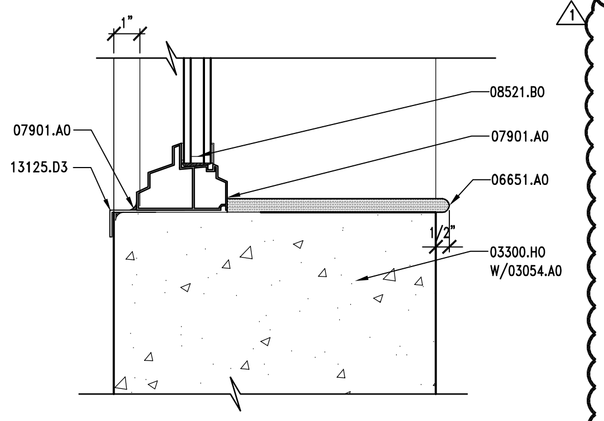

C2 | WINDOW SILL DETAIL

AE602 | REF. AE602 | SCALE: 3" = 1'-0"

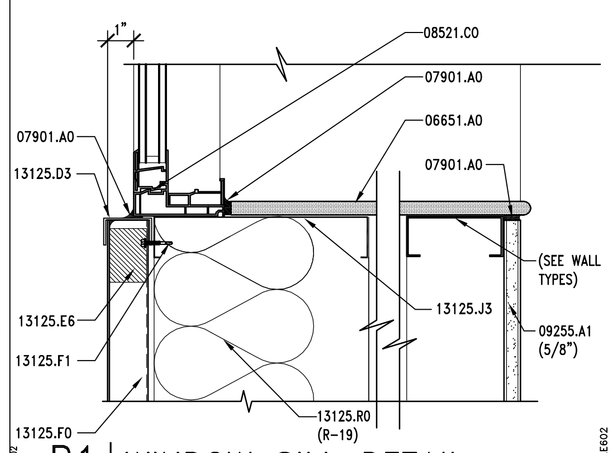

B1 | WINDOW SILL DETAIL

AE602 | REF. AE602 | SCALE: 3" = 1'-0"

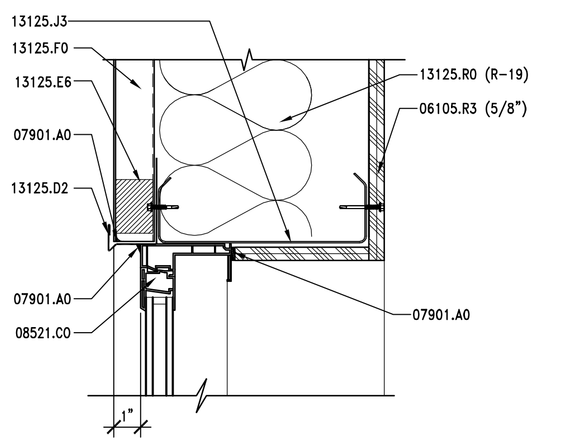

B2 | WINDOW HEAD DETAIL

AE602 | REF. AE602 | SCALE: 3' = 1'-0"

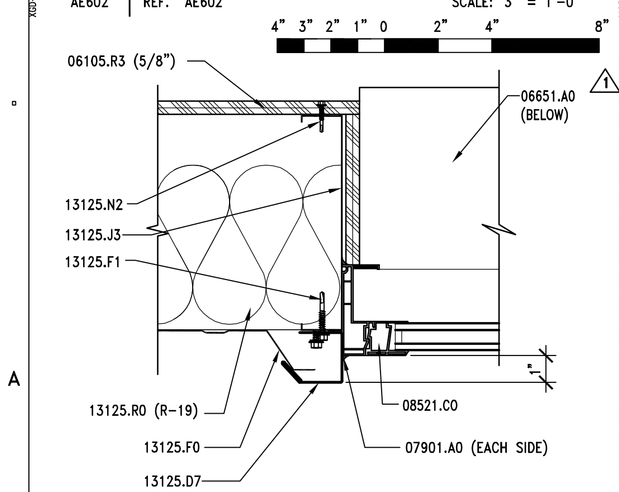

A1 | WINDOW JAMB DETAIL

AE602 | REF. AE602 | SCALE: 3" = 1'-0"

ROOM FINISH SCHEDULE

ROOM	NAME & NUMBER	FLOOR	BASE	WALLS				DOOR/FRAMES	P. LAM.	CEILING	REMARKS
				WEST	EAST	NORTH	SOUTH				
101	REPAIR GARAGE	F1	–	W1 & W4	W1 & W4	W1 & W2	W1 & W4	D1 & D2	–	C3	–
102	STORAGE AREA	F1	B1	W2	W2	W2	W2–	D1	P1	C1	–
103	RESTROOM	F3	B2	W2 & W3	W2 & W3	W2 & W3	W2 & W3	D1	–	C1	USE BULLNOSE AT TOP OF WAINSCOT
104	TRAINING ROOM/OFFICE	F2	B1	W2	W2	W2	W2	D1	P1 & P2	C2	–

ROOM FINISH LEGEND

FLOOR	BASE	WALL	DOOR & FRAMES	PLASTIC LAMINATE	CEILING
F1. CONCRETE FLOOR, WITH WATER PROOF ADD MIXTURE & OLIOPHOBIC TOPICAL SEALER. F2. 12" x 12" VINYL COMPOSITION TILE – ARMSTRONG STANDARD EXCELON IMPERIAL TEXTURE #51858–SANDRIFT WHITE OR EQUAL F3. 2" x 2" CERAMIC TILE – DALTILE, KEYSTONES, MEXICAN SAND SPECKLE W/MAPEI GROUT #05 – CHAMOIS OR EQUAL	B1. 4" RUBBER BASE – JOHNSONITE #49 – BEIGE OR EQUAL B2. 2" x 2" COVED TILE BUILT UP BASE – DALTILE, #MB5B – KEYSTONES, MEXICAN SAND SPECKLE OR EQUAL	W1. PLYWOOD PANEL: CDX PLYWOOD – PAINTED BENJAMIN MOORE – NAVAJO WHITE OR EQUAL W2. GYPSUM BOARD – PAINTED BENJAMIN MOORE – NAVAJO WHITE OR EQUAL W3. 4 1/4" x 4 1/4" CERAMIC WALL TILE – DALTILE #X735 – ALMOND – MATTE FINISH W/1/2" x 6" FLAT TOP LINER – DALTILE #K174 – MEXICAN SAND – SEMI-GLOSS FINISH OR EQUAL W/MAPEI GROUT #39 – IVORY OR EQUAL W4. METAL BUILDING EXPOSED STRUCTURE – PAINTED BENJAMIN MOORE – NAVAJO WHITE OR EQUAL. W5. SILICONIZED POLYESTER METAL BUILDING PANELS – COLOR TO MATCH EXTERIOR.	D1. PAINTED – ICI #427 – DEERFIELD OR EQUAL D2. MATCH EXTERIOR COLOR SCHEDULE – SEE SHEET AE201	P1. COUNTER TOP/CABINET FACE – WILSONART #4781–60 SUNSTONE OR EQUAL P2. CABINET FACE – WILSONART #4794–60 WINDSWEPT BRONZE OR EQUAL	C1. GYPSUM BOARD – PAINTED BENJAMIN MOORE – NAVAJO WHITE OR EQUAL C2. ARMSTRONG ALTIMA WITH TEGULAR EDGE OR EQUAL COLOR: WHITE C3. METAL BUILDING EXPOSED STRUCTURE – PAINTED BENJAMIN MOORE – NAVAJO WHITE OR EQUAL.

GENERAL NOTES

1. FIELD VERIFY ALL EXISTING CONDITIONS AND THEIR COMPATIBILITY WITH NEW CONSTRUCTION PRIOR TO THE COMMENCEMENT OF WORK. COORDINATE DISCREPANCIES WITH ARCHITECT.

2. DO NOT SCALE DRAWINGS

3. ALL FLASHING TO BE PAINTED TO MATCH WINDOW FRAMES

4. SEE SPECIFICATIONS FOR ALL GLAZING TYPES.

5. ALL INTERIOR WALL AND CEILING FINISHES SHALL BE CLASS C: FLAME SPREAD 76–200; SMOKE–DEVELOPED 0–450. EXCEPTION: MATERIALS, OTHER THAN TEXTILES, TESTED IN ACCORDANCE WITH SECTION 803.2.

6. AS PER SPECIFICATION SECTION 09900.1.2.B CONTRACTOR TO FIELD PAINT ALL EXPOSED BARE AND COVERED PIPES AND DUCTS (INCLUDING COLOR CODING), HANGERS, EXPOSED STEEL AND IRON WORK, AND PRIMED METAL SURFACES OF MECHANICAL AND ELECTRICAL EQUIPMENT.

KEYNOTES

03054.A0 OLIOPHOBIC TOPICAL CONCRETE SEALER
03300.H0 FOUNDATION WALL – SEE STRUCTURAL

06105.R3 PLYWOOD PANEL (THICKNESS)
06651.A0 1/2" WHITE SOLID SURFACE WINDOW SILL

07901.A0 CONT. SEALANT

08521.B0 FIXED VINYL WINDOW
08521.C0 VINYL WINDOW W/SLIDING GLASS PANEL
08800.G2 TEMPERED GLASS

09255.A1 GYPSUM BOARD (THICKNESS)
09255.M2 METAL CORNER BEAD (TYP)

12511.A0 HORIZONTAL LOUVER BLINDS

13125.D2 METAL HEAD FLASHING
13125.D3 METAL SILL FLASHING
13125.D7 JAMB FLASHING
13125.E6 WALL CLOSURE
13125.F0 METAL WALL PANEL
13125.F1 METAL WALL FASTENER
13125.J3 STRUCTURAL GIRT
13125.N2 FASTENER (SPACING)
13125.R0 INSULATION & VAPOR BARRIER (R-VALUE)

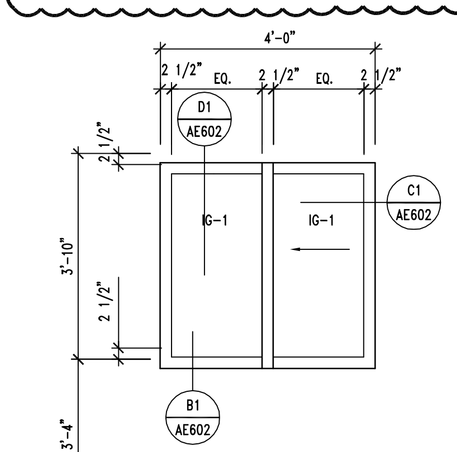

TYPE A

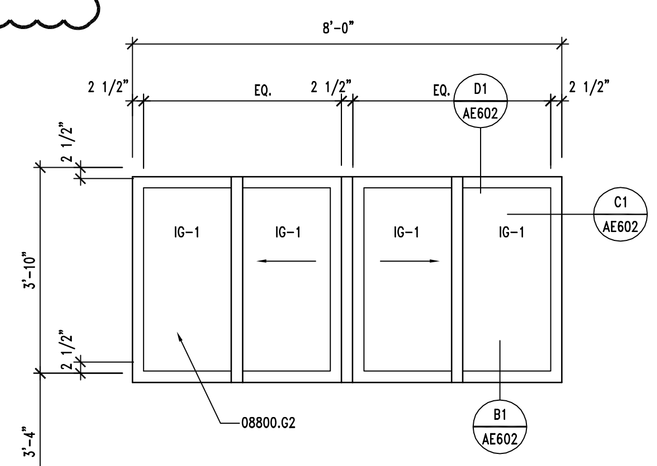

TYPE B

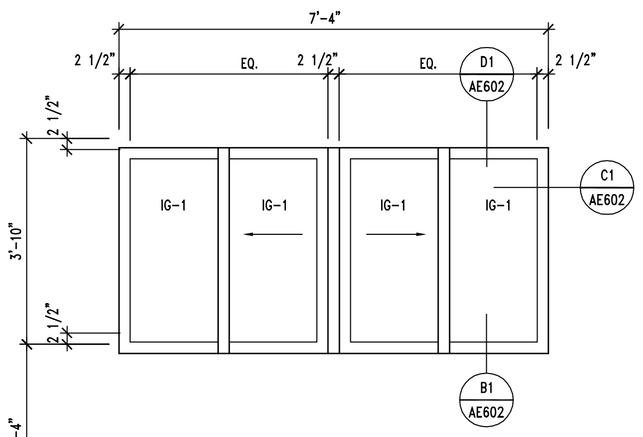

TYPE C

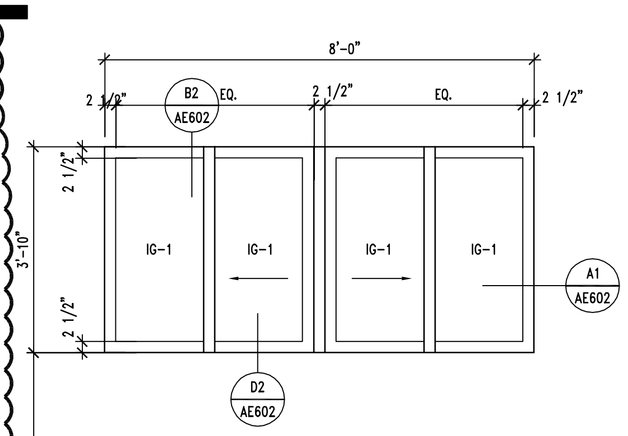

TYPE D

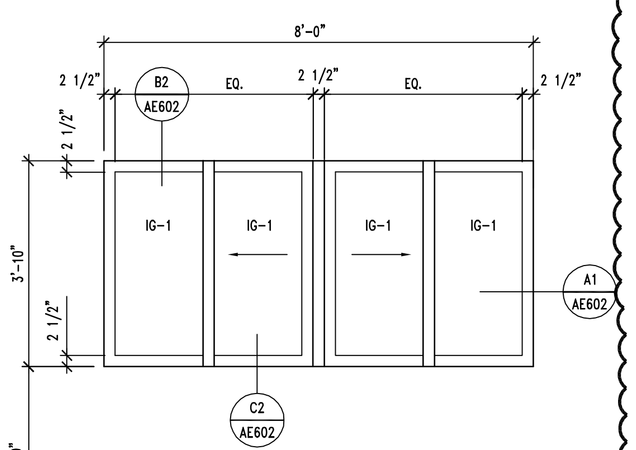

TYPE E

CLIENT

UDOT CONNECTING COMMUNITIES

STATION #3437A
SR-44 @ M.P. 0.5 ±
GREENDALE UTAH

DESIGNER

ARCHIPLEX GROUP
architecture · planning · design services
1135 South West Temple, Ste. A
Salt Lake City, UT 84101
P:(801) 961-7070
F:(801) 961-7373

CONSULTANTS

PROFESSIONAL SEAL

STATE OF UTAH
RALPH M. STANISLAW
95-310818-0301
LICENSED ARCHITECT

ISSUE

MARK	DATE	DESCRIPTION
1	3-20-08	ADDENDUM #2
	02-2008	CONSTRUCTION DOCUMENTS

DFCM CONTRACT NO:	077325
DFCM PROJECT NO:	07029900
ARCHIPLEX PROJECT NO:	0708.01
DRAWN BY:	A. PHILLIPS
CHECKED BY:	R. STANISLAW
SCALE:	AS SHOWN
DATE:	FEBRUARY, 2008

SHEET TITLE

WINDOW FRAME TYPES, FINISH SCHEDULE AND DETAILS

AE602

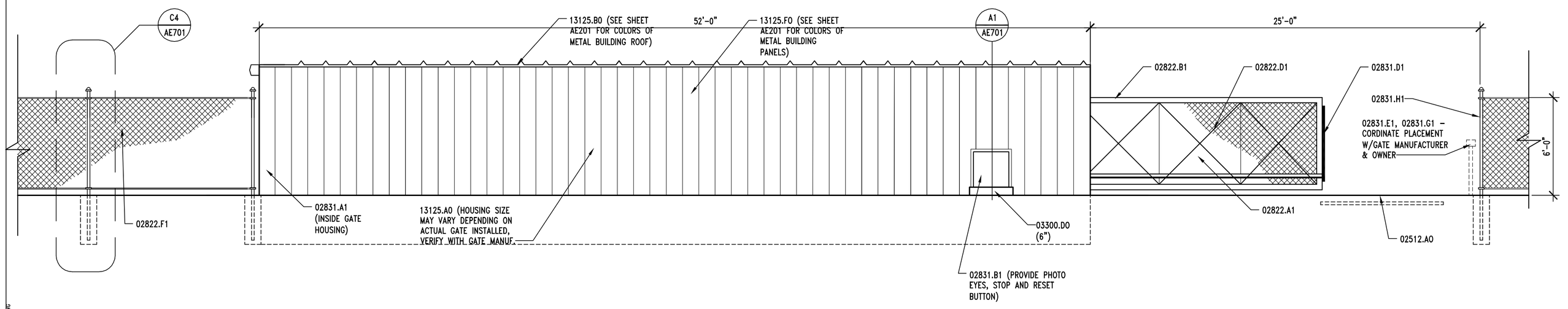

D1 GATE HOUSING ELEVATION

AE701 | REF. AE701 | SCALE: 1/4" = 1' -0"

GENERAL NOTES

02512.A0	ZERO VOIDSASPHALT PAVING (THICKNESS)
02513.A0	ASPHALT CONCRETE PAVING
02822.A1	CANTILEVERED GATE
02822.B1	2" ø GATE FRAME
02822.C1	NEW 6' HIGH CHAIN LINK FENCE - SEE CIVIL
02822.D1	TENSION TIE WIRE
02822.E1	LINE POSTS @ 10'-0" O.C.
02822.E2	LINE POSTS @ 8'-0" O.C.
02822.F1	2" DIAMOND MESH STEEL FABRIC
02831.A1	PHYSICAL TRAVEL STOP
02831.B1	HYDRAULIC SLIDE GATE OPERATOR W/AUDIO ALARM
02831.C1	UNDERGROUND OBSTRUCTION LOOP
02831.D1	PROVIDE GATE SENSORS
02831.E1	KEY PAD ACCESS ON PEDESTAL
02831.G1	FIRE ACCESS & KNOX BOX ON PEDESTAL
02831.H1	GATE RECEIVER POCKET
03300.C0	FOOTING
03300.C1	FOOTING SEE STRUCTURAL
03300.D0	CONCRETE PAD
05120.D2	TUBE STEEL COLUMN - SEE STRUCTURAL - GALVANIZED
05500.J1	PIPE BOLLARD - DETAIL B2/AE503
13125.A0	GATE HOUSING METAL BUILDING
13125.B0	STANDING SEAM METAL ROOF
13125.D4	METAL FLASHING - FINISH TO MATCH ROOF PANELS
13125.F0	METAL WALL PANEL
13125.H1	BENT PLATE ROOF SUPPORT
16520.B4	EXTERIOR LIGHT - MOUNT TO STRUCTURE ABOVE

GENERAL NOTES

1. FIELD VERIFY ALL EXISTING CONDITIONS AND THEIR COMPATIBILITY WITH NEW CONSTRUCTION PRIOR TO THE COMMENCEMENT OF WORK. COORDINATE DISCREPANCIES WITH ARCHITECT.

2. DO NOT SCALE DRAWINGS.

3. SEE ELECTRICAL DRAWINGS FOR ALL POWER & CONTROL INFORMATION.

4. ALL METAL PANELS SYSTEMS FOR ANCILLARY PUMP ENCLOSURE AND GATE ENCLOSURE TO MATCH SPECIFICATION REQUIREMENTS OF SECTION 13125.

5. CONTRACTOR TO PROVIDE ALL REQUIRED CODE & SAFETY DEVICES AS REQIRED BY GATE MANUFACTURER.

6. INSTALL LOOP APPROPRIATE DISTANCE BELOW PAVEMENT FOR LARGE TRUCKS. COORDINATE LOCATION W/OWNER & ARCHITECT BEFORE INSTALLATION

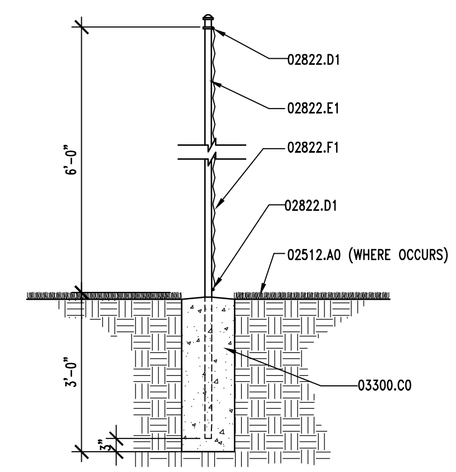

C4 CHAIN LINK FENCE DETAIL

AE701 | REF. AE701 | SCALE: 1/2" = 1'-0"

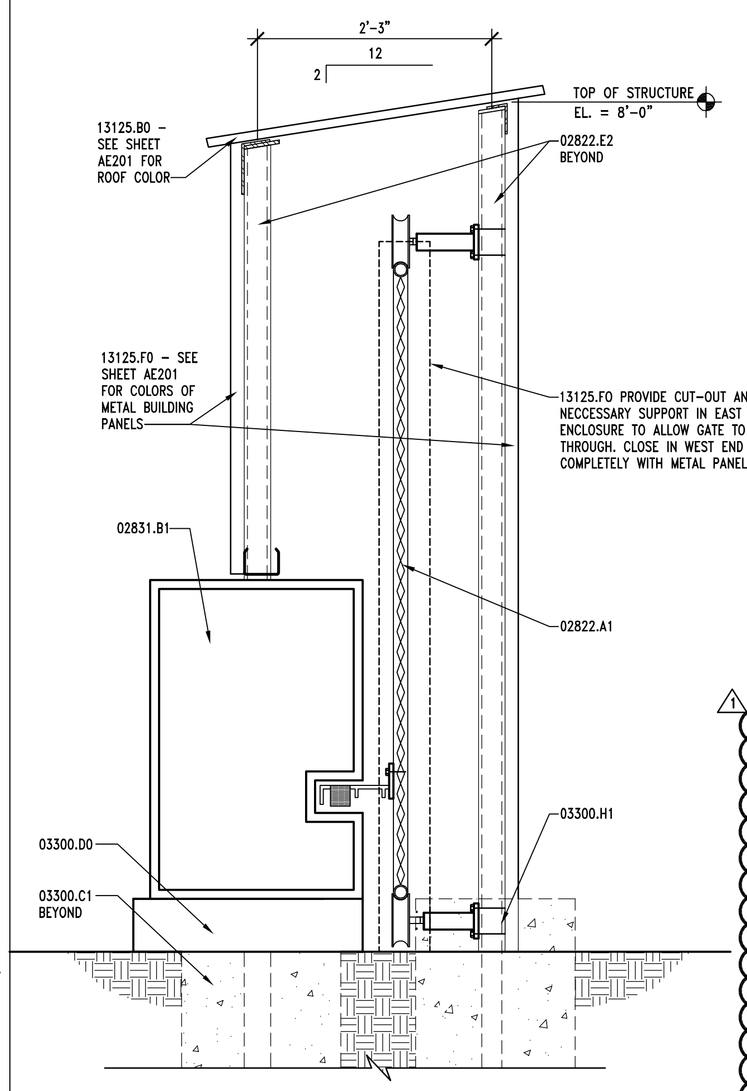

A1 GATE HOUSING

AE701 | REF. AE701 | SCALE: 3/4" = 1'-0"

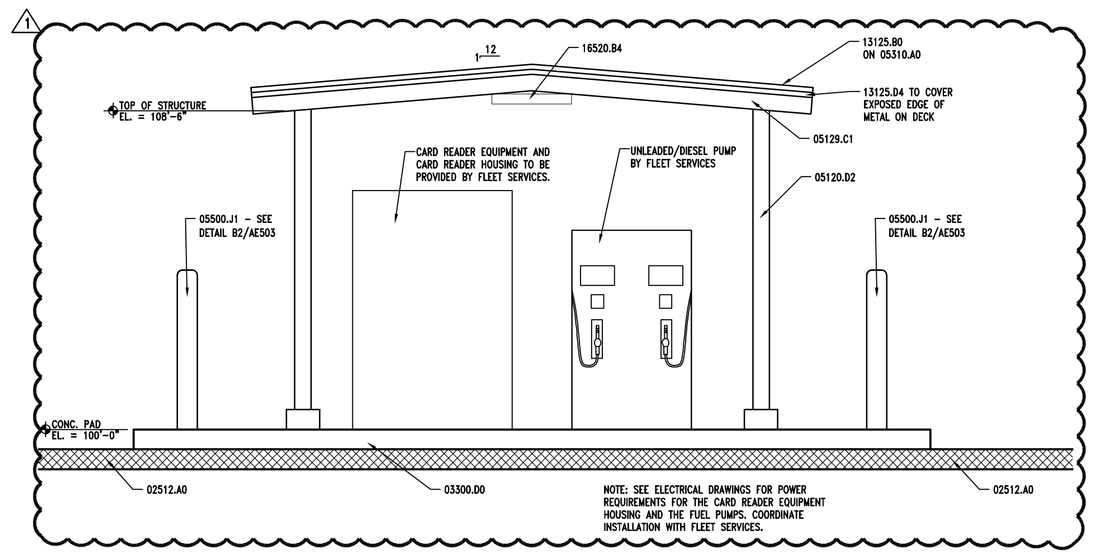

B2 FUEL ISLAND ELEVATION

AE701 | REF. | SCALE: 3/8" = 1'-0"

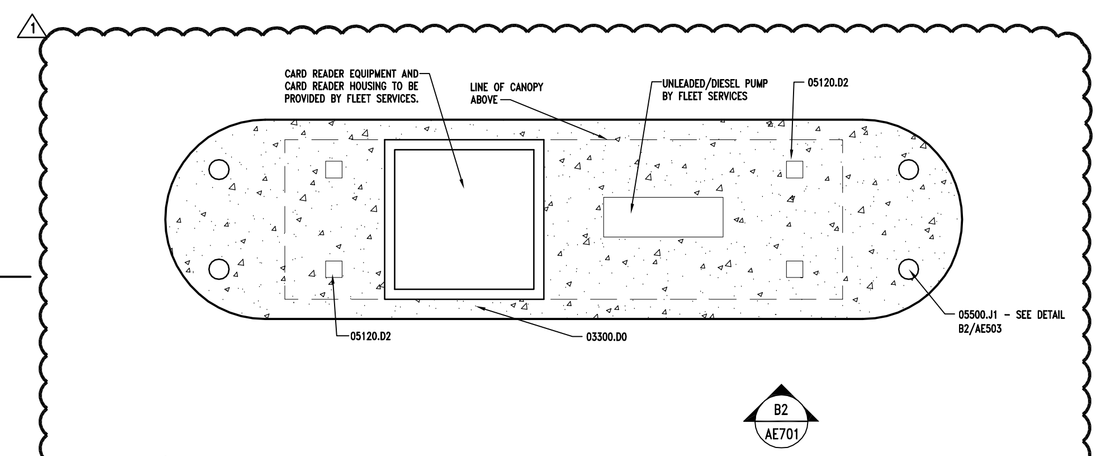

A2 FUEL ISLAND PLAN

AE701 | REF. | SCALE: 3/8" = 1'-0"

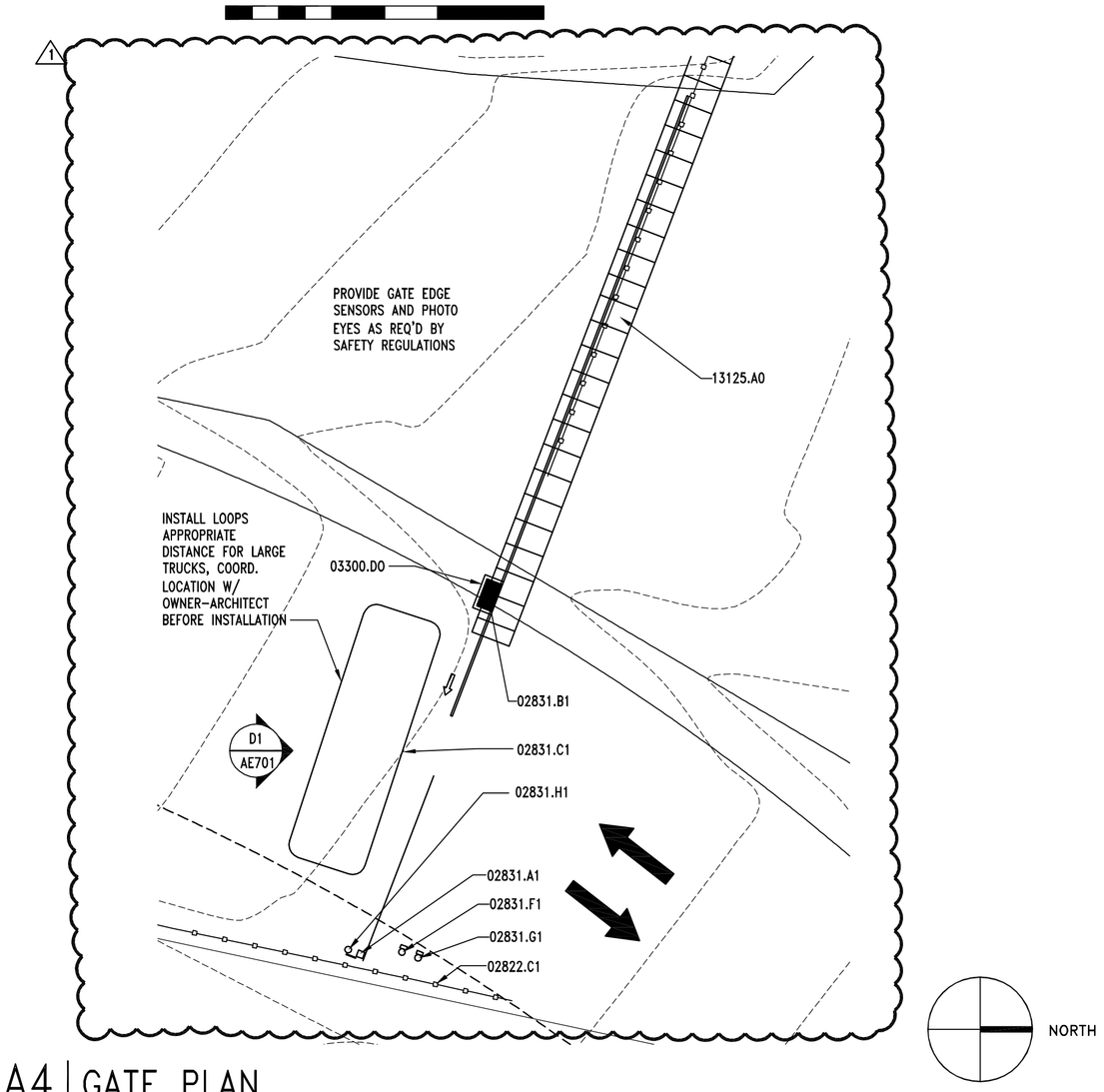

A4 GATE PLAN

AE701 | REF. | SCALE: 3/8" = 1'-0"

CLIENT

UDOT CONNECTING COMMUNITIES

STATION #3437A
SR-44 @ M.P. 0.5 ±
GREENDALE UTAH

DESIGNER

ARCHIPLEX GROUP
architecture · planning · design services
1135 South West Temple, Ste. A
Salt Lake City, UT 84101
P:(801) 961-7070
F:(801) 961-7373

CONSULTANTS

PROFESSIONAL SEAL

STATE OF UTAH
RALPH M. STANISLAW
95-310818-0301
LICENSED ARCHITECT

ISSUE

MARK	DATE	DESCRIPTION
1	3-20-08	ADDENDUM #2
	02-2008	CONSTRUCTION DOCUMENTS

DFCM CONTRACT NO:	077325
DFCM PROJECT NO:	07029900
ARCHIPLEX PROJECT NO:	0708.01
DRAWN BY:	K. PHILLIPS
CHECKED BY:	R. STANISLAW
SCALE:	AS SHOWN
DATE:	FEBRUARY, 2008

SHEET TITLE

GATE PLAN, GATE HOUSING, ELEVATION AND FENCE DETAILS

AE701

GENERAL STRUCTURAL NOTES

GENERAL

1. The structural notes are intended to complement the project specifications. Specific notes and details in the drawings shall govern over the structural notes and typical details.
2. Typical details and sections shall apply where specific details are not shown.
3. The contractor shall verify all site conditions and dimensions. If actual conditions differ from those shown in the contract drawings, the contractor shall immediately notify the architect/engineer before proceeding with the fabrication or construction of any effected elements.
4. Omissions or conflicts between the contract drawings and/or specifications shall be brought to the attention of the architect/engineer before proceeding with any work involved. In case of conflict, follow the most stringent requirement as directed by the architect/engineer at no additional cost to the owner.
5. The contractor shall submit a written request to the architect/engineer before proceeding with any changes, substitutions or modifications. Any work done by the contractor before receiving written approval will be at the contractor's risk.
6. The contractor shall coordinate with all trades any items that are to be integrated into the structural system such as openings, penetrations, mechanical and electrical equipment, etc. Sizes and locations of mechanical and other equipment that differs from those shown on the contract drawings shall be reported to the architect/engineer.
7. The contractor shall provide adequate shoring and bracing as required for his method of erection. Shoring and bracing shall remain in place until final connections for the permanent members are completed. The building shall not be considered stable until all connections are completed. Walls shall not be considered self-supporting and shall be braced until the floor/roof system is completed.
8. Site observations by BHB Consulting Engineers, P.C.'s field representative shall not be construed as approval of construction procedures nor special inspection.
9. Detailing and shop drawing production for structural elements will require information (including dimensions) contained in the architectural, structural and/or other consultants' drawings. The structural drawings shall be used in conjunction with the architectural and other consultant's drawings. Some dimensions and elements such as elevations, depressions, slopes, mechanical housekeeping pads, etc. are not shown in the structural drawings. All dimensions shown on structural drawings shall be verified by contractor with architectural, mechanical and electrical drawings.
10. Review of shop drawing submittals by BHB Consulting Engineers, P.C. is for general compliance only and is not intended for approval. The shop drawing review shall not relieve the contractor from the responsibility of completing the project according to the contract documents.
11. Shop drawings made from reproductions of the contract drawings will be rejected unless the contractor signs a release agreement prior to the shop drawings being reviewed.
12. Only an authorized representative of BHB Consulting Engineers, P.C. may make changes to these contract drawings. BHB Consulting Engineers, P.C. shall not be held responsible or liable for any claims arising directly or indirectly from changes made without written authorization by an authorized representative of BHB Consulting Engineers, P.C.

BASIS OF DESIGN

1. Governing Building Code — International Building Code 2006
2. Roof Snow Load
   a. Ground Snow Load — $P_g = 78$ psf
   b. Snow Importance Factor — $I_s = 1.0$
   c. Snow Exposure Coefficient — $C_e = 1.0$
   d. Thermal Exposure Coefficient — $C_t = 1.0$
   e. Roof Snow Load — $P_f = 0.7 * C_e * C_t * I_s * P_g = 55$ psf plus Snow Drift
3. Seismic Loads
   a. Short Period Mapped Spectral Acceleration — $S_S = 0.333$
   b. Soil Site Class — B
   c. Short Period Site Coefficient — $F_a = 1.0$
   d. 5% Damped Design Spectral Response Acceleration — $S_{DS} = 2/3 * F_a * S_S$
   e. Seismic Importance Factor — $I_e = 1.00$
   f. Fuel Island and Fence Gate House Response Modification Coefficient — R = 1.25
   g. Seismic Response Coefficient — $C_s = S_{DS} * I_e / R$
   h. W — Dead Loads of Structure
   i. Building Seismic Design Category — D
   j. System Overstrength Factor — 3.0
   k. Deflection Amplification Factor — 3.0
   l. Base Shear — $V = C_S * W = 0.178$ W (Strength Design)
4. Wind Loads
   a. Wind Velocity (3 Second Gust) — 90 mph
   b. Exposure Type — C
   c. Wind Importance Factor — 1.00

FOUNDATION

1. Soils Investigation Report: None.
2. Soil bearing pressure: 1500 psf. Assumed by Owner.
3. Frost Protection: 48 inches minimum.
4. Clear excavations of debris and loose soil prior to placing footings. All footings shall bear on undisturbed natural sub-grade or engineered compacted fill as noted in the soils report.

EARTHWORK

1. Clearing: The building area shall be stripped of all vegetation, topsoil and debris. Following stripping, all fill soils and any remaining loose natural soils shall be excavated to expose competent natural soils.
2. Proof roll and/or compact the entire building pad area with normal compaction equipment, in the presence of a qualified soils engineer to achieve, or verify the existence of, zero deflection and zero flexure.
3. Compacted structural fill: All fill material shall be a well-graded granular material with a maximum size less than 3 inches and with not more than 15 percent passing a No. 200 sieve. It shall be compacted to at least 95 percent of the maximum laboratory density as determined by ASTM D 1557 for fill beneath footings and floor slabs. All fill shall be tested. Compacted structural fill shall be placed in lifts not exceeding 8 inches in uncompacted thickness.
4. Floor slabs thicknesses shall be required by the plans and underlain by a granular layer at least 4 inches thick. The granular layer shall have a maximum size less than 1 inch with not more than 5 percent passing a #200 sieve and shall be compacted to at least 90 percent of the ~~maximum laboratory density as determined by ASTM D 1557.~~
5. Consult the project specifications for further earthwork requirements.

CONCRETE

1. Materials, unless noted otherwise:
   a. Normal weight aggregates — ASTM C 33
   b. Reinforcing Steel — ASTM 615 Grade 60 (Fy = 60 ksi) Use Grade 40 (Fy = 40 ksi) for field bent dowels with spacings indicated reduced by 1/3.
   c. Deformed Bar Anchors (DBA) — ASTM A496
   d. Admixtures:
      i. Air-entraining admixtures comply with ASTM C 260 (when used).
      ii. Calcium chloride shall not be added to the concrete mix.
   e. Type I cement complying with ASTM C-150 shall be used for all concrete.
   f. The water/cement ratios shall meet the requirements of ACI 318.
   g. Provide air entraining as recommended by ACI 318.
   h. No aluminum conduit or product containing aluminum or any other material injurious to concrete shall be embedded in concrete.
2. Compressive strengths of concrete at 28 days shall be as follows:
   a. Footings ....3,000 psi
   b. Interior Slabs on Grade ....4,000 psi
   c. Walls ....4,000 psi
   d. All Site Concrete ....4,000 psi
3. Only one grade or type of concrete shall be poured on the site at any given time.
4. The contractor shall be responsible for the design, detailing, care, placement and removal of all formwork and shores.
   a. Supporting forms and shoring shall not be removed until structural members have acquired sufficient strength to safely support their own weight and any construction load to which they may be subjected. In no case, however, shall forms and shoring be removed in less than 24 hours after concrete placement.
   b. Suspended slabs shall be re-supported after form removal until concrete reaches its 28-day specified compressive strength.
5. Reinforcement shall have the following concrete cover:
   Cast-in-place Concrete: .... Clear Cover
   a. Cast against and permanently exposed to earth ....3"
   b. Formed concrete exposed to earth or weather:
      #6 thru #18 bars ....2"
      #5 and smaller bars ....1-1/2"
   c. Concrete not exposed to weather or in contact with ground:
      Slabs, Walls, Joists: #11 bars and smaller ....3/4"
      Beams, Columns: Primary Reinf., Ties, Stirrups, Spirals ....1-1/2"
6. Construction Joints and Control Joints:
   a. Provide a formed and beveled 2 x 4 x continuous keyway in all horizontal and vertical construction joints including between top of footing and foundation walls, unless noted otherwise. In addition, all joints shall be intentionally roughened to a full amplitude of approximately 1/4 inch.
   b. Control joints shall be installed in slabs on grade so the length to width ratio of the slab is no more than 1.25:1. Control joints shall be completed within 12 hours of concrete placement. Control joints may be installed by:
      i. Saw cut a depth of 1/4 the thickness of the slab
      ii. Tooled joints a depth of 1/4 the thickness of the slab
   c. Install construction or control joints in slabs on grade at a spacing not to exceed 75 times the slab thickness in any direction for reinforced slabs, unless noted otherwise. Construction joints shall not exceed a distance of 125'-0" o.c. in any direction.
   d. In exposed areas, install construction or control joints in concrete over metal deck at a spacing not to exceed 10 feet o/c. Coordinate location with architectural drawings.
7. Construction
   a. Use chairs or other support devices recommended by the CRSI to support and tie reinforcement bars and WWF prior to placing concrete. WWF shall be continuously supported at 36" o.c. maximum. Reinforcing steel for slabs on grade shall be adequately supported on precast concrete units. Lifting the reinforcing off the grade during placement of concrete is not permitted.
   b. Concrete to be mechanically consolidated during placement per ACI standards.
   c. Contractor shall coordinate placement of all openings, curbs, dowels, sleeves, conduits, bolts, inserts and other embedded items prior to concrete placement.
   d. All embeds and dowels shall be securely tied to formwork or to adjacent reinforcing prior to the placement of concrete.
   e. No pipes, ducts, sleeves, etc shall be placed in structural concrete unless specifically detailed or approved by the structural engineer. Penetrations through walls when approved shall be built into the wall prior to concrete placement. Penetrations will not be allowed in footings or grade beams unless detailed. Piping shall be routed around these elements and footings stepped to avoid piping.
   f. Reinforcing Bars shall not be welded. Do not substitute reinforcing bars for DBAs or HSAs.
8. Detailing:
   a. Lap splice lengths shall be detailed to comply with the "Reinforcing Bar Lap Splice Schedule" on sheet S601. Splices may be made with mechanical splices capable of 125% tension capacity of the bar being spliced. Mechanical splices shall be the positive connecting type coupler and shall meet all Uniform Building Code requirements. Use "Cadweld", "Lenton" Standard Couplers, "Bar-Lock" or equal with internal protector. If mechanical splices are used, splices or couplers on adjacent bars shall be staggered a minimum of 24" apart along the longitudinal axis of the reinforcing bars.
   b. At joints provide reinforcing dowels to match the member reinforcing, unless noted otherwise.
   c. At all discontinuous control or construction slab on grade joints, provide 2 - #4 x 48 inches.
   d. Provide corner bars at intersecting wall corners using the same bar size and spacing as the horizontal wall reinforcing.
   e. All vertical reinforcing shall be doweled to footings, or to the structure below with the same size and spacing as the vertical reinforcing for the element above. Dowels extending into footings shall terminate with a 90 degree standard hook and shall extend to within 4" of the bottom of the footing. Footing dowels (#8 bars and smaller) with hooks need not extend more than 20" into footings.
   f. Horizontal wall reinforcing shall terminate at ends of walls and openings into the far end of the jamb column with a 90-degree standard hook plus a 6 bar diameter extension. Horizontal wall reinforcing shall be continuous through construction and control joints.
   g. See detail B2/S501 for reinforcing around miscellaneous openings (8" to 36" wide). For openings wider than 36", contact the engineer. All recesses that interrupt reinforcing shall be reinforced the same as an opening.

EPOXY

1. Epoxy shall be "HIT HY 150 MAX" or "HIT RE 500 " by Hilti Corporation, "Anchor-It" by Adhesive Technology Corporation, "Epcon Injection System" by Ramset/Redhead, "Power-Fast" by Rawl, or approved equal.
2. All drilled holes shall be 1/8 inch larger than the bar or anchor bolt being installed.
3. After drilling the proper size hole, clean the walls and bottom of the hole of all dust and debris using a nylon brush in conjunction with oil free compressed air. The hole shall be free of dust, debris and standing water.
4. Follow all manufacturer's recommendations for epoxy installation.

STRUCTURAL STEEL

1. Material:
   a. Other shapes & Plates — ASTM A36
   b. Deformed Bar Anchors (DBA) — ASTM A496
   c. Bolted Connections: — ASTM A325
2. Fabrication and construction shall comply with the latest edition of the following Codes and Standards:
   a. American Institute of Steel Construction (AISC), "Specification for the Design, Fabrication and Erection of Structural Steel for Buildings," with "Commentary".
   b. AISC "Code of Standard Practice" excluding the following: Section 3.4, Section 4.4, Section 4.4.1,
   c. AISC "Specification for Structural Joints Using ASTM A325 or A490 Bolts"
   d. American Welding Society (AWS), Structural Welding Code (specific items do not apply when they conflict with the AISC requirements).
   e. AISC "Seismic Provision for Structural Steel Buildings"
3. Welding
   a. All welding and cutting shall be performed by AWS certified welders.
   b. Use E-70 XX or as noted otherwise.
   c. All intersecting steel shapes which are not bolted shall be connected by a fillet weld all around, unless noted otherwise. Where fillet weld sizes are not shown they shall be 1/16" less than the thinnest of the connected parts for thicknesses 1/4" and larger. Fillet welds on plates less than 1/4" shall be of the same size as the thinnest of the connected part.
   d. Reinforcing Bars: Do not weld rebar. Do not substitute reinforcing bars for deformed bar anchors (DBAs), machine bolts, or headed stud anchors(HSAs).
   e. Do not weld anchor bolts, including "tack" welds.
   f. Headed Stud Anchors (HSAs) welding and deformed bar anchor welding shall conform to the manufacturer's specifications.
4. Bolted Connections:
   a. Use ASTM A325N bolts for steel to steel connections, as noted herein or as noted on the drawings. A325N bolts shall be used in connections for simple span framing and beam (or girder) to bearing plate connections. Tighten bolts to a snug tight condition.
   b. Use hardened washers beneath the turned element of all bolts or nuts. Use hardened beveled washers, to compensate for the lack of parallelism, where the outer face of the bolted parts has a slope greater than one in twenty with respect to the plane normal to the bolt axis. At oversized holes hardened washers or plates shall conform with ASTM F-436 and shall completely cover the slot after installation.
   c. Where a steel to steel beam connection is not shown, provide a standard AISC framed connection for one half the total uniform load capacity of the beam for the span and steel specified.
   d. Bolts, nuts and washers shall not be reused.

METAL DECKING

1. Steel deck shall comply with the latest requirements of the Steel Deck Institute.
2. All deck shall be 3-span continuous minimum. In areas where 3-span conditions are not possible, the contractor shall provide heavier gauge deck as required to provide the equivalent loading of the deck under a three span condition.
3. All deck supporting members shall be dry before welding.
4. Crimp seams before button punching or welding interlocking seams.
5. Where deck is to receive sprayed-on fire proofing, deck shall be coated, as required, with special paint that will allow the sprayed-on fire proofing to adhere to the deck.

Steel Roof Deck

a. Steel roof deck shall be 1.1/2" deep X 20 gage minimum painted, type "B" wide rib deck with interlocking side seams with the following properties:

	20 Gage
Minimum S ($in^3/_8$) =	0.234
Minimum I ($in^4/_8$) =	0.213

b. Minimum allowable deck diaphragm shear values shall be 500 lb/ft. for a 7'-0" deck span.
c. Weld steel roof deck to supporting framing members with 3/4" diameter puddle welds at the following spacings (Closer spacing may be used to develop minimum shear requirements.):
   i. 6" o.c. to all supports perpendicular to deck corrugations (7 welds per 36" sheet).
   ii. 6" o.c. to all supports parallel to deck corrugations.
d. Hilti power driven fasteners are acceptable as an alternative to welds provided the connection meets the diaphragm shear capacity given above. Call Hilti at 800-879-8000 extension 6337 for connection information comparison. If Hilti power driven fasteners are used, the contractor shall submit Hilti's calculations to the Architect/Engineer for review. Also if Hilti power driven fasteners are used, a Hilti representative shall be present before the decking is installed to make sure the installer is properly trained in using the equipment. The Hilti representative shall also make a site visit the day after deck has been started to be installed to verify the power driven fasteners are being installed correctly.
e. Attach interlocking seams with 1 1/2" long top seam welds at 18" o.c. maximum or with Verco PunchLok System at 12' o.c. maximum or with ASC Delta Grip System at 15' o.c. maximum. Closer spacing may be used to develop minimum shear requirements. A standard button punch can **not** be used in place of Verco PunchLok or DeltaGrip.
f. Provide a minimum bearing and a 4 inch lap at the splice points.

COLD-FORMED STEEL

1. All cold-formed steel shall meet the requirements of "Specifications for the Design of Cold-Formed Steel Structural Members" by American Iron and Steel Institute (AISI).
2. Light Gauge Steel Framing:
   a. Galvanized steel must meet the minimum requirements of ASTM A446 Grade D (Fy = 50 ksi) for 12, 14 and 16-gauge and ASTM A446 Grade A (Fy = 33 ksi) for 18-gauge and lighter. Galvanized coatings must meet the ASTM A525 specification.
   b. Follow all manufacturers' recommendations for the use of these products.
   c. Unless noted otherwise, all welded connections shall be done according to AWS standards.
   d. All interior non-bearing steel-stud walls that extend above the ceiling but do not attach to the structure above shall be brace with diagonal metal-stud braces (45 degrees). The kl/r ratio of the brace shall not exceed 200 and shall not be spaced further apart than 10'-0" o/c. Connect diagonal braces to the top of the steel stud walls and to the top flange of the steel beams with two #10 tek screws minimum. Where a concrete deck occurs above, use two powder-driven fasteners per diagonal brace. Other approved methods may be used.
3. Prefabricated Systems: Submit complete shop drawings and calculations of all elements for review. Shop Drawings shall bear the stamp of a Professional Engineer registered in the State of Utah.

PREFABRICATED METAL BUILDING

1. The design, fabrication and erection of all prefabricated elements and associated hardware shall comply with the latest requirements of the IBC, AISC, SDI and AISI.
2. Prior to fabrication and installation of anchor bolts, the metal building supplier shall submit complete shop drawings and calculations including reactions bearing the stamp of a Registered Design Professional licensed in the State of Utah. Complete calculations shall be submitted with the shop drawings.
3. Do not modify any structural element of the prefabricated metal building without the written consent and direction from the manufacturer. Send copies of the consent and modifications to the Architect and Engineer.
4. The design of the premanufactured structural roof system including the steel deck, joists, girders, columns, and the lateral force resisting system (including rigid frames) is the responsibility of the premanufactured metal building supplier. Refer to the prefabricated structural roof system supplier's drawings and calculations for the exact gravity roof load values and for the design of the roof and lateral systems.

SPECIAL INSPECTION AND QUALITY ASSURANCE

Special inspection and quality assurance, as required by section 1704 of the IBC, shall be provided by an independent agency employed by the owner unless waived by the building official. The contractor shall coordinate and cooperate with the required inspections. All testing and inspection reports shall be sent within 24 hours of the test to the architect, engineer and contractor for review. Special inspection during fabrication is not required if the fabricator is registered and approved to perform such work without special inspection. Approved fabricators shall submit a certificate of compliance at the completion of the fabrication to the building official. Items requiring special inspection and quality assurance are:

1. Soils (IBC 1704.7)
   a. Prior to placement of the prepared fill, the special inspector shall determine that the site has been prepared in accordance with the specifications.
   b. During placement and compaction of the fill material, the special inspector shall determine that the material being used and the maximum lift thickness comply with the specifications.
   c. The special inspector shall determine that the in-place dry density of the compacted fill material complies with the soils report.
      i. Continuous Footing Backfill: At each compacted backfill layer, at least one test for each 25 linear feet or less of wall length, but no fewer than 2 tests.
      ii. Spot Footing Backfill: Minimum of one compaction test for each lift for each spot footing.
   d. See specifications for further requirements.
2. Concrete placement (IBC Section 1704.4)
   a. Continuous special inspection shall be provided
   b. Cylinders, slump, temperature and air-entrainment shall be done for every 50 cubic yards or each day's production if less than 50 cubic yards.
   c. See specifications for further concrete testing requirements.
3. Bolts installed in concrete (IBC Section 1704.4)
   a. All bolts shall be inspected prior to and during concrete placement.
4. Embeds and Inserts installed in concrete (IBC Section 1704.4)
   a. All embeds and inserts shall be inspected prior to and during concrete placement.
5. Concrete reinforcing steel placement (IBC Section 1704.4)
   a. All Reinforcing shall be inspected prior to concrete placement.
6. Structural welding, including steel deck (IBC 1704.3)
   a. Periodic special inspection of metal floor prior to concrete placement and roof decks.
   b. Periodic special inspection of single pass fillet welds less than or equal to 5/16"
   c. Continuous special inspection of single pass fillet welds greater than 5/16" and multi-pass fillet welds.
   d. Continuous special inspection of complete and partial penetration welds.
7. High Strength bolted connections (IBC Section 1704.3.3)
   a. Periodic special inspection of bearing type connections.
   b. Continuous special inspection of slip critical connections. Special inspector shall be present to observe the pre-installation testing and calibration procedures.
8. Epoxy Anchors (IBC Section 1704.13)
   a. Special inspection shall verify all drilled holes' size and depth prior to installation of epoxy and epoxy cure.
9. Prefabricated Metal Building (IBC Section 1704.2)
   a. Periodic special inspection of shop fabrications unless fabricator is an approved fabricator by the State Building Official.
   b. Approved fabricators shall submit a certificate of compliance at the completion of the fabrication to the building official

DEFERRED SUBMITTALS

For the purpose of this section, deferred submittals are defined as per section 106.3.4.2 of the IBC. Submittal documents for deferred submittal items shall be submitted to the engineer/architect for their review for general conformance with the design of the building. Deferred structural submittals for this project are:

1. Prefabricated Metal Building

LEGEND OF MARKS AND ABREVIATIONS

AB	ANCHOR BOLT(S)	JST	JOIST
ABV	ABOVE		
ALT	ALTERNATE	k	KIP(S) = 1000 POUNDS
APPROX	APPROXIMATE	KLF	KIPS PER LINEAL FOOT
ARCH	ARCHITECT(URAL)	KSF	KIPS PER SQUARE FOOT
BLDG	BUILDING	LBS	POUNDS
BLW	BELOW	LF	LINEAL FOOT
BM	BEAM	LLH	LONG LEG HORIZONTAL
BOT	BOTTOM	LLV	LONG LEG VERTICAL
BRG	BEARING	LSV	LONG SIDE VERTICAL
BTWN	BETWEEN		
		MAX	MAXIMUM
CC.	CENTER-TO CENTER	MECH	MECHANICAL
C.J.	CONST/CONTROL JOINT	MFR	MANUFACTURER
COL	COLUMN	MIN	MINIMUM
CONC	CONCRETE	MISC	MISCELLANEOUS
CONST	CONSTRUCTION		
CTR	CENTER	NIC	NOT IN CONTRACT
CW-x	CONCRETE WALL	NTS	NOT TO SCALE
DBA	DEFORMED BAR ANCHOR	O.C.	ON CENTER
DBE	DECK BEARING ELEVATION	O.F.	OUTSIDE FACE
DBL	DOUBLE	OPNG	OPENING
DET	DETAIL	OPP	OPPOSITE
DIA	DIAMETER		
DIM	DIMENSION	PCF	POUNDS PER CUBIC FOOT
DN	DOWN	PL	PLATE
DWG	DRAWING	PLF	POUNDS PER LINEAL FOOT
DWL	DOWEL	PSF	POUNDS PER SQUARE FOOT
		PSI	POUNDS PER SQUARE INCH
EA	EACH	PT	POINT
E.F.	EACH FACE		
ELEC	ELECTRICAL	REINF	REINFORCING
ELEV	ELEVATION	REQD	REQUIRED
EQUIP	EQUIPMENT		
EQ	EQUAL		
E.W.	EACH WAY	SHT	SHEET
EXST	EXISTING	SI	SPECIAL INSPECTION
EXP	EXPANSION	SIM	SIMILAR
EXT	EXTERIOR	SOG	SLAB-ON-GRADE
		SQ	SQUARE
FC-x	CONTINUOUS FOOTING MARK	STAG	STAGGERED
F.D.	FLOOR DRAIN	STD	STANDARD
FDN	FOUNDATION	STL	STEEL
F.F.	FINISHED FLOOR	STR	STRUCTURAL
FS-x	SQUARE FOOTING MARK	STS	SELF TAPPING SCREWS
FT	FOOT		
FTG	FOOTING	T&B	TOP AND BOTTOM
FTS-x	THICKEN SLAB MARK	TEMP	TEMPERATURE
		THDS	THREADS
GA	GAUGE	T.O.	TOP OF
GALV	GALVANIZED	TOC	TOP OF CONCRETE
GSN	GENERAL STRUCTURAL NOTES	TOD	TOP OF DECK
		TOF	TOP OF FOOTING
HORIZ	HORIZONTAL	TOW	TOP OF WALL
HT	HEIGHT	TYP	TYPICAL
ICBO	INTERNATIONAL CONFERENCE OF BUILDING OFFICIALS	UNO	UNLESS NOTED OTHERWISE
IBC	INTERNATIONAL BUILDING CODE		
I.F.	INSIDE FACE	VERT	VERTICAL
IN.	INCH		
INT	INTERIOR	W/	WITH
		WWF	WELDED WIRE FABRIC
JT	JOINT	WWM	WELDED WIRE MESH

CLIENT

UDOT CONNECTING COMMUNITIES

STATION #3437A
SR-44 @ M.P. 0.5 ±
GREENDALE UTAH

DESIGNER

ARCHIPLEX GROUP
architecture · planning · design services
1135 South West Temple, Ste. A
Salt Lake City, UT 84101
P:(801) 961-7070
F:(801) 961-7373

CONSULTANTS

"Engineering Results"
BHB Consulting Engineers
A Professional Corporation
344 West 300 North
Suite 202
Salt Lake City, Utah 84103
Phone: 801.355.5656
Fax: 801.355.5950
Email: bhb@bhbengineers.com

PROFESSIONAL SEAL

ISSUE

MARK	DATE	DESCRIPTION
1	3-20-08	ADDENDUM #2
	02-2008	CONSTRUCTION DOCUMENTS

DFCM CONTRACT NO:	077325
DFCM PROJECT NO:	07029900
BHB PROJECT NO:	07099
DRAWN BY:	CHRIS B.
CHECKED BY:	GERALD M.
SCALE:	
DATE:	FEBRUARY, 2008

SHEET TITLE

GENERAL STRUCTURAL NOTES

S001

Q:\2007\07099\Struct\07099_S-001.dwg, 3/19/2008 2:54:22 PM, chrisb

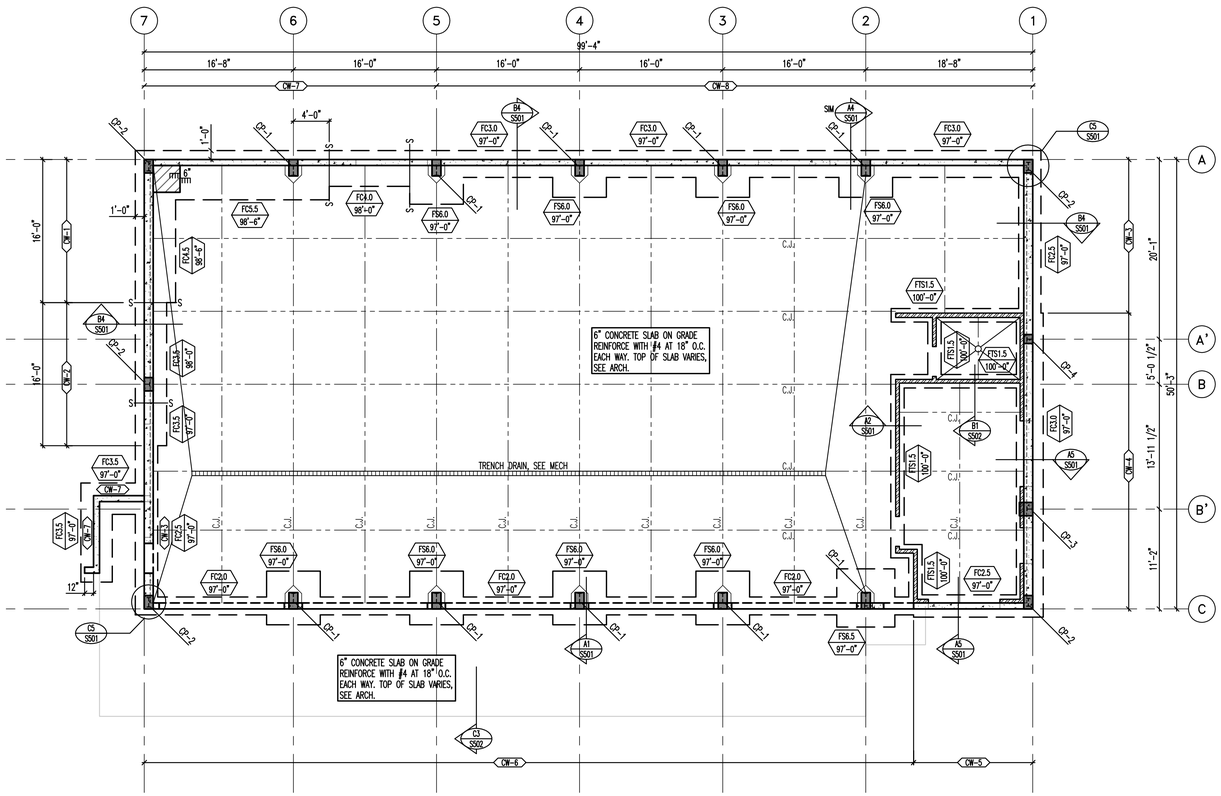

FOOTING AND FOUNDATION PLAN

SCALE: 1/8"=1'-0"

0 4' 8' 16'

NORTH

MARKS AND SYMBOLS LEGEND

- SECTION MARK / SHEET NUMBER
- FOOTING DESIGNATION / TOP OF FOOTING ELEVATION
- INDICATES CONCRETE WALL.
- DEPRESS FOUNDATION WALL AND POUR SLAB OVER. SEE DETAIL B4/S501 AND C3/S502.
- INDICATES 6" THICK CONCRETE HOUSE-KEEPING PAD. REINF WITH #4 BARS AT 12" O.C. EACH WAY. SEE DETAIL A3/S501 AND A4/S501.
- CW-x — INDICATES CONCRETE FOUNDATION WALL TYPE, SEE SCHEDULE ON SHEET S601.
- FCxx — INDICATES CONTINUOUS FOOTING. SEE SCHEDULE ON SHEET S601.
- FSxx — INDICATES SPOT FOOTING. SEE SCHEDULE ON SHEET S601.
- CP-x — INDICATES CONCRETE PIER TYPE, SEE SCHEDULE ON SHEET S601.
- C.J. — INDICATES CONTROL/CONSTRUCTION JOINT. SEE DETAILS C3/S501 AND C4/S501.
- SC-x — INDICATES STEEL COLUMN. SEE SCHEDULE ON SHEET S-601.

FOOTING AND FOUNDATION PLAN NOTES

1. COORDINATE LOCATION OF DEPRESSED SLABS, SLOPED SLABS, AND FLOOR DRAINS WITH ARCHITECTURAL AND MECHANICAL DRAWINGS.
2. SEE ARCHITECTURAL AND CIVIL DRAWINGS FOR EXTERIOR CONCRETE WORK AT DOORS, SIDEWALKS, ETC.
4. ALL SPOT FOOTINGS SHALL BE CENTERED UNDER COLUMNS (UNO).
5. SEE DETAILS C1/S501 AND C2/S501 FOR CONDITION WHERE BURIED PIPES RUN PARALLEL AND PERPENDICULAR TO FOOTINGS.
6. SEE DETAIL C3/S501 AND C4/S501 FOR TYPICAL CONTROL/CONSTRUCTION JOINTS IN CONCRETE SLAB ON GRADE AND AT SLAB DEPRESSIONS.
7. SEE DETAIL B1/S501 FOR SLAB REINFORCING WHERE CONTROL JOINTS ARE DISCONTINUOUS.
8. SEE DETAIL B2/S501 FOR ADDITIONAL REINFORCING AT MISCELLANEOUS OPENINGS IN CONCRETE WALLS.
9. SEE DETAIL A3/S501 AND A4/S501 FOR ANCHORAGE OF HOUSEKEEPING PADS.
10. SEE ARCHITECTURAL DRAWINGS FOR DIMENSIONS TO ALL STEEL COLUMNS.
11. FOOTING AND CONCRETE PIER SIZES SHOWN ARE AN ESTIMATE OF ACTUAL SIZES. ACTUAL SIZES WILL BE PROVIDED AFTER PREFABRICATED METAL BUILDER IS SELECTED. ALL BIDDERS SHALL PROVIDE UNIT PRICES FOR ADDING OR SUBTRACTING VOLUME OF CONCRETE, WEIGHT OF REINFORCING STEEL AND VOLUME OF EARTHWORK.
12. SEE "EARTHWORK" NOTES ON SHEET S001 FOR MINIMUM FILL REQUIRED BENEATH FOOTINGS.

CLIENT

UDOT CONNECTING COMMUNITIES

STATION #3437A
SR-44 @ M.P. 0.5 ±
GREENDALE UTAH

DESIGNER

ARCHIPLEX GROUP
architecture · planning · design services
1135 South West Temple, Ste. A
Salt Lake City, UT 84101
P:(801) 961-7070
F:(801) 961-7373

CONSULTANTS

"Engineering Results"
BHB Consulting Engineers
A Professional Corporation
344 West 300 North
Suite 202
Salt Lake City, Utah 84103
Phone: 801.355.5656
Fax: 801.355.5950
Email: bhb@bhbengineers.com

PROFESSIONAL SEAL

ISSUE

MARK	DATE	DESCRIPTION
1	3-20-08	ADDENDUM #2
	02-2008	CONSTRUCTION DOCUMENTS

DFCM CONTRACT NO:	077325
DFCM PROJECT NO:	07029900
BHB PROJECT NO:	07099
DRAWN BY:	CHRIS B.
CHECKED BY:	GERALD M.
SCALE:	
DATE:	FEBRUARY, 2008

SHEET TITLE

FOOTING AND FOUNDATION PLAN

S101 1

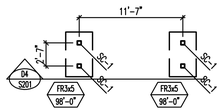

D1 FUEL ISLAND [PLAN VIEW]
ENG1,3-701
NO SCALE

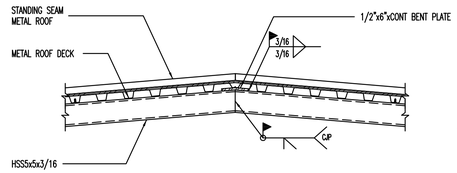

D2 FUEL ISLAN RIDGE BEAM
ENG1,3-701
NO SCALE

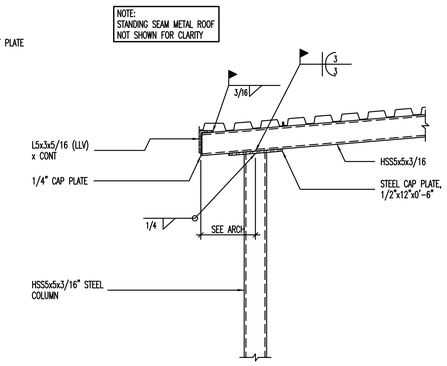

D3 FUEL ISLAND BEAM TO COLUMN CONNECTION
ENG1,3-701
NO SCALE

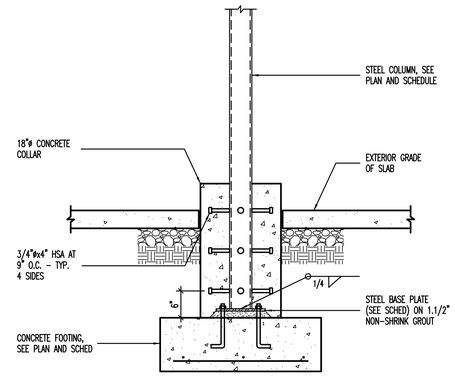

D4 FUEL ISLAND FOOTING AND FOUNDATION
ENG1,3-701
NO SCALE

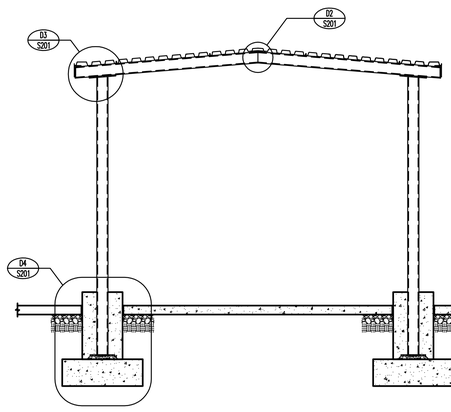

C4 FUEL ISLAND ELEVATION
ENG1,3-701
NO SCALE

CLIENT

UDOT CONNECTING COMMUNITIES

STATION #3437A
SR-44 @ M.P. 0.5 ±
GREENDALE UTAH

DESIGNER

ARCHIPLEX GROUP
architecture · planning · design services
1135 South West Temple, Ste. A
Salt Lake City, UT 84101
P:(801) 961-7070
F:(801) 961-7373

CONSULTANTS

"Engineering Results"
BHB Consulting Engineers
A Professional Corporation
244 West 300 North
Suite 202
Salt Lake City, Utah 84103
Phone: 801.355.5656
Fax: 801.355.5950
Email: bhb@bhbengineers.com

PROFESSIONAL SEAL

ISSUE

MARK	DATE	DESCRIPTION
1	3-20-08	ADDENDUM #2
	02-2008	CONSTRUCTION DOCUMENTS

DFCM CONTRACT NO:	077325
DFCM PROJECT NO:	07029900
BHB PROJECT NO:	07099
DRAWN BY:	CHRIS B.
CHECKED BY:	GERALD M.
SCALE:	
DATE:	FEBRUARY, 2008

SHEET TITLE

FUEL ISLAND
DETAILS

S201 1

Q:\2007\07099\Structural\07099_S-201.dwg, 3/19/2008 2:53:52 PM, eshelp

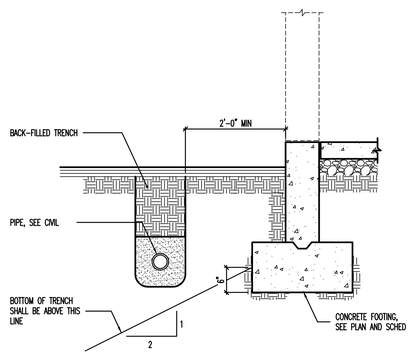

C1 CONDITION AT PIPE PARALLEL TO CONCRETE FOOTING
NO SCALE

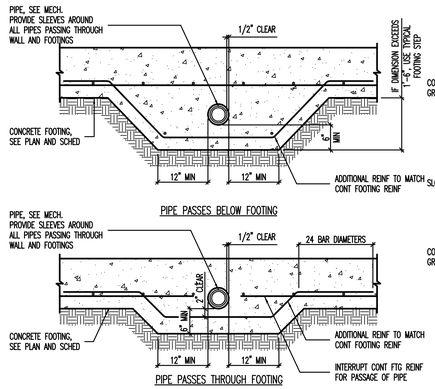

C2 CONDITIONS AT PIPE PERPENDICULAR TO FOOTING
NO SCALE

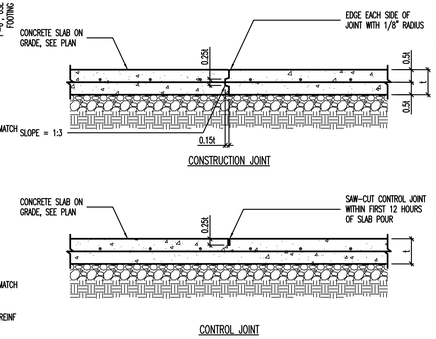

C3 TYPICAL SLAB ON GRADE JOINT DETAILS
NO SCALE

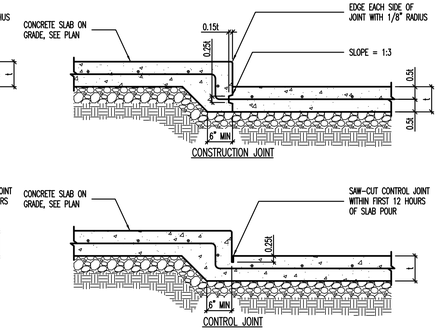

C4 JOINT DETAILS AT SLAB DEPRESSIONS
NO SCALE

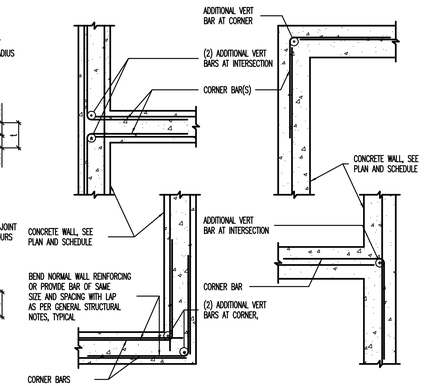

C5 TYPICAL CORNER WALL REINFORCING AT CONCRETE WALLS [PLAN VIEW]
NO SCALE

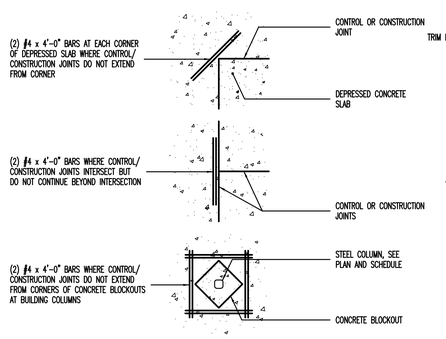

B1 LOCATIONS REQUIRING ADDITIONAL SLAB REINFORCING [PLAN VIEW]
NO SCALE

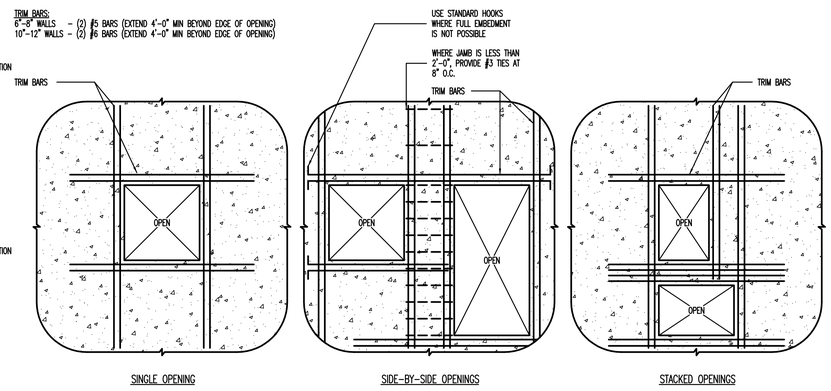

B2 TYPICAL REINFORCING FOR MISCELLANEOUS OPENINGS LESS THAN 3'-0" IN CONCRETE WALLS
WHERE MISCELLANEOUS OPENING WIDTH IS GREATER THAN 3'-0" WIDE, CONTACT STRUCTURAL ENGINEER.
NO SCALE

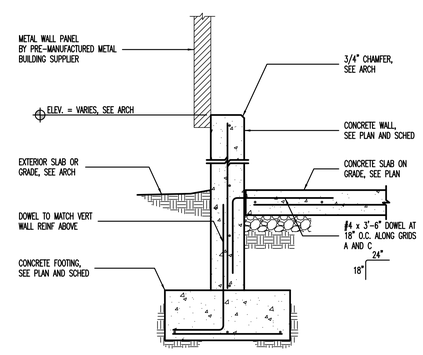

B4 FOUNDATION WALL DETAIL
NO SCALE

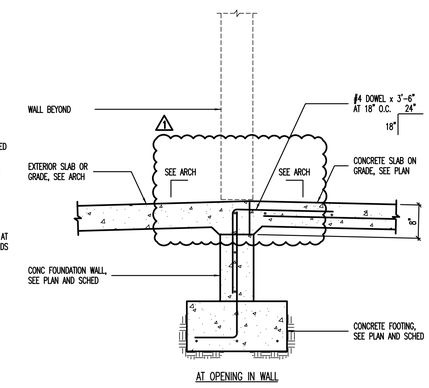

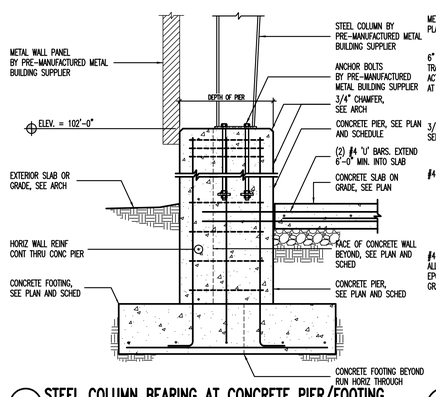

A1 STEEL COLUMN BEARING AT CONCRETE PIER/FOOTING
NO SCALE

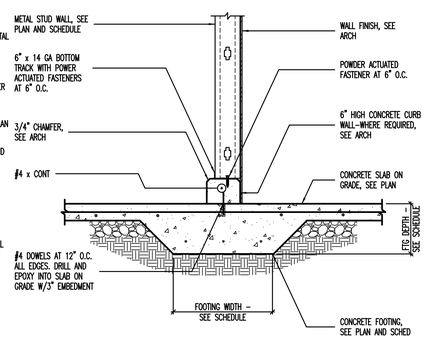

A2 THICKENED SLAB FOOTING AT INTERIOR STUD WALL
NO SCALE

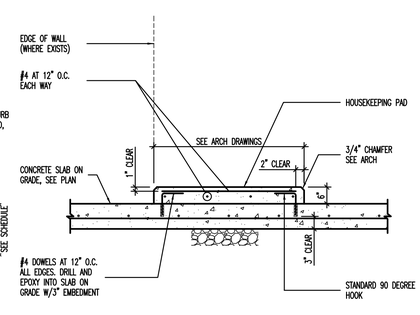

A3 TYPICAL HOUSEKEEPING PAD
NO SCALE

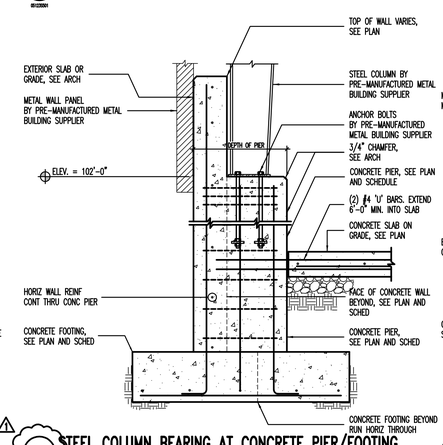

A4 STEEL COLUMN BEARING AT CONCRETE PIER/FOOTING
NO SCALE

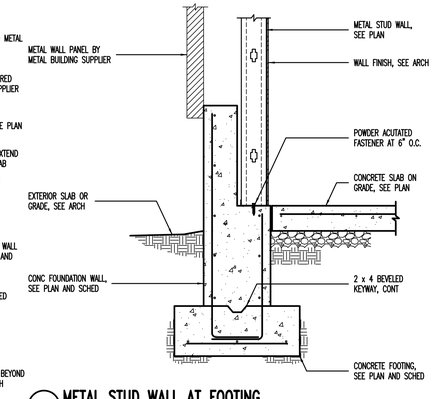

A5 METAL STUD WALL AT FOOTING
NO SCALE

CLIENT

STATION #3437A
SR-44 @ M.P. 0.5 ±
GREENDALE UTAH

DESIGNER

ARCHIPLEX GROUP
architecture · planning · design services
1135 South West Temple, Ste. A
Salt Lake City, UT 84101
P:(801) 961-7070
F:(801) 961-7373

CONSULTANTS

"Engineering Results"
BHB Consulting Engineers
A Professional Corporation
244 West 300 North
Suite 202
Salt Lake City, Utah 84103
Phone: 801.355.5656
Fax: 801.355.5950
Email: bhb@bhbengineers.com

PROFESSIONAL SEAL

ISSUE

MARK	DATE	DESCRIPTION
1	3-20-08	ADDENDUM #2
	02-2008	CONSTRUCTION DOCUMENTS

DFCM CONTRACT NO:	077325
DFCM PROJECT NO:	07029900
BHB PROJECT NO:	07099
DRAWN BY:	CHRIS B.
CHECKED BY:	GERALD M.
SCALE:	
DATE:	FEBRUARY, 2008

SHEET TITLE

FOOTING AND FOUNDATION DETAILS

S501

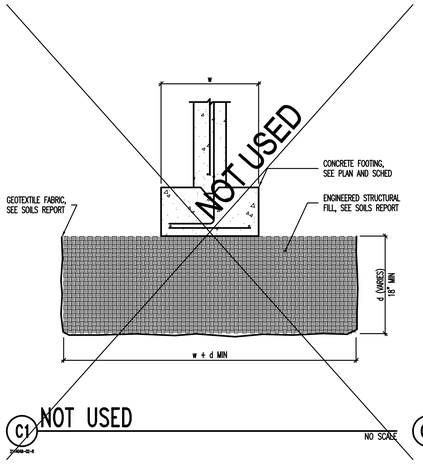

C1 NOT USED

NO SCALE

C2 NOT USED

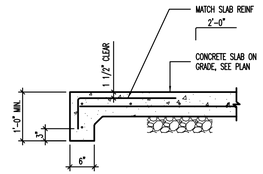

C3 SLAB TURNDOWN DETAIL

NO SCALE

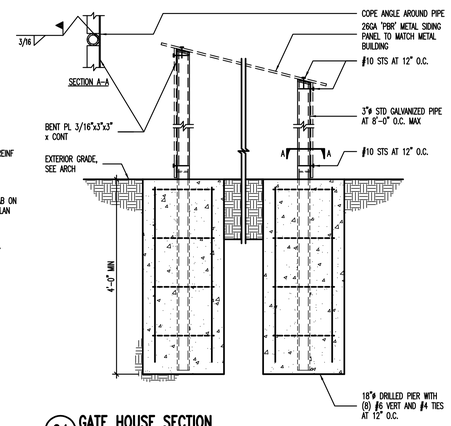

C4 GATE HOUSE SECTION

NO SCALE

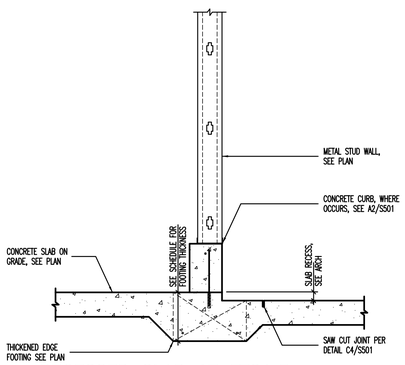

B1 RECESSED SLAB AT FTS1.5

CLIENT

UDOT CONNECTING COMMUNITIES

STATION #3437A
SR-44 @ M.P. 0.5 ±
GREENDALE UTAH

DESIGNER

ARCHIPLEX GROUP
architecture · planning · design services
1135 South West Temple, Ste. A
Salt Lake City, UT 84101
P:(801) 961-7070
F:(801) 961-7373

CONSULTANTS

"Engineering Results"
BHB Consulting Engineers
A Professional Corporation
244 West 300 North
Suite 202
Salt Lake City, Utah 84103
Phone: 801.355.5656
Fax: 801.355.5950
Email: bhb@bhbengineers.com

PROFESSIONAL SEAL

ISSUE

MARK	DATE	DESCRIPTION
1	3-20-08	ADDENDUM #2
	02-2008	CONSTRUCTION DOCUMENTS

DFCM CONTRACT NO:	077325
DFCM PROJECT NO:	07029900
BHB PROJECT NO:	07099
DRAWN BY:	CHRIS B.
CHECKED BY:	GERALD M.
SCALE:	
DATE:	FEBRUARY, 2008

SHEET TITLE

FOOTING AND FOUNDATION DETAILS

S502 1

CONCRETE FOOTING SCHEDULE

MARK	WIDTH	LENGTH	DEPTH	REINFORCING CROSSWISE				REINFORCING LENGTHWISE				COMMENTS
				No.	SIZE	LENGTH	SPACING	No.	SIZE	LENGTH	SPACING	
FTS1.5	1'-6"	CONT	12"	–	–	–	–	2	#4	CONT	EQ	THICKENED SLAB
FC2.0	2'-0"	CONT	12"	–	–	–	–	3	#4	CONT	EQ	
FC2.5	2'-6"	CONT	12"	–	#5	2'-0"	14"	3	#5	CONT	EQ	
FC3.0	3'-0"	CONT	12"	–	#5	2'-6"	14"	3	#5	CONT	EQ	
FC3.5	3'-6"	CONT	12"	–	#5	3'-0"	14"	3	#5	CONT	EQ	
FC4.0	4'-0"	CONT	12"	–	#5	3'-6"	14"	4	#5	CONT	EQ	
FC4.5	4'-6"	CONT	12"	–	#5	4'-0"	14"	4	#5	CONT	EQ	
FC5.0	5'-0"	CONT	12"	–	#5	4'-6"	14"	5	#5	CONT	EQ	
1 FC5.5	5'-6"	CONT	12"	–	#5	5'-0"	14"	6	#5	CONT	EQ	
FS2.5	2'-6"	2'-6"	12"	3	#5	2'-0"	EQ	3	#5	2'-0"	EQ	
FS3.0	3'-0"	3'-0"	12"	3	#5	2'-6"	EQ	3	#5	2'-6"	EQ	
FS3.5	3'-6"	3'-6"	12"	3	#5	3'-0"	EQ	3	#5	3'-0"	EQ	
FS4.0	4'-0"	4'-0"	12"	4	#5	3'-6"	EQ	4	#5	3'-6"	EQ	
FS4.5	4'-6"	4'-6"	12"	4	#5	4'-0"	EQ	4	#5	4'-0"	EQ	
FS5.0	5'-0"	5'-0"	12"	5	#5	4'-6"	EQ	5	#5	4'-6"	EQ	
FS5.5	5'-6"	5'-6"	12"	5	#5	5'-0"	EQ	5	#5	5'-0"	EQ	
FS6.0	6'-0"	6'-0"	12"	6	#5	5'-6"	EQ	6	#5	5'-6"	EQ	
1 FS6.5	6'-6"	6'-6"	14"	8	#5	6'-0"	EQ	8	#5	6'-0"	EQ	
FS7.0	7'-0"	7'-0"	14"	8	#5	6'-6"	EQ	8	#5	6'-6"	EQ	
FS7.5	7'-6"	7'-6"	14"	8	#5	7'-0"	EQ	8	#5	7'-0"	EQ	

CONCRETE FOOTING NOTES:
1. PLACE ALL FOOTING REINFORCING IN THE BOTTOM OF THE FOOTING WITH 3" CLEAR CONCRETE COVER (UNO).
2. TOP REINFORCING, WHERE OCCURS, SHALL BE PLACED IN THE TOP OF THE FOOTING WITH 2" MINIMUM CONCRETE COVER.
3. IF FOOTINGS ARE EARTH-FORMED, FOOTINGS SHALL BE 6" LONGER AND WIDER THAN SCHEDULED.
4. SEE GENERAL STRUCTURAL NOTES FOR ADDITIONAL REQUIREMENTS.
5. SOME SCHEDULED FOOTINGS MAY NOT BE USED, SEE FOOTING AND FOUNDATION PLAN FOR FOOTING MARKS.

C1 CONCRETE FOOTING SCHEDULE
S0601_CONC_FTG-C3000-S1500 — NO SCALE

CONCRETE PIER SCHEDULE

MARK	PIER SIZE	REINFORCING		TYPE	COMMENTS
		VERTICAL	TIES		
CP-1	12" x 22"	(10) #5	(2) #3 AT 8" O.C.	A	
CP-2	12" x 18"	(8) #5	(2) #3 AT 8" O.C.	B	
CP-3	12" x 18"	(8) #5	(2) #3 AT 8" O.C.	C	
CP-4	12" x 18"	(8) #5	(2) #3 AT 8" O.C.	C	

CONCRETE PIER NOTES:
1. INSTALL (3) SETS OF TIES AT 3" O.C. AT TOP OF ALL PIERS (UNO).
2. RUN HORIZONTAL CONCRETE WALL REINFORCING CONTINUOUS THROUGH PIER WHEN PIER IS POURED MONOLITHICALLY WITH CONCRETE WALL.
3. SEE GENERAL STRUCTURAL NOTES FOR ADDITIONAL REQUIREMENTS.

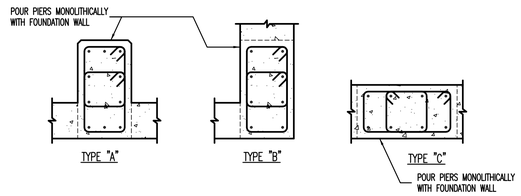

C2 CONCRETE PIER SCHEDULE
S0601_CONC_PIER-01 — NO SCALE

EPOXY DOWEL EMBED SCHEDULE

DOWEL SIZE	MINIMUM EMBEDMENT INTO EXISTING CONCRETE
#4	6 1/2"
#5	7 1/2"
#6	10"
#7	1'-1"
#8	1'-4"

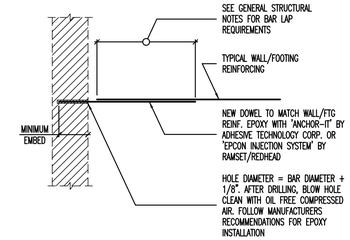

C3 EPOXY DOWEL EMBED SCHEDULE
S0601_SPE_WALL-01 — NO SCALE

CONCRETE WALL SCHEDULE

MARK	THICKNESS	REINFORCING			WALL TYPE	COMMENTS
		VERTICAL	HORIZONTAL	TOP AND BOTTOM		
CW-1	12"	#5 AT 16" O.C. E.F.	#4 AT 12" O.C. E.F.	(2) #5	C	.
CW-2	12"	#4 AT 18" O.C. E.F.	#4 AT 12" O.C. E.F.	(2) #4	C	
CW-3	12"	#4 AT 18" O.C. E.F.	#4 AT 12" O.C. E.F.	(2) #4	C	
CW-4	12"	#4 AT 18" O.C.	#4 AT 12" O.C.	(1) #4	A	ABV. ELEV. 100'-0"
	20"	#4 AT 18" O.C. E.F.	#4 AT 12" O.C. E.F.	(2) #4	C	BELOW ELEV. 100'-0"
CW-5	8"	#4 AT 18" O.C.	#4 AT 12" O.C.	(1) #4	A	ABV. ELEV. 100'-0"
	16"	#4 AT 18" O.C. E.F.	#4 AT 12" O.C. E.F.	(2) #4	C	BELOW ELEV. 100'-0"
CW-6	8"	#4 AT 18" O.C.	#4 AT 12" O.C.	(1) #4	A	
CW-7	8"	#5 AT 15" O.C.	#4 AT 12" O.C.	(1) #5	B	
CW-8	8"	#5 AT 18" O.C.	#4 AT 12" O.C.	(1) #4	B	

CONCRETE FOUNDATION WALL NOTES:
1. SEE GENERAL STRUCTURAL NOTES FOR ADDITIONAL REQUIREMENTS.
2. CONCRETE FOUNDATION WALLS NOT DESIGNATED ON PLANS SHALL BE REINFORCED AS FOLLOWS:

THICKNESS	VERTICAL REINFORCING	HORIZONTAL REINFORCING
6"	#4 BARS AT 18" O.C.	#4 BARS AT 16" O.C.
8"	#4 BARS AT 18" O.C.	#4 BARS AT 12" O.C.
10"	#4 BARS AT 16" O.C.	#5 BARS AT 15" O.C.
12"	#4 BARS AT 18" O.C. E.F.	#4 BARS AT 16" O.C. E.F.

ABBREVIATIONS:
E.F. EACH FACE
I.F. INSIDE FACE
O.F. OUTSIDE FACE

WALL REINFORCING PLACEMENT TYPES:

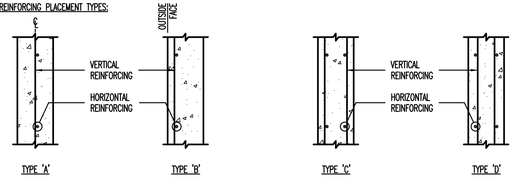

A1 CONCRETE WALL SCHEDULE
S0601_CONC_WALL-01 — NO SCALE

CONCRETE REINFORCING BAR LAP SPLICE SCHEDULE

BAR SIZE	f'c = 3000psi				f'c = 4000psi				f'c = 5000psi				f'c = 6000psi			
	REGULAR		TOP		REGULAR		TOP		REGULAR		TOP		REGULAR		TOP	
	CLASS		CLASS		CLASS		CLASS		CLASS		CLASS		CLASS		CLASS	
	A	B	A	B	A	B	A	B	A	B	A	B	A	B	A	B
#3	13"	17"	17"	21"	12"	16"	16"	21"	12"	16"	16"	21"	12"	16"	16"	21"
#4	17"	22"	22"	28"	15"	19"	19"	25"	13"	17"	17"	22"	12"	16"	16"	21"
#5	21"	27"	27"	35"	18"	24"	24"	31"	16"	21"	21"	27"	15"	19"	19"	25"
#6	27"	36"	36"	46"	24"	31"	31"	40"	21"	28"	28"	36"	20"	25"	25"	33"
#7	37"	48"	48"	63"	32"	42"	42"	54"	29"	38"	38"	49"	27"	34"	34"	44"
#8	49"	64"	64"	82"	42"	55"	55"	71"	38"	49"	49"	64"	35"	45"	45"	58"
#9	62"	80"	80"	104"	54"	70"	70"	90"	48"	62"	62"	81"	44"	57"	57"	74"
#10	78"	102"	102"	132"	68"	88"	88"	115"	61"	79"	79"	102"	56"	72"	72"	94"
#11	96"	125"	125"	162"	83"	108"	108"	141"	76"	97"	97"	126"	68"	88"	88"	115"

CONCRETE REINFORCING BAR LAP SPLICE NOTES:
1. THIS SCHEDULE SHALL BE USED FOR ALL BAR SPLICES IN CONCRETE WALLS, UNLESS NOTED OTHERWISE.
2. CLASS 'A' SPLICES MAY BE USED ONLY IN CASES WHERE 50% OR LESS OF THE BARS ARE SPLICED WITHIN THE LAP SPLICE LENGTH.
3. CLASS 'B' SPLICES SHALL BE USED FOR ALL SPLICES UNLESS THE REQUIREMENTS OF NOTE No. 2 ABOVE ARE MET.
4. TIES AND STIRRUPS SHALL NOT BE SPLICED.
5. SPLICES FOR BUNDLED BARS:
   a. FOR BUNDLED BARS OF THREE OR LESS, LAP SPLICE LENGTHS SHALL BE MULTIPLIED BY 1.2.
   b. FOR BUNDLED BARS OF FOUR OR MORE, LAP SPLICE LENGTHS SHALL BE MULTIPLIED BY 1.33.
   c. INDIVIDUAL BAR SPLICES WITHIN A BUNDLE SHALL NOT OVERLAP.
   d. ENTIRE BUNDLES SHALL NOT BE LAP SPLICED.
6. FOR ALL LIGHTWEIGHT CONCRETE, LAP LENGTHS SHALL BE MULTIPLIED BY 1.3.
7. FOR ALL EPOXY COATED BARS, LAP LENGTHS SHALL BE MULTIPLIED BY 1.3 FOR TOP BARS AND 1.5 FOR REGULAR BARS.
8. TOP BARS ARE CLASSIFIED AS HORIZONTAL BARS WHERE 12", OR MORE, OF FRESH CONCRETE IS CAST BELOW THE REINFORCING BAR.
9. SEE GENERAL STRUCTURAL NOTES FOR ADDITIONAL REQUIREMENTS.

A2 CONCRETE REINFORCING BAR LAP SPLICE SCHEDULE
S0601_CONC_REINF-01 — NO SCALE

STEEL COLUMN SCHEDULE

MARK	SIZE	STEEL BASE PLATE	STEEL CAP PLATE	COMMENTS
1 SC-1	HSS5x5x3/16	3/4" (SBP-1)	1/2" (SCP-1)	

STEEL COLUMN NOTES:
1. UNLESS NOTED OTHERWISE, ALL COLUMNS SHALL BE INSTALLED WITH (4) 3/4"ø ANCHOR BOLTS WITH 3" MINIMUM HOOKS. PROJECT ANCHOR BOLTS 3" MINIMUM ABOVE THE TOP OF THE BASE PLATE. EMBEDMENT SHALL BE 9" MINIMUM. ALL BOLTS SHALL BE INSTALLED WITH HARDENED WASHERS BENEATH THE NUT. ANY BOLT HOLES LARGER THAN THE BOLT DIAMETER PLUS 5/16" SHALL HAVE 5/16" PLATE WASHERS INSTALLED BENEATH THE HARDENED WASHERS.
2. ALL CAP PLATE BOLTS SHALL BE 3/4"ø A325N BOLTS, TYPICAL UNLESS NOTED OTHERWISE.
3. ANCHOR BOLTS SHALL NOT BE WELDED (INCLUDING TACK WELDS).
4. SEE GENERAL STRUCTURAL NOTES FOR ADDITIONAL REQUIREMENTS.

STEEL BASE PLATE TYPES:

BASE PLATE LEGEND
co = 1/2" MINIMUM
ed = 1 1/2" MINIMUM
bc = 3" MINIMUM

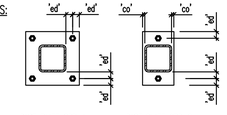

STEEL CAP PLATE TYPES:

CAP PLATE LEGEND
co = 1/2" MINIMUM
ed = 1 1/2" MINIMUM
bc = BEAM OR GIRDER GAGE
w = BEAM OR GIRDER GAGE + 3"
OR
BEAM OR GIRDER WIDTH + 1"
OR
COLUMN WIDTH + 1"
WHICHEVER IS GREATER

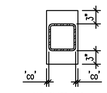

A3 STEEL COLUMN SCHEDULE
S0601_STL_COL-01 — NO SCALE

CLIENT

UDOT CONNECTING COMMUNITIES

STATION #3437A
SR-44 @ M.P. 0.5 ±
GREENDALE UTAH

DESIGNER

ARCHIPLEX GROUP
architecture · planning · design services
1135 South West Temple, Ste. A
Salt Lake City, UT 84101
P:(801) 961-7070
F:(801) 961-7373

CONSULTANTS

"Engineering Results"
BHB Consulting Engineers
A Professional Corporation
244 West 300 North
Suite 202
Salt Lake City, Utah 84103
Phone: 801.355.5656
Fax: 801.355.5950
Email: bhb@bhbengineers.com

PROFESSIONAL SEAL

ISSUE

MARK	DATE	DESCRIPTION
1	3-20-08	ADDENDUM #2
	02-2008	CONSTRUCTION DOCUMENTS

DFCM CONTRACT NO:	077325
DFCM PROJECT NO:	07029900
BHB PROJECT NO:	07099
DRAWN BY:	CHRIS B.
CHECKED BY:	GERALD M.
SCALE:	
DATE:	FEBRUARY, 2008

SHEET TITLE

STRUCTURAL SCHEDULES

S601

C:\2007\07099\Structural\07099_S-601.dwg, 3/19/2008 2:54:30 PM, chrisb

SYMBOL SCHEDULE

Symbol	Description
RT 1	SPECIFIED MECHANICAL EQUIPMENT (SEE SCHEDULE)
A 150	SPECIFIED REGISTER OR GRILLE & DESIGN CFM (SEE SCHEDULE)
3	REFERENCE TO GENERAL NOTES FOR CLARIFICATION
6"Φ	DUCTWORK INSIDE DIMENSION (ROUND)
12/10	DUCTWORK INSIDE DIMENSIONS (RECTANGULAR - WIDTH/HEIGHT)
	SUPPLY AIR TOWARDS
	SUPPLY AIR AWAY
	RETURN AIR OR EXHAUST AIR TOWARDS
	RETURN AIR OR EXHAUST AIR AWAY
	DIRECTION OF AIR FLOW
3/4"-S	REFRIGERATION PIPE SIZE (SUCTION)
3/8"-L	REFRIGERATION PIPE SIZE (LIQUID)
	CEILING GRILLE
VD	VOLUME DAMPER
FD	FIRE DAMPER
SD	SMOKE DETECTOR
U/C	UNDERCUT DOOR
S	SENSOR
T	THERMOSTAT
W	SWITCH

FURNACE

MARK	MANUFACTURER CATALOG No.	CFM	INPUT BTU	OUTPUT BTU	V	PHASE	HP	S.P.	RPM	DRIVE	FILTER SIZE	NOTES
F 1	TRANE #TUX1B080A9421A	800	80,000	74,000	115	1	1/2	0.5	1075	DIRECT	14"X20"X1"	(1)

(1) AFUE - 93; R-22; PROVIDE W/TXC050C4HPD EVAPORATOR; CONCENTRIC VENT KIT, CONDENSER, EVAPORATOR AND FURNACE BY SAME MANUFACTURER; PROPANE.

EXHAUST FAN SCHEDULE

MARK	SERVES	CFM	STATIC PRESS.	HP	RPM	V	PHASE	SONES	WEIGHT	MAKE & MODEL	NOTES
EF 1	RESTROOM	120	0.15	50W	1200	120	1	1.7	22	COOK #GC-240	(4) (5) (6)
EF 2	VEHICLE SVC BAY	6,000	0.25	1.0	701	208	1	19.7	299	COOK XLP 30	(1) (2) (3) (7) (8) (9)

(1) PROVIDE WALL FAN AS PACKAGED UNIT
(2) CONTROL WITH CARBON MONOXIDE DETECTOR THROUGH ON/AUTO SWITCH
(3) INNER LOCK LOUVER MOTOR WITH FAN MOTOR
(4) CEILING GRILLE
(5) COOK WCA-2 WALL CAP AND DAMPER
(6) CONTROL WITH MOTION DETECTOR
(7) INTEGRAL EXHAUST SHUTTER
(8) MOTORIZED INLET LOUVER. INTERLOCK LOUVER WITH FAN MOTOR SEE PLANS FOR LOCATION
(9) SAFETY INLET SCREEN

1

GAS-FIRED RADIANT HEATERS

MARK	MODEL MANUFACTURER	INPUT BTUH	UNIT WEIGHT	AFUE RATING	GAS CONNECTION	ELEC. REQ.	AMPS	FLUE SIZE	REMARKS
B 1	ROBERTS GORDON CO-RAY-VAC #B-10	80,000	35	80%	1/2"	120/1/60	1.0	4"Φ	(1) (2) (3)

(1) ROBERTS GORDON #EP-100 VACUUM PUMP (VP 1), 1/3HP, 120 VOLT; PROVIDE FRESH AIR INTAKE; 7-DAY PROGRAMMABLE THERMOSTAT; HEAT TREATED ALUMINIZED STEEL TUBE AND POLISHED ALUMINUM REFLECTOR; PROPANE GAS.
(2) 7 DAY PROGRAMMING THERMOSTAT.
(3) PROVIDE ULTRA RAYVAC CONTROLLER 120V/20A.
(4) COORDINATE ALL LOCATIONS WITH ARCHITECT.

REGISTER, LOUVER & GRILLE SCHEDULE

MARK	TYPE	NECK/SIZE	SERVICE	MAX CFM	NOMINAL SIZE	REMARKS
1	CEILING DIFFUSER	6"Φ	SUPPLY	176	12X12	PRICE #SCDA (1) (3) (4) (6)
2	CEILING DIFFUSER	8"Φ	SUPPLY	280	24X24	PRICE #SCDA (2) (3) (4) (6)
3	TRANSFER GRILLE	12" X 12"	TRANSFER	N.A.	12X12	PRICE #80D (6)
4	RETURN GRILLE	24" X 24" 1	RETURN	630	24X24 1	PRICE #80D (6)
L1	INLET LOUVER	48" X 66"	TRANSFER	N.A.	48X66	RUSKIN ELC-445D (5) (6)
L2	EXHAUST LOUVER	54" X 54"	TRANSFER	N.A.	54X54	RUSKIN ELF-811S (6)
L3	INLET LOUVER	16" X 16"	TRANSFER	N.A.	16X16	RUSKIN ELF-811DD (6)

(1) 12" X 12" FACE MODULE.
(2) 24" X 24" FACE MODULE.
(3) 3 CONCENTRIC CONES.
(4) SET FOR HORIZONTAL DISCHARGE.
(5) PROVIDE WITH TWO ACTUATORS NO. G6D221, 115V, 150VA RUNNING, 10 VA HOLDING.
(6) COORDINATE ALL LOCATIONS WITH ARCHITECT.
(7) ALL EXTERIOR LOUVERS SHALL BE WHITE IN COLOR. 1

GENERAL NOTES

1. PROVIDE ALL MATERIALS AND EQUIPMENT AND PERFORM ALL LABOR REQUIRED TO INSTALL COMPLETE AND OPERABLE MECHANICAL SYSTEMS AS INDICATED ON THE DRAWINGS, AS SPECIFIED AND AS REQUIRED BY CODE.
2. CONTRACT DOCUMENT DRAWINGS FOR MECHANICAL WORK (HVAC AND PLUMBING) ARE DIAGRAMMATIC AND ARE INTENDED TO CONVEY SCOPE AND GENERAL ARRANGEMENT ONLY.
3. INSTALL ALL MECHANICAL EQUIPMENT AND APPURTENANCES IN ACCORDANCE WITH MANUFACTURERS' RECOMMENDATIONS, CONTRACT DOCUMENTS, AND APPLICABLE CODES AND REGULATIONS.
4. PROVIDE VIBRATION ISOLATION FOR ALL MECHANICAL EQUIPMENT TO PREVENT TRANSMISSION OF VIBRATION TO BUILDING STRUCTURE.
5. PROVIDE VIBRATION ISOLATORS FOR ALL PIPING SUPPORTS CONNECTED TO AND WITHIN 50 FEET OF ISOLATED EQUIPMENT (EXCEPT AT BASE ELBOW SUPPORTS AND ANCHOR POINTS) THROUGHOUT MECHANICAL EQUIPMENT ROOMS.
6. THE LOCATION OF EXISTING UNDERGROUND UTILITIES IS SHOWN IN AN APPROXIMATE WAY ONLY. THE CONTRACTOR SHALL DETERMINE THE EXACT LOCATION OF ALL EXISTING UTILITIES BEFORE COMMENCING WORK. THE CONTRACTOR SHALL PAY FOR AND REPAIR ALL DAMAGES CAUSED BY FAILURE TO EXACTLY LOCATE AND PRESERVE ANY AND ALL UNDERGROUND UTILITIES UNLESS OTHERWISE INDICATED.
7. COORDINATE CONSTRUCTION OF ALL MECHANICAL WORK WITH ARCHITECTURAL, STRUCTURAL, CIVIL, ELECTRICAL WORK, ETC., SHOWN ON OTHER CONTRACT DOCUMENT DRAWINGS.
8. MAINTAIN A MINIMUM OF 6'-8" CLEARANCE TO UNDERSIDE OF PIPES, DUCTS, CONDUITS, SUSPENDED EQUIPMENT, ETC., THROUGHOUT ACCESS ROUTES IN MECHANICAL ROOMS.
9. ALL TESTS SHALL BE COMPLETED BEFORE ANY MECHANICAL EQUIPMENT OR PIPING INSULATION IS APPLIED.
10. LOCATE ALL TEMPERATURE, PRESSURE, AND FLOW MEASURING DEVICES IN ACCESSIBLE LOCATIONS WITH STRAIGHT SECTION OF PIPE OR DUCT UP- AND DOWNSTREAM AS RECOMMENDED BY THE MANUFACTURER FOR GOOD ACCURACY.
11. TESTING, ADJUSTING, AND BALANCING AGENCY SHALL BE A MEMBER OF THE ASSOCIATED AIR BALANCE COUNCIL (AABC) OR THE NATIONAL ENVIRONMENTAL BALANCING BUREAU (NEBB). TESTING, ADJUSTING, AND BALANCING SHALL BE PERFORMED IN ACCORDANCE WITH THE AABC STANDARDS.
12. WHERE TWO OR MORE ITEMS OF THE SAME TYPE OF EQUIPMENT ARE REQUIRED, THE PRODUCT OF ONE MANUFACTURER SHALL BE USED.
13. REINFORCEMENT, DETAILING, AND PLACEMENT OF CONCRETE SHALL CONFORM TO ASTM 315 AND ACI 318. CONCRETE SHALL CONFORM TO ASTM C94. CONCRETE WORK SHALL CONFORM TO ACI 318, PART ENTITLED "CONSTRUCTION REQUIREMENTS." COMPRESSIVE STRENGTH IN 28 DAYS SHALL BE 3,000 PSI. TOTAL AIR CONTENT OF EXTERIOR CONCRETE SHALL BE BETWEEN 5 AND 7 PERCENT BY VOLUME. SLUMP SHALL BE BETWEEN 3 AND 4 INCHES. CONCRETE SHALL BE CURED FOR 7 DAYS AFTER PLACEMENT.
14. COORDINATE ALL EQUIPMENT CONNECTIONS WITH MANUFACTURERS' CERTIFIED DRAWINGS. COORDINATE AND PROVIDE ALL DUCT AND PIPING TRANSITIONS REQUIRED FOR FINAL EQUIPMENT CONNECTIONS TO FURNISHED EQUIPMENT. FIELD VERIFY AND COORDINATE ALL DUCT AND PIPING DIMENSIONS BEFORE FABRICATION.
15. ALL CONTROL WIRE AND CONDUIT SHALL COMPLY WITH THE NATIONAL ELECTRIC CODE AND DIVISION 16 OF THE SPECIFICATION.
16. CONCRETE HOUSEKEEPING PADS TO SUIT MECHANICAL EQUIPMENT SHALL BE SIZED AND LOCATED BY THE MECHANICAL CONTRACTOR. MINIMUM CONCRETE PAD THICKNESS SHALL BE 6 INCHES. PAD SHALL EXTEND BEYOND THE EQUIPMENT A MINIMUM OF 6 INCHES ON EACH SIDE. CONCRETE HOUSEKEEPING PADS SHALL BE PROVIDED BY THE GENERAL CONTRACTOR. IT SHALL BE THE RESPONSIBILITY OF THE MECHANICAL CONTRACTOR TO COORDINATE SIZE AND LOCATION OF CONCRETE HOUSEKEEPING PADS WITH GENERAL CONTRACTOR.
17. WHEN MECHANICAL WORK (HVAC, PLUMBING, SHEET METAL, FIRE PROTECTION, ETC.) IS SUBCONTRACTED, IT SHALL BE THE MECHANICAL CONTRACTOR'S RESPONSIBILITY TO COORDINATE SUBCONTRACTORS AND THE ASSOCIATED CONTRACTS. WHEN DISCREPANCIES ARISE PERTAINING TO WHICH CONTRACTOR PROVIDES A PARTICULAR ITEM OF THE MECHANICAL CONTRACT OR WHICH CONTRACTOR PROVIDES FINAL CONNECTION FOR A PARTICULAR ITEM OF THE MECHANICAL CONTRACT, IT SHALL BE BROUGHT TO THE ATTENTION OF THE MECHANICAL CONTRACTOR, WHOSE DECISION SHALL BE FINAL.
18. THE LOCATIONS OF ALL ITEMS SHOWN ON THE DRAWINGS OR CALLED FOR IN THE SPECIFICATIONS THAT ARE NOT DEFINITELY FIXED BY DIMENSIONS ARE APPROXIMATE ONLY. THE EXACT LOCATIONS NECESSARY TO SECURE THE BEST CONDITIONS AND RESULTS MUST BE DETERMINED BY THE PROJECT SITE CONDITIONS AND SHALL HAVE THE APPROVAL OF THE ENGINEER BEFORE BEING INSTALLED. DO NOT SCALE DRAWINGS.
19. ALL MISCELLANEOUS STEEL REQUIRED TO ENSURE PROPER INSTALLATION AND AS SHOWN IN DETAILS FOR PIPING, DUCTWORK, AND EQUIPMENT (UNLESS OTHERWISE NOTED) SHALL BE FURNISHED AND INSTALLED BY THE MECHANICAL CONTRACTOR.
20. PROVIDE ACCESS PANELS FOR INSTALLATION IN WALLS AND CEILINGS, WHERE REQUIRED, TO SERVICE DAMPERS, VALVES, SMOKE DETECTORS, AND OTHER CONCEALED MECHANICAL EQUIPMENT. ACCESS PANELS SHALL BE TURNED OVER TO GENERAL CONTRACTOR FOR INSTALLATION
21. ALL EQUIPMENT, PIPING, DUCTWORK, ETC., SHALL BE SUPPORTED AS DETAILED, SPECIFIED, AND REQUIRED TO PROVIDE A VIBRATION FREE INSTALLATION.

GENERAL NOTES CONTINUED

24. ALL ROOF MOUNTED EQUIPMENT CURBS FOR EQUIPMENT PROVIDED BY THE MECHANICAL CONTRACTOR SHALL BE FURNISHED BY THE MECHANICAL CONTRACTOR AND INSTALLED BY THE GENERAL CONTRACTOR.
25. LOCATIONS AND SIZES OF ALL FLOOR, WALL, AND ROOF OPENINGS SHALL BE COORDINATED WITH ALL OTHER TRADES INVOLVED.
26. ALL OPENINGS IN FIRE WALLS DUE TO DUCTWORK, PIPING, CONDUIT, ETC., SHALL BE FIRE STOPPED WITH A PRODUCT SIMILAR TO 3M OR APPROVED EQUAL.
27. ALL AIR CONDITIONING CONDENSATE DRAIN LINES FROM EACH AIR HANDLING UNIT AND ROOFTOP UNIT SHALL BE PIPED FULL SIZE OF THE UNIT DRAIN OUTLET, WITH "P" TRAP, AND PIPED TO NEAREST DRAIN. SEE DETAILS SHOWN ON THE DRAWINGS OR THE CONTRACT SPECIFICATIONS FOR DEPTH OF AIR CONDITIONING CONDENSATE TRAP.
28. REFER TO TYPICAL DETAILS FOR DUCTWORK, PIPING, AND EQUIPMENT INSTALLATION.
29. DO NOT INSTALL EXPOSED PIPING OR DUCTWORK ABOVE OR WITHIN THE CODE REQUIRED WORKING CLEARANCES OF ANY ELECTRICAL PANEL BOARD OR SWITCH GEAR (30" WIDE OR THE WIDTH OF THE PANEL, WHICHEVER IS GREATER AND 36" IN FRONT - FLOOR TO CEILING.) COORDINATE WITH ELECTRICAL CONTRACTOR.

COMcheck Software Version 3.5.1
Mechanical Compliance Certificate

2006 IECC
Report Date: 03/18/08
Data filename: J:\Archiplex\UDOT\UDOT Greendale\Elec\GREE-UDOT.cck

Section 1: Project Information

Project Title: Greendale Maintenance Facility

Construction Site: Dutch John, UT
Owner/Agent:
Designer/Contractor: Gwen Gerkey, Boulder Engineering, 811 West Cedar, Pocatello, ID 83201, 208-478-4613, beng@bengllc.com

Section 2: General Information

Building Location (for weather data): Mantua, Utah
Climate Zone: 6b
Heating Degree Days (base 65 degrees F): 6685
Cooling Degree Days (base 50 degrees F): 2595
Project Type: New Construction

Section 3: Mechanical Systems List

Quantity	System Type & Description
1	HVAC System 1: Heating: Central Furnace, Propane / Single Zone
1	HVAC System 2: Heating: Radiant Heater, Propane / Single Zone
1	HVAC System 3: Heating: Radiant Heater, Propane / Single Zone
1	HVAC System 4: Heating: Radiant Heater, Propane / Single Zone
1	Instantaneous Water Heater 1: Gas Instantaneous Water Heater, Capacity: 2 gallons, Input Rating: 180000 Btu/h

Section 4: Requirements Checklist

Requirements Specific To: HVAC System 1 :
☐ 1. Newly purchased heating equipment meets the heating efficiency requirements

Requirements Specific To: HVAC System 2 :
None

Requirements Specific To: HVAC System 3 :
None

Requirements Specific To: HVAC System 4 :
None

Requirements Specific To: Instantaneous Water Heater 1 :
☐ 1. Hot water system sized per manufacturer's sizing guide
☐ 2. Gas Instantaneous Water Heater efficiency >= 0.67 EF
☐ 3. First 8 ft of outlet piping is insulated

Generic Requirements: Must be met by all systems to which the requirement is applicable:

Project Title: Greendale Maintenance Facility — Report date: 03/18/08
Data filename: J:\Archiplex\UDOT\UDOT Greendale\Elec\GREE-UDOT.cck — Page 1 of 2

☐ 1. Load calculations per 2001 ASHRAE Fundamentals
☐ 2. Plant equipment and system capacity no greater than needed to meet loads
- Exception: Standby equipment automatically off when primary system is operating
- Exception: Multiple units controlled to sequence operation as a function of load

☐ 3. Minimum one temperature control device per system
☐ 4. Minimum one humidity control device per installed humidification/dehumidification system
☐ 5. Automatic Controls: Setback to 55 degrees F (heat) and 85 degrees F (cool); 7-day clock, 2-hour occupant override, 10-hour backup
- Exception: Continuously operating zones
- Exception: 2 kW demand or less, submit calculations

☐ 6. Outside-air source for ventilation; system capable of reducing OSA to required minimum
☐ 7. R-5 supply and return air duct insulation in unconditioned spaces R-8 supply and return air duct insulation outside the building R-8 insulation between ducts and the building exterior when ducts are part of a building assembly
- Exception: Ducts located within equipment
- Exception: Ducts with interior and exterior temperature difference not exceeding 15 degrees F.
- Exception: Continuously welded and locking-type longitudinal joints and seams on ducts operating at static pressures less than 2 inches w.g. pressure classification

☐ 8. Mechanical fasteners and sealants used to connect ducts and air distribution equipment
☐ 9. Ducts sealed - longitudinal seams on rigid ducts; transverse seams on all ducts; UL 181A or 181B tapes and mastics
☐ 10. Hot water pipe insulation: 1 in. for pipes <=1.5 in. and 2 in. for pipes >1.5 in. Chilled water/refrigerant/brine pipe insulation: 1 in. for pipes <=1.5 in. and 1.5 in. for pipes >1.5 in. Steam pipe insulation: 1.5 in. for pipes <=1.5 in. and 3 in. for pipes >1.5 in.
- Exception: Piping within HVAC equipment
- Exception: Fluid temperatures between 55 and 105 degrees F
- Exception: Fluid not heated or cooled
- Exception: Runouts <4 ft in length

☐ 11. Operation and maintenance manual provided to building owner
☐ 12. Balancing devices provided in accordance with IMC 603.15
☐ 13. Piping, insulated to 1/2 in. if nominal diameter of pipe is <1.5 in.; Larger pipe insulated to 1 in. thickness
☐ 14. Lavatory faucet outlet temperatures in public restrooms limited to 110 degrees F (43 degrees C)
☐ 15. Motorized, automatic shutoff dampers required on exhaust and outdoor air supply openings
- Exception: Gravity dampers acceptable in buildings <3 stories
- Exception: Gravity dampers acceptable in systems with outside or exhaust air flow rates less than 300 cfm where dampers are interlocked with fan

☐ 16. Stair and elevator shaft vents are equipped with motorized dampers

Section 5: Compliance Statement

Compliance Statement: The proposed mechanical design represented in this document is consistent with the building plans, specifications and other calculations submitted with this permit application. The proposed mechanical systems have been designed to meet the 2006 IECC requirements in COM*check* Version 3.5.1 and to comply with the mandatory requirements in the Requirements Checklist.

CLIFFORD HOLMES, P.E. — [signature] — 3-18-08
Name - Title — Signature — Date

Project Title: Greendale Maintenance Facility — Report date: 03/18/08
Data filename: J:\Archiplex\UDOT\UDOT Greendale\Elec\GREE-UDOT.cck — Page 2 of 2

1

CLIENT

UDOT CONNECTING COMMUNITIES
STATION #3437A
SR-44 @ M.P. 0.5 ±
GREENDALE UTAH

DESIGNER

ARCHIPLEX GROUP
architecture · planning · design services
1135 South West Temple, Ste. A
Salt Lake City, UT 84101
P:(801) 961-7070
F:(801) 961-7373

CONSULTANTS

VAN BOERUM & FRANK ASSOCIATES INC.
CONSULTING ENGINEERS
WWW.VBFA.COM
Salt Lake City · Logan · St. George · Tempe · Pocatello
811 West Cedar St., Pocatello, ID 83201-6139
208.478.4613 T
208.478.4617 F

PROFESSIONAL SEAL

LICENSED PROFESSIONAL ENGINEER — CLIFFORD DEE HOLMES — 03/18/08 — NUMBER 309570 — STATE OF UTAH

ISSUE

MARK	DATE	DESCRIPTION
1	03/20/08	ADDENDUM #2
	02-2008	CONSTRUCTION DOCUMENTS

DFCM CONTRACT NO:	077325
DFCM PROJECT NO:	07029900
ARCHIPLEX PROJECT NO:	0708.01
DRAWN BY:	LCM
CHECKED BY:	CDH
SCALE:	NONE
DATE:	FEBRUARY, 2008

SHEET TITLE

MECHANICAL SYMBOLS AND SCHEDULES

M001

J:\Archiplex\UDOT\UDOT Greendale\Mech\UDTGM001.dwg, 3/18/2008 2:42:17 PM

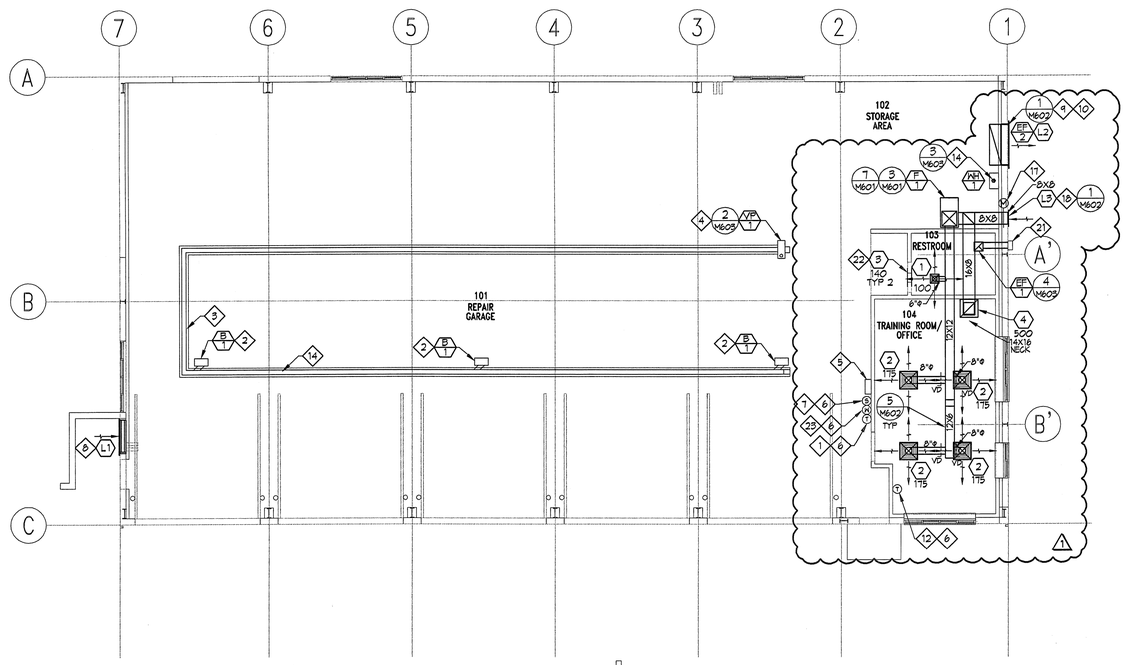

MAINTENANCE BUILDING PLAN

SCALE: 1/8" = 1'-0"

NORTH

KEY NOTES

1. THERMOSTAT FOR RADIANT HEAT SYSTEM.
2. 4" COMBUSTION AIR THROUGH ROOF.
3. MOUNT RADIANT HEATERS PARALLEL WITH ROLL UP DOORS (TYPICAL). COORDINATE EXACT LOCATION WITH ARCHITECT.
4. 4" TYPE B FLUE THROUGH ROOF. INSTALL PER MANUFACTURERS RECOMMENDATIONS.
5. RADIANT HEAT SYSTEM CONTROL PANEL. SEE SCHEDULE.
6. MOUNT 5'-0" AFF.
7. CARBON MONOXIDE DETECTOR. INTERLOCK THROUGH AUTO/ON SWITCH WITH EXHAUST FAN EF-2.
8. COMBINATION LOUVER. INTERLOCK ACTUATOR WITH EF-2 REFER TO ARCHITECTURAL DRAWINGS FOR LOCATION.
9. REFERENCE ARCH. DRAWINGS FOR LOCATION.
10. EXHAUST LOUVER. LOUVER TO HAVE WHITE FINISH.
11. 1
12. THERMOSTAT TO CONTROL F-1.
13. 1
14. MECHANICAL CONTRACTOR SHALL COORDINATE ANY/ALL CHANGES TO SUPPLIED EQUIPMENT ELECTRICAL WITH ELECTRICAL CONTRACTOR.
15. 1
16. 1
17. INTERLOCK DAMPER MOTOR WITH F-1. SEE DETAIL 8/M601.
18. FRESH AIR LOUVER. PROVIDE INSECT SCREEN AND BALANCING DAMPER. SET DAMPER TO 200 CFM. SEE DETAIL 8/M601.
19. 1
20. 1
21. EXHAUST FAN WALL CAP. REFER TO SCHEDULE.
22. MOUNT TRANSFER GRILLE ABOVE DOOR WITH CHANNEL BORDER ON BOTH SIDES OF THE WALL.
23. MANUAL OVERRIDE SWITCH LOCATION FOR EF-2. SEE ELECTRICAL DRAWINGS.
24. 1

CLIENT

UDOT CONNECTING COMMUNITIES

STATION #3437A
SR-44 @ M.P. 0.5 ±
GREENDALE UTAH

DESIGNER

ARCHIPLEX GROUP
architecture • planning • design services
1135 South West Temple, Ste. A
Salt Lake City, UT 84101
P:(801) 961-7070
F:(801) 961-7373

CONSULTANTS

VAN BOERUM & FRANK ASSOCIATES INC.
WWW.VBFA.COM CONSULTING ENGINEERS
Salt Lake City • Logan • St. George • Tempe • Pocatello
811 West Cedar St., Pocatello, ID 83201-6139
208.478.4613 T
208.478.4617 F

PROFESSIONAL SEAL

LICENSED PROFESSIONAL ENGINEER
CLIFFORD DEE HOLMES
03/18/08
NUMBER 309570
STATE OF UTAH

ISSUE

MARK	DATE	DESCRIPTION
1	03/20/08	ADDENDUM #2
	02-2008	CONSTRUCTION DOCUMENTS

DFCM CONTRACT NO:	077325
DFCM PROJECT NO:	07029900
ARCHIPLEX PROJECT NO:	0708.01
DRAWN BY:	LCM
CHECKED BY:	CDH
SCALE:	1/8"=1'-0"
DATE:	FEBRUARY, 2008

SHEET TITLE

MECHANICAL FLOOR PLAN

M201

J:\Archiplex\UDOT\UDOT Greendale\Mech\UDTGM201.dwg, 3/18/2008 1:33:47 PM

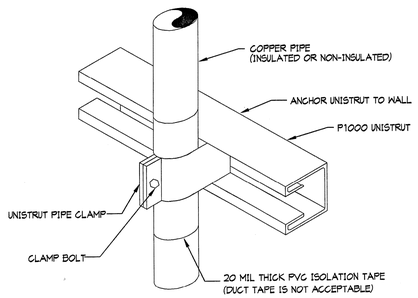

PIPE SUPPORT DETAIL

SCALE: NO SCALE — 6

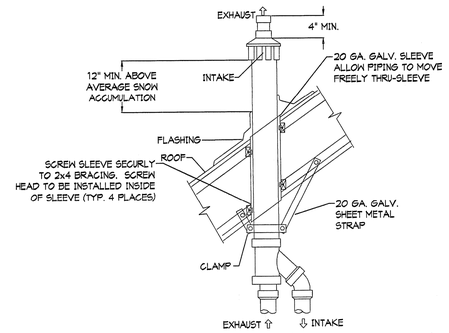

CONCENTRIC ROOF TERMINATION DETAIL

SCALE: NO SCALE — 3

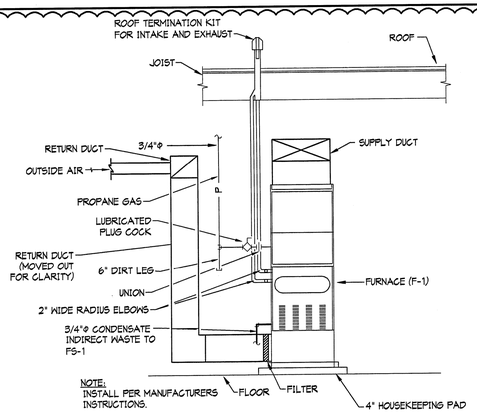

90% EFFICIENT FURNACE DETAIL

SCALE: NO SCALE — 7

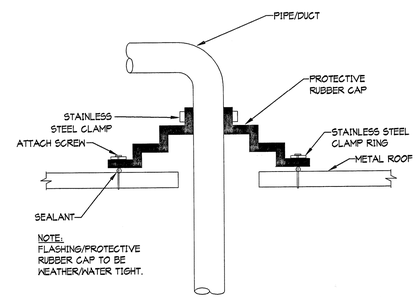

METAL ROOF PENETRATION DETAIL

SCALE: NO SCALE — 4

DETAIL NOT USED

SCALE: NO SCALE — 1

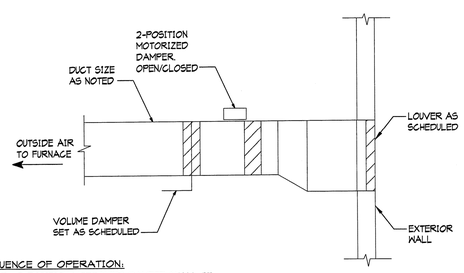

SEQUENCE OF OPERATION:
OCCUPIED MODE: 2-POSITION MOTORIZED DAMPER SHALL BE ELECTRONICALLY TIED TO FURNACE SUCH THAT WHEN THE FURNACE CALLS FOR HEATING OR COOLING, DAMPER OPENS.
UNOCCUPIED MODE: 2-POSITION MOTORIZED REMAINS CLOSED. (NIGHT OR WEEKEND SET BACK)

OUTSIDE AIR DUCT DETAIL

SCALE: NO SCALE — 8

NOTE:
PROVIDE ON ALL UNACCESSABLE DAMPERS

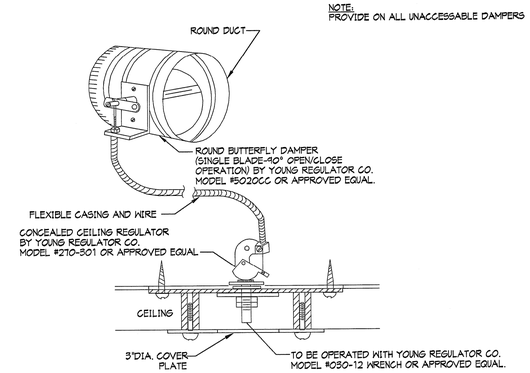

DAMPER AND REGULATOR DETAIL

SCALE: NO SCALE — 5

DETAIL NOT USED

SCALE: NO SCALE — 2

CLIENT

UDOT CONNECTING COMMUNITIES

STATION #3437A
SR-44 @ M.P. 0.5 ±
GREENDALE UTAH

DESIGNER

ARCHIPLEX GROUP
architecture • planning • design services
1135 South West Temple, Ste. A
Salt Lake City, UT 84101
P:(801) 961-7070
F:(801) 961-7373

CONSULTANTS

VAN BOERUM & FRANK ASSOCIATES INC.
WWW.VBFA.COM CONSULTING ENGINEERS
Salt Lake City • Logan • St. George • Tempe • Pocatello
811 West Cedar St., Pocatello, ID 83201-6139
208.478.4613 T
208.478.4617 F

PROFESSIONAL SEAL

LICENSED PROFESSIONAL ENGINEER
CLIFFORD DEE HOLMES
03/18/08
NUMBER 309570
STATE OF UTAH

ISSUE

MARK	DATE	DESCRIPTION
1	03/20/08	ADDENDUM #2
	02-2008	CONSTRUCTION DOCUMENTS

DFCM CONTRACT NO:	077325
DFCM PROJECT NO:	07029900
ARCHIPLEX PROJECT NO:	0708.01
DRAWN BY:	LCM
CHECKED BY:	CDH
SCALE:	NONE
DATE:	FEBRUARY, 2008

SHEET TITLE

MECHANICAL DETAILS

M601

J:\Archiplex\UDOT\UDOT Greendale\Mech\UDTGM601.dwg, 3/18/2008 1:33:33 PM

METAL FASTENERS:
OMARK INSUL-PINS, DURO DYNE FASTENERS OR GRIP NAILS.

GRIP NAILS SHALL BE INSTALLED BY "GRIPNAIL AIR HAMMER" OR BY "AUTOMATIC FASTENER EQUIP."

NOTE:
ALL SUPPLY AIR DUCTS SHALL BE WRAPPED EXTERNALLY AS PER SPECIFICATIONS

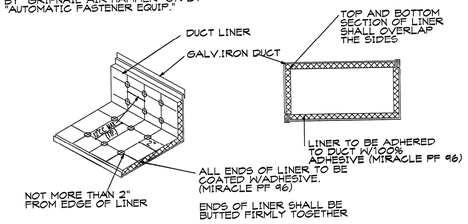

DUCT LINER DETAIL

SCALE: NO SCALE (7)

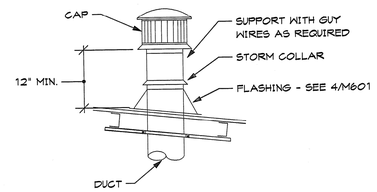

INTAKE VENT PIPE DETAIL

SCALE: NO SCALE (4)

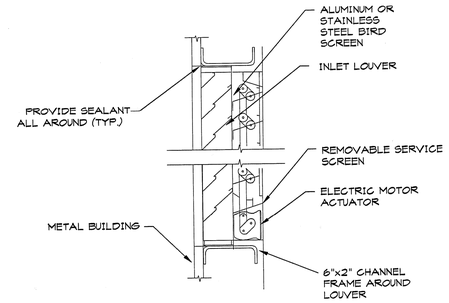

OUTLET / INLET LOUVER DETAIL

SCALE: NO SCALE (1)

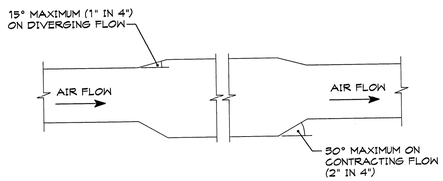

NOTE:
THE 15° MAXIMUM TRANSITION ANGLE NOTED ON THIS DETAIL IS MORE RESTRICTIVE THAN THE SMACNA ALLOWANCE OF 20°.

CONVERGING AND DIVERGING TRANSITIONS

SCALE: NO SCALE (8)

DIMENSION OF LONGEST SIDE, INCHES	SHEET METAL GAGE (ALL FOUR SIDES)	MINIMUM REINFORCING ANGLE SIZE & MAXIMUM LONGITUDINAL SPACING BETWEEN JOINTS &/OR INTERMEDIATE REINFORCING	TRANSVERSE REINFORCING (1) AT JOINTS: MIN. H, IN.	DRIVE SLIP: PLAIN 'S' SLIP RECOM-MENDED GAGE	HEMMED 'S' SLIP RECOM-MENDED GAGE	ALTERNT. BAR SLIP RECOM-MENDED GAGE	REINFOR. BAR SLIP RECOM-MENDED GAGE	BAR SLIP / ANGLE SLIP RECOM-MENDED GAGE	BAR SLIP / ANGLE SLIP REINFORCED ANGLE SIZE	STAND. SEAM / ANGLE REINFOR. STAND.SEAM REINFORCED ANGLE SIZE	POCKET LOCK / ANGLE REINFORCED POCKET LOCK RECOM-MENDED GAGE	POCKET LOCK / ANGLE REINFORCED POCKET LOCK REINFORCED ANGLE SIZE
UP THRU 12	26	NONE REQ.	1	26	26	24	24	24	NOT REQ.	NOT REQ.	24	NOT REQ.
13 - 18	24	NONE REQ.	1	24	24	24	24	24	NOT REQ.	NOT REQ.	24	NOT REQ.
19 - 30	24	1X1X1/8 @ 60"	1	-	24	24	24	24	NOT REQ.	NOT REQ.	24	NOT REQ.
31 - 42	22	1X1X1/8 @ 60"	1	-	-	22	22	22	NOT REQ.	NOT REQ.	22	NOT REQ.
43 - 54	22	1.5X1.5X1/8@60"	1 1/2	-	-	22	22	22	1.5X1.5X1/8	NOT REQ.	22	NOT REQ.
55 - 60	20	1.5X1.5X1/8@60"	1 1/2	-	-	-	22	22	1.5X1.5X1/8	NOT REQ.	22	NOT REQ.
61 - 84	20	1.5X1.5X1/8@30"	1 1/2	-	-	-	22	22	1.5X1.5X1/8	1.5X1.5X1/8	22	1.5X1.5X1/8

(1) TRANSVERSE REINFORCING SIZE IS DETERMINED BY DIMENSION OF SIDE TO WHICH ANGLE IS APPLIED

DUCT CONSTRUCTION DETAIL

SCALE: NO SCALE (5)

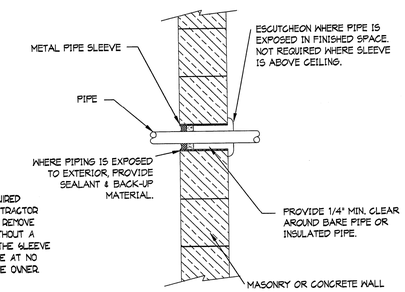

NOTE:
PIPE SLEEVES ARE REQUIRED ON THIS PROJECT. CONTRACTOR SHALL BE REQUIRED TO REMOVE ANY PIPE INSTALLED WITHOUT A PIPE SLEEVE, INSTALL THE SLEEVE AND REINSTALL THE PIPE AT NO ADDITIONAL COST TO THE OWNER.

PIPE THRU WALL ABOVE GRADE

SCALE: NO SCALE (2)

HANGER SIZES FOR RECTANGULAR DUCT

MAX. SIDE	HANGER	HORIZANTAL SUPPORT ANGLE	MAXIMUM SPACING
30"	1"X18" GAGE STRAP	NONE REQUIRED	10'-0"
36"	1/4" ROUND ROD	1 1/2" X 1 1/2" X 1/8"	8'-0"
48"	1/4" ROUND ROD	2" X 2" X 1/8"	8'-0"
60"	5/16" ROUND ROD	2" X 2" X 1/8"	8'-0"
84"	3/8" ROUND ROD	2" X 2" X 1/8"	8'-0"

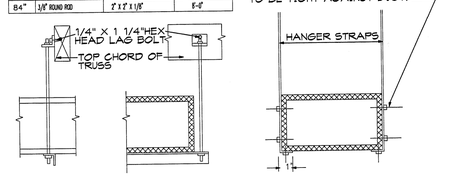

DUCT STRAP HANGER DETAIL

SCALE: NO SCALE (6)

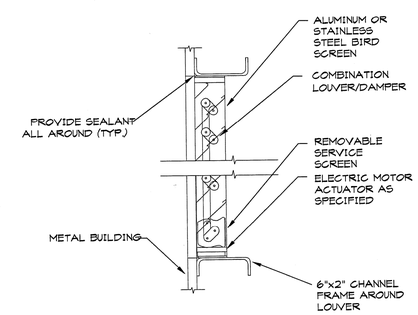

COMBINATION LOUVER/DAMPER DETAIL

SCALE: NO SCALE (3)

CLIENT

UDOT CONNECTING COMMUNITIES

STATION #3437A
SR-44 @ M.P. 0.5 ±
GREENDALE UTAH

DESIGNER

ARCHIPLEX GROUP
architecture • planning • design services
1135 South West Temple, Ste. A
Salt Lake City, UT 84101
P:(801) 961-7070
F:(801) 961-7373

CONSULTANTS

VAN BOERUM & FRANK ASSOCIATES INC.
WWW.VBFA.COM CONSULTING ENGINEERS
Salt Lake City • Logan • St. George • Tempe • Pocatello
811 West Cedar St., Pocatello, ID 83201-6139
208.478.4613 T
208.478.4617 F

PROFESSIONAL SEAL

LICENSED PROFESSIONAL ENGINEER
CLIFFORD DEE HOLMES
03/18/08
NUMBER 309570
STATE OF UTAH

ISSUE

MARK	DATE	DESCRIPTION
1	03/20/08	ADDENDUM #2
	02-2008	CONSTRUCTION DOCUMENTS

DFCM CONTRACT NO:	077325
DFCM PROJECT NO:	07029900
ARCHIPLEX PROJECT NO:	0708.01
DRAWN BY:	LCM
CHECKED BY:	CDH
SCALE:	NONE
DATE:	FEBRUARY, 2008

SHEET TITLE

MECHANICAL DETAILS

M602

J:\Archiplex\UDOT\UDOT Greendale\Mech\UDTGM602.dwg, 3/18/2008 1:33:19 PM

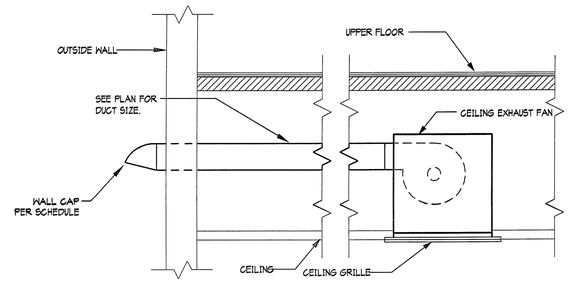

EXHAUST FAN — SCALE: NO SCALE — (4)

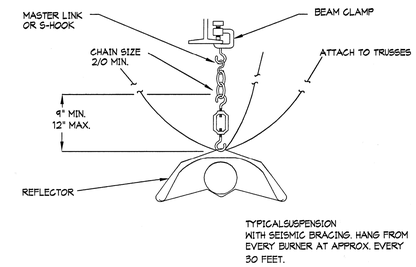

RADIANT HEATING SEISMIC DETAIL — SCALE: NO SCALE — (1)

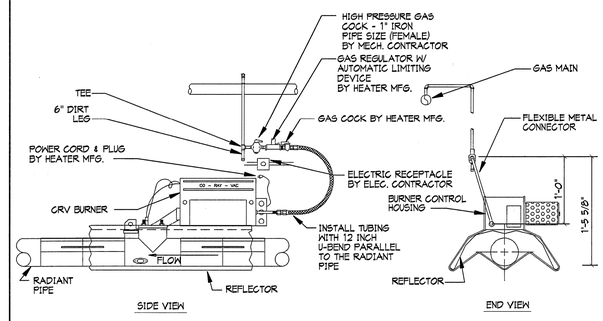

GAS CONNECTION TO CRV BURNER DETAIL — SCALE: NO SCALE — (2)

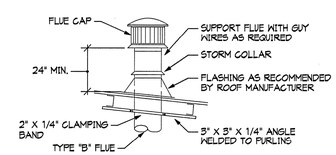

FLUE CAP DETAIL — SCALE: NO SCALE — (3)

CLIENT

UDOT CONNECTING COMMUNITIES

STATION #3437A
SR-44 @ M.P. 0.5 ±
GREENDALE UTAH

DESIGNER

ARCHIPLEX GROUP
architecture • planning • design services
1135 South West Temple, Ste. A
Salt Lake City, UT 84101
P:(801) 961-7070
F:(801) 961-7373

CONSULTANTS

VAN BOERUM & FRANK ASSOCIATES INC.
WWW.VBFA.COM CONSULTING ENGINEERS
Salt Lake City • Logan • St. George • Tempe • Pocatello
811 West Cedar St., Pocatello, ID 83201-6139
208.478.4613 T
208.478.4617 F

PROFESSIONAL SEAL

LICENSED PROFESSIONAL ENGINEER
CLIFFORD DEE HOLMES
03/18/08
NUMBER 309570
STATE OF UTAH

ISSUE

MARK	DATE	DESCRIPTION
1	03/20/08	ADDENDUM #2
	02-2008	CONSTRUCTION DOCUMENTS

DFCM CONTRACT NO:	077325
DFCM PROJECT NO:	07029900
ARCHIPLEX PROJECT NO:	0708.01
DRAWN BY:	LCM
CHECKED BY:	CDH
SCALE:	NONE
DATE:	FEBRUARY, 2008

SHEET TITLE

MECHANICAL DETAILS

M603

J:\Archiplex\UDOT\UDOT Greendale\Mech\UDTGM603.dwg, 3/18/2008 1:33:05 PM

PLUMBING SYMBOL SCHEDULE

SYMBOL	ABBREVIATION	DESCRIPTION
	CW	COLD WATER LINE
	HW	HOT WATER LINE
	HWR	HW RECIRCULATION LINE
CW	CW	CW LINE UNDER FLOOR
HW	HW	HW LINE UNDER FLOOR
HWR	HWR	HWR LINE UNDER FLOOR
	SAN	SANITARY WASTE LINE (BELOW FLOOR OR GRADE)
	SAN	SANITARY WASTE LINE (ABOVE FLOOR OR GRADE)
	SAN(E)	EXISTING SANITARY WASTE LINE
	V	VENT LINE
C	COND	A/C CONDENSATE LINE (SIZED TO DISCHARGE)
	UP	PIPE RISER UP (VIEWED CEILING TO FLOOR)
	DN	PIPE RISER DOWN (VIEWED CEILING TO FLOOR
	SOV / GV	SHUT-OFF VALVE / GATE VALVE
	SOV / BV	SHUT-OFF VALVE / BALL VALVE
	SOV / GV (NC)	SOV / GV (NORMALLY CLOSED)
	SOV /BV (NC)	SOV / BV (NORMALLY CLOSED)
	SOV / CC	SHUT-OFF VALVE /GAS COCK
	CK V	CHECK VALVE
	UN	UNION
	PRV	PRESSURE REGULATING VALVE
	P&T	PRESS. & TEMP. RELIEF VALVE
	STR	'Y' STRAINER
	PR GA	PRESSURE GAUGE
	WTR MTR	WATER METER
	GAS MTR	GAS METER
RW	RW	RAIN WATER LINE (ABOVE FLOOR)
G	G	NATURAL GAS LINE
LP	LP	LIQUID PROPANE LINE
F	F	FIRE SPRINKLER LINE
SW	SW	SOFT WATER LINE
CA	CA	COMPRESSED AIR LINE
CA	CA	COMPRESSED AIR LINE (BELOW FLOOR)
DW	DW	DEDICATED WASTE LINE
	SOV IN YB	SHUT-OFF VALVE IN YARD BOX
	FH	FIRE HYDRANT
	FDC	FIRE DEPT. CONNECTION
	WMS	WATER MOTOR GONG
	FIV	POST INDICATOR VALVE
	POC	POINT OF CONNECTION
W	W	UTILITY WATER MAIN - SIZE
SAN	SAN	SANITARY SEWER MAIN - SIZE
G	G	UTILITY GAS MAIN - SIZE
SD	SD	UTILITY STORM DRAIN - SIZE
	GC	AIR CONNECTION

ABBREVIATION SCHEDULE

SYMBOL	DESCRIPTION	SYMBOL	DESCRIPTION
A/C	AIR CONDITIONING	HB	HOSE BIBB
ASR	AUTOMATIC SPRINKLER RISER	HD	HUB DRAIN
AVG	AVERAGE	HTR	HEATER
BFP	BACKFLOW PREVENTER	IE	INVERT ELEVATION
BTU	BRITISH THERMAL UNITS	IW	INDIRECT WASTE
CB	CATCH BASIN	MAX	MAXIMUM
CFH	CUBIC FEET PER HOUR	MBH	THOUSAND BTUS PER HOUR
CL	CENTERLINE	MC	MECHANICAL CONTRACTOR
CO	CLEANOUT	MECH	MECHANICAL
CONC	CONCRETE	MH	MANHOLE
CONT'D	CONTINUED	MIN	MINIMUM
CONTR	CONTRACTOR		
COTG	CLEANOUT TO GRADE	(N)	NEW
		NIC	NOT IN CONTRACT
DN	DOWN		
DS	DOWNSPOUT	OD	OVERFLOW DRAIN
(E)	EXISTING	PC	PLUMBING CONTRACTOR
(ER)	EXISTING TO BE REMOVED	PIV	POST INDICATOR VALVE
EC	ELECTRICAL CONTRACTOR	POC	POINT OF CONNECTION
ELEV	ELEVATION	PSI	POUNDS PER SQUARE INCH
EXIST	EXISTING	PSIL	PSI LOSS
FCO	FLOOR CLEANOUT		
FD	FLOOR DRAIN	RD	ROOF DRAIN
FE	FIRE EXTINGUISHER	REG	REGULATOR
FEC	FE & CABINET	REQ'D	REQUIRED
FHB	FLOOR HOSE BOX	RI & C	ROUGH-IN AND CONNECT
FHC	FIRE HOSE AND CABINET		
FL	FLOOR	STA	STATION
FPS	FEET PER SECOND		
FS	FLOOR SINK	VEL	VELOCITY
FT.HD	FEET OF HEAD	VTR	VENT THRU ROOF
FTR	FLUE THRU ROOF		
FU	FIXTURE UNIT	W/	WITH
		WCO	WALL CLEANOUT
GC	GENERAL CONTRACTOR	WF	WALL FAUCET
GPM	GALLONS PER MINUTE	WTR	WATER
GR	GRADE		

GENERAL NOTES TO ALL SHEETS

1. PROVIDE ALL MATERIALS AND EQUIPMENT AND PERFORM ALL LABOR REQUIRED TO INSTALL COMPLETE AND OPERABLE PLUMBING SYSTEMS AS INDICATED ON THE DRAWINGS, AS SPECIFIED AND AS REQUIRED BY CODE.
2. RUN ALL SOIL WASTE AND VENT PIPING WITH 2% MINIMUM GRADE UNLESS OTHERWISE NOTED. HORIZONTAL VENT PIPING SHALL BE GRADED TO DRIP BACK TO THE SOIL OR WASTE PIPE BY GRAVITY.
5. ELEVATIONS AS SHOWN ON THE DRAWINGS ARE TO THE CENTERLINE OF ALL PRESSURE PIPING AND TO THE INVERT OF ALL GRAVITY PIPING.
4. ADJUST SEWER INVERTS TO KEEP TOPS OF PIPE IN LINE WHERE PIPE SIZE CHANGES.
5. MAINTAIN A MINIMUM OF 4'0" OF GROUND COVER OVER ALL UNDERGROUND WATER MAINS AND A MINIMUM OF 3'0" OF GROUND COVER OVER ALL UNDERGROUND SEWERS AND DRAINS.
6. PROVIDE SHUTOFF VALVES IN ALL DOMESTIC WATER PIPING SYSTEM BRANCHES IN WHICH BRANCH PIPING SERVES TWO OR MORE FIXTURES.
7. THIS CONTRACTOR SHALL PROVIDE SUBMITTALS ON ITEMS IN MECHANICAL EQUIPMENT LIST TO THE ENGINEER FOR REVIEW PRIOR TO THE ORDER, PURCHASE OR INSTALLATION.
8. UNLESS OTHERWISE NOTED, ALL PIPING SHALL BE HELD, TIGHT TO THE STRUCTURE, WITH SPACE FOR INSULATION.
9. INSTALL PIPING SO THAT ALL VALVES, STRAINERS, UNION, TRAPS, FLANGES, AND OTHER APPURTENANCES REQUIRING ACCESS ARE ACCESSIBLE.
10. WHERE DOMESTIC COLD AND HOT WATER PIPING DROPS INTO A PIPE CHASE, THE SIZE SHOWN FOR THE PIPE DROPS SHALL BE USED TO THE LAST FIXTURE.
11. INSTALL ALL PIPING WITHOUT FORCING OR SPRINGING.
12. ALL PIPING SHALL CLEAR DOORS AND WINDOWS.
13. ALL PIPING SHALL GRADE TO LOW POINTS, PROVIDE HOSE END DRAIN VALVES AT THE BOTTOM OF ALL RISERS AND LOW POINTS.
14. UNIONS AND/OR FLANGES SHALL BE INSTALLED AT EACH PIECE OF EQUIPMENT, IN BYPASSES, AND IN LONG PIPING RUNS (100 FEET OR MORE) TO PERMIT DISASSEMBLY FOR ALTERATION AND REPAIRS.
15. ALL VALVES SHALL BE ADJUSTED FOR SMOOTH AND EASY OPERATION.
16. ALL VALVES (EXCEPT CONTROL VALVES) AND STRAINERS SHALL BE FULL SIZE OF PIPE BEFORE REDUCING SIZE TO MAKE CONNECTIONS TO EQUIPMENT AND CONTROLS.
17. ALL MECHANICAL SYSTEM SHALL BE INSTALLED IN ACCORDANCE WITH THE CURRENT ADOPTED EDITION OF THE BUILDING CODES, MECHANICAL CODES AND PLUMBING CODES.
18. PROVIDE ALL PLUMPING FIXTURES AND EQUIPMENT WITH ACCESSIBLE STOPS.
19. UNLESS OTHERWISE NOTED, DRAINS SHALL BE INSTALLED AT THE LOW POINT OF ROOFS, AREAWAYS, FLOORS, ETC.
20. PROVIDE CLEANOUTS IN SANITARY AND STORM DRAINAGE SYSTEMS AT ENDS OF RUNS, AT CHANGES IN DIRECTION, NEAR THE BASE OF STACKS, EVERY 50 FEET IN HORIZONTAL RUNS AND ELSEWHERE AS INDICATED. ALL CLEANOUTS SHALL BE CAST IRON.
21. ALL CLEANOUTS SHALL BE FULL SIZE OF PIPE FOR PIPE SIZES 6 INCHES AND SMALLER AND SHALL BE 6 INCHES FOR PIPE SIZES LARGER THAN 6 INCHES.
22. ALL BALANCING VALVES AND BUTTERFLY VALVES SHALL BE PROVIDED WITH POSITION INDICATORS AND MAXIMUM ADJUSTABLE STOPS (MEMORY STOPS).
23. ALL VALVES SHALL BE INSTALLED SO THAT VALVE REMAINS IN SERVICE WHEN EQUIPMENT OR PIPING ON EQUIPMENT SIDE OF VALVE IS REMOVED.
24. ALL PIPING WORK SHALL BE COORDINATED WITH ALL TRADES INVOLVED, OFFSETS IN PIPING AROUND OBSTRUCTIONS SHALL BE PROVIDED AT NO ADDITIONAL COST TO THE OWNER.
25. PROVIDE FLEXIBLE CONNECTION IN ALL PIPING SYSTEMS CONNECTED TO PUMPS AND OTHER EQUIPMENT WHICH REQUIRE VIBRATION ISOLATION. FLEXIBLE CONNECTIONS SHALL BE PROVIDED AS CLOSE TO THE EQUIPMENT AS POSSIBLE OR AS INDICATED ON THE DRAWINGS.
26. DO NOT INSTALL EXPOSED PIPING ABOVE OR WITHIN THE CODE REQUIRED WORKING CLEARANCES OF ANY ELECTRICAL PANEL BOARD OR SWITCH GEAR (30" WIDE OR THE WIDTH OF THE PANEL, WHICHEVER IS GREATER AND 36" IN FRONT - FLOOR TO CEILING.) COORDINATE WITH ELECTRICAL CONTRACTOR.
27. COORDINATE ALL AIR DEVICE LOCATIONS WITH REFLECTED CEILING PLANS AND ELECTRICAL DRAWINGS.
28. DUCTWORK AND PIPE ROUTING AS SHOWN ON DRAWINGS IS DIAGRAMMATIC AND IS NOT TO BE SCALED. WHERE ALTERNATE ROUTING, OFFSETS AND TRANSITIONS ARE REQUIRED FOR COORDINATION OF WORK, THIS CONTRACTOR SHALL MAKE CHANGES WITHOUT ADDITIONAL COSTS.
29. THIS CONTRACTOR SHALL CLOSELY COORDINATE NEW MECHANICAL WITH NEW ELECTRICAL, ARCHITECTURAL, AND BUILDING STRUCTURE.
30. THIS CONTRACTOR SHALL FIELD VERIFY ALL MECHANICAL ITEMS PRIOR TO STARTING NEW WORK. ADDITIONAL COST WILL NOT BE ALLOWED FOR CONTRACTOR'S FAILURE TO BECOME FAMILIAR WITH SITE CONDITIONS.

PLUMBING FIXTURE SCHEDULE

EQUIPMENT AND INSTALLATION BY PLUMBING CONTRACTOR
PROVIDE SPECIFIED ITEMS OR APPROVED EQUALS. (REFER TO SPECIFICATIONS)

MARK	DESCRIPTION	W	V	CW	HW
P1	WATER CLOSET (ADA) - FLOOR MOUNTED TANK TYPE, CRANE - HYMONT #51055, 18 INCH RIM HEIGHT, MAXIMUM WATER USAGE OF 1.6 GALLON'S PER FLUSH. TANK TO HAVE PRESSURE ASSISTED FLUSH. SEAT - PROVIDE SPLIT FRONT TYPE WITH CHECK HINGE, BEMIS #1955C PROVIDE CHROME PLATED SUPPLY AND STOP.	4"	2"	1/2"	-
P2	LAVATORY - WALL MOUNTED, CRANE #1412V, HANDICAP TYPE, VITREOUS CHINA, SELF SUPPORTING FIXTURE, SIZE 24"X21". FAUCET AND DRAIN - SYMMONS S-6080 WITH DRAIN GRID, BATTERY OPERATED WITH BATTERY INSIDE BODY OF FAUCET. PROVIDE CHROME PLATED SUPPLIES AND STOPS. DEARBORN, 17 GA TUBE "P" TRAP, CHROME PLATED. FITTINGS AND TRAP TO BE INSULATED TO MEET ADA REQUIREMENTS PROVIDE MCGUIRES PROWRAP. PROVIDE WITH CARRIER.	1 1/2"	1 1/2"	1/2"	1/2"
P3	UTILITY SINK - ELKAY ESSW 2520-C, WALL MOUNTED 304 14 GAUGE STAINLESS STEEL SERVICE SINK WITH HOSE THREAD, VACUUM BREAKER, WALL BRACKET AND PAIL HOOK SPOUT AND LK173 CAST IRON P-TRAP.	3"	2"	3/4"	3/4"
P4	TRAP PRIMER - TRAP PRIMER MIFAB #500 COMPLETE WITH MIFAB MI-GAP AIR GAP FITTING AND STAINLESS STEEL ACCESS DOOR.	-	-	1/2"	-
P5	DRINKING FOUNTAIN - ADA COMPLIANT WATER COOLER, 12 GPH, 115 VOLTS, 370 WATTS, 4.0 AMPS, ELKAY #EZ56.	2"	1 1/2"	1/2"	-
P6	2 COMPARTMENT SINK - JUST #DL-ADA-2233-A-GR, STAINLESS STEEL DOUBLE COMPARTMENT, SELF RIMMING, SIZE 22"X33" OD WITH TWO COMPARTMENTS THAT ARE 16"X14"X8" DEEP, MATERIAL - 18 GAUGE TYPE 304 STAINLESS STEEL, SEAMLESS DIE DRAWN. INTERIOR SURFACES POLISHED TO A NON-POROUS FINISH. UNDERSIDE TO BE FULLY COATED INSULATED FOR SOUND AND CONDENSATION REDUCTION. FAUCET AND DRAIN - GOOSENECK WITH SPRAY. JUST JWF-201 WITH TEAR DROP HANDLES AND JB-99 DRAIN OR APPROVED EQUAL. PROVIDE WITH CHROME PLATED SUPPLY AND STOPS. DEARBORN 17 GA TUBE "P" TRAP, CHROME PLATED.	2"	1 1/2"	1/2"	1/2"
P7	URINAL - WALL MOUNTED URINAL CRANE #1147, 1.0 GPF. VITREOUS CHINA, MOUNT 17" A.F.F. TO MEET ADA REQUIREMENTS. PROVIDE WITH SLOAN #8186 G2 OPTIMA PLUS BATTERY OPERATED FLUSHMETER, FLUSHMETER TO HAVE MANUAL OVERRIDE (URINAL SHALL FIT SPACE AVAILABLE.) PROVIDE CARRIER.	2"	1 1/2"	3/4"	-
TD	TRENCH DRAIN - JTRENCH DRAIN J.R. SMITH #9931, COMPLETE WITH HEAVY DUTY FRAME, LOAD CLASS C CAST IRON SLOTTED GRATE, FULLY SLOPED CHANNELS.	3"	2"	-	-
HB1	HOSE BIB - SINGLE SPOUT WITH HOSE CONNECTION. PROVIDE WITH VACUUM BREAKER AND METAL HANDLE. (PLASTIC HANDLES ARE NOT ACCEPTABLE). CHICAGO MODEL NO. 293 WITH E21 VACUUM BREAKER	-	-	3/4"	-
WH1	WALL HYDRANT - WADE W8600,1.75, NON-FREEZE WALL HYDRANT WITH NICKEL BRONZE BOX, COMPLETE WITH CHROME PLATED LOCKING COVER AND BOX WITH INTEGRAL VACUUM BREAKER. WALL HYDRANT TO BE SIZED FOR WALL THICKNESS.	-	-	3/4"	-
FD1	FLOOR DRAIN - FLOOR DRAIN J.R. SMITH #2005-A, WITH NICKEL BRONZE STRAINER, TRAP PRIMER CONNECTION AND DEEP SEAL TRAP.	3"	2"	-	-
FD2	FLOOR DRAIN - SMITH #2340 NB, FLOOR DRAIN WITH SEDIMENT BUCKET, DEEP SEAL P-TRAP, AND NICKEL BRONZE TOP.	2"	2"	-	-
FS1	FLOOR SINK - FLOOR SINK J.R. SMITH #3020, COMPLETE WITH ACID RESISTANT COATED INTERIOR AND POLISHED ALUMINUM DOME BOTTOM STRAINER.	2"	2"	-	-

GAS FIRED WATER HEATER SCHEDULE

MARK	MFR. CATALOG NO.	SERVICE	MAX GPM	FUEL GAS	INPUT BTU	RECOV GPH	VOLTS/PH	AMPS/ VOLTS	TEMP F IN/OUT	FLUE SIZE	REMARKS
WH 1	RINNAI V2520FFUC	HOT WATER	5.3	PROPANE	180,000	-	120/1	-/15w	40°/140°	2"	(1) (2) (3)

1 INSTALL PER MANUFACTURERS REQUIREMENTS
2 87% EFFICIENCY
3 CONCENTRIC VENT KIT

GAS LOADS

MARK	CFH
B-1	80,000
B-1	80,000
B-1	80,000
F-1	80,000
WATER HEATER WH-1	180,000
TOTAL	500,000

ANTICIPATED DEVELOPED LENGTH: 300'

AIR COMPRESSOR

MARK	DUTY	ACFM @ 175 PSI	RECEIVER CAP. (GAL)	ELECTRICAL VOLT/PH	ELECTRICAL HP	MANUFACTURER & MODEL NO	NOTES
AC 1	SHOP AIR	25.8	80	208/1	7.5	CHAMPION HRV 7-8	(1) (2) (3) (4)
CA 1	COMPRESSED AIR CONNECTION						

(1) START/STOP, WITH PROVISION FOR NO LOAD START. INCLUDE MAGNETIC STARTER
(2) MOUNT AIR COMPRESSOR ON VIBRATION ISOLATORS.
(3) PROVIDE STORAGE TANK. AUTOBLEEDER. ROUTE TO DRAIN.
(4) PROVIDE FLEXIBLE CONNECTOR BETWEEN AIR COMPRESSOR AND COMPRESSED AIR LINE
(5) SEE SPECIFICATIONS.

1

CLIENT

UDOT CONNECTING COMMUNITIES

STATION #3437A
SR-44 @ M.P. 0.5 ±
GREENDALE UTAH

DESIGNER

ARCHIPLEX GROUP
architecture • planning • design services
1135 South West Temple, Ste. A
Salt Lake City, UT 84101
P:(801) 961-7070
F:(801) 961-7373

CONSULTANTS

VAN BOERUM & FRANK ASSOCIATES INC.
WWW.VBFA.COM CONSULTING ENGINEERS
Salt Lake City • Logan • St. George • Tempe • Pocatello
811 West Cedar St., Pocatello, ID 83201-6139
208.478.4613 T
208.478.4617 F

PROFESSIONAL SEAL

LICENSED PROFESSIONAL ENGINEER
CLIFFORD DEE HOLMES
03/18/08
NUMBER 309570
STATE OF UTAH

ISSUE

MARK	DATE	DESCRIPTION
1	03/20/08	ADDENDUM #2
	02-2008	CONSTRUCTION DOCUMENTS

DFCM CONTRACT NO:	077325
DFCM PROJECT NO:	07029900
ARCHIPLEX PROJECT NO:	0708.01
DRAWN BY:	LCM
CHECKED BY:	CDH
SCALE:	NONE
DATE:	FEBRUARY, 2008

SHEET TITLE

PLUMBING SYMBOLS AND SCHEDULES

P001

J:\Archiplex\UDOT\UDOT Greendale\Plum\UDTGP001.dwg, 3/18/2008 2:40:14 PM

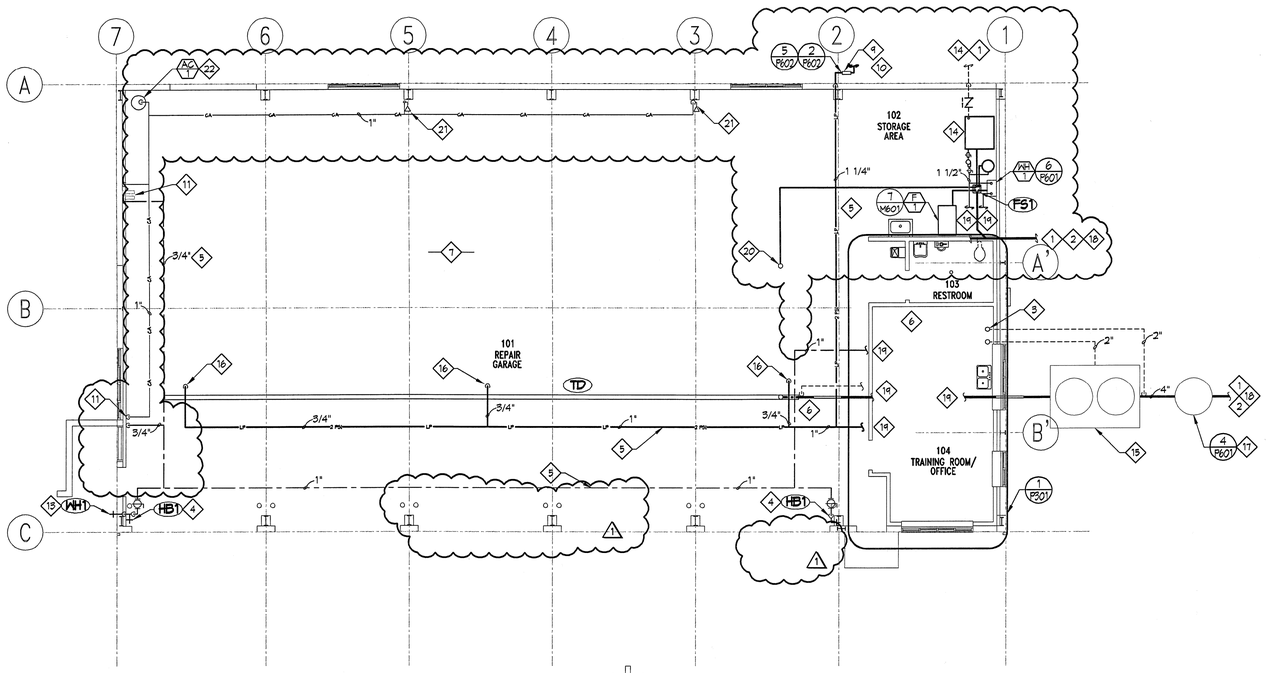

MAINTENANCE BUILDING PLAN

SCALE: 1/8" = 1'-0"

NORTH

KEY NOTES

1. SEE CIVIL SITE DRAWINGS FOR CONTINUATION.
2. SEE CIVIL DRAWINGS FOR INVERT ELEVATION. GENERAL CONTRACTOR IS TO COORDINATE WITH HIS SUBS TO VERIFY SITE SANITARY SEWER AND BUILDING SANITARY SEWER PIPE WILL PROPERLY CONNECT PRIOR TO INSTALLING ANY SANITARY PIPE IN THE SITE OR BUILDING. IF A PROBLEM EXISTS, THE CONTRACTOR IS TO INFORM THE ARCHITECT OF THE PROBLEM PRIOR TO INSTALLING ANY PIPE. IF PIPE IS INSTALLED AND A PROBLEM ARISES, THE CONTRACTOR, AT HIS EXPENSE, SHALL PERFORM ANY WORK REQUIRED SUCH THAT THE SANITARY PIPE CAN BE INSTALLED CORRECTLY TO CODE STANDARDS.
3. VENTS FROM SAND/OIL SEPARATOR MAY BE COMBINED AFTER THEY ARE 10' ABOVE FLOOD RIM OF SEPARATOR. THEN VENTS MAY BE CONNECTED TO VEHICLE STORAGE BAY WASTE SYSTEM VENT PIPE.
4. PROVIDE PVC COVER OVER INSULATION TO 8'-0" AFF. MOUNT HB-1 3'-0" AFF.
5. ROUTE PIPING AT BOTTOM OF STRUCTURE.
6. ALL WASTE PIPING SHALL SLOPE A MINIMUM OF 1/4" PER FOOT.
7. PIPE SLEEVES ARE REQUIRED ON THIS PROJECT. IF CONTRACTOR FAILS TO INSTALL PIPE SLEEVES, THE CONTRACTOR SHALL REMOVE PIPE, INSTALL SLEEVE AND REINSTALL PIPE AT NO ADDITIONAL EXPENSE TO THE OWNER.
8. NOT USED.
9. AT BUILDING EXTERIOR PROVIDE PROPANE SHUTOFF VALVE AND EARTHQUAKE VALVE AT 24" A.F.G. PROVIDE PRESSURE REGULATOR TO REGULATE PRESSURE FROM 10 PSI TO 2 PSI. TURN, PENETRATE BUILDING WALL AND RISE TO ROOF TRUSSES. SEAL PENETRATION AND PROVIDE ESCUTCHEON. SEE DETAIL 5/P602. 1
10. EXTEND PROPANE GAS PIPING FROM TANK FARM TO THIS POINT. CONFIRM EXACT LOCATIONS.
11. CONNECT 3/4" CW LINE AND CA LINE TO OVERHEAD HOSE REEL. PROVIDE SHUT-OFF AND UNION. HOSE REEL BY THIS CONTRACTOR. 1
12. NOT USED.
13. DROP WITH CW LINE ON WARM SIDE OF INSULATION TO WH1 AT 18" AFG.
14. REUSE EXISTING DOMESTIC WATER HOLDING TANK AND BLADDER TANK. REUSE EXISTING WATER SUPPLY. MAKE CONNECTION TO EXISTING IN THIS AREA. CONFIRM EXACT LOCATION. 1
15. EXISTING SAND/OIL INTERCEPTOR TO REMAIN. CONFIRM EXACT LOCATION.
16. GAS LINE DOWN TO HEATER BURNER. PROVIDE SHUT-OFF VALVE, UNION AND APPLIANCE REGULATOR TO REGULATE GAS PRESSURE FROM 2 PSI TO 11" W.C.. REFERENCE DETAIL 2/M603.
17. NEW SAMPLING MANHOLE BY THIS CONTRACTOR. SEE DETAIL.
18. CONNECT TO EXISTING BUILDING SANITARY SEWER. FIELD VERIFY EXACT LOCATION AND INVERT ELEVATION TO PROVIDE PROPER FLOW TO EXISTING SEPTIC DRAIN FIELD.
19. CONTINUED SHEET P301.
20. CONDENSATE DRAIN FROM RADIANT TUBE HEATER VACUUM PUMP TO BE ROUTED TO FLOOR SINK. INSTALL PER MANUFACTURER'S INSTALLATION INSTRUCTIONS.
21. DROP AIR LINE DOWN COLUMN FACE AND TERMINATE WITH QUICK COUPLER 3'-0" A.F.F.
22. AIR COMPRESSOR BY THIS CONTRACTOR. CONNECT 1-1/4" COMPRESSED AIR LINE TO COMPRESSOR. PROVIDE SHUT-OFF VALVE AND UNION. 1

CLIENT

UDOT CONNECTING COMMUNITIES

STATION #3437A
SR-44 @ M.P. 0.5 ±
GREENDALE UTAH

DESIGNER

ARCHIPLEX GROUP
architecture • planning • design services
1135 South West Temple, Ste. A
Salt Lake City, UT 84101
P:(801) 961-7070
F:(801) 961-7373

CONSULTANTS

VAN BOERUM & FRANK ASSOCIATES INC.
WWW.VBFA.COM CONSULTING ENGINEERS
Salt Lake City • Logan • St. George • Tempe • Pocatello
811 West Cedar St., Pocatello, ID 83201-6139
208.478.4613 T
208.478.4617 F

PROFESSIONAL SEAL

LICENSED PROFESSIONAL ENGINEER
CLIFFORD DEE HOLMES
03/18/08
NUMBER 309570
STATE OF UTAH

ISSUE

MARK	DATE	DESCRIPTION
1	03/20/08	ADDENDUM #2
	02-2008	CONSTRUCTION DOCUMENTS

DFCM CONTRACT NO:	077325
DFCM PROJECT NO:	07029900
ARCHIPLEX PROJECT NO:	0708.01
DRAWN BY:	LCM
CHECKED BY:	CDH
SCALE:	1/8"=1'-0"
DATE:	FEBRUARY, 2008

SHEET TITLE

PLUMBING PLAN

P201

J:\Archiplex\UDOT\UDOT Greendale\Plum\UDTGP201.dwg, 3/18/2008 2:39:34 PM

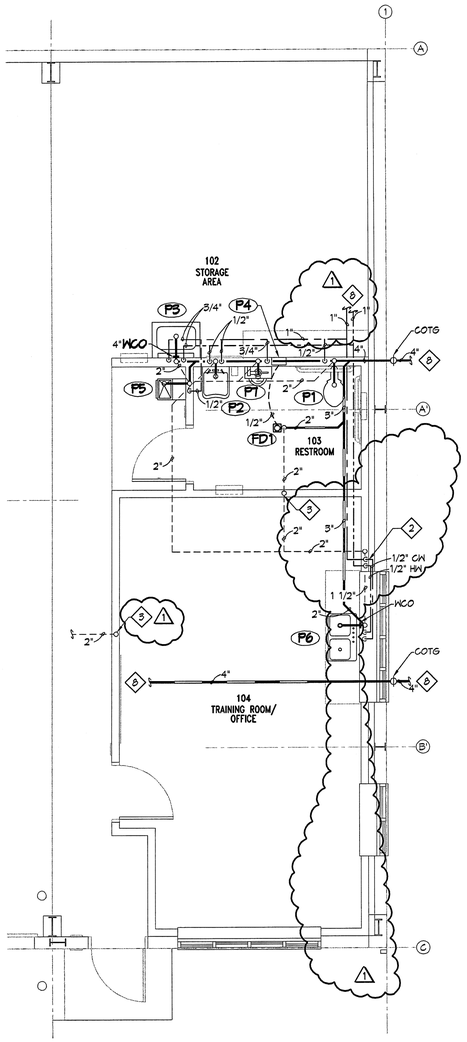

MAIN LEVEL PLUMBING PLAN (1 / P301)

SCALE: 1/4" = 1'-0"

NORTH

KEY NOTES

1
2 DROP IN WALL ON WARM SIDE OF INSULATION TO BELOW COUNTER TOP. RUN WATER PIPING EXPOSED BELOW CONTER TOP TO SINK. 1
3 3" VENT LINE FROM BELOW CONTINUE THROUGH ROOF.
4
5
6
7 1
8 CONTINUED PLUMBING PLAN P201.
9
10
11
12
13
14
15
16
17
18 1

1

CLIENT

UDOT CONNECTING COMMUNITIES

STATION #3437A
SR-44 @ M.P. 0.5 ±
GREENDALE UTAH

DESIGNER

ARCHIPLEX GROUP
architecture • planning • design services
1135 South West Temple, Ste. A
Salt Lake City, UT 84101
P:(801) 961-7070
F:(801) 961-7373

CONSULTANTS

VAN BOERUM & FRANK ASSOCIATES INC.
WWW.VBFA.COM CONSULTING ENGINEERS
Salt Lake City • Logan • St. George • Tempe • Pocatello
811 West Cedar St., Pocatello, ID 83201-6139
208.478.4613 T
208.478.4617 F

PROFESSIONAL SEAL

LICENSED PROFESSIONAL ENGINEER
CLIFFORD DEE HOLMES
03/18/08
NUMBER 309570
STATE OF UTAH

ISSUE

MARK	DATE	DESCRIPTION
1	03/20/08	ADDENDUM #2
	02-2008	CONSTRUCTION DOCUMENTS

DFCM CONTRACT NO:	077325
DFCM PROJECT NO:	07029900
ARCHIPLEX PROJECT NO:	0708.01
DRAWN BY:	LCM
CHECKED BY:	CDH
SCALE:	1/4"=1'-0"
DATE:	FEBRUARY, 2008

SHEET TITLE

PLUMBING ENLARGEMENTS

P301

J:\Archiplex\UDOT\UDOT Greendale\Plum\UDTGP301.dwg, 3/18/2008 1:30:37 PM

NOTES:

1 PIPING, CLEANOUT CONFIGURATION, SIZE AND TYPE OF PIPING MATERIAL AS PER CITY OR SANITARY DISTRICT. INSPECTION BY SANITRAY DISTRICT PRIOR TO BACKFILLING.

2 WIDTH OF TROUGH IN MANHOLE MUST BE SAME SIZE AS THE INLET PIPE INTO MANHOLE. DEPTH OF TROUGH MUST BE THE SAME AS ½ OF INLET PIPE DIAMETER

3 CONCRETE SHALL HAVE A MINIMUM 28 DAY COMPRESSIVE STRENGTH OF 4000 PSI.

4 REINFORCEMENT STEEL SHALL BE ASTM A615 GRADE 60.

5 THE CONCRETE COVER OVER REINFORCEMENT STEEL SHALL BE A MINIMUM OF 1-½ INCHES.

6 THE STRUCTURE SHALL BE DESIGNED BY A REGISTERED PROFESSIONAL ENGINEER LICENSED IN THE STATE OF UTAH.

7 THE STRUCTURE SHALL BE DESIGNED FOR THE FOLLOWING LOADING CRITERIA:

A) WALLS DESIGNED FOR A SATURATED EQUIVALENT FLUID AT-REST SOIL PRESSURE OF 90 PCF PLUS TRUCK SURCHARGES

B) TRUCK LOADING USING AN AASHTO H-20 TRUCK LOAD.

8 MANHOLES WILL HAVE STAINLESS OR PLASTIC STEPS.

9 ALL MANHOLES MUST HAVE ROUND NOTCHED COVERS WITH PICK HOLE FOR REMOVAL

10 FOR NEW CONSTRUCTION BOTTOM OF INLET PIPE INTO MANHOLE MUST BE AT LEAST 3 INCHES ABOVE THE BOTTOM OF THE TROUGH THRU THE MANHOLE.

NOTE:
SANITARY PIPING FROM TOILETS MUST TIE IN DOWNSTREAM FROM SAMPLING MANHOLE.

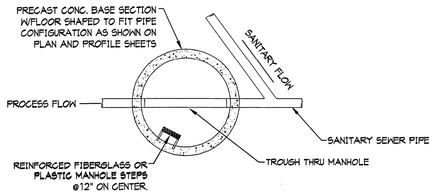

PLAN VIEW

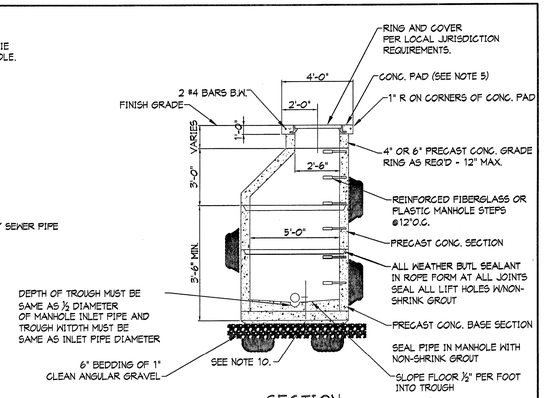

SECTION

SAMPLING MANHOLE DETAIL

SCALE: NO SCALE | 4

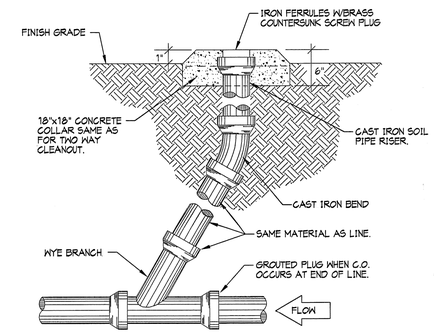

EXTERIOR CLEANOUT DETAIL

SCALE: NO SCALE | 1

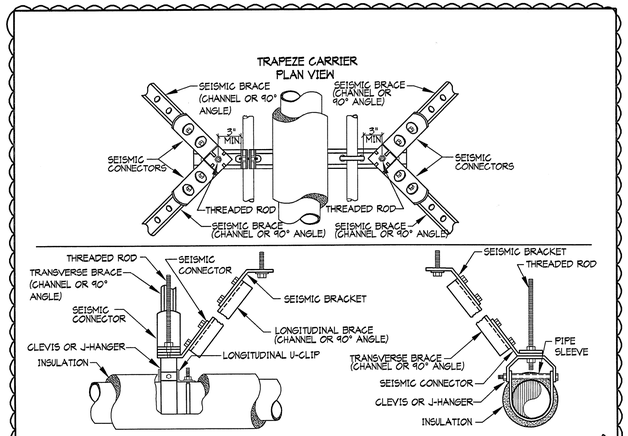

TYPICAL SEISMIC PIPE BRACING

SCALE: NO SCALE | 6

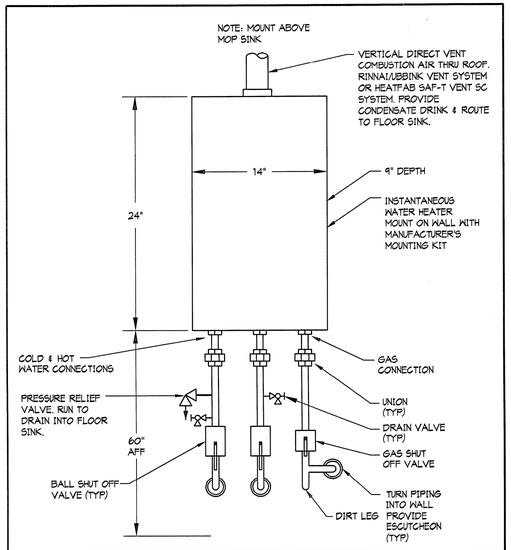

GAS INSTANTANEOUS WATER HEATER

5

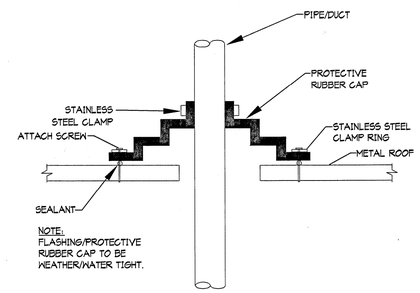

NOTE:
FLASHING/PROTECTIVE RUBBER CAP TO BE WEATHER/WATER TIGHT.

METAL ROOF PENETRATION DETAIL

SCALE: NO SCALE | 2

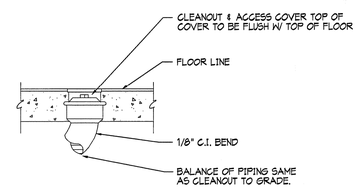

FLOOR CLEANOUT

SCALE: NO SCALE | 3

CLIENT

UDOT CONNECTING COMMUNITIES

STATION #3437A
SR-44 @ M.P. 0.5 ±
GREENDALE UTAH

DESIGNER

ARCHIPLEX GROUP
architecture • planning • design services
1135 South West Temple, Ste. A
Salt Lake City, UT 84101
P:(801) 961-7070
F:(801) 961-7373

CONSULTANTS

VAN BOERUM & FRANK ASSOCIATES INC.
WWW.VBFA.COM CONSULTING ENGINEERS
Salt Lake City • Logan • St. George • Tempe • Pocatello
811 West Cedar St., Pocatello, ID 83201-6139
208.478.4613 T
208.478.4617 F

PROFESSIONAL SEAL

LICENSED PROFESSIONAL ENGINEER
CLIFFORD DEE HOLMES
03/18/08
NUMBER 309570
STATE OF UTAH

ISSUE

MARK	DATE	DESCRIPTION
1	03/20/08	ADDENDUM #2
	02-2008	CONSTRUCTION DOCUMENTS

DFCM CONTRACT NO:	077325
DFCM PROJECT NO:	07029900
ARCHIPLEX PROJECT NO:	0708.01
DRAWN BY:	LCM
CHECKED BY:	CDH
SCALE:	NONE
DATE:	FEBRUARY, 2008

SHEET TITLE

PLUMBING DETAILS

P601

J:\Archiplex\UDOT\UDOT Greendale\Plum\UDTGF601.dwg, 3/18/2008 1:30:13 PM

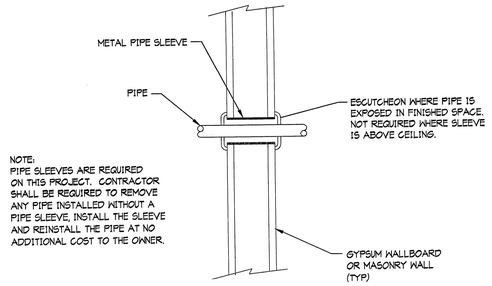

NOTE:
PIPE SLEEVES ARE REQUIRED ON THIS PROJECT. CONTRACTOR SHALL BE REQUIRED TO REMOVE ANY PIPE INSTALLED WITHOUT A PIPE SLEEVE, INSTALL THE SLEEVE AND REINSTALL THE PIPE AT NO ADDITIONAL COST TO THE OWNER.

PIPING THRU GYPSUM WALL

SCALE: NO SCALE (4)

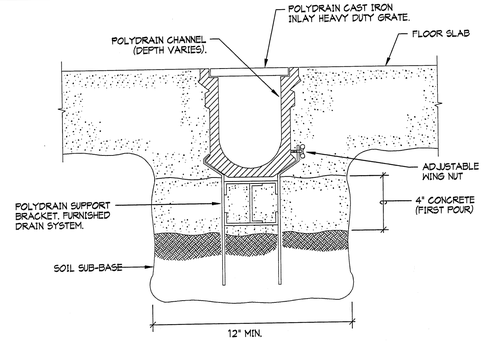

TRENCH DRAIN INSTALLATION

NOTE:
REFER TO ARCHITECTURAL DRAWINGS FOR WEATHERPROOF REQUIREMENTS.

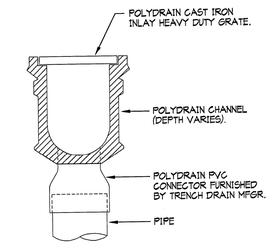

TRENCH DRAIN PIPING

TYPICAL TRENCH DRAIN DETAIL

SCALE: NO SCALE (1)

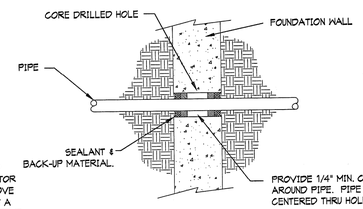

NOTE.
PIPE SLEEVES ARE REQUIRED ON THIS PROJECT. CONTRACTOR SHALL BE REQUIRED TO REMOVE ANY PIPE INSTALLED WITHOUT A PIPE SLEEVE, INSTALL THE SLEEVE AND REINSTALL THE PIPE AT NO ADDITIONAL COST TO THE OWNER.

PIPE THRU WALL - BELOW GRADE

SCALE: NO SCALE (5)

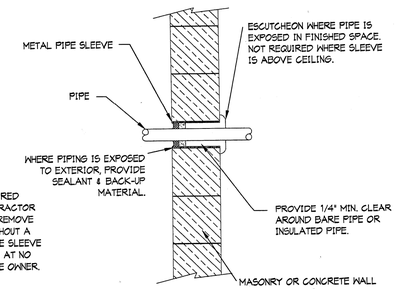

NOTE.
PIPE SLEEVES ARE REQUIRED ON THIS PROJECT. CONTRACTOR SHALL BE REQUIRED TO REMOVE ANY PIPE INSTALLED WITHOUT A PIPE SLEEVE, INSTALL THE SLEEVE AND REINSTALL THE PIPE AT NO ADDITIONAL COST TO THE OWNER.

PIPE THRU WALL ABOVE GRADE

SCALE: NO SCALE (2)

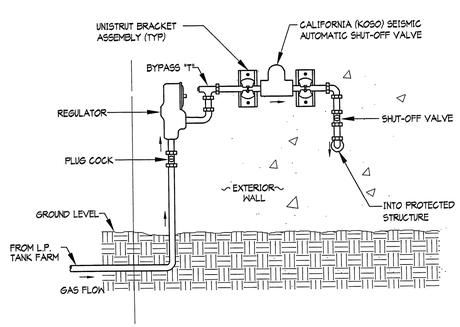

SEISMIC GAS VALVE

SCALE: NO SCALE (6)

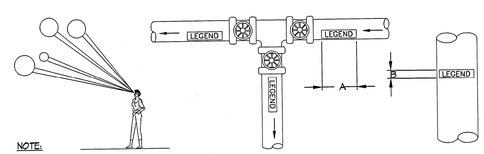

NOTE:
IDENDIFICATION MARKERS OR STRIPS TO BE PLACED ON ALL EXPOSED COVERED AND UNCOVERED PIPES AT 50'-0" INTERVALS AND AT ALL VALVES, BRANCHES, CHANGE IN DIRECTION OF FLOW AND ON BOTH SIDES OF WALLS WHERE PIPES PASS THROUGH SAME. ARROWS OF SAME COLOR AS IDENTIFICATION MARKERS SHALL ALSO BE PLACED ON PIPES POINTING AWAY FROM MARKER INDICATION DIRECTION OF FLOW.

OUTSIDE DIAMETER OF PIPE OR COVERING		LENGTH OF COLOR FIELD A		SIZE OF LETTERS B	
INCHES	MM	INCHES	MM	INCHES	MM
3/4" TO 1-1/4"	19 TO 32	8"	200	1/2"	13
1-1/2" TO 2"	38 TO 51	8"	200	3/4"	19
2-1/2" TO 6"	64 TO 150	12"	300	1-1/4"	32
8" TO 10"	200 TO 250	24"	600	2-1/2"	64
OVER 10"	OVER 250	32"	800	3-1/2"	89

SERVICE	BACKGROUND OR COLOR BAND	IDENTIFICATION MARKER
DOMESTIC COLD WATER	GREEN	WHITE ON GREEN
DOMESTIC HOT WATER	YELLOW	BLACK ON YELLOW
DOMESTIC HOT WATER RETURN	YELLOW	BLACK ON YELLOW
FIRE PROTECTION (SPRINKLER)	RED	WHITE ON RED
NATURAL GAS	YELLOW	BLACK ON YELLOW
SANITARY DRAIN	GREEN	WHITE ON GREEN
STORM WATER	GREEN	WHITE ON GREEN

PIPE IDENTIFICATION DETAIL

SCALE: NO SCALE (3)

CLIENT

UDOT CONNECTING COMMUNITIES

STATION #3437A
SR-44 @ M.P. 0.5 ±
GREENDALE UTAH

DESIGNER

ARCHIPLEX GROUP
architecture • planning • design services
1135 South West Temple, Ste. A
Salt Lake City, UT 84101
P:(801) 961-7070
F:(801) 961-7373

CONSULTANTS

VAN BOERUM & FRANK ASSOCIATES INC.
CONSULTING ENGINEERS
WWW.VBFA.COM
Salt Lake City • Logan • St. George • Tempe • Pocatello
811 West Cedar St.,
Pocatello, ID 83201-6139
208.478.4613 T
208.478.4617 F

PROFESSIONAL SEAL

LICENSED PROFESSIONAL ENGINEER
CLIFFORD DEE HOLMES
03/18/08
NUMBER 309570
STATE OF UTAH

ISSUE

MARK	DATE	DESCRIPTION
1	03/20/08	ADDENDUM #2
	02-2008	CONSTRUCTION DOCUMENTS

DFCM CONTRACT NO:	077325
DFCM PROJECT NO:	07029900
ARCHIPLEX PROJECT NO:	0708.01
DRAWN BY:	LCM
CHECKED BY:	CDH
SCALE:	NONE
DATE:	FEBRUARY, 2008

SHEET TITLE

PLUMBING DETAILS

P602

J:\Archiplex\UDOT\UDOT Greendale\Plum\UDTGP602.dwg, 3/18/2008 1:29:53 PM

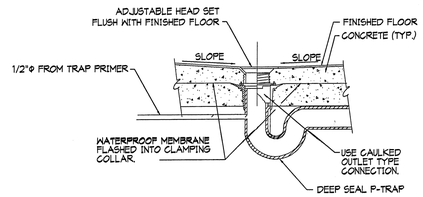

FLOOR DRAIN DETAIL — SCALE: NO SCALE — (7)

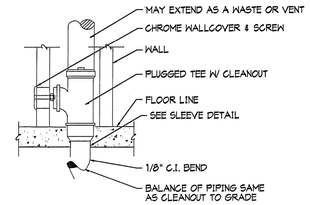

WALL CLEANOUT - ALL VERTICAL PIPE — SCALE: NO SCALE — (4)

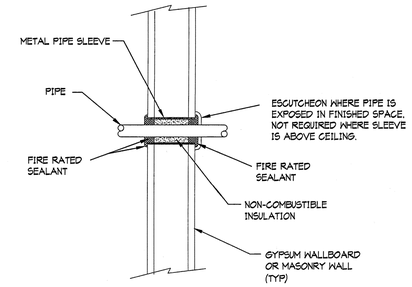

PIPING THRU FIRE-RATED WALL — SCALE: NO SCALE — (1)

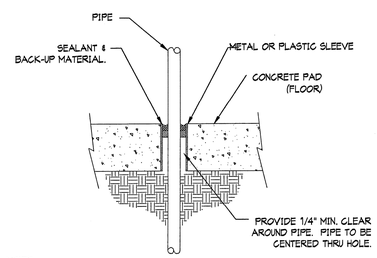

NOTE:
ALL PIPES TO BE SLEEVED. THIS INCLUDES WATER, SEWER ETC.

PIPING THRU ON GRADE FLOOR — SCALE: NO SCALE — (8)

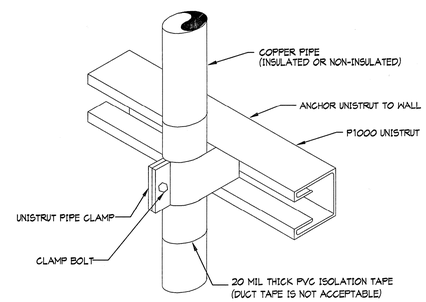

PIPE SUPPORT DETAIL — SCALE: NO SCALE — (5)

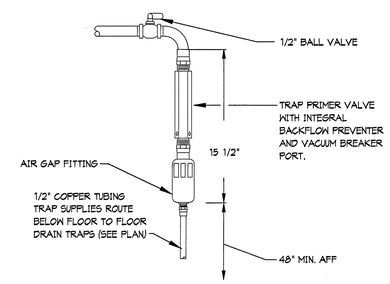

TRAP PRIMER DETAIL — SCALE: NO SCALE — (2)

NOTE:
1. PLACE PUMP AS CLOSE TO STORAGE TANK AS POSSIBLE.
2. PROVIDE LONG RADIUS ELBOWS ON SUCTION AND DISCHARGE PIPING.
3. CENTRIFUGAL PUMP SHOULD NOT BE STARTED NOR RUN DRY. ALWAYS PRIME PUMP BEFORE STARTING.

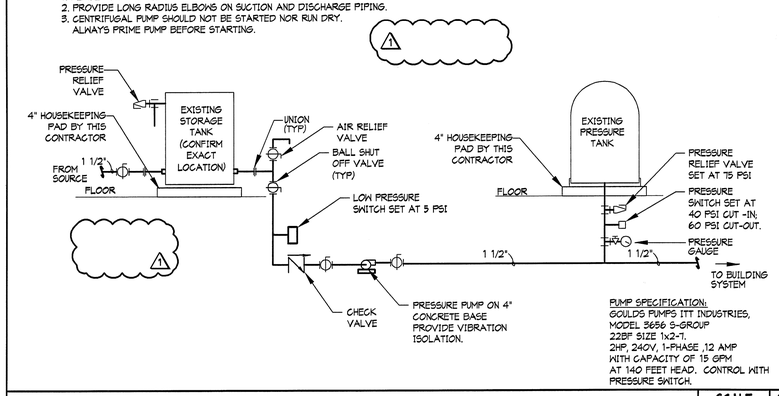

PUMP SPECIFICATION:
GOULDS PUMPS ITT INDUSTRIES, MODEL 3656 S-GROUP 22BF SIZE 1x2-7, 2HP, 240V, 1-PHASE ,12 AMP WITH CAPACITY OF 15 GPM AT 140 FEET HEAD. CONTROL WITH PRESSURE SWITCH.

WATER PRESSURE SYSTEM — SCALE: NO SCALE — (9)

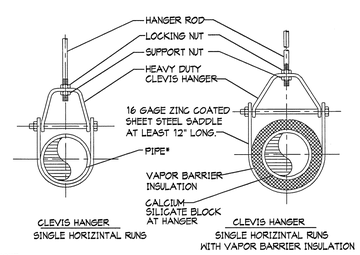

NOTE:
*INSTALL 20 MIL THICK PVC ISOLATION TAPE BETWEEN PIPE AND HANGER FOR DISSIMILAR MATERIAL. WRAP TAPE AROUND PIPE (DUCT TAPE OR ELECTRICIAN TAPE IS NOT ACCEPTABLE)
*PLUMBER'S TAPE IS NOT AN ACCEPTABLE METHOD TO HANG PIPE.

PIPE HANGERS DETAIL — SCALE: NO SCALE — (6)

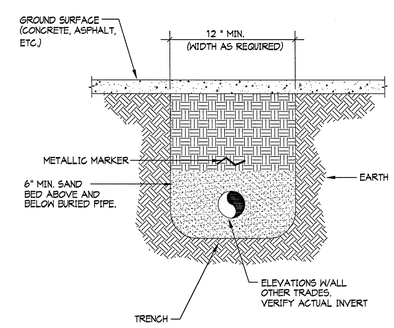

BURIED PIPE DETAIL — SCALE: NO SCALE — (3)

CLIENT

UDOT CONNECTING COMMUNITIES

STATION #3437A
SR-44 @ M.P. 0.5 ±
GREENDALE UTAH

DESIGNER

ARCHIPLEX GROUP
architecture • planning • design services
1135 South West Temple, Ste. A
Salt Lake City, UT 84101
P:(801) 961-7070
F:(801) 961-7373

CONSULTANTS

VAN BOERUM & FRANK ASSOCIATES INC.
WWW.VBFA.COM CONSULTING ENGINEERS
Salt Lake City • Logan • St. George • Tempe • Pocatello
811 West Cedar St., Pocatello, ID 83201-6139
208.478.4613 T
208.478.4617 F

PROFESSIONAL SEAL

LICENSED PROFESSIONAL ENGINEER
CLIFFORD DEE HOLMES
03/18/08
NUMBER 309570
STATE OF UTAH

ISSUE

MARK	DATE	DESCRIPTION
1	03/20/08	ADDENDUM #2
	02-2008	CONSTRUCTION DOCUMENTS

DFCM CONTRACT NO:	077325
DFCM PROJECT NO:	07029900
ARCHIPLEX PROJECT NO:	0708.01
DRAWN BY:	LCM
CHECKED BY:	CDH
SCALE:	NONE
DATE:	FEBRUARY, 2008

SHEET TITLE

PLUMBING DETAILS

P603

J:\Archiplex\UDOT\UDOT Greendale\Plum\UDTGP603.dwg, 3/18/2008 1:29:28 PM

ELECTRICAL SYMBOL SCHEDULE

SYMBOL	DEVICE/FIXTURE DESCRIPTION	MOUNTING	NOTES
	FLUORESCENT LIGHT FIXTURE		(1) (2) (3)
	EXIT LIGHT FIXTURE - WALL MOUNT		(1) (2) (4) (5)
	WALL LIGHT FIXTURE		(1) (2)
S	SINGLE POLE SWITCH		(6)
S_3	THREE WAY SWITCH		(6)
S_M	MOTION SENSING SWITCH		(7)
T	THERMOSTAT		
	DUPLEX CONVENIENCE OUTLET, GROUNDING TYPE		(6)
	DUPLEX CONVENIENCE OUTLET - GFI		(6)
	SINGLE CONVENIENCE OUTLET		(6)
	DOUBLE DUPLEX OUTLET		(6)
	SINGLE PHASE SPECIAL OUTLET	NEMA - SUBSCRIPT MARKS TYPE	(6)

	VOLTS	AMPS	OUTLET	PLUG	WIRE
1	125	30	5-30R	5-30P	3W
2	250	20	6-20R	6-20P	3W
3	250	30	10-30R	10-30P	3W
4	250	60			

(13)

	JUNCTION BOX	(12)
	JUNCTION BOX	(12) MOUNT AS NOTED
F	FAN MOTOR OUTLET - CEILING OR AS NOTED	
	TELEPHONE OUTLET	(6)
R	VEHICLE EXHAUST FAN SWITCH	
S	CARBON MONOXIDE SENSOR	
	DISCONNECT SWITCH	(7)
F	FUSED DISCONNECT SWITCH	(8) (13)
	MAGNETIC STARTER WITH DISCONNECT	(7)
	MULTI-MEDIA STRUCTURED CABLING OUTLET	
	MAIN POWER PANEL	
	PANEL BOARD	
	EMERGENCY LIGHT FIXTURE	(1) (2)
	OVERHEAD DOOR CONTROL	

	WIRING IN CND IN CEILING OR WALL	— — —	WIRING IN CND IN GROUND OR FLOOR
—o	CONDUIT TURNED UP	—•	CONDUIT TURNED DOWN
—►	CIRCUIT HOME RUN TO PANEL. 3 CONDUCTORS INCLUDING THE EQUIPMENT GROUND CONDUCTOR.		
#►	CIRCUIT HOME RUN TO PANEL. NUMBER OF ARROW HEADS INDICATE NUMBER OF CIRCUITS. SLASH MARKS INDICATE NUMBER OF CONDUCTORS. EX. TWO CIRCUITS, FOUR CONDUCTORS, COMMON NEUTRAL AND THREE CIRCUITS WITH 7 CONDUCTORS (SEPERATE NEUTRAL PER CIRCUIT). BOTH EX. INCLUDE AN EQUIP. GROUND.		

INSTALL CONDUIT AS DRAWN ON THE PLANS. THE ONLY EXCEPTIONS ARE THOSE AUTHORIZED IN WRITING BY THE ENGINEER.
ALL CONDUITS SHALL INCLUDE AN EQUIPMENT GROUND CONDUCTOR SIZED PER NEC.

ABBREVIATIONS/NOTES

AFF - ABOVE FINISHED FLOOR, AFG - ABOVE FINISHED GRADE,
AIC - AMPS INTERUPTING CAPACITY, BC - BARE COPPER, BFC - BELOW FINISHED CEILING
BFG - BELOW FINISHED GRADE, CND. OR C. - CONDUIT, CT - CURRENT TRANSDUCER,
DFA - DROP FROM ABOVE, EC - ELECTRICAL CONTRACTOR, GC - GENERAL CONTRACTOR,
MC - MECHANICAL CONTRACTOR, MCA - MINIMUM CIRCUIT AMPS,
P.C. - PLUMBING CONTRACTOR, POC - POINT OF CONNECTION, POS - POINT OF SALES,
RMC - RIGID METAL CONDUIT, SCA - SHORT CIRCUIT AMPERES,
TC - TEMP. CONTROL CONTRACTOR, VA - VOLT/AMPS, VIF - VERIFY IN FIELD,
WP - WEATHER PROOF/NEMA 3R

(1) SEE LIGHTING FIXTURE SCHEDULE FOR TYPE AND SPECIFICS.
(2) SEE LIGHTING FIXTURE SCHEDULE FOR MOUNTING OF FIXTURE.
(3) WIRE FIXTURE FROM ADJACENT J-BOX
(4) DO NOT SWITCH
(5) PROVIDE DIRECTIONAL ARROWS AS SHOWN ON THE DRAWINGS BY THE DARKENED AREA
(6) ACCEPTABLE EQUALS ARE P&S, LEVITON, COOPER, HUBBELL
(7) ACCEPTABLE EQUALS ARE GENERAL ELECTRIC, ALLEN-BRADLEY, SQUARE D
(8) ACCEPTABLE EQUALS ARE LEVITON, P&S, HUBBELL, COOPER
(9) PROVIDE MUD RING AND/OR BOX COVER APPROPRIATE FOR DEVICE/FIXTURE SERVED
(10) USE HEAVY DUTY FOR 480 VOLT.
(11) ACCEPTABLE EQUALS ARE HUBBELL, ORTRONICS, SIEMON
(12) SWITCH WITH LIGHTS UNLESS INDICATED OTHERWISE.
(13) PROVIDE RECEPTACLE CONFIGURATION AND NUMBER OF CONDUCTORS REQUIRED BY EQUIPMENT.

LIGHT-FIXTURE SCHEDULE

TYPE	DESCRIPTION / MANUFACTURER	CATALOG NUMBER	LAMPS No	LAMPS TYPE	VOLTS	MOUNTING	REMARKS
	8' 4-LAMP INDUSTRIAL FLUORESCENT FIXTURE						
L1	METALUX	8TD1M232-120V-EB82	4	F32T8SP35	120	PENDENT	(1)
							110 VA
	RECESSED FLANGED 2'X4' 3-LAMP FLUORSCENT FIXTURE						
L2	METALUX	2FC8-332A-120VEB82	3	F32T8SP35	120	RECESSED	(1)
							98 VA
	SURFACE MOUNTED FLUORSCENT WRAP AROUND FIXTURE						
L3	METALUX	WS232A-120VEB81	2	F32T8SP35	120	SURFACE	
							68 VA
	EMERGENCY BATTERY PACK						
L4	SURELITES	CCTNCSD-SM	2	C/W UNIT	120	SURFACE	
							82 VA
	LED EXIT SIGN W/ REMOTE CAPACITY						
L5	SURELITES	LPX10DGWH	-	LED	120	UNIV.	
							7 VA
	OUTDOOR 250W METAL HALIDE WALLPACK						
L6	LUMARK	MHWL250-120V-WHT	1	250WMH	120	SURFACE	
							275 VA
	OUTDOOR 400W METAL HALIDE FLOOD LIGHT						
L7	McGRAW EDISON	AMF-Y-400MH-120-T6-WH	1	400WMH	120	WALL	
							460 VA
	100W METAL HALIDE FIXTURE						
L8	LUMARK	MHIP-T-100-120V-EM/SC/12V-F1-PE	1	15TTDC	120	WALL	(2)
							110 VA
	4' 2-LAMP FLUORESCENT WALL FIXTURE						
L9	METALUX	BC232-120V-EB81	2	F32T8SP35			
							65 VA
	POLE LIGHT - 30' POLE						
L10	McGRAW EDISON	GLM-AM-400MH-240-35-FGAP/ MA1007-AP-R556M305V	1	400WMH	240	POLE	
							460 VA
	BATTERY PACK						
L11	SURE-LITES	XRG			120	WALL 7'-6"	
							18 VA
	CANOPY LIGHT						
L12	COOPER	MH CL 250W MT	1	250WMH	240	SURFACE	
							280 VA

NOTE: THE FIXTURES LISTED IN THIS SCHEDULE REPRESENT THE QUALITY AND TYPE OF FIXTURES DESIRED. EQUALS OF THOSE MANUFACTURERS NOTED IN THE REMARKS ARE ACCEPTED. FOR THOSE FIXTURES WITHOUT A MANUFACTURE DESIGNATION IN THE REMARK COLUMN THE SUPPLIER MAY SUBMIT A FIXTURE THEY BELIEVE TO BE EQUAL TO THE ONE SPECIFIED. TO BE ACCEPTABLE THE FIXTURES SUBMITTED MUST BE OF THE SAME TYPE AND MATERIAL AS THAT SPECIFIED AND MUST RECEIVE APPROVAL FROM THE ENGINEER BY ADDENDUM PRIOR TO BID.

(1) PROVIDE TWO BALLASTS AND WIRE FOR INBOARD/OUTBOARD SWITCHING.
(2) ORDER WITH MR16, 35W LAMP FOR 12V EMERGENCY CIRCUIT.

MECHANICAL EQUIPMENT SCHEDULE

MARK	DESCRIPTION	ELECTRICAL V/PH	MCA	MOCP	LMHP	DISCONNECT SIZE/POLE	FUSE SIZE	REMARKS
B-1	RADIANT HEATER	120/1	1.0					
AC-1	AIR COMPRESSOR	230/1			1.5	60/2	60	(3)
EF-1	EXHAUST FAN	120/1	0.4					(2)
EF-2	EXHAUST FAN	230/1	8.0	15.0	1.0			(4)(13)
F-1	FURNACE	120/1	9.8	15.0	1/2	20A SWITCH/1	NF	(6)
VP-1	VACUUM PUMP	120/1	4.8	15.0	1/3	20A SWITCH/1	NF	(6)
WELL	WELL PUMP	240/1	17.0	35.0	3	60/2	25AF	
LM	LOUVER MOTOR	120/1	1.5					(4)
GATE	AUTO GATE	240/1	8.0	20.0	1	30/2	20AF	(7)
WH-1	WATER HEATER	120/1	0.8					
	PRESSURE PUMP	240/1	6.6		2	30/2		(3)

V/PH/Hz = VOLTAGE / PHASE / HERTZ
MCA = MINIMUM CIRCUIT AMPACITY
MOCP = MAXIMUM OVER CURRENT PROTECTION LISTED BY THE MANUFACTURER
NF = NON-FUSED
LMHP = LARGEST MOTOR HORSE POWER

NOTES:
(1) UNIT FURNISHED WITH DISCONNECT INSTALLED BY EC.
(2) SWITCH WITH LIGHT FIXTURE
(3) PROVIDE NEMA 1 DISCONNECT. FUSE TO MAX FUSE SIZE AS LISTED BY MANUFACTURER
(4) INTERLOCK LOUVER MOTOR WITH FAN MOTOR. COORDINATE WITH MC.
(5) PROVIDE COMBINATION STARTER (SQUARE D 8538-SBG61V02-CP15X20Y14)
(6) PROVIDE DISCONNECT DEVICE AS REQUIRED BY UNIT.
(7) ASSUMED LOAD AND VOLTAGE. E.C. SHALL CONFIRM LOAD AND VOLTAGE.

CONDUIT/CONDUCTOR SCHEDULE

MARK	AMPS	CONDUIT CABLE	CONDUCTOR QTY	SIZE	INSUL.	REMARKS
212	20	3/4"	2	12	(1)	(2)
412	20	3/4"	4	12	(1)	(2)
20	30	3/4"	2	10	(1)	(2)
20-1	30	1"	2	10	(1)	(2)
28	50	3/4"	2	8	(1)	(2)
26	65	1"	2	6	(1)	(2)
35	100	1 1/4"	3	3	(1)	(2)
3-4	335	3"	3	400	(1)	(2)
3S-2	200	2 1/2"	3	3/0	(1)	(2)

NOTE:
(1) THHN/THWN-2.
(2) ALL CONDUIT SHALL CONTAIN A SEPARATE EQUIPMENT GROUNDING CONDUCTOR SIZED IN ACCORDANCE WITH THE NEC. ACCOUNT FOR PARALLEL RUNS.

SUFFIX:
"A" INDICATES ALUMINUM CONDUCTORS
"Y" INDICATES YELLOW ISOLATED GROUND CONDUCTOR IN ADDITION TO THE GROUND CONDUCTOR IN NOTE ABOVE.

GENERAL NOTES

1. THE ELECTRICAL SYSTEMS DEFINED BY THESE PLANS AND SPECIFICATIONS ARE TO BE CONSTRUCTED AS COMPLETE AND OPERABLE SYSTEMS AND SHALL BE BID WITH THIS INTENT. THE CONTRACTOR SHALL VISIT THE SITE, READ ALL THE RELEVANT DOCUMENTS AND BECOME FAMILIAR WITH THE TYPE OF CONSTRUCTION AND WORK TO BE ACCOMPLISHED. SHOULD ANY ERROR, OMISSION OR CONFLICT EXIST IN EITHER THE PLANS OR SPECIFICATIONS, THE CONTRACTOR SHALL NOTIFY THE ENGINEER IN WRITING BEFORE SUBMITTING HIS BID PRICE SO A CHANGE CAN BE ISSUED IN A PRE-BID ADDENDUM. OTHERWISE, THE CONTRACTOR AND/OR EQUIPMENT SUPPLIER SHALL SUPPLY THE PROPER MATERIALS AND LABOR TO INSTALL COMPLETE AND OPERABLE SYSTEMS AT THEIR OWN EXPENSE. WHEN EACH ELECTRICAL SYSTEM IS COMPLETE, THE CONTRACTOR SHALL TEST AND CONFIRM IT'S PROPER OPERATION. ANY INCOMPLETE SYSTEM SHALL BE MADE COMPLETE AND OPERABLE.

2. THE ARCHITECTURAL AND MECHANICAL PLANS ARE CONSIDERED A PART OF THE ELECTRICAL DOCUMENTS SO FAR AS THEY APPLY. THE ELECTRICAL CONTRACTOR SHALL REFER TO AND COORDINATE WITH THEM. NO EXTRA COST SHALL BE ALLOWED FOR FAILURE TO COORDINATE THE CONTRACT DOCUMENTS WITH OTHER TRADES AND/OR IF EQUIPMENT DIMENSIONS ARE GREATER THAN SPECIFIED AND/OR DIMENSIONED ON THE PLANS.

3. NO ADDITIONS TO THE CONTRACTOR BID WILL BE ALLOWED FOR CHANGES MADE NECESSARY BY INTERFERENCE WITH OTHER WORK.

4. THE ELECTRICAL CONTRACTOR SHALL PROVIDE EQUIPMENT, MATERIALS AND LABOR FOR THE CONNECTIONS OF ALL EQUIPMENT SHOWN ON THE PLANS - ARCHITECTURAL, MECHANICAL, ETC.

5. THIS PROJECT IS TO BE INSTALLED IN STRICT ACCORDANCE WITH LOCAL AND STATE CODES AND THE NEC. IF AT ANY TIME DURING CONSTRUCTION, OR AFTER, SOMETHING IS FOUND TO BE INSTALLED IN VIOLATION OF THE CODES LISTED ABOVE, IT SHALL BE CORRECTED AT THE CONTRACTORS EXPENSE.

6. ELECTRICAL CONTRACTOR SHALL CONFIRM THE EXACT LOCATION OF THE POWER COMPANY SERVICE TRANSFORMER, BEFORE INSTALLING THE SERVICE CONDUIT.

7. THE ELECTRICAL CONTRACTOR SHALL COORDINATE THE SERVICE FEEDER TO THE BUILDING WITH THE LOCAL UTILITY. PROVIDE LABOR AND CONDUIT, CONDUCTORS, WEATHER HEAD (IF AERIAL FEED), WIRE WAYS, TRANSFORMER LUGS, METER BASES, METER CONDUIT, CONDUCTORS, ETC., AS NEEDED FOR A COMPLETE ELECTRIC SERVICE TO THIS FACILITY.

8. THE EC SHALL INSTALL A SEPARATE EQUIPMENT GROUNDING CONDUCTOR IN EACH CONDUIT RUN. CONDUIT SHALL NOT BE USED AS AN EQUIPMENT GROUNDING CONDUCTOR. THE EC SHALL GROUND THE ELECTRICAL SYSTEM IN ACCORDANCE WITH LOCAL AND NATIONAL CODES.

9. THE CONTRACTOR SHALL NOTIFY THE MANUFACTURER THAT THE LAYOUT AND DIMENSIONS ARE CRITICAL FOR ALL PANELS, SWITCHGEAR, ETC. AND NO PIECE OF EQUIPMENT SHALL EXCEED THE PHYSICAL SIZE INDICATED ON THE PLANS.

10. ELECTRICAL CONTRACTOR SHALL CONFIRM MINIMUM CODE (NEC) WORKING CLEARANCE BEFORE INSTALLING ANY ELECTRICAL PANELS OR CABINETS AND SHALL MOVE THE PANELS AT HIS EXPENSE IF REJECTED BY AN INSPECTOR. IF CLEARANCE IS NOT POSSIBLE, THE DESIGNER SHALL BE NOTIFIED IMMEDIATELY IN WRITING.

11. THE CONTRACTOR SHALL ALLOW THE MOVEMENT, BEFORE ROUGH-IN, OF ANY ELECTRICAL PANEL, DEVICE, LIGHT FIXTURE, ETC. A DISTANCE OF 10 FEET WITHOUT REQUIRING ADDITIONAL COST TO THE PROJECT.

12. THE ELECTRICAL CONTRACTOR SHALL SECURE ALL CONDUIT TO THE STRUCTURE AS IT IS SET IN PLACE USING INDUSTRY STANDARD METHODS AND PRACTICES.

13. TO ASSURE ALL DEVICES ARE RIGIDLY SET, THE ELECTRICAL CONTRACTOR SHALL SECURE ALL DEVICE BOXES WITH BRACKETS, HANGERS, ETC. DESIGNED FOR THE APPLICATION. ANY DEVICE BOXES NOT SECURED WILL BE MADE SECURE AT THE CONTRACTORS EXPENSE.

14. THE ELECTRICAL CONTRACTOR SHALL PROVIDE THE TELEPHONE SERVICE CONDUIT WITH A NYLON PULL CORD INSTALLED. EC SHALL CONFIRM ROUTING, SIZE, AND LOCATION OF THE TELEPHONE SERVICE CONDUIT, AND THE MAIN TELEPHONE BOARD WITH THE TELEPHONE COMPANY AND EACH TELEPHONE OUTLET WITH OWNER PRIOR TO ROUGH-IN.

15. EC SHALL INSTALL A 3/4" CONDUIT WITH (1) #6 BARE COPPER CONDUCTOR FROM TELEPHONE DEMARK TO THE MAIN GROUNDING BUS.

16. BEFORE ANY ELECTRICAL CONDUIT, BOXES, ETC. ARE COVERED (FLOOR, CEILINGS, WALLS, ETC.), THEY SHALL BE APPROVED BY THE INSPECTING OFFICER (INSPECTOR). THE UNCOVERING AND REPLACEMENT OF ELECTRICAL WORK FOR THE INSPECTION PURPOSES WILL BE AT THE COST OF THE ELECTRICAL CONTRACTOR.

17. LIGHT FIXTURES INSTALLED IN THE MECHANICAL ROOM SHALL BE PLACED SO THAT ALL EQUIPMENT IS ADEQUATELY ILLUMINATED AFTER THE MECHANICAL EQUIPMENT IS IN PLACE.

18. ALL FIXTURES SHALL BE SUPPORTED FROM THE BUILDING STRUCTURE AND NOT THE CEILING GRID.

19. ELECTRICAL CONTRACTOR SHALL PROVIDE CONDUIT WITH PULL CORD, FROM ALL HEATING/COOLING EQUIPMENT TO THE THERMOSTAT, FOR THE AUTOMATIC TEMPERATURE SYSTEM CONTROL. CONFIRM AND COORDINATE WITH THE MECHANICAL CONTRACTOR.

20. THE ELECTRICAL CONTRACTOR SHALL PROVIDE AND INSTALL THE STRUCTURED CABLING FROM EACH TELEPHONE OR MULTIMEDIA OUTLET TO THE TELEPHONE/DATA BOARD/RACK. THE CABLE SHALL BE LABELED ON EACH END FOR PROPER IDENTIFICATION BEFORE THE CABLE ENDS ARE TERMINATED. THE ELECTRICAL CONTRACTOR SHALL TERMINATE THE CABLES IN THE OUTLET AND IN THE PATCH PANEL OR BLOCK IN THE TELECOMMUNICATIONS CLOSET.

21. AFTER THE FACILITY IS COMPLETE AND BEEN IN FULL OPERATION FOR TWO WEEKS THE ELECTRICAL CONTRACTOR SHALL OBTAIN THE UTILITY DEMAND, THE SYSTEM VOLTAGE (PHASE TO PHASE AND PHASE TO GROUND) AND AN AMMETER READING (EACH PHASE) ON THE MAIN FEEDERS. THESE READINGS SHALL BE OBTAINED DURING NORMAL OPERATING HOURS FOR THE FACILITY AND SHALL BE RECORDED AND A COPY SENT TO THE ENGINEER.

22. DURING CONSTRUCTION, THE ELECTRICAL CONTRACTOR SHALL REMOVE, REROUTE, AND/OR RELOCATE ANY EXISTING ELECTRICAL EQUIPMENT THAT CONFLICTS WITH THE REMODEL OR ADDITION. ALL SYSTEMS SHALL BE OPERABLE AT THE COMPLETION OF THE PROJECT.

23. THE ELECTRICAL CONTRACTOR SHALL MAINTAIN ELECTRICAL CONTINUITY TO REMAINING EQUIPMENT WHEN ANY EXISTING ELECTRICAL EQUIPMENT IS REMOVED.

CLIENT

UDOT CONNECTING COMMUNITIES

STATION #3437A
SR-44 @ M.P. 0.5 ±
GREENDALE UTAH

DESIGNER

ARCHIPLEX GROUP
architecture • planning • design services
1135 South West Temple, Ste. A
Salt Lake City, UT 84101
P:(801) 961-7070
F:(801) 961-7373

CONSULTANTS

VAN BOERUM & FRANK ASSOCIATES INC.
WWW.VBFA.COM CONSULTING ENGINEERS
Salt Lake City • Logan • St. George • Tempe • Pocatello
811 West Cedar St., Pocatello, ID 83201-6139
208.478.4613 T
208.478.4617 F

PROFESSIONAL SEAL

LICENSED PROFESSIONAL ENGINEER
STAN WALTER JOHNS
03/18/08
NUMBER 5246941
STATE OF UTAH

ISSUE

MARK	DATE	DESCRIPTION
1	03/20/2008	ADDENDUM #2
	02-2008	CONSTRUCTION DOCUMENTS

DFCM CONTRACT NO:	077325
DFCM PROJECT NO:	07029900
ARCHIPLEX PROJECT NO:	0708.01
DRAWN BY:	LCM
CHECKED BY:	SWJ
SCALE:	NONE
DATE:	FEBRUARY, 2008

SHEET TITLE

GENERAL NOTES, SCHEDULES

E001

J:\Archiplex\UDOT\UDOT Greendale\Elec\UDTGE001.dwg, 3/18/2008 4:55:38 PM

COMcheck Software Version 3.4.1
Lighting Compliance Certificate

2006 IECC

Report Date: 03/17/08
Data filename: J:\Archiplex\UDOT\UDOT Greendale\Elec\GREE-UDOT.cck

Section 1: Project Information

Project Title: Greendale Maintenance Facility

Construction Site:
Dutch John, UT

Owner/Agent:

Designer/Contractor:
Gwen Gerkey
Boulder Engineering
811 West Cedar
Pocatello, ID 83201
208-478-4613
beng@bengllc.com

Section 2: General Information

Building Use Description by: **Activity Type**
Project Type: **New Construction**

Activity Type(s)	Floor Area
Workshop	4880

Section 3: Requirements Checklist

Interior Lighting:

❏ 1. Total actual watts must be less than or equal to total allowed watts.

Allowed Watts	Actual Watts	Complies
6832	3036	YES

Exterior Lighting:

❏ 2. Efficacy greater than 45 lumens/W.
Exceptions:
Specialized lighting highlighting features of historic buildings; signage; safety or security lighting; low-voltage landscape lighting.

❏ 3. Comply with Sections 505.2.4 and 505.6 of IECC 2006 and attach documentation.

Controls, Switching, and Wiring:

❏ 4. Independent controls for each space (switch/occupancy sensor).
Exceptions:
Areas designated as security or emergency areas that must be continuously illuminated.
Lighting in stairways or corridors that are elements of the means of egress.

❏ 5. Master switch at entry to hotel/motel guest room.
❏ 6. Individual dwelling units separately metered.
❏ 7. Each space provided with a manual control to provide uniform light reduction by at least 50%.
Exceptions:
Only one luminaire in space;
An occupant-sensing device controls the area;
The area is a corridor, storeroom, restroom, public lobby or sleeping unit.

Areas that use less than 0.6 Watts/sq.ft.

❏ 8. Automatic lighting shutoff control in buildings larger than 5,000 sq.ft.
Exceptions:
Sleeping units, patient care areas; and spaces where automatic shutoff would endanger safety or security.

❏ 9. Photocell/astronomical time switch on exterior lights.
Exceptions:
Lighting intended for 24 hour use.

❏ 10. Tandem wired one-lamp and three-lamp ballasted luminaires (No single-lamp ballasts).
Exceptions:
Electronic high-frequency ballasts; Luminaires on emergency circuits or with no available pair.

Section 4: Compliance Statement

Compliance Statement: The proposed lighting design represented in this document is consistent with the building plans, specifications and other calculations submitted with this permit application. The proposed lighting system has been designed to meet the 2006 IECC requirements in COM*check* Version 3.4.1 and to comply with the mandatory requirements in the Requirements Checklist.

ELECTRICAL ENGINEER — [signature] — 3/17/08
Name - Title — Signature — Date

COMcheck Software Version 3.4.1
Lighting Application Worksheet

2006 IECC

Report Date:
Data filename: J:\Archiplex\UDOT\UDOT Greendale\Elec\GREE-UDOT.cck

Section 1: Allowed Lighting Power Calculation

A Area Category	B Floor Area (ft2)	C Allowed Watts / ft2	D Allowed Watts (B x C)
Workshop	4880	1.4	6832
		Total Allowed Watts =	6832

Section 2: Actual Lighting Power Calculation

A Fixture ID : Description / Lamp / Wattage Per Lamp / Ballast	B Lamps/ Fixture	C # of Fixtures	D Fixture Watt.	E (C X D)
Workshop (4880 sq.ft.)				
Linear Fluorescent 1: L1: Industrial Fluorescent / 48" T8 32W (Super T8) / Electronic	4	17	128	2176
Linear Fluorescent 2: L2: Recessed Fluorescent / 48" T8 32W (Super T8) / Electronic	3	6	98	588
Linear Fluorescent 3: L3: Surface Wrap / 48" T8 32W (Super T8) / Electronic	2	4	68	272
			Total Actual Watts =	3036

Section 3: Compliance Calculation

If the Total Allowed Watts minus the Total Actual Watts is greater than or equal to zero, the building complies.

Total Allowed Watts = 6832
Total Actual Watts = 3036
Project Compliance = 3796

Lighting PASSES: Design 56% better than code

△1

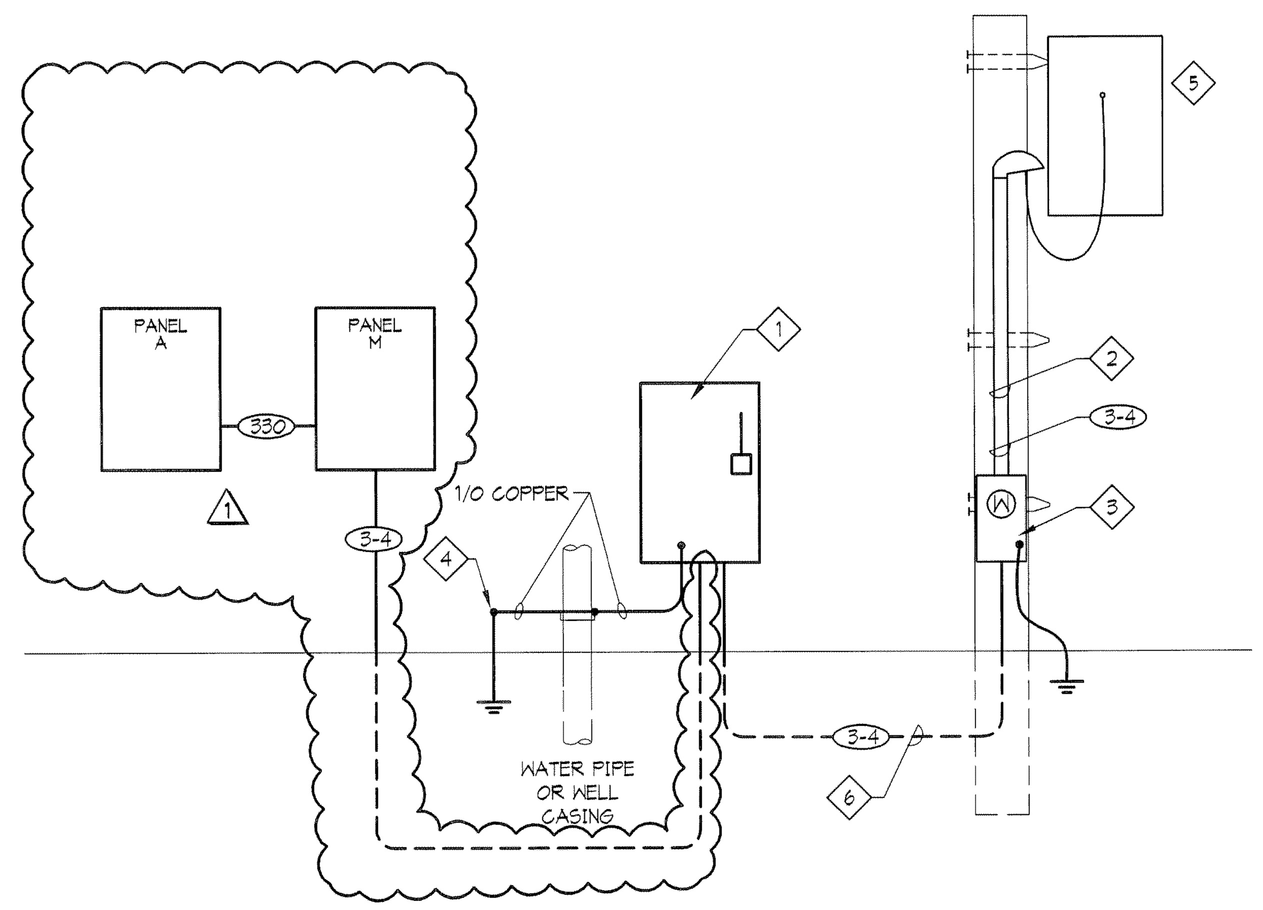

POWER RISER
SCALE: NONE

KEY NOTES

1. SERVICE DISCONNECT. PROVIDE A 400 AMP, TWO POLE, NEMA 3R, FUSED DISCONNECT, FUSED 350 AMPS. INSTALL THE DISCONNECT ON THE SIDE OF THE BUILDING. SEE SHEET E201.
2. PROVIDE A MAST, WEATHERHEAD AND CONDUCTORS ON THE POLE DOWN TO THE METER BASE AS REQUIRED BY THE POWER COMPANY.
3. PROVIDE A 320 AMP METER BASE THAT COMPLIES WITH ALL REQUIREMENTS OF THE POWER COMPANY. INSTALL THE METER BASE ON THE POWER COMPANY POLE AND INSTALL THE NEW SERVICE DROP AND SERVICE ENTRANCE CONDUCTORS AS SHOWN. GROUND THE METER BASE AS REQUIRED BY THE POWER COMPANY.
4. EC SHALL PROVIDE 30' OF #4 AWG BARE COPPER ENCASED IN AT LEAST 2" OF CONCRETE LOCATED WITHIN AND NEAR THE BOTTOM OF A CONCRETE FOUNDATION OR FOOTING THAT IS IN DIRECT CONTACT WITH THE EARTH PER 2005 NEC SECTION 250.52 (A)(3).
5. POWER COMPANY EXISTING POLE AND NEW POLE MOUNTED TRANSFORMER. COORDINATE WITH THE POWER COMPANY FOR THE REQUIREMENTS AND PROVIDE A COMPLETE ELECTRICAL SERVICE TO THE FACILITY.
6. DO NOT PROVIDE AN EQUIPMENT GROUNDING CONDUCTOR IN THIS CONDUIT FROM THE METER TO THE SERVICE DISCONNECT.

PANEL M

PANEL: M — TYPE: NQOD — LOCATION: STORAGE ROOM △1
VOLTAGE: 120 / 240 — PHASE: 1 — WIRES: 3 — AIC: 10000 AMPS
MOUNTING: FLUSH / X SURFACE — FEED: TOP / X BOTTOM
MAINS: 400 AMP — X LUGS — BREAKER
DIMS.: 20" W — 5.75" D — 62" H
SPECIAL EQUIPMENT: X GROUND BUS — X SUB-FEED BRKR — NEMA 3R — SURGE PROTECTOR

CIR NO.	CIRCUIT DESCRIPTION	CODE	LTS	CO	MIS	P	AMP	WIRE SIZE	CIRCUIT LOAD	A	C	CIRCUIT LOAD	WIRE SIZE	AMP	P	MIS	CO	LTS	CODE	CIRCUIT DESCRIPTION	CIR NO.
1	PANEL A	1,3			1	2	200		15109	16029		920		20	2	1			1	GATE	2
3						-			13958		14878	920		--	-					-----	4
5	OVERHEAD DOOR				1	1	20	10	1200	1430		230		20	2			1	1	GATE LIGHT	6
7	OVERHEAD DOOR				1	1	20	10	1200		1430	230		--	-					-----	8
9	OVERHEAD DOOR				1	1	20	10	1200	1200				20	1					SPARE	10
11	OVERHEAD DOOR				1	1	20	10	1200		1330	130		20	2			1	1	FUEL IS. LT	12
13	OVERHEAD DOOR				1	1	20	10	1200	1330		130		-	-						14
15	HEAT CABLE	6			1	1	20	10	1200		4080	2880		30	1				1	CARD READER	16
17	HEAT CABLE	6			1	1	20	10	1200	3120		1920		20	1				1	FUEL DISPENSER	18
19	SPARE					1	20				1920	1920		20	1				1	FUEL DISPENSER	20
21	SPARE					1	20			1920		1920		20	1				1	FUEL DISPENSER	22
23	VEHICLE PLUG				1	1	20	10	1200		3120	1920		20	1				1	FUEL DISPENSER	24
25	VEHICLE PLUG				1	1	20	10	1200	2376		1176	12	15	1	1				F-1	26
27	VEHICLE PLUG				1	1	20	10	1200		3120	1920		20	2					FUEL PUMP	28
29	VEHICLE PLUG				1	1	20	10	1200	3120		1920									30
31	VEHICLE PLUG				1	1	20	10	1200		1200			20	1					SPARE	32
33	ROOF HEAT CABLE	6			1	1	20	10	1200	1200				20	1					SPARE	34
35	SPARE					1	20				1920	1920		20	2					FUEL PUMP	36
37	SPARE					1	20			1920		1920			-						38
39	SPARE					2	20				4800	4800		50	2	1			1	WELDER	40
41						-				4800		4800			-						42

NOTE:

PHASE TOTALS △1: VA 38445 (A), 37798 (C); DIV; AMPS 320 (A), 315 (C)
CONN LOAD: 76 KVA — AV. AMPS: 318 A

CODES
1 = SEE DRAWINGS FOR CONDUIT & CONDUCTOR SIZE
2 = SHUNT-TRIP BREAKER
3 = SUBFEED BREAKER
4 = PROVIDE LOCK OFF DEVICE
5 = GFCI BREAKER
6 = GFEP BREAKER

THIS PANEL, ALL OF ITS LUGS, BREAKERS, ETC. SHALL BE RATED FOR 75° C

PANEL A

PANEL: A — TYPE: NQOD — LOCATION: STORAGE ROOM △1
VOLTAGE: 120 / 240 — PHASE: 1 — WIRES: 3 — AIC: 10000 AMPS
MOUNTING: FLUSH / X SURFACE — FEED: X TOP / BOTTOM
MAINS: 225 AMP — X LUGS — BREAKER
DIMS.: 20" W — 5.75" D — 35" H
SPECIAL EQUIPMENT: X GROUND BUS — SUB-FEED BRKR — NEMA 3R — SURGE PROTECTOR

CIR NO.	CIRCUIT DESCRIPTION	CODE	LTS	CO	MIS	P	AMP	WIRE SIZE	CIRCUIT LOAD	A	C	CIRCUIT LOAD	WIRE SIZE	AMP	P	MIS	CO	LTS	CODE	CIRCUIT DESCRIPTION	CIR NO.
1	△1					1	20			1200		1200	12	20	1	2				TRAINING RM 104	2
3	SHOP LTS.		15			1	20	10	1340		2540	1200	12	20	1	2				TRAINING RM 104	4
5	SHOP LTS.		10			1	20	10	1152	2532		1380	12	20	1	2				TRAINING RM 104	6
7	OFFICE/STOR LTS.		10		1	1	20	12	976		1732	756	12	20	1	1	1			P-9, RM 103	8
9	EXTERIOR LTS		3			1	20	10	825	2475		1650	12	20	1	1				MICROWAVE	10
11						1	20				900	900	10	20	1		5			REPAIR RM 101	12
13	REFRIGERATOR				1	1	20	12	850	1390		540	10	20	1		3			EXTERIOR PWR	14
15	COUNTER				1	1	20	12	1200		2016	816		20	2	1			1	PRESSURE PUMP	16
17						1	20			816		816			-						18
19						1	20				500	500	12	20	1		1			PHONE/DATA	20
21	SPARE					1	20			936		936	12	15	1	4				B-1 CONTROLLER	22
23	SPARE					1	20				180	180	12	20	1		1			REPAIR GARAGE	24
25	SPARE					1	20			0				15	1					SPARE	26
27	SPARE					1	20				330	330	12	20	1	1				WH-1, LM	28
29	SPARE					1	20			0				20	1					SPARE	30
31	SPARE					1	20				0			30	2					SPARE	32
33	SPARE					1	20			0					-						34
35	SPARE					1	20				960	960		15	2	1			1	EF-2	36
37	SPARE					1	20			960		960			-						38
39	SPARE					2	15				4800	4800		80	2	1			1	AC-1	40
41						-				4800		4800			-						42

NOTE:

PHASE TOTALS △1: VA 15109 (A), 13958 (C); DIV; AMPS 126 (A), 116 (C)
CONN LOAD: 29 KVA — AV. AMPS: 121 A

CODES
1 = SEE DRAWINGS FOR CONDUIT & CONDUCTOR SIZE
2 = SHUNT-TRIP BREAKER
3 = SUBFEED BREAKER
4 = PROVIDE LOCK OFF DEVICE
5 = GFCI BREAKER
6 = GFEP BREAKER

THIS PANEL, ALL OF ITS LUGS, BREAKERS, ETC. SHALL BE RATED FOR 75° C

SERVICE LOAD CALCULATIONS

DESCRIPTION	LOAD	DEMAND	NEW LOAD	AMPS
LIGHTING	4753	1.25	5941.3	
KITCHEN	0	0.65	0	
HVAC	2112	1	2112	
CONTINUOUS	8750	1.25	10938	
RECEPTACLES	1440	1	1440	
NON-CONTINUOUS	28736	1	28736	
SNOW MELTING	3600	1	3600	
GAS/FUEL/SUMP PUMP	15360	1	15360	
SMALL MOTORS	1632	1	1632	
LARGEST NEW MOTOR 7.5HP	9600	0.25	2400	
TOTAL SERVICE LOAD			72159 = 300.7	

CLIENT

UDOT — CONNECTING COMMUNITIES
STATION #3437A
SR-44 @ M.P. 0.5 ±
GREENDALE UTAH

DESIGNER

ARCHIPLEX GROUP
architecture · planning · design services
1135 South West Temple, Ste. A
Salt Lake City, UT 84101
P:(801) 961-7070
F:(801) 961-7373

CONSULTANTS

VAN BOERUM & FRANK ASSOCIATES INC.
WWW.VBFA.COM CONSULTING ENGINEERS
Salt Lake City · Logan · St. George · Tempe · Pocatello
811 West Cedar St., 208.478.4613 T
Pocatello, ID 83201-6139 208.478.4617 F

PROFESSIONAL SEAL

LICENSED PROFESSIONAL ENGINEER — STAN WALTER JOHNS — 03/18/08 — NUMBER 5246941 — STATE OF UTAH

ISSUE

MARK	DATE	DESCRIPTION
△1	03/20/08	ADDENDUM #2
	02-2008	CONSTRUCTION DOCUMENTS

DFCM CONTRACT NO:	077325
DFCM PROJECT NO:	07029900
ARCHIPLEX PROJECT NO:	0708.01
DRAWN BY:	LCM
CHECKED BY:	SWJ
SCALE:	NONE
DATE:	FEBRUARY, 2008

SHEET TITLE

ELECTRICAL PANELS, LOAD CALCS, AND RISER DIAGRAM

E002

J:\Archiplex\UDOT\UDOT Greendale\Elec\UDTGE002.dwg, 3/18/2008 4:56:09 PM

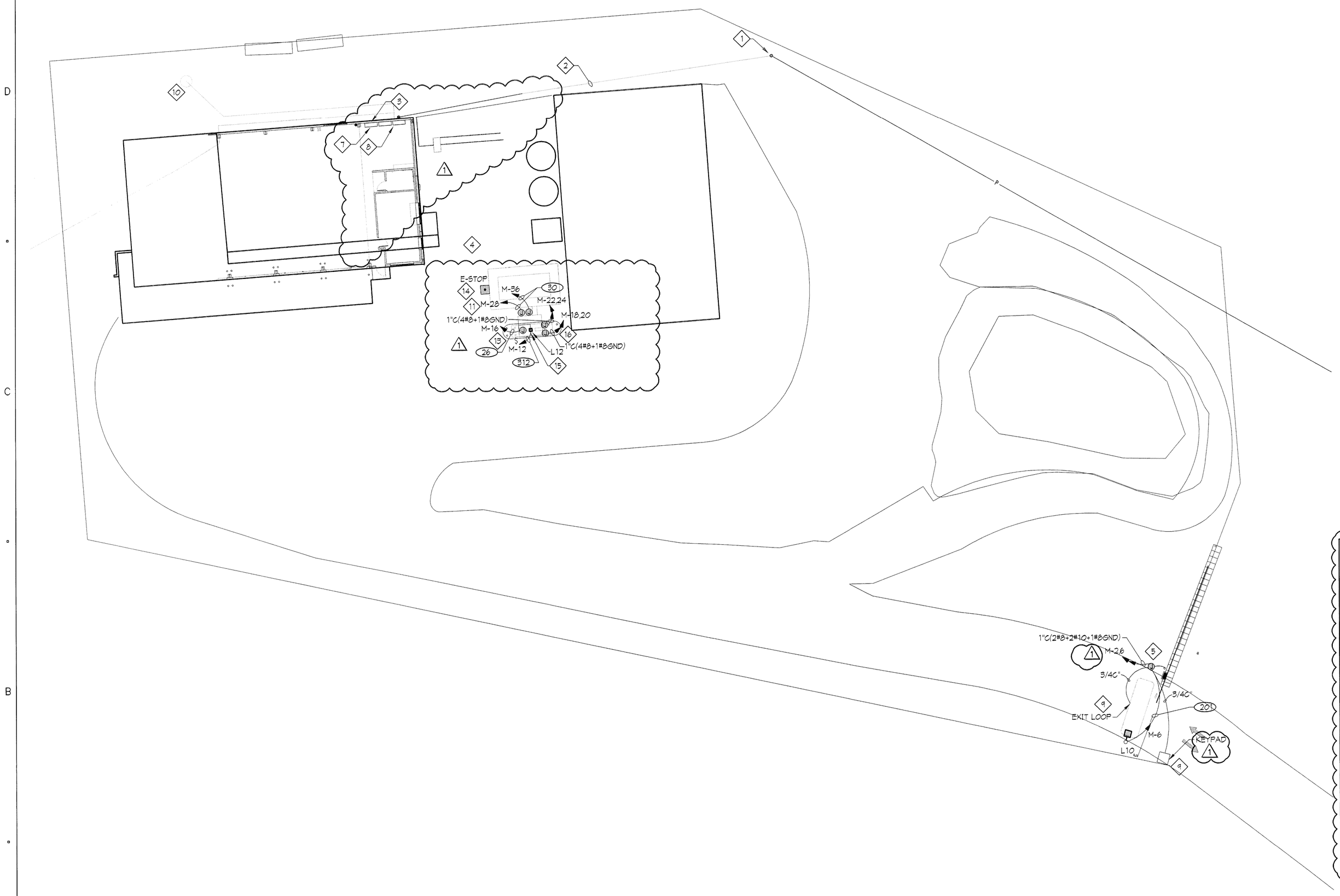

SITE PLAN

SCALE: 1" = 20'-0"

KEY NOTES

1. EXISTING POWER COMPANY POWER POLE WITH SINGLE PHASE POLE MOUNTED TRANSFORMER. EC SHALL FIELD CONFIRM THE EXACT LOCATION AND REQUIREMENTS FOR THE NEW SERVICE AND CONNECTIONS WITH THE POWER COMPANY AND PROVIDE A COMPLETE ELECTRICAL SERVICE TO THE FACILITY.
2. EC SHALL REMOVE THE EXISTING SERVICE ENTRANCE FEEDERS AND PROVIDE THE NEW FEEDER AS SHOWN ON SHEET E002. FIELD CONFIRM EXISTING CONDITIONS AND PROVIDE UNOBSTRUCTED ROUTING FOR THE INSTALLATION OF THE FEEDER. INSTALL THE SERVICE ENTRANCE FEEDERS AS REQUIRED BY THE POWER COMPANY AND THE 2005 NEC.
3. EC SHALL COORDINATE WITH THE TELEPHONE COMPANY AND EXTEND THE EXISTING TELEPHONE SERVICE FROM ITS CURRENT LOCATION TO THE NEW BUILDING AND PROVIDE A 1" CONDUIT WITH A CAT5E CABLE FROM THE TELEPHONE DEMARK LOCATION TO THE PHONE/DATA BOARD ON THE MEZZANINE. FIELD CONFIRM EXISTING CONDITIONS.
4. EC SHALL CONFIRM ALL EXISTING ELECTRICAL REQUIREMENTS OUTSIDE OF THE NEW BUILDING THAT WILL REMAIN AND NEED POWER. PROVIDE BREAKERS, CONDUIT AND CONDUCTORS FROM EITHER PANEL M OR PANEL A AS REQUIRED TO POWER THEM IN ACCORDANCE WITH THE 2005 NEC. EC SHALL CONFIRM THESE LOADS AND THE LOADS SHOWN IN THE PANEL SCHEDULES ARRANGE THE CIRCUITS SO THE PANELS LOADS ARE BALANCED AND NOT OVERLOADED. CONTACT THE ENGINEER IF THE PANEL BOARDS OR FEEDERS APPEAR TO BE OVERLOADED.
5. ALL MOTORIZED GATE EQUIPMENT FURNISHED AND INSTALLED BY THE ELECTRICAL CONTRACTOR COORDINATE ALL CONNECTIONS AND ROUGH-IN WITH G.C. AND SHOP DRAWINGS. PROVIDE A JUNCTION/PULL BOX AS REQUIRED FOR THE INSTALLATION. SEE AE-706
6. NOTE NOT USED.
7. PHONE/DATA TERMINAL BOARD IN STORAGE AREA. SEE SHEET E201.
8. PANEL M IN STORAGE AREA. SEE SHEET E201.
9. INSTALL KEYPAD AND EXIT LOOP AS REQUIRED BY THE MANUFACTURER.
10. EXISTING WELL PUMP NOT USED. DISCONNECT FROM ALL POWER.
11. EXPLOSION PROOF J-BOX FOR POWER TO FUEL ISLAND PUMPS. VERIFY LOCATION PRIOR TO ROUGH-IN. COORDINTE WITH FUEL SYSTEM SUPPLIER.
12. EXPLOSION PROOF J-BOX FOR POWER TO FUEL DISPENSER. VERIFY LOCATION PRIOR TO ROUGH-IN. COORDINATE WITH FUEL SYSTEM SUPPLIER.
13. EXPLOSION PROOF J-BOX FOR POWER TO CARD READER. VERIFY LOCATION PRIOR TO ROUGH-IN. COORDINATE WITH FUEL SYSTEM SUPPLIER.
14. INSTALL EMERGENCY SWITCH PER FUEL SYSTEM SUPPLIER'S INSTRUCTION AT A DISTANCE OF 20FT OR GREATER FROM THE GAS DISPENSER. SEE DETAIL THIS SHEET.
15. LIGHT FIXTURE INSTALLED ON CANOPY ABOVE EQUIPMENT.
16. EC SHALL CONFIRM ALL HAZARDOUS LOCATIONS AS DEFINED BY THE NEC. INSTALLATION, EQUIPMENT AND WIRING METHODS SHALL COMPLY WITH THE NEC REGARDING HAZARDOUS LOCATIONS. ALL CONDUIT PASSING THROUGH A HAZARDOUS LOCATION SHALL HAVE SEAL OFFS INSTALLED AS REQUIRED BY NEC 514. INSTALL SITE CONDUITS OUTSIDE OF HAZARDOUS LOCATIONS WHENEVER POSSIBLE. DOCUMENT ALL HAZARDOUS LOCATIONS ON THE RECORD DRAWINGS.

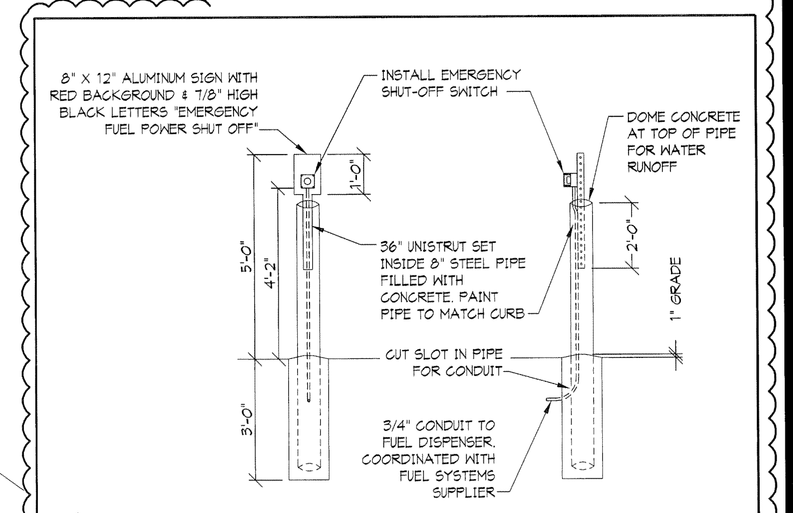

EMERGENCY SHUT-DOWN POST MOUNTING

SCALE: NONE

1 / E101

CLIENT

UDOT CONNECTING COMMUNITIES

STATION #3437A
SR-44 @ M.P. 0.5 ±
GREENDALE UTAH

DESIGNER

ARCHIPLEX GROUP
architecture · planning · design services
1135 South West Temple, Ste. A
Salt Lake City, UT 84101
P:(801) 961-7070
F:(801) 961-7373

CONSULTANTS

VAN BOERUM & FRANK ASSOCIATES INC.
WWW.VBFA.COM CONSULTING ENGINEERS
Salt Lake City · Logan · St. George · Tempe · Pocatello
811 West Cedar St., Pocatello, ID 83201-6139
208.478.4613 T
208.478.4617 F

PROFESSIONAL SEAL

LICENSED PROFESSIONAL ENGINEER
STAN WALTER JOHNS
03/18/08
NUMBER 5246941
STATE OF UTAH

ISSUE

MARK	DATE	DESCRIPTION
1	03/20/08	ADDENDUM #2
	02-2008	CONSTRUCTION DOCUMENTS

DFCM CONTRACT NO:	077325
DFCM PROJECT NO:	07029900
ARCHIPLEX PROJECT NO:	0708.01
DRAWN BY:	LCM
CHECKED BY:	SWJ
SCALE:	1"=20'-0"
DATE:	FEBRUARY, 2008

SHEET TITLE

SITE PLAN

E101

J:\Archiplex\UDOT\UDOT Greendale\Elec\UDTGE101.dwg, 3/18/2008 4:56:39 PM

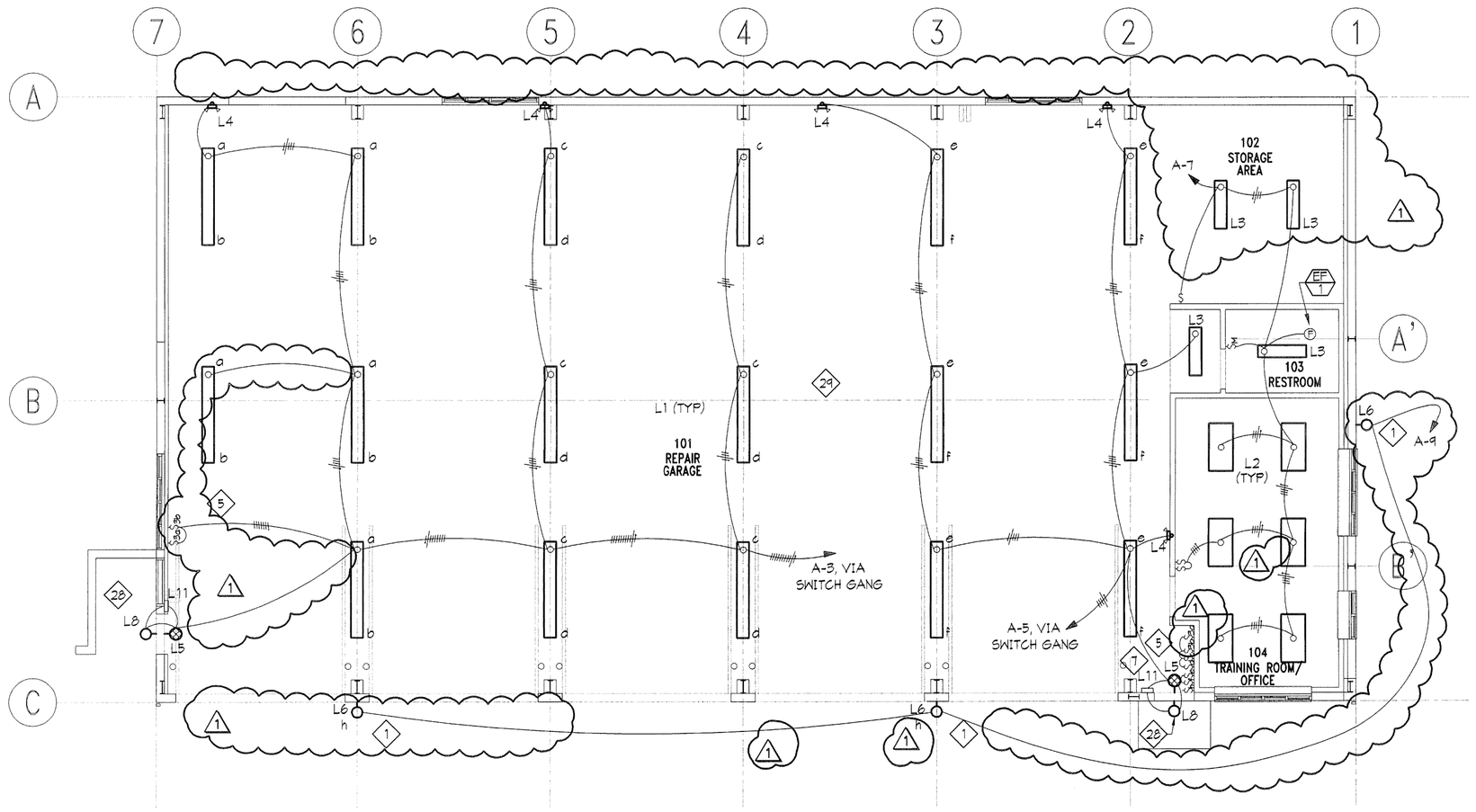

MAIN LEVEL LIGHTING PLAN

SCALE: 1/8" = 1'-0"

NORTH

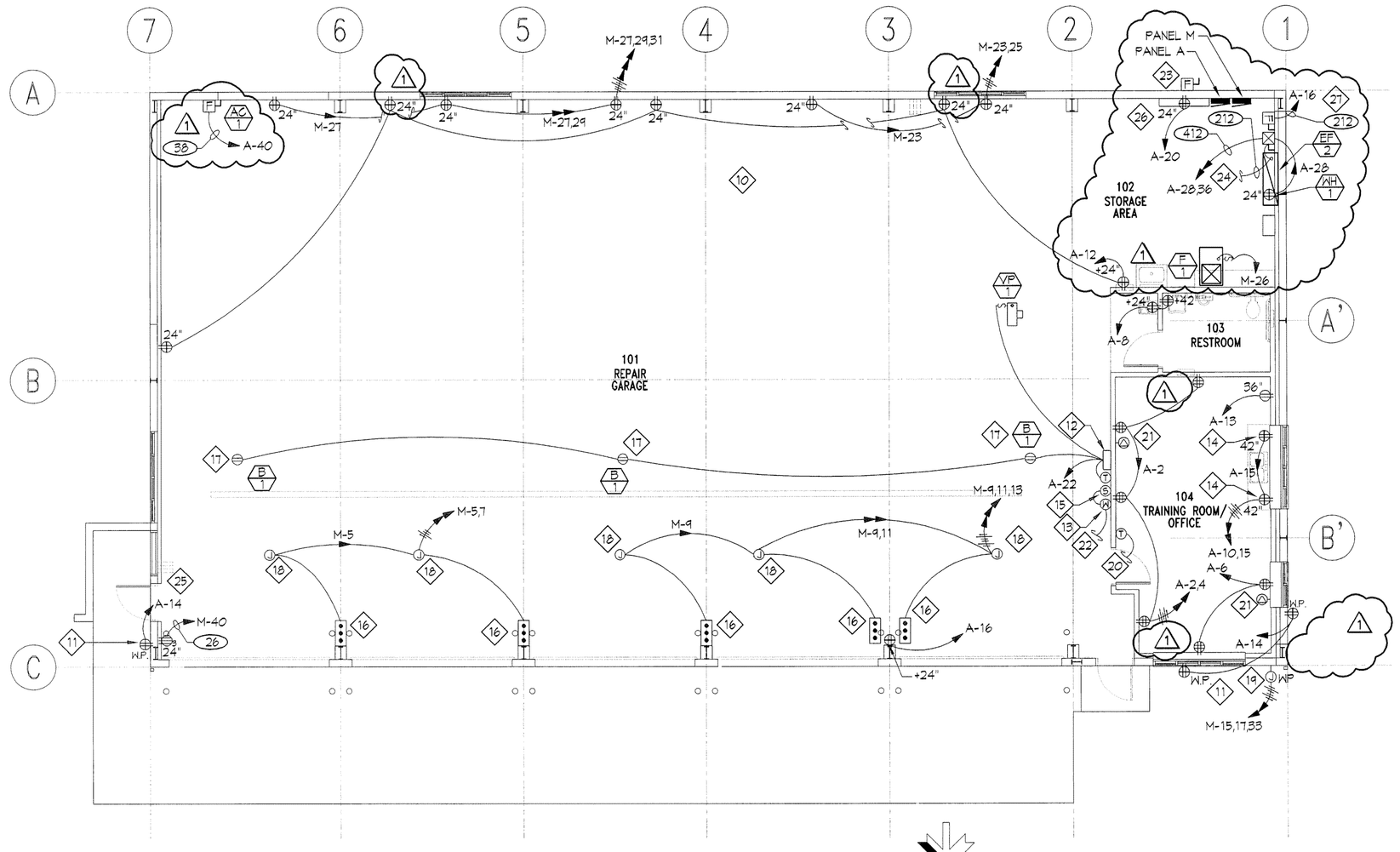

MAINTENANCE BUILDING PLAN

SCALE: 1/8" = 1'-0"

NORTH

KEY NOTES

1. SEE ARCHITECTURAL ELEVATIONS FOR MOUNTING HEIGHTS OF EXTERIOR LUMINAIRES.
2. NOTE NOT USED.
3. NOTE NOT USED.
4. NOTE NOT USED.
5. USE ONE WATTSTOPPER DATA LINE SWITCH WITH A BUTTON FOR EACH LETTER SHOWN. SEE DETAIL 1/E002.
6. NOTE NOT USED.
7. NOTE NOT USED.
8. NOTE NOT USED.
9. NOTE NOT USED.
10. ALL RECEPTACLES, DISCONNECT SWITCHES, PANEL BOARDS AND OTHER ELECTRICAL EQUIPMENT IN THE REPAIR GARAGE AND IN THE STORAGE AREA SHALL BE INSTALLED AT 24" AFF OR GREATER. ALL RECEPTACLES MUST BE GFI.
11. OUTLETS FOR BLOCK HEATERS. INSTALL AT 36" A.F.F.
12. RADIANT HEATING CONTROL PANEL FURNISHED BY MC. PROVIDE CONDUIT AND CONDUCTORS FROM THE PANEL TO THE B-1 UNITS AND TO VP-1. COORDINATE WITH MC AND PROVIDE ALL REQUIRED CONDUIT, CONDUCTORS AND CONNECTION FOR THE RADIANT HEATING SYSTEM.
13. MANUAL OVER-RIDE SWITCH FOR CONTROL OF EF-2. WIRE SO THAT IN AUTO THE CARBON MONOXIDE SENSOR STARTS AND STOPS EF-2 AND IN ON THE SWITCH STARTS AND STOPS EF-2.
14. INSTALL RECEPTACLE HORIZONTALLY IN BACK SPLASH.
15. CARBON MONOXIDE SENSOR PROVIDED BY MC. PROVIDE CONNECTION FROM IT TO THE MANUAL OVER-RIDE SWITCH AND EF-2 STARTER. COORDINATE WITH MC.
16. DOOR CONTROLS PROVIDED BY OVERHEAD DOOR SUPPLIER INSTALLED AND CONNECTED BY EC. CONFIRM AND PROVIDE ALL MATERIALS AND LABOR REQUIRED TO POWER AND OPERATE THE OVERHEAD DOORS.
17. RECEPTACLE INSTALL ON STRUCTURE FOR POWER TO THE B-1 UNIT. COORDINATE WITH MC AND PROVIDE POWER TO THE B-1 UNITS AND INTER-CONNECTION WITH THE RADIANT HEATING CONTROL PANEL.
18. JUNCTION BOX FOR POWER TO OVERHEAD DOOR OPERATOR. CONFIRM LOCATION AND PROVIDE AS REQUIRED BY THE OVERHEAD DOOR SUPPLIER.
19. PROVIDE WEATHER PROOF JUNCTION BOX FOR POWER TO RAIN GUTTER DE-ICING CABLE. INSTALL UNDER EAVE. PROVIDE DE-ICING CABLE (RAYCHEM GM-1X 32°F CABLE) IN GUTTER AND DOWNSPOUTS. INSTALL THE CABLE TO THE BOTTOM OF EACH DOWNSPOUT. FOR DOWNSPOUTS IN THE CENTER OF THE RUN, LOOP CABLE TO THE BOTTOM OF THE OF THE DOWNSPOUT AND CONTINUE BACK UP TO THE GUTTER. FOR ROOF DE-ICING, INSTALL CABLE IN A ZIG-ZAG PATTERN GOING UP FROM THE ROOF EDGE 18" AND SPACING EACH PEAK 24" APART.
20. THERMOSTAT FOR CONTROL OF F-1. PROVIDE 3/4" CONDUIT WITH PULL CORD FROM THERMOSTAT TO F-1. CABLE/CONDUCTORS PROVIDED BY MC. COORDINATE WITH MC.
21. PROVIDE 3/4" CONDUIT WITH CAT5E CABLE FROM EACH MULTI-MEDIA OUTLET TO PHONE/DATA BACK-BOARD. CONFIRM REQUIREMENTS WITH OWNER AND PROVIDE A COMPLETE PHONE/DATA SYSTEM.
22. PROVIDE CONNECTION TO EF-2 COMBINATION STARTER FOR REMOTE CONTROL FROM CARBON MONOXIDE SENSOR AND MANUAL OVER-RIDE SWITCH. CONFIRM REQUIREMENTS WITH MC AND PROVIDE REQUIRED COMPONENTS FOR A FULLY FUNCTIONAL EXHAUST/VENTILATION SYSTEM.
23. SERVICE DISCONNECT. SEE POWER RISER SHEET E002.
24. INTER-CONNECT THE EF-2 STARTER WITH THE LOUVER ACTUATOR THROUGH A NORMALLY OPEN CONTACT ON THE STARTER SO THE DAMPER OPENS WHEN EF-2 OPERATES.
25. LOUVER ACTUATOR. EC SHALL INTER-CONNECT WITH EF-2 STARTER FOR SIMULTANEOUS OPERATION OF BOTH. SEE KEY NOTE 24.
26. PHONE/DATA BOARD. EC SHALL PROVIDE A 3/4"X24"X24" PLYWOOD BACKBOARD INSTALLED WITH THE TOP AT 5'-6" AFF FOR THE PHONE/DATA BOARD. INSTALL ALL CONDUITS FROM THE MULTI-MEDIA OUTLETS TO THIS BOARD.
27. FUSED DISCONNECT FOR PRESSURE PUMP. CONFIRM LOCATION WITH PLUMBING CONTRACTOR PRIOR TO ROUGH-IN.
28. WIRE 12V AUXILIARY SOCKET, CONTAINED INSIDE TYPE L8 FIXTURE, TO BATTERY PACK, L11, SUCH THAT 12V SOCKET IS ENERGIZED UPON POWER OUTAGE.
29. SEE ARCH PLANS FOR LOCATIONS OF ALL LIGHTING FIXTURES.

CLIENT

UDOT CONNECTING COMMUNITIES

STATION #3437A
SR-44 @ M.P. 0.5 ±
GREENDALE UTAH

DESIGNER

ARCHIPLEX GROUP
architecture · planning · design services
1135 South West Temple, Ste. A
Salt Lake City, UT 84101
P:(801) 961-7070
F:(801) 961-7373

CONSULTANTS

VAN BOERUM & FRANK ASSOCIATES INC.
WWW.VBFA.COM
CONSULTING ENGINEERS
Salt Lake City · Logan · St. George · Tempe · Pocatello
811 West Cedar St., Pocatello, ID 83201-6139
208.478.4613 T
208.478.4617 F

PROFESSIONAL SEAL

LICENSED PROFESSIONAL ENGINEER
STAN WALTER JOHNS
03/18/08
NUMBER 5246941
STATE OF UTAH

ISSUE

MARK	DATE	DESCRIPTION
1	03/20/08	ADDENDUM #2
	02-2008	CONSTRUCTION DOCUMENTS

DFCM CONTRACT NO:	077325
DFCM PROJECT NO:	07029900
ARCHIPLEX PROJECT NO:	0708.01
DRAWN BY:	LCM
CHECKED BY:	SWJ
SCALE:	1/8"=1'-0"
DATE:	FEBRUARY, 2008

SHEET TITLE

LIGHTING AND POWER PLANS

E201

J:\Archiplex\UDOT\UDOT Greendale\Elec\UDTGE201.dwg, 3/18/2008 4:57:00 PM