THIS DRAWING, AS AN INSTRUMENT OF SERVICE, IS AND SHALL REMAIN THE PROPERTY OF SMD ENGINEERING, PLLC. THE INFORMATION, DESIGN, OR CONCEPTS REPRESENTED ON THIS DRAWING ARE CONFIDENTIAL AND ARE NOT FOR GENERAL DISTRIBUTION. © SMD ENGINEERING, PLLC 2008
WITHOUT THE PERMISSION OF SMD ENGINEERING, PLLC. AND SHALL NOT BE REPRODUCED, PUBLISHED, OR USED IN ANY WAY WITHOUT THE

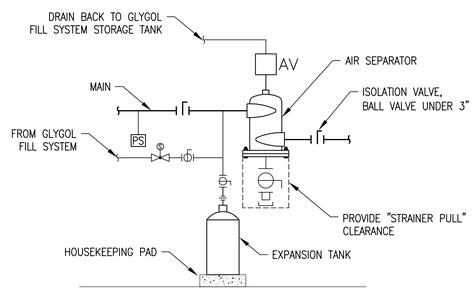

1 MH502 EXPANSION TANK/AIR SEPARATOR

CONTROL SEQUENCE

HAND MODE: START AND RUN PUMP, OPEN ALL SOLINOID VALVES.

OFF MODE: STOP PUMP, CLOSE ALL SOLENOID VALVES.

AUTOMATIC MODE: START AND STOP PUMP TO SATISFY PRESSURE SWITCH.

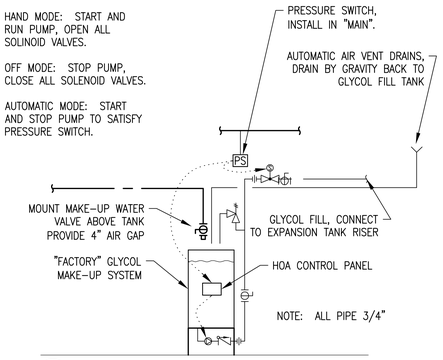

2 MH502 GLYCOL FILL SYSTEM

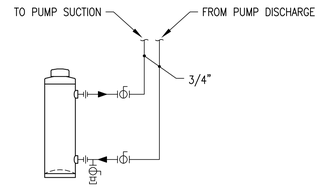

3 MH502 CHEMICAL BY-PASS FEEDER

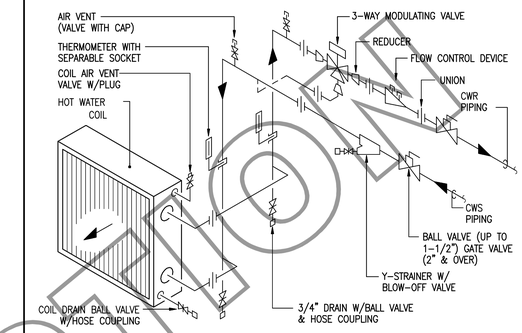

4 MH502 AIR HANDLER CHILLED WATER COIL

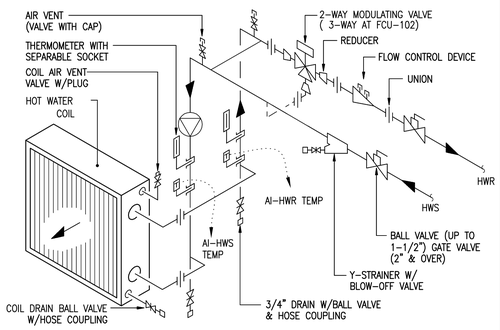

5 MH502 PUMPED HEATING COIL

6 MH502 NOT USED

7 MH502 NOT USED

8 MH502 NOT USED

9 MH502 NOT USED

10 MH502 NOT USED

11 MH502 NOT USED

12 MH502 NOT USED

13 MH502 NOT USED

14 MH502 NOT USED

15 MH502 NOT USED

16 MH502 NOT USED

NOT FOR CONSTRUCTION

SCOPE SET - NOT FOR CONSTRUCTION. NOT FOR PRICING.

SMD ENGINEERING, PLLC
"Engineered Mechanical Solutions"
986 WEST ATHERTON DRIVE, SUITE 200
TAYLORSVILLE, UTAH 84123
(801) 268-3828, FAX (801) 268-3297
WWW.SMDENGINEERING.COM

STATE MAIL SERVICES

WEST VALLEY, UTAH

JRCA
ARCHITECTS
577 South 200 East
Salt Lake City, Utah 84111
(801) 533-2100 fax: 533-2101 jrcadesign.com

DATE/REVISION	PROJECT #.
11 · 17 · 08	20080512

MECHANICAL DETAILS

MH 502

THIS DRAWING, AS AN INSTRUMENT OF SERVICE, IS AND SHALL REMAIN THE PROPERTY OF SMD ENGINEERING, PLLC. THE INFORMATION, DESIGN, OR CONCEPTS REPRESENTED ON THIS DRAWING ARE CONFIDENTIAL AND ARE NOT FOR GENERAL DISTRIBUTION. © SMD ENGINEERING, PLLC 2008
THE PERMISSION OF SMD ENGINEERING, PLLC. THE INFORMATION, DESIGN, OR CONCEPTS REPRESENTED ON THIS DRAWING ARE CONFIDENTIAL AND ARE NOT FOR GENERAL DISTRIBUTION. © SMD ENGINEERING, PLLC 2008
NOT FOR CONSTRUCTION

WATER COOLED CHILLER SCHEDULE (WCC)

WCC / TON

MARK	NOMINAL CAPACITY (TONS)	EER	REFRIGERANT	REFRIGERANT LBS/CIRCUIT	EVAPORATOR						CONDENSER					ELECTRICAL							DIMENSIONS				MANUFACTURER MODEL	REMARKS
					FLUID TYPE	FLOW GPM	PD FT WC	NO. PASSES	FOULING FACTOR	EWT/ LWT °F	FLUID TYPE	FLOW GPM	PD FT WC	FOULING FACTOR	EWT/ LWT °F	VOLTS/ PHASE	MCA	MCOP	COMPRESSOR NO.	COMPRESSOR TYPE	COMPRESSOR LRA	COMPRESSOR RLA	L (IN)	W (IN)	H (IN)	WT (LBS)		
WCC-1	80	22.7	R-134A	99.2	WATER	200	23.4	2	0.00010	55/ 45	COND. WATER	240	20.2	0.00025	70/ 80	200/ 3ø	211	300	2	SCREW	276	92	127	35	76	5750	TRANE RTWD-080A	NOTE 1

NOTE 1: STANDARD EFFICIENCY CHILLER W/ CONVENIENCE OUTLET AND DISCONNECT.

FAN COIL UNIT SCHEDULE (FCU)

FCU / CFM

MARK	AREA SERVED	FAN			MOTOR		COOLING COIL									HEATING COIL							DIMENSIONS				MANUFACTURER MODEL	REMARKS
		CFM	ESP IN WC	DRIVE	HP	VOLT/ PHASE	ROWS	EAT DB/WB °F	LAT DB/WB °F	TOTAL MBH	SENS. MBH	EWT/ LWT °F	GPM	WATER PD FT WC	PROP. GLYC. %	ROWS	EAT/ LAT °F	TOTAL MBH	EWT/ LWT °F	GPM	WATER PD FT WC	PROP. GLYC. %	L IN	W IN	H IN	WT LBS		
FCU-1 THRU FCU-6	SECOND LEVEL OFFICES	1,200	0.5	BELT	1/2	120/ 1ø	6	75/ 63	54/ 53	32.7	22.6	45/ 55	7.0	7.5	WATER	2	70/ 91	29.6	140/ 120	3.0	0.9	WATER	37	42	19	250	FIRST CO. 36SHW6-36HWK	NOTE 1
FCU-7	PRINTING	3,000	0.5	BELT	1.5	208/ 3ø	6	75/ 63	53/ 52	84.5	58.8	45/ 54	19.0	4.6	WATER	2	70/ 102	86.2	140/ 120	8.0	1.0	WATER	53	54	27	500	FIRST CO. 90SHW6-90HWK	NOTE 1
FCU-8 THRU FCU-10	PRINTING	2,000	0.5	BELT	3/4	208/ 3ø	6	75/ 63	54/ 53	55.1	37.8	45/ 54	13.0	6.8	WATER	2	70/ 98	50.4	140/ 120	5.0	2.2	WATER	42	51	21	350	FIRST CO. 60SHW6-60HWK	NOTE 1
FCU-11 AND FCU-12	MAIL SORTING	6,000	0.5	BELT	3.0	208/ 3ø	6	75/ 63	53/ 53	167.0	116.7	45/ 54	38.0	5.7	WATER	2	70/ 102	172.7	140/ 117	15.0	1.5	WATER	46	66	63	850	FIRST CO. 180SVW6-180HWK	NOTE 1
FCU-13	INSERTERS	4,400	0.5	BELT	3.0	208/ 3ø	6	75/ 63	53/ 52	124.1	86.1	45/ 54	28.0	5.9	WATER	2	70/ 101	123.5	140/ 118	11.0	1.0	WATER	53	57	32	550	FIRST CO. 120SHW6-120HWK	NOTE 1
FCU-BRK	BREAK ROOM	600	0.5	DIRECT	1/4	120/ 1ø																	46	23	10		FIRST CO. 10PHBC	
FCU-CON	CONFERENCE ROOM	1,200	0.5	BELT	1/2	120/ 1ø	6	75/ 63	54/ 53	32.7	22.6	45/ 54	7.0	7.5	WATER	2	70/ 91	29.6	140/ 120	3.0	0.9	WATER	37	42	19	250	FIRST CO. 36SHW6-36HWK	NOTE 1
FCU-F1 THRU FCU-F7	FIRST FLOOR OFFICES	800	0.5	DIRECT		120/ 1ø																	53	23	10		FIRST CO. 13PHBC	
FCU-F8	FIRST FLOOR OFFICES	1,200	0.5	BELT	1/2	120/ 1ø	6	75/ 63	54/ 53	32.7	22.6	45/ 55	7.0	7.5	WATER	2	70/ 91	29.6	140/ 120	3.0	0.9	WATER	37	42	19	250	FIRST CO. 36SHW6-36HWK	NOTE 1
FCU-S01	SOUTH OFFICES 1	1,200	0.5	BELT	1/2	120/ 1ø	6	75/ 63	54/ 53	32.7	22.6	45/ 54	7.0	7.5	WATER	2	70/ 91	29.6	140/ 120	3.0	0.9	WATER	37	42	19	250	FIRST CO. 36SHW6-36HWK	NOTE 1
FCU-S02	SOUTH OFFICES 2	800	0.5	BELT	1/3	120/ 1ø																	37	33	19	230	FIRST CO. 24SHW6-24HWK	NOTE 1
FCU-S03	SOUTH OFFICES 3	800	0.5	BELT	1/3	120/ 1ø																	37	33	19	230	FIRST CO. 24SHW6-24HWK	NOTE 1
FCU-STH	SOUTH CORRIDOR	5,000	0.6	BELT	2.0	208/ 3ø	6	75/ 63	53/ 52	142.1	98.5	45/ 54	32.0	4.1	WATER	2	70/ 104	152.5	140/ 117	13.0	1.1	WATER	57	66	40	850	FIRST CO. 180SHW6-180HWK	NOTE 1

NOTE 1: MOUNT HEATING COIL IN PREHEAT CONFIGURATION.

DUCT FREE SPLIT (DFS)

DFS / NOM. TON

MARK	AREA SERVED	NOM. TONS	SEER	TOTAL MBH (ARI)	INDOOR UNIT								OUTDOOR UNIT									REMARKS
					FAN HP	CFM	VOLT/ PHASE	L IN	H IN	D IN	WT LBS	MANUFACTURER MODEL	VOLT/ PHASE	MCA	MCOP	FLA	L IN	H IN	D IN	WT LBS	MANUFACTURER MODEL	
DFS-1	SERVER/ COMM.	2.0	18.0	24.2	75 W	647	208/ 1ø	39	13	9	31	FUJITSU "HALCYON" ASU24CL	208/ 1ø	21	29	10.1	31	23	13	97	FUJITSU "HALCYON" AOU24CL	NOTE 1
DFS-2	ELEV. EQUIP.	2.0	18.0	24.2	75 W	647	208/ 1ø	39	13	9	31	FUJITSU "HALCYON" ASU24CL	208/ 1ø	21	29	10.1	31	23	13	97	FUJITSU "HALCYON" AOU24CL	NOTE 1

NOTE 1: ASHRAE 90.1 COMPLIANT, W/ "FACTORY" CONTROLS, "FACTORY" LINE KIT, AND REMOTE CONTROL, "FACTORY" CONDENSATE PUMP, 0°F LOW AMBIENT, "FACTORY" CURB, AND AUTOMATIC AIR SWEEP.

INFRARED RADIANT HEATER SCHEDULE

IRH / MBU

MARK	BURNER			DIMENSIONS				MANUFACTURER MODEL	REMARKS
	INPUT MBH	VOLT/ PHASE	RLA	TUBE L FT	TUBE DIA IN	FLUE DIA IN	WT LBS		
IRH-1	80	120/ 1ø	1.0	25	4	4	150	ROBERTS-GORDON CTH2-80	NOTE 1

NOTE 1: NATURAL GAS, PARABOLIC ALUMINUM REFLECTORS, HANGERS, ACCESSORIES, HOT SURFACE ELECTRONIC IGNITION, AND ALUMINIZED COMBUSTION TUBE.

EXHAUST FAN SCHEDULE (EF)

EF / CFM

MARK	AREA SERVED	TYPE	CFM	ESP IN WC	FAN RPM	MOTOR			SONES	DAMPER	CONTROL	OPENING SIZE IN	MANUFACTURER MODEL	REMARKS
						BHP	HP	VOLT/ PHASE						
EF-1	RESTROOMS	CENT. ROOF	750	0.6	1302	.118	1/4	120/ 1ø	8.2	GRAVITY	LIGHTS	15.5/15.5	COOK ACED 120C15D	W/ ELECTRONIC SPEED CONTROL
EF-2	MAIL SORTING/ INSERTERS	CENT. ROOF	1000	0.25	1137	.089	1/4	120/ 1ø	7.1	MOTORIZED	LIGHTS	15.5/15.5	COOK ACED 120C15D	W/ ELECTRONIC SPEED CONTROL
EF-BRK	BREAK ROOM	CENT. ROOF	250	0.5	1489	72 WATTS	1/8	120/ 1ø	7.1	GRAVITY	LIGHTS	13.5/13.5	COOK ACED 90C15DH	W/ ELECTRONIC SPEED CONTROL
EF-109	JANITOR'S 109	CEILING	50	0.25	740	36 WATTS	N/A	120/ 1ø	1.0	GRAVITY	LIGHTS	15/13	COOK GEMC GC-122	W/ ELECTRONIC SPEED CONTROL
EF-146	RESTROOM 146	CEILING	75	0.3	983	45 WATTS	N/A	120/ 1ø	2.1	GRAVITY	LIGHTS	15/13	COOK GEMC GC-142	W/ ELECTRONIC SPEED CONTROL
EF-213	BREAK ROOM 213	CEILING	100	0.3	982	64 WATTS	N/A	120/ 1ø	2.4	GRAVITY	WALL SWITCH	15/13	COOK GEMC GC-144	W/ ELECTRONIC SPEED CONTROL
EF-215	BREAK ROOM 215	CEILING	150	0.25	1127	93 WATTS	N/A	120/ 1ø	3.5	GRAVITY	WALL SWITCH	15/13	COOK GEMC GC-164	W/ ELECTRONIC SPEED CONTROL
EF-223	JANITOR'S 223	CEILING	50	0.3	759	36 WATTS	N/A	120/ 1ø	1.8	GRAVITY	LIGHTS	15/13	COOK GEMC GC-122	W/ ELECTRONIC SPEED CONTROL
EF-224	WOMEN'S 224	CEILING	75	0.3	985	45 WATTS	N/A	120/ 1ø	2.1	GRAVITY	LIGHTS	15/13	COOK GEMC GC-142	W/ ELECTRONIC SPEED CONTROL
EF-225	MEN'S 225	CEILING	75	0.3	985	45 WATTS	N/A	120/ 1ø	2.1	GRAVITY	LIGHTS	15/13	COOK GEMC GC-142	W/ ELECTRONIC SPEED CONTROL

SCOPE SET - NOT FOR CONSTRUCTION. NOT FOR PRICING.

SMD ENGINEERING, PLLC
"Engineered Mechanical Solutions"
986 WEST ATHERTON DRIVE, SUITE 200
TAYLORSVILLE, UTAH 84123
(801) 268-3828, FAX (801) 268-3297
WWW.SMDENGINEERING.COM

STATE MAIL SERVICES

WEST VALLEY, UTAH

JRCA
ARCHITECTS
577 South 200 East
Salt Lake City, Utah 84111
(801) 533-2100 fax: 533-2101 jrcadesign.com

DATE/REVISION	PROJECT #.
11 · 17 · 08	20080512

MECHANICAL SCHEDULES

MH 601

THIS DRAWING, AS AN INSTRUMENT OF SERVICE, IS AND SHALL REMAIN THE PROPERTY OF SMD ENGINEERING, PLLC. AND SHALL NOT BE REPRODUCED, PUBLISHED, OR USED IN ANY WAY WITHOUT THE PERMISSION OF SMD ENGINEERING, PLLC. THE INFORMATION, DESIGN, OR CONCEPTS REPRESENTED ON THIS DRAWING ARE CONFIDENTIAL AND ARE NOT FOR GENERAL DISTRIBUTION. © SMD ENGINEERING, PLLC 2008

HEAT EXCHANGER SCHEDULE (HX)

HX / MBH

MARK	DUTY	HOT SIDE GPM	HOT SIDE INLET °F	HOT SIDE OUTLET °F	HOT SIDE PD FT	HOT SIDE FLUID	HOT SIDE CONNECTION IN	COLD SIDE GPM	COLD SIDE INLET °F	COLD SIDE OUTLET °F	COLD SIDE PD FT	COLD SIDE FLUID	COLD SIDE CONNECTION IN	HEAT XFER MBH	TYPE	PLATES NUMBER/ MAX	AREA SF	MATERIAL	GASKET	MAX. WORKING PRESSURE PSI	DIMENSIONS L (IN)	DIMENSIONS W (IN)	DIMENSIONS H (IN)	DIMENSIONS WT (LBS)	MANUFACTURER MODEL	REMARKS
HX-1	CONDENSER WATER TO CHILLED WATER	200	55	45	16.0	WATER	2-1/2	240	40	48.3	22.5	COND. WATER	2-1/2	1,000	PLATE AND FRAME IG	74/ 80	172.6	0.0157" AISI 316 STAINLESS	NITRIL	150	22	16	37	550	SONDEX S19A-IG10-74-TMTL63	

AIR DEVICE SCHEDULE

DEVICE / CFM/NCK

MARK	TYPE & DUTY	FACE SIZE H X W	NECK SIZE H X W	CEILING TYPE	MAX. CFM	MAX. T.P. IN WC	MAX. NC LEVEL	MIN T50 THROW FT	PATTERN	MANUFACTURER MODEL	REMARKS
S-1	ARCHITECTURAL PLAQUE DIFFUSER	24/24	6ø	LAY-IN	120	0.03	11	5	4-WAY	KRUEGER PLQ	W/ LAY-IN FRAME
S-2	ARCHITECTURAL PLAQUE DIFFUSER	24/24	8ø	LAY-IN	250	0.07	15	10	4-WAY	KRUEGER PLQ	W/ LAY-IN FRAME
S-3	ARCHITECTURAL PLAQUE DIFFUSER	24/24	10ø	LAY-IN	400	0.09	17	13	4-WAY	KRUEGER PLQ	W/ LAY-IN FRAME
S-4	ARCHITECTURAL PLAQUE DIFFUSER	24/24	12ø	LAY-IN	500	0.10	14	15	4-WAY	KRUEGER PLQ	W/ LAY-IN FRAME
S-5	CURVED BLADE SUPPLY GRILLE	20/10	18/8	LAY-IN	400	0.07	26	32	2-WAY ADJ.	KRUEGER 180	W/ SURFACE MOUNT FRAME AND 2-WAY AIR PATTERN
R-1	PERFORATED RETURN	24/12	22/10	LAY-IN	600	0.05	28	N/A	N/A	KRUEGER 6490	W/ LAY-IN FRAME
R-2	PERFORATED RETURN	24/24	22/22	LAY-IN	1200	0.05	28	N/A	N/A	KRUEGER 6490	W/ LAY-IN FRAME
E-1	ALUMINUM PERFORATED EXHAUST	12/12									
E-2	PERFORATED EXHAUST	24/24									

COOLING TOWER (DIRECT) SCHEDULE (CT)

CT / MBH

MARK	HEAT REJECTION MBH	GPM	EWT/ LWT °F	OSA WB °F	PROP GLYC %	ELECTRICAL FAN RPM	ELECTRICAL FAN BHP	ELECTRICAL VOLT/ PHASE	DIMENSIONS L (IN)	DIMENSIONS W (IN)	DIMENSIONS H (IN)	DIMENSIONS WT (LBS)	MANUFACTURER MODEL	REMARKS
CT-1	1,200	240	80/ 70	64	WATER	1800	5.0	208/ 3ø	140	100	148	8060	MARLEY AV61001	

BOILER SCHEDULE (B)

B / MBH

MARK	BURNER INPUT @ SL MBH	BURNER OUTPUT @ SL MBH	BURNER OUTPUT @ 5000 MBH	BURNER EFFICIENCY %	BURNER INLET GAS PRESSURE MAX/MIN IN WC	CHARACTERISTICS ASME PRESSURE RATING PSI	CHARACTERISTICS MINIMUM RELIEF VALVE PSI	CHARACTERISTICS FLUE CATEGORY	CHARACTERISTICS FLUE SIZE IN	CHARACTERISTICS MIN INLET WATER TEMP °F	WATER FLOW GPM	WATER FLOW PD FT WC	ELECTRICAL VOLT/ PHASE	ELECTRICAL AMP	DIMENSIONS L IN	DIMENSIONS H IN	DIMENSIONS W IN	DIMENSIONS WT LBS	MANUFACTURER MODEL	REMARKS
B-1	999	869	869	87	10.5/ 4.0	160	30	CAT. IV	6	120	80	11.1	120/ 1ø	12	30	55	26	720	RAYPAK MVB-1003	
B-2	999	869	869	87	10.5/ 4.0	160	30	CAT. IV	6	120	80	11.1	120/ 1ø	12	30	55	26	720	RAYPAK MVB-1003	

HUMIDIFIER SCHEDULE (HUM)

HUM / KW

MARK	SYSTEM SERVED	MAX. HUMID. RATE LBS/HR	INPUT POWER KW	ELECTRICAL VOLT/ PHASE	ELECTRICAL FLA	ELECTRICAL MCOP	DIMENSIONS L (IN)	DIMENSIONS W (IN)	DIMENSIONS H (IN)	DIMENSIONS WT (LBS)	MANUFACTURER MODEL	REMARKS
HUM-1	PRINTING	30	10.2	208/ 3ø	28.3	40	18	13	25	100	NORTEC NH-030	W/ REMOTE MOUNTED BLOWER PACK
HUM-2	PRINTING	20	6.8	208/ 3ø	18.9	25	18	13	25	100	NORTEC NH-020	W/ REMOTE MOUNTED BLOWER PACK
HUM-3	PRINTING	30	10.2	208/ 3ø	28.3	40	18	13	25	100	NORTEC NH-030	W/ REMOTE MOUNTED BLOWER PACK

EXPANSION TANK SCHEDULE (ET)

ET / GAL

MARK	SYSTEM SERVED	TEMP °F	GLYC. %	TANK VOL. GAL	ACCEPT. VOL. GAL	PRE-CHARGE PSI	DIMENSIONS DIA. IN	DIMENSIONS H IN	DIMENSIONS WT LBS	MANUFACTURER MODEL	REMARKS
ET-CW	CHILLED WATER	45	WATER	8.0	2.4	20	12	20	63	AMTROL "EXTROL" AX-15V	ASME RATED W/ POTABLE WATER COMPATIBLE BLADDER
ET-HW	HEATING WATER	180	WATER	21.7	11.3	20	16	30	184	AMTROL "EXTROL" AX-40V	ASME RATED W/ POTABLE WATER COMPATIBLE BLADDER

PUMP SCHEDULE (P)

P / GPM

MARK	SYSTEM SERVED	TYPE	GPM	HEAD FT WC	MIN % EFF.	GLYCOL %	MOTOR RPM	MOTOR BHP	MOTOR HP	MOTOR VOLT/ PHASE	MANUFACTURER MODEL	REMARKS
P-CNDW1	COND. WATER	BASE MOUNTED CLOSE COUPLED	240	52	73.6	WATER	1750	4.34	5	208/ 3ø	BELL & GOSSETT 1531 2-1/2BB	W/ SUCTION DIFFUSER
P-CNDW2	COND. WATER	BASE MOUNTED CLOSED COUPLED	240	52	73.6	WATER	1750	4.34	5	208/ 3ø	BELL & GOSSETT 1531 2-1/2BB	W/ SUCTION DIFFUSER
P-CW1	CHILLED WATER	BASE MOUNTED CLOSE COUPLED	200	78	71.2	WATER	1750	5.57	7.5	208/ 3ø	BELL & GOSSETT 1531 2BC	W/ SUCTION DIFFUSER
P-CW2	CHILLED WATER	BASE MOUNTED CLOSE COUPLED	200	78	71.2	WATER	1750	5.57	7.5	208/ 3ø	BELL & GOSSETT 1531 2BC	W/ SUCTION DIFFUSER
P-HW1	HEATING WATER	IN-LINE	80	62	51.9	WATER	1750	2.45	3	208/ 3ø	BELL & GOSSETT SERIES 80 1-1/2 X 1-1/2 X 9-1/2	
P-HW2	HEATING WATER	IN-LINE	80	62	51.9	WATER	1750	2.45	3	208/ 3ø	BELL & GOSSETT SERIES 80 1-1/2 X 1-1/2 X 9-1/2	

AIR SEPARATOR SCHEDULE (AS)

AS / GPM

MARK	SYSTEM SERVED	CONN. SIZE IN	MAX GPM	DESIGN GPM	PD FT WC	DIMENSIONS DIA IN	DIMENSIONS H IN	DIMENSIONS FLG TO FLG IN	DIMENSIONS DRY WT LBS	STRAINER FREE AREA SQ IN	MANUFACTURER MODEL	REMARKS
AS-CW	CHILLED WATER	4	300	200	4.5	13	31	21	165	140	BELL & GOSSETT ROLAIRTROL R-4	FLANGE CONNECTIONS W/ STRAINER
AS-HW	HEATING WATER	3	190	80	2.5	11	26	17	95	66	BELL & GOSSETT ROLAIRTROL R-3	NPT CONNECTIONS W/ STRAINER

NOT FOR CONSTRUCTION

SCOPE SET - NOT FOR CONSTRUCTION. NOT FOR PRICING.

SMD ENGINEERING, PLLC
"Engineered Mechanical Solutions"
986 WEST ATHERTON DRIVE, SUITE 200
TAYLORSVILLE, UTAH 84123
(801) 268-3828, FAX (801) 268-3297
WWW.SMDENGINEERING.COM

STATE MAIL SERVICES

WEST VALLEY, UTAH

JRCA
ARCHITECTS
577 South 200 East
Salt Lake City, Utah 84111
(801) 533-2100 fax: 533-2101 jrcadesign.com

DATE/REVISION	PROJECT #.
11 · 17 · 08	20080512

MECHANICAL SCHEDULES

MH 602

This Drawing, as an instrument of service, is and shall remain the property of SMD Engineering, PLLC. The information, design, or concepts represented on this drawing are confidential and are not for general distribution. © SMD Engineering, PLLC 2008
without the permission of SMD Engineering, PLLC. and shall not be reproduced, published, or used in any way without the permission

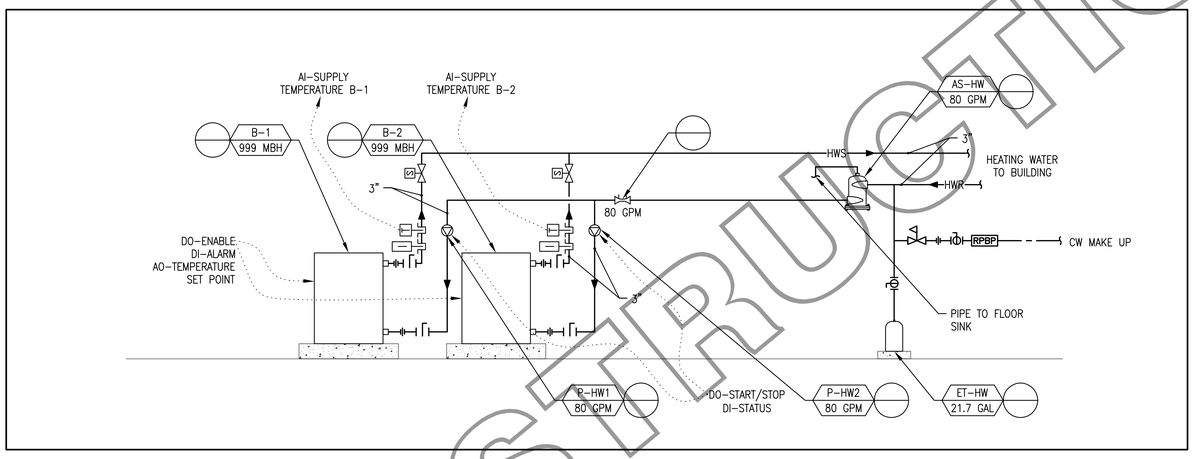

1 MH701 BOILER CONNECTION SCHEMATIC

8' 4' 2' 0 8' 16'
SCALE: 1/8" = 1'-0"

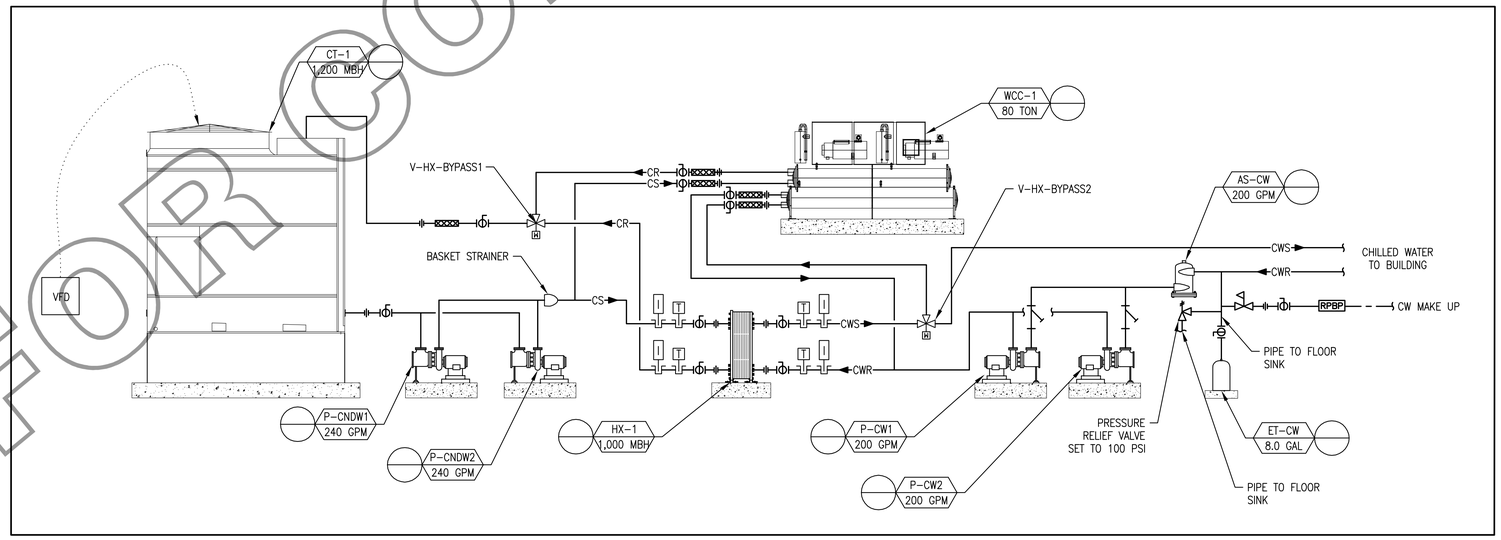

2 MH701 COOLING TOWER CONNECTION SCHEMATIC

8' 4' 2' 0 8' 16'
SCALE: 1/8" = 1'-0"

NOT FOR CONSTRUCTION

SCOPE SET - NOT FOR CONSTRUCTION. NOT FOR PRICING.

SMD ENGINEERING, PLLC
"Engineered Mechanical Solutions"
986 WEST ATHERTON DRIVE, SUITE 200
TAYLORSVILLE, UTAH 84123
(801) 268-3828, FAX (801) 268-3297
WWW.SMDENGINEERING.COM

STATE MAIL SERVICES

WEST VALLEY, UTAH

JRCA
ARCHITECTS
577 South 200 East
Salt Lake City, Utah 84111
(801) 533-2100 fax: 533-2101 jrcadesign.com

DATE/REVISION	PROJECT #.
11 · 17 · 08	20080512

MECHANICAL SCHEMATICS

MH 701

This Drawing, as an instrument of service, is and shall remain the property of SMD Engineering, PLLC and shall not be reproduced, published, or used in any way without the permission of SMD Engineering, PLLC. The information, design, or concepts represented on this drawing are confidential and are not for general distribution. © SMD Engineering, PLLC 2008

KEYED NOTES

1. RUN MECHANICAL PIPING OVER BEAMS.

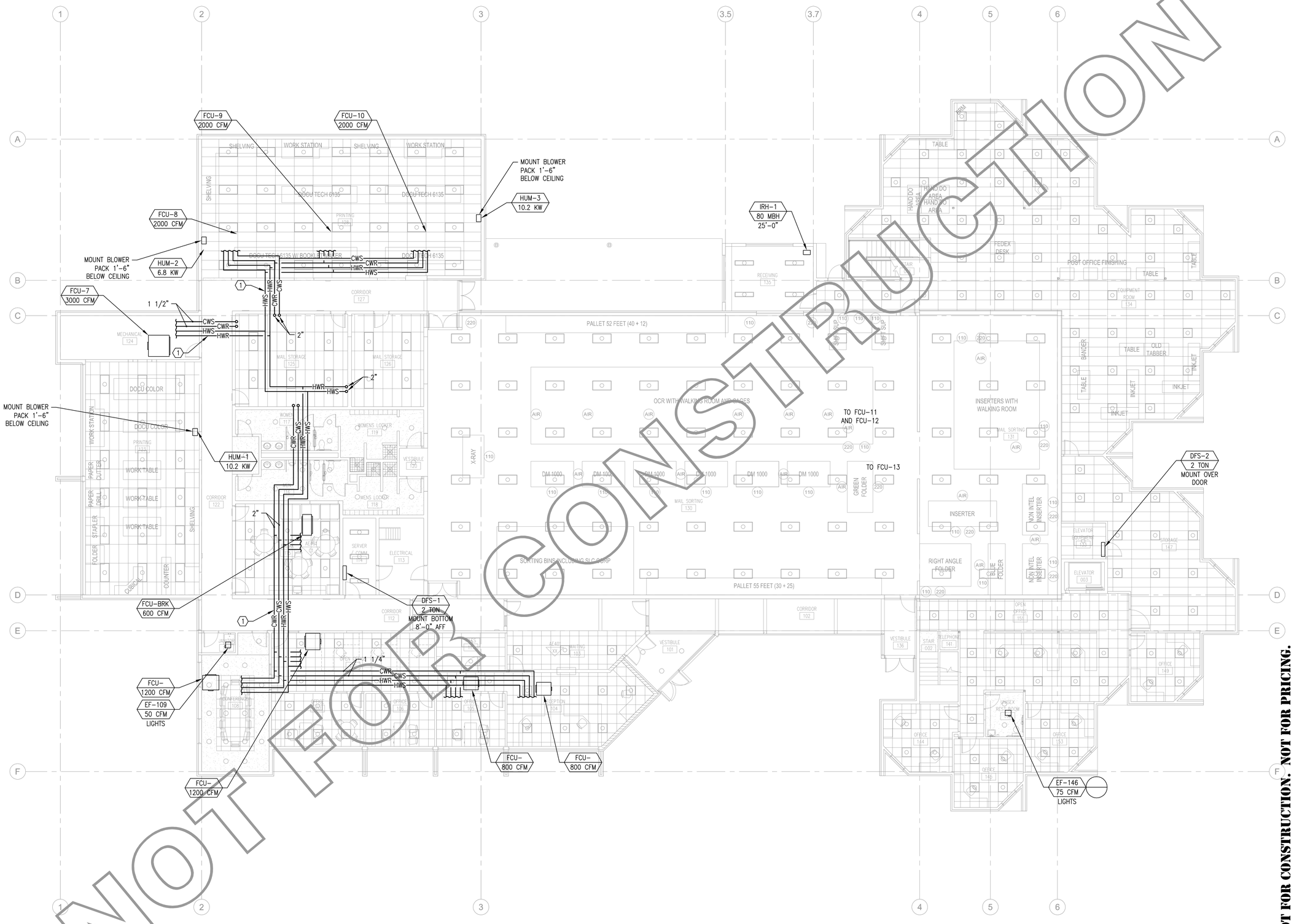

NOT FOR CONSTRUCTION

1 / MP101 MECHANICAL PIPING MAIN LEVEL FLOOR PLAN

SCALE: 1/8" = 1'-0"

SCOPE SET - NOT FOR CONSTRUCTION. NOT FOR PRICING.

SMD ENGINEERING, PLLC
"Engineered Mechanical Solutions"
986 WEST ATHERTON DRIVE, SUITE 200
TAYLORSVILLE, UTAH 84123
(801) 268-3828, FAX (801) 268-3297
WWW.SMDENGINEERING.COM

STATE MAIL SERVICES

WEST VALLEY, UTAH

JRCA
ARCHITECTS
577 South 200 East
Salt Lake City, Utah 84111
(801) 533-2100 fax: 533-2101 jrcadesign.com

DATE/REVISION	PROJECT #.
11 · 17 · 08	20080512

MECHANICAL PIPING MAIN LEVEL FLOOR PLAN

MP 101

THIS DRAWING, AS AN INSTRUMENT OF SERVICE, IS AND SHALL REMAIN THE PROPERTY OF SMD ENGINEERING, PLLC AND SHALL NOT BE REPRODUCED, PUBLISHED, OR USED IN ANY WAY WITHOUT THE PERMISSION OF SMD ENGINEERING, PLLC. THE INFORMATION, DESIGN, OR CONCEPTS REPRESENTED ON THIS DRAWING ARE CONFIDENTIAL AND ARE NOT FOR GENERAL DISTRIBUTION. © SMD ENGINEERING, PLLC 2008

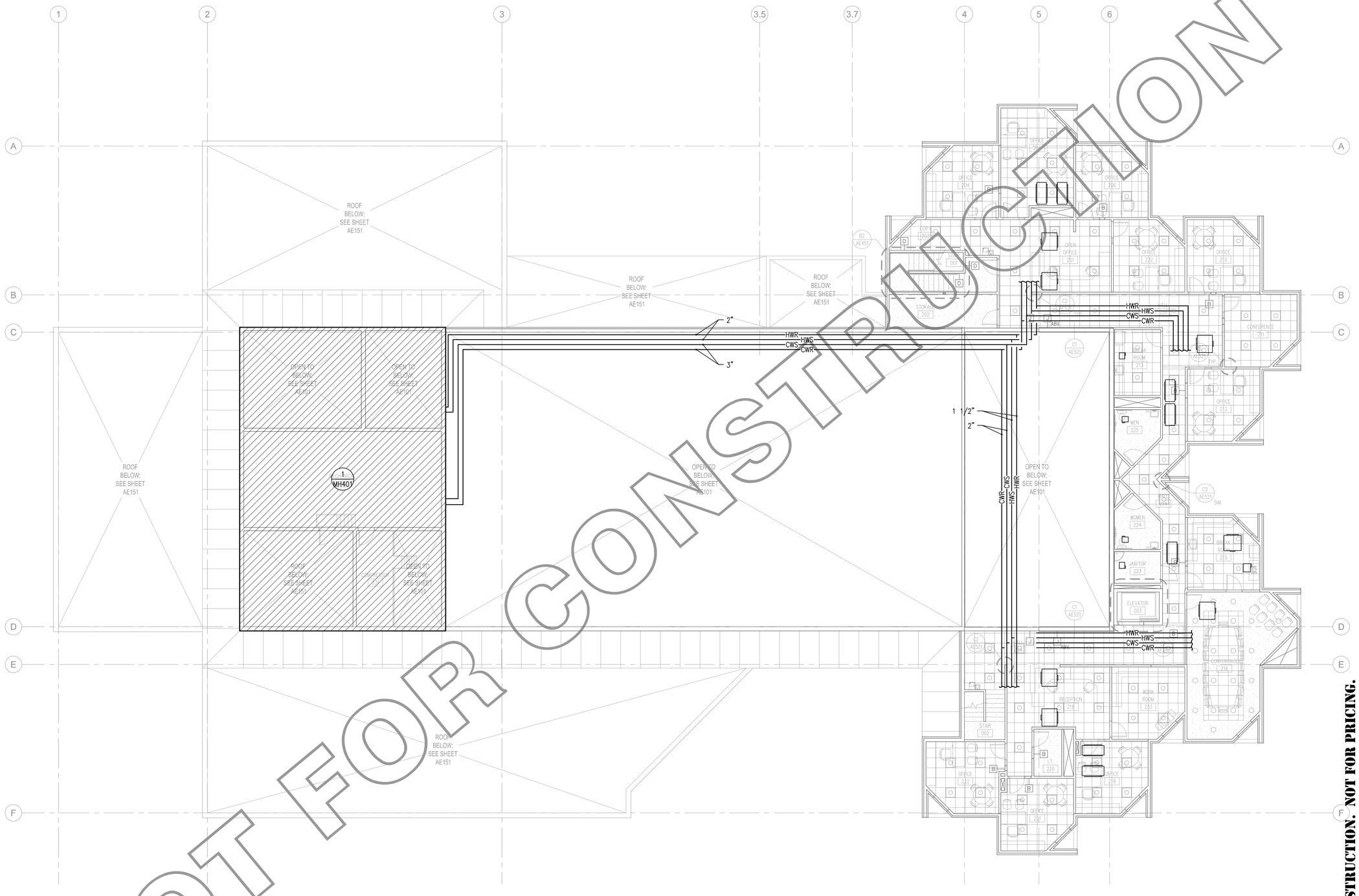

NOT FOR CONSTRUCTION

1 / MP102 MECHANICAL PIPING UPPER LEVEL FLOOR PLAN

NORTH

8' 4' 2' 0 8' 16'

SCALE: 1/8" = 1'-0"

SCOPE SET - NOT FOR CONSTRUCTION. NOT FOR PRICING.

SMD ENGINEERING, PLLC
"Engineered Mechanical Solutions"
986 WEST ATHERTON DRIVE, SUITE 200
TAYLORSVILLE, UTAH 84123
(801) 268-3828, FAX (801) 268-3297
WWW.SMDENGINEERING.COM

STATE MAIL SERVICES

WEST VALLEY, UTAH

JRCA
ARCHITECTS
577 South 200 East
Salt Lake City, Utah 84111
(801) 533-2100 fax: 533-2101 jrcadesign.com

DATE/REVISION	PROJECT #.
11 · 17 · 08	20080512

MECHANICAL PIPING UPPER LEVEL FLOOR PLAN

MP 102

THIS DRAWING, AS AN INSTRUMENT OF SERVICE, IS AND SHALL REMAIN THE PROPERTY OF SMD ENGINEERING, PLLC. AND SHALL NOT BE REPRODUCED, PUBLISHED, OR USED IN ANY WAY WITHOUT THE PERMISSION OF SMD ENGINEERING, PLLC. THE INFORMATION, DESIGN, OR CONCEPTS REPRESENTED ON THIS DRAWING ARE CONFIDENTIAL AND ARE NOT FOR GENERAL DISTRIBUTION. © SMD ENGINEERING, PLLC 2008

KEYED NOTES

1. 3/4" COMPRESSED AIR DROP TERMINATE W/ BALL VALVE

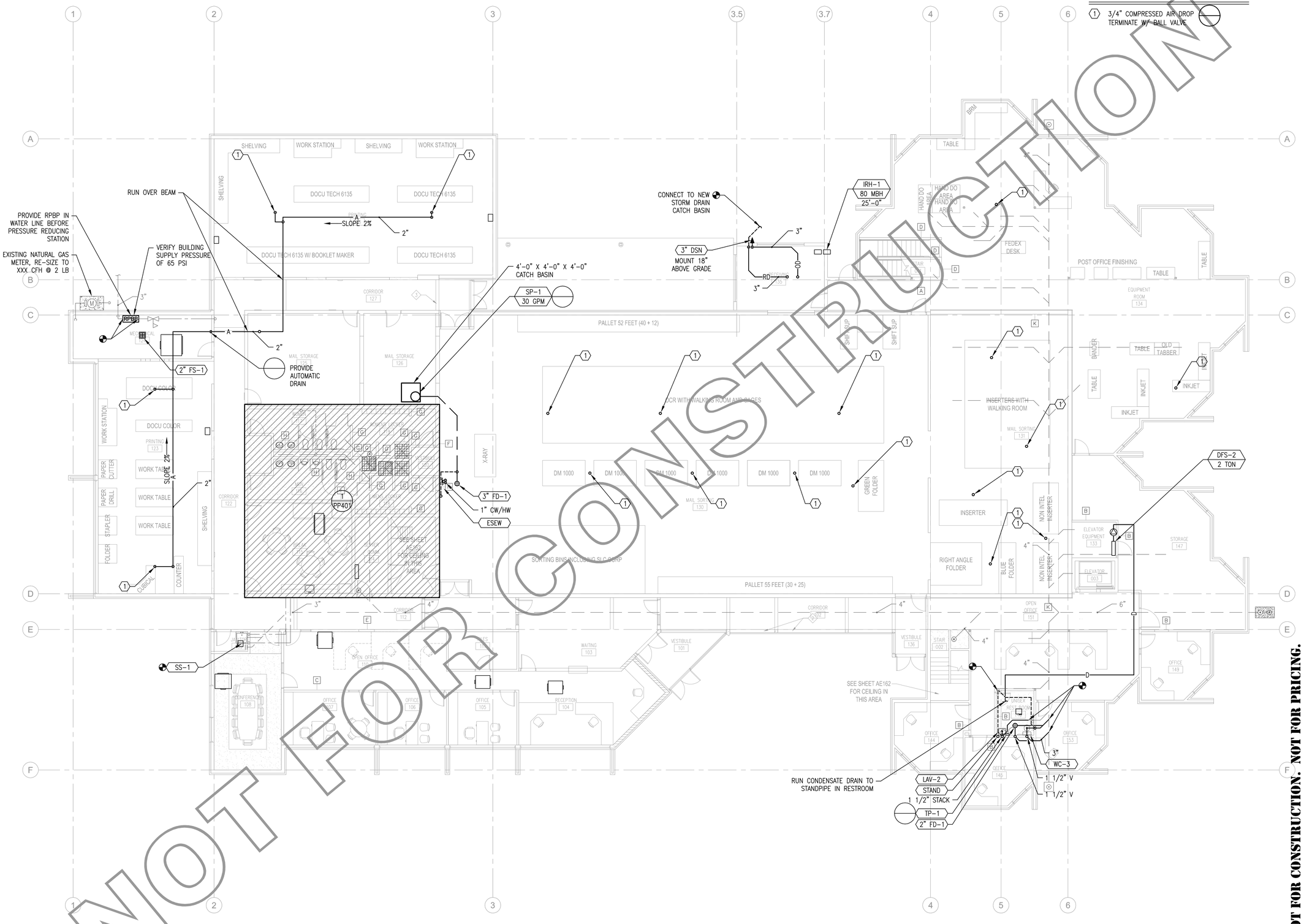

1 / PP101 PLUMBING MAIN LEVEL FLOOR PLAN

NOT FOR CONSTRUCTION

SCOPE SET - NOT FOR CONSTRUCTION. NOT FOR PRICING.

SMD ENGINEERING, PLLC
"Engineered Mechanical Solutions"
986 WEST ATHERTON DRIVE, SUITE 200
TAYLORSVILLE, UTAH 84123
(801) 268-3828, FAX (801) 268-3297
WWW.SMDENGINEERING.COM

STATE MAIL SERVICES

WEST VALLEY, UTAH

JRCA
ARCHITECTS
577 South 200 East
Salt Lake City, Utah 84111
(801) 533-2100 fax: 533-2101 jrcadesign.com

DATE/REVISION	PROJECT #.
11 · 17 · 08	20080512

PLUMBING MAIN LEVEL FLOOR PLAN

PP 101

THIS DRAWING, AS AN INSTRUMENT OF SERVICE, IS AND SHALL REMAIN THE PROPERTY OF SMD ENGINEERING, PLLC. THE INFORMATION, DESIGN, OR CONCEPTS REPRESENTED ON THIS DRAWING ARE CONFIDENTIAL AND ARE NOT FOR GENERAL DISTRIBUTION. © SMD ENGINEERING, PLLC 2008

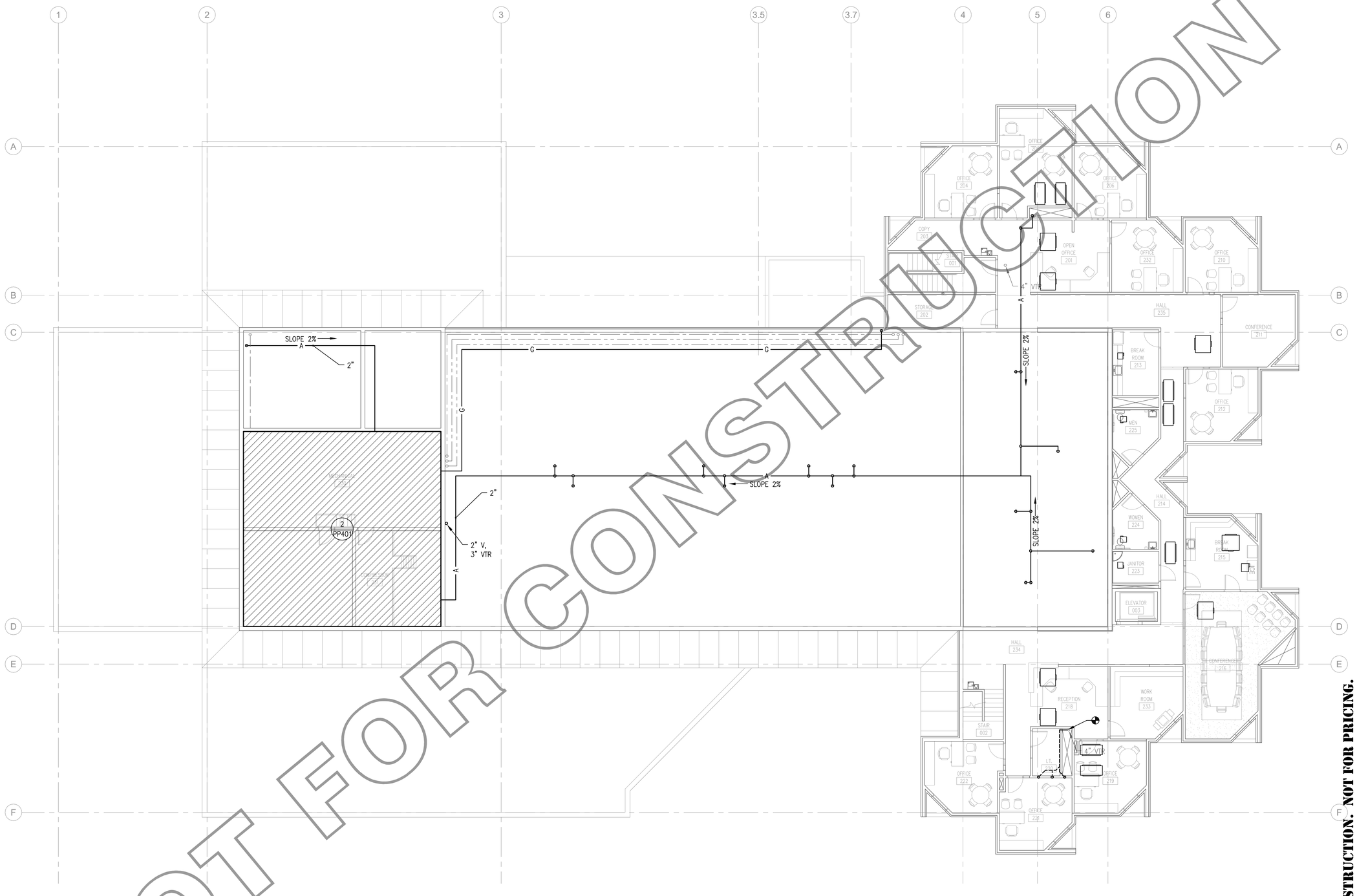

1 / PP102 PLUMBING UPPER LEVEL FLOOR PLAN

NORTH

8' 4' 2' 0 8' 16'

SCALE: 1/8" = 1'-0"

NOT FOR CONSTRUCTION

SCOPE SET - NOT FOR CONSTRUCTION. NOT FOR PRICING.

SMD ENGINEERING, PLLC
"Engineered Mechanical Solutions"
986 WEST ATHERTON DRIVE, SUITE 200
TAYLORSVILLE, UTAH 84123
(801) 268-3828, FAX (801) 268-3297
WWW.SMDENGINEERING.COM

STATE MAIL SERVICES

WEST VALLEY, UTAH

JRCA
ARCHITECTS
577 South 200 East
Salt Lake City, Utah 84111
(801) 533-2100 fax: 533-2101 jrcadesign.com

DATE/REVISION	PROJECT #.
11 · 17 · 08	20080512

PLUMBING UPPER LEVEL FLOOR PLAN

PP 102

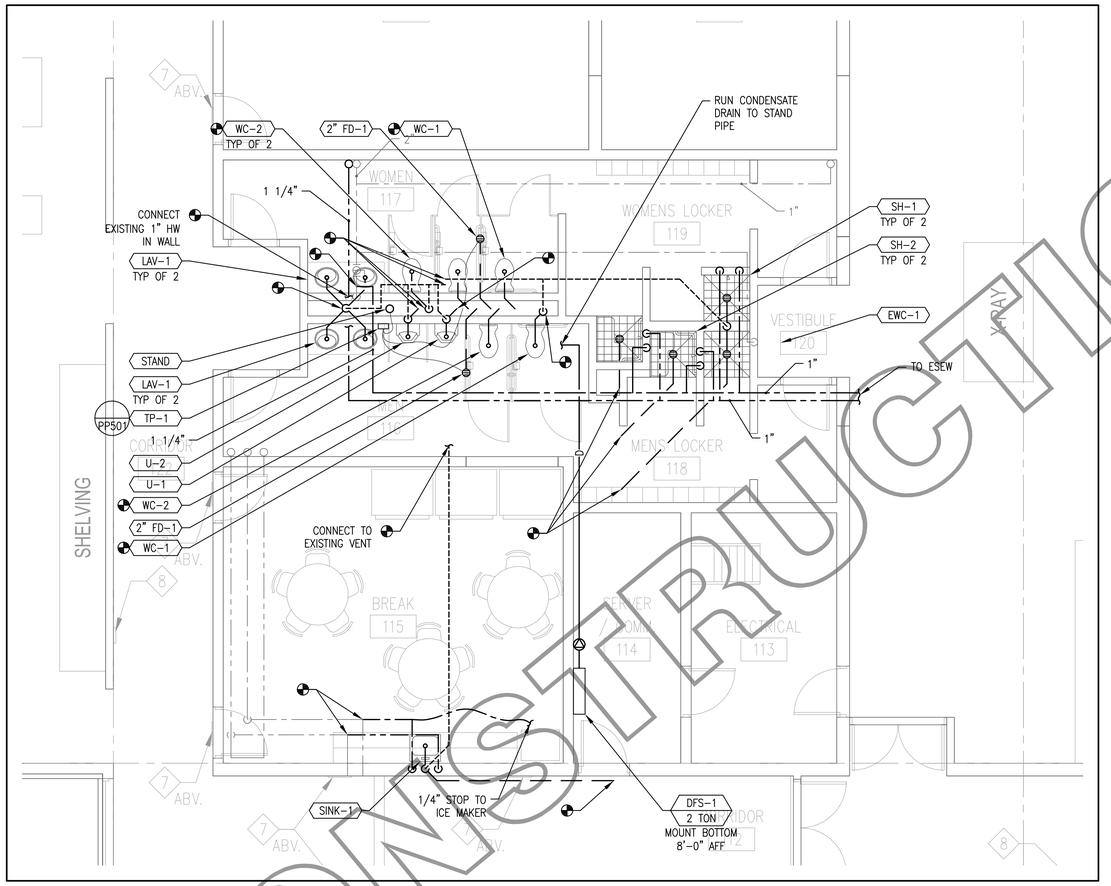

1 PP401 ENLARGED PLUMBING FIRST LEVEL FLOOR PLAN

NORTH

4' 2' 1' 0 4' 8'

SCALE: 1/4" = 1'-0"

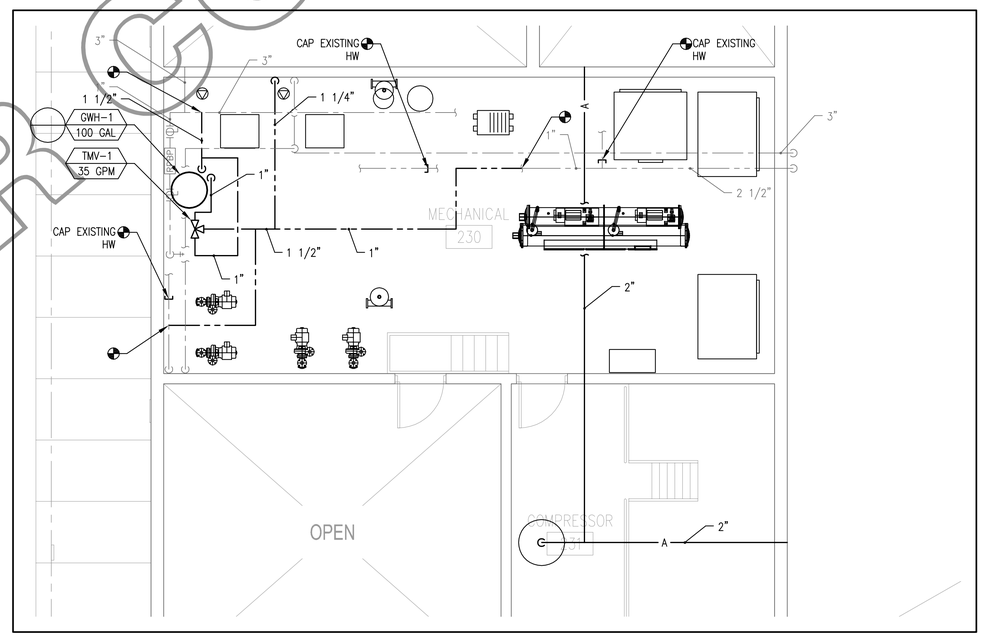

2 PP401 ENLARGED PLUMBING UPPER LEVEL FLOOR PLAN

NORTH

4' 2' 1' 0 4' 8'

SCALE: 1/4" = 1'-0"

NOT FOR CONSTRUCTION

NOT FOR CONSTRUCTION

SCOPE SET - NOT FOR CONSTRUCTION. NOT FOR PRICING.

THIS DRAWING, AS AN INSTRUMENT OF SERVICE, IS AND SHALL REMAIN THE PROPERTY OF SMD ENGINEERING, PLLC. AND SHALL NOT BE REPRODUCED, PUBLISHED, OR USED IN ANY WAY WITHOUT THE PERMISSION OF SMD ENGINEERING, PLLC. THE INFORMATION, DESIGN, OR CONCEPTS REPRESENTED ON THIS DRAWING ARE CONFIDENTIAL AND ARE NOT FOR GENERAL DISTRIBUTION. © SMD ENGINEERING, PLLC 2008

SMD ENGINEERING, PLLC
"Engineered Mechanical Solutions"
986 WEST ATHERTON DRIVE, SUITE 200
TAYLORSVILLE, UTAH 84123
(801) 268-3828, FAX (801) 268-3297
WWW.SMDENGINEERING.COM

STATE MAIL SERVICES

WEST VALLEY, UTAH

JRCA
ARCHITECTS
577 South 200 East
Salt Lake City, Utah 84111
(801) 533-2100 fax: 533-2101 jrcadesign.com

DATE/REVISION	PROJECT #.
11 · 17 · 08	20080512

ENLARGED PLUMBING LEVEL FLOOR PLANS

PP 401

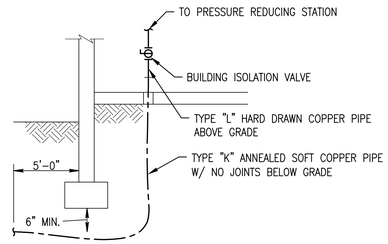

1 PP501 WATER SERVICE ENTRANCE

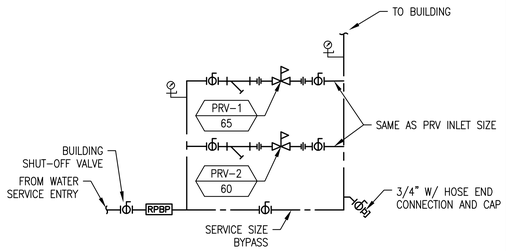

2 PP501 PRESSURE REDUCING STATION

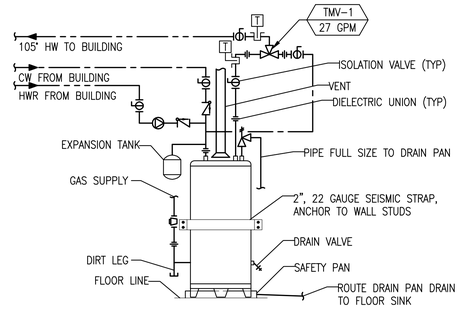

3 PP501 GAS-FIRED WATER HEATER

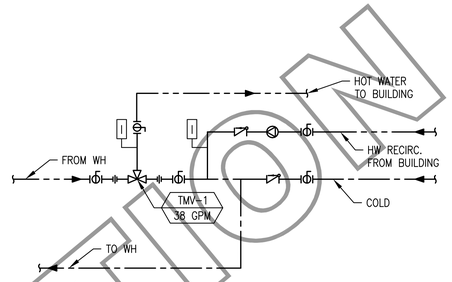

4 PP501 PUMPED THERMOSTATIC MIXING VALVE

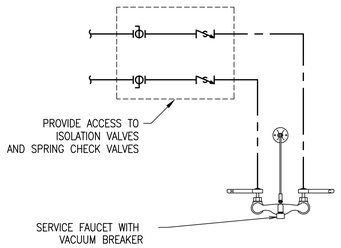

NOTE: TYPICAL ALL FAUCETS WITH HOSE END CONNECTION

5 PP501 SERVICE FAUCET PIPING

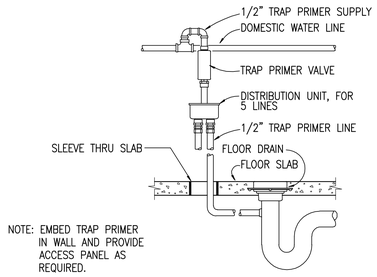

NOTE: EMBED TRAP PRIMER IN WALL AND PROVIDE ACCESS PANEL AS REQUIRED.

6 PP501 TRAP PRIMER

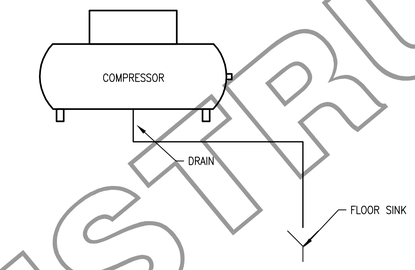

7 PP501 AIR COMPRESSOR CONNECTION

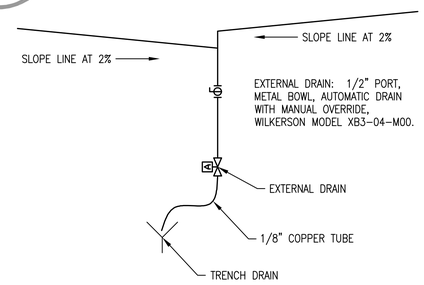

8 PP501 TYPICAL AIR EXTERNAL DRAIN DROP

9 PP501 COMPRESSED AIR DROP

10 PP501 NOT USED

11 PP501 NOT USED

12 PP501 NOT USED

13 PP501 NOT USED

14 PP501 NOT USED

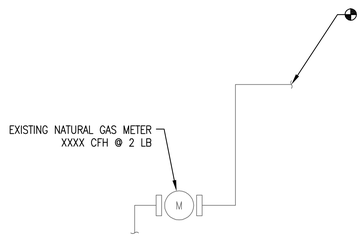

15 PP501 GAS PIPING DIAGRAM

NOT FOR CONSTRUCTION

SCOPE SET - NOT FOR CONSTRUCTION. NOT FOR PRICING.

THIS DRAWING, AS AN INSTRUMENT OF SERVICE, IS AND SHALL REMAIN THE PROPERTY OF SMD ENGINEERING, PLLC. THE INFORMATION, DESIGN, OR CONCEPTS REPRESENTED ON THIS DRAWING ARE CONFIDENTIAL AND ARE NOT FOR GENERAL DISTRIBUTION. © SMD ENGINEERING, PLLC 2008
WITHOUT THE PERMISSION OF SMD ENGINEERING, PLLC. AND SHALL NOT BE REPRODUCED, PUBLISHED, OR USED IN ANY WAY WITHOUT THE P

SMD ENGINEERING, PLLC
"Engineered Mechanical Solutions"
986 WEST ATHERTON DRIVE, SUITE 200
TAYLORSVILLE, UTAH 84123
(801) 268-3828, FAX (801) 268-3297
WWW.SMDENGINEERING.COM

STATE MAIL SERVICES

WEST VALLEY, UTAH

JRCA
ARCHITECTS
577 South 200 East
Salt Lake City, Utah 84111
(801) 533-2100 fax: 533-2101 jrcadesign.com

DATE/REVISION	PROJECT #.
11 · 17 · 08	20080512

PLUMBING DETAILS

PP 501

THIS DRAWING, AS AN INSTRUMENT OF SERVICE, IS AND SHALL REMAIN THE PROPERTY OF SMD ENGINEERING, PLLC. AND SHALL NOT BE REPRODUCED, PUBLISHED, OR USED IN ANY WAY WITHOUT THE PERMISSION OF SMD ENGINEERING, PLLC. THE INFORMATION, DESIGN, OR CONCEPTS REPRESENTED ON THIS DRAWING ARE CONFIDENTIAL AND ARE NOT FOR GENERAL DISTRIBUTION. © SMD ENGINEERING, PLLC 2008

MIXING VALVE SCHEDULE (TMV)

TMV / GPM

MARK	MIN GPM	MAX GPM	DESIGN GPM	PD PSI	MANUFACTURER MODEL	REMARKS
TMV-1	0.5	38	35	10	SYMMONS TEMPCONTROL 5-500	THERMOSTATIC MIXING VALVE

GAS FIRED WATER HEATER SCHEDULE (GWH)

GWH / GAL

MARK	INPUT MBH	OUT. MBH	EFF. %	FUEL	TANK GAL	REC. GPH	TEMP. RISE °F	OPER. TEMP. °F	FLUE		DIMENSIONS			ELECTRICAL		MANUFACTURER MODEL	REMARKS
									D IN	TYPE	D IN	H IN	WT LBS	VOLT/ PHASE	AMP		
GWH-1	199	139	94	NAT. GAS	100	202	90	140	3	PVC	28	56	438	N/A	N/A	A. O. SMITH BTH-199	W/ CONCENTRIC VENT TERMINATION, WATER HEATER SAFETY PAN, AND AMTROL ST-12-C EXPANSION TANK

SUMP PUMP SCHEDULE (SP)

SP / GPM

MARK	SYSTEM SERVED	TYPE	GPM	HEAD FT WC	MOTOR			MANUFACTURER MODEL	REMARKS
					RPM	HP	VOLT/ PHASE		
SP-1	ESEW CATCH BASIN	SUMP PUMP	30	15	1750	1/2	120/ 1ø	MEYERS CMV5	W/ AUTOMATIC FLOAT CONTROL

PLUMBING FIXTURE SCHEDULE

FIXTURE

MARK	FIXTURE	ROUGH IN SIZE					MANUFACTURER MODEL	REMARKS
		WASTE IN	TRAP IN	VENT IN	HW IN	CW IN		
WC-1	WATER CLOSET, WALL MOUNTED, MANUAL FLUSH VALVE ADA COMPLIANT	3	2	1-1/2	N/A	1	AMERICAN STANDARD "AFWALL" MOUNT 17" H W/ ZURN Z6000-WS1	VITREOUS CHINA, 1.6 GPF, 17" FLOOR TO RIM, 10" ROUGH IN, ELONGATED BOWL, COMPLIES WITH ASME A112.19.2M. W/ OLSENITE #95 OPEN FRONT SEAT LESS COVER, FLUSH VALVE AND CARRIER.
WC-2	WATER CLOSET, WALL MOUNTED, MANUAL FLUSH VALVE	3	2	1-1/2	N/A	1	AMERICAN STANDARD "AFWALL" MOUNT 15" H W/ ZURN Z6000-WS1	VITREOUS CHINA, 1.6 GPF, 17" FLOOR TO RIM, 10" ROUGH IN, ELONGATED BOWL, COMPLIES WITH ASME A112.19.2M. W/ OLSENITE #95 OPEN FRONT SEAT LESS COVER, FLUSH VALVE AND CARRIER.
WC-3	WATER CLOSET, FLOOR MOUNTED, TANK TYPE, ADA COMPLIANT	3	2	1-1/2	N/A	1/2	TOTO "DRAKE" CST744SL	WHITE VITREOUS CHINA, 1.6 GPF, 3" FLUSH VALVE, 17" FLOOR TO RIM, 12" ROUGH IN, ELONGATED BOWL, W/OLSENITE #95 OPEN FRONT SEAT LESS COVER, CHROMED ANGLE STOP AND CHROMED BRASS SUPPLY.
U-1	URINAL, ADA COMPLIANT, WALL MOUNTED, W/ MANUAL FLUSH VALVE	2	2	1-1/2	N/A	3/4	AMERICAN STANDARD "WASHBROOK" W/ ZURN Z6003 FLUSH VALVE	VITREOUS CHINA, 1.0 GPF 19" W X 27" H X 14" D, WASHOUT FLUSH ACTION, LOW CONSUMPTION URINAL WITH 3/4" MANUAL FLUSH VALVE AND WALL CARRIER. SEE ARCHITECTURAL ELEVATIONS FOR MOUNTING ELEVATION.
U-2	URINAL, WALL MOUNTED, W/ MANUAL FLUSH VALVE	2	2	1-1/2	N/A	3/4	AMERICAN STANDARD "WASHBROOK" W/ ZURN Z6003 FLUSH VALVE	VITREOUS CHINA, 1.0 GPF 19" W X 27" H X 14" D, WASHOUT FLUSH ACTION, LOW CONSUMPTION URINAL WITH 3/4" MANUAL FLUSH VALVE AND WALL CARRIER. SEE ARCHITECTURAL ELEVATIONS FOR MOUNTING ELEVATION.
LAV-1	LAVATORY, COUNTER MOUNTED, ADA COMPLIANT W/ SINGLE CONTROL LAV FAUCET	1-1/2	1 1/4	1-1/2	1/2	1/2	AMERICAN STANDARD "CADET" LAVATORY W/ "SEVA" FAUCET	VITREOUS CHINA 18"X21" OVAL COUNTERTOP LAVATORY W/ SINGLE CONTROL LAV FAUCET, FAUCET HOLES ON 4" CENTERS, GRID STRAINER, CHROMED ANGLE STOPS, CHROMED BRASS SUPPLIES, CHROMED BRASS "P" TRAP, AND ADA COMPLIANT INSULATION KIT.
SINK-1								
SH-1	ADA COMPLIANT SHOWER VALVE W/ HAND SPRAY, SLIDE BAR, AND SHOWER DRAIN	2	2	1-1/2	1/2	1/2	SYMMONS TEMPTROL SHOWER SYSTEM W/ HAND SPRAY AND TWO ZURN SHOWER DRAINS FD-2254-NH2-R5	PRESSURE BALANCED SHOWER VALVE W/ INTEGRAL SERVICE STOPS, HAND SPRAY, 30" SLIDE BAR. TWO (2) SHOWER DRAINS W/ CAST IRON BODY, CLAMPING COLLER, AND ADJUSTABLE NICKEL BRONZE STRAINER ASSEMBLY.
SH-2	SHOWER VALVE W/ HAND SPRAY AND SHOWER DRAIN	2	2	1-1/2	1/2	1/2	SYMMONS TEMPTROL SHOWER SYSTEM W/ HAND SPRAY AND TWO ZURN SHOWER DRAINS FD-2254-NH2-R5	PRESSURE BALANCED SHOWER VALVE W/ INTEGRAL SERVICE STOPS, HAND SPRAY. TWO (2) SHOWER DRAINS W/ CAST IRON BODY, CLAMPING COLLER, AND ADJUSTABLE NICKEL BRONZE STRAINER ASSEMBLY.
ESEW	EMERGENCY SHOWER AND EYEWASH, STAINLESS STEEL	2	1 1/4	1-1/2	X	1 1/4	HAWS 8330	STAINLESS STEEL COMBINATION SHOWER AND EYE/FACE WASH W/ TWIN STAINLESS STEEL SOFT-FLO EYEWASH HEADS, STAINLESS STEEL DUST COVER, PULL RING, FOOT TREADLE, AND "FACTORY" THERMOSTATIC MIXING VALVE.
EWC-1	ELECTRIC WATER COOLER, TWO STATION, ADA COMPLIANT	1-1/2	1 1/2	1-1/2	N/A	1/2	ELKAY EZSTL8C	W/ FRONT AND SIDE CONTROLS, 9.6 GPH 50°F DRINKING WATER, 120V/1ø/3.7A, CHROMED ANGLE STOP, CHROMED BRASS "P" TRAP, AND CHROMED BRASS SUPPLY.
SS-1	SERVICE SINK, ENAMELED CAST IRON	3	3	1-1/2	1/2	1/2	AMERICAN STANDARD FLORWELL W/FAUCET 8344.112	28"X28"X13" DEEP ENAMELED CAST IRON SERVICE SINK W/ FLAT GRID DRAIN, REMOVABLE VINYL-COATED RIM GUARD, HOSE AND HOSE BRACKET. POLISHED CHROME FAUCET W/TOP BRACE, STOPS AND VACUUM BREAKER.
HB-1	HOSE BIBB	N/A	N/A	N/A	N/A	3/4	ZURN Q1343	ROUGH BRONZE LAWN FAUCET.
WH-1	FREEZELESS WALL HYDRANT	N/A	N/A	N/A	N/A	3/4	WOODFORD MFG 65	W/ LOOSE KEY, AND INTEGRAL VACUUM BREAKER.
TP-1	TRAP PRIMER	N/A	N/A	N/A	N/A	1/2	PPP 500	TRAP PRIMER.
RD	ROOF DRAIN	X	N/A	N/A	N/A	N/A	ZURN RD2131-AL "X" INDICATED ON DRAWINGS	CAST IRON ROOF DRAIN W/ ALUMINUM DOME STRAINER AND INTEGRAL GRAVEL GUARD.
OD	ROOF OVERFLOW DRAIN	X	N/A	N/A	N/A	N/A	ZURN RD2132-AL "X" INDICATED ON DRAWINGS	CAST IRON OVERFLOW ROOF DRAIN W/ ALUMINUM DOME STRAINER AND INTEGRAL GRAVEL GUARD.
DSN	DOWNSPOUT NOZZLE	X	N/A	N/A	N/A	N/A	ZURN ZARB-199 "X" INDICATED ON DRAWINGS	DOWNSPOUT NOZZLE, ROUGH BRONZE BODY, THREADED INLET, DECORATIVE FACE, AND BIRDSCREEN.
FD-1	FLOOR DRAIN	X	X	X/2 2" MIN	N/A	N/A	ZURN FD-2321-NH"X" "X" INDICATED ON DRAWINGS	CAST IRON BODY, ADJUSTABLE NICKEL BRONZE STRAINER ASSEMBLY, MEMBRANE CLAMP, WEEP HOLES, AND TRAP PRIMER CONNECTION.
FS-1	FLOOR SINK 6" DEEP	2	2	1-1/2	N/A	N/A	ZURN FD-2375-Y	CAST IRON, 12"X12"X6" DEEP, 1/2 GRATE, WHITE ACID RESISTING INTERIOR, PVC DOME STRAINER, AND SEDIMENT BUCKET.
STAND	STANDPIPE	2	2	1-1/2	N/A	N/A	N/A	PROVIDE TRAP PRIMER.

NOT FOR CONSTRUCTION

SCOPE SET - NOT FOR CONSTRUCTION. NOT FOR PRICING.

SMD ENGINEERING, PLLC
"Engineered Mechanical Solutions"
986 WEST ATHERTON DRIVE, SUITE 200
TAYLORSVILLE, UTAH 84123
(801) 268-3828, FAX (801) 268-3297
WWW.SMDENGINEERING.COM

STATE MAIL SERVICES

WEST VALLEY, UTAH

JRCA
ARCHITECTS
577 South 200 East
Salt Lake City, Utah 84111
(801) 533-2100 fax: 533-2101 jrcadesign.com

DATE/REVISION	PROJECT #.
11 · 17 · 08	20080512

PLUMBING SCHEDULES

PP 601

SYMBOL LEGEND

SYMBOL	DESCRIPTION
REFERENCE AND LINE SYMBOLS	
A5 / E-501	DETAIL INDICATOR: A5 INDICATES DETAIL NUMBER, E-501 INDICATES DRAWING SHEET WHERE DETAIL IS SHOWN.
A5 / E-201	ELEVATION OR SECTION INDICATOR, EXTERIOR: A5 INDICATES ELEVATION OR SECTION NUMBER, E-201 INDICATES DRAWING SHEET WHERE ELEVATION OR SECTION IS SHOWN.
A5 / E-201	ELEVATION OR SECTION INDICATOR, INTERIOR: A5 INDICATES ELEVATION OR SECTION NUMBER, E-201 INDICATES DRAWING SHEET WHERE ELEVATION OR SECTION IS SHOWN.
100	ROOM OR SPACE NUMBER.
1	KEYNOTE INDICATOR.
1	REVISION INDICATOR.
CU-1	EQUIPMENT INDICATOR.
	BREAK, STRAIGHT: TO BREAK PARTS OF DRAWING.
	BREAK, ROUND.
	NEW LINE: MEDIUM LINE.
	HIDDEN FEATURES LINE: HIDDEN, THIN LINE.
	EXISTING TO REMAIN LINE: THIN LINE.
	DEMOLITION LINE: DASHED, MEDIUM LINE.
WIRING METHODS	
	WIRING.
A-1,3,5	BRANCH CIRCUIT HOME RUN TO PANELBOARD: NUMBER OF ARROWS INDICATES NUMBER OF CIRCUITS. LETTER AND NUMBER NOTATIONS IDENTIFY PANEL AND CIRCUIT NUMBERS. USE #12 CONDUCTORS, EXCEPT #10 CONDUCTORS SHALL BE INSTALLED IF DISTANCES EXCEED THOSE SPECIFIED IN SECTION 16120.
1 A-1,3,5	BRANCH CIRCUIT HOME RUN TO PANELBOARD: NUMBER OF ARROWS INDICATES NUMBER OF CIRCUITS. LETTER AND NUMBER NOTATIONS IDENTIFY PANEL AND CIRCUIT NUMBERS. NUMBER IN BOX REFERS TO THE CONDUCTOR AND CONDUIT SCHEDULE. FOR BRANCH WIRING USE #12 CONDUCTORS, EXCEPT #10 CONDUCTORS SHALL BE INSTALLED IF DISTANCES EXCEED THOSE SPECIFIED IN SECTION 16120.
— X —	WIRING AND/OR RACEWAY: THIN LINE. WHERE "X" = : CATV = CABLE TELEVISION / NC = NURSE CALL CCTV = CLOSED CIRCUIT TELEVISION / P = POWER FA = FIRE ALARM / RC = RIGID CONDUIT FO = FIBER OPTICS / S = SOUND I = INTERCOM / T = TELEPHONE TV = TELEVISION OTHERS AS NOTED IN OTHER SCHEDULES. RACEWAYS AND WIRING SHALL BE SIZED AS SHOWN AND/OR SPECIFIED.
	LOW VOLTAGE WIRING: DIVIDE, MEDIUM LINE.
	CONDUIT STUB. DIMENSION RECORD DRAWINGS AND MARK.
	CONDUCTOR & CONDUIT ("CC") SCHEDULE INDICATOR. REFER TO ONE-LINE DIAGRAM.
	JUNCTION BOX.
SC	JUNCTION BOX, SYSTEMS FURNITURE COMMUNICATION CONNECTION.
SP	JUNCTION BOX, SYSTEMS FURNITURE POWER CONNECTION.
C	CABLE TRAY ABOVE ACCESSIBLE CEILING.
	EARTH GROUND (ONE-LINE DIAGRAM).
C	JUNCTION BOX, CEILING.
	LADDER RACK.
LIGHTING (REFER TO FIXTURE SCHEDULE FOR SYMBOLS)	
(W-3)	FIXTURE IDENTIFICATION: (W-3) INDICATES FIXTURE TYPE AS SCHEDULED.
(W-3)	FIXTURE IDENTIFICATION, EMERGENCY WITH BATTERY PACK, CONNECTED TO GENERATOR AS INDICATED: (W-3) INDICATES FIXTURE TYPE AS SCHEDULED.
EM	EMERGENCY.
NL	NIGHT LIGHT: DO NOT SWITCH.
↑	EGRESS DIRECTION ARROW.
LV	LOW VOLTAGE LIGHTING TRANSFORMER.
LIGHTING CONTROL	
	OCCUPANCY SENSOR, DUAL TECHNOLOGY, OMNI-DIRECTIONAL, CEILING.
	OCCUPANCY SENSOR, DUAL TECHNOLOGY, WALL.
	OCCUPANCY SENSOR, DUAL TECHNOLOGY, DIRECTIONAL.
U	OCCUPANCY SENSOR, ULTRASONIC, OMNI-DIRECTIONAL, CEILING.
R	OCCUPANCY SENSOR CONTROL RELAY.
P	PHOTOCELL.
TC	TIME CLOCK.
STRUCTURED CABLING	
X	TELEPHONE, WALL MOUNTED ("X" INDICATES QUANTITY OF CABLES).
W	TELEPHONE, WALL MOUNTED: WALL PHONE.
X	OUTLET, DATA COMMUNICATION ("X" INDICATES QUANTITY OF CABLES).
	OUTLET, BUILDING STANDARD COMBINATION TELEPHONE/DATA COMMUNICATION.
	TELEPHONE TERMINAL BOARD, FIRE TREATED PLYWOOD PAINTED.
	LAN RACK, FLOOR STANDING.
—D—	DATA CABLE, CATEGORY 5 (ONE-LINE DIAGRAM).
—V—	VOICE CABLE, CATEGORY 3 (ONE-LINE DIAGRAM).

SYMBOL LEGEND

SYMBOL	DESCRIPTION
WIRING DEVICES	
	RECEPTACLE, DUPLEX: NEMA 5-20R.
A	RECEPTACLE, DUPLEX, ABOVE COUNTER: NEMA 5-20R.
C	RECEPTACLE, DUPLEX, CEILING: NEMA 5-20R.
D	RECEPTACLE, DUPLEX, DEDICATED CIRCUIT: NEMA 5-20R.
DF	RECEPTACLE, DUPLEX, DRINKING FOUNTAIN: CONCEAL WATER COOLER RECEPTACLE BEHIND WATER COOLER. SEE DIVISION 15 SHOP DRAWINGS FOR INSTALLATION REQUIREMENTS.
	RECEPTACLE, DUPLEX WITH GROUND FAULT CIRCUIT INTERRUPTER: NEMA 5-20R.
WP	RECEPTACLE, DUPLEX WITH GROUND FAULT CIRCUIT INTERRUPTER, WEATHERPROOF: NEMA 5-20R.
	RECEPTACLE, QUADRAPLEX: NEMA 5-20R.
	RECEPTACLE, SPECIAL PURPOSE. PROVIDE RECEPTACLE TO MATCH EQUIPMENT PLUG.
	MULTI-OUTLET ASSEMBLY: NEMA 5-20R.
D	DROP CORD. SEE DETAIL.
FB#	FLUSH FLOOR BOX. "#" SHOWN ON DRAWINGS. REFER TO WIRING DEVICE SCHEDULE IN SECTION 16140 FOR CONFIGURATION AND DEVICES.
PP#	POWER POLE. "#" SHOWN ON DRAWINGS. REFER TO WIRING DEVICE SCHEDULE IN SECTION 16140 FOR CONFIGURATION AND DEVICES.
PT#	FLUSH FIRE RATED POKE THRU. "#" SHOWN ON DRAWINGS. REFER TO WIRING DEVICE SCHEDULE IN SECTION 16140 FOR CONFIGURATION AND DEVICES.
	SWITCH, DIMMER.
X $	SWITCH, SINGLE POLE ("X" INDICATES FIXTURES CONTROLLED).
X $3	SWITCH, THREE-WAY ("X" INDICATES FIXTURES CONTROLLED).
$4	SWITCH, FOUR-WAY ("X" INDICATES FIXTURES CONTROLLED).

ABBREVIATIONS

NOTE: ALL ABBREVIATIONS MAY NOT BE USED.

1P	SINGLE POLE	KV	KILOVOLT
1PH	SINGLE-PHASE	KVA	KILOVOLT AMPERE
1WAY	ONE-WAY	kVAR	KILOVOLT AMPERE REACTIVE
2/C	TWO-CONDUCTOR	kW	KILOWATT
2WAY	TWO-WAY	kWh	KILOWATT HOUR
3/C	THREE-CONDUCTOR	LED	LIGHT EMITTING DIODE
3PH	THREE-PHASE	LFMC	LIQUID TIGHT FLEXIBLE METAL CONDUIT
3WAY	THREE-WAY	LFNC	LIQUID TIGHT FLEXIBLE NONMETALLIC CONDUIT
4OUT	QUADRUPLE RECEPTACLE OUTLET	LPS	LOW PRESSURE SODIUM
4PDT	FOUR-POLE DOUBLE THROW	LRA	LOCKED ROTOR AMPS
4PST	FOUR-POLE SINGLE THROW	LTG	LIGHTING
4W	FOUR-WIRE	LV	LOW VOLTAGE
4WAY	FOUR-WAY	MATV	MASTER ANTENNA TELEVISION SYSTEM
A	ABOVE COUNTER	MAX	MAXIMUM
AC	ARMORED CABLE	MC	METAL CLAD
ADA	AMERICANS WITH DISABILITIES ACT	MCA	MINIMUM CIRCUIT AMPS
ADJ	ADJACENT	MCB	MAIN CIRCUIT BREAKER
AFF	ABOVE FINISHED FLOOR	MCC	MOTOR CONTROL CENTER
AFG	ABOVE FINISHED GRADE	MCP	MOTOR CIRCUIT PROTECTION
AIC	AMPERE INTERRUPTING CAPACITY	MDP	MAIN DISTRIBUTION PANEL
ALUM	ALUMINUM	MG	MOTOR GENERATOR
AMP	AMPERE	MH	MANHOLE
ANN	ANNUNCIATOR	MIN	MINIMUM
AP	ACCESS POINT (WIRELESS DATA)	MLO	MAIN LUGS ONLY
AR	AS REQUIRED	MOCP	MAXIMUM OVERCURRENT PROTECTION
ASC	AMPS SHORT CIRCUIT	NA	NOT APPLICABLE
ATS	AUTOMATIC TRANSFER SWITCH	NC	NORMALLY CLOSED
AV	AUDIO VISUAL	NEC	NATIONAL ELECTRICAL CODE
AWG	AMERICAN WIRE GAGE	NEMA	NATIONAL ELECTRICAL MANUFACTURERS ASSOCIATION
BB XFMR	BUCK-BOOST TRANSFORMER	NFC	NATIONAL FIRE CODE
C	CEILING MOUNTED	NFPA	NATIONAL FIRE PROTECTION ASSOCIATION
CATV	COMMUNITY ANTENNA TELEVISION	NIC	NOT IN CONTRACT
CB	CIRCUIT BREAKER	NL	NIGHT LIGHT
CCBA	CUSTOM COLOR AS SELECTED BY ARCHITECT	NO	NORMALLY OPEN
CCTV	CLOSED CIRCUIT TELEVISION	NTS	NOT TO SCALE
CFBA	CUSTOM FINISH AS SELECTED BY ARCHITECT	OC	ON CENTER
CF/CI	CONTRACTOR FURNISHED/ CONTRACTOR INSTALLED	OCP	OVER CURRENT PROTECTION
CF/OI	CONTRACTOR FURNISHED/ OWNER INSTALLED	OF/CI	OWNER FURNISHED/ CONTRACTOR INSTALLED
CKT	CIRCUIT	OF/OI	OWNER FURNISHED/ OWNER INSTALLED
CM	CONSTRUCTION MANAGER	OFP	OBTAIN FROM PLANS
CND	CONDUIT	OH DR	OVERHEAD (COILING) DOOR
CO	CONVENIENCE OUTLET	OL	OVERLOAD
COR	CONTRACTING OFFICER'S REPRESENTATIVE	PB	PUSHBUTTON
CP	CONTROL PANEL	PF	POWER FACTOR
CT	CURRENT TRANSFORMER	PH	PHASE
CTV	CABLE TELEVISION	PNL	PANEL
CU	COPPER	PT	POTENTIAL TRANSFORMER
dBA	UNIT OF SOUND LEVEL	PTZ	PAN/TILT/ZOOM
DPDT	DOUBLE POLE DOUBLE THROW	QTY	QUANTITY
DS	DISCONNECT SWITCH	R	REMOVE
EA	EACH	RCP	REFLECTED CEILING PLAN
EM	EMERGENCY	RMC	RIGID METAL CONDUIT
EMT	ELECTRICAL METALLIC TUBING	RNC	RIGID NONMETALLIC CONDUIT
ENT	ELECTRICAL NONMETALLIC TUBING	RPM	REVOLUTIONS PER MINUTE
EPO	EMERGENCY POWER OFF	RR	REMOVE AND RELOCATE
EQUIP	EQUIPMENT	SCA	SHORT CIRCUIT AMPS
EX	EXISTING	SCBA	STANDARD COLOR AS SELECTED BY ARCHITECT
F	FURNITURE MOUNTED	SF	SQUARE FOOT (FEET)
FA	FIRE ALARM	SFBA	STANDARD FINISH AS SELECTED BY ARCHITECT
FCP	FIRE ALARM CONTROL PANEL	SPDT	SINGLE POLE, DOUBLE THROW
FLA	FULL LOAD AMPS	SPEC	SPECIFICATION
FMC	FLEXIBLE METALCONDUIT	SPST	SINGLE POLE, SINGLE THROW
FOB	FREIGHT ON BOARD	S/S	START/STOP
FVNR	FULL VOLTAGE NON-REVERSING	ST	SINGLE THROW
FVR	FULL VOLTAGE REVERSING	SWBD	SWITCHBOARD
G	GROUND	SWGR	SWITCHGEAR
GEN	GENERATOR	TL	TWIST LOCK
GFCI	GROUND FAULT CIRCUIT INTERRUPTER	TP	TELEPHONE POLE
GFP	GROUND FAULT PROTECTION	TP	TWISTED PAIR
HD	HEAVY DUTY	TTB	TELEPHONE TERMINAL BOARD
HID	HIGH INTENSITY DISCHARGE	TV	TELEVISION
HOA	HAND-OFF-AUTOMATIC	TVSS	TRANSIENT VOLTAGE SURGE SUPPRESSER
HP	HORSE POWER	TYP	TYPICAL
HPF	HIGH POWER FACTOR	UF	UNDERFLOOR
HPS	HIGH PRESSURE SODIUM	UGND	UNDERGROUND
HV	HIGH VOLTAGE	UPS	UNINTERRUPTIBLE POWER SUPPLY
HZ	HERTZ	V	VOLTS
IG	ISOLATED GROUND	VA	VOLT AMPERE
IMC	INTERMEDIATE METAL CONDUIT	VFC/VFD	VARIABLE FREQUENCY MOTOR CONTROLLER
IN/IS	INSULATED/ISOLATED	W/	WITH
I/O	INPUT/OUTPUT	W/O	WITHOUT
IR	INFRARED	WP	WEATHERPROOF
J-BOX	JUNCTION BOX	XFMR	TRANSFORMER

DEFINITIONS

NOTE: ALL DEFINITIONS MAY NOT BE USED.

INDICATED: THE TERM "INDICATED" REFERS TO GRAPHIC REPRESENTATIONS, NOTES, OR SCHEDULES ON THE DRAWINGS, OTHER PARAGRAPHS OR SCHEDULES IN THE SPECIFICATIONS, AND SIMILAR REQUIREMENTS IN THE CONTRACT DOCUMENTS. WHERE TERMS SUCH AS "SHOWN", "NOTED", "SCHEDULED", AND "SPECIFIED" ARE USED, IT IS TO HELP THE READER LOCATE THE REFERENCE, NO LIMITATION ON LOCATION IS INTENDED.

DIRECTED: TERMS SUCH AS "DIRECTED", "REQUESTED", AUTHORIZED", "SELECTED", "APPROVED", "REQUIRED", AND "PERMITTED" MEAN "DIRECTED BY THE ENGINEER", "REQUESTED BY THE ENGINEER", AND SIMILAR PHRASES.

APPROVED: THE TERM "APPROVED", WHERE USED IN CONJUNCTION WITH THE ENGINEER'S ACTION ON THE CONTRACTOR'S SUBMITTALS, APPLICATIONS, AND REQUESTS, IS LIMITED TO THE ENGINEER'S DUTIES AND RESPONSIBILITIES AS STATED IN GENERAL AND SUPPLEMENTARY CONDITIONS.

FURNISH: THE TERM "FURNISH" IS USED TO MEAN "SUPPLY AND DELIVER TO THE PROJECT SITE, READY FOR UNLOADING, UNPACKING, ASSEMBLY, INSTALLATION, AND SIMILAR OPERATIONS."

INSTALL: THE TERM "INSTALL" IS USED TO DESCRIBE OPERATIONS AT PROJECT SITE INCLUDING THE ACTUAL "UNLOADING, UNPACKING, ASSEMBLY, ERECTION, PLACING, ANCHORING, APPLYING, WORKING TO DIMENSION, FINISHING, CURING, PROTECTING, CLEANING, AND SIMILAR OPERATIONS."

PROVIDE: THE TERM "PROVIDE" MEANS "TO FURNISH AND INSTALL, COMPLETE AND READY FOR THE INTENDED USE."

INSTALLER: AN "INSTALLER" IS THE CONTRACTOR OR AN ENTITY ENGAGED BY THE CONTRACTOR, EITHER AS AN EMPLOYEE, SUBCONTRACTOR, OR SUB-SUBCONTRACTOR, FOR PERFORMANCE OF A PARTICULAR CONSTRUCTION ACTIVITY, INCLUDING INSTALLATION, ERECTION, APPLICATION, AND SIMILAR OPERATIONS. INSTALLERS ARE REQUIRED TO BE EXPERIENCED IN THE OPERATIONS THEY ARE ENGAGED TO PERFORM.

TECHNOLOGY SYSTEMS: THE TERM "TECHNOLOGY SYSTEMS" IS USED TO DESCRIBE ALL LOW VOLTAGE SYSTEMS GENERALLY REFERRED TO AS "SPECIAL SYSTEMS". THESE SYSTEMS INCLUDE BUT ARE NOT NECESSARILY LIMITED TO ALL SYSTEMS WHICH UTILIZE VOLTAGES OF LESS THAN 71 VOLTS SUCH AS SOUND SYSTEMS, VIDEO SYSTEMS, TV SYSTEMS, SECURITY SYSTEMS, VOICE AND DATA CABLING SYSTEMS, ETC...

GENERAL ELECTRICAL NOTES

1. CLARIFICATION METHODS: AT THE TIME OF BIDDING, BIDDERS SHALL FAMILIARIZE THEMSELVES WITH THE DRAWINGS AND SPECIFICATIONS. ANY QUESTIONS, MISUNDERSTANDINGS, CONFLICTS, DELETIONS, DISCONTINUED PRODUCTS, CATALOG NUMBER DISCREPANCIES, DISCREPANCIES BETWEEN THE EQUIPMENT SUPPLIED AND THE INTENT OR FUNCTION OF THE EQUIPMENT, ETC, SHALL BE SUBMITTED TO THE ARCHITECT/ENGINEER IN WRITING FOR CLARIFICATION PRIOR TO ISSUANCE OF THE FINAL ADDENDUM AND BIDDING OF THE PROJECT. WHERE DISCREPANCIES OR MULTIPLE INTERPRETATIONS OCCUR, THE MOST STRINGENT (WHICH IS GENERALLY RECOGNIZED AS THE MOST COSTLY) THAT MEETS THE INTENT OF THE DOCUMENTS SHALL BE ENFORCED.

2. OWNER FURNISHED ITEMS: THE OWNER WILL FURNISH MATERIAL AND EQUIPMENT AS INDICATED IN THE CONTRACT DOCUMENTS TO BE INCORPORATED INTO THE WORK. THESE ITEMS ARE ASSIGNED TO THE INSTALLER AND COSTS FOR RECEIVING, HANDLING, STORAGE, IF REQUIRED, AND INSTALLATION ARE INCLUDED IN THE CONTRACT SUM.

   A. THE INSTALLER'S RESPONSIBILITIES ARE THE SAME AS IF THE INSTALLER FURNISHED THE MATERIALS OR EQUIPMENT.

   B. THE OWNER WILL ARRANGE AND PAY FOR DELIVERY OF OWNER FURNISHED ITEMS FREIGHT ON BOARD JOB SITE AND THE INSTALLER WILL INSPECT DELIVERIES FOR DAMAGE. IF OWNER FURNISHED ITEMS ARE DAMAGED, DEFECTIVE OR MISSING, DOCUMENT DAMAGED ITEMS WITH THE TRANSPORT COMPANY AND THE OWNER WILL ARRANGE FOR REPLACEMENT. THE OWNER WILL ALSO ARRANGE FOR MANUFACTURER'S FIELD SERVICES, AND THE DELIVERY OF MANUFACTURER'S WARRANTIES AND BONDS TO THE INSTALLER.

   C. THE INSTALLER IS RESPONSIBLE FOR DESIGNATING THE DELIVERY DATES OF OWNER FURNISHED ITEMS AND FOR RECEIVING, UNLOADING AND HANDLING OWNER FURNISHED ITEMS AT THE SITE. THE INSTALLER IS RESPONSIBLE FOR PROTECTING OWNER FURNISHED ITEMS FROM DAMAGE, INCLUDING DAMAGE FROM EXPOSURE TO THE ELEMENTS, AND TO REPAIR OR REPLACE ITEMS DAMAGED AS A RESULT OF HIS OPERATIONS.

3. EXPOSED STRUCTURE AREAS (EXCLUDING MECHANICAL, ELECTRICAL, AND COMMUNICATION SPACES): INSTALL RACEWAYS BETWEEN DECK AND STRUCTURE WHEREVER POSSIBLE IN EXPOSED STRUCTURE CEILING AREAS. ROUTE RACEWAYS IN CONCEALED AREAS WHEREVER POSSIBLE. REFER ALL CONDITIONS WHERE RACEWAYS MUST BE INSTALLED WHICH CANNOT COMPLY WITH THESE REQUIREMENTS TO THE ARCHITECT.

4. SUBMITTALS: PROVIDE SUBMITTALS IN THREE RING BINDERS WITH JOB NAME, SUBCONTRACTOR, AND VOLUME ON THE BINDING. PREPARE TABS FOR EACH SPECIFICATION SECTION REQUIRING SUBMITTALS. PREPARE INDEX OF EQUIPMENT SUBMITTED IN EACH TAB.

5. REFLECTED CEILING PLANS: COORDINATE THE LOCATION OF LIGHT FIXTURES WITH THE ARCHITECTURAL REFLECTED CEILING PLANS. REFER ALL DISCREPANCIES TO THE ARCHITECT AND ENGINEER.

50% CD SUBMITTAL

SPECTRUM ENGINEERS
175 South Main Street, Suite 300
Salt Lake City, Utah 84111
801-328-5151
800-678-7077
FAX 801-328-5155
www.spectrum-engineers.com

STATE MAIL SERVICES

WEST VALLEY, UTAH

JRCA
ARCHITECTS
577 South 200 East
Salt Lake City, Utah 84111
(801) 533-2100 fax: 533-2101 jrcadesign.com

DATE/REVISION	PROJECT #.
11 · 17 · 08	08008

SYMBOL LEGEND, SHEET INDEX & ABBREVIATIONS

EE 001

NOT FOR CONSTRUCTION

File Name: P:\2007\20070662\1Drawings\Sheet\62EE-001.dwg Last Plotted: 2008/11/13 @ 10:26 AM By: pss

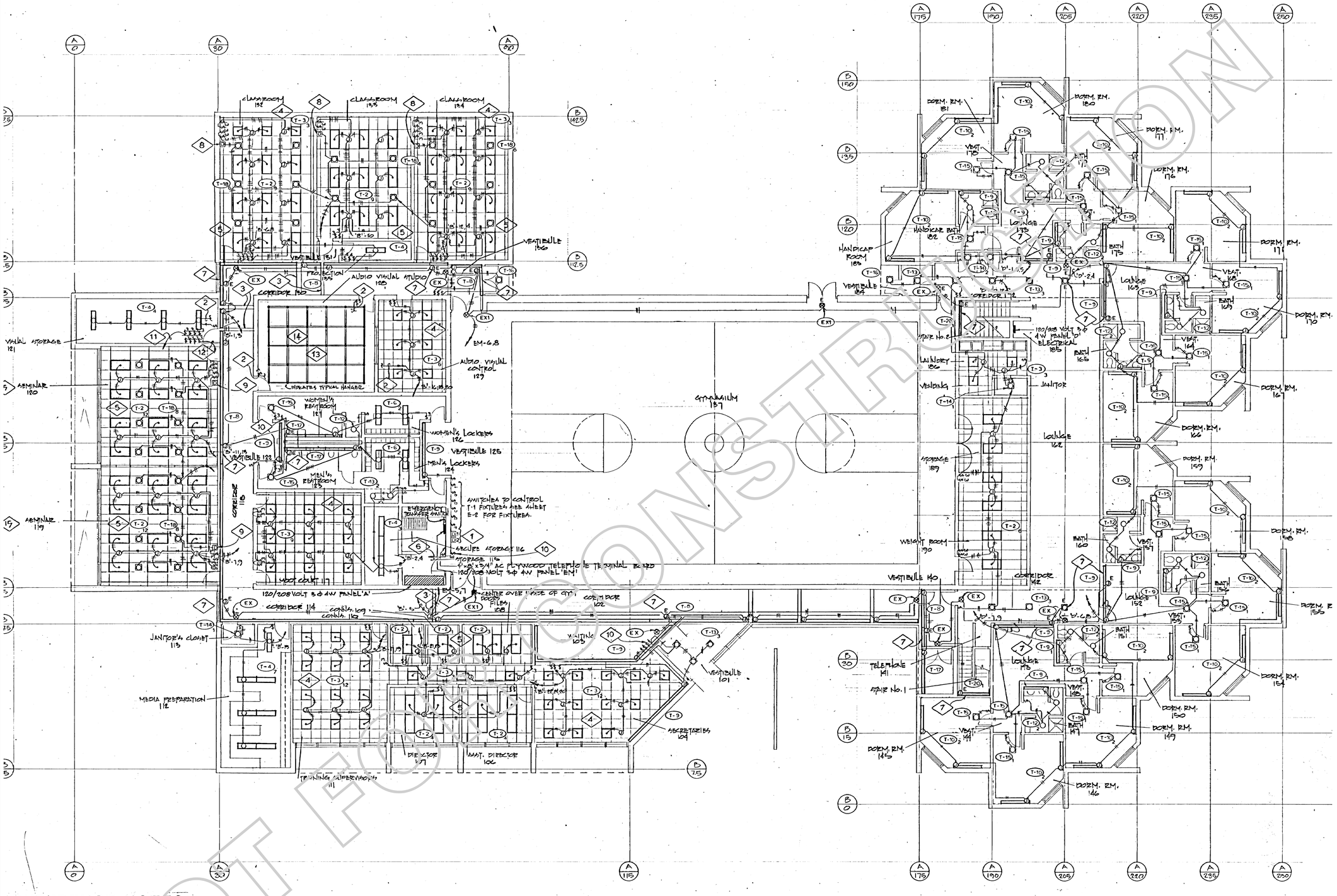

REFERENCE NOTES:

1. ELECTRICAL CONTRACTOR TO FURNISH AND INSTALL (2) 'LUTRON' TYPE 'NOVA' LINEAR SLIDE CONTROL #N-1500 AND CONNECT ONE DIMMER TO ONE CIRCUIT OF T-11 TRACK LIGHT AND ONE DIMMER TO THE SECOND CIRCUIT OF T-11 TRACK LIGHT. SEE SHEET E-2 FOR LOCATION.
2. FOR CONTINUATION OF LIGHTING CIRCUIT REFER TO SHEET E-2
3. ELECTRICAL CONTRACTOR TO RUN ALL CONDUITS THAT RUN OVER HEAD, THRU AREA
4. CONTRACTOR TO WIRE T-2 2 LAMP FIXTURES FOR MULTI-LEVEL SWITCHING, CONTROL THE CENTER LAMPS WITH ONE SWITCH CONTROL THE TWO OUTSIDE LAMPS WITH ONE SWITCH.
5. CONTRACTOR TO WIRE THE T-2 4 LAMP FIXTURES FOR MULTI-LEVEL SWITCHING, CONTROL THE TWO INBOARD LAMPS WITH ONE SWITCH, CONTROL THE TWO OUTBOARD LAMPS WITH ONE SWITCH.
6. SWITCH TO CONTROL STORAGE AREA LIGHTING, SEE SHEET E-2.
7. FIXTURES MARKED WITH 'E' INDICATES FIXTURES OR SECTIONS, CIRCUITED ON EMERGENCY CIRCUIT.
8. FURNISH AND INSTALL LUTRON #N-1000 LINEAR SLIDE CONTROL DIMMERS.
9. FURNISH AND INSTALL LUTRON #N-1500 LINEAR SLIDE CONTROL DIMMERS.
10. SWITCHES & COVERS THAT CONTROL EMERGENCY LIGHTING TO BE RED HIGH GLOSS WITH "EMERGENCY" ENGRAVED ON TOP OF COVER PLATE.
11. SWITCHES TO CONTROL FLUORESCENT T-2 FIXTURES IN SEMINAR #119
12. SWITCHES TO CONTROL FLUORESCENT T-2 FIXTURES IN SEMINAR #120
13. SEE SHEET E-3 FOR LIGHTING LAYOUT FOR STUDIO LIGHTING SYSTEM.
14. ELECTRICAL CONTRACTOR TO INSTALL 1½" RIGID ALUMINUM PIPE FRAME GRID, 12" BELOW T-4 WORK LIGHTS. SECURE GRID TO BUILDING STRUCTURE WITH PIPE CLAMPS AND 3/8" THREADED RODS AT EACH PIPE INTERSECTION. PROVIDE ALL NECESSARY FITTINGS FOR A COMPLETE INSTALLATION.
15. ELECTRICAL CONTRACTOR TO COORDINATE THE LIGHTING FIXTURE LAYOUTS WITH THE ARCHITECTURAL REFLECTED CEILING PLANS. (TYPICAL)

FIRST FLOOR LIGHTING PLAN

SCALE 1/8" = 1'-0"

NOT FOR CONSTRUCTION

50% CD SUBMITTAL

SPECTRUM ENGINEERS
175 South Main Street, Suite 300
Salt Lake City, Utah 84111
801-328-5151
800-678-7077
FAX 801-328-5155
www.spectrum-engineers.com

STATE MAIL SERVICES

WEST VALLEY, UTAH

JRCA
ARCHITECTS
577 South 200 East
Salt Lake City, Utah 84111
(801) 533-2100 fax: 533-2101 jrcadesign.com

DATE/REVISION	PROJECT #.
11 · 17 · 08	08008

REFERENCE FIRST FLOOR LIGHTING PLAN

EE 101

File Name: P:\2007\20070662\1Drawings\Sheet\62EE-101.dwg Last Plotted: 2008/11/13 @ 10:23 AM By: pss

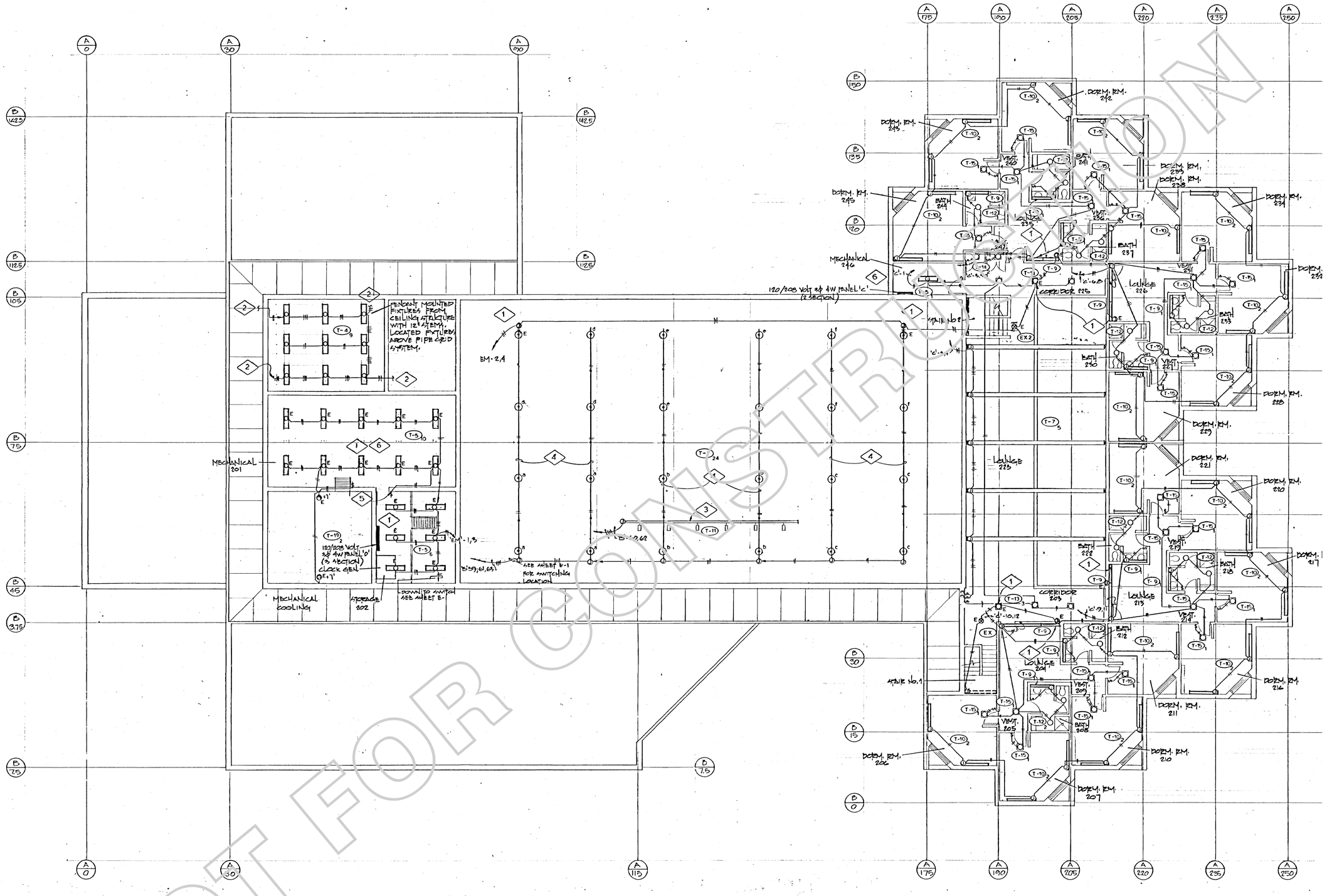

NOT FOR CONSTRUCTION

REFERENCE NOTES:

1. FIXTURES MARKED WITH "E" INDICATES FIXTURES OR FIXTURE SECTION ON EMERGENCY CIRCUIT.
2. FOR CONTINUATION OF LIGHTING CIRCUIT, REFER TO SHEET E-1
3. INSTALL T-11 TRACK LIGHT ON A P-1000 UNI-STRUT SUPPORT SYSTEM, MOUNTED ON 3/8" RODS ON 6' CENTERS. LOCATE TRACK WITHIN ROOF STRUCTURE FOR MAXIMUM PROTECTION.
4. ELECTRICAL CONTRACTOR TO FURNISH AND INSTALL A CONTINUOUS UNI-STRUT #P-1000 C KO SUPPORT SYSTEM, COMPLETE WITH CLOSURE STRIPS & END CAPS. SUPPORT WITH 3/8" CONTINUOUS THREADED RODS APPROX. 7'-0" O.C. SECURED TO THE ROOF STRUCTURE WITH AN APPROVED MOUNTING METHOD. BOTTOM OF FIXTURES TO MOUNT EVEN WITH BOTTOM OF ROOF TRUSS.
5. SWITCHES & COVERS THAT CONTROL EMERGENCY LIGHTING TO BE RED HIGH ABUSE WITH "EMERGENCY" ENGRAVED ON TOP OF COVER PLATE.
6. ELECTRICAL CONTRACTOR TO COORDINATE ALL ELECTRICAL EQUIPMENT WITH MECHANICAL CONTRACTOR SO AS NOT TO INTERFERE WITH PIPING AND DUCT WORK.

SECOND FLOOR LIGHTING PLAN

SCALE 1/8" : 1'-0"

50% CD SUBMITTAL

SPECTRUM ENGINEERS
175 South Main Street, Suite 300
Salt Lake City, Utah 84111
801-328-5151
800-678-7077
FAX 801-328-5155
www.spectrum-engineers.com

STATE MAIL SERVICES

WEST VALLEY, UTAH

JRCA
ARCHITECTS
577 South 200 East
Salt Lake City, Utah 84111
(801) 533-2100 fax: 533-2101 jrcadesign.com

DATE/REVISION	PROJECT #.
11 · 17 · 08	08008

REFERENCE SECOND FLOOR LIGHTING PLAN

EE 102

File Name: P:\2007\20070662\10rawings\Sheet\62EE-102.dwg Last Plotted: 2008/11/13 @ 10:22 AM By: pss

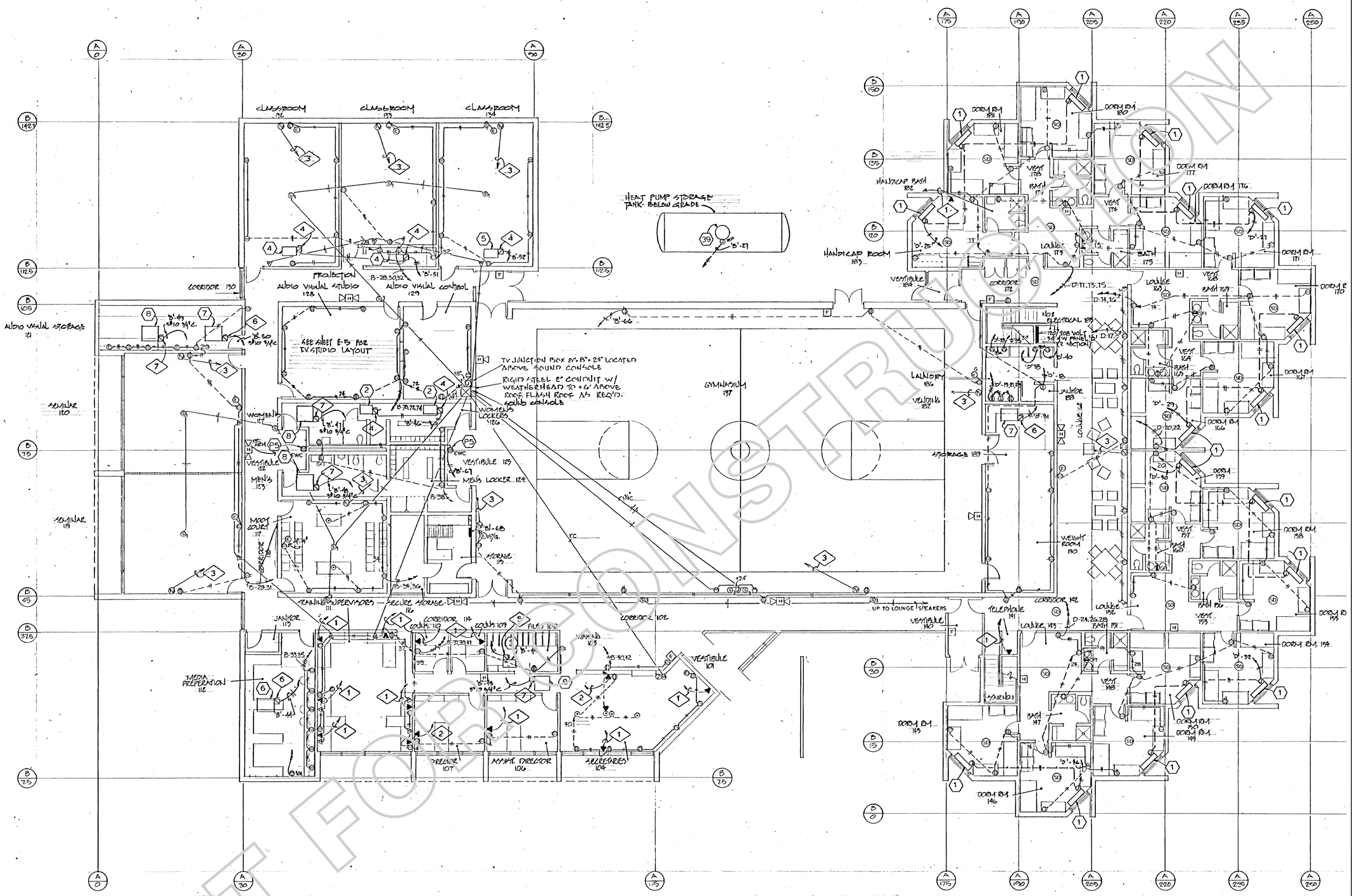

REFERENCE NOTES:

1. ELECTRICAL CONTRACTOR TO EXTEND 1" CONDUIT WITH PULL WIRE TO STORAGE #115 TO TELEPHONE TERMINAL BOARD.
2. ELECTRICAL CONTRACTOR TO EXTEND 1½ CONDUIT WITH PULL WIRE TO STORAGE #115 TO TELEPHONE TERMINAL BOARD.
3. ELECTRICAL CONTRACTOR TO EXTEND 1" CONDUIT WITH PULL WIRE TO JUNCTION BOX ABOVE SOUND CONSOLE.
4. ELECTRICAL CONTRACTOR TO FURNISH AND INSTALL, WEATHERPROOF HEAVY DUTY 30 AMP FUSED DISCONNECT SWITCH, FUSED WITH 15 AMP FUSETRON FUSES.
5. ELECTRICAL CONTRACTOR TO FURNISH AND INSTALL, WEATHERPROOF HEAVY DUTY 30 AMP FUSED DISCONNECT SWITCH, FUSED WITH 20 AMP FUSETRON FUSES.
6. ELECTRICAL CONTRACTOR TO FURNISH AND INSTALL, WEATHERPROOF HEAVY DUTY 30 AMP FUSED DISCONNECT SWITCH, FUSED WITH 25 AMP FUSETRON FUSES.
7. ELECTRICAL CONTRACTOR TO FURNISH AND INSTALL, WEATHERPROOF HEAVY DUTY 60 AMP FUSED DISCONNECT SWITCH, FUSED WITH 35 AMP FUSETRON FUSES.

FIRST FLOOR POWER PLAN

SCALE 1/8" = 1'-0"

SOUND SYMBOLS

SYMBOL	DESCRIPTION
M	MIKE OUTLET
S#	AMPLIFIER # DENOTES TYPE
Z	ZONE SELECTOR PNL
	INTERCOM MASTER.
TV	TELEVISION OUTLET

NOT FOR CONSTRUCTION

50% CD SUBMITTAL

SPECTRUM ENGINEERS
175 South Main Street, Suite 300
Salt Lake City, Utah 84111
801-328-5151
800-678-7077
FAX 801-328-5155
www.spectrum-engineers.com

STATE MAIL SERVICES

WEST VALLEY, UTAH

JRCA ARCHITECTS
577 South 200 East
Salt Lake City, Utah 84111
(801) 533-2100 fax: 533-2101 jrcadesign.com

DATE/REVISION	PROJECT #.
11 · 17 · 08	08008

REFERENCE FIRST FLOOR POWER PLAN

EE 103

File Name: P:\2007\20070662\1Drawings\Sheet\62EE-103.dwg Last Plotted: 2008/11/13 @ 10:21 AM By: pss

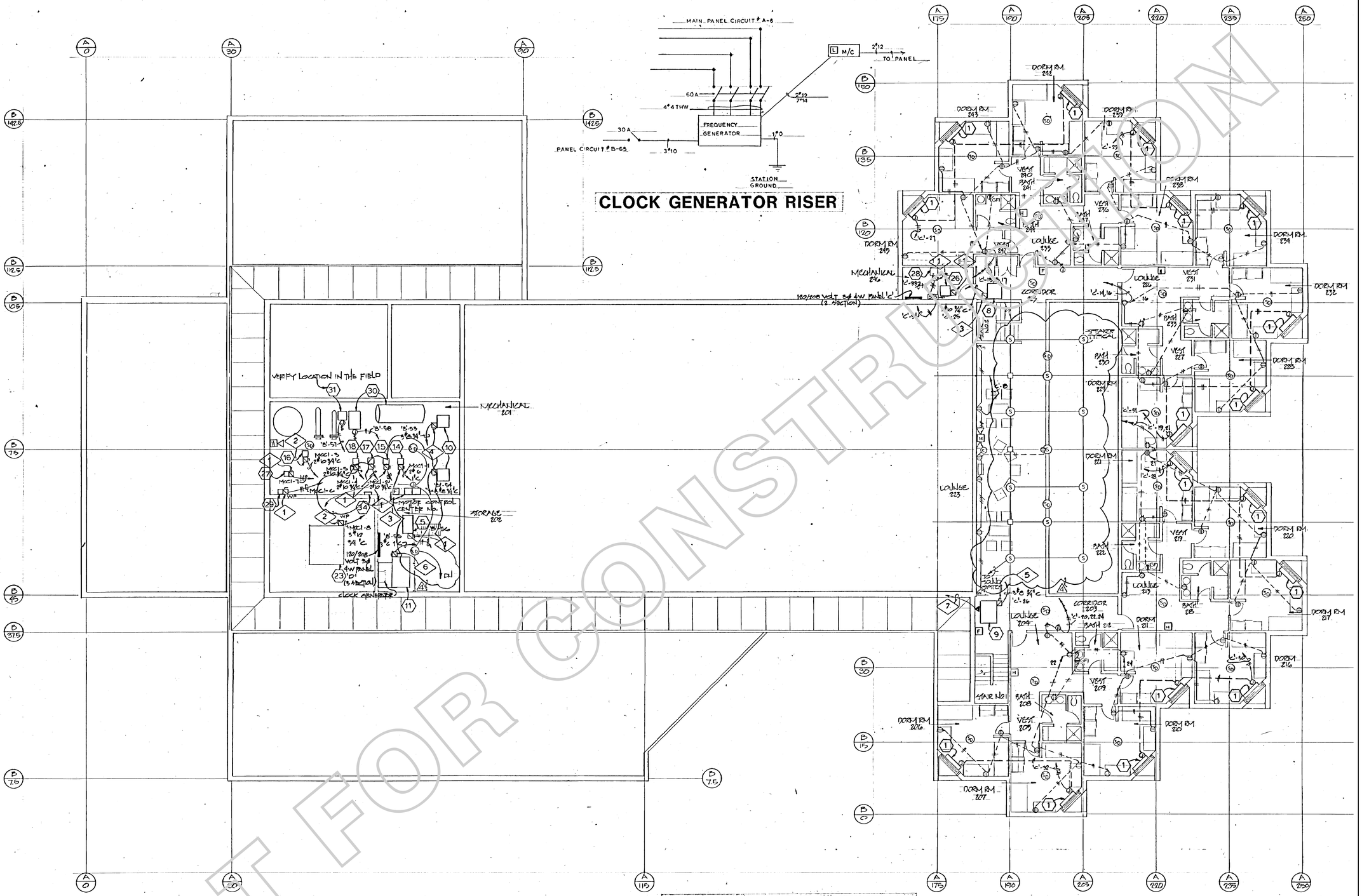

SECOND FLOOR POWER PLAN

SCALE 1/8" = 1'-0"

REFERENCE NOTES

1. ELECTRICAL CONTRACTOR TO FURNISH AND INSTALL, WEATHERPROOF HEAVY DUTY 30 AMP FUSED DISCONNECT SWITCH, FUSED WITH 15 AMP FUSETRON FUSES.
2. ELECTRICAL CONTRACTOR TO FURNISH AND INSTALL, WEATHERPROOF HEAVY DUTY 30 AMP FUSED DISCONNECT SWITCH, FUSED WITH 20 AMP FUSETRON FUSES.
3. ELECTRICAL CONTRACTOR TO FURNISH AND INSTALL, WEATHERPROOF HEAVY DUTY 60 AMP FUSED DISCONNECT SWITCH, FUSED WITH 35 AMP FUSETRON FUSES.
4. ELECTRICAL CONTRACTOR TO FURNISH AND INSTALL, WEATHERPROOF HEAVY DUTY 60 AMP FUSED DISCONNECT SWITCH, FUSED WITH 45 AMP FUSETRON FUSES.
5. ELECTRICAL CONTRACTOR TO FURNISH AND INSTALL, WEATHERPROOF HEAVY DUTY 60 AMP FUSED DISCONNECT SWITCH, FUSED WITH 60 AMP FUSETRON FUSES.
6. ELECTRICAL CONTRACTOR TO FURNISH AND INSTALL, WEATHERPROOF HEAVY DUTY 100 AMP FUSED DISCONNECT SWITCH, FUSED WITH 90 AMP FUSETRON FUSES.
7. ELECTRICAL CONTRACTOR TO EXTEND 1" CONDUIT WITH PULL WIRE, TO STORAGE #115 TO TELEPHONE TERMINAL BOARD.

NOT FOR CONSTRUCTION

50% CD SUBMITTAL

SPECTRUM ENGINEERS
175 South Main Street, Suite 300
Salt Lake City, Utah 84111
801-328-5151
800-678-7077
FAX 801-328-5155
www.spectrum-engineers.com

STATE MAIL SERVICES

WEST VALLEY, UTAH

JRCA
ARCHITECTS
577 South 200 East
Salt Lake City, Utah 84111
(801) 533-2100 fax: 533-2101 jrcadesign.com

DATE/REVISION	PROJECT #.
11 · 17 · 08	08008

REFERENCE SECOND FLOOR POWER PLAN

EE 104

File Name: P:\2007\20070662\1Drawings\Sheet\62EE-104.dwg Last Plotted: 2008/11/13 @ 10:21 AM By: pss

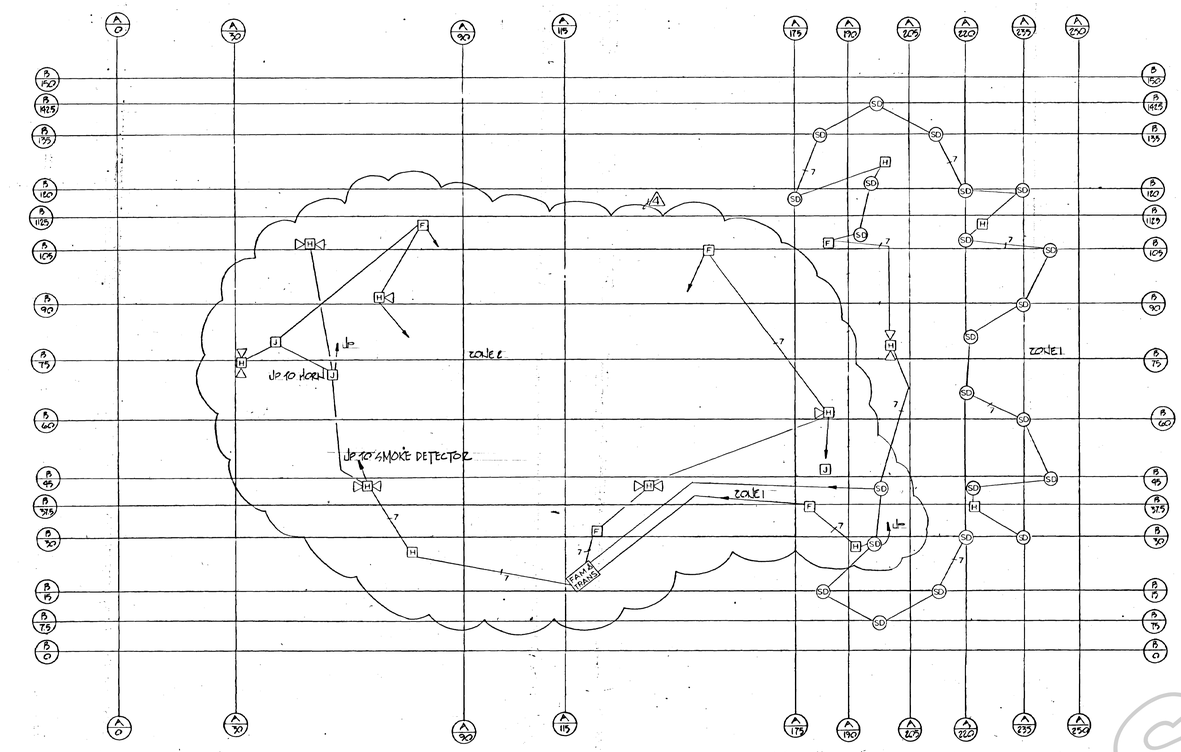

FIRE ALARM RISER DIAGRAM FIRST FLOOR

SCHEMATIC ONLY

NOTES:

1. ALL CIRCUITS ARE 2 WIRE 20AMP. (NO COMMON NEUTRALS)
2. ALL CIRCUITS TERMINATE IN PATCH PANEL.

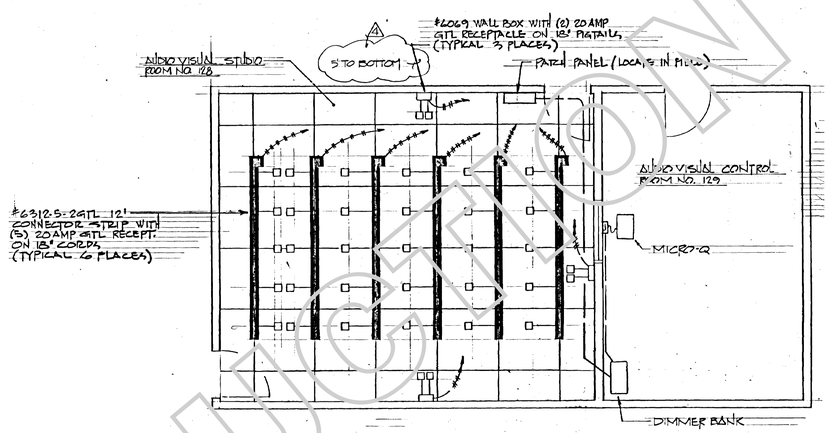

AUDIO VISUAL ELECTRICAL LAYOUT

SYMBOL LIST

FAN & TRANS	FIRE ALARM MASTER AND TRANSPONDER FOR CENTRAL TIE IN
SD	SMOKE DETECTOR WITH 135° HEAT BACK UP
F	PULL STATION
H	HORN- DOUBLE SINGLE OR NON PROJECTED

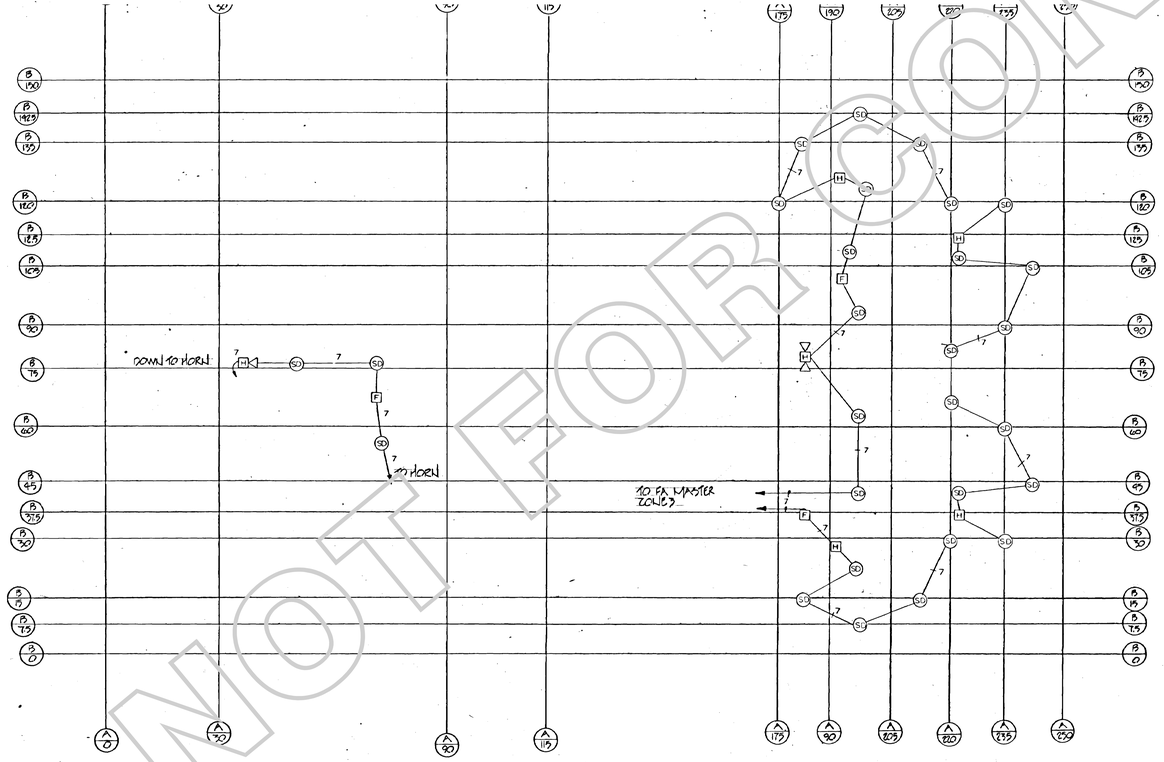

FIRE ALARM RISER DIAGRAM SECOND FLOOR

SCHEMATIC ONLY

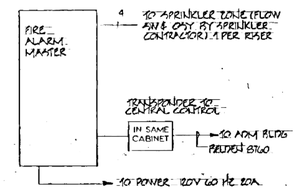

FIRE ALARM SCHEMATIC

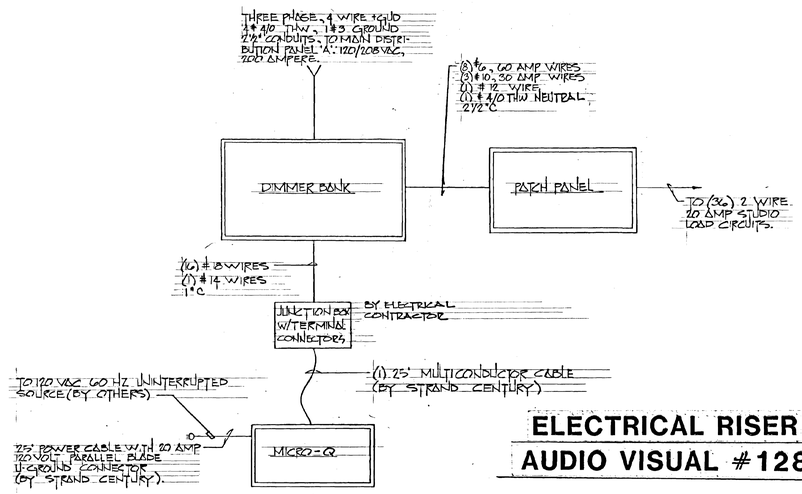

ELECTRICAL RISER
AUDIO VISUAL #128

NOT FOR CONSTRUCTION

50% CD SUBMITTAL

SPECTRUM ENGINEERS
175 South Main Street, Suite 300
Salt Lake City, Utah 84111
801-328-5151
800-678-7077
FAX 801-328-5155
www.spectrum-engineers.com

STATE MAIL SERVICES

WEST VALLEY, UTAH

JRCA
ARCHITECTS
577 South 200 East
Salt Lake City, Utah 84111
(801) 533-2100 fax: 533-2101 jrcadesign.com

DATE/REVISION	PROJECT #.
11 · 17 · 08	08008

REFERENCE
FIRE ALARM RISER
AUDIO VISUAL
ELECTRICAL
LAYOUT

EE 105

File Name: P:\2007\20070662\1Drawings\Sheet\62EE-105.dwg Last Plotted: 2008/11/13 @ 10:20 AM By: pss

LIGHTING FIXTURE SCHEDULE

SYMB	MANUF	CATALOG #	LAMPS	DISCRIPTION
T-1	ELGY HUBBEL WESTINGHOUSE	IBG-250-HPS-DR SQM-0250-H-1MI-A1 AF5S1522	250 WATT H.P.S.	250 WATT HPS PENDANT MOUNTED SELF CONTAINED FIXTURE. 208 VOLT ENCAPSULATED CWA HPF BALLAST. 1/8" THICK ACRA TUFF PATTERN 12 LENS, WITH FACTORY (RTV) SEALED LENS. 250 WATT WESTINGHOUSE COLOR IMPROVED CERAMALUX 4 HIGH PRESSURE SODIUM.
T-2	ELGY DAY-BRITE WESTINGHOUSE	PBAG-440-2x4-120 LGZ424-32A24 AFOBAG4424-432-10	(4) F40 RS WW ECONO WATT LAMPS	2X4 LAY-IN TROFFER 4 LAMP, 120 VOLT ENERGY SAVER BALLAST. BLACK AIR SLOT, PARABOLIC ALUMINUM LOUVERS, HINGED AND LATCHED FACTORY WIRED FOR INBOARD AND OUTBOARD SWITCHING. 120 VOLT. AIR RETURN ONLY.
T-3	ELGY DAY-BRITE WESTINGHOUSE	PBAG-3U40-2x2-120 LGZ3220-9A22 AFBBAG-3U22-316-10	(3) F40 RS WW U LAMPS	SAME AS T-2 EXCEPT 2X2 LAY-IN TROFFER (3) U LAMPS
T-4	LITHONIA DAY-BRITE WESTINGHOUSE	LB-240A 14WA2RA VR-240 AC	(2) F40 RS WW ECONO WATT LAMPS	1X4 2 LAMP SURFACE MOUNTED WRAPAROUND FIXTURE. 120 VOLT ENERGY SAVER BALLASTS W/ACRYLIC LENS.
T-5	LITHONIA DAY-BRITE WESTINGHOUSE	M-240-MAIZ 4N2R PH240RSC-LD	(2) F40 RS WW ECONO WATT LAMPS	4' 2 LAMP SURFACE MOUNTED INDUSTRIAL FIXTURE, 120 VOLT ENERGY SAVER BALLASTS STANDARD WHITE FINISH. LOW DENSITY MOUNTING.
T-6	LITHONIA DAY-BRITE WESTINGHOUSE	DV-240A R41241 PEG-240R	(2) F40 RS WW ECONO WATT LAMPS	4' 2 LAMP SURFACE MOUNTED INDUSTRIAL VAPOR TIGHT FIXTURES, 120 VOLT ENERGY SAVER BALLASTS. STANDARD WHITE FINISH, W/ACRYLIC LENS.
T-7	FORUM NORTHERN PEERLESS	SAU-2020X28/28 25LIN-24R-DIR 36-LSTI2-MW-SPL	(14) F40 RS WW ECONO WATT LAMPS	PENDANT MOUNTED OFF THE TRUSS 9' TO BOTTOM OF FIXTURE. 8" WIDE X 4 3/4" HIGH EXTRUDED ALUMINUM LIGHT BEAM. CONTINUOUS WALL TO WALL. FIELD CUT TO FIT. FACTORY WIRE FOR 2 SEPERATE ROWS OF SWITCHING. 120 VOLT ENERGY SAVER BALLAST. MATTE WHITE FINISH.
T-8	PEERLESS	3d-LBR-184-MW	F40 RS WW ECONO WATT LAMPS	WALL MOUNTED 6" WIDE X 6" HIGH EXTRUDED ALUMINUM LIGHT BAR LENGTH AS SHOWN. 120 VOLT ENERGY SAVER BALLAST. MATTE WHITE FINISH. UP/DOWN LIGHT WITH 1"x1" BAFFELS ON DOWN LIGHT.
T-9	NORTHERN PEERLESS	WCPLA24R 3a-LBE190MW-SPL	F40 RS WW ECONO WATT LAMPS	RECESSED 6" WIDE X 6" DEEP EXTRUDED ALUMINUM WALL SLOT WITH WHITE 1"X1" BAFFELS. LENGTH AS SHOWN. 120 VOLT ENERGY SAVER BALLASTS MATTE WHITE FINISH. FACTORY WIRED FOR 2 CIRCUIT WIRING STAGGERED LAMPS.
T-10	NORTHERN PEERLESS	XCPLA272R-ACA-SWS 1M-9445-SPL	(2) F20 (2) F40 RS WW LAMPS	WALL MOUNTED 6' LONG FIXTURE. UP/DOWNLIGHT W/SELFCONTAINED SWITCHES. ONE TO CONTROL (1) 4' LAMP UP LIGHT AND ONE TO CONTROL (1) 4' LAMP DOWNLIGHT AND ONE TO CONTROL (1) 2' UPLIGHT, (1) 2' DOWNLIGHT LAMPS 120 VOLT BALLASTS. MATTE WHITE FINISH W/ACRYLIC LENS. MOUNT FIXTURE AT 5'-6" AFF.
T-11	ELGY OMEGA PRESCOLITE	L6304/L6463 T23EEB5/6-TUA-693HBA 92000 SERIES/934P9	(6) 150 WATT 150 R40 LAMPS	SURFACE MOUNTED 2 CIRCUIT LIGHT TRACK LENGTH PER DRAWINGS. COMPLETE WITH ALL COUPLINGS, CONNECTORS, ETC AS REQUIRED FOR A COMPLETE INSTALLATION. INSTALL (6) WHITE 150 WATT ADJUST CYLINDERS, 3 PER CIRCUIT.
T-12	ACME BUNBAR PRESCOLITE	404-22-W 9447	(1) 20 WATT WW LAMPS	SURFACE MOUNTED FLUORESCENT CIRCLE LINE FIXTURE WITH 120 VOLT BALLAST. OPAL ACAPAL DIFFUSER. WET LOCATIONS LABAL.
T-13	CALITE OMEGA PRESCOLITE	HD-100HARM-AC120 E4051TW 1225-H5-100MV-462	(1) 100 WATT DLX. MERCURY VAPOR.	RECESSED 100 WATT MERCURY VAPOR. DOWNLIGHT 120 VOLT SILENT PACK BALLAST PREWIRED JUNCTION BOX SPECULAR SILVER ALZAK CONE, GASKETED FLANGE TRIM TO PREVENT LIGHT LEAKS. BALLAST TO BE ACCESSABLE THROUGH FUTURE OPENING.
T-14	PRESCOLITE	1015RM-3	(1) 75 WATT A-23 LAMP	RECESSED 75 WATT INCANDESCENT DOWN LIGHT WITH PREWIRED JUNCTION BOX. REGRESSED SQ. TRIM DROP OPAL LENS.
T-15	PRESCOLITE	1015RM-3	(1) 100 WATT A-23 LAMP	SAME AS T-14 EXCEPT 100 WATT.
T-16	OMEGA PRESCOLITE	L7051TWD 1015H4M-70HPS-8-SPL	(1) 70 WATT HPS	SAME AS T-13 EXCEPT W/TEMPERED LENS. 70 WATT HPS LAMP.
T-17	PEERLESS	3d-LBR-184-MW-EG -20°DL	F40 RS WW ECONO WATT LAMPS	SAME AS T-8 EXCEPT TWO LAMP 800 MA. ENCLOSED & GASKETED DOOR WITH -20° 120 VOLT BALLASTS. DAMP LAMB.
T-18	OMEGA PRESCOLITE	PS853TW 1225-462	(1) 150 WATT A-21 LAMP	8" RECESSED DOWNLIGHT, PREWIRED JUNCTION BOX. SPECULAR CLEAR ALZAK REFLECTOR FOR A-21 LAMP.
T-19	PRESCOLITE	WB-28/WG-8	(1) 100 WATT A-LAMP I.F.	WALL MOUNTED INCANDESCENT FIXTURE WITH CAST ALUMINUM GUARD. MOUNT FIXTURE AT 7'-0" ABOVE ROOF. WET LOCATION.
T-20	PEERLESS	3d-LBR76-MW	F40 RS WW ECONO WATTS LAMPS	SAME AS T-8 EXCEPT SINGLE LAMP 800 MA. MOUNTED IN STAIRS UP 6'-6" ABOVE LANDING.
T-21				
T-22				
EX	DEVINE DAY-BRITE PRESCOLITE	G50 SERIES BB116 15222	LAMP AS REQ'D	SURFACE MOUNTED EXIT LIGHT, UNIVERSAL MOUNTED (BACK, TOP, END) UNIVERSAL ARROWS, GREEN METAL STENCIL FACE CAST ALUMIUM VERIFY MOUNTING & ARROWS 120 VOLT
EX1	DEVINE DAY-BRITE PRESCOLITE	G50 SERIES BB116 [illegible]	LAMP AS REQ'D	SAME AS EX EXCEPT RECESSED EXIT LIGHT
EX-2	DEVINE DAY-BRITE PRESCOLITE	G50 SERIES BB126 15222	LAMP AS REQ'D	SAME AS EX EXCEPT DOUBLE FACED EXIT LIGHT.

PANEL NO. 'A' VOLTAGE 120 / 208 4 WIRE X
SURFACE X FLUSH — MOUNTED, TYPE I-LINE MAIN BREAKER 1400A 3P. BOLT LOCK
MAINS ONLY 1600A FEED —, LOCATION STORAGE #115

AREA SERVED	LOAD	CCT.	BKR.	BKR.	CCT.	LOAD	AREA SERVED
SUBFEED PANEL 'B'	170K	1	600	300	2	67K	SUBFEED PANEL 'C'
SUBFEED PANEL 'D'	51KW	3	300	150	4		SUBFEED MOTOR CONTROL CENTER #1
SUBFEED PANEL 'EM'	8KW	5	50	60	6	8KW	CLOCK GENERATOR #201
SPACE ONLY 225A FRAME				225	8	200A	DIMMER PANEL
" "							SPACE ONLY Q2H FRAME
" "							" "
" "							" "

1400A 3POLE BOLT LOCK FUSIBLE SWITCH WITH CURRENT LIMITING FUSES (TYPE KRPC)
TOTAL CONNECTED LOAD 382KW = 1062 AMPS
MAIN DISTRIBUTION

PANEL NO. 'B' VOLTAGE 120 / 208 4 WIRE X
SURFACE X FLUSH — MOUNTED, TYPE NQOB MAIN BREAKER —
MAINS ONLY 225a FEED —, LOCATION STORAGE #115

AREA SERVED	LOAD	CCT.	BKR.	BKR.	CCT.	LOAD	AREA SERVED
LTG. CORRIDOR	1400	1	20	20	2	1600	LTG. SECURITY-COURT
" "	1400	3	20	20	4	1600	" RESTROOM
" "	1400	5	20	20	6	1600	" CLASSROOM
" CLASSROOMS	1200	7	20	20	8	1000	" "
" "	1200	9	20	20	10	1000	" "
" "	1200	11	20	20	12	1000	" "
" "	1200	13	20	20	14	1600	" "
" MEDIA PREPARATION	800	15	20	20	16	1200	" AUDIO VISUAL
" TRAINING SUPERVISOR	1200	17	20	20	18	1000	" " "
" " "	1200	19	20	20	20	500	" " "
" COUNSLER	1600	21	20	20	22	1200	" RECEPTION
" DIRECTOR	1600	23	20	20	24	1200	" "
SPARE		25	20	20	26	1600	" "
WATER LEVELER	1600	27	20	20	28	300	CONV. OTL. CLASSROOM
CONV. OTL. AUDIO VISUAL	1200	29	20	20	30	500	" "
" "	1200	31	20	20	32	1500	" "
" "	1600	33	20	20	34	800	" MOT COURT
" "	1600	35	20	20	36	1100	" " "
" "	800	37	20	20	38	800	" LOCKERS
" "	1200	39	20	20	40	1200	" CLERKS
" "	800	41	20	20	42	1200	" "

TOTAL CONNECTED LOAD 47 KW 131 AMPS
SECTION #1 (22,000 AIC)

PANEL NO. 'B' VOLTAGE 120 / 208 4 WIRE X
SURFACE X FLUSH — MOUNTED, TYPE NQOB MAIN BREAKER —
MAINS ONLY 400A FEED —, LOCATION STORAGE #115

AREA SERVED	LOAD	CCT.	BKR.	BKR.	CCT.	LOAD	AREA SERVED
HEAT PUMP (8) #105	7100	43	50	40	44	5000	HEAT PUMP (6) #112
" " (3) #103	7100	45	20	20	46	2400	" " (2) #126
" " (8) #127	7100	47	50	50	48	7100	" " (8) #123
" " (8) #121	7100	49	50	40	50	6000	" " (7) #121
" " ( ) #132	3000	51	20	20	52	3100	" " (5) #124
" " (10) #2[illegible]	9300	53	70	70	54	9300	" " (10) #202
" " (11) #201	11000	55	100	20	56	3700	" " (5) #201
HOT WATER BOIL. (30) #207	1000	57	20	20	58	1000	IN-LINE PUMP (31) #202

TOTAL CONNECTED LOAD 92 KW 255 AMPS
SECTION #2 (22,000 AIC)

PANEL NO. 'B' VOLTAGE 120 / 208 4 WIRE X
SURFACE X FLUSH — MOUNTED, TYPE I-LINE MAIN BREAKER —
MAINS ONLY 600A. FEED —, LOCATION STORAGE #115

AREA SERVED	LOAD	CCT.	BKR.	BKR.	CCT.	LOAD	AREA SERVED
				20	60	1200	LTG MULTI-PURPOSE
LTG. MULTI-PURPOSE	3800	59	20	20	62	1200	" " "
				20	64	1200	" STORAGE MEZZ.
" " "	3800	61	20	20	66	1000	CONV. OTL. MULTI-PURPOSE
				20	68	1000	" " "
" " "	3800	63	20	20	70	1000	" " AUDIO VISUAL
				20	72	1000	" " " "
CLOCK GENERATOR #201	4000	65	30	20	74	1000	" " " "
EWC #122 #125	1000	67	20	30	76	3000	ZEROX MACHINE
SPARE		69	20	20	78		SPARE
"		71	20	20	80		"
"		73	20	20	82		"
"		75	20	20	84		"
"		77	20	20	86		"
SPACE ONLY		79			88		SPACE ONLY
" "		81			90		" "
" "		83			92		" "
SUBFEED SECTION #1 OF PANEL 'B'	47K	85	225	300	94	92K	SUBFEED SECTION #2 OF PANEL 'B'

TOTAL CONNECTED LOAD 170 KW [illegible] AMPS
SECTION #3 (22,000 AIC)

PANEL NO. 'C' VOLTAGE 120 / 208 4 WIRE X
SURFACE X FLUSH — MOUNTED, TYPE NQOB MAIN BREAKER —
MAINS ONLY 225a FEED —, LOCATION MECHANICAL #246

AREA SERVED	LOAD	CCT.	BKR.	BKR.	CCT.	LOAD	AREA SERVED
LTG. LINEN MEZZ.	1000	1	20	20	2	1200	LTG MEZZANINE
" DORM AREA	[illegible]	3	20	20	4	1200	" "
" " "	1000	5	20	20	6	1400	" DORM AREA
" " "	1000	7	20	20	8	1200	" " "
" " "	1400	9	20	20	10	1400	" " "
" " "	1000	11	20	20	12	1200	" " "
CONV. OTL " "	1000	13	20	20	14	1000	CONV. OTL " "
" " " "	1400	15	20	20	16	1400	" " " "
" " " "	1600	17	20	20	18	1100	" " LOUNGE
" " " "	1200	19	20	20	20	1400	" " DORM AREA
" " "	1600	21	20	20	22	1200	" " " "
SPARE		23	20	20	24	1400	" " " "
HEAT PUMPS (8) #225	7100	25	40	70	26	12KW	HEAT PUMPS (9) #203
" " (1) #245	2900	27	20	20	28	2900	" " (1) #221
" " (1) #239	2900	29	20	20	30	2900	" " (1) #216
" " (1) #229	2900	31	20	20	32	2900	" " (1) #207

TOTAL CONNECTED LOAD 65.6 KW 182 AMPS
SECTION #1 (22,000 AIC)

PANEL NO. 'C' VOLTAGE 120 / 208 4 WIRE X
SURFACE X FLUSH — MOUNTED, TYPE NQOB MAIN BREAKER —
MAINS ONLY 400a FEED —, LOCATION MECHANICAL #246

AREA SERVED	LOAD	CCT.	BKR.	BKR.	CCT.	LOAD	AREA SERVED
CENTRIFUGAL #246	1200	33	20	20	34	800	CENTRIFUGAL #246
SPARE		35	20	20	36		SPARE
"		37	20	20	38		"
"		39	20	20	40		"
"		41	20	20	42		"
"		43	20	20	44		"
"		45	20	20	46		"
"		47	20	20	48		"
"		49	20	20	50		"
"		51	20	20	52		"
SPACE ONLY Q2H FRAME		53		225	54	136K	SUBFEED SECTION #1 OF PANEL 'C'

TOTAL CONNECTED LOAD 67.6 KW 187 AMPS
SECTION #2 (22,000 AIC)

PANEL NO. 'D' VOLTAGE 120 / 208 4 WIRE X
SURFACE X FLUSH — MOUNTED, TYPE NQOB MAIN BREAKER —
MAINS ONLY 400A. FEED —, LOCATION ELECTRICAL #185

AREA SERVED	LOAD	CCT.	BKR.	BKR.	CCT.	LOAD	AREA SERVED
LTG. DORM AREA	900	1	20	20	2	800	LTG DORM AREA
" " "	1100	3	20	20	4	1200	" " "
" " "	[illegible]	5	20	20	6	1200	" " "
" " "	1500	7	20	20	8	1200	" " "
" " "	1200	9	20	20	10	1500	" CORR., STAIRS, LOUNGE
CONV. OTL " "	1600	11	20	20	12	1500	" STOR. WEIGHT
" " " "	1400	13	20	20	14	1000	CONV. OTL. DORM AREA
" " " "	1600	15	20	20	16	1400	" " " "
" " CORRIDOR	1300	17	20	20	18	1600	" " STOR. WEIGHT
" " VENDING	1200	19	20	20	20	1200	" " DORM AREA
" " "	1000	21	20	20	22	1600	" " " "
" " "	1000	23	20	20	24	1400	" " " "
				20	26	1000	" " " "
HEAT PUMPS (1) #146	2900	25	20	20	28	1400	" " " "
" " (1) #154	2900	27	20	20	30	2900	HEAT PUMPS (1) #166
" " (1) #159	2900	29	20	20	32	2900	" " (1) #171
" " (7) #189	6000	31	40	125	34	15KW	SUBFEED SECTION #2 PANEL 'D'

TOTAL CONNECTED LOAD 69 KW 192 AMPS
SECTION #1 (22,000 AIC)

PANEL NO. 'D' VOLTAGE 120 / 208 4 WIRE X
SURFACE X FLUSH — MOUNTED, TYPE NQOB MAIN BREAKER —
MAINS ONLY 225 A FEED —, LOCATION ELECTRICAL #185

AREA SERVED	LOAD	CCT.	BKR.	BKR.	CCT.	LOAD	AREA SERVED
WASHER-LAUNDRY	3000	33	30	20	36	2900	HEAT PUMP (1) #183
" "	3000	35	30	30	38	3000	DRYER-LAUNDRY
SPARE		37	20	30	40	3000	" "
"		39	20	20	42		SPARE
"		41	20	20	44		"
"		43	20	20	46		"
"		45	20	20	48		"
"		47	20	20	50		"
"		49	20	20	52		"
"		51	20				
SPACE ONLY		53			54		SPACE ONLY
" "		55			56		" "
" "		57			58		" "

TOTAL CONNECTED LOAD 15 KW 42 AMPS
SECTION #2 (22,000 AIC)

PANEL NO. 'EM' VOLTAGE 120 / 208 4 WIRE X
SURFACE X FLUSH — MOUNTED, TYPE NQOB MAIN BREAKER 50AMP 3POLE
MAINS ONLY 100A. FEED —, LOCATION STORAGE #115

AREA SERVED	LOAD	CCT.	BKR.	BKR.	CCT.	LOAD	AREA SERVED
LTG. STORAGE, MECH.	900	1	20	20	2	100	LTG GYM, CORR., LOUNGE
" MECHANICAL	1000	3	20	20	4	50	EXIT LTG. STAIRS
" CORR., LOUNGE	1100	5	20	20	6	1000	LTG CORR., LOUNGE
EXIT LTG. CORR., LOUNGE	350	7	20	20	8	300	EXIT LTG. GYM, CORR.
PA SOUND SYSTEM	1000	9	20	20	10	1000	TELEPHONE TERMINAL
SPARE		11	20	20	12		SPARE
"		13	20	20	14		"
"		15	20	20	16		"
"		17	20	20	18		"
SPACE ONLY		19			20		SPACE ONLY
" "		21			22		" "
" "		23			24		" "

TOTAL CONNECTED LOAD 8 KW 22 AMPS
EMERGENCY PANEL (22,000 AIC)

PANEL NOTES

1. MAIN BUSS BARS AND CONNECTING STRAPS SHALL BE COPPER THROUGHOUT FOR BRANCH PANELS, SWITCHBOARDS AND MOTOR CONTROL CENTERS.
2. MINIMUM BREAKER INTERRUPTING RATINGS TO BE 22,000 AMPS SYMMETICAL.
3. ALL 120/208 VOLT 3 PHASE 4 WIRE BRANCH PANELS TO BE EQUAL TO SQUARE 'D' TYPE NQOB WITH BOLT ON TYPE QOBVH FRAME BREAKERS, 20 AMP THRU 100 AMP. Q2H FRAME BREAKERS, 125 AMP THRU 225 AMP.
4. PROVIDE MOUNTING HARDWARE IN ALL SPACE ONLY DESIGNATIONS
5. ALL BRANCH TO HAVE CANS 20" WIDE X 5 3/4" DEEP.
6. WHERE EVER POSSIBLE THE ELECTRICAL CONTRACTOR SHALL ROUTE CONDUITS FROM PANELS THRU FLOOR INTO AVAILABE CLEAR ACCESSABLE SPACE TO MINIMIZE CONDUIT BENDS IN FLOOR SLAB AT PANEL LOCATIONS, THIS WILL HELP MINIMIZE FLOOR SLAB CRACKING THESE LOCATIONS.

NOT FOR CONSTRUCTION

50% CD SUBMITTAL

SPECTRUM ENGINEERS
175 South Main Street, Suite 300
Salt Lake City, Utah 84111
801-328-5151
800-678-7077
FAX 801-328-5155
www.spectrum-engineers.com

STATE MAIL SERVICES
WEST VALLEY, UTAH

JRCA ARCHITECTS
577 South 200 East
Salt Lake City, Utah 84111
(801) 533-2100 fax: 533-2101 jrcadesign.com

DATE/REVISION 11・17・08 PROJECT #. 08008

REFERENCE LIGHTING FIXTURE & PANEL SCHEDULES

EE 106

File Name: P:\2007\20070662\1Drawings\Sheet\62EE-106.dwg Last Plotted: 2008/11/13 @ 10:19 AM By: pss

MOTOR CONTROL CENTER NO 1

LOCATED IN MECHANICAL ROOM #201
SEE SHEET E-4.

SECTION	EQUIPMENT	MOTOR RATING	BREAKER AMPS	NUMBER POLES	STARTER SIZE	CONTROL H.O.A.	CONTROL P.B.	PILOT LIGHT GREEN	PILOT LIGHT RED	INTERLOCKS N/O	INTERLOCKS N/C	REMARKS
1	CIRCULATING PUMP #14	7 1/2	30 MCP	3	2	1		1	1	2		HEAT PUMP
2	" " #15	3	15 MCP	3	1	1		1	1	2		HEAT EXCHANGER
3	" " #16	5	30 MCP	3	1	1		1	1	2		COOLING TOWER
4	" " #17	1 1/2	15 MCP	3	1	1		1	1	2		BOILER CIRC.
5	" " #18	3	15 MCP	3	1	1		1	1	2		COND. WATER
6	EXHAUST FAN #29	3/4	7 MCP	3	1	1		1	1	2		
7	CENTRIFUGAL #27	1/2	3 MCP	3	1	1		1	1	2		
8	COOLING TOWER #23	5	30 MCP	3	1	1		1	1	2		
9	SPARE			3	1	1		1	1	2		
10	SPARE			3	2	1		1	1	2		
11	SPACE ONLY				1							
12	LUGS											

MOTOR CONTROL CENTER TO BE SQUARE 'D' TYPE 8998 TYPE 4 - CLASS I, TYPE B WIRING. 208VOLT, 3Φ, 3 WIRE. COPPER BUSS WITH GROUND BUSS. 22,000 RMS SYMMETRICAL AMPERES, BRACING. EACH STARTER TO BE COMBINATION MOTOR CIRCUIT PROTECTOR. PROVIDE 3 OVERLOADS WITH EACH STARTER AND A SEPERATE 120VOLT FUSED CONTROL TRANS. MOUNT CONTROL CENTER ON A 4" HIGH CONCRETE BASE. PROVIDE THE GEN. CONTRACTOR EXACT DIM. PRIOR TO POUR. ALL BREAKERS TO BE RATED 22,000 AIC SYM.

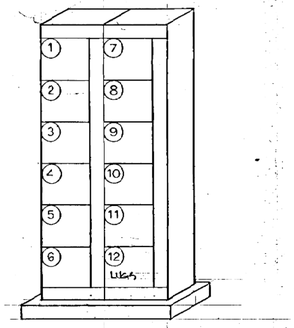

MCC 1 ELEVATION

ELECTRICAL SYMBOLS

	FLOURESCENT FIXTURE
	INCANDESCENT FIXTURE
	INDICATES LIGHTING FIXTURE ON NIGHT LIGHT OR EMERGENCY
	INDICATES WALL MOUNTED BRACKET FIXTURE
	INDICATES RECESSED LIGHT FIXTURE
	EXIT LIGHT
	FLOOD LIGHT
	EMERGENCY BATTERY OPERATED LIGHT – SINGLE OR TWIN BEAM
	INDICATES POST MOUNTED PARKING OR WALKWAY LIGHTING
(T-1)	INDICATES FIXTURE CALLOUT – TYPE AND SUGGESTED QUANTITY
S	SINGLE POLE TOGGLE SWITCH – 20 AMP TYPICAL
Ssb	SINGLE POLE TOGGLE SWITCH – LETTERS INDICATE SWITCHING
S3	THREE-WAY TOGGLE SWITCH
Sp	SINGLE POLE TOGGLE SWITCH WITH PILOT LIGHT
	JUNCTION BOX – SIZE AS REQUIRED
	DUPLEX MOUNTED CONVENIENCE OUTLET – 20 AMP TYPICAL
	INDICATES TWIST LOCK TYPE RECEPTACLE
	INDICATES FLUSH MOUNTED FLOOR OUTLET
	INDICATES TELEPHONE OUTLET LOCATION
	INDICATES CLOCK OUTLET LOCATION 18" BELOW CEILING OR NOTED
	SPECIAL PURPOSE 1 PHASE OUTLET – SIZE AS NOTED
	SPECIAL PURPOSE 3 PHASE OUTLET – SIZE AS NOTED
	GROUND FAULT INTERRUPTER OUTLET
	NON FUSED SITE DISCONNECT SWITCH – SIZE AS NOTED
	FUSED SITE DISCONNECT SWITCH – SIZE AS NOTED
	MOTOR STARTER LOCATION – SIZE AS REQUIRED
	MOTOR LOCATION
FBG	FIRE ALARM BREAK GLASS STATION
	FIRE ALARM DETECTOR
	FIRE ALARM CHIME
	FIRE ALARM HORN – SIZE AS NOTED
EWC	ELECTRIC WATER COOLER
WP	INDICATES WEATHER PROOF EQUIPMENT
	ELECTRICAL PANEL LOCATION
	ELECTRICAL DISTRIBUTION PANEL
	INDICATES CONDUITS CONCEALED IN CEILING AND WALLS
	INDICATES CONDUITS CONCEALED IN FLOOR OR BELOW GRADE
	ARROWS INDICATE HOME RUN, CROSS LINES INDICATE NUMBER WIRES
	~~FOR LOW SYSTEM SYMBOLS SEE SHEET E-1~~

SEE SHEET E-5 FOR ADDITIONAL SYMBOLS

TYPICAL SYMBOL LIST. ALL SYMBOLS NOT FOUND ON THIS PROJECT.

MECHANICAL EQUIPMENT SCHEDULE

SEE MECHANICAL PLANS AND SPECIFICATIONS

	NAME OF EQUIPMENT	HEAT PUMP	HEAT PUMP	HEAT PUMP	HEAT PUMP	HEAT PUMP	HEAT PUMP	HEAT PUMP	HEAT PUMP	HEAT PUMP	HEAT PUMP	HEAT PUMP		CIRCULATING PUMP	CIRCULATING PUMP	CIRCULATING PUMP	CIRCULATING PUMP	CIRCULATING PUMP		COOLING TOWER	CENTRIFUGAL FAN	CENTRIFUGAL FAN	EXHAUST FAN	EXHAUST FAN	IN LINE PUMP	TWO STAGE THERMOSTAT	TIME CLOCK	FIRE ALARM SYSTEM	WATER LEVEL CONTROLLER		ELECTRIC WATER COOLER
	EQUIPMENT NO.	1	2	3	4	5	6	7	8	9	10	11		14	15	16	17	18		23	26	27	28	29	31	33	34	37	39		P-5
MOTOR DATA	HORSEPOWER / RATING	7½ KW	2.2KW	5.5KW	11.0KW	2.2KW	7.5KW	5.5KW	7.5KW	7.5KW	7.5KW	5.5KW		1 1/2	3	5	1 1/2	3		5	3/4	1/2	1/4	3/4	1/6						
	VOLTAGE	208	208	208	208	208	208	208	208	208	208	208		208	208	208	208	208		208	208	208	208	208	120	120	120	120	120		120
	PHASE	1	1	1	1	1	3	3	3	3	3	3		3	3	3	3	3		3	3	3	3	3							
	AMPS.	45	60	80	86	103	16	16.5	19.7	33.1	25.6	45.6		14.4	10.6	16.8	5.75	10.6		16.8	3.1	2.2	1.1	[illegible]							45

THE ELECTRICAL CONTRACTOR TO REFER TO THE MECHANICAL PLANS AND SPECIFICATIONS FOR ADDITIONAL ELECTRICAL REQUIREMENTS AND CONTROL WIRING. FURNISH AND INSTALL ALL MATERIAL AS NOTED.

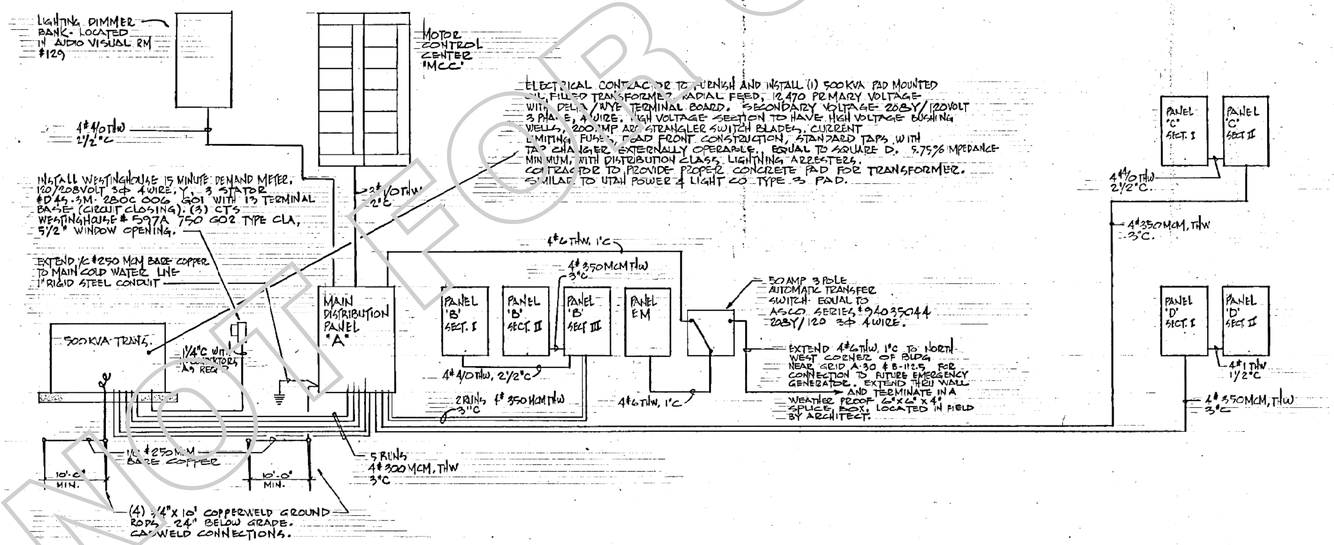

PANEL RISER DIAGRAM

SCHEMATIC ONLY

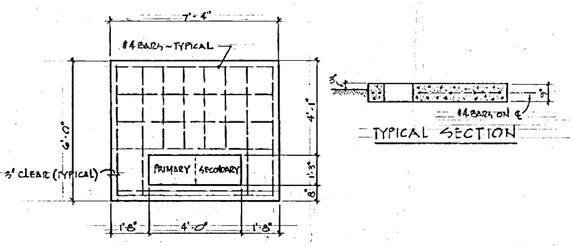

TYPE 3 TRANSFORMER PAD DETAILS

NOT FOR CONSTRUCTION

50% CD SUBMITTAL

SPECTRUM ENGINEERS
175 South Main Street, Suite 300
Salt Lake City, Utah 84111
801-328-5151
800-678-7077
FAX 801-328-5155
www.spectrum-engineers.com

STATE MAIL SERVICES

WEST VALLEY, UTAH

JRCA ARCHITECTS
577 South 200 East
Salt Lake City, Utah 84111
(801) 533-2100 fax: 533-2101 jrcadesign.com

DATE/REVISION	PROJECT #.
11 · 17 · 08	08008

REFERENCE ONE-LINE RISER, MECHANICAL SCHD, PAD DETAIL, SYMBOL LEGEND

EE 107

File Name: P:\2007\20070662\1Drawings\Sheet\62EE-107.dwg Last Plotted: 2008/11/13 @ 10:19 AM By: pss

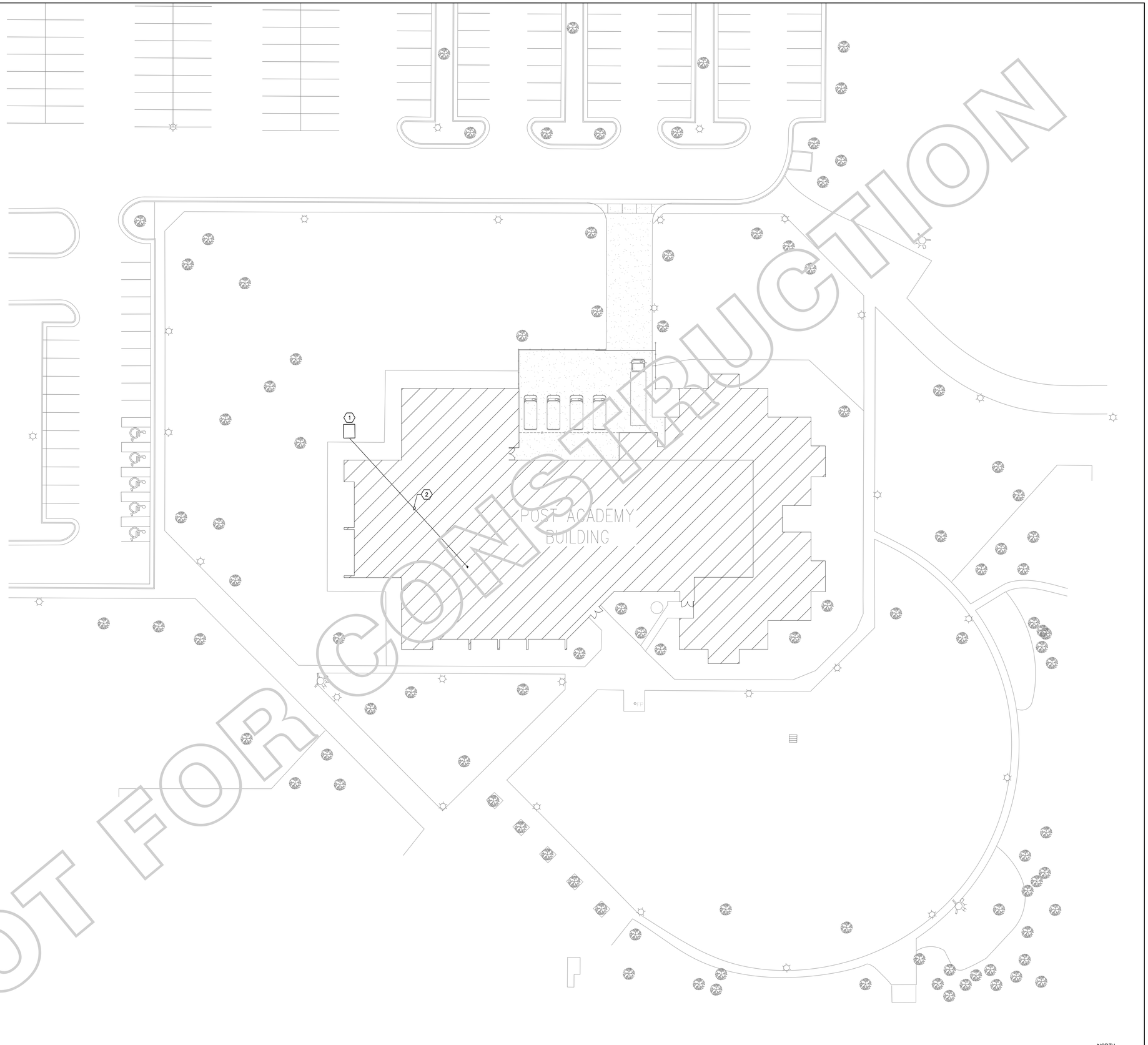

NOT FOR CONSTRUCTION

1 ELECTRICAL SITE PLAN
SCALE: 1" = 20'-0"

SHEET KEYNOTES

1. EXISTING PAD MOUNTED TRANSFORMER SHALL REMAIN.
2. EXISTING 1200A 120/208V 3ø 4W SECONDARY SERVICE INTO BUILDING TO REMAIN.

50% CD SUBMITTAL

SPECTRUM ENGINEERS
175 South Main Street, Suite 300
Salt Lake City, Utah 84111
801-328-5151
800-678-7077
FAX 801-328-5155
www.spectrum-engineers.com

STATE MAIL SERVICES

WEST VALLEY, UTAH

JRCA
ARCHITECTS
577 South 200 East
Salt Lake City, Utah 84111
(801) 533-2100 fax: 533-2101 jrcadesign.com

DATE/REVISION	PROJECT #.
11 · 17 · 08	08008

ELECTRICAL SITE PLAN

ES 101

File Name: P:\2007\20070662\1Drawings\Sheet\62ES-101.dwg Last Plotted: 2008/11/13 @ 10:18 AM By: pss

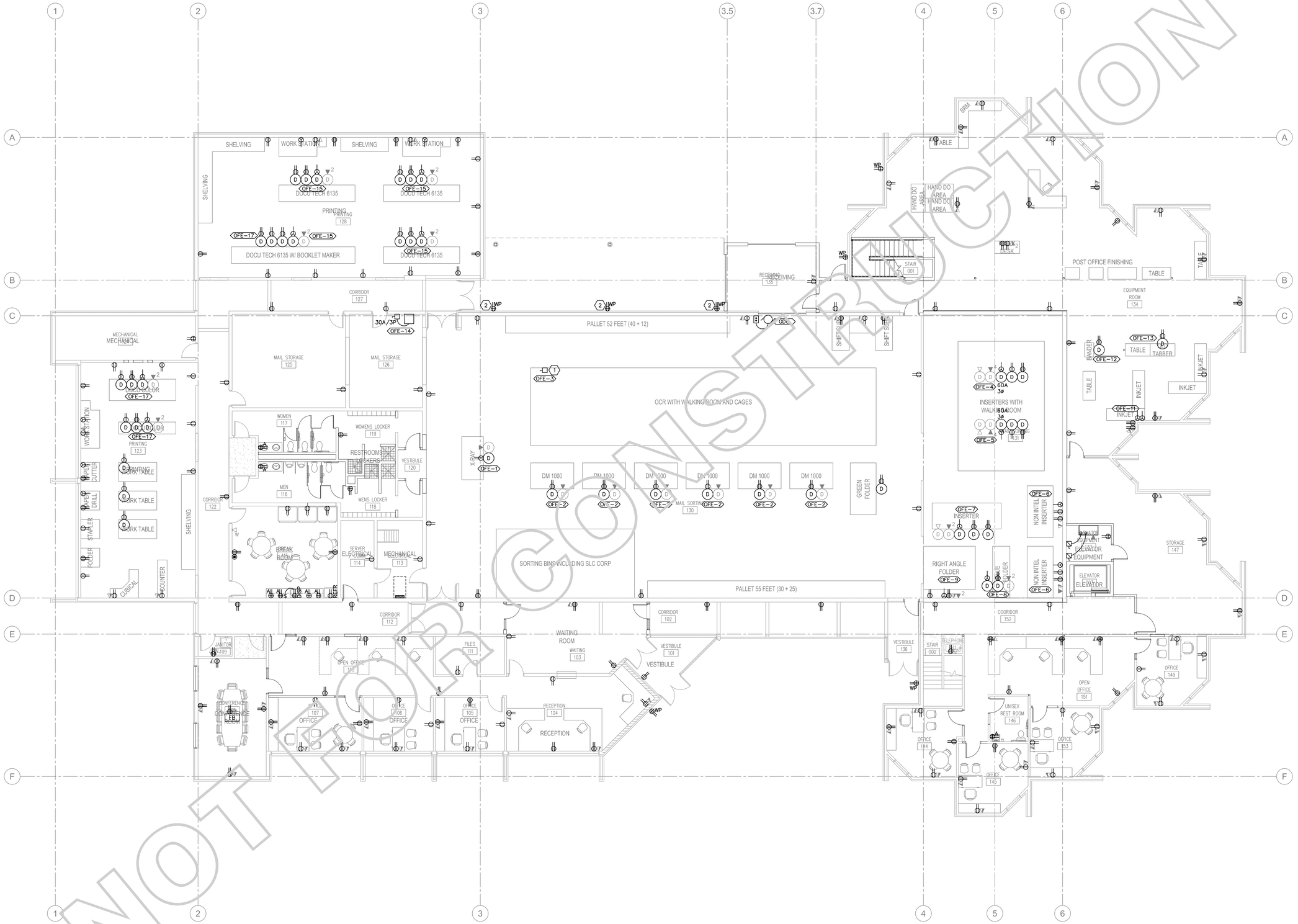

NOT FOR CONSTRUCTION

1 MAIN LEVEL POWER PLAN

SCALE: 1/8" = 1'-0"

SHEET KEYNOTES

1. PROVIDE HARD WIRED SEAL TIGHT CONNECTION. 100A, 3P, 4W DISC SWITCH W/100A FUSE ECNR. MOUNT ON 8"x8" WIREWAY ROUTED FROM CEILING TRUSS TO FLOOR STATION.
2. SURFACE MOUNT DOCK RECEPTACLES IN A WP BELL BOX ON EXISTING MASONRY WALL.

50% CD SUBMITTAL

SPECTRUM ENGINEERS
175 South Main Street, Suite 300
Salt Lake City, Utah 84111
801-328-5151
800-678-7077
FAX 801-328-5155
www.spectrum-engineers.com

STATE MAIL SERVICES

WEST VALLEY, UTAH

JRCA
ARCHITECTS
577 South 200 East
Salt Lake City, Utah 84111
(801) 533-2100 fax: 533-2101 jrcadesign.com

DATE/REVISION	PROJECT #.
11 · 17 · 08	08008

MAIN LEVEL POWER PLAN

EP 101

File Name: P:\2007\20070662\1Drawings\Sheet\62EP-101.dwg Last Plotted: 2008/11/13 @ 10:18 AM By: pss

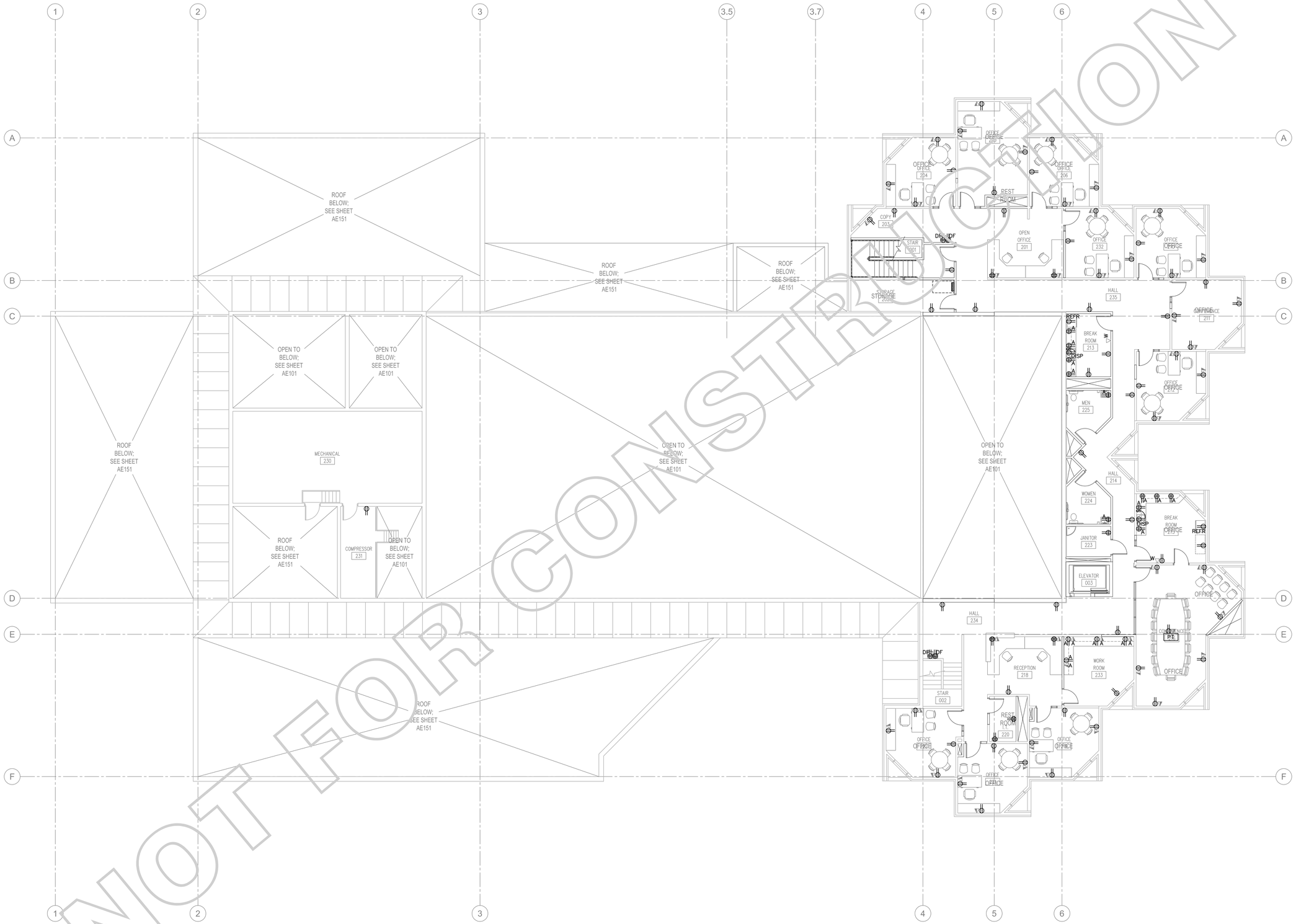

NOT FOR CONSTRUCTION

1 UPPER LEVEL POWER PLAN

SCALE: 1/8" = 1'-0"

0 4' 8' 16'

50% CD SUBMITTAL

SPECTRUM ENGINEERS
175 South Main Street, Suite 300
Salt Lake City, Utah 84111
801-328-5151
800-678-7077
FAX 801-328-5155
www.spectrum-engineers.com

STATE MAIL SERVICES

WEST VALLEY, UTAH

JRCA
ARCHITECTS
577 South 200 East
Salt Lake City, Utah 84111
(801) 533-2100 fax: 533-2101 jrcadesign.com

DATE/REVISION	PROJECT #.
11 · 17 · 08	08008

UPPER LEVEL POWER PLAN

EP 102

File Name: P:\2007\20070662\1Drawings\Sheet\62EP-102.dwg Last Plotted: 2008/11/13 @ 10:18 AM By: pss

OWNER FURNISHED EQUIPMENT (OFE)

MARK	QTY	ITEM DESCRIPTION	CONNECTION REQUIREMENTS
1	1	RAPISCAN X-RAY	1-110V DED 1-COMM
2	6	PITNEY BOWES DM1000	1-110V DED 1-COMM
3	1	BOWE BELL & HOWELL	1-100A - 120/208V 3-PHASE 4W DISCONNECT
4	1	B&H MAIL SCAN	2-110V DED 1-208V 3-PHASE - 60A W/TL CAP 4-DATA
5	1	B&H MAIL SCAN	2-110V DED 1-208V 3-PHASE - SEAL TIGHT CONN 60A 4-DATA
6	2	EXPESITOR ROYAL INSERTERS	1-30A 3-PHASE TL PLUG 2-110V DED PLUG 2-DATA
7	1	BOWE BELL & HOWELL INSERTER 68012A	1-30A 3-PHASE TL PLUG 2-110V DED 2-DATA 1-PHONE
8	1	MBO BLUE FOLDER	1-30A 3-PHASE TL PLUG EASY HUBBELL L1250P 1-110V DED 2-DATA
9	1	RT ANGLE FOLDER	1-30A 3-PHASE TL PLUG 2-110V DED 2-DATA
10	1	GREEN FOLDER	1-110V DED
11	1	CHESHIRE 7000 INK JET VIDEO JET	2-30A 208V 1ø T.L. 2-110V DED 1-DATA/PHONE
12	1	BANDER	1-110V DED
13	1	TABBU	1-110V DED
14	1	FORK LIFT CHARGER	1-30A 3-POLE 208V
15	1	DOCUTECH 6135 B&W	1-50A 208V NEMA 14-50R FOR PRINTER FINISHER 1-110V DED - DFR 1-110V DED - INTERPOSER
16	1	DOCUTECK BOOKLET MAKER	1-110V DED
17	1	DOCUTECK COLOR	1-50A 208V NEMA 14-50R FOR PRINTER FINISHER 1-110V DED - DFR 1-110V DED - INTERPOSER

NOT FOR CONSTRUCTION

50% CD SUBMITTAL

SPECTRUM ENGINEERS
175 South Main Street, Suite 300
Salt Lake City, Utah 84111
801-328-5151
800-678-7077
FAX 801-328-5155
www.spectrum-engineers.com

STATE MAIL SERVICES

WEST VALLEY, UTAH

JRCA
ARCHITECTS
577 South 200 East
Salt Lake City, Utah 84111
(801) 533-2100 fax: 533-2101 jrcadesign.com

DATE/REVISION	PROJECT #.
11 · 17 · 08	08008

POWER SCHEDULES

EP 602

File Name: P:\2007\20070662\1Drawings\Sheet\62EP-602.dwg Last Plotted: 2008/11/13 @ 10:18 AM By: pss

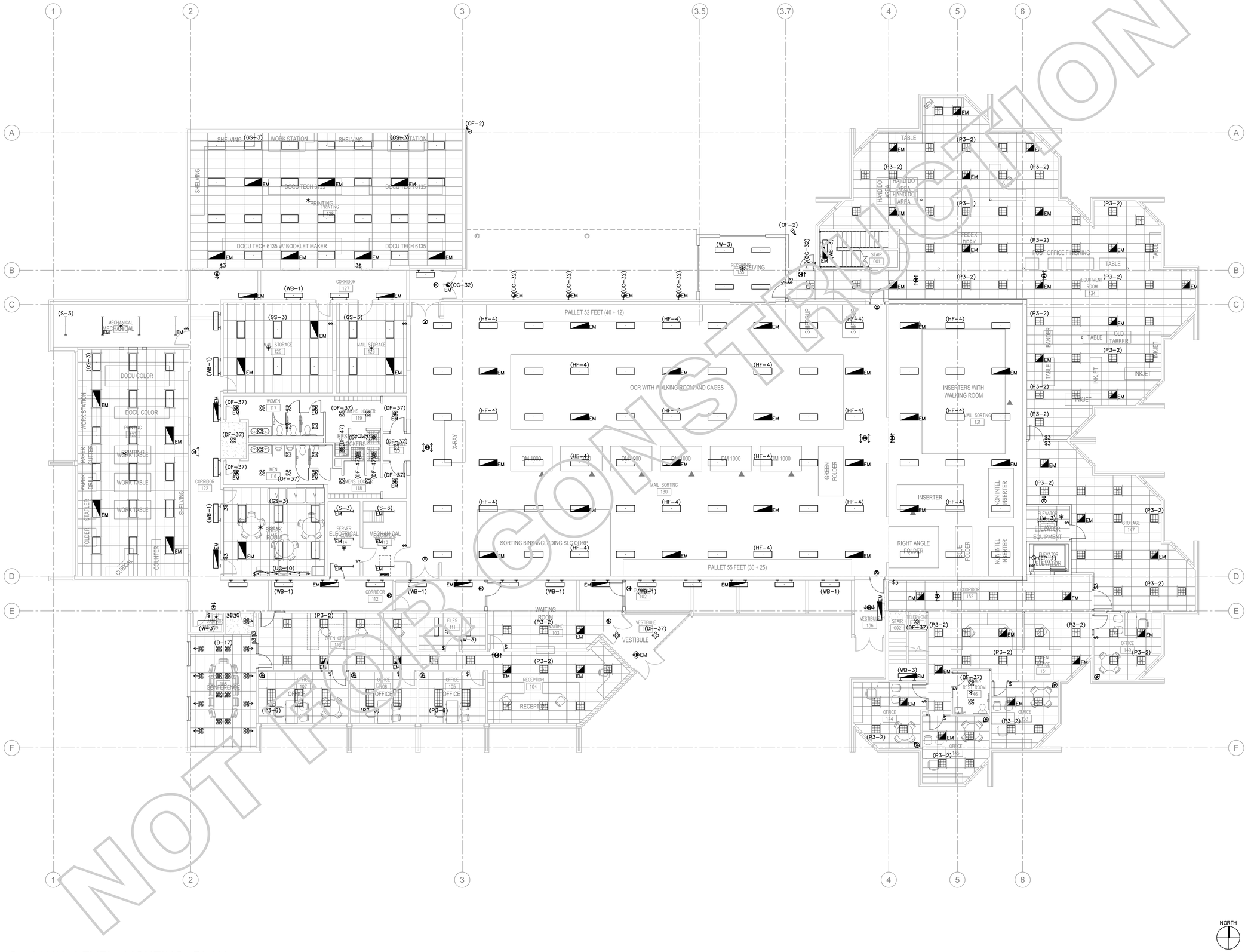

NOT FOR CONSTRUCTION

1 MAIN LEVEL LIGHTING PLAN

SCALE: 1/8" = 1'-0"

50% CD SUBMITTAL

SPECTRUM ENGINEERS
175 South Main Street, Suite 300
Salt Lake City, Utah 84111
801-328-5151
800-678-7077
FAX 801-328-5155
www.spectrum-engineers.com

STATE MAIL SERVICES

WEST VALLEY, UTAH

JRCA
ARCHITECTS
577 South 200 East
Salt Lake City, Utah 84111
(801) 533-2100 fax: 533-2101 jrcadesign.com

DATE/REVISION	PROJECT #.
11 · 17 · 08	08008

MAIN LEVEL LIGHTING PLAN

EL 101

File Name: P:\2007\20070662\1Drawings\Sheet\62EL-101.dwg Last Plotted: 2008/11/13 @ 10:18 AM By: pss

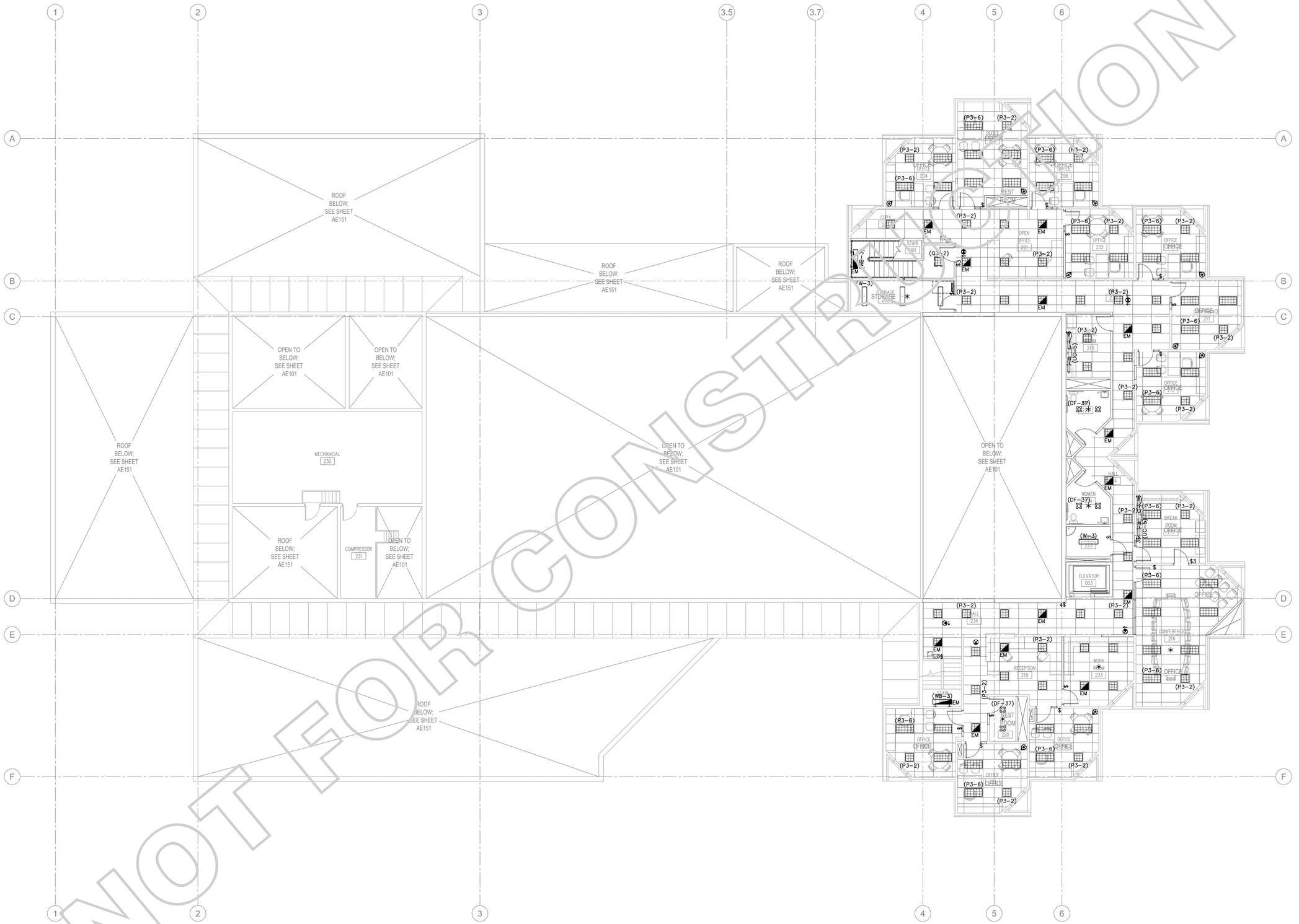

NOT FOR CONSTRUCTION

1 UPPER LEVEL LIGHTING PLAN
SCALE: 1/8" = 1'-0"

50% CD SUBMITTAL

SPECTRUM ENGINEERS
175 South Main Street, Suite 300
Salt Lake City, Utah 84111
801-328-5151
800-678-7077
FAX 801-328-5155
www.spectrum-engineers.com

STATE MAIL SERVICES

WEST VALLEY, UTAH

JRCA
ARCHITECTS
577 South 200 East
Salt Lake City, Utah 84111
(801) 533-2100 fax: 533-2101 jrcadesign.com

DATE/REVISION	PROJECT #.
11 · 17 · 08	08008

UPPER LEVEL LIGHTING PLAN

EL 102

File Name: P:\2007\20070662\1Drawings\Sheet\62EL-102.dwg Last Plotted: 2008/11/13 @ 10:18 AM By: pss

LIGHTING FIXTURE SCHEDULE

POST ACADEMY/HOMELAND SECURITY EMERGENCY OPERATIONS CENTER

NOTE TO BIDDERS: COMPLY WITH SECTIONS 16511, 16521, AND 16570 OF THE SPECIFICATIONS.
REFER TO SPECIFICATIONS FOR IMPORTANT TECHNICAL REQUIREMENTS FOR LIGHTING FIXTURES, BALLASTS, AND LAMPS. THE CATALOG NUMBERS LISTED BELOW HAVE BEEN CAREFULLY PREPARED TO ASSIST BIDDERS IN SELECTING PRODUCTS TO ACHIEVE THE DESIGN CONCEPT, HOWEVER, PRIOR TO BIDDING, EACH MANUFACTURER SHALL COMPARE THE CATALOG NUMBERS SHOWN WITH THE DESCRIPTION AND REQUIREMENTS ON THE DRAWINGS, AND SHALL NOTIFY THE ARCHITECT/ENGINEER OF ANY DISCREPANCIES. SPECIFICALLY INCLUDED IN THIS EVALUATION SHALL BE THE VERIFYING OF PROPER MOUNTING KITS OR ACCESSORIES TO FACILITATE INSTALLATION AS SHOWN AT EACH LOCATION ON THE DRAWINGS. NO ALLOWANCE OR REDRESS WILL BE ALLOWED FOR DISCREPANCIES THAT WERE NOT REPORTED TO THE ARCHITECT/ENGINEER IN TIME FOR CORRECTION OR CLARIFICATION BEFORE THE BID. THE REPORTING OF ANY AMBIGUITY IS THE RESPONSIBILITY OF THE BIDDER. PROVIDE UNIT PRICES AND FIXTURE BRAND SELECTED FOR ADD/DELETE CHANGES FOR EACH FIXTURE TYPES SHOWN WITHIN 48 BUSINESS HOURS OF THE BID DATE. FAILURE TO COMPLY WITH THIS REQUIREMENT MAY DISQUALIFY THE PRODUCTS AND EMPOWER THE ENGINEER TO DETERMINE FAIR VALUE FOR FIXTURE AND INSTALLATION CHANGES, WITHOUT FURTHER INPUT FROM THE CONTRACTOR OR INSTALLER. SUBMITTAL PACKAGE SHALL INCLUDE LAMP MANUFACTURER AND CATALOG NUMBER ON EACH FIXTURE SHEET. ON ALL PENDANT MOUNTED FIXTURES, PROVIDE A SECOND SET OF PENDANTS, OF A DIFFERENT LENGTH, AS DIRECTED BY THE ARCHITECT/ENGINEER, PROVIDED AND INSTALLED AT NO ADDITIONAL CHARGE. ALL FIXTURES SHALL BE APPROVED BY UL OR ANOTHER ACCEPTABLE TESTING LAB FOR THE PURPOSE INTENDED AND WITH THE LAMP AND BALLAST PROPOSED. CONTRACTOR ALLOWANCE PRICES ARE ACCURATE WHEN THIS JOB WAS SPECIFIED, CONTRACTOR AND ELECTRICAL DISTRIBUTOR SHALL VERIFY THIS ALLOWANCE AND REPORT ANY PROBLEMS TO THE ENGINEER BEFORE THE BID. ALLOWANCE PRICE MAY OR MAY NOT INCLUDE LAMP(S) OR FREIGHT AS NOTED, AND DO NOT INCLUDE ANY TAXES. UNIVERSAL VOLTAGE (120/277) BALLASTS REQUIRED UNLESS NOTED OTHERWISE.

SYMBOL	MARK	FIXTURE CHARACTERISTICS BODY / AIR / MOUNTING / DOOR LENS/LOUVER/REFLECTOR/OTHER	LAMP	WATTS	VOLTS	MANUFACTURER	CATALOG NUMBER	NOTES
	D	DOWNLIGHT; THERMALLY PROTECTED HOUSING; TO ACCOMMODATE MULTIPLE ALUMINUM TRIMS AND REFLECTOR ASSEMBLIES AS LISTED BELOW; MAX 8" DEEP, NON-IC HOUSINGS EXCEPT AS NOTED.						
	D-17	RECESSED 150W ADJUSTABLE DOWN- LIGHT, 360 DEGREE X 35 DEGREE ADJUSTMENT, 40 DEGREE BEAM SPREAD UNLESS OTHERWISE NOTED. CLEAR ALZAK CONE, WHITE TRIM.	100HIR PAR38FL	150W	120V	PRESCOLITE	PBX-TA38 C (11-1/2 X 7-1/2 X 7-1/2)	
						HALO	H7T-478 (10-1/2 X 7-1/2 X 7-1/2)	
						LITHONIA	LP6 6AC2A (13 X 12-1/4 X 7-3/4)	
						CAPRI	CINADJ615-RMS40CLR (12-1/8 X 7-5/8 X 7-5/8)	
						LIGHTOLIER	1700P1-1738 CL (15-1/2 X 10-7/8 X 9-3/4)	
						INFINITY	DR75 150 (PAR38/MED) MWT BH (13-15/16 X 13-15/16 X 11-5/16)	
	DF	FLUORESCENT DOWNLIGHT; THERMALLY PROTECTED HOUSING: TO ACCOMMODATE MULTIPLE TRIMS AND REFLECTOR ASSEMBLIES FOR LAMPS AS LISTED BELOW; ELECTRONIC BALLASTS; LOW IRIDESCENT REFLECTOR FINISH (EVEN IF NOT SHOWN IN CATALOG #); SELF FLANGING TRIM UNLESS NOTED.						
	DF-37	RECESSED DOWNLIGHT; 8-10" APERTURE, HORIZONTAL, 2-32W CF-AMALGAM LAMPS, CLEAR.	2-CF-A32 RE835	100W	120/277V	PORTFOLIO	C9232E-9251LI (17-15/16 X 16-1/2 X 9-3/8)	
						INFINITY	PH10 232T-EB (GX24Q-3) 277 BH (23 X 17 X 9)	
						LIGHTOLIER	8039CLW/8232HU (15-5/8 X 14 X 9)	
						LITHONIA	AF 2/32TRT 10AR MVOLT (17-1/2 X 17-3/16 X 9-3/4)	
						OMEGA	S82H32-U-T82HPLT-CS (14-11/16 X 13-1/4 X 6-11/16)	
						PRESCOLITE	CFT932HEB-STF902H (16-1/4 X 14-7/16 X 8-9/16)	
	DF-47	RECESSED DOWNLIGHT;SHOWER LIGHT TRIM, 9" APERTURE, HORIZONTAL, 32W CF-AMALGAM LAMP. GASKET.	1-CF-A32 RE835	50W	120/277V	OMEGA	OM61H32PLTSRD-SWR (24-13/16 X 14-1/2 X 6-3/16)	
						INFINITY	PVSL68 132T-EB (GX24Q-3) 277 BH (16-1/4 X 14-7/16 X 7-7/8)	
						LIGHTOLIER	8097CWHW/7132BU (15 X 12-3/4 X 6-1/2)	
						HALO	C7132-1E-7180LI-120 (14 X 13-5/16 X 8)	
						PRESCOLITE	CFT832HEB-WTT2F (16-1/4 X 14-7/16 X 7-1/8)	
						LITHONIA	LGF-132TRT9 RW DOLGSGT MVOLT (17-3/4 X 17-1/4 X 8-5/8)	
	E10	EXIT SIGN: METAL HOUSING; CEILING MOUNT, SEE DRAWINGS; ARROWS PER PLANS; LED LAMPS; EDGE LIGHTED CLEAR LENS; GREEN LETTERS ON CLEAR BACKGROUND. MUST MEET NFPA ILLUMINATION STANDARDS. UNITS SHOWN ARE CEILING MOUNT MODELS. CONTRACTOR TO PROVIDE MATCHING LOW LEVEL WALL MOUNTED UNITS WHERE REQUIRED.						
	E10-1	SINGLE FACE:	LED	20W	120/277V	DUAL-LITE	LECSGWA	
						MCPHILBEN	45VL-1-GC-XX	
						EELP	EDG 1 GC W EM	
						LITHONIA	LRP W 1 GC XX 120/277	
						ISOLITE	EDGL-S-S-G-BK (BLACK HOUSING)	
						CHLORIDE	STDLX-X-1-GC-X	
						LIGHTOLIER	LEAC1GCX	
	E10-2	DUAL FACE:	LED	20W	120/277V	DUAL-LITE	LECDGWA	
						MCPHILBEN	[illegible]L-2-GM-XX	
						EELP	EDG 2 GC W EM	
						LITHONIA	LRP W 2 GMR XX 120/277	
						ISOLITE	EDGL-D-S-G-BK (BLACK HOUSING)	
						CHLORIDE	STDLX-X-2-GC-X	
						LIGHTOLIER	LEAC2GCX	
	EP	ELEVATOR PIT LIGHTS: INCANDESCENT VAPORTIGHT; COPPER-FREE CAST ALUMINUM BODY AND GUARD; CAST ALUMINUM ADAPTERS FOR MOUNTING AS NOTED, CLEAR TEMPERED GLASS GLOBE, U.L. LISTED FOR USE IN WET LOCATIONS.						
	EP-1	WALL ARM MOUNT ON FLUSH OR RECESSED OUTLET BOX.	100A/19	100W	120V	ARK	A[illegible]21-200	
						DAY-BRITE	VIS-100-I-12-W-G	
						RAL	VPWB100GG75	
						EXCELINE	RLW-100-IN-L-CG-C-1	
						SPERO	VW30-42-G	
	GF	TROFFERS: RECESSED FOR FLANGE MOUNTED CEILING; STATIC; HINGED AND LATCHED STEEL DOOR; .125 ACRYLIC PRISMATIC LENS, MINIMUN 1/8"; PROGRAM START ELECTRONIC BALLASTS; T8 LAMPS; ONE BALLAST PER FIXTURE WHERE POSSIBLE, UNLESS TWO LEVEL SWITCHING IS SHOWN ON THE PLANS. MAX 5" DEEP. SPECIFICATION GRADE.						
	GF-2	2X2, 2 LAMP.	2-F31T8U RE835	65W	120/277V	LITHONIA	2SP8F 2U31 A12125 MVOLT TUBRHP (3-11/16" DEPTH)	
						METALUX	FP-2U6T8A125-UNV-EB81-PROGRAM START (3-3/4" DEPTH)	
						DAYBRITE	2DF231U6-FS21-UNV-1/2EB-SPEC (4-3/8" DEPTH)	
						COLUMBIA	ST822-232U6F-FSA12.125-EB8LHPRUNV (4-1/4" DEPTH)	
						LSI	FLA125 2U32 SD SSO10PS UE (4" DEPTH)	
						LIGHTOLIER	XT2FVI2U6-U-SOP (3-1/2" DEPTH)	
	GS	TROFFERS: RECESSED FOR LAY-IN GRID; STATIC; HINGED AND LATCHED STEEL DOOR; .125 ACRYLIC PRISMATIC LENS, MINIMUN 1/8"; EARTHQUAKE CLIPS; MAX 5" DEEP; SPECIFICATION GRADE; PROGRAM START ELECTRONIC BALLASTS, T8 LAMPS; ONE BALLAST PER FIXTURE WHERE POSSIBLE, UNLESS TWO LEVEL SWITCHING IS SHOWN ON THE PLANS.						
	GS-2	2X2, 2 LAMP.	2-F31T8U RE835	65W	120/277V	LITHONIA	2 SP8G 2U31 A12125 MVOLT TUBRHP (4-1/4" DEPTH)	
						METALUX	2GP-2U6T8A125-UNV-EB81-PROGRAM START (3-3/4" DEPTH)	
						DAYBRITE	2DPG231U6-FS21-UNV-1/2EB-SPEC (4-3/8" DEPTH)	
						COLUMBIA	ST822-232U6G-FSA12.125-EB8LHPRUNV (4-1/4" DEPTH)	
						LSI	LA125 2U32 SD SSO10PS UE (4" DEPTH)	
						LIGHTOLIER	XT2GVI2-2U-UNV-SOP (4-1/2" DEPTH)	
	GS-3	2X4, 2 LAMP.	2-F32T8 RE835	65W	120/277V	LITHONIA	2 SP8G 232 A12125 MVOLT TUBRHP (4-1/2" DEPTH)	
						METALUX	2GP-232A125-UNV-EB81-PROGRAM START (3-3/4" DEPTH)	
						DAYBRITE	2DPG232-FS21-UNV-1/2EB-SPEC (4-3/8" DEPTH)	
						LSI	LA125 232 SD SSO10PS UE (4" DEPTH)	
						LIGHTOLIER	XT2GVI232-UNV-SOP (3-5/8" DEPTH)	
						COLUMBIA	ST824-232G-FSA12.125-EB8LHPRUNV (3-3/4" DEPTH)	
	HF	HIGH BAY INDUSTRIAL FLUORESCENT FIXTURES: SURFACE OR PENDANT MOUNT ELECTRONIC BALLAST; DR ACRYLIC LENS , SECURE LATCH, CONTINOUS HINGE, WIREGUARD						
	HF-4	HEAVY DUTY SURFACE LUMINAIRE, 48" X 17", 4-LAMP	4-F54T5HO RE841	240W	120/277V	LA LIGHTING	HB1609-4-4M-SR-DRP8-2E5H-UNV/WG11	
	OC	WALL PACK: ADJUSTABLE CUT OFF; FULL PERIMETER GASKETING: WET LOCATION; STAINLESS STEEL HINGES AND LATCHES; PROJECTING LENS; HPF BALLAST; SEE ELEVATION FOR MOUNTING HEIGHT, COLOR AS SPECIFIED BY ARCHITECT.						
	OC-32	CF42, RECESSED J BOX. MEDIUM THROW, SQUARE, DECORATIVE	CF42 RE835	50W	120/277V	MCPHILBEN	101MT-42TRF-CBA-DT	
						LSI	GBWS-FTM-42CFL-F-120/277-XX-NO	
						LITHONIA	WST 42TRT MD MVOLT	
						LUMARK	PLIP-T-42-MT-XX	
						LSI	GBWS FTM 42CFL F UE XXX W/LAMP	
	OF	OUTDOOR FLOOD LIGHTS; FULLY GASKETED; WET LABEL; TYPES AND WATTAGES AS INDICATED. MOUNT AS INDICATED ON ELEVATIONS, COLOR PER ARCHITECT, VANDAL RESISTANT CONSTRUCTION. SECURE MOUNTING BRACKED AS REQUIRED, AIMING ADJUSTMENT WITH FIRM LOCKING DEVICE. MULTI-TAP BALLAST.						
	OF-2	200PSMH, FLOODLIGHT, WIDE BEAM SPREAD. WALL MOUNTED AREA FLOOD.	200PSMH	200W	MTBV	LUMARK	MPWR-65X-200-MT	
						HUBBELL	MHS-0200W-268	
						LITHONIA	TFL 200M TA2 TB SCWA	
						EXCELINE	TFS20PMA-8	
						GE	PF1S20M0A16X6XX	
						DAYBRITE	FLI200P-MT-PSC	
	P3	PARABOLIC LOUVER FIXTURES WITH 3" LOUVERS IN PLASTIC PROTECTORS AND FULL DEPTH REFLECTOR; SIZE AS NOTED; PROGRAM START ELECTRONIC BALLASTS PER SPECS; T8 LAMPS; ONE BALLAST PER FIXTURE UNLESS NOTED FOR SWITCHING; STATIC OR AIR RETURN AND HEAT REMOVAL; EARTHQUAKE CLIPS INSTALLED ON ON GRID FIXTURES; HINGED AND LATCHED DOOR; LOW IRIDESCENT LOUVER FINISH, VERTICAL GRAIN DIE STAMPED LOUVERS; TWO FORMED BALLAST COVERS; MAX 1300 CD/M2 ABOVE 45 DEGREES.						
	P3-2	2X2, 9 CELL LAY-IN; SEMI-SPECULAR SILVER LOUVERS. STATIC.	2-F31T8U RE835	65W	120/277V	LITHONIA	2PM3NGB-2U316-9LD-MVOLT-TUBRHP-2R	
						DAYBRITE	2P3GS231U6-33SL-UNV-1/2-EB-SPEC	
						METALUX	2EP3GX-2U6S33I-UNV-PROGRAM START	
						COLUMBIA	P4D24-232U6G-LD33-S-EB8LHPRUNV	
						LSI	N2PG9 2U32 FD SSO10PS UE	
						LIGHTOLIER	DPS2G9LS26U-U-SOP	
	P3-6	2X4, 18 CELL LAY-IN; SEMI-SPECULAR SILVER, 3-LAMP. STATIC.	3-F32T8 RE835	95W	120/277V	LITHONIA	2PM3NGB-332-18LD-MVOLT-1/3TUBRHP-2R	
						DAYBRITE	2P3GS332-36SL-UNV-1/3-EB-SPEC	
						METALUX	2EP3GX-332S36I-UNV-PROGRAM START-2BC	
						COLUMBIA	P4D24-332G-LD36-S-3EB8LHPRUNV	
						LSI	N2PG18 332 FD SSO10PS 2BC UE	
						LIGHTOLIER	DPS2G18LP332-U-03P	
						HEWILLIAMS	HE3G-D24-332-36S-EB8PXLH3*OS-UNV	
	Q3	PARABOLIC LOUVER FIXTURES WITH 3" LOUVERS IN PLASTIC PROTECTORS AND FULL DEPTH REFLECTOR; SIZE AS NOTED; PROGRAM START ELECTRONIC BALLASTS PER SPECS; T8 LAMPS; ONE BALLAST PER FIXTURE UNLESS NOTED FOR SWITCHING; STATIC OR AIR RETURN AND HEAT REMOVAL; EARTHQUAKE CLIPS INSTALLED ON GRID FIXTURES; HINGED AND LATCHED DOOR; LOW IRIDESCENT LOUVER FINISH, VERTICAL GRAIN DIE STAMPED LOUVERS; TWO FORMED BALLAST COVERS; MAX 1300 CD/M2 ABOVE 45 DEGREES.						
	Q3-2	2X2, 9 CELL FLANGE; SEMI-SPECULAR SILVER. STATIC.	2-F32T8U RE835	65W	120/277V	LITHONIA	2PM3NFB-2U31-9LD-MVOLT-TUBRHP	
						DAYBRITE	2P3FS231U6-33SL-UNV-1/2-EB-SPEC	
						METALUX	2P3FX-2U6S33I-UNV-PROGRAM START	
						COLUMBIA	P4D24-232U6G-LD33-S-EB8LHPRUNV-FK22	
						LIGHTOLIER	DPS2F9LS26U-U-SOP	
						LSI	N2PF9 2U32 FD SSO10PS UE	
	S	FLUORESCENT STRIP LIGHT: STEEL CONSTRUCTION; WHITE PAINTED FINISH; SUITABLE FOR MOUNTING ON LOW DENSITY CEILINGS; PROGRAM START ELECTRONIC BALLASTS; T8 LAMPS; ONE BALLAST PER FIXTURE WHERE POSSIBLE, UNLESS TWO LEVEL SWITCHING IS SHOWN ON THE PLANS.						
	S-3	4', 2-LAMP.	2-F32T8 RE835	65W	120/277V	LITHONIA	C232-MVOLT-TUBRHP	
						LIGHTOLIER	SW232-U-SOP	
						METALUX	[illegible]S-232-UNV-PROGRAM START	
						DAYBRITE	T232-UNV-1/2-EB-SPEC	
						HUBBELL	C232[illegible]PS	
						COLUMBIA	CS4-232-EB8120/277 PROG	
	UC	UNDERCABINET LIGHT: LOW PROFILE X 5 1/4"DEEP X LENGTH AS NOTED; ACRYLIC DIFFUSER.						
	UC-5	33 1/2" LONG, WHITE.	T5/8W T5/13W	40W	120V	NULITE	NU 33 120	
						FSC	3033	
						LIGHTOLIER	TSL1813W120	
						CREATIVE	TI-33	
						DURAY	DUC 813	
						EELP	TUS2133T5ELB	
	UC-10	48 1/8" LONG, WHITE	F32T8	40W	120V	NULITE	112 32 ELB10	
						FSC	3148-T8-EL	
						LIGHTOLIER	TCU32WSO120	
						CREATIVE	UC-132-T8	
						DURAY	HUC 132 PSEB120	
						LSI	SL1 32 SSO 120	
	W	LOW PROFILE WRAPAROUND: SURFACE MOUNTED SUITABLE FOR MOUNTING ON LOW DENSITY CEILINGS WRAPAROUND ACRYLIC PRISMATIC DIFFUSER; WHITE ENAMEL ENDPLATES; MINIMUM CU OF 70 @ 80/50/20 AND RCR=1; PROGRAM START ELECTRONIC BALLASTS; T8 LAMPS; ONE BALLAST PER FIXTURE WHERE POSSIBLE, UNLESS TWO LEVEL SWITCHING IS SHOWN ON THE PLANS.						
	W-3	NARROW BODY WRAPAROUND; 2-LAMP, APPROX; 3" X 10" X 48".	2-F32T8 RE835	65W	120/277V	LITHONIA	LB232-MVOLT-TUBPHP	
						DAYBRITE	CAN232-UNV-1/2-EB-SPEC	
						METALUX	WS-232A-UNV-PROGRAM START	
						LIGHTOLIER	WA232-U-SOP	
						LSI	PR 232 SSO10PRS UE	
						COLUMBIA	WC4-232-EBPS120/277	
	WB	WALL MOUNTED FLUORESCENT LOCATED ABOVE WALL ELEMENT (MIRROR/WHITEBOARD, ETC.): AS INDICATED ON DRAWINGS; WITH ACRYLIC INJECTION MOLDED; PROGRAM START ELECTRONIC BALLASTS; T8 LAMPS; ONE BALLAST PER FIXTURE WHERE POSSIBLE, UNLESS TWO LEVEL SWITCHING IS SHOWN ON THE PLANS.						
	WB-[illegible]	WALL MOUNTED ASYMMETRIC INDIRECT. ADJUSTABLE	1 T5HO RE841	55W	277V	LITECONTROL	WAID34 14T5HO PFF CWM LPEB 1CFQ	
	WB-3	2-LAMP, WALL MOUNT 48", STEEL ENCLOSURE, DOWNLIGHT ONLY; ACRYLIC INJECTION MOLDED PRISMATIC DIFFUSER.	2-F32T8 RE835	65W	120/277V	DAYBRITE	CD232W-UNV-1/2-EB-SPEC	
						LIGHTOLIER	CWB232-WB-U-SOP	
						METALUX	BI-232-UNV-PROGRAM START	
						L.A.L.	BSQ100-2-4R-INJ-WHT-T8EB-120/277-UPS	
						COLUMBIA	WAL4-232-EBPS120/277	
						LITHONIA	WP 232 DO MVOLT-TUBPHP	
						LSI	WB 232 SSO10PRS UE	

NOT FOR CONSTRUCTION

50% CD SUBMITTAL

SPECTRUM ENGINEERS
175 South Main Street, Suite 300
Salt Lake City, Utah 84111
801-328-5151
800-678-7077
FAX 801-328-5155
www.spectrum-engineers.com

STATE MAIL SERVICES

WEST VALLEY, UTAH

JRCA
ARCHITECTS
577 South 200 East
Salt Lake City, Utah 84111
(801) 533-2100 fax: 533-2101 jrcadesign.com

DATE/REVISION 11 · 17 · 08
PROJECT #. 08008

LIGHTING FIXTURE SCHEDULE

EL 601

File Name: P:\2007\20070662\1Drawings\Sheet\62EL-601.dwg Last Plotted: 2008/11/13 @ 10:18 AM By: wendy

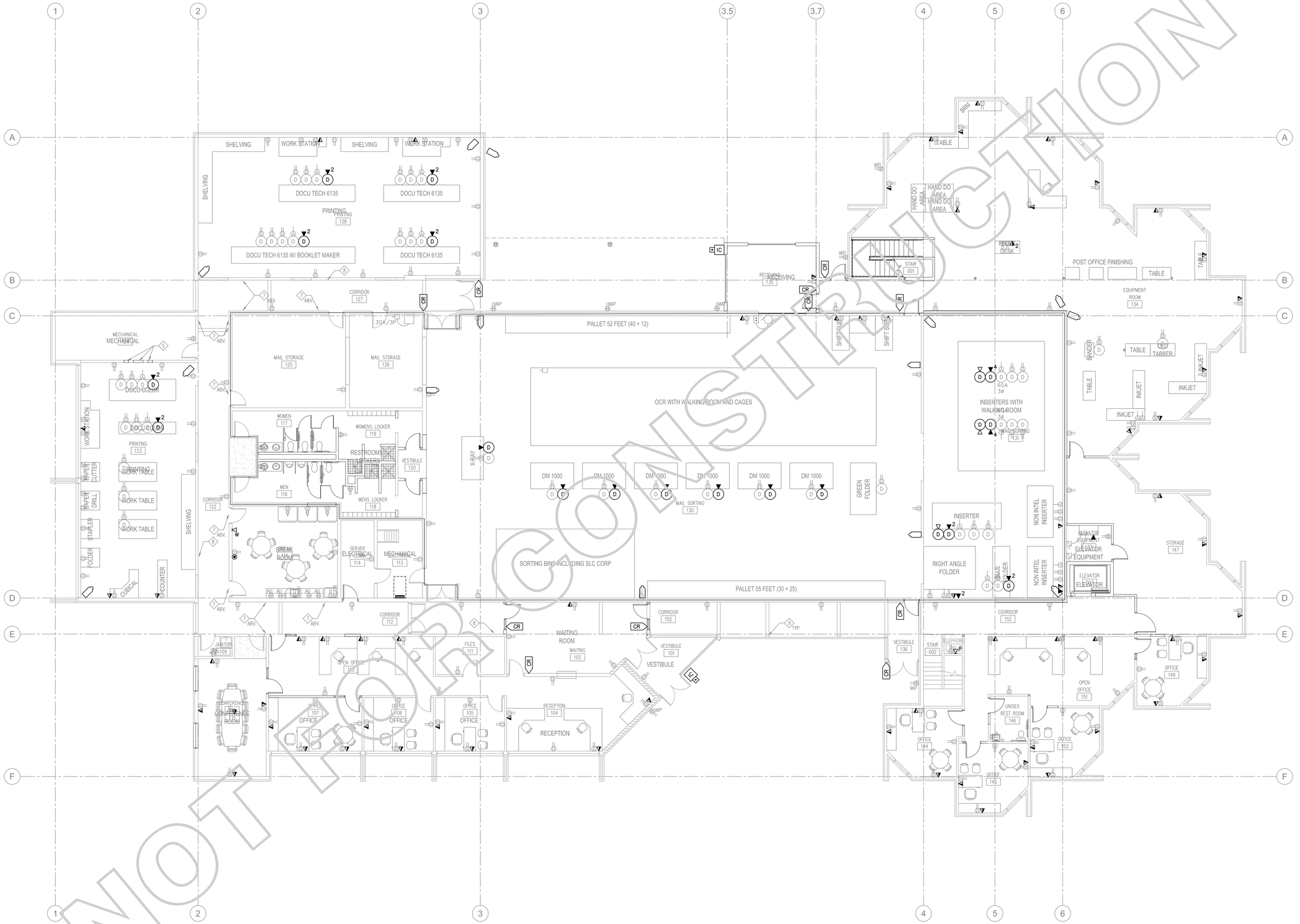

NOT FOR CONSTRUCTION

1 MAIN LEVEL TECHNOLOGY PLAN

SCALE: 1/8" = 1'-0"

50% CD SUBMITTAL

SPECTRUM ENGINEERS
175 South Main Street, Suite 300
Salt Lake City, Utah 84111
801-328-5151
800-678-7077
FAX 801-328-5155
www.spectrum-engineers.com

STATE MAIL SERVICES

WEST VALLEY, UTAH

JRCA
ARCHITECTS
577 South 200 East
Salt Lake City, Utah 84111
(801) 533-2100 fax: 533-2101 jrcadesign.com

DATE/REVISION	PROJECT #.
11 · 17 · 08	08008

MAIN LEVEL TECHNOLOGY PLAN

ET 101

File Name: P:\2007\20070662\1Drawings\Sheet\62ET-101.dwg Last Plotted: 2008/11/13 @ 10:18 AM By: pss

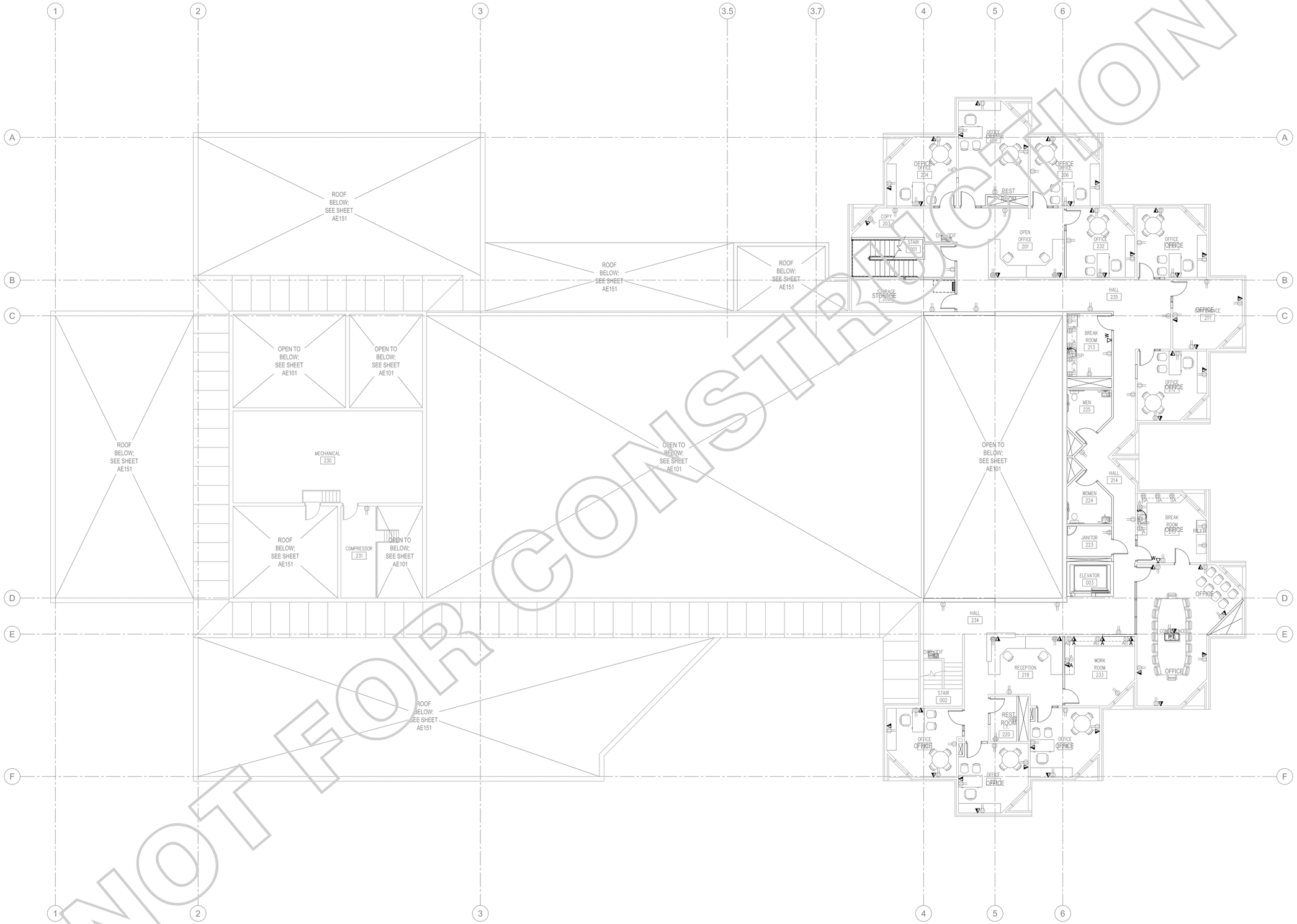

NOT FOR CONSTRUCTION

1 UPPER LEVEL TECHNOLOGY PLAN

SCALE: 1/8" = 1'-0"

50% CD SUBMITTAL

SPECTRUM ENGINEERS
175 South Main Street, Suite 300
Salt Lake City, Utah 84111
801-328-5151
800-678-7077
FAX 801-328-5155
www.spectrum-engineers.com

STATE MAIL SERVICES

WEST VALLEY, UTAH

JRCA
ARCHITECTS
577 South 200 East
Salt Lake City, Utah 84111
(801) 533-2100 fax: 533-2101 jrcadesign.com

DATE/REVISION	PROJECT #.
11 · 17 · 08	08008

UPPER LEVEL TECHNOLOGY PLAN

ET 102

File Name: P:\2007\20070662\1Drawings\Sheet\62ET-102.dwg Last Plotted: 2008/11/13 @ 10:18 AM By: pss

FIRE ALARM INPUT/OUTPUT MATRIX

	ZONE	GENERAL ALARM	DOOR HOLDER/CLOSERS	ELEVATOR RECALL MAIN LEVEL	ELEVATOR RECALL ALTERNATE LEVEL	FAN SHUTDOWN	FIRE DAMPER	MAIN LEVEL ELEVATOR DOORS HOLD OPENS	2ND LEVEL ELEVATOR DOORS HOLD OPENS	ELEVATOR SHUNT TRIP				NOTES
		OUTPUT DEVICES												
INITIATING DEVICES	1 MAIN LEVEL FLOW	●												
	2 MAIN LEVEL TAMPER													
	3 2ND LEVEL FLOW													
	4 2ND LEVEL TAMPER													
	5 PENTHOUSE FLOW													
	6 PENTHOUSE TAMPER													
	7 MAIN LEVEL INITIATING LOOP													
	8 MAIN LEVEL ELEVATOR DETECTOR													
	9 MAIN LEVEL DUCT DETECTOR													
	10 2ND LEVEL INITIATING LOOP													
	11 2ND LEVEL ELEVATOR DETECTOR													
	12 2ND LEVEL DUCT DETECTOR													
	13 PENTHOUSE LEVEL INITIATING LOOP													
	14 PENTHOUSE LEVEL ELEVATOR DETECTOR													
	15 PENTHOUSE LEVEL DUCT DETECTOR													
	16 FIRE PUMP PUMP RUNNING													
	17 FIRE PUMP LOSS OF POWER													
	18 FIRE PUMP PHASE REVERSAL													
	19 ELEVATOR SPRINKLER HEAT DETECTORS													

WIRING SCHEDULE

FUNCTION	< 500'	< 1000'	1000'–3000'	> 3000'
ADDRESSABLE LOOP	#18 TSP	#18 TSP	#16 TSP	#14 TSP
POWER LOOP	#14 THWN	#14 THWN	#12 THWN	#10 THWN
SPARE LOOP	#14 THWN	#14 THWN	#12 THWN	#10 THWN
STROBE HORNS	#14 THWN	#14 THWN	#12 THWN	#10 THWN
MAGNETIC DOOR HOLDERS	#12 THWN	#12 THWN		
SPEAKERS	#16 TSP	#16 TSP	#14 TSP	#14 TSP

NOTIFICATION SCHEDULE

SYMBOL	STROBE SIZE	COVERAGE	AVERAGE CURRENT	MAXIMUM PER CIRCUIT ALONE
15	15 CD	20'x20'	.085A	17
30	30 CD	30'x30'	.135A	11
75	75 CD	40'x40'	.200A	7
110	110 CD	50'x50'	.225A	6

ADDRESSABLE LOOP LEGEND

INITIATING LOOP	DESCRIPTION
FA–1	–

INDICATING LOOP LEGEND

INDICATING LOOP	DESCRIPTION
FI–1	–

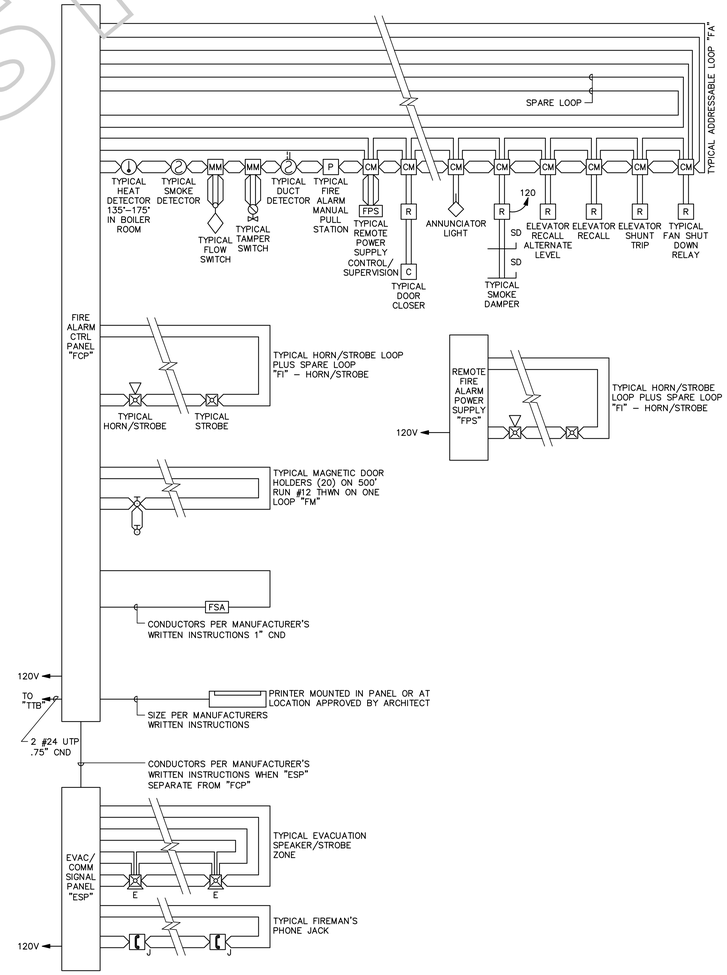

1 ADDRESSABLE FIRE ALARM RISER
NO SCALE

GENERAL SHEET NOTES

1. PLANS ARE BASED UPON 99 MONITOR AND CONTROL DEVICES PER ADDRESSABLE LOOP. OTHER CONFIGURATIONS ARE ACCEPTABLE SUBJECT TO CONTRACTOR ALLOWING FOR INCREASED WIRING REQUIREMENTS AND SUBMITTAL DRAWINGS SHOWING NEW WIRING CONFIGURATION. MAXIMUM INITIAL DEVICES PER LOOP SHALL NOT EXCEED 75% MAXIMUM ALLOWABLE.
2. PLANS ARE BASED UPON THE WIRING SCHEDULE SHOWN. WHERE MANUFACTURER'S REQUIREMENTS EXCEED REQUIREMENTS SHOWN, INCLUDE ADDITIONAL ASSOCIATED COSTS AND SUBMITTAL DRAWINGS INDICATING NEW WIRING CONFIGURATION.
3. PLANS ARE BASED UPON 2 AMPS AT 24 VDC, NOT TO EXCEED 75% (1.50 AMPS AVAILABLE), POWER SUPPLY CAPACITY PER NOTIFICATION CIRCUIT. NOTIFICATION DEVICE LOADS ARE BASED UPON NOTIFICATION DEVICE SCHEDULE SHOWN. INCLUDE ADDITIONAL ASSOCIATED COSTS FOR INCREASED WIRING AND POWER SUPPLY CAPACITY IF LOADS OF ACTUAL DEVICES PROVIDED EXCEED CIRCUIT CAPACITY, OR IF LOAD OUTPUT OF ACTUAL POWER SUPPLIES PROVIDED IS SIZED DIFFERENTLY. PROVIDE SUBMITTAL DRAWINGS SHOWING NEW WIRING CONFIGURATION.
4. FLOW AND TAMPER CONFIGURATION BASED UPON FIRE SPRINKLER DESIGN CONCEPT. FIELD VERIFY ACTUAL REQUIREMENTS. INCLUDE ANY ADDITIONAL MONITOR MODULES REQUIRED BY ACTUAL DESIGN REQUIREMENTS.
5. HEAT DETECTORS WHEN INSTALLED IN ELEVATOR SHAFTS OR MECHANICAL ROOMS FOR ELEVATOR SHUT DOWN SHALL HAVE HEAT DETECTOR WITH LOWER RESPONSE TIME INDEX THAN SPRINKLER HEAD.
6. PROVIDE POWER SUPPLY CAPACITY AS REQUIRED FOR DOOR HOLD OPENS SHOWN.
7. BATTERY CAPACITY TO BE ADEQUATE TO OPERATE 15 MINUTES AFTER 24 HOURS PLUS 25% SPARE CAPACITY.
8. VFD REQUIRES TWO RELAYS, ONE FOR SMOKE CONTROL, ONE SPARE.
9. RUN SPARE LOOPS IN SAME CONDUIT. DO NOT EXCEED 40% AREA FILL OF CONDUITS.
10. PROVIDE DUCT DETECTORS FOR SUPPLY AND RETURN AIR SYSTEMS OVER 2000 CFM. INSTALL DUCT DETECTORS PER NFPA 72 REQUIREMENTS AND PROVIDE ADDITIONAL DUCT DETECTORS DEPENDING UPON FINAL DUCT ARRANGEMENT.
11. PROVIDE DUCT DETECTOR AT EACH FLOOR, PRIOR TO CONNECTION TO A COMMON RETURN AND PRIOR TO RECIRCULATING OR FRESH AIR INLET IN AIR RETURN SYSTEMS OVER 15,000 CFM CAPACITY AND SERVING MORE THAN ONE STORY.
12. PROVIDE MANUAL PULL STATIONS IN BOILER ROOMS AND KITCHENS.
13. PROVIDE ONE YEAR OFF SITE MONITORING INCLUDING ALL INTERFACE DEVICES AND MONITORING CHARGES. COORDINATE WITH BUILDING OWNER'S OFF SITE MONITORING COMPANY.
14. LOCATE SMOKE DETECTORS MINIMUM 3' FROM AIR SUPPLY AND RETURN LOUVERS.
15. PROVIDE SYNCHRONIZED STROBES THROUGHOUT FACILITY. PROVIDE SYNCHRONIZATION MODULES PER MANUFACTURER'S REQUIREMENTS. INCLUDE ADDITIONAL WIRING, IF REQUIRED.
16. INITIATING AND INDICATING LOOPS SHALL NOT SERVE AN AREA OF GREATER THAN 22,500 SQUARE FEET. PROVIDE ADDITIONAL LOOPS FOR AREAS LARGER THAN THIS.
17. ALL OUTPUT DEVICES ARE DESIGNED ON SYSTEMS WITH 2 AMP POWER SUPPLY.
18. HORN/STROBE BASED ON 120 MILLIAMPS, DOOR HOLDERS BASED ON 70 MILLIAMPS.
19. INSTALL DUCT DETECTORS PER NFPA 72 REQUIREMENTS AND PROVIDE ADDITIONAL DUCT DETECTORS DEPENDING UPON FINAL DUCT ARRANGEMENT.

50% CD SUBMITTAL

SPECTRUM ENGINEERS
175 South Main Street, Suite 300
Salt Lake City, Utah 84111
801-328-5151
800-678-7077
FAX 801-328-5155
www.spectrum-engineers.com

STATE MAIL SERVICES

WEST VALLEY, UTAH

JRCA
ARCHITECTS
577 South 200 East
Salt Lake City, Utah 84111
(801) 533-2100 fax: 533-2101 jrcadesign.com

DATE/REVISION	PROJECT #.
11 · 17 · 08	08008

FIRE ALARM RISER

FA 601

NOT FOR CONSTRUCTION

File Name: P:\2007\20070662\10rawings\Sheet\62FA-601.dwg Last Plotted: 2008/11/13 @ 10:17 AM By: pss