State of Utah

JON M. HUNTSMAN, JR.
Governor

GARY R. HERBERT
Lieutenant Governor

Department of Administrative Services
KIMBERLY K. HOOD
Executive Director

Division of Facilities Construction and Management
DAVID G. BUXTON
Director

ADDENDUM #2

Date:	25 March 2008	
To:	General Contractors	
From:	Bill Bowen, Project Manager, DFCM	
Reference:	Weber State University Hurst Center for Lifelong Learning	
DFCM Project #:	07110810	
Subject:	**Addendum No. 2**	
Pages:	Addendum	1 page
	Substitution Request	16 pages
	Architectural Addendum	38 pages
	Total Pages	**55 pages**

Note: This Addendum shall be included as part of the Contract Documents. Items in this Addendum apply to all drawings and specification sections whether referenced or not involving the portion of the work added, deleted, modified, or otherwise addressed in the Addendum. Acknowledge receipt of this Addendum in the space provided on the Bid Form. Failure to do so may subject the Bidder to disqualification.

2.1. SCHEDULE CHANGES – there are no schedule changes.

2.2. General:

1.2.1. Please submit only one (1) copy of References, the Cost Proposal and the Cost Proposal Reductions.
1.2.2. The DFCM does not maintain past performance ratings on subcontractors or vendors.
1.2.3. The DFCM does not submit bid documents to the Plan Rooms It is the individual Plan Room's responsibility to obtain a copy of the bid documents and post them accordingly should they choose to do so.

End of Addendum #2

Johns Manville
Roofing Systems Group
A Berkshire Hathaway Company

SUBSTITUTION REQUEST - 2 PAGES

TO: DFCM Attn: Bill Bowen Ph. 801-538-3271 FAX: 801-538-3267

PROJECT: WSU Hurst Center for Lifelong Learning

SPECIFIED ITEM: Thermoplastic Membrane Roofing

SECTION 07540 PAGE 5 PARAGRAPH part 2, 2.2 4.11 DESCRIPTION fabric reinf. PVC sheet

PROPOSED SUBSTITUTION: Johns Manville PVC 60 mil sheet, white
Johns Manville roof insulation is specified but not JM's membrane ??

Attached data includes product description, specifications, drawings, photographs, performance and test data adequate for evaluation of the request; applicable portions of the data are clearly identified.

Attached data also includes a description of changes to the Contract Documents that the proposed substitution will require for its proper installation.

The undersigned certifies that the following paragraphs, unless modified by attachments, are correct:

1. The proposed substitution does not affect dimensions shown on drawings.
2. The undersigned will pay for changes to the building design, including engineering design.
3. The proposed substitution will have no adverse affect on other trades, the construction schedule, or specified warranty requirements.
4. Maintenance and service parts will be locally available for the proposed substitution.

The undersigned further states that the function, appearance, and quality of the proposed substitution are equivalent or superior to the specified item.

Submitted by:

Signature: [signature]

Firm: Johns Manville / RSG-SLC

Address: 2205 S. Main St.
So. SLC, UT 84115

Date: 3-14-08

Telephone: 801-467-4900

Fax: 801-467-4916

For use by the A/E

[X] Approved [ ] Approved a

[ ] Not Approved [ ] Received t

By: [signature] Angelica M Pavon

Date: 3/20/08

Remarks:

Johns Manville

Single Ply Roofing Systems (PVC)

JM PVC

☐ 50 ☐ 60 ☐ 80

Description

JM PVC is a flexible, thermoplastic membrane manufactured using an ultraviolet-resistant polyvinyl chloride and an Elvaloy® KEE (ketone ethylene ester) formulation. JM PVC membranes are reinforced with a non-wicking polyester fabric. JM PVC membranes provide excellent weathering characteristics, high tensile strength and long-term flexibility. JM PVC membranes also have excellent resistance to harsh chemicals and industrial pollutants.

Use

JM PVC membranes can be installed in new, reroof (tear-off) and recover roof constructions. In recover construction, if the existing roof is sound, the Johns Manville (JM) roof system can eliminate the cost of disposing of the original roof. JM PVC membranes are installed over approved cushioning layers or insulations, when required.

The membrane is secured to the roof deck utilizing either mechanical fastening methods that have been tested for wind uplift in both static and dynamic pressure vessels, or adhering the membrane to an acceptable substrate. JM PVC membranes are thermoplastic; therefore, when rolled out onto the roof substrate, they can be easily welded into one homogenous sheet using hot air welding procedures. Since the JM PVC membrane utilizes a non-wicking reinforcement, the application of an edge sealant is not required.

Colors

White, Grey and Sandstone

Special colors are available with extended lead times. Minimum order quantities may apply. Contact your local JM sales representative for additional information.

Sizes

Available in 50 mil, 60 mil and 80 mil thicknesses in the following sheet dimensions:

50 mil	78"x100' (2.0 m x 30.5 m) 39"x100' (1.0 m x 30.5 m)
60 mil	78"x100' (2.0 m x 30.5 m) 39"x100' (1.0 m x 30.5 m)
80 mil	78"x 75' (2.0 m x 22.9 m) 39"x 75' (1.0 m x 22.9 m)

Applicable Standards

JM PVC membranes meet or exceed all of the requirements of ASTM D 4434, Type III. In addition, JM PVC mechanically fastened and adhered roof systems are classified by UL (Underwriter's Laboratories, Inc.), ULC (Underwriter's Laboratories of Canada) and FM Global. JM membranes meet the material requirements of the International Building Code.

Limitations

JM PVC membranes are mechanically fastened or adhered to the structural roof deck according to FM Global requirements, published standard fastening patterns or adhesives recommendations. The membranes should not come into direct contact with asphalt, coal tar pitch or any petroleum-based product.

Energy and the Environment

ENERGY STAR®	Pass	Reflectivity:	0.86	
Title 24	Pass	Reflectivity:	0.86	Emissivity: 0.86
LEED		Reflectivity:	0.86	Emissivity: 0.94
		Recycled Content		
		Post Consumer: 0%	Post Industrial: 2.5%	
		Producing Location: Pawtucket, RI		

Results shown are for the initial reflectivity and emittance for white membranes; emissivity values for Title 24 are tested per ASTM C 1371; LEED emissivity values are tested per ASTM E 408.

Placement of JM Membrane

JM specifications require acceptable wood nailers to be installed according to FM Global current recommendations in Loss Prevention Data Sheet 1-49 and current JM Detail Drawings. Insulation must neatly fit around all the roof penetrations and projections.

Insulations used must be accepted by JM for use in the system to be installed. Fastening of the insulation must be in strict accordance with JM standard fastening requirements and/or any applicable code requirements, whichever is most restrictive or required by the building owner.

Method of Attachment

See product guide specifications for proper installation methods and additional technical data.

Guarantees

JM provides full system guarantees as outlined below:

20 year	60 mil, 80 mil
15 year	50, 60 and 80 mil
10 year	50, 60 and 80 mil

For detailed guarantee information, see the JM system guarantee chart.

JM PVC-50, 60 and 80 membranes meet or exceed all of the requirements of ASTM D 4434, Type III.

Typical Physical Properties

Property	ASTM Test Method	Values
Breaking Strength	D 751	>200 lbs./in. (35 kN/m)
Elongation at Break	D 751	>20%
Properties After Heat Aging		
Breaking Strength	D 751	>90% of original
Elongation	D 751	>90% of original
Tear Resistance	D 751	>45 lbs./in. (7.9 kN/m)
Low Temperature Bend	D 2136	Pass at -40°F (-40°C)
Accelerated Weathering Test	G 53	
Cracking (@7x magnification)		None
Crazing (@7x magnification)		None
Discoloration (@7x magnification)		Negligible
Linear Dimension Change	D 1204	<0.5%
Change in Weight After Immersion in Water	D 570	<3.0%

Refer to the Material Safety Data Sheet prior to using JM PVC. Material Safety Data Sheet is available by calling 800-654-3103 or online at www.jm.com.

WATER FIRE HAIL WIND

RS-8276 0-06

[redacted]

A INC.

SUBSTITUTION REQUEST FORM

Bid Date: 3/17/08

TO: MHTN ARCHITECTS
DON WILLIAMS

PROJECT #
PROJECT: WSU HURST CNTR. FOR LIFELONG LEARNING

SPECIFIED ITEM:

Section	Page	Paragraph	Description
10801			TOILET ACCESSORIES
10155			TOILET COMPARTMENTS - FLUSH - METAL PART.

The undersigned requests consideration of the following

We are waiting for new catalogs to print. Can we quote? Thanks Don

PROPOSED SUBSTITUTION: American Accessories Inc.

Attached data includes product description, specifications, drawings, photographs, performance and test data adequate for evaluation of the request; applicable portions of the data are clearly identified.

Attached data also includes description of the changes to Contract Documents which proposed substitution will require for its proper installation.

The undersigned states that the following paragraphs, unless modified on attachments, are correct.

1. The proposed substitution does not affect dimensions shown on Drawings.
2. The undersigned will pay for changes to the building design, including engineering design, detailing and construction cost caused by the requested substitution.
3. The proposed substitution will have no adverse affect on other trades, the construction schedule, or specified warranty requirements.
4. Maintenance and service parts will be locally available for the proposed substitution.

The undersigned further states that the function, appearance and quality of the Proposed Substitution are equivalent or superior to the Specified Item.

Submitted by: Martha Powdrill

Signature M Powdrill

Date

Firm: American Accessories Inc.
2605 North State Highway 91
Denison, TX 75020

Telephone (877) 465-5005
Fax (877) 465-4090

FOR USE BY DESIGN CONSULTANT:

[Y] Accepted [ ] Accepted as noted

[ ] Not Accepted [ ] Received too late

By Angelica M. Pavani

Date 3/20/08

Remarks

Attachments 2002 A.A.I. Catalog, Technical Data Sheets

cc:

DALY & ASSOCIATES
MANUFACTURER'S REPRESENTATIVE
1793 MEADOW MOOR RD., SALT LAKE CITY, UTAH 84117
801-486-1026 • Fax 801-486-1061

March 11, 2008

Don Williams
MHTN
420 East South Temple Ste. 100
Salt Lake City, UT 84111-1300

RE: WSU Hurst Center for Lifelong Learning
Request for Approval to Bid Elmdor Access Doors – Division 8
Request Approval for Steel Roof Hatch – Division 7

Dear Don:

Elmdor manufacturing was founded in the principle of producing one of the best designed quality access doors found on the market. The focus for over 40 years has been to set the standard for the industry. Elmdor offers a wide selection of products from drywall, to fire rated, to high security series doors. We manufacture in a wide variety of standard sizes and gages. Custom fabrication is also available.

Our drywall (DW) doors offer the unique design of rounded safety corners and a concealed pivoting rod hinge. Fire rated (FR) wall access doors are "B" labeled for 1 ½ hour walls. Fire rated ceiling (FRC) access doors are underwriters laboratories (UL) "B" labeled for 1 ½ hour walls and Warnock Hersey 3 hours in ceilings. We ask for your approval of this product on this project.

Elmdor would also like to introduce you to their line of steel roof access hatches. These hatches are made of 14 gauge galvanized steel, coated with durable re-coatable grey primer. They are available in many standard sizes with special sizes available upon request. All hardware is corrosion resistant and the hatch's 12" curb is insulated with 1" of rigid insulation.

Product specifications are available on the reverse side of the product brochure enclosed. We ask for your approval and inclusion of Elmdor hatches on this project and thank you for your consideration.

Additional information is available from our office at (801) 486-1026 or by e-mail at david@dalylslc.com.

Sincerely,

David Daly

David Daly

Approved: _____ Date: 3/20/08
Angelica M. Pavani

DALY & ASSOCIATES
MANUFACTURER'S REPRESENTATIVE
1793 MEADOW MOOR RD., SALT LAKE CITY, UTAH 84117
801-486-1026 • Fax 801-486-1061

March 11, 2008

Don Williams
MHTN
420 East South Temple Ste. 100
Salt Lake City, UT 84111-1300

RE: WSU Hurst Center for Lifelong Learning
Request for Approval to Bid Wood Doors – Division 8

Dear Don:

We would like to present our qualifications to you as a producer of architectural hardwood flush doors, and request your approval to bid on this project.

Oshkosh Architectural Door Company is one of the most comprehensive manufacturers of doors in the industry. Our experience in the world of construction has made us a leading producer of wood products. We are a 5 Ply construction door.

Oshkosh specializes in offering beautiful hardwood doors pre-finished, pre-machined, pre-fit, pre-marked for the exact opening, and individually identified. They are produced in a totally factory controlled to achieve the highest quality at the most competitive price. All doors are precision-planned and have 1 3/8" minimum matching hardwood stiles as well as 1 1/8" minimum rails bonded to the core. A wide range of premium hardwood veneer and veneer cuts are available (1/50 minimum). Blocking for fire doors is also available and recommended. All hardwood doors meet or exceed the ANSI and WDMA (Wood/Door Mfg's Association) and AWI (Architectural Woodwork Institute) quality standard for architectural flush doors.

Thank you for you consideration.

Sincerely,

David Daly

Approved By: _____ Date: 3/20/08
Angelica M. Pavani

Advancement of Construction Technology

SUBSTITUTION REQUEST

PRIOR TO the Bidding Phase)

Project: WSU HURST CENTER LIFELONG OGDEN UTAH

Substitution Request Number: CT-031208-D1

From: DAVE TEMPEST

To: DONALD W. WILLIAMS MHTN ARCHITECTS

Date: MARCH 12, 2008

A/E Project Number:

Re: SHEATHING

Contract For: TBD

Specification Title: SHEATHING

Description: WALL SHEATHING

Section: DOLLED Page: 2

Article/Paragraph: 2.1A

Proposed Substitution: GLASROC BY CERTAINTEED

Manufacturer: CERTAINTEED Address: 4300 W. CYPRESS SUITE 500 Phone: 800-233-8990

Trade Name: GLASROC SHEATHING TYPE X Model No.: 5/8" TYPE X

Installer: TBD Address: Phone:

History: ☐ New product ☒ 2-5 years old ☐ 5-10 yrs old ☐ More than 10 years old

Differences between proposed substitution and specified product: ENHANCED GLASS REINFORCED GYPSUM, FULLY EMBEDED GLASS-MATS, INNOVATIVE ACRYLIC COATING, SUPERIOR FLEXURAL STRENGTHS, EXCELLENT NAIL PULL RESISTANCE etc.

☒ Point-by-point comparative data attached - REQUIRED BY A/E SEE PG. 5 BROCHURE

Reason for not providing specified item: EMBEDDED GLASS-MATS & OPTIONS

Similar Installation:

Project: HEALTH SCIENCES

Architect:

Address: WEST JORDAN UTAH

Owner: S.L.C.C.

Date Installed:

Proposed substitution affects other parts of Work: ☒ No ☐ Yes; explain

Savings to Owner for accepting substitution: N/A ($ -0-)

Proposed substitution changes Contract Time: ☒ No ☐ Yes [Add] [Deduct] _____ days.

Supporting Data Attached: ☐ Drawings ☒ Product Data ☒ Samples ☒ Tests ☒ Reports ☒ SUBSTITUTE APPROVALS

Copyright 1996, Construction Specification Institute, 601 Madison Street, Alexandria, VA 22314-1791

SUBSTITUTION REQUEST
(Continued)

The Undersigned certifies:

- Proposed substitution has been fully investigated and determined to be equal or superior in all respects to specified product.
- Same warranty will be furnished for proposed substitution as for specified product.
- Same maintenance service and source of replacement parts, as applicable, is available.
- Proposed substitution will have no adverse effect on other trades and will not affect or delay progress schedule.
- Cost data as stated above is complete. Claims for additional costs related to accepted substitution which may subsequently become apparent are to be waived.
- Proposed substitution does not affect dimensions and functional clearances.
- Payment will be made for changes to building design, including A/E design, detailing, and construction costs caused by the substitution.
- Coordination, installation, and changes in the Work as necessary for accepted substitution will be complete in all respects.

Submitted by: DAVE TEMPEST - CERTAINTEED

Signed by:

Firm: CERTAINTEED Gypsum

Address: 4300 West Cypress St. #500
Tampa FL. 33607

Telephone: 1-800-427-2872 or Local 801-209-8231

Attachments: SEE ATTACHED

A/E?s REVIEW AND ACTION

- [x] Substitution approved - Make submittals in accordance with Specification Section 01330.
- [ ] Substitution approved as noted - Make submittals in accordance with Specification Section 01330.
- [ ] Substitution rejected - Use specified materials.
- [ ] Substitution Request received too late - Use specified materials.

Signed by: Angelica M. Pavoni Date: 3/20/08

Additional Comments: ☐ Contractor ☐ Subcontractor ☐ Supplier ☐ Manufacturer ☐ A/E ☐

Copyright 1996, Construction Specification Institute,
601 Madison Street, Alexandria, VA 22314-1791

ATTACHMENT 1

SUBSTITUTION REQUEST FORM

FILE NO:	20080307-034	BID DATE:	4/1/2008
ARCHITECT:	Mick Gavigilio	PROJECT:	WSU Hurst Center for Longlife Learning Ogden, UT WEBER
FIRM:	MHTN Architects 420 E. South Temple, Suite 100 Salt Lake City, UT84111		
PHONE:	801-595-6700		
FAX:	801-595-6717		

07540	02	Single Ply PVC Thermoplastic Roofing
Section	Part	Description

The undersigned requests consideration of the following:

PROPOSED SUBSTITUTE: EverGuard® PVC Roofing System Specification: P-MA-N-I-60

Attached data includes product description, specifications, performance and test data, as necessary, for evaluation of the request; applicable portions of the data are clearly identified.

The undersigned states that the following paragraphs, unless modified on attachments, are correct:

1. This proposed substitution meets or exceeds the architects specified performance requirements.
2. Maintenance and service parts will be locally available for the proposed substitution.

The undersigned further states that the function, appearance and quality of the proposed substitution are equal or superior to the specified item.

Submitted by: Cindy Fontenot

Cindy Fontenot

Firm: EverGuard Roofing Systems
Address: P.O. Box 2845
Port Arthur, TX77643

Phone: (800) 522-9224 Ext. 1406
Toll-free Fax: (877) 271-6588
Email: cfontenot@gaf.com

☒ Accepted ☐ Accepted as noted
☐ Bid as Equal - Review Upon Award
☐ Not Accepted ☐ Received too late

By Angelica M. Pavon

Date: 3/20/08

Remarks:

GAF GAF MATERIALS CORPORATION

EverGuard™

"Quality You Can Trust...North America's Largest Roofing Manufacturer"

"In Perspective..."

A Clear Mission...

"Creating a world class building materials organization based on a foundation of being the biggest and best roofing products manufacturer."

Your Best and Safest Choice For Single Ply Solutions - Why Take Risks?

Proven... *EverGuard® is a registered trademark and division of GAF Building Materials Corp., North America's largest roofing manufacturer. We've earned this distinction by focusing on the basics: a) reliability that customers have learned they can count on, b) rigorous continuous improvement and disciplined process through every aspect of the organization and c) demonstration of appreciation to our customers.*

Unbiased System Solutions... *we'll help provide roofing solutions for your specific facility, rather than promoting a few roofing technologies as generic solutions; this is unlike most other manufacturers who have a vested interest in only a few technologies. We have no vested interest in any one specific technology - we manufacture products in every major roofing system technology.*

Unique National Capability... *we are the only national manufacturer that can provide the ease and coordination to provide customers with both Low and Steep Slope System needs. This includes assistance with a) coordinating design and development of options, b) gaining the cooperation and support from certified contractors c) services to ssure satisfaction before, during and following installation, d) steep slope warranties that essentially up to double the typical manufacturer coverage and e) low slope guarantees that are unsurpassed in the industry. We're fanatics about solving problems - before they happen!*

A Pragmatic Belief...

"We'll achieve our vision as a world class building products manufacturer through a disciplined approach to delivering world class excellence, through a continuous improvement in "ROAR"

- ***Reliable...*** *keeping commitments; easiest to do business with.*
- ***Organized...*** *creating and using processes to reduce time wasters and confusion.*
- ***Appreciation...*** *listening, recognition and respect: customers and employees.*
- ***Results...*** *world class organization.*

The EverGuard® Choice Is The Right Choice...

Heat Weldable Thermoplastic Single Ply PVC Membranes are offered by EverGuard® Roofing Systems, the right choice for specifications where a light-weight single ply is desired.

- ***Versatility...*** *mechanically fastened, fully adhered, composite adhered, ballasted or paver covered applications.*
- ***Reflective...*** *available in solar reflective ENERGYSTAR® rated white, tan or herringbone gray.*
- ***Strength...*** *Heat welded seams are stronger than glued or taped seams.*
- ***Lightweight...*** *installed membrane is more lightweight than conventional roofing systems.*

More Info? 1-800-522-9224

Fast Facts...

Quick Numbers

Number Of Manufacturing Sites	*30+*
Number Distribution Points	*1000+*
Roofing Products Sales	*$2+ Billion*
Year Founded	*1886*
Number Of Employees	*4,000+*
Number Roof System Solutions	*5,000+*

Unique Capabilities And Achievements

Leadership	*North America's Largest Roofing Manufacturer. Extremely active in various industry associations.*
Technical Service	*Most comprehensive field support, including over 250 professionals in the field.*
Systems Solutions	*Manufacture complete systems in all major roofing technologies. (Maintenance/repair, re-surfacing and replacement)*
Warranty/Guarantee	*Only national company with both steep and low slope "NDL" type coverage - the best coverage available (both application and material defect). Support in design, installation and inspection to prevent problems before they occur.*
Installation Knowledge	*The best certified contractors: 6 of 8 NRCA Golden Circle Award winners*
Value Assured	*The best total value is from the lowest overall cost. In roofing, you've probably already realized - determining the best overall cost can be difficult.*

What Effects Overall Cost?

1. **Evaluation...** most manufacturers have a vested interest in their own specific technology; we manufacture all major roofing systems, so we have a vested interest in matching the right technology to your specific local requirements. As a result – better value!
2. **Installation...** most manufacturers qualify almost any roofing contractor who is willing to install their product; as North America's largest roofing manufacturer, we have identified, certified and provided training and technical guidance to a select group of Master contractors (less than 2% in North America) of both steep and low slope contractors. As a result – better value!
3. **Inspection...** many manufacturers utilize their sales team to conduct inspections (if they inspect at all) – they have a vested interest in always telling contractors they did an adequate job. We have a national team of over 50 technical specialists that are not part of the sales team, and who have one simple mission – assure the roof system is installed right and will perform. As a result – a better value!
4. **Financial Protection...** manufacturers can offer warranties and guarantees that promise anything. It's a fact that over 9 major manufacturers no longer exist from only 15 years ago. We are the largest roofing manufacturer, and are financially strong. In fact, we've invested in technology at almost double the cumulative total of the industry in just the past few years. Simply, we have always met our obligations. As a result – better value!

More Info?
1-800-Roof 411

ATTACHMENT 2

EverGuard® Roofing Systems Project Specification

FILE NO:	20080307-034	PRINT DATE:	3/7/2008
SECTION:	07540	PART:	02

This roof system is eligible for an EverGuard® Weather Stopper® Everguard® Diamond Pledge Twenty (20) Year Guaranteewhen applied in accordance with all current EverGuard® application and specification requirements, and guarantee procedures are followed. Manufacturer's specifications or instructions unique to this project shall supersede printed manufacturer's literature or specification manuals. If referenced manufacturer's specifications and industry standards are in conflict, the more restrictive and higher quality shall govern.

Compliance with project warranty requirements not included in GAF's standard published guarantee requires review and written approval by a GAF Contractor Services Manager.

EverGuard® PVC Roofing Systems Specification P-MA-N-I-60shall consist of a thermoplastic single ply roof system, which includes the following:

- Insulation: EnergyGuard™ PolyIso Roof Insulation. Thickness and "LTTR" value as specified.
- Insulation: EnergyGuard™ Tapered Foam Roof Insulation. Thickness and "R" value as specified.
- Membrane: EverGuard® PVC 60, smooth reinforced PVC thermoplastic co-polymer membrane. Meets or exceeds the requirements of ASTM D-4434.
- Flashing Membrane: EverGuard® PVC 60, smooth reinforced PVC thermoplastic co-polymer membrane. Meets or exceeds the requirements of ASTM D-4434.
- Fasteners: BMCA Drill-Tec Fastners. Type and size as specified.
- Accessories: EverGuard® Accessories, where applicable.

GAFMC listing determinations require full roofing system and roof deck review by a GAF Technical Services Manager.

For further information on EverGuard® requirements, recommendations, application techniques or code approvals, refer to the latest edition of the *EverGuard® Application and Specification Manual* or call the technical services hotline at (800)-ROOF-411.

ATTACHMENT 3

Comparison of Specified Materials and Proposed Substitution

FILE NO: 20080307-034 PRINT DATE: 3/7/2008

Competitive information listed below is referenced from information published in the project specification manual.

Section: 07540 Part 02
Roof Insulation

EnergyGuard™ PolyIso Roof Insulation:

1. Made of organic/glass facers bonded to a core of isocyanurate foam.
2. Meets the physical property requirements of Federal Specification HH-I-1972/Gen. ASTM C 1289 and CCMC 12786-R.
3. Listed by Underwriter's Laboratories (UL) for use under Class A, B or C Roof Covering.
4. Factory Mutual Research Corporation (FMRC) Approved for use as approved insulation in FMRC constructions subject to listings in Approval Guide.
5. Total thickness and "LTTR" value, as specified.
6. Canadian CGSB Standard 51.26-M86; meets or exceeds building code sections of: BOCA, ICBO, SBCCI

Note: Environmentally safe - Does not contain any Class 1 (ODS) ozone depleting substance.

Section: 07540 Part 02
Tapered Roof Insulation

EnergyGuard™ Tapered Foam Roof Insulation:

1. Made of organic/glass facers bonded to a core of isocyanurate foam.
2. Meets the physical property requirements of Federal Specification HH-I-1972/Gen. ASTM C 1289 and CCMC 12786-R.
3. Listed by Underwriter's Laboratories (UL) for use under Class A, B or C Roof Covering.
4. Factory Mutual Research Corporation (FMRC) Approved for use as approved insulation in FMRC constructions subject to listings in Approval Guide.
5. Available tapers, 1/8" per foot and 1/4" per foot. Total thickness and "R" value, as specified.
6. Canadian CGSB Standard 51.26-M86; meets or exceeds building code sections of: BOCA, ICBO, SBCCI

Note: Environmentally safe - Does not contain any Class 1 (ODS) ozone depleting substance.

Section: 07540 Part 02
Roof Membrane

EverGuard® PVC 60

1. 60 mil single-ply reinforced PVC thermoplastic co-polymer membrane with smooth backing
2. Nominal size and weight: 600 square feet per roll; 230 lb (104.33 kg).
3. Thickness: 60 mil (nominal)
4. Physical properties and Test Method:
   Breaking Strength: 320 lbs x 280 lbs (ASTM D 751);
   Seam Strength: >95% membrane failure (ASTM D 638);
   Tear Strength: 70 lbs x 80 lbs (ASTM D 751);
   Cold Brittleness: Pass @ -40 F (ASTM D 2137);
   Ozone Resistance: No effect @ 7X mag (ASTM D 1149);
   Accelerated Weathering: No visible deterioration @ 7X mag (ASTM G 53);
   Dimensional Change: +/- 0.5% (ASTM D 1204)
5. Membrane Color: White
6. ENERGYSTAR® registered

Section: 07540 Part 02
Flashing Membrane

EverGuard® PVC 60

1. 60 mil single-ply reinforced PVC thermoplastic co-polymer membrane with smooth backing
2. Nominal size and weight: 600 square feet per roll; 230 lb (104.33 kg).
3. Thickness: 60 mil (nominal)
4. Physical properties and Test Method:
   Breaking Strength: 320 lbs x 280 lbs (ASTM D 751);
   Seam Strength: >95% membrane failure (ASTM D 638);
   Tear Strength: 70 lbs x 80 lbs (ASTM D 751);
   Cold Brittleness: Pass @ -40 F (ASTM D 2137);
   Ozone Resistance: No effect @ 7X mag (ASTM D 1149);
   Accelerated Weathering: No visible deterioration @ 7X mag (ASTM G 53);
   Dimensional Change: +/- 0.5% (ASTM D 1204)
5. Membrane Color: White
6. ENERGYSTAR® registered

Section: 07540 Part 02

Fasteners

Drill-Tec™:

1. Mechanical Fasteners designed to attach roofing and insulation to a variety of substrates.
2. For FM compliance, refer to Factory Mutual Approval Guide and Factory Mutual Approval Reports.

Section: 07540 Part 02

Accessories

EverGuard® PVC Accessories:
Pre-molded PVC membrane for vents, corners and drains. Heat welds directly to roofing membrane. Required in flashing details for all EverGuard® PVC Roofing Systems. Part of EverGuard® guarantee.

EverGuard® PVC Prefabricated Expansion Joint Covers:
Made of 0.040" thick reinforced PVC membrane with foam supported bellows, heat welds directly to roofing membrane

EverGuard® Metal:
PVC coated metal consists of 25 gauge steel with 0.020" thick PVC based film. Required for fabrication into metal profiles that PVC membrane is heat welded directly to.

Walkway Protection:
EverGuard® PVC Walkway Pads and EverGuard® PVC Walkway Rolls. Made of 1/8" thick extruded and embossed PVC Plus pads and rolls. Unique herringbone traction surface in either safety yellow or gray color, by EverGuard® Roofing Systems

---

SUBSTITUTION REQUEST
(After the Bidding Phase)

Project: Hurst Center for Life Long Learning

To: MHTN Architects

Re:

Substitution Request Number:

From: J.R. Jones & Assoc

Date: 3/10/08

A/E Project Number:

Contract For:

Specification Title: Toilet Compartments

Section: 10155 Page: 1

Description: overhead braced

Article/Paragraph: 2.1A

Proposed Substitution: Hadrian toilet compartments

Manufacturer: Hadrian Address: Mentor, OH Phone: 440-942-9118

Trade Name: overhead braced Model No.: powder coated metal

Installer: Pioneer Specialties Address: Phone:

Robert I Merrill

History: ☐ New product ☐ 2-5 years old ☐ 5-10 yrs old ☒ More than 10 years old

Differences between proposed substitution and specified product: Hadrian is widely used in the area

☒ Point-by-point comparative data attached - REQUIRED BY A/E

Reason for not providing specified item: So that our Salt Lake distributors can bid on the project

Similar Installation:

Project: See attached Architect:

Address: Owner:

Date Installed:

Proposed substitution affects other parts of Work: ☒ No ☐ Yes explain

Savings to Owner for accepting substitution: Hadrian is stocked in SLC ($)

Proposed substitution changes Contract Time: ☐ No ☐ Yes [Add] [Deduct] days.

many colors ship in 2 days

Supporting Data Attached: ☐ Drawings ☒ Product Data ☐ Samples ☐ Tests ☐ Reports ☐

Copyright 1996, Construction Specifications Institute, 601 Madison Street, Alexandria, VA 22314-1791

September 1996
CSI Form 13.1A

SUBSTITUTION REQUEST
(Continued)

The Undersigned certifies:

- Proposed substitution has been fully investigated and determined to be equal or superior in all respects to specified product.
- Same warranty will be furnished for proposed substitution as for specified product.
- Same maintenance service and source of replacement parts, as applicable, is available.
- Proposed substitution will have no adverse effect on other trades and will not affect or delay progress schedule.
- Cost data as stated above is complete. Claims for additional costs related to accepted substitution which may subsequently become apparent are to be waived.
- Proposed substitution does not affect dimensions and functional clearances.
- Payment will be made for changes to building design, including A/E design, detailing, and construction costs caused by the substitution.
- Coordination, installation, and changes in the Work as necessary for accepted substitution will be complete in all respects.

Submitted by:

Signed by: Bonnie Jones, CDT

Firm: J.R. Jones & Assoc

Address: 19054 E Costilla Pl
Centennial, CO 80016

Telephone: 303-699-7863

Attachments:

A/E's REVIEW AND ACTION

- [x] Substitution approved - Make submittals in accordance with Specification Section 01330.
- [ ] Substitution approved as noted - Make submittals in accordance with Specification Section 01330.
- [ ] Substitution rejected - Use specified materials.
- [ ] Substitution Request received too late - Use specified materials.

Signed by: Angelica M. Pavoni Date: 3/17/08

Additional Comments: ☐ Contractor ☐ Subcontractor ☐ Supplier ☐ Manufacturer ☐ A/E ☐

Copyright 1996, Construction Specifications Institute,
601 Madison Street, Alexandria, VA 22314-1791

Addendum No. 2 Issued: 3/25/08

Addendum No. Two
for the
WSU Hurst Center for Lifelong Learning
MHTN Project No. 2007556.00
DFCM Project No. 07110810

All Contractors submitting proposals on the above captioned project shall be governed by the following addendum, changes and explanations to the bidding documents and shall submit their bids in accordance therewith:

Changes to The Project Manual:

A2.1 Specification Section 02810 – IRRIGATION SYSTEMS add the following to Article 1.5 paragraph B:
"7. Pressure Regulators"
"8. Flow Sensor / Decoder"

A2.2 Specification Section 02810 – IRRIGATION SYSTEMS add the following to Article 1.5 paragraph D:
"7. Pressure Regulators"
"8. Flow Sensor / Decoder"

A2.3 Specification Section 02810 – IRRIGATION SYSTEMS revise item 4 in Article 1.5 paragraph D to read "Controllers and Radio / Central Control Equipment."

A2.4 Specification Section 02900 – LANDSCAPE PLANTING revise item 3.2 Header to read "Installation of Topsoil" Delete reference to light weight soil.

A2.5

A2.6 Specification Section 07180 – TRAFFIC COATINGS add the following to Article 2.2 paragraph A:
"7. American Polymers" as an available manufacturer."

A2.7 Specification Section 06160 – SHEATHING. Replace existing section with new section attached.

A2.8 Specification Section 07540 – THERMOPLASTIC MEMBRANE ROOF –

- Add the following to new paragraph to Article 1.6 Quality Assurance:
  " G. Manufacturers Qualifications: A qualified manufacturer that is UL listed and FM Approvals approved for membrane roofing system identical to that used for this Project."
- Revise Article 2.2 paragraph A to read:
  "Fabric-Reinforced ASTM D 4434 PVC Sheet: Uniform, flexible sheet reinforced internally and as follows:"
- Add the following manufacturers to Article 2.2 paragraph A item 1:
  "GAF Materials Corporation ; Everguard and Johns Manville".

A2.9 Specification Section 07720 – ROOF ACCESSORIES – Article 2.1 Paragraph A add the following manufacturer:
"f. Elmdor"

A2.10 Specification Section 08211 –WOOD DOORS– Article 2.1 Paragraph A item 1 add the following manufacturer:
"f. Oshkosh"

A2.11 Specification Section 08311- ACCESS DOORS – Article 2.1 Paragraph A add the following manufacturer:

"6. Elmdor"

A2.12 Specification Section 08710 – DOOR HARDWARE – add the following items to hardware group 12.1:

" 1	***SET***	***SEALS***	***155S***	***AL***	***NGP***
1	***EA***	***DOOR BOTTOM***	***220NA***	***AL***	***NGP***
1	***EA***	***THRESHOLD***	***513***	***AL***	***NGP"***

A2.13 Specification Section 09511 – ACOUSTICAL PANEL CEILINGS revise the following items in Article 3.5 paragraph A.

- Item 2. replace with the following:
  "2. Classification: Panels fitting ASTM E 1264 for Type III, mineral base with painted finish; Form 2, wet formed."
- Item 3. replace with the following:
  " 3. Pattern; Panels fitting ASTM E 1264 pattern designation CD (Perforated with small holes).
- Item 5. replace with the following:
  " 5. Light Reflectance Coefficient: Not less than LR 0.80."
- Item 6. replace with the following:
  " 6. Noise Reduction Coefficient: NRC 0.55."
- Delete Item 10 and item 11.

A2.14 Specification Section 09671 – RESINOUS FLOORING:

- Replace Article 1.2 SUMMARY with the following:
  "A. This Section includes the following:
  1. ***High-performance epoxy resin flooring with broadcast granule finish, for mechanical areas***
  2. ***OR: Two-component urethane elastomeric waterproof membrane flooring with broadcast granule finish or rubber latex polymer, for mechanical areas.***
  3. ***Waterproofing primer"***

- Replace Article 2.1 paragraph A with the following:
  "A. Manufacturer/Product: Subject to compliance with requirements, available manufacturers offering products that may be incorporated in the Work include, but are not limited to, the following:
  1. ***Flooring: Provide one of the following:***
     a. ***General Polymers "EPO-FLEX MER 1"***
     b. ***Stonehard "Stoneshield HRI"***
     c. ***Stonehard"Soneshield MRT"***
     d. ***Crossfield Products Corp.:"Dex-O-Tex; M-E Floor***
  2. ***Top Coat: Provide one of the following:***
     a. ***General Polymers No. 3744***
     b. ***Stonehard Stoneshield Sealer."***

A2.15 Specification Section 09681 – CARPET TILE – Replace section with new section 09681 attached.

A2.16 Specification Section 10100 – VISUAL DISPLAY BOARDS – Article 2.1 Paragraph A item 1 add the following manufacturer:

"g. Newline Products, Inc."

A2.17 Specification Section 10155 – TOILET COMPARTMENTS– Article 2.1 Paragraph A add the following manufacturers:

"8. Hadrian Manufacturing Inc.
9. Flush Metal Inc."

A2.18 Specification Section 10801 – TOILET AND BATH ACCESSORIES– Article 2.1 Paragraph A item 1 add the following manufacturers:
"g. American Accessories, Inc."

A2.19 SECTION 15500 - Paragraph 3.2, H shall be changed to the following: Install dielectric nipples on all connections of dissimilar metals.

A2.20 SECTION 15510 - Paragraph 3.3, L shall be changed to the following: Install dielectric nipples on all connections of dissimilar metals.

A2.21 SECTION 15684 - Provide all special features except for "3. Temperature Reset" in paragraph 2.1, M.

A2.22 SECTION 15860 - Modify Paragraph 1.2, A, 5 to read the following: "5. The fans shall be wired for single point connect except for the lights and outlets (120/1/60 circuit). This division shall provide VFD's which shall be factory wired as well.

A2.23 SECTION 15975
1. Add the following to 4.4 Air Cooled Chiller Sequence: During spring and fall operation (chiller is drained during the winter) the chilled water pump shall operate as a freeze protection pump when temperature drops below 40°F.
2. Exhaust Fan EF-10 serving the MDF & IDF Rooms shall be controlled by a thermostat during building unoccupied mode. The exhaust fan shall operate If any of the three rooms get above 80°F.

Changes to the Drawings:

A2.24 Sheet CD002: showed a 12" more or less concrete conduit and several irrigation lines for demolition per attached SK-1 and SK-2.

A2.25 Sheet CU301: Showed a new valve on an irrigation line, adjust grade for an irrigation line, reworked irrigation line and drain line, per attached SK-3.

A2.26 Sheet LP101
Revise all references that read "ARC MAS 2" plugs" to read "ARC MAS 1 gal."

A2.27 Sheet LP501
Add the following to the Plant Schedule: ARC MAS Arctostaphylos uva-ursi Massachusetts`
- -Massachusetts Manzanita 1 gal. @ 18" oc.LP102

A2.28 Sheet SF101-
- The foundation walls have been revised at the Hurst Center/Alumni Center Connector between grids 0 and 3.

A2.29 Replace all Structural drawings with attached sheets SG001, SG601, SB101, SB501, SF101, SF102, SF102.A, SF103, SF201, SF301, SF501 and SF502. No technical revisions have been made to the sheets (except as noted herein), only new pdf files have been created due to plotting inconsistencies, as some of the detail call-outs were not legible.

A2.30 Sheet AS101 - Accessible parking stalls on north side of building are to match civil drawing CS101 for correct configuration. Each stall shall have a handicapped parking sign, to state "Van Accessible" one each at the east and north sides.

A2.31 Sheet AS501 – Add the following General Note: "1. All handrails shall return to wall, guardrail, or walking surface, typical."

A2.32 Sheets AE001and AE002 – All rated door locations are currently not indicated on the code plans. Refer to Floor Plans and Door Schedule for locations of all rated door assemblies.

A2.33 Sheet AE101:

- Refer to sketch AD02-A01 for revisions to door locations 102 and 102A.
- Door 115.4 has been changed to a 6'-0" wide opening; revise masonry opening dimension on plans to 6'-8".

A2.34 Sheet AE103:

- Low canopy roof west of grid line 3 between gridlines B and E delete south set of roof drains. Delete center ridge and relocate high point of tapered insulation to south parapet wall. High point of tapered insulation shall be 112'-4". Note this area only shall be sloped a min of ¼" per foot.
- Add the following general note: "9. Roof shall be UL Test 790, Class A roof assembly."

A2.35 Sheet AC101:

- Refer to sketch AD02-A02 for revisions to ceilings at doors 102 and 102A.
- Add a stepped soffit (similar to detail B5/AE551) to elevation 9'-4"along the west wall of Assembly #115, to align with the east faces of the column enclosures, to enclose a roof drain pipe. Frame the soffit to allow full depth for the pipe to slope to the north.
- Add a dropped soffit (detail B5/AE551) to elevation 8'-2" at the north wall of Men's Toilet Room #117 above the lavatories to conceal duct work.
-

A2.36 Sheet AE201 –

- D1 North Elevation Top of foundation wall at east portion of the Connecting Walkway 100D shall be 101'-4".
- Top of foundation at north side of stair 1(199A) shall be 100'-8" between grid lines 3 and 4.

A2.37 Sheet AE202 – A1 West Elevation - top of foundation shall be 100'-8" west wall of stair 1 (199A) approximate grid locations F to F.9.

A2.38 Sheet AE310 Wall Section A2:

- Delete note ¾" PLYWOOD SHEATHING" and replace with "STANDING SEAM METAL ROOF OVER WATERPROOF UNDERLAYMENT OVER ½" GLASS MAT. ROOF SHEATHING OVER METAL DECK."

A2.39 Sheet AE314 Wall Section A1:

- Delete note "3/4" PLYWOOD SHEATHING OVER STEEL ROOF DECK" and replace with "STANDING SEAM METAL ROOF OVER WATERPROOF UNDERLAYMENT OVER ½" GLASS MAT. ROOF SHEATHING OVER METAL DECK."
- Provide continuous soffit vent on all sides of clerestory south of grid line H.

A2.40 Sheet AE401 – replace with new sheet AE401.

A2.41 Sheet AE402 – replace with new sheet AE402.

A2.42 Sheet AE530 – add new detail A5/AE530 see sketch AD02-A07.

A2.43 Sheet AE461: Refer to sketch AD02-A03 for revisions to floor materials at doors 102 and 102A.

A2.44 Sheet AE502:

- Detail D3/AE502 – refer to sketch AD02-A04 for revisions to detail.

A2.45 Sheet AE520: Replace sheet with new AE520. Delete detail D4. Revised details D2, C2, B1, B2, A1, A2 and A3.

A2.46 Sheet AE615: Replace sheet with new AE615.

A2.47 Sheet AE621: Add the following note in the remarks column for room 213: "PROVIDE INTEGRAL RESINOUS FLOORING COVE BASE 4" HIGH MINIMUM AT WALLS AND AT MECHANICAL EQUIPMENT BASES."

A2.48 Sheet AE631:
- Window type 16 – refer to sketch AD02-A05 for revisions to window type.
- Window type 17 – refer to sketch AD02-A06 for revisions to window type.

A2.49 Sheet MH601:
- Pump Schedule: P-5: Change electrical requirements to 277/1/60.

A2.50 Sheet MH101: Modify supply ductwork serving the Connecting walkway 100D and the exhaust ductwork serving Men's Toilet Room 117 as indicated on attached drawing MSD-3.

A2.51 Sheet MH601: Pump Schedule: P-5: Change electrical requirements to 277/1/60.

A2.52 Sheet MH602
- Air Handler Schedule: See attached drawing MSD-02 for a schedule of sound data.

A2.53 Sheet PP101
1. Reroute roof drains at Connecting Walkway 100D as indicated on the attached drawing PSD-1.
2. Reroute primary roof drain line at grids D & 2.7 to location shown on the attached drawing PSD-1
3. Delete roof drains RD-1 & RDO-1 at grids C & 2.7.
4. Refer to specification section 15778 for heat trace requirements on roof drain piping

A2.54 MECHNICAL PRIOR APPROVALS

The following manufacturers, trade names and products are allowed to bid on a name brand only basis with the provision that they completely satisfy all and every requirement of the drawings, specifications and all addenda shall conform to the design, quality and standards specified, established and required for the complete and satisfactory installation and performance of the building and all its respective parts.

Item	Manufacturer	Comments
Custom Air-Handling Unit	Energy Labs	No
Condensing Boiler	Lochinvar	No
Roof Exhaust Fans	ACME	Yes
Inline Exhaust Fans	ACME	Yes
Gravity Roof Hoods	ACME	Yes
Gravity Roof Hoods	Air-Rite Manufacturing	Yes
Louvered Penthouse Units	Air-Rite Manufacturing	Yes
Vibration Isolation & Seismic Restraint	Vibration Eliminator Co., Inc.	No
DHW Espansion Tank	Taco	Yes
Expansion Tanks	Taco	Yes
Condensing Boiler	Raypak	No
Louvers & Vents	Leader Industries, Wonder Metals	Yes
In-line Centrifugal Fans	Penn Barry	Yes
Custom Air Handling Unit	Scott Springfield Mfg.	No
Breechings, Chimneys & Stacks	Heatfab, Van Packer	Yes
Chiller	McQuay	Yes

Hydronic Heating Panels	Aerotech	Yes
Computer Room AC units	Compu-Aire	Yes
Backdraft Dampers	Greenheck	Yes
Manual Volume Dampers	Greenheck	Yes
Fire/Smoke Dampers	Greenheck	Yes
Smoke Dampers	Greenheck	Yes
Fire Dampers	Greenheck	Yes
Duct Access Doors	Kees, Greenheck	Yes
Flexible Duct	Hart & Cooley	Yes
High Efficiency Takeoffs	Clifco, Hercules	Yes
Unit Heaters	Beacon Morris	Yes
Heating Terminal Unit	Rittling	Yes
Louvers	Pottorff	Yes
Storage Tank	Laars, Hanson Tanks	Yes

A2.55 Sheet EE-003

1. Power Single Line Diagram
   - Change feeder conduit and conductors to Panel BP from 4#4/0 THHN, 1#4 THHN GND, 2" C. to a 4#3 THHN, 1#8 THHN, 1 ¼" C.
   - Change 45 KVA transformer tied to panel 1P1 to 75 KVA. Change primary feeder to transformer from 3#6 THHN, 1#8 THHN GND, 1" C. to 3#2 THHN, 1#6 THHN GND, 1 ¼" C.
   - Change Feeder conduit and conductors to Panel 1P2 from 4#1/0 THHN, 1#6 THHN GND, 2" C. to 4#3/0 THHN, 1#4 THHN GND, 2" C.
   - Change 45 KVA transformer tied to Panel 2P1 to 75 KVA. Change primary feeder to transformer from 3#6 THHN, 1#8 THHN GND, 3/4" C. to 3#2 THHN, 1#6 THHN GND, 1 ¼" C. Change secondary feeder from 4#1/0 THHN, 1#6 THHN GND, 2" C. to 4#3/0 THHN, 1#4 THHN GND in 2" C.
   - Change feeder conduit and conductors for panel 2P2 from 4#1/0 THHN, 1#6 THHN GND, 2" C. to 4#3/0 THHN, 1#4 THHN GND, 2" C.
   - Change 75 KVA pad mount medium voltage transformer to 750 KVA.
   - Furnish and install a 225 amp. Panel 2P3 on the 2nd floor next to Panel 2P2 with forty two (42) 1-pole, 20 amp, spare circuit breakers. Tie panel 2P3 to sub feed lugs in panel 2P2. Utilize 4#3/0 THHN, 1#4 THHN GND in 2" conduit.

A2.56 Sheet EE-004:

1. Panel schedules:
   a. Control transformer for flush toilets in Women's Toilet Room 006 to be tied to circuit # 7 in panel BP.
   b. Control transformer for heating terminal unit at Stair 099 tied to circuit # 9 in panel BP.
   c. Alternate #1 Patio duplex outlet to be tied to circuit # 16 in panel 2P2.
   d. Control transformer for flush toilets in Women's Toilet Room 211 to be tied to circuit # 26 in panel 2P2.
   e. Control transformer for flush toilets in Men's Toilet Room 219 to be tied to circuit # 24 in panel 2P2.
   f. Water heater in Unisex Toilet Room 107 to be tied to circuit # 40 in panel 1P2.
   g. Exhaust Fan DEF-10 on roof to be tied to circuit # 28 in panel 2P2.
   h. Tie Pump # 5 to circuit # 13 in panel 2LP.
   i. Tie Heat Trace to circuit # 42 in panel 2P2.
   j. Furnish and install a 100 amp., 3-pole circuit breaker in panel 1P1 to provide power to panel BP.
   k. Delete 225 amp., 3-pole circuit breaker for panel 1P2. Panel 1P2 to be tied to sub feed lugs. Provide three (3) 20 amp., 1-pole circuit breakers as spares.
   l. Change main circuit breaker in panel 1P1 from 150 amp. to 225 amp.

m. In Panel 1LP, change 70 amp., 3-pole circuit breaker for step down transformer to 125 amp., 3-pole circuit breaker.
n. Main lugs in Panel 1LP to be 150 amp. minimum.
o. Main lugs in Panel 2LP to be 150 amp. minimum.
p. Change main breaker for Panel 2P1 from 150 amp. to 225 amp.
q. In Panel 2P1, change the 225 amp., 3-pole circuit breaker for Panel 2P2 to three (3) 1-pole, spare circuit breakers. Tie panel 2P2 to main lugs of Panel 2P1.

2. Mechanical Equipment Schedule:
   a. Add exhaust Fans 9 and 10. These exhaust fans are identical to exhaust fan #1 at 1/6th HP.
   b. Add pump #5 to equipment schedule. Pump #5 is ¾ HP, 277 volt.
   c. Starter and disconnect is provided with Chiller CH-1.

A2.57 Sheet ES-100:

1. Site Plan
   a. Concrete encase with red die around 6" conduit for medium voltage cable. Concrete encase a minimum of 3" around the entire conduit. Where the conduit is bored does not need to be concrete incased. The entire length of conduit to be buried 60" in lieu of 48"
   b. There are two (2) 2" existing conduits which run from existing communication manhole located in the north west of the alumni building to the existing credit union (west of the alumni building). Contractor is to run new conduit under the new driveway/parking lot west of alumni building. Intercept the existing (2) 2" conduit and bury them under the new parking/driveway. Coordinate this work with general contractor.

A2.58 Sheet EP-100

1. Lower Level Power Plan:
   a. Tie two (2) Fire Smoke Damper Connections to IT Computer/Server Vault 007 to circuit # 4 in panel EP. Coordinate with mechanical contractor for exact location.
   b. Provide 120-volt power to control transformer above ceiling for flush toilets in Women's Toilet Room 006. Tie control transformer to circuit # 7 in panel BP.
   c. Provide 120-volt power to control transformer above ceiling for heating terminal unit at Stair 2 099. Tie control transformer to circuit # 9 in panel BP.

A2.59 Sheet EP-101

1. Level One Power Plan:
   a. Tie Water Heater WH-1 for Unisex Toilet Room 107 to circuit # 40 in panel 1P2. Coordinate with mechanical contractor for exact location.

A2.60 Sheet EP-102

1. Level Two Power Plan:
   a. Exhaust fans DEF-5 and DEF-9 are located on the roof. See mechanical drawings for exact locations. Provide WP boxes, thermal switches, etc.
   b. Move Connection for Fire Smoke Damper in Main mechanical chase from the west wall to the north wall.
   c. Tie fire smoke damper just outside the door of Air Handler Room 213 to circuit # 4 in panel EP. Coordinate with mechanical contractor for exact location.
   d. Under Alternate #1, Furnish and install one (1) weatherproof GFI duplex outlet on the south wall of patio area. Tie outlet to circuit # 16 in panel 2P2.
   e. Provide 120-volt power to control transformer above ceiling in Women's Toilet Room 211 for flush toilets. Tie control transformer to circuit # 26 in panel 2P2.
   f. Provide 120-volt power to control transformer above ceiling in Men's Toilet Room 219 for flush toilets. Tie control transformer to circuit # 24 in panel 2P2.
   g. Tie Pump #5 to circuit # 13 in panel 2LP. Run 3#12 THHN, 1#12 THHN ground in 3/4 "

conduit to Pump # 5.

h. Tie Heat Trace on roof above vestibule 100A to circuit # 42 in panel 2P2. Heat trace and temperature sensor is provided by mechanical contractor.
i. Tie the outlets for LCD in conference room 202C and 202K to circuit # 9 in panel 2P2. Leave circuit # 11 and 13 in panel 2P2 as spare circuit breakers.
j. Tie DEF-1 and DEF-2 to one circuit (2P2-10). Leave circuit 12 as a spare.
k. Tie DEF-5 and DEF-6 to one circuit (2P2-30). Leave circuit 32 as a spare.

A2.61 Sheet EP-103

1. Roof Power Plan:
   a. Exhaust Fans DEF-5 and DEF-9 are located on the roof. See mechanical drawings for exact locations of exhaust fans.
   b. Exhaust Fan DEF-10 on roof to be tied to circuit # 28 in panel 2P2. See mechanical drawings for exact locations of exhaust fan.

2. Roof Power Plan:
   a. Exhaust Fans DEF-5 and DEF-9 are located on the roof. See mechanical drawings for exact locations of exhaust fans.
   b. Exhaust Fan DEF-10 on roof to be tied to circuit # 28 in panel 2P2. See mechanical drawings for exact locations of exhaust fans.

A2.62 Sheet EL-102

1. Level Two Lighting Plan:
   a. Under Alternate #1, Furnish and install two (2) LED step light fixtures T-21 in patio area. Install one (1) step light on the north wall and one (1) on the west wall. Tie step light fixtures to unswitched lighting circuit 2LP-1. Provide a light switch by the door opening into the patio to control the step lights.
   b. Change fixture type in IDF Room 212 from T-2 to T-1.

A2.63 Sheet EY-100

1. Lower Level Systems Plan:
   a. Furnish and install horn/strobes above each side of the door to IT Computer/Server Vault 007. Tie the horn/strobes to the FM-200 panel so that when FM-200 is released horn/strobes are to be activated.
   b. Furnish and install a pull station next to FM-200 panel. Tie the pull station to the FM-200 panel so that when the pull station is activated, FM-200 is released.

A2.64 Approved Manufacturers

The following lighting manufacturers are approved to bid. Approval of the equipment from catalog information indicates that the brand name and general characteristics are acceptable to the Engineer. Any conflict arising from use of the substituted equipment shall be the responsibility of the Supplier who shall bear all costs required to make the equipment comply with the intent of plans and specifications.

Fixture Type	Approved Manufacturers
T-3	Pinnacle
T-4	Lightolier
T-5	Gotham
T-7	Lightolier
T-8	Pinnacle
T-9	SPI
T-11	Lightolier
T-12	Lightolier
T-13	Visionaire

T-16	Lightolier
T-18	Lithonia, InVUE, Visionaire
T-19	Exceline
T-20	Visa, Lightolier
T-21	Lumux, Elcast, Erco
T-22	MP Lighting
T-23	Gammalux

Transient Voltage Suppression

1. Siemens is an approved manufacturer.

Attachments:
Specification Section 06160 – SHEATHING
Specification Section 09681 – CARPET TILE
Architectural sketches AD02-A01 through AD02-A07
Mechanical sketches MSD-02, MSD -03 & PSD-01
Structural sheets: SG001, SG601, SB101, CB501, SF101, SF102, SF102.A, SF103, SF201, SF301, SF501 and SF502
Architectural sheets: AE401, AE402, AE520 and AE615

End of Addendum No. 2

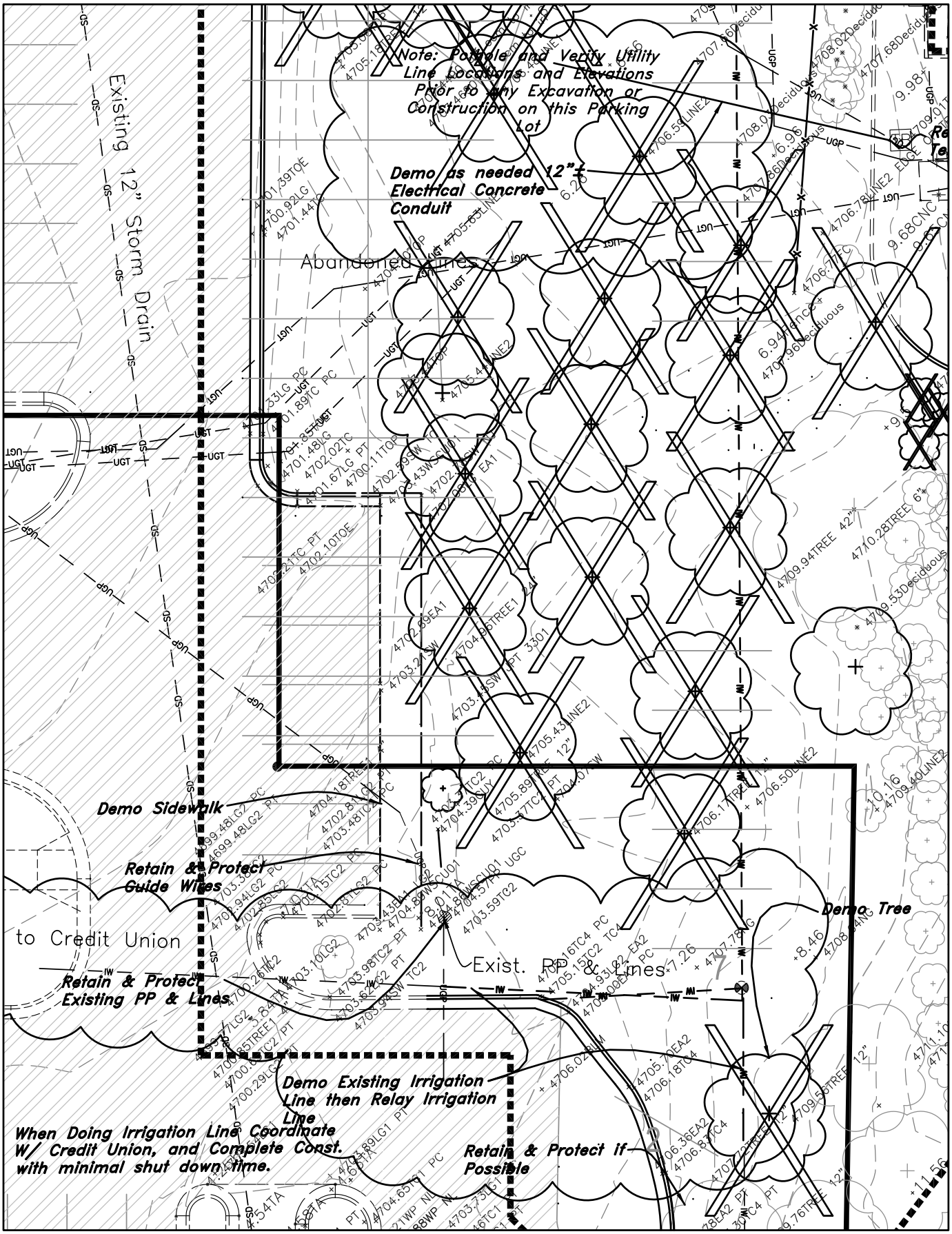

MHTN ARCHITECTS, INC.
420 East South Temple
Suite 100
Salt Lake City, Utah 84111
Telephone (801) 595-6700
Telefax (801) 595-6717
www.mhtn.com

Project Name: WSU HURST CENTER FOR LIFELONG LEARNING

Project No: 2007556.00/07110810

Date: 24 March 2008

Sheet No.

CD002

Sheet Reference

SK-1

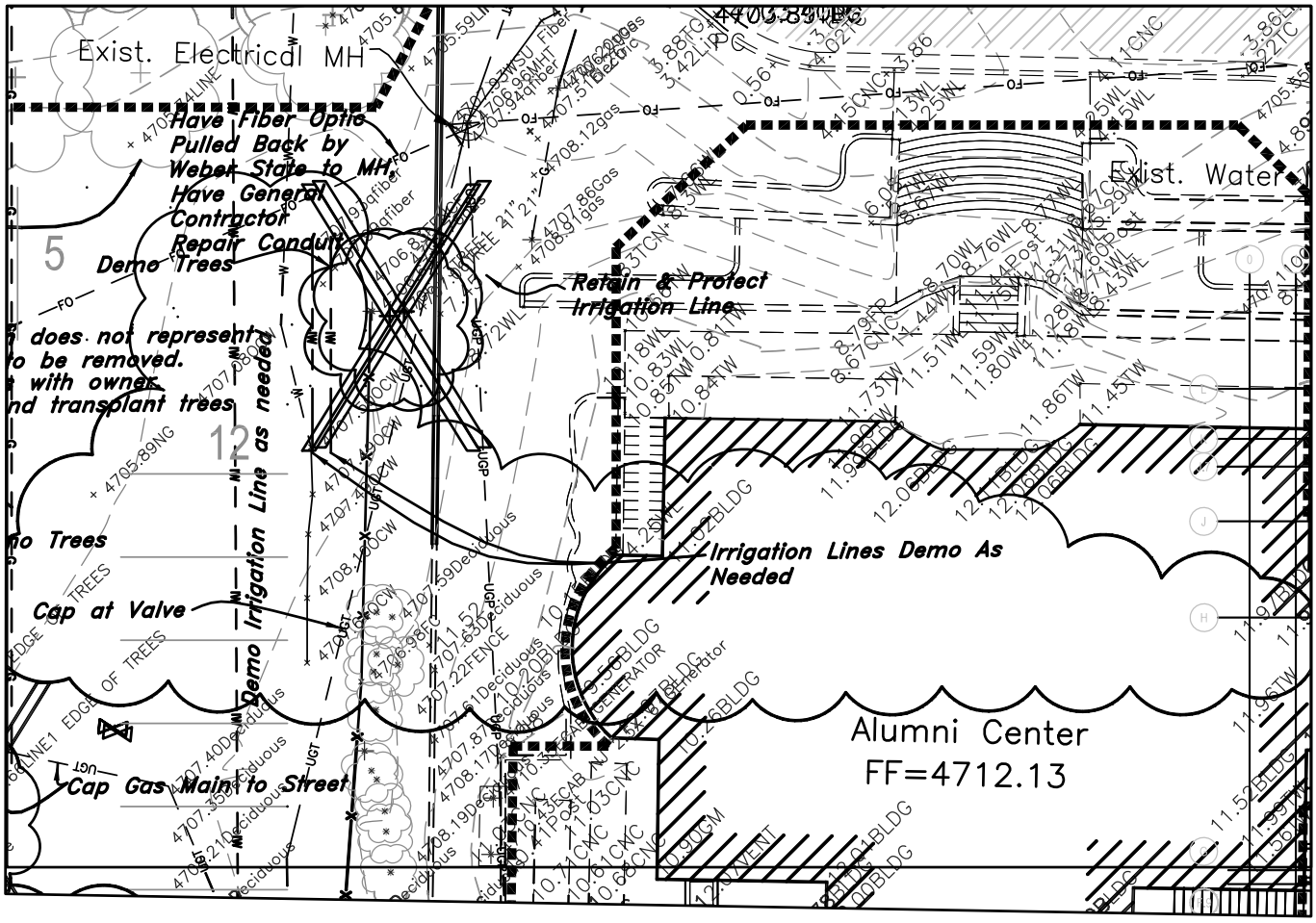

MHTN ARCHITECTS, INC.
420 East South Temple
Suite 100
Salt Lake City, Utah 84111
Telephone (801) 595-6700
Telefax (801) 595-6717
www.mhtn.com

Project Name: WSU HURST CENTER FOR LIFELONG LEARNING

Project No: 2007556.00/07110810

Date: 24 March 2008

Sheet No.
CD002

Sheet Reference
SK-2

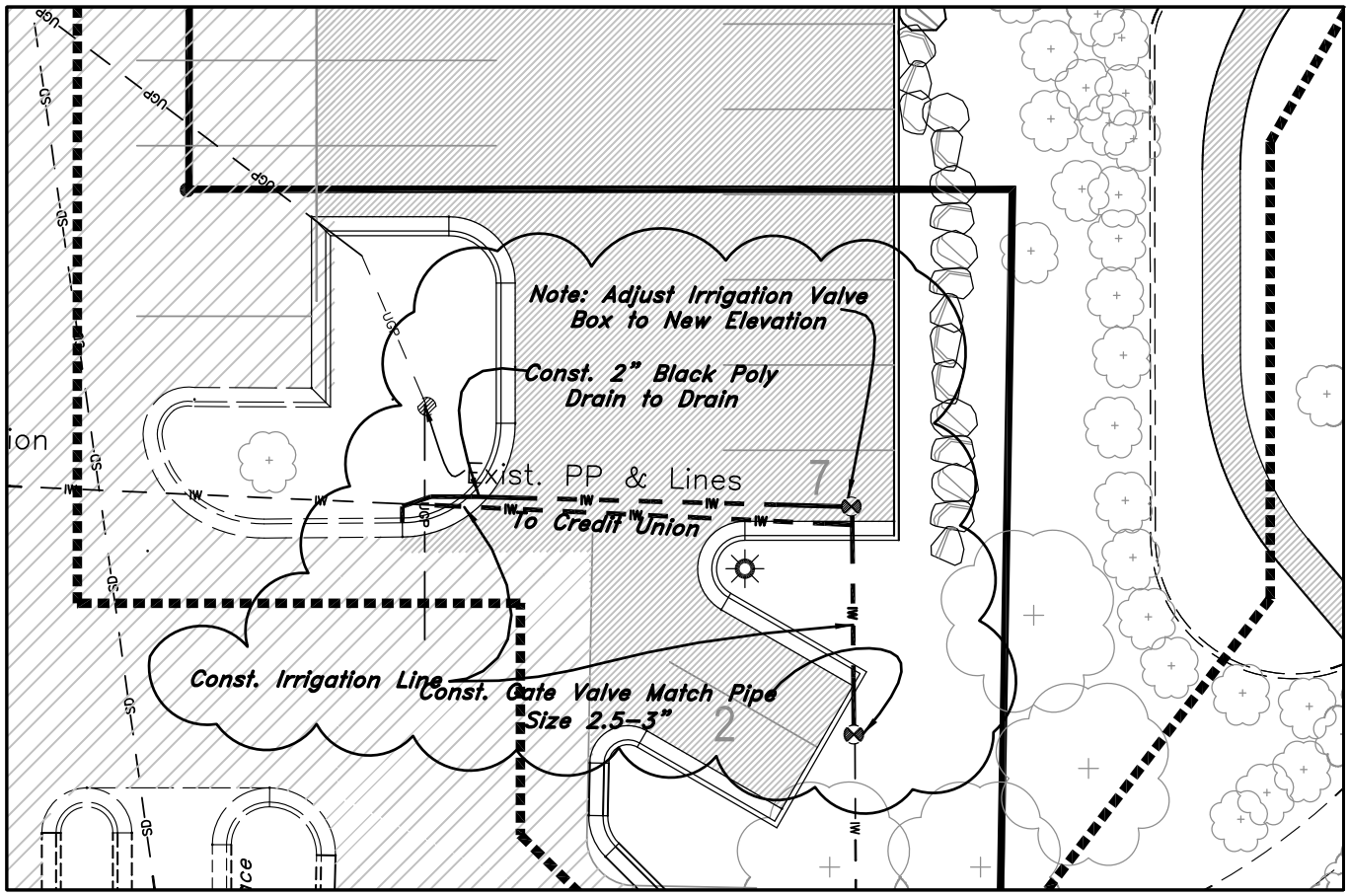

MHTN ARCHITECTS, INC.
420 East South Temple
Suite 100
Salt Lake City, Utah 84111
Telephone (801) 595-6700
Telefax (801) 595-6717
www.mhtn.com

Project Name: WSU HURST CENTER FOR LIFELONG LEARNING

Project No: 2007556.00/07110810

Date: 24 MARCH 2008

Sheet No.
CU301

Sheet Reference
SK-3

STRUCTURAL NOTES

A. GENERAL

1. THE STRUCTURAL NOTES ARE INTENDED TO COMPLEMENT THE PROJECT SPECIFICATIONS WHICH ARE PART OF THE CONSTRUCTION DOCUMENTS. SPECIFIC NOTES AND DETAILS ON THE DRAWINGS SHALL GOVERN OVER THE STRUCTURAL NOTES AND TYPICAL DETAILS.
2. THE ARCHITECTURAL DRAWINGS ARE THE PRIME CONTRACT DRAWINGS. THE STRUCTURAL DRAWINGS ARE SUPPLEMENTARY TO AND MUST BE USED IN CONJUNCTION WITH THE ARCHITECTURAL DRAWINGS AND OTHER CONSULTANTS DRAWINGS. ALL OMISSIONS OR CONFLICTS BETWEEN THE VARIOUS ELEMENTS OF THE WORKING DRAWINGS AND/OR SPECIFICATIONS SHALL BE BROUGHT TO THE ATTENTION OF THE ARCHITECT AND STRUCTURAL ENGINEER BEFORE PROCEEDING WITH ANY WORK INVOLVED. IN CASE OF CONFLICT, FOLLOW THE MOST STRINGENT REQUIREMENT AS DIRECTED BY THE ARCHITECT AT NO ADDITIONAL COST TO THE OWNER.
3. SEE SPECIFICATIONS FOR REQUIRED SUBMITTALS. SUBMITTALS SHALL BE MADE IN A TIMELY MANNER AS INDICATED IN SPECIFICATIONS. REVIEW OF SUBMITTALS BY ARW ENGINEERS IS FOR GENERAL COMPLIANCE ONLY AND IS NOT INTENDED AS APPROVAL. CONTRACTOR IS RESPONSIBLE FOR VERIFYING ALL SIZES, DIMENSIONS, AND ELEVATIONS ON SUBMITTALS AS RELATED TO DESIGN DOCUMENTS. PREPARATION OF SHOP DRAWINGS FOR STRUCTURAL ELEMENTS WILL REQUIRE INFORMATION (I.E. DIMENSIONS, ETC.) FOUND IN THE ARCHITECTURAL, STRUCTURAL, AND OTHER CONSULTANTS DRAWINGS.
4. THE CONTRACTOR SHALL VERIFY ALL CONDITIONS AND DIMENSIONS AT THE SITE. IF ACTUAL CONDITIONS DIFFER FROM THOSE SHOWN ON CONTRACT DOCUMENTS, CONTRACTOR SHALL NOTIFY ARCHITECT PRIOR TO FABRICATION OR CONSTRUCTION OF ANY AFFECTED ELEMENTS.
5. THE CONTRACTOR SHALL COORDINATE AND VERIFY ALL LOCATIONS AND SIZES OF MECHANICAL EQUIPMENT OR OTHER EQUIPMENT BEFORE FABRICATING AND ERECTING STRUCTURAL ELEMENTS. SIZES AND LOCATIONS THAT DIFFER FROM THOSE SHOWN ON THE CONTRACT DOCUMENTS SHALL BE REPORTED TO THE ARCHITECT.
6. THE CONTRACTOR SHALL SUBMIT A WRITTEN REQUEST TO THE ARCHITECT FOR ARCHITECT AND/OR ENGINEER APPROVAL BEFORE PROCEEDING WITH ANY CHANGES, MODIFICATIONS OR SUBSTITUTIONS.
7. OBSERVATION VISITS TO THE SITE BY ARW ENGINEERS FIELD REPRESENTATIVES SHALL NEITHER BE CONSTRUED AS INSPECTION NOR APPROVAL OF CONSTRUCTION.
8. DURING AND AFTER CONSTRUCTION, BUILDER AND/OR OWNER SHALL KEEP LOADS ON STRUCTURE WITHIN THE LIMITS OF DESIGN LOADS AS NOTED IN THESE DOCUMENTS.
9. SUBJECT TO REVIEW AND APPROVAL BY THE ENGINEER, TYPICAL OR SIMILAR DETAILS AND SECTIONS SHALL APPLY WHERE SPECIFIC DETAILS ARE NOT SHOWN. TYPICAL OR SIMILAR DETAILS REFER TO THE CONDITION ADDRESSED AND ARE NOT NECESSARILY DETAILS LABELED "TYPICAL" OR "SIMILAR" IN THE PLANS AND DOCUMENTS.
10. DRAWINGS AND DETAILS HAVE BEEN PREPARED WITH THE INTENT TO VISUALLY REPRESENT INFORMATION PROVIDED IN SCALED FORM; HOWEVER CONTRACTOR/SUPPLIERS SHOULD NOT SCALE PLANS OR DETAILS FOR DIMENSIONAL INFORMATION.
11. THE CONTRACTOR SHALL PROVIDE ADEQUATE TEMPORARY SHORING AND BRACING FOR ALL STRUCTURAL ELEMENTS UNTIL THE ENTIRE STRUCTURAL SYSTEM IS COMPLETED. DESIGN OF ALL SHORING AND BRACING IS BY OTHERS AT NO ADDITIONAL COST TO THE OWNER.
12. ENGINEER SHALL NOT BE RESPONSIBLE FOR ACTIVITIES UNDER CONTROL OF THE CONTRACTOR SUCH AS CONSTRUCTION SITE SAFETY, MEANS, METHODS, AND SEQUENCING OF CONSTRUCTION. ENGINEER SHALL NOT BE RESPONSIBLE FOR FABRICATION, ERECTION AND CONSTRUCTION REQUIREMENTS AS PRESCRIBED BY OSHA OR OTHER REGULATORY AGENCIES REGARDLESS OF INDICATIONS IN THESE DOCUMENTS.

B. SPECIAL INSPECTION

1. SPECIAL INSPECTION SHALL BE PROVIDED BY AN INDEPENDENT AGENCY IN ACCORDANCE WITH IBC 1704 AND AS OUTLINED AND SCHEDULED IN THESE DOCUMENTS. CONTRACTOR SHALL COORDINATE AND COOPERATE WITH REQUIRED INSPECTIONS.
2. ITEMS REQUIRING SPECIAL INSPECTION ARE LISTED IN THE SPECIAL INSPECTION SCHEDULE.

C. BASIS OF DESIGN

1. GOVERNING BUILDING CODE: INTERNATIONAL BUILDING CODE (IBC) 2006
   OCCUPANCY CATEGORY: 3
2. SUSPENDED FLOOR LOADS
   A. LIVE LOAD = 100 PSF AT CORRIDORS AND EXITS, 80 PSF ELSEWHERE
   B. DEAD LOAD = 70 PSF
3. ROOF LOADS
   A. FLAT-ROOF SNOW LOAD, Pf: 35 PSF
      (1) GROUND SNOW LOAD, Pg: 45.2 PSF
      (2) SNOW EXPOSURE FACTOR, Ce: 1.0
      (3) SNOW LOAD IMPORTANCE FACTOR, IS: 1.1
      (4) THERMAL FACTOR, Ct: 1.0
   B. DEAD LOAD = 20 PSF
4. WIND DESIGN:
   A. BASIC WIND SPEED (3 SECOND GUST): 90 MPH
   B. WIND IMPORTANCE FACTOR, IW: 1.15
   C. WIND EXPOSURE: C
   D. COMPONENT AND CLADDING DESIGN WIND PRESSURE SHALL BE AS REQUIRED PER ASCE 7-05.
5. SEISMIC DESIGN:
   A. SEISMIC IMPORTANCE FACTOR, IE: 1.25
   B. SITE CLASS: D
   C. SPECTRAL RESPONSE COEFFICIENTS: SDS = 0.932 , SD1 = 0.584
   D. SEISMIC DESIGN CATEGORY: D
   E. BASIC SEISMIC-FORCE-RESISTING SYSTEM: INTERMEDIATE STEEL MOMENT RESISTING FRAMES.
   F. DESIGN BASE SHEAR: V = Cs * W
   G. SEISMIC RESPONSE COEFFICIENT, CS: 0.259
   H. RESPONSE MODIFICATION FACTOR, R: 4.5
   I. ANALYSIS PROCEDURE: EQUIVALENT LATERAL FORCE .
   J. NONSTRUCTURAL COMPONENTS AND THEIR ATTACHMENT SHALL BE DESIGNED AS REQUIRED PER ASCE 7-05.

D. FOUNDATION

1. DESIGN SOIL PRESSURE: 3000 PSF
2. SOILS REPORT BY: GSH GEOTECHNICAL CONSULTANTS, INC.
   REPORT #: 0149-007-07
   DATED: NOVEMBER 29, 2007 - INCLUDING THE SUPPLEMENT DATED JANUARY 11, 2008
3. SOIL PREPARATION UNDER FOOTINGS AND SLABS-ON-GRADE SHALL BE IN ACCORDANCE WITH THE SOILS REPORT.
4. TOP OF FOOTING ELEVATIONS SHOWN ON THE FOOTING AND FOUNDATION PLAN ARE BASED ON PRELIMINARY GRADING INFORMATION AND MUST BE VERIFIED PRIOR TO CONSTRUCTION. STEPS WHERE SHOWN ARE AT APPROXIMATE LOCATIONS. ALL EXTERIOR FOOTINGS MUST BEAR A MINIMUM OF 30 INCHES BELOW LOWEST ADJACENT FINAL GRADE.
5. ALL WALLS (EXCEPT CANTILEVERED RETAINING WALLS) SHALL BE ADEQUATELY BRACED AGAINST LATERAL MOVEMENT PRIOR TO BACKFILLING. DESIGN AND ERECTION OF BRACING/SHORING IS THE RESPONSIBILITY OF THE GENERAL CONTRACTOR. BRACING SHALL REMAIN IN PLACE UNTIL SUPPORTING STRUCTURAL ELEMENTS ARE IN PLACE AND HAVE ATTAINED FULL STRENGTH.
6. UNLESS NOTED OTHERWISE, ALL FOOTINGS AT COLUMNS TO BE CENTERED BELOW COLUMNS.
7. UNLESS NOTED OTHERWISE, ALL FOOTINGS SHALL HAVE VERTICAL FACES FORMED WITH STANDARD FORMING MATERIALS (WOOD, METAL, ETC.). WITH PRIOR APPROVAL OF ARCHITECT AND ENGINEER, CONCRETE FOR FOOTINGS CAN BE PLACED IN EXCAVATED "SOIL" FORMS PROVIDED THAT THE DIMENSIONS ARE INCREASED 3" ON EACH SIDE.

E. CONCRETE

1. ALL CONCRETE SHALL HAVE A DESIGN 28-DAY COMPRESSIVE STRENGTH AS FOLLOWS:

A. GRAVITY FOOTINGS AND FOUNDATION WALLS:	3000 PSI
B. GRADE BEAMS AND MOMENT FRAME FOOTINGS:	4000 PSI
C. INTERIOR SUSPENDED SLABS	3000 PSI
D. RETAINING WALLS:	4000 PSI
E. EXTERIOR SLABS (DOCKS, ETC.):	4000 PSI
F. INTERIOR SLABS ON GRADE:	3000 PSI

2. NO PIPES, DUCTS, SLEEVES, ETC. SHALL BE PLACED IN STRUCTURAL CONCRETE UNLESS SPECIFICALLY DETAILED OR APPROVED BY STRUCTURAL ENGINEER. NO ALUMINUM PRODUCTS SHALL BE EMBEDDED IN CONCRETE. PENETRATIONS THRU STRUCTURAL CONCRETE ELEMENTS MUST BE APPROVED BY THE ENGINEER AND SHALL BE BUILT INTO THE ELEMENT PRIOR TO CONCRETE PLACEMENT.
3. REFER TO ARCHITECTURAL DRAWINGS FOR MOLDS, GROOVES, ORNAMENTS, ETC. TO BE CAST IN TO CONCRETE, AND FOR EXTENT AND LOCATION OF DEPRESSIONS, CURBS, RAMPS, ETC.
4. UNLESS OTHERWISE NOTED, MINIMUM REINFORCING IN ALL CONCRETE FOUNDATION WALLS SHALL BE AS FOLLOWS:

THICKNESS	TOP & BOTTOM BARS	VERTICAL	HORIZONTAL
6"	(1) #5	#4 AT 18" O.C.	#4 AT 16" O.C.
8"	(2) #5	#4 AT 18" O.C.	#4 AT 12" O.C.
10"	(2) #5	#4 AT 12" O.C.	#5 AT 12" O.C.
12"	(2) #5	#4 AT 18" O.C. EA FACE	#4 AT 16" O.C. EA FACE

5. UNLESS OTHERWISE NOTED CONCRETE SLABS ON EARTH SHALL BE REINFORCED AS FOLLOWS:
   4" THICK - UNREINFORCED.
6. UNLESS OTHERWISE NOTED, FOR OPENINGS LARGER THAN 12" IN ANY DIRECTION IN CONCRETE WALLS ADD (2) #5 BARS ALL SIDES IN ADDITION TO REGULAR WALL REINFORCING AND EXTEND 24" EACH WAY BEYOND OPENING. WHERE 24" IS NOT AVAILABLE, EXTEND BARS AS FAR AS POSSIBLE AND TERMINATE WITH A STANDARD HOOK.
7. CONSTRUCTION JOINTS NOT SHOWN ON THE PLANS SHALL BE MADE AND LOCATED SO AS TO NOT IMPAIR THE STRENGTH OF THE STRUCTURE AND AS APPROVED BY THE STRUCTURAL ENGINEER. PROVIDE 2 X 4 (SHAPED) KEYWAY IN ALL VERTICAL AND HORIZONTAL JOINTS UNLESS NOTED OR DETAILED OTHERWISE. ALL STEEL REINFORCING SHALL BE CONTINUOUS THROUGH COLD JOINTS UNLESS NOTED OTHERWISE. SEE TYPICAL DETAILS FOR COLD/CONSTRUCTION JOINTS FOR SLABS ON GRADE.

F. ANCHOR BOLTS/EMBEDDED BOLTS

1. ALL ANCHOR BOLTS SHALL HAVE ASTM A-563 HEAVY HEX NUT AND HARDENED WASHERS, GRADE A. ANCHOR BOLTS SHALL COMPLY WITH THE FOLLOWING:
   A. AT MOMENT RESISTING FRAMES - ASTM F1554 GRADE 105 HEADED BOLTS. (ASTM A449 THREADED ROD MAY BE USED WITH DOUBLE NUT AND WASHER)
   B. AT ALL OTHER ANCHOR BOLTS (UNLESS NOTED OTHERWISE) - ASTM F1554 GRADE 36 HEADED BOLTS. (ASTM A36 THREADED ROD MAY BE USED WITH DOUBLE NUT AND WASHER)
2. SEE TYPICAL ANCHOR BOLT DETAIL FOR DEFINITIONS OF EMBEDMENT LENGTH, ETC.
3. FURNISH TEMPLATES AND OTHER DEVICES AS NECESSARY FOR PRESETTING ALL BOLTS PRIOR TO PLACING CONCRETE AND/OR GROUT.
4. IF THREADED RODS ARE USED AS PERMITTED ABOVE, THEY SHALL BE CLEAR OF OIL AND DIRT.

G. SUSPENDED CONCRETE SLABS / SLABS ON METAL DECK

1. UNLESS OTHERWISE NOTED, ALL CONCRETE SLABS ON METAL DECK SHALL BE 6-1/2" TOTAL THICKNESS NORMAL WEIGHT CONCRETE WITH A WEIGHT LESS THAN 150 POUNDS PER CUBIC FOOT, REINFORCED WITH #3 @ 12" O.C. WHERE REINFORCING STEEL IS SHOWN ON THE PLANS IT SHALL BE CHAIRED TO 1" TOP COVER AT ALL BEAM LOCATIONS.
2. AROUND OPENINGS IN SUSPENDED CONCRETE SLABS, ADD REINFORCING BARS EQUIVALENT TO BARS CUT BY OPENING WITH HALF ON EACH SIDE OF OPENING. BARS PARALLEL TO PRINCIPAL REINFORCING SHALL RUN FULL LENGTH OF SPAN. BARS PARALLEL TO TEMPERATURE REINFORCING SHALL RUN 24" BEYOND OPENING.
3. ALL OPENINGS GREATER THAN 6" IN ANY DIRECTION IN CONCRETE FLOOR SLAB ON METAL DECK SHALL BE FRAMED ON 4 SIDES WITH STEEL ANGLES OR BENT PLATE (SEE TYPICAL DETAIL) UNLESS OTHERWISE NOTED.
4. EVERY EFFORT SHALL BE MADE TO PROVIDE A LEVEL FINISHED FLOOR WHILE MAINTAINING THE MINIMUM INDICATED SLAB THICKNESS.
5. CONTROL JOINTS IN SUSPENDED CONCRETE SLABS AND CONCRETE SLABS ON DECK SHALL NOT BE USED UNLESS SPECIFICALLY APPROVED AND DETAILED BY THE ENGINEER.
6. SEE TYPICAL DETAILS WHEN SLABS ARE MADE COMPOSITE WITH STEEL BEAMS.
7. ANY CONDUIT PLACED IN SLABS ON DECK SHALL BE SPACED NOT CLOSER THAN 18" O.C. CONDUIT LARGER THAN 3/4" DIAMETER SHALL BE PLACED IN DECK FLUTES, BUT MAY NOT BE PLACED IN FLUTES WITH REINFORCING STEEL OR HSA'S. NO CONDUIT LARGER THAN 1" IN DIAMETER SHALL BE PLACED IN SLABS ON DECK. CONDUIT CROSSOVERS ARE NOT ALLOWED AND A 1" MINIMUM CLEARANCE SHALL BE MAINTAINED BETWEEN THE CONDUIT AND THE DECK.
8. WHERE CONDUIT IS CLUSTERED TOGETHER TO RISE ABOVE SLAB OR PENETRATE SLAB, PENETRATION IN SLAB MUST BE SUPPORTED AS NOTED IN NOTE G.3 ABOVE.
9. CONTRACTOR SHALL PROVIDE ALL TEMPORARY SHORING, BRACING, AND GUYING AS REQUIRED DURING ERECTION AND PLACEMENT OF SUSPENDED CONCRETE SLABS ON METAL DECK.

H. REINFORCING STEEL

1. ALL REINFORCING BARS SHALL CONFORM TO ASTM STANDARD A-615 GRADE 60 . ADEQUATELY TIE AND SUPPORT ALL REINFORCING STEEL AS SPECIFIED BY ACI 315, TO MAINTAIN EXACT REQUIRED POSITION.
2. ALL FIELD BENT DOWELS SHALL BE GRADE 40 WITH SPACINGS INDICATED REDUCED BY 1/3.
3. UNLESS NOTED OTHERWISE, REINFORCEMENT SHALL HAVE THE FOLLOWING CONCRETE COVERAGE:
   A. CAST AGAINST AND PERMANENTLY EXPOSED TO EARTH.......3"
   B. EXPOSED TO EARTH OR WEATHER:
      (1) #6 & LARGER .... 2"
      (2) #5 & SMALLER........... 1-1/2"
   C. NOT EXPOSED TO WEATHER OR EARTH:
      (1) SLABS, WALLS, JOISTS, #11 & SMALLER............3/4"
      (2) BEAMS, COLUMNS: MAIN REINFORCING OR TIES.......1-1/2"
   D. SLAB ON GRADE:
      (1) PLACE REINFORCING AT CENTER OF SLAB UNLESS INDICATED OTHERWISE.
4. EXCEPT WHERE NOTED ON PLANS OR DETAILS CONTINUOUS REINFORCEMENT SHALL BE SPLICED AT POINTS OF MINIMUM STRESS BY LAPPING PER THE REBAR LAP SCHEDULE.
5. REINFORCING STEEL MAY BE SPLICED WITH MECHANICAL COUPLERS THAT HAVE A TENSION CAPACITY OF AT LEAST 125% OF THE STRENGTH OF THE BAR. MECHANICAL COUPLERS SHALL BE A POSITIVE CONNECTING TYPE COUPLER, AND SHALL BE INSTALLED IN ACCORDANCE WITH AN APPROVED ICC RESEARCH REPORT. WHERE THESE ARE USED, SPLICES ON ADJACENT BARS SHALL BE STAGGERED AT LEAST 24 INCHES ALONG THE LENGTH OF THE BARS.
6. ALL VERTICAL REINFORCING SHALL BE SPLICED WITH MATCHING DOWELS EMBEDDED WITHIN THE FOOTINGS OR STRUCTURE BELOW. SPLICE LENGTHS SHALL COMPLY WITH REBAR LAP SCHEDULE. DOWELS INTO FOOTINGS SHALL TERMINATE WITH A STANDARD HOOK, AND SHALL EXTEND TO WITHIN 4" OF THE BOTTOM OF THE FOOTING, BUT NOT MORE THAN 20" INTO FOOTING.
7. DO NOT WELD REINFORCING EXCEPT AS NOTED ON PLANS. WHERE REINFORCING IS WELDED, USE ASTM A-706 REINFORCING.
8. REINFORCING BARS, TIES, AND TENDONS SHALL BE SUPPORTED BY NYLON CONES, PLASTIC-COATED TIE-WIRES, OR PLASTIC-COATED CHAIRS.
9. UNLESS NOTED OTHERWISE, HOOKS, STIRRUPS, TIES, AND OTHER BENDS IN REINFORCING STEEL SHALL MEET THE STANDARDS SET FORTH IN ACI 318/318R-05. UNLESS OTHERWISE PERMITTED BY THE ENGINEER, ALL REINFORCEMENT SHALL BE BENT COLD. REINFORCEMENT PARTIALLY EMBEDDED IN CONCRETE SHALL NOT BE FIELD BENT, EXCEPT AS SHOWN ON THESE DRAWINGS OR OTHERWISE PERMITTED BY THE ENGINEER.
10. UNLESS SPECIFICALLY NOTED AND/OR DETAILED IN THE STRUCTURAL DRAWINGS CONDUIT SHALL NOT BE IN CONTACT WITH REINFORCING STEEL.

I. STRUCTURAL STEEL

1. STRUCTURAL STEEL SHALL BE FABRICATED AND ERECTED IN ACCORDANCE WITH THE LATEST EDITION OF THE FOLLOWING:
   A. ANSI/AISC 360-05 SPECIFICATION FOR STRUCTURAL STEEL BUILDINGS", WITH "COMMENTARY" AND "SUPPLEMENTS" AS REQUIRED BY BUILDING CODE.
   B. AISC 303-05 "CODE OF STANDARD PRACTICE FOR STEEL BUILDINGS AND BRIDGES" EXCLUDING THE FOLLOWING SECTIONS: 4.4, 4.4.1, AND 4.4.2.
   C. AISI "SPECIFICATIONS FOR THE DESIGN OF COLD-FORMED STEEL STRUCTURAL MEMBERS".
   D. AISC "SPECIFICATION FOR STRUCTURAL JOINTS USING ASTM A325 OR A490 BOLTS".
   E. AWS D1.1 AND 1.3, "STRUCTURAL WELDING CODE" (EXCEPT SPECIFIC ITEMS DO NOT APPLY IF THEY CONFLICT WITH AISC).
   F. ANSI/AISC 341-05 "SEISMIC PROVISIONS FOR STRUCTURAL STEEL BUILDINGS"
2. STRUCTURAL STEEL SHALL COMPLY WITH THE FOLLOWING:
   A. WIDE FLANGE SHAPES - ASTM A992
   B. OTHER SHAPES AND PLATES - ASTM A-36 (UNO)
   C. TUBES (TS) AND HOLLOW STRUCTURAL SECTIONS (HSS) - ASTM A-500, GRADE B (FY = 46 KSI)
   D. PIPE COLUMNS - ASTM A-53, GRADE B TYPE E OR S
   E. DEFORMED BAR ANCHORS (DBA) - ASTM A-496, WELDED IN ACCORDANCE WITH AWS D1.1
   F. HEADED STUD ANCHORS (HSA) - ASTM A-108, GRADE 1015 STEEL AND WELDED IN ACCORDANCE WITH AWS D1.1 FOR TYPE "B". USE 3/4" DIAMETER STUDS, UNLESS OTHERWISE NOTED.
   G. THREADED ROD - ASTM A-449
3. CONNECTIONS SHALL COMPLY WITH THE STRUCTURAL DRAWINGS UNLESS WRITTEN APPROVAL TO CHANGE IS GIVEN BY THE STRUCTURAL ENGINEER.
4. ALL SHOP FABRICATIONS SHALL BE PERFORMED BY AN APPROVED FABRICATOR IN ACCORDANCE WITH SECTIONS 1702 AND 1704 OF THE IBC OR WITH SHOP INSPECTION BY AN INDEPENDENT AGENCY IN ACCORDANCE WITH SECTION 1704.2 OF THE IBC.
5. WELDING
   A. ALL WELDING AND CUTTING SHALL BE PERFORMED BY AWS CERTIFIED WELDERS IN ACCORDANCE WITH ANSI/AWS D1.1 (LATEST EDITION).
   B. USE E-70XX ELECTRODES UNLESS NOTED OTHERWISE. E-60XX MAY BE USED FOR WELDING STEEL DECKS.
   C. ALL INTERSECTING STEEL SHAPES WHICH ARE NOT CONNECTED WITH BOLTS SHALL BE WELDED TOGETHER WITH A FILLET WELD ALL AROUND UNLESS NOTED OTHERWISE. WHERE WELD SIZES ARE NOT SHOWN USE THE FOLLOWING: 1) WHERE ALL CONNECTED PARTS ARE THICKER THAN 1/4", WELD IS 1/16" LESS THAN THE THICKNESS OF THE THINNEST PART. 2) WHERE ANY OF THE CONNECTED PARTS IS LESS THAN 1/4" THICK, WELD IS SAME AS THICKNESS OF THE THINNEST PART.
   D. WELDING OF HSA'S AND DBA'S SHALL CONFORM TO THE MANUFACTURER'S SPECIFICATIONS.
   E. WHEREVER POSSIBLE, WELDS SHALL BE SHOP WELDS. SPECIAL CONSIDERATIONS, SUCH AS ITEMS WHICH MAY NEED ADJUSTMENT AT THE SITE, REQUIRE THAT SOME WELDS BE FIELD WELDS. WHERE QUESTIONS OR DISCREPANCIES OCCUR THE CONTRACTOR SHALL COORDINATE THE WORK BETWEEN THE SHOP FABRICATOR AND THE STEEL ERECTOR.
6. BOLTING
   A. UNLESS OTHERWISE NOTED, ALL STRUCTURAL STEEL TO STEEL CONNECTIONS SHALL USE HIGH STRENGTH BOLTS CONFORMING TO ASTM A-325.
   B. UNLESS NOTED OTHERWISE ALL BOLTING IS CLASSIFIED AS NON-SLIP CRITICAL BEARING TYPE CONNECTIONS WITH THREADS INCLUDED IN SHEAR PLANE. TIGHTEN BOLTS TO A SNUG TIGHT CONDITION, WITH ALL PLIES OF THE JOINT IN FIRM CONTACT.
   C. AT OVERSIZED AND SLOTTED HOLES, WASHERS SHALL CONFORM TO ASTM F-436 AND COMPLETELY COVER THE HOLE.
   D. WHERE A STEEL BEAM TO BEAM CONNECTION IS NOT SHOWN, PROVIDE AN AISC STANDARD FRAMED CONNECTION SIZED FOR 1/2 OF THE TOTAL LOAD CAPACITY OF THE BEAM FOR THE SPAN AND STEEL SPECIFIED.
7. METAL DECKING
   A. UNLESS NOTED OTHERWISE, METAL ROOF DECK SHALL BE 22 GAUGE PAINTED STEEL, TYPE B. SEE ROOF DECK SCHEDULE FOR ATTACHMENTS.
   B. UNLESS NOTED OTHERWISE, METAL FLOOR DECK SHALL BE 20 GAUGE PAINTED STEEL COMPOSITE, W-3. UNLESS NOTED OTHERWISE, ATTACH TO SUPPORTING STRUCTURE WITH 3/4" DIAMETER WELDS AT 24" MAXIMUM SPACING. ATTACH SIDE SEAMS WITH BUTTON PUNCH OR SIDE SEAM SCREWS AT 24" MAXIMUM SPACING. AN H.S.A. FIELD-WELDED THROUGH THE DECK MAY SUBSTITUTE FOR A PUDDLE WELD.
   C. ALL DECK SHALL BE CONTINUOUS OVER 3-SPANS. WHERE NOT POSSIBLE, THE DECK SUPPLIER/CONTRACTOR SHALL PROVIDE HEAVIER GAUGE DECK AS NEEDED TO PROVIDE THE EQUIVALENT PERFORMANCE OF THE SPECIFIED DECK WITH 3-SPAN CONTINUITY.
   D. SEE TYPICAL DETAILS FOR SUPPORT OF DECK AT OPENINGS.
   E. PROVIDE L2"X2"X3/16" FOR DECK SUPPORT AT LOCATIONS WHERE COLUMNS EXTEND THROUGH DECK.
   F. PAINTED STEEL DECK SHALL CONFORM TO ASTM A1008 AND GALVANIZED STEEL DECK SHALL CONFORM TO A653 GRADE G60.
   G. BUILDING ELEMENTS MAY BE SUPPORTED BY HANGING DIRECTLY FROM METAL DECKING, PROVIDED THAT THE TOTAL WEIGHT PER CONNECTION IS LESS THAN 50 LBS AND THAT THE ATTACHMENT TO THE DECKING IS DISTRIBUTED ACROSS AT LEAST TWO RIBS AND SPACED AT LEAST 6 FT. APART IN ANY DIRECTION.
8. PROVIDE FULL DEPTH WEB STIFFENER PLATES AT EACH SIDE OF STEEL BEAMS AT ALL BEARING (EXCEPT SECONDARY FRAMING) POINTS. STIFFENER PLATES SHALL BE THICKNESS SHOWN UNLESS OTHERWISE NOTED AND SHALL BE WELDED BOTH SIDES WITH FILLET WELDS ALL AROUND.

FLANGE WIDTH	STIFFENER THICKNESS	WELD THICKNESS
< 8 1/4"	1/4"	3/16"
8 1/4" < BF < 12 1/2"	3/8"	1/4"
12 1/2" < BF < 18"	1/2"	5/16"

9. FABRICATORS AND SUPPLIERS SHALL COORDINATE PAINT/FINISHES WITH REQUIREMENTS FOR DIRECT APPLIED INSULATION, FIREPROOFING, ETC. AS NOTED IN THE PROJECT SPECIFICATIONS.
10. WHEN DETERMINING THE FIRE RESISTANCE OF ASSEMBLIES, USE THE FOLLOWING: STEEL ROOF FRAMING MEMBERS ARE CONSIDERED UN-RESTRAINED AND STEEL FLOOR FRAMING MEMBERS ARE CONSIDERED RESTRAINED.

J. MOMENT FRAMES

1. STRUCTURAL STEEL IN MOMENT FRAMES SHALL BE FABRICATED AND ERECTED IN ACCORDANCE WITH THE LATEST EDITION OF THE SPECIFICATIONS NOTED IN THE STRUCTURAL STEEL NOTES ABOVE TO INCLUDE THE FOLLOWING:
   A. AISC 341 - RECOMMENDED SPECIFICATIONS AND QUALITY ASSURANCE GUIDELINES FOR STEEL MOMENT-FRAME CONSTRUCTION FOR SEISMIC APPLICATIONS.
2. STRUCTURAL STEEL IN MOMENT FRAMES SHALL COMPLY WITH THE REQUIREMENTS NOTED IN THE STRUCTURAL STEEL NOTES ABOVE TO INCLUDE THE FOLLOWING:
   A. ALL SHAPES OF GROUP 3 (WITH FLANGES THICKER THAN 1-1/2"), GROUP 4 AND GROUP 5, AS WELL AS ALL PLATES 2" AND THICKER, THAT ARE PART OF THE SEISMIC FORCE RESISTING SYSTEM SHALL HAVE CHARPY V-NOTCH ABSORBED ENERGY OF AT LEAST 20 FT-LBS. AT 70 DEGREES F.
3. BOLTED CONNECTIONS IN MOMENT FRAMES SHALL CONFORM TO AISC 358 FASTENER AND TIGHTENING REQUIREMENTS. ALL BOLTS IN MOMENT FRAMES SHALL BE INSPECTED AND TESTED.
4. WELDED CONNECTIONS BETWEEN THE PRIMARY MEMBERS OF MOMENT FRAMES SHALL BE TESTED FOR COMPLIANCE ACCORDING TO IBC TABLE 1704.3 AND THE CONTRACT SPECIFICATIONS AND PLANS. INSPECTION SHALL BE DONE BY A QUALIFIED TESTING INSPECTOR. AS A MINIMUM, THE TESTING SHALL INCLUDE THE FOLLOWING:
   A. ALL COMPLETE PENETRATION GROOVE WELDS CONTAINED IN JOINTS AND SPLICES SHALL BE TESTED 100% EITHER BY ULTRASONIC TESTING OR BY RADIOGRAPHY.
   B. BASE METAL THICKER THAN 1-1/2", WHEN SUBJECTED TO THROUGH THICKNESS WELD SHRINKAGE STRAINS SHALL BE ULTRASONICALLY INSPECTED FOR DISCONTINUITIES DIRECTLY BEHIND SUCH WELDS AND THREE INCHES ABOVE AND BELOW THE WELD AFTER JOINT ASSEMBLY COMPLETION.
   C. ANY MATERIAL DISCONTINUITIES SHALL BE ACCEPTED OR REJECTED ON THE BASIS OF THE DEFECT RATING IN ACCORDANCE WITH THE UBC STANDARDS AS IT REFERS TO THE TESTING IN AWS D1.1 CHAPTER 6, EXCLUDING SECTIONS 6.1 THROUGH AND INCLUDING 6.6. ALL DEFICIENT WELDS SHALL BE CORRECTED AND TESTED AT NO ADDITIONAL COST TO THE OWNER.
5. ALL FULL PENETRATION WELDS USED IN MOMENT FRAMES ARE CONSIDERED DEMAND CRITICAL AND THE FOLLOWING SPECIAL PROVISION APPLY: WELDING METHODS, PROCEDURES AND QUALITY CONTROL SHALL COMPLY WITH AWS D1.1 AND THE FOLLOWING:
   A. TACK WELD QUALITY SHALL COMPLY WITH SECTION 5.18.
   B. ARC STRIKES, GOUGES AND OTHER IMPERFECTIONS WITHIN OR ADJACENT TO THE JOINT, SHALL BE REPAIRED OR REMOVED.
   C. PREHEAT AND INTER-PASS REQUIREMENTS AS OUTLINED IN SECTION 3.5.
   D. UNREPAIRED CRACKS, GOUGES, GROOVES AND NOTCHES WILL NOT BE PERMITTED IN THE JOINT AREA.
   E. USE ELECTRODES WITH CHARPY V-NOTCH ABSORBED ENERGY EQUAL TO OR GREATER THAN 20 FT-LBS AT 0 DEGREES FAHRENHEIT UNDER AWS A5 CLASSIFICATION TEST METHODS, AND 40 FT-LBS AT 70 DEGREES FAHRENHEIT USING TEST PROCEDURES PRESCRIBED IN APPENDIX X OF AISC 358. ACCEPTABLE ELECTRODES INCLUDE E70TG-K2, E71T-8, AND E71T-1.

K. OPEN WEB JOISTS AND GIRDERS

1. ALL OPEN WEB STEEL JOISTS AND GIRDERS SHALL BE FABRICATED AND ERECTED IN ACCORDANCE WITH THE LATEST EDITION OF "STANDARD SPECIFICATIONS AND CODE OF STANDARD PRACTICE" OF THE STEEL JOIST INSTITUTE.
2. CONCENTRATED POINT LOADS (NOT SPECIFICALLY SHOWN ON THE PLANS) OF LESS THAN 200 LBS FOR MECHANICAL UNITS, FIRE SPRINKLER MAINS, AND OTHER EQUIPMENT SUPPORTED FROM JOISTS SHALL BE SUPPORTED WITHIN 6" OF A CHORD PANEL POINT. SUPPORT BEYOND PANEL POINTS CAN BE PROVIDED BY ADDING (2) L2"X2"X1/4" DIAGONALS TO THE NEAREST OPPOSITE CHORD PANEL POINT. LOADS SHALL BE SPACED AT LEAST 6 FEET APART WITH NO MORE THAN 4 PER JOIST. SEE JOIST FABRICATOR FOR ADDITIONAL REQUIREMENTS.
3. ANY BRACING REQUIRED FOR MISCELLANEOUS ITEMS (I.E. DUCTWORK, PIPING, ETC.) MUST CONNECT TO THE TOP CHORD OF THE JOIST OR GIRDER. BRACING TO THE BOTTOM CHORD IS NOT ALLOWED UNLESS SPECIFICALLY DETAILED THAT WAY ON THE PLANS.
4. PROVIDE SPECIAL BEARING ENDS AS REQUIRED AT SLOPED BEARING CONDITIONS. CONTRACTOR SHALL COORDINATE WITH OTHER STRUCTURAL ELEMENTS
5. ALL JOISTS SHALL BE CAMBERED PER SJI SPECIFICATIONS, UNO.
6. FIELD MODIFICATIONS (INCLUDING HOLES IN THE CHORD OR WEB MEMBERS) SHALL NOT BE MADE TO ANY JOIST OR GIRDER WITHOUT PRIOR APPROVAL BY THE MANUFACTURER.
7. FABRICATORS AND SUPPLIERS SHALL COORDINATE PAINT/FINISHES WITH REQUIREMENTS FOR DIRECT APPLIED INSULATION, FIREPROOFING, ETC. AS NOTED IN THE PROJECT SPECIFICATIONS.
8. JOIST BRIDGING SHALL BE PROVIDED AS REQUIRED BY THE JOIST MANUFACTURER AND SJI STANDARDS. BRIDGING WHERE SHOWN ON THE STRUCTURAL DRAWINGS IS A SCHEMATIC REPRESENTATION ONLY. SEE JOIST MANUFACTURER FOR BRIDGING SIZE, CONNECTIONS, TYPE AND QUANTITY.
9. WHERE ADDED LOADS ARE SHOWN ON THE JOISTS BUT NOT SPECIFICALLY DIMENSIONED, THE JOIST DESIGNER SHALL PLACE THOSE LOADS ON THE JOIST AT A LOCATION THAT RESULTS IN THE HIGHEST STRESS IN THE MEMBERS. THE DESIGNER MAY ASSUME THAT THE LOAD OCCURS WITHIN 10 FEET OF A SCALED DIMENSION.
10. FABRICATOR MUST SUBMIT A CERTIFICATE OF COMPLIANCE TO THE BUILDING OFFICIAL PER IBC 2206.5.

L. MASONRY VENEER

1. MASONRY VENEER SHALL BE ANCHORED AS FOLLOWS :
   MASONRY VENEER SHALL BE ANCHORED USING THE DUR-O-WALL VENEER ANCHOR ASSEMBLY SYSTEM, OR AN APPROVED EQUAL. REGARDLESS OF BACK-UP SYSTEM, PROVIDE A CONTINUOUS HORIZONTAL 9 GAUGE WIRE AT 16" O.C. IN VENEER MORTAR JOINTS FOR ANCHOR ATTACHMENT. POSITIVE ANCHORAGE TO THE WIRE SHALL BE PROVIDED TO SUPPORT NOT MORE THAN 2 SQUARE FEET OF WALL, WITH A HORIZONTAL SPACING NOT EXCEEDING 18".
   A. METAL STUDS; USE DUR-0-WALL D/A 213 HEAVY DUTY ANCHORS OR AN APPROVED EQUAL. THE DUR-O-WALL ASSEMBLY SHALL BE ATTACHED TO METAL STUDS USING #10 SCREWS.

M. DEFERRED SUBMITTALS

1. DEFERRED SUBMITTALS ARE COMPLETE PACKAGES TO BE SUBMITTED FOR REVIEW THAT INCLUDE DRAWINGS AND CALCULATIONS FOR ALL ELEMENTS AND CONNECTIONS OF ITEMS LISTED BELOW. DEFERRED SUBMITTALS SHALL BEAR THE STAMP AND SIGNATURE OF THE DESIGN PROFESSIONAL RESPONSIBLE FOR THE DESIGN.
2. DEFERRED SUBMITTAL COMPONENTS SHALL NOT BE INSTALLED UNTIL APPROVED BY THE BUILDING OFFICIAL.
3. DEFERRED SUBMITTALS SHALL INCLUDE, BUT ARE NOT LIMITED TO:
   A. OPEN WEB JOISTS & GIRDERS
   B. COLD FORMED STEEL STUDS / JOIST / TRUSSES.
   C. STRUCTURAL STEEL STAIRS.
   D. AGGREGATE PIER SOIL REINFORCEMENT.

N. STATEMENT OF SPECIAL INSPECTIONS

1. THE DESIGNATED SEISMIC/WIND SYSTEMS AND SEISMIC/WIND-FORCE-RESISTING SYSTEMS THAT ARE SUBJECT TO SPECIAL INSPECTIONS IN ACCORDANCE WITH IBC SECTION 1705.1 ARE IDENTIFIED IN THE SEISMIC/WIND-FORCE-RESISTING SYSTEM KEY-PLAN ON SHEET SG601. OTHER ITEMS, DETAILS, AND SYSTEMS SUBJECT TO SPECIAL INSPECTIONS ARE ALSO IDENTIFIED ON THESE DOCUMENTS WITH A CIRCLE "L".
2. SPECIAL INSPECTIONS AND TESTING ARE TO BE PROVIDED AS REQUIRED BY IBC SECTIONS 1704 AND 1708 AND OTHER APPLICABLE SECTIONS OF THE IBC. ITEMS REQUIRING SPECIAL INSPECTION ARE IDENTIFIED IN THE SPECIAL INSPECTION SCHEDULE ON SHEET SG601. THE TYPE AND FREQUENCY OF TESTING AND SPECIAL INSPECTIONS SHALL BE AS NOTED IN THE SPECIAL INSPECTION SCHEDULE, THE JOB SPECIFICATIONS, AND IN ACCORDANCE WITH IBC SECTION 109 AND CHAPTER 17.
3. ALL TESTING AND SPECIAL INSPECTION SHALL BE PROVIDED BY A QUALIFIED SPECIAL INSPECTION AGENCY EMPLOYED AS OUTLINED IN THE JOB SPECIFICATIONS. REPORTS OF FINDINGS OR DISCREPANCIES SHALL BE NOTED AND FORWARDED TO THE CONTRACTOR, ARCHITECT, ENGINEER, AND BUILDING OFFICIAL IN A TIMELY MANNER.
4. STRUCTURAL OBSERVATION VISITS SHALL BE PERFORMED BY A REPRESENTATIVE FROM ARW ENGINEERS IN ACCORDANCE WITH THE CONTRACT AS NEEDED TO OBSERVE THE CONSTRUCTION OF CRITICAL BUILDING ELEMENTS (I.E., FOOTINGS, MOMENT FRAMES, DRAG STRUTS AND THEIR CONNECTIONS, COLLECTORS, AND ROOF AND FLOOR DIAPHRAGMS). STRUCTURAL OBSERVATION REPORTS FOR EACH VISIT SHALL BE SENT DIRECTLY TO THE ARCHITECT FOR DISTRIBUTION TO THE CONTRACTOR AND BUILDING OFFICIAL. STRUCTURAL OBSERVATION VISITS SHALL NEITHER BE CONSTRUED AS SPECIAL INSPECTION NOR APPROVAL OF COMPLETED CONSTRUCTION.
5. IN ACCORDANCE WITH IBC SECTION 1706.1, THE CONTRACTOR SHALL SUBMIT A WRITTEN CONTRACTOR'S STATEMENT OF RESPONSIBILITY TO THE BUILDING OFFICIAL AND OWNER PRIOR TO CONSTRUCTION OF ANY SEISMIC/WIND-FORCE-RESISTING SYSTEM, DESIGNATED SEISMIC/WIND SYSTEM, OR COMPONENT IDENTIFIED IN THIS QUALITY ASSURANCE PLAN AND AS NOTED ON THE PLANS WITH A CIRCLE "L".

LEGEND OF SYMBOLS AND ABBREVIATIONS

AB	=	ANCHOR BOLT
ABV	=	ABOVE
ARCH	=	ARCHITECT
BLW	=	BELOW
BN	=	BOUNDRY NAILING
℄	=	CENTER LINE
CMU	=	CONCRETE MASONRY UNIT
COL	=	COLUMN
CONC	=	CONCRETE
DBA	=	DEFORMED BAR ANCHOR
DBE	=	DECK BEARING ELEVATION
ELEV	=	ELEVATION
EN	=	EDGE NAILING
FDN	=	FOUNDATION
FTG	=	FOOTING
FFE	=	FINISHED FLOOR ELEVATION
HSA	=	HEADED STUD ANCHOR
JBE	=	JOIST BEARING ELEVATION
MIN	=	MINIMUM
MAX	=	MAXIMUM
MECH	=	MECHANICAL
MEZZ	=	MEZZANINE
OAE	=	OR APPROVED EQUAL
OPP	=	OPPOSITE
PL	=	PLATE
REINF	=	REINFORCING
REQ	=	REQUIRED
SIM	=	SIMILAR
TOF	=	TOP OF FOOTING
TOB	=	TOP OF BEAM ELEVATION
TOM	=	TOP OF MASONRY ELEVATION
TOC	=	TOP OF CONCRETE SLAB
TOG	=	TOP OF GIRDER ELEVATION
TOS	=	TOP OF STEEL ELEVATION
TYP	=	TYPICAL
UNO	=	UNLESS NOTED OTHERWISE
NS, FS	=	NEAR SIDE, FARSIDE

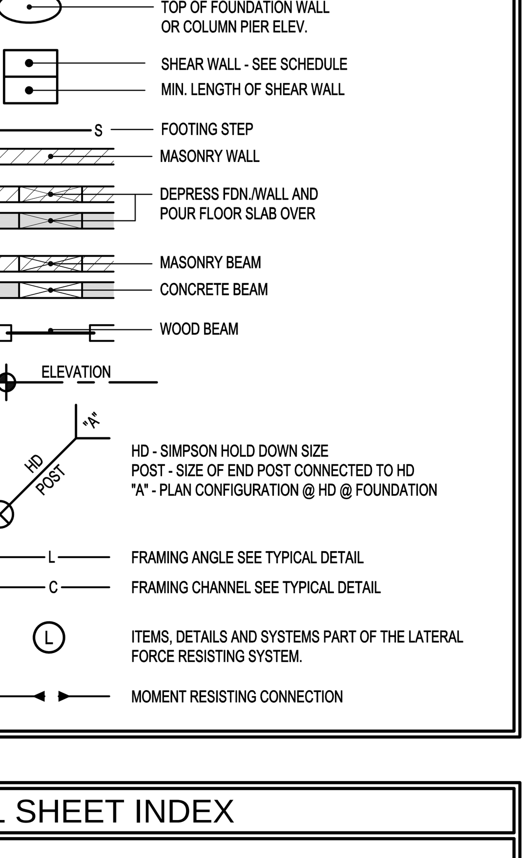

STRUCTURAL SHEET INDEX

SHEET NO.	SHEET TITLE
SG001	STRUCTURAL NOTES
SG601	STRUCTURAL SCHEDULES
SB101	FOOTING / FOUNDATION PLAN
SB501	DETAILS
SF101	FIRST FLOOR FRAMING PLAN
SF102	SECOND FLOOR FRAMING PLAN
SF102.A	ADD ALTERNATE - PATIO
SF103	ROOF FRAMING PLAN
SF201	MOMENT FRAME DETAILS
SF301	CHIMNEY FRAMING AND DETAILS
SF501	DETAILS
SF502	DETAILS

MHTN ARCHITECTS, INC.
420 East South Temple
Suite 100
Salt Lake City, Utah 84111
Telephone (801) 595-6700
Telefax (801) 595-6717
www.mhtn.com

ENGINEERS
structural consultants
1594 W. Park Cir. Ogden, Utah 84404
ph. 801.782.6008 fx. 801.782.4656

WEBER STATE UNIVERSITY

THE GREAT SEAL OF THE STATE OF UTAH 1896

HURST CENTER
FOR LIFELONG LEARNING
WEBER STATE UNIVERSITY
UTAH STATE DIVISION OF FACILITIES CONSTRUCTION
MANAGEMENT - DFCM PROJECT NO. 07110810

SEAL

LICENSED PROFESSIONAL ENGINEER
Jeremy L. Achter
No. 353467
STATE OF UTAH

MHTN PROJECT NO. 2007556.00
DRAWN BY: B. PAINE CHECKED BY: J. ACHTER

ISSUED:

NO.	DATE	DESCRIPTION
#1	10/26/07	SCHEMATIC DESIGN
#2	12/18/07	DESIGN DEVELOPMENT
#3	02/08/08	CONSTRUCTION DOCUMENTS
#4	03/04/08	CONSTRUCTION BID DOCUMENTS

REVISIONS:

NO.	DATE	DESCRIPTION
1	03/12/08	ADDENDUM #1
2	03/24/08	ADDENDUM #2

STRUCTURAL NOTES

CONSTRUCTION BID
DOCUMENTS
MARCH 4, 2008

SHEET NUMBER

SG001

ROOF DECK SCHEDULE

AREA	DECK DEPTH	DECK TYPE	DECK GA.	ATTACHMENT SUPPORTS DIA. WELD	SUPPORTS PATTERN	SIDE SEAMS #12 TEK SCREWS	SIDE SEAMS TOP SEAM WELD	SIDE SEAMS PUNCH LOCK™	SUPPORTS PARALLEL TO FLUTES DIA. WELD	SUPPORTS PARALLEL TO FLUTES SPA.	MIN. SHEAR CAPACITY
A	1 1/2	B	22	3/4"	36/7	--	--	24"o.c.	3/4"	12"	620 plf
B	1 1/2	B	22	3/4"	36/7	--	--	8"o.c.	3/4"	12"	784 plf

FASTENING PATTERNS

WELD PATTERN : 36/7

NOTES :

1. TOP SEAM WELDS SHALL BE 1 1/2" LONG AND SHALL BE ACCORDING TO SDI STANDARDS.
2. MIN. SHEAR CAPACITY IS THE CAPACITY REQUIRED FOR ALTERNATE SYSTEMS.
3. USE NESTABLE (OVERLAPPING) SIDE SEAMS AT SCREW ATTACHMENTS AND INTERLOCKING SIDE SEAMS AT WELDS.
4. N DECK END BUTT JOINTS OVER STEEL JOISTS SHALL USE 16 GA. x 6" CONTINUOUS SHEET BETWEEN DECK AND JOIST TOP CHORD ANGLES. DECK WELDS TO PENETRATE SHEET AND ENGAGE JOIST CHORD.
5. ALL DECK WITH A PROFILE DEPTH OF 2" OR LESS SHALL HAVE NESTED OR TELESCOPED END LAPS.
6. SUBMIT CURRENT ICBO APPROVAL FOR ALL DECKS.
7. OTHER PNUEMATIC FASTENING SYSTEMS MUST MEET MIN. SHEAR CAPACITY SHOWN IN SCHEDULE. ALL ALTERNATE SYSTEMS SHALL BE SUBMITTED TO ENGINEER FOR REVIEW & APPROVAL.

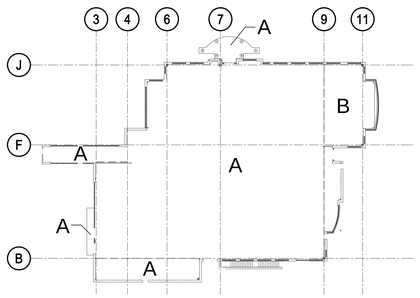

KEY PLAN

QUALITY ASSURANCE PLAN

ESTABLISHED PER 2006 IBC SECTION 1705.2

ITEM	DESCRIPTION
SPECIAL INSPECTIONS & TESTING	REFER TO SPECIAL INSPECTION SCHEDULE
STRUCTURAL OBSERVATIONS	OBSERVATION VISITS SHALL BE PERFORMED AS NEEDED TO VERIFY THE CONSTRUCTION OF CRITICAL BUILDING ELEMENTS, SUCH AS: FOOTINGS, MOMENT FRAMES, COLLECTORS, AND FLOOR & ROOF DIAPHRAGMS. OBSERVATION REPORTS FOR EACH VISIT SHALL BE SENT DIRECTLY TO THE ARCHITECT FOR DISTRIBUTION TO THE CONTRACTOR AND BUILDING OFFICIAL.

DESIGNATED SIESMIC & MAIN WIND-FORCE-RESISTING SYSTEM

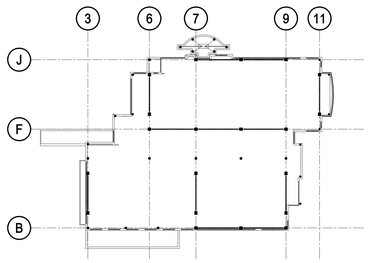

2ND FLOOR PLAN

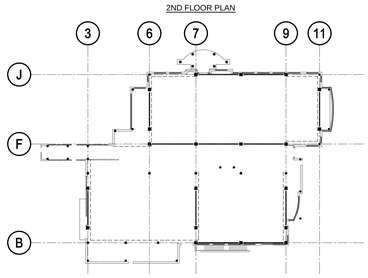

ROOF PLAN

- - - - - - = COLLECTORS
——— = MOMENT FRAME

MOMENT FRAME KEY PLAN

CONCRETE PIER SCHEDULE

MARK	SIZE (B x L)	VERT REINF. (NOTE 2)	TIES	COMMENTS
CP-1	20" x 20"	(14) #5	#3 @ 8"	(3) TIES IN TOP 5"
CP-2	18" x 18"	(12) #5	#3 @ 8"	(3) TIES IN TOP 5"
CP-3	16" x 16"	(12) #5	#3 @ 8"	(3) TIES IN TOP 5"
CP-4	24" x 24"	(20) #5	#3 @ 8"	(3) TIES IN TOP 5"
CP-5	30" x 20"	(16) #5	#3 @ 8"	(3) TIES IN TOP 5"
CP-6	24" x 17"	(14) #5	#3 @ 8"	(3) TIES IN TOP 5"
CP-7	20" x 17"	(12) #5	#3 @ 8"	(3) TIES IN TOP 5"
CP-8	22" x 20"	(14) #5	#3 @ 8"	(3) TIES IN TOP 5"
CP-9	21" x 21"	(14) #5	#3 @ 8"	(3) TIES IN TOP 5"
CP-10	24" x 22"	(16) #5	#3 @ 8"	(3) TIES IN TOP 5"
CP-11	22" x 22"	(16) #5	#3 @ 8"	(3) TIES IN TOP 5"
CP-12	28" x 28"	(16) #5	#3 @ 8"	(3) TIES IN TOP 5"

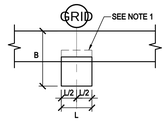

PIER AT WALL

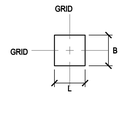

ISOLATED PIER

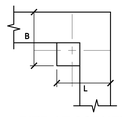

PIER AT CORNER

20 VERTS

12 VERTS

14 OR 16 VERTS

NOTES

1. WHERE T.O. PIER IS LOWER THAN T.O. FOUND. WALL, BLOCK OUT FOUND. WALL AS REQ'D FOR BASE PLATE CLEARANCE
2. VERTICAL PIER REINFORCING TO BE UNIFORMLY SPACED AROUND PERIMETER, 2" CLEAR FROM OUTSIDE OF PIER
3. TOP OF PIER ELEVATION IS 99'-6" EXCEPT WHERE OTHERWISE NOTED ON PLANS THUSLY

2006 IBC REBAR LAP SPLICE SCHEDULE

FOR CONCRETE APPLICATIONS (ACI 318 - 05)

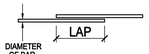

BAR SIZE		f'c = 3000 PSI				f'c = 4000 PSI			
		TYP. SPLICES		TOP BAR SPLICES		TYP. SPLICES		TOP BAR SPLICES	
NO.	DIA.	CLASS 'A'	CLASS 'B'	CLASS 'A'	CLASS 'B'	CLASS 'A'	CLASS 'B'	CLASS 'A'	CLASS 'B'
2	0.250	12"	16"	15"	19"	12"	16"	13"	17"
3	0.375	17"	22"	22"	28"	15"	19"	19"	25"
4	0.500	22"	29"	29"	38"	19"	25"	25"	33"
5	0.625	28"	36"	36"	47"	24"	31"	31"	41"
6	0.750	33"	43"	43"	56"	29"	37"	37"	49"
7	0.875	48"	63"	63"	81"	42"	54"	54"	71"
8	1.000	55"	72"	72"	93"	48"	62"	62"	81"
9	1.128	62"	80"	80"	105"	54"	70"	70"	91"
10	1.270	69"	89"	89"	116"	60"	78"	78"	101"
11	1.410	76"	98"	98"	128"	66"	85"	85"	111"

NOTES:

1. ALL LAP SPLICE LENGTHS ARE CLASS 'A' UNLESS NOTED OTHERWISE.
2. MECHANICAL COUPLERS MAY BE USED IN LIEU OF LAP SPLICED SHOWN. SEE STRUCTURAL NOTES FOR MINIMUM COUPLER CAPACITY. WHERE MECHANICAL COUPLERS ARE USED, STAGGER ADJACENT SPLICES A MINIMUM OF 24".
3. CONCRETE LAP LENGTHS SHALL BE INCREASED BY 20% WHERE EPOXY COATING IS USED.
4. TOP BAR IS ANY HORIZONTAL BAR WITH MORE THAN 12" OF FRESH CONCRETE CAST BELOW IT.

FOOTING SCHEDULE [1]

MARK	WIDTH	LENGTH	THICK	LENGTHWISE REINF. NO.	LENGTHWISE REINF. SIZE	CROSSWISE REINF. NO.	CROSSWISE REINF. SIZE	CROSSWISE REINF. SPA.	MIN. THICKNESS OF REPLACEMENT GRANULAR FILL [2]	REMARKS
FC2	2'-0"	CONT.	12"	(2)	#5	--	--	--	O FEET	
FC2.5	2'-6"	CONT.	12"	(2)	#5	--	--	--	O FEET	
FC3	3'-0"	CONT.	14"	(3)	#6	--	#3	24"	O FEET	
FC3.5	3'-6"	CONT.	12"	(3)	#5	--	#3	24"	O FEET	
FC8	8'-0"	CONT.	16"	(8)	#6	--	#3	12"	O FEET	
F3	3'-0"	3'-0"	12"	(3)	#4	(3)	#4	--	O FEET	
F3.5	3'-6"	3'-6"	12"	(3)	#5	(3)	#5	--	O FEET	
F4	4'-0"	4'-0"	12"	(4)	#5	(4)	#5	--	O FEET	
F4.5	4'-6"	4'-6"	12"	(4)	#5	(4)	#5	--	O FEET	
F5	5'-0"	5'-0"	14"	(5)	#5	(5)	#5	--	O FEET	
F5.5	5'-6"	5'-6"	14"	(5)	#6	(5)	#6	--	O FEET	
F6	6'-0"	6'-0"	16"	(6)	#6	(6)	#6	--	1.5 FEET	
F6.5	6'-6"	6'-6"	18"	(6)	#6	(6)	#6	--	1.5 FEET	
F7	7'-0"	7'-0"	18"	(7)	#6	(7)	#6	--	1.5 FEET	
F7.5	7'-6"	7'-6"	20"	(7)	#7	(7)	#7	--	2.5 FEET	
F8	8'-0"	8'-0"	24"	(8)	#7	(8)	#7	--	2.5 FEET	
F8.5	8'-6"	8'-6"	22"	(8)	#7	(8)	#7	--	3.5 FEET	
F9	9'-0"	9'-0"	24"	(9)	#7	(9)	#7	--	3.5 FEET	
F9.5	9'-6"	9'-6"	24"	(9)	#7	(9)	#7	--	4.5 FEET	
F10	10'-0"	10'-0"	26"	(10)	#7	(10)	#7	--	4.5 FEET	
F10.5	10'-6"	10'-6"	28"	(10)	#8	(10)	#8	--	4.5 FEET	
F11	11'-0"	11'-0"	28"	(11)	#8	(11)	#8	--	4.5 FEET	
F11.5	11'-6"	11'-6"	30"	(11)	#8	(11)	#8	--	4.5 FEET	
F12	12'-0"	12'-0"	32"	(12)	#8	(12)	#8	--	4.5 FEET	
F126	6'-0"	12'-6"	24"	(6)	#8	(12)	#7	--	4.5 FEET	

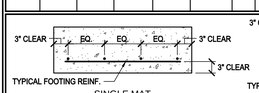

SINGLE MAT

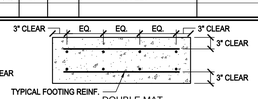

DOUBLE MAT

1. ALL FOOTINGS AT MOMENT FRAMES SHALL HAVE A DOUBLE MAT OF REINFORCINGS.
2. REFERENCE THE SOILS REPORT FOR MORE INFORMATION.

SPECIAL INSPECTION SCHEDULE [1, 2]

ESTABLISHED PER 2006 IBC SECTION 109 AND CHAPTER 17

ITEM	CONTINUOUS [3]	PERIODIC [3]	REFERENCE	COMMENTS
PRE-FAB CONSTRUCTION (IBC 1704.2)			REFERENCE NOTES P1 & P2	P1. SPECIAL INSPECTION IS NOT REQUIRED WHERE THE WORK IS DONE ON THE PREMISES OF A FABRICATOR REGISTERED AND APPROVED TO PERFORM SUCH WORK WITHOUT SPECIAL INSPECTION, PROVIDED THE FABRICATOR COMPLIES WITH IBC INSPECTION FOR PREFABRICATED CONSTRUCTION SHALL BE THE SAME AS IF THE MATERIAL USED IN THE CONSTRUCTION TOOK PLACE ON SITE. SPECIAL INSPECTION WILL NOT BE REQUIRED DURING PREFABRICATION IF THE APPROVED AGENCY CERTIFIES THE CONSTRUCTION AND FURNISHES EVIDENCE OF COMPLIANCE. (SEE NOTE 2) P2.
STEEL CONSTRUCTION (IBC 1704.3)			SEE IBC TABLE 1704.3	S1. WELDING INSPECTIONS SHALL BE IN COMPLIANCE WITH AWS D1.1. S2. ALL WELDS SHALL BE VISUALLY INSPECTED. ALL MATERIALS, WELDING PROCEDURES, AND QUALIFICATIONS OF WELDERS SHALL BE VERIFIED PRIOR TO THE START OF THE WORK. (IBC 1704.3) S3. ALL COMPLETE PENETRATION WELDS SHALL BE TESTED ULTRASONICALLY OR BY USING ANOTHER APPROVED METHOD (IBC 1708.4). S4. PERIODIC SPECIAL INSPECTION IS ALLOWED FOR VERIFICATION OF THE WELDABILITY OF REINFORCING STEEL OTHER THAN ASTM A 706 IN ACCORDANCE WITH ANSI/AWS D1.4. CONTINUOUS SPECIAL INSPECTION IS REQUIRED FOR REINFORCING STEEL RESISTING FLEXURAL AND AXIAL FORCES IN INTERMEDIATE AND SPECIAL MOMENT FRAMES, BOUNDARY ELEMENTS OF SPECIAL REINFORCED CONCRETE SHEAR WALLS, AND SHEAR REINFORCEMENT. PERIODIC SPECIAL INSPECTION IS ALLOWED FOR WELDING OF OTHER ASTM A 706 REINFORCING STEEL NOT INCLUDED IN THE CONTINUOUS SPECIAL INSPECTION REQUIREMENTS NOTED ABOVE. S5. SLIP-CRITICAL CONNECTIONS MAY HAVE PERIODIC SPECIAL INSPECTION PROVIDED THAT THE TURN-OF-THE-NUT METHOD WITH MATCHMARKING TECHNIQUES IS USED.
SHOP [2] AND FIELD WELDING			REFERENCE NOTE S1	
SINGLE PASS FILLET WELD ≤ 5/16"		●	REFERENCE NOTE S2	
FILLET WELDS > 5/16"	●		REFERENCE NOTE S2	
MULTI-PASS FILLET WELDS	●		REFERENCE NOTE S2	
PARTIAL / COMPLETE PENETRATION WELDS	●		REFERENCE NOTE S3	
LIGHT GAUGE METAL FRAMING WELDING		●	REFERENCE NOTE S2	
FLOOR AND ROOF DECK WELDING		●	REFERENCE NOTE S2	
FLOOR AND ROOF DECK MECH. FASTENERS		●		
SIDE SEAM SCREWS, BUTTON PUNCHES ETC.				
WELDING OF ANCHORS & STUDS		●	REFERENCE NOTE S2	
WELDING STAIRS / RAILING SYSTEMS		●	REFERENCE NOTE S2	
REINFORCING STEEL				
WELDING OF REINFORCING STEEL	●	●	REFERENCE NOTE S4	
SHEAR REINFORCING	●			
OTHER REINFORCING		●		
INSPECTION OF STEEL FRAME JOINT DETAILS		●		
EMBEDDED PLATES		●		
HIGH STRENGTH BOLTING (IBC 1704.3.3)				
VERIFY MATERIALS OF NUTS, BOLTS & WASHERS		●		
BEARING TYPE CONNECTIONS		●		
SPRAY FIRE RESISTANT MATERIALS (IBC 1704.10)	●			
CONCRETE CONSTRUCTION (IBC 1704.4)			SEE IBC TABLE 1704.4 - REF. NOTE C1	C1. SPECIAL INSPECTION IS NOT REQUIRED FOR CONC. ISOLATED SPREAD FOOTINGS, CONTINUOUS FOOTINGS, NON-STRUCTURAL SLABS, FOUNDATION WALLS, PATIOS, DRIVEWAYS, AND SIDEWALKS PROVIDED THE REQUIREMENTS OF IBC 1704.4 ARE MET. C2. PERIODIC SPECIAL INSPECTION IS ALLOWED FOR VERIFICATION OF THE WELDABILITY OF REINFORCING STEEL OTHER THAN ASTM A 706 IN ACCORDANCE WITH ANSI/AWS D1.4. CONTINUOUS SPECIAL INSPECTION IS REQUIRED FOR REINFORCING STEEL RESISTING FLEXURAL AND AXIAL FORCES IN INTERMEDIATE AND SPECIAL MOMENT FRAMES, BOUNDARY ELEMENTS OF SPECIAL REINFORCED CONCRETE SHEAR WALLS, AND SHEAR REINFORCEMENT. PERIODIC SPECIAL INSPECTION IS ALLOWED FOR WELDING OF OTHER ASTM A 706 REINFORCING STEEL NOT INCLUDED IN THE CONTINUOUS SPECIAL INSPECTION REQUIREMENTS NOTED ABOVE. C3. PERFORM AIR, SLUMP AND TEMP. TESTS WHEN CONCRETE SAMPLES ARE CAST. C4. PERIODIC SPECIAL INSPECTION IS REQUIRED FOR VERIFICATION OF IN-SITU CONCRETE STRENGTH FOR POST-TENSIONED CONCRETE PRIOR TO TENSIONING TENDONS OR REMOVING SHORING OR FORMS. C5. EPOXY AND EXPANSION ANCHORS INTO MASONRY OR CONCRETE MAY BE USED ONLY WHEN APPROVED BY ARCHITECT AND/OR ENGINEER USING AN APPROVED PRODUCT WITH CURRENT PUBLISHED ICC ES RESEARCH REPORT NUMBERS.
REINFORCING STEEL PLACEMENT		●		
WELDING OF REINFORCING STEEL	●	●	REFERENCE NOTE C2	
EMBEDDED BOLTS & PLATES	●			
VERIFYING REQUIRED DESIGN MIX		●		
CONCRETE PLACEMENT / SAMPLING	●		REFERENCE NOTE C3	
CURING TEMPERATURE / TECHNIQUES		●		
EPOXY / EXPANSION ANCHOR PLACEMENT	●		REFERENCE NOTE C5	
SOILS (IBC 1704.7)			REFERENCE NOTE F1	F1. SPECIAL INSPECTION OF SOILS SHALL REFERENCE THE APPROVED SOILS REPORT TO DETERMINE COMPLIANCE. F2. SPECIAL INSPECTIONS ARE NOT REQUIRED DURING PLACEMENT OF FILL LESS THAN 12 INCHES DEEP.
MATERIALS BELOW FOOTINGS ARE ADEQUATE TO ACHIEVE DESIGN BEARING CAPACITY.		●	REFERENCE NOTE F1	
EXCAVATIONS EXTEND TO PROPER DEPTH AND REACH PROPER MATERIAL.		●	REFERENCE NOTE F2	
PERFORM CLASSIFICATION AND TESTING OF CONTROLLED FILL MATERIALS.		●	REFERENCE NOTE F2	
PERFORM MATERIALS, DENSITIES, AND LIFT THICKNESSES DURING PLACEMENT AND COMPACTION OF CONTROLLED FILL.	●		REFERENCE NOTE F1	
PROPERLY PREPARED SITE AND SUB-GRADE PRIOR TO FILL.		●	REFERENCE NOTE F1	
PIER FOUNDATIONS (IBC 1704.9)			REFERENCE NOTE PF1	PF1. MATERIALS USED IN PILE/PIER FOUNDATIONS SHALL BE SUBJECT TO ADDITIONAL SPECIAL INSPECTION TASKS IN ACCORDANCE WITH THE SPECIAL INSPECTION REQUIREMENTS FOR THE SPECIFIED MATERIALS.
OBSERVE DRILLING OPERATIONS AND MAINTAIN COMPLETE AND ACCURATE RECORDS FOR EACH PIER.	●			
VERIFY PLACEMENT LOCATIONS, AND PLUMBNESS, CONFIRM PIER DIAMETERS, LENGHTS, AND EMBEDMENT PER PROJECT SPECIFICATIONS.	●			

GENERAL SPECIAL INSPECTION NOTES :

1. THE ITEMS MARKED WITH A "●" IN THE SPECIAL INSPECTION SCHEDULE SHALL BE INSPECTED IN ACCORDANCE WITH IBC CHAPTER 17 BY A CERTIFIED SPECIAL INSPECTOR FROM AN ESTABLISHED TESTING AGENCY. FOR MATERIAL SAMPLING AND TESTING REQUIREMENTS, REFER TO THE MATERIAL SAMPLING AND TESTING SECTION, THE PROJECT SPECIFICATIONS, AND THE SPECIFIC GENERAL NOTES SECTIONS. THE TESTING AGENCY SHALL SEND COPIES OF ALL STRUCTURAL TESTING AND INSPECTION REPORTS DIRECTLY TO THE ARCHITECT, ENGINEER, CONTRACTOR, AND BUILDING OFFICIAL. ANY ITEMS WHICH FAIL TO COMPLY WITH THE APPROVED CONSTRUCTION DOCUMENTS SHALL IMMEDIATELY BE BROUGHT TO THE ATTENTION OF THE CONTRACTOR FOR CORRECTION. IF DISCREPANCIES ARE NOT CORRECTED, THEY SHALL BE BROUGHT TO THE ATTENTION OF THE BUILDING OFFICIAL, ARCHITECT, AND ENGINEER PRIOR TO COMPLETION OF THAT PHASE OF WORK. SPECIAL INSPECTION TESTING REQUIREMENTS APPLY EQUALLY TO ALL BIDDER DESIGNED COMPONENTS.
2. ANY CONSTRUCTION OR MATERIAL THAT HAS FAILED INSPECTION SHALL BE SUBJECT TO REMOVAL AND REPLACEMENT.
3. CONTINUOUS SPECIAL INSPECTION MEANS THE FULL-TIME OBSERVATION OF WORK REQUIRING SPECIAL INSPECTION BY AN APPROVED SPECIAL INSPECTOR WHO IS PRESENT IN THE AREA WHERE THE WORK IS BEING PERFORMED. PERIODIC SPECIAL INSPECTION MEANS THE PART-TIME OR INTERMITTENT OBSERVATION OF WORK REQUIRING SPECIAL INSPECTION BY AN APPROVED SPECIAL INSPECTOR WHO IS PRESENT IN THE AREA WHERE THE WORK HAS BEEN OR IS BEING PERFORMED AND AT THE COMPLETION OF THE WORK. (IBC SECTION 1702)

CONCRETE GRADE BEAM SCHEDULE

MARK	BEAM SIZE WIDTH	BEAM SIZE DEPTH	REFERENCE DETAIL	REINF. TOP BARS LENGTHWISE	REINF. TOP BARS CROSSWISE	REINF. BOTTOM BARS LENGTHWISE	REINF. BOTTOM BARS CROSSWISE	STIRRUPS (FROM EACH END)	COMMENTS
GB-1	36"	20"	C6/SB501	(3) #6	#4 @ 16"	(3) #6	#4 @ 16"	#3 @ 12"o.c.	
GB-2	24"	26"	--	(8) #10	--	(8) #10	--	#4 @ 12"o.c.	SEE PLAN FOR LENGTH OF GRADE BEAM
GB-3	24"	26"	D4/SF201	(5) #6	--	(15) #8	--	#4 @ 10"o.c.	SEE PLAN FOR LENGTH OF GRADE BEAM

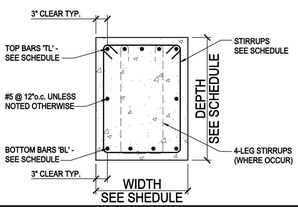

MHTN ARCHITECTS, INC.
420 East South Temple
Suite 100
Salt Lake City, Utah 84111
Telephone (801) 595-6700
Telefax (801) 595-6717
www.mhtn.com

ARW ENGINEERS
structural consultants
159A W. Park Dr. Ogden, Utah 84404
ph. 801.782.6008 fx. 801.782.4656

WEBER STATE UNIVERSITY

HURST CENTER
FOR LIFELONG LEARNING
WEBER STATE UNIVERSITY

UTAH STATE DIVISION OF FACILITIES CONSTRUCTION MANAGEMENT - DFCM PROJECT NO. 07110810

SEAL

LICENSED PROFESSIONAL ENGINEER
Jeremy L. Achter
No. 353467
STATE OF UTAH

MHTN PROJECT NO: 20075566.00

DRAWN BY: B. PAINE CHECKED BY: J. ACHTER

ISSUED:

NO.	DATE	DESCRIPTION
#1	10/26/07	SCHEMATIC DESIGN
#2	12/18/07	DESIGN DEVELOPMENT
#3	02/08/08	CONSTRUCTION DOCUMENTS
#4	03/04/08	CONSTRUCTION BID DOCUMENTS

REVISIONS:

NO.	DATE	DESCRIPTION
1	03/12/08	ADDENDUM #1
2	03/24/08	ADDENDUM #2

STRUCTURAL SCHEDULES

CONSTRUCTION BID DOCUMENTS
MARCH 4, 2008

SHEET NUMBER

SG601

FOOTING & FOUNDATION NOTES

1. SEE SHEET SG001FOR GENERAL STRUCTURAL NOTES.
2. ALL FOOTINGS SHALL BE PLACED ON SOIL WHICH HAS BEEN PREPARED PER THE SOILS REPORT FOR THE BEARING PRESSURE SHOWN IN THE STRUCTURAL NOTES.
3. ALL COLUMN FOOTINGS SHALL BE CENTERED BELOW COLUMNS U.N.O.
4. VERIFY ALL DIMENSIONS WITH DRAWINGS AND NOTIFY ENGINEER OF ANY DISCREPANCIES FOUND.
5. SEE SHEET SG601FOR FOOTING SCHEDULE.
6. PROVIDE DOWELS IN FOOTINGS / FOUNDATIONS TO MATCH VERTICAL WALL REINFORCING U.N.O.
7. SEE SHEET SB501FOR TYPICAL FOOTING AND FOUNDATION DETAILS.
8. ALL EXTERIOR WALL FOOTINGS TO BEAR A MINIMUM DIMENSION BELOW EXTERIOR GRADE AS NOTED IN GENERAL STRUCTURAL NOTES.
9. FOUNDATION WALLS ARE DESIGNED AND DETAILED FOR THE COMPLETED CONDITION. CONTRACTOR IS RESPONSIBLE FOR MEANS AND METHODS OF CONSTRUCTION. BACKFILLED WALLS SHALL BE ADEQUATELY BRACED DURING CONSTRUCTION AND BACKFILLING TO PRODUCE PLUMB AND TRUE FINISHED WALLS.
10. ALL ANCHORS, HOLD-DOWNS, ANCHOR BOLTS, DOWELS, EMBEDDED ITEMS, ETC. SHALL BE HELD IN PLACE PRIOR TO AND DURING CONCRETE AND/OR GROUT PLACEMENT.
11. COORDINATE ALL FOOTING DEPTHS (INTERIOR AND EXTERIOR) WITH DRAINS, CONDUITS, ETC. THAT MAY INTERFERE WITH FOOTINGS.
12. SEE A4/SB501 FOR TYPICAL FOOTING STEP REINFORCING AND ARCHITECTURAL PLANS FOR LOCATIONS.
13. REFER TO GEOTECHNICAL REPORT FOR BASEMENT WALL BACK FILL REQUIREMENTS.

CONCRETE SLAB NOTES

1. SLAB ON GRADE SHALL BE 4" THICK CONCRETE U.N.O. SLAB SHALL BE UNDERLAIN BY FREE DRAINING MATERIAL AS PRESCRIBED IN THE SOILS REPORT.
2. SEE SHEET SB501 FOR CONTROL AND CONSTRUCTION JOINT INFORMATION.

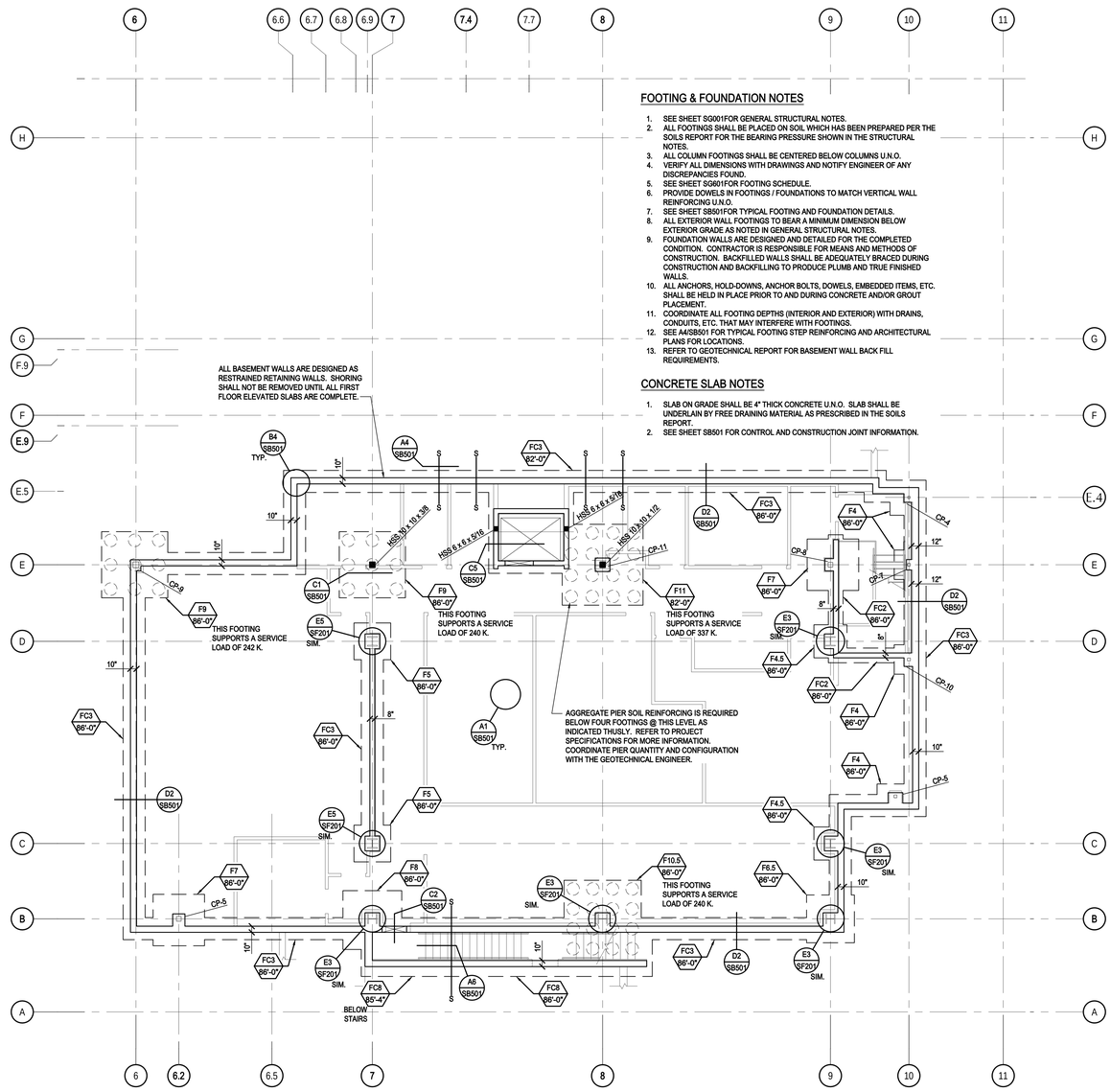

FOOTING / FOUNDATION PLAN

SCALE : 1/8" = 1'-0"

A
SB101B

NORTH

MHTN ARCHITECTS, INC.
420 East South Temple
Suite 100
Salt Lake City, Utah 84111
Telephone (801) 595-6700
Telefax (801) 595-6717
www.mhtn.com

ARW ENGINEERS
structural consultants
1594 W. Park Cir. Ogden, Utah 84404
ph. 801.782.6008 fx. 801.782.4656

WEBER STATE UNIVERSITY

HURST CENTER FOR LIFELONG LEARNING
WEBER STATE UNIVERSITY

UTAH STATE DIVISION OF FACILITIES CONSTRUCTION MANAGEMENT - DFCM PROJECT NO. 07110810

SEAL

LICENSED PROFESSIONAL ENGINEER
Jeremy L. Achter
No. 353467
STATE OF UTAH

MHTN PROJECT NO. 2007556.00

DRAWN BY: B. PAINE CHECKED BY: J. ACHTER

ISSUED:

NO.	DATE	DESCRIPTION
#1	10/26/07	SCHEMATIC DESIGN
#2	12/18/07	DESIGN DEVELOPMENT
#3	02/08/08	CONSTRUCTION DOCUMENTS
#4	03/04/08	CONSTRUCTION BID DOCUMENTS

REVISIONS:

NO.	DATE	DESCRIPTION
1	03/12/08	ADDENDUM #1
2	03/24/08	ADDENDUM #2

FOOTING / FOUNDATION PLAN

CONSTRUCTION BID DOCUMENTS
MARCH 4, 2008

SHEET NUMBER

SB101

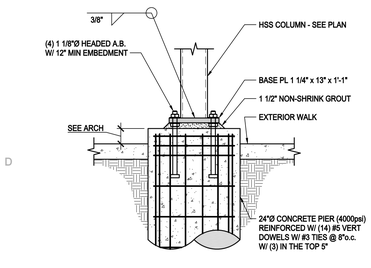

E1 DETAIL
SCALE = NONE

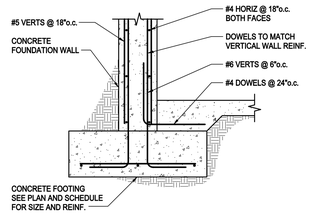

E2 DETAIL
SCALE = NONE

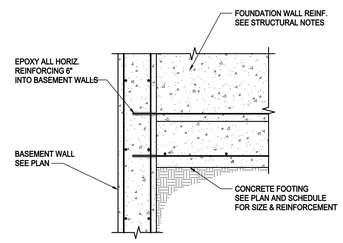

E3 DETAIL
SCALE = NONE

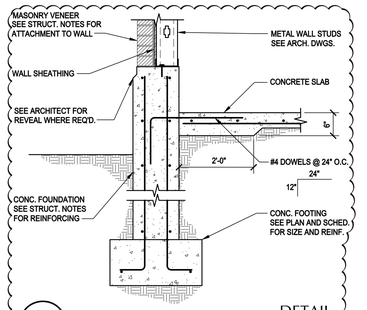

E4 DETAIL
SCALE = NONE

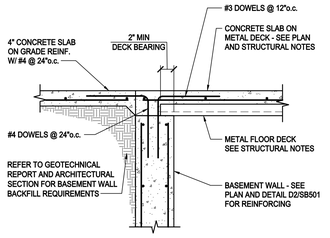

E5 DETAIL
SCALE = NONE

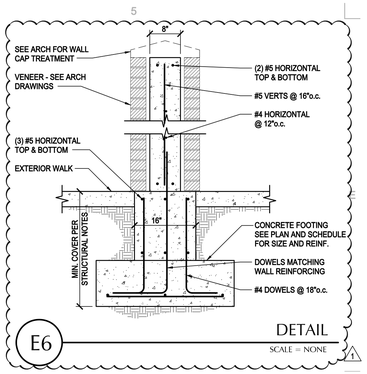

E6 DETAIL
SCALE = NONE

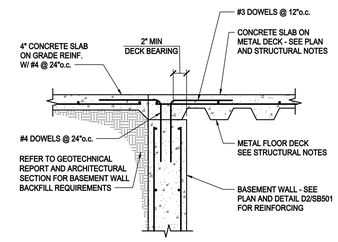

D1 (L) DETAIL
SCALE = NONE

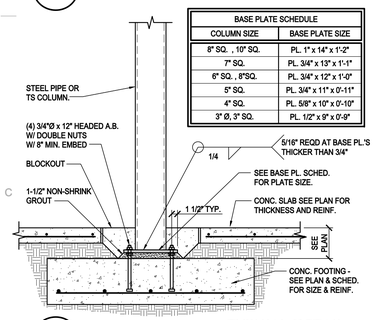

BASE PLATE SCHEDULE	
COLUMN SIZE	BASE PLATE SIZE
8" SQ. , 10" SQ.	PL. 1" x 14" x 1'-2"
7" SQ.	PL. 3/4" x 13" x 1'-1"
6" SQ. , 8"SQ.	PL. 3/4" x 12" x 1'-0"
5" SQ.	PL. 3/4" x 11" x 0'-11"
4" SQ.	PL. 5/8" x 10" x 0'-10"
3" Ø, 3" SQ.	PL. 1/2" x 9" x 0'-9"

C1 TYPICAL DETAIL
SCALE = NONE

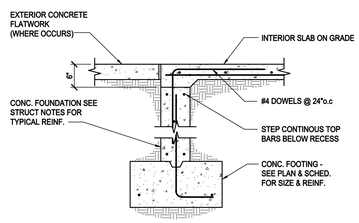

D2 DETAIL
SCALE = NONE

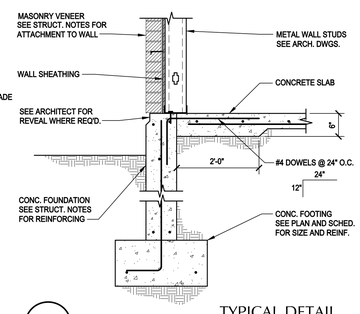

D3 DETAIL
SCALE = NONE

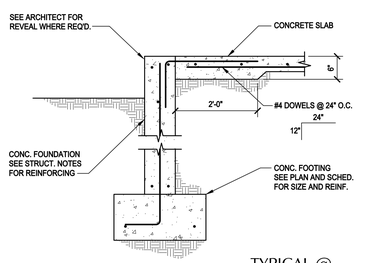

D4 DETAIL
SCALE = NONE

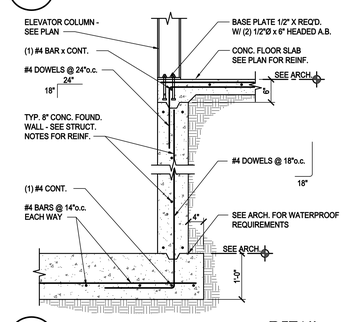

D5 DETAIL
SCALE = NONE

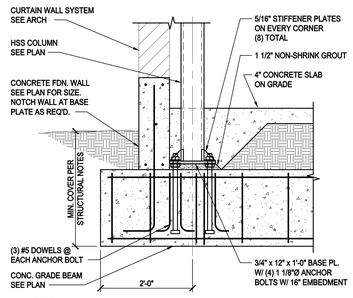

D6 DETAIL
SCALE = NONE

C2 DETAIL
SCALE = NONE

C3 TYPICAL DETAIL
SCALE = NONE

C4 TYPICAL @ WINDOW OPENING DETAIL
SCALE = NONE

C5 DETAIL
SCALE = NONE

C6 DETAIL
SCALE = NONE

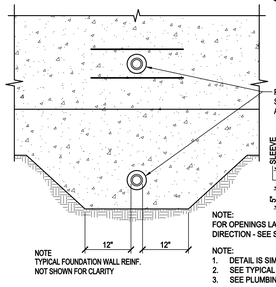

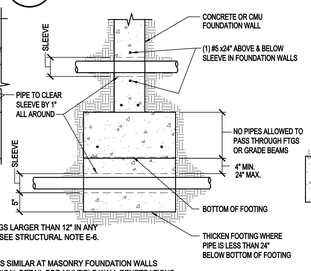

NOTE:
FOR OPENINGS LARGER THAN 12" IN ANY DIRECTION - SEE STRUCTURAL NOTE E-6.

NOTE:
1. DETAIL IS SIMILAR AT MASONRY FOUNDATION WALLS
2. SEE TYPICAL DETAIL FOR MULTIPLE WALL PENETRATIONS
3. SEE PLUMBING PLANS FOR LOCATIONS

PIPE CROSSING FOOTING / FOUNDATION WALL

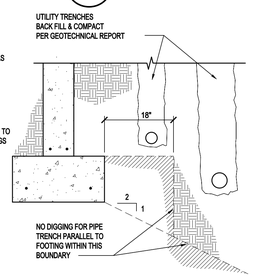

PIPE PARALLEL TO FOOTING

B1 TYPICAL PIPE PENETRATION DETAIL
SCALE = NONE

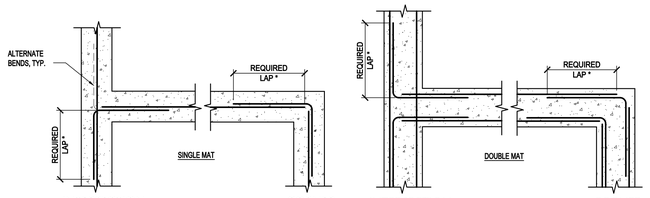

NOTES:
1. REQUIRED LAP *
SEE REBAR LAP SCHEDULE
2. VERTICAL BARS NOT SHOWN
3. DETAIL IS SIMILAR @ SINGLE CURTAIN OF REINF.
4. THIS DETAIL IS APPLICABLE AT ALL FOOTINGS AND FOUNDATION WALLS

B4 TYPICAL DETAIL
SCALE = NONE

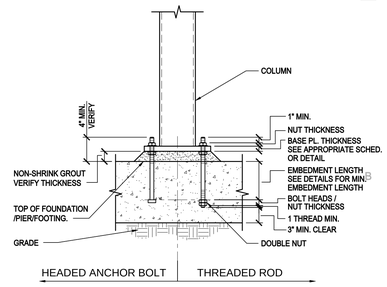

B6 TYPICAL ANCHOR BOLT DETAIL
SCALE = NONE

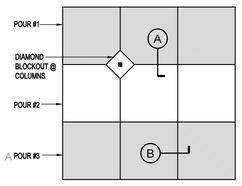

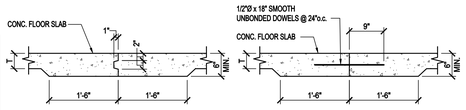

NOTE: THICKENING OF SLAB NOT REQUIRED FOR SLABS WITH T = 6" OR GREATER
T = SLAB THICKNESS
(OPTION 1)
CONSTRUCTION JOINT (A)
SCALE : NONE

NOTE: THICKENING OF SLAB NOT REQUIRED FOR SLABS WITH T = 6" OR GREATER
T = SLAB THICKNESS
(OPTION 2)
CONSTRUCTION JOINT (A)
SCALE : NONE

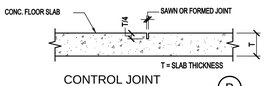

CONTROL JOINT (B)
SCALE : NONE

NOTES :
1. JOINTS SHALL OCCUR AT MAIN COLUMN/GRID LINES W/15'-0" MAX. SPACING BETWEEN JOINTS @ 4" SLABS; 20'-0" MAX. @ 5" & 6" SLABS
2. SEE PLAN FOR SLAB THICKNESS "T" AND REINFORCING SIZE AND SPACING

A1 TYPICAL DETAIL
SCALE = NONE

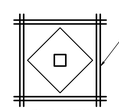

PLAN VIEW

(2) #4 x 4'-0" BARS SHALL BE PLACED IN THE SLAB WHERE CONTROL OR CONSTRUCTION JOINTS DO NOT EXTEND FROM THE CORNERS OF COLUMN BLOCK-OUTS IN SLABS.

(2) #4 x 4'-0" BARS SHALL BE PLACED IN THE SLAB WHERE CONTROL OR CONSTRUCTION JOINT INTERSECTIONS DO NOT OCCUR AT DEPRESSED SLAB CORNERS.

(2) #4 x 4'-0" BARS SHALL BE PLACED IN THE SLAB WHERE CONTROL OR CONSTRUCTION JOINTS INTERSECT ONE ANOTHER BUT DO NOT CONTINUE PAST THE JOINT.

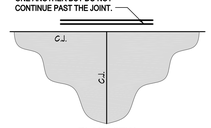

PLAN VIEW

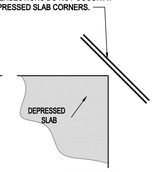

PLAN VIEW

A3 TYPICAL DETAIL
SCALE = NONE

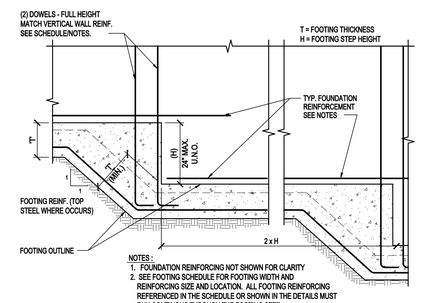

NOTES :
1. FOUNDATION REINFORCING NOT SHOWN FOR CLARITY
2. SEE FOOTING SCHEDULE FOR FOOTING WIDTH AND REINFORCING SIZE AND LOCATION. ALL FOOTING REINFORCING REFERENCED IN THE SCHEDULE OR SHOWN IN THE DETAILS MUST RUN CONTINOUS THROUGH THE FOOTING STEP

A4 TYPICAL DETAIL
SCALE = NONE

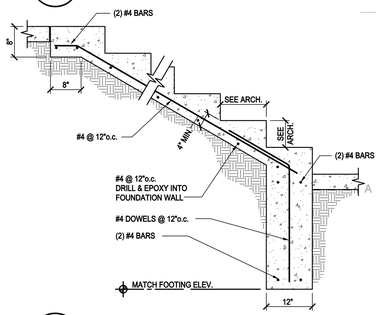

A6 DETAIL
SCALE = NONE

MHTN ARCHITECTS, INC.
420 East South Temple
Suite 100
Salt Lake City, Utah 84111
Telephone (801) 595-6700
Telefax (801) 595-6717
www.mhtn.com

ARW ENGINEERS
structural consultants
1594 W. Park Cir. Ogden, Utah 84404
ph. 801.782.6008 fx. 801.782.4656

WEBER STATE UNIVERSITY

HURST CENTER FOR LIFELONG LEARNING
WEBER STATE UNIVERSITY
UTAH STATE DIVISION OF FACILITIES CONSTRUCTION MANAGEMENT - DFCM PROJECT NO. 07110810

SEAL

LICENSED PROFESSIONAL ENGINEER Jeremy L. Achter No. 333467 STATE OF UTAH

MHTN PROJECT NO. 2007556.00
DRAWN BY: B. PAINE CHECKED BY: J. ACHTER

ISSUED:

NO.	DATE	DESCRIPTION
#1	10/26/07	SCHEMATIC DESIGN
#2	12/18/07	DESIGN DEVELOPMENT
#3	02/06/08	CONSTRUCTION DOCUMENTS
#4	03/04/08	CONSTRUCTION BID DOCUMENTS

REVISIONS:

NO.	DATE	DESCRIPTION
1	03/12/08	ADDENDUM #1
2	03/24/08	ADDENDUM #2

DETAILS

CONSTRUCTION BID DOCUMENTS
MARCH 4, 2008

SHEET NUMBER

SB501

FLOOR FRAMING NOTES :

1. SEE SHEET SG001 FOR GENERAL STRUCTURAL NOTES
2. CONCRETE FLOOR SLABS TO BE 6 1/2" THICK ON 20 GAUGE "W3" DECK REINFORCED WITH #3 REBAR AT 12" O.C. SLAB THICKNESS IS TOTAL FROM BOTTOM OF DECK TO TOP OF CONCRETE. THE REINFORCING SHALL BE PLACED AT THE APPROXIMATE CENTERLINE OF THE CONCRETE DEPTH OVER THE TOP FLUTE OF THE FORMLOK DECK.
3. ( ) DENOTES NUMBER OF 3/4" DIAMETER X 5" LONG HSA ALONG BEAM TOP FLANGE. REFER TO A4/SF501.
4. C = DENOTES AMOUNT OF CAMBER IN WF BEAM AT MIDSPAN.
5. PROVIDE TYPICAL SLAB CLOSURE AT ALL OPENINGS AND SLAB EDGES AS PER TYPICAL DETAILS.
6. WHERE STEEL FLOOR DECK RUNS PERPENDICULAR TO BEAMS WITH HSA, HSA SHALL BE FIELD WELDED TO BEAMS THRU DECK MATERIAL.
7. WHERE STEEL FLOOR DECK RUNS PARALLEL TO BEAMS WITH HSA, A 2-1/2" X CONTINUOUS EXPOSED BEAM FLANGE SURFACE IS REQUIRED FOR CONCRETE COVER OF HSA.
8. DO NOT PROVIDE CONTROL JOINTS IN SUSPENDED CONCRETE SLABS.
9. CONSTRUCTION JOINTS IN SLABS ON DECK SHALL NOT BE CLOSER THAN 12" TO HSA.
10. AT NON-COMPOSITE BEAMS AND JOISTS AND WHERE HSA'S ARE SPACED AT MORE THAN 12" O.C., WELD DECK TO SUPPORT WITH 3/4" DIAMETER PUDDLE WELDS AT 12" O.C.
11. SEE SF501 FOR TYPICAL FRAMING CONDITION.

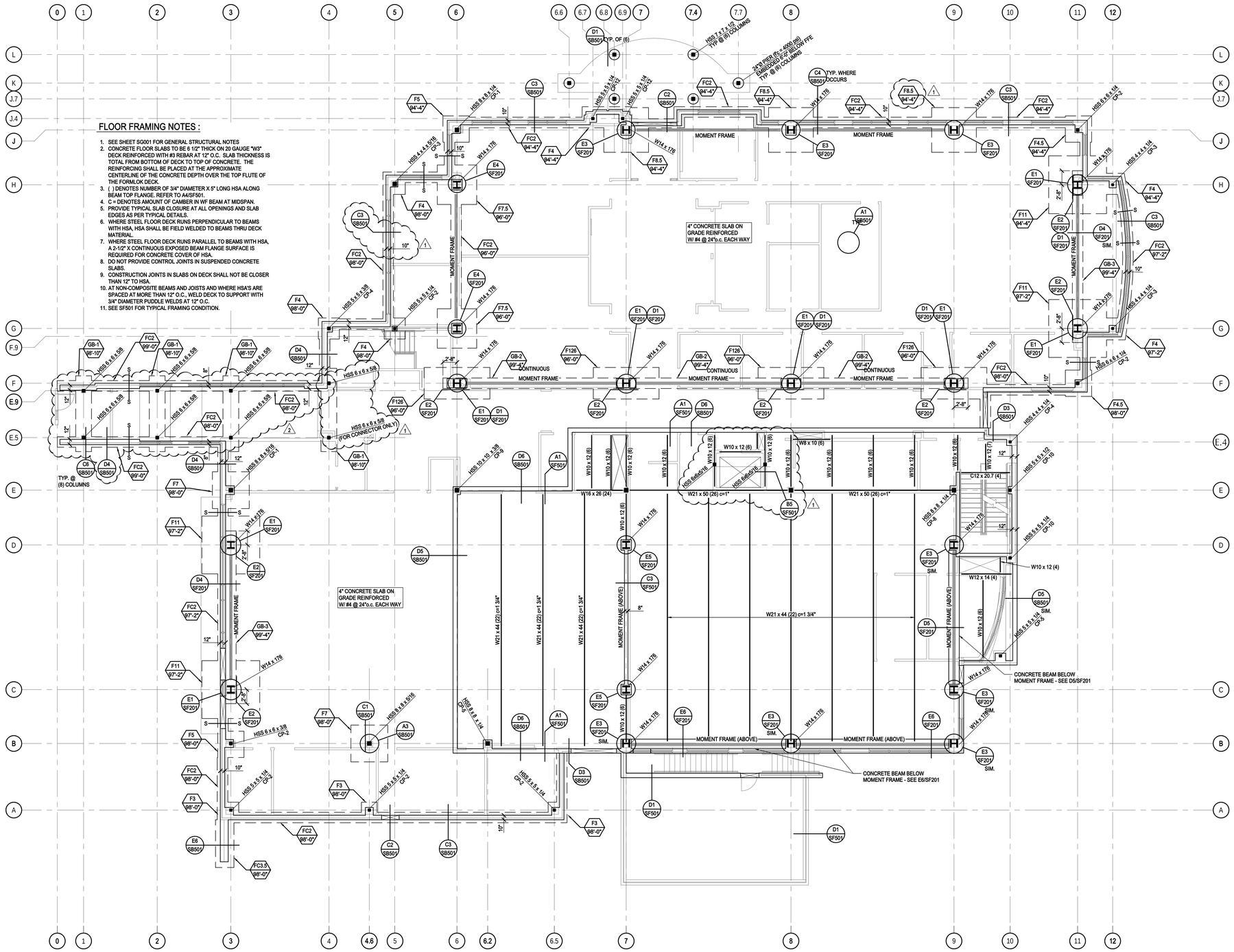

FIRST FLOOR FRAMING PLAN
SCALE : 1/8" = 1'-0"

A
SF101

NORTH

MHTN ARCHITECTS, INC.
420 East South Temple
Suite 100
Salt Lake City, Utah 84111
Telephone (801) 595-6700
Telefax (801) 595-6717
www.mhtn.com

ARW ENGINEERS
structural consultants
159A W. Park Cir. Ogden, Utah 84404
ph. 801.782.6008 fx. 801.782.4656

WEBER STATE UNIVERSITY

HURST CENTER FOR LIFELONG LEARNING
WEBER STATE UNIVERSITY
UTAH STATE DIVISION OF FACILITIES CONSTRUCTION MANAGEMENT - DFCM PROJECT NO. 07110810

SEAL

LICENSED PROFESSIONAL ENGINEER
Jeremy L. Achter
No. 335467
STATE OF UTAH

MHTN PROJECT NO: 2007556.00

DRAWN BY: B. PAINE CHECKED BY: J. ACHTER

ISSUED:

NO.	DATE	DESCRIPTION
#1	10/26/07	SCHEMATIC DESIGN
#2	12/18/07	DESIGN DEVELOPMENT
#3	02/08/08	CONSTRUCTION DOCUMENTS
#4	03/04/08	CONSTRUCTION BID DOCUMENTS

REVISIONS:

NO.	DATE	DESCRIPTION
1	03/12/08	ADDENDUM #1
2	03/24/08	ADDENDUM #2

FIRST FLOOR FRAMING PLAN

CONSTRUCTION BID DOCUMENTS
MARCH 4, 2008

SHEET NUMBER

SF101

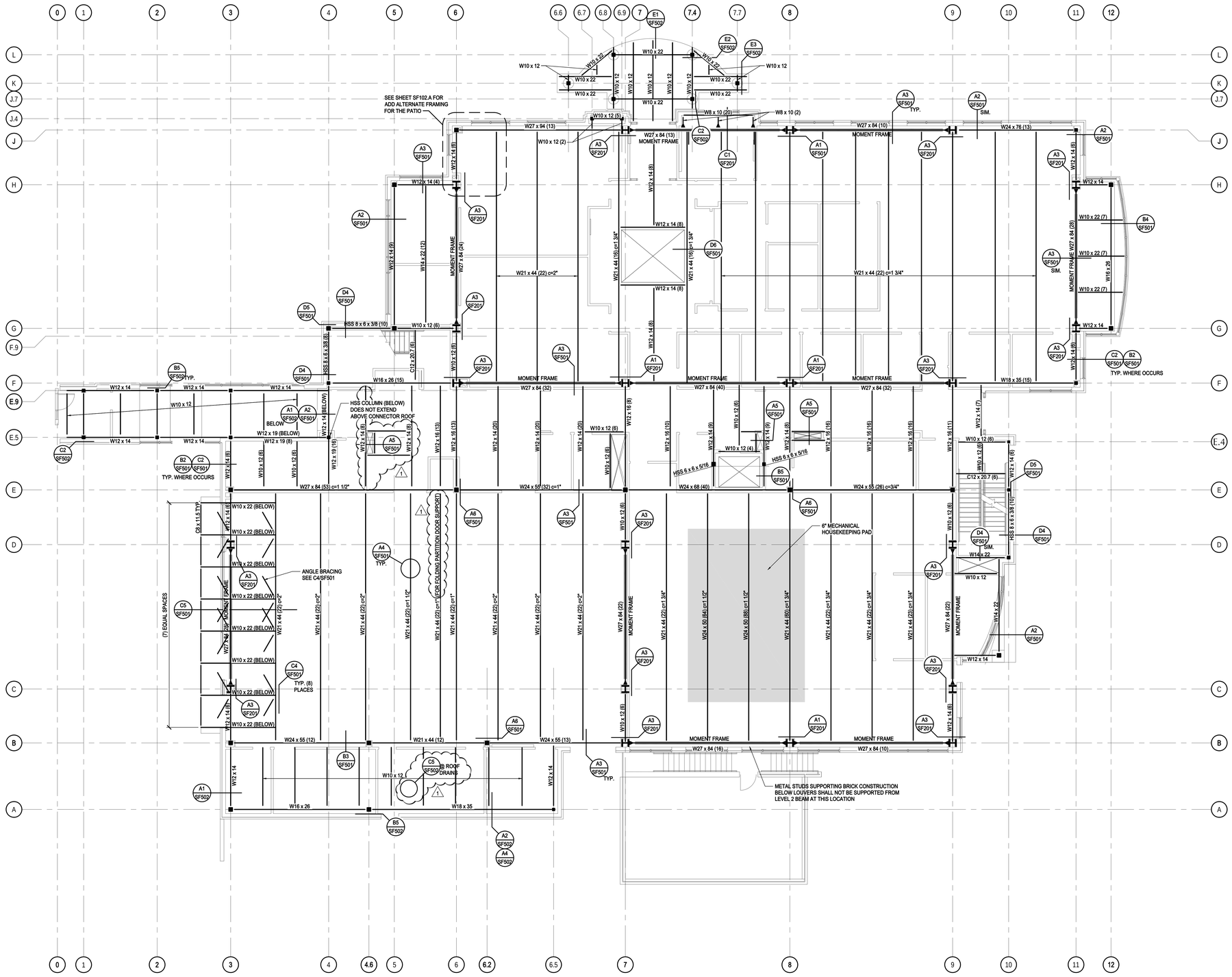

SECOND FLOOR FRAMING PLAN

SCALE : 1/8" = 1'-0"

SEE SHEET SF101 FOR FLOOR FRAMING NOTES

A
SF102

NORTH

MHTN ARCHITECTS, INC.
420 East South Temple
Suite 100
Salt Lake City, Utah 84111
Telephone (801) 595-6700
Telefax (801) 595-6717
www.mhtn.com

ARW ENGINEERS
structural consultants
1594 W. Park Cir. Ogden, Utah 84404
ph. 801.782.6008 fx. 801.782.4656

WEBER STATE UNIVERSITY

HURST CENTER FOR LIFELONG LEARNING
WEBER STATE UNIVERSITY

UTAH STATE DIVISION OF FACILITIES CONSTRUCTION MANAGEMENT - DFCM PROJECT NO. 07110810

SEAL

LICENSED PROFESSIONAL ENGINEER
Jeremy L. Achter
No. 333467
STATE OF UTAH

MHTN PROJECT NO. 2007556.00

DRAWN BY: B. PAINE CHECKED BY: J. ACHTER

ISSUED:

NO.	DATE	DESCRIPTION
#1	10/26/07	SCHEMATIC DESIGN
#2	12/18/07	DESIGN DEVELOPMENT
#3	02/06/08	CONSTRUCTION DOCUMENTS
#4	03/04/08	CONSTRUCTION BID DOCUMENTS

REVISIONS:

NO.	DATE	DESCRIPTION
1	03/12/08	ADDENDUM #1
2	03/24/08	ADDENDUM #2

SECOND FLOOR FRAMING PLAN

CONSTRUCTION BID DOCUMENTS
MARCH 4, 2008

SHEET NUMBER

SF102

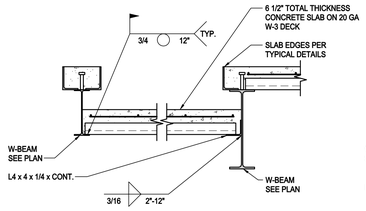

E1 DETAIL
SCALE = NONE

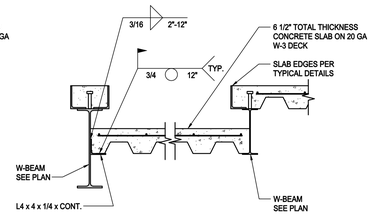

E2 DETAIL
SCALE = NONE

E3 DETAIL
SCALE = NONE

E4 DETAIL
SCALE = NONE

E5 DETAIL
SCALE = NONE

E6 DETAIL
SCALE = NONE

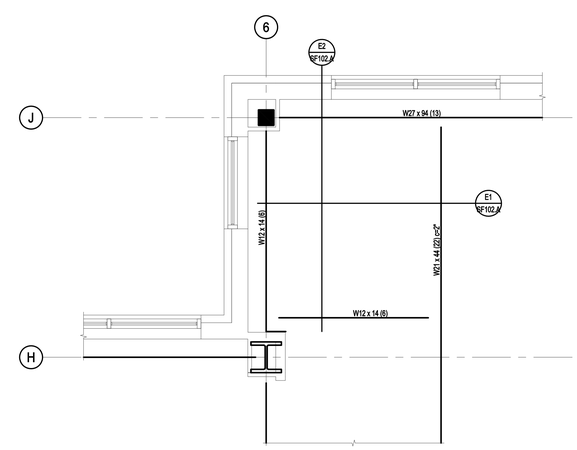

ADD ALTERNATE - PATIO
SCALE : 3/8" = 1'-0"

A
SF102.A

NORTH

MHTN ARCHITECTS, INC.
420 East South Temple
Suite 100
Salt Lake City, Utah 84111
Telephone (801) 595-6700
Telefax (801) 595-6717
www.mhtn.com

ARW ENGINEERS
structural consultants
1594 W. Park Cir. Ogden, Utah 84404
ph. 801.782.6008 fx. 801.782.4656

WEBER STATE UNIVERSITY

HURST CENTER FOR LIFELONG LEARNING
WEBER STATE UNIVERSITY

UTAH STATE DIVISION OF FACILITIES CONSTRUCTION MANAGEMENT - DFCM PROJECT NO. 07110810

SEAL

LICENSED PROFESSIONAL ENGINEER
Jeremy L. Achter
No. 335467
STATE OF UTAH

MHTN PROJECT NO. 2007556.00

DRAWN BY: B. PAINE CHECKED BY: J. ACHTER

ISSUED:

NO.	DATE	DESCRIPTION
#1	10/26/07	SCHEMATIC DESIGN
#2	12/18/07	DESIGN DEVELOPMENT
#3	02/08/08	CONSTRUCTION DOCUMENTS
#4	03/04/08	CONSTRUCTION BID DOCUMENTS

REVISIONS:

NO.	DATE	DESCRIPTION
1	03/12/08	ADDENDUM #1
2	03/24/08	ADDENDUM #2

ADD ALTERNATE - PATIO

CONSTRUCTION BID DOCUMENTS
MARCH 4, 2008

SHEET NUMBER

SF102.A

ROOF FRAMING NOTES :

1. SEE SHEET SG001 FOR GENERAL STRUCTURAL NOTES.
2. GENERAL CONTRACTOR SHALL VERIFY MECHANICAL EQUIPMENT WEIGHTS, DIMENSIONS, AND LOCATIONS W/ MECHANICAL AND REFRIGERATION CONTRACTORS PRIOR TO ORDERING/FABRICATING JOISTS.
3. JOISTS SUPPORTING MECHANICAL EQUIPMENT SHALL BE DESIGNED FOR ADDITIONAL LOADS INDICATED.
4. SEE JOIST LOAD PROFILES FOR SPECIALLY LOADED JOISTS.
5. PROVIDE ADDED HORIZONTAL AND VERTICAL JOISTS LOADS WHERE INDICATED ON PLAN OR DETAILS.
6. JOISTS AND GIRDERS SHALL BE DESIGNED FOR 23 PSF NET WIND UPLIFT.
7. SEE ROOF DECK SCHEDULE FOR REQUIRED DECK AND ATTACHMENTS.
8. SEE TYPICAL DETAILS FOR OPENINGS IN ROOF DECK. SEE MECHANICAL AND ARCHITECTURAL DRAWINGS FOR EXACT LOCATIONS.
9. CONTRACTOR SHALL ERECT AND MAINTAIN ADEQUATE TEMPORARY BRACING UNTIL ALL ROOF FRAMING AND DECK ATTACHMENTS ARE COMPLETE.
10. CONCENTRATED LOADS FROM EQUIPMENT, PIPING, ETC., SHALL NOT BE HUNG FROM JOISTS EXCEPT AT PANEL POINTS AND AS APPROVED BY THE ENGINEER.
11. JOIST BRIDGING IS SHOWN SCHEMATICALLY. ACTUAL BRIDGING DESIGN AND LOCATION BY JOIST MANUFACTURER.
12. ANY CONCENTRATED LOAD ON JOIST CHORDS (INCLUDING FRAMING ANGLES) NOT LOCATED WITHIN 6" OF A PANEL POINT REQUIRE (2) L 2" x 2" x 1/4" FROM THE POINT LOAD TO THE NEAREST OPPOSITE CHORD PANEL POINT (CONTRACTOR SUPPLIED AND INSTALLED).
13. ANY ROOF SUPPORTED PIPING 6" OR LARGER RUNNING PARALLEL TO JOIST SHALL BE SUPPORTED BY 2 OR MORE JOISTS.
14. JOIST BOTTOM CHORDS OVER MECHANICAL ROOMS SHALL BE CAPABLE OF SUPPORTING A CONCENTRATED LOAD OF 1.0k AT ANY PANEL POINT.
15. ALL K SERIES JOISTS SHALL HAVE A 5" BEARING DEPTH.

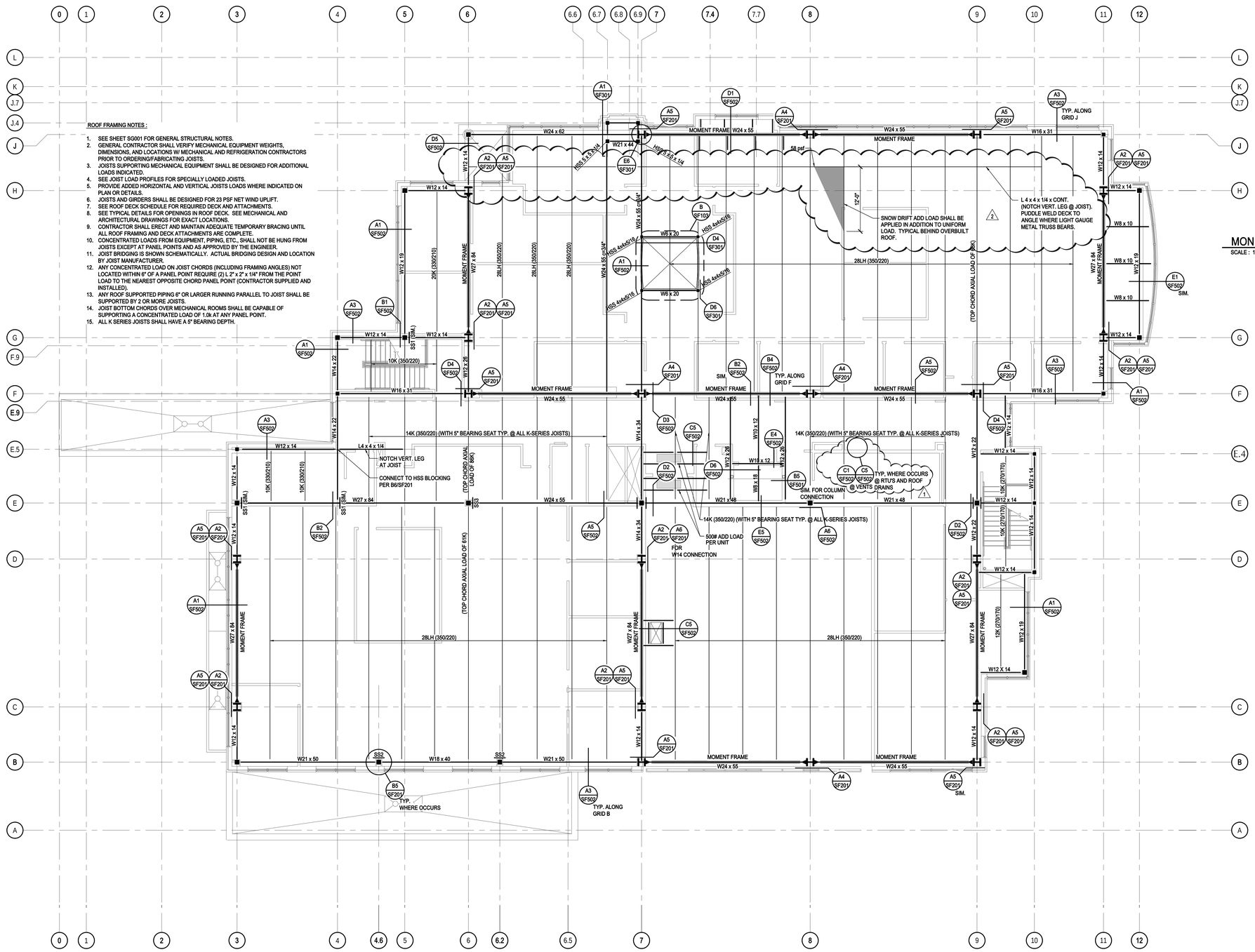

ROOF FRAMING PLAN
SCALE : 1/8" = 1'-0"
A SF103

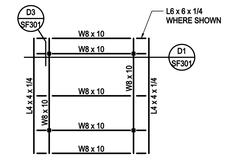

MONITOR ROOF PLAN
SCALE : 1/8" = 1'-0"
B SF103

NORTH

MHTN ARCHITECTS, INC.
420 East South Temple
Suite 100
Salt Lake City, Utah 84111
Telephone (801) 595-6700
Telefax (801) 595-6717
www.mhtn.com

ARW ENGINEERS
structural consultants
1594 W. Park Cir. Ogden, Utah 84404
ph. 801.782.6008 fx. 801.782.4656

HURST CENTER FOR LIFELONG LEARNING
WEBER STATE UNIVERSITY
UTAH STATE DIVISION OF FACILITIES CONSTRUCTION MANAGEMENT - DFCM PROJECT NO. 07110810

SEAL

LICENSED PROFESSIONAL ENGINEER
Jeremy L. Achter
No. 353467
STATE OF UTAH

MHTN PROJECT NO: 20075556.00

DRAWN BY: B. PAINE CHECKED BY: J. ACHTER

ISSUED:

NO.	DATE	DESCRIPTION
#1	10/26/07	SCHEMATIC DESIGN
#2	12/18/07	DESIGN DEVELOPMENT
#3	02/08/08	CONSTRUCTION DOCUMENTS
#4	03/04/08	CONSTRUCTION BID DOCUMENTS

REVISIONS:

NO.	DATE	DESCRIPTION
1	03/12/08	ADDENDUM #1
2	03/24/08	ADDENDUM #2

ROOF FRAMING PLAN

CONSTRUCTION BID DOCUMENTS
MARCH 4, 2008

SHEET NUMBER

SF103

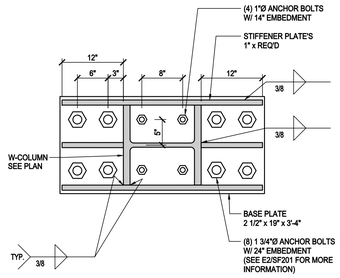

E1 DETAIL
SCALE = NONE

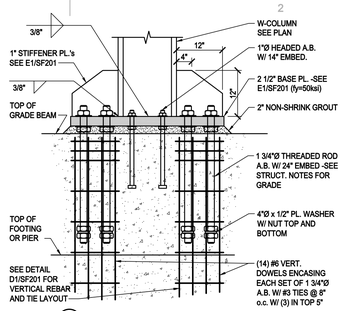

E2 DETAIL
SCALE = NONE

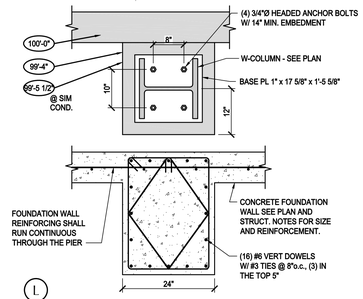

E3 DETAIL
SCALE = NONE

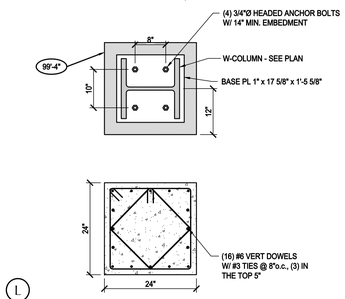

E4 DETAIL
SCALE = NONE

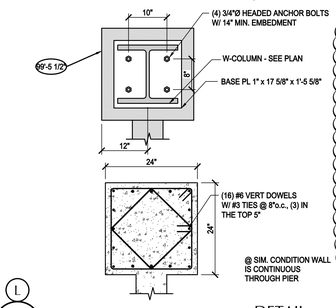

E5 DETAIL
SCALE = NONE

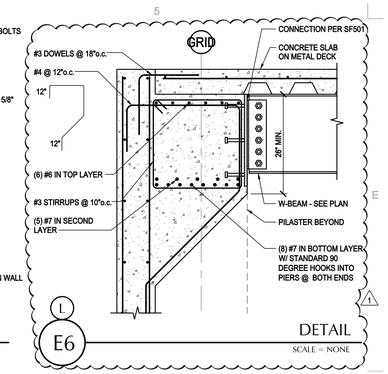

E6 DETAIL
SCALE = NONE

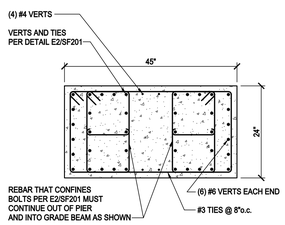

D1 DETAIL
SCALE = NONE

D2 DETAIL
SCALE = NONE

D3 DETAIL
SCALE = NONE

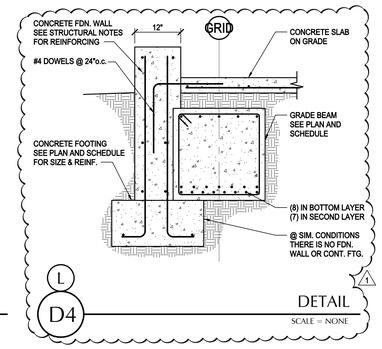

D4 DETAIL
SCALE = NONE

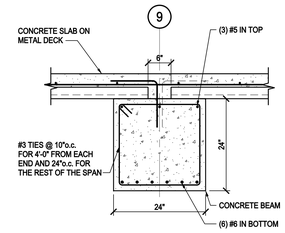

D5 DETAIL
SCALE = NONE

D6 DETAIL
SCALE = NONE

C1 DETAIL
SCALE = NONE

C2 DETAIL
SCALE = NONE

C3 DETAIL
SCALE = NONE

C4 DETAIL
SCALE = NONE

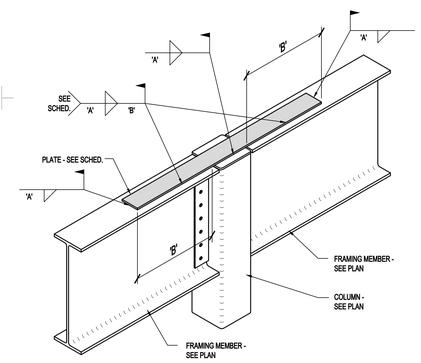

SEISMIC STRAP SCHEDULE			
MARK	STRAP SIZE	WELD SIZE 'A'	WELD LENGTH 'B'
SS1	PLATE 1/4"x4"xREQ'D	3/16"	6"
SS2	PLATE 5/16"x7 1/2"xREQ'D	1/4"	6"
SS3	PLATE 1/4"x8"xREQ'D	3/16"	8"

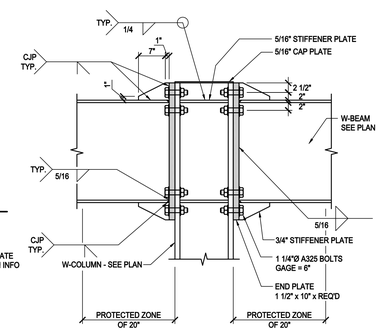

CONTRACTOR NOTE:

1. FLANGE TO END PLATE WELDS SHALL BE DONE WITHOUT BACKING. THE ROOT SHALL BE ON THE BEAM WEB SIDE OF THE FLANGE.
2.
   a. WITHIN THE PROTECTED ZONE, DISCONTINUITIES CREATED BY FACRICATION OR ERECTION OPERATIONS, SUCH AS TACK WELDS, ERECTION AIDS, AIR-ARC GOUGING AND THERMAL CUTTING SHALL BE REPAIRED AS REQUIRED BY THE ENGINEER OF RECORD.
   b. WELDED SHEAR STUDS AND DECKING ATTACHMENTS THAT PENETRATE THE BEAM FLANGE SHALL NOT BE PLACED ON BEAM FLANGES WITHIN THE PROTECTED ZONE. DECKING ARC SPOT WELDS AS REQUIRED TO SECURE DECKING SHALL BE PERMITTED.
   c. WELDED, BOLTED, SCREWED OR SHOT-IN ATTACHMENTS FOR PERIMETER EDGE ANGLES, EXTERIOR FACADES, PARTITIONS, DUCT WORK, PIPING OR OTHER CONSTRUCTION SHALL NOT BE PLACED WITHIN THE PROTECTED ZONE.

A1 DETAIL
SCALE = NONE

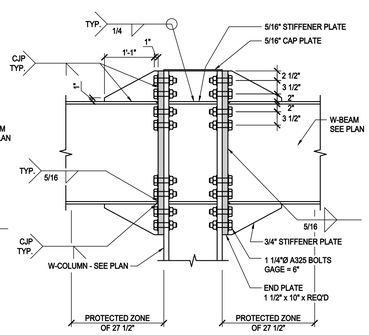

CONTRACTOR NOTE:

1. FLANGE TO END PLATE WELDS SHALL BE DONE WITHOUT BACKING. THE ROOT SHALL BE ON THE BEAM WEB SIDE OF THE FLANGE.
2.
   a. WITHIN THE PROTECTED ZONE, DISCONTINUITIES CREATED BY FACRICATION OR ERECTION OPERATIONS, SUCH AS TACK WELDS, ERECTION AIDS, AIR-ARC GOUGING AND THERMAL CUTTING SHALL BE REPAIRED AS REQUIRED BY THE ENGINEER OF RECORD.
   b. WELDED SHEAR STUDS AND DECKING ATTACHMENTS THAT PENETRATE THE BEAM FLANGE SHALL NOT BE PLACED ON BEAM FLANGES WITHIN THE PROTECTED ZONE. DECKING ARC SPOT WELDS AS REQUIRED TO SECURE DECKING SHALL BE PERMITTED.
   c. WELDED, BOLTED, SCREWED OR SHOT-IN ATTACHMENTS FOR PERIMETER EDGE ANGLES, EXTERIOR FACADES, PARTITIONS, DUCT WORK, PIPING OR OTHER CONSTRUCTION SHALL NOT BE PLACED WITHIN THE PROTECTED ZONE.

A2 DETAIL
SCALE = NONE

B3 DETAIL
SCALE = NONE

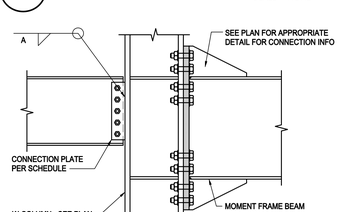

BEAM SIZE	PLATE	BOLTS		WELD 'A'
		NO.	SIZE	
W16	3/8" x 3 1/2"	(4)	3/4"	1/4"
W18	3/8" x 3 1/2"	(5)	3/4"	1/4"
W21	3/8" x 3 1/2"	(6)	3/4"	1/4"
W12	3/8" x 3 1/2"	(3)	3/4"	1/4"

A3 DETAIL
SCALE = NONE

A4 DETAIL
SCALE = NONE

B5 DETAIL
SCALE = NONE

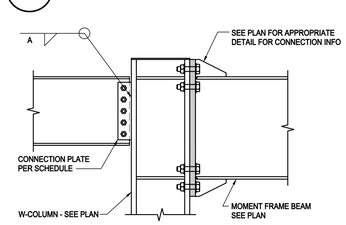

BEAM SIZE	PLATE	BOLTS		WELD 'A'
		NO.	SIZE	
W16	3/8" x 3 1/2"	(4)	3/4"	1/4"
W18	3/8" x 3 1/2"	(5)	3/4"	1/4"
W21	3/8" x 3 1/2"	(6)	3/4"	1/4"
W12	3/8" x 3 1/2"	(3)	3/4"	1/4"

A5 DETAIL
SCALE = NONE

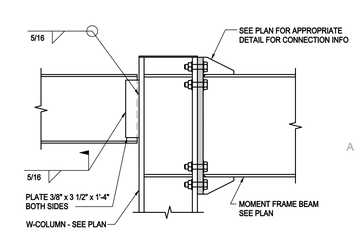

A6 DETAIL
SCALE = NONE

MHTN ARCHITECTS, INC.
420 East South Temple
Suite 100
Salt Lake City, Utah 84111
Telephone (801) 595-6700
Telefax (801) 595-6717
www.mhtn.com

ARW ENGINEERS
structural consultants
1594 W. Park Cir. Ogden, Utah 84404
ph. 801.782.6008 fx. 801.782.4656

HURST CENTER FOR LIFELONG LEARNING
WEBER STATE UNIVERSITY

UTAH STATE DIVISION OF FACILITIES CONSTRUCTION MANAGEMENT - DFCM PROJECT NO. 07110810

SEAL

LICENSED PROFESSIONAL ENGINEER
Jeremy L. Achter
No. 335467
STATE OF UTAH

MHTN PROJECT NO. 2007556.00

DRAWN BY: B. PAINE CHECKED BY: J. ACHTER

ISSUED:

NO.	DATE	DESCRIPTION
#1	10/26/07	SCHEMATIC DESIGN
#2	12/18/07	DESIGN DEVELOPMENT
#3	02/08/08	CONSTRUCTION DOCUMENTS
#4	03/04/08	CONSTRUCTION BID DOCUMENTS

REVISIONS:

NO.	DATE	DESCRIPTION
1	03/12/08	ADDENDUM #1
2	03/24/08	ADDENDUM #2

DETAILS

CONSTRUCTION BID DOCUMENTS
MARCH 4, 2008

SHEET NUMBER

SF201

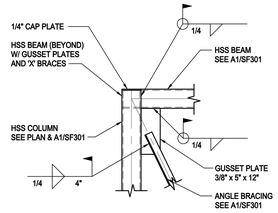

E1 DETAIL
SCALE = NONE

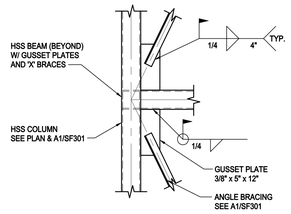

E2 DETAIL
SCALE = NONE

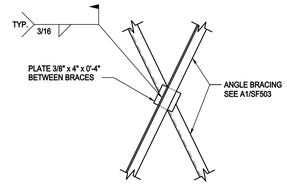

E3 DETAIL
SCALE = NONE

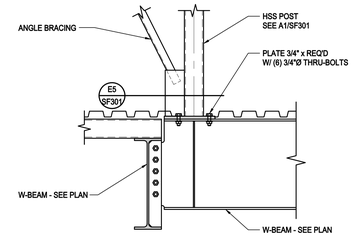

E4 DETAIL
SCALE = NONE

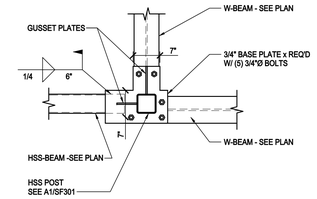

E5 DETAIL
SCALE = NONE

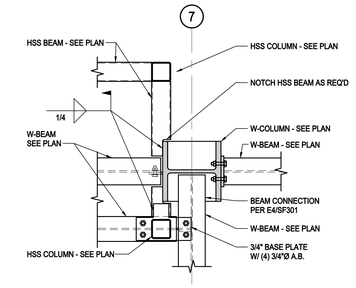

E6 DETAIL
SCALE = NONE

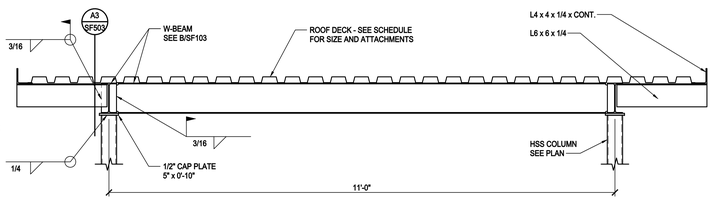

D1 DETAIL
SCALE = NONE

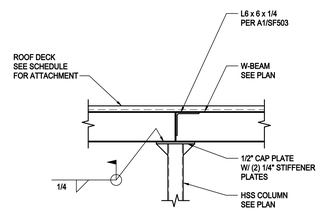

D3 DETAIL
SCALE = NONE

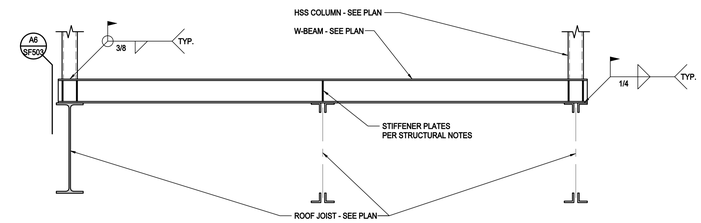

D4 DETAIL
SCALE = NONE

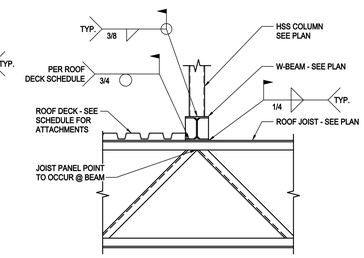

D6 DETAIL
SCALE = NONE

C1 DETAIL
SCALE = NONE

C2 DETAIL
SCALE = NONE

C3 DETAIL
SCALE = NONE

C4 DETAIL
SCALE = NONE

C5 DETAIL
SCALE = NONE

C6 DETAIL
SCALE = NONE

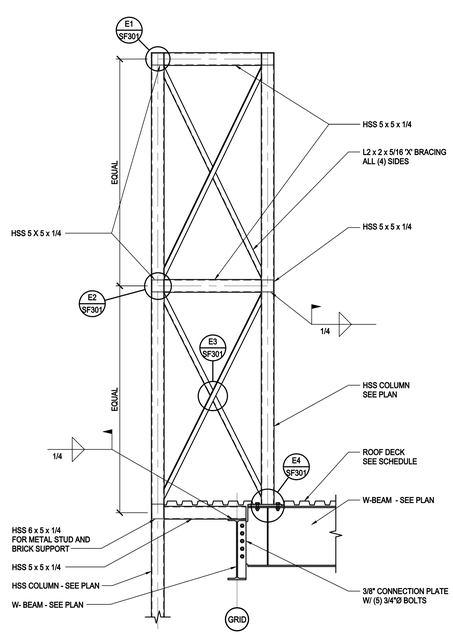

A1 CHIMNEY ELEVATION
SCALE = NONE

B3 DETAIL
SCALE = NONE

B4 DETAIL
SCALE = NONE

B5 DETAIL
SCALE = NONE

B6 DETAIL
SCALE = NONE

A3 DETAIL
SCALE = NONE

A4 DETAIL
SCALE = NONE

A5 DETAIL
SCALE = NONE

A6 DETAIL
SCALE = NONE

MHTN ARCHITECTS, INC.
420 East South Temple
Suite 100
Salt Lake City, Utah 84111
Telephone (801) 595-6700
Telefax (801) 595-6717
www.mhtn.com

ARW ENGINEERS
structural consultants
1594 W. Park Cir. Ogden, Utah 84404
ph. 801.782.6008 fx. 801.782.4656

WEBER STATE UNIVERSITY

HURST CENTER FOR LIFELONG LEARNING
WEBER STATE UNIVERSITY
UTAH STATE DIVISION OF FACILITIES CONSTRUCTION MANAGEMENT - DFCM PROJECT NO. 07110810

SEAL

LICENSED PROFESSIONAL ENGINEER
Jeremy L. Achter
No. 335467
STATE OF UTAH

MHTN PROJECT NO. 2007556.00

DRAWN BY: B. PAINE CHECKED BY: J. ACHTER

ISSUED:

NO.	DATE	DESCRIPTION
#1	10/26/07	SCHEMATIC DESIGN
#2	12/18/07	DESIGN DEVELOPMENT
#3	02/08/08	CONSTRUCTION DOCUMENTS
#4	03/04/08	CONSTRUCTION BID DOCUMENTS

REVISIONS:

NO.	DATE	DESCRIPTION
1	03/12/08	ADDENDUM #1
2	03/24/08	ADDENDUM #2

CHIMNEY FRAMING AND DETAILS

CONSTRUCTION BID DOCUMENTS
MARCH 4, 2008

SHEET NUMBER

SF301

NOTES :

1. PROVIDE 3/4" DEEP VERTICAL CONTROL JOINT AT 15'-0" MAXIMUM SPACING. CONTINUE ALL HORIZONTAL REINFORCING THROUGH JOINT.
2. PROVIDE EXPANSION JOINTS @ 48'-0"o.c. MAX. SPACING.

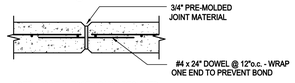

NOTE : JOINT IN FOOTING NOT REQUIRED.

3. EXTEND HORIZONTAL REINFORCING AROUND CORNERS OR ADD CORNER BARS AND LAP EACH WAY - SEE REBAR LAP SCHEDULE.
4. ALLOW CONCRETE TO REACH 100% OF DESIGN STRENGTH (f'c) PRIOR TO BACKFILLING.
5. PROVIDE 2"Ø PVC PIPE WEEP HOLES @ 12'-0", W/ NON-FERROUS SCREEN & GRAVEL BACKING. CONTINUOUS PERFORATED FOUNDATION DRAIN LINE TIED TO STORM DRAIN SYSTEM IS AN ACCEPTABLE ALTERNATE TO WEEP HOLES.
6. PROVIDE FILTER FABRIC BETWEEN GRANULAR BACKFILL AND BACK SIDE OF WALL. FILTER FABRIC TO BE FREE DRAINING WITHOUT ALLOWING INFILTRATION OF FINE SOILS.
7. DUMPSTER ENCLOSURE WALLS SHALL COMPLY WITH THE WALL TYPE WHERE 'H' = 7'-0"

DIMENSION 'H'	DIMENSION				BAR TYPE 'H'		BAR TYPE 'V'		BAR TYPE 'C'		BAR TYPE 'T'	
	'T'	'A'	'B'	'W'	SIZE	SPACING	SIZE	SPACING	SIZE	NUMBER	SIZE	SPACING
H ≤ 3'-0"	12"	8"	6"	24"	#4	12"o.c.	#4	16"o.c.	#5	—	—	—
3'-1" - 5'-0"	12"	8"	9"	36"	#4	12"o.c.	#4	16"o.c.	#4	(3)	#4	16"o.c.
5'-1" - 7'-0"	12"	8"	18"	48"	#4	12"o.c.	#5	12"o.c.	#4	(5)	#5	16"o.c.

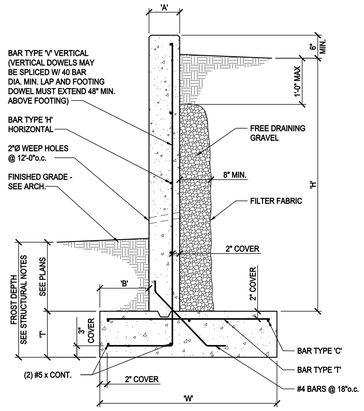

D1 TYPICAL SITE RETAINING WALL DETAIL
SCALE = NONE

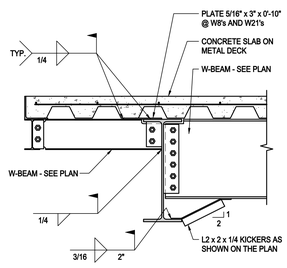

C1 DETAIL
SCALE = NONE

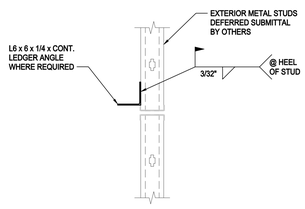

C2 TYPICAL LEDGER ANGLE DETAIL
SCALE = NONE

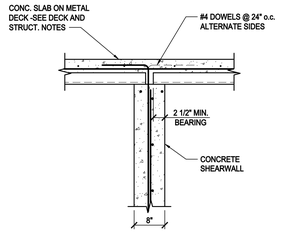

C3 DETAIL
SCALE = NONE

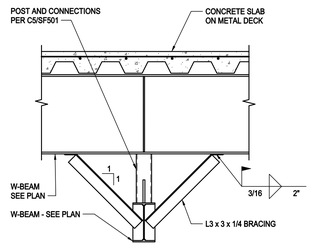

C4 DETAIL
SCALE = NONE

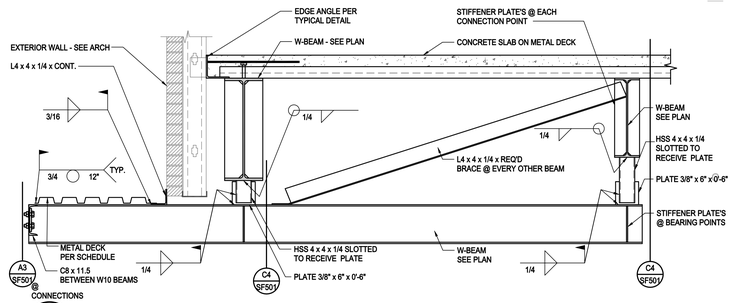

C5 DETAIL
SCALE = NONE

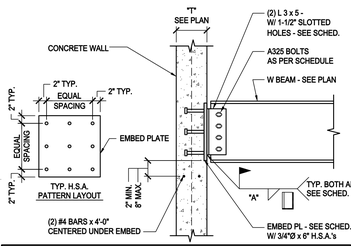

BEAM SIZE	ANGLE SIZE (EA. SIDE)	WELD 'A'	BOLTS	EMBED PLATE	# OF H.S.A.	H.S.A. PATTERN
W8x, C8x	3 x 5 x 1/4	3/16"	(2) 3/4"Ø	1/2" x 8" x 8"	4	⁝⁝
W10x	3 x 5 x 5/16	1/4"	(2) 3/4"Ø	1/2" x 12" x 1'-4"	6	⁝⁝⁝
W12x, C12x	3 x 5 x 5/16	1/4"	(3) 3/4"Ø	1/2" x 12" x 1'-4"	6	⁝⁝⁝
W14x	3 x 5 x 5/16	1/4"	(3) 3/4"Ø	1/2" x 15" x 1'-4"	9	⁝⁝⁝
W16x	3 x 5 x 5/16	1/4"	(4) 3/4"Ø	3/4" x 15" x 2'-0"	12	⁝⁝⁝⁝
W18x	3 x 5 x 5/16	1/4"	(5) 3/4"Ø	3/4" x 15" x 2'-0"	12	⁝⁝⁝⁝
W21x	3 x 5 x 3/8	1/4"	(6) 7/8"Ø	3/4" x 15" x 2'-0"	12	⁝⁝⁝⁝
W24x	3 x 5 x 3/8	1/4"	(7) 7/8"Ø	3/4" x 15" x 2'-0"	12	⁝⁝⁝⁝
W27x	3 x 5 x 3/8	3/8"	(8) 7/8"Ø	3/4" x 15" x 2'-6"	15	⁝⁝⁝⁝
W30x	3 x 5 x 3/8	3/8"	(9) 7/8"Ø	3/4" x 15" x 2'-6"	15	⁝⁝⁝⁝

A1 TYPICAL DETAIL
SCALE = NONE

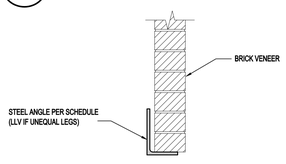

CLEAR OPENING	SIZE OF ANGLE
UP TO 7'-0"	3-1/2" x 3-1/2" x 1/4"
7'-1" TO 9'-0"	5" x 3-1/2" x 1/4"
9'-1" TO 10'-0"	5" x 3-1/2" x 5/16"
10'-1" TO 11'-0"	5" x 3-1/2" x 3/8"
11'-1" TO 12'-0"	6" x 4" x 3/8"

NOTE:
PROVIDE 1" BEARING FOR EACH FOOT OF SPAN @ EACH END. (MIN. OF 6" BEARING @ EACH END)

B2 TYPICAL DETAIL
SCALE = NONE

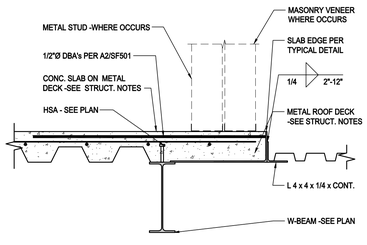

B3 DETAIL
SCALE = NONE

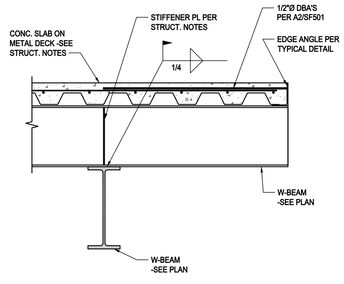

B4 DETAIL
SCALE = NONE

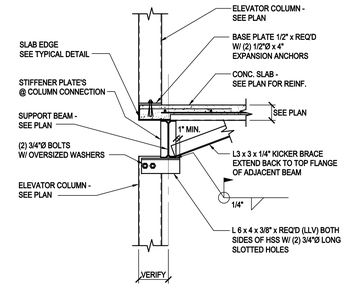

B5 DETAIL
SCALE = NONE

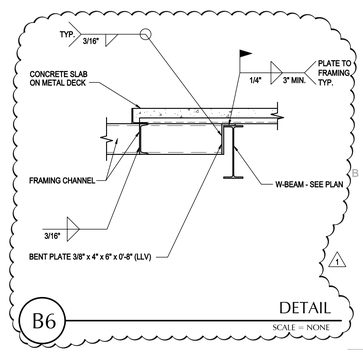

B6 DETAIL
SCALE = NONE

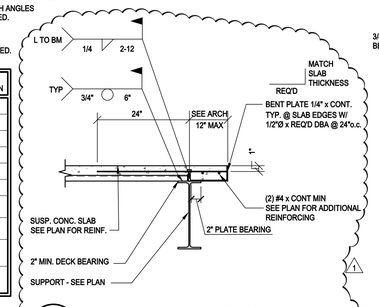

A2 TYPICAL DETAIL
SCALE = NONE

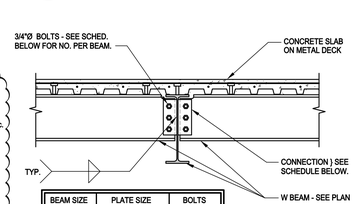

BEAM SIZE	PLATE SIZE	BOLTS
W10	1/4" x 3-1/2"	(2) 3/4"
W12	1/4" x 3-1/2"	(3) 3/4"
W14	3/8" x 3-1/2"	(3) 3/4"
W16	3/8" x 3-1/2"	(4) 3/4"
W18	3/8" x 3-1/2"	(5) 3/4"
W21	3/8" x 3-1/2"	(6) 3/4"
W24	3/8" x 3-1/2"	(6) 3/4"

A3 DETAIL
SCALE = NONE

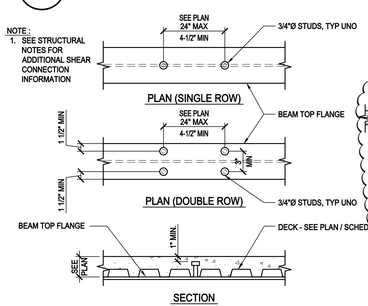

A4 TYPICAL DETAIL
SCALE = NONE

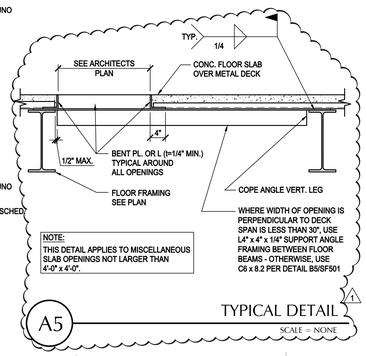

A5 TYPICAL DETAIL
SCALE = NONE

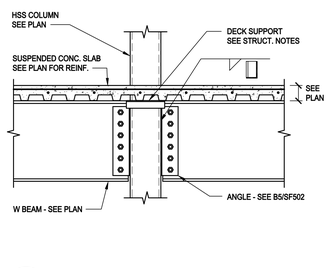

A6 DETAIL
SCALE = NONE

E4 DETAIL
SCALE = NONE

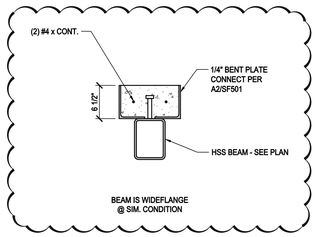

D4 DETAIL
SCALE = NONE

E5 DETAIL
SCALE = NONE

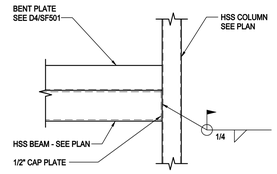

NOTE: CLIP HSS CORNER WHERE PERPENDICULAR BEAMS CONNECT TO COLUMN.

D5 DETAIL
SCALE = NONE

E6 DETAIL
SCALE = NONE

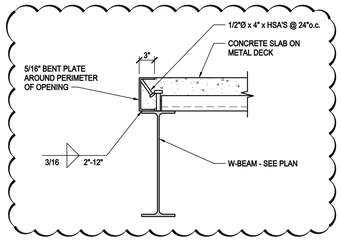

D6 DETAIL
SCALE = NONE

MHTN ARCHITECTS, INC.
420 East South Temple
Suite 100
Salt Lake City, Utah 84111
Telephone (801) 595-6700
Telefax (801) 595-6717
www.mhtn.com

ARW ENGINEERS
structural consultants
1594 W. Park Cir. Ogden, Utah 84404
ph. 801.782.6008 fx. 801.782.4656

WEBER STATE UNIVERSITY

HURST CENTER FOR LIFELONG LEARNING
WEBER STATE UNIVERSITY

UTAH STATE DIVISION OF FACILITIES CONSTRUCTION MANAGEMENT - DFCM PROJECT NO. 07110810

SEAL

LICENSED PROFESSIONAL ENGINEER
Jeremy L. Achter
No. 355467
STATE OF UTAH

MHTN PROJECT NO. 2007556.00

DRAWN BY: B. PAINE CHECKED BY: J. ACHTER

ISSUED:

NO.	DATE	DESCRIPTION
#1	10/26/07	SCHEMATIC DESIGN
#2	12/18/07	DESIGN DEVELOPMENT
#3	02/08/08	CONSTRUCTION DOCUMENTS
#4	03/04/08	CONSTRUCTION BID DOCUMENTS

REVISIONS:

NO.	DATE	DESCRIPTION
1	03/12/08	ADDENDUM #1
2	03/24/08	ADDENDUM #2

DETAILS

CONSTRUCTION BID DOCUMENTS
MARCH 4, 2008

SHEET NUMBER

SF501

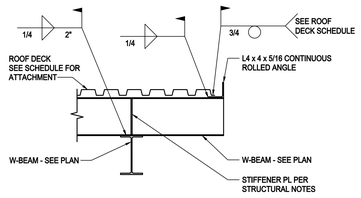

E1 DETAIL
SCALE = NONE

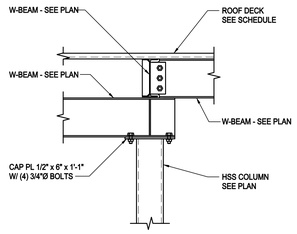

E2 DETAIL
SCALE = NONE

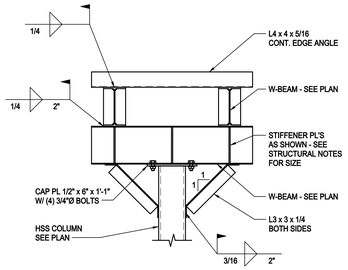

E3 DETAIL
SCALE = NONE

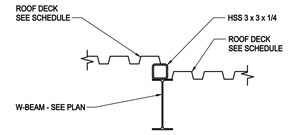

E4 DETAIL
SCALE = NONE

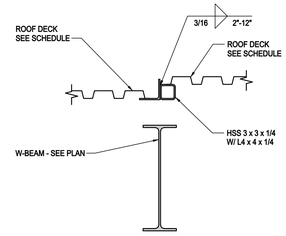

E5 DETAIL
SCALE = NONE

E6 DETAIL
SCALE = NONE

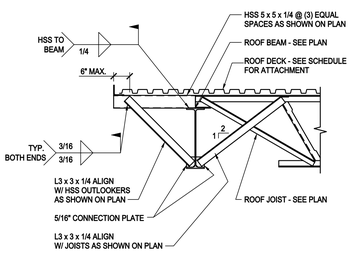

D1 DETAIL
SCALE = NONE

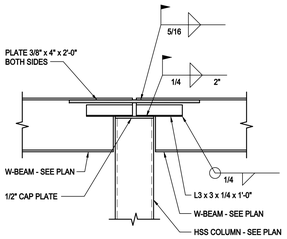

D2 DETAIL
SCALE = NONE

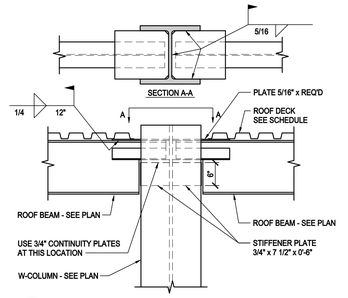

D3 DETAIL
SCALE = NONE

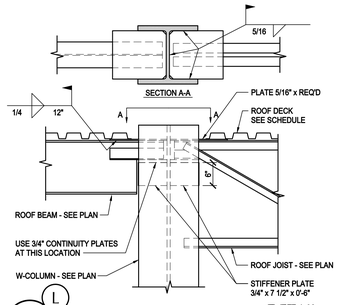

D4 DETAIL
SCALE = NONE

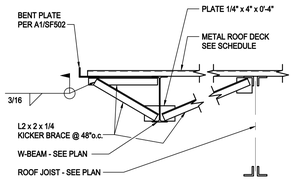

D5 DETAIL
SCALE = NONE

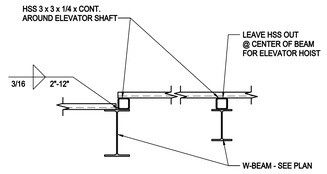

D6 DETAIL
SCALE = NONE

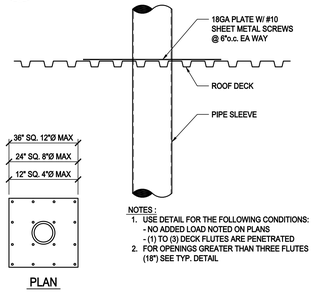

NOTES :
1. USE DETAIL FOR THE FOLLOWING CONDITIONS:
   - NO ADDED LOAD NOTED ON PLANS
   - (1) TO (3) DECK FLUTES ARE PENETRATED
2. FOR OPENINGS GREATER THAN THREE FLUTES (18") SEE TYP. DETAIL

C1 TYPICAL ROOF PENETRATION DETAIL
SCALE = NONE

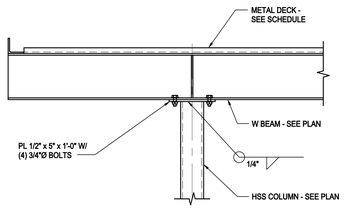

C2 DETAIL
SCALE = NONE

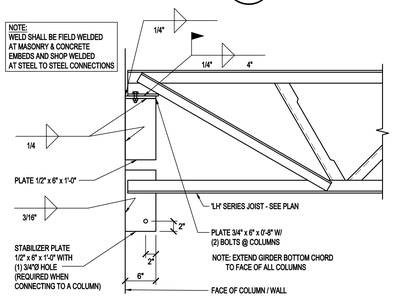

C3 TYPICAL JOIST BEARING SEAT
SCALE = NONE

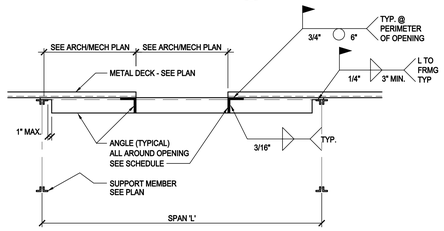

SPAN	ANGLE SIZE
L ≤ 6'-0"	L4 x 4 x 1/4
L ≤ 8'-0"	L4 x 4 x 3/8
L ≤ 10'-0"	L5 x 5 x 3/8

NOTES:
1. THIS DETAIL APPLIES TO ROOF OPENINGS LARGER THAN 18" IN EITHER DIRECTION.
2. WHERE THERE IS NO OPENING IN ROOF, PLACE FRAME UNDER CURB.

C5 TYPICAL ROOF PENETRATION
SCALE = NONE

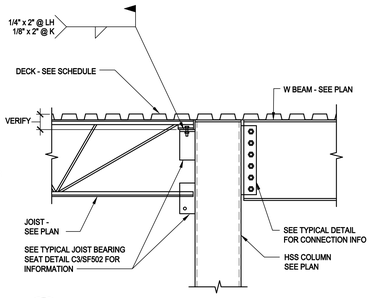

B1 DETAIL
SCALE = NONE

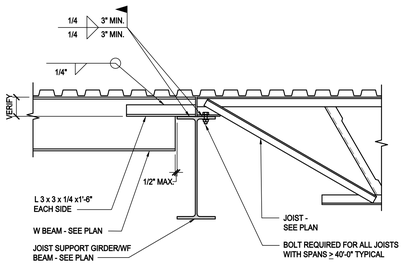

B2 DETAIL
SCALE = NONE

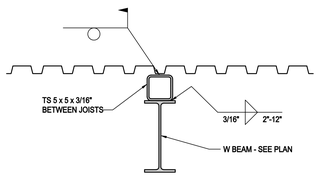

B4 DETAIL
SCALE = NONE

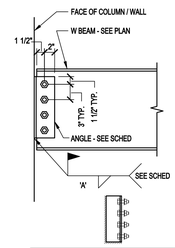

NOTE:
WELD SHALL BE FIELD WELDED AT MASONRY AND CONCRETE EMBEDS; AND SHOP WELDED AT STEEL TO STEEL CONNECTIONS.

CONNECTION SCHEDULE					
BEAM DEPTH	ANGLE	BOLTS No.	BOLTS SIZE	WELD 'A'	COMMENTS
W8 x, W10 x	L 4x3x1/4	2	3/4"Ø	1/4"	--
W12 x	L 4x3x1/4	3	3/4"Ø	1/4"	--
W14 x	L 4x3x1/4	3	3/4"Ø	1/4"	--
W16 x	L 4x3x3/8	4	3/4"Ø	1/4"	--
W18 x	L 4x3x3/8	5	3/4"Ø	1/4"	--
W21 x, W24 x	L 4x3x3/8	6	7/8"Ø	1/4"	--
W27 x	L 4x3x3/8	8	7/8"Ø	3/8"	--
W30 x	L 4x3x3/8	9	7/8"Ø	3/8"	--

NOTE: AT CONNECTION TO MASONRY OR CONCRETE EMBED, PROVIDE SHORT HORIZONTAL SLOTTED HOLES IN ANGLE.

B5 TYPICAL BEAM CONNECTION
SCALE = NONE

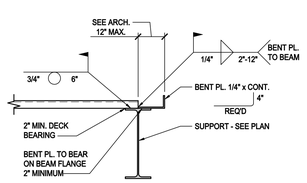

A1 DETAIL
SCALE = NONE

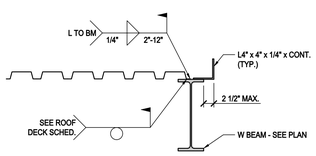

A2 DETAIL
SCALE = NONE

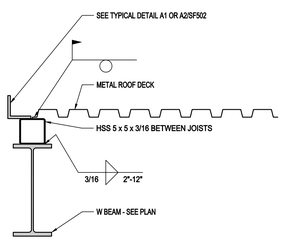

A3 DETAIL
SCALE = NONE

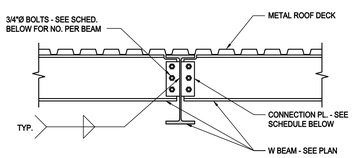

BEAM SIZE	PLATE SIZE	BOLTS
W10	1/4" x 3-1/2"	(2) 3/4"
W12	1/4" x 3-1/2"	(3) 3/4"
W14	3/8" x 3-1/2"	(3) 3/4"
W16	3/8" x 3-1/2"	(4) 3/4"
W18	3/8" x 3-1/2"	(5) 3/4"
W21	3/8" x 3-1/2"	(6) 3/4"
W24	3/8" x 3-1/2"	(6) 3/4"

TYPICAL DETAIL
SCALE = NONE

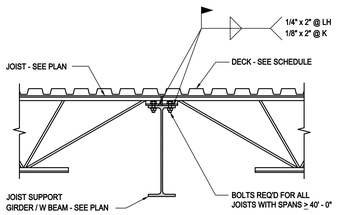

A5 DETAIL
SCALE = NONE

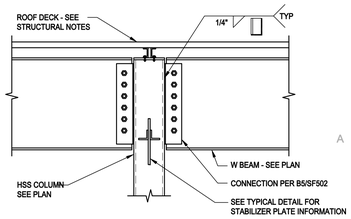

A6 DETAIL
SCALE = NONE

MHTN ARCHITECTS, INC.
420 East South Temple
Suite 100
Salt Lake City, Utah 84111
Telephone (801) 595-6700
Telefax (801) 595-6717
www.mhtn.com

ARW ENGINEERS
structural consultants
1594 W. Park Cir. Ogden, Utah 84404
ph. 801.782.6008 fx. 801.782.4656

HURST CENTER FOR LIFELONG LEARNING WEBER STATE UNIVERSITY

UTAH STATE DIVISION OF FACILITIES CONSTRUCTION MANAGEMENT - DFCM PROJECT NO. 07110810

SEAL

LICENSED PROFESSIONAL ENGINEER Jeremy L. Achter No. 353467 STATE OF UTAH

MHTN PROJECT NO. 2007556.00

DRAWN BY: B. PAINE CHECKED BY: J. ACHTER

ISSUED:

NO.	DATE	DESCRIPTION
#1	10/26/07	SCHEMATIC DESIGN
#2	12/18/07	DESIGN DEVELOPMENT
#3	02/08/08	CONSTRUCTION DOCUMENTS
#4	03/04/08	CONSTRUCTION BID DOCUMENTS

REVISIONS:

NO.	DATE	DESCRIPTION
1	03/12/08	ADDENDUM #1
2	03/24/08	ADDENDUM #2

DETAILS

CONSTRUCTION BID DOCUMENTS
MARCH 4, 2008

SHEET NUMBER

SF502

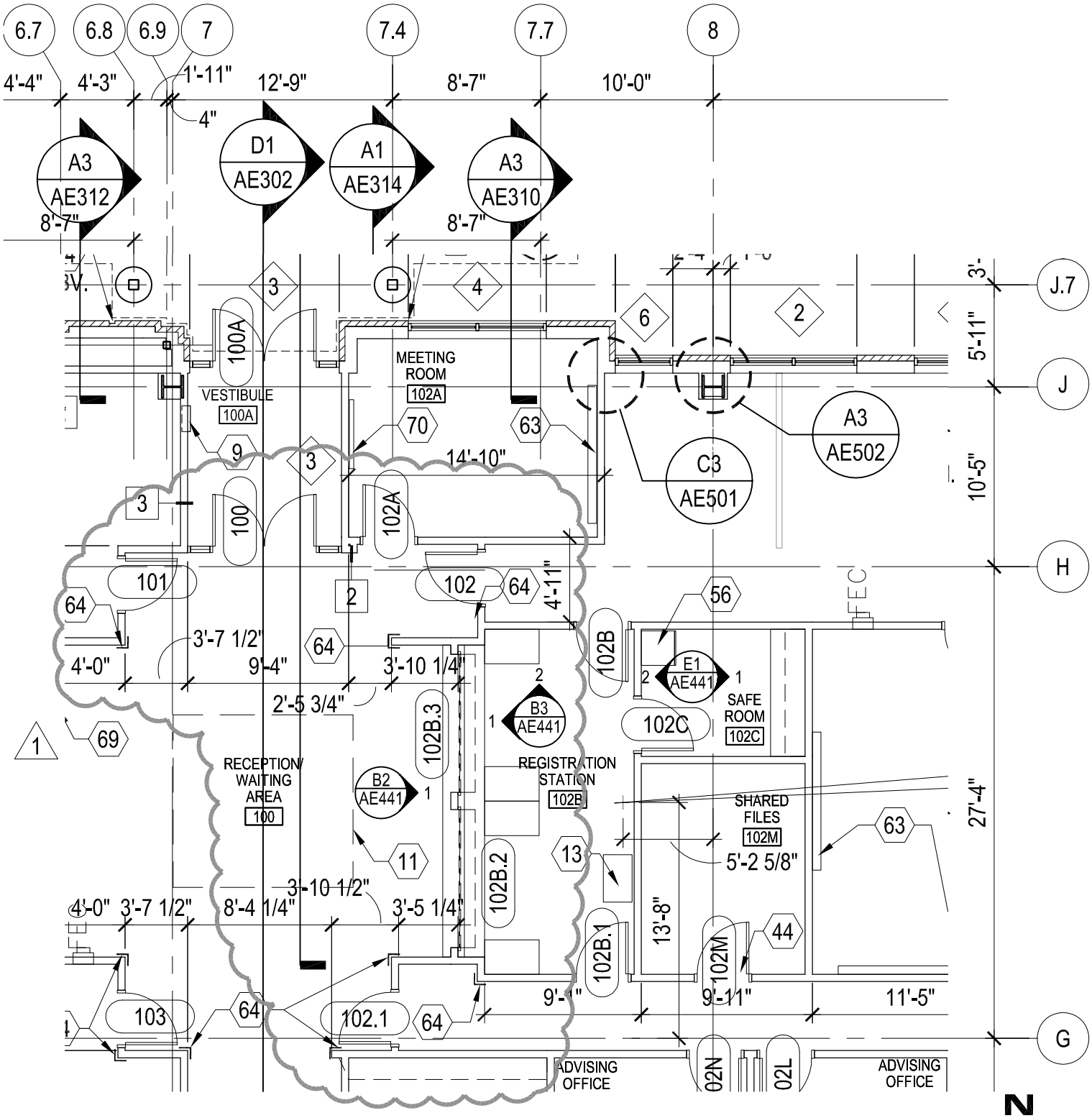

LEVEL ONE FLOOR PLAN

0 4' 8' 16'

SCALE: 1/8" = 1'-0"

MHTN ARCHITECTS, INC.
420 East South Temple
Suite 100
Salt Lake City, Utah 84111
Telephone (801) 595-6700
Telefax (801) 595-6717
www.mhtn.com

Project Name: WSU - HURST CENTER FOR LIFELONG LEARNING

Project No: 2007556

Date: 24 MARCH 2008

Sheet No.

AD02-A01

Sheet Reference

AE101

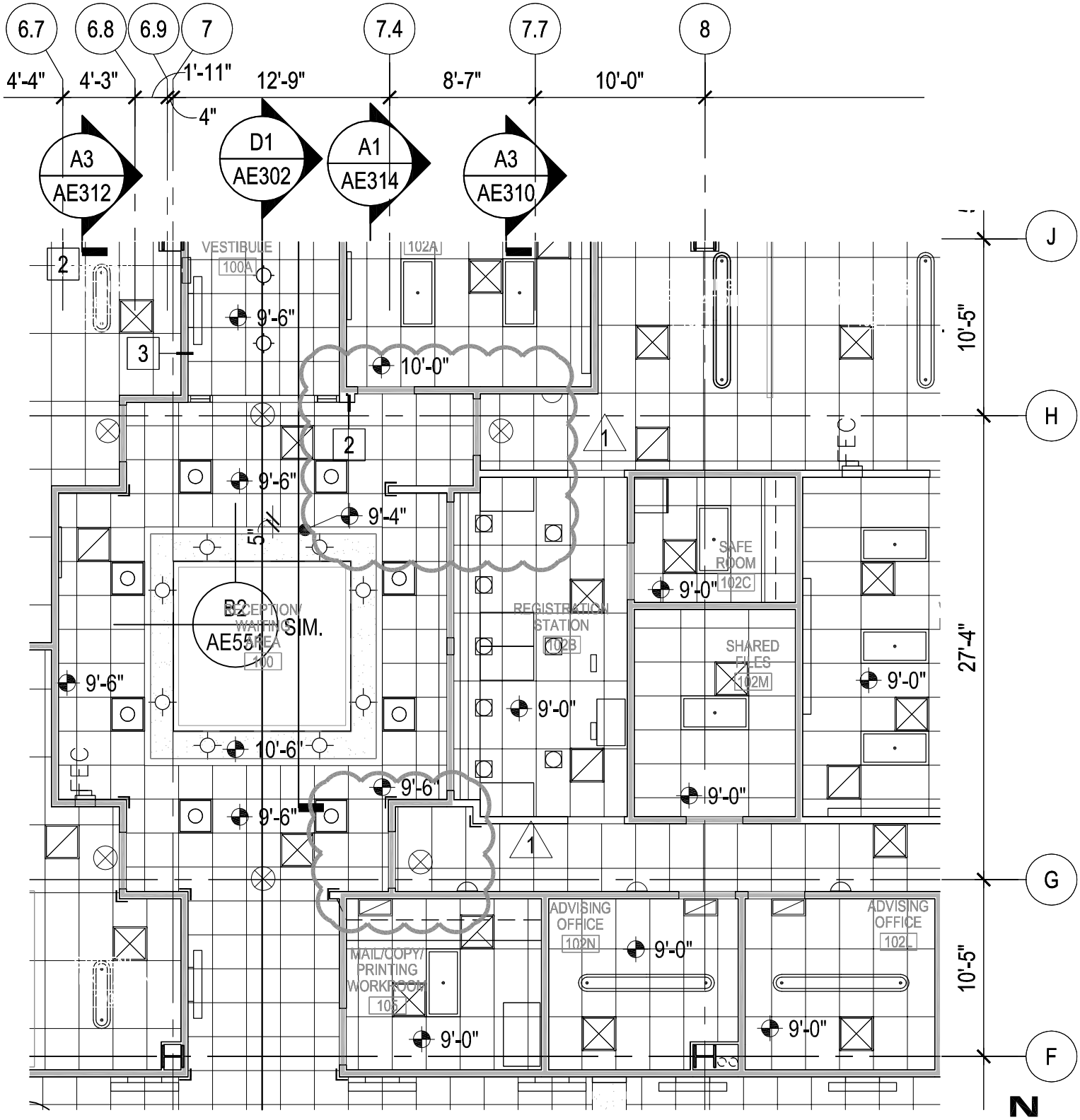

LEVEL ONE REFLECTED CEILING PLAN

0 4' 8' 16'

SCALE: 1/8" = 1'-0"

MHTN ARCHITECTS, INC.
420 East South Temple
Suite 100
Salt Lake City, Utah 84111
Telephone (801) 595-6700
Telefax (801) 595-6717
www.mhtn.com

Project Name: WSU - HURST CENTER FOR LIFELONG LEARNING

Project No: 2007556

Date: 24 MARCH 2008

Sheet No.

AD02-A02

Sheet Reference

AC101

GENERAL NOTES :

1. REFER TO FLOOR PLANS FOR INFORMATION ON WALL TYPES.
2. ALL EXPOSED STEEL STAIR COMPONENTS SHALL BE PAINTED.
3. REFER TO FINISH SCHEDULE FOR FINISHES.
4. PROVIDE FOUNDATION DRAIN AT PERIMETER OF BASEMENT. SEE DETAIL A4/AE511. REFER TO CIVIL FOR ELEVATIONS.

MHTN ARCHITECTS, INC.
420 East South Temple
Suite 100
Salt Lake City, Utah 84111
Telephone (801) 595-6700
Telefax (801) 595-6717
www.mhtn.com

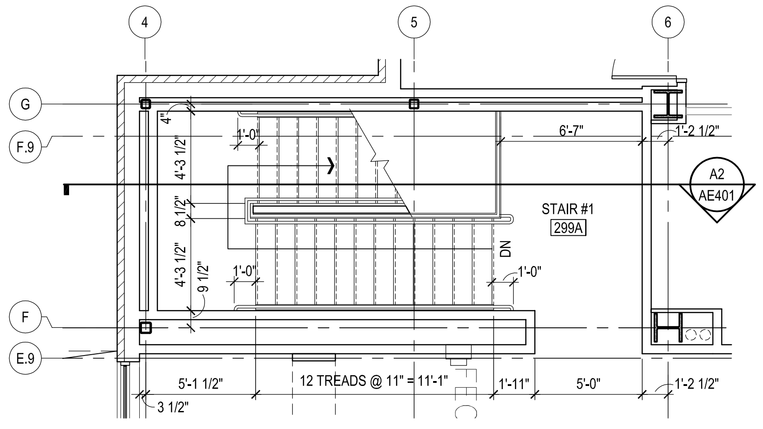

B1 STAIR #1 - LEVEL 2
SCALE: 1/4" = 1'-0" AE401

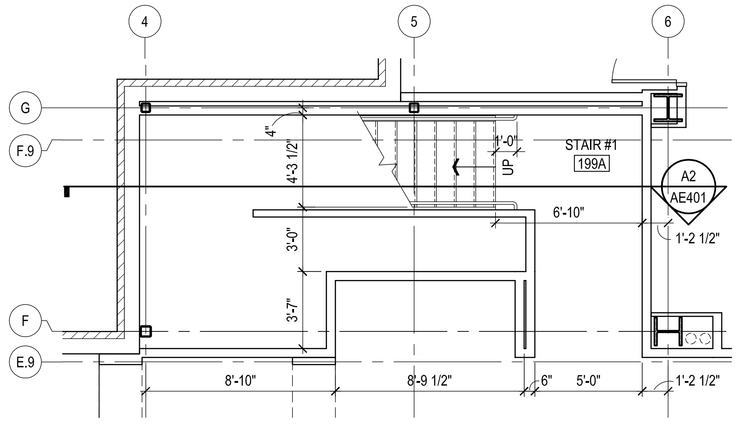

A1 STAIR #1 - LEVEL 1
SCALE: 1/4" = 1'-0" AE401

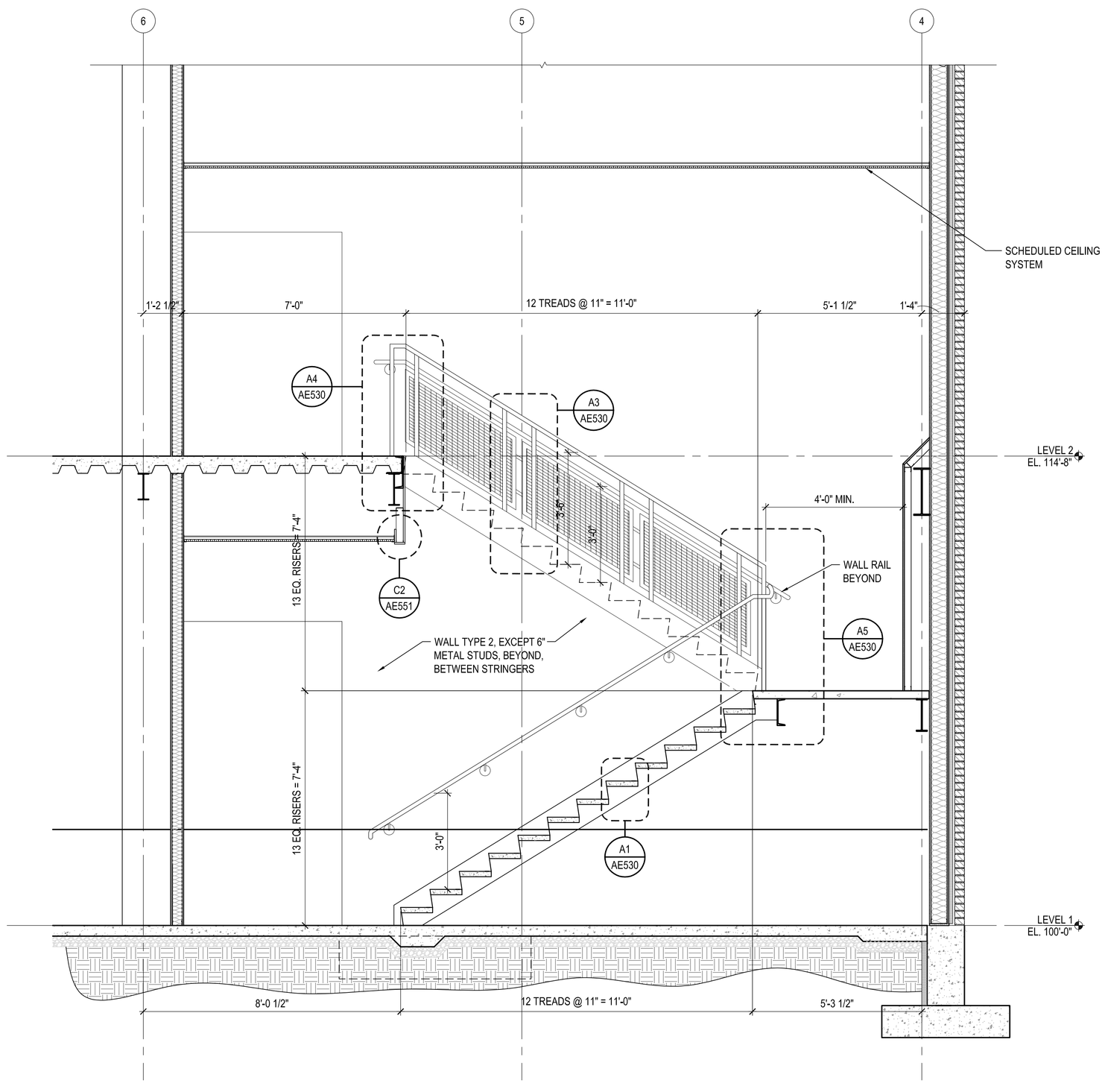

A2 STAIR #1 - SECTION
SCALE: 1/2" = 1'-0" AE401

HURST CENTER FOR LIFELONG LEARNING WEBER STATE UNIVERSITY

UTAH STATE DIVISION OF FACILITIES CONSTRUCTION MANAGEMENT- DFCM PROJECT NO. 07110810

SEAL

STATE OF UTAH
MICHAEL GAVIGLIO
#192976-0301
9.04.06
LICENSED ARCHITECT

MHTN PROJECT NO. 2007556.00
DRAWN BY: STAFF CHECKED BY: MG

ISSUED:

NO.	DATE	DESCRIPTION
1	10/26/07	SCHEMATIC DESIGN
2	12/18/07	DESIGN DEVELOPMENT
3	02/08/08	CONSTRUCTION DOCUMENTS
4	03/04/08	CONSTRUCTION BID DOCUMENTS

REVISIONS:

NO.	DATE	DESCRIPTION
1	03/24/08	ADDENDUM #2

VERTICAL CIRCULATION - NORTHWEST STAIR

CONSTRUCTION BID DOCUMENTS
MARCH 4, 2008

SHEET NUMBER

AE401

By:kinnaker, Mar 24, 2008 - 4:07pm
K:\Hurst_2\2007556 WSU Hurst Center\Drawings\AE401.dwg

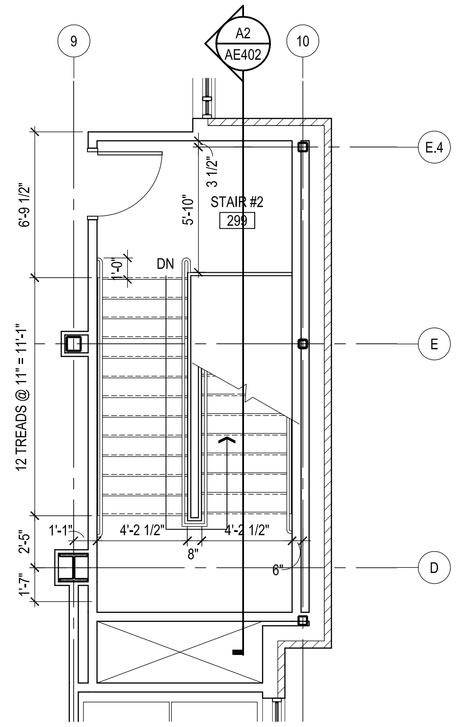

D1 STAIR #2 - LEVEL 2

SCALE: 1/4" = 1'-0" AE402

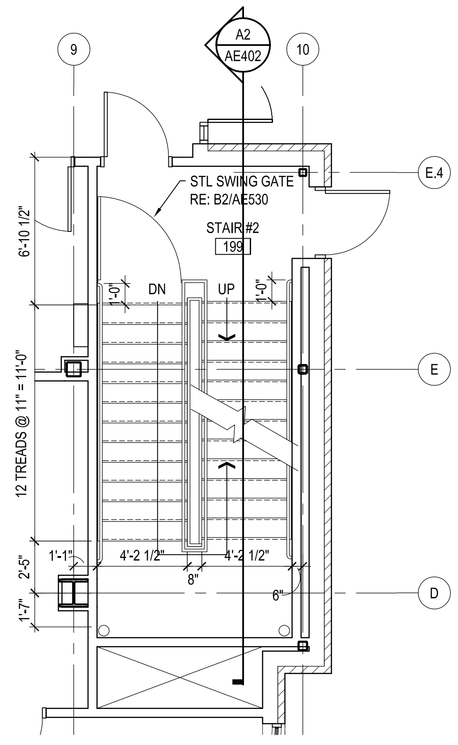

B1 STAIR #2 - LEVEL 1

SCALE: 1/4" = 1'-0" AE402

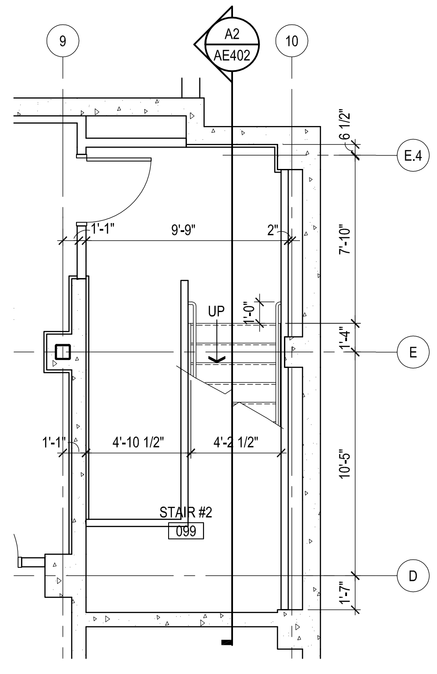

A1 STAIR #2 - LEVEL B

SCALE: 1/4" = 1'-0" AE402

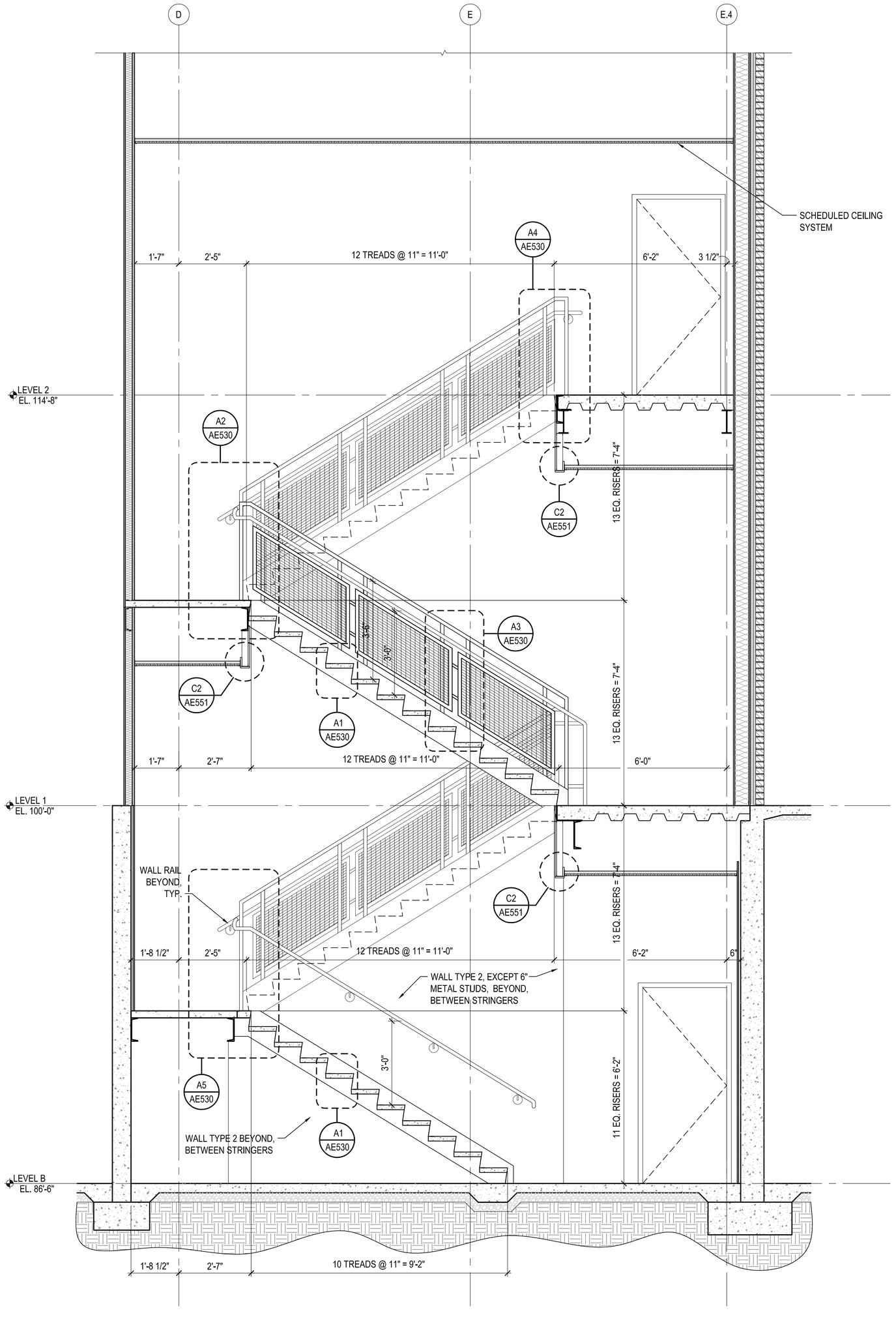

A2 STAIR #2 - SECTION

SCALE: 1/2" = 1'-0" AE402

GENERAL NOTES :

1. REFER TO FLOOR PLANS FOR INFORMATION ON WALL TYPES.
2. ALL EXPOSED STEEL STAIR COMPONENTS SHALL BE PAINTED.
3. REFER TO FINISH SCHEDULE FOR FINISHES.
4. PROVIDE FOUNDATION DRAIN AT PERIMETER OF BASEMENT. SEE DETAIL A4/AE511. REFER TO CIVIL FOR ELEVATIONS.

MHTN ARCHITECTS, INC.
420 East South Temple
Suite 100
Salt Lake City, Utah 84111
Telephone (801) 595-6700
Telefax (801) 595-6717
www.mhtn.com

WEBER STATE UNIVERSITY

HURST CENTER FOR LIFELONG LEARNING WEBER STATE UNIVERSITY

UTAH STATE DIVISION OF FACILITIES CONSTRUCTION MANAGEMENT- DFCM PROJECT NO. 07110810

SEAL

STATE OF UTAH
MICHAEL GAVIGLIO
#192973-0301
2-04-08
LICENSED ARCHITECT

MHTN PROJECT NO. 2007556.00

DRAWN BY: STAFF CHECKED BY: MG

ISSUED:

NO.	DATE	DESCRIPTION
1	10/26/07	SCHEMATIC DESIGN
2	12/18/07	DESIGN DEVELOPMENT
3	02/08/08	CONSTRUCTION DOCUMENTS
4	03/04/08	CONSTRUCTION BID DOCUMENTS

REVISIONS:

NO.	DATE	DESCRIPTION
1	03/24/08	ADDENDUM #2

VERTICAL CIRCULATION - SOUTHEAST STAIR

CONSTRUCTION BID DOCUMENTS
MARCH 4, 2008

SHEET NUMBER

AE402

By: Annette Mar 24, 2008 - 4:59pm
K:\Hurst_2\2007556.950\Arch\Center\Drawings\AE402.dwg

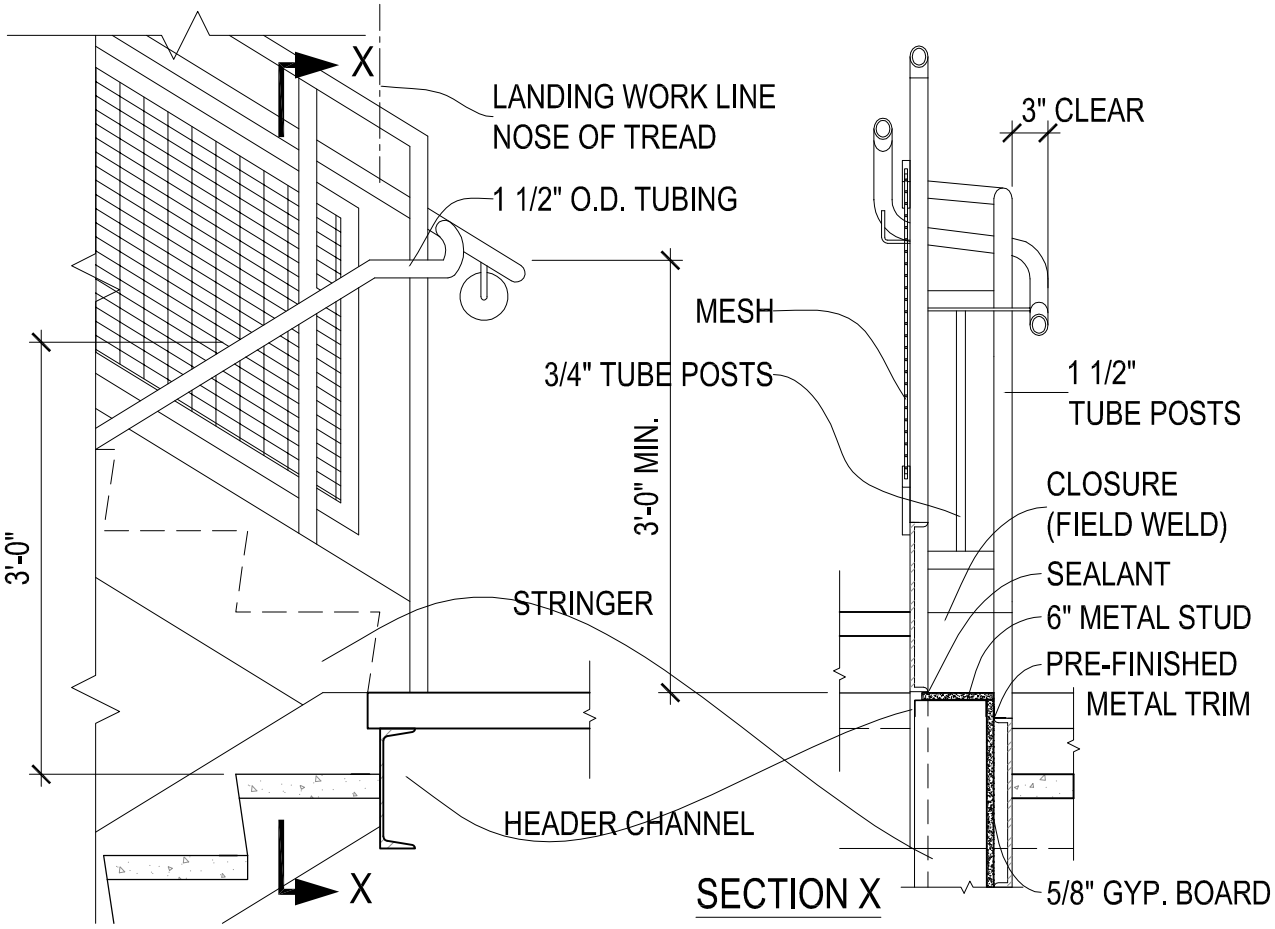

A5 GUARDRAIL @ LANDING

SCALE: 3/4" = 1-0"

AE530

A-DTVC09

MHTN ARCHITECTS, INC.
420 East South Temple
Suite 100
Salt Lake City, Utah 84111
Telephone (801) 595-6700
Telefax (801) 595-6717
www.mhtn.com

Project Name: WSU - HURST CENTER FOR LIFELONG LEARNING

Project No: 2007556

Date: 24 MARCH 2008

Sheet No.

AD02-A07

Sheet Reference

AE530

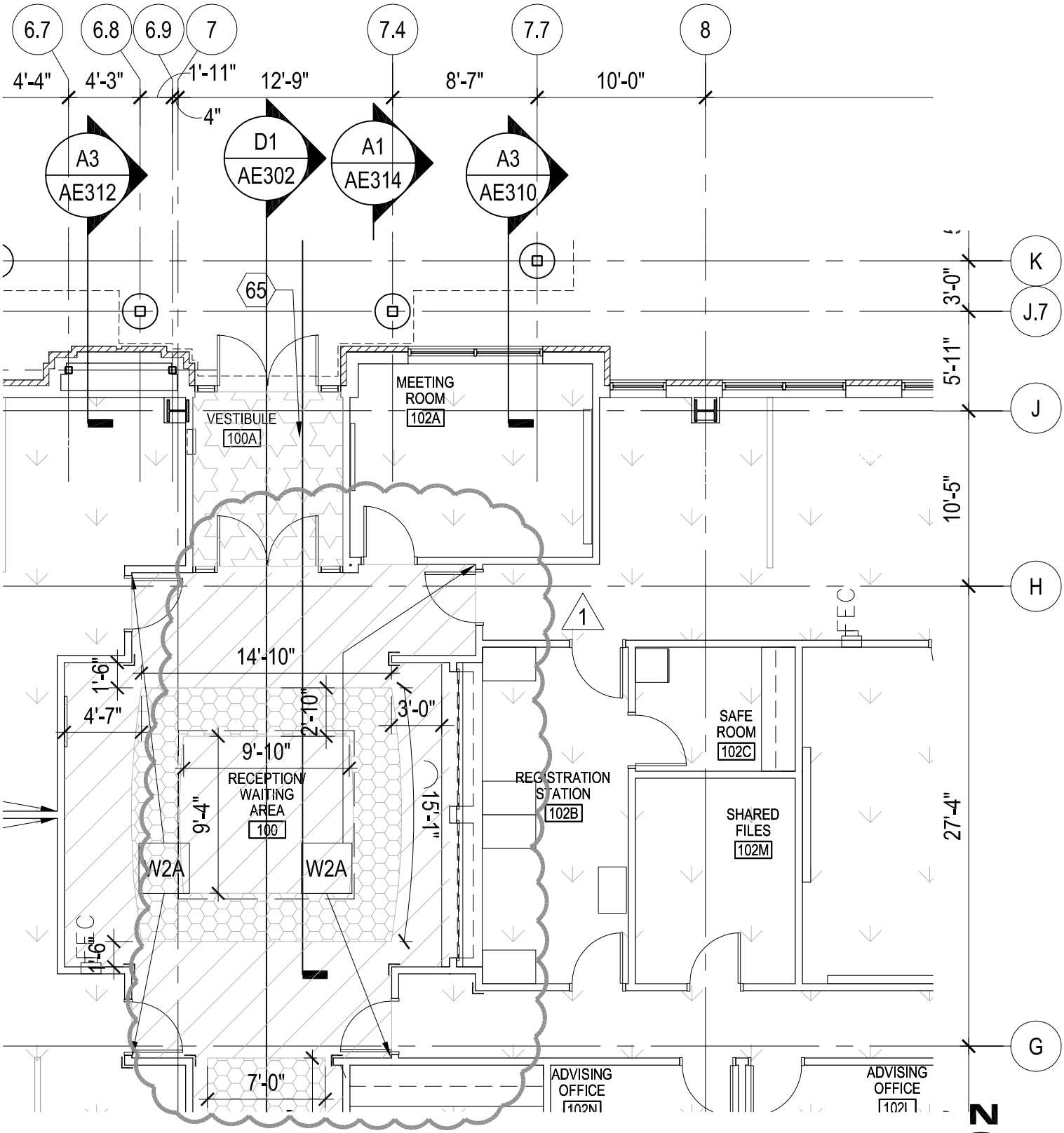

LEVEL ONE FLOOR PATTERN PLAN

0 4' 8' 16'

SCALE: 1/8" = 1'-0"

MHTN ARCHITECTS, INC.
420 East South Temple
Suite 100
Salt Lake City, Utah 84111
Telephone (801) 595-6700
Telefax (801) 595-6717
www.mhtn.com

Project Name: WSU - HURST CENTER FOR LIFELONG LEARNING

Project No: 2007556

Date: 24 MARCH 2008

Sheet No.

AD02-A03

Sheet Reference

AE461

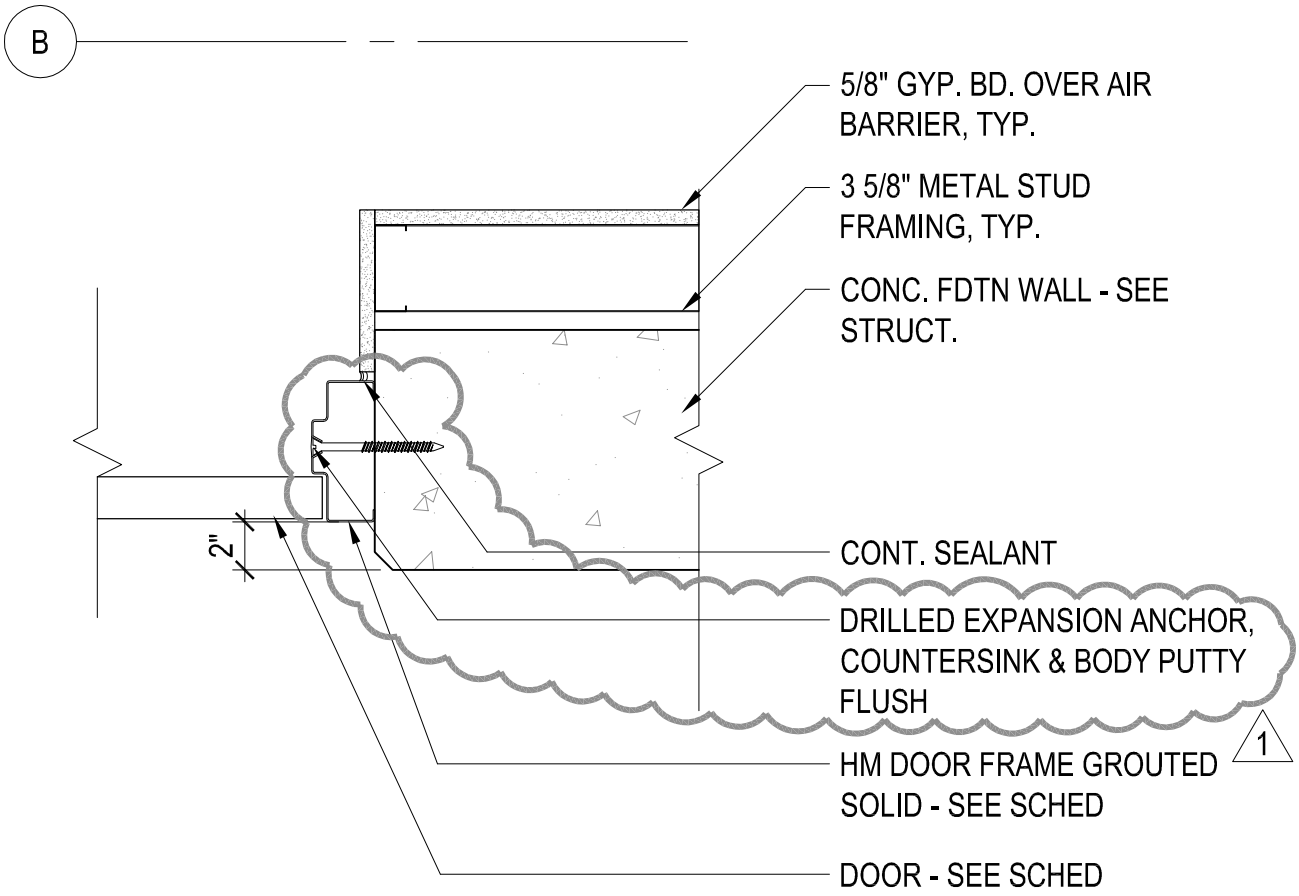

D3 DOOR JAMB DETAIL (HEAD SIM.)

SCALE: 1 1/2" = 1'-0"

AE502

A-DTDR13

MHTN ARCHITECTS, INC.
420 East South Temple
Suite 100
Salt Lake City, Utah 84111
Telephone (801) 595-6700
Telefax (801) 595-6717
www.mhtn.com

Project Name: WSU - HURST CENTER FOR LIFELONG LEARNING

Project No: 2007556

Date: 24 MARCH 2008

Sheet No.

AD02-A04

Sheet Reference

AE502

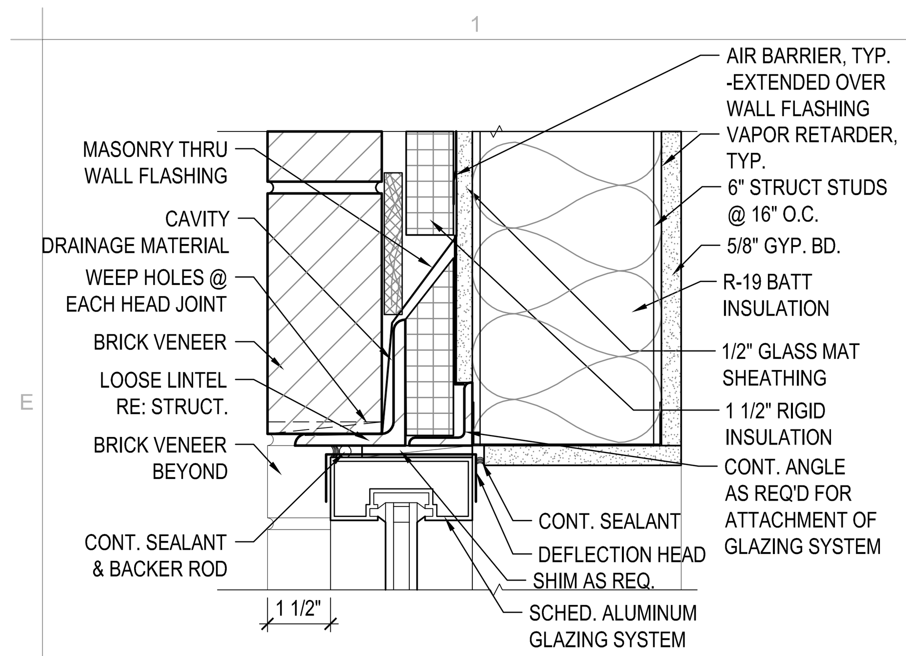

E1 STOREFRONT HEAD DETAIL
SCALE: 3" = 1'-0" AE520 A-DTWN02

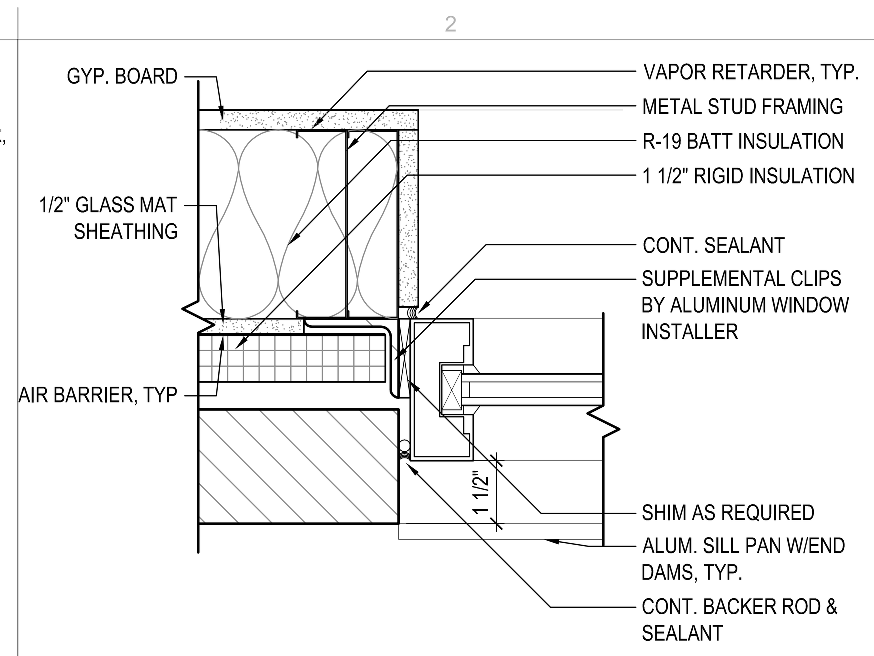

E2 STOREFRONT JAMB DETAIL
SCALE: 3" = 1'-0" AE520 A-DTWN08

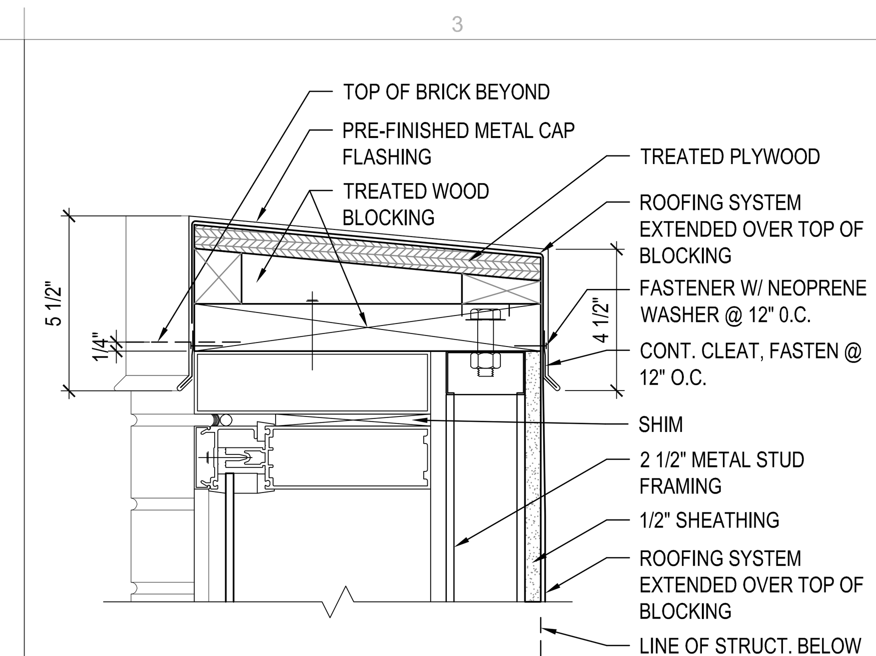

E3 CURTAINWALL DETAIL - T.O. WALL
SCALE: 3" = 1'-0" AE520 A-DTWN05

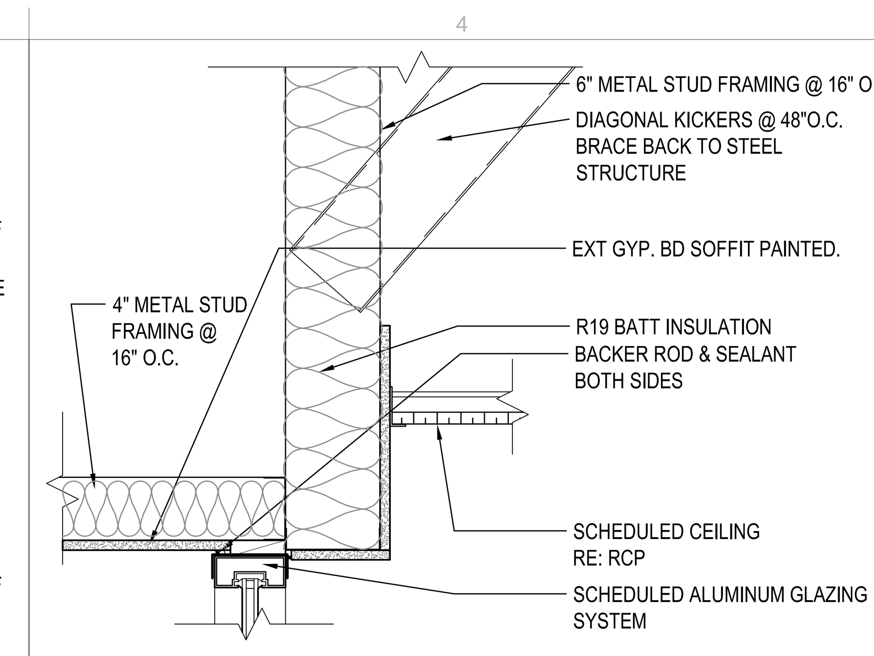

E4 CURTAINWALL HEAD DETAIL
SCALE: 1 1/2" = 1'-0" AE520 A-DTWN04

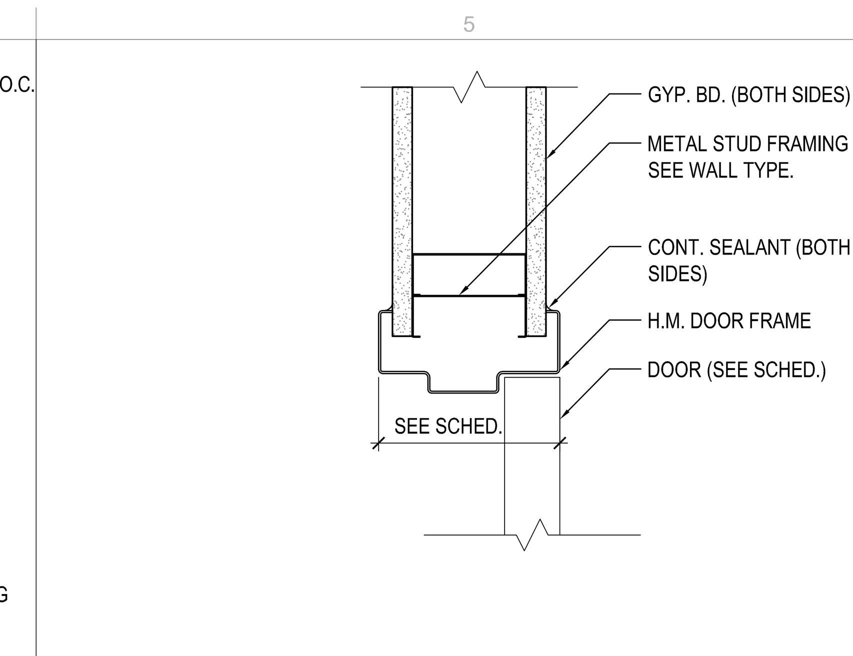

E5 H.M. JAMB DETAIL (HEAD SIM.)
SCALE: 3" = 1'-0" AE520 A-DTDR05

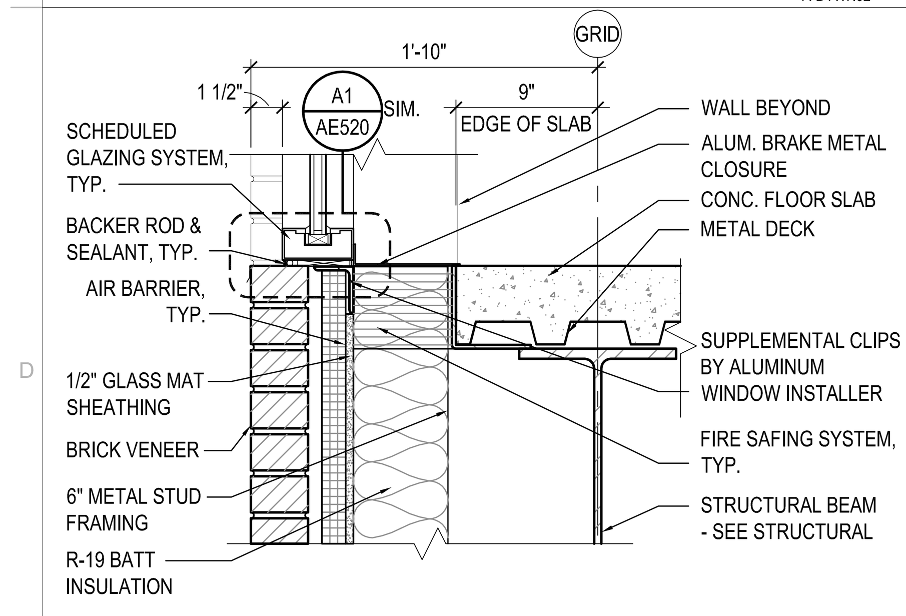

D1 STOR. SILL DETAIL @ FLOOR
SCALE: 1 1/2" = 1'-0" AE520 A-DTWN07

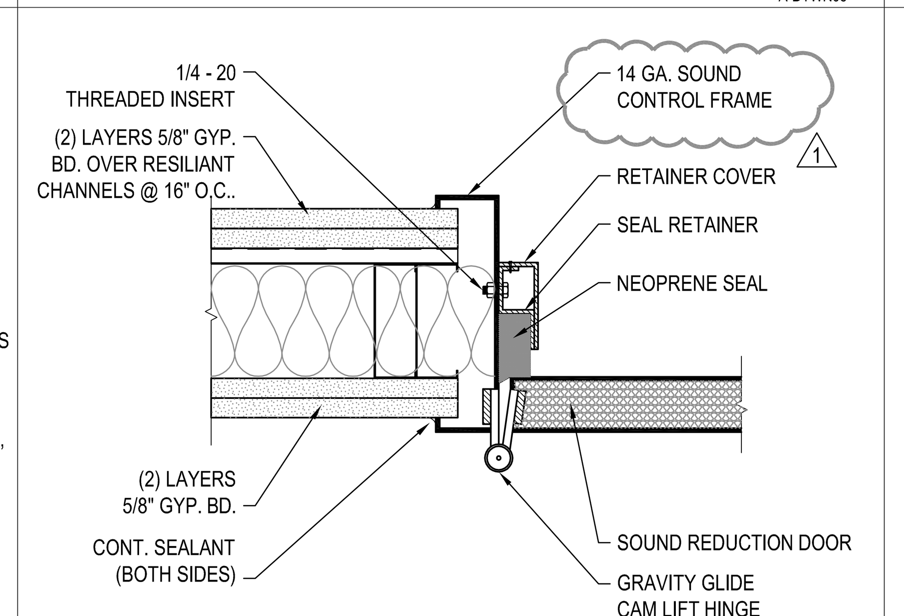

D2 SOUND CONTROL JAMB (HEAD SIM)
SCALE: 3" = 1'-0" AE520 A-DTDR11

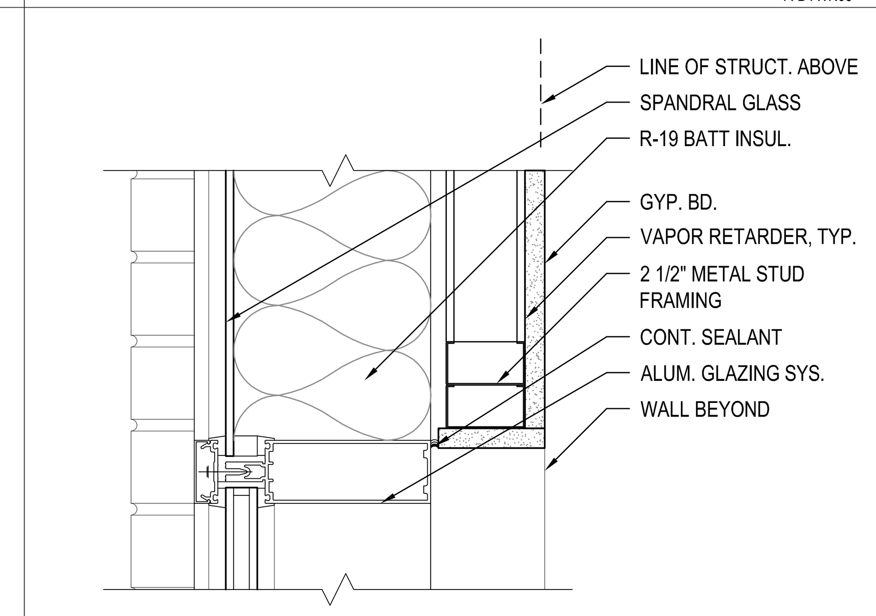

D3 CURTAINWALL HEAD DETAIL
SCALE: 3" = 1'-0" AE520 A-DTWN09

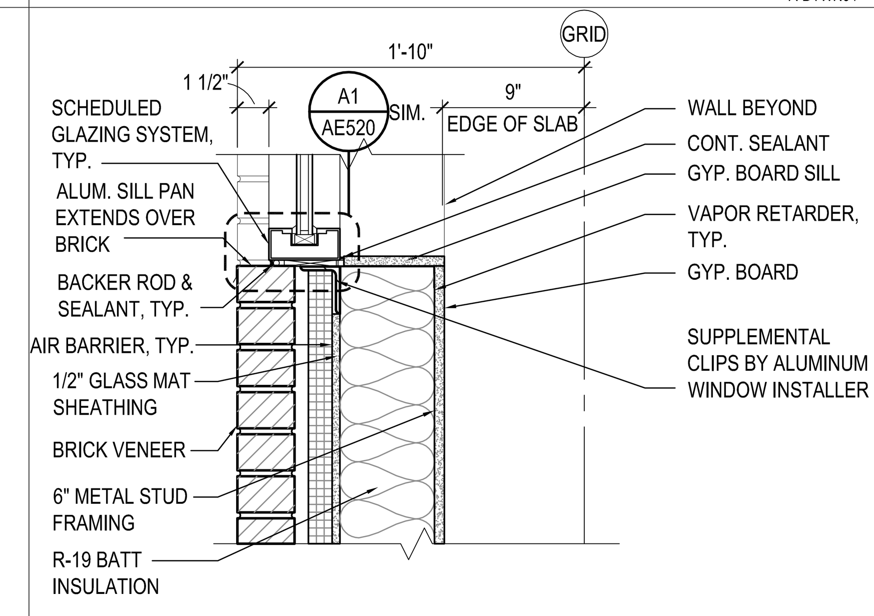

D4 STOREFRONT SILL DETAIL
SCALE: 1 1/2" = 1'-0" AE520 A-DTWN17

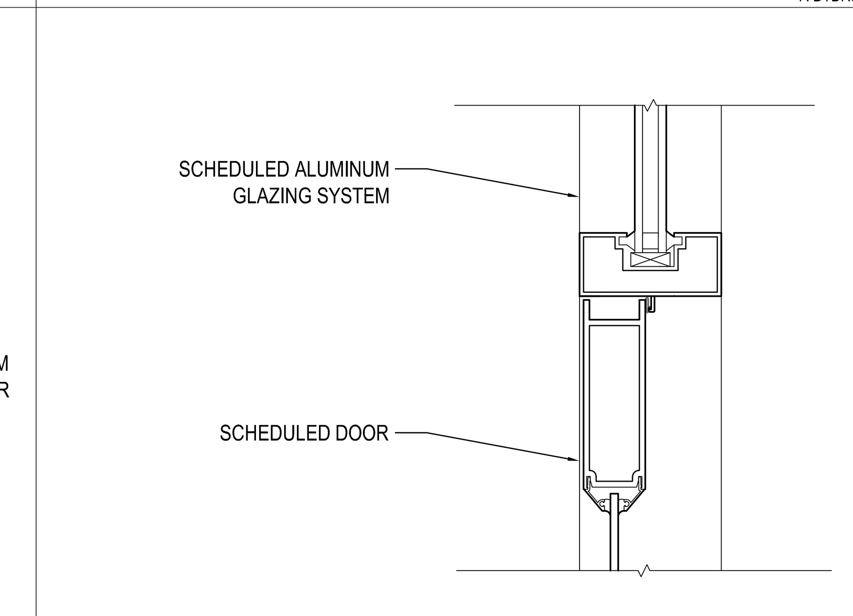

D5 ALUM. DOOR DETAIL
SCALE: 3" = 1'-0" AE520 A-DTDR04

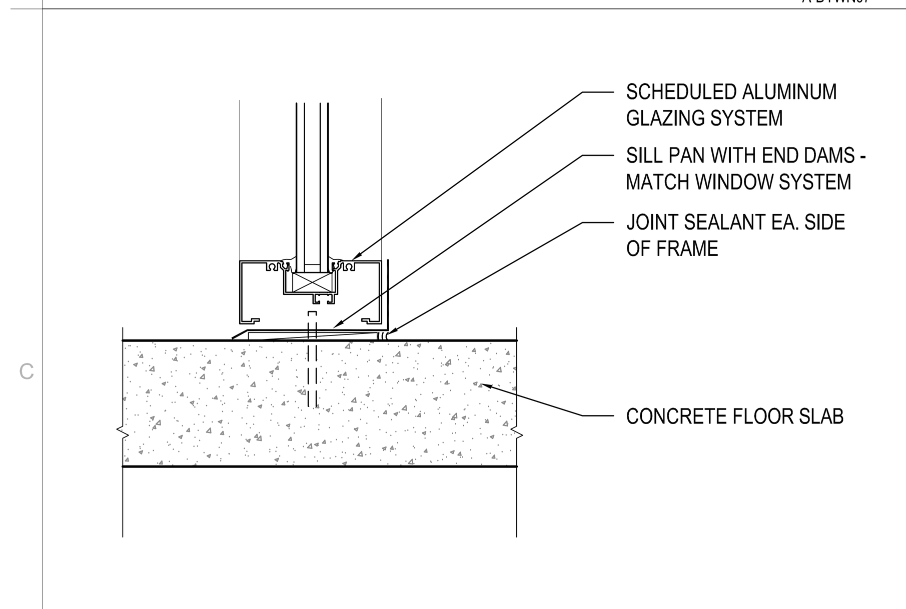

C1 STOR. SILL DETAIL @ FLOOR
SCALE: 3" = 1'-0" AE520 A-DTWN03

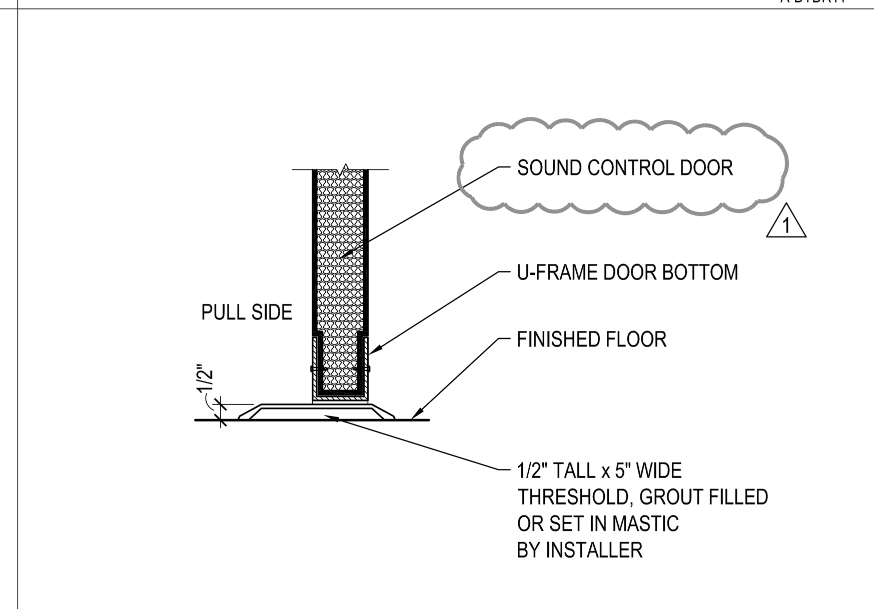

C2 SOUND CONTROL DOOR DETAIL
SCALE: 3" = 1'-0" AE520 A-DTDR12

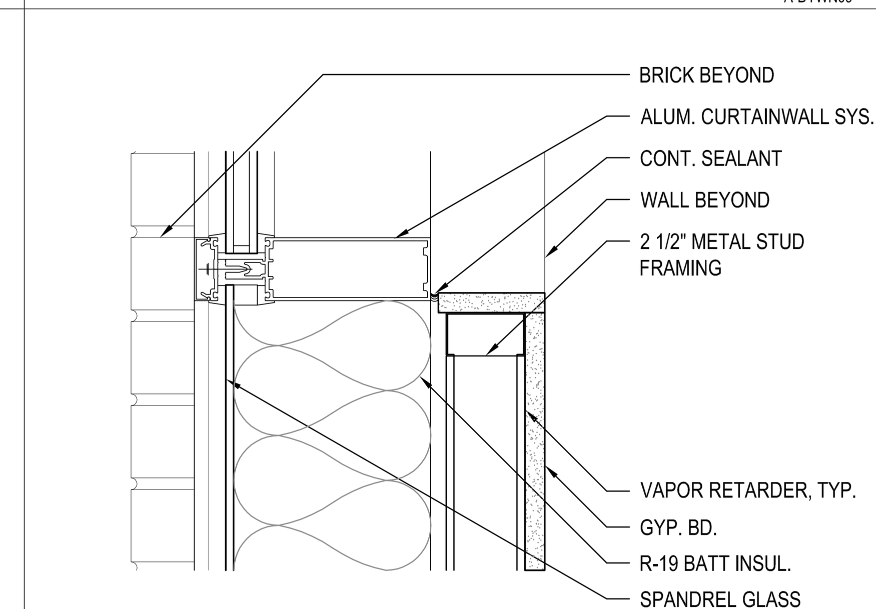

C3 CURTAINWALL SILL DETAIL
SCALE: 3" = 1'-0" AE520 A-DTWN06

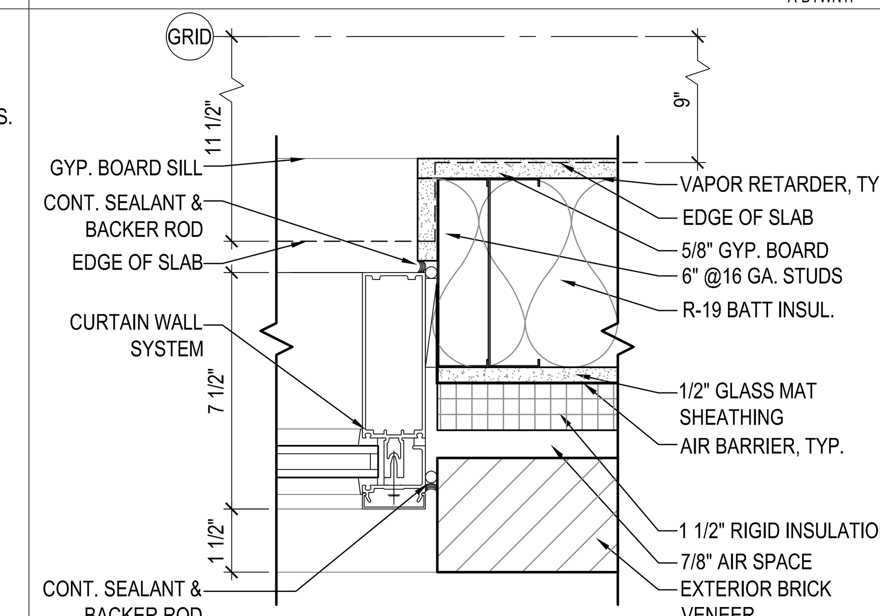

C4 CURTAINWALL JAMB DETAIL
SCALE: 3" = 1'-0" AE520 A-DTWN12

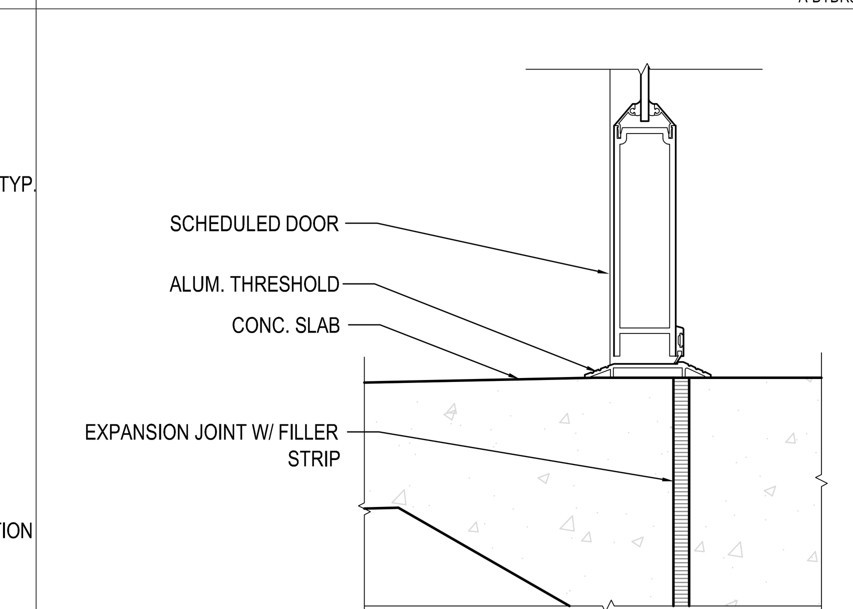

C5 ALUM. DOOR DETAIL
SCALE: 3" = 1'-0" AE520 A-DTDR03

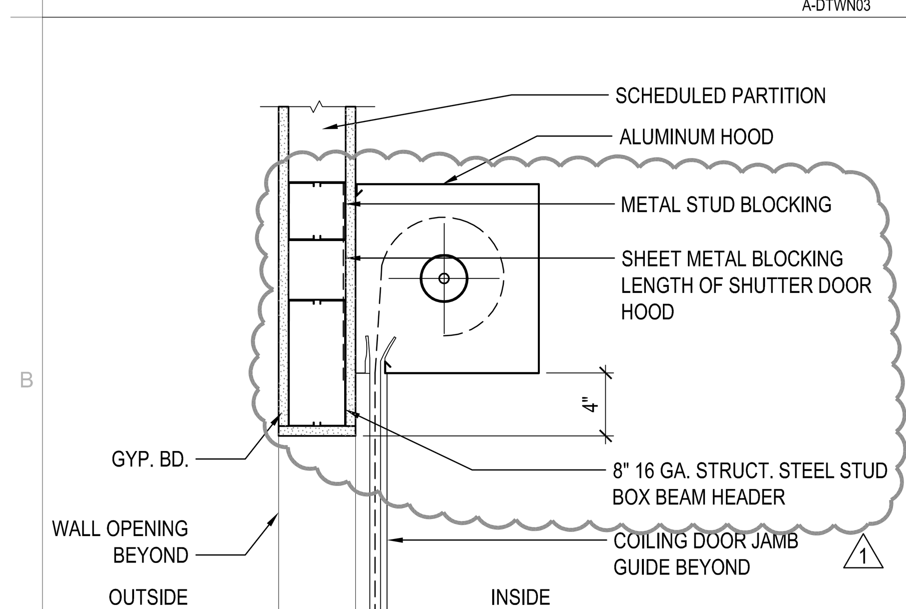

B1 ROLLING SHUTTER HEAD DETAIL
SCALE: 1 1/2" = 1'-0" AE520 A-DTDR10

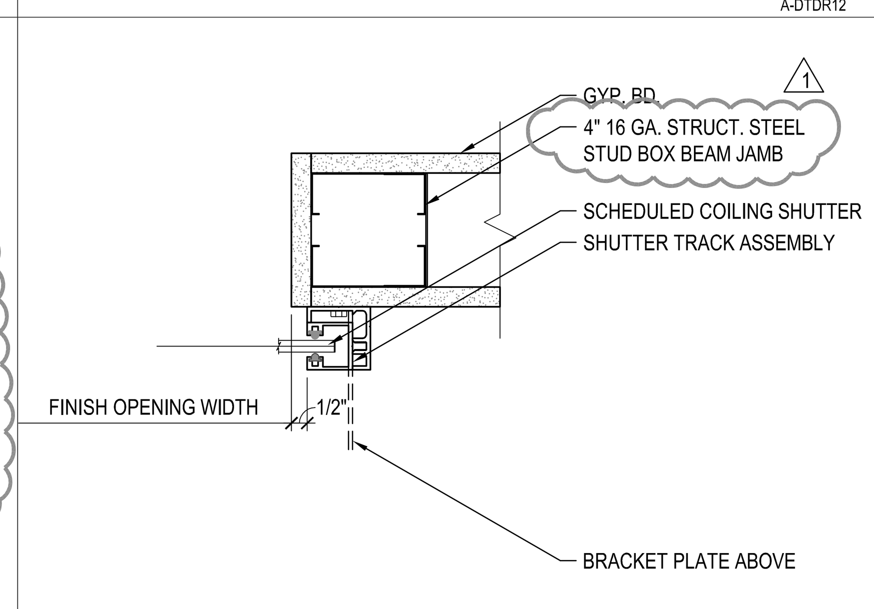

B2 ROLLING SHUTTER JAMB DETAIL
SCALE: 3" = 1'-0" AE520 A-DTXX00

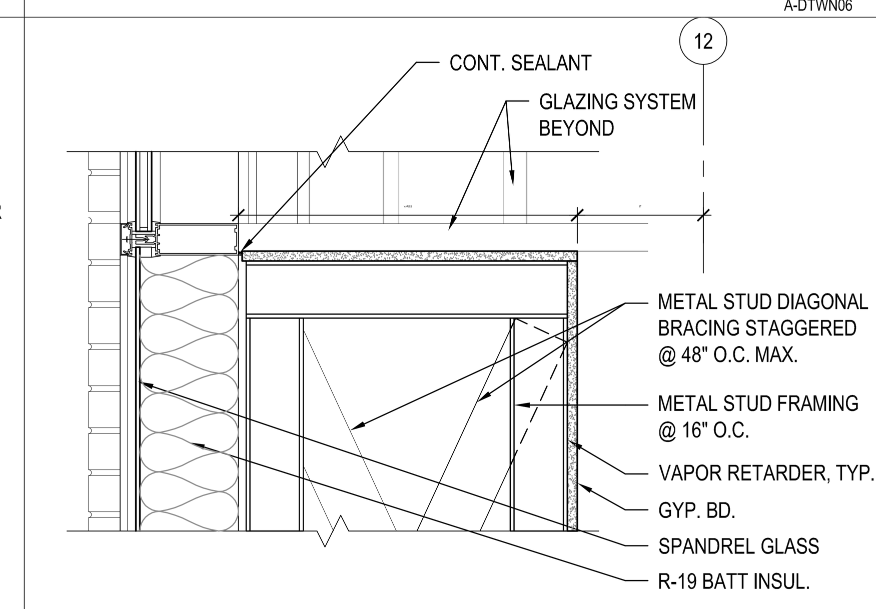

B3 CURTAINWALL SILL DETAIL
SCALE: 1 1/2" = 1'-0" AE520 A-DTWN13

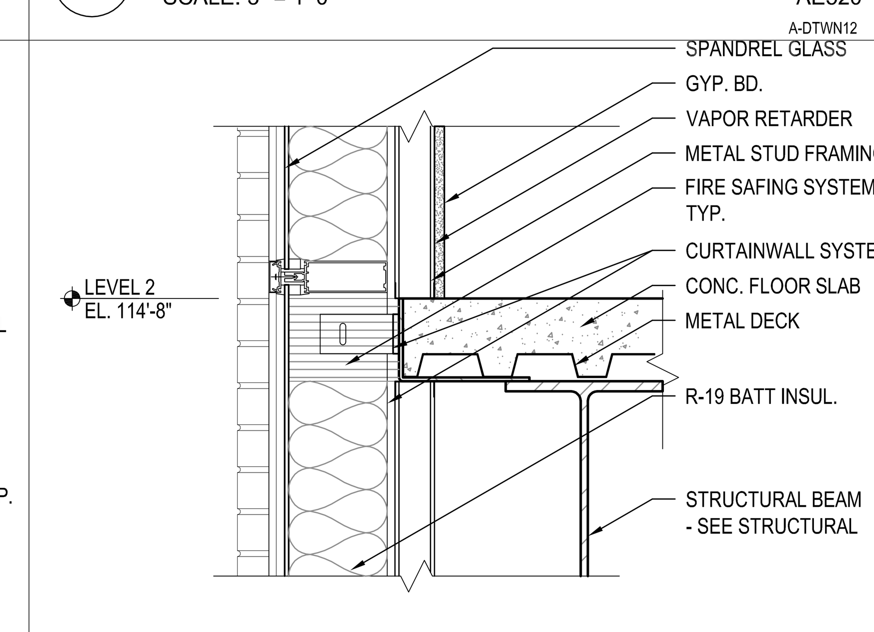

B4 CURTAINWALL DETAIL @ FLOOR
SCALE: 1 1/2" = 1'-0" AE520 A-DTWN14

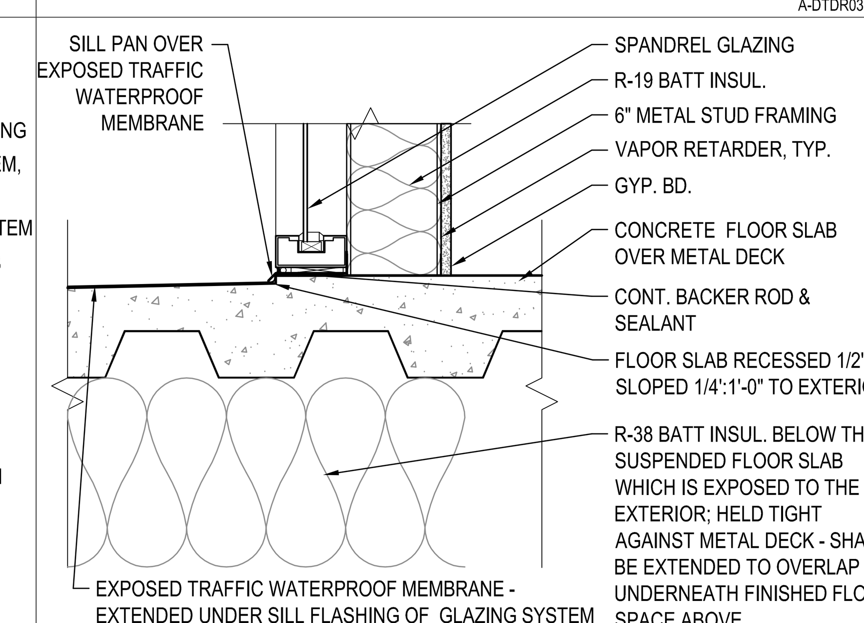

B5 STOR. SILL DETAIL @ FLOOR
SCALE: 1 1/2" = 1'-0" AE520 A-DTWN18

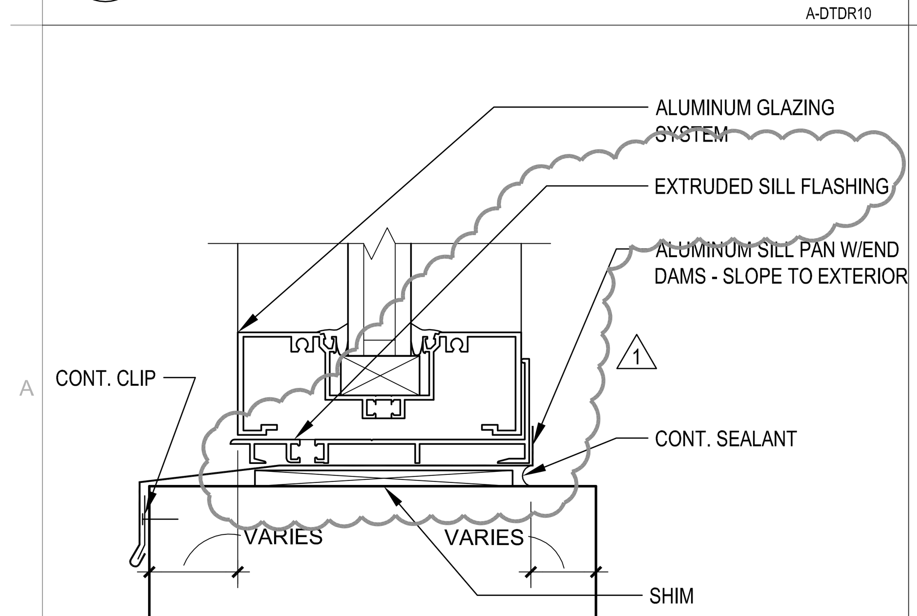

A1 STOR. SILL FLASHING DETAIL
SCALE: 6" = 1'-0" AE520 A-DTWN10

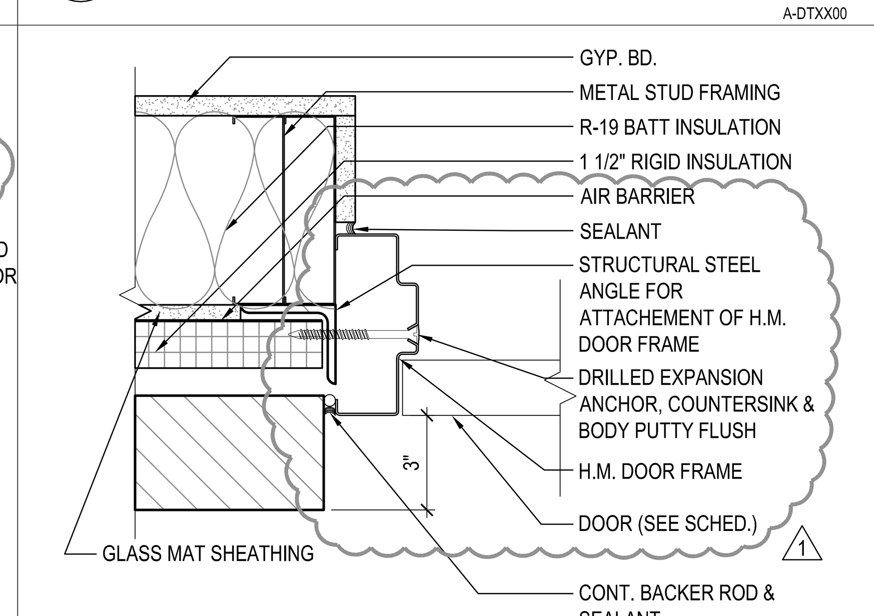

A2 EXTERIOR H.M. JAMB DETAIL
SCALE: 3" = 1'-0" AE520 A-DTDR06

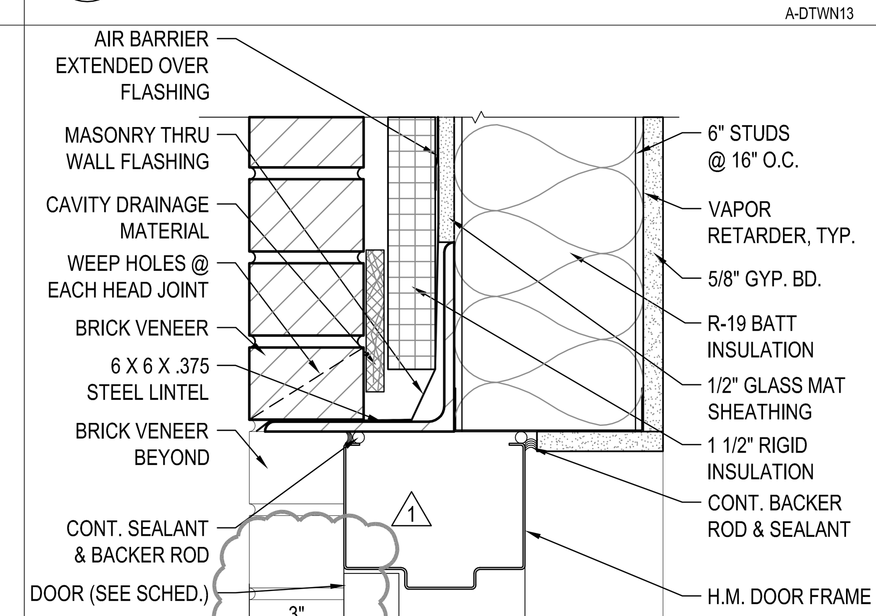

A3 EXTERIOR H.M. DOOR HEAD
SCALE: 3" = 1'-0" AE520 A-DTDR07

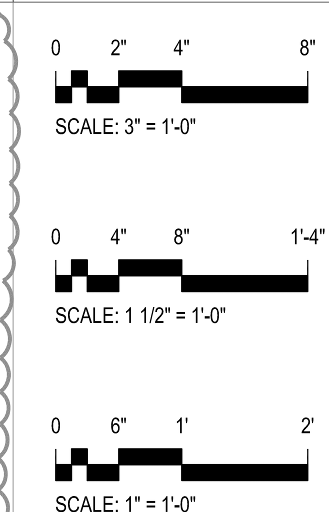

MHTN ARCHITECTS, INC.
420 East South Temple
Suite 100
Salt Lake City, Utah 84111
Telephone (801) 595-6700
Telefax (801) 595-6717
www.mhtn.com

WEBER STATE UNIVERSITY

HURST CENTER FOR LIFELONG LEARNING WEBER STATE UNIVERSITY

UTAH STATE DIVISION OF FACILITIES CONSTRUCTION MANAGEMENT- DFCM PROJECT NO. 07110810

SEAL
STATE OF UTAH — MICHAEL GAVIGLIO — 4920978-0301 — 3.04.08 — LICENSED ARCHITECT

MHTN PROJECT NO. 2007556.00
DRAWN BY: STAFF CHECKED BY: MG

ISSUED:

NO.	DATE	DESCRIPTION
1	10/26/07	SCHEMATIC DESIGN
2	12/18/07	DESIGN DEVELOPMENT
3	02/08/08	CONSTRUCTION DOCUMENTS
4	03/04/08	CONSTRUCTION BID DOCUMENTS

REVISIONS:

NO.	DATE	DESCRIPTION
1	03/24/08	ADDENDUM #2

DOOR AND WINDOW DETAILS

CONSTRUCTION BID DOCUMENTS
MARCH 4, 2008

SHEET NUMBER
AE520

By: AntoniaV; Mar 24, 2008 - 7:00pm
K:\Higher_Ed\2007556 WSU Hurst Center\1 Drawings\AE520.dwg

LOWER LEVEL DOOR SCHEDULE

Number	Door Type	Door Size	Door Thickness	Door Material	Frame Type	Frame Material	Frame Depth	Head Detail	Jamb Detail	Sill Detail	Electrical	Fire Rating	Hardware	Notes	Number
002	1	3'-0" x 7'-0"	1 3/4"	WD	A	HM	5 3/4"	E5/AE520	E5/AE520	--	--	45 MIN	04	--	002
002.1	1	3'-0" x 7'-0"	1 3/4"	WD	A	HM	5 3/4"	E5/AE520	E5/AE520	--	--	45 MIN	04	--	002.1
003	2	3'-0" x 7'-0"	1 3/4"	WD	A	HM	5 3/4"	E5/AE520	E5/AE520	--	--	--	17	--	003
004	2	3'-0" x 7'-0"	1 3/4"	WD	A	HM	5 3/4"	E5/AE520	E5/AE520	--	--	--	12	--	004
006	1	3'-0" x 7'-0"	1 3/4"	WD	A	HM	5 3/4"	E5/AE520	E5/AE520	--	--	--	19	--	006
007	1	3'-0" x 7'-0"	1 3/4"	WD	A	HM	5 3/4"	E5/AE520	E5/AE520	--	--	--	12.1	1	007
008	1	3'-0" x 7'-0"	1 3/4"	WD	A	HM	5 3/4"	E5/AE520	D4/AE502	--	--	--	19	--	008
010	1	3'-0" x 7'-0"	1 3/4"	WD	A	HM	5 3/4"	E5/AE520	E5/AE520	--	--	--	10	--	010
011	3	3'-0" x 7'-0"	1 3/4"	WD	A	HM	5 3/4"	E5/AE520	E5/AE520	--	--	--	17	--	011
012	1	3'-0" x 7'-0"	1 3/4"	WD	A	HM	5 3/4"	E5/AE520	E5/AE520	--	--	60 MIN.	12.2	--	012
013	1	3'-0" x 7'-0"	1 3/4"	WD	A	HM	5 3/4"	E5/AE520	E5/AE520	--	--	--	10	--	013
014	3	3'-0" x 7'-0"	1 3/4"	WD	A	HM	5 3/4"	E5/AE520	E5/AE520	--	--	--	17	--	014
014.1	3	3'-0" x 7'-0"	1 3/4"	WD	A	HM	5 3/4"	E5/AE520	E5/AE520	--	--	--	17	--	014.1
017	2	3'-0" x 7'-0"	1 3/4"	WD	A	HM	5 3/4"	E5/AE520	E5/AE520	--	--	--	12	--	017
019	2	PR 3'-0" x 7'-0"	1 3/4"	WD	A	HM	5 3/4"	E5/AE520	E5/AE520	--	--	--	09	--	019
099	5	3'-0" x 7'-0"	1 3/4"	WD	A	HM	5 3/4"	E5/AE520	E5/AE520	--	--	60 MIN	05	--	099
099B	5	3'-0" x 7'-0"	1 3/4"	HM	B	HM	5 3/4"	D3/AE502	D3/AE502	--	YES	60 MIN	03	--	099B

LEVEL ONE DOOR SCHEDULE

Number	Door Type	Door Size	Door Thickness	Door Material	Frame Type	Frame Material	Frame Depth	Head Detail	Jamb Detail	Sill Detail	Electrical	Fire Rating	Hardware	Notes	Number
100	4	PR 3'-0" x 7'-4"	1 3/4"	AL/G	W3	ALUM	4 1/2"	--	--	--	YES	--	AL-06	4 --	100
100A	4	PR 3'-0" x 7'-4"	1 3/4"	AL/G	W3	ALUM	4 1/2"	--	--	--	YES	--	AL-03	4	100A
100B	4	PR 3'-0" x 7'-4"	1 3/4"	AL/G	W9	ALUM	4 1/2"	--	--	--	YES	--	AL-01	4 2	100B
100D	1	3'-0" x 7'-0"	1 3/4"	WD	A	HM	7 3/4"	E5/AE520 SIM	E5/AE520 SIM	--	--	90 MIN	07		100D
100D.1	4	3'-0" x 7'-4"	1 3/4"	AL/G	W16	ALUM	4 1/2"	--	--	--	YES	--	AL-02	--	100D.1
100D.2	4	3'-0" x 7'-4"	1 3/4"	AL/G	W17	ALUM	4 1/2"	--	--	--	YES	--	AL-02A	2 4	100D.2
101	3	3'-0" x 7'-0"	1 3/4"	WD	A	HM	5 3/4"	E5/AE520	E5/AE520	--	YES	--	13	1	101
101A	2	3'-0" x 7'-0"	1 3/4"	WD	A	HM	5 3/4"	E5/AE520	E5/AE520	--	--	--	17	--	101A
102	3	3'-0" x 7'-0"	1 3/4"	WD	A	HM	5 3/4"	E5/AE520	E5/AE520	--	YES	--	13	1	102
102.1	3	3'-0" x 7'-0"	1 3/4"	WD	A	HM	5 3/4"	E5/AE520	E5/AE520	--	YES	--	13	1	102.1
102.2	3	3'-0" x 7'-0"	1 3/4"	WD	A	HM	5 3/4"	E5/AE520	E5/AE520	--	YES	--	13	1	102.2
102A	2	3'-0" x 7'-0"	1 3/4"	WD	A	HM	5 3/4"	E5/AE520	E5/AE520	--	--	--	18	--	102A
102B	2	3'-0" x 7'-0"	1 3/4"	WD	A	HM	5 3/4"	E5/AE520	E5/AE520	--	--	--	16	--	102B
102B.1	2	3'-0" x 7'-0"	1 3/4"	WD	A	HM	5 3/4"	E5/AE520	E5/AE520	--	--	--	16	--	102B.1
102B.2	6	8'-0" x 4'-6"	1/2"	ALUM	--	ALUM	2"	B1/AE520	B2/AE520	--	--	--	23	5 --	102B.2
102B.3	6	8'-0" x 4'-6"	1/2"	ALUM	--	ALUM	2"	B1/AE520	B2/AE520	--	--	--	23	5 --	102B.3
102C	2	3'-0" x 7'-0"	1 3/4"	WD	A	HM	5 3/4"	E5/AE520	E5/AE520	--	--	--	12	--	102C
102E	2	3'-0" x 7'-0"	1 3/4"	WD	A	HM	5 3/4"	E5/AE520	E5/AE520	--	--	--	16	--	102E
102G	2	3'-0" x 7'-0"	1 3/4"	WD	A	HM	5 3/4"	E5/AE520	E5/AE520	--	--	--	17	--	102G
102H	2	3'-0" x 7'-0"	1 3/4"	WD	A	HM	5 3/4"	E5/AE520	E5/AE520	--	--	--	17	--	102H
102J	2	3'-0" x 7'-0"	1 3/4"	WD	A	HM	5 3/4"	E5/AE520	E5/AE520	--	--	--	17	--	102J
102L	2	3'-0" x 7'-0"	1 3/4"	WD	A	HM	5 3/4"	E5/AE520	E5/AE520	--	--	--	17	--	102L
102M	2	3'-0" x 7'-0"	1 3/4"	WD	A	HM	5 3/4"	E5/AE520	E5/AE520	--	--	--	16	--	102M
102N	2	3'-0" x 7'-0"	1 3/4"	WD	A	HM	5 3/4"	E5/AE520	E5/AE520	--	--	--	17	--	102N
103	3	3'-0" x 7'-0"	1 3/4"	WD	A	HM	5 3/4"	E5/AE520	E5/AE520	--	YES	--	13	1	103
103A	2	3'-0" x 7'-0"	1 3/4"	WD	A	HM	5 3/4"	E5/AE520	E5/AE520	--	--	--	17	--	103A
105	2	3'-0" x 7'-0"	1 3/4"	WD	A	HM	5 3/4"	E5/AE520	E5/AE520	--	--	--	15	--	105
107	1	3'-0" x 7'-0"	1 3/4"	WD	A	HM	5 3/4"	E5/AE520	E5/AE520	--	YES	--	20	2 --	107
108	1	3'-0" x 7'-0"	1 3/4"	WD	A	HM	5 3/4"	E5/AE520	E5/AE520	--	--	--	21	--	108
109	1	3'-0" x 7'-0"	1 3/4"	WD	A	HM	5 3/4"	E5/AE520	E5/AE520	--	--	--	12	--	109
110	3	3'-0" x 7'-0"	1 3/4"	WD	A	HM	5 3/4"	E5/AE520	E5/AE520	--	YES	--	13	1	110
110.1	1	3'-0" x 7'-0"	1 3/4"	HM	B	HM	5 3/4"	A3/AE520	A2/AE520	--	--	--	01	--	110.1
110A	2	3'-0" x 7'-0"	1 3/4"	WD	A	HM	5 3/4"	E5/AE520	E5/AE520	--	--	--	17	--	110A
110B	2	3'-0" x 7'-0"	1 3/4"	WD	A	HM	5 3/4"	E5/AE520	E5/AE520	--	--	--	18	--	110B
110B.1	2	3'-0" x 7'-0"	1 3/4"	WD	A	HM	5 3/4"	E5/AE520	E5/AE520	--	--	--	18	--	110B.1
112	1	3'-0" x 7'-0"	1 3/4"	WD	A	HM	5 3/4"	E5/AE520	E5/AE520	--	--	--	12	--	112
113	1	3'-0" x 7'-0"	1 3/4"	WD	A	HM	5 3/4"	E5/AE520	E5/AE520	--	--	--	12	--	113
115	1	PR 3'-0" x 7'-0"	1 3/4"	WD	A	HM	5 3/4"	E5/AE520	E5/AE520	--	YES	45 MIN	08	1	115
115.1	1	PR 3'-0" x 7'-0"	1 3/4"	WD	A	HM	5 3/4"	E5/AE520	E5/AE520	--	YES	45 MIN	08	1	115.1
115.2	4	PR 3'-0" x 7'-0"	1 3/4"	AL/G	W15	ALUM	4 1/2"	--	--	--	YES	--	AL-04	1 --	115.2
115.3	4	PR 3'-0" x 7'-0"	1 3/4"	AL/G	W15	ALUM	4 1/2"	--	--	--	YES	--	AL-04	1 --	115.3
115.4	1	PR 3'-0" x 7'-0"	1 3/4"	HM	C	HM	5 3/4"	A3/AE520	A2/AE520	--	YES	--	24	1 --	115.4
115B	1	3'-0" x 7'-0"	1 3/4"	WD	A	HM	5 3/4"	E5/AE520	E5/AE520	--	--	--	11	--	115B
115C	2	3'-0" x 7'-0"	1 3/4"	WD	A	HM	5 3/4"	E5/AE520	E5/AE520	--	--	--	16	--	115C
115C.1	2	3'-0" x 7'-0"	1 3/4"	WD	A	HM	5 3/4"	E5/AE520	E5/AE520	--	--	--	16	--	115C.1
115C.2	2	3'-0" x 7'-0"	1 3/4"	HM	B	HM	5 3/4"	A3/AE520	A2/AE520	--	YES	--	02	1 --	115C.2
115D	1	3'-6" x 7'-0"	1 3/4"	WD	A	HM	5 3/4"	E5/AE520	E5/AE520	--	--	--	11	--	115D
115F	1	3'-0" x 7'-0"	1 3/4"	WD	A	HM	5 3/4"	E5/AE520	E5/AE520	--	--	--	12	--	115F
117	1	3'-0" x 7'-0"	1 3/4"	WD	A	HM	5 3/4"	E5/AE520	E5/AE520	--	--	--	21	--	117
199	5	3'-0" x 7'-0"	1 3/4"	WD	A	HM	5 3/4"	E5/AE520	E5/AE520	--	--	60 MIN	06	--	199
199.1	2	3'-0" x 7'-0"	1 3/4"	HM	B	HM	5 3/4"	A3/AE520	A2/AE520	--	--	--	01	--	199.1

LEVEL TWO DOOR SCHEDULE

Number	Door Type	Door Size	Door Thickness	Door Material	Frame Type	Frame Material	Frame Depth	Head Detail	Jamb Detail	Sill Detail	Electrical	Fire Rating	Hardware	Notes	Number
201	3	3'-0" x 7'-0"	1 3/4"	WD	1	HM	5 3/4"	E5/AE520	E5/AE520	--	YES	--	13	1	201
202	3	3'-0" x 7'-0"	1 3/4"	WD	1	HM	5 3/4"	E5/AE520	E5/AE520	--	YES	--	13	1	202
202.1	3	3'-0" x 7'-0"	1 3/4"	WD	1	HM	5 3/4"	E5/AE520	E5/AE520	--	YES	--	13	1	202.1
202.2	3	3'-0" x 7'-0"	1 3/4"	WD	1	HM	5 3/4"	E5/AE520	E5/AE520	--	YES	--	13	1	202.2
202A	2	3'-0" x 7'-0"	1 3/4"	WD	1	HM	5 3/4"	E5/AE520	E5/AE520	--	--	--	17	--	202A
202C	2	3'-0" x 7'-0"	1 3/4"	WD	1	HM	5 3/4"	E5/AE520	E5/AE520	--	--	--	18	--	202C
202E	2	3'-0" x 7'-0"	1 3/4"	WD	1	HM	5 3/4"	E5/AE520	E5/AE520	--	--	--	17	--	202E
202F	2	3'-0" x 7'-0"	1 3/4"	WD	1	HM	5 3/4"	E5/AE520	E5/AE520	--	--	--	17	--	202F
202H	2	3'-0" x 7'-0"	1 3/4"	WD	1	HM	5 3/4"	E5/AE520	E5/AE520	--	--	--	17	--	202H
202J	2	3'-0" x 7'-0"	1 3/4"	WD	1	HM	5 3/4"	E5/AE520	E5/AE520	--	--	--	17	--	202J
202K	2	3'-0" x 7'-0"	1 3/4"	WD	1	HM	5 3/4"	E5/AE520	E5/AE520	--	--	--	18	--	202K
202M	2	3'-0" x 7'-0"	1 3/4"	WD	1	HM	5 3/4"	E5/AE520	E5/AE520	--	--	--	17	--	202M
202N	2	3'-0" x 7'-0"	1 3/4"	WD	1	HM	5 3/4"	E5/AE520	E5/AE520	--	--	--	17	--	202N
203	3	3'-0" x 7'-0"	1 3/4"	WD	1	HM	5 3/4"	E5/AE520	E5/AE520	--	YES	--	13	1 --	203
203A	2	3'-0" x 7'-0"	1 3/4"	WD	1	HM	5 3/4"	E5/AE520	E5/AE520	--	--	--	17	--	203A
204	3	3'-0" x 7'-0"	1 3/4"	WD	1	HM	5 3/4"	E5/AE520	E5/AE520	--	YES	--	13	1 --	204
204A	2	3'-0" x 7'-0"	1 3/4"	WD	1	HM	5 3/4"	E5/AE520	E5/AE520	--	--	--	17	--	204A
206	2	3'-0" x 7'-0"	1 3/4"	WD	1	HM	5 3/4"	E5/AE520	E5/AE520	--	--	--	15	--	206
208	2	3'-6" x 7'-0"	1 3/4"	WD	1	HM	5 3/4"	E5/AE520	E5/AE520	--	--	--	18	--	208
209	2	3'-0" x 7'-0"	1 3/4"	WD	1	HM	5 3/4"	E5/AE520	E5/AE520	--	--	--	14	--	209
211	1	3'-0" x 7'-0"	1 3/4"	WD	1	HM	5 3/4"	E5/AE520	E5/AE520	--	--	--	21	--	211
212	1	3'-0" x 7'-0"	1 3/4"	WD	1	HM	5 3/4"	E5/AE520	E5/AE520	--	--	--	12	--	212
213	1	PR 3'-0" x 7'-0"	1 3/4"	WD	1	HM	8"	D2/AE520	D2/AE520	C2/AE520	--	--	22	--	213
214	1	3'-0" x 7'-0"	1 3/4"	WD	1	HM	5 3/4"	E5/AE520	E5/AE520	--	--	--	12	--	214
215	1	3'-0" x 7'-0"	1 3/4"	WD	1	HM	5 3/4"	E5/AE520	E5/AE520	--	--	--	12	--	215
216	3	3'-0" x 7'-0"	1 3/4"	WD	1	HM	5 3/4"	E5/AE520	E5/AE520	--	YES	--	13	1	216
216.1	3	3'-0" x 7'-0"	1 3/4"	WD	1	HM	5 3/4"	E5/AE520	E5/AE520	--	YES	--	13	1	216.1
216A	2	3'-0" x 7'-0"	1 3/4"	WD	1	HM	5 3/4"	E5/AE520	E5/AE520	--	--	--	17	--	216A
216B	2	3'-0" x 7'-0"	1 3/4"	WD	1	HM	5 3/4"	E5/AE520	E5/AE520	--	--	--	17	--	216B
216C	2	3'-0" x 7'-0"	1 3/4"	WD	1	HM	5 3/4"	E5/AE520	E5/AE520	--	--	--	17	--	216C
216D	2	3'-0" x 7'-0"	1 3/4"	WD	1	HM	5 3/4"	E5/AE520	E5/AE520	--	--	--	17	--	216D
216H	2	3'-0" x 7'-0"	1 3/4"	WD	1	HM	5 3/4"	E5/AE520	E5/AE520	--	--	--	17	--	216H
216K	2	3'-0" x 7'-0"	1 3/4"	WD	1	HM	5 3/4"	E5/AE520	E5/AE520	--	--	--	18	--	216K
219	1	3'-0" x 7'-0"	1 3/4"	WD	1	HM	5 3/4"	E5/AE520	E5/AE520	--	--	--	21	--	219
299	5	3'-0" x 7'-0"	1 3/4"	WD	1	HM	5 3/4"	E5/AE520	E5/AE520	--	--	60 MIN	05	--	299
201.1	4	3'-0" x 7'-0"	1 3/4"	AL/G	W22	ALUM	4 1/2"	--	--	--	--	--	AL-08	ADD ALTERNATE #1	201.1

GENERAL NOTES

1. KEY NOTES LISTED APPLY ONLY TO THIS SHEET.
2. FIRE RATING LISTED IN SCHEDULE APPLIES TO BOTH DOOR AND FRAME.
3. RE: ELECTRICAL DRAWINGS FOR DOORS HAVING ELECTRICAL REQUIREMENTS

KEYNOTES

1. ROUGH IN FOR ACCESS CONTROL
2. ADA ACTUATOR
3. NOT USED
4. CARD READER PROVIDED BY OWNER
5. COUNTER SHUTTER

LEGENDS AND SYMBOLS

ALUM = ALUMINUM
AL/G = ALUMINUM AND GLASS
HM = HOLLOW METAL
WD = WOOD
W# = WINDOW SCHEDULE WINDOW TYPES SEE SHEETS AE630, AE631, AND AE632.

MARK	GLASS TYPES
1	1" INSULATED GLASS, LOW E - TINTED 1A = PROVIDE HIGH PERFORMANCE TINTED GLAZING UNITS AT WEST FACING GLASS LOCATIONS, TYP.
2	1" INSULATED TEMPERED GLASS, LOW E - TINTED 2A = PROVIDE HIGH PERFORMANCE TINTED GLAZING UNITS AT WEST FACING GLASS LOCATIONS, TYP.
3	1" INSULATED SPANDREL GLASS 3A = PROVIDE HIGH PERFORMANCE TINTED GLAZING UNITS AT WEST FACING GLASS LOCATIONS, TYP.
4	1/4" FLOAT GLASS - CLEAR
5	1/4" TEMPERED GLASS - CLEAR
6	1" INSULATED GLASS, LOW E- TINTED AND TEMPERED - 60 MIN. RATING
7	FIRE RATED GLAZING - TEMPERED 60 MIN. RATING

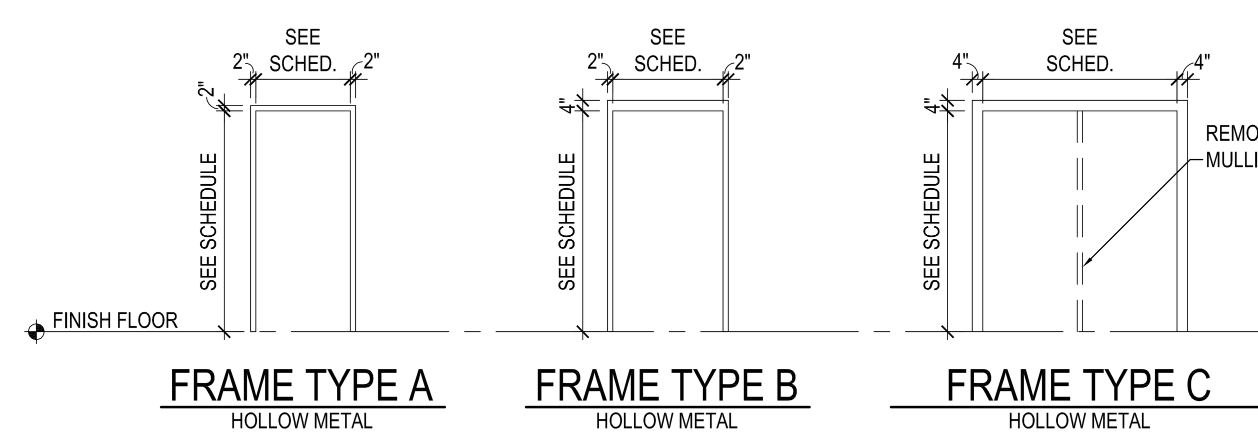

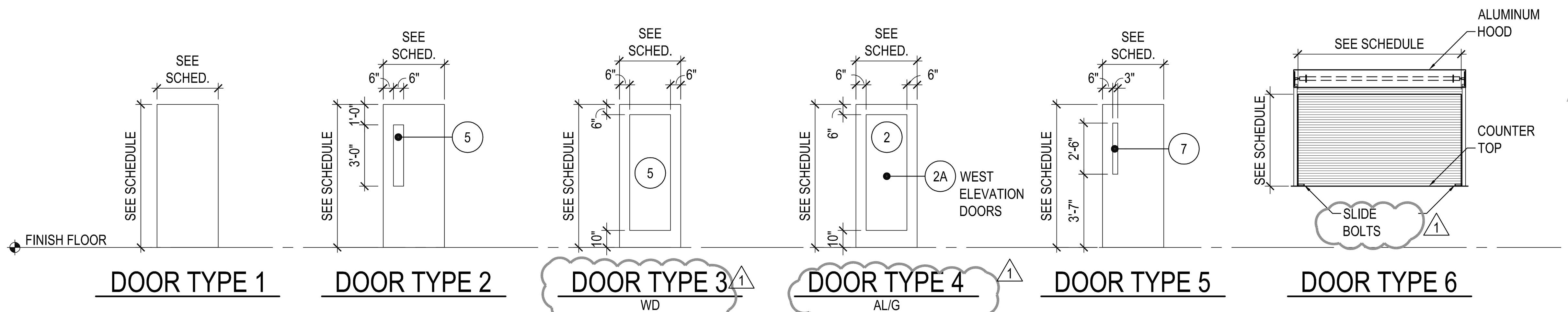

MHTN ARCHITECTS, INC.
420 East South Temple
Suite 100
Salt Lake City, Utah 84111
Telephone (801) 595-6700
Telefax (801) 595-6717
www.mhtn.com

WEBER STATE UNIVERSITY

HURST CENTER FOR LIFELONG LEARNING WEBER STATE UNIVERSITY

UTAH STATE DIVISION OF FACILITIES CONSTRUCTION MANAGEMENT- DFCM PROJECT NO. 07110810

SEAL: STATE OF UTAH, MICHAEL GAVIGLIO, 4920978-0301, 3.04.08, LICENSED ARCHITECT

MHTN PROJECT NO. 2007556.00
DRAWN BY: STAFF CHECKED BY: MG

ISSUED:

NO.	DATE	DESCRIPTION
1	10/26/07	SCHEMATIC DESIGN
2	12/18/07	DESIGN DEVELOPMENT
3	02/08/08	CONSTRUCTION DOCUMENTS
4	03/04/08	CONSTRUCTION BID DOCUMENTS

REVISIONS:

NO.	DATE	DESCRIPTION
1	03/24/08	ADDENDUM #2

DOOR SCHEDULE

CONSTRUCTION BID DOCUMENTS
MARCH 4, 2008

SHEET NUMBER
AE615

By: AntoniaV; Mar 24, 2008 - 7:14pm
K:\Higher_Ed\2007556 WSU Hurst Center\1 Drawings\AE615.dwg

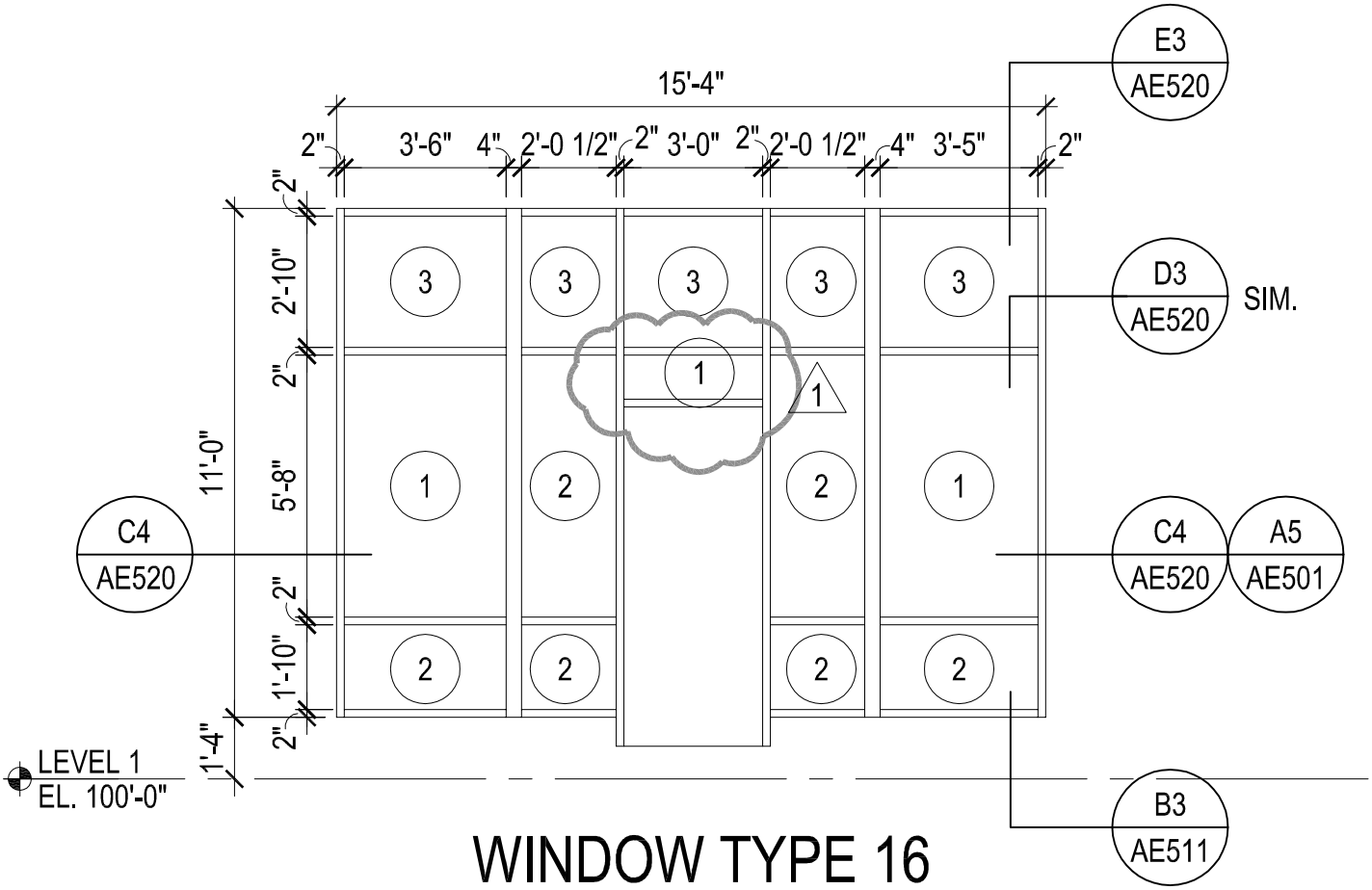

WINDOW TYPE 16

GLAZED ALUM. CURTAIN WALL

0 1' 2' 4'

SCALE: 1/4" = 1'-0"

MHTN ARCHITECTS, INC.
420 East South Temple
Suite 100
Salt Lake City, Utah 84111
Telephone (801) 595-6700
Telefax (801) 595-6717
www.mhtn.com

Project Name: WSU - HURST CENTER FOR LIFELONG LEARNING

Project No: 2007556

Date: 24 MARCH 2008

Sheet No.

AD02-A05

Sheet Reference

AE631

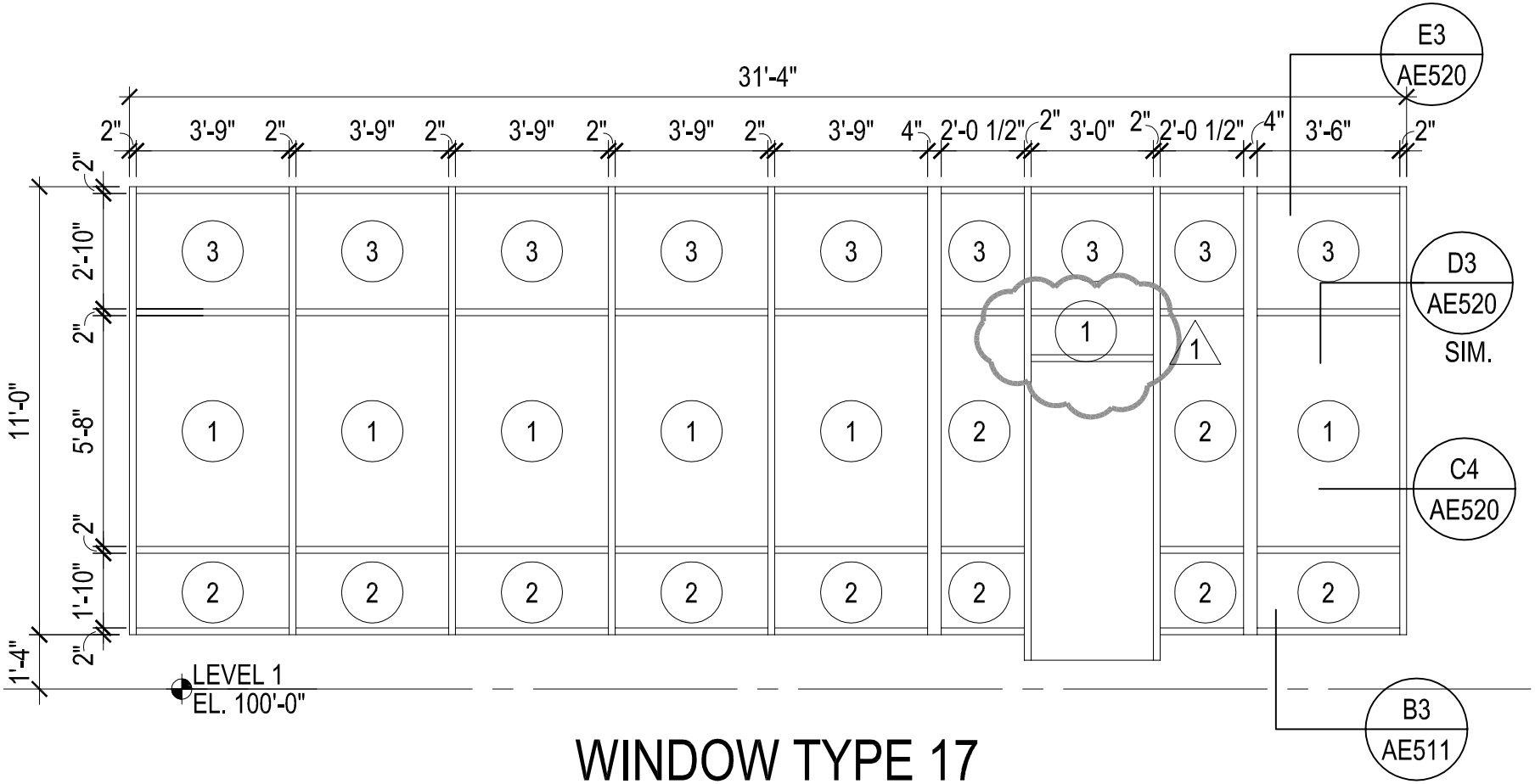

WINDOW TYPE 17

GLAZED ALUM. CURTAIN WALL

0 1' 2' 4'

SCALE: 1/4" = 1'-0"

MHTN ARCHITECTS, INC.
420 East South Temple
Suite 100
Salt Lake City, Utah 84111
Telephone (801) 595-6700
Telefax (801) 595-6717
www.mhtn.com

Project Name: WSU - HURST CENTER FOR LIFELONG LEARNING
Project No: 2007556
Date: 24 MARCH 2008

Sheet No.
AD02-A06
Sheet Reference
AE631

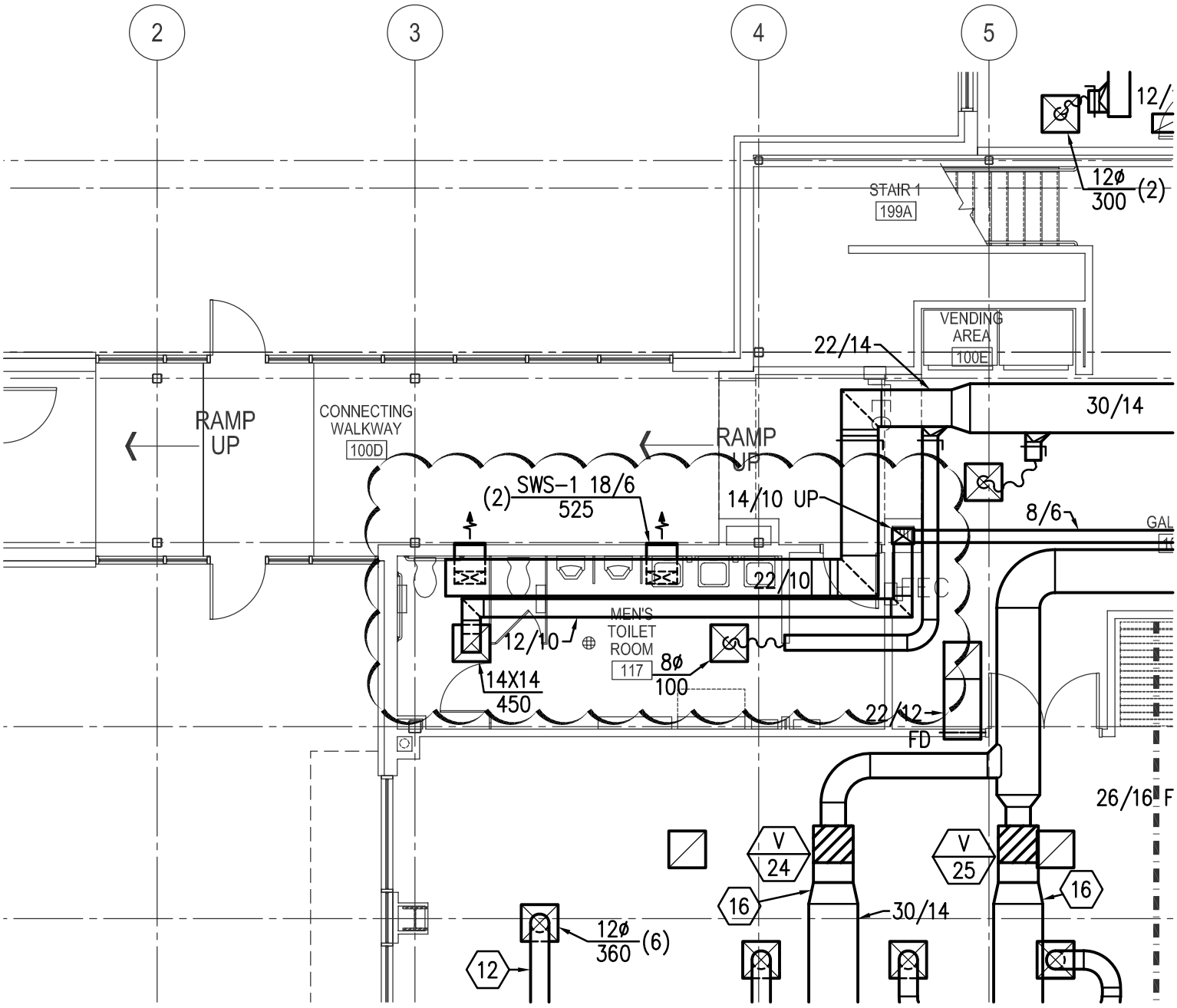

MHTN ARCHITECTS, INC.
420 East South Temple
Suite 100
Salt Lake City, Utah 84111
Telephone (801) 595-6700
Telefax (801) 595-6717
www.mhtn.com

Project Name: WSU HURST CENTER FOR LIFELONG LEARNING

Project No: 2007556.00/07110810

Date: 24 MARCH 2008

Sheet No.

MSD-03

Sheet Reference

MH101

By: MHtgn Mar 24, 2008 - 4:31pm
N:_07\07200\07286 Weber State Hurst Center\01_Cadd_Phase 1_Mechanical_7286_mech-h.dwg

Air Handler Sound Power Schedule													
			Octave Band Frequency Sound Power (dB re: 10E-12 watts)										
Tag	Sound Data Location	Opening Area Sqft	63	125	250	500	1k	2k	4k	8k	LwA	Lw
AH-1	Return Fan	Inlet	87	84	81	79	78	78	70	67	84	90
		Outlet	77	80	82	72	75	72	67	53	80	86
	Supply Fan	Inlet	86	90	88	91	91	91	89	85	97	99
		Outlet	85	85	89	82	85	83	80	74	90	94
	EA Opening	43.8	82	84	80	80	78	79	77	73	85	88
	RA Opening	17.9	83	77	70	67	63	65	57	54	71	84
	RA Opening	8.3	79	74	67	64	61	62	54	51	68	81
	RA Opening	8.3	79	74	67	64	61	62	54	51	68	81
	RA Opening	12.1	81	75	69	65	62	63	55	52	69	82
	OA Opening	45	83	85	80	81	79	80	78	74	86	90
	SA Opening	9.1	73	71	72	63	64	63	61	54	70	77
	SA Opening	3.1	69	66	67	59	60	59	56	50	66	73
	SA Opening	8.5	73	70	71	63	64	63	60	54	70	77
	Casing Radiated		79	76	74	65	59	53	48	40	69	81

MHTN ARCHITECTS, INC.
420 East South Temple
Suite 100
Salt Lake City, Utah 84111
Telephone (801) 595-6700
Telefax (801) 595-6717
www.mhtn.com

Project Name: WSU HURST CENTER FOR LIFELONG LEARNING
Project No: 2007556.00/07110810
Date: 24 MARCH 2008

Sheet No.
MSD-02
Sheet Reference
MH602

By: user: Mar 24, 2008 - 4:10pm
N:\07\07200\07286 Weber State Hurst Center\01_Cad\Dj_Phase 1_Plumbing\7286_pp101.dwg

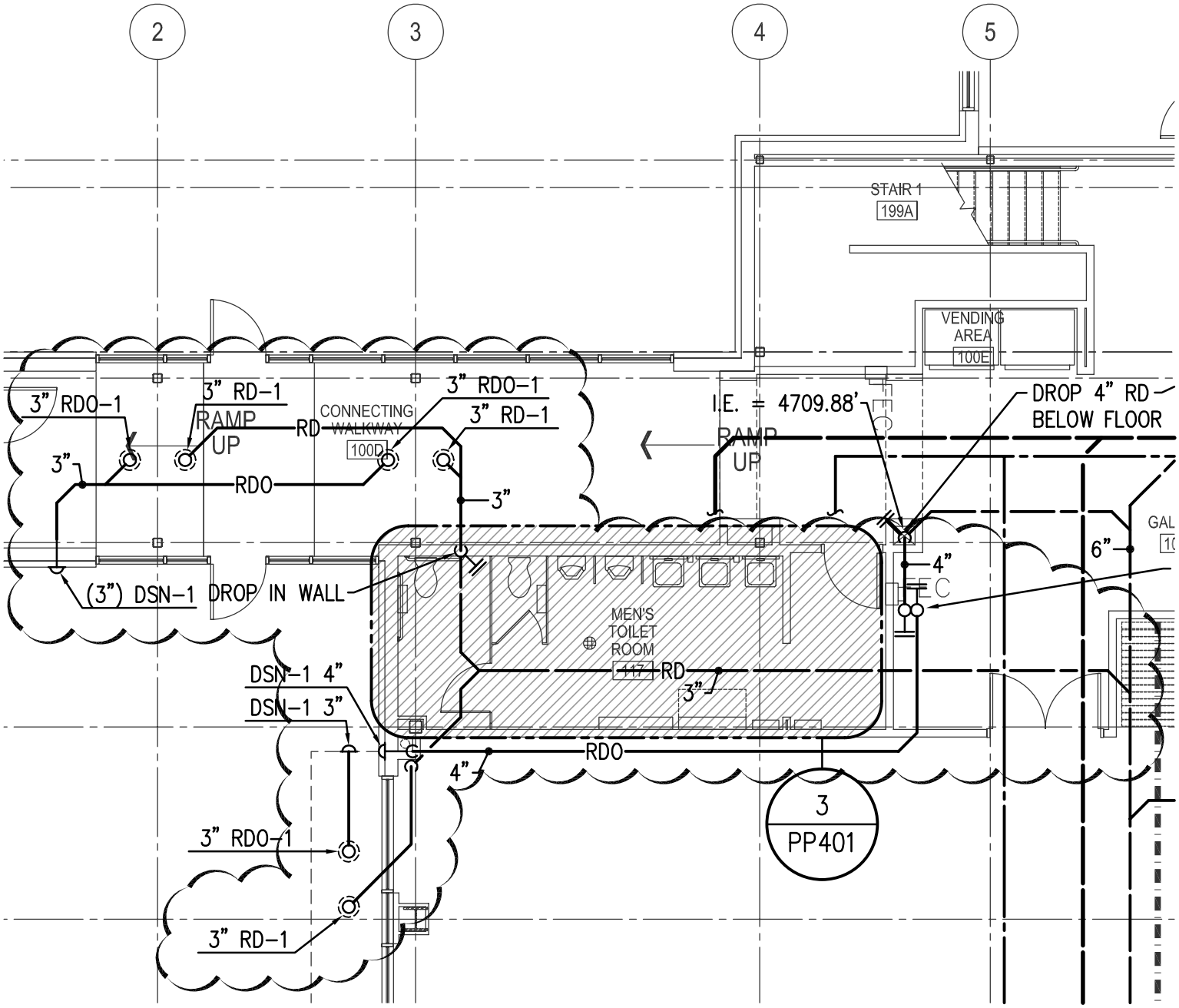

MHTN ARCHITECTS, INC.
420 East South Temple
Suite 100
Salt Lake City, Utah 84111
Telephone (801) 595-6700
Telefax (801) 595-6717
www.mhtn.com

Project Name: WSU HURST CENTER FOR LIFELONG LEARNING

Project No: 2007556.00/07110810

Date: 24 MARCH 2008

Sheet No.

PSD-01

Sheet Reference

PP101