HURST CENTER FOR LIFELONG LEARNING
WEBER STATE UNIVERSITY
OGDEN, UTAH
UTAH STATE DIVISION OF FACILITIES CONSTRUCTION
MANAGEMENT- DFCM PROJECT NO. 07110810

CONSTRUCTION DOCUMENTS
MARCH 4, 2008

ABBREVIATIONS

AC	Air Conditioning	EIFS	Exterior Insulation, & Finish System	OC	On Center
AFF	Above Finish Floor			OPP	Opposite
ALT	Alternate	FT	Feet	OD	Outside Diameter
APPROX	Approximate	FLR	Floor	OA	Overall
ARCH	Architect	FIN FLR	Finish Floor	OH DR	Overhead Door
BD	Board	FE	Fire Extinguisher	PR	Pair
BRG	Bearing	FIN	Finish	PERP	Perpendicular
BLKG	Blocking	FD	Floor Drain	PLAM	Plastic Laminate
BLDG	Building	FR	Frame	PL GL	Plate Glass
BOT	Bottom	FTG	Footing	PLBG	Plumbing
CLG	Ceiling	FDTN	Foundation	PREFAB	Prefabricate
CL	CenterLine	GA	Gage	PL	Property Line
CO	Cleanout	GALV	Galvanize	REFR	Refrigeration
CONC	Concrete	GI	Galvanized Iron	REINF	Reinforce
CONF	Conference	GLU-LAM	Glue Laminated	REQD	Required
CONSTR	Construction	GYP BD	Gypsum Board	RD	Roof Drain
CONT	Continue	HDW	Hardware	SCHED	Schedule
CONTR	Contractor	HC	Handicap	SIM	Similar
CJ	Control Joint	HVAC	Heating Ventilation & Air Conditioning	SPEC	Specification
COORD	Coordinate			SQ	Square
CORR	Corridor	HORIZ	Horizontal	STD	Standard
CSK	Countersunk	HM	Hollow Metal	STRUCT	Structural
COMM	Communication	ID	Inside Diameter	SUSP CLG	Suspended Ceiling
CIP	Cast in Place	INT	Interior	THK	Thick
CMU	Concrete Masonry Unit	ISO	Isometric	T&G	Tongue and Groove
		JAN	Janitor	TO	Top Of
DEM0	Demolition	KOP	Knockout Panel	TOB	Top of Beam
DIAG	Diagonal	KD	Knock Down	TOS	Top of Slab
DIA	Diameter	LAB	Laboratory	TOW	Top of PARTITION
DIM	Dimension	LAV	Lavatory	TOM	Top of Masonry
DN	Down	MAINT	Maintenance	XFMR	Transformer
DS	Downspout	MH	Manhole	TOMu	Top of Mullion
DWG	Drawing	MFR	Manufacturer	TYP	Typical
ELEC	Electric	MO	Masonry Opening	UNO	Unless Noted Otherwise
EL	Elevation	MAX	Maximum		
ELEV	Elevator	MECH	Mechanical	VTR	Vent Through Roof
EQ	Equal	MEZZ	Mezzanine	VERT	Vertical
EQUIP	Equipment	MIN	Minimum	VEST	Vestibule
EXIST	Existing	MISC	Miscellaneous	VCT	Vinyl Composition Tile
EXP	Expansion	NOM	Nominal	WC	Water Closet
EJ	Expansion Joint	NIC	Not In Contract	WH	Water Heater
EXT	Exterior	NO	Number	WWF	Welded Wire Fabric
EWC	Electric Water Cooler	NTS	Not to Scale	W/	With

GENERAL SYMBOLS
SEE PLUMBING, MECHANICAL AND ELECTRICAL FOR DISCIPLINE SYMBOLS

AXXXX — SHEET NUMBER; Sheet Number Sequence; Sheet Type; Discipline

GRID REFERENCE MARK — A1 Starts at lower left corner; Number Horizontal; Letters Vertical

B2 / AE303 — BUILDING SECTION, SHEET WHERE DRAWN

T.O. DECK EL. 108'-0" — SPOT ELEVATION

B3 / AE301 — WALL SECTION, SHEET WHERE DRAWN

LEVEL 1 EL. 100'-0" — VERTICAL ELEVATION

D2 / AE501 — DETAIL, SHEET WHERE DRAWN

N — NORTH ARROW

B2 / AE303 — EXTERIOR ELEVATION, SHEET WHERE DRAWN

A1 / AE401 — INTERIOR ELEVATION, SHEET WHERE DRAWN

DRAWING REVISION, Revision Number

101A — DOOR NUMBER

OFFICE 101 — ROOM NAME, ROOM NUMBER

10 — WINDOW NUMBER

1 — KEYED NOTES

8 — PARTITION TYPE

MATERIALS
EARTH; BRICK; GYPSUM BOARD; GRAVEL; STONE; EIFS; CONCRETE; PRE-CAST CONCRETE; BATT INSULATION; CMU; WOOD & BLOCKING; RIGID INSULATION

APPROVALS
WSU - JIM HARRIS, PROJECT MANAGER — DATE:

DFCM - BILL BOWEN, PROGRAM DIRECTOR — DATE:

MHTN ARCHITECTS - MICK GAVIGLIO, PROJECT MANAGER — DATE:

DFCM CODE TEMPLATE

APPLICABLE CODES

Code	Year	Code	Year
International Building Code	2006	National Electrical Code	2005
International Mechanical Code	2006	Uniform Code for Building Conservation	N/A
International Plumbing Code	2006	ADA Accessibility Guildelines	1994
International Fire Code	2006		
International Energy Conservation Code	2006		

A. Occupancy and Group: B - BUSINESS   A-3 ASSEMBLY

Change in Use: Yes ____ No X   Mixed Occupancy: Yes X No ____
Special Use and Occupancy (e.g. High Rise, Covered Mall): N/A

B. Seismic Design Category: D   Design Wind Speed: 90 mph

C. Type of Construction (circle one): I A, I B, II A, **II B** (circled), III A, III B, IV HT, V A, V B

D. Fire Resistance Rating Requirements for the Exterior Walls based on the fire separation distance (in hours): North: 0 South: 0 East: 0 West: 0

E. Mixed Occupancies: YES   Nonseparated Uses: NA

1) Required Separation between Occupancies (IBC 2006 - Table 508.3.3)

Separation between Group B and Group A-3 = 1-hour (with sprinklers)

F: Sprinklers:
Required: NO   Provided: YES   Type of Sprinkler System: WET PIPE PER SECTION 903.1.1

G: Allowable HT (Table 503):
Group A-3: Number of Stories: 2   Building Height: 55'
Group B: Number of Stories: 4   Building Height: 55'
Increase Per 504.2
Group A-3: Number of Stories: 3   Building Height: 75'
Group B: Number of Stories: 4   Building Height: 75'

H: Actual Area per Floor:
1) Lower Level Area (square feet): 6,210
2) Level One Area (square feet): 17,986
3) Level Two Area (square feet): 17,204
Total (square feet): 41,400

I: Tabular Area: (TABLE 503): B= 23,000; A-3=9500

J: Area Modifications (IBC 2006 - SECTION 506):

1) Area Modicifation General (IBC 2006 - 506.1):

Business Occupancy (Primary)

$$A_a = 23{,}000\,(A_t) + \left[23{,}000\,(A_t) \times 0.72\,(I_f)\right] + \left[23{,}000\,(A_t) \times 2\,(I_s)\right]$$

a) A_t = Allowable Area of the Main Occupancy = 23,000 sf (Table 503)

b) I_f = Area Increase for Frontage (IBC 2006 - 506.2)

$$= 100\left[\frac{623'\,(F)}{633'\,(P)} - 0.25\right]\frac{29.5\,(W)}{30} = 0.72$$

c) I_s = Area Increase for Sprinklers per Section506.3;(2)

$$= 23{,}000 + [16{,}560] + [46{,}000] = 85{,}560 \text{ (Group B)}$$

Assembly Occupancy (Secondary)

$$A_a = 9{,}500\,(A_t) + \left[9{,}500\,(A_t) \times 0.72\,(I_f)\right] + \left[9{,}500\,(A_t) \times 2\,(I_s)\right]$$

a) A_t = Allowable Area of the Main Occupancy = 9,500 sf (Table 503)

b) I_f = Area Increase for Frontage (IBC 2006 - 506.2)

$$= 100\left[\frac{623'\,(F)}{633'\,(P)} - 0.25\right]\frac{29.4\,(W)}{30} = 0.74$$

c) I_s = Area Increase for Sprinklers per Section 506.3;(2)

$$= 9{,}500 + [6{,}840] + [19{,}000] = 35{,}340 \text{ (Group A-3)}$$

2) Allowable Area for Seperated Occupancies in Mixed Use
Sum of the Ratios Calculations for Mixed Occupancies (IBC 2006 - 508.3.3.2):

☒ CONFIRMED

$$\frac{18{,}004 \text{ sf (actual)}}{85{,}560 \text{ sf (allowable)}}_{\text{Business (B)}} + \frac{3{,}727 \text{ sf (actual)}}{35{,}340 \text{ sf (allowable)}}_{\text{Assembly (A-3)}} = .12 \quad \left[\text{MUST BE } \le 1\right]$$

3) Total Allowable Area for:
1) One Story: NA
2) Two Story: $A_a(2)$ 85,560 sf / floor; 171,120 sf (Total)
3) Three Story: $A_a(3)$ NA
4) Four Story: $A_a(4)$ NA

4) Unlimited Area Building: Yes ____ No X   Code Section: NA

K. Fire Resistance Rating Requirements for Building Elements (hours).

Type IIB Construction

Element	Hours	Assembly Listing	Element	Hours	Assembly Listing
Exterior Bearing Walls	0		Exterior Doors and Windows	0	
Interior Bearing Walls	0		Shaft Enclosures - Mech	1	
Exterior Non-Bearing Walls	0		Shaft Enclosures - Stairwell	1	
Structural Frame	0		Shaft Enclosures - Stairwell	1	
Partitions - Permanent	0		Fire Walls	2	
Fire Barriers	0		Fire Partitions	1	
Floor - Ceiling Assy.	0		Smoke Partitions	0	
Roof - Ceiling Assy.	0				

L. Design Occupant Load: 889
Exit Width Required: 215"   Exit Width Provided: 430"

M. Minimum Number of Required Plumbing Facilities:
a) Water Closets - Required (m) 8 (f) 10   Provided (m) 9 (f) 11
b) Lavatories - Required (m) 6 (f) 6   Provided (m) 6 (f) 6
Unisex per (1109.2.1): Required: 1   Provided: 1
c) Bath Tubs or Showers: N/A
d) Drinking Fountains Required: 6   Provided: 6
d) Service Sinks: 3
*PLUS WATER CLOSET @ UNISEX

FOOTNOTES:

1) In case of conflict with the U.S. Department of Justice Federal Registers Parts I through V - ADA Guidelines and specific reference to the International Building Code Accessibility Chapters, the more restrictive requirement shall govern.

2) Additional Code Information shall be provided at the discretion of the Building Official for Complex Buildings. Including, but not limited to:
a) High Rise Requirements.
b) Atriums.
c) Performance Based Criteria.
d) Means or Egress Analysis.
e) Fire Assembly Locator Sheet.
f) Exterior and Interior Accessibility Route.
g) Fire Stopping, Including Tested Design Number.

LIST OF DEFERRED SUBMITTALS
1. AGGREGATE PIER SOIL REINFORCEMENT
2. STRUCTURAL WALL COLD FORMED FRAMING
3. OPEN WEB STEEL JOISTS
4. STAIRS
5. SPRINKLERS
6. FIRE ALARM
7. CODE SIGNAGE BY WSU
8. EXCAVATION SHORING

SPECIAL INSPECTIONS (IN ADDITION TO THOSE LISTED ON SG601) AS REQ.'D BY 1705.3 OR 1707
1. GLAZING / CURTAIN WALLS
2. SPRAY FIRE - RESISTIVE MATERIALS
3. SUSPENDED CEILING SYSTEMS
4. EXTERIOR CLADDING AND VENEERS WEIGHING MORE THAN 5 psf
5. GENERATOR

VICINITY MAP

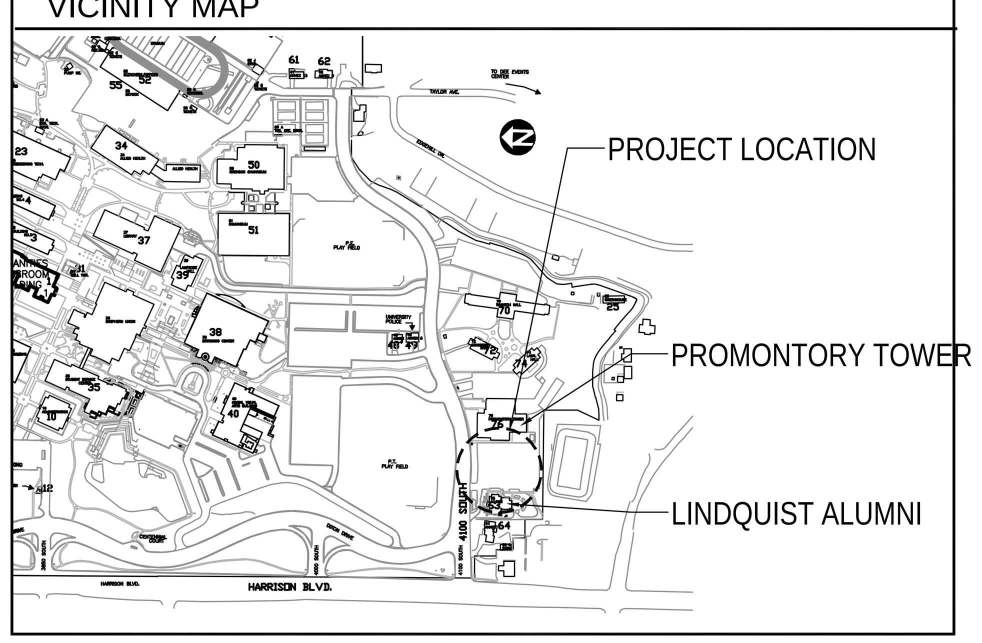

INDEX TO DRAWINGS - CONSTRUCTION DOCUMENTS

GENERAL
GI001 SHEET INDEX AND GENERAL INFORMATION

CIVIL
CD001 DEMOLITION PLAN
CD002 DEMOLITION PLAN
CS100 SITE PLAN
CS101 SITE PLAN
CG200 GRADING AND DRAINAGE PLAN
CG201 GRADING AND DRAINAGE PLAN
CU300 UTILITY PLAN
CU301 UTILITY PLAN
CD400 DETAILS
CD401 DETAILS
CD402 DETAILS
CP500 SWPP PLAN
CP501 SWPP PLAN
CP502 SWPP DETAILS
CP503 SWPP NOTES

LANDSCAPE
LI101 IRRIGATION PLAN
LI501 IRRIGATION DETAILS
LI502 IRRIGATION DETAILS
LP101 PLANTING PLAN
LP501 PLANTING DETAILS

STRUCTURAL
SG001 STRUCTURAL NOTES
SG601 STRUCTURAL SCHEDULES
SB101 FOOTING / FOUNDATION PLAN
SB501 DETAILS
SF101 FIRST FLOOR FRAMING PLAN
SF102 SECOND FLOOR FRAMING PLAN
SF102.A ADD ALTERNATE - PATIO
SF103 ROOF FRAMING PLAN
SF201 DETAILS
SF301 CHIMNEY FRAMING AND DETAILS
SF501 DETIALS
SF502 DETAILS

ARCHITECTURAL
AS101 ARCHITECTURAL SITE PLAN
AS501 SITE DETAILS
AE001 CODE AND LIFE SAFETY PLANS
AE002 CODE AND LIFE SAFETY PLANS
AE100 LOWER LEVEL PLAN
AE101 LEVEL ONE PLAN
AE102 LEVEL TWO PLAN
AE103 ROOF PLAN
AC100 LOWER LEVEL REFLECTED CEILING PLAN
AC101 LEVEL ONE REFLECTED CEILING PLAN
AC102 LEVEL TWO REFLECTED CEILING PLAN
AE201 BUILDING ELEVATIONS
AE202 BUILDING ELEVATIONS
AE301 BUILDING SECTIONS
AE302 BUILDING SECTIONS
AE310 WALL SECTIONS
AE311 WALL SECTIONS
AE312 WALL SECTIONS
AE313 WALL SECTIONS
AE314 WALL SECTIONS
AE401 VERTICAL CIRCULATION - NORTHWEST STAIR
AE402 VERTICAL CIRCULATION - SOUTHEAST STAIR
AE403 VERTICAL CIRCULATION - SOUTH STAIR
AE410 VERTICAL CIRCULATION - ELEVATOR
AE420 MOUNTING HEIGHTS
AE421 ENLARGED TOILET ROOMS - PLANS AND ELEVATIONS
AE422 ENLARGED TOILET ROOMS - PLANS AND ELEVATIONS
AE441 CASEWORK ELEVATIONS
AE442 CASEWORK DETAILS
AE460 LOWER LEVEL FLOOR PATTERN PLAN
AE461 LEVEL ONE FLOOR PATTERN PLAN
AE462 LEVEL TWO FLOOR PATTERN PLAN
AE501 WALL DETAILS
AE502 PLAN DETAILS
AE505 ROOF DETAILS
AE507 ADD ALTERNATE - PATIO
AE511 WALL SECTION DETAILS
AE520 DOOR AND WINDOW DETAILS
AE521 EXTERIOR DETAILS
AE530 VERTICAL CIRCULATION DETAILS
AE541 INTERIOR DETAILS
AE551 CEILING DETAILS
AE601 PARTITION TYPES
AE615 DOOR SCHEDULE
AE620 FINISH SCHEDULE LOWER LEVEL & FIRST FLOOR
AE621 FINISH SCHEDULE SECOND FLOOR
AE630 WINDOW SCHEDULE
AE631 WINDOW SCHEDULE
AE632 WINDOW SCHEDULE

MECHANICAL
M001 MECHANICAL SYMBOLS LEGEND
MH100 LOWER LEVEL MECHANICAL PLAN
MH101 LEVEL ONE MECHANICAL PLAN
MH102 LEVEL TWO MECHANICAL PLAN
MH301 MECHANICAL SECTIONS
MH401 LARGE SCALE MECHANICAL PLANS
MH501 MECHANICAL DETAILS
MH601 MECHANICAL SCHEDULES
MH602 MECHANICAL SCHEDULES
MH701 AIR HANDLING SYSTEM SCHEMATIC
MH702 CHILLED WATER AND HOT WATER SCHEMATICS
MP100 LOWER LEVEL MECHANICAL PIPING PLAN
MP101 LEVEL ONE MECHANICAL PIPING PLAN
MP102 LEVEL TWO MECHANICAL PIPING PLAN
PP100 LOWER LEVEL PLUMBING PLAN
PP101 LEVEL ONE PLUMBING PLAN
PP102 LEVEL TWO PLUMBING PLAN
PP401 LARGE SCALE PLUMBING PLANS
PP601 PLUMBING DETAILS AND SCHEDULES

ELECTRICAL
EE001 NOTES & SCHEDULES
EE002 DETAILS
EE003 POWER SINGLE LINE DIAGRAM
EE004 PANEL SCHEDULE
EE005 FIRE ALARM SINGLE LINE DIAGRAM
EE006 RELAY RISER AND DETAILS
ES100 SITE PLAN - ELECTRICAL
EP100 LOWER LEVEL PLAN - POWER
EP101 LEVEL ONE PLAN - POWER
EP102 LEVEL TWO PLAN - POWER
EP103 ROOF PLAN - ELECTRICAL
EL100 LOWER LEVEL PLAN - LIGHTING
EL101 LEVEL ONE PLAN - LIGHTING
EL102 LEVEL TWO PLAN - LIGHTING
EY100 LOWER LEVEL PLAN - SYSTEMS
EY101 LEVEL ONE PLAN - SYSTEMS
EY102 LEVEL TWO PLAN -SYSTEMS

CONSULTANTS

CIVIL ENGINEER	STRUCTURAL	MECHANICAL	ELECTRICAL
GREAT BASIN ENGINEERING 5746 SOUTH 1475 EAST SUITE 200 OGDEN, UT 84404 PHONE: (801) 394-4515 FAX: (801) 392-7544 CONTACT: DAVE WALDREN	ARW ENGINEERS 1594 PARK CIRCLE OGDEN, UT 84404 PHONE: (801) 782-6008 FAX: (801) 782-4656 CONTACT: JEREMY ACHTER	VAN BOERUM & FRANK & ASSOCIATES 330 SOUTH 300 EAST SALT LAKE CITY, UT 84111 PHONE: (801) 530-3148 FAX: (801) 530-3150 CONTACT: BRANDON BRIGGS	E.C.E. INC. 939 S. WEST TEMPLE SALT LAKE CITY, UT 84101 PHONE: (801) 521-8007 FAX: (801) 521-8057 CONTACT: AKBAR MATINKHAH

MHTN ARCHITECTS, INC.
420 East South Temple
Suite 100
Salt Lake City, Utah 84111
Telephone (801) 595-6700
Telefax (801) 595-6717
www.mhtn.com

WEBER STATE UNIVERSITY

HURST CENTER FOR LIFELONG LEARNING
WEBER STATE UNIVERSITY
UTAH STATE DIVISION OF FACILITIES CONSTRUCTION
MANAGEMENT- DFCM PROJECT NO. 07110810

SEAL

STATE OF UTAH — MICHAEL GAVIGLIO 4920978-0301 — LICENSED ARCHITECT — 3.04.08

MHTN PROJECT NO. 2007556.00
DRAWN BY: STAFF   CHECKED BY: MG

ISSUED:

NO.	DATE	DESCRIPTION
1	10/26/07	SCHEMATIC DESIGN
2	12/18/07	DESIGN DEVELOPMENT
3	02/08/08	CONSTRUCTION DOCUMENTS
4	03/04/08	CONSTRUCTION BID DOCUMENTS

REVISIONS:

NO.	DATE	DESCRIPTION

SHEET INDEX AND GENERAL INFORMATION
CONSTRUCTION BID DOCUMENTS
MARCH 4, 2008

SHEET NUMBER
GI001

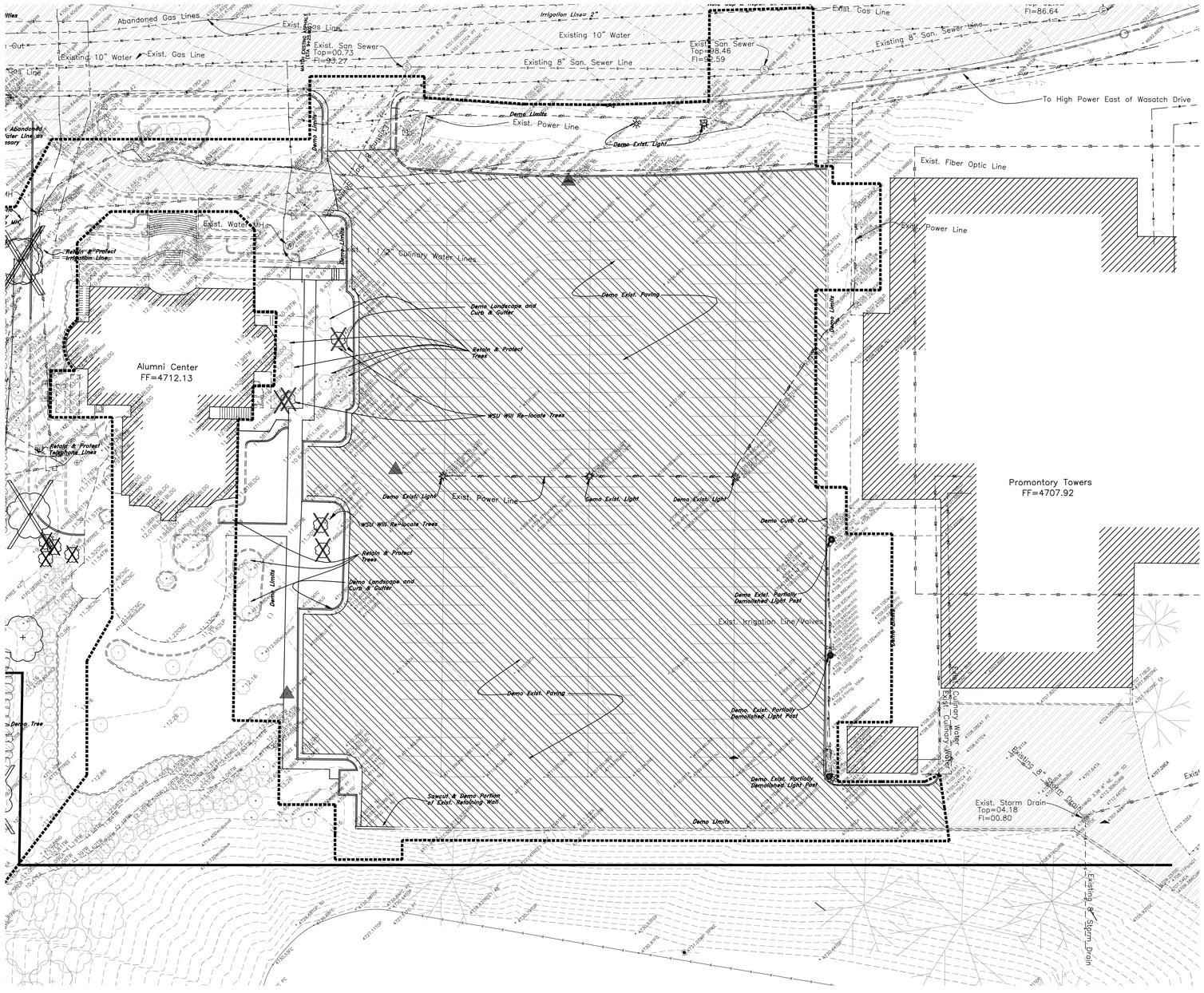

Project Benchmark
Monument Row 4697.45

MHTN ARCHITECTS, INC.
420 East South Temple
Suite 100
Salt Lake City, Utah 84111
Telephone (801) 595-6700
Telefax (801) 595-6717
www.mhtn.com

GREAT BASIN ENGINEERING NORTH
CONSULTING ENGINEERS AND SURVEYORS
5746 South 1475 East
Suite 200
Ogden, Utah 84403
P.O. Box 150048
Ogden, Utah 84415
Ogden (801)394-4515
Salt Lake City (801)521-0222
Fax (801)392-7544

Scale: 1" = 20'

20 0 10 20 25 30 35

Graphic Scale

Legend

(Note: All items may not appear on drawing)

San. Sewer Manhole
Water Manhole
Storm Drain Manhole
Electrical Manhole
Catch Basins
Exist. Fire Hydrant
Fire Hydrant
Exist. Water Valve
Water Valve
Sanitary Sewer — S —
Culinary Water — W —
Gas Line — G —
Irrigation Line — IW —
Storm Drain — SD —
Telephone Line — T —
Secondary Waterline — SW —
Power Line — P —
Fire Line — FL —
Land Drain — LD —
Power pole
Power pole w/guy
Light Pole
Fence — x — x —
Flowline of ditch
Overhead Power line — OHP —
Corrugated Metal Pipe CMP
Concrete Pipe CP
Reinforced Concrete Pipe RCP
Ductile Iron DI
Polyvinyl Chloride PVC
Top of Asphalt TA
Edge of Asphalt EA
Centerline CL
Flowline FL
Finish Floor FF
Top of Curb TC
Top of Wall TWL
Top of Walk TW
Top of Concrete TCN
Natural Ground NG
Finish Contour — 90 —
Exist. Contour — 90 —
Finish Grade 95.33TA
Exist. Grade 95.12TA
Ridge Line — R —
Direction of Flow
Existing Asphalt
New Asphalt
Heavy Duty Asphalt
Concrete
Open Face Curb & Gutter

HURST BUILDING FOR LIFELONG LEARNING WEBER STATE UNIVERSITY

UTAH STATE DIVISION OF FACILITIES CONSTRUCTION MANAGEMENT-DFCM PROJECT NO. 07110810

SEAL

MHTN PROJECT NO. 2007556.01

DRAWN BY: DE CHECKED BY: DRW

ISSUED:

NO.	DATE	DESCRIPTION
1	10/26/07	SCHEMATIC DESIGN
2	12/18/07	DESIGN DEVELOPMENT
3	02/06/08	CONSTRUCTION DOCUMENTS

REVISIONS:

NO.	DATE	DESCRIPTION

DEMO PLAN

CONSTRUCTION DOCUMENTS
MARCH 4, 2008

SHEET NUMBER

CD001

General Demolition Notes:

1. Demolition and site clearing for this contract are to include all areas shown within demolition limits or by note.
2. Refer to site improvement plans for more details on limits of removal.
3. Demolish existing buildings and clear from site. (Including removal of all footings and foundations.)
4. All curbs, gutters, walks, slabs, walls, fences, flatwork, asphalt, waterlines and meters, gas lines, sewer lines, light poles, buried cables, storm drain piping and structures to be cleared from site unless otherwise shown.
5. All utilities, sewer, water, gas, telephone and electrical services to be disconnected and capped according to city, county and utility company requirements, unless otherwise shown.
6. Basements and other excavated areas to be backfilled with clean granular material compacted to 95% of maximum lab density as determined by ASTM D 1557-78. (Test results to be given to owner)
7. Clear and grub trees, shrubs, and vegetation within construction limits, disposal to be off-site Except where noted otherwise.
8. DO NOT interrupt any services or disrupt the operation of any businesses shown outside the demolition limits.
9. If ASBESTOS is found in existing structures, the Asbestos must be removed in a legal manner by a contractor licensed to handle asbestos materials. (Not a part of contract)
10. Remove debris, rubbish, and other materials resulting from the demolition and site clearing operations from the site and dispose of in a legal manner.

General Demolition Notes Continued:

11. The location and/or elevation of existing utilities as shown on these plans is based on records of the various utility companies and, where possible, measurements taken in the field. The information is not to be relied upon as being exact or complete. Contractor shall contact authorities having jurisdiction for field locations. Contractor shall be responsible for protection of in place and relocated utilities during construction.
12. Stockpiles shall be graded to maintain slopes not greater than 3 horizontal to 1 vertical. Provide erosion control as needed to prevent sediment transport to adjacent drainage ways.
13. Contractor shall be responsible for disposal of all waste material. Disposal shall be at an approved site for such material. Burning onsite is not permitted.
14. Contractor shall verify with city any street removal, curb cuts, and any restoration required for utility line removal.
15. Install traffic warning devices as needed in accordance with local standards.
16. Contractor shall obtain all permits necessary for demolition from City, County, State or Federal Agencies as required.

CAUTION NOTICE TO CONTRACTOR

The contractor is specifically cautioned that the location and/or elevation of existing utilities as shown on these plans are based on records of the various utility companies and, where possible, measurements taken in the field. The information is not to be relied on as being exact or complete. The contractor must call the appropriate utility company at least 48 hours before any excavation to request exact field location of utilities. It shall be the responsibility of the contractor to relocate all existing utilities which conflict with the propose improvements shown on the plans.

PRIVATE ENGINEER'S NOTICE TO CONTRACTORS

The Contractor agrees that he shall assume sole and complete responsibility for job site conditions during the course of construction of this project, including safety of all persons and property; that this requirement shall apply continuously and not be limited to normal working hours; and that the contractor shall defend, indemnify, and hold the owner and the engineer harmless from any and all liability, real or alleged, in connection with the performance of work on this project, excepting for liability arising from the sole negligence of the owner or the engineer.

ALL CONSTRUCTION TO CONFORM TO CITY STANDARDS AND SPECIFICATIONS IN RIGHT OF WAY

DT
FILE

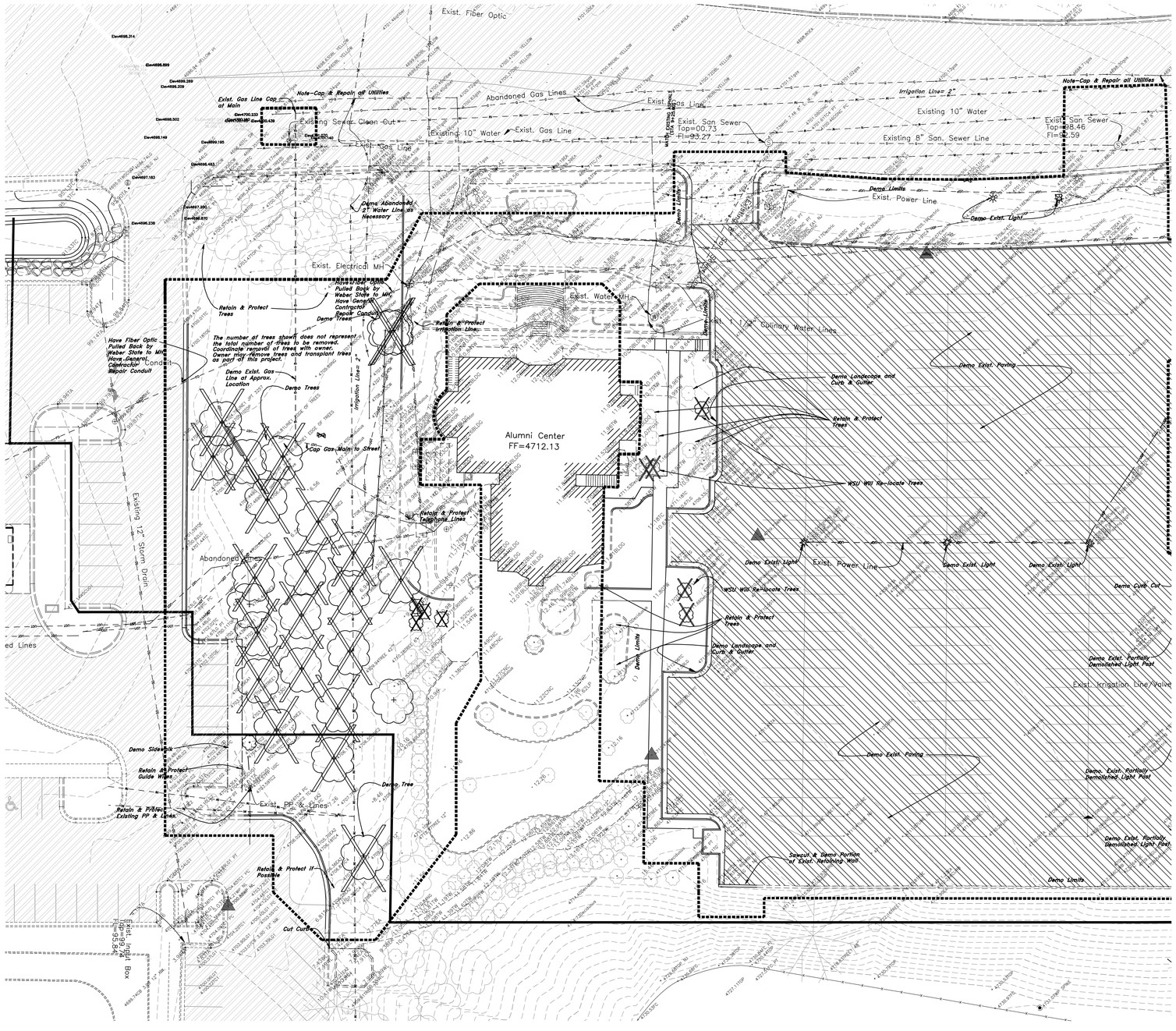

MHTN ARCHITECTS, INC.
420 East South Temple
Suite 100
Salt Lake City, Utah 84111
Telephone (801) 595-6700
Telefax (801) 595-6717
www.mhtn.com

GREAT BASIN ENGINEERING NORTH
CONSULTING ENGINEERS AND SURVEYORS
5746 South 1475 East
Suite 200
Ogden, Utah 84403
P.O. Box 150048
Ogden, Utah 84415
Ogden (801)394-4515
Salt Lake City (801)521-0222
Fax (801)392-7544

Scale: 1" = 20'

20 0 10 20 25 30 35

Graphic Scale

Legend

(Note: All items may not appear on drawing)

San. Sewer Manhole
Water Manhole
Storm Drain Manhole
Electrical Manhole
Catch Basins
Exist. Fire Hydrant
Fire Hydrant
Exist. Water Valve
Water Valve
Sanitary Sewer — S —
Culinary Water — W —
Gas Line — G —
Irrigation Line — IW —
Storm Drain — SD —
Telephone Line — T —
Secondary Waterline — SW —
Power Line — P —
Fire Line — FL —
Land Drain — LD —
Power pole
Power pole w/guy
Light Pole
Fence
Flowline of ditch
Overhead Power line — OHP —
Corrugated Metal Pipe CMP
Concrete Pipe CP
Reinforced Concrete Pipe RCP
Ductile Iron DI
Polyvinyl Chloride PVC
Top of Asphalt TA
Edge of Asphalt EA
Centerline CL
Flowline FL
Finish Floor FF
Top of Curb TC
Top of Wall TWL
Top of Walk TW
Top Of Concrete TOC
Natural Ground NG
Finish Contour — 90 —
Exist. Contour — 90 —
Finish Grade 95.33TA
Exist. Grade ex.grd
Ridge Line — R —
Direction of Flow
Existing Asphalt
New Asphalt
Heavy Duty Asphalt
Concrete
Open Face Curb & Gutter

Project Benchmark
Monument Row 4697.45

General Contractor to Relocate Conduits:
FO
IW
Gas
UGT

Need to Have Blue Stake Come In & Make Their Utilities. Such as Aft.:
Comcast
Qwest
Questar Gas
Pineview
Weber Basin
Rocky Mountain Power

General Demolition Notes:

1. Demolition and site clearing for this contract are to include all areas shown within demolition limits or by note.
2. Refer to site improvement plans for more details on limits of removal.
3. Demolish existing buildings and clear from site. (Including removal of all footings and foundations.)
4. All curbs, gutters, walks, slabs, walls, fences, flatwork, asphalt, waterlines and meters, gas lines, sewer lines, light poles, buried cables, storm drain piping and structures to be cleared from site unless otherwise shown.
5. All utilities, sewer, water, gas, telephone and electrical services to be disconnected and capped according to city, county and utility company requirements, unless otherwise shown.
6. Basements and other excavated areas to be backfilled with clean granular material compacted to 95% of maximum lab density as determined by ASTM D 1557-78. (Test results to be given to owner)
7. Clear and grub trees, shrubs, and vegetation within construction limits, disposal to be off-site Except where noted otherwise.
8. DO NOT interrupt any services or disrupt the operation of any businesses shown outside the demolition limits.
9. If ASBESTOS is found in existing structures, the Asbestos must be removed in a legal manner by a contractor licensed to handle asbestos materials. (Not a part of contract)
10. Remove debris, rubbish, and other materials resulting from the demolition and site clearing operations from the site and dispose of in a legal manner.

General Demolition Notes Continued:

11. The location and/or elevation of existing utilities as shown on these plans is based on records of the various utility companies and, where possible, measurements taken in the field. The information is not to be relied upon as being exact or complete. Contractor shall contact authorities having jurisdiction for field locations. Contractor shall be responsible for protection of in place and relocated utilities during construction.
12. Stockpiles shall be graded to maintain slopes not greater than 3 horizontal to 1 vertical. Provide erosion control as needed to prevent sediment transport to adjacent drainage ways.
13. Contractor shall be responsible for disposal of all waste material. Disposal shall be at an approved site for such material. Burning onsite is not permitted.
14. Contractor shall verify with city any street removal, curb cuts, and any restoration required for utility line removal.
15. Install traffic warning devices as needed in accordance with local standards.
16. Contractor shall obtain all permits necessary for demolition from City, County, State or Federal Agencies as required.

CAUTION NOTICE TO CONTRACTOR

The contractor is specifically cautioned that the location and/or elevation of existing utilities as shown on these plans are based on records of the various utility companies and, where possible, measurements taken in the field. The information is not to be relied on as being exact or complete. The contractor must call the appropriate utility company at least 48 hours before any excavation to request exact field location of utilities. It shall be the responsibility of the contractor to relocate all existing utilities which conflict with the propose improvements shown on the plans.

PRIVATE ENGINEER'S NOTICE TO CONTRACTORS

The Contractor agrees that he shall assume sole and complete responsibility for job site conditions during the course of construction of this project, including safety of all persons and property; that this requirement shall apply continuously and not be limited to normal working hours; and that the contractor shall defend, indemnify, and hold the owner and the engineer harmless from any and all liability, real or alleged, in connection with the performance of work on this project, excepting for liability arising from the sole negligence of the owner or the engineer.

ALL CONSTRUCTION TO CONFORM TO CITY STANDARDS AND SPECIFICATIONS IN RIGHT OF WAY

HURST BUILDING FOR LIFELONG LEARNING WEBER STATE UNIVERSITY

UTAH STATE DIVISION OF FACILITIES CONSTRUCTION MANAGEMENT-DFCM PROJECT NO. 07110810

SEAL

MHTN PROJECT NO. 2007556.01

DRAWN BY: DE CHECKED BY: DRW

ISSUED:

NO.	DATE	DESCRIPTION
1	10/26/07	SCHEMATIC DESIGN
2	12/18/07	DESIGN DEVELOPMENT
3	02/08/08	CONSTRUCTION DOCUMENTS

REVISIONS:

NO.	DATE	DESCRIPTION

DEMO PLAN

CONSTRUCTION DOCUMENTS
MARCH 4, 2008

SHEET NUMBER

CD002

BT FILE

MHTN ARCHITECTS, INC.
420 East South Temple
Suite 100
Salt Lake City, Utah 84111
Telephone (801) 595-6700
Telefax (801) 595-6717
www.mhtn.com

GREAT BASIN ENGINEERING NORTH
CONSULTING ENGINEERS AND SURVEYORS
5746 South 1475 East
Suite 200
Ogden, Utah 84403
P.O. Box 150048
Ogden, Utah 84415
Ogden (801)394-4515
Salt Lake City (801)521-0222
Fax (801)392-7544

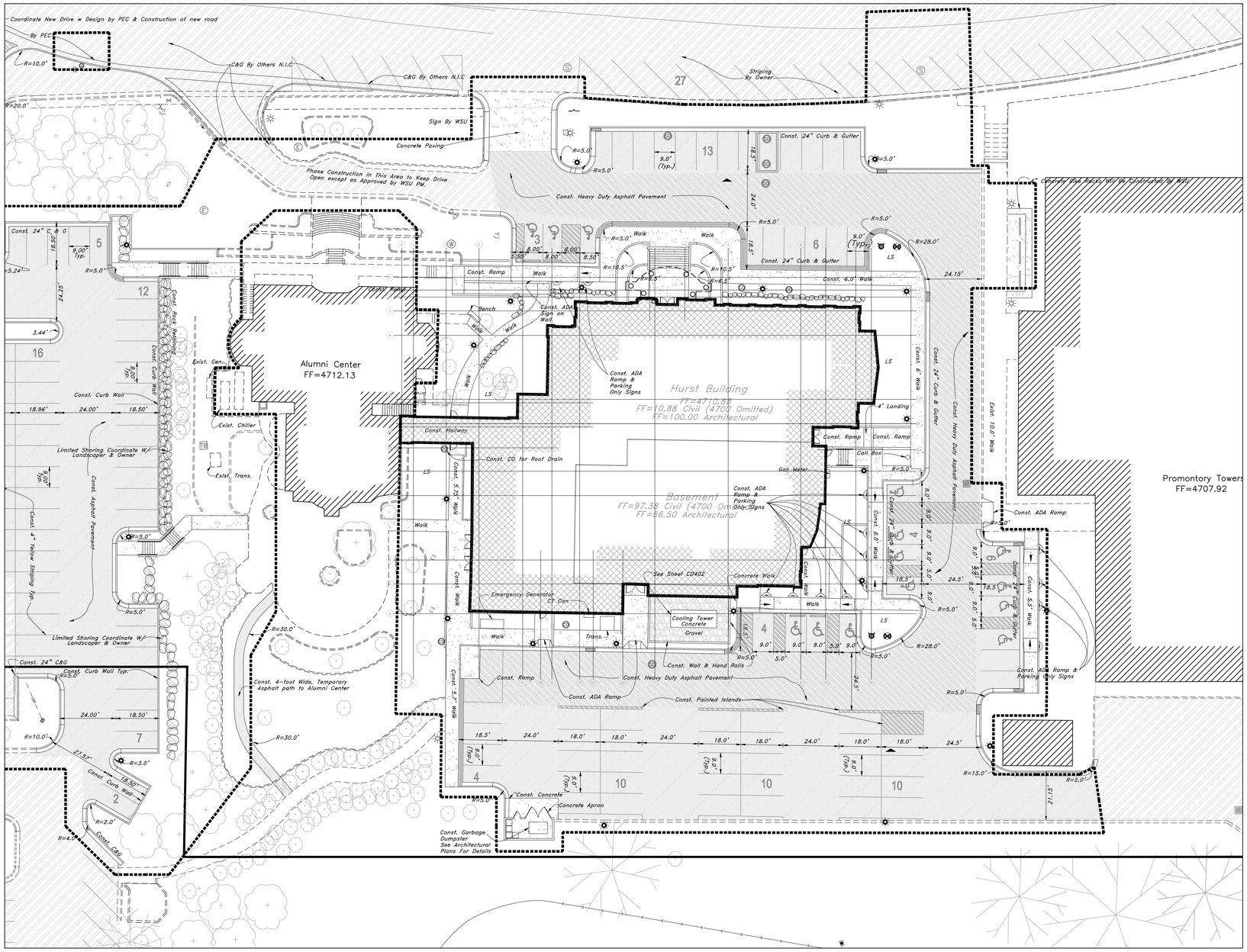

Scale: 1" = 20'

Graphic Scale

Legend

(Note: All items may not appear on drawing)

San. Sewer Manhole	S
Water Manhole	W
Storm Drain Manhole	D
Electrical Manhole	E
Catch Basins	
Exist. Fire Hydrant	
Fire Hydrant	
Exist. Water Valve	WV
Water Valve	WV
Sanitary Sewer	S
Culinary Water	W
Gas Line	G
Irrigation Line	IW
Storm Drain	SD
Telephone Line	T
Secondary Waterline	SD
Power Line	P
Fire Line	F
Land Drain	LD
Power pole	
Power pole w/guy	
Light Pole	
Fence	
Flowline of ditch	
Overhead Power line	OHP
Corrugated Metal Pipe	CMP
Concrete Pipe	CP
Reinforced Concrete Pipe	RCP
Ductile Iron	DI
Polyvinyl Chloride	PVC
Top of Asphalt	TA
Edge of Asphalt	EA
Centerline	CL
Flowline	FL
Finish Floor	FF
Top of Curb	TC
Top of Wall	TWL
Top of Walk	TW
Top of Concrete	TCN
Natural Ground	NG
Finish Contour	90
Exist. Contour	90
Finish Grade	95.33TA
Exist. Grade	95.72TA
Ridge Line	R
Direction of Flow	
Existing Asphalt	
New Asphalt	
Heavy Duty Asphalt	
Concrete	
Open Face Curb & Gutter	

Vicinity Map

General Site Notes:
1. Stalls designated as handicap will require a painted handicap symbol. (See Details)
2. Fire lane markings to be installed as directed by the Fire Marshall and all signs to be installed by the owner.
3. Aisle markings, directional arrows and stop bars will be painted at each driveway as shown on the plans.
4. See Horizontal Control plan for coordinates, radiuses and detailed dimensions of site improvements.
5. Building sidewalks, ramps, and bollards are building contractor responsible items. See architectural plans.
6. All dimensions are to back of curb unless otherwise noted.
7. Refer to Structural for Concrete Walls.

PRIVATE ENGINEER'S NOTICE TO CONTRACTORS
The Contractor agrees that he shall assume sole and complete responsibility for job site conditions during the course of construction of this project, including safety of all persons and property; that this requirement shall apply continuously and not be limited to normal working hours; and that the contractor shall defend, indemnify, and hold the owner and the engineer harmless from any and all liability, real or alleged, in connection with the performance of work on this project, excepting for liability arising from the sole

ALL CONSTRUCTION TO CONFORM TO CITY AND UDOT STANDARDS AND SPECIFICATIONS IN RIGHT OF WAY

HURST BUILDING FOR LIFELONG LEARNING WEBER STATE UNIVERSITY

UTAH STATE DIVISION OF FACILITIES CONSTRUCTION MANAGEMENT-DFCM PROJECT NO. 07110810

SEAL

MHTN PROJECT NO. 2007566.01

DRAWN BY: DE CHECKED BY: DRW

ISSUED:

NO.	DATE	DESCRIPTION
1	10/29/07	SCHEMATIC DESIGN
2	12/19/07	DESIGN DEVELOPMENT
3	02/06/08	CONSTRUCTION DOCUMENTS

REVISIONS:

NO.	DATE	DESCRIPTION

SITE PLAN

CONSTRUCTION DOCUMENTS
MARCH 4, 2008

SHEET NUMBER

CS100

BY FILE

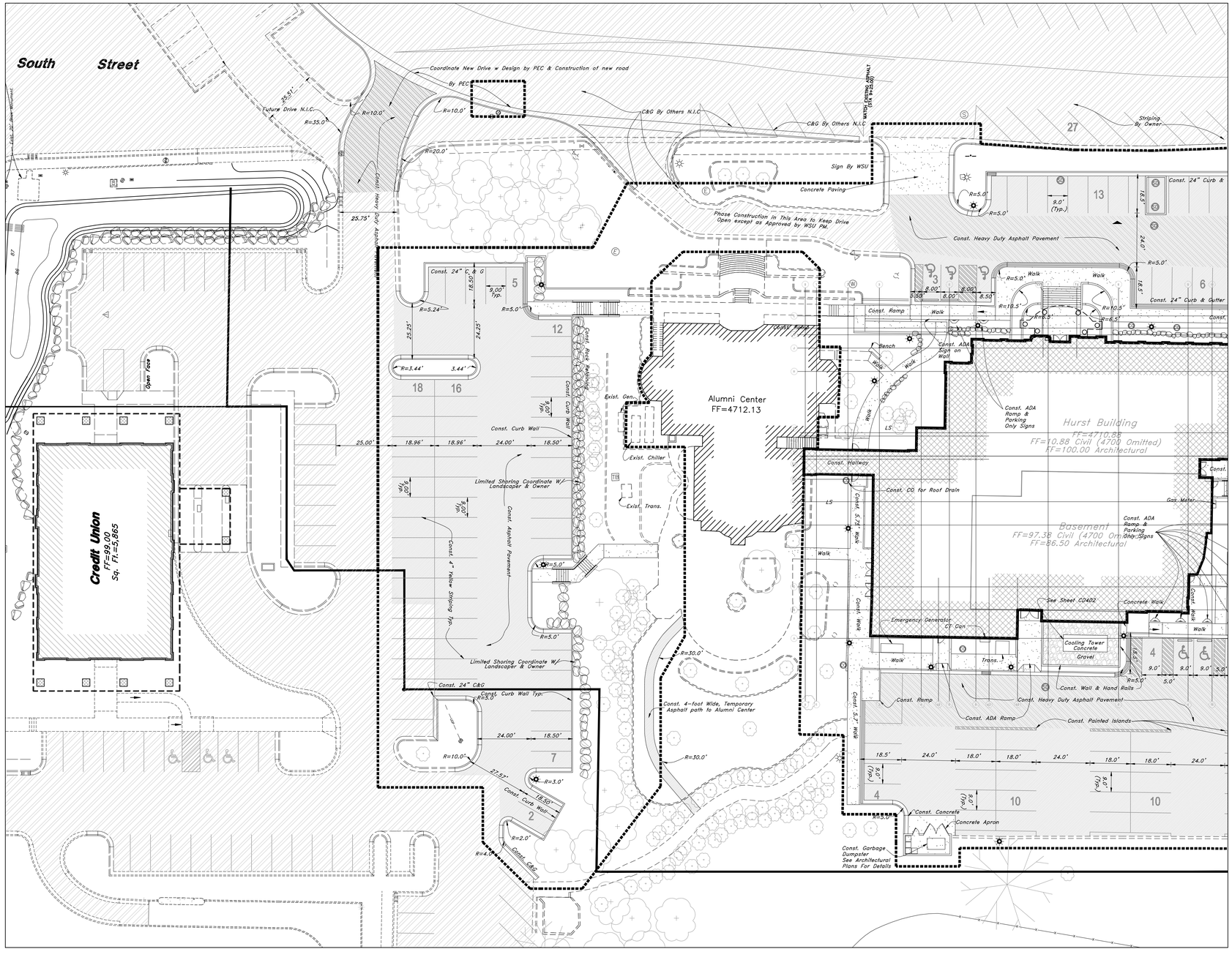

Scale: 1" = 20'

Graphic Scale

Legend

(Note: All items may not appear on drawing)

San. Sewer Manhole	S
Water Manhole	W
Storm Drain Manhole	D
Electrical Manhole	E
Catch Basins	
Exist. Fire Hydrant	
Fire Hydrant	
Exist. Water Valve	WV
Water Valve	WV
Sanitary Sewer	S
Culinary Water	W
Gas Line	G
Irrigation Line	IW
Storm Drain	SD
Telephone Line	T
Secondary Waterline	SD
Power Line	P
Fire Line	F
Land Drain	LD
Power pole	
Power pole w/guy	
Light Pole	
Fence	
Flowline of ditch	
Overhead Power line	OHP
Corrugated Metal Pipe	CMP
Concrete Pipe	CP
Reinforced Concrete Pipe	RCP
Ductile Iron	DI
Polyvinyl Chloride	PVC
Top of Asphalt	TA
Edge of Asphalt	EA
Centerline	CL
Flowline	FL
Finish Floor	FF
Top of Curb	TC
Top of Wall	TWL
Top of Walk	TW
Top of Concrete	TCN
Natural Ground	NG
Finish Contour	90
Exist. Contour	90
Finish Grade	95.33TA
Exist. Grade	95.72TA
Ridge Line	R
Direction of Flow	
Existing Asphalt	
New Asphalt	
Heavy Duty Asphalt	
Concrete	
Open Face Curb & Gutter	

Vicinity Map

General Site Notes:

1. Stalls designated as handicap will require a painted handicap symbol. (See Details)
2. Fire lane markings and signs to be installed as directed by the Fire Marshall.
3. Aisle markings, directional arrows and stop bars will be painted at each driveway as shown on the plans.
4. See Horizontal Control plan for coordinates, radiuses and detailed dimensions of site improvements.
5. Building sidewalks, ramps, and bollards are building contractor responsible items. See architectural plans.
6. All dimensions are to back of curb unless otherwise noted.

PRIVATE ENGINEER'S NOTICE TO CONTRACTORS

The Contractor agrees that he shall assume sole and complete responsibility for job site conditions during the course of construction of this project, including safety of all persons and property; that this requirement shall apply continuously and not be limited to normal working hours; and that the contractor shall defend, indemnify, and hold the owner and the engineer harmless from any and all liability, real or alleged, in connection with the performance of work on this project, excepting for liability arising from the sole

ALL CONSTRUCTION TO CONFORM TO CITY AND UDOT STANDARDS AND SPECIFICATIONS IN RIGHT OF WAY

MHTN ARCHITECTS, INC.
420 East South Temple
Suite 100
Salt Lake City, Utah 84111
Telephone (801) 595-6700
Telefax (801) 595-6717
www.mhtn.com

GREAT BASIN ENGINEERING NORTH
CONSULTING ENGINEERS AND SURVEYORS
5746 South 1475 East
Suite 200
Ogden, Utah 84403
P.O. Box 150048
Ogden, Utah 84415
Ogden (801)394-4515
Salt Lake City (801)521-0222
Fax (801)392-7544

HURST BUILDING FOR LIFELONG LEARNING WEBER STATE UNIVERSITY

UTAH STATE DIVISION OF FACILITIES CONSTRUCTION MANAGEMENT-DFCM PROJECT NO. 07110810

SEAL

MHTN PROJECT NO. 2007556.01

DRAWN BY: DE CHECKED BY: DRW

ISSUED:

NO.	DATE	DESCRIPTION
1	10/28/07	SCHEMATIC DESIGN
2	12/19/07	DESIGN DEVELOPMENT
3	03/04/08	CONSTRUCTION DOCUMENTS

REVISIONS:

NO.	DATE	DESCRIPTION

SITE PLAN

CONSTRUCTION DOCUMENTS
MARCH 4, 2008

SHEET NUMBER

CS101

DT FILE

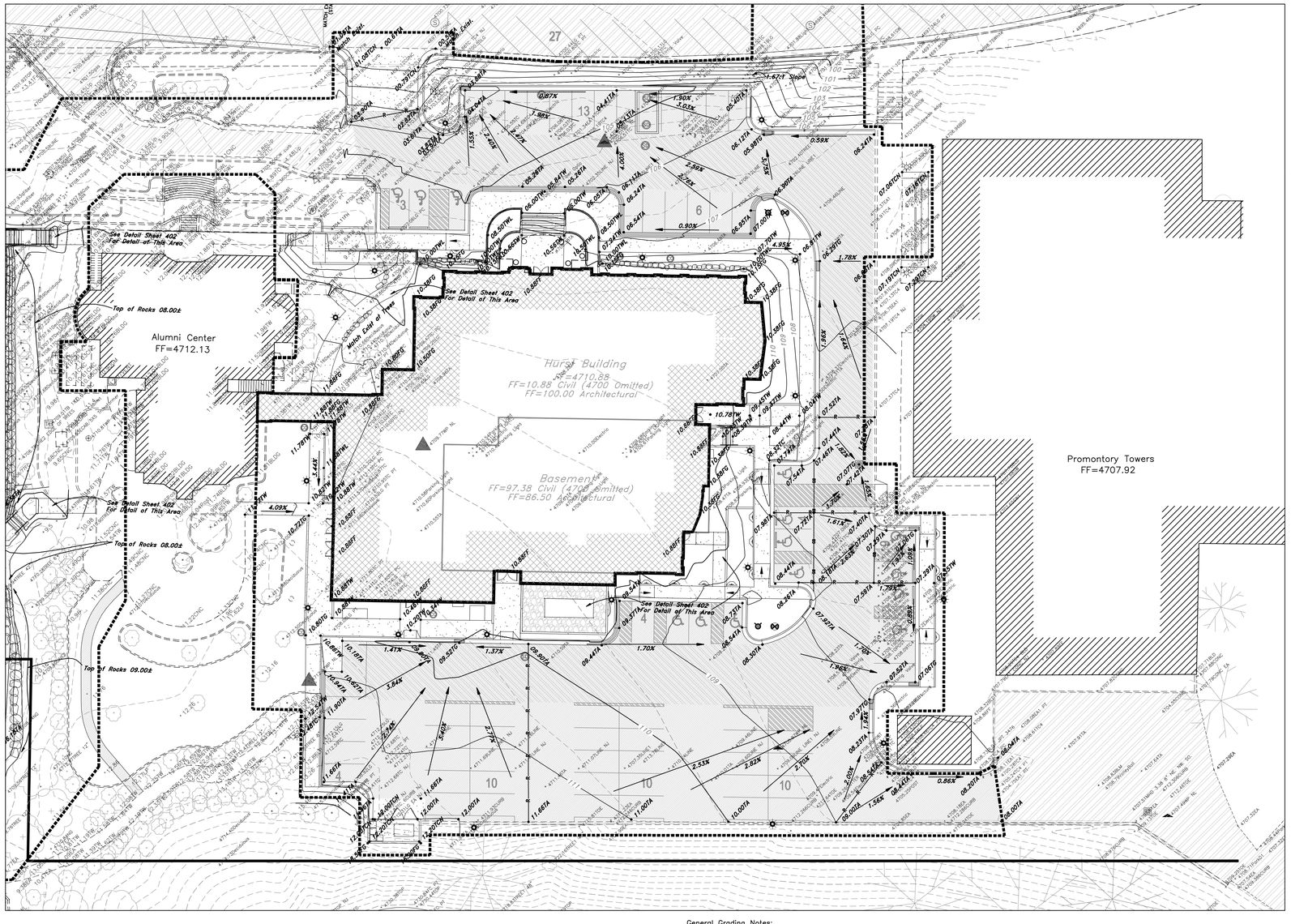

Scale: 1" = 20'

Graphic Scale

Legend

(Note: All items may not appear on drawing)

San. Sewer Manhole
Water Manhole
Storm Drain Manhole
Electrical Manhole
Catch Basins
Exist. Fire Hydrant
Fire Hydrant
Exist. Water Valve
Water Valve
Sanitary Sewer — S —
Culinary Water — W —
Gas Line — G —
Irrigation Line — IW —
Storm Drain — SD —
Telephone Line — T —
Secondary Waterline — SW —
Power Line — P —
Fire Line — F —
Land Drain — LD —
Power pole
Power pole w/guy
Light Pole
Fence — x — x — x —
Flowline of ditch
Overhead Power line — OHP —
Corrugated Metal Pipe CMP
Concrete Pipe CP
Reinforced Concrete Pipe RCP
Ductile Iron DI
Polyvinyl Chloride PVC
Top of Asphalt TA
Edge of Asphalt EA
Centerline CL
Flowline FL
Finish Floor FF
Top of Curb TC
Top of Wall TWL
Top of Walk TW
Top of Concrete TCN
Natural Ground NG
Finish Contour — 90 —
Exist. Contour — 90 —
Finish Grade 95.33TA
Exist. Grade 95.72TA
Ridge Line — R —
Direction of Flow
Existing Asphalt
New Asphalt
Heavy Duty Asphalt
Concrete
Open Face Curb & Gutter

Project Benchmark–
Monument North of Alumi Building Elevation= 4697.45

General Grading Notes:

1. All work shall be in accordance with the City Public Works Standard.
2. Cut slopes shall be no steeper than 2 horizontal to 1 vertical.
3. Fill slopes shall be no steeper than 2 horizontal to 1 vertical.
4. Fills shall be compacted per the recommendations of the geotechnical report prepared for the project and shall be certified by the geotechnical engineer.
5. Areas to receive fill shall be properly prepared and approved by the City inspector and geotechnical Engineer prior to placing fill.
6. Fills shall be benched into competent material as per specifications and geotechnical report.
7. All trench backfill shall be tested and certified by the site geotechnical engineer per the grading code.
8. A geotechnical engineer shall perform periodic inspections and submit a complete report and map upon completion of the rough grading.
9. The final compaction report and certification from the geotechnical engineer shall contain the type of field testing performed. Each test shall be identified with the method of obtaining the in-place density. Sufficient maximum density determinations shall be performed to verify the accuracy of the maximum density curves used by the field technician.
10. Dust shall be controlled by watering.
11. The location and protection of all utilities is the responsibility of the permitee.
12. Approved protective measures and temporary drainage provisions must be used to protect adjoining properties during the grading project.
13. All public roadways must be cleared daily of all dirt, mud and debris deposited on them as a result of the grading operation. Cleaning is to be done to the satisfaction of the city engineer.
14. The site shall be cleared and grubbed of all vegetation and deleterious matter prior to grading.
15. The contractor shall provide shoring in accordance with OSHA requirements for trench walls.
16. Aggregate base shall be compacted per the geotechnical report prepared for the project.
17. Elevations shown on this plan are finish grades. Rough grades are the subgrades of the improvements shown hereon.
18. The recommendations in the following Geotechnical Engineering Report by GSH Geotechnical Consultants Inc. are included in the requirements of grading and site preparation. The report is titled "0149-007-07" Dated: November 29, 2007.
19. As part of the construction documents, owner has provided contractor with a topographic survey performed by manual or aerial means. Such survey was prepared for project design purposes and is provided to the contractor as a courtesy. It is expressly understood that such survey may not accurately reflect existing topographic conditions.
20. Erosion Control: Protect all inlet boxes, catch basins, etc. with straw bales or other approved method to strain the strom water during construction. Protect surrounding properties and streets from site runoff with sandbags and earth berms.
21. The Maximum slope in any direction in a handicap parking stall or side asile 2.00%
22. The minimum side asile width for a standard handicap stall is 5.0-feet. The minumim width for a van accessable side asile is 8-feet.

Curb and Gutter Construction Notes:

1. Open face gutter shall be constructed where drainage is directed away from curb.
2. It is the responsibility of the surveyor to adjust top of curb grades at the time construction staking.
3. Refer to the typical details for a standard and open face curb and gutter for dimensions.
4. Transitions between open face and standard curb and gutter are to be smooth. Hand form these areas if necessary.

The Contractor agrees that he shall assume sole and complete responsibility for job site conditions during the course of construction of this project, including safety of all persons and property; that this requirement shall apply continuously and not be limited to normal working hours; and that the contractor shall defend, indemnify, and hold the owner and the engineer harmless from any and all liability, real or alleged, in connection with the performance of work on this project, excepting for liability arising from the sole

ALL CONSTRUCTION TO CONFORM TO CITY STANDARDS AND SPECIFICATIONS IN RIGHT OF WAY.

MHTN ARCHITECTS, INC.
420 East South Temple
Suite 100
Salt Lake City, Utah 84111
Telephone (801) 595-6700
Telefax (801) 595-6717
www.mhtn.com

GREAT BASIN ENGINEERING NORTH
CONSULTING ENGINEERS AND SURVEYORS
5746 South 1475 East
Suite 200
Ogden, Utah 84403
P.O. Box 150048
Ogden, Utah 84415
Ogden (801)394-4515
Salt Lake City (801)521-0222
Fax (801)392-7544

HURST BUILDING FOR LIFELONG LEARNING WEBER STATE UNIVERSITY

UTAH STATE DIVISION OF FACILITIES CONSTRUCTION MANAGEMENT-DFCM PROJECT NO. 07110810

SEAL

MHTN PROJECT NO. 2007/506.01

DRAWN BY: DE CHECKED BY: DRN

ISSUED:

NO.	DATE	DESCRIPTION
1	10/26/07	SCHEMATIC DESIGN
2	12/18/07	DESIGN DEVELOPMENT
3	02/08/08	CONSTRUCTION DOCUMENTS

REVISIONS:

NO.	DATE	DESCRIPTION

GRADING PLAN

CONSTRUCTION DOCUMENTS
MARCH 4, 2008

SHEET NUMBER

CG200

FL
FILE

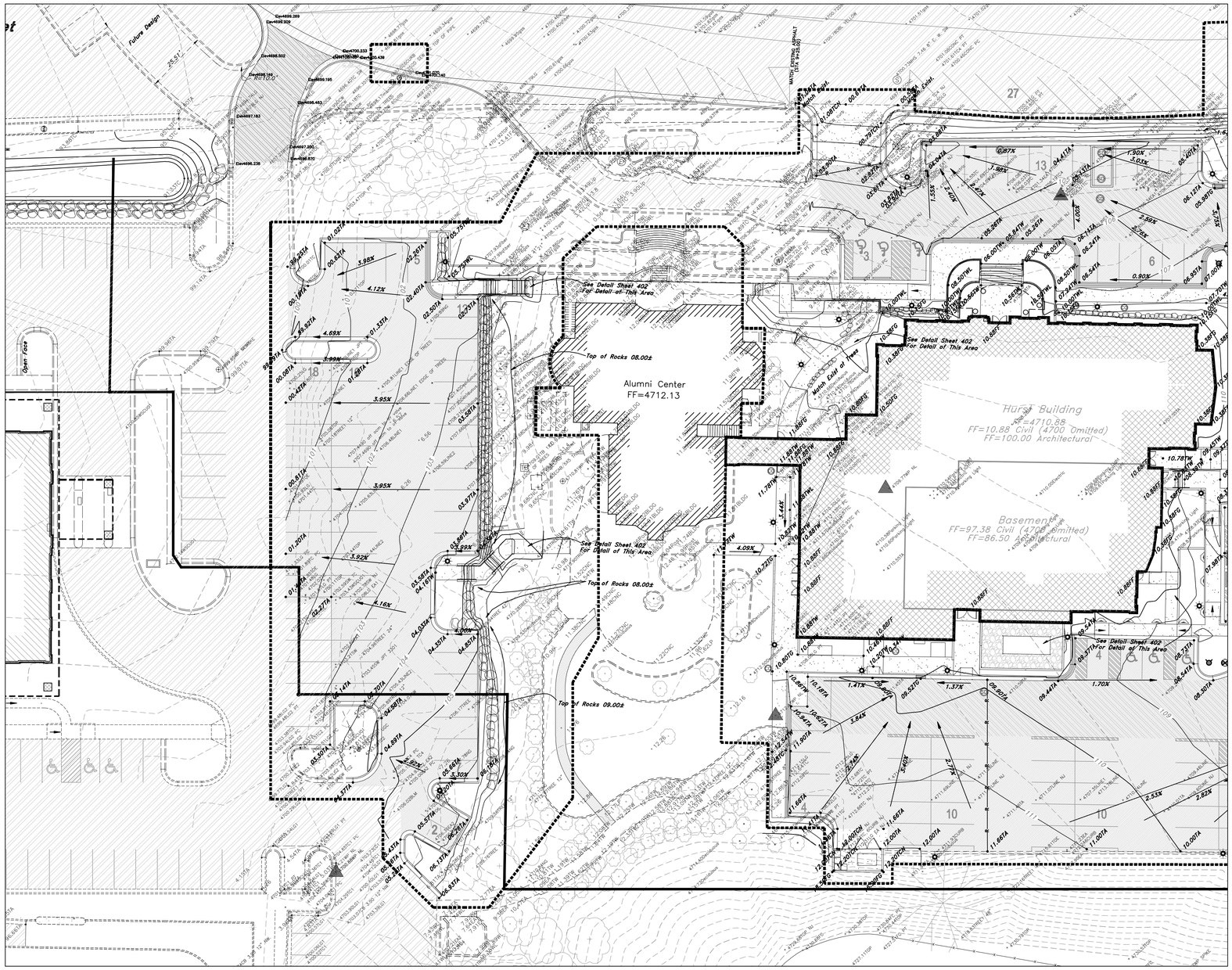

Scale: 1" = 20'

Graphic Scale

Legend

(Note: All items may not appear on drawing)

San. Sewer Manhole
Water Manhole
Storm Drain Manhole
Electrical Manhole
Catch Basins
Exist. Fire Hydrant
Fire Hydrant
Exist. Water Valve
Water Valve
Sanitary Sewer
Culinary Water
Gas Line
Irrigation Line
Storm Drain
Telephone Line
Secondary Waterline
Power Line
Fire Line
Land Drain
Power pole
Power pole w/guy
Light Pole
Fence
Flowline of ditch
Overhead Power line
Corrugated Metal Pipe
Concrete Pipe
Reinforced Concrete Pipe
Ductile Iron
Polyvinyl Chloride
Top of Asphalt
Edge of Asphalt
Centerline
Flowline
Finish Floor
Top of Curb
Top of Wall
Top of Walk
Top of Concrete
Natural Ground
Finish Contour
Exist. Contour
Finish Grade
Exist. Grade
Ridge Line
Direction of Flow
Existing Asphalt
New Asphalt
Heavy Duty Asphalt
Concrete
Open Face Curb & Gutter

Project Benchmark–
Monument North of Alumi Building Elevation= 4697.45

Curb and Gutter Construction Notes:

1. Open face gutter shall be constructed where drainage is directed away from curb.
2. It is the responsibility of the surveyor to adjust top of curb grades at the time construction staking.
3. Refer to the typical details for a standard and open face curb and gutter for dimensions.
4. Transitions between open face and standard curb and gutter are to be smooth. Hand form these areas if necessary.

General Grading Notes:

1. All work shall be in accordance with the City Public Works Standard.
2. Cut slopes shall be no steeper than 2 horizontal to 1 vertical.
3. Fill slopes shall be no steeper than 2 horizontal to 1 vertical.
4. Fills shall be compacted per the recommendations of the geotechnical report prepared for the project and shall be certified by the geotechnical engineer.
5. Areas to receive fill shall be properly prepared and approved by the City inspector and geotechnical Engineer prior to placing fill.
6. Fills shall be benched into competent material as per specifications and geotechnical report.
7. All trench backfill shall be tested and certified by the site geotechnical engineer per the grading code.
8. A geotechnical engineer shall perform periodic inspections and submit a complete report and map upon completion of the rough grading.
9. The final compaction report and certification from the geotechnical engineer shall contain the type of field testing performed. Each test shall be identified with the method of obtaining the in-place density. Sufficient maximum density determinations shall be performed to verify the accuracy of the maximum density curves used by the field technician.
10. Dust shall be controlled by watering.
11. The location and protection of all utilities is the responsibility of the permitee.
12. Approved protective measures and temporary drainage provisions must be used to protect adjoining properties during the grading project.
13. All public roadways must be cleared daily of all dirt, mud and debris deposited on them as a result of the grading operation. Cleaning is to be done to the satisfaction of the city engineer.
14. The site shall be cleared and grubbed of all vegetation and deleterious matter prior to grading.
15. The contractor shall provide sharing in accordance with OSHA requirements for trench walls.
16. Aggregate base shall be compacted per the geotechnical report prepared for the project.
17. Elevations shown on this plan are finish grades. Rough grades are the subgrades of the improvements shown hereon.
18. The recommendations in the following Geotechnical Engineering Report by GSH Geotechnical Consultants Inc. are included in the requirements of grading and site preparation. The report is titled "0149-007-07" Dated: November 29, 2007.
19. As part of the construction documents, owner has provided contractor with a topographic survey performed by manual or aerial means. Such survey was prepared for project design purposes and is provided to the contractor as a courtesy. It is expressly understood that such survey may not accurately reflect existing topographic conditions.
20. Erosion Control: Protect all inlet boxes, catch basins, etc. with straw bales or other approved method to strain the stram water during construction. Protect surrounding properties and streets from site runoff with sandbags and earth berms.

The Contractor agrees that he shall assume sole and complete responsibility for job site conditions during the course of construction of this project, including safety of all persons and property; that this requirement shall apply continuously and not be limited to normal working hours; and that the contractor shall defend, indemnify, and hold the owner and the engineer harmless from any and all liability, real or alleged, in connection with the performance of work on this project, excepting for liability arising from the sole

ALL CONSTRUCTION TO CONFORM TO CITY STANDARDS AND SPECIFICATIONS IN RIGHT OF WAY.

MHTN ARCHITECTS, INC.
420 East South Temple
Suite 100
Salt Lake City, Utah 84111
Telephone (801) 595-6700
Telefax (801) 595-6717
www.mhtn.com

GREAT BASIN ENGINEERING NORTH
CONSULTING ENGINEERS AND SURVEYORS
5746 South 1475 East
Suite 200
Ogden, Utah 84403
P.O. Box 150048
Ogden, Utah 84415
Ogden: (801)394-4515
Salt Lake City (801)521-0222
Fax (801)392-7544

HURST BUILDING FOR LIFELONG LEARNING WEBER STATE UNIVERSITY

UTAH STATE DIVISION OF FACILITIES CONSTRUCTION MANAGEMENT-DFCM PROJECT NO. 07110810

SEAL

MHTN PROJECT NO. 2007556.01

DRAWN BY: DE CHECKED BY: DRW

ISSUED:

NO.	DATE	DESCRIPTION
1	10/29/07	SCHEMATIC DESIGN
2	12/18/07	DESIGN DEVELOPMENT
3	03/06/08	CONSTRUCTION DOCUMENTS

REVISIONS:

NO.	DATE	DESCRIPTION

GRADING PLAN

CONSTRUCTION DOCUMENTS
MARCH 4, 2008

SHEET NUMBER

CG201

FL
FILE

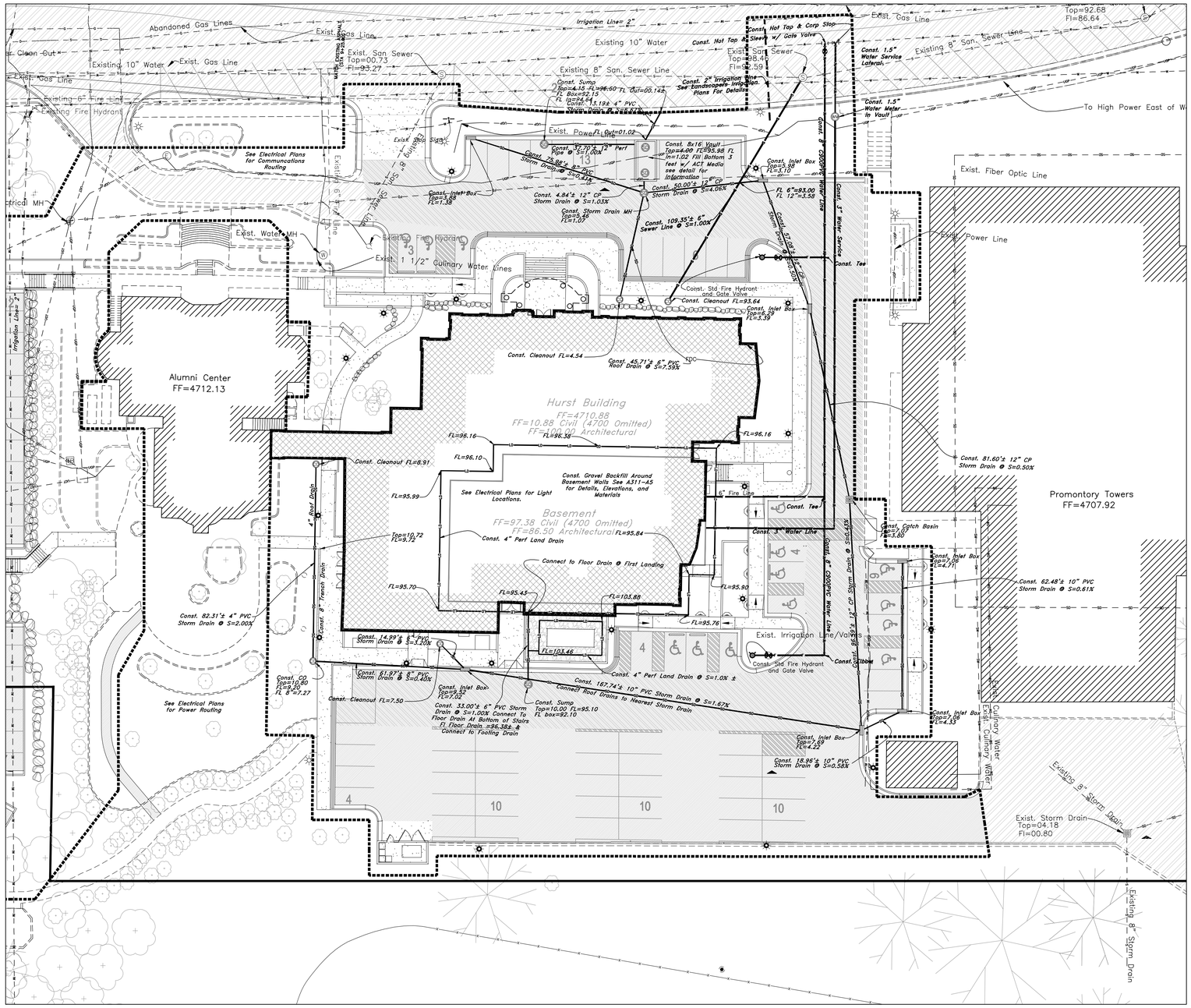

Scale: 1" = 20'

Graphic Scale

Legend

(Note: All items may not appear on drawing)

San. Sewer Manhole
Water Manhole
Storm Drain Manhole
Electrical Manhole
Catch Basing
Exist. Fire Hydrant
Fire Hydrant
Exist. Water Valve
Water Valve
Sanitary Sewer — S —
Culinary Water — W —
Gas Line — G —
Irrigation Line — IW —
Storm Drain — SD —
Telephone Line — T —
Secondary Waterline — SD —
Power Line — P —
Fire Line — F —
Land Drain — LD —
Power pole
Power pole w/guy
Light Pole
Fence
Flowline of ditch
Overhead Power line — OHP —
Corrugated Metal Pipe CMP
Concrete Pipe CP
Reinforced Concrete Pipe RCP
Ductile Iron DI
Polyvinyl Chloride PVC
Top of Asphalt TA
Edge of Asphalt EA
Centerline CL
Flowline FL
Finish Floor FF
Top of Curb TC
Top of Wall TWL
Top of Walk TW
Top of Concrete TC
Natural Ground NG
Finish Contour — 90 —
Exist. Contour — 90 —
Finish Grade 95.33TA
Exist. Grade 95.72TA
Ridge Line — R —
Direction of Flow
Existing Asphalt
New Asphalt
Heavy Duty Asphalt
Concrete
Open Face Curb & Gutter

General Utility Notes:

1. Coordinate all utility connections to building with plumbing plans and building contractor.
2. Verify depth and location of all existing utilities prior to constructing any new utility lines. Notify Civil Engineer of any discrepancies or conflicts prior to any connections being made.
3. All catch basin and inlet box grates are to be bicycle proof.
4. All inlet boxes located in curb and gutter are to be rectangular and cast in place to ensure proper placement. Pre-cast or square boxes will not be accepted.
5. Refer to the site electrical plan for details and locations of electrical lines, transformers and light poles.
6. Gas lines, telephone lines, and cable TV lines are not a part of these plans.
7. Water meters are to be installed per city standards and specifications. It will be the contractor's responsibility to install all items required.
8. Water lines, valves, fire hydrants, fittings etc. are to be constructed as shown. Contractor is responsible to construct any vertical adjustments necessary to clear sewer, storm drain or other utilities as necessary including valve boxes and hydrant spools to proper grade.
9. Field verify all existing and/or proposed Roof Drain/Roof Drain down spout connections to Storm Water System with Civil, Plumbing & Architectural plans. Notify Engineer of any discrepancies.
10. The connection to sewer and water main lines must be witnessed by a City Inspector.

Utility Piping Materials:

All piping to be installed per manufacturers recommendations. Refer to project specifications for more detailed information regarding materials, installation, etc.

Culinary Service Laterals

1. 3/4" to 2" diameter pipe – copper tube ASTM B, Type K, Soft Temper
2. Over 2" diameter pipe – AWWA C-900 Class 150 pipe

Water Main Lines and Fire Lines

1. Pipe material as shown on utility plan view or to meet city standards.

Sanitary Sewer Lines

1. All sewer piping to be Polyvinyl Chloride (PVC) sewer pipe, ASTM D 3034, Type PSM, SDR 35

Storm Drain Lines

1. 10" pipes or smaller – Polyvinyl Chloride (PVC) sewer pipe, ASTM D3034, Type PSM, SDR 35
2. 12" to 21" pipes – Concrete Pipe, ASTM C76, Class II
3. 24" pipes or larger – Reinforced Concrete Pipe, ASTM C76, Class II

Measurements

1. Distances are measured from center of box to center of box on utilities.

CAUTION NOTICE TO CONTRACTOR

The contractor is specifically cautioned that the location and/or elevation of existing utilities as shown on these plans are based on records of the various utility companies and, where possible, measurements taken in the field. The information is not to be relied on as being exact or complete. The contractor must call the appropriate utility company at least 48 hours before any excavation to request exact field location of utilities. It shall be the responsibility of the contractor to relocate all existing utilities which conflict with the propose improvements shown on the plans.

PRIVATE ENGINEER'S NOTICE TO CONTRACTORS

The Contractor agrees that he shall assume sole and complete responsibility for job site conditions during the course of construction of this project, including safety of all persons and property; that this requirement shall apply continuously and not be limited to normal working hours; and that the contractor shall defend, indemnify, and hold the owner and the engineer harmless from any and all liability, real or alleged, in connection with the performance of work on this project, excepting for liability arising from the sole negligence of the owner or the engineer.

ALL CONSTRUCTION TO CONFORM TO CITY STANDARDS AND SPECIFICATIONS IN RIGHT OF WAY

MHTN ARCHITECTS, INC.
420 East South Temple
Suite 100
Salt Lake City, Utah 84111
Telephone (801) 595-6700
Telefax (801) 595-6717
www.mhtn.com

GREAT BASIN ENGINEERING NORTH
CONSULTING ENGINEERS AND SURVEYORS
5746 South 1475 East
Suite 200
Ogden, Utah 84403
P.O. Box 150048
Ogden, Utah 84415
Ogden (801)394-4515
Salt Lake City (801)521-0222
Fax (801)392-7544

HURST BUILDING FOR LIFELONG LEARNING WEBER STATE UNIVERSITY

UTAH STATE DIVISION OF FACILITIES CONSTRUCTION MANAGEMENT-DFCM PROJECT NO. 07110810

SEAL

MHTN PROJECT NO. 2007556.01

DRAWN BY: DE CHECKED BY: DRW

ISSUED:

NO.	DATE	DESCRIPTION
1	10/26/07	SCHEMATIC DESIGN
2	12/18/07	DESIGN DEVELOPMENT
3	03/04/08	CONSTRUCTION DOCUMENTS

REVISIONS:

NO.	DATE	DESCRIPTION

UTILITY PLAN

CONSTRUCTION DOCUMENTS
MARCH 4, 2008

SHEET NUMBER

CU300

TL
FILE

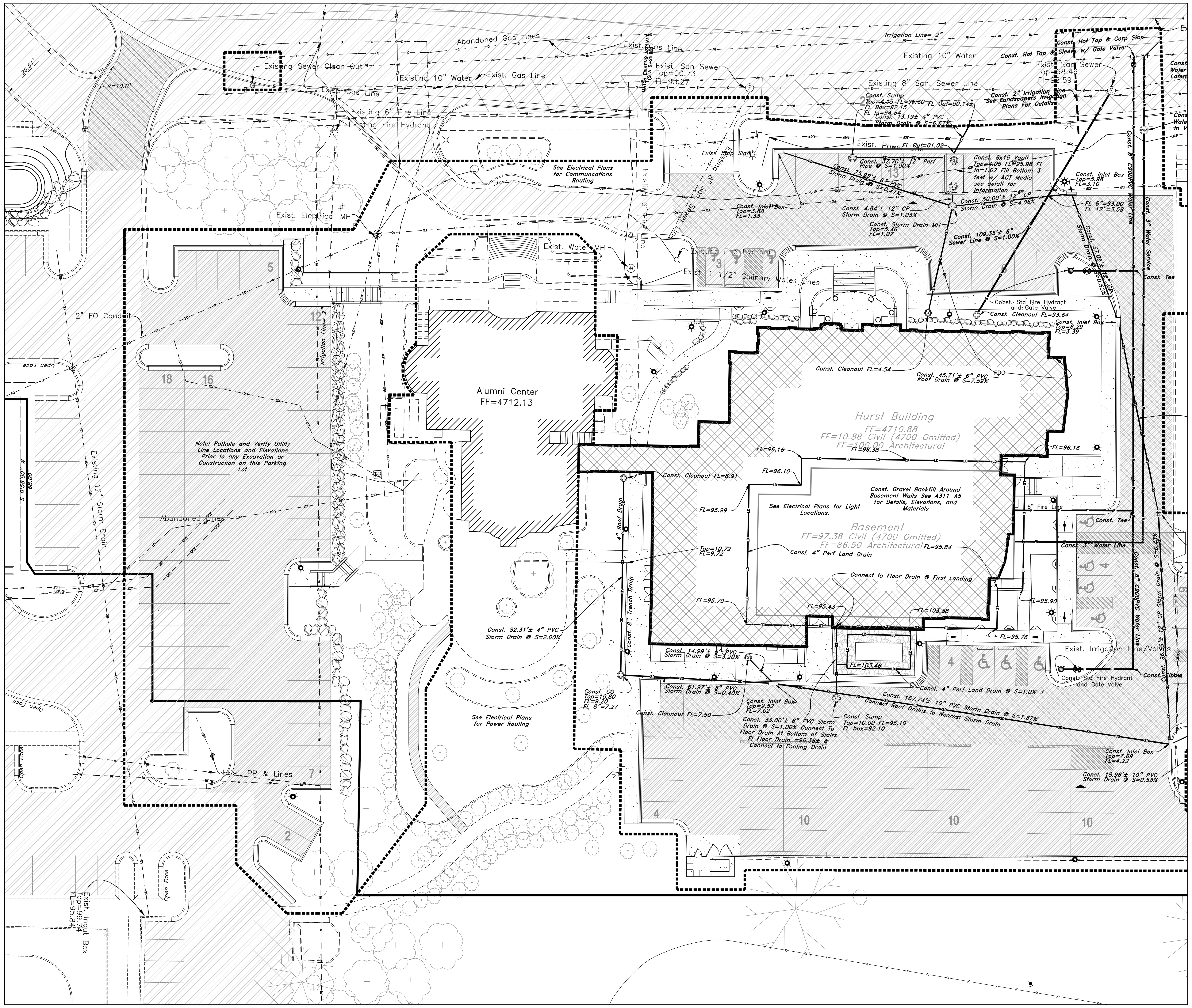

MHTN ARCHITECTS, INC.
420 East South Temple
Suite 100
Salt Lake City, Utah 84111
Telephone (801) 595-6700
Telefax (801) 595-6717
www.mhtn.com

GREAT BASIN ENGINEERING NORTH
CONSULTING ENGINEERS AND SURVEYORS
5746 South 1475 East
Suite 200
Ogden, Utah 84403
P.O. Box 150048
Ogden, Utah 84415
Ogden (801)394-4515
Salt Lake City (801)521-0222
Fax (801)392-7544

Scale: 1" = 20'

20 0 10 20 25 30 35

Graphic Scale

Legend

(Note: All Items may not appear on drawing)

San. Sewer Manhole	S
Water Manhole	W
Storm Drain Manhole	SD
Electrical Manhole	E
Catch Basins	
Exist. Fire Hydrant	
Fire Hydrant	
Exist. Water Valve	
Water Valve	
Sanitary Sewer	S
Culinary Water	W
Gas Line	G
Irrigation Line	IW
Storm Drain	SD
Telephone Line	T
Secondary Waterline	SD
Power Line	P
Fire Line	F
Land Drain	LD
Power pole	
Power pole w/guy	
Light Pole	
Fence	x x x
Flowline of ditch	
Overhead Power line	OHP
Corrugated Metal Pipe	CMP
Concrete Pipe	CP
Reinforced Concrete Pipe	RCP
Ductile Iron	DI
Polyvinyl Chloride	PVC
Top of Asphalt	TA
Edge of Asphalt	EA
Centerline	CL
Flowline	FL
Finish Floor	FF
Top of Curb	TC
Top of Wall	TWL
Top of Walk	TW
Top of Concrete	TCN
Natural Ground	NG
Finish Contour	90
Exist. Contour	90
Finish Grade	95.33TA
Exist. Grade	95.72TA
Ridge Line	R
Direction of Flow	
Existing Asphalt	
New Asphalt	
Heavy Duty Asphalt	
Concrete	
Open Face Curb & Gutter	

General Utility Notes:

1. Coordinate all utility connections to building with plumbing plans and building contractor.
2. Verify depth and location of all existing utilities prior to constructing any new utility lines. Notify Civil Engineer of any discrepancies or conflicts prior to any connections being made.
3. All catch basin and inlet box grates are to be bicycle proof.
4. All inlet boxes located in curb and gutter are to be rectangular and cast in place to ensure proper placement. Pre-cast or square boxes will not be accepted.
5. Refer to the site electrical plan for details and locations of electrical lines, transformers and light poles.
6. Gas lines, telephone lines, and cable TV lines are not a part of these plans.
7. Water meters are to be installed per city standards and specifications. It will be the contractor's responsibility to install all items required.
8. Water lines, valves, fire hydrants, fittings etc. are to be constructed as shown. Contractor is responsible to construct any vertical adjustments necessary to clear sewer, storm drain or other utilities as necessary including valve boxes and hydrant spools to proper grade.
9. Field verify all existing and/or proposed Roof Drain/Roof Drain down spout connections to Storm Water System with Civil, Plumbing & Architectural plans. Notify Engineer of any discrepancies.
10. The connection to sewer and water main lines must be witnessed by a City Inspector.

Utility Piping Materials:

All piping to be installed per manufacturers recommendations. Refer to project specifications for more detailed information regarding materials, installation, etc.

Culinary Service Laterals

1. 3/4" to 2" diameter pipe – copper tube ASTM B, Type K, Soft Temper
2. Over 2" diameter pipe – AWWA C-900 Class 150 pipe

Water Main Lines and Fire Lines

1. Pipe material as shown on utility plan view or to meet city standards.

Sanitary Sewer Lines

1. All sewer piping to be Polyvinyl Chloride (PVC) sewer pipe, ASTM D 3034, Type PSM, SDR 35

Storm Drain Lines

1. 10" pipes or smaller – Polyvinyl Chloride (PVC) sewer pipe, ASTM D3034, Type PSM, SDR 35
2. 12" to 21" pipes – Concrete Pipe, ASTM C76, Class II
3. 24" pipes or larger – Reinforced Concrete Pipe, ASTM C76, Class II

Measurements

1. Distances are measured from center of box to center of box on utilities.

CAUTION NOTICE TO CONTRACTOR

The contractor is specifically cautioned that the location and/or elevation of existing utilities as shown on these plans are based on records of the various utility companies and, where possible, measurements taken in the field. The information is not to be relied on as being exact or complete. The contractor must call the appropriate utility company at least 48 hours before any excavation to request exact field location of utilities. It shall be the responsibility of the contractor to relocate all existing utilities which conflict with the propose improvements shown on the plans.

PRIVATE ENGINEER'S NOTICE TO CONTRACTORS

The Contractor agrees that he shall assume sole and complete responsibility for job site conditions during the course of construction of this project, including safety of all persons and property: that this requirement shall apply continuously and not be limited to normal working hours; and that the contractor shall defend, indemnify, and hold the owner and the engineer harmless from any and all liability, real or alleged, in connection with the performance of work on this project, excepting for liability arising from the sole negligence of the owner or the engineer.

ALL CONSTRUCTION TO CONFORM TO CITY STANDARDS AND SPECIFICATIONS IN RIGHT OF WAY

HURST BUILDING FOR LIFELONG LEARNING WEBER STATE UNIVERSITY

UTAH STATE DIVISION OF FACILITIES CONSTRUCTION MANAGEMENT-DFCM PROJECT NO. 07110810

SEAL:

MHTN PROJECT NO. 2007556.01

DRAWN BY: DE **CHECKED BY:** DRW

ISSUED:

NO.	DATE	DESCRIPTION
1	10/26/07	SCHEMATIC DESIGN
2	12/18/07	DESIGN DEVELOPMENT
3	02/08/08	CONSTRUCTION DOCUMENTS

REVISIONS:

NO.	DATE	DESCRIPTION

UTILITY PLAN

CONSTRUCTION DOCUMENTS
MARCH 4, 2008

SHEET NUMBER

CU301

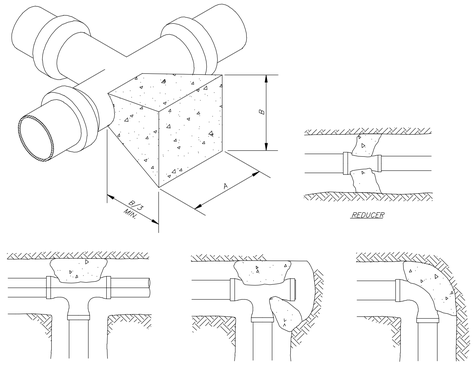

DIMENSIONS FOR THRUST BLOCKING								
FITTING SIZE	TEES & PLUGS		90° BEND		45° BEND & WYES		REDUCERS, 11 1/4° & 22 1/2° BENDS	
	A	B	A	B	A	B	A	B
4"	1'7"	1'-2"	1'-9"	1'-6"	1'-8"	0'-10"	1'-7"	0'-6"
6"	2'-0"	1'-11"	2'-5"	2'-2"	1'-10"	1'-7"	1'-9"	0'-10"
8"	2'-8"	2'-6"	3'-2"	3'-0"	2'-5"	2'-1"	1'-9"	1'-6"
10"	3'-4"	3'-3"	4'-0"	3'-10"	3'-10"	2'-9"	2'-2"	1'-11"
12"	4'-0"	3'-10"	4'-8"	4'-8"	3'-8"	3'-3"	2'-7"	2'-3"
14"	5'-5"	3'-10"	6'-6"	4'-11"	4'-9"	3'-5"	3'-5"	2'-5"

NOTE: This table is based on 150 PSI Main Pressure
2000 PSF Soil Bearing Pressure

Thrust Blocking Details
NOT TO SCALE

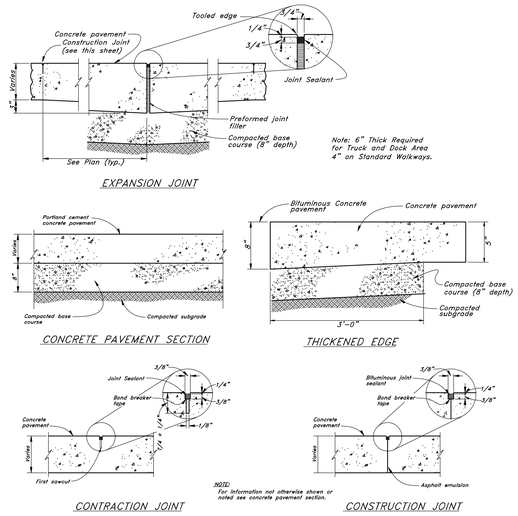

Portland Cement Concrete Pavement
NOT TO SCALE

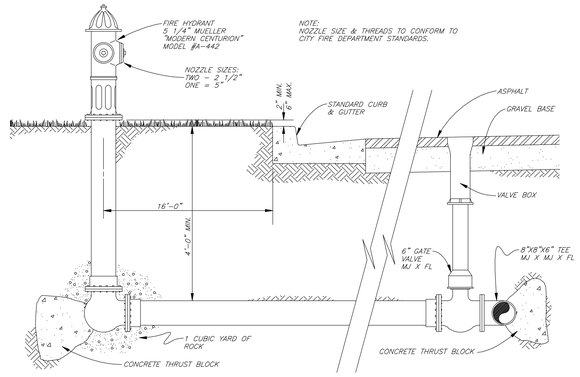

TYPICAL FIRE HYDRANT & VALVE CONNECTION
NOT TO SCALE

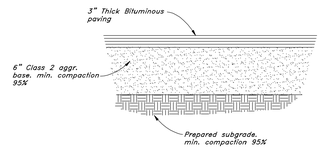

Typical Bituminous Pavement Section Parking Areas

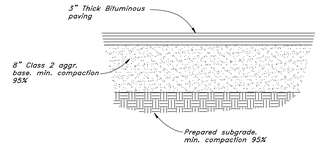

Typical Bituminous Pavement Section Heavy Duty Drives

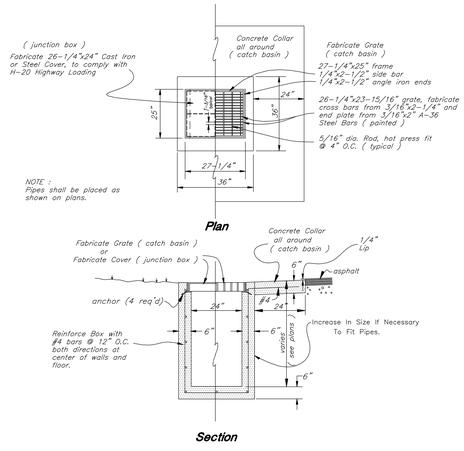

TYPICAL CATCH BASIN
TYPICAL JUNCTION BOX

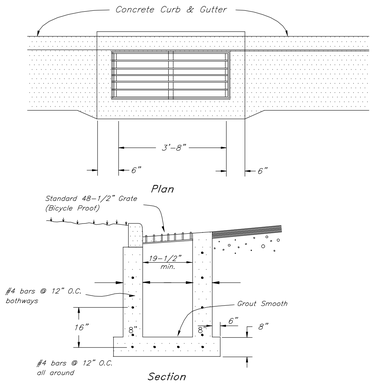

Typical Inlet Box
in curb & gutter

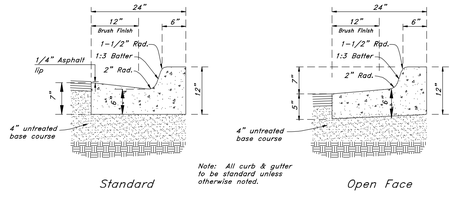

Typical Section - 24" Curb & Gutter

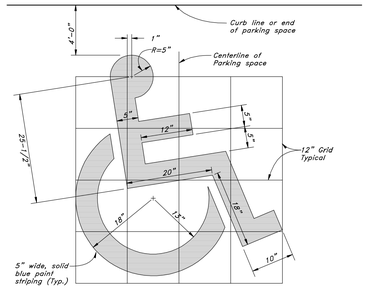

Handicap Symbol
NOT TO SCALE

MHTN ARCHITECTS, INC.
420 East South Temple
Suite 100
Salt Lake City, Utah 84111
Telephone (801) 595-6700
Telefax (801) 595-6717
www.mhtn.com

GREAT BASIN ENGINEERING NORTH
CONSULTING ENGINEERS AND SURVEYORS
5746 South 1475 East
Suite 200
Ogden, Utah 84403
P.O. Box 150048
Ogden, Utah 84415
Ogden (801)394-4515
Salt Lake City (801)521-0222
Fax (801)392-7544

HURST BUILDING
FOR LIFELONG LEARNING
WEBER STATE UNIVERSITY

UTAH STATE DIVISION OF FACILITIES CONSTRUCTION MANAGEMENT-DFCM PROJECT NO. 07110810

SEAL

MHTN PROJECT NO. 2007S66.01
DRAWN BY: DE CHECKED BY: DRW

ISSUED:

NO.	DATE	DESCRIPTION
1	10/26/07	SCHEMATIC DESIGN
2	12/18/07	DESIGN DEVELOPMENT
3	02/06/08	CONSTRUCTION DOCUMENTS

REVISIONS:

NO.	DATE	DESCRIPTION

DETAILS

CONSTRUCTION DOCUMENTS
MARCH 4, 2008

SHEET NUMBER

CD400

TL FILE

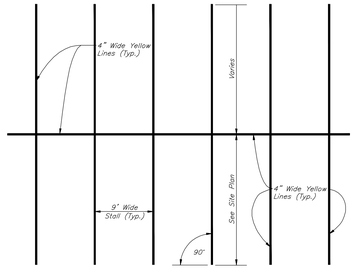

Typical Parking Lot Striping Plan

Not to Scale

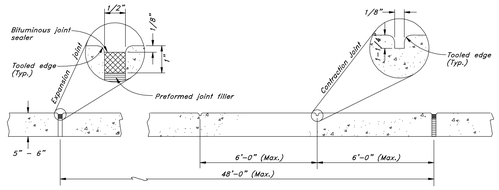

ELEVATION

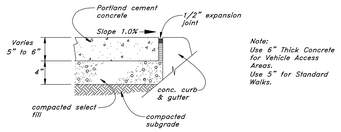

CROSS SECTION

Concrete Sidewalk

NOT TO SCALE

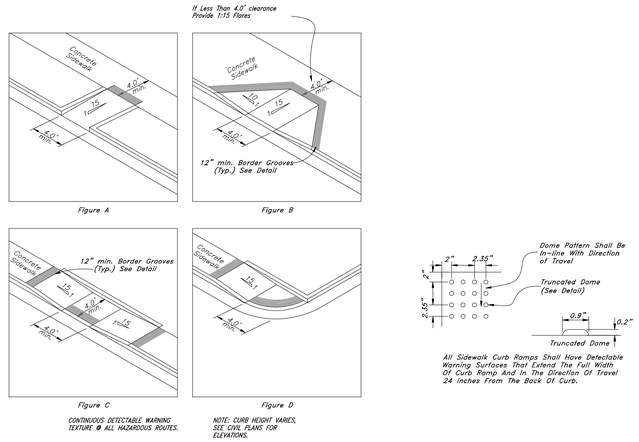

Typical Handicap Ramp Detail

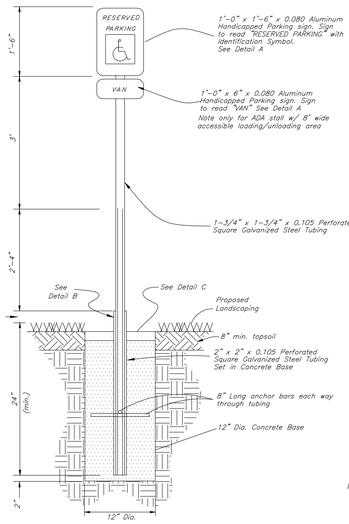

Handicapped Parking Sign

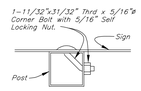

"Detail A" Sign Mounting

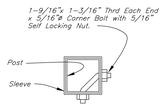

"Detail B" Anchor Assembly

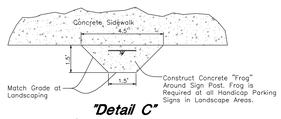

"Detail C" Concrete "Frog"

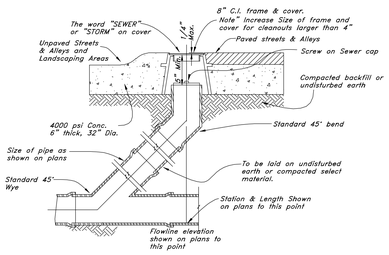

Sewer, Storm, and Roof Drain Cleanout Detail

NOT TO SCALE

Detail of 8 X 16 Vault, On Sheet CU300

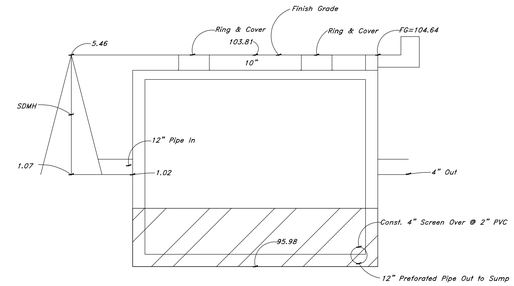

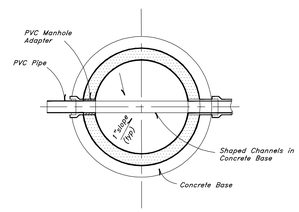

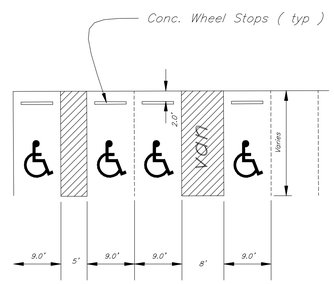

Typical Handicap Stall Detail

No Scale

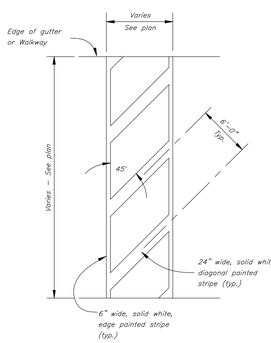

CROSSWALK

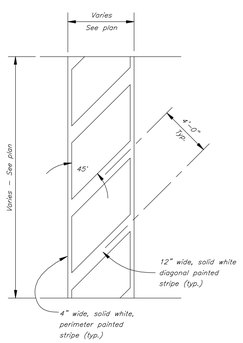

NO PARKING

Striping

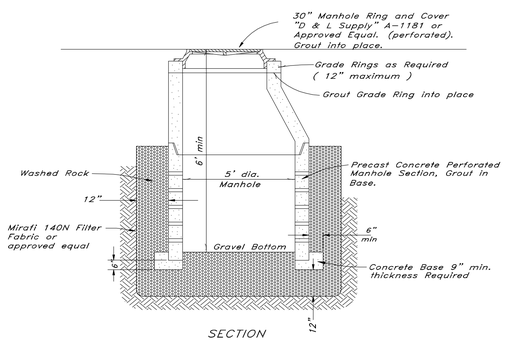

Typical Sump Detail

SUMP

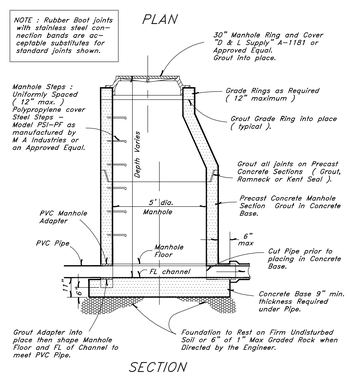

Typical Manhole Detail

MHTN ARCHITECTS, INC.
420 East South Temple
Suite 100
Salt Lake City, Utah 84111
Telephone (801) 595-6700
Telefax (801) 595-6717
www.mhtn.com

GREAT BASIN ENGINEERING NORTH
CONSULTING ENGINEERS AND SURVEYORS
5746 South 1475 East
Suite 200
Ogden, Utah 84403
P.O. Box 150048
Ogden, Utah 84415
Ogden (801)394-4515
Salt Lake City (801)521-0222
Fax (801)392-7544

HURST BUILDING
FOR LIFELONG LEARNING
WEBER STATE UNIVERSITY

UTAH STATE DIVISION OF FACILITIES CONSTRUCTION MANAGEMENT-DFCM PROJECT NO. 07110810

SEAL

MHTN PROJECT NO. 2007S50.01

DRAWN BY: DE CHECKED BY: DRN

ISSUED:

NO.	DATE	DESCRIPTION
1	10/26/07	SCHEMATIC DESIGN
2	12/18/07	DESIGN DEVELOPMENT
3	02/08/08	CONSTRUCTION DOCUMENTS

REVISIONS:

NO.	DATE	DESCRIPTION

DETAILS
PLAN

CONSTRUCTION DOCUMENTS
MARCH 4, 2008

SHEET NUMBER

CD401

FL
FILE

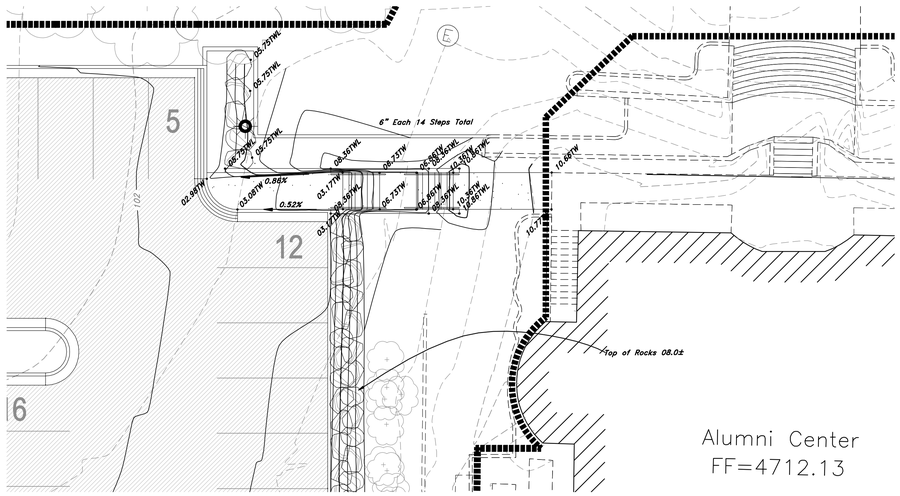

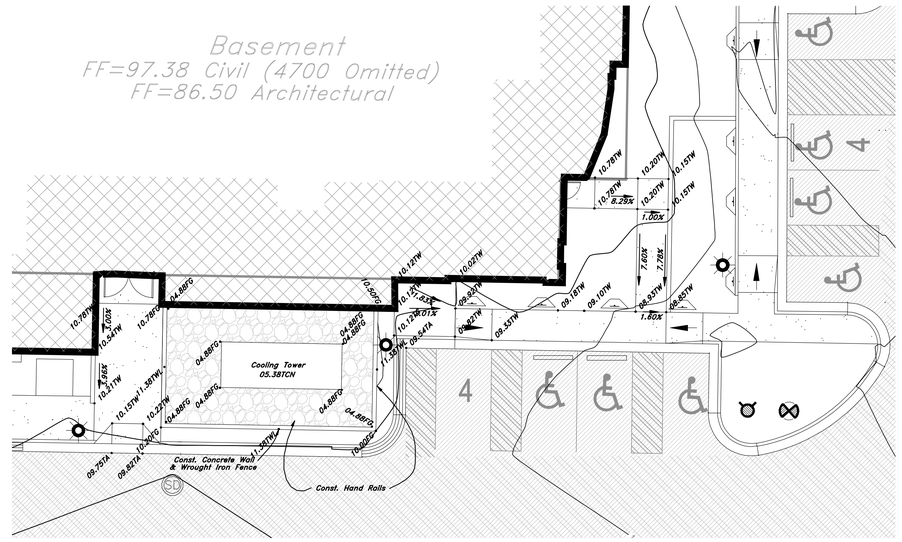

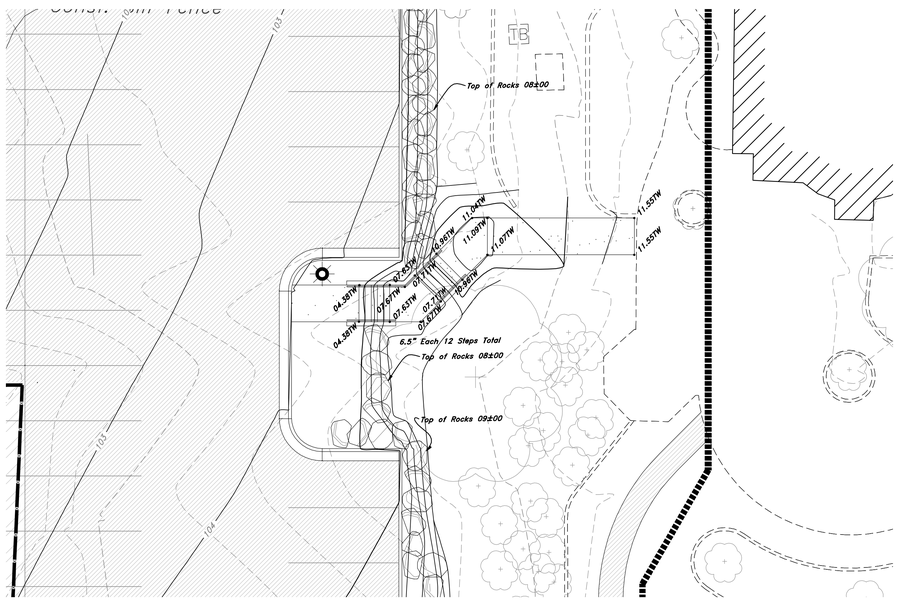

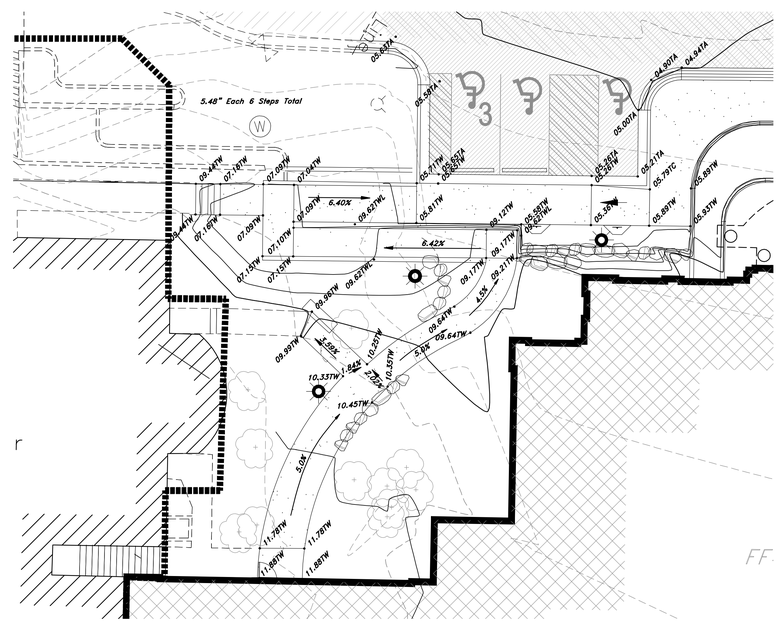

MHTN ARCHITECTS, INC.
420 East South Temple
Suite 100
Salt Lake City, Utah 84111
Telephone (801) 595-6700
Telefax (801) 595-6717
www.mhtn.com

GREAT BASIN ENGINEERING NORTH
CONSULTING ENGINEERS AND SURVEYORS
5746 South 1475 East
Suite 200
Ogden, Utah 84403
P.O. Box 150048
Ogden, Utah 84415
Ogden (801)394-4515
Salt Lake City (801)521-0222
Fax (801)392-7544

Scale: 1" = 10'

Graphic Scale

HURST BUILDING FOR LIFELONG LEARNING WEBER STATE UNIVERSITY

UTAH STATE DIVISION OF FACILITIES CONSTRUCTION MANAGEMENT-DFCM PROJECT NO. 07110810

SEAL

MHTN PROJECT NO. 2007526.01

DRAWN BY: DE CHECKED BY: DRW

ISSUED:

NO.	DATE	DESCRIPTION
1	10/29/07	SCHEMATIC DESIGN
2	12/19/07	DESIGN DEVELOPMENT
3	03/04/08	CONSTRUCTION DOCUMENTS

REVISIONS:

NO.	DATE	DESCRIPTION

DETAILS PLAN

CONSTRUCTION DOCUMENTS
MARCH 4, 2008

SHEET NUMBER

CD402

TL FILE

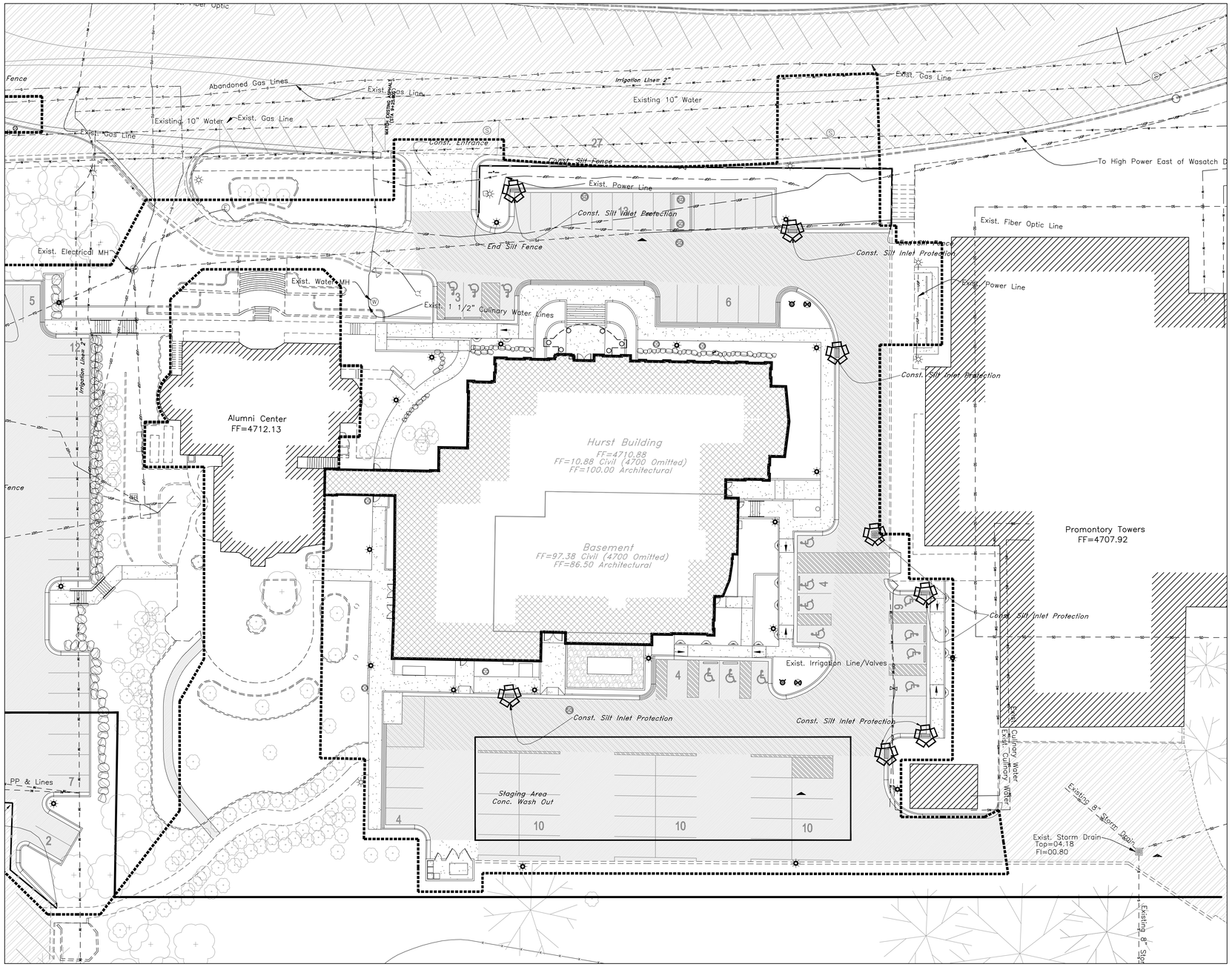

Scale: 1" = 20'

Graphic Scale

Legend

(Note: All items may not appear on drawing)

San. Sewer Manhole	S
Water Manhole	W
Storm Drain Manhole	D
Electrical Manhole	E
Catch Basins	
Exist. Fire Hydrant	
Fire Hydrant	
Exist. Water Valve	W
Water Valve	W
Sanitary Sewer	S
Culinary Water	W
Gas Line	G
Irrigation Line	IW
Storm Drain	SD
Telephone Line	T
Secondary Waterline	SD
Power line	P
Fire Line	F
Land Drain	LD
Power pole	
Power pole w/guy	
Light Pole	
Fence	
Flowline of ditch	
Overhead Power line	OHP
Corrugated Metal Pipe	CMP
Concrete Pipe	CP
Reinforced Concrete Pipe	RCP
Ductile Iron	DI
Polyvinyl Chloride	PVC
Top of Asphalt	TA
Edge of Asphalt	EA
Centerline	CL
Flowline	FL
Finish Floor	FF
Top of Curb	TC
Top of Wall	TWL
Top of Walk	TW
Top of Concrete	TCN
Natural Ground	NG
Finish Contour	90
Exist. Contour	93
Finish Grade	95.33TA
Exist. Grade	95.72TA
Ridge Line	R
Direction of Flow	
Existing Asphalt	
New Asphalt	
Heavy Duty Asphalt	
Concrete	
Open Face Curb & Gutter	

	Mobilization Activity	Required BMP
1	Clear & Grub Building Pad & Demo Asphalt at Building Pad	Install Silt Fence Along Boundary,
2	Const. Underground Utilities	Inlet Protection
3	Back Fill	Maintain BMP
4	Construct Building	Maintain BMP
5	Regrade Rest of Site	Maintain BMP
6	Pave Road & Install Curb & Gutter	Install Silt Snakes Or Equiv.
7	Landscaping	Remove Inlet Protection After Site Is 70% Stabilized

Note: Protect Portable Toilets Per City Requirements.

MHTN ARCHITECTS, INC.
420 East South Temple
Suite 100
Salt Lake City, Utah 84111
Telephone (801) 595-6700
Telefax (801) 595-6717
www.mhtn.com

GREAT BASIN ENGINEERING NORTH
CONSULTING ENGINEERS AND SURVEYORS
5746 South 1475 East
Suite 200
Ogden, Utah 84403
P.O. Box 150048
Ogden, Utah 84415
Ogden: (801)394-4515
Salt Lake City (801)521-0222
Fax (801)392-7544

HURST BUILDING FOR LIFELONG LEARNING WEBER STATE UNIVERSITY

UTAH STATE DIVISION OF FACILITIES CONSTRUCTION MANAGEMENT-DFCM PROJECT NO. 07110810

SEAL

MHTN PROJECT NO. 2007556.01

DRAWN BY: DE CHECKED BY: DRW

ISSUED:

NO.	DATE	DESCRIPTION
1	10/26/07	SCHEMATIC DESIGN
2	12/18/07	DESIGN DEVELOPMENT
3	02/06/08	CONSTRUCTION DOCUMENTS

REVISIONS:

NO.	DATE	DESCRIPTION

SWPP PLAN

CONSTRUCTION DOCUMENTS
MARCH 4, 2008

SHEET NUMBER

CP500

FL
FILE

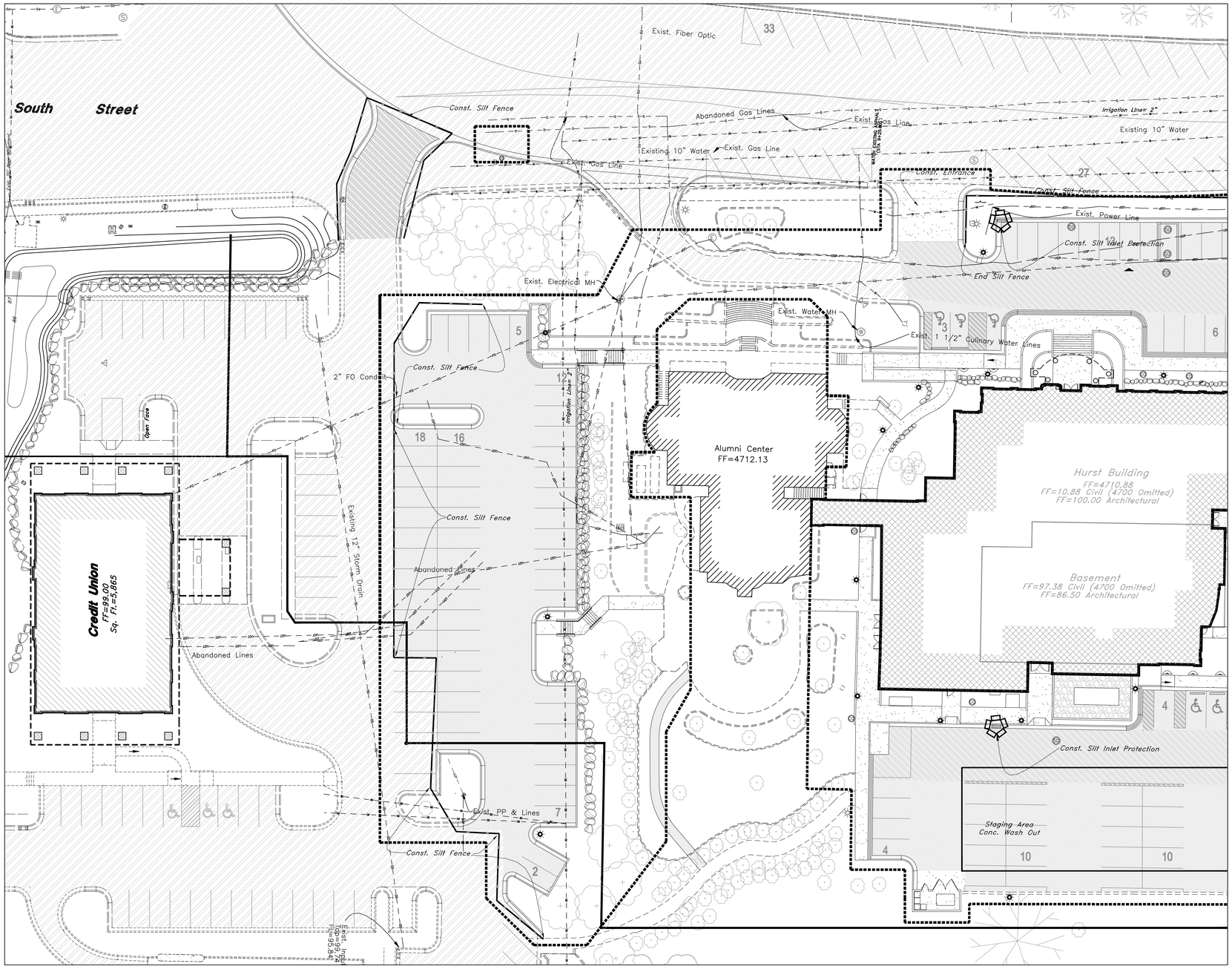

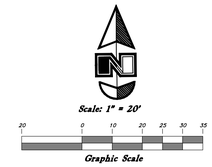

Legend

(Note: All items may not appear on drawing)

San. Sewer Manhole	S
Water Manhole	W
Storm Drain Manhole	D
Electrical Manhole	E
Catch Basins	
Exist. Fire Hydrant	
Fire Hydrant	
Exist. Water Valve	
Water Valve	V
Sanitary Sewer	—S—
Culinary Water	—W—
Gas Line	—G—
Irrigation Line	—IW—
Storm Drain	—SD—
Telephone Line	—SD—
Secondary Waterline	—P—
Power line	—P—
Fire Line	—F—
Land Drain	—LD—
Power pole	
Power pole w/guy	
Light Pole	
Fence	× × ×
Flowline of ditch	
Overhead Power line	—OHP—
Corrugated Metal Pipe	CMP
Concrete Pipe	CP
Reinforced Concrete Pipe	RCP
Ductile Iron	DI
Polyvinyl Chloride	PVC
Top of Asphalt	TA
Edge of Asphalt	EA
Centerline	CL
Flowline	FL
Finish Floor	FF
Top of Curb	TC
Top of Wall	TWL
Top of Walk	TW
Top of Concrete	TCN
Natural Ground	NG
Finish Contour	—90—
Exist. Contour	90
Finish Grade	95.33TA
Exist. Grade	95.72TA
Ridge Line	—R—
Direction of Flow	
Existing Asphalt	
New Asphalt	
Heavy Duty Asphalt	
Concrete	
Open Face Curb & Gutter	

	Mobilization Activity	Required BMP
1	Clear & Grub Building Pad & Demo Asphalt at Building Pad	Install Silt Fence Along Boundary,
2	Const. Underground Utilities	Inlet Protection
3	Back Fill	Maintain BMP
4	Construct Building	Maintain BMP
5	Regrade Rest of Site	Maintain BMP
6	Pave Road & Install Curb & Gutter	Install Silt Snakes Or Equiv.
7	Landscaping	Remove Inlet Protection After Site Is 70% Stabilized

Note: Protect Portable Toilets Per City Requirements.

MHTN ARCHITECTS, INC.
420 East South Temple
Suite 100
Salt Lake City, Utah 84111
Telephone (801) 595-6700
Telefax (801) 595-6717
www.mhtn.com

GREAT BASIN ENGINEERING NORTH
CONSULTING ENGINEERS AND SURVEYORS
5746 South 1475 East
Suite 200
Ogden, Utah 84403
P.O. Box 150048
Ogden, Utah 84415
Ogden (801)394-4515
Salt Lake City (801)521-0222
Fax (801)392-7544

HURST BUILDING FOR LIFELONG LEARNING WEBER STATE UNIVERSITY

UTAH STATE DIVISION OF FACILITIES CONSTRUCTION MANAGEMENT-DFCM PROJECT NO. 07110810

SEAL

MHTN PROJECT NO. 2007558.01

DRAWN BY: DE CHECKED BY: DRW

ISSUED:

NO.	DATE	DESCRIPTION
1	10/26/07	SCHEMATIC DESIGN
2	12/18/07	DESIGN DEVELOPMENT
3	03/06/08	CONSTRUCTION DOCUMENTS

REVISIONS:

NO.	DATE	DESCRIPTION

SWPP PLAN

CONSTRUCTION DOCUMENTS
MARCH 4, 2008

SHEET NUMBER

CP501

TL FILE

MHTN ARCHITECTS, INC.
420 East South Temple
Suite 100
Salt Lake City, Utah 84111
Telephone (801) 595-6700
Telefax (801) 595-6717
www.mhtn.com

GREAT BASIN ENGINEERING NORTH
CONSULTING ENGINEERS AND SURVEYORS
5746 South 1475 East
Suite 200
Ogden, Utah 84403
P.O. Box 150048
Ogden, Utah 84415
Ogden (801)394-4515
Salt Lake City (801)521-0222
Fax (801)392-7544

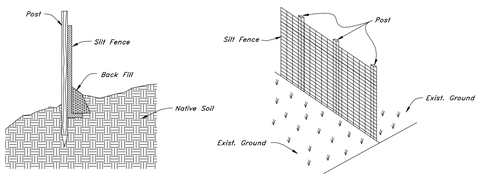

Silt Fence Section

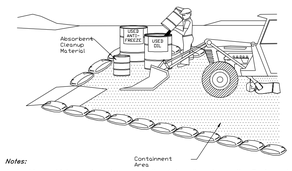

Notes:
1. Leaking vehicles and equipment shall not be allowed on-site. Equipment and vehicles shall be inspected frequently for leaks and shall be repaired immediately. Clean up spills and leaks promptly with absorbent materials; do not flush with water.
2. Vehicles and equipment shall be maintained, and repaired on-site only in designated areas. Prevent run-on and run-off from designated areas.
3. Containment devices shall be provided and areas shall be covered if necessary.
4. Designate on-site vehicle and equipment maintenance areas, away from storm drain inlets and watercourses.
5. Always use secondary containment, such as a drain pan or drop cloth, to catch spills and leaks when removing or changing fluids. Legally dispose of used oils, fluids, and lubricants.
6. Provide spill containment dikes or secondary containment around stored oil, fuel, and chemical drums.
7. Maintain an adequate supply of absorbent spill cleanup materials in designated area.

Equipment Repair/Maintenance

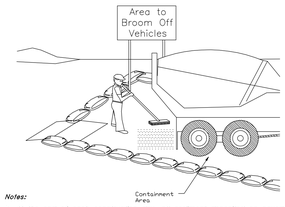

Notes:
1. At the end of each construction day, all sediment deposited on paved roadways and broom off area shall be removed and returned to the construction site.

Construction Entrance With Broom Off Area

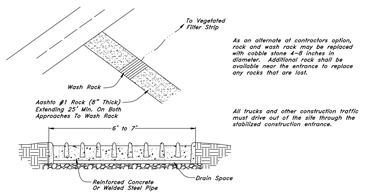

Maintenance: Rock construction entrance thickness shall be constantly maintained to the specified dimensions by adding rock. A stockpile of rock material shall be maintained on site for this purpose. Drain space under wash rack shall be kept open at all times. Damage to the wash rack shall be repaired prior to further use of the rock. At the end of each construction day, all sediment deposited on paved roadways shall be removed and returned to the construction site.

Rock Construction Entrance With Wash Rack

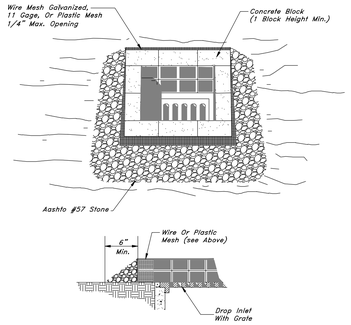

Maximum drainage area = 1 acre.

Inlet protection is not required for inlet tributary to sediment basin or trap. Berms required for all installations.

Earthen berm in roadway shall be maintained until roadway is stoned. Road subbase berm on roadway shall be maintained until roadway is paved. Earthen berm in channel shall be maintained until permanent stabilization is completed or to remain permanently.

Do not use on major paved roadways where ponding may cause traffic hazards

Gravel Inlet Protection

Use Silt Snake or Engineer Approved Equal Method to Strain Storm Water Prior to Flowing to Catch Basins and Inlet Boxes after Paving and Prior to 70% Stabilization

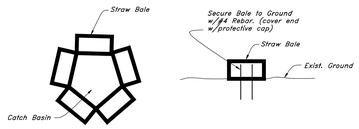

Straw Bale Detail

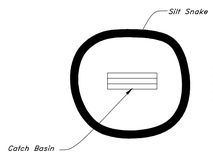

Note:
Inspect the silt snakes on a weekly basis. If silt snake is showing signs of failure remove and replace those sections of the silt snake.

Silt Snake Detail

Not to Scale

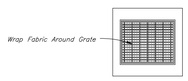

Plan

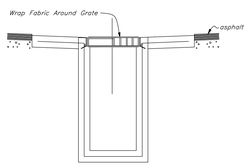

Section

Typical Catch Basin

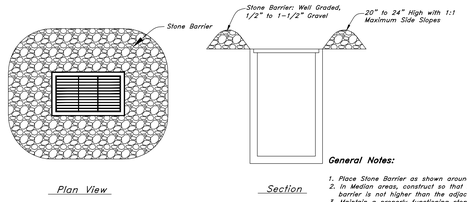

General Notes:
1. Place Stone Barrier as shown around the inlet opening.
2. In Median areas, construct so that the top of the stone barrier is not higher than the adjacent roadway.
3. Maintain a properly functioning stone barrier throughout construction or until disturbed area contributing to the inlet have been paved or vegetated.
4. Remove sediment as it accumulates and place it in a stable area approved by the engineer.

Stone Drop-Inlet Barrier

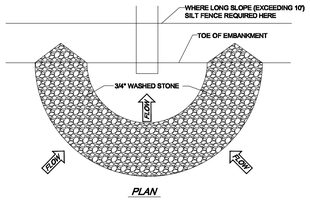

PLAN

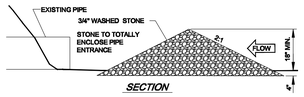

SECTION

PIPE/RISER INLET PROTECTION (IP)

(NOT TO SCALE)

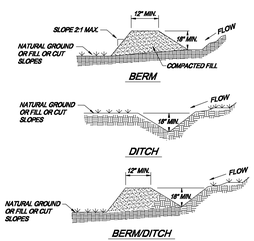

NOTES:
1. POSITIVE GRADE MUST BE PROVIDED TO ASSURE DRAINAGE. IF SLOPE EXCEEDS 2%, SEED AND MULCH DIVERSION, TRY NOT TO EXCEED 5% (HIGH RUNOFF VELOCITIES RESULT). MAXIMUM DRAINAGE AREA IS 5.00 ACRES WITHOUT SUPPORTING CALCULATIONS FOR PERMANENT CHANNEL. DIVERSIONS AT THE TOPS OF SLOPES MUST EMPTY INTO AN APPROVED SLOPE DRAIN (SEE DETAILS). THE BERM/ DITCH IS THE MOST COMMONLY USED DIVERSION.
2. MACHINE COMPACTION OF ALL FILL IS REQUIRED.
3. DIVERSIONS SUFFICIENT TO DIRECT ALL SEDIMENT-LADEN STORMWATER INTO SEDIMENT CONTROL DEVICE MUST BE INSTALLED PRIOR TO CLEARING AND GRUBBING OF AREA (OR IN CONJUNCTION WITH THIS OPERATION IF SEDIMENT CONTROLS AND DIVERSIONS ARE INSTALLED AT EACH CRITICAL POINT AS INDICATED).
4. DIVERSIONS SHOULD BE LOCATED TO MINIMIZE DAMAGES BY CONSTRUCTION OPERATIONS.
5. DIVERSIONS SHOULD BE SEEDED AND MULCHED IF THEY ARE TO REMAIN IN PLACE OVER 14 DAYS.
6. CHECK DIVERSIONS AFTER EACH RAIN, OR ONCE PER WEEK WHICH EVER IS THE SHORTER DURATION. REPAIR AS NEEDED TO MAINTAIN FUNCTION.

DETAIL TEMPORARY DIVERSION BERM/DITCH (TDD)

(NOT TO SCALE)

EROSION CONTROL NOTES
1. LAND DISTURBING ACTIVITIES SHALL NOT COMMENCE UNTIL APPROVAL TO DO SO HAS BEEN RECEIVED BY GOVERNING AUTHORITIES.
2. THE GENERAL CONTRACTOR SHALL STRICTLY ADHERE TO THE STORM WATER POLLUTION PREVENTION PLAN (SWPPP) DURING CONSTRUCTION OPERATIONS.
3. NO LAND CLEARING OR GRADING SHALL BEGIN UNTIL ALL PERIMETER EROSION AND SEDIMENT CONTROL MEASURES HAVE BEEN INSTALLED.
4. ALL EXPOSED AREAS SHALL BE SEEDED AS SPECIFIED WITHIN 14 DAYS OF FINAL GRADING.
5. SHOULD CONSTRUCTION STOP FOR LONGER THAN 14 DAYS, THE SITE SHALL BE SEEDED AS SPECIFIED.
6. SEDIMENT AND EROSION CONTROL MEASURES SHALL BE INSPECTED AT LEAST ONCE EVERY SEVEN (7) DAYS AND WITHIN 24 HOURS OF A RAINFALL EXCEEDING 0.5 INCHES DURING A 24-HOUR PERIOD OR MORE FREQUENTLY IF REQUIRED BY GOVERNING NPDES GENERAL PERMIT. ALL MAINTENANCE REQUIRED BY INSPECTION SHALL COMMENCE WITHIN 24 HOURS AND BE COMPLETED WITHIN 48 HOURS OF REPORT.
7. THIS PLAN SHALL NOT BE CONSIDERED ALL INCLUSIVE AS THE GENERAL CONTRACTOR SHALL TAKE ALL NECESSARY PRECAUTIONS TO PREVENT SOIL SEDIMENT FROM LEAVING THE SITE.
8. GENERAL CONTRACTOR SHALL COMPLY WITH ALL STATE AND LOCAL ORDINANCES THAT APPLY.
9. ADDITIONAL EROSION AND SEDIMENT CONTROL MEASURES WILL BE INSTALLED IF DEEMED NECESSARY BY ON SITE INSPECTION.
10. IF INSTALLATION OF STORM DRAINAGE SYSTEM SHOULD BE INTERRUPTED BY WEATHER OR NIGHTFALL, THE PIPE ENDS SHALL BE COVERED WITH FILTER FABRIC.
11. COMPACT & MAINTAIN 25' WIDE DRIVE FROM ACCESS ROAD TO LAYDOWN AREA AND 25' WIDE DRIVE FROM LAYDOWN AREA TO BUILDING PAD. DRIVE AND LAYDOWN AREA TO BE CONSTRUCTED OF 6" COMPACTED STONE. COORDINATE LOCATION OF LAYDOWN AREA WITH PROJECT MANAGER AND OWNER.
12. GENERAL CONTRACTOR SHALL BE RESPONSIBLE TO TAKE WHATEVER MEANS NECESSARY TO ESTABLISH PERMANENT SOIL STABILIZATION.
13. SEDIMENT SHALL BE REMOVED FROM THE SEDIMENT BASIN BEFORE IT IS 25% FULL AND FROM SILT FENCE BEFORE IT IS 33% FULL.

SEEDING SPECIFICATION

GENERAL
SEEDING CAN BE USED FOR TEMPORARY OR PERMANENT STABILIZATION. DISTURBED AREAS OF THE SITE WHERE CONSTRUCTION ACTIVITY HAS CEASED FOR MORE THAN 14 DAYS (OR MORE FREQUENT IF REQUIRED BY THE STATE NPDES PERMIT) SHALL BE TEMPORARARILY SEEDED AND WATERED. AREAS WHERE FINAL GRADING HAS BEEN COMPLETED FOR MORE THAN 14 DAYS SHALL BE TEMPORARILY OR PERMANENTLY SEEDED. TEMPORARY SEED MIXTURES ARE SPECIFIED BELOW. PERMANENT SEED MIXTURES SHALL BE SEEDED DURING SEASON SPECIFIED.

SEEDING MIXTURES
[APPROPRIATE SEED MIXTURE IS TO BE SELECTED BY THE SITE DESIGN CONSULTANT. IF POSSIBLE CONSULT WITH LANDSCAPE ARCHITECT OR LOCAL NATURAL RESOURCE CONSERVATION SERVICE (NRCS) CONSERVATIONIST OR COUNTY EXTENSION AGENT FOR ASSISTANCE]

TEMPORARY SEEDING

PLANTING DATES	SEED VARIETY	APPLICATION RATE
April 15 - October 1	Quickguard Sterile Triticale Hybrid	35 pounds/acre

Note: must have temporary irrigation to germinate and graw

As an alternate, spray M-Binder tackifyer at 200 pounds per acre

PERMANENT SEEDING
See Landscape Plan. In areas ready for permenant seeding, place plants, shrubs, trees, etc as indicated
and with appropprate mulch.

MULCH SEEDED AREA WITH 2 TONS PER ACRE CLEAN GRAIN STRAW. ANCHOR STRAW WITH HYDRAULIC WOOD FIBER MULCH AT THE RATE OF 1000 LBS PER ACRE, OR 150-200 POUNDS OF ORGANIC MULCH TACKIFIER PER ACRE, OR USE NETTING, OR USE A MULCH ANCHORING TOOL.

SLOPES STEEPER THAN 3:1

TEMPORARY SEEDING
spray M-Binder tackifyer at 200 pounds per acre

PERMANENT SEEDING
se Landscape Plan. In areas ready for permenant seeding, place plants, shrubs, trees, etc as indicated
and with appropprate mulch.

MULCH SEEDED AREA WITH 2 TONS PER ACRE CLEAN GRAIN STRAW. ANCHOR STRAW WITH HYDRAULIC WOOD FIBER MULCH AT THE RATE OF 1000 LBS PER ACRE, OR 150-200 POUNDS OF ORGANIC MULCH TACKIFIER PER ACRE, OR USE NETTING.

SEED BED PREPARATION (PERMENTENT SEEDING)
SURFACE WATER CONTROL MEASURES SHALL BE IN PLACE. AREA TO BE SEEDED SHALL BE RIPPED AND SPREAD WITH AVAILABLE TOPSOIL. TOTAL SEEDBED PREPARED DEPTH SHOULD BE AT LEAST 4 INCHES. LOOSE ROCKS, ROOTS AND OTHER OBSTRUCTIONS NEED TO BE REMOVED FROM THE SURFACE SO THAT THEY WILL NOT INTERFERE WITH THE ESTABLISHMENT AND MAINTENANCE OF VEGETATION. SURFACE FOR FINAL SEEDBED PREPARATION SHOULD BE AT FINISH GRADE AND BE REASONABLY SMOOTH AND UNIFORM.

IF NO SOIL TEST IS TAKEN, FERTILIZER AND LIME SHOULD BE ACCORDING TO SEEDING SPECIFICATIONS. IF SOIL TEST IS TAKEN, APPLY FERTILIZER AND LIME ACCORDING TO SOIL TEST REPORT. FERTILIZER AND LIME SHALL BE APPLIED UNIFORMLY AND MIXED WITH THE SOIL DURING SEEDBED PREPARATION. WEIGHTS, SEED SPECIES AND PERCENTAGE OF PURITY AND GERMINATION MUST BE CHECKED PRIOR TO SEEDING.

SEEDING SHALL BE ACCOMPLISHED IN TWO DIRECTIONS AND AT RIGHT ANGLES TO EACH OTHER. LAWN AREAS SHALL BE SEEDED AT THE RATE INDICATED ON THE DRAWINGS BY SOWING EVENLY WITH AN APPROVED MECHANICAL CULTI-PACKER SEEDER TO COVER THE SEED AND FORM THE SEEDBED IN ONE OPERATION. IF BROADCAST SEEDER IS USED THE SEEDING RATE SHALL BE TWO (2) TIMES THE DRILL RATE. IN INACCESSIBLE AREAS, THE SEED SHALL BE LIGHTLY RAKED WITH FLEXIBLE RAKES AND ROLLED WITH A WATER BALAST ROLLER. AFTER ROLLING SEEDED AREAS ARE TO BE MULCHED ACCORDING TO SPECIFICATION. IF HYDROSEED OPERATION IS USED, SEEDING RATE SHALL BE FIVE (5) TIMES THE DRILL RATE INDICATED ON THE DRAWINGS.

IF SEEDING CAN NOT BE ACCOMPLISHED DUE TO SEASONAL CONSTRAINTS, APPLY STRAW MULCH AND TACKIFIER TO ALL SLOPES AND DISTURBED AREAS UNTIL PERMANENT SEEDING IS ALLOWED. IN THE EVENT SEEDING OCCURS OUT OF SEASON, MAINTENANCE SHALL OCCUR AND CONTINUE INTO THE FOLLOWING GROWING SEASON OR UNTIL A UNIFORM STAND OF THE SPECIFIED PERMANENT GRASSES HAVE BEEN ESTABLISHED AND THE SITE HAS REACHED 85% STABILIZATION. PERMANENT AND TEMPORARY SEEDING SHALL BE ACCOMPLISHED THROUGHOUT THE CONSTRUCTION PROCESS.

INSPECTION
INSPECT SEEDED AREAS FREQUENTLY. IF SEEDED AREAS FAIL TO GERMINATE, OR TO PROVIDE ADEQUATE GROUND COVERAGE, THE AREA SHALL BE RE-SEEDED UNTIL FINAL STABILIZATION IS ACHIEVED. ALL EROSION AND SEDIMENT CONTROL MEASURES SHALL BE INSPECTED AT MINIMUM EVERY SEVEN (7) CALENDAR DAYS AND WITHIN 24-HOURS OF A RAINFALL EVENT OF GREATER THAN .5 INCHES OF RAIN DURING A 24-HOUR PERIOD (OR MORE FREQUENTLY IF REQUIRED BY THE STATE NPDES GENERAL PERMIT) THROUGHOUT CONSTRUCTION UNTIL FINAL STABILIZATION IS ACHIEVED OR MORE FREQUENTLY IF REQUIRED BY STATE NPDES GENERAL PERMIT.

HURST BUILDING FOR LIFELONG LEARNING WEBER STATE UNIVERSITY

UTAH STATE DIVISION OF FACILITIES CONSTRUCTION MANAGEMENT-DFCM PROJECT NO. 07110810

SEAL

MHTN PROJECT NO. 2007356.01
DRAWN BY: DE CHECKED BY: DRH

ISSUED:

NO.	DATE	DESCRIPTION
1	10/26/07	SCHEMATIC DESIGN
2	12/14/07	DESIGN DEVELOPMENT
3	02/08/08	CONSTRUCTION DOCUMENTS

REVISIONS:

NO.	DATE	DESCRIPTION

SWPP DETAILS

CONSTRUCTION DOCUMENTS
MARCH 4, 2008

SHEET NUMBER

CP502

FL
FILE

STORMWATER POLLUTION PREVENTION PLAN
WEBER STATE UNIVERSITY - HURST BUILDING
OGDEN, UTAH

STORM WATER POLLUTION PREVENTION PLAN SPECIFIC NOTES

1. THIS STORM WATER POLLUTION PREVENTION PLAN (SWPPP) WAS DEVELOPED AT THE REQUEST OF THE OWNER, WEBER STATE UNIVERSITY, FOR THE CONSTRUCTION OF A OFFICE BUILDING/PARKING LOT IN THE CITY OF OGDEN, COUNTY OF WEBER, STATE OF UTAH. THIS PLAN IDENTIFIES POTENTIAL SOURCES OF POLLUTANTS OF STORM WATER, PRESENTS POLLUTION CONTROL MEASURES, AND ASSISTS IN INSURING IMPLEMENTATION AND MAINTENANCE OF THE BEST MANAGEMENT PRACTICES (BMP'S) INDICATED HEREIN.

2. A NOTICE OF INTENT HAS BEEN FILED WITH THE STATE OF UTAH DEQ WATER QUALITY DIVISION BY THE OWNER SO THAT THIS CONSTRUCTION PROJECT MAY BE COVERED UNDER THE STATE GENERAL PERMIT. THE PERMIT IS NATIONAL POLLUTION DISCHARGE ELIMINATION SYSTEM (NPDES) GENERAL PERMIT (NO. UTR 100000) FOR STORM WATER DISCHARGES ASSOCIATED WITH CONSTRUCTION ACTIVITY.

3. IN THE EVENT OF A CHANGE IN OWNERSHIP, A NEW NOTICE OF INTENT SHALL BE FILED WITH THE UTAH DEQ WATER QUALITY DIVISION.

4. IN THE EVENT OF A RELEASE OF A REPORTABLE QUANTITY OF A POLLUTANT, THE CONTRACTOR SHALL ADVISE THE OWNER TO NOTIFY THE NATIONAL RESPONSE CENTER, PROVO CITY AND GREAT BASIN ENGINEERING, INC. IF NECESSARY, THIS POLLUTION PREVENTION PLAN SHOULD BE REVISED TO REFLECT THE CHANGE IN CONDITIONS OF THE CONSTRUCTION ACTIVITY. A REPORTABLE QUANTITY IS ESTABLISHED BY 40 CODE OF FEDERAL REGULATIONS (CFR) 117.3 OR 40 CFR 302.4.

5. ALL CONTRACTORS AND THEIR PERSONNEL WHOSE WORK CAN CONTRIBUTE TO OR CAUSE POLLUTION OF STORM WATER SHOULD BE MADE FAMILIAR WITH THIS POLLUTION PREVENTION PLAN. ADEQUATE TRAINING PROVIDED BY THE PERMITEE FOR IMPLEMENTATION OF THE MEASURES PRESENTED HEREIN SHALL BE PROVIDED TO THE CONTRACTORS AND THEIR PERSONNEL.

6. CHANGES IN CONSTRUCTION OR IN CONDITIONS WHICH ARE NOT COVERED BY THIS PLAN SHOULD BE BROUGHT TO THE ATTENTION OF THE OWNER AND GREAT BASIN ENGINEERING, INC. IF NECESSARY, THIS POLLUTION PREVENTION PLAN WILL BE REVISED TO REFLECT THE CHANGE IN CONSTRUCTION OR IN CONDITIONS.

7. ALL PREVENTION AND CLEAN UP MEASURES SHOULD BE CONDUCTED IN ACCORDANCE WITH OGDEN CITY ORDINANCES, AS WELL AS STATE AND FEDERAL REGULATIONS. WASTE MATERIALS SHOULD BE DISPOSED OF IN A LEGAL MANNER. ALL DISCHARGERS OF STORM WATER MUST COMPLY WITH THE LAWFUL REQUIREMENTS OF OGDEN CITY, WEBER COUNTY AND OTHER LOCAL AGENCIES REGARDING THE DISCHARGES OF STORM WATER TO STORM DRAINS.

8. THIS PLAN DOES NOT COVER THE REMOVAL OF HAZARDOUS OR TOXIC WASTE. IN THE EVENT OF A DISCHARGE OR RELEASE OF A REPORTABLE QUANTITY OF TOXIC WASTE, WORK SHOULD BE STOPPED UNTIL THE SPILL CAN BE ASSESSED AND A MITIGATED ON REPORT PREPARED BY A QUALIFIED ENVIRONMENTAL CONSULTANT, AND IF NECESSARY, REVIEWED BY UTAH COUNTY, PROVO CITY AND ANY OTHER AGENCY HAVING JURISDICTION.

9. THIS SWPPP SHALL BE MADE AVAILABLE TO THE PUBLIC UNDER SECTION 308(B) OF THE CLEAN WATER ACT. UPON REQUEST BY MEMBERS OF THE PUBLIC, THE DISCHARGER SHALL MAKE AVAILABLE FOR REVIEW A COPY OF THIS SWPPP EITHER TO DEQ OR DIRECTLY TO THE REQUESTER. THIS SWPPP MUST BE KEPT ON SITE DURING CONSTRUCTION ACTIVITY AND MADE AVAILABLE UPON REQUEST OF A REPRESENTATIVE OF THE UTAH DEQ WATER QUALITY DIVISION/OR THE LOCAL AGENCY.

10. CONTACTS

OWNER WEBER STATE UNIVERSITY OGDEN, UTAH 84	(801) -626-6677
CIVIL ENGINEER GREAT BASIN ENGINEERING, INC. 5746 SOUTH 1475 EAST, SUITE 200 OGDEN, UTAH 84403	DAVID R. WALDRON PROJECT MANAGER (801) 394-4515
OGDEN CITY ENGINEERING DEPARTMENT OGDEN, UTAH	ASST. ENGINEER (801) -629-8000
STATE OF UTAH DEPARTMENT OF ENVIRONMENTAL QUALITY DIVISION OF WATER QUALITY 288 NORTH 10 WEST P.O. BOX 144870 SALT LAKE CITY, UTAH 84114-4870	RAND FISHER (801) 533-6065
U.S. EPA ENVIRONMENTAL PROTECTION AGENCY DENVER, COLORADO	REGION VIII 800-759-4372
ENVIRONMENTAL PROTECTION AGENCY WASHINGTON, D.C. 200	202-475-9518

11. REFERENCES
    A. SITE PLAN PER GREAT BASIN ENGINEERING, INC., DATED December 17, 2007.
    B. STORMWATER POLLUTION PREVENTION PLAN PREPARED BY GREAT BASIN ENGINEERING, INC., DATED .

12. THE PROPOSED CONSTRUCTION ACTIVITY IS CONSTRUCTION OF A NEW OFFICE AND PARKING LOT.

13. LOCATION OF THE SITE: THE PROJECT IS LOCATED AT APPROXIMATELY 1450 NORTH UNIVERSITY AVENUE IN PROVO CITY UTAH COUNTY, UTAH. A PART OF THE SOUTHEAST QUARTER AND NORTHEAST QUARTER OF SECTION 35, T6S, R2E. GPS COORDINATES: LATITUDE-40°15'12.8" N, LONGITUDE-111°39'25.6" W.

14. A MINIMAL AMOUNT OF WATER FLOWS ONTO THE SITE CURRENTLY ALL STREET WATER FLOWS THROUGH PARKING LOTS SOUTH WESTERLY TO UNIVERSITY AVENUE. THEN INTO PUBLIC STORM DRAIN SYSTEM.

15. THE RUNOFF COEFFICIENT FOR THIS SITE IS ABOUT . THIS MEANS THAT ABOUT 47% OF THE SITE IS COVERED WITH AN IMPERVIOUS SURFACE (SUCH AS CONCRETE, ASPHALT, OR A BUILDING); AND THAT ABOUT 53% OF THE SITE HAS A PERVIOUS SURFACE (SUCH AS LANDSCAPING AND PLANTING AREAS).

16. THE EXISTING NATIVE SUBSURFACE SOILS ARE GENERALLY SILTY CLAY OVER SILTY SAND. THE EXISTING GROUND WATER QUALITY AT THIS LOCATION IS ASSUMED TO BE THAT OF WATER WHICH IS SAFE FOR DRINKING; THE EXISTING STORM WATER QUALITY IS TYPICAL OF STORM WATER FLOWING FROM DEVELOPED, SUBURBAN, AREAS.

17.
    A. THE EXISTING SITE CONSISTS OF AN ASPAHLT PARKING AND LIMITED VEGETATION. PRE-CONSTRUCTION RUNOFF COEFFICIENT =0.88
    B. THE PROPOSED SITE WILL CONSIST OF OFFICE BUILDING & PARKING LOT. WITH LANDSCAPING A POST-CONSTRUCTION RUNOFF COEFFICIENT =

18. SEE IMPROVEMENT PLANS FOR SITE DRAINAGE

    START DATE _____

    FINISH DATE _____

19. THE GENERAL CONTRACTOR/DEVELOPER IS RESPONSIBLE FOR MAINTENANCE AND TIMING OF THE STORM WATER POLLUTION CONTROL MEASURES. FOR THIS PROJECT, JACOBSEN CONSTRUCTION IS RESPONSIBLE. STORM WATER CONTROL MEASURES ARE TO BE IN PLACE BY THE START DATE LISTED ABOVE.

20. INTERIM STABILIZATION MEASURES ARE SHOWN ON SHEET CP500. DETAILS ARE SHOWN ON SHEET CP501. THE CONTRACTOR SHALL MAKE CHANGES TO THE CONTROL MEASURES AS NEEDED DURING CONSTRUCTION TO MAINTAIN CONTROL OF THE STORM WATER ON THIS SITE.

    PERMANENT STABILIZATION MEASURES INCLUDE REGULAR MAINTENANCE OF THE LANDSCAPING, REMOVING AND REPLACING DAMAGED AND DEAD VEGETATION, CONTROLLING FERTILIZER QUANTITIES, AND REGULAR CLEANING OF THE STORM DRAINAGE SYSTEM. THESE ITEMS WILL BE DONE BY THE CONTRACTOR DURING CONSTRUCTION AND THE OWNER AFTER CONSTRUCTION IS COMPLETE.

21. THE CONTRACTOR SHALL KEEP A RUNNING LOG OF WHEN GRADING ACTIVITIES HAVE STARTED, STOPPED, AND RESUMED.

22. SILT FENCES WILL BE USED TO CONTROL SILT LADEN STORM WATER FROM LEAVING THE SITE. INLET BOXES AND CATCH BASINS SHALL HAVE FILTRATION DEVICES PLACED AROUND THEM TO PREVENT SILT LADEN STORM WATER FROM DRAINING FROM THE SITE. DIVERSION DITCHES, STRAW WADDLES, AND OTHER METHODS CAN BE USED TO DIVERT CLEAN WATER AWAY FROM DISTURBED SOIL. TRACKING, MULCHES, AND GEOFABRICS CAN BE USED TO KEEP SILT FROM BEING ERODED.

23. POST-CONSTRUCTION STORM WATER CONTROLS INCLUDE: REGULAR MAINTENANCE OF THE LANDSCAPING, REMOVING AND REPLACING DAMAGED AND DEAD VEGETATION, CONTROLLING FERTILIZER QUANTITIES, AND REGULAR CLEANING OF THE STORM DRAINAGE SYSTEM. THESE ITEMS WILL BE DONE BY THE OWNER.

24. OFF SITE TRACKING WILL BE CONTROLLED WITH BROOM OFF AREAS, SWEEPING, AND OTHER CLEANING MEASURES AS NEEDED TO KEEP THE PUBLIC STREETS FREE FROM DIRT AND DEBRIS.

25. WASTE MATERIAL WILL BE DISPOSED OF ON A REGULAR BASIS. GARBAGE CANS SHALL BE PLACED AROUND THE SITE AS NEEDED TO PROVIDE LOCATIONS FOR WASTE MATERIALS. THE CONTRACTOR SHALL HAVE SUFFICIENT PORTABLE BATHROOMS LOCATED AROUND THE SITE TO ACCOMMODATE THE NUMBER OF EMPLOYEES ON SITE.

STORM WATER POLLUTION PREVENTION PLAN GENERAL NOTES

A. PROHIBITION ON MOST NON-STORM WATER DISCHARGES

   ONLY STORM WATER FROM THE PROJECT SITE SHALL BE ALLOWED TO FLOW INTO THE ON-SITE STORM DRAIN SYSTEM. CLEAN, NON-CHLORINATED WATER FROM THE FLUSHING OF FIRE HYDRANTS, WATER MAINS, AND STORM DRAINS MAY BE DISCHARGED TO THE STORM DRAIN IF IT IS NOT ALLOWED TO COLLECT DIRT, DEBRIS, AND TRASH WHILE FLOWING TO A STORM DRAIN INLET.

B. SOURCES OF STORM WATER POLLUTANTS

   STORM WATER POLLUTANTS INCLUDE SOIL SEDIMENT AND NUTRIENTS, OIL, GREASE, TOXIC POLLUTANTS, AND HEAVY METALS. SOURCES OF STORM WATER POLLUTANTS INCLUDE BUT ARE NOT LIMITED TO SOIL EROSION BY WATER AND/OR WIND; CLEARING OF VEGETATION; GRADING; VEHICLE AND EQUIPMENT REFUELING AND MAINTENANCE; WASHING OF CONCRETE TRUCKS, MIXERS AND HANDLING EQUIPMENT; PAINTS, SOLVENTS AND ADHESIVES; AND LANDSCAPING WORK.

C. EROSION AND SEDIMENT CONTROLS

   1. COVER EXPOSED STOCKPILES OF SOILS, CONSTRUCTION AND LANDSCAPING MATERIALS WITH HEAVY PLASTIC SHEETING.
   2. IN LANDSCAPING AREAS WHERE THE VEGETATION HAS NOT ESTABLISHED GROWTH AND TAKEN HOLD, CONSTRUCT SANDBAG OR DIRT BERMS AROUND THEIR PERIMETER TO INSURE THAT WATER WILL BE CONTAINED INSIDE THE LANDSCAPING AREA AND THAT IT WILL NOT BE CONVEYED TO A STORM DRAIN INLET.
   3. RE-VEGETATE AREAS WHERE LANDSCAPING HAS DIED OR NOT TAKEN HOLD.
   4. DIVERT STORM WATER RUNOFF AROUND DISTURBED SOILS WITH BERMS OR DIRT SWALES.

D. OTHER CONTROLS

   1. WASTE DISPOSAL
      A. KEEP WASTE DISPOSAL CONTAINERS COVERED.
      B. PROVIDE FOR THE WEEKLY (OR MORE FREQUENT, IF NECESSARY) DISPOSAL OF WASTE CONTAINERS.
      C. PROVIDE CONTAINERS AT CONVENIENT LOCATIONS AROUND THE SITE.
   2. SWEEPING OF SITE
      A. PROVIDE DAILY SWEEPING BY HAND OR MECHANICAL MEANS (IF NEEDED) TO KEEP THE PAVED AREAS OF THE SITE FREE OF DUST, DIRT, AND DEBRIS.
      B. DISPOSE OF ACCUMULATED DIRT IN WASTE CONTAINERS, OR HAUL IT OFF THE SITE TO A LANDFILL.
   3. SANITARY/SEPTIC DISPOSAL

      PORTABLE TOILETS AND OTHER SANITARY FACILITIES SHALL BE SERVICED WEEKLY AND PUMPED CLEAN BY A WASTE DISPOSAL COMPANY. NO TOXIC OR HAZARDOUS WASTE SHALL BE DISPOSED IN A PORTABLE TOILET OR IN THE ON-SITE SANITARY SEWER.
   4. SPILLS
      A. STORE ADEQUATE ABSORBENT MATERIALS, RAGS, BROOMS, SHOVELS, AND WASTE CONTAINERS ON THE SITE TO CLEAN-UP SPILLS OF MATERIALS SUCH AS FUEL, PAINT, SOLVENTS, OR CLEANERS. CLEAN UP MINOR SPILLS IMMEDIATELY.
      B. FOR REPORTABLE QUANTITY OF HAZARDOUS OR TOXIC SUBSTANCE, SECURE THE SERVICES OF QUALIFIED PERSONNEL OR CLEAN-UP AND DISPOSAL.
   5. CONTROL OF ALLOWABLE NON-STORM WATER DISCHARGES

      LANDSCAPING IRRIGATION, EROSION CONTROL MEASURES, PIPE FLUSHING AND TESTING, AND PAVEMENT WASHING ARE ALLOWED IF THEY CANNOT FEASIBLY BE ELIMINATED, COMPLY WITH THIS PLAN, DO NOT CAUSE OR CONTRIBUTE TO A VIOLATION OF WATER QUALITY STANDARDS, AND ARE NOT REQUIRED TO BE PERMITTED BY THE LOCAL REGIONAL WATER QUALITY CONTROL BOARD.
   6. VEHICLES AND EQUIPMENT
      A. FIX LEAKS OF FUEL, OIL AND OTHER SUBSTANCES IMMEDIATELY.
      B. PERFORM REFUELING AND SERVICE OF VEHICLES OR EQUIPMENT OFF-SITE WHEN POSSIBLE. IF REFUELING OR SERVICE OF EQUIPMENT IS PERFORMED ON-SITE, THEN PROVIDE AN IMPERVIOUS, CONTAINED AREA WHERE ANY SPILLS CAN BE CONTAINED WITHOUT FLOWING TO A STORM WATER INLET OR INTO THE GROUND.
      C. USE DRIP PANS TO CATCH LEAKS AND SMALL SPILLS.
   7. CONCRETE TRUCKS, MIXERS AND HANDLING EQUIPMENT
      A. DO NOT DISPOSE OF WASHOUT FROM THE WASHING OF CONCRETE TRUCKS, MIXERS, AND HANDLING EQUIPMENT WHERE IT WILL FLOW INTO A STORM WATER INLET OR INTO A PUBLIC STREET.
      B. PROVIDE A HOLDING TANK TO RECEIVE ANY WASHOUT FROM CONCRETE EQUIPMENT. DISPOSAL OF TANK CONTENTS SHOULD BE CONDUCTED BY A WASTE HANDLING FIRM.
      C. PROVIDE A DESIGNATED AREA FOR WASHING ANY VEHICLES OR EQUIPMENT. DRAINAGE FROM THIS AREA SHOULD FLOW TO THE HOLDING TANK.
   8. LANDSCAPING OPERATIONS
      A. USE ONLY THE MINIMUM AMOUNT OF LANDSCAPING FERTILIZES, NUTRIENTS, AND OTHER CHEMICALS THAT ARE NEEDED.
      B. DO NOT OVER WATER FERTILIZED OR TREATED LANDSCAPE AREAS. MINIMIZE RUNOFF OF IRRIGATION WATER FROM LANDSCAPING.
   9. STORM WATER INLETS

      KEEP ALL ON-SITE STORM WATER INLETS CLEAN AND FREE OF DIRT AND DEBRIS. IN THE EVENT THAT SEDIMENT AND DEBRIS MAY FLOW TO AN INLET, PROVIDE AN 18-INCH (MINIMUM) STRAIN BARRIER AROUND THE INLET TO TRAP THE DIRT AND DEBRIS AND ALLOW ONLY CLEAN STORM WATER TO ENTER THE INLET.

E. INSPECTION

1. REGULAR INTERVAL INSPECTION AND INSPECTION BEFORE AND AFTER STORMS

A. VISUALLY INSPECT THE SITE WEEKLY TO INSURE THAT STORM WATER INLETS ARE FREE OF DIRT AND DEBRIS.

B. BEFORE A STORM, INSPECT THE SITE TO INSURE THAT STORM WATER POLLUTION CONTROL MEASURES ARE IN PLACE.

C. AFTER A STORM, INSPECT ALL STORM WATER INLETS TO INSURE THAT THEY ARE CLEAR OF DIRT AND DEBRIS. CLEAN THOSE STORM WATER INLETS THAT ARE NOT CLEAR AN FREE OF DEBRIS.

D. THE UTAD DEQ WATER QUALITY DIVISION MAY REQUIRE THE DISCHARGE TO CONDUCT ADDITIONAL SITE INSPECTIONS. SUBMIT REPORTS AND CERTIFICATIONS, OR TO PERFORM SAMPLING AND ANALYSIS.

2. ALL DISCHARGERS ARE REQUIRED TO CONDUCT INSPECTIONS OF THE CONSTRUCTION SITE PRIOR TO ANTICIPATED STORM EVENTS AND AFTER ACTUAL STORM EVENTS, TO IDENTIFY AREAS CONTRIBUTING TO A STORM WATER DISCHARGE, TO EVALUATE WHETHER MEASURES TO REDUCE POLLUTANT LOADINGS IDENTIFIED IN THIS SWPPP ARE ADEQUATE, TO PROPERLY IMPLEMENT IN ACCORDANCE WITH THE TERMS OF THE GENERAL PERMIT, AND TO DETERMINE WHETHER ADDITIONAL CONTROL PRACTICES ARE NEEDED.

3. PREPARATION OF REPORTS AND RETENTION OF RECORDS

A. EACH DISCHARGER MUST CERTIFY ANNUALLY THAT ITS CONSTRUCTION ACTIVITY IS IN COMPLIANCE WITH THE REQUIREMENTS OF THE GENERAL PERMIT AND THIS SWPPP. THIS CERTIFICATION MUST BE BASED ON THE SITE INSPECTIONS. THE FIRST CERTIFICATION MUST BE COMPLETED BY JULY 1, 2002, AND EACH JULY 1 THEREAFTER.

B. THE DISCHARGER IS REQUIRED TO RETAIN RECORDS OF ALL MONITORING INFORMATION, COPIES OF ALL REPORTS REQUIRED BY THIS GENERAL PERMIT, AND RECORDS OF ALL DATA USED TO COMPLETE THE NOTICE OF INTENT FOR CONSTRUCTION ACTIVITY FOR A PERIOD OF AT LEAST THREE YEARS. THIS PERIOD MAY BE EXTENDED BY REQUEST OF THE STATE. WITH THE EXCEPTION OF NONCOMPLIANCE REPORTING, DISCHARGERS ARE NOT REQUIRED TO SUBMIT THE RECORDS EXCEPT UPON SPECIFIC REQUEST BY THE STATE DEQ DIVISION OF WATER QUALITY.

C. DISCHARGERS WHO CANNOT CERTIFY COMPLIANCE MUST NOTIFY THE STATE DEQ DIVISION OF WATER QUALITY. THIS NOTIFICATION SHALL IDENTIFY THE TYPE OR TYPES OF NONCOMPLIANCE, DESCRIBE THE ACTIONS NECESSARY TO ACHIEVE COMPLIANCE, AND INCLUDE A TIME SCHEDULE, SUBJECT TO THE MODIFICATIONS BY THE STATE DEQ DIVISION OF WATER QUALITY, INDICATING WHEN COMPLIANCE WILL BE ACHIEVED. NONCOMPLIANCE REPORTS MUST BE SUBMITTED WITHIN 30 DAYS OF THE IDENTIFICATION OF THE NONCOMPLIANCE.

F. MAINTENANCE OF CONTROLS

1. MAINTENANCE AND REPAIR

   ALL CONTROLS AND MEASURES INDICATED ON THIS PLAN SHOULD BE MAINTAINED IN GOOD AND EFFECTIVE CONDITION. IF ANY CONTROLS OR MEASURES ARE DAMAGED OR REMOVED, THEY SHOULD BE PROMPTLY REPAIRED OR RESTORED.

2. PLAN REVISIONS

   IF CONSTRUCTION ACTIVITY OR CONDITIONS CHANGE FROM THOSE SHOWN IN THIS PLAN, THEN THIS PLAN SHALL BE REVISED TO REFLECT THE CURRENT CONDITIONS.

G. FINAL STABILIZATION AND POST-CONSTRUCTION CONTROLS

1. STABILIZATION PRACTICES MAY INCLUDE: TEMPORARY SEEDING, PERMANENT SEEDING, MULCHING, GEOTEXTILES, SOD STABILIZATION, VEGETATIVE BUFFER STRIPS, PROTECTION OF TREES, PRESERVATION OF MATURE VEGETATION AND OTHER APPROPRIATE MEASURES. STABILIZATION MEASURES SHALL BE INITIATED AS SOON AS PRACTICABLE IN PORTIONS OF THE SITE WHERE CONSTRUCTION ACTIVITIES HAVE TEMPORARILY OR PERMANENTLY CEASED, BUT IN NO CASE MORE THAN 14 DAYS AFTER THE CONSTRUCTION ACTIVITY IN THAT PORTION OF THE SITE HAS TEMPORARILY OR PERMANENTLY CEASED EXCEPT AS NOTED BELOW.

   WHERE THE INITIATION OF STABILIZED MEASURES BY THE 14TH DAY AFTER CONSTRUCTION ACTIVITY TEMPORARILY OR PERMANENTLY CEASED IS PRECLUDED BY SNOW COVER OR FROZEN GROUND CONDITIONS, STABILIZATION MEASURES SHALL BE INITIATED AS SOON AS PRACTICAL.

   WHERE CONSTRUCTION ACTIVITY ON A PORTION OF THE SITE IS TEMPORARILY CEASED, AND EARTH DISTURBING ACTIVITIES WILL BE RESUMED WITHIN 21 DAYS, TEMPORARY STABILIZATION MEASURES DO NOT HAVE TO BE INITIATED ON THAT PORTION OF THE SITE.

2. AFTER CONSTRUCTION HAS BEEN COMPLETED, THE SITE SHALL BE SWEPT CLEAN, STORM WATER INLETS (GRATES AND BASINS) SHALL BE CLEANED, AND ALL WASTE AND LEFTOVER MATERIALS SHALL BE REMOVED FROM THE SITE.

3. ALL LANDSCAPING AND PLANTING AREAS SHOULD BE WELL MAINTAINED TO PREVENT EROSION. AVOID OVER WATERING OF LANDSCAPING.

4. ALL PAVED AREAS SHOULD BE SWEPT WEEKLY EITHER BY HAND OR BY MECHANICAL MEANS TO KEEP THE SITE CLEAR OF DIRT, DUST, AND DEBRIS.

5. WASTE MATERIALS ON-SITE SHOULD BE STORED IN COVERED CONTAINERS WHICH ARE CLEANED OUT REGULARLY.

6. TESTING OF FIRE HYDRANTS ON-SITE SHALL NOT BE CONDUCTED UNTIL THE AREA WHERE THE WATER DISCHARGES HAS BEEN SWEPT CLEAN OF DIRT AND DEBRIS.

7. STORM DRAIN LINES SHOULD BE CHECKED AND CLEANED ANNUALLY TO KEEP THEM CLEAN AND CLEAR OF DEBRIS.

8. ALL ON-SITE STORM WATER INLETS SHOULD BE CLEARLY MARKED "STORM WATER ONLY".

H. COMPLETION OF CONSTRUCTION ACTIVITIES AND NOTICE OF TERMINATION

   WHEN CONSTRUCTION ACTIVITIES HAVE BEEN COMPLETED ON THIS SITE, THE OWNER SHALL FILE A LETTER WITH THE STATE DEQ DIVISION OF WATER QUALITY. THIS LETTER SHALL CERTIFY THAT THE CONSTRUCTION ACTIVITY HAS BEEN COMPLETED, THAT ALL ELEMENTS OF THE SWPPP HAVE BEEN IMPLEMENTED, THAT CONSTRUCTION AND EQUIPMENT MAINTENANCE WASTES HAVE BEEN DISPOSED OF PROPERLY, THAT THE SITE IS IN COMPLIANCE WITH ALL LOCAL STORM WATER REQUIREMENTS INCLUDING EROSION/SEDIMENT CONTROL REQUIREMENTS, POLICIES, AND GUIDELINES.

DEFINITIONS

1. "BEST MANAGEMENT PRACTICES" ("BMP'S") MEANS SCHEDULES OF ACTIVITIES, PROHIBITIONS OF PRACTICES, MAINTENANCE PROCEDURES, AND OTHER MANAGEMENT PRACTICES TO PREVENT OR REDUCE THE POLLUTION OF WATERS OF THE UNITED STATES. BMP'S ALSO INCLUDE TREATMENT REQUIREMENTS, OPERATING PROCEDURES, AND PRACTICES TO CONTROL SITE RUNOFF, SPILLAGE OR LEAKS, WASTE DISPOSAL, OR DRAINAGE FROM RAW MATERIAL STORAGE.

2. "CLEAN WATER ACT" ("CWA") MEANS THE FEDERAL WATER POLLUTION CONTROL ACT ENACTED BY PUBLIC LAW 92-500 AS AMENDED BY PUBLIC LAWS 95-217, 95-576, 96-483, AND 97-111; 33 USC 1251 ET SEQ.

3. "CONSTRUCTION SITE" IS THE LOCATION OF THE CONSTRUCTION ACTIVITY.

4. "NON-STORM WATER DISCHARGE" MEANS ANY DISCHARGE TO STORM DRAIN SYSTEMS THAT IS NOT COMPOSED ENTIRELY OF STORM WATER EXCEPT DISCHARGE PURSUANT TO AN NPDES PERMIT AND DISCHARGES RESULTING FROM FIRE FIGHTING ACTIVITIES.

5. "SIGNIFICANT MATERIALS" INCLUDES, BUT IS NOT LIMITED TO RAW MATERIALS; FUELS; MATERIALS SUCH AS SOLVENTS, DETERGENTS, AND PLASTIC PELLETS; FINISHED MATERIALS SUCH AS METALLIC PRODUCTS; RAW MATERIALS USED IN FOOD PROCESSING OR PRODUCTION HAZARDOUS SUBSTANCES DESIGNATED UNDER SECTION 101(14) OF THE COMPREHENSIVE ENVIRONMENTAL RESPONSE, COMPENSATION, AND LIABILITY ACT (CERCLA); ANY CHEMICAL THE FACILITY IS REQUIRED TO REPORT PURSUANT TO SECTION 313 OF TITLE III OF SUPERFUND AMENDMENTS AND REAUTHORIZATION ACT (SARA); FERTILIZERS; PESTICIDES; AND WASTE PRODUCTS SUCH AS ASHES, SLAG, AND SLUDGE THAT MAVE THE POTENTIAL TO BE RELEASED WITH STORM WATER DISCHARGES.

6. "SIGNIFICANT QUANTITIES" IS THE VOLUME, CONCENTRATIONS, OR MASS OF A POLLUTANT IN STORM WATER DISCHARGE THAT CAN CAUSE OR THREATEN TO CAUSE POLLUTION, CONTAMINATION, OR NUISANCE; ADVERSELY IMPACT HUMAN HEALTH OR THE ENVIRONMENT; CAUSE OR CONTRIBUTE TO A VIOLATION OF ANY APPLICABLE WATER QUALITY STANDARDS FOR THE RECEIVING WATER.

7. "STORM WATER" MEANS STORM WATER RUNOFF, SNOW MELT RUNOFF, SURFACE RUNOFF AND DRAINAGE. IT EXCLUDES INFILTRATION AND RUNOFF FROM AGRICULTURAL LAND.

8. "POLLUTION" MEANS THE "MAN-MADE OR MAN-INDUCED ALTERATION OF THE CHEMICAL, PHYSICAL, BIOLOGICAL, AND RADIOLOGICAL INTEGRITY OF WATER" [CLEAN WATER ACT SECTION 502(19)]. POLLUTION ALSO MEANS "AN ALTERATION OF THE QUALITY OF THE WATERS OF THE STATE BY WASTE TO A DEGREE WHICH UNREASONABLY AFFECTS EITHER... THE WATERS FOR BENEFICIAL USES... OR FACILITIES WHICH SERVE THESE BENEFICIAL USES." [CALIFORNIA WATER CODE SECTION 13050(l)].

9. "CONTAMINATION" MEANS "AN IMPAIRMENT OF THE QUALITY OF THE WATERS OF THE STATE BY WASTE TO A DEGREE WHICH CREATES A HAZARD TO THE PUBLIC HEALTH THROUGH POISONING OR THROUGH THE SPREAD OF DISEASE...INCLUDING ANY EQUIVALENT EFFECT RESULTING FROM THE DISPOSAL OF WASTE, WHETHER OR NOT WATERS OF THE STATE ARE AFFECTED."

10. "NUISANCE" MEANS "ANYTHING WHICH MEETS ALL OF THE FOLLOWING REQUIREMENTS: (1) IS INJURIOUS TO HEALTH , OR IS INDECENT OR OFFENSIVE TO THE SENSES, OR AN OBSTRUCTION TO THE FREE USE OF PROPERTY, SO AS TO INTERFERE WITH THE COMFORTABLE ENJOYMENT OF LIFE AND PROPERTY; (2) AFFECTS AT THE SAME TIME AN ENTIRE COMMUNITY OR NEIGHBORHOOD, OR ANY CONSIDERABLE NUMBER OF PERSONS, ALTHOUGH THE EXTENT OF THE ANNOYANCE OR DAMAGE INFLICTED UPON INDIVIDUALS MAY BE UNEQUAL; (3) OCCURS DURING OR AS A RESULT OF THE TREATMENT OR DISPOSAL OF WASTES."

11. "LOCAL AGENCY" MEANS ANY AGENCY THAT IS INVOLVED WITH REVIEW, APPROVAL, OR OVERSIGHT OF THE CONSTRUCTION SITES" (a) CONSTRUCTION ACTIVITY, (b) EROSION AND SEDIMENT CONTROLS, (c) STORM WATER DISCHARGE.

CERTIFICATION

I CERTIFY UNDER PENALTY OF PERJURY THAT THIS DOCUMENT AND ALL ATTACHMENTS WERE PREPARED UNDER MY DIRECTION OR SUPERVISION IN ACCORDANCE WITH A SYSTEM DESIGNED TO ASSURE THAT QUALIFIED PERSONNEL PROPERLY GATHER AND EVALUATE THE INFORMATION SUBMITTED. BASED ON MY INQUIRY OF THE PERSON OR PERSONS WHO MANAGE THE SYSTEM OR THOSE PERSONS DIRECTLY RESPONSIBLE FOR GATHERING THE INFORMATION, THE INFORMATION SUBMITTED IS TO THE BEST OF MY KNOWLEDGE AND BELIEF, TRUE, ACCURATE, AND COMPLETE. I AM AWARE THAT THERE ARE SIGNIFICANT PENALTIES FOR SUBMITTING FALSE INFORMATION, INCLUDING THE POSSIBILITY OF FINE AND IMPRISONMENT FOR KNOWING VIOLATIONS.

_____ _____
DAVID R. WALDRON — Developer Signiture & Date
REGISTERED CIVIL ENGINEER NO. 187515
GREAT BASIN ENGINEERING, INC.

CONTRACTORS

NAME	SIGNATURE	ROLE-COMPANY	DEFINITION OF OPERATION

NPDES I.D. NUMBER _____

MHTN ARCHITECTS, INC.
420 East South Temple
Suite 100
Salt Lake City, Utah 84111
Telephone (801) 595-6700
Telefax (801) 595-6717
www.mhtn.com

GREAT BASIN ENGINEERING NORTH
CONSULTING ENGINEERS AND SURVEYORS
5746 South 1475 East
Suite 200
Ogden, Utah 84403
P.O. Box 150048
Ogden, Utah 84415
Ogden (801)394-4515
Salt Lake City (801)521-0222
Fax (801)392-7544

HURST BUILDING
FOR LIFELONG LEARNING
WEBER STATE UNIVERSITY

UTAH STATE DIVISION OF FACILITIES CONSTRUCTION MANAGEMENT-DFCM PROJECT NO. 07110810

SEAL

MHTN PROJECT NO. 2007556.01
DRAWN BY: DE CHECKED BY: DRW

ISSUED:

NO.	DATE	DESCRIPTION
1	10/26/07	SCHEMATIC DESIGN
2	12/18/07	DESIGN DEVELOPMENT
3	03/06/08	CONSTRUCTION DOCUMENTS

REVISIONS:

NO.	DATE	DESCRIPTION

SWPP
NOTES

CONSTRUCTION DOCUMENTS
MARCH 4, 2008

SHEET NUMBER

CP503

FILE

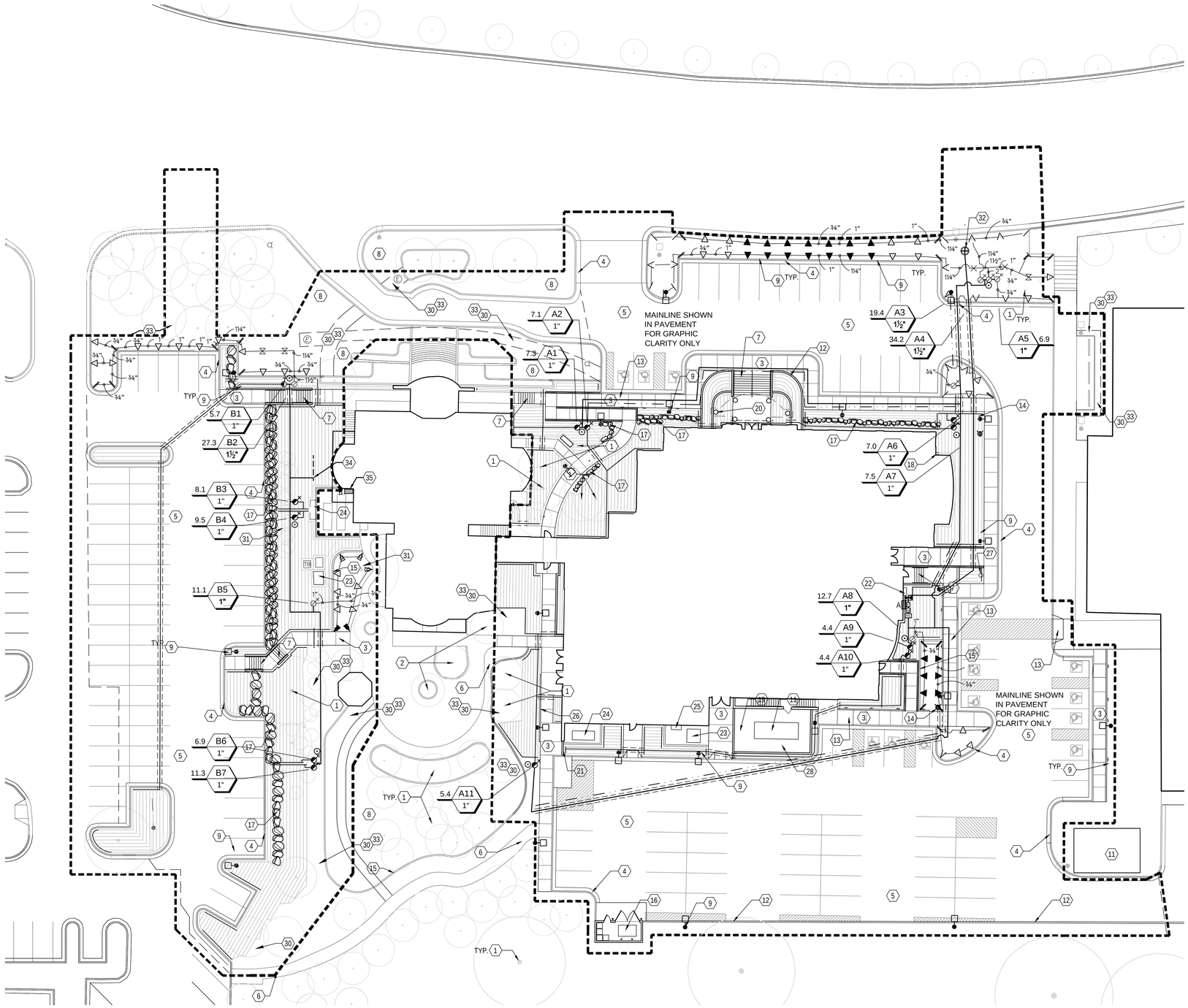

KEYNOTES

1. EXISTING TREE
2. NOT USED
3. SIDEWALK
4. CURB & GUTTER
5. ASPHALT PAVING
6. STAMPED CONCRETE PAVING
7. STAIR
8. LANDSCAPE AREA
9. LIGHT POLE
10. CURB
11. COOLING TOWER
12. CONCRETE WALL
13. ACCESSIBLE RAMP
14. HYDRANT
15. CONCRETE MOWSTRIP
16. DUMPSTER LOCATION
17. BOULDER WALL
18. FDC LOCATION
19. CONCRETE RETAINING WALL
20. BUILDING COLUMN - SEE ARCHITECTURAL
21. MASONRY SCREEN WALL
22. GAS METER
23. ELECTRICAL TRANSFORMER
24. EMERGENCY GENERATOR
25. CT CAN
26. TRENCH DRAIN
27. CALL STATION (POLE MOUNT)
28. GRAVEL PAVING
29. BENCH N.I.C
30. EXISTING IRRIGATION SYSTEM THIS AREA
31. REMOVE AND REPLACE IRRIGATION THIS AREA
32. NEW TAP INTO EXISTING IRRIGATION LINE - SEE CIVIL
33. REMODEL EXISTING IRRIGATION SYSTEM THIS AREA
34. CONNECT NEW MAINLINE TO EXISTING MAINLINE
35. REPLACE EXISTING CONTROLLER WITH NEW CONTROLLER - SEE LEGEND.

IRRIGATION REMODEL NOTES

THIS CONTRACTOR SHALL BE RESPONSIBLE FOR FIELD VERIFICATION OF THE EXISTING SPRINKLER IRRIGATION SYSTEM IN TERMS OF FLOW CAPACITY, VALVE WIRING, VALVE AND HEAD LAYOUT AND CONTROLLER CAPACITY.

THIS CONTRACTOR SHALL BE RESPONSIBLE FOR THE COMPLETE REMODEL OF A SECTION OF THE EXISTING IRRIGATION SYSTEM AS SHOWN AND FOR PROVIDING FOR FULL COVERAGE OF ALL SYSTEM HEADS AND FOR THE FULL AND COMPLETE OPERATION OF BOTH THE NEW AND EXISTING SYSTEM IN THE AREAS BEING MODIFIED.

THIS CONTRACTOR SHALL COORDINATE ALL DEMOLITION WORK AND TIMES WITH THE OWNER.

MAINTAIN AND PROTECT AS MUCH OF THE EXISTING IRRIGATION SYSTEM AS POSSIBLE AND FEASIBLE AND STILL PROVIDE FOR FULL COVERAGE OF THE ENTIRE AREA. KEEP ALL LAWN AREA HEADS ON A SEPARATE CIRCUIT FROM SHRUB AREA HEADS.

THE EXISTING IRRIGATION SYSTEMS NOTED TO REMAIN IN USE SHALL BE PATCHED AND REPAIRED AS NECESSARY. MAINTAIN OPERATION OF THE EXISTING SYSTEM AS REQUIRED TO PROTECT EXISTING PLANT MATERIAL. CONTRACTOR SHALL BE RESPONSIBLE FOR DAMAGE OR DEATH OF EXISTING PLANT MATERIAL.

ALL SALVAGED HEADS SHALL BE RE-USED IN THE NEW SYSTEM, IF COMPATIBLE WITH NEW HEADS, OR RETURNED TO THE OWNER.

THIS CONTRACTOR SHALL BE RESPONSIBLE FOR PROTECTING THE EXISTING VALVE WIRING AND RE-ROUTING AS SHOWN AND AS REQUIRED. MINIMIZE THE USE OF WIRE SPLICES. PROVIDE TEMPORARY WIRING AS REQUIRED TO KEEP THE EXISTING SYSTEM IN OPERATION.

REPAIR DAMAGE TO EXISTING IRRIGATION SYSTEM AND LAWN RESULTING FROM CONSTRUCTION OPERATIONS.

TIE NEW AND EXISTING VALVES TO NE CONTROLLER AT ALUMNI CENTER

NOTE:

NO AS-BUILT OF THE ALUMNI CENTER IRRIGATION EXISTS. CONTRACTOR TO FIELD VERIFY AND DOCUMENT THE EXISTING SYSTEM PRIOR TO ANY DEMOLITION AND CONSTRUCTION

MHTN ARCHITECTS, INC.
420 East South Temple
Suite 100
Salt Lake City, Utah 84111
Telephone (801) 595-6700
Telefax (801) 595-6717
www.mhtn.com

WEBER STATE UNIVERSITY

HURST CENTER FOR LIFELONG LEARNING
WEBER STATE UNIVERSITY

UTAH STATE DIVISION OF FACILITIES CONSTRUCTION MANAGEMENT- DFCM PROJECT NO. 07110810

SEAL

MHTN PROJECT NO: 2007556.00

DRAWN BY: STAFF CHECKED BY: TED

ISSUED:

NO.	DATE	DESCRIPTION
1	10/26/07	SCHEMATIC DESIGN
2	12/18/07	DESIGN DEVELOPMENT
3	02/08/08	CONSTRUCTION DOCUMENTS
4	03/04/08	CONSTRUCTION BID DOCUMENTS

REVISIONS:

NO.	DATE	DESCRIPTION

IRRIGATION PLAN

CONSTRUCTION BID DOCUMENTS
MARCH 4, 2008

SHEET NUMBER

LI101

IRRIGATION PLAN

0 10' 20' 40'

SCALE: 1" = 20'-0"

N

By Stand - Feb 29, 2008 - 4:42pm
S:\Projects\2007556.00 Hurst Center\Construct Drawings\LI101.DWG

MHTN ARCHITECTS, INC.
420 East South Temple
Suite 100
Salt Lake City, Utah 84111
Telephone (801) 595-6700
Telefax (801) 595-6717
www.mhtn.com

HURST CENTER FOR LIFELONG LEARNING
WEBER STATE UNIVERSITY

UTAH STATE DIVISION OF FACILITIES CONSTRUCTION MANAGEMENT- DFCM PROJECT NO. 07110810

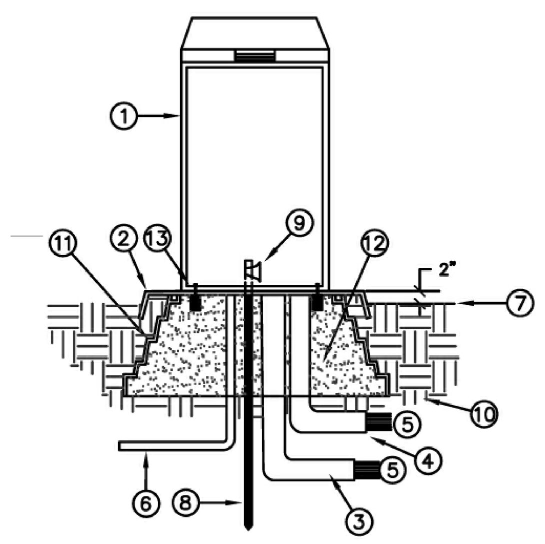

1. CONTROLLER AND CONTROLLER ENCLOSURE – SEE IRRIGATION EQUIPMENT SCHEDULE
2. QUICKPAD 3/16" MIN. THCKNESS ALUMINUM POWDER COATED PERFORMED PAD
3. PVC SWEEP ELL STATIONS 1–24
4. PVC SWEEP ELL STATIONS 25–40 (IF APPLICABLE)
5. DIRECT BURIAL CONTROL WIRES TO CONTROL VALVES
6. 110–VOLT SERVICE IN CONDUIT
7. FINISH GRADE
8. 5/8" X 8' COPPER GROUND ROD
9. BRONZE GROUND CLAMP
10. UBGRADE COMPACTED TO 90%
11. PREFORMED PAD SUPPORT BASE
12. FILL INSIDE BASE WITH PEA GRAVEL
13. QUICKPAD FASTENING BRACKET (2)

CONTROLLER & ENCLOSURE

NTS

COPYRIGHT (c) 2004 by Bingham Engineering
THIS DRAWING IS BEING FURNISHED FOR USE AT WEBER STATE UNIVERSITY ONLY. IT SHALL NOT BE DUPLICATED, IN WHOLE OR IN PART, NOR USED FOR OTHER PURPOSES WITHOUT THE CONSENT OF BINGHAM ENGINEERING.

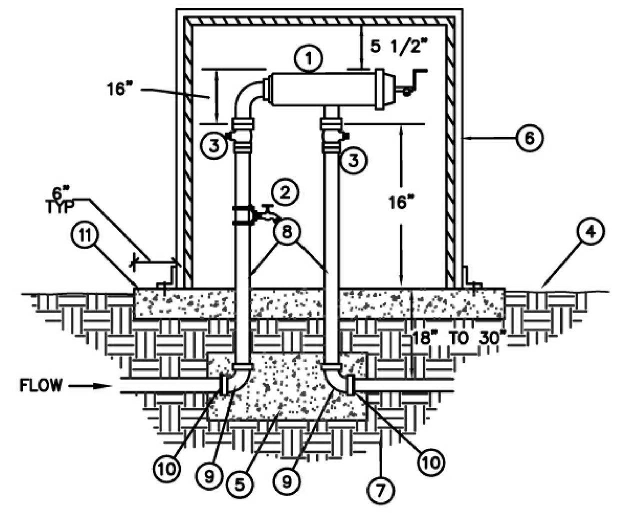

1. 6 " STEEL INLINE FILTER WITH WEAVEWIRE SCREEN (200 MICRON) – SEE IRRIGATION EQUIPMENT SCHEDULE
2. 3/4" BRASS HOSE BIB AND SADDLE
3. 8" FL WAFER BUTTERFLY VALVE
4. FINISH GRADE
5. CONCRETE THRUST BLOCKS (TYP.). WRAP PIPES W/ 10 MIL TAPE. CAST AGAINST UNDISTURBED SOIL
6. BACKFLOW ENCLOSURE – SEE IRRIGATION EQUIPMENT SCHEDULE (FILTER) (INSTALL PER MANUFACTURER'S SPECIFICATIONS)
7. 8" FL CAST PIPE
8. 8" FL X PE, SPOOL LENGTH AS REQUIRED (TYP.)
9. 8" FL ELL (TYP.)
10. 8" INSTA FLANGE ADAPTER
11. 4" THICK CONCRETE PAD (SIZE AS REQUIRED)

FILTER ASSEMBELY

NTS

COPYRIGHT (c) 2004 by Bingham Engineering
THIS DRAWING IS BEING FURNISHED FOR USE AT WEBER STATE UNIVERSITY ONLY. IT SHALL NOT BE DUPLICATED, IN WHOLE OR IN PART, NOR USED FOR OTHER PURPOSES WITHOUT THE CONSENT OF BINGHAM ENGINEERING.

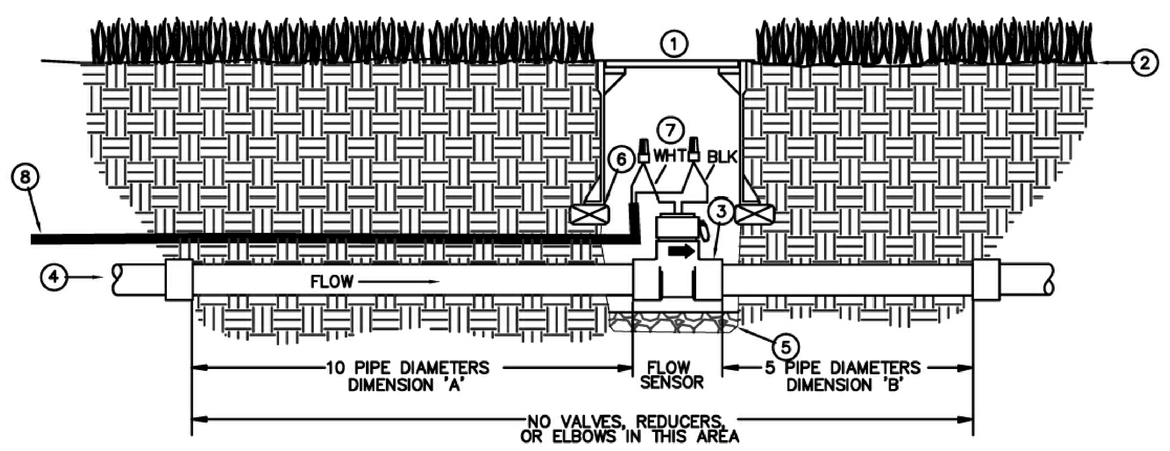

1. 10" ROUND GREEN PLASTIC VALVE BOX, W/ BOLT LOCK, AMATEK OR EQUAL, MARKED "G.V." IN 2" WHITE LETTERS
2. FINISH GRADE
3. FLOW SENSOR
4. PVC MAINLINE
5. 4" MIN. DEPTH PEA GRAVEL
6. 2x4 REDWOOD OR BRICK BLOCKING
7. WATERPROOF WIRE SPLICES
8. SENSOR CABLE

FLOW SENSOR INSTALLATION

NTS

COPYRIGHT (c) 2004 by Bingham Engineering
THIS DRAWING IS BEING FURNISHED FOR USE AT WEBER STATE UNIVERSITY ONLY. IT SHALL NOT BE DUPLICATED, IN WHOLE OR IN PART, NOR USED FOR OTHER PURPOSES WITHOUT THE CONSENT OF BINGHAM ENGINEERING.

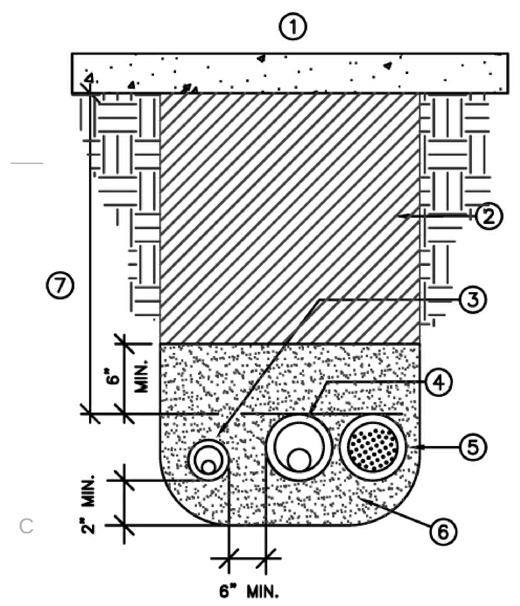

1. HARDSCAPE SURFACE – SEE CIVIL PLANS
2. BACKFILL MATERIAL – SEE NOTES
3. LATERAL LINE W/SLEEVE.
4. PRESSURE MAIN LINE SLEEVE
5. CONTROL WIRE SLEEVE (SAME SIZE AS MAIN LINE SLEEVE)
6. BEDDING MATERIAL – SEE NOTES
7. MINIMUM COVER:
   12" UNDER WALKS
   18" UNDER STREETS

NOTES:
- SLEEVES 4" AND SMALLER USE PVC SCH. 40 PIPE.
- SLEEVES >4" USE PVC CLASS 200 PIPE
- ALL SLEEVES SHALL BE TWO (2) TIMES LARGER THAN DIAMETER OF PIPE TO BE SLEEVED.
- INSTALL SLEEVES AT A DEPTH TO AVOID CONFLICT WITH OTHER UTILITIES AND MAINS.

SLEEVING DETAIL

NTS

COPYRIGHT (c) 2004 by Bingham Engineering
THIS DRAWING IS BEING FURNISHED FOR USE AT WEBER STATE UNIVERSITY ONLY. IT SHALL NOT BE DUPLICATED, IN WHOLE OR IN PART, NOR USED FOR OTHER PURPOSES WITHOUT THE CONSENT OF BINGHAM ENGINEERING.

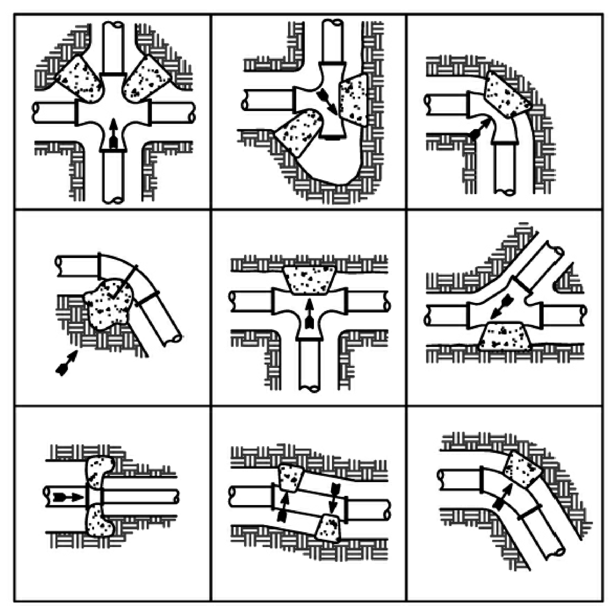

DIRECTION OF THRUST (TYP.)
INSTALL THRUST BLOCKS ON ALL 3" FITTINGS AND VALVES

THRUST BLOCK DETAILS

NTS

COPYRIGHT (c) 2004 by Bingham Engineering
THIS DRAWING IS BEING FURNISHED FOR USE AT WEBER STATE UNIVERSITY ONLY. IT SHALL NOT BE DUPLICATED, IN WHOLE OR IN PART, NOR USED FOR OTHER PURPOSES WITHOUT THE CONSENT OF BINGHAM ENGINEERING.

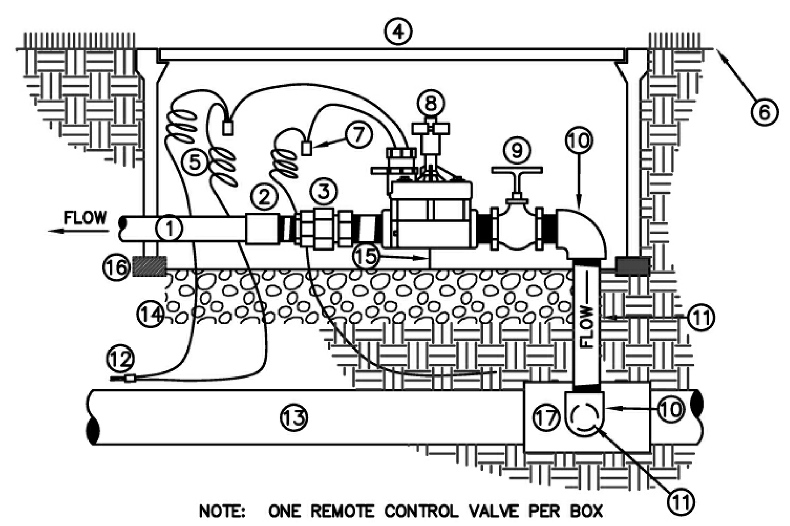

NOTE: ONE REMOTE CONTROL VALVE PER BOX

1. LATERAL LINE
2. PVC SCH. 40 FEMALE ADAPTER
3. PVC SCH. 80 UNION
4. GREEN PLASTIC VALVE BOX W/ BOLT LOCK (CARSON–BROOKS OR APPROVED EQUAL) SIZE AS REQUIRED
5. PROVIDE 18" EXPANSION LOOP AT EACH WIRE CONNECTOR IN BOX.
6. FINISH GRADE
7. WATER TIGHT WIRE CONNECTORS (TYP.)
8. VALVE – SEE EQUIPMENT SCHEDULE
9. GATE VALVE (LINE SIZE)
10. PVC SCH. 80 ELL
11. PVC SCH. 80 NIPPLE, LENGTH AS REQUIRED
12. WIRES TO CONTROLLER, TAPE AND BUNDLE EVERY 10' – SEE TRENCH DETAIL
13. MAIN LINE
14. 4" MIN. DEPTH CLEAN PEA GRAVEL
15. 2" MIN. CLEARANCE REQUIRED
16. 2"x4" REDWOOD OR BRICK BLOCKING
17. PVC SCH. 40 TEE (OR ELL)

CONTROL VALVE ASSEMBLY

NTS

COPYRIGHT (c) 2004 by Bingham Engineering
THIS DRAWING IS BEING FURNISHED FOR USE AT WEBER STATE UNIVERSITY ONLY. IT SHALL NOT BE DUPLICATED, IN WHOLE OR IN PART, NOR USED FOR OTHER PURPOSES WITHOUT THE CONSENT OF BINGHAM ENGINEERING.

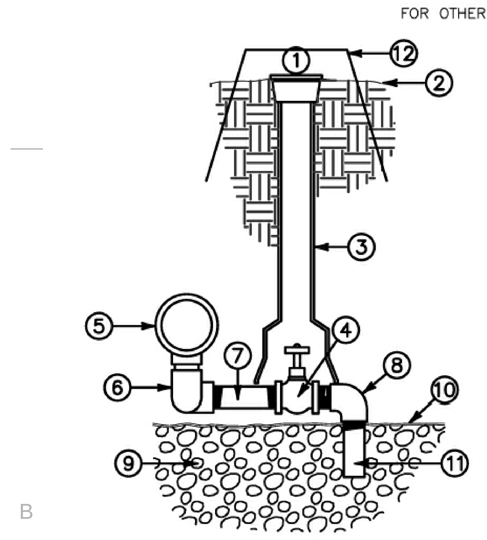

1. ADJUSTABLE CURB BOX W/ BOLT LID, CARSON–BROOKS 250 OR EQUAL
2. FINISH GRADE
3. ADJUST HEIGHT AS REQUIRED
4. 3/4" BRASS GLOBE VALVE WITH CROSS HANDLE – SEE IRRIGATION EQUIPMENT SCHEDULE
5. PVC MAINLINE & SERVICE TEE
6. (2)–FIPTxFIPT 90° ELL (2)–3/4" x CLOSE PVC NIPPLE
7. 3/4"x12" PVC NIPPLE
8. 3/4" 90° STREET ELL
9. 3/4" ROCK SUMP – 6 C.F. MIN. SIZE
10. FILTER FABRIC COVERING SUMP
11. 3/4" x 6" PVC TOE NIPPLE
12. 10" ROUND GREEN PLASTIC VALVE BOX, CARSON–BROOKS 910 OR EQUAL

NOTE:
1) ALL PVC NIPPLES TO BE SCHEDULE 80.
2) PROVIDE VALVE KEY TO OWNER

MANUAL DRAIN VALVE

NTS

COPYRIGHT (c) 2004 by Bingham Engineering
THIS DRAWING IS BEING FURNISHED FOR USE AT WEBER STATE UNIVERSITY ONLY. IT SHALL NOT BE DUPLICATED, IN WHOLE OR IN PART, NOR USED FOR OTHER PURPOSES WITHOUT THE CONSENT OF BINGHAM ENGINEERING.

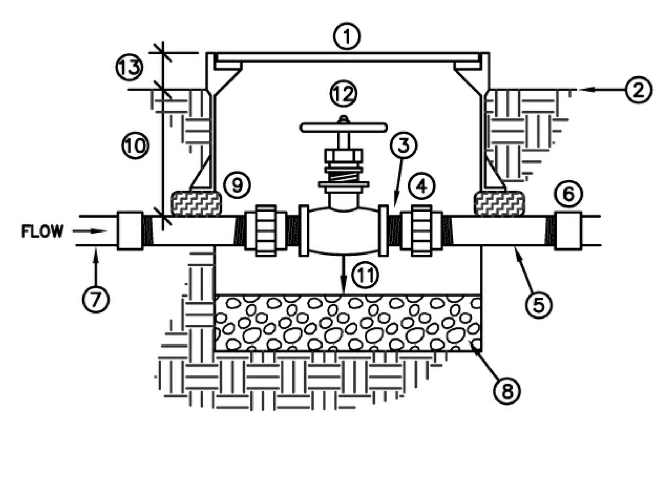

1. 10" ROUND GREEN PLASTIC VALVE BOX, W/ BOLT LOCK, CARSON–BROOKS OR EQUAL, MARKED "G.V." IN 2" WHITE LETTERS
2. FINISH GRADE
3. CLOSE NIPPLE (TYP.)
4. PVC SCH. 80 UNION – SIZE AS REQUIRED
5. 12" MIN. GALVANIZED NIPPLE
6. PVC SCH. 80 FEMALE ADAPTER (TYP.)
7. PVC MAINLINE
8. 4" MIN. DEPTH PEA GRAVEL
9. 2"x4" REDWOOD OR BRICK BLOCKING (TYP.)
10. DEPTH – SEE NOTES
11. 2" MINIMUM CLEARANCE REQUIRED
12. THREADED GATE VALVE – SEE IRRIGATION EQUIPMENT SCHEDULE
13. SHRUBS–2"; SOD–1 1/2"; SEED–1"

GATE VALVE (THREADED)

NTS

COPYRIGHT (c) 2004 by Bingham Engineering
THIS DRAWING IS BEING FURNISHED FOR USE AT WEBER STATE UNIVERSITY ONLY. IT SHALL NOT BE DUPLICATED, IN WHOLE OR IN PART, NOR USED FOR OTHER PURPOSES WITHOUT THE CONSENT OF BINGHAM ENGINEERING.

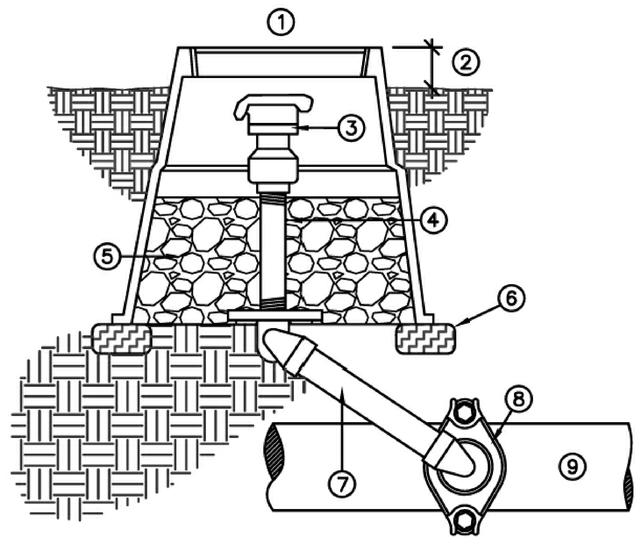

1. 10" ROUND GREEN PLASTIC VALVE BOX, CARSON–BROOKS 910 OR EQUAL
2. HEIGHT ABOVE FINISH GRADE: 1 1/2" IN TURF AREAS (SODDED); 1" IN TURF AREAS (SEEDED); 2" IN PLANTING AREAS
3. QUICK COUPLER VALVE – SEE EQUIPMENT SCHEDULE
4. BRASS NIPPLE, LENGTH AS REQUIRED
5. 6" MIN. DEPTH CLEAN PEA GRAVEL
6. REDWOOD OR BRICK BLOCKING, TYPICAL
7. 12" LASCO UNITIZED SWING JOINT W/ BRASS INSERT STABILIZER ELBOW, OR 12" SPEARS SWING JOINT RISER ASSEMBLY W/ BRASS FEMALE THREAD 90° ELL OUTLET
8. DUCTILE IRON SERVICE SADDLE W/ S.S. STRAP (SIDE MOUNTED, SIZE AS REQUIRED)
9. PVC MAIN LINE

QUICK COUPLING VALVE

NTS

COPYRIGHT (c) 2004 by Bingham Engineering
THIS DRAWING IS BEING FURNISHED FOR USE AT WEBER STATE UNIVERSITY ONLY. IT SHALL NOT BE DUPLICATED, IN WHOLE OR IN PART, NOR USED FOR OTHER PURPOSES WITHOUT THE CONSENT OF BINGHAM ENGINEERING.

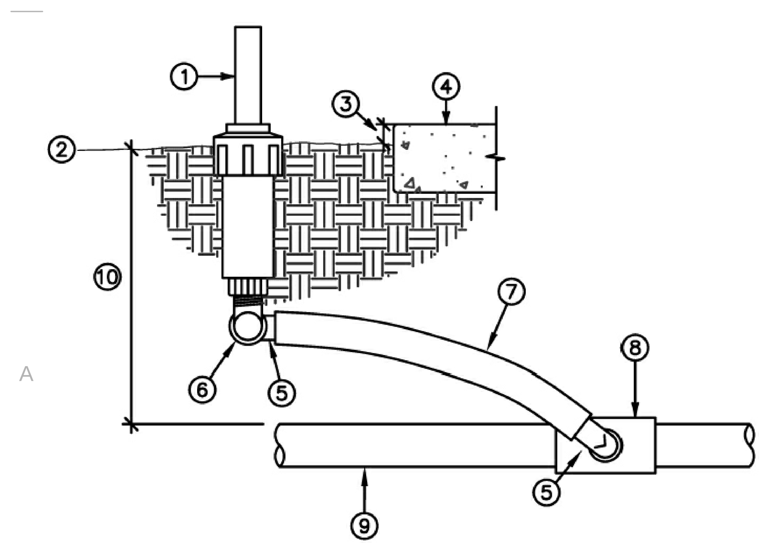

1. POP–UP SPRAY HEAD – SEE LEGEND
2. FINISH GRADE
3. 1" – 1 1/2"
4. NOTE: ALL SPRAY HEADS TO BE PLACED 2" CLEAR OF ALL HARDSCAPE SURFACES
5. SWING PIPE ELL WITH SPIRAL BARB FITTING (TYP.)
6. MARLEX STREET ELL
7. FLEXIBLE SWING PIPE, 12" MIN. LENGTH
8. PVC SCH 40 SxSxT TEE (OR ELL)
9. PVC LATERAL LINE, SIZE AS NOTED ON PLAN
10. DEPTH – SEE NOTES & TRENCH DETAIL

4" POP-UP SPRAY SPRINKLER

NTS

COPYRIGHT (c) 2004 by Bingham Engineering
THIS DRAWING IS BEING FURNISHED FOR USE AT WEBER STATE UNIVERSITY ONLY. IT SHALL NOT BE DUPLICATED, IN WHOLE OR IN PART, NOR USED FOR OTHER PURPOSES WITHOUT THE CONSENT OF BINGHAM ENGINEERING.

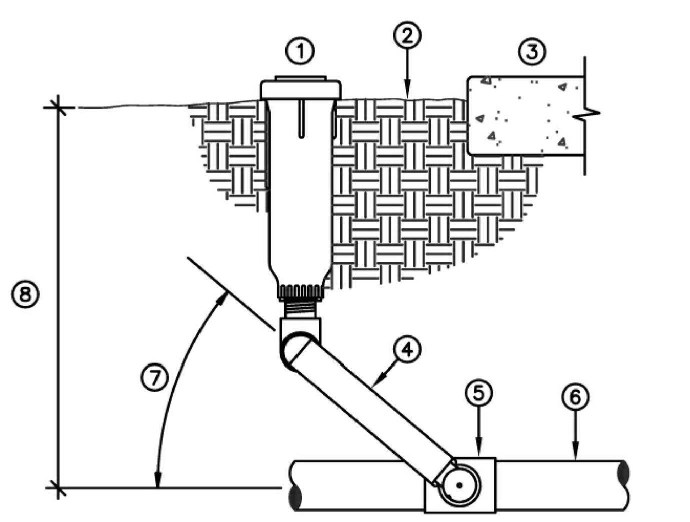

1. POP–UP ROTOR SPRINKLER – SEE LEGEND
2. FINISH GRADE
3. NOTE: ALL SPRAY HEADS TO BE PLACED 2" CLEAR OF ALL HARDSCAPE SURFACES
4. LASCO UNITIZED SWING JOINT OR SPEARS SWING JOINT RISER ASSEMBLY; 8" LENGTH; SIZE AS REQUIRED
5. PVC SCH 40 SxSxT TEE (OR ELL)
6. PVC LATERAL LINE, SIZE AS NOTED ON PLAN
7. SWING JOINT ARM INSTALLED AT ANGLE BETWEEN 30 AND 45 DRG. OF LATERAL PIPE
8. DEPTH – SEE NOTES & TRENCH DETAIL

POP-UP GEAR DRIVE ROTOR SPRINKLER

NTS

COPYRIGHT (c) 2004 by Bingham Engineering
THIS DRAWING IS BEING FURNISHED FOR USE AT WEBER STATE UNIVERSITY ONLY. IT SHALL NOT BE DUPLICATED, IN WHOLE OR IN PART, NOR USED FOR OTHER PURPOSES WITHOUT THE CONSENT OF BINGHAM ENGINEERING.

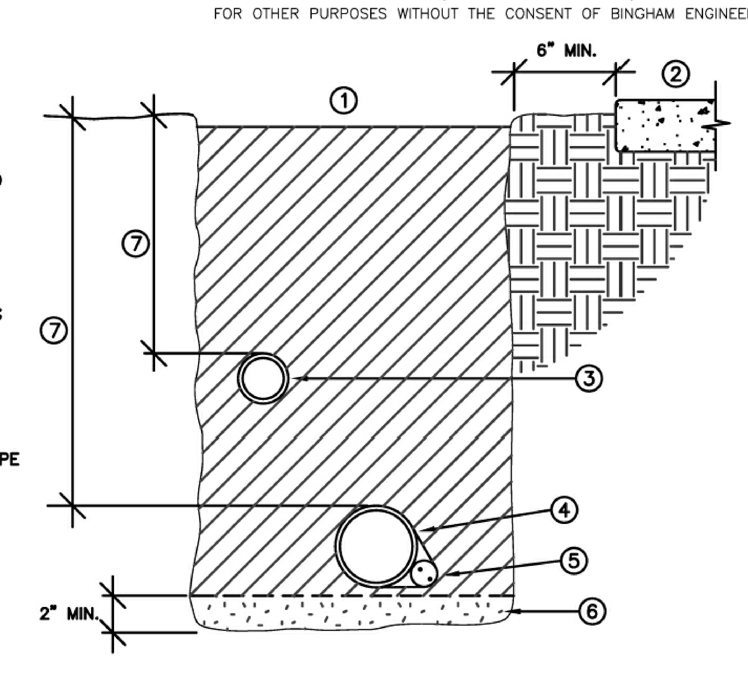

1. BACKFILL MATERIAL – SEE NOTES, COMPACT TO 90% MIN.
2. ADJACENT HARD SURFACE
3. NON–PRESSURE LATERAL LINE
4. PRESSURE MAIN LINE
5. DIRECT BURIAL, LOW VOLTAGE CONTROL WIRES; TAPE AND BUNDLE AT 10 FT. O.C.
6. BEDDING MATERIAL – SEE NOTES
7. PIPE DEPTHS – SEE NOTES

NOTE: SEE SLEEVING DETAIL FOR TRENCHING IN PAVED AREAS.

TRENCH DETAIL

NTS

COPYRIGHT (c) 2004 by Bingham Engineering
THIS DRAWING IS BEING FURNISHED FOR USE AT WEBER STATE UNIVERSITY ONLY. IT SHALL NOT BE DUPLICATED, IN WHOLE OR IN PART, NOR USED FOR OTHER PURPOSES WITHOUT THE CONSENT OF BINGHAM ENGINEERING.

IRRIGATION LEGEND

HUNTER INST- 04-CV POP UP SPRAY HEADS IN (SOD) LAWN AREAS
HUNTER INST-12-CV POP UP SPRAY HEADS IN ALL OTHER AREAS
WITH 15' RADIUS PLASTIC NOZZLE @ 30 PSI

- FULL CIRCLE
- HALF CIRCLE
- QUARTER CIRCLE
- 15A ADJUSTABLE ARC NOZZLE

HUNTER INST- 04-CV POP UP SPRAY HEADS IN (SOD) LAWN AREAS
HUNTER INST-12-CV POP UP SPRAY HEADS IN ALL OTHER AREAS
WITH 12' RADIUS PLASTIC NOZZLE @ 30 PSI

- FULL CIRCLE
- HALF CIRCLE
- QUARTER CIRCLE
- 12A ADJUSTABLE ARC NOZZLE

HUNTER INST- 04-CV POP UP SPRAY HEADS IN (SOD) LAWN AREAS
HUNTER INST-12-CV POP UP SPRAY HEADS IN ALL OTHER AREAS
WITH 10' RADIUS PLASTIC NOZZLE @ 30 PSI

- FULL CIRCLE
- HALF CIRCLE
- QUARTER CIRCLE
- 10A ADJUSTABLE ARC NOZZLE

HUNTER INST- 04-CV POP UP SPRAY HEADS IN (SOD) LAWN AREAS
HUNTER INST-12-CV POP UP SPRAY HEADS IN ALL OTHER AREAS
WITH 8' RADIUS PLASTIC NOZZLE @ 30 PSI

- FULL CIRCLE
- HALF CIRCLE
- QUARTER CIRCLE
- 10A ADJUSTABLE ARC NOZZLE

HUNTER INST- 04-CV POP UP SPRAY HEADS IN (SOD) LAWN AREAS
HUNTER INST-12-CV POP UP SPRAY HEADS IN ALL OTHER AREAS
WITH 5' RADIUS PLASTIC NOZZLE @ 30 PSI

- HALF CIRCLE
- QUARTER CIRCLE

CONTROL VALVE DESIGNATION

8 | 2.39 | 1"
VALVE NUMBER
GALLONS PER MINUTE
VALVE SIZE

RAINBIRD EFB-CP-PRS-D BRASS REMOTE CONTROL VALVE WITH PRS-D PRESSURE REGULATING MODULE SET TO ACHEIVE SPECIFIED PSI.

SIZE AS SHOWN

RAINBIRD EFB-CP REMOTE CONTROL VALVE FOR DRIP ZONES. INSTALL WITH VALVE: 1" BALL VALVE, INLINE 1" DISC FILTER, 1" INLINE PRESSURE REGULATOR. - SEE DETAIL (WHERE TOTAL FLOW OF ZONE IS BELOW 5 GPM. INSTALL 1" PESB VALVE)

1"

RAINMASTER IRRIGATION CONTROLLER WITH STAINLESS STEEL PEDISTAL. USE ONLY RAINMASTER COMMUNICATON CABLE TO INSTALL THE FLOW SENSOR.
INSTALL CONTROLLER WITH THE FOLLOWING EQUIPMENT:

EV-GROUND-ROD	GROUNDING ROD
DX-FLOW	FLOW SENSING BOARD
DX-RF	RADIO COMMUNICATION BOARD
EV-ANT-FED-KIT	LOW GAIN ANTENNA
PRM-RAINMASTER-KIT	REMOTE CONTROL RECIEVER UNIT

A RAINMASTER DX12-UPED-T 12 STATION CONTROLLER
B REPLACE EXISTING CONTROLLER WITH RAINMASTER DX18-UPED-T 18 STATION CONTROLLER

NETAFIM TECHLINE DRIPPER LINE
TLCV 6-12 SPACED AT 18" O.C.

1" TWO PIECE QUICK COUPLER WITH RUBBER COVER - MARKED FOR NON-POTABLE WATER

SCHEDULE 40 PVC MAINLINE
2"

EXISTING MAINLINE
FIELD VERIFY SIZE & LOCATION

SCHEDULE 40 PVC LATERAL LINE
SIZE AS SHOWN

PVC PIPE SLEEVE
TWICE THE SIZE OF THE THROUGH PIPES

PVC PIPE CONDUIT
2"

POINT OF CONNECTION TO 2" PRESSURE IRRIGATION LINE - SEE CIVIL

POC

RAPHAEL MASTER CONTROL VALVE ASSEMBLY, NORMALLY OPEN, PRESSURE REGULATING, 2-WAY BRASS PILOT, GREEN SPRING

M 2"

AMIAD 2" STEEL INLINE FILTER ASSEMBLY WITH A BRUSHAWAY CLEANING SYSTEM AND WEAVEWIRE SCREEN (300 MICRON) IN ALUMINUM ENCLOSURE

F 2"

RAINMASTER 2" FLOW SENSOR

FS 2"

NIBCO RESILIENT SEAT GATE VALVE, NON-RISING STEM

2"

SEAL

MHTN PROJECT NO. 2007556.00
DRAWN BY: STAFF CHECKED BY: TED

ISSUED:

NO.	DATE	DESCRIPTION
1	10/26/07	SCHEMATIC DESIGN
2	12/18/07	DESIGN DEVELOPMENT
3	02/08/08	CONSTRUCTION DOCUMENTS
4	03/04/08	CONSTRUCTION BID DOCUMENTS

REVISIONS:

NO.	DATE	DESCRIPTION

IRRIGATION DETAILS

CONSTRUCTION BID DOCUMENTS
MARCH 4, 2008

SHEET NUMBER

LI501

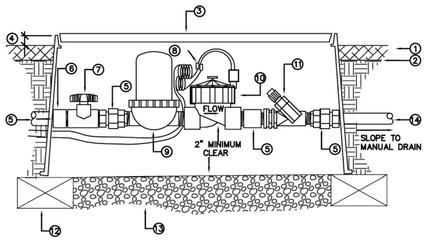

1. PLANTING BED MULCH, SEE PLANTING NOTES FOR DEPTH
2. FINISH GRADE
3. CARSON–BROOKS 1220 JUMBO SERIES VALVE BOX
4. 1" MAX DEPTH
5. PVC UNION
6. PVC SHC 40 COUPLING / BUSHING
7. BALL VALVE
8. WATERPROOF CONNECTORS
9. INLINE 1" DISC FILTER, ANGLED
10. REMOTE CONTROL VALVE
11. INLINE PRESSURE REGULATOR
12. 2"x4" REDWOOD OR BRICK BLOCKING
13. 4" MIN. DEPTH WASHED PEA GRAVEL
14. PVC SUPPLY HEADER

DRIP ZONE REMOTE CONTROL VALVE

NTS

COPYRIGHT (c) 2004 by Bingham Engineering

THIS DRAWING IS BEING FURNISHED FOR USE AT WEBER STATE UNIVERSITY ONLY. IT SHALL NOT BE DUPLICATED, IN WHOLE OR IN PART, NOR USED FOR OTHER PURPOSES WITHOUT THE CONSENT OF BINGHAM ENGINEERING.

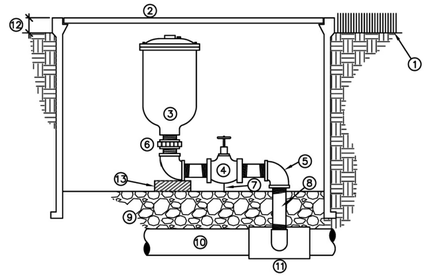

1. FINISH GRADE
2. PLASTIC VALVE BOX W/ LOCK BOLT (CARSON–BROOKS OR EQUAL), SIZE AS REQUIRED
3. AIR RELEASE VALVE – SEE IRRIGATION EQUIPMENT SCHEDULE (INSTALL PER MANUFAC. SPECS.)
4. BRASS BALL VALVE, SIZE AS REQUIRED
5. 90° BRASS ELL (TYP.)
6. BRASS UNION
7. 2" MIN. CLEARANCE REQUIRED
8. BRASS NIPPLE, LENGTH AS REQUIRED (TYP.)
9. 6" MIN. DEPTH WASHED PEA GRAVEL
10. MAIN LINE
11. SERVICE TEE, SIZE AS REQUIRED
12. SEED = 1"; SOD = 1 1/2"; SHRUBS = 2"
13. SUPPORT BLOCK FOR VALVE RECOMMENDED

AIR RELEASE VALVE ASSEMBLY

NTS

COPYRIGHT (c) 2004 by Bingham Engineering

THIS DRAWING IS BEING FURNISHED FOR USE AT WEBER STATE UNIVERSITY ONLY. IT SHALL NOT BE DUPLICATED, IN WHOLE OR IN PART, NOR USED FOR OTHER PURPOSES WITHOUT THE CONSENT OF BINGHAM ENGINEERING.

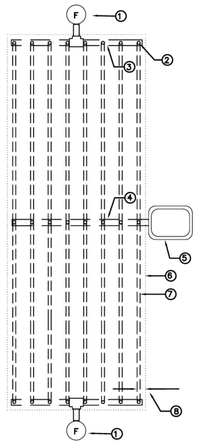

1. MANUAL FLUSH VALVE PLUMBED TO PVC
2. TLIAPVC CONNECTOR
3. 1 1/2" PVC EXHAUST HEADER
4. 1 1/2" PVC SUPPLY HEADER
5. REMOTE CONTROL VALVE WITH DISC FILTER AND PRESSURE REDUCING VALVE
6. AREA PERIMETER
7. TECHLINE CV TUBING LATERAL
8. PERIMETER LATERALS 2" TO 4" FROM EDGE

CENTER FEED DRIP LAYOUT

NTS

COPYRIGHT (c) 2004 by Bingham Engineering

THIS DRAWING IS BEING FURNISHED FOR USE AT WEBER STATE UNIVERSITY ONLY. IT SHALL NOT BE DUPLICATED, IN WHOLE OR IN PART, NOR USED FOR OTHER PURPOSES WITHOUT THE CONSENT OF BINGHAM ENGINEERING.

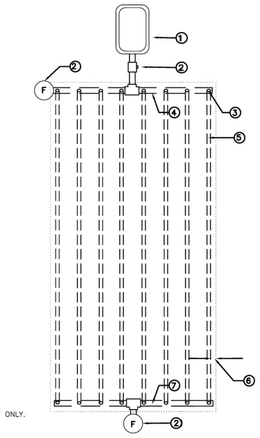

1. REMOTE CONTROL VALVE WITH DISC FILTER AND PRESSURE REDUCING VALVE
2. MANUAL FLUSH VALVE PLUMBED TO PVC
3. TLIAPVC CONNECTOR
4. 1 1/2" PVC SUPPLY HEADER
5. TECHLINE CV TUBING
6. PERIMETER DRIPLINE 2" TO 4" FROM EDGE
7. 1 1/2" PVC EXHAUST HEADER

END FEED DRIP LAYOUT

NTS

COPYRIGHT (c) 2004 by Bingham Engineering

THIS DRAWING IS BEING FURNISHED FOR USE AT WEBER STATE UNIVERSITY ONLY. IT SHALL NOT BE DUPLICATED, IN WHOLE OR IN PART, NOR USED FOR OTHER PURPOSES WITHOUT THE CONSENT OF BINGHAM ENGINEERING.

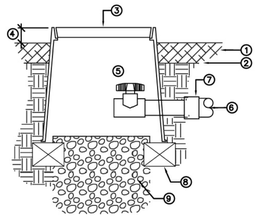

1. PLANTING BED MULCH SEE PLANTING NOTES FOR DEPTH
2. FINISH GRADE
3. PLASTIC VALVE BOX CARSON–BROOKS 809 OR EQUAL
4. 1" MAX. DEPTH
5. MANUAL FLUSHING VALVE
6. PVC EXHAUST HEADER
7. PVC REDUCER ADAPTER (S X 1/2") FPT (SIZE AS REQ'D)
8. (3) 2" X 4" REDWOOD OR BRICK BLOCKING
9. 1 C.F. WASHED PEA GRAVEL

DRIP FLUSH VALVE (PLUMBED TO PVC)

NTS

COPYRIGHT (c) 2004 by Bingham Engineering

THIS DRAWING IS BEING FURNISHED FOR USE AT WEBER STATE UNIVERSITY ONLY. IT SHALL NOT BE DUPLICATED, IN WHOLE OR IN PART, NOR USED FOR OTHER PURPOSES WITHOUT THE CONSENT OF BINGHAM ENGINEERING.

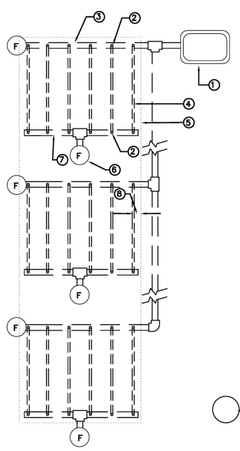

1. REMOTE CONTROL VALVE WITH DISC FILTER AND PRESSURE REDUCING VALVE
2. TLIAPVC CONECTOR
3. 1 1/2" PVC SUPPLY HEADER
4. TECHLINE CV TUBING LATERAL
5. ISLAND PERIMETER
6. MANUAL FLUSH VALVE
7. 1 1/2" PVC EXHAUST HEADER
8. PERIMETER DRIPLINE 2" TO 4" FROM EDGE

ISLAND DRIP LAYOUT

NTS

COPYRIGHT (c) 2004 by Bingham Engineering

THIS DRAWING IS BEING FURNISHED FOR USE AT WEBER STATE UNIVERSITY ONLY. IT SHALL NOT BE DUPLICATED, IN WHOLE OR IN PART, NOR USED FOR OTHER PURPOSES WITHOUT THE CONSENT OF BINGHAM ENGINEERING.

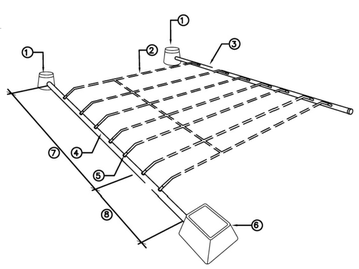

1. MANUAL FLUSHING VALVE PLUMBED TO PVC
2. TECHLINE CV TUBING – INSTALL AT GRADE UNDER MULCH
3. 1 1/2" PVC EXHAUST HEADER FOR DEPTH SEE NOTES
4. 1 1/2" PVC SUPPLY HEADER FOR DEPTH SEE NOTES
5. TLIAPVC CONNECTOR
6. REMOTE CONTROL VALVE
7. ON SLOPES, USE THE SPECIFIED DRIPLINE SPACING ON THE TOP 2/3 OF THE SLOPE
8. ON SLOPES, USE THE SPECIFIED DRIPLINE SPACING PLUS 25% ON THE BOTTOM 1/3 OF SLOPE

NOTE: ON SLOPES, ALIGN DRIPLINE PARALLEL TO THE CONTOURS OF THE SLOPE

DRIPLINE CIRCUIT LAYOUT

NTS

COPYRIGHT (c) 2004 by Bingham Engineering

THIS DRAWING IS BEING FURNISHED FOR USE AT WEBER STATE UNIVERSITY ONLY. IT SHALL NOT BE DUPLICATED, IN WHOLE OR IN PART, NOR USED FOR OTHER PURPOSES WITHOUT THE CONSENT OF BINGHAM ENGINEERING.

NOTE:
INSTALL ONE DRIPPER LINE ON EACH SIDE OF ALL SHRUBS TYPICAL

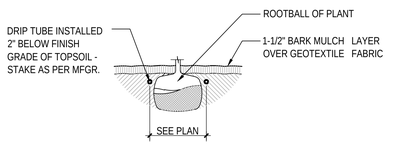

A3 DRIP LINE PLACEMENT

NTS LI501 1-dsr09

NOTE:
RUN ONE EXTRA WIRE FROM THE ADJACENT CONTROLLER TO EACH GROUP OF VALVES FOR FUTURE USE AND STUB INTO THE VALVE BOX.

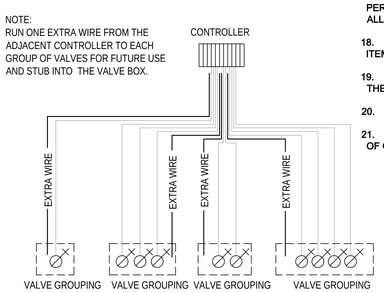

A4 SPARE WIRE DETAIL

NTS LI501 1-dsr07

IRRIGATION NOTES

1. IRRIGATION PLAN IS DIAGRAMMATIC. ALL IRRIGATION EQUIPMENT SHALL BE LOCATED IN PLANTING AREAS ONLY, UNLESS NOTED OTHERWISE. REFER TO THE IRRIGATION LEGEND, DETAILS, AND SPECIFICATIONS FOR EQUIPMENT AND INSTALLATION. SPECIFICATIONS SHALL TAKE PRECEDENCE OVER INSTALLATION DETAILS.

2. LANDSCAPE CONTRACTOR SHALL VERIFY LOCATION OF IRRIGATION POINT OF CONNECTION (POC) AND THE STATIC WATER PRESSURE AT THAT LOCATION PRIOR TO BEGINNING ANY IRRIGATION WORK. IF THE LOCATION OR WATER PRESSURE IS DIFFERENT THAN THAT EXPRESSED BY THE LANDSCAPE ARCHITECT, OR IF THE PRESSURE APPEARS TO BE UNUSUALLY HIGH OR LOW, THE CONTRACTOR SHALL NOTIFY THE LANDSCAPE ARCHITECT IMMEDIATELY.

3. CONTRACTOR SHALL KEEP THE PREMISES CLEAN AND FREE OF EXCESS EQUIPMENT, MATERIALS AND RUBBISH INCIDENTAL TO WORK OF THIS SECTION.

4. PIPE FITTINGS SHALL BE AS FOLLOWS:
A. ALL RISERS AND EXPOSED FITTINGS SHALL BE P.V.C. SCHEDULE 80.
B. ALL UNDERGROUND FITTINGS SHALL BE P.V.C. SCHEDULE 40.
C. ALL MAIN LINE TWO AND HALF (2 ½) INCH OR GREATER SHALL USE DUCTILE IRON FITTINGS. ALL MAINLINE TWO (2) INCH OR SMALLER SHALL USE PVC FITTINGS.

5. IRRIGATION CONTROL WIRES SHALL CONFORM TO THE FOLLOWING:
A. ALL WIRE SHALL BE TYPE UF, 600 VOLT, SOLID COPPER , SINGLE CONDUCTOR WIRE. IT SHALL BE UL LISTED, DIRECT BURIAL TYPE, AND MINIMUM SIZE OF 14 GAUGE. ALL SPLICES AND CONNECTIONS SHALL BE WATER-TIGHT. ALL WIRES SHALL BE INSTALLED WITH TWO (2) FEET OF EXCESS WIRE (COILED) AT THE END OF EACH WIRE RUN, WIRE SPLICE, AND AT EACH CONTROLLER.
B. CONTROL WIRE SHALL BE BUNDLED EVERY 10' AND PLACED ADJACENT TO MAIN LINE.
C. ALL WIRE SPLICES SHALL BE LOCATED IN VALVE BOXES.

6. MANUAL DRAIN VALVES SHALL BE PLACED ON THE MAIN LINE AT ALL LOW SPOTS TO ENSURE COMPLETE DRAINAGE AND WINTERIZATION OF MAIN LINE. ALL MANUAL DRAINS SHALL BE PLACE IN SEPARATE VALVE BOXES PER INSTALLATION DETAILS.

7. CHECK VALVES SHALL BE USED WHERE INDICATED AND WHERE NECESSARY TO PREVENT WATER FLOW FROM LOWER ELEVATION HEADS WHEN SYSTEM IS TURNED OFF. INSTALL PER MANUFACTURE'S RECOMMENDATION, WITH A ONE (1) CU. FT. MIN. GRAVEL SUMP AROUND EACH DRAIN. .

8. ALL POP-UP SPRAY SPRINKLERS SHALL CONFORM TO THE FOLLOWING UNLESS SPECIFICALLY NOTED OTHERWISE ON THE PLANS:
A. SPRINKLERS LOCATED IN GRASS AREAS SHALL BE FOUR (4) INCHES IN HEIGHT.
B. SPRINKLERS LOCATED IN PLANTING BEDS SHALL BE TWELVE (12) INCHES IN HEIGHT.

9. DRIP IRRIGATION SHALL CONFORM TO THE FOLLOWING:
(DRIP LINES AT GRADE UNDER MULCH)
A. DRIP TUBING WITH PRESSURE COMPENSATING EMITTERS SHALL CONFORM TO THE FOLLOWING:
1. TUBING SHALL BE CONSTRUCTED OF HIGH QUALITY LINEAR, LOW DENSITY, UV-RESISTANT, POLYETHYLENE RESIN MATERIALS WITH INTERNAL, INTEGRAL DRIPPERS AT SPECIFIED INTERVALS.
2. DRIPPERS OR EMITTERS SHALL BE OF THE INDIVIDUAL, SELF-CLEANING, PRESSURE-COMPENSATING TYPE.

B. INLINE DRIP TUBING SHALL BE SPACED AT A DISTANCE EQUAL TO OR LESS THAN THE INLINE EMITTER SPACING. FOR SLOPE APPLICATIONS PLACE DRIP TUBING LATERALS PARALLEL TO THE SLOPE CONTOUR. WHEN SLOPES EXCEED 3% INCREASE THE RECOMMENDED LATERAL SPACING BY 25% ON THE LOWER 1/3 OF THE SLOPE.

C. ALL INSERT BARBED FITTINGS SHALL BE CONSTRUCTED OF MOLDED, UV-RESISTANT PLASTIC. EACH FITTING SHALL BE A MINIMUM OF TWO RIDGES OR BARBS PER OUTLET. ALL FITTINGS SHALL BE OF ONE MANUFACTURER AND SHALL BE AVAILABLE ON ONE OF THE FOLLOWING END CONFIGURATIONS:
1.1. BARBED INSERT FITTINGS
1.2. MALE PIPE THREADS (MPT) WITH BARBED INSERT FITTINGS
1.3. FEMALE PIPE THREADS (FPT) WITH BARBED INSERT FITTINGS

D. ALL DRIP TUBING SHALL BE SHALL BE HELD IN PLACE BY SOIL STAPLES AND SHALL CONFORM TO THE FOLLOWING:
1.1. SANDY SOIL - ONE STAPLE EVERY THREE (3') FEET AND TWO (2) STAPLES ON EACH CHANGE OF DIRECTION (TEE, ELBOW, OR CROSS)
1.2. LOAM SOIL - ONE STAPLE VERY FOUR (4') FEET AND TWO (2) STAPLES ON EACH CHANGE OF DIRECTION (TEE, ELBOW, OR CROSS)
1.3. CLAY SOIL - ONE STAPLE VERY FIVE (5') FEET AND TWO (2) STAPLES ON EACH CHANGE OF DIRECTION (TEE, ELBOW, OR CROSS)

E. REMOTE CONTROL VALVE ASSEMBLY SHALL CONTAIN THE FOLLOWING COMPONENTS:
1.1. PVC BALL VALVE
1.2. INLINE DISC OR SCREEN FILTER WITH 100 MICRON / 150 MESH FILTER ELEMENTS.
1.3. REMOTE CONTROL VALVE - CAPABLE OF OPERATING AT VERY LOW FLOWS
1.4. INLINE PRESSURE REGULATOR
ALL COMPONENTS SHALL BE INSTALLED ACCORDING TO MANUFACTURER'S RECOMMENDATIONS, AND LOCATED WITHIN A SINGLE VALVE BOX, ONE VALVE ASSEMBLY PER BOX.

F. PROVIDE THE FOLLOWING EQUIPMENT TO EACH VALVE CIRCUIT, LOCATED AND INSTALLED PER MANUFACTURER'S RECOMMENDATIONS:
1.1. LINE FLUSHING VALVE(S); MINIMUM OF ONE ON EACH EXHAUST HEADER AND ONE FOR EVERY 15 GPM IN THE CIRCUIT.
1.2. AIR/VACUUM RELIEF VALVE(S) AT ALL HIGH POINTS IN THE SYSTEM.
1.3. AUTOMATIC DRAINS AT ALL LOW POINTS ON THE SUPPLY AND EXHAUST HEADERS, WITH ONE LOCATED 2 FEET FROM THE CONTROL VALVE ASSEMBLY. THE DRAINS SHALL BE ANGLED DOWN AT 30 TO 45 DEGREES FROM HORIZONTAL .

G. INLINE DRIPPER TUBING SHALL BE INSTALLED AT FINISHED GRADE WITH SOIL STAPLES AND COVERED WITH THREE (3) INCHES OF SPECIFIED MULCH. SUPPLY AND EXHAUST HEADERS SHALL BE INSTALLED AT NORMAL LATERAL LINE DEPTHS.

H. INSTALLATION OF INLINE DRIP CIRCUITS SHALL GENERALLY CONFORM TO THE FOLLOWING STEPS:
1.1. ASSEMBLE AND INSTALL FILTER, REMOTE CONTROL VALVE AND PRESSURE REGULATING VALVE ASSEMBLY(S) IN ACCORDANCE WITH INSTALLATION DETAILS.
1.2. ASSEMBLE AND INSTALL SUPPLY HEADER(S) IN ACCORDANCE WITH INSTALLATION DETAILS. INCLUDE AUTOMATIC DRAIN AT LOW POINTS. TAPE OR PLUG ALL OPEN CONNECTIONS TO PREVENT DEBRIS CONTAMINATION.
1.3. INSTALL LATERAL DRIP LINES IN ACCORDANCE WITH DETAILS AND RELEVANT SPECIFICATIONS AND MANUFACTURER'S RECOMMENDATIONS. TAPE OR PLUG ALL OPEN ENDS WHILE INSTALLING TO PREVENT DEBRIS CONTAMINATION.
1.4. ASSEMBLE AND INSTALL EXHAUST HEADER(S) IN ACCORDANCE WITH INSTALLATION DETAILS. INCLUDE FLUSHING VALVE(S) AND AUTOMATIC DRAIN(S) AT LOW POINTS. TAPE OR PLUG ALL OPEN CONNECTIONS TO PREVENT DEBRIS CONTAMINATION.
1.5. INSTALL AIR/VACUUM RELIEF VALVE(S) AT THE ZONES HIGHEST POINT(S) IN ACCORDANCE WITH DETAILS.
1.6. THOROUGHLY FLUSH SUPPLY HEADER(S) AND CONNECT DRIP LATERAL LINES WHILE FLUSHING.
1.7. THOROUGHLY FLUSH DRIP LATERAL LINES AND CONNECT TO EXHAUST HEADER(S) AND ANY INTERCONNECTING DRIP LATERAL LINES WHILE FLUSHING
1.8. THOROUGHLY FLUSH EXHAUST HEADER(S) AND INSTALL LINE FLUSHING VALVES IN ACCORDANCE WITH DETAILS.

10. ALL PRESSURE MAIN LINES SHALL HAVE EIGHTEEN (18) INCHES TO THIRTY (30) INCHES OF COVER, AND ALL LATERAL LINES SHALL HAVE EIGHT (8) INCHES TO FOURTEEN (14) INCHES OF COVER. TRENCH BEDDING AND BACKFILL MATERIAL SHALL BE EXISTING SITE SOIL FREE OF ROCKS, DEBRIS, ETC. GREATER THAN ONE (1) INCH IN ANY DIMENSION THAT MAY DAMAGE IRRIGATION PIPE OR EQUIPMENT. IN THE EVENT OF BACKFILL SETTLEMENT, CONTRACTOR SHALL PERFORM REQUIRED REPAIRS AT HIS OWN COST.

11. WHERE POSSIBLE, ALL AUTOMATIC VALVES SHALL BE LOCATED WITHIN SHRUB AREAS AND INSTALLED IN GREEN VALVE BOXES, ONE VALVE PER BOX, WITH FOUR (4) INCHES OF 3/4" GRAVEL BENEATH THE VALVE. NO VALVE MANIFOLDS SHALL BE ALLOWED. GATE VALVES SHALL BE LOCATED IN SEPARATE VALVE BOXES. WIRE SPLICES SHALL ALSO BE LOCATED IN SEPARATE VALVE BOXES.

12. ALL MAIN LINE AND LATERAL LINES SHALL BE SLEEVED WITH P.V.C. SCHEDULE 40 PIPE (4" AND UNDER) OR CLASS 200 (GREATER THAN 4") WHERE THEY PASS UNDER PAVED AREAS. SLEEVE SIZE SHALL BE TWICE THE DIAMETER OF THE LINE TO BE SLEEVED UNLESS OTHERWISE NOTED ON THE PLANS.

13. AUTOMATIC CONTROLLERS SHALL BE OF THE SIZE AND TYPE NOTED, AND INSTALLED WHERE INDICATED ON IRRIGATION PLAN. CONTROL WIRES SHALL BE SLEEVED IN ELECTRICAL CONDUIT TO MAINLINE. 120-VOLT ELECTRICAL SERVICE TO CONTROLLERS SHALL BE PROVIDED BY THE LANDSCAPE CONTRACTOR. COORDINATE THIS WORK WITH ELECTRICAL AND OTHER CONTRACTORS FOR THIS PROJECT.

14. A MASTER VALVE SHALL BE INSTALLED ALONG WITH APPROPRIATE FLOW SENSING EQUIPMENT TO ELIMINATE EXCESS SYSTEM FLOW SHOULD A VALVE STICK OPEN AFTER A CYCLE HAS BEEN COMPLETED OR A MAIN LINE BREAK OCCURS.

15. PRIOR TO BACKFILLING IRRIGATION TRENCHES:
A. ALL MAIN LINES IN THE SYSTEM SHALL BE CAPPED AND PRESSURE TESTED AT 125 P.S.I. FOR A PERIOD OF FOUR (4) HOURS. ANY LEAKS FOUND SHALL BE CORRECTED BY REMOVING THE LEAKING PIPE OR FITTINGS AND INSTALLING NEW MATERIAL IN ITS PLACE. REPEAT PRESSURE TEST TO ASSURE ABSENCE OF LEAKS.
B. THE CONTRACTOR SHALL NOT ALLOW NOR CAUSE ANY OF HIS WORK TO BE COVERED UNTIL IT HAS BEEN INSPECTED, TESTED AND APPROVED BY THE OWNER/OWNER'S AUTHORIZED REPRESENTATIVE.
C. WHERE MAIN LINE WILL BE ALLOWED TO SIT UNCOVERED FOR ANY LENGTH OF TIME IN THE TRENCH PRIOR TO TESTING, SHADE MAIN LINE WITH A THIN COVERING OF SOIL TO MINIMIZE WEATHER-RELATED EXPANSION OR CONTRACTION OF PIPE.

16. IRRIGATION CONTRACTOR SHALL ADJUST ALL HEADS TO PROVIDE A UNIFORM COVERAGE AND TO KEEP SPRAY OFF BUILDINGS, WALKWAYS, WALLS, PARKING AREAS, AND DRIVES.

17. WHEN THE SPRINKLER SYSTEM IS COMPLETED THE CONTRACTOR SHALL, IN THE PRESENCE OF THE OWNER/OWNER'S AUTHORIZED REPRESENTATIVE, PERFORM A COVERAGE TEST OF WATER PROVIDED TO THE PLANTING AREAS TO ENSURE IT IS CONSISTENT AND UNIFORM. THE CONTRACTOR SHALL FURNISH ALL MATERIALS AND PERFORM ALL WORK REQUIRED TO CORRECT ANY INADEQUACIES OF COVERAGE AT HIS OWN COST.

18. THE CONTRACTOR SHALL FURNISH TO THE OWNER A COMPLETE "AS BUILT" DRAWING ON MYLAR AND TWO PRINTS SHOWING EXACT LOCATIONS OF ALL ITEMS INSTALLED. THESE ARE TO BE DELIVERED ON OR BEFORE FINAL INSPECTION.

19. A REDUCED IRRIGATION PLAN INDICATING ALL SYSTEMS AND THEIR APPROPRIATE SEQUENCED VALVES SHALL BE LAMINATED IN MYLAR AND MOUNTED ON THE INSIDE COVER OF THE IRRIGATION CONTROLLER(S).

20. IRRIGATION CONTRACTOR SHALL MAINTAIN THE SYSTEM FOR THE DURATION OF THE MAINTENANCE PERIOD AND SHALL WATER ON A DAILY BASIS.

21. IRRIGATION CONTRACTOR SHALL GUARANTEE THE ENTIRE IRRIGATION SYSTEM TO BE FREE OF DEFECTS IN WORKMANSHIP AND MATERIALS FOR A PERIOD OF ONE (1) YEAR FROM FINAL ACCEPTANCE BY THE OWNER.

MHTN ARCHITECTS, INC.
420 East South Temple
Suite 100
Salt Lake City, Utah 84111
Telephone (801) 595-6700
Telefax (801) 595-6717
www.mhtn.com

WEBER STATE UNIVERSITY

HURST CENTER FOR LIFELONG LEARNING
WEBER STATE UNIVERSITY
UTAH STATE DIVISION OF FACILITIES CONSTRUCTION MANAGEMENT- DFCM PROJECT NO. 07110810

SEAL

MHTN PROJECT NO. 2007556.00
DRAWN BY: STAFF CHECKED BY: TED

ISSUED:

NO.	DATE	DESCRIPTION
1	10/26/07	SCHEMATIC DESIGN
2	12/18/07	DESIGN DEVELOPMENT
3	02/08/08	CONSTRUCTION DOCUMENTS
4	03/04/08	CONSTRUCTION BID DOCUMENTS

REVISIONS:

NO.	DATE	DESCRIPTION

IRRIGATION DETAILS

CONSTRUCTION BID DOCUMENTS
MARCH 4, 2008

SHEET NUMBER

LI502

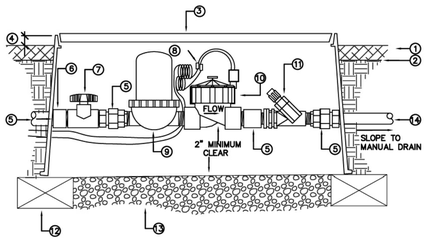

1. PLANTING BED MULCH, SEE PLANTING NOTES FOR DEPTH
2. FINISH GRADE
3. CARSON–BROOKS 1220 JUMBO SERIES VALVE BOX
4. 1" MAX DEPTH
5. PVC UNION
6. PVC SHC 40 COUPLING / BUSHING
7. BALL VALVE
8. WATERPROOF CONNECTORS
9. INLINE 1" DISC FILTER, ANGLED
10. REMOTE CONTROL VALVE
11. INLINE PRESSURE REGULATOR
12. 2"x4" REDWOOD OR BRICK BLOCKING
13. 4" MIN. DEPTH WASHED PEA GRAVEL
14. PVC SUPPLY HEADER

DRIP ZONE REMOTE CONTROL VALVE

NTS

COPYRIGHT (c) 2004 by Bingham Engineering

THIS DRAWING IS BEING FURNISHED FOR USE AT WEBER STATE UNIVERSITY ONLY. IT SHALL NOT BE DUPLICATED, IN WHOLE OR IN PART, NOR USED FOR OTHER PURPOSES WITHOUT THE CONSENT OF BINGHAM ENGINEERING.

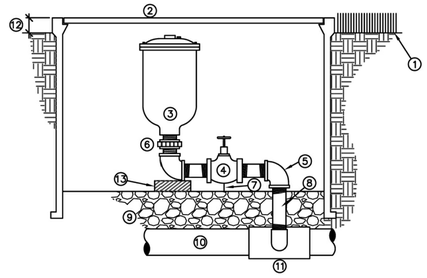

1. FINISH GRADE
2. PLASTIC VALVE BOX W/ LOCK BOLT (CARSON–BROOKS OR EQUAL), SIZE AS REQUIRED
3. AIR RELEASE VALVE – SEE IRRIGATION EQUIPMENT SCHEDULE (INSTALL PER MANUFAC. SPECS.)
4. BRASS BALL VALVE, SIZE AS REQUIRED
5. 90° BRASS ELL (TYP.)
6. BRASS UNION
7. 2" MIN. CLEARANCE REQUIRED
8. BRASS NIPPLE, LENGTH AS REQUIRED (TYP.)
9. 6" MIN. DEPTH WASHED PEA GRAVEL
10. MAIN LINE
11. SERVICE TEE, SIZE AS REQUIRED
12. SEED = 1"; SOD = 1 1/2"; SHRUBS = 2"
13. SUPPORT BLOCK FOR VALVE RECOMMENDED

AIR RELEASE VALVE ASSEMBLY

NTS

COPYRIGHT (c) 2004 by Bingham Engineering

THIS DRAWING IS BEING FURNISHED FOR USE AT WEBER STATE UNIVERSITY ONLY. IT SHALL NOT BE DUPLICATED, IN WHOLE OR IN PART, NOR USED FOR OTHER PURPOSES WITHOUT THE CONSENT OF BINGHAM ENGINEERING.

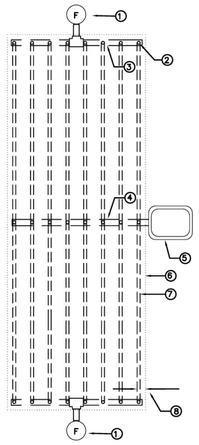

1. MANUAL FLUSH VALVE PLUMBED TO PVC
2. TLIAPVC CONNECTOR
3. 1 1/2" PVC EXHAUST HEADER
4. 1 1/2" PVC SUPPLY HEADER
5. REMOTE CONTROL VALVE WITH DISC FILTER AND PRESSURE REDUCING VALVE
6. AREA PERIMETER
7. TECHLINE CV TUBING LATERAL
8. PERIMETER LATERALS 2" TO 4" FROM EDGE

CENTER FEED DRIP LAYOUT

NTS

COPYRIGHT (c) 2004 by Bingham Engineering

THIS DRAWING IS BEING FURNISHED FOR USE AT WEBER STATE UNIVERSITY ONLY. IT SHALL NOT BE DUPLICATED, IN WHOLE OR IN PART, NOR USED FOR OTHER PURPOSES WITHOUT THE CONSENT OF BINGHAM ENGINEERING.

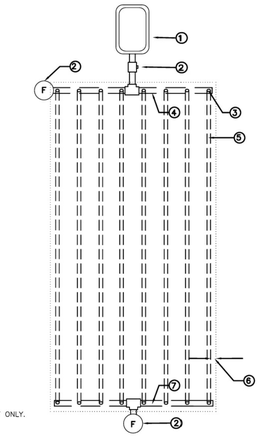

1. REMOTE CONTROL VALVE WITH DISC FILTER AND PRESSURE REDUCING VALVE
2. MANUAL FLUSH VALVE PLUMBED TO PVC
3. TLIAPVC CONNECTOR
4. 1 1/2" PVC SUPPLY HEADER
5. TECHLINE CV TUBING
6. PERIMETER DRIPLINE 2" TO 4" FROM EDGE
7. 1 1/2" PVC EXHAUST HEADER

END FEED DRIP LAYOUT

NTS

COPYRIGHT (c) 2004 by Bingham Engineering

THIS DRAWING IS BEING FURNISHED FOR USE AT WEBER STATE UNIVERSITY ONLY. IT SHALL NOT BE DUPLICATED, IN WHOLE OR IN PART, NOR USED FOR OTHER PURPOSES WITHOUT THE CONSENT OF BINGHAM ENGINEERING.

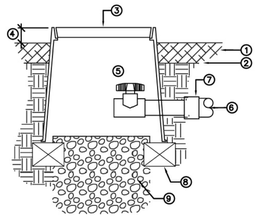

1. PLANTING BED MULCH SEE PLANTING NOTES FOR DEPTH
2. FINISH GRADE
3. PLASTIC VALVE BOX CARSON–BROOKS 809 OR EQUAL
4. 1" MAX. DEPTH
5. MANUAL FLUSHING VALVE
6. PVC EXHAUST HEADER
7. PVC REDUCER ADAPTER (S X 1/2") FPT (SIZE AS REQ'D)
8. (3) 2" X 4" REDWOOD OR BRICK BLOCKING
9. 1 C.F. WASHED PEA GRAVEL

DRIP FLUSH VALVE (PLUMBED TO PVC)

NTS

COPYRIGHT (c) 2004 by Bingham Engineering

THIS DRAWING IS BEING FURNISHED FOR USE AT WEBER STATE UNIVERSITY ONLY. IT SHALL NOT BE DUPLICATED, IN WHOLE OR IN PART, NOR USED FOR OTHER PURPOSES WITHOUT THE CONSENT OF BINGHAM ENGINEERING.

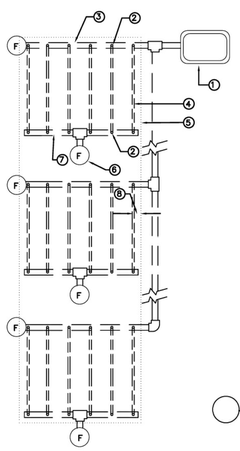

1. REMOTE CONTROL VALVE WITH DISC FILTER AND PRESSURE REDUCING VALVE
2. TLIAPVC CONECTOR
3. 1 1/2" PVC SUPPLY HEADER
4. TECHLINE CV TUBING LATERAL
5. ISLAND PERIMETER
6. MANUAL FLUSH VALVE
7. 1 1/2" PVC EXHAUST HEADER
8. PERIMETER DRIPLINE 2" TO 4" FROM EDGE

ISLAND DRIP LAYOUT

NTS

COPYRIGHT (c) 2004 by Bingham Engineering

THIS DRAWING IS BEING FURNISHED FOR USE AT WEBER STATE UNIVERSITY ONLY. IT SHALL NOT BE DUPLICATED, IN WHOLE OR IN PART, NOR USED FOR OTHER PURPOSES WITHOUT THE CONSENT OF BINGHAM ENGINEERING.

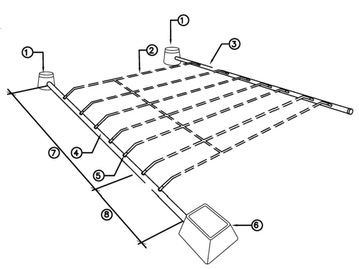

1. MANUAL FLUSHING VALVE PLUMBED TO PVC
2. TECHLINE CV TUBING – INSTALL AT GRADE UNDER MULCH
3. 1 1/2" PVC EXHAUST HEADER FOR DEPTH SEE NOTES
4. 1 1/2" PVC SUPPLY HEADER FOR DEPTH SEE NOTES
5. TLIAPVC CONNECTOR
6. REMOTE CONTROL VALVE
7. ON SLOPES, USE THE SPECIFIED DRIPLINE SPACING ON THE TOP 2/3 OF THE SLOPE
8. ON SLOPES, USE THE SPECIFIED DRIPLINE SPACING PLUS 25% ON THE BOTTOM 1/3 OF SLOPE

NOTE: ON SLOPES, ALIGN DRIPLINE PARALLEL TO THE CONTOURS OF THE SLOPE

DRIPLINE CIRCUIT LAYOUT

NTS

COPYRIGHT (c) 2004 by Bingham Engineering

THIS DRAWING IS BEING FURNISHED FOR USE AT WEBER STATE UNIVERSITY ONLY. IT SHALL NOT BE DUPLICATED, IN WHOLE OR IN PART, NOR USED FOR OTHER PURPOSES WITHOUT THE CONSENT OF BINGHAM ENGINEERING.

NOTE:
INSTALL ONE DRIPPER LINE ON EACH SIDE OF ALL SHRUBS TYPICAL

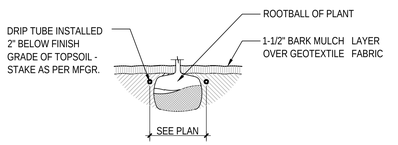

A3 DRIP LINE PLACEMENT

NTS LI501 1-dsr09

NOTE:
RUN ONE EXTRA WIRE FROM THE ADJACENT CONTROLLER TO EACH GROUP OF VALVES FOR FUTURE USE AND STUB INTO THE VALVE BOX.

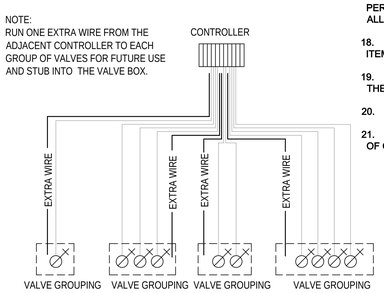

A4 SPARE WIRE DETAIL

NTS LI501 1-dsr07

IRRIGATION NOTES

1. IRRIGATION PLAN IS DIAGRAMMATIC. ALL IRRIGATION EQUIPMENT SHALL BE LOCATED IN PLANTING AREAS ONLY, UNLESS NOTED OTHERWISE. REFER TO THE IRRIGATION LEGEND, DETAILS, AND SPECIFICATIONS FOR EQUIPMENT AND INSTALLATION. SPECIFICATIONS SHALL TAKE PRECEDENCE OVER INSTALLATION DETAILS.

2. LANDSCAPE CONTRACTOR SHALL VERIFY LOCATION OF IRRIGATION POINT OF CONNECTION (POC) AND THE STATIC WATER PRESSURE AT THAT LOCATION PRIOR TO BEGINNING ANY IRRIGATION WORK. IF THE LOCATION OR WATER PRESSURE IS DIFFERENT THAN THAT EXPRESSED BY THE LANDSCAPE ARCHITECT, OR IF THE PRESSURE APPEARS TO BE UNUSUALLY HIGH OR LOW, THE CONTRACTOR SHALL NOTIFY THE LANDSCAPE ARCHITECT IMMEDIATELY.

3. CONTRACTOR SHALL KEEP THE PREMISES CLEAN AND FREE OF EXCESS EQUIPMENT, MATERIALS AND RUBBISH INCIDENTAL TO WORK OF THIS SECTION.

4. PIPE FITTINGS SHALL BE AS FOLLOWS:
A. ALL RISERS AND EXPOSED FITTINGS SHALL BE P.V.C. SCHEDULE 80.
B. ALL UNDERGROUND FITTINGS SHALL BE P.V.C. SCHEDULE 40.
C. ALL MAIN LINE TWO AND HALF (2 ½) INCH OR GREATER SHALL USE DUCTILE IRON FITTINGS. ALL MAINLINE TWO (2) INCH OR SMALLER SHALL USE PVC FITTINGS.

5. IRRIGATION CONTROL WIRES SHALL CONFORM TO THE FOLLOWING:
A. ALL WIRE SHALL BE TYPE UF, 600 VOLT, SOLID COPPER , SINGLE CONDUCTOR WIRE. IT SHALL BE UL LISTED, DIRECT BURIAL TYPE, AND MINIMUM SIZE OF 14 GAUGE. ALL SPLICES AND CONNECTIONS SHALL BE WATER-TIGHT. ALL WIRES SHALL BE INSTALLED WITH TWO (2) FEET OF EXCESS WIRE (COILED) AT THE END OF EACH WIRE RUN, WIRE SPLICE, AND AT EACH CONTROLLER.
B. CONTROL WIRE SHALL BE BUNDLED EVERY 10' AND PLACED ADJACENT TO MAIN LINE.
C. ALL WIRE SPLICES SHALL BE LOCATED IN VALVE BOXES.

6. MANUAL DRAIN VALVES SHALL BE PLACED ON THE MAIN LINE AT ALL LOW SPOTS TO ENSURE COMPLETE DRAINAGE AND WINTERIZATION OF MAIN LINE. ALL MANUAL DRAINS SHALL BE PLACE IN SEPARATE VALVE BOXES PER INSTALLATION DETAILS.

7. CHECK VALVES SHALL BE USED WHERE INDICATED AND WHERE NECESSARY TO PREVENT WATER FLOW FROM LOWER ELEVATION HEADS WHEN SYSTEM IS TURNED OFF. INSTALL PER MANUFACTURE'S RECOMMENDATION, WITH A ONE (1) CU. FT. MIN. GRAVEL SUMP AROUND EACH DRAIN. .

8. ALL POP-UP SPRAY SPRINKLERS SHALL CONFORM TO THE FOLLOWING UNLESS SPECIFICALLY NOTED OTHERWISE ON THE PLANS:
A. SPRINKLERS LOCATED IN GRASS AREAS SHALL BE FOUR (4) INCHES IN HEIGHT.
B. SPRINKLERS LOCATED IN PLANTING BEDS SHALL BE TWELVE (12) INCHES IN HEIGHT.

9. DRIP IRRIGATION SHALL CONFORM TO THE FOLLOWING:
(DRIP LINES AT GRADE UNDER MULCH)
A. DRIP TUBING WITH PRESSURE COMPENSATING EMITTERS SHALL CONFORM TO THE FOLLOWING:
1. TUBING SHALL BE CONSTRUCTED OF HIGH QUALITY LINEAR, LOW DENSITY, UV-RESISTANT, POLYETHYLENE RESIN MATERIALS WITH INTERNAL, INTEGRAL DRIPPERS AT SPECIFIED INTERVALS.
2. DRIPPERS OR EMITTERS SHALL BE OF THE INDIVIDUAL, SELF-CLEANING, PRESSURE-COMPENSATING TYPE.

B. INLINE DRIP TUBING SHALL BE SPACED AT A DISTANCE EQUAL TO OR LESS THAN THE INLINE EMITTER SPACING. FOR SLOPE APPLICATIONS PLACE DRIP TUBING LATERALS PARALLEL TO THE SLOPE CONTOUR. WHEN SLOPES EXCEED 3% INCREASE THE RECOMMENDED LATERAL SPACING BY 25% ON THE LOWER 1/3 OF THE SLOPE.

C. ALL INSERT BARBED FITTINGS SHALL BE CONSTRUCTED OF MOLDED, UV-RESISTANT PLASTIC. EACH FITTING SHALL BE A MINIMUM OF TWO RIDGES OR BARBS PER OUTLET. ALL FITTINGS SHALL BE OF ONE MANUFACTURER AND SHALL BE AVAILABLE ON ONE OF THE FOLLOWING END CONFIGURATIONS:
1.1. BARBED INSERT FITTINGS
1.2. MALE PIPE THREADS (MPT) WITH BARBED INSERT FITTINGS
1.3. FEMALE PIPE THREADS (FPT) WITH BARBED INSERT FITTINGS

D. ALL DRIP TUBING SHALL BE SHALL BE HELD IN PLACE BY SOIL STAPLES AND SHALL CONFORM TO THE FOLLOWING:
1.1. SANDY SOIL - ONE STAPLE EVERY THREE (3') FEET AND TWO (2) STAPLES ON EACH CHANGE OF DIRECTION (TEE, ELBOW, OR CROSS)
1.2. LOAM SOIL - ONE STAPLE VERY FOUR (4') FEET AND TWO (2) STAPLES ON EACH CHANGE OF DIRECTION (TEE, ELBOW, OR CROSS)
1.3. CLAY SOIL - ONE STAPLE VERY FIVE (5') FEET AND TWO (2) STAPLES ON EACH CHANGE OF DIRECTION (TEE, ELBOW, OR CROSS)

E. REMOTE CONTROL VALVE ASSEMBLY SHALL CONTAIN THE FOLLOWING COMPONENTS:
1.1. PVC BALL VALVE
1.2. INLINE DISC OR SCREEN FILTER WITH 100 MICRON / 150 MESH FILTER ELEMENTS.
1.3. REMOTE CONTROL VALVE - CAPABLE OF OPERATING AT VERY LOW FLOWS
1.4. INLINE PRESSURE REGULATOR
ALL COMPONENTS SHALL BE INSTALLED ACCORDING TO MANUFACTURER'S RECOMMENDATIONS, AND LOCATED WITHIN A SINGLE VALVE BOX, ONE VALVE ASSEMBLY PER BOX.

F. PROVIDE THE FOLLOWING EQUIPMENT TO EACH VALVE CIRCUIT, LOCATED AND INSTALLED PER MANUFACTURER'S RECOMMENDATIONS:
1.1. LINE FLUSHING VALVE(S); MINIMUM OF ONE ON EACH EXHAUST HEADER AND ONE FOR EVERY 15 GPM IN THE CIRCUIT.
1.2. AIR/VACUUM RELIEF VALVE(S) AT ALL HIGH POINTS IN THE SYSTEM.
1.3. AUTOMATIC DRAINS AT ALL LOW POINTS ON THE SUPPLY AND EXHAUST HEADERS, WITH ONE LOCATED 2 FEET FROM THE CONTROL VALVE ASSEMBLY. THE DRAINS SHALL BE ANGLED DOWN AT 30 TO 45 DEGREES FROM HORIZONTAL .

G. INLINE DRIPPER TUBING SHALL BE INSTALLED AT FINISHED GRADE WITH SOIL STAPLES AND COVERED WITH THREE (3) INCHES OF SPECIFIED MULCH. SUPPLY AND EXHAUST HEADERS SHALL BE INSTALLED AT NORMAL LATERAL LINE DEPTHS.

H. INSTALLATION OF INLINE DRIP CIRCUITS SHALL GENERALLY CONFORM TO THE FOLLOWING STEPS:
1.1. ASSEMBLE AND INSTALL FILTER, REMOTE CONTROL VALVE AND PRESSURE REGULATING VALVE ASSEMBLY(S) IN ACCORDANCE WITH INSTALLATION DETAILS.
1.2. ASSEMBLE AND INSTALL SUPPLY HEADER(S) IN ACCORDANCE WITH INSTALLATION DETAILS. INCLUDE AUTOMATIC DRAIN AT LOW POINTS. TAPE OR PLUG ALL OPEN CONNECTIONS TO PREVENT DEBRIS CONTAMINATION.
1.3. INSTALL LATERAL DRIP LINES IN ACCORDANCE WITH DETAILS AND RELEVANT SPECIFICATIONS AND MANUFACTURER'S RECOMMENDATIONS. TAPE OR PLUG ALL OPEN ENDS WHILE INSTALLING TO PREVENT DEBRIS CONTAMINATION.
1.4. ASSEMBLE AND INSTALL EXHAUST HEADER(S) IN ACCORDANCE WITH INSTALLATION DETAILS. INCLUDE FLUSHING VALVE(S) AND AUTOMATIC DRAIN(S) AT LOW POINTS. TAPE OR PLUG ALL OPEN CONNECTIONS TO PREVENT DEBRIS CONTAMINATION.
1.5. INSTALL AIR/VACUUM RELIEF VALVE(S) AT THE ZONES HIGHEST POINT(S) IN ACCORDANCE WITH DETAILS.
1.6. THOROUGHLY FLUSH SUPPLY HEADER(S) AND CONNECT DRIP LATERAL LINES WHILE FLUSHING.
1.7. THOROUGHLY FLUSH DRIP LATERAL LINES AND CONNECT TO EXHAUST HEADER(S) AND ANY INTERCONNECTING DRIP LATERAL LINES WHILE FLUSHING
1.8. THOROUGHLY FLUSH EXHAUST HEADER(S) AND INSTALL LINE FLUSHING VALVES IN ACCORDANCE WITH DETAILS.

10. ALL PRESSURE MAIN LINES SHALL HAVE EIGHTEEN (18) INCHES TO THIRTY (30) INCHES OF COVER, AND ALL LATERAL LINES SHALL HAVE EIGHT (8) INCHES TO FOURTEEN (14) INCHES OF COVER. TRENCH BEDDING AND BACKFILL MATERIAL SHALL BE EXISTING SITE SOIL FREE OF ROCKS, DEBRIS, ETC. GREATER THAN ONE (1) INCH IN ANY DIMENSION THAT MAY DAMAGE IRRIGATION PIPE OR EQUIPMENT. IN THE EVENT OF BACKFILL SETTLEMENT, CONTRACTOR SHALL PERFORM REQUIRED REPAIRS AT HIS OWN COST.

11. WHERE POSSIBLE, ALL AUTOMATIC VALVES SHALL BE LOCATED WITHIN SHRUB AREAS AND INSTALLED IN GREEN VALVE BOXES, ONE VALVE PER BOX, WITH FOUR (4) INCHES OF 3/4" GRAVEL BENEATH THE VALVE. NO VALVE MANIFOLDS SHALL BE ALLOWED. GATE VALVES SHALL BE LOCATED IN SEPARATE VALVE BOXES. WIRE SPLICES SHALL ALSO BE LOCATED IN SEPARATE VALVE BOXES.

12. ALL MAIN LINE AND LATERAL LINES SHALL BE SLEEVED WITH P.V.C. SCHEDULE 40 PIPE (4" AND UNDER) OR CLASS 200 (GREATER THAN 4") WHERE THEY PASS UNDER PAVED AREAS. SLEEVE SIZE SHALL BE TWICE THE DIAMETER OF THE LINE TO BE SLEEVED UNLESS OTHERWISE NOTED ON THE PLANS.

13. AUTOMATIC CONTROLLERS SHALL BE OF THE SIZE AND TYPE NOTED, AND INSTALLED WHERE INDICATED ON IRRIGATION PLAN. CONTROL WIRES SHALL BE SLEEVED IN ELECTRICAL CONDUIT TO MAINLINE. 120-VOLT ELECTRICAL SERVICE TO CONTROLLERS SHALL BE PROVIDED BY THE LANDSCAPE CONTRACTOR. COORDINATE THIS WORK WITH ELECTRICAL AND OTHER CONTRACTORS FOR THIS PROJECT.

14. A MASTER VALVE SHALL BE INSTALLED ALONG WITH APPROPRIATE FLOW SENSING EQUIPMENT TO ELIMINATE EXCESS SYSTEM FLOW SHOULD A VALVE STICK OPEN AFTER A CYCLE HAS BEEN COMPLETED OR A MAIN LINE BREAK OCCURS.

15. PRIOR TO BACKFILLING IRRIGATION TRENCHES:
A. ALL MAIN LINES IN THE SYSTEM SHALL BE CAPPED AND PRESSURE TESTED AT 125 P.S.I. FOR A PERIOD OF FOUR (4) HOURS. ANY LEAKS FOUND SHALL BE CORRECTED BY REMOVING THE LEAKING PIPE OR FITTINGS AND INSTALLING NEW MATERIAL IN ITS PLACE. REPEAT PRESSURE TEST TO ASSURE ABSENCE OF LEAKS.
B. THE CONTRACTOR SHALL NOT ALLOW NOR CAUSE ANY OF HIS WORK TO BE COVERED UNTIL IT HAS BEEN INSPECTED, TESTED AND APPROVED BY THE OWNER/OWNER'S AUTHORIZED REPRESENTATIVE.
C. WHERE MAIN LINE WILL BE ALLOWED TO SIT UNCOVERED FOR ANY LENGTH OF TIME IN THE TRENCH PRIOR TO TESTING, SHADE MAIN LINE WITH A THIN COVERING OF SOIL TO MINIMIZE WEATHER-RELATED EXPANSION OR CONTRACTION OF PIPE.

16. IRRIGATION CONTRACTOR SHALL ADJUST ALL HEADS TO PROVIDE A UNIFORM COVERAGE AND TO KEEP SPRAY OFF BUILDINGS, WALKWAYS, WALLS, PARKING AREAS, AND DRIVES.

17. WHEN THE SPRINKLER SYSTEM IS COMPLETED THE CONTRACTOR SHALL, IN THE PRESENCE OF THE OWNER/OWNER'S AUTHORIZED REPRESENTATIVE, PERFORM A COVERAGE TEST OF WATER PROVIDED TO THE PLANTING AREAS TO ENSURE IT IS CONSISTENT AND UNIFORM. THE CONTRACTOR SHALL FURNISH ALL MATERIALS AND PERFORM ALL WORK REQUIRED TO CORRECT ANY INADEQUACIES OF COVERAGE AT HIS OWN COST.

18. THE CONTRACTOR SHALL FURNISH TO THE OWNER A COMPLETE "AS BUILT" DRAWING ON MYLAR AND TWO PRINTS SHOWING EXACT LOCATIONS OF ALL ITEMS INSTALLED. THESE ARE TO BE DELIVERED ON OR BEFORE FINAL INSPECTION.

19. A REDUCED IRRIGATION PLAN INDICATING ALL SYSTEMS AND THEIR APPROPRIATE SEQUENCED VALVES SHALL BE LAMINATED IN MYLAR AND MOUNTED ON THE INSIDE COVER OF THE IRRIGATION CONTROLLER(S).

20. IRRIGATION CONTRACTOR SHALL MAINTAIN THE SYSTEM FOR THE DURATION OF THE MAINTENANCE PERIOD AND SHALL WATER ON A DAILY BASIS.

21. IRRIGATION CONTRACTOR SHALL GUARANTEE THE ENTIRE IRRIGATION SYSTEM TO BE FREE OF DEFECTS IN WORKMANSHIP AND MATERIALS FOR A PERIOD OF ONE (1) YEAR FROM FINAL ACCEPTANCE BY THE OWNER.

MHTN ARCHITECTS, INC.
420 East South Temple
Suite 100
Salt Lake City, Utah 84111
Telephone (801) 595-6700
Telefax (801) 595-6717
www.mhtn.com

WEBER STATE UNIVERSITY

HURST CENTER FOR LIFELONG LEARNING
WEBER STATE UNIVERSITY
UTAH STATE DIVISION OF FACILITIES CONSTRUCTION MANAGEMENT- DFCM PROJECT NO. 07110810

SEAL

MHTN PROJECT NO. 2007556.00
DRAWN BY: STAFF CHECKED BY: TED

ISSUED:

NO.	DATE	DESCRIPTION
1	10/26/07	SCHEMATIC DESIGN
2	12/18/07	DESIGN DEVELOPMENT
3	02/08/08	CONSTRUCTION DOCUMENTS
4	03/04/08	CONSTRUCTION BID DOCUMENTS

REVISIONS:

NO.	DATE	DESCRIPTION

IRRIGATION DETAILS

CONSTRUCTION BID DOCUMENTS
MARCH 4, 2008

SHEET NUMBER

LI502