FIRE ALARM SYSTEM: WASHBURN BUILDING SNOW COLLEGE - RICHFIELD

200 SOUTH AND TECHNOLOGY DR
RICHFIELD, UT 84701

STATE OF UTAH
DEPARTMENT OF ADMINISTRATIVE SERVICES
DIVISION OF FACILITIES CONSTRUCTION AND MANAGEMENT
4110 State Office Building / SLC, Utah 84114 / (801) 538-3018

DFCM PROJECT NO. 07159700

PROTECTION CONSULTANTS, INC.
182 SOUTH 600 EAST, SUITE #202 - SALT LAKE CITY, UT 84102 - 801.596.1601

DRAWING SCHEDULE

SHEET	DRAWING TITLE
FA-1	FIRE ALARM INITIATING DEVICE PLAN – NORTHWEST
FA-2	FIRE ALARM INITIATING DEVICE PLAN – NORTHEAST
FA-3	FIRE ALARM INITIATING DEVICE PLAN – SOUTHEAST
FA-4	FIRE ALARM INITIATING DEVICE PLAN – SOUTHWEST
FA-5	FIRE ALARM NOTIFICATION DEVICE PLAN – NORTHWEST
FA-6	FIRE ALARM NOTIFICATION DEVICE PLAN – NORTHEAST
FA-7	FIRE ALARM NOTIFICATION DEVICE PLAN – SOUTHEAST
FA-8	FIRE ALARM NOTIFICATION DEVICE PLAN – SOUTHWEST
FA-9	FIRE ALARM SYSTEM DETAILS
FA-10	FIRE SPRINKLER SCOPE OF WORK

VICINITY MAP

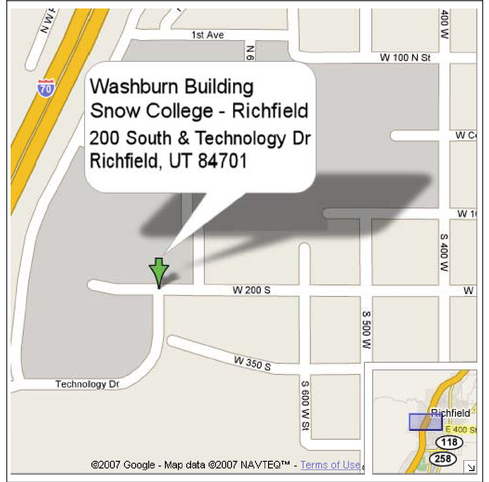

FIRE ALARM DESIGN AND CODE CRITERIA

		Year
A.	Applicable Codes:	
1.	International Building Code	2006
2.	International Fire Code	2006
3.	ADA Accessibility Guidelines	1994
4.	National Electrical Code (NFPA 70)	2008
5.	International Mechanical Code	2006
6.	Utah State Fire Marshall Rule R710-4	N/A
7.	National Fire Alarm Code (NFPA 72)	2007

B.	Building Parameters:	
1.	Occupancy Group:	Mixed (B, A-3, S-1)
2.	Total Building Area:	94,075 Sq.Ft.
	a. Group A-3:	14,016 Sq. Ft.
	b. Group B:	29,974 Sq. Ft.
	c. Group S-1:	50,085 Sq. Ft.
3.	Stories:	One
4.	Type of Construction:	Type II-B
5.	Fire Sprinklers:	Yes (NFPA 13)
6.	Occupancy Seperations:	Shop Areas (Group S-1) Separated from Classrooms/Offices/Library (Groups A-3 and B)
7.	Allowable Area Calculation:	
	a. Group A-3:	9,500 x 14.9% = 1,416 Sq. Ft.
	b. Group B:	23,000 x 31.86% = 7,328 Sq. Ft.
	c. Group S-1:	17,500 x 5324% = 9,317 Sq. Ft.
	Total Allowable Area:	18,061 Sq.Ft.
8.	Area Increase for Frontage:	0.75 (30' Yard on all 4 sides)
9.	Area Increase for Fire Sprinklers:	3.0
10.	Total Allowable Area With Increases:	94,820 Sq. Ft.

C.	Fire Alarm Design Requirements:	
1.	Fire Alarm System Required:	Yes (IBC 907.2.1)
2.	Occupant Notification:	Yes (IBC 907.2.1)
3.	Visible Alarms:	Yes (IBC 907.9.1)
4.	Manual Pull Stations:	Yes (IBC 907.3)
5.	Smoke/Heat Detectors:	Yes (USFM R710-4)
6.	Duct Smoke Detectors:	Yes (IBC 907.11)

FIRE ALARM SYSTEM GENERAL NOTES

1. SCOPE OF WORK: WORK SHALL INCLUDE REMOVAL OF EXISTING CONVENTIONAL FIRE ALARM SYSTEM INCLUDING ALL CONTROL EQUIPMENT, POWER SUPPLIES, CABINETS, INIT. CIRCUITS AND DEVICES, NOTIFICATION APPLIANCE CIRCUITS AND DEVICES. INSTALL NEW ADDRESSABLE FIRE ALARM SYSTEM INCLUDING CONTROL PANEL WITH NEW SIGNALING LINE CIRCUITS, INITIATING DEVICE CIRCUITS AND NOTIFICATION APPLIANCE CIRCUITS. NEW FIRE ALARM SYSTEM SHALL BE IN ACCORDANCE WITH NFPA 72, THESE DRAWINGS AND SPECIFICATIONS.

2. APPLICABLE CODES/STANDARDS:
   INTERNATIONAL BUILDING CODE - 2006 EDITION
   INTERNATIONAL FIRE CODE - 2006 EDITION
   INTERNATIONAL MECHANICAL CODE - 2006 EDITION
   UTAH STATE FIRE MARSHAL RULE R710-4
   NFPA 70 - 2005 EDITION
   NFPA 72 - 2007 EDITION
   NFPA 90A - 2002 EDITION

3. QUALITY ASSURANCE: ALL EQUIPMENT, MATERIAL AND DEVICES USED FOR THE FIRE ALARM SYSTEM INSTALLATION SHALL BE UL LISTED AND/OR FM APPROVED FOR USE IN FIRE PROTECTION SYSTEMS. ALL INITIATING DEVICES SHALL BE LISTED COMPATIBLE WITH THE FIRE ALARM CONTROL PANEL (FACP). MAJOR SYSTEM COMPONENTS (CONTROL PANELS, INITIATING DEVICES, ADDRESSABLE MODULES AND RELAYS, POWER SUPPLIES, ETC.) SHALL BE FCI OR FROM A STATE OF UTAH DFCM APPROVED MANUFACTURER. APPROVED MANUFACTURERS INCLUDE FIRE-LITE AND SILENT KNIGHT.

4. SUBMITTALS: FIRE ALARM SYSTEM CONTRACTOR SHALL PREPARE AND SUBMIT SHOPS DRAWINGS TO STATE FIRE MARSHAL, OWNER AND ENGINEER FOR REVIEW/APPROVAL PRIOR TO ORDERING OR INSTALLING ANY EQUIPMENT. SUBMITTALS SHALL CONFORM TO THE CONSTRUCTION DOCUMENTS REQUIREMENTS OF IFC 907.1.1.

5. DEMOLITION: IT IS THE INSTALLER'S RESPONSIBILITY FOR THE DEMOLITION OF THE EXISTING FIRE ALARM SYSTEM. ALL NEW DEVICES AND CIRCUITS WILL REPLACE THE OLD AND GENERALLY REUSE THE EXISTING LOCATIONS. ANY EXISTING DEVICES AND CONDUIT NOT BEING REPLACED AND REUSED THAT ARE VISIBLE, SUCH AS CABINETS NOTIFICATION APPLIANCES OR SMOKE DETECTORS SHALL BE REMOVED AND REMAINING WALL OR CEILING SURFACE REPAIRED OR REPLACED TO MATCH SURROUNDING AREAS. REMOVE ALL UNUSED WIRE IN ALL REMAINING J-BOXES AND/OR CONDUITS. ANY CEILING TILE DAMAGED BY THE INSTALLER MUST BE REPLACED WITH THE SAME OR EQUIVALENT TILE.

6. SYSTEM TYPE: FIRE ALARM SYSTEM SHALL MEET THE REQUIREMENTS FOR PROTECTED PREMISE FIRE ALARM SYSTEMS. SYSTEM SHALL PROVIDE OFF-PREMISE NOTIFICATION OF STATUS TO CENTRAL STATION DETERMINED BY OWNER.

7. OCCUPANT NOTIFICATION: RECEIPT OF ANY FIRE ALARM SIGNAL AT THE FACP SHALL RESULT IN THE ACTIVATION OF ALL NOTIFICATION APPLIANCES IN THE BUILDING (STROBES AND HORN/STROBES). FOR PURPOSES OF FIRE ALARM NOTIFICATION, THE BUILDING SHALL BE CONSIDERED AS A SINGLE ZONE.

8. WIRING/CONDUIT: ALL WIRING SHALL BE NEW (EXISTING WIRING MAY NOT BE RE-USED) AND SHALL BE FREE OF OPENS, SHORTS AND GROUNDS. ALL WIRING SHALL BE INSTALLED IN RIGID CONDUIT OR EMT. FLEXIBLE CONDUIT MAY BE USED FOR DROPS TO SINGLE DEVICES (MAXIMUM 6'). MINIMUM CONDUIT SIZE SHALL BE 1/2". CONDUIT SHALL BE CONCEALED IN FINISHED AREAS AND MAY BE EXPOSED IN UNFINISHED AREAS. EXPOSED CONDUIT MAY BE UNPAINTED (UNLESS OTHERWISE NOTED) BUT SHALL BE PERIODICALLY MARKED WITH RED TAPE OR PAINT. ALL PENETRATIONS THROUGH RATED PARTITIONS SHALL BE FIRE STOPPED WITH A SUITABLE CAULKING COMPOUND. ALL WIRING USED IN THE FIRE ALARM SYSTEM SHALL BE FPL (FIRE, POWER LIMITED) WITH MINIMUM 300V INSULATION OR EQUIVALENT AS PER NFPA 70 ARTICLE 760.

9. WIRING STYLES(PER NFPA 72): INITIATING DEVICE CIRCUITS SHALL MEET THE REQUIREMENTS FOR CLASS A STYLE D CIRCUITS. SIGNALING LINE CIRCUITS SHALL MEET THE REQUIREMENTS FOR CLASS A STYLE 6 OR 7 CIRCUITS. NOTIFICATION APPLIANCE CIRCUITS SHALL MEET THE REQUIREMENTS FOR CLASS A STYLE Z.

10. POWER: PROVIDE NEW 120VAC 20 AMP CIRCUIT FROM EXISTING POWER DISTRIBUTION PANEL IN SUPPLY ROOM TO PROVIDE PRIMARY POWER TO FACP. EXISTING BRANCH CIRCUITS MAY BE REUSED TO PROVIDE PRIMARY POWER TO NEW REMOTE NOTIFICATION CIRCUIT POWER SUPPLIES. FURNISH A BATTERY BACKUP TO PROVIDE SECONDARY POWER SUPPLY TO FIRE ALARM PANEL AND NOTIFICATION CIRCUIT POWER SUPPLIES. BATTERY BACKUP SHALL BE OF SUFFICIENT CAPACITY TO PROVIDE 24 HOURS OF STANDBY POWER WITH AN ADDITIONAL RESERVE TO OPERATE SYSTEM FOR 5 MINUTES IN ALARM.

11. INITIATING DEVICES:
   SLC CIRCUITS: SLC LOOP DEVICE ADDRESSING SHALL NOT EXCEED 100 DEVICES (SMOKES, HEATS, DUCT SMOKES, MODULES CONTROL RELAYS, ETC.) PER LOOP. AT LEAST 20 ADDRESSES (20%) SHOULD BE LEFT VACANT ON EACH SLC LOOP IN ORDER TO ALLOW SPACE FOR ADJUSTMENTS/EXPANSION:
   SMOKE DETECTORS: PROVIDE SMOKE DETECTORS WHERE SHOWN ON PLANS IN ALL CORRIDORS AND LOBBIES. MAXIMUM SPACING OF DETECTORS SHALL BE 30' BETWEEN DETECTORS OR 15' FROM FURTHEST WALL.
   MANUAL PULL STATIONS: INSTALL NEW PULL STATIONS AT SAME LOCATION AND HEIGHT AS EXISTING PULL STATIONS USING EXISTING JUNCTION BOXES (UNLESS OTHERWISE NOTED). WHERE NEW MANUAL PULL STATIONS ARE INDICATED ON THE PLAN INSTALL WITH OPERATING ELEMENT AT 48" AFF.
   ADDRESSABLE MODULES: PROVIDE ADDRESSABLE MODULES TO MONITOR EXISTING CONVENTIONAL DEVICES (FIRE SPRINKLER SWITCHES) TO REMAIN AND TROUBLE OUTPUT OF NEW NOTIFICATION CIRCUIT POWER SUPPLIES. LOCATE MONITOR MODULE ADJACENT TO DEVICE MONITORED IN AN ACCESSIBLE LOCATION OR ABOVE REMOVABLE CEILING TILE. LABEL AS PART OF THE FIRE ALARM SYSTEM WITH THE NAME OF THE DEVICE MONITORED ON THE COVER OF THE JUNCTION BOX.

12. NOTIFICATION APPLIANCES: PROVIDE AUDIBLE AND VISUAL NOTIFICATION APPLIANCES THROUGHOUT BUILDING. VOLUME OF HORNS SHALL BE SUFFICIENT TO PROVIDE A SOUND LEVEL OF 15 Db ABOVE AMBIENT IN ALL OCCUPIED AREAS. VISIBLE ALARMS SHALL BE PROVIDED THROUGHOUT ALL OCCUPIED AREAS OF HE BUILDING INCLUDING PRIVATE OFFICES AND AREAS WITH POSSIBLE OCCUPANCY BY HEARING IMPAIRED PERSONS. STROBES SHALL FLASH IN SYNCHRONIZATION. CONFIGURE CIRCUITS TO ALLOW HORNS TO BE SILENCED WHILE STROBES CONTINUE TO FLASH.

13. FIRE SAFETY FUNCTIONS: CONTROL MODULES WITH RELAY CONTACTS SHALL BE INSTALLED AND PROGRAMMED TO PROVIDE DOOR RELEASE, FAN SHUTDOWN AND ACTIVATION OF NOTIFICATION CIRCUIT POWER SUPPLIES (UNLESS PROVIDED BY SEPARATE CIRCUIT FROM FACP). THE CONTROL RELAY MODULES SHALL BE INSTALLED WITHIN 36" OF DEVICE OR CIRCUIT CONTROLLED.

14. PHASING: PLAN SEQUENCE OF WORK TO MINIMIZE DOWN TIME OF FIRE ALARM SYSTEM. IT IS THE INSTALLER'S RESPONSIBILITY TO NOTIFY PROPER AUTHORITIES AND PROVIDE A FIRE WATCH DURING INTERRUPTIONS OF FIRE DETECTION AND ALARM SERVICE IN THE BUILDING.

15. TESTING: SCHEDULE AND PERFORM ALL ACCEPTANCE TESTS REQUIRED BY NFPA 72. TESTING SHALL BE WITNESSED BY STATE FIRE MARSHAL'S OFFICE, PROJECT ENGINEER, DFCM AND BUILDING MAINTENANCE PERSONNEL. SUBMIT A WRITTEN TESTING PLAN DETAILING EACH TEST TO BE PERFORMED TO EACH AGENCY AT LEAST ONE DAY PRIOR TO SCHEDULED TEST.

FIRE ALARM INITIATING DEVICE PLAN – NORTHWEST

1/8" = 1'-0"

FIRE ALARM KEYPLAN

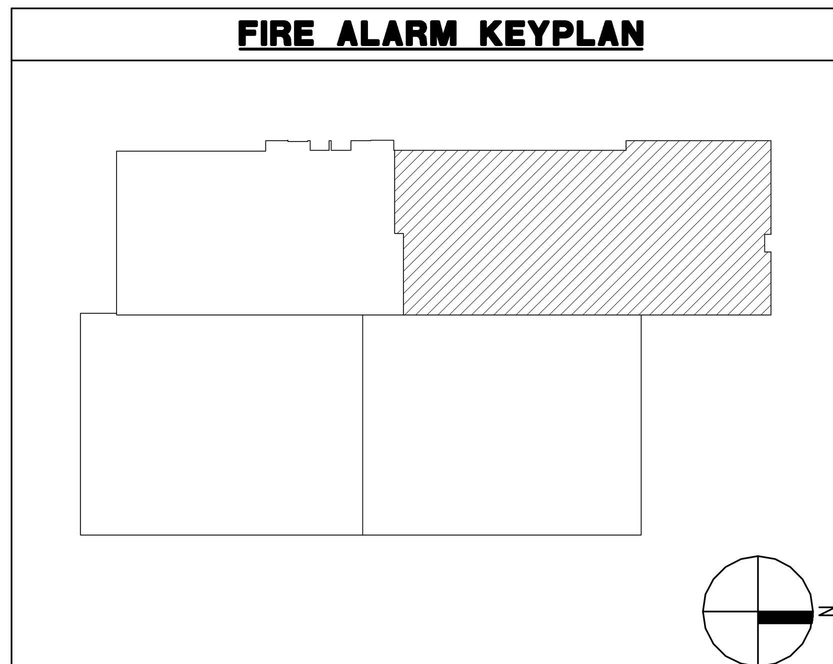

FIRE ALARM SYSTEM KEY NOTES

(01) FURNISH AND INSTALL NEW ADDRESSABLE FIRE ALARM CONTROL PANEL (FACP). FACP MAY BE SURFACE MOUNT OR RECESSED INTO WALL. CONDUIT FROM FACP TO VOID SPACE ABOVE CEILING MAY BE EXPOSED BUT SHALL BE PAINTED TO MATCH WALL. FACP SHALL BE FCI (IDENTIFLEX 602 WITH 411 SERIES DACT), SILENT KNIGHT (5820XL) OR FIRE-LITE (MS-9600 WITH DACT-UD). INSTALL FACP WITH KEY PAD APPROXIMATELY 60" ABOVE FLOOR LEVEL. PROVIDE DEDICATED 120 VAC - 20 AMP CIRCUIT TO FACP FROM NEARBY POWER DISTRIBUTION PANEL. POWER CIRCUIT TO FACP SHALL BE PERMANENTLY MARKED AND MECHANICALLY PROTECTED PER NFPA 70 & 72. PROVIDE PHONE LINES (PRIMARY AND SECONDARY) TO FACP FOR OFF-PREMISE RELAY OF FIRE ALARM, SUPERVISORY AND TROUBLE SIGNALS.

(02) EXISTING FIRE ALARM CONTROL PANEL TO BE REPLACED BY NEW ADDRESSABLE FACP AT DIFFERENT LOCATION. FACP SHALL BE KEPT IN SERVICE UNTIL NEW FACP IS INSTALLED AND FULLY OPERATIONAL. AFTER NEW FACP HAS BEEN INSTALLED AND IS FULLY OPERATIONAL, EXISTING FACP SHALL BE REMOVED (EXISTING MASTER TIME SYSTEM TO REMAIN). REMOVE ALL CONTROL EQUIPMENT, CABINETS, CONDUIT, J-BOXES, ETC. PATCH AND RE-FINISH WALL TO MATCH SURROUNDING WALL SURFACE.

(03) FURNISH AND INSTALL REMOTE POWER SUPPLIES TO PROVIDE 24 VDC POWER TO NOTIFICATION APPLIANCE CIRCUITS. SURFACE MOUNT POWER SUPPLIES ON WALL WHERE SHOWN ON PLANS AT NEW FACP, LOCATION OF EXISTING FACP AND REMOTE POWER SUPPLY TO BE REMOVED. CONDUITS FROM POWER SUPPLY TO VOID SPACE ABOVE CEILING OR TO TRUSS SPACE MAY BE EXPOSED BUT SHALL BE PAINTED TO MATCH WALL. EXISTING POWER CIRCUITS MAY BE RE-USED WHERE PRESENT. POWER SUPPLIES SHALL BE SUPERVISED AND NAC CIRCUITS ACTIVATED BY FACP. PROVIDE BATTERIES FOR SECONDARY POWER SUPPLY SIZED TO PROVIDE 24 HOURS OF STANDBY POWER PLUS AN ADDITIONAL RESERVE FOR 5 MINUTES OF ALARM POWER. PROVIDE SYNC MODULES AND INTERCONNECT POWER SUPPLIES AS REQUIRED TO SYNCRONIZE ALL VISUAL ALARMS WITHIN A SINGLE FIELD OF VIEW.

(04) EXISTING NOTIFICATION POWER SUPPLY TO BE REMOVED. POWER SUPPLY TO BE KEPT IN SERVICE UNTIL ALL FUNCTIONS PERFORMED BY THE POWER SUPPLY ARE PROVIDED BY THE NEW FIRE ALARM SYSTEM. REMOVE POWER SUPPLY, CABINET, J-BOX, ETC. PATCH AND REFINISH TO MATCH EXISTING.

(05) FURNISH AND INSTALL A NEW ANNUNCIATOR PANEL FOR ADDRESSABLE FIRE ALARM SYSTEM. INSTALL ON RECESSED TYPE JUNCTION BOX WITH CONDUIT CONCEALED IN WALL. MOUNT ANNUNCIATOR AT 54" CENTERLINE ABOVE FLOOR LEVEL.

(06) EXISTING MANUAL PULL STATION TO BE REMOVED. PULL STATION IS NOT REQUIRED BY IBC OR IFC. REMOVE EXISTING DEVICE, JUNCTION BOX AND CONDUIT TO VOID SPACE ABOVE CEILING OR TRUSS SPACE. PATCH AND REFINISH WALL SURFACE TO MATCH EXISTING.

(07) FURNISH AND INSTALL A PROTECTIVE COVER (STI-1100 OR EQUAL) WITH AUDIBLE ALARM OVER MANUAL FIRE ALARM PULL STATION TO DISCURAGE FALSE ACTUATION.

(08) EXISTING PULL STATION MOUNTED TO HIGH TO CONFORM TO ACCESSIBILITY GUIDELINES. RELOCATE EXISTING PULL STATION J-BOX AND CONDUIT AND INSTALL NEW ADDRESSABLE PULL STATION WITH THE OPERATING ELEMENT AT 48" ABOVE FLOOR LEVEL. CONDUIT MAY BE EXPOSED WITH SURFACE MOUNTED J-BOX FOR BLOCK WALLS AND SHALL BE CONCEALED WHERE WALL SURFACE IS FINISHED. PATCH AND REPAINT WALL AS REQUIRED.

(09) INSTALL BURRIED CONDUIT ABOVE GROUND WEATHERPROOF JUNCTION BOXES AND WEATHER PROOF FLEX CONDUIT TO NEW TAMPER SWITCH ON EXTERIOR FIRE SPRINKLER CONTROL VALVE (SEE KEY NOTE 1 ON SHEET FA-10).

(10) PROVIDE A PROGRAMMABLE RELAY TO RELEASE EXISTING FIRE DOOR UPON OPERATION OF SMOKE DETECTOR ON EITHER SIDE OF FIRE DOOR. TEST DOOR FOR PROPER OPERATION AND ADJUST OR REPAIR DOOR TO ENSURE PROPER OPERATION. NOTIFY OWNER AND ENGINEER IN WRITING IF EXISTING DOOR IS NOT FUNCTIONAL AND CANNOT BE REPAIRED/ ADJUSTED OR DOES NOT INCLUDE RELAYS FOR CONNECTION TO FIRE ALARM SYSTEM.

(11) INSTALL NEW DUCT MOUNTED SMOKE DETECTOR ON THE SUPPLY SIDE OF AIR MOVEMENT SYSTEMS WITH A CAPACITY IN EXCESS OF 2,00 CFM. EXISTING DETECTORS MY BE RE-USED IF COMPLETELY FUNCTIONAL AND COMPATIBLE WITH NEW FIRE ALARM SYSTEM. INSTALL DETECTOR PER MANUFACTURER'S RECOMMENDATIONS WITH DETECTOR ENCLOSURE MOUNTED ON DUCT EXTERIOR AND SAMPLING TUBE INSTALLED WITHIN DUCT. SMOKE DETECTORS AND AUTOMATIC CONTROL WILL NOT BE REQUIRED FOR EVAPORATIVE COOLERS IN SHOP AREAS WHERE AIR MOVEMENT SYSTEM SUPPLIES AND RETURNS FROM A SINGLE ROOM.

(12) FURNISH AND INSTALL A PROGRAMMABLE RELAY TO SHUT DOWN AIR HANDLER. RELAY SHALL BE NORMALLY ENERGIZED AND FAN CONTROLS SHALL BE CONNECTED TO NORMALLY CLOSED CONTACTS ON THE RELAY. RELAY SHALL BE PROGRAMMED TO SHUT DOWN ALL AIR HANDLERS SIMULTANEOUSLY UPON ACTIVATION OF ANY AREA OR DUCT SMOKE DETECTOR AND SHALL NOT RESTORE UNTIL THE FACP HAS RESET. FIELD LOCATE RELAY.

(13) FURNISH AND INSTALL A NEW EXTERIOR ALARM ON THE EXTERIOR WALL OF THE BUILDING. MOUNT ALARM AT 10'-0" ABOVE GRADE OR AT HEIGHT INDICATED ON DRAWINGS. DEVICE SHALL BE UL LISTED FOR EXTERIOR INSTALLATION AND INSTALLED ON A WEATHERPROOF J-BOX. J-BOX MAY BE SURFACE MOUNTED BUT CONDUIT SHALL BE CONCEALED IN WALL.

FIRE ALARM EQUIPMENT LEGEND

DEVICE	DESCRIPTION	MOUNTING	REMARKS
FACP	ADDRESSABLE FIRE ALARM CONTROL PANEL	SURFACE MOUNT ON WALL WITH KEYPAD AT 60" AFF.	FCI IDENTIFLEX 602, SILENT KNIGHT 5820 XL OR FIRE LITE MS-9600
FACP	EXISTING FIRE ALARM CONTROL PANEL	EXISTING	EXISTING FACP TO BE REMOVED. PATCH AND REFINISH WALL SURFACE.
FAPS	NOTIFICATION CIRCUIT REMOTE POWER SUPPLY	SURFACE MOUNT ON WALL	TO POWER NOTIFICATION APPLIANCES
FAPS	EXISTING FIRE ALARM POWER SUPPLY	EXISTING	EXISTING POWER SUPPLY TO BE REMOVED. NEW POWER SUPPLY TO BE INSTALLED IN SAME LOCATION.
ANN	FIRE ALARM ANNUNCIATOR PANEL	MOUNT AT 54"AFF ON RECESSED J-BOX.	TO DISPLAY STATUS OF FIRE ALARM SYSTEM. ANNUNCIATOR SHALL HAVE ALPHA-NUMERIC READOUT AND KEYPAD TO ALLOW SYSTEM SILENCE AND RESET.
	ADDRESSABLE PHOTOELECTRIC SMOKE DETECTOR TO REPLACE EXISTING DETECTOR	CEILING MOUNT ON EXISTING J-BOX	REMOVE EXISTING SMOKE DETECTORS AND REPLACE WITH NEW ADDRESSABLE DETECTORS COMPATIBLE WITH NEW FACP.
N	ADDRESSABLE PHOTOELECTRIC SMOKE DETECTOR	CEILING MOUNT ON EXISTING J-BOX	ADD NEW DETECTORS WHERE INDICATED ON PLANS.
	EXISTING SMOKE DETECTOR	EXISTING	REMOVE EXISTING DETECTOR AND J-BOX REPLACE CEILING TILE AND/OR PATCH AND PAINT CEILING.
	ADDRESSABLE HEAT DETECTOR (FIXED TEMP)	CEILING MOUNT ON EXISTING J-BOX	REMOVE EXISTING HEAT DETECTOR AND REPLACE WITH NEW ADDRESSABLE DETECTOR COMPATIBLE WITH NEW FACP.
	ADDRESSABLE MANUAL PULL STATION TO REPLACE EXISTING.	WALL MOUNT ON EXISTING (OR RELOCATED) J-BOX.	REPLACE EXISTING PULL STATIONS WITH NEW PULL STATIONS COMPATIBLE WITH NEW FACP
N	ADDRESSABLE MANUAL PULL STATION	WALL MOUNT AT 48" AFF ON RECESSED J-BOX	ADD NEW PULL STATION WHERE INDICATED ON PLAN.
	EXISTING MANUAL PULL STATION	EXISTING	REMOVE EXISTING PULL STATION, J-BOX AND CONDUIT. PATCH AND PAINT WALL.
F	VANE TYPE WATER FLOW SWITCH	MOUNT ON FIRE SPRINKLER RISER PER MANUFACTURER REQUIREMENTS.	TO REPLACE EXISTING PRESSURE TYPE FLOW SWITCHES. CONNECT TO NEW FIRE ALARM SYSTEM.
F	EXISTING VANE TYPE WATER FLOW SWITCH	EXISTING	EXISTING TO REMAIN. CONNECT TO NEW FIRE ALARM SYSTEM.
T	VALVE SUPERVISORY SWITCH	MOUNT IN PORT OF NEW EXTERIOR POST INDICATOR	TO MONITOR POSITION OF EXTERIOR FIRE SPRINKLER CONTROL VALVE. CONNECT TO NEW FIRE ALARM SYSTEM.
T	EXISTING VALVE SUPERVISORY SWITCH	EXISTING	EXISTING TO REMAIN. CONNECT TO NEW FIRE ALARM SYSTEM.
SD	ADDRESSABLE DUCT SMOKE DETECTOR	DUCT MOUNT IN SUPPLY AND RETURN DUCTS PER MANUFACTURER'S REQUIREMENTS	REPLACE EXISTING DETECTORS AND/OR INSTALL NEW DETECTORS FOR ALL AIR MOVEMENT SYSTEMS WITH A CAPACITY IN EXCESS OF 2000 CFM PER NFPA 72, 90 & IMC.
M	ADDRESSABLE MONITOR MODULE	MOUNT ON J-0BOX NEAR CONVENTIONAL DEVICE TO BE MONITORED	CONNECT TO CONTACTS OF CONVENTIONAL DEVICE TO FACILITATE MONITORING OF DEVICE AS AN ADDRESSABLE POINT.
C	ADDRESSABLE CONTROL MODULE	MOUNT ON J-BOX WITHIN 3' OF DEVICE OR CIRCUIT	TO PROVIDE PROTECTED PREMISE FIRE SAFETY FUNCTIONS SUCH AS DOOR RELEASE, FAN SHUTDOWN TO NOTIFICATION CIRCUIT ACTIVATION.
	HORN/STROBE TO REPLACE EXISTING	WALL MOUNT ON EXISTING J-BOX	CANDELA RATING OF STROBE SHALL BE AS INDICATED ON DRAWINGS. STROBES SHALL BE SYNCHRONIZED WITH ALL OTHER STROBES IN VIEW. DEVICE SHALL BE POWERED FROM FACP OR REMOTE POWER SUPPLY SUPERVISED BY FACP. DEVICE COLOR – RED
N	HORN/STROBE (WALL MOUNT)	WALL MOUNT AT 80" TO 96" AFF ON NEW RECESSED J-BOX	
N	STROBE	CEILING MOUNT ON NEW RECESSED J-BOX OR WALL MOUNT AT 80" TO 96" AFF	
	HORN/STROBE (CEILING MOUNT)	CEILING MOUNT ON NEW RECESSED J-BOX	
	EXTERIOR HORN/STROBE TO REPLACE EXISTING	WALL MOUNT ON EXISTING J-BOX	
N	EXTERIOR HORN/STROBE	WALL MOUNT ON NEW WEATHER PROOF J-BOX (SURFACE MOUNT) AT 10'-0" AFF OR HEIGHT INDICATED ON DRAWINGS	
	EXISTING NOTIFICATION APPLIANCE TO BE REMOVED	EXISTING	REMOVE EXISTING DEVICE AND WIRING AND PROVIDE COVER PLATE (APPROVED BY OWNER) FOR EXISTING J-BOX.

JOB NO. 104161
DWG ISSUE:

DRAWN BY: BBH
CHECKED BY: GTJ

REVISIONS:

DRAWING DATE: 12/07/07
REVISION DATE: XX/XX/XX

SNOW COLLEGE - WASHBURN BUILDING
RICHFIELD, UTAH

FIRE ALARM SYSTEM UPGRADE
DFCM PROJECT #07159700

FIRE ALARM INITIATING DEVICE PLAN - NORTHWEST

FA-1

FIRE ALARM SYSTEM GENERAL NOTES

1. SCOPE OF WORK: WORK SHALL INCLUDE REMOVAL OF EXISTING CONVENTIONAL FIRE ALARM SYSTEM INCLUDING ALL CONTROL EQUIPMENT, POWER SUPPLIES, CABINETS, INIT. CIRCUITS AND DEVICES, NOTIFICATION APPLIANCE CIRCUITS AND DEVICES. INSTALL NEW ADDRESSABLE FIRE ALARM SYSTEM INCLUDING CONTROL PANEL WITH NEW SIGNALING LINE CIRCUITS, INITIATING DEVICE CIRCUITS AND NOTIFICATION APPLIANCE CIRCUITS. NEW FIRE ALARM SYSTEM SHALL BE IN ACCORDANCE WITH NFPA 72, THESE DRAWINGS AND SPECIFICATIONS.

2. APPLICABLE CODES/STANDARDS:
   INTERNATIONAL BUILDING CODE - 2006 EDITION
   INTERNATIONAL FIRE CODE - 2006 EDITION
   INTERNATIONAL MECHANICAL CODE - 2006 EDITION
   UTAH STATE FIRE MARSHAL RULE R710-4
   NFPA 70 - 2005 EDITION
   NFPA 72 - 2007 EDITION
   NFPA 90A - 2002 EDITION

3. QUALITY ASSURANCE: ALL EQUIPMENT, MATERIAL AND DEVICES USED FOR THE FIRE ALARM SYSTEM INSTALLATION SHALL BE UL LISTED AND/OR FM APPROVED FOR USE IN FIRE PROTECTION SYSTEMS. ALL INITIATING DEVICES SHALL BE LISTED COMPATIBLE WITH THE FIRE ALARM CONTROL PANEL (FACP). MAJOR SYSTEM COMPONENTS (CONTROL PANELS, INITIATING DEVICES, ADDRESSABLE MODULES AND RELAYS, POWER SUPPLIES, ETC.) SHALL BE FCI OR FROM A STATE OF UTAH DFCM APPROVED MANUFACTURER. APPROVED MANUFACTURERS INCLUDE FIRE-LITE AND SILENT KNIGHT.

4. SUBMITTALS: FIRE ALARM SYSTEM CONTRACTOR SHALL PREPARE AND SUBMIT SHOPS DRAWINGS TO STATE FIRE MARSHAL, OWNER AND ENGINEER FOR REVIEW/APPROVAL PRIOR TO ORDERING OR INSTALLING ANY EQUIPMENT. SUBMITTALS SHALL CONFORM TO THE CONSTRUCTION DOCUMENTS REQUIREMENTS OF IFC 907.1.1.

5. DEMOLITION: IT IS THE INSTALLER'S RESPONSIBILITY FOR THE DEMOLITION OF THE EXISTING FIRE ALARM SYSTEM. ALL NEW DEVICES AND CIRCUITS WILL REPLACE THE OLD AND GENERALLY REUSE THE EXISTING LOCATIONS. ANY EXISTING DEVICES AND CONDUIT NOT BEING REPLACED AND REUSED THAT ARE VISIBLE, SUCH AS CABINETS NOTIFICATION APPLIANCES OR SMOKE DETECTORS SHALL BE REMOVED AND REMAINING WALL OR CEILING SURFACE REPAIRED OR REPLACED TO MATCH SURROUNDING AREAS. REMOVE ALL UNUSED WIRE IN ALL REMAINING J-BOXES AND/OR CONDUITS. ANY CEILING TILE DAMAGED BY THE INSTALLER MUST BE REPLACED WITH THE SAME OR EQUIVALENT TILE.

6. SYSTEM TYPE: FIRE ALARM SYSTEM SHALL MEET THE REQUIREMENTS FOR PROTECTED PREMISE FIRE ALARM SYSTEMS. SYSTEM SHALL PROVIDE OFF-PREMISE NOTIFICATION OF STATUS TO CENTRAL STATION DETERMINED BY OWNER.

7. OCCUPANT NOTIFICATION: RECEIPT OF ANY FIRE ALARM SIGNAL AT THE FACP SHALL RESULT IN THE ACTIVATION OF ALL NOTIFICATION APPLIANCES IN THE BUILDING (STROBES AND HORN/STROBES). FOR PURPOSES OF FIRE ALARM NOTIFICATION, THE BUILDING SHALL BE CONSIDERED AS A SINGLE ZONE.

8. WIRING/CONDUIT: ALL WIRING SHALL BE NEW (EXISTING WIRING MAY NOT BE RE-USED) AND SHALL BE FREE OF OPENS, SHORTS AND GROUNDS. ALL WIRING SHALL BE INSTALLED IN RIGID CONDUIT OR EMT. FLEXIBLE CONDUIT MAY BE USED FOR DROPS TO SINGLE DEVICES (MAXIMUM 6'). MINIMUM CONDUIT SIZE SHALL BE 1/2". CONDUIT SHALL BE CONCEALED IN FINISHED AREAS AND MAY BE EXPOSED IN UNFINISHED AREAS. EXPOSED CONDUIT MAY BE UNPAINTED (UNLESS OTHERWISE NOTED) BUT SHALL BE PERIODICALLY MARKED WITH RED TAPE OR PAINT. ALL PENETRATIONS THROUGH RATED PARTITIONS SHALL BE FIRE STOPPED WITH A SUITABLE CAULKING COMPOUND. ALL WIRING USED IN THE FIRE ALARM SYSTEM SHALL BE FPL (FIRE, POWER LIMITED) WITH MINIMUM 300V INSULATION OR EQUIVALENT AS PER NFPA 70 ARTICLE 760.

9. WIRING STYLES(PER NFPA 72): INITIATING DEVICE CIRCUITS SHALL MEET THE REQUIREMENTS FOR CLASS A STYLE D CIRCUITS. SIGNALING LINE CIRCUITS SHALL MEET THE REQUIREMENTS FOR CLASS A STYLE 6 OR 7 CIRCUITS. NOTIFICATION APPLIANCE CIRCUITS SHALL MEET THE REQUIREMENTS FOR CLASS A STYLE Z.

10. POWER: PROVIDE NEW 120VAC 20 AMP CIRCUIT FROM EXISTING POWER DISTRIBUTION PANEL IN SUPPLY ROOM TO PROVIDE PRIMARY POWER TO FACP. EXISTING BRANCH CIRCUITS MAY BE REUSED TO PROVIDE PRIMARY POWER TO NEW REMOTE NOTIFICATION CIRCUIT POWER SUPPLIES. FURNISH A BATTERY BACKUP TO PROVIDE SECONDARY POWER SUPPLY TO FIRE ALARM PANEL AND NOTIFICATION CIRCUIT POWER SUPPLIES. BATTERY BACKUP SHALL BE OF SUFFICIENT CAPACITY TO PROVIDE 24 HOURS OF STANDBY POWER WITH AN ADDITIONAL RESERVE TO OPERATE SYSTEM FOR 5 MINUTES IN ALARM.

11. INITIATING DEVICES:
    SLC CIRCUITS: SLC LOOP DEVICE ADDRESSING SHALL NOT EXCEED 100 DEVICES (SMOKES, HEATS, DUCT SMOKES, MODULES CONTROL RELAYS, ETC.) PER LOOP. AT LEAST 20 ADDRESSES (20%) SHOULD BE LEFT VACANT ON EACH SLC LOOP IN ORDER TO ALLOW SPACE FOR ADJUSTMENTS/EXPANSION:
    SMOKE DETECTORS: PROVIDE SMOKE DETECTORS WHERE SHOWN ON PLANS IN ALL CORRIDORS AND LOBBIES. MAXIMUM SPACING OF DETECTORS SHALL BE 30' BETWEEN DETECTORS OR 15' FROM FURTHEST WALL.
    MANUAL PULL STATIONS: INSTALL NEW PULL STATIONS AT SAME LOCATION AND HEIGHT AS EXISTING PULL STATIONS USING EXISTING JUNCTION BOXES (UNLESS OTHERWISE NOTED). WHERE NEW MANUAL PULL STATIONS ARE INDICATED ON THE PLAN INSTALL WITH OPERATING ELEMENT AT 48" AFF.
    ADDRESSABLE MODULES: PROVIDE ADDRESSABLE MODULES TO MONITOR EXISTING CONVENTIONAL DEVICES (FIRE SPRINKLER SWITCHES) TO REMAIN AND TROUBLE OUTPUT OF NEW NOTIFICATION CIRCUIT POWER SUPPLIES. LOCATE MONITOR MODULE ADJACENT TO DEVICE MONITORED IN AN ACCESSIBLE LOCATION OR ABOVE REMOVABLE CEILING TILE. LABEL AS PART OF THE FIRE ALARM SYSTEM WITH THE NAME OF THE DEVICE MONITORED ON THE COVER OF THE JUNCTION BOX.

12. NOTIFICATION APPLIANCES: PROVIDE AUDIBLE AND VISUAL NOTIFICATION APPLIANCES THROUGHOUT BUILDING. VOLUME OF HORNS SHALL BE SUFFICIENT TO PROVIDE A SOUND LEVEL OF 15 Db ABOVE AMBIENT IN ALL OCCUPIED AREAS. VISIBLE ALARMS SHALL BE PROVIDED THROUGHOUT ALL OCCUPIED AREAS OF HE BUILDING INCLUDING PRIVATE OFFICES AND AREAS WITH POSSIBLE OCCUPANCY BY HEARING IMPAIRED PERSONS. STROBES SHALL FLASH IN SYNCHRONIZATION. CONFIGURE CIRCUITS TO ALLOW HORNS TO BE SILENCED WHILE STROBES CONTINUE TO FLASH.

13. FIRE SAFETY FUNCTIONS: CONTROL MODULES WITH RELAY CONTACTS SHALL BE INSTALLED AND PROGRAMMED TO PROVIDE DOOR RELEASE, FAN SHUTDOWN AND ACTIVATION OF NOTIFICATION CIRCUIT POWER SUPPLIES (UNLESS PROVIDED BY SEPARATE CIRCUIT FROM FACP). THE CONTROL RELAY MODULES SHALL BE INSTALLED WITHIN 36" OF DEVICE OR CIRCUIT CONTROLLED.

14. PHASING: PLAN SEQUENCE OF WORK TO MINIMIZE DOWN TIME OF FIRE ALARM SYSTEM. IT IS THE INSTALLER'S RESPONSIBILITY TO NOTIFY PROPER AUTHORITIES AND PROVIDE A FIRE WATCH DURING INTERRUPTIONS OF FIRE DETECTION AND ALARM SERVICE IN THE BUILDING.

15. TESTING: SCHEDULE AND PERFORM ALL ACCEPTANCE TESTS REQUIRED BY NFPA 72. TESTING SHALL BE WITNESSED BY STATE FIRE MARSHAL'S OFFICE, PROJECT ENGINEER, DFCM AND BUILDING MAINTENANCE PERSONNEL. SUBMIT A WRITTEN TESTING PLAN DETAILING EACH TEST TO BE PERFORMED TO EACH AGENCY AT LEAST ONE DAY PRIOR TO SCHEDULED TEST.

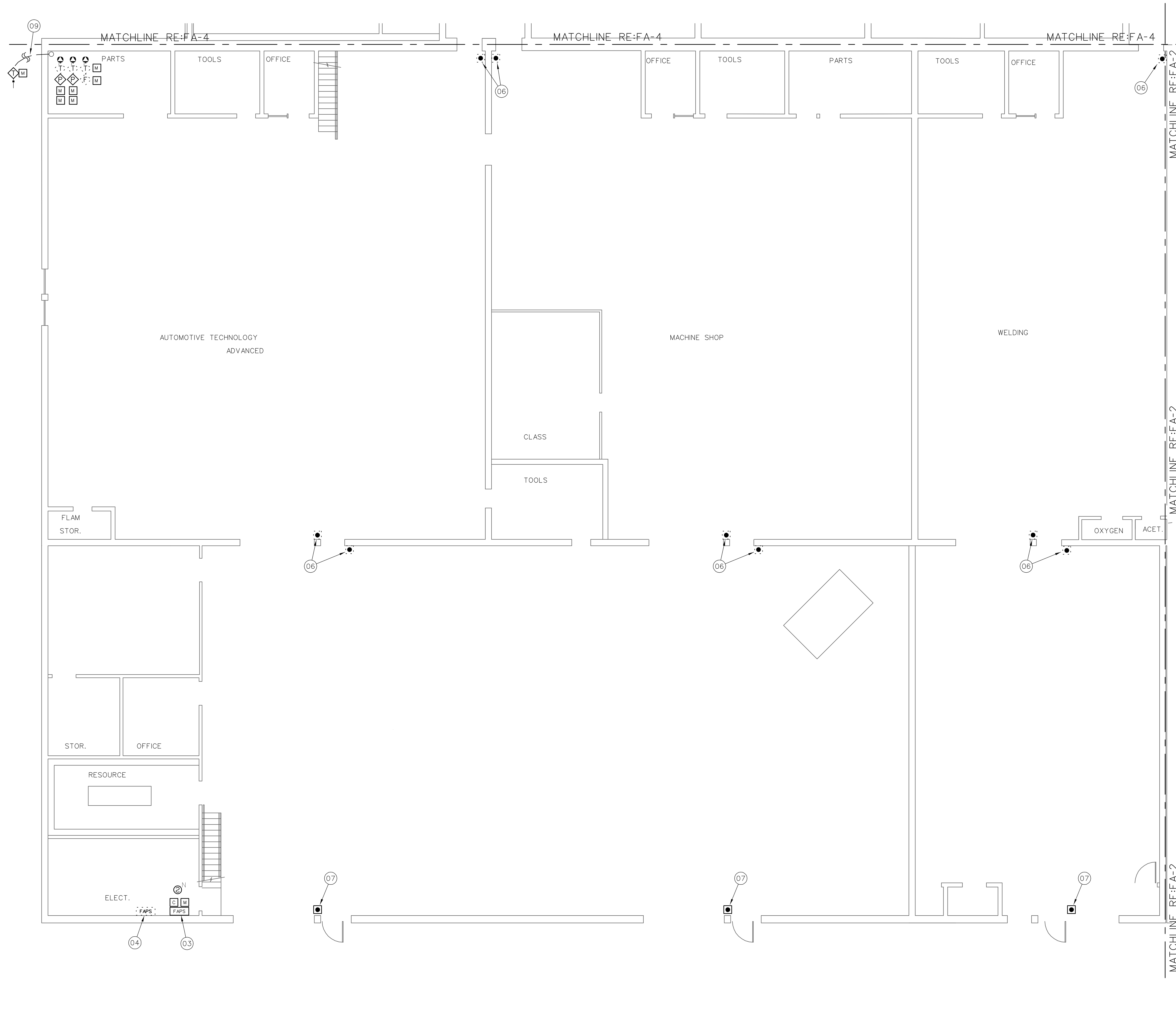

FIRE ALARM INITIATING DEVICE PLAN – SOUTHEAST

1/8" = 1'-0"

0 8' 16' 32'

FIRE ALARM KEYPLAN

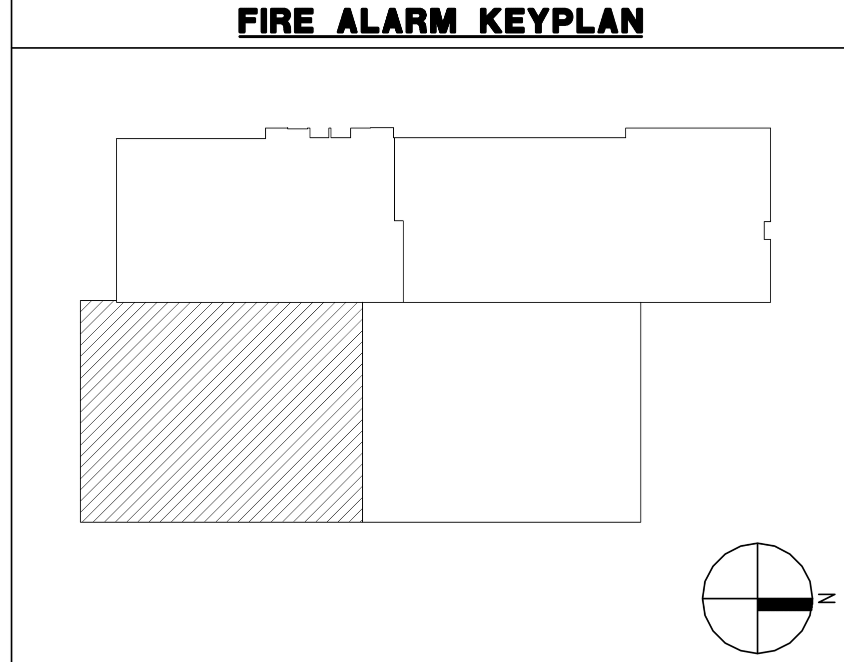

FIRE ALARM SYSTEM KEY NOTES

(01) FURNISH AND INSTALL NEW ADDRESSABLE FIRE ALARM CONTROL PANEL (FACP). FACP MAY BE SURFACE MOUNT OR RECESSED INTO WALL. CONDUIT FROM FACP TO VOID SPACE ABOVE CEILING MAY BE EXPOSED BUT SHALL BE PAINTED TO MATCH WALL. FACP SHALL BE FCI (IDENTIFLEX 602 WITH 411 SERIES DACT), SILENT KNIGHT (5820XL) OR FIRE-LITE (MS-9600 WITH DACT-UD). INSTALL FACP WITH KEY PAD APPROXIMATELY 60" ABOVE FLOOR LEVEL. PROVIDE DEDICATED 120 VAC - 20 AMP CIRCUIT TO FACP FROM NEARBY POWER DISTRIBUTION PANEL. POWER CIRCUIT TO FACP SHALL BE PERMANENTLY MARKED AND MECHANICALLY PROTECTED PER NFPA 70 & 72. PROVIDE PHONE LINES (PRIMARY AND SECONDARY) TO FACP FOR OFF-PREMISE RELAY OF FIRE ALARM, SUPERVISORY AND TROUBLE SIGNALS.

(02) EXISTING FIRE ALARM CONTROL PANEL TO BE REPLACED BY NEW ADDRESSABLE FACP AT DIFFERENT LOCATION. FACP SHALL BE KEPT IN SERVICE UNTIL NEW FACP IS INSTALLED AND FULLY OPERATIONAL. AFTER NEW FACP HAS BEEN INSTALLED AND IS FULLY OPERATIONAL, EXISTING FACP SHALL BE REMOVED (EXISTING MASTER TIME SYSTEM TO REMAIN). REMOVE ALL CONTROL EQUIPMENT, CABINETS, CONDUIT, J-BOXES, ETC. PATCH AND RE-FINISH WALL TO MATCH SURROUNDING WALL SURFACE.

(03) FURNISH AND INSTALL REMOTE POWER SUPPLIES TO PROVIDE 24 VDC POWER TO NOTIFICATION APPLIANCE CIRCUITS. SURFACE MOUNT POWER SUPPLIES ON WALL WHERE SHOWN ON PLANS AT NEW FACP, LOCATION OF EXISTING FACP AND REMOTE POWER SUPPLY TO BE REMOVED. CONDUITS FROM POWER SUPPLY TO VOID SPACE ABOVE CEILING OR TO TRUSS SPACE MAY BE EXPOSED BUT SHALL BE PAINTED TO MATCH WALL. EXISTING POWER CIRCUITS MAY BE RE-USED WHERE PRESENT. POWER SUPPLIES SHALL BE SUPERVISED AND NAC CIRCUITS ACTIVATED BY FACP. PROVIDE BATTERIES FOR SECONDARY POWER SUPPLY SIZED TO PROVIDE 24 HOURS OF STANDBY POWER PLUS AN ADDITIONAL RESERVE FOR 5 MINUTES OF ALARM POWER. PROVIDE SYNC MODULES AND INTERCONNECT POWER SUPPLIES AS REQUIRED TO SYNCRONIZE ALL VISUAL ALARMS WITHIN A SINGLE FIELD OF VIEW.

(04) EXISTING NOTIFICATION POWER SUPPLY TO BE REMOVED. POWER SUPPLY TO BE KEPT IN SERVICE UNTIL ALL FUNCTIONS PERFORMED BY THE POWER SUPPLY ARE PROVIDED BY THE NEW FIRE ALARM SYSTEM. REMOVE POWER SUPPLY, CABINET, J-BOX, ETC. PATCH AND REFINISH TO MATCH EXISTING.

(05) FURNISH AND INSTALL A NEW ANNUNCIATOR PANEL FOR ADDRESSABLE FIRE ALARM SYSTEM. INSTALL ON RECESSED TYPE JUNCTION BOX WITH CONDUIT CONCEALED IN WALL. MOUNT ANNUNCIATOR AT 54" CENTERLINE ABOVE FLOOR LEVEL.

(06) EXISTING MANUAL PULL STATION TO BE REMOVED. PULL STATION IS NOT REQUIRED BY IBC OR IFC. REMOVE EXISTING DEVICE, JUNCTION BOX AND CONDUIT TO VOID SPACE ABOVE CEILING OR TRUSS SPACE. PATCH AND REFINISH WALL SURFACE TO MATCH EXISTING.

(07) FURNISH AND INSTALL A PROTECTIVE COVER (STI-1100 OR EQUAL) WITH AUDIBLE ALARM OVER MANUAL FIRE ALARM PULL STATION TO DISCURAGE FALSE ACTUATION.

(08) EXISTING PULL STATION MOUNTED TO HIGH TO CONFORM TO ACCESSIBILITY GUIDELINES. RELOCATE EXISTING PULL STATION J-BOX AND CONDUIT AND INSTALL NEW ADDRESSABLE PULL STATION WITH THE OPERATING ELEMENT AT 48" ABOVE FLOOR LEVEL. CONDUIT MAY BE EXPOSED WITH SURFACE MOUNTED J-BOX FOR BLOCK WALLS AND SHALL BE CONCEALED WHERE WALL SURFACE IS FINISHED. PATCH AND REPAINT WALL AS REQUIRED.

(09) INSTALL BURRIED CONDUIT ABOVE GROUND WEATHERPROOF JUNCTION BOXES AND WEATHER PROOF FLEX CONDUIT TO NEW TAMPER SWITCH ON EXTERIOR FIRE SPRINKLER CONTROL VALVE (SEE KEY NOTE 1 ON SHEET FA-10).

(10) PROVIDE A PROGRAMMABLE RELAY TO RELEASE EXISTING FIRE DOOR UPON OPERATION OF SMOKE DETECTOR ON EITHER SIDE OF FIRE DOOR. TEST DOOR FOR PROPER OPERATION AND ADJUST OR REPAIR DOOR TO ENSURE PROPER OPERATION. NOTIFY OWNER AND ENGINEER IN WRITING IF EXISTING DOOR IS NOT FUNCTIONAL AND CANNOT BE REPAIRED/ ADJUSTED OR DOES NOT INCLUDE RELAYS FOR CONNECTION TO FIRE ALARM SYSTEM.

(11) INSTALL NEW DUCT MOUNTED SMOKE DETECTOR ON THE SUPPLY SIDE OF AIR MOVEMENT SYSTEMS WITH A CAPACITY IN EXCESS OF 2,00 CFM. EXISTING DETECTORS MY BE RE-USED IF COMPLETELY FUNCTIONAL AND COMPATIBLE WITH NEW FIRE ALARM SYSTEM. INSTALL DETECTOR PER MANUFACTURER'S RECOMMENDATIONS WITH DETECTOR ENCLOSURE MOUNTED ON DUCT EXTERIOR AND SAMPLING TUBE INSTALLED WITHIN DUCT. SMOKE DETECTORS AND AUTOMATIC CONTROL WILL NOT BE REQUIRED FOR EVAPORATIVE COOLERS IN SHOP AREAS WHERE AIR MOVEMENT SYSTEM SUPPLIES AND RETURNS FROM A SINGLE ROOM.

(12) FURNISH AND INSTALL A PROGRAMMABLE RELAY TO SHUT DOWN AIR HANDLER. RELAY SHALL BE NORMALLY ENERGIZED AND FAN CONTROLS SHALL BE CONNECTED TO NORMALLY CLOSED CONTACTS ON THE RELAY. RELAY SHALL BE PROGRAMMED TO SHUT DOWN ALL AIR HANDLERS SIMULTANEOUSLY UPON ACTIVATION OF ANY AREA OR DUCT SMOKE DETECTOR AND SHALL NOT RESTORE UNTIL THE FACP HAS RESET. FIELD LOCATE RELAY.

(13) FURNISH AND INSTALL A NEW EXTERIOR ALARM ON THE EXTERIOR WALL OF THE BUILDING. MOUNT ALARM AT 10'-0" ABOVE GRADE OR AT HEIGHT INDICATED ON DRAWINGS. DEVICE SHALL BE UL LISTED FOR EXTERIOR INSTALLATION AND INSTALLED ON A WEATHERPROOF J-BOX. J-BOX MAY BE SURFACE MOUNTED BUT CONDUIT SHALL BE CONCEALED IN WALL.

FIRE ALARM EQUIPMENT LEGEND

DEVICE	DESCRIPTION	MOUNTING	REMARKS
FACP	ADDRESSABLE FIRE ALARM CONTROL PANEL	SURFACE MOUNT ON WALL WITH KEYPAD AT 60" AFF.	FCI IDENTIFLEX 602, SILENT KNIGHT 5820 XL OR FIRE LITE MS-9600
FACP	EXISTING FIRE ALARM CONTROL PANEL	EXISTING	EXISTING FACP TO BE REMOVED. PATCH AND REFINISH WALL SURFACE.
FAPS	NOTIFICATION CIRCUIT REMOTE POWER SUPPLY	SURFACE MOUNT ON WALL	TO POWER NOTIFICATION APPLIANCES
FAPS	EXISTING FIRE ALARM POWER SUPPLY	EXISTING	EXISTING POWER SUPPLY TO BE REMOVED. NEW POWER SUPPLY TO BE INSTALLED IN SAME LOCATION.
ANN	FIRE ALARM ANNUNCIATOR PANEL	MOUNT AT 54"AFF ON RECESSED J-BOX.	TO DISPLAY STATUS OF FIRE ALARM SYSTEM. ANNUNCIATOR SHALL HAVE ALPHA-NUMERIC READOUT AND KEYPAD TO ALLOW SYSTEM SILENCE AND RESET.
	ADDRESSABLE PHOTOELECTRIC SMOKE DETECTOR TO REPLACE EXISTING DETECTOR	CEILING MOUNT ON EXISTING J-BOX	REMOVE EXISTING SMOKE DETECTORS AND REPLACE WITH NEW ADDRESSABLE DETECTORS COMPATIBLE WITH NEW FACP.
N	ADDRESSABLE PHOTOELECTRIC SMOKE DETECTOR	CEILING MOUNT ON EXISTING J-BOX	ADD NEW DETECTORS WHERE INDICATED ON PLANS.
	EXISTING SMOKE DETECTOR	EXISTING	REMOVE EXISTING DETECTOR AND J-BOX REPLACE CEILING TILE AND/OR PATCH AND PAINT CEILING.
	ADDRESSABLE HEAT DETECTOR (FIXED TEMP)	CEILING MOUNT ON EXISTING J-BOX	REMOVE EXISTING HEAT DETECTOR AND REPLACE WITH NEW ADDRESSABLE DETECTOR COMPATIBLE WITH NEW FACP.
	ADDRESSABLE MANUAL PULL STATION TO REPLACE EXISTING.	WALL MOUNT ON EXISTING (OR RELOCATED) J-BOX.	REPLACE EXISTING PULL STATIONS WITH NEW PULL STATIONS COMPATIBLE WITH NEW FACP
N	ADDRESSABLE MANUAL PULL STATION	WALL MOUNT AT 48" AFF ON RECESSED J-BOX	ADD NEW PULL STATION WHERE INDICATED ON PLAN.
	EXISTING MANUAL PULL STATION	EXISTING	REMOVE EXISTING PULL STATION, J-BOX AND CONDUIT. PATCH AND PAINT WALL.
F	VANE TYPE WATER FLOW SWITCH	MOUNT ON FIRE SPRINKLER RISER PER MANUFACTURER REQUIREMENTS.	TO REPLACE EXISTING PRESSURE TYPE FLOW SWITCHES. CONNECT TO NEW FIRE ALARM SYSTEM.
F	EXISTING VANE TYPE WATER FLOW SWITCH	EXISTING	EXISTING TO REMAIN. CONNECT TO NEW FIRE ALARM SYSTEM.
T	VALVE SUPERVISORY SWITCH	MOUNT IN PORT OF NEW EXTERIOR POST INDICATOR	TO MONITOR POSITION OF EXTERIOR FIRE SPRINKLER CONTROL VALVE. CONNECT TO NEW FIRE ALARM SYSTEM.
T	EXISTING VALVE SUPERVISORY SWITCH	EXISTING	EXISTING TO REMAIN. CONNECT TO NEW FIRE ALARM SYSTEM.
SD	ADDRESSABLE DUCT SMOKE DETECTOR	DUCT MOUNT IN SUPPLY AND RETURN DUCTS PER MANUFACTURER'S REQUIREMENTS	REPLACE EXISTING DETECTORS AND/OR INSTALL NEW DETECTORS FOR ALL AIR MOVEMENT SYSTEMS WITH A CAPACITY IN EXCESS OF 2000 CFM PER NFPA 72, 90 & IMC.
M	ADDRESSABLE MONITOR MODULE	MOUNT ON J-0BOX NEAR CONVENTIONAL DEVICE TO BE MONITORED	CONNECT TO CONTACTS OF CONVENTIONAL DEVICE TO FACILITATE MONITORING OF DEVICE AS AN ADDRESSABLE POINT.
C	ADDRESSABLE CONTROL MODULE	MOUNT ON J-BOX WITHIN 3' OF DEVICE OR CIRCUIT	TO PROVIDE PROTECTED PREMISE FIRE SAFETY FUNCTIONS SUCH AS DOOR RELEASE, FAN SHUTDOWN TO NOTIFICATION CIRCUIT ACTIVATION.
	HORN/STROBE TO REPLACE EXISTING	WALL MOUNT ON EXISTING J-BOX	CANDELA RATING OF STROBE SHALL BE AS INDICATED ON DRAWINGS. STROBES SHALL BE SYNCHRONIZED WITH ALL OTHER STROBES IN VIEW. DEVICE SHALL BE POWERED FROM FACP OR REMOTE POWER SUPPLY SUPERVISED BY FACP. DEVICE COLOR – RED
N	HORN/STROBE (WALL MOUNT)	WALL MOUNT AT 80" TO 96" AFF ON NEW RECESSED J-BOX	
N	STROBE	CEILING MOUNT ON NEW RECESSED J-BOX OR WALL MOUNT AT 80" TO 96" AFF	
	HORN/STROBE (CEILING MOUNT)	CEILING MOUNT ON NEW RECESSED J-BOX	
	EXTERIOR HORN/STROBE TO REPLACE EXISTING	WALL MOUNT ON EXISTING J-BOX	
N	EXTERIOR HORN/STROBE	WALL MOUNT ON NEW WEATHER PROOF J-BOX (SURFACE MOUNT) AT 10'-0" AFF OR HEIGHT INDICATED ON DRAWINGS	
	EXISTING NOTIFICATION APPLIANCE TO BE REMOVED	EXISTING	REMOVE EXISTING DEVICE AND WIRING AND PROVIDE COVER PLATE (APPROVED BY OWNER) FOR EXISTING J-BOX.

PCI PROTECTION CONSULTANTS, INC.
Fire Protection Engineers
-Since 1983-

JOB NO. 104161
DWG ISSUE:

DRAWN BY: BBH
CHECKED BY: GTJ

REVISIONS:

DRAWING DATE: 12/07/07

REVISION DATE: XX/XX/XX

SNOW COLLEGE - WASHBURN BUILDING
RICHFIELD, UTAH

FIRE ALARM SYSTEM UPGRADE
DFCM PROJECT #07159700

FIRE ALARM
INITIATING DEVICE
PLAN - SOUTHEAST

FA-3

FIRE ALARM SYSTEM GENERAL NOTES

1. SCOPE OF WORK: WORK SHALL INCLUDE REMOVAL OF EXISTING CONVENTIONAL FIRE ALARM SYSTEM INCLUDING ALL CONTROL EQUIPMENT, POWER SUPPLIES, CABINETS, INIT. CIRCUITS AND DEVICES, NOTIFICATION APPLIANCE CIRCUITS AND DEVICES. INSTALL NEW ADDRESSABLE FIRE ALARM SYSTEM INCLUDING CONTROL PANEL WITH NEW SIGNALING LINE CIRCUITS, INITIATING DEVICE CIRCUITS AND NOTIFICATION APPLIANCE CIRCUITS. NEW FIRE ALARM SYSTEM SHALL BE IN ACCORDANCE WITH NFPA 72, THESE DRAWINGS AND SPECIFICATIONS.

2. APPLICABLE CODES/STANDARDS:
   INTERNATIONAL BUILDING CODE - 2006 EDITION
   INTERNATIONAL FIRE CODE - 2006 EDITION
   INTERNATIONAL MECHANICAL CODE - 2006 EDITION
   UTAH STATE FIRE MARSHAL RULE R710-4
   NFPA 70 - 2005 EDITION
   NFPA 72 - 2007 EDITION
   NFPA 90A - 2002 EDITION

3. QUALITY ASSURANCE: ALL EQUIPMENT, MATERIAL AND DEVICES USED FOR THE FIRE ALARM SYSTEM INSTALLATION SHALL BE UL LISTED AND/OR FM APPROVED FOR USE IN FIRE PROTECTION SYSTEMS. ALL INITIATING DEVICES SHALL BE LISTED COMPATIBLE WITH THE FIRE ALARM CONTROL PANEL (FACP). MAJOR SYSTEM COMPONENTS (CONTROL PANELS, INITIATING DEVICES, ADDRESSABLE MODULES AND RELAYS, POWER SUPPLIES, ETC.) SHALL BE FCI OR FROM A STATE OF UTAH DFCM APPROVED MANUFACTURER. APPROVED MANUFACTURERS INCLUDE FIRE-LITE AND SILENT KNIGHT.

4. SUBMITTALS: FIRE ALARM SYSTEM CONTRACTOR SHALL PREPARE AND SUBMIT SHOPS DRAWINGS TO STATE FIRE MARSHAL, OWNER AND ENGINEER FOR REVIEW/APPROVAL PRIOR TO ORDERING OR INSTALLING ANY EQUIPMENT. SUBMITTALS SHALL CONFORM TO THE CONSTRUCTION DOCUMENTS REQUIREMENTS OF IFC 907.1.1.

5. DEMOLITION: IT IS THE INSTALLER'S RESPONSIBILITY FOR THE DEMOLITION OF THE EXISTING FIRE ALARM SYSTEM. ALL NEW DEVICES AND CIRCUITS WILL REPLACE THE OLD AND GENERALLY REUSE THE EXISTING LOCATIONS. ANY EXISTING DEVICES AND CONDUIT NOT BEING REPLACED AND REUSED THAT ARE VISIBLE, SUCH AS CABINETS NOTIFICATION APPLIANCES OR SMOKE DETECTORS SHALL BE REMOVED AND REMAINING WALL OR CEILING SURFACE REPAIRED OR REPLACED TO MATCH SURROUNDING AREAS. REMOVE ALL UNUSED WIRE IN ALL REMAINING J-BOXES AND/OR CONDUITS. ANY CEILING TILE DAMAGED BY THE INSTALLER MUST BE REPLACED WITH THE SAME OR EQUIVALENT TILE.

6. SYSTEM TYPE: FIRE ALARM SYSTEM SHALL MEET THE REQUIREMENTS FOR PROTECTED PREMISE FIRE ALARM SYSTEMS. SYSTEM SHALL PROVIDE OFF-PREMISE NOTIFICATION OF STATUS TO CENTRAL STATION DETERMINED BY OWNER.

7. OCCUPANT NOTIFICATION: RECEIPT OF ANY FIRE ALARM SIGNAL AT THE FACP SHALL RESULT IN THE ACTIVATION OF ALL NOTIFICATION APPLIANCES IN THE BUILDING (STROBES AND HORN/STROBES). FOR PURPOSES OF FIRE ALARM NOTIFICATION, THE BUILDING SHALL BE CONSIDERED AS A SINGLE ZONE.

8. WIRING/CONDUIT: ALL WIRING SHALL BE NEW (EXISTING WIRING MAY NOT BE RE-USED) AND SHALL BE FREE OF OPENS, SHORTS AND GROUNDS. ALL WIRING SHALL BE INSTALLED IN RIGID CONDUIT OR EMT. FLEXIBLE CONDUIT MAY BE USED FOR DROPS TO SINGLE DEVICES (MAXIMUM 6'). MINIMUM CONDUIT SIZE SHALL BE 1/2". CONDUIT SHALL BE CONCEALED IN FINISHED AREAS AND MAY BE EXPOSED IN UNFINISHED AREAS. EXPOSED CONDUIT MAY BE UNPAINTED (UNLESS OTHERWISE NOTED) BUT SHALL BE PERIODICALLY MARKED WITH RED TAPE OR PAINT. ALL PENETRATIONS THROUGH RATED PARTITIONS SHALL BE FIRE STOPPED WITH A SUITABLE CAULKING COMPOUND. ALL WIRING USED IN THE FIRE ALARM SYSTEM SHALL BE FPL (FIRE, POWER LIMITED) WITH MINIMUM 300V INSULATION OR EQUIVALENT AS PER NFPA 70 ARTICLE 760.

9. WIRING STYLES(PER NFPA 72): INITIATING DEVICE CIRCUITS SHALL MEET THE REQUIREMENTS FOR CLASS A STYLE D CIRCUITS. SIGNALING LINE CIRCUITS SHALL MEET THE REQUIREMENTS FOR CLASS A STYLE 6 OR 7 CIRCUITS. NOTIFICATION APPLIANCE CIRCUITS SHALL MEET THE REQUIREMENTS FOR CLASS A STYLE Z.

10. POWER: PROVIDE NEW 120VAC 20 AMP CIRCUIT FROM EXISTING POWER DISTRIBUTION PANEL IN SUPPLY ROOM TO PROVIDE PRIMARY POWER TO FACP. EXISTING BRANCH CIRCUITS MAY BE REUSED TO PROVIDE PRIMARY POWER TO NEW REMOTE NOTIFICATION CIRCUIT POWER SUPPLIES. FURNISH A BATTERY BACKUP TO PROVIDE SECONDARY POWER SUPPLY TO FIRE ALARM PANEL AND NOTIFICATION CIRCUIT POWER SUPPLIES. BATTERY BACKUP SHALL BE OF SUFFICIENT CAPACITY TO PROVIDE 24 HOURS OF STANDBY POWER WITH AN ADDITIONAL RESERVE TO OPERATE SYSTEM FOR 5 MINUTES IN ALARM.

11. INITIATING DEVICES:
   SLC CIRCUITS: SLC LOOP DEVICE ADDRESSING SHALL NOT EXCEED 100 DEVICES (SMOKES, HEATS, DUCT SMOKES, MODULES CONTROL RELAYS, ETC.) PER LOOP. AT LEAST 20 ADDRESSES (20%) SHOULD BE LEFT VACANT ON EACH SLC LOOP IN ORDER TO ALLOW SPACE FOR ADJUSTMENTS/EXPANSION:
   SMOKE DETECTORS: PROVIDE SMOKE DETECTORS WHERE SHOWN ON PLANS IN ALL CORRIDORS AND LOBBIES. MAXIMUM SPACING OF DETECTORS SHALL BE 30' BETWEEN DETECTORS OR 15' FROM FURTHEST WALL.
   MANUAL PULL STATIONS: INSTALL NEW PULL STATIONS AT SAME LOCATION AND HEIGHT AS EXISTING PULL STATIONS USING EXISTING JUNCTION BOXES (UNLESS OTHERWISE NOTED). WHERE NEW MANUAL PULL STATIONS ARE INDICATED ON THE PLAN INSTALL WITH OPERATING ELEMENT AT 48" AFF.
   ADDRESSABLE MODULES: PROVIDE ADDRESSABLE MODULES TO MONITOR EXISTING CONVENTIONAL DEVICES (FIRE SPRINKLER SWITCHES) TO REMAIN AND TROUBLE OUTPUT OF NEW NOTIFICATION CIRCUIT POWER SUPPLIES. LOCATE MONITOR MODULE ADJACENT TO DEVICE MONITORED IN AN ACCESSIBLE LOCATION OR ABOVE REMOVABLE CEILING TILE. LABEL AS PART OF THE FIRE ALARM SYSTEM WITH THE NAME OF THE DEVICE MONITORED ON THE COVER OF THE JUNCTION BOX.

12. NOTIFICATION APPLIANCES: PROVIDE AUDIBLE AND VISUAL NOTIFICATION APPLIANCES THROUGHOUT BUILDING. VOLUME OF HORNS SHALL BE SUFFICIENT TO PROVIDE A SOUND LEVEL OF 15 Db ABOVE AMBIENT IN ALL OCCUPIED AREAS. VISIBLE ALARMS SHALL BE PROVIDED THROUGHOUT ALL OCCUPIED AREAS OF HE BUILDING INCLUDING PRIVATE OFFICES AND AREAS WITH POSSIBLE OCCUPANCY BY HEARING IMPAIRED PERSONS. STROBES SHALL FLASH IN SYNCHRONIZATION. CONFIGURE CIRCUITS TO ALLOW HORNS TO BE SILENCED WHILE STROBES CONTINUE TO FLASH.

13. FIRE SAFETY FUNCTIONS: CONTROL MODULES WITH RELAY CONTACTS SHALL BE INSTALLED AND PROGRAMMED TO PROVIDE DOOR RELEASE, FAN SHUTDOWN AND ACTIVATION OF NOTIFICATION CIRCUIT POWER SUPPLIES (UNLESS PROVIDED BY SEPARATE CIRCUIT FROM FACP). THE CONTROL RELAY MODULES SHALL BE INSTALLED WITHIN 36" OF DEVICE OR CIRCUIT CONTROLLED.

14. PHASING: PLAN SEQUENCE OF WORK TO MINIMIZE DOWN TIME OF FIRE ALARM SYSTEM. IT IS THE INSTALLER'S RESPONSIBILITY TO NOTIFY PROPER AUTHORITIES AND PROVIDE A FIRE WATCH DURING INTERRUPTIONS OF FIRE DETECTION AND ALARM SERVICE IN THE BUILDING.

15. TESTING: SCHEDULE AND PERFORM ALL ACCEPTANCE TESTS REQUIRED BY NFPA 72. TESTING SHALL BE WITNESSED BY STATE FIRE MARSHAL'S OFFICE, PROJECT ENGINEER, DFCM AND BUILDING MAINTENANCE PERSONNEL. SUBMIT A WRITTEN TESTING PLAN DETAILING EACH TEST TO BE PERFORMED TO EACH AGENCY AT LEAST ONE DAY PRIOR TO SCHEDULED TEST.

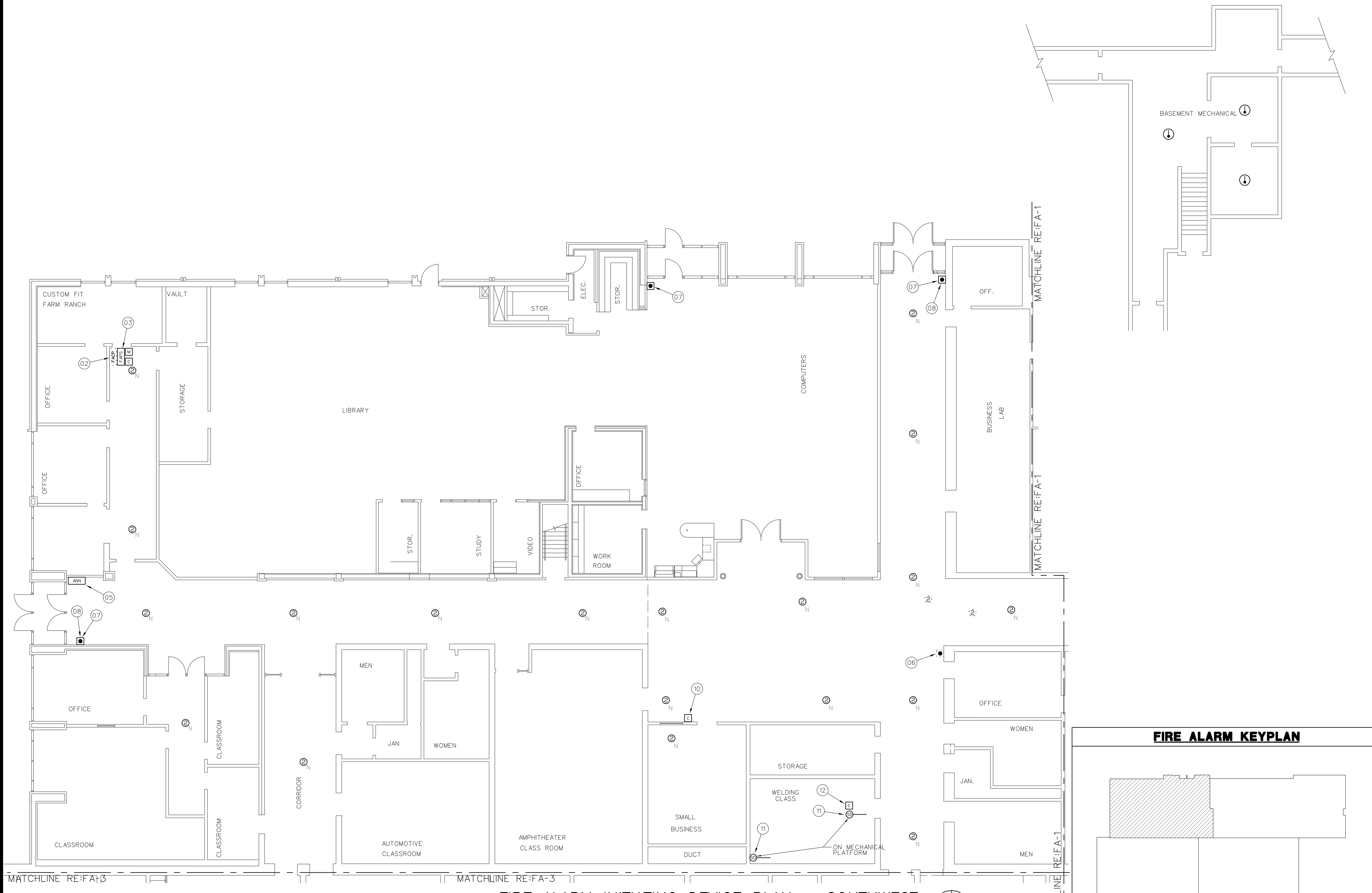

FIRE ALARM INITIATING DEVICE PLAN – SOUTHWEST

1/8" = 1'-0"

0 8' 16' 32'

FIRE ALARM SYSTEM KEY NOTES

(01) FURNISH AND INSTALL NEW ADDRESSABLE FIRE ALARM CONTROL PANEL (FACP). FACP MAY BE SURFACE MOUNT OR RECESSED INTO WALL. CONDUIT FROM FACP TO VOID SPACE ABOVE CEILING MAY BE EXPOSED BUT SHALL BE PAINTED TO MATCH WALL. FACP SHALL BE FCI(IDENTIFLEX 602 WITH 411 SERIES DACT), SILENT KNIGHT (5820XL) OR FIRE-LITE (MS-9600 WITH DACT-UD). INSTALL FACP WITH KEY PAD APPROXIMATELY 60" ABOVE FLOOR LEVEL. PROVIDE DEDICATED 120 VAC - 20 AMP CIRCUIT TO FACP FROM NEARBY POWER DISTRIBUTION PANEL. POWER CIRCUIT TO FACP SHALL BE PERMANENTLY MARKED AND MECHANICALLY PROTECTED PER NFPA 70 & 72. PROVIDE PHONE LINES (PRIMARY AND SECONDARY) TO FACP FOR OFF-PREMISE RELAY OF FIRE ALARM, SUPERVISORY AND TROUBLE SIGNALS.

(02) EXISTING FIRE ALARM CONTROL PANEL TO BE REPLACED BY NEW ADDRESSABLE FACP AT DIFFERENT LOCATION. FACP SHALL BE KEPT IN SERVICE UNTIL NEW FACP IS INSTALLED AND FULLY OPERATIONAL. AFTER NEW FACP HAS BEEN INSTALLED AND IS FULLY OPERATIONAL, EXISTING FACP SHALL BE REMOVED (EXISTING MASTER TIME SYSTEM TO REMAIN). REMOVE ALL CONTROL EQUIPMENT, CABINETS, CONDUIT, J-BOXES, ETC. PATCH AND RE-FINISH WALL TO MATCH SURROUNDING WALL SURFACE.

(03) FURNISH AND INSTALL REMOTE POWER SUPPLIES TO PROVIDE 24 VDC POWER TO NOTIFICATION APPLIANCE CIRCUITS. SURFACE MOUNT POWER SUPPLIES ON WALL WHERE SHOWN ON PLANS AT NEW FACP, LOCATION OF EXISTING FACP AND REMOTE POWER SUPPLY TO BE REMOVED. CONDUITS FROM POWER SUPPLY TO VOID SPACE ABOVE CEILING OR TO TRUSS SPACE MAY BE EXPOSED BUT SHALL BE PAINTED TO MATCH WALL. EXISTING POWER CIRCUITS MAY BE RE-USED WHERE PRESENT. POWER SUPPLIES SHALL BE SUPERVISED AND NAC CIRCUITS ACTIVATED BY FACP. PROVIDE BATTERIES FOR SECONDARY POWER SUPPLY SIZED TO PROVIDE 24 HOURS OF STANDBY POWER PLUS AN ADDITIONAL RESERVE FOR 5 MINUTES OF ALARM POWER. PROVIDE SYNC MODULES AND INTERCONNECT POWER SUPPLIES AS REQUIRED TO SYNCRONIZE ALL VISUAL ALARMS WITHIN A SINGLE FIELD OF VIEW.

(04) EXISTING NOTIFICATION POWER SUPPLY TO BE REMOVED. POWER SUPPLY TO BE KEPT IN SERVICE UNTIL ALL FUNCTIONS PERFORMED BY THE POWER SUPPLY ARE PROVIDED BY THE NEW FIRE ALARM SYSTEM. REMOVE POWER SUPPLY, CABINET, J-BOX, ETC. PATCH AND REFINISH TO MATCH EXISTING.

(05) FURNISH AND INSTALL A NEW ANNUNCIATOR PANEL FOR ADDRESSABLE FIRE ALARM SYSTEM. INSTALL ON RECESSED TYPE JUNCTION BOX WITH CONDUIT CONCEALED IN WALL. MOUNT ANNUNCIATOR AT 54" CENTERLINE ABOVE FLOOR LEVEL.

(06) EXISTING MANUAL PULL STATION TO BE REMOVED. PULL STATION IS NOT REQUIRED BY IBC OR IFC. REMOVE EXISTING DEVICE, JUNCTION BOX AND CONDUIT TO VOID SPACE ABOVE CEILING OR TRUSS SPACE. PATCH AND REFINISH WALL SURFACE TO MATCH EXISTING.

(07) FURNISH AND INSTALL A PROTECTIVE COVER (STI-1100 OR EQUAL) WITH AUDIBLE ALARM OVER MANUAL FIRE ALARM PULL STATION TO DISCURAGE FALSE ACTUATION.

(08) EXISTING PULL STATION MOUNTED TO HIGH TO CONFORM TO ACCESSIBILITY GUIDELINES. RELOCATE EXISTING PULL STATION J-BOX AND CONDUIT AND INSTALL NEW ADDRESSABLE PULL STATION WITH THE OPERATING ELEMENT AT 48" ABOVE FLOOR LEVEL. CONDUIT MAY BE EXPOSED WITH SURFACE MOUNTED J-BOX FOR BLOCK WALLS AND SHALL BE CONCEALED WHERE WALL SURFACE IS FINISHED. PATCH AND REPAINT WALL AS REQUIRED.

(09) INSTALL BURRIED CONDUIT ABOVE GROUND WEATHERPROOF JUNCTION BOXES AND WEATHER PROOF FLEX CONDUIT TO NEW TAMPER SWITCH ON EXTERIOR FIRE SPRINKLER CONTROL VALVE (SEE KEY NOTE 1 ON SHEET FA-10).

(10) PROVIDE A PROGRAMMABLE RELAY TO RELEASE EXISTING FIRE DOOR UPON OPERATION OF SMOKE DETECTOR ON EITHER SIDE OF FIRE DOOR. TEST DOOR FOR PROPER OPERATION AND ADJUST OR REPAIR DOOR TO ENSURE PROPER OPERATION. NOTIFY OWNER AND ENGINEER IN WRITING IF EXISTING DOOR IS NOT FUNCTIONAL AND CANNOT BE REPAIRED/ ADJUSTED OR DOES NOT INCLUDE RELAYS FOR CONNECTION TO FIRE ALARM SYSTEM.

(11) INSTALL NEW DUCT MOUNTED SMOKE DETECTOR ON THE SUPPLY SIDE OF AIR MOVEMENT SYSTEMS WITH A CAPACITY IN EXCESS OF 2,00 CFM. EXISTING DETECTORS MY BE RE-USED IF COMPLETELY FUNCTIONAL AND COMPATIBLE WITH NEW FIRE ALARM SYSTEM. INSTALL DETECTOR PER MANUFACTURER'S RECOMMENDATIONS WITH DETECTOR ENCLOSURE MOUNTED ON DUCT EXTERIOR AND SAMPLING TUBE INSTALLED WITHIN DUCT. SMOKE DETECTORS AND AUTOMATIC CONTROL WILL NOT BE REQUIRED FOR EVAPORATIVE COOLERS IN SHOP AREAS WHERE AIR MOVEMENT SYSTEM SUPPLIES AND RETURNS FROM A SINGLE ROOM.

(12) FURNISH AND INSTALL A PROGRAMMABLE RELAY TO SHUT DOWN AIR HANDLER. RELAY SHALL BE NORMALLY ENERGIZED AND FAN CONTROLS SHALL BE CONNECTED TO NORMALLY CLOSED CONTACTS ON THE RELAY. RELAY SHALL BE PROGRAMMED TO SHUT DOWN ALL AIR HANDLERS SIMULTANEOUSLY UPON ACTIVATION OF ANY AREA OR DUCT SMOKE DETECTOR AND SHALL NOT RESTORE UNTIL THE FACP HAS RESET. FIELD LOCATE RELAY.

(13) FURNISH AND INSTALL A NEW EXTERIOR ALARM ON THE EXTERIOR WALL OF THE BUILDING. MOUNT ALARM AT 10'-0" ABOVE GRADE OR AT HEIGHT INDICATED ON DRAWINGS. DEVICE SHALL BE UL LISTED FOR EXTERIOR INSTALLATION AND INSTALLED ON A WEATHERPROOF J-BOX. J-BOX MAY BE SURFACE MOUNTED BUT CONDUIT SHALL BE CONCEALED IN WALL.

FIRE ALARM EQUIPMENT LEGEND

DEVICE	DESCRIPTION	MOUNTING	REMARKS
FACP	ADDRESSABLE FIRE ALARM CONTROL PANEL	SURFACE MOUNT ON WALL WITH KEYPAD AT 60" AFF.	FCI IDENTIFLEX 602, SILENT KNIGHT 5820 XL OR FIRE LITE MS-9600
FACP	EXISTING FIRE ALARM CONTROL PANEL	EXISTING	EXISTING FACP TO BE REMOVED. PATCH AND REFINISH WALL SURFACE.
FAPS	NOTIFICATION CIRCUIT REMOTE POWER SUPPLY	SURFACE MOUNT ON WALL	TO POWER NOTIFICATION APPLIANCES
FAPS	EXISTING FIRE ALARM POWER SUPPLY	EXISTING	EXISTING POWER SUPPLY TO BE REMOVED. NEW POWER SUPPLY TO BE INSTALLED IN SAME LOCATION.
ANN	FIRE ALARM ANNUNCIATOR PANEL	MOUNT AT 54"AFF ON RECESSED J-BOX.	TO DISPLAY STATUS OF FIRE ALARM SYSTEM. ANNUNCIATOR SHALL HAVE ALPHA-NUMERIC READOUT AND KEYPAD TO ALLOW SYSTEM SILENCE AND RESET.
	ADDRESSABLE PHOTOELECTRIC SMOKE DETECTOR TO REPLACE EXISTING DETECTOR	CEILING MOUNT ON EXISTING J-BOX	REMOVE EXISTING SMOKE DETECTORS AND REPLACE WITH NEW ADDRESSABLE DETECTORS COMPATIBLE WITH NEW FACP.
N	ADDRESSABLE PHOTOELECTRIC SMOKE DETECTOR	CEILING MOUNT ON EXISTING J-BOX	ADD NEW DETECTORS WHERE INDICATED ON PLANS.
	EXISTING SMOKE DETECTOR	EXISTING	REMOVE EXISTING DETECTOR AND J-BOX REPLACE CEILING TILE AND/OR PATCH AND PAINT CEILING.
	ADDRESSABLE HEAT DETECTOR (FIXED TEMP)	CEILING MOUNT ON EXISTING J-BOX	REMOVE EXISTING HEAT DETECTOR AND REPLACE WITH NEW ADDRESSABLE DETECTOR COMPATIBLE WITH NEW FACP.
	ADDRESSABLE MANUAL PULL STATION TO REPLACE EXISTING.	WALL MOUNT ON EXISTING (OR RELOCATED) J-BOX.	REPLACE EXISTING PULL STATIONS WITH NEW PULL STATIONS COMPATIBLE WITH NEW FACP
N	ADDRESSABLE MANUAL PULL STATION	WALL MOUNT AT 48" AFF ON RECESSED J-BOX	ADD NEW PULL STATION WHERE INDICATED ON PLAN.
	EXISTING MANUAL PULL STATION	EXISTING	REMOVE EXISTING PULL STATION, J-BOX AND CONDUIT. PATCH AND PAINT WALL.
F	VANE TYPE WATER FLOW SWITCH	MOUNT ON FIRE SPRINKLER RISER PER MANUFACTURER REQUIREMENTS.	TO REPLACE EXISTING PRESSURE TYPE FLOW SWITCHES. CONNECT TO NEW FIRE ALARM SYSTEM.
F	EXISTING VANE TYPE WATER FLOW SWITCH	EXISTING	EXISTING TO REMAIN. CONNECT TO NEW FIRE ALARM SYSTEM.
T	VALVE SUPERVISORY SWITCH	MOUNT IN PORT OF NEW EXTERIOR POST INDICATOR	TO MONITOR POSITION OF EXTERIOR FIRE SPRINKLER CONTROL VALVE. CONNECT TO NEW FIRE ALARM SYSTEM.
T	EXISTING VALVE SUPERVISORY SWITCH	EXISTING	EXISTING TO REMAIN. CONNECT TO NEW FIRE ALARM SYSTEM.
SD	ADDRESSABLE DUCT SMOKE DETECTOR	DUCT MOUNT IN SUPPLY AND RETURN DUCTS PER MANUFACTURER'S REQUIREMENTS	REPLACE EXISTING DETECTORS AND/OR INSTALL NEW DETECTORS FOR ALL AIR MOVEMENT SYSTEMS WITH A CAPACITY IN EXCESS OF 2000 CFM PER NFPA 72, 90 & IMC.
M	ADDRESSABLE MONITOR MODULE	MOUNT ON J-0BOX NEAR CONVENTIONAL DEVICE TO BE MONITORED	CONNECT TO CONTACTS OF CONVENTIONAL DEVICE TO FACILITATE MONITORING OF DEVICE AS AN ADDRESSABLE POINT.
C	ADDRESSABLE CONTROL MODULE	MOUNT ON J-BOX WITHIN 3' OF DEVICE OR CIRCUIT	TO PROVIDE PROTECTED PREMISE FIRE SAFETY FUNCTIONS SUCH AS DOOR RELEASE, FAN SHUTDOWN TO NOTIFICATION CIRCUIT ACTIVATION.
	HORN/STROBE TO REPLACE EXISTING	WALL MOUNT ON EXISTING J-BOX	CANDELA RATING OF STROBE SHALL BE AS INDICATED ON DRAWINGS. STROBES SHALL BE SYNCHRONIZED WITH ALL OTHER STROBES IN VIEW. DEVICE SHALL BE POWERED FROM FACP OR REMOTE POWER SUPPLY SUPERVISED BY FACP. DEVICE COLOR - RED
N	HORN/STROBE (WALL MOUNT)	WALL MOUNT AT 80" TO 96" AFF ON NEW RECESSED J-BOX	
N	STROBE	CEILING MOUNT ON NEW RECESSED J-BOX OR WALL MOUNT AT 80" TO 96" AFF	
	HORN/STROBE (CEILING MOUNT)	CEILING MOUNT ON NEW RECESSED J-BOX	
	EXTERIOR HORN/STROBE TO REPLACE EXISTING	WALL MOUNT ON EXISTING J-BOX	
N	EXTERIOR HORN/STROBE	WALL MOUNT ON NEW WEATHER PROOF J-BOX (SURFACE MOUNT) AT 10'-0" AFF OR HEIGHT INDICATED ON DRAWINGS	
	EXISTING NOTIFICATION APPLIANCE TO BE REMOVED	EXISTING	REMOVE EXISTING DEVICE AND WIRING AND PROVIDE COVER PLATE (APPROVED BY OWNER) FOR EXISTING J-BOX.

PROTECTION CONSULTANTS, INC.
Fire Protection Engineers
-Since 1983-
182 South 600 East Suite 202
Salt Lake City, UT 84102
PHONE:(801)-596-1601 ◆ FAX:(801)-596-2561
DOMAIN: pciut.com

JOB NO. 104161
DWG ISSUE:

DRAWN BY: BBH
CHECKED BY: GTJ

REVISIONS:

DRAWING DATE: 12/07/07

REVISION DATE: XX/XX/XX

SNOW COLLEGE - WASHBURN BUILDING
RICHFIELD, UTAH

FIRE ALARM SYSTEM UPGRADE
DFCM PROJECT #07159700

FIRE ALARM INITIATING DEVICE PLAN - SOUTHWEST

FA-4

FIRE ALARM SYSTEM GENERAL NOTES

1. SCOPE OF WORK: WORK SHALL INCLUDE REMOVAL OF EXISTING CONVENTIONAL FIRE ALARM SYSTEM INCLUDING ALL CONTROL EQUIPMENT, POWER SUPPLIES, CABINETS, INIT. CIRCUITS AND DEVICES, NOTIFICATION APPLIANCE CIRCUITS AND DEVICES. INSTALL NEW ADDRESSABLE FIRE ALARM SYSTEM INCLUDING CONTROL PANEL WITH NEW SIGNALING LINE CIRCUITS, INITIATING DEVICE CIRCUITS AND NOTIFICATION APPLIANCE CIRCUITS. NEW FIRE ALARM SYSTEM SHALL BE IN ACCORDANCE WITH NFPA 72, THESE DRAWINGS AND SPECIFICATIONS.

2. APPLICABLE CODES/STANDARDS:
   INTERNATIONAL BUILDING CODE - 2006 EDITION
   INTERNATIONAL FIRE CODE - 2006 EDITION
   INTERNATIONAL MECHANICAL CODE - 2006 EDITION
   UTAH STATE FIRE MARSHAL RULE R710-4
   NFPA 70 - 2005 EDITION
   NFPA 72 - 2007 EDITION
   NFPA 90A - 2002 EDITION

3. QUALITY ASSURANCE: ALL EQUIPMENT, MATERIAL AND DEVICES USED FOR THE FIRE ALARM SYSTEM INSTALLATION SHALL BE UL LISTED AND/OR FM APPROVED FOR USE IN FIRE PROTECTION SYSTEMS. ALL INITIATING DEVICES SHALL BE LISTED COMPATIBLE WITH THE FIRE ALARM CONTROL PANEL (FACP). MAJOR SYSTEM COMPONENTS (CONTROL PANELS, INITIATING DEVICES, ADDRESSABLE MODULES AND RELAYS, POWER SUPPLIES, ETC.) SHALL BE FCI OR FROM A STATE OF UTAH DFCM APPROVED MANUFACTURER. APPROVED MANUFACTURERS INCLUDE FIRE-LITE AND SILENT KNIGHT.

4. SUBMITTALS: FIRE ALARM SYSTEM CONTRACTOR SHALL PREPARE AND SUBMIT SHOPS DRAWINGS TO STATE FIRE MARSHAL, OWNER AND ENGINEER FOR REVIEW/APPROVAL PRIOR TO ORDERING OR INSTALLING ANY EQUIPMENT. SUBMITTALS SHALL CONFORM TO THE CONSTRUCTION DOCUMENTS REQUIREMENTS OF IFC 907.1.1.

5. DEMOLITION: IT IS THE INSTALLER'S RESPONSIBILITY FOR THE DEMOLITION OF THE EXISTING FIRE ALARM SYSTEM. ALL NEW DEVICES AND CIRCUITS WILL REPLACE THE OLD AND GENERALLY REUSE THE EXISTING LOCATIONS. ANY EXISTING DEVICES AND CONDUIT NOT BEING REPLACED AND REUSED THAT ARE VISIBLE, SUCH AS CABINETS NOTIFICATION APPLIANCES OR SMOKE DETECTORS SHALL BE REMOVED AND REMAINING WALL OR CEILING SURFACE REPAIRED OR REPLACED TO MATCH SURROUNDING AREAS. REMOVE ALL UNUSED WIRE IN ALL REMAINING J-BOXES AND/OR CONDUITS. ANY CEILING TILE DAMAGED BY THE INSTALLER MUST BE REPLACED WITH THE SAME OR EQUIVALENT TILE.

6. SYSTEM TYPE: FIRE ALARM SYSTEM SHALL MEET THE REQUIREMENTS FOR PROTECTED PREMISE FIRE ALARM SYSTEMS. SYSTEM SHALL PROVIDE OFF-PREMISE NOTIFICATION OF STATUS TO CENTRAL STATION DETERMINED BY OWNER.

7. OCCUPANT NOTIFICATION: RECEIPT OF ANY FIRE ALARM SIGNAL AT THE FACP SHALL RESULT IN THE ACTIVATION OF ALL NOTIFICATION APPLIANCES IN THE BUILDING (STROBES AND HORN/STROBES). FOR PURPOSES OF FIRE ALARM NOTIFICATION, THE BUILDING SHALL BE CONSIDERED AS A SINGLE ZONE.

8. WIRING/CONDUIT: ALL WIRING SHALL BE NEW (EXISTING WIRING MAY NOT BE RE-USED) AND SHALL BE FREE OF OPENS, SHORTS AND GROUNDS. ALL WIRING SHALL BE INSTALLED IN RIGID CONDUIT OR EMT. FLEXIBLE CONDUIT MAY BE USED FOR DROPS TO SINGLE DEVICES (MAXIMUM 6'). MINIMUM CONDUIT SIZE SHALL BE 1/2". CONDUIT SHALL BE CONCEALED IN FINISHED AREAS AND MAY BE EXPOSED IN UNFINISHED AREAS. EXPOSED CONDUIT MAY BE UNPAINTED (UNLESS OTHERWISE NOTED) BUT SHALL BE PERIODICALLY MARKED WITH RED TAPE OR PAINT. ALL PENETRATIONS THROUGH RATED PARTITIONS SHALL BE FIRE STOPPED WITH A SUITABLE CAULKING COMPOUND. ALL WIRING USED IN THE FIRE ALARM SYSTEM SHALL BE FPL (FIRE, POWER LIMITED) WITH MINIMUM 300V INSULATION OR EQUIVALENT AS PER NFPA 70 ARTICLE 760.

9. WIRING STYLES(PER NFPA 72): INITIATING DEVICE CIRCUITS SHALL MEET THE REQUIREMENTS FOR CLASS A STYLE D CIRCUITS. SIGNALING LINE CIRCUITS SHALL MEET THE REQUIREMENTS FOR CLASS A STYLE 6 OR 7 CIRCUITS. NOTIFICATION APPLIANCE CIRCUITS SHALL MEET THE REQUIREMENTS FOR CLASS A STYLE Z.

10. POWER: PROVIDE NEW 120VAC 20 AMP CIRCUIT FROM EXISTING POWER DISTRIBUTION PANEL IN SUPPLY ROOM TO PROVIDE PRIMARY POWER TO FACP. EXISTING BRANCH CIRCUITS MAY BE REUSED TO PROVIDE PRIMARY POWER TO NEW REMOTE NOTIFICATION CIRCUIT POWER SUPPLIES. FURNISH A BATTERY BACKUP TO PROVIDE SECONDARY POWER SUPPLY TO FIRE ALARM PANEL AND NOTIFICATION CIRCUIT POWER SUPPLIES. BATTERY BACKUP SHALL BE OF SUFFICIENT CAPACITY TO PROVIDE 24 HOURS OF STANDBY POWER WITH AN ADDITIONAL RESERVE TO OPERATE SYSTEM FOR 5 MINUTES IN ALARM.

11. INITIATING DEVICES:
    SLC CIRCUITS: SLC LOOP DEVICE ADDRESSING SHALL NOT EXCEED 100 DEVICES (SMOKES, HEATS, DUCT SMOKES, MODULES CONTROL RELAYS, ETC.) PER LOOP. AT LEAST 20 ADDRESSES (20%) SHOULD BE LEFT VACANT ON EACH SLC LOOP IN ORDER TO ALLOW SPACE FOR ADJUSTMENTS/EXPANSION:
    SMOKE DETECTORS: PROVIDE SMOKE DETECTORS WHERE SHOWN ON PLANS IN ALL CORRIDORS AND LOBBIES. MAXIMUM SPACING OF DETECTORS SHALL BE 30' BETWEEN DETECTORS OR 15' FROM FURTHEST WALL.
    MANUAL PULL STATIONS: INSTALL NEW PULL STATIONS AT SAME LOCATION AND HEIGHT AS EXISTING PULL STATIONS USING EXISTING JUNCTION BOXES (UNLESS OTHERWISE NOTED). WHERE NEW MANUAL PULL STATIONS ARE INDICATED ON THE PLAN INSTALL WITH OPERATING ELEMENT AT 48" AFF.
    ADDRESSABLE MODULES: PROVIDE ADDRESSABLE MODULES TO MONITOR EXISTING CONVENTIONAL DEVICES (FIRE SPRINKLER SWITCHES) TO REMAIN AND TROUBLE OUTPUT OF NEW NOTIFICATION CIRCUIT POWER SUPPLIES. LOCATE MONITOR MODULE ADJACENT TO DEVICE MONITORED IN AN ACCESSIBLE LOCATION OR ABOVE REMOVABLE CEILING TILE. LABEL AS PART OF THE FIRE ALARM SYSTEM WITH THE NAME OF THE DEVICE MONITORED ON THE COVER OF THE JUNCTION BOX.

12. NOTIFICATION APPLIANCES: PROVIDE AUDIBLE AND VISUAL NOTIFICATION APPLIANCES THROUGHOUT BUILDING. VOLUME OF HORNS SHALL BE SUFFICIENT TO PROVIDE A SOUND LEVEL OF 15 Db ABOVE AMBIENT IN ALL OCCUPIED AREAS. VISIBLE ALARMS SHALL BE PROVIDED THROUGHOUT ALL OCCUPIED AREAS OF HE BUILDING INCLUDING PRIVATE OFFICES AND AREAS WITH POSSIBLE OCCUPANCY BY HEARING IMPAIRED PERSONS. STROBES SHALL FLASH IN SYNCHRONIZATION. CONFIGURE CIRCUITS TO ALLOW HORNS TO BE SILENCED WHILE STROBES CONTINUE TO FLASH.

13. FIRE SAFETY FUNCTIONS: CONTROL MODULES WITH RELAY CONTACTS SHALL BE INSTALLED AND PROGRAMMED TO PROVIDE DOOR RELEASE, FAN SHUTDOWN AND ACTIVATION OF NOTIFICATION CIRCUIT POWER SUPPLIES (UNLESS PROVIDED BY SEPARATE CIRCUIT FROM FACP). THE CONTROL RELAY MODULES SHALL BE INSTALLED WITHIN 36" OF DEVICE OR CIRCUIT CONTROLLED.

14. PHASING: PLAN SEQUENCE OF WORK TO MINIMIZE DOWN TIME OF FIRE ALARM SYSTEM. IT IS THE INSTALLER'S RESPONSIBILITY TO NOTIFY PROPER AUTHORITIES AND PROVIDE A FIRE WATCH DURING INTERRUPTIONS OF FIRE DETECTION AND ALARM SERVICE IN THE BUILDING.

15. TESTING: SCHEDULE AND PERFORM ALL ACCEPTANCE TESTS REQUIRED BY NFPA 72. TESTING SHALL BE WITNESSED BY STATE FIRE MARSHAL'S OFFICE, PROJECT ENGINEER, DFCM AND BUILDING MAINTENANCE PERSONNEL. SUBMIT A WRITTEN TESTING PLAN DETAILING EACH TEST TO BE PERFORMED TO EACH AGENCY AT LEAST ONE DAY PRIOR TO SCHEDULED TEST.

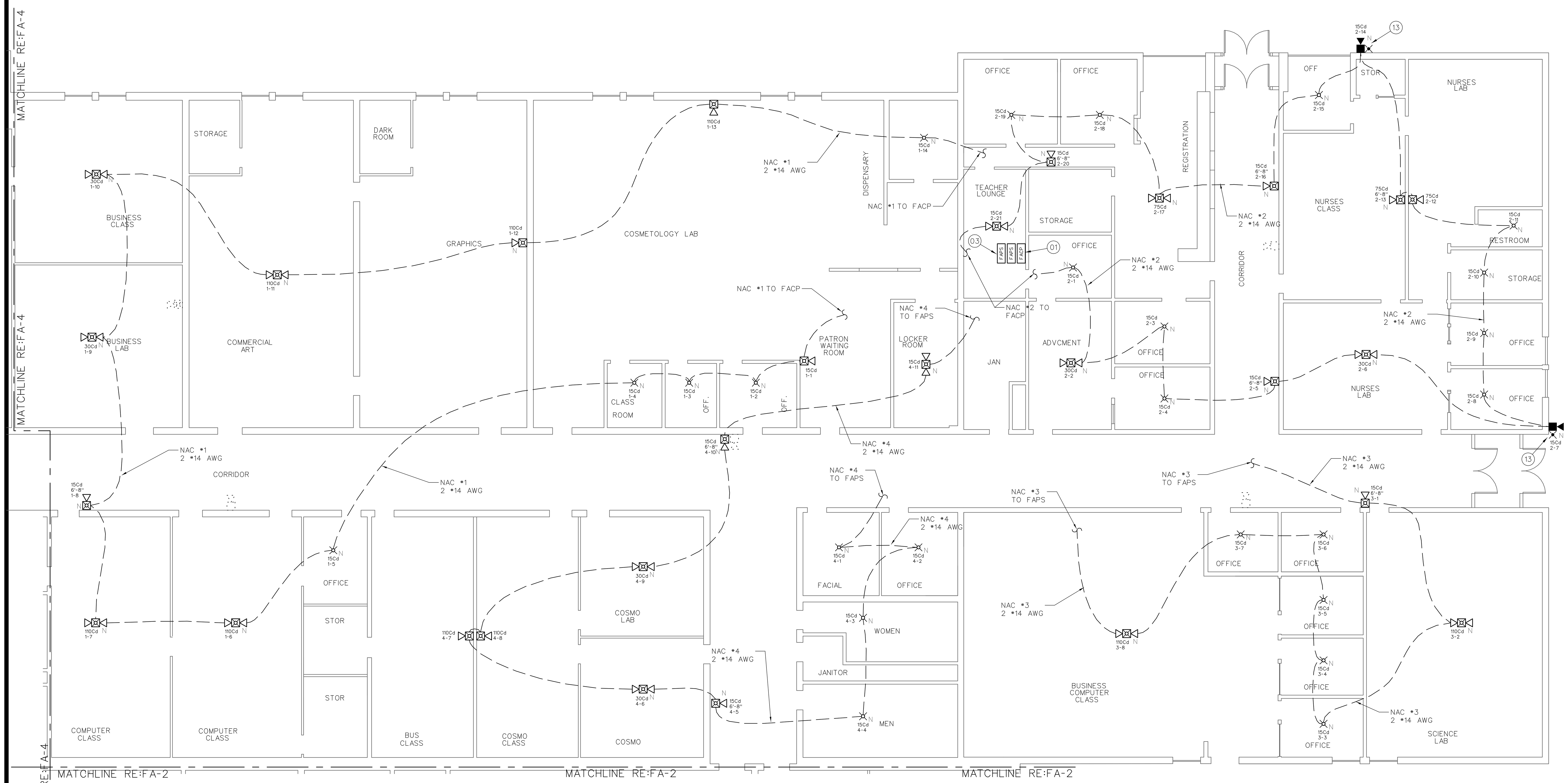

FIRE ALARM NOTIFICATION APPLIANCE PLAN – NORTHWEST

1/8" = 1'-0"

0 8' 16' 32'

FIRE ALARM KEYPLAN

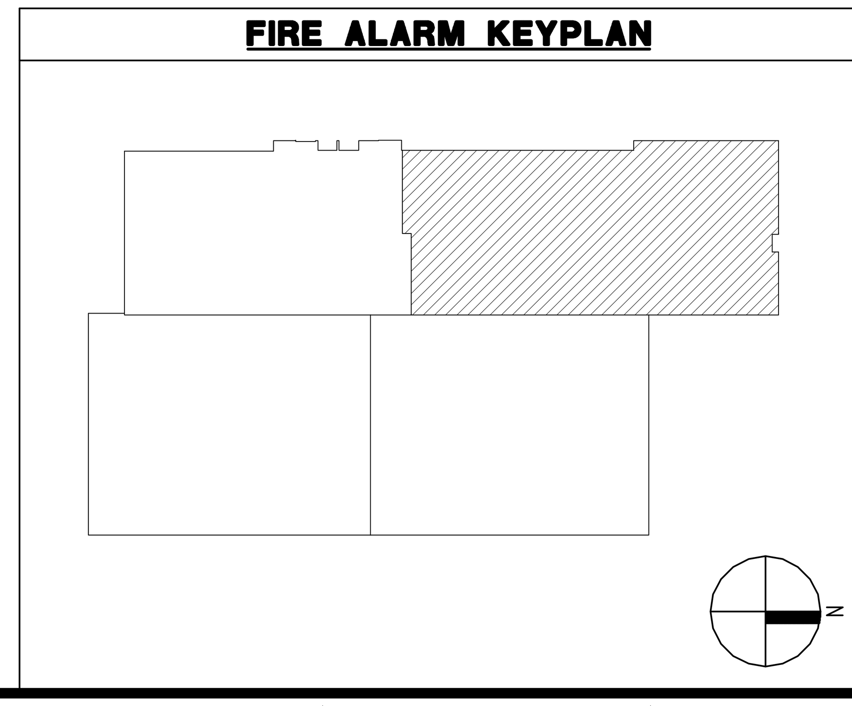

FIRE ALARM SYSTEM KEY NOTES

(01) FURNISH AND INSTALL NEW ADDRESSABLE FIRE ALARM CONTROL PANEL (FACP). FACP MAY BE SURFACE MOUNT OR RECESSED INTO WALL. CONDUIT FROM FACP TO VOID SPACE ABOVE CEILING MAY BE EXPOSED BUT SHALL BE PAINTED TO MATCH WALL. FACP SHALL BE FCI (IDENTIFLEX 602 WITH 411 SERIES DACT), SILENT KNIGHT (5820XL) OR FIRE-LITE (MS-9600 WITH DACT-UD). INSTALL FACP WITH KEY PAD APPROXIMATELY 60" ABOVE FLOOR LEVEL. PROVIDE DEDICATED 120 VAC - 20 AMP CIRCUIT TO FACP FROM NEARBY POWER DISTRIBUTION PANEL. POWER CIRCUIT TO FACP SHALL BE PERMANENTLY MARKED AND MECHANICALLY PROTECTED PER NFPA 70 & 72. PROVIDE PHONE LINES (PRIMARY AND SECONDARY) TO FACP FOR OFF-PREMISE RELAY OF FIRE ALARM, SUPERVISORY AND TROUBLE SIGNALS.

(02) EXISTING FIRE ALARM CONTROL PANEL TO BE REPLACED BY NEW ADDRESSABLE FACP AT DIFFERENT LOCATION. FACP SHALL BE KEPT IN SERVICE UNTIL NEW FACP IS INSTALLED AND FULLY OPERATIONAL. AFTER NEW FACP HAS BEEN INSTALLED AND IS FULLY OPERATIONAL, EXISTING FACP SHALL BE REMOVED (EXISTING MASTER TIME SYSTEM TO REMAIN). REMOVE ALL CONTROL EQUIPMENT, CABINETS, CONDUIT, J-BOXES, ETC. PATCH AND RE-FINISH WALL TO MATCH SURROUNDING WALL SURFACE.

(03) FURNISH AND INSTALL REMOTE POWER SUPPLIES TO PROVIDE 24 VDC POWER TO NOTIFICATION APPLIANCE CIRCUITS. SURFACE MOUNT POWER SUPPLIES ON WALL WHERE SHOWN ON PLANS AT NEW FACP, LOCATION OF EXISTING FACP AND REMOTE POWER SUPPLY TO BE REMOVED. CONDUITS FROM POWER SUPPLY TO VOID SPACE ABOVE CEILING OR TO TRUSS SPACE MAY BE EXPOSED BUT SHALL BE PAINTED TO MATCH WALL. EXISTING POWER CIRCUITS MAY BE RE-USED WHERE PRESENT. POWER SUPPLIES SHALL BE SUPERVISED AND NAC CIRCUITS ACTIVATED BY FACP. PROVIDE BATTERIES FOR SECONDARY POWER SUPPLY SIZED TO PROVIDE 24 HOURS OF STANDBY POWER PLUS AN ADDITIONAL RESERVE FOR 5 MINUTES OF ALARM POWER. PROVIDE SYNC MODULES AND INTERCONNECT POWER SUPPLIES AS REQUIRED TO SYNCRONIZE ALL VISUAL ALARMS WITHIN A SINGLE FIELD OF VIEW.

(04) EXISTING NOTIFICATION POWER SUPPLY TO BE REMOVED. POWER SUPPLY TO BE KEPT IN SERVICE UNTIL ALL FUNCTIONS PERFORMED BY THE POWER SUPPLY ARE PROVIDED BY THE NEW FIRE ALARM SYSTEM. REMOVE POWER SUPPLY, CABINET, J-BOX, ETC. PATCH AND REFINISH TO MATCH EXISTING.

(05) FURNISH AND INSTALL A NEW ANNUNCIATOR PANEL FOR ADDRESSABLE FIRE ALARM SYSTEM. INSTALL ON RECESSED TYPE JUNCTION BOX WITH CONDUIT CONCEALED IN WALL. MOUNT ANNUNCIATOR AT 54" CENTERLINE ABOVE FLOOR LEVEL.

(06) EXISTING MANUAL PULL STATION TO BE REMOVED. PULL STATION IS NOT REQUIRED BY IBC OR IFC. REMOVE EXISTING DEVICE, JUNCTION BOX AND CONDUIT TO VOID SPACE ABOVE CEILING OR TRUSS SPACE. PATCH AND REFINISH WALL SURFACE TO MATCH EXISTING.

(07) FURNISH AND INSTALL A PROTECTIVE COVER (STI-1100 OR EQUAL) WITH AUDIBLE ALARM OVER MANUAL FIRE ALARM PULL STATION TO DISCURAGE FALSE ACTUATION.

(08) EXISTING PULL STATION MOUNTED TO HIGH TO CONFORM TO ACCESSIBILITY GUIDELINES. RELOCATE EXISTING PULL STATION J-BOX AND CONDUIT AND INSTALL NEW ADDRESSABLE PULL STATION WITH THE OPERATING ELEMENT AT 48" ABOVE FLOOR LEVEL. CONDUIT MAY BE EXPOSED WITH SURFACE MOUNTED J-BOX FOR BLOCK WALLS AND SHALL BE CONCEALED WHERE WALL SURFACE IS FINISHED. PATCH AND REPAINT WALL AS REQUIRED.

(09) INSTALL BURRIED CONDUIT ABOVE GROUND WEATHERPROOF JUNCTION BOXES AND WEATHER PROOF FLEX CONDUIT TO NEW TAMPER SWITCH ON EXTERIOR FIRE SPRINKLER CONTROL VALVE (SEE KEY NOTE 1 ON SHEET FA-10).

(10) PROVIDE A PROGRAMMABLE RELAY TO RELEASE EXISTING FIRE DOOR UPON OPERATION OF SMOKE DETECTOR ON EITHER SIDE OF FIRE DOOR. TEST DOOR FOR PROPER OPERATION AND ADJUST OR REPAIR DOOR TO ENSURE PROPER OPERATION. NOTIFY OWNER AND ENGINEER IN WRITING IF EXISTING DOOR IS NOT FUNCTIONAL AND CANNOT BE REPAIRED/ ADJUSTED OR DOES NOT INCLUDE RELAYS FOR CONNECTION TO FIRE ALARM SYSTEM.

(11) INSTALL NEW DUCT MOUNTED SMOKE DETECTOR ON THE SUPPLY SIDE OF AIR MOVEMENT SYSTEMS WITH A CAPACITY IN EXCESS OF 2,00 CFM. EXISTING DETECTORS MY BE RE-USED IF COMPLETELY FUNCTIONAL AND COMPATIBLE WITH NEW FIRE ALARM SYSTEM. INSTALL DETECTOR PER MANUFACTURER'S RECOMMENDATIONS WITH DETECTOR ENCLOSURE MOUNTED ON DUCT EXTERIOR AND SAMPLING TUBE INSTALLED WITHIN DUCT. SMOKE DETECTORS AND AUTOMATIC CONTROL WILL NOT BE REQUIRED FOR EVAPORATIVE COOLERS IN SHOP AREAS WHERE AIR MOVEMENT SYSTEM SUPPLIES AND RETURNS FROM A SINGLE ROOM.

(12) FURNISH AND INSTALL A PROGRAMMABLE RELAY TO SHUT DOWN AIR HANDLER. RELAY SHALL BE NORMALLY ENERGIZED AND FAN CONTROLS SHALL BE CONNECTED TO NORMALLY CLOSED CONTACTS ON THE RELAY. RELAY SHALL BE PROGRAMMED TO SHUT DOWN ALL AIR HANDLERS SIMULTANEOUSLY UPON ACTIVATION OF ANY AREA OR DUCT SMOKE DETECTOR AND SHALL NOT RESTORE UNTIL THE FACP HAS RESET. FIELD LOCATE RELAY.

(13) FURNISH AND INSTALL A NEW EXTERIOR ALARM ON THE EXTERIOR WALL OF THE BUILDING. MOUNT ALARM AT 10'-0" ABOVE GRADE OR AT HEIGHT INDICATED ON DRAWINGS. DEVICE SHALL BE UL LISTED FOR EXTERIOR INSTALLATION AND INSTALLED ON A WEATHERPROOF J-BOX. J-BOX MAY BE SURFACE MOUNTED BUT CONDUIT SHALL BE CONCEALED IN WALL.

FIRE ALARM EQUIPMENT LEGEND

DEVICE	DESCRIPTION	MOUNTING	REMARKS
FACP	ADDRESSABLE FIRE ALARM CONTROL PANEL	SURFACE MOUNT ON WALL WITH KEYPAD AT 60" AFF.	FCI IDENTIFLEX 602, SILENT KNIGHT 5820 XL OR FIRE LITE MS-9600
FACP	EXISTING FIRE ALARM CONTROL PANEL	EXISTING	EXISTING FACP TO BE REMOVED. PATCH AND REFINISH WALL SURFACE.
FAPS	NOTIFICATION CIRCUIT REMOTE POWER SUPPLY	SURFACE MOUNT ON WALL	TO POWER NOTIFICATION APPLIANCES
FAPS	EXISTING FIRE ALARM POWER SUPPLY	EXISTING	EXISTING POWER SUPPLY TO BE REMOVED. NEW POWER SUPPLY TO BE INSTALLED IN SAME LOCATION.
ANN	FIRE ALARM ANNUNCIATOR PANEL	MOUNT AT 54"AFF ON RECESSED J-BOX.	TO DISPLAY STATUS OF FIRE ALARM SYSTEM. ANNUNCIATOR SHALL HAVE ALPHA-NUMERIC READOUT AND KEYPAD TO ALLOW SYSTEM SILENCE AND RESET.
	ADDRESSABLE PHOTOELECTRIC SMOKE DETECTOR TO REPLACE EXISTING DETECTOR	CEILING MOUNT ON EXISTING J-BOX	REMOVE EXISTING SMOKE DETECTORS AND REPLACE WITH NEW ADDRESSABLE DETECTORS COMPATIBLE WITH NEW FACP.
N	ADDRESSABLE PHOTOELECTRIC SMOKE DETECTOR	CEILING MOUNT ON EXISTING J-BOX	ADD NEW DETECTORS WHERE INDICATED ON PLANS.
	EXISTING SMOKE DETECTOR	EXISTING	REMOVE EXISTING DETECTOR AND J-BOX REPLACE CEILING TILE AND/OR PATCH AND PAINT CEILING.
	ADDRESSABLE HEAT DETECTOR (FIXED TEMP)	CEILING MOUNT ON EXISTING J-BOX	REMOVE EXISTING HEAT DETECTOR AND REPLACE WITH NEW ADDRESSABLE DETECTOR COMPATIBLE WITH NEW FACP.
	ADDRESSABLE MANUAL PULL STATION TO REPLACE EXISTING.	WALL MOUNT ON EXISTING (OR RELOCATED) J-BOX.	REPLACE EXISTING PULL STATIONS WITH NEW PULL STATIONS COMPATIBLE WITH NEW FACP
N	ADDRESSABLE MANUAL PULL STATION	WALL MOUNT AT 48" AFF ON RECESSED J-BOX	ADD NEW PULL STATION WHERE INDICATED ON PLAN.
	EXISTING MANUAL PULL STATION	EXISTING	REMOVE EXISTING PULL STATION, J-BOX AND CONDUIT. PATCH AND PAINT WALL.
F	VANE TYPE WATER FLOW SWITCH	MOUNT ON FIRE SPRINKLER RISER PER MANUFACTURER REQUIREMENTS.	TO REPLACE EXISTING PRESSURE TYPE FLOW SWITCHES. CONNECT TO NEW FIRE ALARM SYSTEM.
F	EXISTING VANE TYPE WATER FLOW SWITCH	EXISTING	EXISTING TO REMAIN. CONNECT TO NEW FIRE ALARM SYSTEM.
T	VALVE SUPERVISORY SWITCH	MOUNT IN PORT OF NEW EXTERIOR POST INDICATOR	TO MONITOR POSITION OF EXTERIOR FIRE SPRINKLER CONTROL VALVE. CONNECT TO NEW FIRE ALARM SYSTEM.
T	EXISTING VALVE SUPERVISORY SWITCH	EXISTING	EXISTING TO REMAIN. CONNECT TO NEW FIRE ALARM SYSTEM.
SD	ADDRESSABLE DUCT SMOKE DETECTOR	DUCT MOUNT IN SUPPLY AND RETURN DUCTS PER MANUFACTURER'S REQUIREMENTS	REPLACE EXISTING DETECTORS AND/OR INSTALL NEW DETECTORS FOR ALL AIR MOVEMENT SYSTEMS WITH A CAPACITY IN EXCESS OF 2000 CFM PER NFPA 72, 90 & IMC.
M	ADDRESSABLE MONITOR MODULE	MOUNT ON J-0BOX NEAR CONVENTIONAL DEVICE TO BE MONITORED	CONNECT TO CONTACTS OF CONVENTIONAL DEVICE TO FACILITATE MONITORING OF DEVICE AS AN ADDRESSABLE POINT.
C	ADDRESSABLE CONTROL MODULE	MOUNT ON J-BOX WITHIN 3' OF DEVICE OR CIRCUIT	TO PROVIDE PROTECTED PREMISE FIRE SAFETY FUNCTIONS SUCH AS DOOR RELEASE, FAN SHUTDOWN TO NOTIFICATION CIRCUIT ACTIVATION.
	HORN/STROBE TO REPLACE EXISTING	WALL MOUNT ON EXISTING J-BOX	CANDELA RATING OF STROBE SHALL BE AS INDICATED ON DRAWINGS. STROBES SHALL BE SYNCHRONIZED WITH ALL OTHER STROBES IN VIEW. DEVICE SHALL BE POWERED FROM FACP OR REMOTE POWER SUPPLY SUPERVISED BY FACP. DEVICE COLOR – RED
N	HORN/STROBE (WALL MOUNT)	WALL MOUNT AT 80" TO 96" AFF ON NEW RECESSED J-BOX	
N	STROBE	CEILING MOUNT ON NEW RECESSED J-BOX OR WALL MOUNT AT 80" TO 96" AFF	
	HORN/STROBE (CEILING MOUNT)	CEILING MOUNT ON NEW RECESSED J-BOX	
	EXTERIOR HORN/STROBE TO REPLACE EXISTING	WALL MOUNT ON EXISTING J-BOX	
N	EXTERIOR HORN/STROBE	WALL MOUNT ON NEW WEATHER PROOF J-BOX (SURFACE MOUNT) AT 10'-0" AFF OR HEIGHT INDICATED ON DRAWINGS	
	EXISTING NOTIFICATION APPLIANCE TO BE REMOVED	EXISTING	REMOVE EXISTING DEVICE AND WIRING AND PROVIDE COVER PLATE (APPROVED BY OWNER) FOR EXISTING J-BOX.

JOB NO. 104161
DWG ISSUE:
DRAWN BY: BBH
CHECKED BY: GTJ

REVISIONS:

DRAWING DATE: 12/07/07
REVISION DATE: XX/XX/XX

SNOW COLLEGE - WASHBURN BUILDING
RICHFIELD, UTAH

FIRE ALARM SYSTEM UPGRADE
DFCM PROJECT #07159700

FIRE ALARM NOTIFICATION APPLIANCE PLAN NORTHWEST

FA-5

FIRE ALARM SYSTEM GENERAL NOTES

1. SCOPE OF WORK: WORK SHALL INCLUDE REMOVAL OF EXISTING CONVENTIONAL FIRE ALARM SYSTEM INCLUDING ALL CONTROL EQUIPMENT, POWER SUPPLIES, CABINETS, INIT. CIRCUITS AND DEVICES, NOTIFICATION APPLIANCE CIRCUITS AND DEVICES. INSTALL NEW ADDRESSABLE FIRE ALARM SYSTEM INCLUDING CONTROL PANEL WITH NEW SIGNALING LINE CIRCUITS, INITIATING DEVICE CIRCUITS AND NOTIFICATION APPLIANCE CIRCUITS. NEW FIRE ALARM SYSTEM SHALL BE IN ACCORDANCE WITH NFPA 72, THESE DRAWINGS AND SPECIFICATIONS.

2. APPLICABLE CODES/STANDARDS:
   INTERNATIONAL BUILDING CODE - 2006 EDITION
   INTERNATIONAL FIRE CODE - 2006 EDITION
   INTERNATIONAL MECHANICAL CODE - 2006 EDITION
   UTAH STATE FIRE MARSHAL RULE R710-4
   NFPA 70 - 2005 EDITION
   NFPA 72 - 2007 EDITION
   NFPA 90A - 2002 EDITION

3. QUALITY ASSURANCE: ALL EQUIPMENT, MATERIAL AND DEVICES USED FOR THE FIRE ALARM SYSTEM INSTALLATION SHALL BE UL LISTED AND/OR FM APPROVED FOR USE IN FIRE PROTECTION SYSTEMS. ALL INITIATING DEVICES SHALL BE LISTED COMPATIBLE WITH THE FIRE ALARM CONTROL PANEL (FACP). MAJOR SYSTEM COMPONENTS (CONTROL PANELS, INITIATING DEVICES, ADDRESSABLE MODULES AND RELAYS, POWER SUPPLIES, ETC.) SHALL BE FCI OR FROM A STATE OF UTAH DFCM APPROVED MANUFACTURER. APPROVED MANUFACTURERS INCLUDE FIRE-LITE AND SILENT KNIGHT.

4. SUBMITTALS: FIRE ALARM SYSTEM CONTRACTOR SHALL PREPARE AND SUBMIT SHOPS DRAWINGS TO STATE FIRE MARSHAL, OWNER AND ENGINEER FOR REVIEW/APPROVAL PRIOR TO ORDERING OR INSTALLING ANY EQUIPMENT. SUBMITTALS SHALL CONFORM TO THE CONSTRUCTION DOCUMENTS REQUIREMENTS OF IFC 907.1.1.

5. DEMOLITION: IT IS THE INSTALLER'S RESPONSIBILITY FOR THE DEMOLITION OF THE EXISTING FIRE ALARM SYSTEM. ALL NEW DEVICES AND CIRCUITS WILL REPLACE THE OLD AND GENERALLY REUSE THE EXISTING LOCATIONS. ANY EXISTING DEVICES AND CONDUIT NOT BEING REPLACED AND REUSED THAT ARE VISIBLE, SUCH AS CABINETS NOTIFICATION APPLIANCES OR SMOKE DETECTORS SHALL BE REMOVED AND REMAINING WALL OR CEILING SURFACE REPAIRED OR REPLACED TO MATCH SURROUNDING AREAS. REMOVE ALL UNUSED WIRE IN ALL REMAINING J-BOXES AND/OR CONDUITS. ANY CEILING TILE DAMAGED BY THE INSTALLER MUST BE REPLACED WITH THE SAME OR EQUIVALENT TILE.

6. SYSTEM TYPE: FIRE ALARM SYSTEM SHALL MEET THE REQUIREMENTS FOR PROTECTED PREMISE FIRE ALARM SYSTEMS. SYSTEM SHALL PROVIDE OFF-PREMISE NOTIFICATION OF STATUS TO CENTRAL STATION DETERMINED BY OWNER.

7. OCCUPANT NOTIFICATION: RECEIPT OF ANY FIRE ALARM SIGNAL AT THE FACP SHALL RESULT IN THE ACTIVATION OF ALL NOTIFICATION APPLIANCES IN THE BUILDING (STROBES AND HORN/STROBES). FOR PURPOSES OF FIRE ALARM NOTIFICATION, THE BUILDING SHALL BE CONSIDERED AS A SINGLE ZONE.

8. WIRING/CONDUIT: ALL WIRING SHALL BE NEW (EXISTING WIRING MAY NOT BE RE-USED) AND SHALL BE FREE OF OPENS, SHORTS AND GROUNDS. ALL WIRING SHALL BE INSTALLED IN RIGID CONDUIT OR EMT. FLEXIBLE CONDUIT MAY BE USED FOR DROPS TO SINGLE DEVICES (MAXIMUM 6'). MINIMUM CONDUIT SIZE SHALL BE 1/2". CONDUIT SHALL BE CONCEALED IN FINISHED AREAS AND MAY BE EXPOSED IN UNFINISHED AREAS. EXPOSED CONDUIT MAY BE UNPAINTED (UNLESS OTHERWISE NOTED) BUT SHALL BE PERIODICALLY MARKED WITH RED TAPE OR PAINT. ALL PENETRATIONS THROUGH RATED PARTITIONS SHALL BE FIRE STOPPED WITH A SUITABLE CAULKING COMPOUND. ALL WIRING USED IN THE FIRE ALARM SYSTEM SHALL BE FPL (FIRE, POWER LIMITED) WITH MINIMUM 300V INSULATION OR EQUIVALENT AS PER NFPA 70 ARTICLE 760.

9. WIRING STYLES(PER NFPA 72): INITIATING DEVICE CIRCUITS SHALL MEET THE REQUIREMENTS FOR CLASS A STYLE D CIRCUITS. SIGNALING LINE CIRCUITS SHALL MEET THE REQUIREMENTS FOR CLASS A STYLE 6 OR 7 CIRCUITS. NOTIFICATION APPLIANCE CIRCUITS SHALL MEET THE REQUIREMENTS FOR CLASS A STYLE Z.

10. POWER: PROVIDE NEW 120VAC 20 AMP CIRCUIT FROM EXISTING POWER DISTRIBUTION PANEL IN SUPPLY ROOM TO PROVIDE PRIMARY POWER TO FACP. EXISTING BRANCH CIRCUITS MAY BE REUSED TO PROVIDE PRIMARY POWER TO NEW REMOTE NOTIFICATION CIRCUIT POWER SUPPLIES. FURNISH A BATTERY BACKUP TO PROVIDE SECONDARY POWER SUPPLY TO FIRE ALARM PANEL AND NOTIFICATION CIRCUIT POWER SUPPLIES. BATTERY BACKUP SHALL BE OF SUFFICIENT CAPACITY TO PROVIDE 24 HOURS OF STANDBY POWER WITH AN ADDITIONAL RESERVE TO OPERATE SYSTEM FOR 5 MINUTES IN ALARM.

11. INITIATING DEVICES:
   SLC CIRCUITS: SLC LOOP DEVICE ADDRESSING SHALL NOT EXCEED 100 DEVICES (SMOKES, HEATS, DUCT SMOKES, MODULES CONTROL RELAYS, ETC.) PER LOOP. AT LEAST 20 ADDRESSES (20%) SHOULD BE LEFT VACANT ON EACH SLC LOOP IN ORDER TO ALLOW SPACE FOR ADJUSTMENTS/EXPANSION:
   SMOKE DETECTORS: PROVIDE SMOKE DETECTORS WHERE SHOWN ON PLANS IN ALL CORRIDORS AND LOBBIES. MAXIMUM SPACING OF DETECTORS SHALL BE 30' BETWEEN DETECTORS OR 15' FROM FURTHEST WALL.
   MANUAL PULL STATIONS: INSTALL NEW PULL STATIONS AT SAME LOCATION AND HEIGHT AS EXISTING PULL STATIONS USING EXISTING JUNCTION BOXES (UNLESS OTHERWISE NOTED). WHERE NEW MANUAL PULL STATIONS ARE INDICATED ON THE PLAN INSTALL WITH OPERATING ELEMENT AT 48" AFF.
   ADDRESSABLE MODULES: PROVIDE ADDRESSABLE MODULES TO MONITOR EXISTING CONVENTIONAL DEVICES (FIRE SPRINKLER SWITCHES) TO REMAIN AND TROUBLE OUTPUT OF NEW NOTIFICATION CIRCUIT POWER SUPPLIES. LOCATE MONITOR MODULE ADJACENT TO DEVICE MONITORED IN AN ACCESSIBLE LOCATION OR ABOVE REMOVABLE CEILING TILE. LABEL AS PART OF THE FIRE ALARM SYSTEM WITH THE NAME OF THE DEVICE MONITORED ON THE COVER OF THE JUNCTION BOX.

12. NOTIFICATION APPLIANCES: PROVIDE AUDIBLE AND VISUAL NOTIFICATION APPLIANCES THROUGHOUT BUILDING. VOLUME OF HORNS SHALL BE SUFFICIENT TO PROVIDE A SOUND LEVEL OF 15 Db ABOVE AMBIENT IN ALL OCCUPIED AREAS. VISIBLE ALARMS SHALL BE PROVIDED THROUGHOUT ALL OCCUPIED AREAS OF HE BUILDING INCLUDING PRIVATE OFFICES AND AREAS WITH POSSIBLE OCCUPANCY BY HEARING IMPAIRED PERSONS. STROBES SHALL FLASH IN SYNCHRONIZATION. CONFIGURE CIRCUITS TO ALLOW HORNS TO BE SILENCED WHILE STROBES CONTINUE TO FLASH.

13. FIRE SAFETY FUNCTIONS: CONTROL MODULES WITH RELAY CONTACTS SHALL BE INSTALLED AND PROGRAMMED TO PROVIDE DOOR RELEASE, FAN SHUTDOWN AND ACTIVATION OF NOTIFICATION CIRCUIT POWER SUPPLIES (UNLESS PROVIDED BY SEPARATE CIRCUIT FROM FACP). THE CONTROL RELAY MODULES SHALL BE INSTALLED WITHIN 36" OF DEVICE OR CIRCUIT CONTROLLED.

14. PHASING: PLAN SEQUENCE OF WORK TO MINIMIZE DOWN TIME OF FIRE ALARM SYSTEM. IT IS THE INSTALLER'S RESPONSIBILITY TO NOTIFY PROPER AUTHORITIES AND PROVIDE A FIRE WATCH DURING INTERRUPTIONS OF FIRE DETECTION AND ALARM SERVICE IN THE BUILDING.

15. TESTING: SCHEDULE AND PERFORM ALL ACCEPTANCE TESTS REQUIRED BY NFPA 72. TESTING SHALL BE WITNESSED BY STATE FIRE MARSHAL'S OFFICE, PROJECT ENGINEER, DFCM AND BUILDING MAINTENANCE PERSONNEL. SUBMIT A WRITTEN TESTING PLAN DETAILING EACH TEST TO BE PERFORMED TO EACH AGENCY AT LEAST ONE DAY PRIOR TO SCHEDULED TEST.

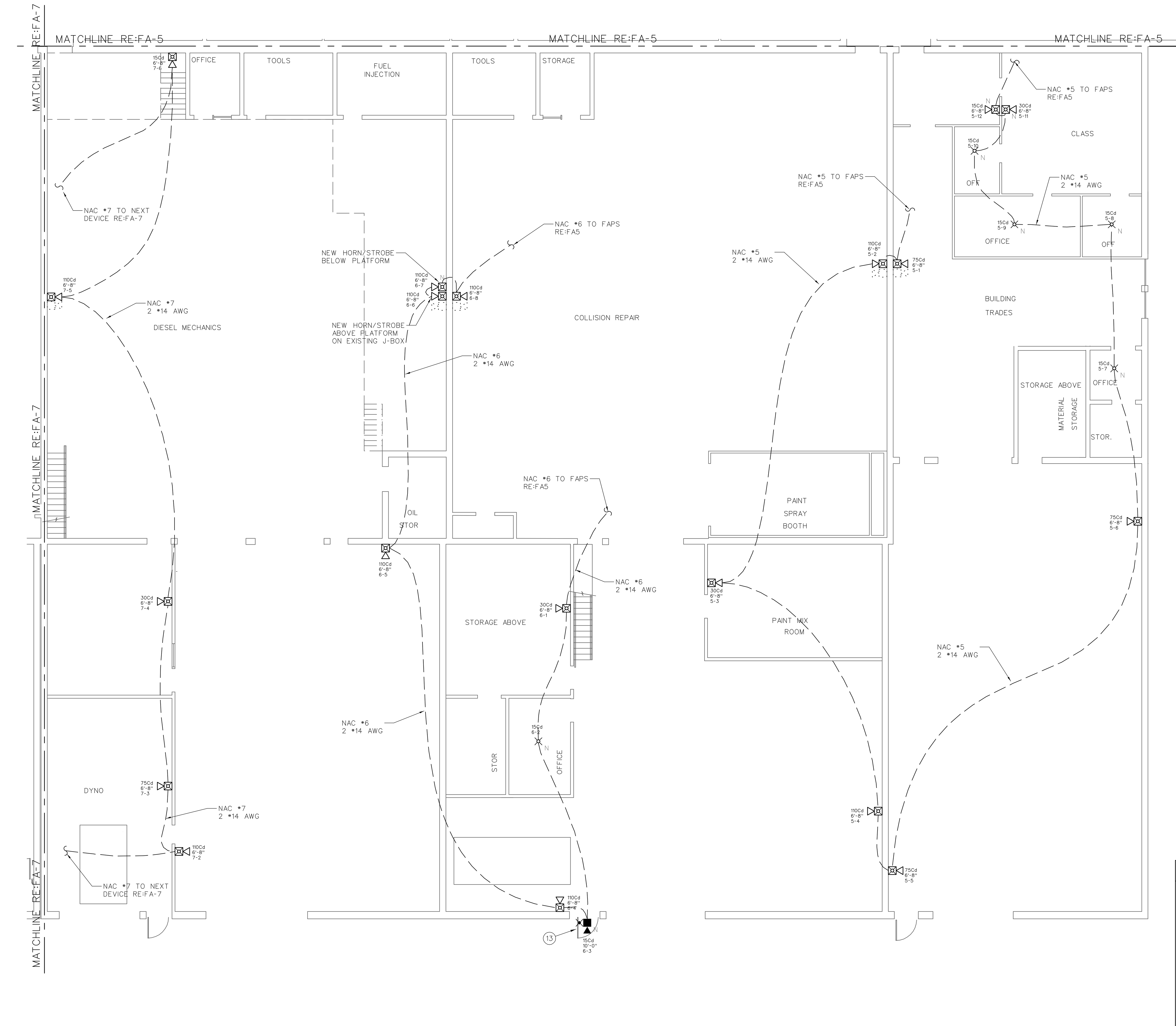

FIRE ALARM NOTIFICATION APPLIANCE PLAN – NORTHEAST

1/8" = 1'-0"

FIRE ALARM SYSTEM KEY NOTES

(01) FURNISH AND INSTALL NEW ADDRESSABLE FIRE ALARM CONTROL PANEL (FACP). FACP MAY BE SURFACE MOUNT OR RECESSED INTO WALL. CONDUIT FROM FACP TO VOID SPACE ABOVE CEILING MAY BE EXPOSED BUT SHALL BE PAINTED TO MATCH WALL. FACP SHALL BE FCI (IDENTIFLEX 602 WITH 411 SERIES DACT), SILENT KNIGHT (5820XL) OR FIRE-LITE (MS-9600 WITH DACT-UD). INSTALL FACP WITH KEY PAD APPROXIMATELY 60" ABOVE FLOOR LEVEL. PROVIDE DEDICATED 120 VAC - 20 AMP CIRCUIT TO FACP FROM NEARBY POWER DISTRIBUTION PANEL. POWER CIRCUIT TO FACP SHALL BE PERMANENTLY MARKED AND MECHANICALLY PROTECTED PER NFPA 70 & 72. PROVIDE PHONE LINES (PRIMARY AND SECONDARY) TO FACP FOR OFF-PREMISE RELAY OF FIRE ALARM, SUPERVISORY AND TROUBLE SIGNALS.

(02) EXISTING FIRE ALARM CONTROL PANEL TO BE REPLACED BY NEW ADDRESSABLE FACP AT DIFFERENT LOCATION. FACP SHALL BE KEPT IN SERVICE UNTIL NEW FACP IS INSTALLED AND FULLY OPERATIONAL. AFTER NEW FACP HAS BEEN INSTALLED AND IS FULLY OPERATIONAL, EXISTING FACP SHALL BE REMOVED (EXISTING MASTER TIME SYSTEM TO REMAIN). REMOVE ALL CONTROL EQUIPMENT, CABINETS, CONDUIT, J-BOXES, ETC. PATCH AND RE-FINISH WALL TO MATCH SURROUNDING WALL SURFACE.

(03) FURNISH AND INSTALL REMOTE POWER SUPPLIES TO PROVIDE 24 VDC POWER TO NOTIFICATION APPLIANCE CIRCUITS. SURFACE MOUNT POWER SUPPLIES ON WALL WHERE SHOWN ON PLANS AT NEW FACP, LOCATION OF EXISTING FACP AND REMOTE POWER SUPPLY TO BE REMOVED. CONDUITS FROM POWER SUPPLY TO VOID SPACE ABOVE CEILING OR TO TRUSS SPACE MAY BE EXPOSED BUT SHALL BE PAINTED TO MATCH WALL. EXISTING POWER CIRCUITS MAY BE RE-USED WHERE PRESENT. POWER SUPPLIES SHALL BE SUPERVISED AND NAC CIRCUITS ACTIVATED BY FACP. PROVIDE BATTERIES FOR SECONDARY POWER SUPPLY SIZED TO PROVIDE 24 HOURS OF STANDBY POWER PLUS AN ADDITIONAL RESERVE FOR 5 MINUTES OF ALARM POWER. PROVIDE SYNC MODULES AND INTERCONNECT POWER SUPPLIES AS REQUIRED TO SYNCRONIZE ALL VISUAL ALARMS WITHIN A SINGLE FIELD OF VIEW.

(04) EXISTING NOTIFICATION POWER SUPPLY TO BE REMOVED. POWER SUPPLY TO BE KEPT IN SERVICE UNTIL ALL FUNCTIONS PERFORMED BY THE POWER SUPPLY ARE PROVIDED BY THE NEW FIRE ALARM SYSTEM. REMOVE POWER SUPPLY, CABINET, J-BOX, ETC. PATCH AND REFINISH TO MATCH EXISTING.

(05) FURNISH AND INSTALL A NEW ANNUNCIATOR PANEL FOR ADDRESSABLE FIRE ALARM SYSTEM. INSTALL ON RECESSED TYPE JUNCTION BOX WITH CONDUIT CONCEALED IN WALL. MOUNT ANNUNCIATOR AT 54" CENTERLINE ABOVE FLOOR LEVEL.

(06) EXISTING MANUAL PULL STATION TO BE REMOVED. PULL STATION IS NOT REQUIRED BY IBC OR IFC. REMOVE EXISTING DEVICE, JUNCTION BOX AND CONDUIT TO VOID SPACE ABOVE CEILING OR TRUSS SPACE. PATCH AND REFINISH WALL SURFACE TO MATCH EXISTING.

(07) FURNISH AND INSTALL A PROTECTIVE COVER (STI-1100 OR EQUAL) WITH AUDIBLE ALARM OVER MANUAL FIRE ALARM PULL STATION TO DISCURAGE FALSE ACTUATION.

(08) EXISTING PULL STATION MOUNTED TO HIGH TO CONFORM TO ACCESSIBILITY GUIDELINES. RELOCATE EXISTING PULL STATION J-BOX AND CONDUIT AND INSTALL NEW ADDRESSABLE PULL STATION WITH THE OPERATING ELEMENT AT 48" ABOVE FLOOR LEVEL. CONDUIT MAY BE EXPOSED WITH SURFACE MOUNTED J-BOX FOR BLOCK WALLS AND SHALL BE CONCEALED WHERE WALL SURFACE IS FINISHED. PATCH AND REPAINT WALL AS REQUIRED.

(09) INSTALL BURRIED CONDUIT ABOVE GROUND WEATHERPROOF JUNCTION BOXES AND WEATHER PROOF FLEX CONDUIT TO NEW TAMPER SWITCH ON EXTERIOR FIRE SPRINKLER CONTROL VALVE (SEE KEY NOTE 1 ON SHEET FA-10).

(10) PROVIDE A PROGRAMMABLE RELAY TO RELEASE EXISTING FIRE DOOR UPON OPERATION OF SMOKE DETECTOR ON EITHER SIDE OF FIRE DOOR. TEST DOOR FOR PROPER OPERATION AND ADJUST OR REPAIR DOOR TO ENSURE PROPER OPERATION. NOTIFY OWNER AND ENGINEER IN WRITING IF EXISTING DOOR IS NOT FUNCTIONAL AND CANNOT BE REPAIRED/ ADJUSTED OR DOES NOT INCLUDE RELAYS FOR CONNECTION TO FIRE ALARM SYSTEM.

(11) INSTALL NEW DUCT MOUNTED SMOKE DETECTOR ON THE SUPPLY SIDE OF AIR MOVEMENT SYSTEMS WITH A CAPACITY IN EXCESS OF 2,00 CFM. EXISTING DETECTORS MY BE RE-USED IF COMPLETELY FUNCTIONAL AND COMPATIBLE WITH NEW FIRE ALARM SYSTEM. INSTALL DETECTOR PER MANUFACTURER'S RECOMMENDATIONS WITH DETECTOR ENCLOSURE MOUNTED ON DUCT EXTERIOR AND SAMPLING TUBE INSTALLED WITHIN DUCT. SMOKE DETECTORS AND AUTOMATIC CONTROL WILL NOT BE REQUIRED FOR EVAPORATIVE COOLERS IN SHOP AREAS WHERE AIR MOVEMENT SYSTEM SUPPLIES AND RETURNS FROM A SINGLE ROOM.

(12) FURNISH AND INSTALL A PROGRAMMABLE RELAY TO SHUT DOWN AIR HANDLER. RELAY SHALL BE NORMALLY ENERGIZED AND FAN CONTROLS SHALL BE CONNECTED TO NORMALLY CLOSED CONTACTS ON THE RELAY. RELAY SHALL BE PROGRAMMED TO SHUT DOWN ALL AIR HANDLERS SIMULTANEOUSLY UPON ACTIVATION OF ANY AREA OR DUCT SMOKE DETECTOR AND SHALL NOT RESTORE UNTIL THE FACP HAS RESET. FIELD LOCATE RELAY.

(13) FURNISH AND INSTALL A NEW EXTERIOR ALARM ON THE EXTERIOR WALL OF THE BUILDING. MOUNT ALARM AT 10'-0" ABOVE GRADE OR AT HEIGHT INDICATED ON DRAWINGS. DEVICE SHALL BE UL LISTED FOR EXTERIOR INSTALLATION AND INSTALLED ON A WEATHERPROOF J-BOX. J-BOX MAY BE SURFACE MOUNTED BUT CONDUIT SHALL BE CONCEALED IN WALL.

FIRE ALARM KEYPLAN

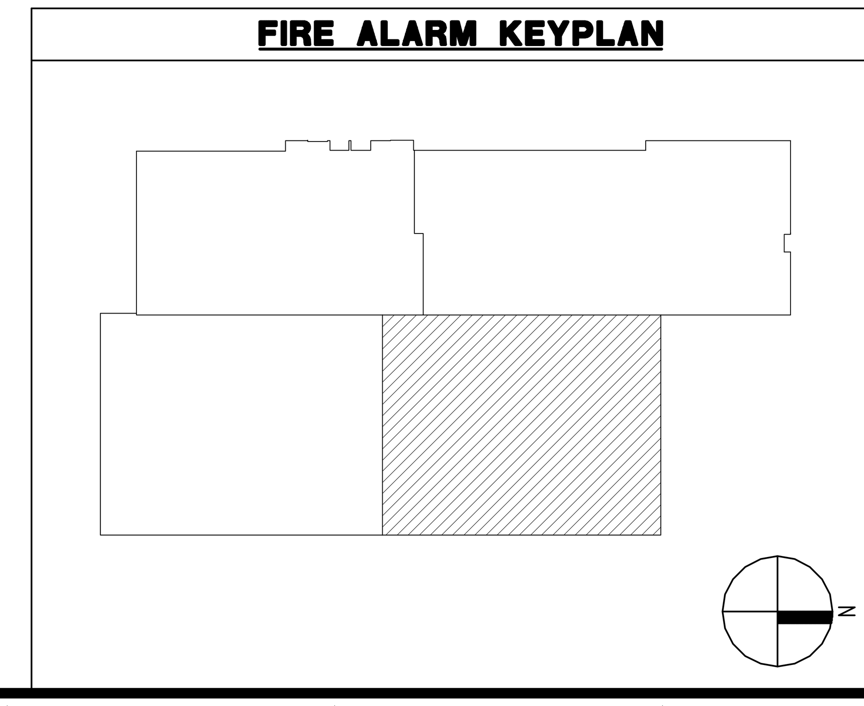

FIRE ALARM EQUIPMENT LEGEND

DEVICE	DESCRIPTION	MOUNTING	REMARKS
FACP	ADDRESSABLE FIRE ALARM CONTROL PANEL	SURFACE MOUNT ON WALL WITH KEYPAD AT 60" AFF.	FCI IDENTIFLEX 602, SILENT KNIGHT 5820 XL OR FIRE LITE MS-9600
FACP (dashed)	EXISTING FIRE ALARM CONTROL PANEL	EXISTING	EXISTING FACP TO BE REMOVED. PATCH AND REFINISH WALL SURFACE.
FAPS	NOTIFICATION CIRCUIT REMOTE POWER SUPPLY	SURFACE MOUNT ON WALL	TO POWER NOTIFICATION APPLIANCES
FAPS (dashed)	EXISTING FIRE ALARM POWER SUPPLY	EXISTING	EXISTING POWER SUPPLY TO BE REMOVED. NEW POWER SUPPLY TO BE INSTALLED IN SAME LOCATION.
ANN	FIRE ALARM ANNUNCIATOR PANEL	MOUNT AT 54"AFF ON RECESSED J-BOX.	TO DISPLAY STATUS OF FIRE ALARM SYSTEM. ANNUNCIATOR SHALL HAVE ALPHA-NUMERIC READOUT AND KEYPAD TO ALLOW SYSTEM SILENCE AND RESET.
S	ADDRESSABLE PHOTOELECTRIC SMOKE DETECTOR TO REPLACE EXISTING DETECTOR	CEILING MOUNT ON EXISTING J-BOX	REMOVE EXISTING SMOKE DETECTORS AND REPLACE WITH NEW ADDRESSABLE DETECTORS COMPATIBLE WITH NEW FACP.
S N	ADDRESSABLE PHOTOELECTRIC SMOKE DETECTOR	CEILING MOUNT ON EXISTING J-BOX	ADD NEW DETECTORS WHERE INDICATED ON PLANS.
S (dashed)	EXISTING SMOKE DETECTOR	EXISTING	REMOVE EXISTING DETECTOR AND J-BOX REPLACE CEILING TILE AND/OR PATCH AND PAINT CEILING.
	ADDRESSABLE HEAT DETECTOR (FIXED TEMP)	CEILING MOUNT ON EXISTING J-BOX	REMOVE EXISTING HEAT DETECTOR AND REPLACE WITH NEW ADDRESSABLE DETECTOR COMPATIBLE WITH NEW FACP.
	ADDRESSABLE MANUAL PULL STATION TO REPLACE EXISTING.	WALL MOUNT ON EXISTING (OR RELOCATED) J-BOX.	REPLACE EXISTING PULL STATIONS WITH NEW PULL STATIONS COMPATIBLE WITH NEW FACP
N	ADDRESSABLE MANUAL PULL STATION	WALL MOUNT AT 48" AFF ON RECESSED J-BOX	ADD NEW PULL STATION WHERE INDICATED ON PLAN.
	EXISTING MANUAL PULL STATION	EXISTING	REMOVE EXISTING PULL STATION, J-BOX AND CONDUIT. PATCH AND PAINT WALL.
F	VANE TYPE WATER FLOW SWITCH	MOUNT ON FIRE SPRINKLER RISER PER MANUFACTURER REQUIREMENTS.	TO REPLACE EXISTING PRESSURE TYPE FLOW SWITCHES. CONNECT TO NEW FIRE ALARM SYSTEM.
F (dashed)	EXISTING VANE TYPE WATER FLOW SWITCH	EXISTING	EXISTING TO REMAIN. CONNECT TO NEW FIRE ALARM SYSTEM.
T	VALVE SUPERVISORY SWITCH	MOUNT IN PORT OF NEW EXTERIOR POST INDICATOR	TO MONITOR POSITION OF EXTERIOR FIRE SPRINKLER CONTROL VALVE. CONNECT TO NEW FIRE ALARM SYSTEM.
T (dashed)	EXISTING VALVE SUPERVISORY SWITCH	EXISTING	EXISTING TO REMAIN. CONNECT TO NEW FIRE ALARM SYSTEM.
SD	ADDRESSABLE DUCT SMOKE DETECTOR	DUCT MOUNT IN SUPPLY AND RETURN DUCTS PER MANUFACTURER'S REQUIREMENTS	REPLACE EXISTING DETECTORS AND/OR INSTALL NEW DETECTORS FOR ALL AIR MOVEMENT SYSTEMS WITH A CAPACITY IN EXCESS OF 2000 CFM PER NFPA 72, 90 & IMC.
M	ADDRESSABLE MONITOR MODULE	MOUNT ON J-0BOX NEAR CONVENTIONAL DEVICE TO BE MONITORED	CONNECT TO CONTACTS OF CONVENTIONAL DEVICE TO FACILITATE MONITORING OF DEVICE AS AN ADDRESSABLE POINT.
C	ADDRESSABLE CONTROL MODULE	MOUNT ON J-BOX WITHIN 3' OF DEVICE OR CIRCUIT	TO PROVIDE PROTECTED PREMISE FIRE SAFETY FUNCTIONS SUCH AS DOOR RELEASE, FAN SHUTDOWN TO NOTIFICATION CIRCUIT ACTIVATION.
	HORN/STROBE TO REPLACE EXISTING	WALL MOUNT ON EXISTING J-BOX	CANDELA RATING OF STROBE SHALL BE AS INDICATED ON DRAWINGS. STROBES SHALL BE SYNCHRONIZED WITH ALL OTHER STROBES IN VIEW. DEVICE SHALL BE POWERED FROM FACP OR REMOTE POWER SUPPLY SUPERVISED BY FACP. DEVICE COLOR – RED
N	HORN/STROBE (WALL MOUNT)	WALL MOUNT AT 80" TO 96" AFF ON NEW RECESSED J-BOX	
N	STROBE	CEILING MOUNT ON NEW RECESSED J-BOX OR WALL MOUNT AT 80" TO 96" AFF	
	HORN/STROBE (CEILING MOUNT)	CEILING MOUNT ON NEW RECESSED J-BOX	
	EXTERIOR HORN/STROBE TO REPLACE EXISTING	WALL MOUNT ON EXISTING J-BOX	
N	EXTERIOR HORN/STROBE	WALL MOUNT ON NEW WEATHER PROOF J-BOX (SURFACE MOUNT) AT 10'-0" AFF OR HEIGHT INDICATED ON DRAWINGS	
	EXISTING NOTIFICATION APPLIANCE TO BE REMOVED	EXISTING	REMOVE EXISTING DEVICE AND WIRING AND PROVIDE COVER PLATE (APPROVED BY OWNER) FOR EXISTING J-BOX.

JOB NO. 104161
DWG ISSUE:

DRAWN BY: BBH
CHECKED BY: GTJ

REVISIONS:

DRAWING DATE: 12/07/07

REVISION DATE: XX/XX/XX

SNOW COLLEGE - WASHBURN BUILDING
RICHFIELD, UTAH

FIRE ALARM SYSTEM UPGRADE
DFCM PROJECT #07159700

FIRE ALARM NOTIFICATION APPLIANCE PLAN NORTHEAST

FA-6

FIRE ALARM SYSTEM GENERAL NOTES

1. SCOPE OF WORK: WORK SHALL INCLUDE REMOVAL OF EXISTING CONVENTIONAL FIRE ALARM SYSTEM INCLUDING ALL CONTROL EQUIPMENT, POWER SUPPLIES, CABINETS, INIT. CIRCUITS AND DEVICES, NOTIFICATION APPLIANCE CIRCUITS AND DEVICES. INSTALL NEW ADDRESSABLE FIRE ALARM SYSTEM INCLUDING CONTROL PANEL WITH NEW SIGNALING LINE CIRCUITS, INITIATING DEVICE CIRCUITS AND NOTIFICATION APPLIANCE CIRCUITS. NEW FIRE ALARM SYSTEM SHALL BE IN ACCORDANCE WITH NFPA 72, THESE DRAWINGS AND SPECIFICATIONS.

2. APPLICABLE CODES/STANDARDS:
INTERNATIONAL BUILDING CODE - 2006 EDITION
INTERNATIONAL FIRE CODE - 2006 EDITION
INTERNATIONAL MECHANICAL CODE - 2006 EDITION
UTAH STATE FIRE MARSHAL RULE R710-4
NFPA 70 - 2005 EDITION
NFPA 72 - 2007 EDITION
NFPA 90A - 2002 EDITION

3. QUALITY ASSURANCE: ALL EQUIPMENT, MATERIAL AND DEVICES USED FOR THE FIRE ALARM SYSTEM INSTALLATION SHALL BE UL LISTED AND/OR FM APPROVED FOR USE IN FIRE PROTECTION SYSTEMS. ALL INITIATING DEVICES SHALL BE LISTED COMPATIBLE WITH THE FIRE ALARM CONTROL PANEL (FACP). MAJOR SYSTEM COMPONENTS (CONTROL PANELS, INITIATING DEVICES, ADDRESSABLE MODULES AND RELAYS, POWER SUPPLIES, ETC.) SHALL BE FCI OR FROM A STATE OF UTAH DFCM APPROVED MANUFACTURER. APPROVED MANUFACTURERS INCLUDE FIRE-LITE AND SILENT KNIGHT.

4. SUBMITTALS: FIRE ALARM SYSTEM CONTRACTOR SHALL PREPARE AND SUBMIT SHOPS DRAWINGS TO STATE FIRE MARSHAL, OWNER AND ENGINEER FOR REVIEW/APPROVAL PRIOR TO ORDERING OR INSTALLING ANY EQUIPMENT. SUBMITTALS SHALL CONFORM TO THE CONSTRUCTION DOCUMENTS REQUIREMENTS OF IFC 907.1.1.

5. DEMOLITION: IT IS THE INSTALLER'S RESPONSIBILITY FOR THE DEMOLITION OF THE EXISTING FIRE ALARM SYSTEM. ALL NEW DEVICES AND CIRCUITS WILL REPLACE THE OLD AND GENERALLY REUSE THE EXISTING LOCATIONS. ANY EXISTING DEVICES AND CONDUIT NOT BEING REPLACED AND REUSED THAT ARE VISIBLE, SUCH AS CABINETS NOTIFICATION APPLIANCES OR SMOKE DETECTORS SHALL BE REMOVED AND REMAINING WALL OR CEILING SURFACE REPAIRED OR REPLACED TO MATCH SURROUNDING AREAS. REMOVE ALL UNUSED WIRE IN ALL REMAINING J-BOXES AND/OR CONDUITS. ANY CEILING TILE DAMAGED BY THE INSTALLER MUST BE REPLACED WITH THE SAME OR EQUIVALENT TILE.

6. SYSTEM TYPE: FIRE ALARM SYSTEM SHALL MEET THE REQUIREMENTS FOR PROTECTED PREMISE FIRE ALARM SYSTEMS. SYSTEM SHALL PROVIDE OFF-PREMISE NOTIFICATION OF STATUS TO CENTRAL STATION DETERMINED BY OWNER.

7. OCCUPANT NOTIFICATION: RECEIPT OF ANY FIRE ALARM SIGNAL AT THE FACP SHALL RESULT IN THE ACTIVATION OF ALL NOTIFICATION APPLIANCES IN THE BUILDING (STROBES AND HORN/STROBES). FOR PURPOSES OF FIRE ALARM NOTIFICATION, THE BUILDING SHALL BE CONSIDERED AS A SINGLE ZONE.

8. WIRING/CONDUIT: ALL WIRING SHALL BE NEW (EXISTING WIRING MAY NOT BE RE-USED) AND SHALL BE FREE OF OPENS, SHORTS AND GROUNDS. ALL WIRING SHALL BE INSTALLED IN RIGID CONDUIT OR EMT. FLEXIBLE CONDUIT MAY BE USED FOR DROPS TO SINGLE DEVICES (MAXIMUM 6'). MINIMUM CONDUIT SIZE SHALL BE 1/2". CONDUIT SHALL BE CONCEALED IN FINISHED AREAS AND MAY BE EXPOSED IN UNFINISHED AREAS. EXPOSED CONDUIT MAY BE UNPAINTED (UNLESS OTHERWISE NOTED) BUT SHALL BE PERIODICALLY MARKED WITH RED TAPE OR PAINT. ALL PENETRATIONS THROUGH RATED PARTITIONS SHALL BE FIRE STOPPED WITH A SUITABLE CAULKING COMPOUND. ALL WIRING USED IN THE FIRE ALARM SYSTEM SHALL BE FPL (FIRE, POWER LIMITED) WITH MINIMUM 300V INSULATION OR EQUIVALENT AS PER NFPA 70 ARTICLE 760.

9. WIRING STYLES(PER NFPA 72): INITIATING DEVICE CIRCUITS SHALL MEET THE REQUIREMENTS FOR CLASS A STYLE D CIRCUITS. SIGNALING LINE CIRCUITS SHALL MEET THE REQUIREMENTS FOR CLASS A STYLE 6 OR 7 CIRCUITS. NOTIFICATION APPLIANCE CIRCUITS SHALL MEET THE REQUIREMENTS FOR CLASS A STYLE Z.

10. POWER: PROVIDE NEW 120VAC 20 AMP CIRCUIT FROM EXISTING POWER DISTRIBUTION PANEL IN SUPPLY ROOM TO PROVIDE PRIMARY POWER TO FACP. EXISTING BRANCH CIRCUITS MAY BE REUSED TO PROVIDE PRIMARY POWER TO NEW REMOTE NOTIFICATION CIRCUIT POWER SUPPLIES. FURNISH A BATTERY BACKUP TO PROVIDE SECONDARY POWER SUPPLY TO FIRE ALARM PANEL AND NOTIFICATION CIRCUIT POWER SUPPLIES. BATTERY BACKUP SHALL BE OF SUFFICIENT CAPACITY TO PROVIDE 24 HOURS OF STANDBY POWER WITH AN ADDITIONAL RESERVE TO OPERATE SYSTEM FOR 5 MINUTES IN ALARM.

11. INITIATING DEVICES:
SLC CIRCUITS: SLC LOOP DEVICE ADDRESSING SHALL NOT EXCEED 100 DEVICES (SMOKES, HEATS, DUCT SMOKES, MODULES CONTROL RELAYS, ETC.) PER LOOP. AT LEAST 20 ADDRESSES (20%) SHOULD BE LEFT VACANT ON EACH SLC LOOP IN ORDER TO ALLOW SPACE FOR ADJUSTMENTS/EXPANSION:
SMOKE DETECTORS: PROVIDE SMOKE DETECTORS WHERE SHOWN ON PLANS IN ALL CORRIDORS AND LOBBIES. MAXIMUM SPACING OF DETECTORS SHALL BE 30' BETWEEN DETECTORS OR 15' FROM FURTHEST WALL.
MANUAL PULL STATIONS: INSTALL NEW PULL STATIONS AT SAME LOCATION AND HEIGHT AS EXISTING PULL STATIONS USING EXISTING JUNCTION BOXES (UNLESS OTHERWISE NOTED). WHERE NEW MANUAL PULL STATIONS ARE INDICATED ON THE PLAN INSTALL WITH OPERATING ELEMENT AT 48" AFF.
ADDRESSABLE MODULES: PROVIDE ADDRESSABLE MODULES TO MONITOR EXISTING CONVENTIONAL DEVICES (FIRE SPRINKLER SWITCHES) TO REMAIN AND TROUBLE OUTPUT OF NEW NOTIFICATION CIRCUIT POWER SUPPLIES. LOCATE MONITOR MODULE ADJACENT TO DEVICE MONITORED IN AN ACCESSIBLE LOCATION OR ABOVE REMOVABLE CEILING TILE. LABEL AS PART OF THE FIRE ALARM SYSTEM WITH THE NAME OF THE DEVICE MONITORED ON THE COVER OF THE JUNCTION BOX.

12. NOTIFICATION APPLIANCES: PROVIDE AUDIBLE AND VISUAL NOTIFICATION APPLIANCES THROUGHOUT BUILDING. VOLUME OF HORNS SHALL BE SUFFICIENT TO PROVIDE A SOUND LEVEL OF 15 Db ABOVE AMBIENT IN ALL OCCUPIED AREAS. VISIBLE ALARMS SHALL BE PROVIDED THROUGHOUT ALL OCCUPIED AREAS OF HE BUILDING INCLUDING PRIVATE OFFICES AND AREAS WITH POSSIBLE OCCUPANCY BY HEARING IMPAIRED PERSONS. STROBES SHALL FLASH IN SYNCHRONIZATION. CONFIGURE CIRCUITS TO ALLOW HORNS TO BE SILENCED WHILE STROBES CONTINUE TO FLASH.

13. FIRE SAFETY FUNCTIONS: CONTROL MODULES WITH RELAY CONTACTS SHALL BE INSTALLED AND PROGRAMMED TO PROVIDE DOOR RELEASE, FAN SHUTDOWN AND ACTIVATION OF NOTIFICATION CIRCUIT POWER SUPPLIES (UNLESS PROVIDED BY SEPARATE CIRCUIT FROM FACP). THE CONTROL RELAY MODULES SHALL BE INSTALLED WITHIN 36" OF DEVICE OR CIRCUIT CONTROLLED.

14. PHASING: PLAN SEQUENCE OF WORK TO MINIMIZE DOWN TIME OF FIRE ALARM SYSTEM. IT IS THE INSTALLER'S RESPONSIBILITY TO NOTIFY PROPER AUTHORITIES AND PROVIDE A FIRE WATCH DURING INTERRUPTIONS OF FIRE DETECTION AND ALARM SERVICE IN THE BUILDING.

15. TESTING: SCHEDULE AND PERFORM ALL ACCEPTANCE TESTS REQUIRED BY NFPA 72. TESTING SHALL BE WITNESSED BY STATE FIRE MARSHAL'S OFFICE, PROJECT ENGINEER, DFCM AND BUILDING MAINTENANCE PERSONNEL. SUBMIT A WRITTEN TESTING PLAN DETAILING EACH TEST TO BE PERFORMED TO EACH AGENCY AT LEAST ONE DAY PRIOR TO SCHEDULED TEST.

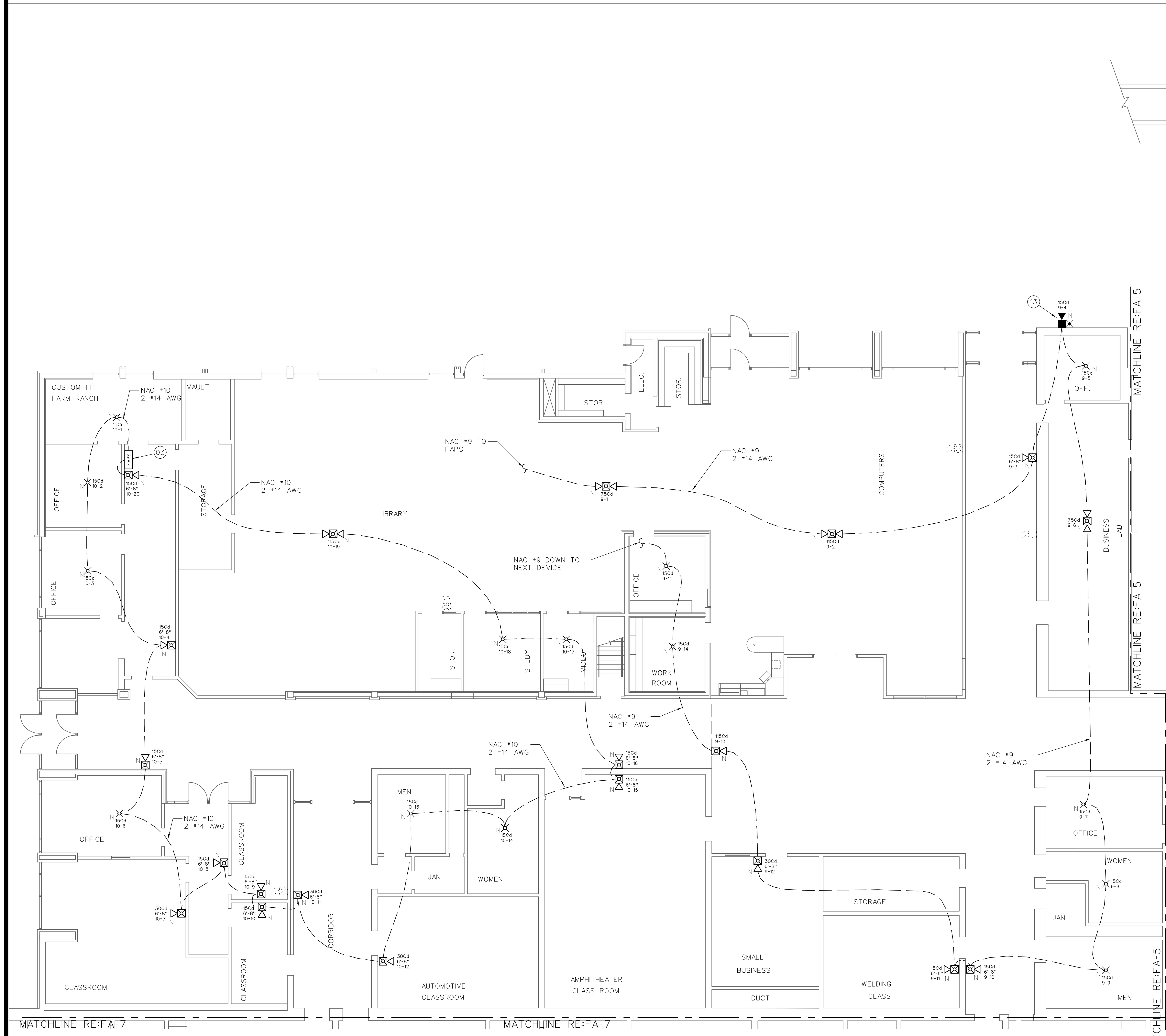

FIRE ALARM NOTIFICATION APPLIANCE PLAN – SOUTHWEST

1/8" = 1'-0"

0 8' 16' 32'

FIRE ALARM SYSTEM KEY NOTES

(01) FURNISH AND INSTALL NEW ADDRESSABLE FIRE ALARM CONTROL PANEL (FACP). FACP MAY BE SURFACE MOUNT OR RECESSED INTO WALL. CONDUIT FROM FACP TO VOID SPACE ABOVE CEILING MAY BE EXPOSED BUT SHALL BE PAINTED TO MATCH WALL. FACP SHALL BE FCI (IDENTIFLEX 602 WITH 411 SERIES DACT), SILENT KNIGHT (5820XL) OR FIRE-LITE (MS-9600 WITH DACT-UD). INSTALL FACP WITH KEY PAD APPROXIMATELY 60" ABOVE FLOOR LEVEL. PROVIDE DEDICATED 120 VAC - 20 AMP CIRCUIT TO FACP FROM NEARBY POWER DISTRIBUTION PANEL. POWER CIRCUIT TO FACP SHALL BE PERMANENTLY MARKED AND MECHANICALLY PROTECTED PER NFPA 70 & 72. PROVIDE PHONE LINES (PRIMARY AND SECONDARY) TO FACP FOR OFF-PREMISE RELAY OF FIRE ALARM, SUPERVISORY AND TROUBLE SIGNALS.

(02) EXISTING FIRE ALARM CONTROL PANEL TO BE REPLACED BY NEW ADDRESSABLE FACP AT DIFFERENT LOCATION. FACP SHALL BE KEPT IN SERVICE UNTIL NEW FACP IS INSTALLED AND FULLY OPERATIONAL. AFTER NEW FACP HAS BEEN INSTALLED AND IS FULLY OPERATIONAL, EXISTING FACP SHALL BE REMOVED (EXISTING MASTER TIME SYSTEM TO REMAIN). REMOVE ALL CONTROL EQUIPMENT, CABINETS, CONDUIT, J-BOXES, ETC. PATCH AND RE-FINISH WALL TO MATCH SURROUNDING WALL SURFACE.

(03) FURNISH AND INSTALL REMOTE POWER SUPPLIES TO PROVIDE 24 VDC POWER TO NOTIFICATION APPLIANCE CIRCUITS. SURFACE MOUNT POWER SUPPLIES ON WALL WHERE SHOWN ON PLANS AT NEW FACP, LOCATION OF EXISTING FACP AND REMOTE POWER SUPPLY TO BE REMOVED. CONDUITS FROM POWER SUPPLY TO VOID SPACE ABOVE CEILING OR TO TRUSS SPACE MAY BE EXPOSED BUT SHALL BE PAINTED TO MATCH WALL. EXISTING POWER CIRCUITS MAY BE RE-USED WHERE PRESENT. POWER SUPPLIES SHALL BE SUPERVISED AND NAC CIRCUITS ACTIVATED BY FACP. PROVIDE BATTERIES FOR SECONDARY POWER SUPPLY SIZED TO PROVIDE 24 HOURS OF STANDBY POWER PLUS AN ADDITIONAL RESERVE FOR 5 MINUTES OF ALARM POWER. PROVIDE SYNC MODULES AND INTERCONNECT POWER SUPPLIES AS REQUIRED TO SYNCRONIZE ALL VISUAL ALARMS WITHIN A SINGLE FIELD OF VIEW.

(04) EXISTING NOTIFICATION POWER SUPPLY TO BE REMOVED. POWER SUPPLY TO BE KEPT IN SERVICE UNTIL ALL FUNCTIONS PERFORMED BY THE POWER SUPPLY ARE PROVIDED BY THE NEW FIRE ALARM SYSTEM. REMOVE POWER SUPPLY, CABINET, J-BOX, ETC. PATCH AND REFINISH TO MATCH EXISTING.

(05) FURNISH AND INSTALL A NEW ANNUNCIATOR PANEL FOR ADDRESSABLE FIRE ALARM SYSTEM. INSTALL ON RECESSED TYPE JUNCTION BOX WITH CONDUIT CONCEALED IN WALL. MOUNT ANNUNCIATOR AT 54" CENTERLINE ABOVE FLOOR LEVEL.

(06) EXISTING MANUAL PULL STATION TO BE REMOVED. PULL STATION IS NOT REQUIRED BY IBC OR IFC. REMOVE EXISTING DEVICE, JUNCTION BOX AND CONDUIT TO VOID SPACE ABOVE CEILING OR TRUSS SPACE. PATCH AND REFINISH WALL SURFACE TO MATCH EXISTING.

(07) FURNISH AND INSTALL A PROTECTIVE COVER (STI-1100 OR EQUAL) WITH AUDIBLE ALARM OVER MANUAL FIRE ALARM PULL STATION TO DISCURAGE FALSE ACTUATION.

(08) EXISTING PULL STATION MOUNTED TO HIGH TO CONFORM TO ACCESSIBILITY GUIDELINES. RELOCATE EXISTING PULL STATION J-BOX AND CONDUIT AND INSTALL NEW ADDRESSABLE PULL STATION WITH THE OPERATING ELEMENT AT 48" ABOVE FLOOR LEVEL. CONDUIT MAY BE EXPOSED WITH SURFACE MOUNTED J-BOX FOR BLOCK WALLS AND SHALL BE CONCEALED WHERE WALL SURFACE IS FINISHED. PATCH AND REPAINT WALL AS REQUIRED.

(09) INSTALL BURRIED CONDUIT ABOVE GROUND WEATHERPROOF JUNCTION BOXES AND WEATHER PROOF FLEX CONDUIT TO NEW TAMPER SWITCH ON EXTERIOR FIRE SPRINKLER CONTROL VALVE (SEE KEY NOTE 1 ON SHEET FA-10).

(10) PROVIDE A PROGRAMMABLE RELAY TO RELEASE EXISTING FIRE DOOR UPON OPERATION OF SMOKE DETECTOR ON EITHER SIDE OF FIRE DOOR. TEST DOOR FOR PROPER OPERATION AND ADJUST OR REPAIR DOOR TO ENSURE PROPER OPERATION. NOTIFY OWNER AND ENGINEER IN WRITING IF EXISTING DOOR IS NOT FUNCTIONAL AND CANNOT BE REPAIRED/ ADJUSTED OR DOES NOT INCLUDE RELAYS FOR CONNECTION TO FIRE ALARM SYSTEM.

(11) INSTALL NEW DUCT MOUNTED SMOKE DETECTOR ON THE SUPPLY SIDE OF AIR MOVEMENT SYSTEMS WITH A CAPACITY IN EXCESS OF 2,00 CFM. EXISTING DETECTORS MY BE RE-USED IF COMPLETELY FUNCTIONAL AND COMPATIBLE WITH NEW FIRE ALARM SYSTEM. INSTALL DETECTOR PER MANUFACTURER'S RECOMMENDATIONS WITH DETECTOR ENCLOSURE MOUNTED ON DUCT EXTERIOR AND SAMPLING TUBE INSTALLED WITHIN DUCT. SMOKE DETECTORS AND AUTOMATIC CONTROL WILL NOT BE REQUIRED FOR EVAPORATIVE COOLERS IN SHOP AREAS WHERE AIR MOVEMENT SYSTEM SUPPLIES AND RETURNS FROM A SINGLE ROOM.

(12) FURNISH AND INSTALL A PROGRAMMABLE RELAY TO SHUT DOWN AIR HANDLER. RELAY SHALL BE NORMALLY ENERGIZED AND FAN CONTROLS SHALL BE CONNECTED TO NORMALLY CLOSED CONTACTS ON THE RELAY. RELAY SHALL BE PROGRAMMED TO SHUT DOWN ALL AIR HANDLERS SIMULTANEOUSLY UPON ACTIVATION OF ANY AREA OR DUCT SMOKE DETECTOR AND SHALL NOT RESTORE UNTIL THE FACP HAS RESET. FIELD LOCATE RELAY.

(13) FURNISH AND INSTALL A NEW EXTERIOR ALARM ON THE EXTERIOR WALL OF THE BUILDING. MOUNT ALARM AT 10'-0" ABOVE GRADE OR AT HEIGHT INDICATED ON DRAWINGS. DEVICE SHALL BE UL LISTED FOR EXTERIOR INSTALLATION AND INSTALLED ON A WEATHERPROOF J-BOX. J-BOX MAY BE SURFACE MOUNTED BUT CONDUIT SHALL BE CONCEALED IN WALL.

FIRE ALARM KEYPLAN

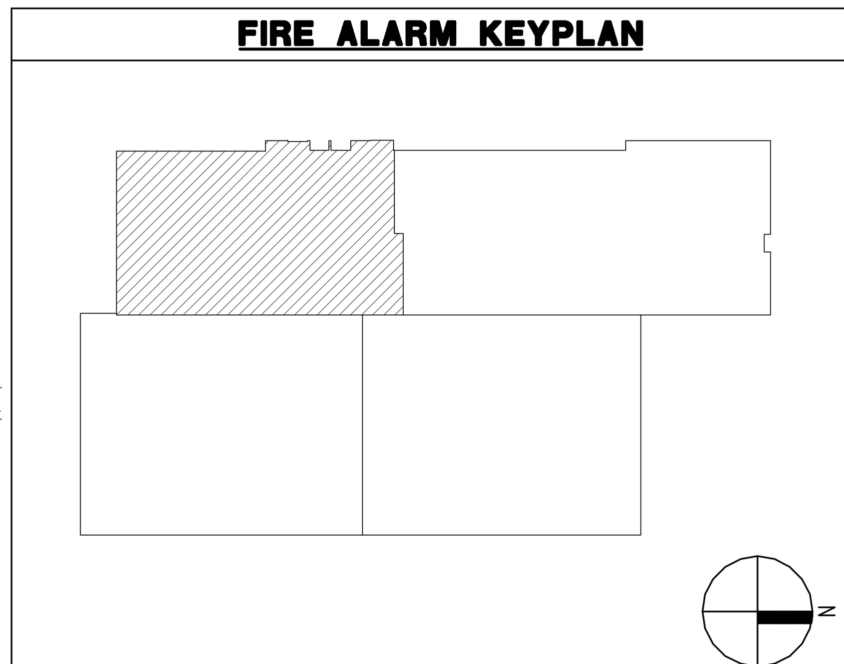

FIRE ALARM EQUIPMENT LEGEND

DEVICE	DESCRIPTION	MOUNTING	REMARKS
FACP	ADDRESSABLE FIRE ALARM CONTROL PANEL	SURFACE MOUNT ON WALL WITH KEYPAD AT 60" AFF.	FCI IDENTIFLEX 602, SILENT KNIGHT 5820 XL OR FIRE LITE MS-9600
FACP	EXISTING FIRE ALARM CONTROL PANEL	EXISTING	EXISTING FACP TO BE REMOVED. PATCH AND REFINISH WALL SURFACE.
FAPS	NOTIFICATION CIRCUIT REMOTE POWER SUPPLY	SURFACE MOUNT ON WALL	TO POWER NOTIFICATION APPLIANCES
FAPS	EXISTING FIRE ALARM POWER SUPPLY	EXISTING	EXISTING POWER SUPPLY TO BE REMOVED. NEW POWER SUPPLY TO BE INSTALLED IN SAME LOCATION.
ANN	FIRE ALARM ANNUNCIATOR PANEL	MOUNT AT 54"AFF ON RECESSED J-BOX.	TO DISPLAY STATUS OF FIRE ALARM SYSTEM. ANNUNCIATOR SHALL HAVE ALPHA-NUMERIC READOUT AND KEYPAD TO ALLOW SYSTEM SILENCE AND RESET.
	ADDRESSABLE PHOTOELECTRIC SMOKE DETECTOR TO REPLACE EXISTING DETECTOR	CEILING MOUNT ON EXISTING J-BOX	REMOVE EXISTING SMOKE DETECTORS AND REPLACE WITH NEW ADDRESSABLE DETECTORS COMPATIBLE WITH NEW FACP.
N	ADDRESSABLE PHOTOELECTRIC SMOKE DETECTOR	CEILING MOUNT ON EXISTING J-BOX	ADD NEW DETECTORS WHERE INDICATED ON PLANS.
	EXISTING SMOKE DETECTOR	EXISTING	REMOVE EXISTING DETECTOR AND J-BOX REPLACE CEILING TILE AND/OR PATCH AND PAINT CEILING.
	ADDRESSABLE HEAT DETECTOR (FIXED TEMP)	CEILING MOUNT ON EXISTING J-BOX	REMOVE EXISTING HEAT DETECTOR AND REPLACE WITH NEW ADDRESSABLE DETECTOR COMPATIBLE WITH NEW FACP.
	ADDRESSABLE MANUAL PULL STATION TO REPLACE EXISTING.	WALL MOUNT ON EXISTING (OR RELOCATED) J-BOX.	REPLACE EXISTING PULL STATIONS WITH NEW PULL STATIONS COMPATIBLE WITH NEW FACP
N	ADDRESSABLE MANUAL PULL STATION	WALL MOUNT AT 48" AFF ON RECESSED J-BOX	ADD NEW PULL STATION WHERE INDICATED ON PLAN.
	EXISTING MANUAL PULL STATION	EXISTING	REMOVE EXISTING PULL STATION, J-BOX AND CONDUIT. PATCH AND PAINT WALL.
F	VANE TYPE WATER FLOW SWITCH	MOUNT ON FIRE SPRINKLER RISER PER MANUFACTURER REQUIREMENTS.	TO REPLACE EXISTING PRESSURE TYPE FLOW SWITCHES. CONNECT TO NEW FIRE ALARM SYSTEM.
F	EXISTING VANE TYPE WATER FLOW SWITCH	EXISTING	EXISTING TO REMAIN. CONNECT TO NEW FIRE ALARM SYSTEM.
T	VALVE SUPERVISORY SWITCH	MOUNT IN PORT OF NEW EXTERIOR POST INDICATOR	TO MONITOR POSITION OF EXTERIOR FIRE SPRINKLER CONTROL VALVE. CONNECT TO NEW FIRE ALARM SYSTEM.
T	EXISTING VALVE SUPERVISORY SWITCH	EXISTING	EXISTING TO REMAIN. CONNECT TO NEW FIRE ALARM SYSTEM.
SD	ADDRESSABLE DUCT SMOKE DETECTOR	DUCT MOUNT IN SUPPLY AND RETURN DUCTS PER MANUFACTURER'S REQUIREMENTS	REPLACE EXISTING DETECTORS AND/OR INSTALL NEW DETECTORS FOR ALL AIR MOVEMENT SYSTEMS WITH A CAPACITY IN EXCESS OF 2000 CFM PER NFPA 72, 90 & IMC.
M	ADDRESSABLE MONITOR MODULE	MOUNT ON J-0BOX NEAR CONVENTIONAL DEVICE TO BE MONITORED	CONNECT TO CONTACTS OF CONVENTIONAL DEVICE TO FACILITATE MONITORING OF DEVICE AS AN ADDRESSABLE POINT.
C	ADDRESSABLE CONTROL MODULE	MOUNT ON J-BOX WITHIN 3' OF DEVICE OR CIRCUIT	TO PROVIDE PROTECTED PREMISE FIRE SAFETY FUNCTIONS SUCH AS DOOR RELEASE, FAN SHUTDOWN TO NOTIFICATION CIRCUIT ACTIVATION.
	HORN/STROBE TO REPLACE EXISTING	WALL MOUNT ON EXISTING J-BOX	CANDELA RATING OF STROBE SHALL BE AS INDICATED ON DRAWINGS. STROBES SHALL BE SYNCHRONIZED WITH ALL OTHER STROBES IN VIEW. DEVICE SHALL BE POWERED FROM FACP OR REMOTE POWER SUPPLY SUPERVISED BY FACP. DEVICE COLOR – RED
N	HORN/STROBE (WALL MOUNT)	WALL MOUNT AT 80" TO 96" AFF ON NEW RECESSED J-BOX	
N	STROBE	CEILING MOUNT ON NEW RECESSED J-BOX OR WALL MOUNT AT 80" TO 96" AFF	
	HORN/STROBE (CEILING MOUNT)	CEILING MOUNT ON NEW RECESSED J-BOX	
	EXTERIOR HORN/STROBE TO REPLACE EXISTING	WALL MOUNT ON EXISTING J-BOX	
N	EXTERIOR HORN/STROBE	WALL MOUNT ON NEW WEATHER PROOF J-BOX (SURFACE MOUNT) AT 10'-0" AFF OR HEIGHT INDICATED ON DRAWINGS	
	EXISTING NOTIFICATION APPLIANCE TO BE REMOVED	EXISTING	REMOVE EXISTING DEVICE AND WIRING AND PROVIDE COVER PLATE (APPROVED BY OWNER) FOR EXISTING J-BOX.

JOB NO. 104161
DWG ISSUE:

DRAWN BY: BBH
CHECKED BY: GTJ

REVISIONS:

DRAWING DATE: 12/07/07
REVISION DATE: XX/XX/XX

SNOW COLLEGE - WASHBURN BUILDING
RICHFIELD, UTAH

FIRE ALARM SYSTEM UPGRADE
DFCM PROJECT #07159700

FIRE ALARM NOTIFICATION APPLIANCE PLAN SOUTHWEST

FA-8

FIRE ALARM SYSTEM GENERAL NOTES

1. SCOPE OF WORK: WORK SHALL INCLUDE REMOVAL OF EXISTING CONVENTIONAL FIRE ALARM SYSTEM INCLUDING ALL CONTROL EQUIPMENT, POWER SUPPLIES, CABINETS, INIT. CIRCUITS AND DEVICES, NOTIFICATION APPLIANCE CIRCUITS AND DEVICES. INSTALL NEW ADDRESSABLE FIRE ALARM SYSTEM INCLUDING CONTROL PANEL WITH NEW SIGNALING LINE CIRCUITS, INITIATING DEVICE CIRCUITS AND NOTIFICATION APPLIANCE CIRCUITS. NEW FIRE ALARM SYSTEM SHALL BE IN ACCORDANCE WITH NFPA 72, THESE DRAWINGS AND SPECIFICATIONS.

2. APPLICABLE CODES/STANDARDS:
   INTERNATIONAL BUILDING CODE - 2006 EDITION
   INTERNATIONAL FIRE CODE - 2006 EDITION
   INTERNATIONAL MECHANICAL CODE - 2006 EDITION
   UTAH STATE FIRE MARSHAL RULE R710-4
   NFPA 70 - 2005 EDITION
   NFPA 72 - 2007 EDITION
   NFPA 90A - 2002 EDITION

3. QUALITY ASSURANCE: ALL EQUIPMENT, MATERIAL AND DEVICES USED FOR THE FIRE ALARM SYSTEM INSTALLATION SHALL BE UL LISTED AND/OR FM APPROVED FOR USE IN FIRE PROTECTION SYSTEMS. ALL INITIATING DEVICES SHALL BE LISTED COMPATIBLE WITH THE FIRE ALARM CONTROL PANEL (FACP). MAJOR SYSTEM COMPONENTS (CONTROL PANELS, INITIATING DEVICES, ADDRESSABLE MODULES AND RELAYS, POWER SUPPLIES, ETC.) SHALL BE FCI OR FROM A STATE OF UTAH DFCM APPROVED MANUFACTURER. APPROVED MANUFACTURERS INCLUDE FIRE-LITE AND SILENT KNIGHT.

4. SUBMITTALS: FIRE ALARM SYSTEM CONTRACTOR SHALL PREPARE AND SUBMIT SHOPS DRAWINGS TO STATE FIRE MARSHAL, OWNER AND ENGINEER FOR REVIEW/APPROVAL PRIOR TO ORDERING OR INSTALLING ANY EQUIPMENT. SUBMITTALS SHALL CONFORM TO THE CONSTRUCTION DOCUMENTS REQUIREMENTS OF IFC 907.1.1.

5. DEMOLITION: IT IS THE INSTALLER'S RESPONSIBILITY FOR THE DEMOLITION OF THE EXISTING FIRE ALARM SYSTEM. ALL NEW DEVICES AND CIRCUITS WILL REPLACE THE OLD AND GENERALLY REUSE THE EXISTING LOCATIONS. ANY EXISTING DEVICES AND CONDUIT NOT BEING REPLACED AND REUSED THAT ARE VISIBLE, SUCH AS CABINETS NOTIFICATION APPLIANCES OR SMOKE DETECTORS SHALL BE REMOVED AND REMAINING WALL OR CEILING SURFACE REPAIRED OR REPLACED TO MATCH SURROUNDING AREAS. REMOVE ALL UNUSED WIRE IN ALL REMAINING J-BOXES AND/OR CONDUITS. ANY CEILING TILE DAMAGED BY THE INSTALLER MUST BE REPLACED WITH THE SAME OR EQUIVALENT TILE.

6. SYSTEM TYPE: FIRE ALARM SYSTEM SHALL MEET THE REQUIREMENTS FOR PROTECTED PREMISE FIRE ALARM SYSTEMS. SYSTEM SHALL PROVIDE OFF-PREMISE NOTIFICATION OF STATUS TO CENTRAL STATION DETERMINED BY OWNER.

7. OCCUPANT NOTIFICATION: RECEIPT OF ANY FIRE ALARM SIGNAL AT THE FACP SHALL RESULT IN THE ACTIVATION OF ALL NOTIFICATION APPLIANCES IN THE BUILDING (STROBES AND HORN/STROBES). FOR PURPOSES OF FIRE ALARM NOTIFICATION, THE BUILDING SHALL BE CONSIDERED AS A SINGLE ZONE.

8. WIRING/CONDUIT: ALL WIRING SHALL BE NEW (EXISTING WIRING MAY NOT BE RE-USED) AND SHALL BE FREE OF OPENS, SHORTS AND GROUNDS. ALL WIRING SHALL BE INSTALLED IN RIGID CONDUIT OR EMT. FLEXIBLE CONDUIT MAY BE USED FOR DROPS TO SINGLE DEVICES (MAXIMUM 6'). MINIMUM CONDUIT SIZE SHALL BE 1/2". CONDUIT SHALL BE CONCEALED IN FINISHED AREAS AND MAY BE EXPOSED IN UNFINISHED AREAS. EXPOSED CONDUIT MAY BE UNPAINTED (UNLESS OTHERWISE NOTED) BUT SHALL BE PERIODICALLY MARKED WITH RED TAPE OR PAINT. ALL PENETRATIONS THROUGH RATED PARTITIONS SHALL BE FIRE STOPPED WITH A SUITABLE CAULKING COMPOUND. ALL WIRING USED IN THE FIRE ALARM SYSTEM SHALL BE FPL (FIRE, POWER LIMITED) WITH MINIMUM 300V INSULATION OR EQUIVALENT AS PER NFPA 70 ARTICLE 760.

9. WIRING STYLES(PER NFPA 72): INITIATING DEVICE CIRCUITS SHALL MEET THE REQUIREMENTS FOR CLASS A STYLE D CIRCUITS. SIGNALING LINE CIRCUITS SHALL MEET THE REQUIREMENTS FOR CLASS A STYLE 6 OR 7 CIRCUITS. NOTIFICATION APPLIANCE CIRCUITS SHALL MEET THE REQUIREMENTS FOR CLASS A STYLE Z.

10. POWER: PROVIDE NEW 120VAC 20 AMP CIRCUIT FROM EXISTING POWER DISTRIBUTION PANEL IN SUPPLY ROOM TO PROVIDE PRIMARY POWER TO FACP. EXISTING BRANCH CIRCUITS MAY BE REUSED TO PROVIDE PRIMARY POWER TO NEW REMOTE NOTIFICATION CIRCUIT POWER SUPPLIES. FURNISH A BATTERY BACKUP TO PROVIDE SECONDARY POWER SUPPLY TO FIRE ALARM PANEL AND NOTIFICATION CIRCUIT POWER SUPPLIES. BATTERY BACKUP SHALL BE OF SUFFICIENT CAPACITY TO PROVIDE 24 HOURS OF STANDBY POWER WITH AN ADDITIONAL RESERVE TO OPERATE SYSTEM FOR 5 MINUTES IN ALARM.

11. INITIATING DEVICES:
    SLC CIRCUITS: SLC LOOP DEVICE ADDRESSING SHALL NOT EXCEED 100 DEVICES (SMOKES, HEATS, DUCT SMOKES, MODULES CONTROL RELAYS, ETC.) PER LOOP. AT LEAST 20 ADDRESSES (20%) SHOULD BE LEFT VACANT ON EACH SLC LOOP IN ORDER TO ALLOW SPACE FOR ADJUSTMENTS/EXPANSION:
    SMOKE DETECTORS: PROVIDE SMOKE DETECTORS WHERE SHOWN ON PLANS IN ALL CORRIDORS AND LOBBIES. MAXIMUM SPACING OF DETECTORS SHALL BE 30' BETWEEN DETECTORS OR 15' FROM FURTHEST WALL.
    MANUAL PULL STATIONS: INSTALL NEW PULL STATIONS AT SAME LOCATION AND HEIGHT AS EXISTING PULL STATIONS USING EXISTING JUNCTION BOXES (UNLESS OTHERWISE NOTED). WHERE NEW MANUAL PULL STATIONS ARE INDICATED ON THE PLAN INSTALL WITH OPERATING ELEMENT AT 48" AFF.
    ADDRESSABLE MODULES: PROVIDE ADDRESSABLE MODULES TO MONITOR EXISTING CONVENTIONAL DEVICES (FIRE SPRINKLER SWITCHES) TO REMAIN AND TROUBLE OUTPUT OF NEW NOTIFICATION CIRCUIT POWER SUPPLIES. LOCATE MONITOR MODULE ADJACENT TO DEVICE MONITORED IN AN ACCESSIBLE LOCATION OR ABOVE REMOVABLE CEILING TILE. LABEL AS PART OF THE FIRE ALARM SYSTEM WITH THE NAME OF THE DEVICE MONITORED ON THE COVER OF THE JUNCTION BOX.

12. NOTIFICATION APPLIANCES: PROVIDE AUDIBLE AND VISUAL NOTIFICATION APPLIANCES THROUGHOUT BUILDING. VOLUME OF HORNS SHALL BE SUFFICIENT TO PROVIDE A SOUND LEVEL OF 15 Db ABOVE AMBIENT IN ALL OCCUPIED AREAS. VISIBLE ALARMS SHALL BE PROVIDED THROUGHOUT ALL OCCUPIED AREAS OF HE BUILDING INCLUDING PRIVATE OFFICES AND AREAS WITH POSSIBLE OCCUPANCY BY HEARING IMPAIRED PERSONS. STROBES SHALL FLASH IN SYNCHRONIZATION. CONFIGURE CIRCUITS TO ALLOW HORNS TO BE SILENCED WHILE STROBES CONTINUE TO FLASH.

13. FIRE SAFETY FUNCTIONS: CONTROL MODULES WITH RELAY CONTACTS SHALL BE INSTALLED AND PROGRAMMED TO PROVIDE DOOR RELEASE, FAN SHUTDOWN AND ACTIVATION OF NOTIFICATION CIRCUIT POWER SUPPLIES (UNLESS PROVIDED BY SEPARATE CIRCUIT FROM FACP). THE CONTROL RELAY MODULES SHALL BE INSTALLED WITHIN 36" OF DEVICE OR CIRCUIT CONTROLLED.

14. PHASING: PLAN SEQUENCE OF WORK TO MINIMIZE DOWN TIME OF FIRE ALARM SYSTEM. IT IS THE INSTALLER'S RESPONSIBILITY TO NOTIFY PROPER AUTHORITIES AND PROVIDE A FIRE WATCH DURING INTERRUPTIONS OF FIRE DETECTION AND ALARM SERVICE IN THE BUILDING.

15. TESTING: SCHEDULE AND PERFORM ALL ACCEPTANCE TESTS REQUIRED BY NFPA 72. TESTING SHALL BE WITNESSED BY STATE FIRE MARSHAL'S OFFICE, PROJECT ENGINEER, DFCM AND BUILDING MAINTENANCE PERSONNEL. SUBMIT A WRITTEN TESTING PLAN DETAILING EACH TEST TO BE PERFORMED TO EACH AGENCY AT LEAST ONE DAY PRIOR TO SCHEDULED TEST.

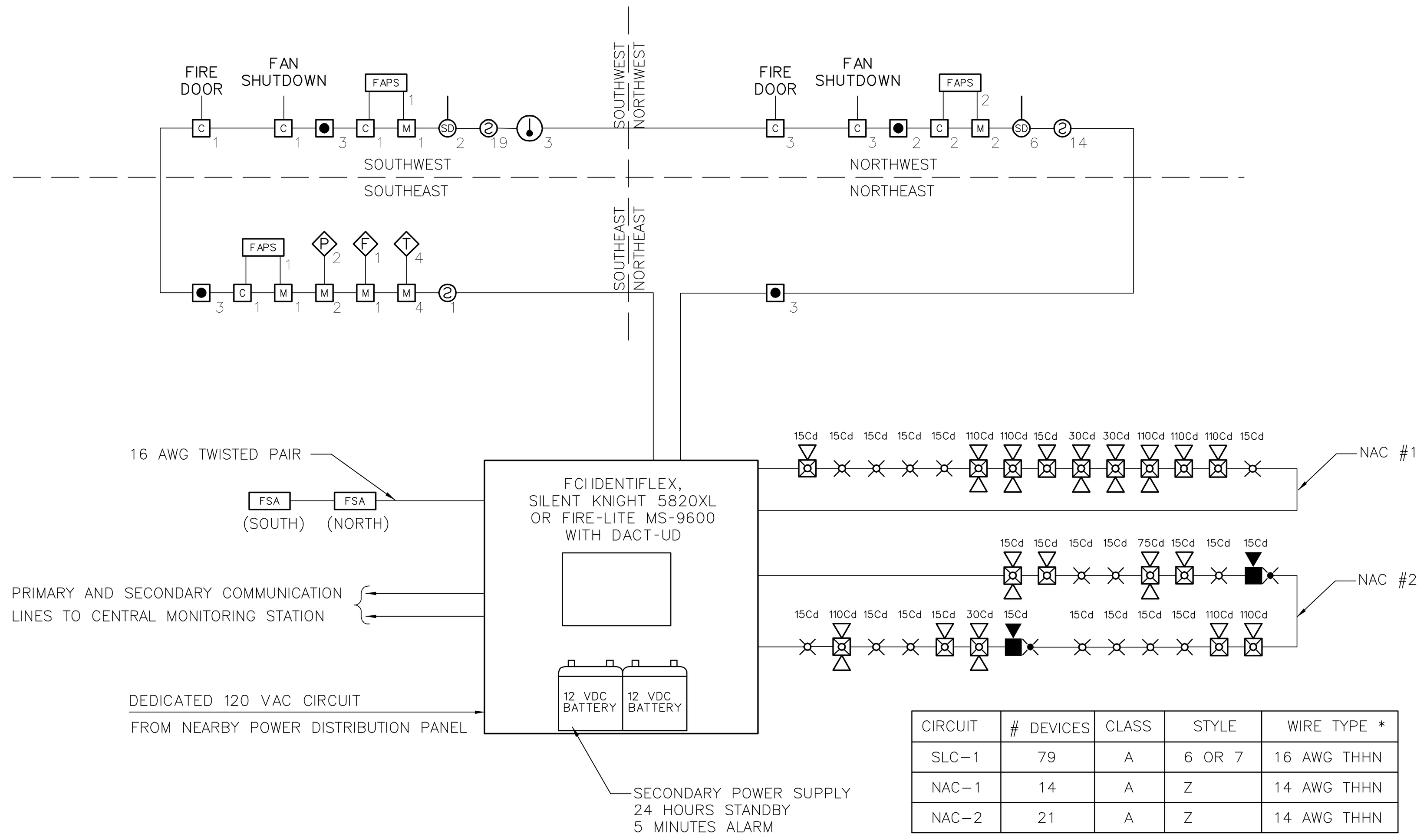

CIRCUIT	# DEVICES	CLASS	STYLE	WIRE TYPE *
SLC-1	79	A	6 OR 7	16 AWG THHN
NAC-1	14	A	Z	14 AWG THHN
NAC-2	21	A	Z	14 AWG THHN

*WIRE TYPE SHALL COMPLY WITH MANUFACTURER REQUIREMENTS

1 FIRE ALARM SINGLE LINE RISER DIAGRAM
NTS

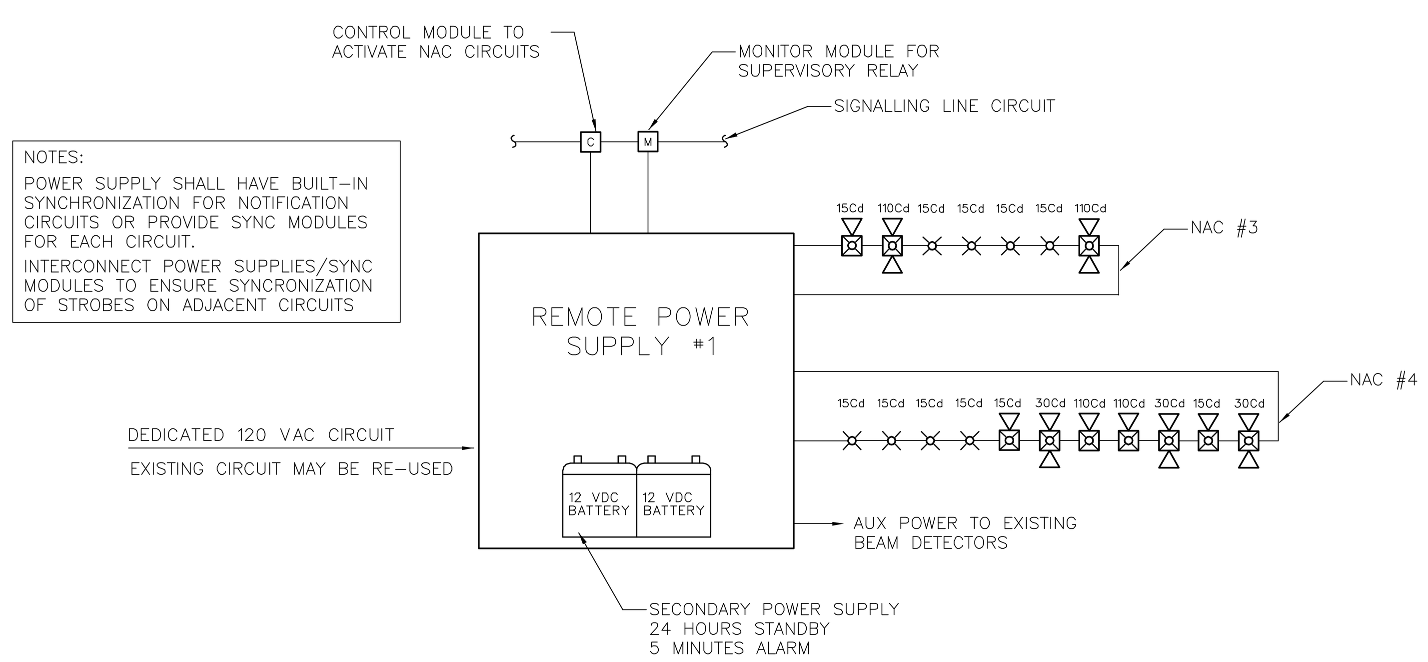

2 REMOTE POWER SUPPLY #1 - SINGLE LINE RISER
NTS

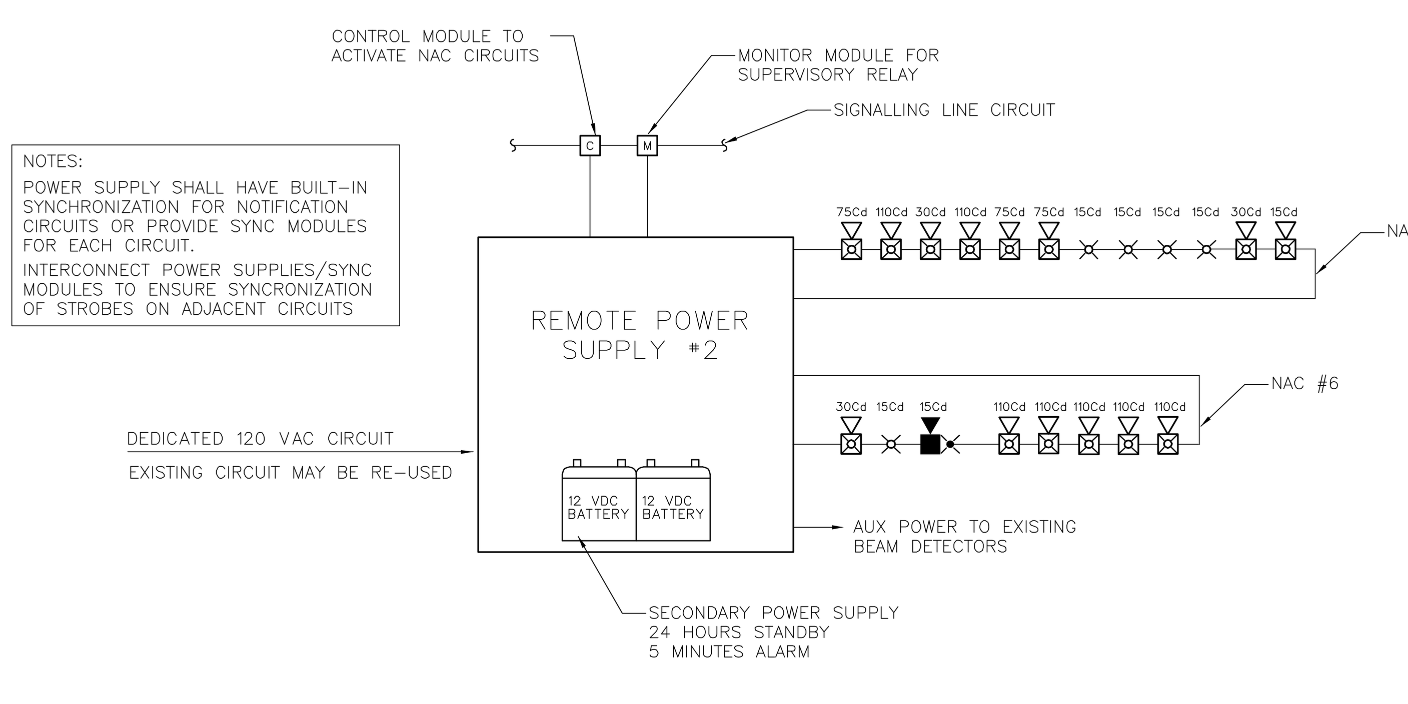

3 REMOTE POWER SUPPLY #2 - SINGLE LINE RISER
NTS

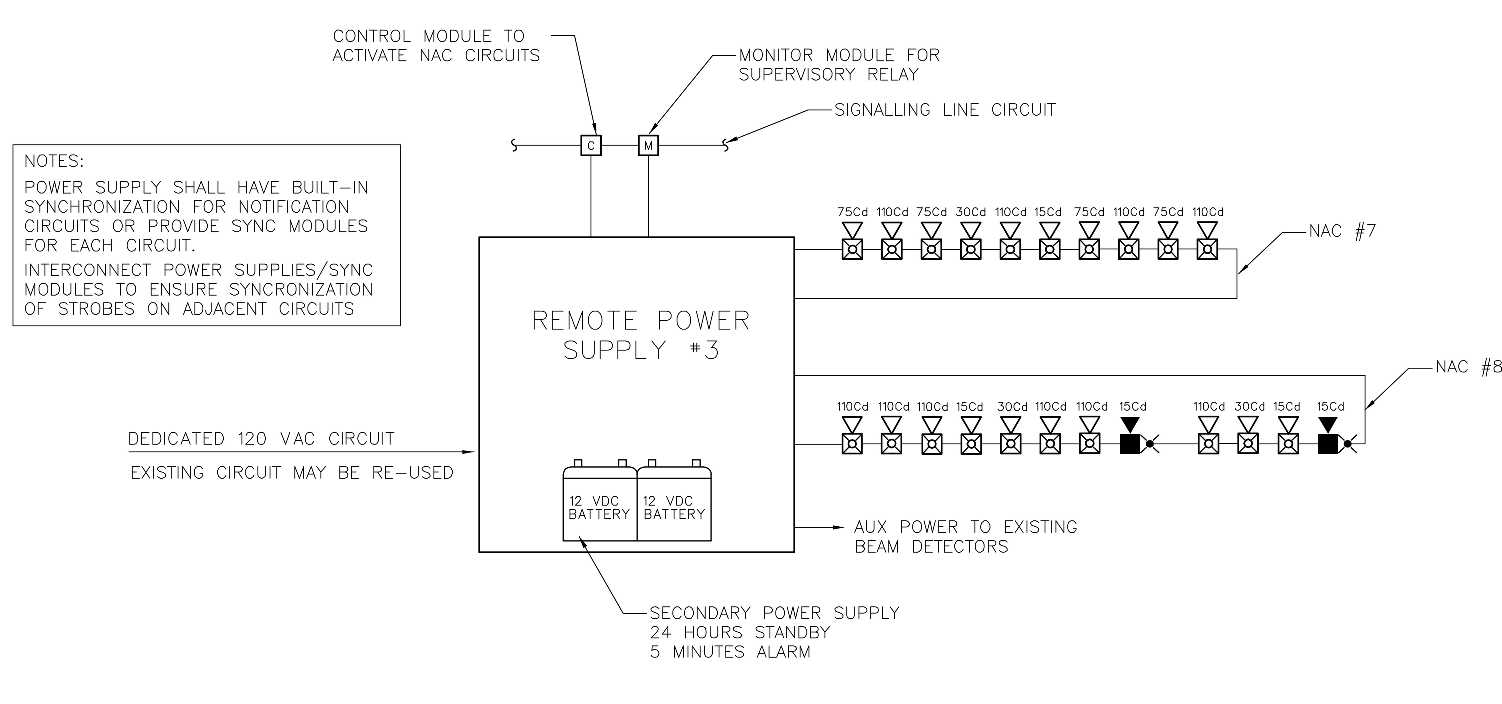

4 REMOTE POWER SUPPLY #3 - SINGLE LINE RISER
NTS

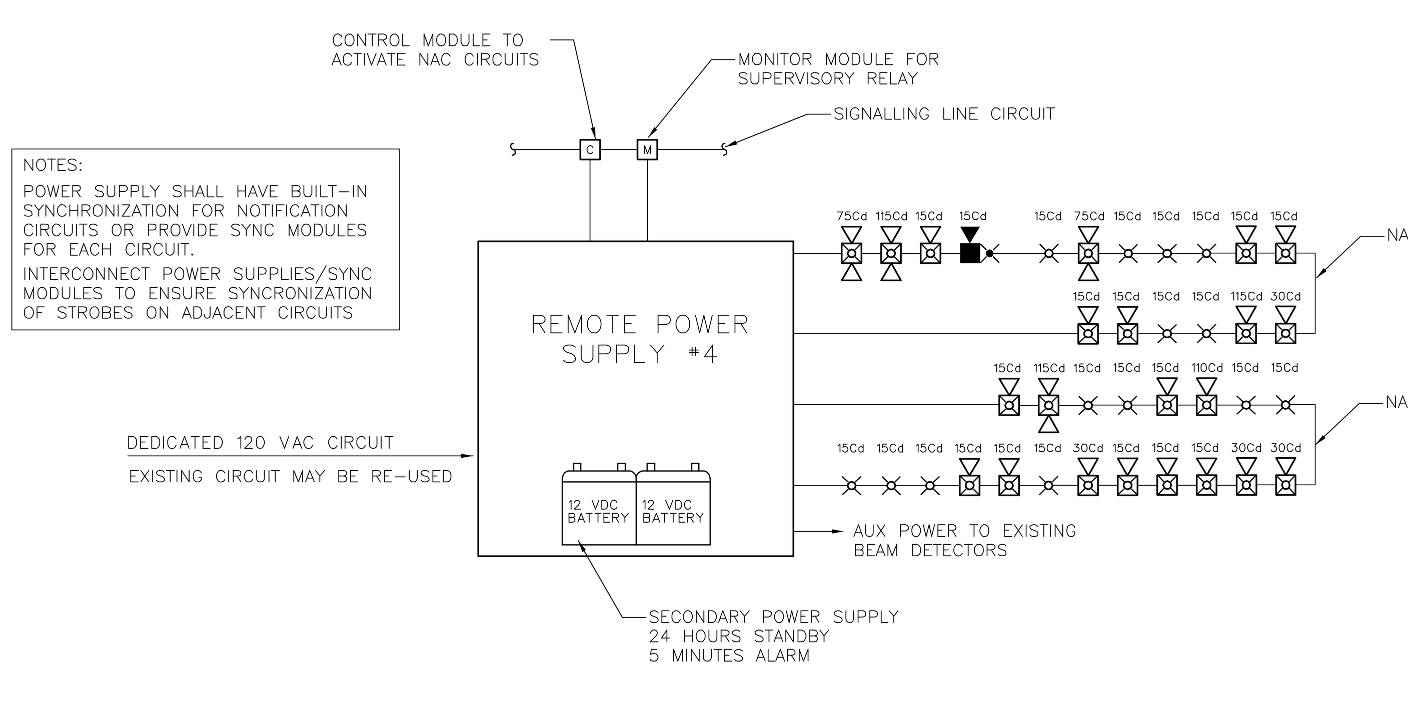

5 REMOTE POWER SUPPLY #2 - SINGLE LINE RISER
NTS

OUTPUT ACTIONS

SYSTEM INPUTS	ACTIVATE LOCAL FIRE ALARM NOTIFICATION APPLIANCES (ALL CIRCUITS)	TRANSMIT FIRE ALARM SIGNAL TO CENTRAL STATION	TRANSMIT SUPERVISORY SIGNAL TO CENTRAL STATION	TRANSMIT TROUBLE SIGNAL TO CENTRAL STATION	SHUT DOWN AIR HANDLERS	RELEASE FIRE DOOR		
ACTIVATION OF ANY SMOKE DETECTOR	X	X			X			
ACTIVATION OF ANY HEAT DETECTOR	X	X			X			
ACTIVATION OF ANY DUCT SMOKE DETECTOR			X		X			
ACTIVATION OF ANY MANUAL PULL STATION	X	X			X			
RECIPT OF TROUBLE SIGNAL FROM REMOTE POWER SUPPLY				X				
LOSS OF AC POWER/LOW BATTERY VOLTAGE				X				
SYSTEM TROUBLE				X				
ACTIVATION OF SMOKE DETECTOR AT FIRE DORR (EITHER SIDE)	X	X			X	X		

6 SEQUENCE OF OPERATION
NTS

FIRE ALARM SYSTEM KEY NOTES

01 FURNISH AND INSTALL NEW ADDRESSABLE FIRE ALARM CONTROL PANEL (FACP). FACP MAY BE SURFACE MOUNT OR RECESSED INTO WALL. CONDUIT FROM FACP TO VOID SPACE ABOVE CEILING MAY BE EXPOSED BUT SHALL BE PAINTED TO MATCH WALL. FACP SHALL BE FCI(IDENTIFLEX 602 WITH 411 SERIES DACT), SILENT KNIGHT (5820XL) OR FIRE-LITE (MS-9600 WITH DACT-UD). INSTALL FACP WITH KEY PAD APPROXIMATELY 60" ABOVE FLOOR LEVEL. PROVIDE DEDICATED 120 VAC - 20 AMP CIRCUIT TO FACP FROM NEARBY POWER DISTRIBUTION PANEL. POWER CIRCUIT TO FACP SHALL BE PERMANENTLY MARKED AND MECHANICALLY PROTECTED PER NFPA 70 & 72. PROVIDE PHONE LINES (PRIMARY AND SECONDARY) TO FACP FOR OFF-PREMISE RELAY OF FIRE ALARM, SUPERVISORY AND TROUBLE SIGNALS.

02 EXISTING FIRE ALARM CONTROL PANEL TO BE REPLACED BY NEW ADDRESSABLE FACP AT DIFFERENT LOCATION. FACP SHALL BE KEPT IN SERVICE UNTIL NEW FACP IS INSTALLED AND FULLY OPERATIONAL. AFTER NEW FACP HAS BEEN INSTALLED AND IS FULLY OPERATIONAL, EXISTING FACP SHALL BE REMOVED (EXISTING MASTER TIME SYSTEM TO REMAIN). REMOVE ALL CONTROL EQUIPMENT, CABINETS, CONDUIT, J-BOXES, ETC. PATCH AND RE-FINISH WALL TO MATCH SURROUNDING WALL SURFACE.

03 FURNISH AND INSTALL REMOTE POWER SUPPLIES TO PROVIDE 24 VDC POWER TO NOTIFICATION APPLIANCE CIRCUITS. SURFACE MOUNT POWER SUPPLIES ON WALL WHERE SHOWN ON PLANS AT NEW FACP, LOCATION OF EXISTING FACP AND REMOTE POWER SUPPLY TO BE REMOVED. CONDUITS FROM POWER SUPPLY TO VOID SPACE ABOVE CEILING OR TO TRUSS SPACE MAY BE EXPOSED BUT SHALL BE PAINTED TO MATCH WALL. EXISTING POWER CIRCUITS MAY BE RE-USED WHERE PRESENT. POWER SUPPLIES SHALL BE SUPERVISED AND NAC CIRCUITS ACTIVATED BY FACP. PROVIDE BATTERIES FOR SECONDARY POWER SUPPLY SIZED TO PROVIDE 24 HOURS OF STANDBY POWER PLUS AN ADDITIONAL RESERVE FOR 5 MINUTES OF ALARM POWER. PROVIDE SYNC MODULES AND INTERCONNECT POWER SUPPLIES AS REQUIRED TO SYNCRONIZE ALL VISUAL ALARMS WITHIN A SINGLE FIELD OF VIEW.

04 EXISTING NOTIFICATION POWER SUPPLY TO BE REMOVED. POWER SUPPLY TO BE KEPT IN SERVICE UNTIL ALL FUNCTIONS PERFORMED BY THE POWER SUPPLY ARE PROVIDED BY THE NEW FIRE ALARM SYSTEM. REMOVE POWER SUPPLY, CABINET, J-BOX, ETC. PATCH AND REFINISH TO MATCH EXISTING.

05 FURNISH AND INSTALL A NEW ANNUNCIATOR PANEL FOR ADDRESSABLE FIRE ALARM SYSTEM. INSTALL ON RECESSED TYPE JUNCTION BOX WITH CONDUIT CONCEALED IN WALL. MOUNT ANNUNCIATOR AT 54" CENTERLINE ABOVE FLOOR LEVEL.

06 EXISTING MANUAL PULL STATION TO BE REMOVED. PULL STATION IS NOT REQUIRED BY IBC OR IFC. REMOVE EXISTING DEVICE, JUNCTION BOX AND CONDUIT TO VOID SPACE ABOVE CEILING OR TRUSS SPACE. PATCH AND REFINISH WALL SURFACE TO MATCH EXISTING.

07 FURNISH AND INSTALL A PROTECTIVE COVER (STI-1100 OR EQUAL) WITH AUDIBLE ALARM OVER MANUAL FIRE ALARM PULL STATION TO DISCURAGE FALSE ACTUATION.

08 EXISTING PULL STATION MOUNTED TO HIGH TO CONFORM TO ACCESSIBILITY GUIDELINES. RELOCATE EXISTING PULL STATION J-BOX AND CONDUIT AND INSTALL NEW ADDRESSABLE PULL STATION WITH THE OPERATING ELEMENT AT 48" ABOVE FLOOR LEVEL. CONDUIT MAY BE EXPOSED WITH SURFACE MOUNTED J-BOX FOR BLOCK WALLS AND SHALL BE CONCEALED WHERE WALL SURFACE IS FINISHED. PATCH AND REPAINT WALL AS REQUIRED.

09 INSTALL BURRIED CONDUIT ABOVE GROUND WEATHERPROOF JUNCTION BOXES AND WEATHER PROOF FLEX CONDUIT TO NEW TAMPER SWITCH ON EXTERIOR FIRE SPRINKLER CONTROL VALVE (SEE KEY NOTE 1 ON SHEET FA-10).

10 PROVIDE A PROGRAMMABLE RELAY TO RELEASE EXISTING FIRE DOOR UPON OPERATION OF SMOKE DETECTOR ON EITHER SIDE OF FIRE DOOR. TEST DOOR FOR PROPER OPERATION AND ADJUST OR REPAIR DOOR TO ENSURE PROPER OPERATION. NOTIFY OWNER AND ENGINEER IN WRITING IF EXISTING DOOR IS NOT FUNCTIONAL AND CANNOT BE REPAIRED/ ADJUSTED OR DOES NOT INCLUDE RELAYS FOR CONNECTION TO FIRE ALARM SYSTEM.

11 INSTALL NEW DUCT MOUNTED SMOKE DETECTOR ON THE SUPPLY SIDE OF AIR MOVEMENT SYSTEMS WITH A CAPACITY IN EXCESS OF 2,00 CFM. EXISTING DETECTORS MY BE RE-USED IF COMPLETELY FUNCTIONAL AND COMPATIBLE WITH NEW FIRE ALARM SYSTEM. INSTALL DETECTOR PER MANUFACTURER'S RECOMMENDATIONS WITH DETECTOR ENCLOSURE MOUNTED ON DUCT EXTERIOR AND SAMPLING TUBE INSTALLED WITHIN DUCT. SMOKE DETECTORS AND AUTOMATIC CONTROL WILL NOT BE REQUIRED FOR EVAPORATIVE COOLERS IN SHOP AREAS WHERE AIR MOVEMENT SYSTEM SUPPLIES AND RETURNS FROM A SINGLE ROOM.

12 FURNISH AND INSTALL A PROGRAMMABLE RELAY TO SHUT DOWN AIR HANDLER. RELAY SHALL BE NORMALLY ENERGIZED AND FAN CONTROLS SHALL BE CONNECTED TO NORMALLY CLOSED CONTACTS ON THE RELAY. RELAY SHALL BE PROGRAMMED TO SHUT DOWN ALL AIR HANDLERS SIMULTANEOUSLY UPON ACTIVATION OF ANY AREA OR DUCT SMOKE DETECTOR AND SHALL NOT RESTORE UNTIL THE FACP HAS RESET. FIELD LOCATE RELAY.

13 FURNISH AND INSTALL A NEW EXTERIOR ALARM ON THE EXTERIOR WALL OF THE BUILDING. MOUNT ALARM AT 10'-0" ABOVE GRADE OR AT HEIGHT INDICATED ON DRAWINGS. DEVICE SHALL BE UL LISTED FOR EXTERIOR INSTALLATION AND INSTALLED ON A WEATHERPROOF J-BOX. J-BOX MAY BE SURFACE MOUNTED BUT CONDUIT SHALL BE CONCEALED IN WALL.

FIRE ALARM EQUIPMENT LEGEND

DEVICE	DESCRIPTION	MOUNTING	REMARKS
FACP	ADDRESSABLE FIRE ALARM CONTROL PANEL	SURFACE MOUNT ON WALL WITH KEYPAD AT 60" AFF.	FCI IDENTIFLEX 602, SILENT KNIGHT 5820 XL OR FIRE LITE MS-9600
FACP	EXISTING FIRE ALARM CONTROL PANEL	EXISTING	EXISTING FACP TO BE REMOVED. PATCH AND REFINISH WALL SURFACE.
FAPS	NOTIFICATION CIRCUIT REMOTE POWER SUPPLY	SURFACE MOUNT ON WALL	TO POWER NOTIFICATION APPLIANCES
FAPS	EXISTING FIRE ALARM POWER SUPPLY	EXISTING	EXISTING POWER SUPPLY TO BE REMOVED. NEW POWER SUPPLY TO BE INSTALLED IN SAME LOCATION.
ANN	FIRE ALARM ANNUNCIATOR PANEL	MOUNT AT 54"AFF ON RECESSED J-BOX.	TO DISPLAY STATUS OF FIRE ALARM SYSTEM. ANNUNCIATOR SHALL HAVE ALPHA-NUMERIC READOUT AND KEYPAD TO ALLOW SYSTEM SILENCE AND RESET.
	ADDRESSABLE PHOTOELECTRIC SMOKE DETECTOR TO REPLACE EXISTING DETECTOR	CEILING MOUNT ON EXISTING J-BOX	REMOVE EXISTING SMOKE DETECTORS AND REPLACE WITH NEW ADDRESSABLE DETECTORS COMPATIBLE WITH NEW FACP.
N	ADDRESSABLE PHOTOELECTRIC SMOKE DETECTOR	CEILING MOUNT ON EXISTING J-BOX	ADD NEW DETECTORS WHERE INDICATED ON PLANS.
	EXISTING SMOKE DETECTOR	EXISTING	REMOVE EXISTING DETECTOR AND J-BOX REPLACE CEILING TILE AND/OR PATCH AND PAINT CEILING.
	ADDRESSABLE HEAT DETECTOR (FIXED TEMP)	CEILING MOUNT ON EXISTING J-BOX	REMOVE EXISTING HEAT DETECTOR AND REPLACE WITH NEW ADDRESSABLE DETECTOR COMPATIBLE WITH NEW FACP.
	ADDRESSABLE MANUAL PULL STATION TO REPLACE EXISTING.	WALL MOUNT ON EXISTING (OR RELOCATED) J-BOX.	REPLACE EXISTING PULL STATIONS WITH NEW PULL STATIONS COMPATIBLE WITH NEW FACP
N	ADDRESSABLE MANUAL PULL STATION	WALL MOUNT AT 48" AFF ON RECESSED J-BOX	ADD NEW PULL STATION WHERE INDICATED ON PLAN.
	EXISTING MANUAL PULL STATION	EXISTING	REMOVE EXISTING PULL STATION, J-BOX AND CONDUIT. PATCH AND PAINT WALL.
F	VANE TYPE WATER FLOW SWITCH	MOUNT ON FIRE SPRINKLER RISER PER MANUFACTURER REQUIREMENTS.	TO REPLACE EXISTING PRESSURE TYPE FLOW SWITCHES. CONNECT TO NEW FIRE ALARM SYSTEM.
F	EXISTING VANE TYPE WATER FLOW SWITCH	EXISTING	EXISTING TO REMAIN. CONNECT TO NEW FIRE ALARM SYSTEM.
T	VALVE SUPERVISORY SWITCH	MOUNT IN PORT OF NEW EXTERIOR POST INDICATOR	TO MONITOR POSITION OF EXTERIOR FIRE SPRINKLER CONTROL VALVE. CONNECT TO NEW FIRE ALARM SYSTEM.
T	EXISTING VALVE SUPERVISORY SWITCH	EXISTING	EXISTING TO REMAIN. CONNECT TO NEW FIRE ALARM SYSTEM.
SD	ADDRESSABLE DUCT SMOKE DETECTOR	DUCT MOUNT IN SUPPLY AND RETURN DUCTS PER MANUFACTURER'S REQUIREMENTS	REPLACE EXISTING DETECTORS AND/OR INSTALL NEW DETECTORS FOR ALL AIR MOVEMENT SYSTEMS WITH A CAPACITY IN EXCESS OF 2000 CFM PER NFPA 72, 90 & IMC.
M	ADDRESSABLE MONITOR MODULE	MOUNT ON J-0BOX NEAR CONVENTIONAL DEVICE TO BE MONITORED	CONNECT TO CONTACTS OF CONVENTIONAL DEVICE TO FACILITATE MONITORING OF DEVICE AS AN ADDRESSABLE POINT.
C	ADDRESSABLE CONTROL MODULE	MOUNT ON J-BOX WITHIN 3' OF DEVICE OR CIRCUIT	TO PROVIDE PROTECTED PREMISE FIRE SAFETY FUNCTIONS SUCH AS DOOR RELEASE, FAN SHUTDOWN TO NOTIFICATION CIRCUIT ACTIVATION.
	HORN/STROBE TO REPLACE EXISTING	WALL MOUNT ON EXISTING J-BOX	CANDELA RATING OF STROBE SHALL BE AS INDICATED ON DRAWINGS. STROBES SHALL BE SYNCHRONIZED WITH ALL OTHER STROBES IN VIEW. DEVICE SHALL BE POWERED FROM FACP OR REMOTE POWER SUPPLY SUPERVISED BY FACP. DEVICE COLOR - RED
N	HORN/STROBE (WALL MOUNT)	WALL MOUNT AT 80" TO 96" AFF ON NEW RECESSED J-BOX	
N	STROBE	CEILING MOUNT ON NEW RECESSED J-BOX OR WALL MOUNT AT 80" TO 96" AFF	
	HORN/STROBE (CEILING MOUNT)	CEILING MOUNT ON NEW RECESSED J-BOX	
	EXTERIOR HORN/STROBE TO REPLACE EXISTING	WALL MOUNT ON EXISTING J-BOX	
N	EXTERIOR HORN/STROBE	WALL MOUNT ON NEW WEATHER PROOF J-BOX (SURFACE MOUNT) AT 10'-0" AFF OR HEIGHT INDICATED ON DRAWINGS	
	EXISTING NOTIFICATION APPLIANCE TO BE REMOVED	EXISTING	REMOVE EXISTING DEVICE AND WIRING AND PROVIDE COVER PLATE (APPROVED BY OWNER) FOR EXISTING J-BOX.

JOB NO. 104161
DWG ISSUE:
DRAWN BY: BBH
CHECKED BY: GTJ

REVISIONS:

DRAWING DATE: 12/07/07
REVISION DATE: XX/XX/XX

SNOW COLLEGE - WASHBURN BUILDING
RICHFIELD, UTAH

FIRE ALARM SYSTEM UPGRADE
DFCM PROJECT #07159700

FIRE ALARM DETAILS
FA-9

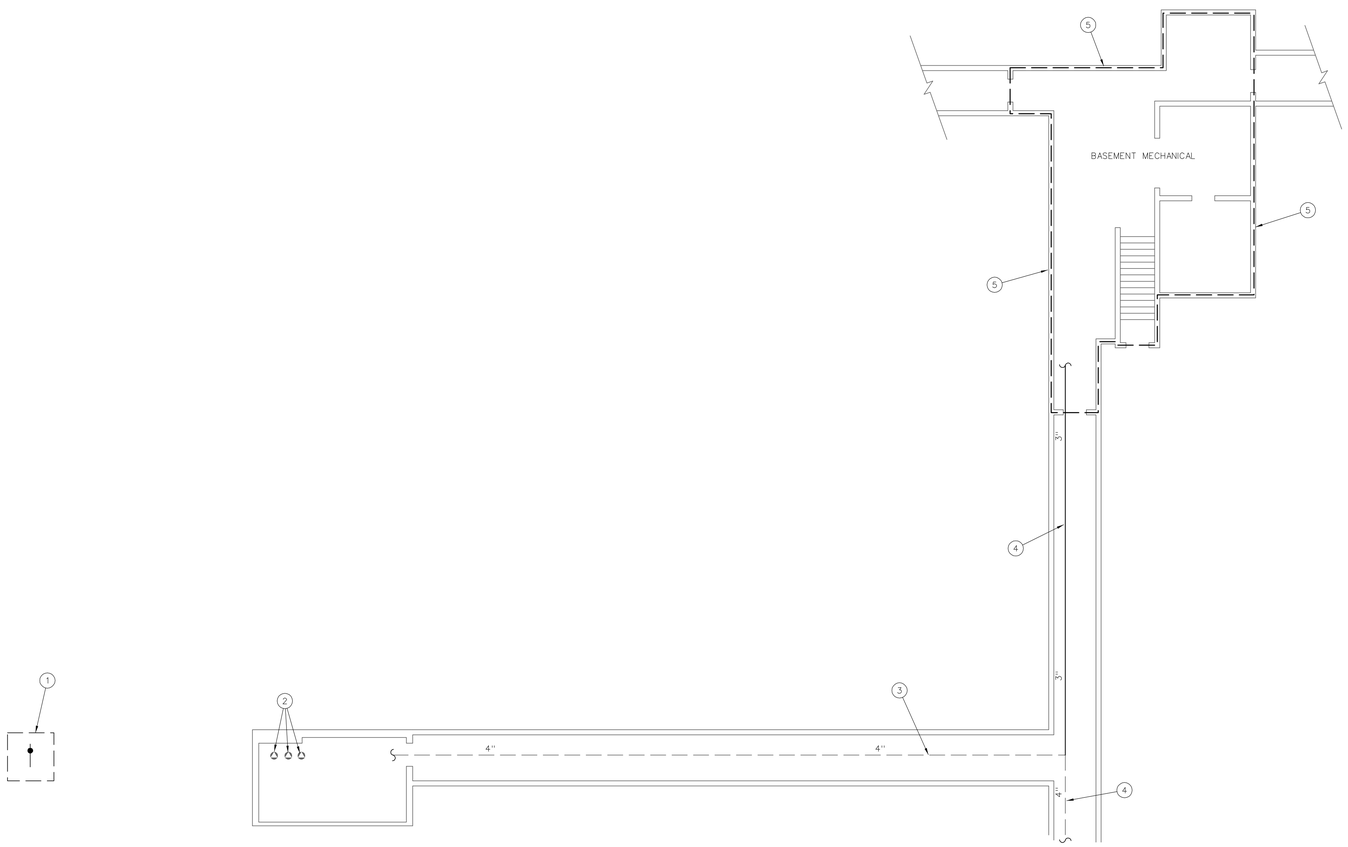

FIRE SPRINKLER DESIGN CRITERIA – LEVEL 1

1/16" = 1'-0"

FIRE SPRINKLER SYSTEM KEY NOTES

1. EXISTING VAULT WITH FIRE SPRINKLER CONTROL VALVE WITH FREE STANDING POST INDICATOR VALVE. POST INDICATOR VALVE IS LOCKED BUT CANNOT RECEIVE VALVE SUPERVISORY SWITCH FOR ELECTRICAL SUPERVISION REQUIRED BY IBC 903.4. CONTRACTOR SHALL REMOVE EXISTING POST INDICATOR AND INSTALL NEW POST INDICATOR WITH VALVE SUPERVISORY SWITCH. POST INDICATOR SHALL BE UL LISTED AND SUPERVISORY SWITCH SHALL BE LISTED FOR EXTERIOR INSTALLATION. INSTALL NEW PADLOCK TO SECURE VALVE IN THE OPEN POSTITION AND PROVIDE KEYS FOR LOCK TO BUILDING MAINENANCE. CUT AND PATCH CONCRETE LID OF EXISTING VAULT AS REQUIRED TO REMOVE OLD POST AND INSTALL NEW POST.

2. EXISTING FIRE SPRINKLER RISERS TO REMAIN. REPLACE EXISTING PRESSURE TYPE WATER FLOW SWITCHES (2) WITH NEW SWITCHES (POTTER PS100-2A OR EQUAL). VERIFY PROPER OPERATION OF EXISTING VALVE SUPERVISORY SWITCHES (3) AND VANE TYPE WATER FLOW SWITCH (1) AND REPAIR OR REPLACE AS REQUIRED.

3. EXISTING 4" CROSS MAIN(S) FOR FIRE SPRINKLER SYSTEMS TO REMAIN.

4. CONNECT TO EXISTING FIRE SPRINKLER CROSS MAIN WITH NEW 3" MAIN TO SUPPLY NEW FIRE SPRINKLERS IN BASEMENT MECHANICAL/ELECTRICAL ROOM. CONNECT TO MAIN FOR FIRE SPRINKLER ZONE THAT SUPPLIES CORRESPONDING AREA ON MAIN LEVEL. INSTALL UPRIGHT FIRE SPRINKLERS AT 15' ON CENTER ON 1" X 1'-0" SPRIG-UPS ON NEW MAIN BETWEEN POINT OF CONNECTION TO EXISTING MAIN TO MECHANICAL/ELECTRICAL ROOM. INSTALL, SUPPORT AND BRACE PIPE IN ACCORDANCE WITH APPLICABLE PROVISIONS OF NFPA 13.

5. INSTALL FIRE SPRINKLERS TO PROTECT ALL PORTIONS OF EXISTING BASEMENT MECHANICAL/ELECTRICAL ROOMS. DESIGN AND INSTALLATION OF FIRE SPRINKLERS SHALL CONFORM TO ALL APPLICABLE PROVISIONS OF NFPA 13. DESIGN FIRE FIRE SPRINKLERS TO PROTECT AN OCCUPANCY OF ORDINARY HAZARD GROUP I. PIPE SIZES SHALL BE DETERMINED BY HYDRAULIC CALCULATIONS AND SHALL BE SUFFICIENT TO PROVIDE A DISCHARGE DENSITY OF 0.15 GPM/SQ FT OVER 1500 SQ FT WITH A 250 GPM OUTSIDE HOSE ALLOWANCE.

FIRE SPRINKLER SYSTEM GENERAL NOTES

1. EXTEND EXISTING FIRE SPRINKLER SYSTEM TO PROTECT EXISTING 970 SQ FT MECHANICAL/ELECTRICAL ROOMS IN BASEMENT. DESIGN SYSTEM EXPANSION TO CONFORM TO ALL APPLICABLE REQUIREMENTS OF NFPA 13 (2007 EDITION), PROJECT SPECIFICATION AND DRAWINGS.
2. CONTRACTOR SHALL PREPARE AND SUBMIT FIRE SPRINKLER SHOP DRAWINGS, HYDRAULIC CALCULATIONS AND EQUIPMENT DATA SHEETS TO UTAH STATE FIRE MARSHAL'S OFFICE, DFCM AND PROJECT ENGINEER.
3. FIRE SPRINKLER SYSTEMS SHALL BE DESIGNED TO PROTECT AN OCCUPANCY OF ORDINARY HAZARD GROUP I (0.15 GPM/SQ FT OVER 1,500 SQ FT WITH 250 GPM HOSE)
4. ALL MATERIALS, DEVICES AND EQUIPMENT SHALL BE U.L. LISTED OR F.M. APPROVED FOR USE IN FIRE PROTECTION SYSTEMS. INSTALLER SHALL BE LICENSED TO INSTALL FIRE SPRINKLER SYSTEMS IN THE STATE OF UTAH.
5. INSTALL PIPING AS HIGH AS POSSIBLE TO MAXIMIZE HEADROOM, DEFLECTOR DISTANCE SHALL CONFORM TO NFPA 13.
6. PIPING:
   PROVIDE STEEL PIPING CONFORMING TO ANSI/ASTM A53, ASTM A135 AND ASTM A795

   2-1/2" (NOMINAL) AND LARGER PIPING MAY BE SCHEDULE 10

   2" (NOMINAL) AND SMALLER PIPING SHALL SCHEDULE 40 OR APPROVED EQUAL.

   ALL PIPING SHALL HAVE A CRR (U.L. CORROSION RESISTANCE RATIO) EQUAL TO OR GREATER THAN 1.0.
7. FITTINGS:

   PROVIDE CAST IRON FITTINGS FOR THREADED PIPE. PROVIDE RUBBER GASKETED FITTINGS FOR ROLL GROOVED SCHEDULE 10 MAINS. PROVIDE WELDED OUTLETS FOR BRANCH LINE ATTACHMENTS TO MAINS. PLAIN END FITTINGS ARE NOT ACCEPTABLE.
8. HANGERS:

   1-1/4" AND SMALLER PIPING - MINIMUM ONE HANGER PER LENGTH OF PIPE AND MAXIMUM 12'-0" BETWEEN HANGERS.

   1-1/2" AND LARGER PIPING - MINIMUM ONE HANGER PER LENGTH OF PIPE AND MAXIMUM 15'-0" BETWEEN HANGERS.
9. SPRINKLER SPACING:

   ORDINARY HAZARD: 130 SQ. FT (MAXIMUM)
10. SEISMIC BRACING: BRACING PROVIDED FOR ALL PIPING AS REQUIRED BY NFPA #13 USING SCHEDULE 40 PIPE. RIGID COUPLINGS USED ON FEED MAINS AND CROSS MAINS. BRACING SHALL BE ATTACHED TO STRUCTURAL MEMBERS IN ACCORDANCE WITH NFPA 13.
11. PROVIDE EXTRA SPRINKLERS PER NFPA 13 FOR PROTECTION BELOW DUCTS, CONDUIT, OR SIMILAR EXPOSED OBSTRUCTIONS OVER 48" WIDE. PROVIDE EXTRA SPRINKLERS AS REQUIRED BY NFPA 13 WHERE SPRINKLER HEAD DISCHARGE IS OBSTRUCTED.
12. CONTRACTOR SHALL DETERMINE AVAILABLE WATER PRESSURES BY CONDUCTING A FIRE HYDRANT WATER FLOW TEST AT PROJECT SITE PRIOR TO DESIGNING FIRE SPRINKLER SYSTEM EXTENSION. REQUIRED PRESSURE FOR SYSTEM EXTENSION SHALL BE DETERMINED BY HYDRAULIC CALCULATIONS AND SHALL NOT EXCEED 90% OF AVAILABLE PRESSURE AT THE SYSTEM DEMAND.

FIRE ALARM KEYPLAN

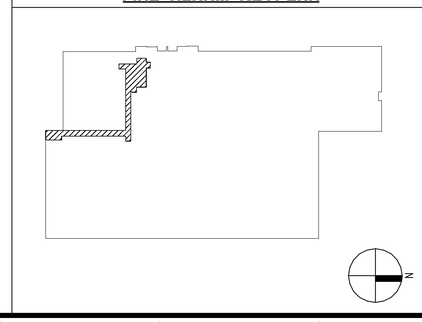

GRUTLICH CONSULTANTS INC
185 South 870 East Suite 202
Lehi, Utah 84043-7910
TEL(801)768-0500 FAX(801)768-0541
DGRAUER@gcai.com
Fire Protection Engineers
Since 1983

JOB NO. 104161
DWG ISSUE:

DRAWN BY: BBH
CHECKED BY: GTJ

REVISIONS:

DRAWING DATE: 12/07/07

REVISION DATE: XX/XX/XX

SNOW COLLEGE - WASHBURN BUILDING
RICHFIELD, UTAH

FIRE ALARM SYSTEM UPGRADE
DFCM PROJECT #07159700

FIRE SPRINKLER SCOPE OF WORK

FA-10