CANNON HEALTH BUILDING
BOILER REPLACEMENT
288 North 1460 West Salt Lake City, Utah 84116

SHEET INDEX

C0.0	COVER SHEET
M0.1	LEGEND OF MECHANICAL SYMBOLS AND ABBREVIATIONS
M1.1	LARGE SCALE DEMO/NEW BOILER ROOM MECHANICAL PLANS
M5.1	MECHANICAL DETAILS AND SCHEDULES
E0.1	ELECTRICAL SPECIFICATIONS AND SYMBOLS
E1.1	LARGE SCALE DEMO/NEW BOILER ROOM ELECTRICAL PLANS

State of Utah—Department of Administrative Services

DIVISION OF FACILITIES CONSTRUCTION AND MANAGEMENT

4110 State Office Building / Salt Lake City, Utah 84114 / 538-3018

DFCM Project No. 07177390
CONSTRUCTION DRAWINGS

CONSULTANTS

PROJECT ENGINEER: VAN BOERUM & FRANK ASSOCIATES, INC.
330 SOUTH 300 EAST
SALT LAKE CITY, UT 84111
(801) 530-3148 (Steve Shepherd)

ELECTRICAL ENGINEER: VAN BOERUM & FRANK ASSOCIATES, INC.
330 SOUTH 300 EAST
SALT LAKE CITY, UT 84111
(801) 530-3148 (Stan Johns)

SALT LAKE CITY, UTAH

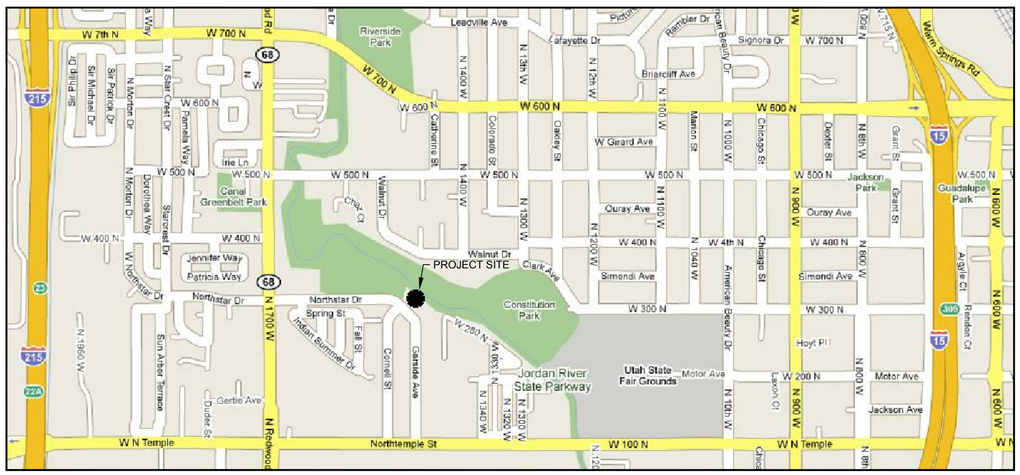

Vicinity Map

NORTH

CODE ANALYSIS

APPLICABLE CODES

	Year		Year
International Building Code	2006	National Electrical Code	2005
International Mechanical Code	2006	Uniform Code for Building Conservation	N/A
International Plumbing Code	2006	ADA Accessibility Guildelines	
International Fire Code	2006		
International Energy Conservation Code	2006		

A. Occupancy and Group: B

Change in Use: Yes ____ No X Mixed Occupancy: Yes X No ____
Special Use and Occupancy (e.g. High Rise, Covered Mall): N/A

B. Seismic Design Category: N/A Design Wind Speed: N/A mph

C. Type of Construction (circle one):

I/A (I/B) II/A II/B III/A III/B IV/HT V/A V/B

D. Fire Resistance Rating Requirements for the Exterior Walls based on the fire separation distance (in hours):
North: NR South: NR East: NR West: NR

E. Mixed Occupancies: NO Nonseparated Uses: NO

F: Sprinklers:
Required: NO Provided: NO Type of Sprinkler System: N/A

G: Number of Stories: 4 Building Height: 62' 0"

H: Actual Area per Floor (square feet): 46325

I: Tabular Area: UL

J: Area Modifications:

a) $A_a = A_t + \left[\frac{A_t I_f}{100}\right] + \left[\frac{A_t I_s}{100}\right]$ $I_f = 100\left[\frac{F}{P} - 0.25\right]\frac{W}{30}$

b) Sum of the Ratio Calculations for Mixed Occupancies:

$\frac{\text{Actual Area}}{\text{Allowable Area}} \leq 1$

c) Total Allowable Area for:
1) One Story: ____
2) Two Story: $A_a(2)$____
3) Three Story: $A_a(3)$____

d) Unlimited Area Building: Yes ____ No ____ Code Section: ____

K. Fire Resistance Rating Requirements for Building Elements (hours).

Element	Hours	Assembly Listing	Element	Hours	Assembly Listing
Exterior Bearing Walls	N		Floors - Ceiling Floors	N	
Interior Bearing Walls	N		Roofs - Ceiling Roofs	N	
Exterior Non-Bearing Walls	N		Exterior Doors and Windows	NR	
Structural Frame	N		Shaft Enclosures	1 HR	
Partitions - Permanent	N		Fire Walls		
Fire Barriers			Fire Partitions		
			Smoke Partitions		

L. Design Occupant Load: ____
Exit Width Required: N/A Exit Width Provided: N/A

M. Minimum Number of Required Plumbing Facilities:
a) Water Closets - Required (m) ___ (f) ___ Provided (m) ___ (f) ___
b) Lavatories - Required (m) ___ (f) ___ Provided (m) ___ (f) ___
c) Bath Tubs or Showers: ___
d) Drinking Fountains: ___ Service Sinks: ___

FOOTNOTES:

1) In case of conflict with the U.S. Department of Justice Federal Registers Parts I through V - ADA Guidelines and specific reference to the International Building Code Accessibility Chapters, the more restrictive requirement shall govern.

2) Additional Code Information shall be provided at the discretion of the Building Official for Complex Buildings. Including, but not limited to:
a) High Rise Requirements.
b) Atriums.
c) Performance Based Criteria.
d) Means or Egress Analysis.
e) Fire Assembly Locator Sheet.
f) Exterior and Interior Accessibility Route.
g) Fire Stopping, Including Tested Design Number.

3) Deferred Submittals:
a) Seismic Bracing.

VAN BOERUM & FRANK ASSOCIATES INC.
CONSULTING ENGINEERS

330 SOUTH 300 EAST
SALT LAKE CITY, UT 84111
801.530.3148 ofc
801.530.3150 fax
http://www.vbfa.com

LICENSED PROFESSIONAL ENGINEER No. 189989 STEVEN T. SHEPHERD STATE OF UTAH

Original drawings remain the property of the Engineer and as such the Engineer retains total ownership and control. The design represented by these drawings are sold to the client for a one time use, unless otherwise agreed upon in writing by the Engineer.
© Van Boerum & Frank Assoc., 2010

CANNON HEALTH BUILDING
BOILER REPLACEMENT
288 NORTH 1460 WEST SALT LAKE CITY, 84116

REVISIONS

VBFA PROJECT #:	10209
CHECKED BY:	Sshepherd / Jbeck
DRAWN BY:	Ejuarez
CURRENT/BID DATE:	07/07/10

SHEET CONTENTS
COVER SHEET

C0.0

LEGEND OF MECHANICAL SYMBOLS AND ABBREVIATIONS

MECHANICAL

- POSITIVE PRESSURE DUCT – RISE
- POSITIVE PRESSURE DUCT – DROP
- NEGATIVE PRESSURE DUCT – RISE
- NEGATIVE PRESSURE DUCT – DROP
- ROUND DUCT – RISE
- ROUND DUCT – DROP
- UNDER FLOOR DUCT
- TURNING VANES
- FRESH AIR LOUVER
- RELIEF AIR OR EXHAUST AIR LOUVER
- 12X12 / 200 — CEILING SUPPLY DIFFUSER
- 22X22 / 200 — CEILING RETURN REGISTER
- 12X12 / 200 — CEILING EXHAUST REGISTER, (BALANCE TO MATCH SUPPLY IF RETURN CFM IS NOT SHOWN)
- 24X10 / 200 — SIDEWALL SUPPLY REGISTER
- 24X10 / 200 — SIDEWALL EXHAUST OR RETURN REGISTER
- 12X12 / 200 — CEILING SUPPLY DIFFUSER WITH FLEXIBLE DUCT
- 12X12 / 200 — CEILING AIR GRILLE WITH FLEXIBLE DUCT

  (TOP FIGURES INDICATE NECK SIZE. BOTTOM FIGURE INDICATES CFM.)
- CEILING RETURN AIR GRILE W/ SOUND BOOT
- 3–1" SLOTS @ 48 / 400 — LINEAR DIFFUSER WITH PLENUM AND FLEXIBLE DUCT CONNECTION. NO. OF SLOTS & SIZE OF SLOT ON TOP, ACTIVE LENGTH AND CFM ON BOTTOM
- FLEXIBLE DUCT CONNECTION
- FLEXIBLE DUCT
- FAN
- 12/8 FO — FLAT OVAL DUCT WITH NET INSIDE DIMENSIONS SHOWN IN INCHES.
- 12/8 — RECTANGULAR DUCT WITH NET INSIDE DIMENSIONS SHOWN IN INCHES.
- 12ø — ROUND DUCT WITH NET INSIDE DIMENSIONS SHOWN IN INCHES.
- UP — INCLINED RISE
- DN — INCLINED DROP

  (WITH RESPECT TO AIR FLOW 15° NOMINAL INCLINE WITH RADIUS TURNS=DEPTH OF DUCT.)
- W R — R/W=1. ROUND DUCT SIMILAR TO RECTANGULAR
- 12/12 8/8 — RECTANGULAR TO RECTANGULAR OR ROUND TO ROUND DUCT TRANSFORMATION MAXIMUM 15° INCLUDED ANGLE EXCEPT WHERE SHOWN OTHERWISE.
- 12/12 12ø — RECTANGULAR TO ROUND DUCT TRANSFORMATION
- R — BRANCH DUCT SPLIT WITH 6" WIDTH AND MIN. R=WIDTH OF BRANCH DUCT DOWNSTREAM. ELBOW TURNING VANE OPTIONAL.
- 150 250 45° D — TAP ENTRY AREA EQUALS 150% OF BRANCH AREA
- 12ø 12/12 — HIGH EFFICIENCY FITTING
- MANUAL VOLUME DAMPER
- FD — FIRE DAMPER IN DUCT, W/ ACCESS PANEL REQD.
- FSD — COMBINATION FIRE/SMOKE DAMPER W/ ACCESS PANEL
- SD — SMOKE DAMPER W/ ACCESS PANEL
- BDD — BACK DRAFT DAMPER
- ATC OR — ATC DAMPER
- AD — ACCESS PANEL IN DUCT OR PLENUM
- HEATING OR COOLING COIL IN DUCT
- SINGLE DUCT AIR TERMINAL BOX VARIABLE OR CONSTANT VOLUME. MIN. 1-1/2 TERMINAL INLET SIZE STRAIGHT DUCT AT TERMINAL INLET.
- 4-WAY BLOW PATTERN
- 3-WAY BLOW PATTERN
- 2-WAY BLOW PATTERN
- 2-WAY BLOW PATTERN
- 1-WAY BLOW PATTERN
- SD — DUCT SMOKE DETECTOR
- UNIT HEATER

PLUMBING

- FLOOR SINK
- FLOOR DRAIN
- FCO / COTG — FLOOR CLEAN-OUT OR CLEAN-OUT TO GRADE
- ROOF DRAIN
- DOWNSPOUT NOZZLE
- ARROW INDICATES DIRECTION OF FLOW IN PIPE
- CHECK VALVE
- PRESSURE REDUCING, EXTERNAL PRESSURE VALVE
- PRESSURE REDUCING, SELF CONTAINED VALVE
- ATC VALVE – 2 WAY
- ATC VALVE – 3 WAY
- SOLENOID VALVE
- GATE VALVE
- GATE VALVE – NON RISING STEM
- GLOBE VALVE
- TEMPERATURE AND PRESSURE TEST PORT
- PS — PRESSURE SWITCH
- GAS COCK
- 0.0 GPM — CALIBRATED BALANCING VALVE WITH GPM INDICATED
- RPBP — REDUCED PRESSURE BACKFLOW PREVENTOR W/ DRAIN PAN
- BRANCH – BOTTOM CONNECTION
- BRANCH – TOP CONNECTION
- BRANCH – SIDE CONNECTION
- RISE OR DROP
- RISER – DOWN (ELBOW)
- RISER – DOWN (ELBOW)
- VTR — VENT THRU ROOF
- WATER HAMMER ARRESTOR
- INLINE PUMP
- INLINE PUMP
- CLEAN-OUT
- RELIEF VALVE
- ANGLE VALVE
- FLOW METER
- UNION
- BALANCING COCK
- SHUT-OFF COCK FOR USE WITH PRESSURE GAUGE
- FLEXIBLE EXPANSION JOINT
- THERMOMETER – TEMP RANGE AS INDICATED
- PRESSURE GAUGE WITH SHUT-OFF COCK
- PRESSURE GAUGE WITH PIGTAIL
- LATERAL STRAINER WITH BLOW-OFF VALVE, PROVIDE HOSE END WITH CAP WHERE DISCHARGE IS NOT PIPED TO DRAIN
- BALL VALVE (PIPE SIZES 2" AND SMALLER) BUTTERFLY VALVE (PIPE SIZES 2-1/2" AND LARGER)
- MOTOR OPERATED BUTTERFLY VALVE
- VALVE IN RISE
- AIR VENT–MANUAL
- AIR VENT–AUTO
- FLOW SWITCH
- REDUCER
- CONCENTRIC REDUCER
- ECCENTRIC REDUCER

PLUMBING CONT.

- THERMOSTATIC MIXING VALVE
- HOSE BIBB
- PIPE CAP
- S — SWITCH
- S — SENSOR
- T — THERMOSTAT
- TN — NIGHT THERMOSTAT
- FILL PORT
- DRAIN PAN AND P-TRAP
- (NAME) — FIXTURE FROM LEVEL ABOVE
- GPM LB/HR. — FLOW METER ORIFICE
- FLANGE
- 90° ELBOW
- STEAM TRAP, F&T=FLOAT & THERMOSTATIC 45° ELBOW
- F&T — B=BUCKET, T=THERMOSTATIC
- DN — LEADER INDICATES DOWNWARD SLOPE
- DEMOLITION
- ALIGNMENT GUIDE
- ANCHOR
- LUBRICATED PLUG COCK

SYMBOLS

- P-1 — PLUMBING FIXTURES
- POINT OF CONNECTION
- A / M-101 — SECTION TAG – TOP FIGURE IS SECTION NO. BOTTOM FIGURE IS SHEET NO.
- A / M101 — DETAIL TAG – TOP FIGURE IS DETAIL NO. BOTTOM FIGURE IS SHEET NO.
- EF / 1 — EQUIPMENT IDENTIFICATION
- 1 — KEYED NOTE IDENTIFICATION

FIRE

- HOSE VALVE
- NRS GATE VALVE WITH SUPERVISION
- FLOW SWITCH
- FIRE RISER
- SPRINKLER HEAD
- F — FIRE SPRINKLER WATER

LINETYPES

- AV — ACID VENT
- AW — ACID WASTE
- BBD — BOILER BLOW DOWN
- BF — BOILER FEED WATER
- B — BRINE
- CO2 — CARBON DIOXIDE
- CA — COMPRESSED AIR
- CF — CHEMICAL FEED
- CHWS — CHILLED WATER SUPPLY
- CHWR — CHILLED WATER RETURN
- CS — CONDENSER WATER SUPPLY
- CR — CONDENSER WATER RETURN
- DOMESTIC COLD WATER (DCW)
- DOMESTIC HOT WATER (DHW)
- DOMESTIC HOT WATER RETURN (DHWR)
- DI — DEIONIZED WATER SUPPLY
- DIR — DEIONIZED WATER RETURN
- E(NAME) — EXISTING PIPING
- (NAME) — EXISTING PIPING TO BE REMOVED
- GHR — GLYCOL HEAT RECOVERY PIPING
- G(NAME) — GLYCOL PIPING SOLUTION
- FOR — FUEL OIL RETURN
- FOS — FUEL OIL SUPPLY
- FOV — FUEL OIL VENT
- G — NATURAL GAS
- HG — HOT GAS
- HFR — HELICOPTER FUEL RETURN
- HFS — HELICOPTER FUEL SUPPLY
- HP(NAME) — HIGH PRESSURE DOMESTIC WATER
- HPC — HIGH PRESSURE CONDENSATE
- HPS — HIGH PRESSURE STEAM
- HWR — HEATING HOT WATER RETURN
- HWS — HEATING HOT WATER SUPPLY
- IA — INSTRUMENT AIR
- IA 120 — INSTRUMENT AIR AT PRESSURE INDICATED
- LA — LAB AIR
- LV — LAB VACUUM
- LPC — LOW PRESSURE CONDENSATE
- LPG — LIQUIFIED PETROLEUM GAS
- LPS — LOW PRESSURE STEAM
- MA — MEDICAL AIR
- MA 120 — MEDICAL AIR AT PRESSURE INDICATED
- MPC — MEDIUM PRESSURE CONDENSATE
- MPS — MEDIUM PRESSURE STEAM
- MUW — MAKE UP WATER
- MV — MEDICAL VACUUM
- N — NITROGEN
- N2O — NITROUS OXIDE
- OX — MEDICAL OXYGEN
- OX 120 — MEDICAL OXYGEN AT PRESSURE INDICATED
- PUMPED CONDENSATE

LINETYPES CONT.

- RO — REVERSE OSMOSIS WATER SUPPLY
- ROR — REVERSE OSMOSIS WATER RETURN
- RD — ROOF DRAIN
- RDO — ROOF DRAIN OVERFLOW
- RL — REFRIGERANT LIQUID
- RS — REFRIGERANT SUCTION
- SEWER (BELOW GRADE)
- SEWER (ABOVE GRADE)
- SW — SOFT DOMESTIC WATER (SW)
- V — VACUUM
- VENT (SEWER)

MECH. GENERAL NOTES

1. DO NOT ROUTE DUCTS AND PIPES ABOVE ELECTRICAL PANELS. ALL ELECTRICAL PANELS MUST HAVE CLEAR ACCESS SPACE IN FRONT OF PANEL 4'-0" DEEP AND 6'-6" HIGH. DO NOT ROUTE DUCTS AND PIPES IN ELECTRICAL ROOMS, EXCEPT DUCTS AND PIPES SERVING THE ROOM.
2. IF CONTRACTOR ENCOUNTERS MATERIAL WHICH MAY CONTAIN ASBESTOS IMMEDIATELY STOP WORK IN THIS AREA AND NOTIFY THE OWNER.
3. STEEL ROOF DECK SHALL NOT BE USED TO SUPPORT LOADS FROM PIPING, DUCTWORK OR EQUIPMENT, UNLESS NOTED OTHERWISE. HANGER LOADS LESS THAN 50 LBS. MAY BE HUNG FROM THE STEEL ROOF DECK IN CASES WHEN HANGING FROM THE STEEL ROOF DECK CANNOT BE AVOIDED; THE ATTACHMENT METHOD MUST DISTRIBUTE THE LOAD ACROSS THE DECK AS APPROVED BY THE STRUCTURAL ENGINEER.

VAN BOERUM & FRANK ASSOCIATES INC.
CONSULTING ENGINEERS

330 SOUTH 300 EAST
SALT LAKE CITY, UT 84111
801.530.3148 ofc
801.530.3150 fax
http://www.vbfa.com

LICENSED PROFESSIONAL ENGINEER No. 189989 STEVEN T. SHEPHERD STATE OF UTAH

Original drawings remain the property of the Engineer and as such the Engineer retains total ownership and control. The design represented by these drawings are sold to the client for a one time use, unless otherwise agreed upon in writing by the Engineer.
© Van Boerum & Frank Assoc., 2010

CANNON HEALTH BUILDING
BOILER REPLACEMENT
288 NORTH 1460 WEST SALT LAKE CITY, 84116

REVISIONS

VBFA PROJECT #:	10209
CHECKED BY:	Sshepherd / Jbeck
DRAWN BY:	Ejuarez
CURRENT/BID DATE:	07/07/10

SHEET CONTENTS
MECHANICAL SYMBOLS AND ABBREVIATIONS

M0.1

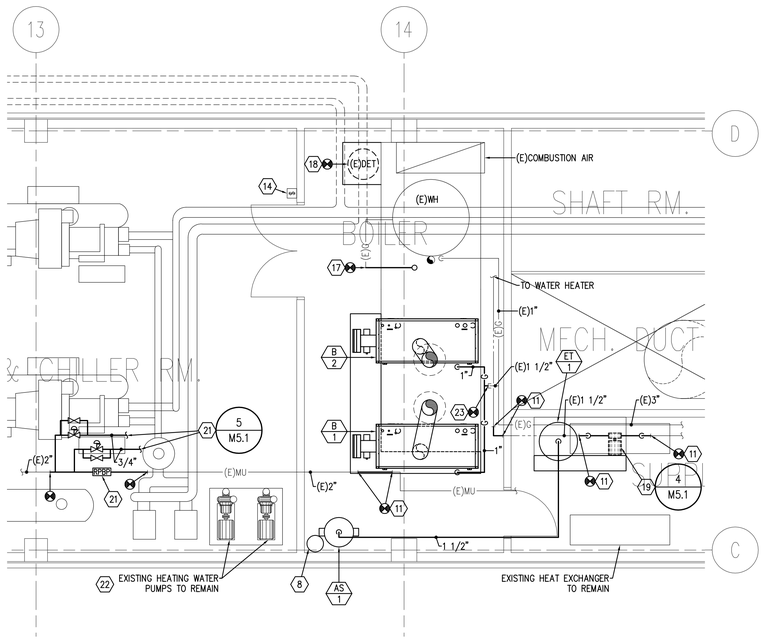

LARGE SCALE BOILER ROOM PLAN
SCALE: 1/4" = 1'-0"

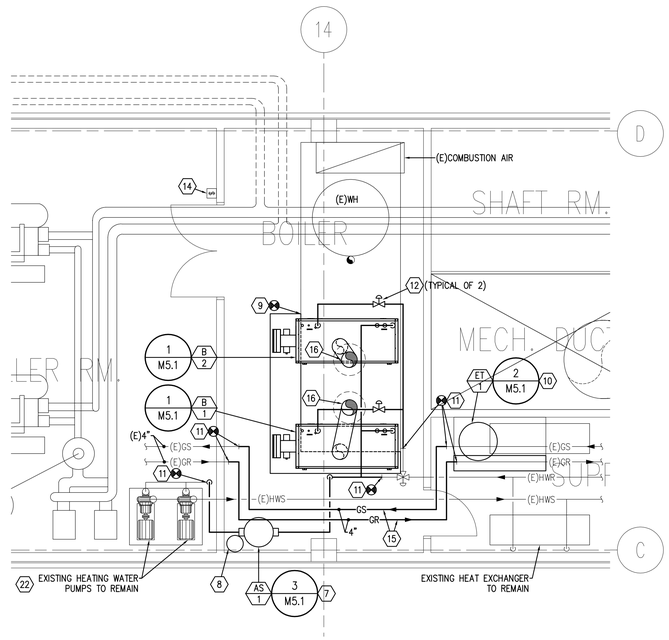

LARGE SCALE BOILER ROOM PLAN
SCALE: 1/4" = 1'-0"

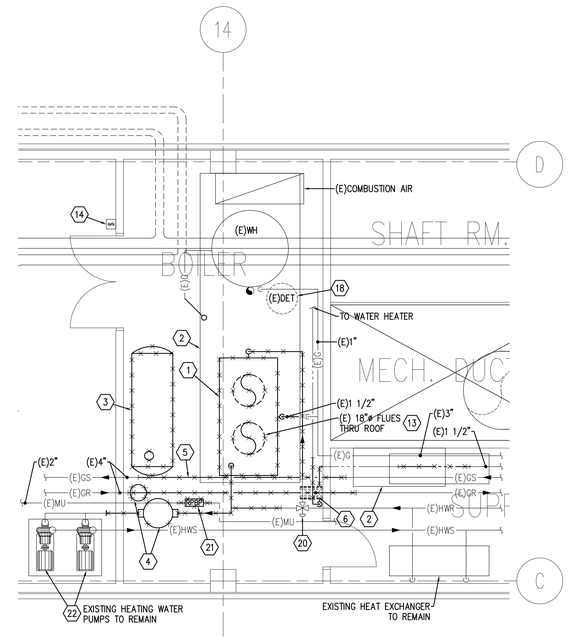

LARGE SCALE BOILER ROOM DEMOLITION PLAN
SCALE: 1/4" = 1'-0"

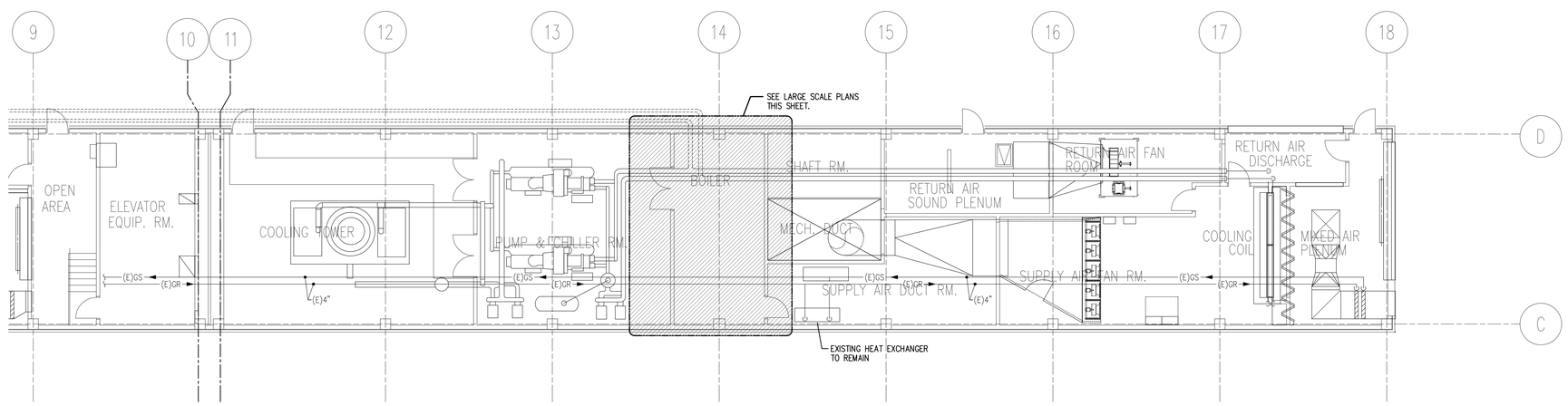

PENTHOUSE MECHANICAL PLAN - EAST
SCALE: 1/8" = 1'-0"

KEYED NOTES

1. REMOVE EXISTING BOILERS INCLUDING ALL ACCESSORIES, FLUES, PIPING, ELECTRICAL, ETC.
2. EXISTING HOUSEKEEPING PAD TO REMAIN.
3. REMOVE EXISTING EXPANSION TANK AND ASSOCIATED PIPING..
4. REMOVE AIR SEPARATOR, POT FEEDER AND PIPING AS SHOWN X'D.
5. REMOVE EXISTING PIPING AS SHOWN X'D.
6. RELOCATE EXISTING DOMESTIC WATER PUMP.
7. MOUNT NEW AIR SEPARATOR AS HIGH AS POSSIBLE.
8. PROVIDE AND INSTALL NEW POT FEEDER AND PIPING FOR HEATING HOT WATER SYSTEM..
9. EXPAND EXISTING 4-INCH HOUSEKEEPING PAD TO ACCOMMODATE NEW BOILERS AND EQUIPMENT.
10. MOUNT NEW EXPANSION TANK ON EXISTING 6-INCH PAD. EXTEND CONCRETE PAD TO ACCOMMODATE SIZE OF EXPANSION TANK.
11. EXTEND AND CONNECT NEW PIPING TO EXISTING.
12. AUTO ISOLATION VALVES (ATC).
13. REMOVE EXISTING ATMOSPHERIC FLUES THRU ROOF. SLEEVES AND FLASHING THRU ROOF TO REMAIN.
14. EMERGENCY BOILER SHUT DOWN TO REMAIN. DISCONNECT FROM EXISTING BOILER AND RECONNECT TO TWO NEW BOILERS.
15. RE-ROUTE EXISTING PRE-HEAT PIPING TO ACCOMMODATE REQUIRED CLEARANCES OF NEW BOILERS (50% P.G.). CONTAIN ALL EXISTING GLYCOL FOR RE-USE.
16. EXTEND NEW POSITIVE PRESSURE FLUES THRU ROOF OPENINGS OF EXISTING FLUES. PATCH AND REPAIR ROOF. FLASH AND SEAL WATER TIGHT ROOF PENETRATIONS.
17. RELOCATE EXISTING WATER HEATER GAS TRAIN TO GIVE BETTER BOILER CLEARANCE.
18. ROTATE EXISTING DOMESTIC EXPANSION TANK. EXTEND PIPING AS REQUIRED. PROVIDE NEW 4-INCH CONCRETE HOUSEKEEPING PAD.
19. RELOCATE EXISTING DOMESTIC WATER CIRCULATING PUMP. MOUNT ON WALL SIMILAR TO EXISTING MOUNTING CONDITIONS.
20. EXISTING 3-WAY CONTROL VALVE TO REMAIN. ALL EXISTING BOILER CONTROLS, SENSORS, ETC. TO REMAIN.
21. REMOVE EXISTING RPBP AND RELOCATE AND PROVIDE NEW RPBP. PROVIDE NEW PRESSURE REDUCING VALVES FOR HEATING WATER AND PRE-HEAT WATER SYSTEMS. EXTEND 3/4" PIPING FROM NEW LOCATIONS BACK TO EXISTING CONNECTIONS TO SYSTEMS.
22. TEST & BALANCE @ EXISTING PUMPS EXISTING HEATING WATER SYSTEM BEFORE WORK STARTS. REPORT FLOWS TO ENGINEER. BALANCE SYSTEM AGAIN AFTER WORK IS COMPLETE.
23. EXTEND AND CONNECT NEW GAS LINES FROM EXISTING MAIN TO NEW BOILERS.

VAN BOERUM
& FRANK
ASSOCIATES INC.
CONSULTING ENGINEERS

330 SOUTH 300 EAST
SALT LAKE CITY, UT 84111
801.530.3148 ofc
801.530.3150 fax
http://www.vbfa.com

LICENSED PROFESSIONAL ENGINEER
No. 189989
STEVEN T. SHEPHERD
STATE OF UTAH

Original drawings remain the property of the Engineer and as such the Engineer retains total ownership and control. The design represented by these drawings are sold to the client for a one time use, unless otherwise agreed upon in writing by the Engineer.
© Van Boerum & Frank Assoc., 2010

CANNON HEALTH BUILDING
BOILER REPLACEMENT
288 NORTH 1460 WEST SALT LAKE CITY, 84116

REVISIONS

VBFA PROJECT #:	10209
CHECKED BY:	Sshepherd / Jbeck
DRAWN BY:	Ejuarez
CURRENT/BID DATE:	07/07/10

SHEET CONTENTS
PENTHOUSE - EAST MECHANICAL PLAN LARGE SCALE BOILER ROOM PLANS

M1.1

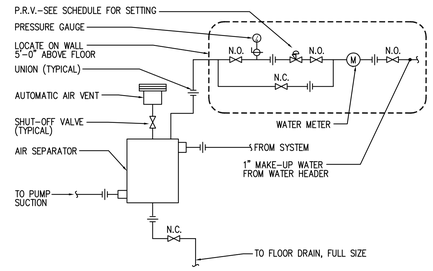

3 / M5.1 **AIR SEPARATOR DETAIL**
NO SCALE

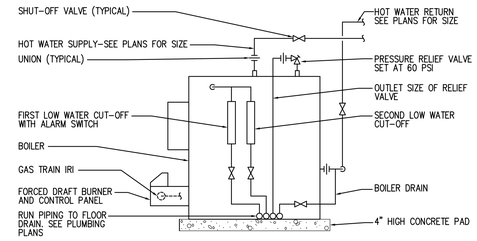

NOTE: PROVIDE AIR VENTS AT HIGH POINTS OF PIPING SYSTEM.

1 / M5.1 **HOT WATER BOILER PIPING DETAIL**
NO SCALE

NOTE: ALL EQUIPMENT, VALVES, PIPES, ETC. ARE NEW UNLESS OTHERWISE NOTED.

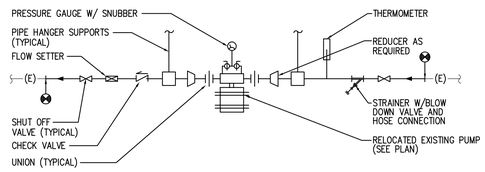

4 / M5.1 **IN-LINE PUMP DETAIL**
NO SCALE

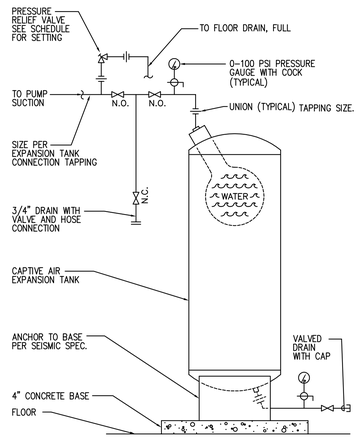

2 / M5.1 **EXPANSION TANK DETAIL**
NO SCALE

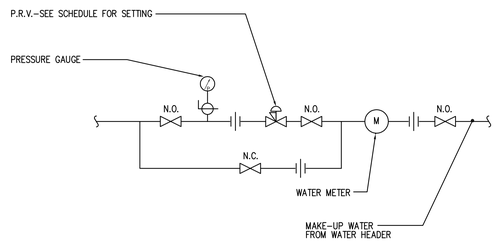

5 / M5.1 **MAKE-UP WATER DETAIL**
NO SCALE

BOILER SCHEDULE

ID	MANUFACTURER AND MODEL NUMBER	LOCATION	TYPE	DRAFT TYPE	FUEL TYPE	INPUT LOAD (BTU/H)	OUTPUT LOAD (BTU/H)	FLUID: FLOW RATE (GPM)	FLUID: ENTERING/ LEAVING TEMP. (°F)	FLUID: WORKING FLUID	FLUID: HEAD LOSS (FT)	ELECTRICAL: MOTOR QUAN.	ELECTRICAL: MOTOR SIZE (HP)	ELECTRICAL: MOTOR VOLT/PH/HZ	PHYSICAL: STACK DIAMETER (IN)	PHYSICAL: LENGTH/ WIDTH/ HEIGHT (IN)	NOTES
B-1	BRYAN CLM-180W	MECH ROOM	NOTE 1	FORCED	NAT GAS	1,800,000	1,440,000	150	160 / 180	HOT WATER	2	1	1/2	120/1/60	14	98 / 35 / 77	1
B-2	BRYAN CLM-180W	MECH ROOM	NOTE 1	FORCED	NAT GAS	1,800,000	1,440,000	150	160 / 180	HOT WATER	2	1	1/2	120/1/60	14	98 / 35 / 77	1

1. FLEXIBLE TUBE BOILER

EXPANSION TANK SCHEDULE

ID	MANUFACTURER AND MODEL NUMBER	LOCATION	TYPE	FLUID: WORKING FLUID	FLUID: MIN. TANK/ ACCEPTANCE (GAL)	PHYSICAL: TANK SIZE (GAL)	PHYSICAL: RELIEF VALVE (PSIG)	PHYSICAL: DIA./ HEIGHT (IN)	PHYSICAL: NPT FITTING (IN)	NOTES
ET-1	BELL & GOSSETT B-1000	MECH ROOM	BLADDER	HOT WATER	264 / 264	264	60	36 / 74	1 1/2	1

1. ASME CERTIFIED

AIR SEPARATOR SCHEDULE

ID	MANUFACTURER AND MODEL NUMBER	LOCATION	TYPE	FLUID: FLOW RATE (GPM)	FLUID: WORKING FLUID	FLUID: HEAD LOSS (FT)	NOTES
AS-1	BELL & GOSSETT RL-5	MECH ROOM	INLINE	300	HOT WATER	3	1

1. ASME CERTIFIED

VAN BOERUM & FRANK ASSOCIATES INC.
CONSULTING ENGINEERS
330 SOUTH 300 EAST
SALT LAKE CITY, UT 84111
801.530.3148 ofc
801.530.3150 fax
http://www.vbfa.com

LICENSED PROFESSIONAL ENGINEER No. 189989 STEVEN T. SHEPHERD STATE OF UTAH

Original drawings remain the property of the Engineer and as such the Engineer retains total ownership and control. The design represented by these drawings are sold to the client for a one time use, unless otherwise agreed upon in writing by the Engineer.
© Van Boerum & Frank Assoc., 2010

CANNON HEALTH BUILDING BOILER REPLACEMENT

288 NORTH 1460 WEST SALT LAKE CITY, 84116

REVISIONS

VBFA PROJECT #:	10209
CHECKED BY:	Sshepherd / Jbeck
DRAWN BY:	Ejuarez
CURRENT/BID DATE:	07/07/10

SHEET CONTENTS
MECHANICAL DETAILS & SCHEDULES

M5.1

MECHANICAL EQUIPMENT SCHEDULE

MARK	DESCRIPTION	ELECTRICAL V/PH	LOAD (kW)	HP	FLA	MCA	MOCP	DISCONNECT SIZE/POLE	FUSE SIZE	NOTES
B-1	BOILER	120/1		1/2				30/2	15	1,2
B-2	BOILER	120/1		1/2				30/2	15	1,2

V/PH/Hz = VOLTAGE / PHASE / HERTZ
MCA = MINIMUM CIRCUIT AMPACITY
MOCP = MAXIMUM OVER CURRENT PROTECTION LISTED BY THE MANUFACTURER

NOTES:
(1) PROVIDE FUSED DISCONNECT WITH FUSE SIZED TO THE MAX. LISTED BY THE MANUFACTURER.
(2) PROVIDE SQUARE D FUSED DISCONNECT PART NUMBER D221N OR APPROVED EQUIVALENT

ELECTRICAL SYMBOL SCHEDULE

SYMBOL	DEVICE/FIXTURE DESCRIPTION	CATALOG NUMBER	MOUNTING	COMMENTS
	JUNCTION BOX	4" x 4" OR AS NOTED, SEE SPEC.	18"	(12) MOUNT AS NOTED
F	FUSED DISCONNECT SWITCH	SQUARE D, GENERAL DUTY	5' – 0"	(8) (13)
	MAGNETIC STARTER WITH DISCONNECT	SQUARE D, 8538	5' – 0"	(8) (13) (14)
	PANEL BOARD	SEE PANEL SCHEDULE	6'–6" TO TOP	
	PUSH BUTTON SWITCH	EDWARDS 850, 149–1	4' – 0"	(8)
R	POWER RELAY (DPDT) IN NEMA 1 ENCLOSURE	SQ. D 8501–C016–VXX–9991UE1	SEE PLANS	(8) (18)

	WIRING IN CND IN CEILING OR WALL		WIRING IN CND IN GROUND OR FLOOR
	CONDUIT TURNED UP		CONDUIT TURNED DOWN
	CIRCUIT HOME RUN TO PANEL. 3 CONDUCTORS INCLUDING THE EQUIPMENT GROUND CONDUCTOR.		
	CIRCUIT HOME RUN TO PANEL. NUMBER OF ARROW HEADS INDICATE NUMBER OF CIRCUITS. SLASH MARKS INDICATE NUMBER OF CONDUCTORS. EX. TWO CIRCUITS, FOUR CONDUCTORS, COMMON NEUTRAL AND THREE CIRCUITS WITH 7 CONDUCTORS (SEPERATE NEUTRAL PER CIRCUIT). BOTH EX. INCLUDE AN EQUIP. GROUND.		

INSTALL CONDUIT AS DRAWN ON THE PLANS. THE ONLY EXCEPTIONS ARE THOSE AUTHORIZED IN WRITING BY THE ENGINEER.
ALL CONDUITS SHALL INCLUDE AN EQUIPMENT GROUND CONDUCTOR SIZED PER NEC.

ABBREVIATIONS/NOTES

AFF – ABOVE FINISHED FLOOR, AFG – ABOVE FINISHED GRADE, AIC – AMPS INTERUPTING CAPACITY, BC – BARE COPPER, BFC – BELOW FINISHED CEILING, BFG – BELOW FINISHED GRADE, CND. OR C. – CONDUIT, CLG – INSTALLED IN CEILING, CT – CURRENT TRANSDUCER, DFA – DROP FROM ABOVE, EC – ELECTRICAL CONTRACTOR, EV – ELECTRO VOICE, GC – GENERAL CONTRACTOR, GND – GROUND, MC – MECHANICAL CONTRACTOR, MCA – MINIMUM CIRCUIT AMPS, P.C. – PLUMBING CONTRACTOR, POC – POINT OF CONNECTION, POS – POINT OF SALES, RMC – RIGID METAL CONDUIT, SCA – SHORT CIRCUIT AMPERES, TC – TEMP. CONTROL CONTRACTOR, UNO – UNLESS NOTED OTHERWISE, VA – VOLT/AMPS, VIF – VERIFY IN FIELD, WP – WEATHER PROOF/NEMA 3R

1. SEE LIGHTING FIXTURE SCHEDULE FOR TYPE AND SPECIFICS.
2. SEE LIGHTING FIXTURE SCHEDULE FOR MOUNTING OF FIXTURE.
3. PROVIDE AND WIRE FROM ADJACENT J–BOX AS REQUIRED BY THE FIXTURE AND NUMBER OF CONDUITS.
4. PROVIDE UN–SWITCHED CONDUCTOR TO EMERGENCY BALLAST
5. PROVIDE DIRECTIONAL ARROWS AS SHOWN.
6. ACCEPTABLE EQUALS ARE P&S, LEVITON, COOPER, HUBBELL
7. ACCEPTABLE EQUALS ARE HUBBELL, WATT STOPPER, SENSOR SWITCH
8. ACCEPTABLE EQUALS ARE GENERAL ELECTRIC, ALLEN–BRADLEY, SQUARE D
9. PROVIDE ONE B2432, ONE S3825, ONE S3826, ONE SB3084, AND ONE FCX244W
10. ACCEPTABLE EQUALS ARE INTERMATIC, PARAGON, EZ–CONTROL
11. USE A 4" X 4" BOX WITH A MUD RING BOX COVER TO MATCH THE DEVICE AND INSTALLATION.
12. PROVIDE MUD RING AND/OR BOX COVER APPROPRIATE FOR DEVICE/FIXTURE SERVED.
13. USE HEAVY DUTY FOR 480 VOLT.
14. SIZE TO THE EQUIPMENT BEING CONTROLLED
15. PROVIDE A FLOOR BOX HUBBELL S1PFB/SISP, TWO HBLSBK, ONE IM2K1BK, AND FIVE IMB1BK W/FLANGE TO MATCH FLOOR TYPE.
16. PROVIDE A FLOOR BOX HUBBELL S1PFB/SISP WITH ONE IM2K1BK, TWO IMB1BK AND ONE HBL2162BK.
17. ACCEPTABLE EQUALS ARE HUBBELL, ORTRONICS, SIEMON
18. MATCH THE VOLTAGE OF THE RELAY WITH THAT OF THE CONTROLLING CIRCUIT.
19. MOUNT SWITCH AT DOOR JAM PER MANUFACTURERS INSTRUCTIONS.
20. FEED THE STYLE LINE RECEP. FROM THE GFCI OUTLET SO BOTH ARE GFCI PROTECTED.
21. PROVIDE HANDY BOX (RACO 663 OR EQUAL) MOUNT DIRECTLY TO FURNACE FUSE 15 AMP OR AS INDICATED ON PLANS.
22. IF EXHAUST FAN, SWITCH WITH LIGHTS UNLESS INDICATED OTHERWISE.
23. PROVIDE DEVICE UL LISTED TO BE USED WITH THE FIRE ALARM PANEL/SYSTEM.
24. PROVIDE ONE DF10W, TWO DFBM10W
25. PROVIDE ONE BR20W
26. FOR TELEPHONE PROVIDE HUBBELL HBLSEW. FOR DATA PROVIDE HUBBELL HBLSEB. FOR BLANKS PROVIDE S1BOWPK10.
27. PROVIDE A FLOOR BOX HUBBELL S2431 WITH (1) SB3083.
28. PROVIDE TIMER INTERVAL AS SHOWN ON DRAWINGS OR LISTED IN SPECIFICATIONS.
29. PROVIDE RACEWAY WITH OUTLETS 12" ON CENTER. UNO.

GENERAL NOTES

1. THE ELECTRICAL SYSTEMS DEFINED BY THESE PLANS AND SPECIFICATIONS ARE TO BE CONSTRUCTED AS COMPLETE AND OPERABLE SYSTEMS AND SHALL BE BID WITH THIS INTENT. THE CONTRACTOR SHALL VISIT THE SITE, READ ALL THE RELEVANT DOCUMENTS AND BECOME FAMILIAR WITH THE TYPE OF CONSTRUCTION AND WORK TO BE ACCOMPLISHED. SHOULD ANY ERROR, OMISSION OR CONFLICT EXIST IN EITHER THE PLANS OR SPECIFICATIONS, THE CONTRACTOR SHALL NOTIFY THE ENGINEER IN WRITING BEFORE SUBMITTING HIS BID PRICE SO A CHANGE CAN BE ISSUED IN A PRE–BID ADDENDUM. OTHERWISE, THE CONTRACTOR AND/OR EQUIPMENT SUPPLIER SHALL SUPPLY THE PROPER MATERIALS AND LABOR TO INSTALL COMPLETE AND OPERABLE SYSTEMS AT THEIR OWN EXPENSE. WHEN EACH ELECTRICAL SYSTEM IS COMPLETE, THE CONTRACTOR SHALL TEST AND CONFIRM IT'S PROPER OPERATION. ANY INCOMPLETE SYSTEM SHALL BE MADE COMPLETE AND OPERABLE.
2. THE ARCHITECTURAL AND MECHANICAL PLANS ARE CONSIDERED A PART OF THE ELECTRICAL DOCUMENTS SO FAR AS ANY ELECTRICAL ITEMS THEY MAY CONTAIN. THE ELECTRICAL CONTRACTOR SHALL REFER TO AND COORDINATE WITH THEM. NO EXTRA COST SHALL BE ALLOWED FOR FAILURE TO COORDINATE THE CONTRACT DOCUMENTS WITH OTHER TRADES AND/OR IF EQUIPMENT DIMENSIONS ARE GREATER THAN SPECIFIED AND/OR DIMENSIONED ON THE PLANS.
3. NO ADDITIONS TO THE CONTRACTOR BID WILL BE ALLOWED FOR CHANGES MADE NECESSARY BY INTERFERENCE WITH OTHER WORK.
4. THE ELECTRICAL CONTRACTOR SHALL PROVIDE EQUIPMENT, MATERIALS AND LABOR FOR THE CONNECTIONS OF ALL EQUIPMENT SHOWN ON THE PLANS – ARCHITECTURAL, MECHANICAL, ETC.
5. THIS PROJECT IS TO BE INSTALLED IN STRICT ACCORDANCE WITH LOCAL AND STATE CODES AND THE NEC. IF AT ANY TIME DURING CONSTRUCTION, OR AFTER, SOMETHING IS FOUND TO BE INSTALLED IN VIOLATION OF THE CODES LISTED ABOVE, IT SHALL BE CORRECTED AT THE CONTRACTORS EXPENSE.
6. THE EC SHALL INSTALL A SEPARATE EQUIPMENT GROUNDING CONDUCTOR IN EACH CONDUIT RUN. CONDUIT SHALL NOT BE USED AS AN EQUIPMENT GROUNDING CONDUCTOR. THE EC SHALL GROUND THE ELECTRICAL SYSTEM IN ACCORDANCE WITH LOCAL AND NATIONAL CODES.
7. THE CONTRACTOR SHALL NOTIFY THE MANUFACTURER THAT THE LAYOUT AND DIMENSIONS ARE CRITICAL FOR ALL PANELS, SWITCHGEAR, ETC. AND NO PIECE OF EQUIPMENT SHALL EXCEED THE PHYSICAL SIZE INDICATED ON THE PLANS.
8. THE CONTRACTOR SHALL ALLOW THE MOVEMENT, BEFORE ROUGH–IN, OF ANY ELECTRICAL PANEL, DEVICE, LUMINAIRE, ETC. A DISTANCE OF 10 FEET WITHOUT REQUIRING ADDITIONAL COST TO THE PROJECT.
9. THE ELECTRICAL CONTRACTOR SHALL SECURE ALL CONDUIT TO THE STRUCTURE AS IT IS SET IN PLACE USING INDUSTRY STANDARD METHODS AND PRACTICES.
10. TO ASSURE ALL DEVICES ARE RIGIDLY SET, THE ELECTRICAL CONTRACTOR SHALL SECURE ALL DEVICE BOXES WITH BRACKETS, HANGERS, ETC. DESIGNED FOR THE APPLICATION. ANY DEVICE BOXES NOT SECURED WILL BE MADE SECURE AT THE CONTRACTORS EXPENSE.
11. DO NOT INSTALL CONDUIT IN BOND BEAMS.
12. LENGTHS OF FLEXIBLE CONDUIT GREATER THAN 48 INCHES SHALL NOT BE INSTALLED ON THIS PROJECT.
13. ALL LUMINAIRES SHALL BE SUPPORTED FROM THE BUILDING STRUCTURE AND NOT THE CEILING GRID OR OTHER NONSTRUCTURAL MEMBER.
14. DURING CONSTRUCTION, THE ELECTRICAL CONTRACTOR SHALL REMOVE, REROUTE, AND/OR RELOCATE ANY EXISTING ELECTRICAL EQUIPMENT THAT CONFLICTS WITH THE REMODEL OR ADDITION. ALL SYSTEMS SHALL BE OPERABLE AT THE COMPLETION OF THE PROJECT. EQUIPMENT THAT IS NOT REUSED, AND NOT WANTED BY THE OWNER IN WRITTING, BECOMES THE PROPERTY OF THE ELECTRICAL CONTRACTOR AND SHALL BE REMOVED FROM THE PREMISES.
15. THE ELECTRICAL CONTRACTOR SHALL MAINTAIN ELECTRICAL CONTINUITY TO REMAINING EQUIPMENT WHEN ANY EXISTING ELECTRICAL EQUIPMENT IS REMOVED.
16. ALL COSTS FROM THE USE OF THE EXISTING PANEL SHALL BE INCLUDED IN THE CONTRACTOR'S BASE BID, I.E. CHANGE IN BREAKER SIZE, ETC.
17. AFTER THE FACILITY IS COMPLETE AND BEEN IN FULL OPERATION FOR TWO WEEKS THE ELECTRICAL CONTRACTOR SHALL OBTAIN THE UTILITY DEMAND, THE SYSTEM VOLTAGE (PHASE TO PHASE AND PHASE TO GROUND) AND AN AMMETER READING (EACH PHASE) ON THE MAIN FEEDERS. THESE READINGS SHALL BE OBTAINED DURING NORMAL OPERATING HOURS FOR THE FACILITY AND SHALL BE RECORDED AND A COPY SENT TO THE ENGINEER.

ELECTRICAL SPECIFICATIONS

PART 1 – GENERAL

A. DESCRIPTION
1. FURNISH ALL LABOR, MATERIALS, EQUIPMENT AND TRANSPORTATION AS REQUIRED TO PROPERLY INSTALL A COMPLETE AND OPERABLE ELECTRICAL SYSTEM.

B. RULES AND REGULATIONS
1. ALL WORK AND MATERIALS SHALL BE INSTALLED AS SHOWN AND HEREIN SPECIFIED.
2. THE LATEST EDITIONS OF THE FOLLOWING SPECIFICATIONS, STANDARDS, AND AMENDMENTS, AS ADOPTED BY THE AUTHORITY HAVING JURISDICTION, SHALL FORM A PART OF THIS SPECIFICATION THE SAME AS IF HEREIN WRITTEN OUT IN FULL (ALL MATERIALS AND INSTALLATIONS SHALL CONFORM TO THE APPLICABLE REQUIREMENTS THEREOF):
   a) NFPA (NATIONAL FIRE PROTECTION ASSOCIATION).
   b) NEC (NATIONAL ELECTRICAL CODE) 2006.
   c) UL (UNDERWRITERS LABORATORIES, INC.).
   d) NEMA (NATIONAL ELECTRICAL MANUFACTURER'S ASSOCIATION).
   e) UBC (UNIFORM BUILDING CODE) AND STANDARD BUILDING CODE.
   f) IBC (INTERNATIONAL BUILDING CODE) 2006
   g) IFC (INTERNATIONAL FIRE CODE) 2006
   h) IECC (INTERNATIONAL ENERGY CONSERVATION CODE) 2006
   i) IEC (INTERNATIONAL ELECTRICAL CODE)
   j) STATE AND LOCAL BUILDING AUTHORITY AND CODES
   k) DFCM (UTAH DIVISION OF FACILITIES CONSTRUCTION AND MANAGEMENT)
3. NO REQUIREMENT TO THESE DRAWINGS AND SPECIFICATIONS SHALL BE CONSTRUCTED TO VOID ANY OF THE PROVISIONS OF THE ABOVE SPECIFICATIONS AND STANDARDS.

C. PERMITS AND INSPECTIONS UNLESS OTHERWISE SPECIFIED, THE CONTRACTOR SHALL APPLY, PAY FOR AND SCHEDULE ALL APPLICABLE PERMITS, FEES AND INSPECTIONS REQUIRED BY ANY AND ALL PUBLIC AUTHORITIES HAVING JURISDICTION AND REQUIRING INSPECTION.
1. EC SHALL INCLUDE ALL UTILITY COMPANY CHARGES IN THE BASE BID.

D. WORKMANSHIP AND MATERIALS
1. WORKMANSHIP SHALL BE OF THE BEST QUALITY AND NONE BUT COMPETENT PERSONNEL SKILLED IN THEIR TRADE SHALL BE EMPLOYED. THE CONTRACTOR SHALL FURNISH THE SERVICES OF AN EXPERIENCED SUPERINTENDENT, WHO WILL BE IN CHARGE OF THE EXECUTION OF WORK, UNTIL COMPLETED AND ACCEPTED.
2. UNLESS OTHERWISE HEREIN AFTER SPECIFIED, ALL MATERIALS AND EQUIPMENT UNDER THIS DIVISION OF THE SPECIFICATIONS SHALL BE NEW, OF BEST GRADE AND AS LISTED IN PRINTED CATALOGS OF THE MANUFACTURER. EACH ARTICLE OF IT'S KIND SHALL BE THE STANDARD PRODUCT OF A SINGLE MANUFACTURER.
3. THE OWNER'S REPRESENTATIVE SHALL HAVE THE RIGHT TO ACCEPT OR REJECT MATERIAL EQUIPMENT AND/OR WORKMANSHIP AND DETERMINE WHEN THEY HAVE COMPLIED WITH THE REQUIREMENTS HEREIN SPECIFIED.
4. ALL MANUFACTURED MATERIALS SHALL BE CLEARLY MARKED OR STAMPED WITH THE MANUFACTURER'S NAME AND RATING.
5. REFERENCE TO STANDARDS ARE INTENDED TO BE THE LATEST REVISION OF THE STANDARD SPECIFIED, OR THAT ACCEPTED BY THE AUTHORITY HAVING JURISDICTION

E. MANUFACTURER'S RECOMMENDATIONS
1. EQUIPMENT INSTALLED UNDER THIS DIVISION OF THE SPECIFICATIONS SHALL BE INSTALLED ACCORDING TO THE MANUFACTURER'S RECOMMENDATIONS, UNLESS OTHERWISE SHOWN ON THE DRAWINGS OR HEREIN SPECIFIED.

F. GUARANTEE
ALL MATERIALS AND EQUIPMENT PROVIDED AND INSTALLED UNDER THIS SECTION SHALL BE GUARANTEED FOR A MINIMUM OF ONE YEAR. SHOULD ANY TROUBLE OR MALFUNCTIONS DEVELOP DURING THIS PERIOD DUE TO DEFECTIVE MATERIALS OR FAULTY WORKMANSHIP, THE CONTRACTOR WILL BE HELD LIABLE AND SHALL FURNISH LABOR, MATERIALS AND EQUIPMENT NECESSARY TO CORRECT THE TROUBLE OR MALFUNCTION WITHOUT ADDITIONAL COST TO THE OWNER. ALL DEFECTIVE MATERIAL OR INFERIOR WORKMANSHIP NOTICED DURING THE TIME OF INSTALLATION SHALL BE CORRECTED IMMEDIATELY TO THE ENTIRE SATISFACTION OF THE ARCHITECT, ENGINEER AND OWNER, AT NO ADDITIONAL COST.

G. DEFINITIONS
1. FURNISH: TO SUPPLY AND DELIVER, UNLOAD, INSPECT FOR DAMAGE.
2. INSTALL: TO UNPACK, ASSEMBLE, ERECT, APPLY, PLACE, FINISH, CURE, PROTECT, CLEAN, AND MAKE READY FOR USE.
3. PROVIDE: TO FURNISH AND INSTALL.

H. SUBMITTALS
1. PROVIDE SHOP DRAWINGS AND MANUFACTURER'S LITERATURE OF MATERIALS AND EQUIPMENT AS REQUIRED IN THE GENERAL CONDITIONS, AS DIRECTED BY THE OWNER'S REPRESENTATIVE AND AS LISTED BELOW:
2. CATALOG CUTS
   a) CIRCUIT BREAKERS (EACH SIZE AND TYPE)
   b) SAFETY SWITCHES
   c) FUSES (EACH SIZE AND TYPE)

THE ABOVE IS A STANDARD SUBMITTAL REQUIREMENT LIST. ELECTRICAL CONTRACTOR SHALL SUBMIT ALL APPLICABLE ITEMS FOR REVIEW. MATERIAL NOT SUBMITTED AND APPROVED BY THE ARCHITECT, ENGINEER OR OWNER'S REPRESENTATIVE SHALL BE SUBJECT TO REMOVAL AND REPLACEMENT AT THE CONTRACTORS COST IF DIRECTED BY THE ARCHITECT, ENGINEER OR THE OWNER'S REPRESENTATIVE.

PART 2 – MATERIALS

A. GENERAL
1. MATERIALS AND EQUIPMENT SHALL BE STANDARD CATALOGED PRODUCTS OF MANUFACTURERS REGULARLY ENGAGED IN THE MANUFACTURE OF THE PRODUCT. UL LISTED, AND SHALL BE THE LATEST STANDARD DESIGN THAT CONFORMS TO SPECIFIED MATERIALS AND EQUIPMENT.

B. RACEWAY
1. RIGID STEEL CONDUIT (RMC) SHALL BE USED IN THE INTERIOR LOCATIONS AND THROUGH WALLS AND AS INDICATED ON THE DRAWINGS.
2. LIQUID TIGHT STEEL CONDUIT (LFMC) SHALL BE USED FOR CONNECTIONS TO MECHANICAL EQUIPMENT AND AS INDICATED ON THE DRAWINGS. PROVIDE A MINIMUM OF 18" LFMC AT EACH MOTOR.
3. SCHEDULE 40 PVC (WITH PVC COATED RIGID STEEL ELBOWS AND RISES) SHALL BE USED FOR RUNS THAT ARE IN CONTACT WITH THE EARTH.
4. 3/4" CONDUIT SHALL BE THE MINIMUM SIZE CONDUIT.
5. OUTDOOR AND WET OR DAMP LOCATIONS: PROVIDE RIGID STEEL CONDUIT.
6. METAL CLAD CABLE, ARMORED CABLE, NON–METALLIC SHEATHED CABLE OR ANY OTHER TYPE OF CABLE IS NOT ALLOWED.

C. FITTINGS
1. ALL FITTINGS SHALL BE STEEL/MALLEABLE IRON WITH INSULATING BUSHINGS.

D. OUTLET AND JUNCTION BOXES
1. BOXES IN INTERIOR LOCATIONS SHALL BE STEEL NEMA 3R OR DIE–CAST 18 CU. IN.; APPLETON, RACO, OR EQUAL.
2. BOXES SHALL BE EQUIPPED WITH PLASTER RINGS, EXTENSION RINGS, AND FIXTURE STUDS AS REQUIRED.
3. ALL BOXES SHALL BE SURFACE MOUNTED WET LOCATION TYPE UNLESS SHOWN OTHERWISE ON THE DRAWINGS.
4. PROVIDE DIE–CAST WHILE–IN–USE COVER PLATES FOR ALL RECEPTACLES.
5. PROVIDE WET LOCATION TOGGLE SWITCH COVER – WITH ACTUATING LEVER FOR ALL LIGHT SWITCHES. PASS & SEYMOUR CA1GL OR EQUAL.

E. CONDUCTORS
1. ALL CONDUCTORS SHALL BE SOFT DRAWN, ANNEALED COPPER IN RACEWAY SIZED AS SHOWN ON THE PLANS. ALL CONDUCTORS TO BE MINIMUM #12 AWG UNLESS NOTED OTHERWISE #8 AWG AND LARGER SHALL BE STRANDED.
2. CONDUCTORS SHALL BE COPPER, THHN OR THWN–2 COLOR CODED IN ACCORDANCE WITH PART 3, SECTION C. 1. OF THESE SPECIFICATIONS OR AS INDICATED ON THE DRAWINGS.
3. ALUMINUM CONDUCTORS: NOT ALLOWED.

F. WIRING CONNECTIONS
1. MAKE ALL ELECTRICAL CONNECTIONS.
2. MAKE CONNECTION TO DEVICES USING "PIG–TAILS". DO NOT USE A DEVICE AS A CONNECTION OR A SPLICE UNIT.
3. DO NOT PLACE STRANDED CONDUCTORS DIRECTLY UNDER SCREWS. INSTALL CRIMP–ON, INSULATED, FORK TERMINALS FOR CONDUCTOR TERMINATIONS, OR INSTALL SOLID CONDUCTORS.
4. SPLICES IN PANELBOARD, SWITCHBOARD ENCLOSURES OR IN CONDUIT BODIES: NOT ALLOWED.

G. NAMEPLATES AND IDENTIFICATION
1. PROVIDE EACH PANEL BOARD, DISCONNECT SWITCH, AND OVER–CURRENT DEVICE IN SWITCHBOARD WITH A MICARTA PLASTIC NAMEPLATE MADE OF WHITE–FACED BLACKCORE PLASTIC LAMINATE. NAMEPLATE SHALL BE MINIMUM 3" WIDE BY 3/4" HIGH FOR PANEL BOARD AND DISCONNECT IDENTIFICATION INCLUDE DESIGNATION, PHASE, AND VOLTAGE. FASTEN WITH EPOXY GLUE. DOUBLE STICK TAPE IS NOT ACCEPTABLE.
2. UNDERGROUND RACEWAY IDENTIFICATION AND INSTALLATION: PROVIDE DIRECT BURIED CONDUIT WITH MAGNETIC "YELLOW WARNING" RIBBON 12" DIRECTLY ABOVE THE CONDUIT AND 6" BELOW FINISHED GRADE MEASURED FROM THE TOP OF THE CONDUIT OR DUCT BANK.

H. MOTOR STARTER
1. PROVIDE MOTOR STARTERS AS SHOWN ON THE DRAWINGS. PROVIDE AUXILLIARY CONTACTS AND CONTACTORS AS REQUIRED TO CONTROL ALL EQUIPMENT TO BE INTER–LOCKED WITH THE STARTERS.

I. SAFETY SWITCHES
1. THE ELECTRICAL CONTRACTOR SHALL FURNISH AND INSTALL SAFETY SWITCHES AS INDICATED ON THE DRAWINGS OR AS REQUIRED. ALL SAFETY SWITCHES SHALL BE UL LISTED. THE SWITCHES SHALL BE FUSED SAFETY SWITCHES OR NON–FUSED SAFETY SWITCHES AS SHOWN ON THE DRAWINGS OR REQUIRED BY CODE AND SHALL BE MANUFACTURED BY SQUARE D, GENERAL ELECTRIC, SIEMENS OR CUTLER HAMMER.
2. SWITCHES SHALL HAVE A QUICK–MAKE AND QUICK–BREAK OPERATING HANDLE AND MECHANISM WHICH SHALL BE AN INTEGRAL PART OF THE BOX. PADLOCKING PROVISIONS SHALL BE PROVIDED FOR PADLOCKING IN THE OFF POSITION WITH AT LEAST THREE PADLOCKS. SWITCHES SHALL BE HORSEPOWER RATED FOR 250 VOLTS AC OR DC OR 600 VOLTS AC AS REQUIRED. LUGS SHALL BE UL LISTED FOR COPPER AND ALUMINUM CABLE AND SHALL HAVE A TEMPERATURE RATING OF AT LEAST 75 DEGREES C.
3. SWITCHES SHALL BE FURNISHED IN NEMA 1 GENERAL PURPOSE ENCLOSURES WITH KNOCKOUTS UNLESS OTHERWISE NOTED OR REQUIRED. SWITCHES LOCATED ON THE EXTERIOR OF THE BUILDING OR IN "WET" LOCATIONS SHALL HAVE NEMA 3R ENCLOSURES (WP).
4. THE SAFETY SWITCHES SHALL BE SECURELY MOUNTED IN ACCORDANCE WITH THE NEC. THE CONTRACTOR SHALL PROVIDE ALL MOUNTING MATERIALS AND INSTALL FUSES IN THE FUSED SAFETY SWITCHES. THE FUSES SHALL BE DUAL ELEMENT ON MOTOR CIRCUITS.
5. PROVIDE FUSES AS SPECIFIED BELOW. FUSES SHALL BE INSTALLED SO THAT THE RATING IS CLEARLY VISIBLE WITHOUT REMOVING FUSE. PROVIDE A SPARE FUSE FOR EACH FUSE INSTALLED.
6. PROVIDE A NAMEPLATE ON EACH DISCONNECT SWITCH AS SPECIFIED IN "NAMEPLATES".

K. FUSES
1. FUSES SHALL BE TYPE FRS–R. FUSES SERVING MOTOR LOADS SHALL BE DUAL ELEMENT WITH A MINIMUM TIME DELAY OF 10 SECONDS AT 500% RATING. FUSES SHALL BE CURRENT LIMITING TIME DELAY TYPE WITH INTERRUPTING CAPACITY OF 200,000 AMP RMS SYMMETRICAL.
2. FUSES SHALL BE BUSSMAN, GOULD OR LITTELFUSE.
3. PROVIDE FUSES SIZED TO THE MAXIMUM SIZE RECOMMENDED BY THE MANUFACTURE OF THE EQUIPMENT OR AS SHOWN ON THE DRAWINGS IF THE MANUFACTURER DOES NOT HAVE A RECOMMENDED SIZE.

L. PANEL BOARDS
1. DEAD FRONT TYPE, EQUIPPED WITH BOLT – ON CIRCUIT BREAKERS AND PROVISIONS FOR FUTURE BREAKERS, AS INDICATED. SQUARE D, GENERAL ELECTRIC, SIEMENS, OR CUTLER HAMMER. THE NUMBER OF POLES, TYPE, VOLTAGE, AND AMP RATING SHALL BE AS INDICATED ON THE PLANS. PROVIDE FULL SIZE GROUND BUS. NEUTRAL WIRES SHALL BE CONNECTED TO A COMMON NEUTRAL BUS WITH BINDING SCREWS OR LUGS, THE NEUTRAL BUS SHALL BE INSULATED FROM THE CABINET.
2. FURNISH COMPLETE WITH DOOR, KEYED LOCK AND TYPE WRITTEN, LAMINATED DIRECTORY. CABINETS SHALL BE RIGIDLY SUPPORTED INDEPENDENT OF CONDUITS. KEYING SHALL MATCH EXISTING PANEL BOARDS, IF ANY. PROVIDE THREE KEYS.
3. PROVIDE FULLY RATED PANEL BOARDS WITH A MINIMUM AIC RATING AS INDICATED ON THE DRAWINGS.

M. INTERIOR AND EXTERIOR LUMINAIRES
1. PROVIDE LIGHTING SYSTEM COMPLETE WITH LAMPS AND ACCESSORIES, AS INDICATED IN THE CONTRACT DOCUMENTS.
2. LUMINAIRES
   a) PROVIDE COMPLETE LUMINAIRE ASSEMBLIES OF TYPE INDICATED ON THE DRAWINGS WITH FEATURES, OPTIONS AND ACCESSORIES AS SCHEDULED AND AS NEEDED FOR A COMPLETE ASSEMBLY AND INSTALLATION.
   b) HID AND FLUORESCENT BALLASTS SHALL BE AS INDICATED ON THE DRAWINGS WITH APPROVED MANUFACTURERS OF ADVANCE, OSRAM SYLVANIA, MAGNETEC OR COLUMBIA.
   c) HID, FLUORESCENT AND INCANDESCENT LAMPS SHALL BE AS INDICATED ON THE DRAWINGS WITH APPROVED MANUFACTURERS OSRAM SYLVANIA, GENERAL ELECTRIC CO., OR PHILLIPS ELECTRONICS NORTH AMERICA.

N. ELECTRICAL SUPPORTS
1. ALL RACEWAYS, BOXES AND CONDUCTORS SHALL BE SUPPORTED INDEPENDENTLY FROM ALL OTHER ELECTRICAL OR MECHANICAL SYSTEMS, DIRECTLY FROM BUILDING STRUCTURE BY LISTED SUPPORTING DEVICES.

PART 3 – EXECUTION

A. GENERAL
1. ALL MATERIALS SHALL BE INSTALLED IN A PROFESSIONAL MANNER INDICATIVE OF THE TRADE.
2. ALL PENETRATIONS OF THE WALLS SHALL BE MADE WITH SLEEVES AND SEALED WITH APPROPRIATE SEALANT OR CAULK FOR THE PARTICULAR SURFACE INVOLVED.

B. RACEWAYS
1. RACEWAYS SHALL RUN EXPOSED UNLESS OTHERWISE INDICATED. EXPOSED RACEWAY RUNS SHALL BE PARALLEL WITH SUPPORTING WALLS, BEAMS, AND CEILINGS AND WITH EACH OTHER AND SHALL NOT BE INSTALLED CLOSER THAN 6 INCHES TO ANY WATER PIPE OR HEATER FLUME.
2. RACEWAY ENDS SHALL BE REAMED AFTER THREADING AND AFTER CUTTING AND BE MADE TO BUTT IN THE CENTER OF THE COUPLING. THE USE OF RUNNING THREADS IS PROHIBITED.
3. RACEWAYS SHALL BE INSTALLED AS A COMPLETE SYSTEM, CONTINUOUS FROM OUTLET TO OUTLET, CABINET, BOX OR FITTINGS, AND SHALL BE MECHANICALLY CONNECTED SO THAT ADEQUATE ELECTRICAL CONTINUITY FROM ONE TO ANOTHER IS OBTAINED. CONDUITS SHALL BE SUPPORTED WITH ONE OR TWO HOLE STAMPED STEEL OR MALLEABLE IRON STRAPS (SUCH AS MANUFACTURED BY RACO) DESIGNED FOR SUPPORTING CONDUIT. THE SIZE OF STRAP SHALL MATCH THE SIZE OF THE CONDUIT. NAILS, PERFORATED STRAP, OR PLUMBERS TAPE SHALL NOT BE USED FOR SUPPORT OF RACEWAY.
4. PROVIDE 1/8" POLY PULL CORD IN RACEWAYS WITHOUT CONDUCTORS.
5. FOUR 90 DEGREE BENDS MAXIMUM BETWEEN TERMINATIONS OR BOXES.

C. CONDUCTORS
1. ALL CONDUCTORS SHALL BE INSTALLED IN CONDUIT AND COLOR CODED AS FOLLOWS:

PHASE	208/120
PHASE A	BLACK
PHASE B	RED
PHASE C	BLUE
NEUTRAL	WHITE
GROUND	GREEN

2. MAKE JOINTS, SPLICES, TAPS AND CONNECTIONS IN CONDUCTORS WITH SOLDERLESS CONNECTORS.

D. JUNCTION AND PULL BOXES
1. PULL BOXES SHALL BE PROVIDED WHERE INDICATED AND WHERE NECESSARY TO FACILITATE THE PULLING OF CONDUCTORS.

E. GROUNDING
1. INSTALL A CODE SIZED GROUNDING CONDUCTOR IN ALL RACEWAYS. DO NOT USE THE RACEWAY FOR GROUNDING. MAKE GOOD CONTACT AT ALL PANEL BOARDS, OUTLET BOXES, AND JUNCTION OR PULL BOXES TO THE RACEWAY SYSTEM. USE APPROVED BONDING MATERIALS.
2. PROVIDE GROUNDING SYSTEM AS INDICATED ON THE DRAWINGS.

F. CUTTING AND PATCHING
1. PERFORM DRILLING, CUTTING, AND PATCHING OF THE GENERAL CONSTRUCTION WORK WHETHER EXISTING OR NEW, AS REQUIRED FOR THE INSTALLATION OF ELECTRICAL WORK. PATCH WITH THE SAME MATERIALS, WORKMANSHIP, AND FINISH AS THE ORIGINAL WORK AND ACCURATELY MATCH ALL SURROUNDING WORK. SUCH WORK WILL BE DONE BY A CRAFTSMAN ACCREDITED IN THE APPLICABLE TRADE UNDER THE CONTRACTOR'S SUPERVISION AND BE ACCEPTABLE TO THE OWNER'S REPRESENTATIVE. COORDINATE WITH OTHER TRADES AND GENERAL CONTRACTOR PRIOR TO CUTTING, DRILLING, OR CORING.

G. WIRING DEVICES
1. MOUNTING HEIGHTS TO THE CENTER OF THE DEVICE AND ORIENTATION SHALL BE AS FOLLOWS:

   DISCONNECT SWITCHES -------------------------------------48" AFF

   ALL MOUNTING HEIGHTS ARE TYPICAL UNLESS NOTED OTHERWISE ON THE PLANS.

I. TESTING
1. DEMONSTRATE THAT ALL COMPONENTS OF THE WORK OF THIS DIVISION HAVE BEEN PROVIDED AND THAT THEY OPERATE IN ACCORDANCE WITH THE CONTRACT DOCUMENTS.
2. TEST WIRING AND CONNECTORS FOR CONTINUITY, SHORT CIRCUITS AND IMPROPER GROUNDS. TEST EACH LIGHTING AND APPLIANCE PANEL WITH MAINS DISCONNECTED FROM FEEDERS, BRANCHES CONNECTED, WALL SWITCHES CLOSED AND FIXTURES PERMANENTLY CONNECTED AND COMPLETE WITH LAMPS. TEST EACH INDIVIDUAL POWER CIRCUIT WITH THE POWER EQUIPMENT CONNECTED FOR PROPER OPERATION.
3. PROVIDE DETAILED DOCUMENTATION OF EACH TEST PERFORMED TO THE SATISFACTION OF THE OWNER'S REPRESENTATIVE, WITH THE NAMES AND THE SIGNATURES OF QUALIFIED INDIVIDUALS WHO CONDUCTED AND WITNESSED EACH TEST.

VAN BOERUM & FRANK ASSOCIATES INC.
CONSULTING ENGINEERS

330 SOUTH 300 EAST
SALT LAKE CITY, UT 84111
801.530.3148 ofc
801.530.3150 fax
http://www.vbfa.com

REGISTERED PROFESSIONAL ENGINEER
No. 5246941
STAN W. JOHNS
07/07/10
STATE OF UTAH

Original drawings remain the property of the Engineer and as such the Engineer retains total ownership and control. The design represented by these drawings are sold to the client for a one time use, unless otherwise agreed upon in writing by the Engineer.
© Van Boerum & Frank Assoc., 2010

CANNON HEALTH BUILDING
BOILER REPLACEMENT
288 NORTH 1460 WEST SALT LAKE CITY, 84116

REVISIONS

VBFA PROJECT #:	10209
CHECKED BY:	Sjohns/Rvanvoast
DRAWN BY:	Ejuarez
CURRENT/BID DATE:	07/07/10

SHEET CONTENTS
ELECTRICAL SCHEDULES

E0.1

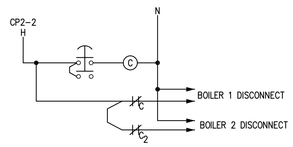

1 / E1.1 EMERGENCY STOP WIRING DIAGRAM
NO SCALE

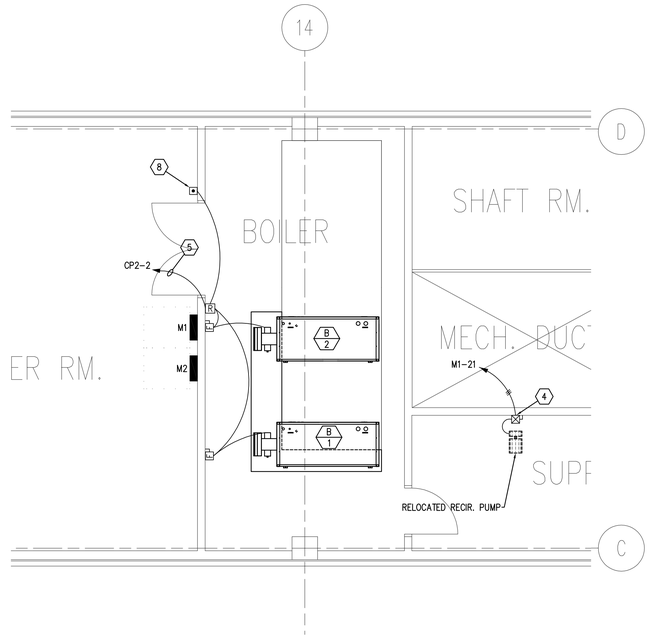

LARGE SCALE ELECTRICAL BOILER ROOM PLAN
SCALE: 1/4" = 1'-0"

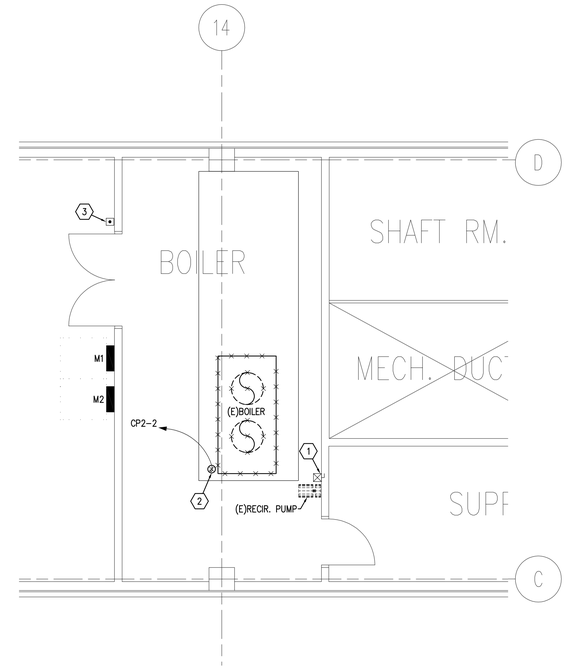

LARGE SCALE ELECTRICAL BOILER ROOM DEMOLITION PLAN
SCALE: 1/4" = 1'-0"

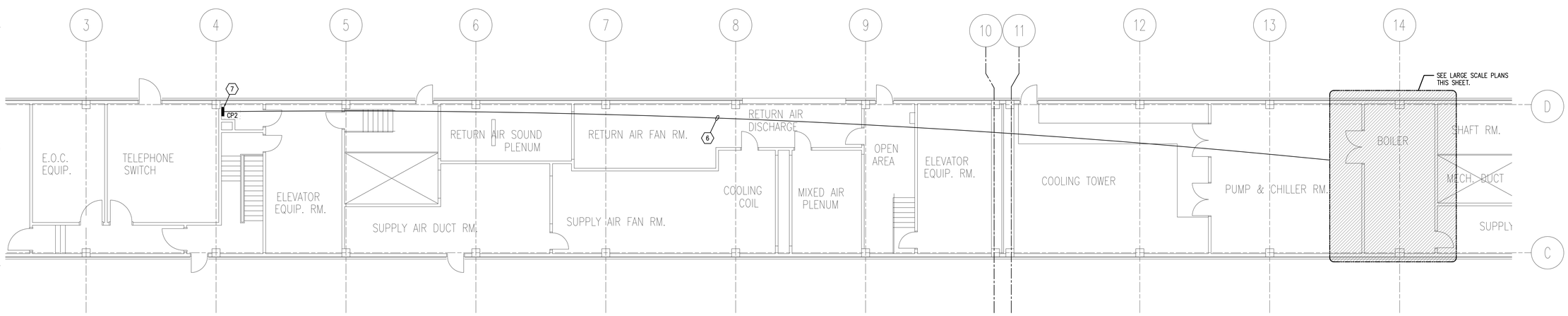

PENTHOUSE ELECTRICAL PLAN - EAST
SCALE: 1/8" = 1'-0"

KEYED NOTES

1. RE-CIRCULATION PUMP TO BE RELOCATED. CONTRACTOR SHALL DISCONNECT AND REMOVE THE STARTER AND DISCONNECT, PROTECT FROM DAMAGE AND STORE FOR RE-USE IN NEW LOCATION.
2. BOILER CIRCUIT INDICATED IS FROM THE RECORD DRAWINGS. CONTRACTOR SHALL FIELD VERIFY ACTUAL LOCATION PRIOR TO BID. DISCONNECT CONDUIT AND CONDUCTORS FROM BOILDER. IF THE CONDUIT IS LESS THAN 1" THEN REMOVE IT BACK TO PANEL CP2. USE THE EXISTING CONDUIT ROUTE FOR THE NEW CONDUIT.
3. EXISTING EMERGENCY STOP PUSH BUTTON FOR BOILERS TO BE REPLACED.
4. NEW LOCATION FOR EXISTING RE-CIRCULATION PUMP, STARTER AND DISCONNECT. CIRCUIT INDICATED IS FROM RECORD DRAWINGS CONTRACTOR SHALL VERIFY ACTUAL BREAKER POSITION PRIOR TO BID. BREAKER POSITION SHALL BE RE-USED. PANEL M1 IS MANUFACTURED BY WESTINGHOUSE. PROVIDE A NEW 15 AMP 3 POLE BREAKER IN PANEL M1 TO MATCH EXISTING WITH AN EQUIVALENT AIC RATING. PROVIDE NEW CONDUCTORS (3 #12 THHN-2 CONDUCTORS AND 1 # 12 GROUND) IN EXISTING CONDUIT AND EXTEND CONDUIT AS REQUIRED TO MATCH EXISTING FOR NEW LOCATION.
5. PROVIDE NEW 1" EMT CONDUIT WITH (2 #4 THHN-2 CONDUCTORS WITH A #4 GND) TO EXISTING PANEL CP2.
6. NEW 1" CONDUIT FOR NEW BOILERS. APPROXIMATE ROUTE SHOWN. USE PREVIOUS BOILER CIRCUIT CONDUIT ROUTE FOR THE NEW CONDUIT.
7. PROVIDE A NEW 30 AMP SINGLE POLE BREAKER TO MATCH EXISTING MANUFACTURER WITH AN EQUIVALENT AIC RATING FOR THE NEW BOILERS. FIELD CONFIRM EXISTING CONDITIONS.
8. PROVIDE A NEW 2-POLE CONTACT BLOCK ON THE EXISTING PUSHBUTTON FOR THE NEW BOILERS AND CIRCUIT THE BOILER SHUT DOWN AS SHOWN IN DETAIL 1/E1.1.

VAN BOERUM
& FRANK
ASSOCIATES INC.
CONSULTING ENGINEERS

330 SOUTH 300 EAST
SALT LAKE CITY, UT 84111
801.530.3148 ofc
801.530.3150 fax
http://www.vbfa.com

REGISTERED PROFESSIONAL ENGINEER
No. 5246941
STAN W. JOHNS
07/07/10
STATE OF UTAH

Original drawings remain the property of the Engineer and as such the Engineer retains total ownership and control. The design represented by these drawings are sold to the client for a one time use, unless otherwise agreed upon in writing by the Engineer.
© Van Boerum & Frank Assoc., 2010

CANNON HEALTH BUILDING
BOILER REPLACEMENT
288 NORTH 1460 WEST SALT LAKE CITY, 84116

REVISIONS

VBFA PROJECT #:	10209
CHECKED BY:	Sjohns/Rvanvoast
DRAWN BY:	Ejuarez
CURRENT/BID DATE:	07/07/10

SHEET CONTENTS
PENTHOUSE - EAST ELECTRICAL PLAN LARGE SCALE BOILER ROOM PLANS

E1.1