ROOSEVELT EDUCATION CENTER
BOILER REPLACEMENT

DFCM PROJECT NUMBER: 07189770

State of Utah–Department of Administrative Services

DIVISION OF FACILITIES CONSTRUCTION
AND MANAGEMENT

4110 State Office Building/Salt Lake City, Utah 84114/538–3018

PREPARED BY

Mechanical
Consulting
Engineers
Cunning & Associates

SHEET INDEX

SHEET	SHEET
MD1.0	MECHANICAL PIPING DEMOLITION PLAN
M0.1	MECHANICAL SCHEDULES
M1.0	MECHANICAL PIPING REMODEL PLAN
M3.1	HEATING WATER DEMOLITION / REMODEL DIAGRAMS
M4.1	LARGE SCALE MECHANICAL PLANS
ME1.1	MECHANICAL CONTROLS

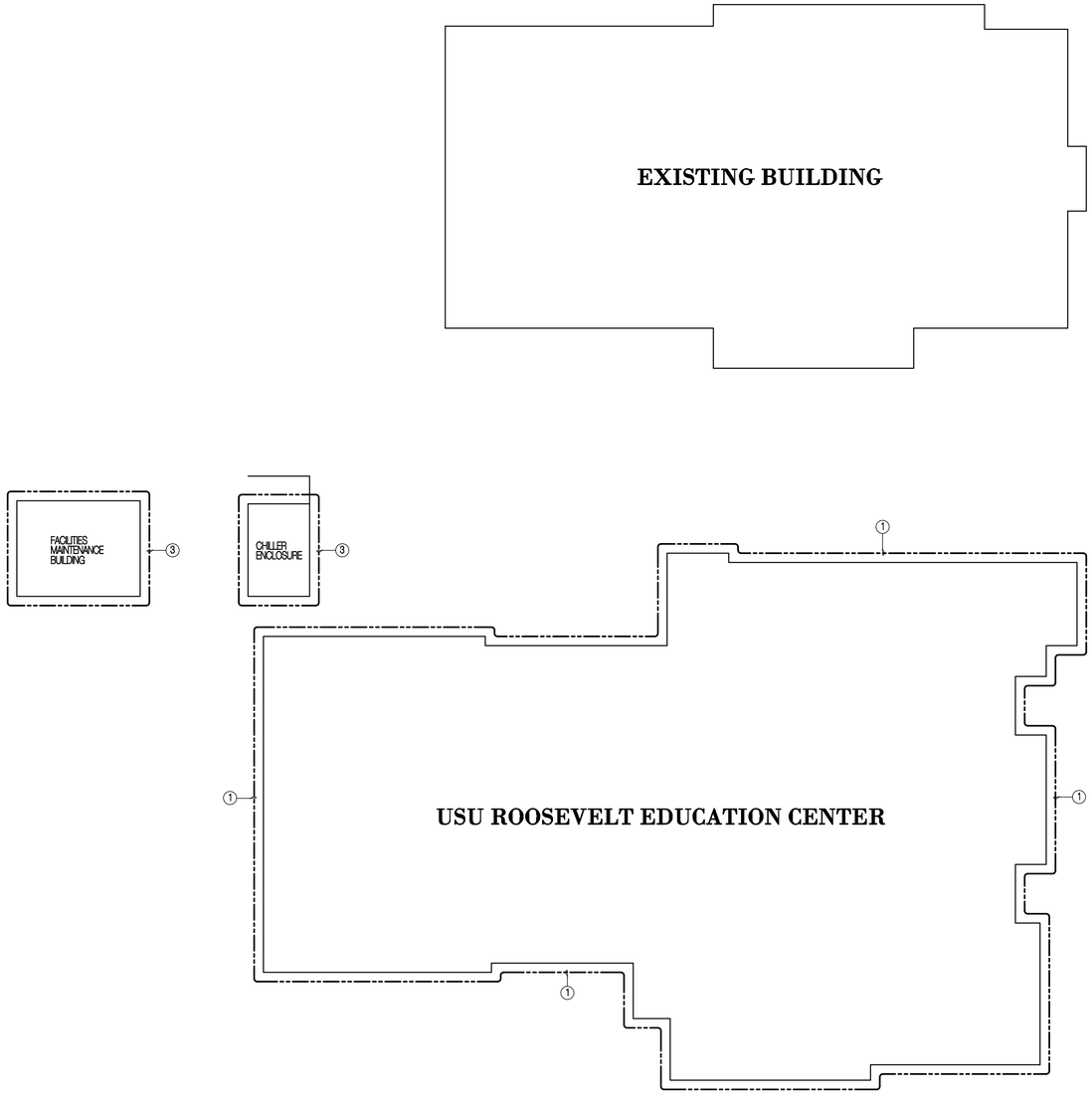

OVERALL PROJECT WORK PLAN

SCALE 1" = 20'-0"

NORTH

DRAWING NOTES

1. PROJECT WORK AREA, SEE CONTRACT DRAWINGS AND SPECIFICATIONS FOR REQUIRED REMODEL WORK IN THE BUILDING.
2. PROPOSED PROJECT STAGING AREA INSIDE CHILLER ENCLOSURE. CONTRACTOR TO COORDINATE STAGING OF PIPING, VALVES, AND ACCESSORIES WITHIN CHILLER ENCLOSURE AREA WITH OWNERS FACILITIES PERSONNEL. STAGING OF MAJOR EQUIPMENT SUCH AS BOILERS, AND CONTROL PANELS SUBJECT TO DAMAGE BY INCLEMENT WEATHER SHALL BE DONE IN THE FACILITIES MAINTENANCE BUILDING. COORDINATE SMALL STAGING SPACE WITHIN BUILDING WITH OWNERS PERSONNEL.
3. PROPOSED PROJECT MEETING AREA INSIDE FACILITIES MAINTENANCE BUILDING. COORDINATE SMALL MEETING SPACE WITHIN BUILDING WITH OWNERS FACILITIES PERSONNEL.

SYMBOL LEGEND AND ABBREVIATIONS

CHWS	CHILLED WATER SUPPLY		BUTTERFLY VALVE
CHWR	CHILLED WATER RETURN		STRAINER
HWS	HEATING WATER SUPPLY		3-WAY CONTROL VALVE
HWR	HEATING WATER RETURN		CHECK VALVE
	ELBOW IN PIPE		PRESSURE GAUGE
	TEE IN PIPE		THERMOMETER
	DROP IN PIPE	(N)	NEW
	RISE IN PIPE	(E)	EXISTING
	BALL VALVE		DENOTES ITEMS TO BE REMOVED
	UNION		PETES PLUG
	BALANCE VALVE		REDUCER
			2-WAY CONTROL VALVE

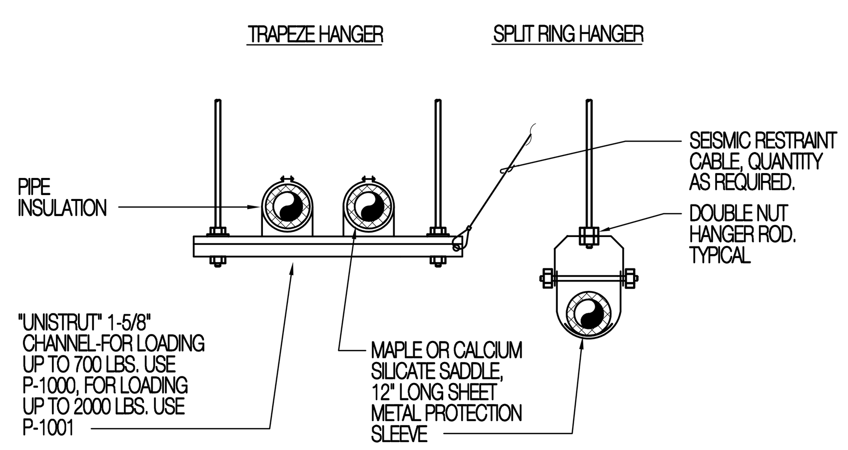

PIPE SIZE	MAX. SPACING	PIPE LOAD WEIGHT/FT. TOTAL	ROD SIZE
1" AND SMALLER	6	2.5/20	3/8"
1-1/4" - 2"	10	6/60	3/8"
2-1/2" - 4"	12	20/240	5/8"
5" - 8"	16	50/800	7/8"
10" - 12"	20	100/2000	7/8"

HANGERS SIZES AND SPACING ARE FOR SINGLE PIPES. HANGER ROD LOADING FOR TRAPEZE HANGERS SHALL NOT EXCEED THE TOTAL LOADING INDICATED. IF SMALLER ROD SIZE IS USED, DECREASE MAXIMUM SPACING SO THAT TOTAL LOADING IS NOT EXCEEDED.

4/M0.1 PIPE HANGER DETAIL
SCALE: NONE

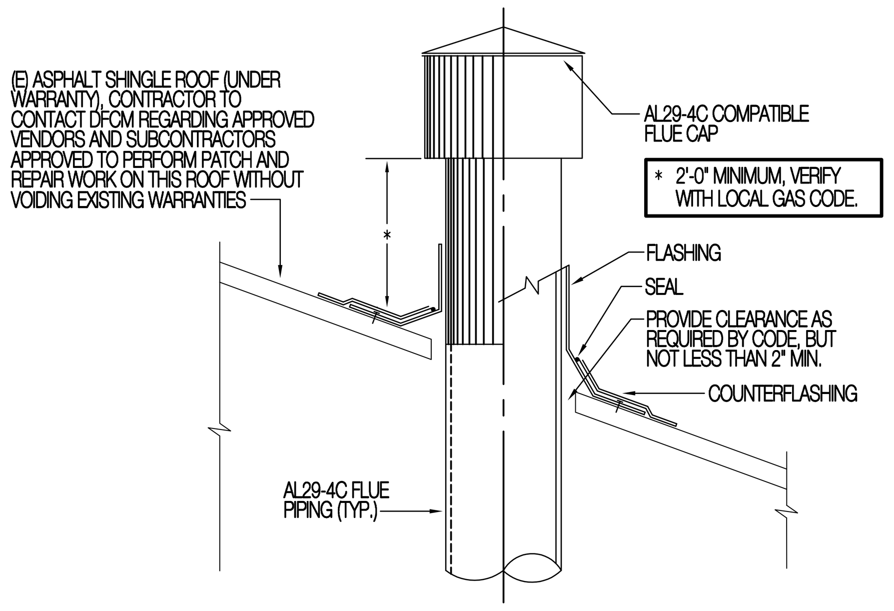

5/M0.1 NEW FLUE THRU ROOF DETAIL
SCALE: NONE

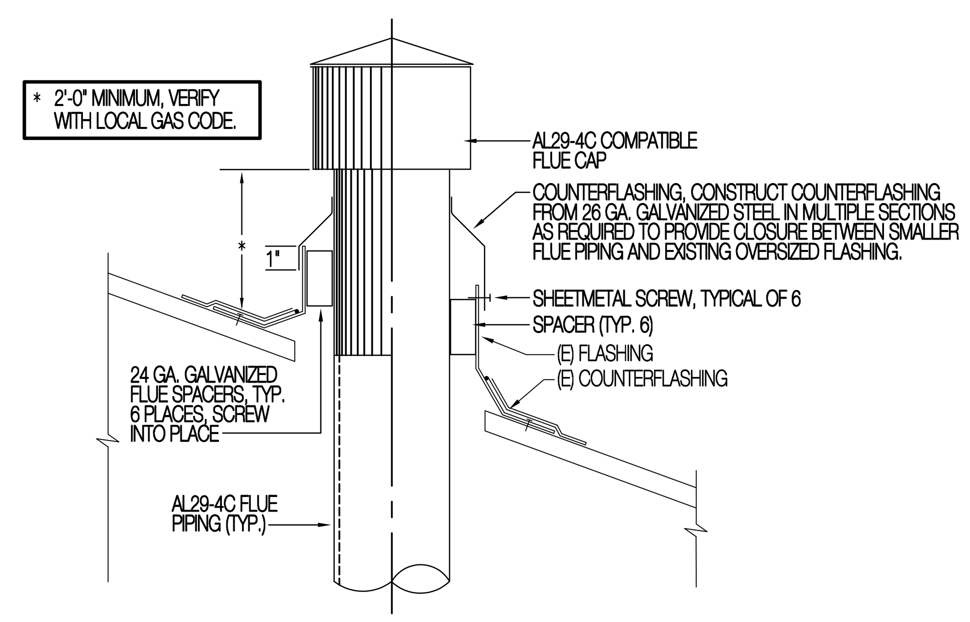

5/M0.1 MODIFICATION OF EXISTING FLASHING
SCALE: NONE

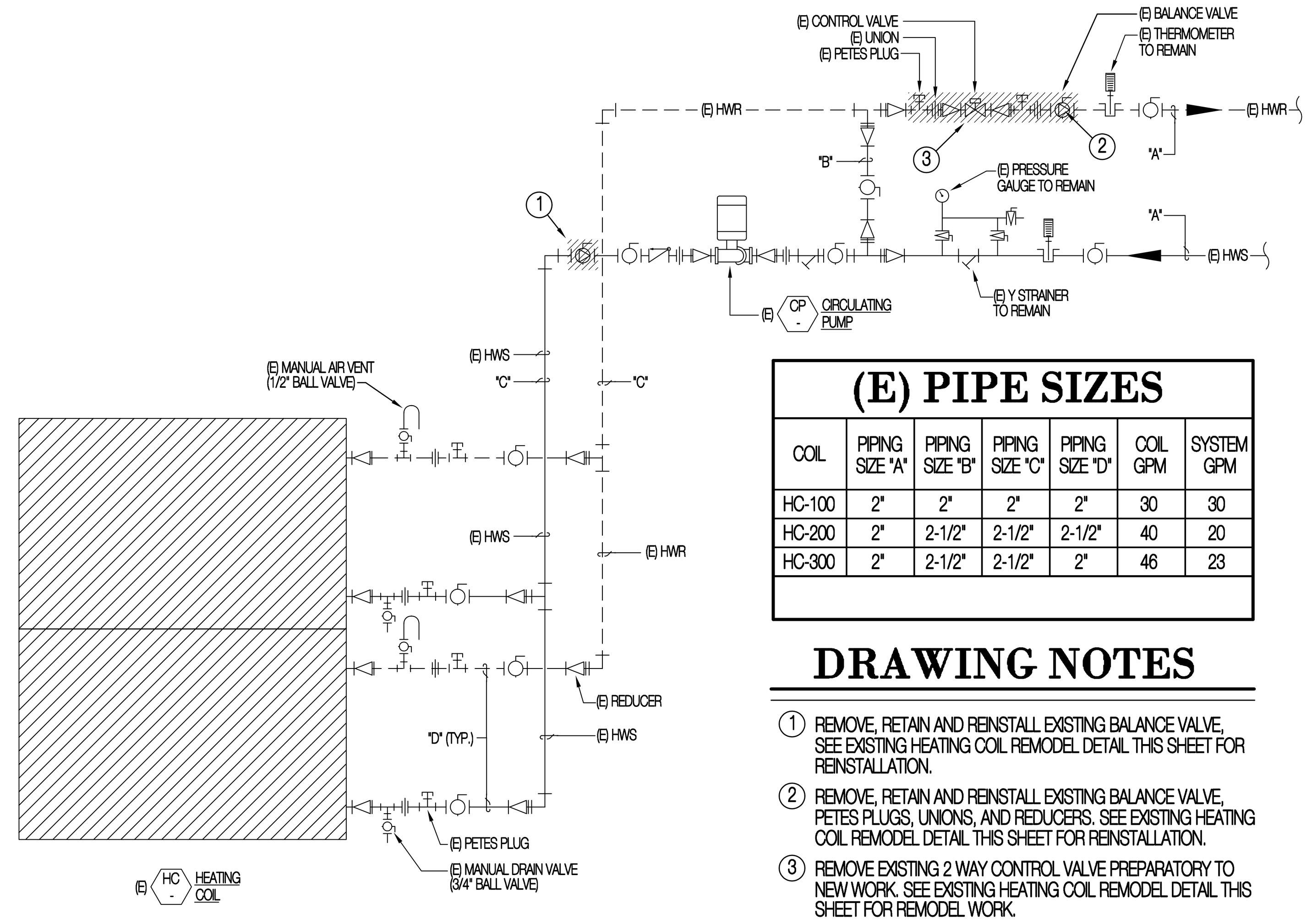

(E) PIPE SIZES

COIL	PIPING SIZE "A"	PIPING SIZE "B"	PIPING SIZE "C"	PIPING SIZE "D"	COIL GPM	SYSTEM GPM
HC-100	2"	2"	2"	2"	30	30
HC-200	2"	2-1/2"	2-1/2"	2-1/2"	40	20
HC-300	2"	2-1/2"	2-1/2"	2"	46	23

DRAWING NOTES

1. REMOVE, RETAIN AND REINSTALL EXISTING BALANCE VALVE, SEE EXISTING HEATING COIL REMODEL DETAIL THIS SHEET FOR REINSTALLATION.
2. REMOVE, RETAIN AND REINSTALL EXISTING BALANCE VALVE, PETES PLUGS, UNIONS, AND REDUCERS. SEE EXISTING HEATING COIL REMODEL DETAIL THIS SHEET FOR REINSTALLATION.
3. REMOVE EXISTING 2 WAY CONTROL VALVE PREPARATORY TO NEW WORK. SEE EXISTING HEATING COIL REMODEL DETAIL THIS SHEET FOR REMODEL WORK.

1/M0.1 (E) HEATING COIL PIPING DEMOLITION DETAIL
SCALE: NONE
NOTE: TYPICAL OF AIR HANDLER HEATING COILS HC-100 THRU 300. HC-300 SHOWN, HC-100 AND 200 SIMILAR EXCEPT HC-100 AND 200 HAVE ONLY ONE COIL SECTION PER AIR HANDLER IN LIEU OF THE TWO SECTIONS SHOWN.

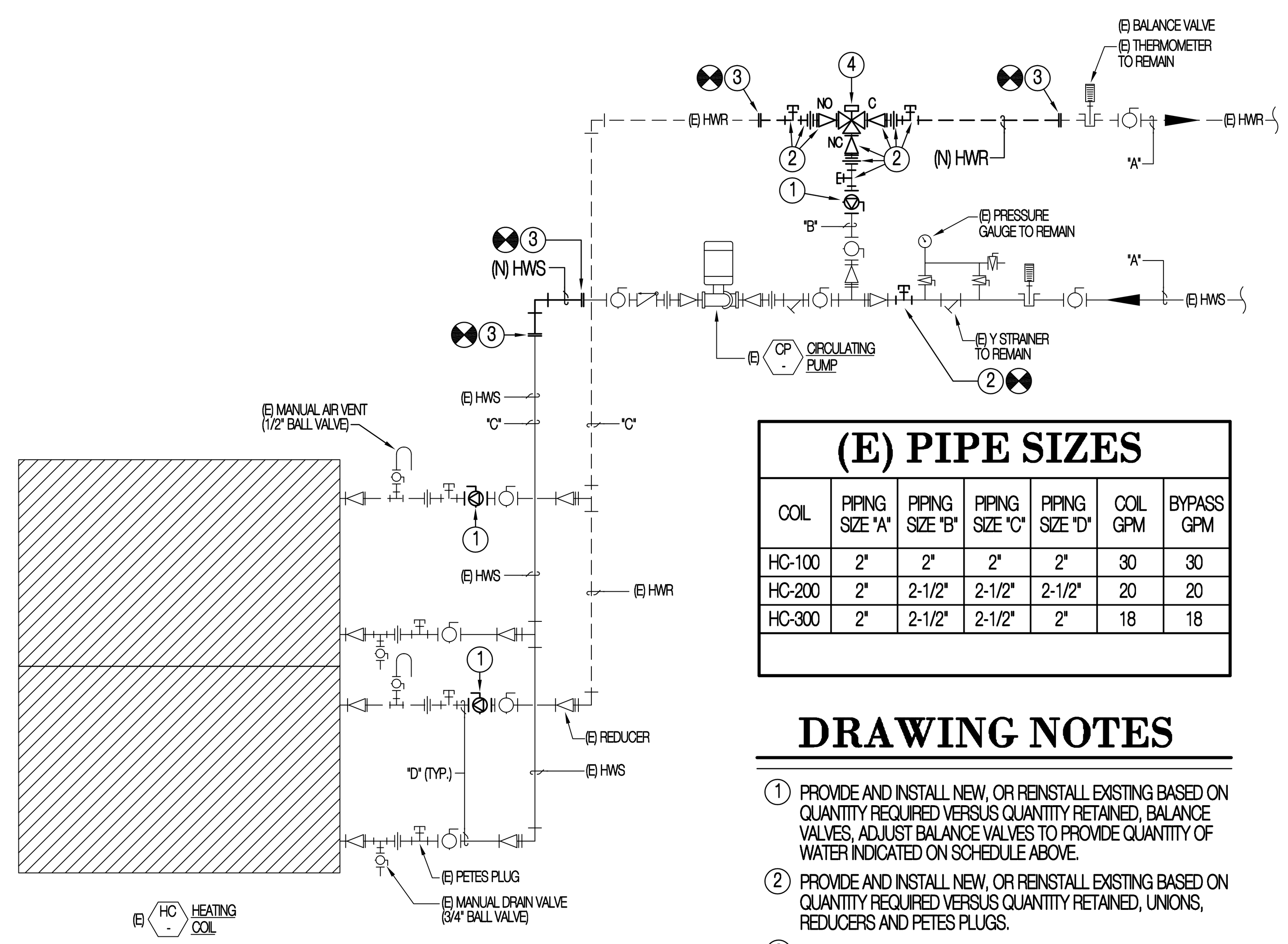

(E) PIPE SIZES

COIL	PIPING SIZE "A"	PIPING SIZE "B"	PIPING SIZE "C"	PIPING SIZE "D"	COIL GPM	BYPASS GPM
HC-100	2"	2"	2"	2"	30	30
HC-200	2"	2-1/2"	2-1/2"	2-1/2"	20	20
HC-300	2"	2-1/2"	2-1/2"	2"	18	18

DRAWING NOTES

1. PROVIDE AND INSTALL NEW, OR REINSTALL EXISTING BASED ON QUANTITY REQUIRED VERSUS QUANTITY RETAINED, BALANCE VALVES, ADJUST BALANCE VALVES TO PROVIDE QUANTITY OF WATER INDICATED ON SCHEDULE ABOVE.
2. PROVIDE AND INSTALL NEW, OR REINSTALL EXISTING BASED ON QUANTITY REQUIRED VERSUS QUANTITY RETAINED, UNIONS, REDUCERS AND PETES PLUGS.
3. CONNECT NEW PIPING TO EXISTING AND EXTEND AS INDICATED.
4. PROVIDE AND INSTALL NEW 3 WAY CONTROL VALVE, SEE CONTROL VALVE SCHEDULE SHEET ME1.0 FOR ADDITIONAL INFORMATION.

2/M0.1 (E) HEATING COIL PIPING REMODEL DETAIL
SCALE: NONE
NOTE: TYPICAL OF AIR HANDLER HEATING COILS HC-100 THRU 300. HC-300 SHOWN, HC-100 AND 200 SIMILAR EXCEPT HC-100 AND 200 HAVE ONLY ONE COIL SECTION PER AIR HANDLER IN LIEU OF THE TWO SECTIONS SHOWN.

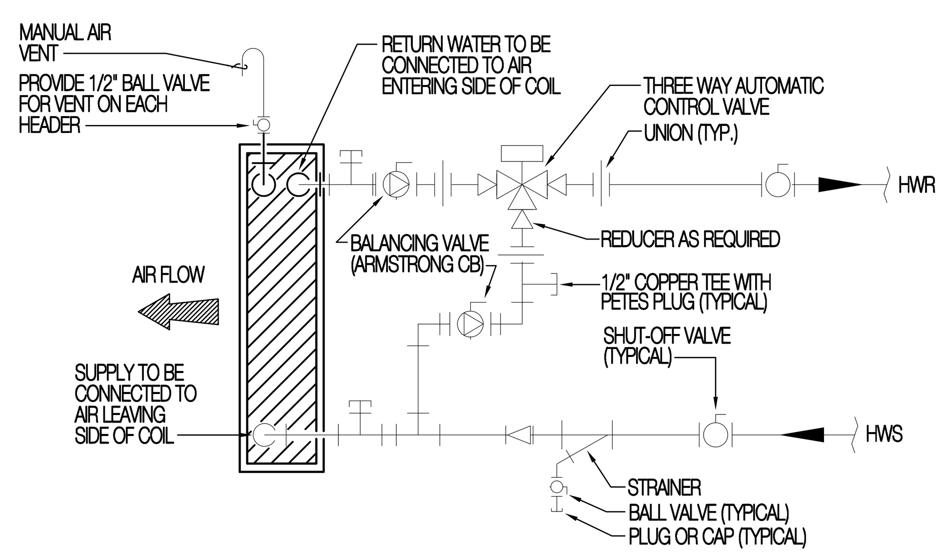

3/M0.1 3-WAY VAV REHEAT COIL PIPING DETAIL
SCALE: NONE
NOTE: TYPICAL OF ALL NEW 3-WAY VALVE INSTALLATIONS ON VAVR BOXES; VAVR-102A, 109A, 117A, 117B, 123A, 123B, 124, 128, 145, AND 146. IN ADDITION CONTRACTOR TO RE-PIPE EXISTING VAVR BOXES 102B, 120, 125, AND 147 TO MATCH DETAIL.

GAS FIRED HEATING WATER BOILER

SYMBOL	INPUT MBTU/HR.	OUTPUT MBTU/HR.	EFF (%)	GPM	ENTERING WATER TEMP.	LEAVING WATER TEMP.	ELECTRICAL REQ. VOLTS	PH.	HZ.	AERCO MODEL	REMARKS
B-1	2,000	1,515	86	120	180°F	150°F	230	1	60	BMK-2.0 GWB	PRIMARY
B-2	2,000	1,515	86	120	180°F	150°F	230	1	60	BMK-2.0 GWB	STANDBY

SEE SPECIFICATION SECTION 15545 FOR CLEANING REQUIREMENTS

XISTING VAVR BOX REHEAT COIL REBALANCE SCHEDULE

	MAX AIRFLOW HTG. CFM	HEATING C HEATING CAPACITY @ HTG. CFM (BTU/HR.)	COIL EWT°F	COIL LWT°F	COIL EAT°F	COIL LAT°F	COIL GPM	REMARKS
	2,990	91,300	180	150	90	125	6.3	-
VAVR-102B	2,990	91,300	180	150	90	125	6.3	-
VAVR-104	365	6,610	180	150	90	111	0.5	-
VAVR-105	365	6,610	180	150	90	111	0.5	-
VAVR-106A	275	5,570	180	150	90	114	0.5	-
VAVR-106B	275	5,570	180	150	90	114	0.5	-
VAVR-107	105	2,100	180	150	90	119	0.5	-
VAVR-108	105	2,100	180	150	90	119	0.5	-
VAVR-109A	420	10,100	180	150	90	118	0.8	-
VAVR-109B	420	10,100	180	150	90	118	0.8	-
VAVR-112	100	2,100	180	150	90	119	0.5	-
VAVR-113	100	2,100	180	150	90	119	0.5	-
VAVR-117A	425	10,175	180	150	90	118	0.8	-
VAVR-117B	425	10,175	180	150	90	118	0.8	-
VAVR-120	105	2,100	180	150	90	119	0.5	-
VAVR-123A	545	12,680	180	150	73	100	1.0	-
VAVR-123B	545	12,680	180	150	73	100	1.0	-
VAVR-124	330	11,000	180	150	73	110	0.9	-
VAVR-125	605	16,130	180	150	73	103	1.3	-
VAVR-126	270	7,115	180	150	73	103	0.6	-
VAVR-128	195	4,760	180	150	73	100	0.5	-
VAVR-130	195	4,760	180	150	73	100	0.5	-
VAVR-131	355	8,390	180	150	73	100	0.9	-
VAVR-132	100	2,100	180	150	73	100	0.5	-
VAVR-133	110	2,100	180	150	73	100	0.5	-
VAVR-135	115	2,100	180	150	73	100	0.5	-
VAVR-136	195	4,760	180	150	73	100	0.5	-
VAVR-138	195	4,760	180	150	73	100	0.5	-
VAVR-140	270	7,115	180	150	73	103	0.6	-
VAVR-141	105	91,300	180	150	73	125	0.5	-
VAVR-144	340	9,540	180	150	73	105	0.8	-
VAVR-145	340	9,540	180	150	73	105	0.8	-
VAVR-146	340	9,540	180	150	73	105	0.8	-
VAVR-147	675	25,400	180	150	73	115	1.8	-
VAVR-148	135	2,250	180	150	73	102	0.5	-
VAVR-150A	270	8,250	180	150	73	107	0.7	-
VAVR-150B	270	8,250	180	150	73	107	0.7	-
VAVR-150C	270	8,250	180	150	73	107	0.7	-
VAVR-150D	270	8,250	180	150	73	107	0.7	-
VAVR-150E	300	8,250	180	150	73	107	0.7	-
VAVR-150F	300	8,250	180	150	73	107	0.7	-

EXISTING HEATING COIL REBALANCE SCHEDULE

SYMBOL	NOMINAL CFM	ENTERING AIR	LEAVING AIR	ENTERING WATER TEMP.	LEAVING WATER TEMP.	TOTAL CAPACITY (BTUH)	TOTAL GPM	COIL PER SECT.	MAX. FLUID PRESS. DROP (FT. WC.)	APPROX. SIZE (W"xH')	TOTAL SQ. FT.	MAX. FACE VEL.	MAX. AIR PRESSURE DROP (IN. WC.)	REMARKS
HC-100	10,000	52°F	99°F	180°F	150°F	433,290	30	1	2.3	45"x65"	20.0	500	0.1"	-
HC-200	17,200	70°F	95°F	180°F	137°F	378,290	20	1	2.2	100"x60"	41.67	412	0.05"	-
HC-300	21,000	50°F	74°F	180°F	122°F	464,420	18	2	0.55	34.5"x88	42.17	498	0.07"	-

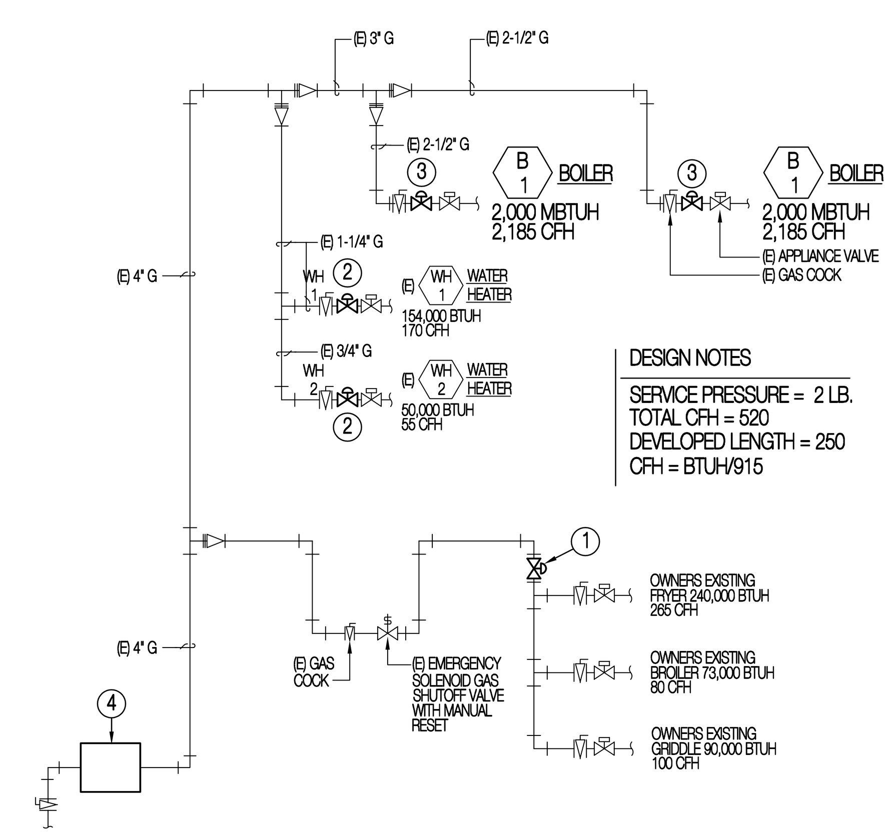

DESIGN NOTES
SERVICE PRESSURE = 2 LB.
TOTAL CFH = 520
DEVELOPED LENGTH = 250
CFH = BTUH/915

DRAWING NOTES

1. PROVIDE AND INSTALL NEW 2LB. TO 4 OZ. PRESSURE REGULATOR WITH VENT LIMITER IN VERTICAL DROP OF GAS LINE SERVING OWNERS COOKING APPLIANCES IN SNACK BAR 107.
2. PROVIDE AND INSTALL NEW 2LB. TO 4 OZ. PRESSURE REGULATOR WITH VENT LIMITER IN EXISTING GAS PIPING SERVING EXISTING WATER HEATERS.
3. PROVIDE AND INSTALL NEW 2LB. TO 4 OZ. PRESSURE REGULATOR WITH VENT LIMITER IN EXISTING GAS PIPING SERVING NEW BOILERS.
4. PROVIDE ALL MATERIALS AND PERFORM ALL LABOR REQUIRED TO CONVERT EXISTING 4 OZ. GAS METER TO 2 LB. GAS METER.

REVISED GAS FLOW DIAGRAM
SCALE: NONE

Revisions	Date

Seal: LICENSED PROFESSIONAL ENGINEER No. 4947211 NORMAN CUNNING STATE OF UTAH

Mechanical Consultant:
Mechanical Consulting Engineers
Cunning & Associates
591 No. Main Clearfield, Ut. 84015 Ph: (801)-776-4005
Email: cassoc@xmission.com Fax: (801)-779-0939

Client: THE GREAT SEAL OF THE STATE OF UTAH 1896
State of Utah–Department of Administrative Services
DIVISION OF FACILITIES CONSTRUCTION AND MANAGEMENT
4110 State Office Building/Salt Lake City, Utah 84114/538-3018

Project Name
ROOSEVELT EDUCATION CENTER BOILER REPLACEMENT ROOSEVELT, UTAH 84066

Project Number: 07189770
Issue Date: 10.30.07

Drawing Title: MECHANICAL SCHEDULES AND DETAILS

Sheet Number: M0.1

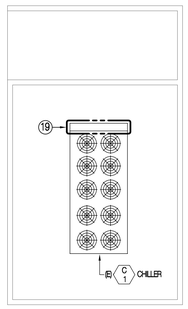

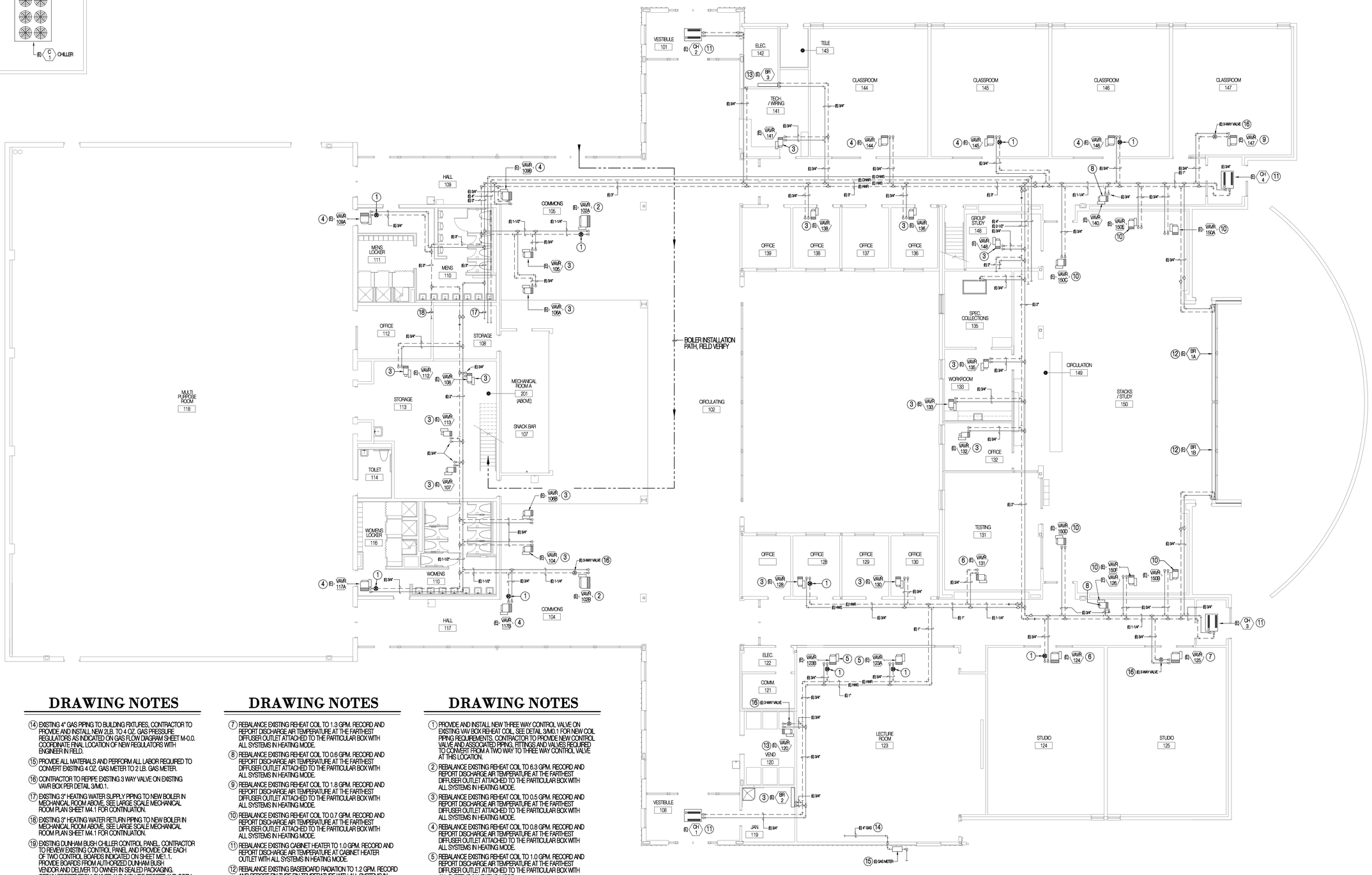

DRAWING NOTES

14. EXISTING 4" GAS PIPING TO BUILDING FIXTURES, CONTRACTOR TO PROVIDE AND INSTALL NEW 2LB. TO 4 OZ. GAS PRESSURE REGULATORS AS INDICATED ON GAS FLOW DIAGRAM SHEET M-0.0. COORDINATE FINAL LOCATION OF NEW REGULATORS WITH ENGINEER IN FIELD.
15. PROVIDE ALL MATERIALS AND PERFORM ALL LABOR REQUIRED TO CONVERT EXISTING 4 OZ. GAS METER TO 2 LB. GAS METER.
16. CONTRACTOR TO REPIPE EXISTING 3 WAY VALVE ON EXISTING VAVR BOX PER DETAIL 3/M0.1.
17. EXISTING 3" HEATING WATER SUPPLY PIPING TO NEW BOILER IN MECHANICAL ROOM ABOVE, SEE LARGE SCALE MECHANICAL ROOM PLAN SHEET M4.1 FOR CONTINUATION.
18. EXISTING 3" HEATING WATER RETURN PIPING TO NEW BOILER IN MECHANICAL ROOM ABOVE, SEE LARGE SCALE MECHANICAL ROOM PLAN SHEET M4.1 FOR CONTINUATION.
19. EXISTING DUNHAM BUSH CHILLER CONTROL PANEL. CONTRACTOR TO REVIEW EXISTING CONTROL PANEL AND PROVIDE ONE EACH OF TWO CONTROL BOARDS INDICATED ON SHEET ME1.1.. PROVIDE BOARDS FROM AUTHORIZED DUNHAM BUSH VENDOR AND DELIVER TO OWNER IN SEALED PACKAGING. OBTAIN RECEIPT FROM OWNER AND INCLUDE RECEIPT AND COPY OF BOARD SHIPPING INVOICE IN O&M MANUALS.

DRAWING NOTES

7. REBALANCE EXISTING REHEAT COIL TO 1.3 GPM. RECORD AND REPORT DISCHARGE AIR TEMPERATURE AT THE FARTHEST DIFFUSER OUTLET ATTACHED TO THE PARTICULAR BOX WITH ALL SYSTEMS IN HEATING MODE.
8. REBALANCE EXISTING REHEAT COIL TO 0.6 GPM. RECORD AND REPORT DISCHARGE AIR TEMPERATURE AT THE FARTHEST DIFFUSER OUTLET ATTACHED TO THE PARTICULAR BOX WITH ALL SYSTEMS IN HEATING MODE.
9. REBALANCE EXISTING REHEAT COIL TO 1.8 GPM. RECORD AND REPORT DISCHARGE AIR TEMPERATURE AT THE FARTHEST DIFFUSER OUTLET ATTACHED TO THE PARTICULAR BOX WITH ALL SYSTEMS IN HEATING MODE.
10. REBALANCE EXISTING REHEAT COIL TO 0.7 GPM. RECORD AND REPORT DISCHARGE AIR TEMPERATURE AT THE FARTHEST DIFFUSER OUTLET ATTACHED TO THE PARTICULAR BOX WITH ALL SYSTEMS IN HEATING MODE.
11. REBALANCE EXISTING CABINET HEATER TO 1.0 GPM. RECORD AND REPORT DISCHARGE AIR TEMPERATURE AT CABINET HEATER OUTLET WITH ALL SYSTEMS IN HEATING MODE.
12. REBALANCE EXISTING BASEBOARD RADIATION TO 1.2 GPM. RECORD AND REPORT FIN TUBE FIN TEMPERATURE WITH ALL SYSTEMS IN HEATING MODE.
13. REBALANCE EXISTING BASEBOARD RADIATION TO 0.5 GPM. RECORD AND REPORT FIN TUBE FIN TEMPERATURE WITH ALL SYSTEMS IN HEATING MODE.

DRAWING NOTES

1. PROVIDE AND INSTALL NEW THREE WAY CONTROL VALVE ON EXISTING VAV BOX REHEAT COIL, SEE DETAIL 3/M0.1 FOR NEW COIL PIPING REQUIREMENTS. CONTRACTOR TO PROVIDE NEW CONTROL VALVE AND ASSOCIATED PIPING, FITINGS AND VALVES REQUIRED TO CONVERT FROM A TWO WAY TO THREE WAY CONTROL VALVE AT THIS LOCATION.
2. REBALANCE EXISTING REHEAT COIL TO 6.3 GPM. RECORD AND REPORT DISCHARGE AIR TEMPERATURE AT THE FARTHEST DIFFUSER OUTLET ATTACHED TO THE PARTICULAR BOX WITH ALL SYSTEMS IN HEATING MODE.
3. REBALANCE EXISTING REHEAT COIL TO 0.5 GPM. RECORD AND REPORT DISCHARGE AIR TEMPERATURE AT THE FARTHEST DIFFUSER OUTLET ATTACHED TO THE PARTICULAR BOX WITH ALL SYSTEMS IN HEATING MODE.
4. REBALANCE EXISTING REHEAT COIL TO 0.8 GPM. RECORD AND REPORT DISCHARGE AIR TEMPERATURE AT THE FARTHEST DIFFUSER OUTLET ATTACHED TO THE PARTICULAR BOX WITH ALL SYSTEMS IN HEATING MODE.
5. REBALANCE EXISTING REHEAT COIL TO 1.0 GPM. RECORD AND REPORT DISCHARGE AIR TEMPERATURE AT THE FARTHEST DIFFUSER OUTLET ATTACHED TO THE PARTICULAR BOX WITH ALL SYSTEMS IN HEATING MODE.
6. REBALANCE EXISTING REHEAT COIL TO 0.9 GPM. RECORD AND REPORT DISCHARGE AIR TEMPERATURE AT THE FARTHEST DIFFUSER OUTLET ATTACHED TO THE PARTICULAR BOX WITH ALL SYSTEMS IN HEATING MODE.

MECHANICAL PIPING REMODEL PLAN

SCALE: 1/8" = 1'-0"

Revisions	Date

Seal

LICENSED PROFESSIONAL ENGINEER
No. 4947211
NORMAN CUNNING
STATE OF IOWA

Mechanical Consultant:

Mechanical Consulting Engineers
Cunning & Associates
201 No. Main Clearfield, Ut. 84015 Ph (801)776-0825
Email: cassoc@xmission.com Fax (801)776-0830

Client

THE GREAT SEAL OF THE STATE OF UTAH 1896

State of Utah-Department of Administrative Services
DIVISION OF FACILITIES CONSTRUCTION AND MANAGEMENT
4110 State Office Building/Salt Lake City, Utah 84114-1850

Project Name

ROOSEVELT EDUCATION CENTER BOILER REPLACEMENT ROOSEVELT, UTAH 84066

Project Number	Issue Date
07189770	10.30.07

Drawing Title

MECHANICAL PIPING REMODEL PLANS

Sheet Number

M1.0

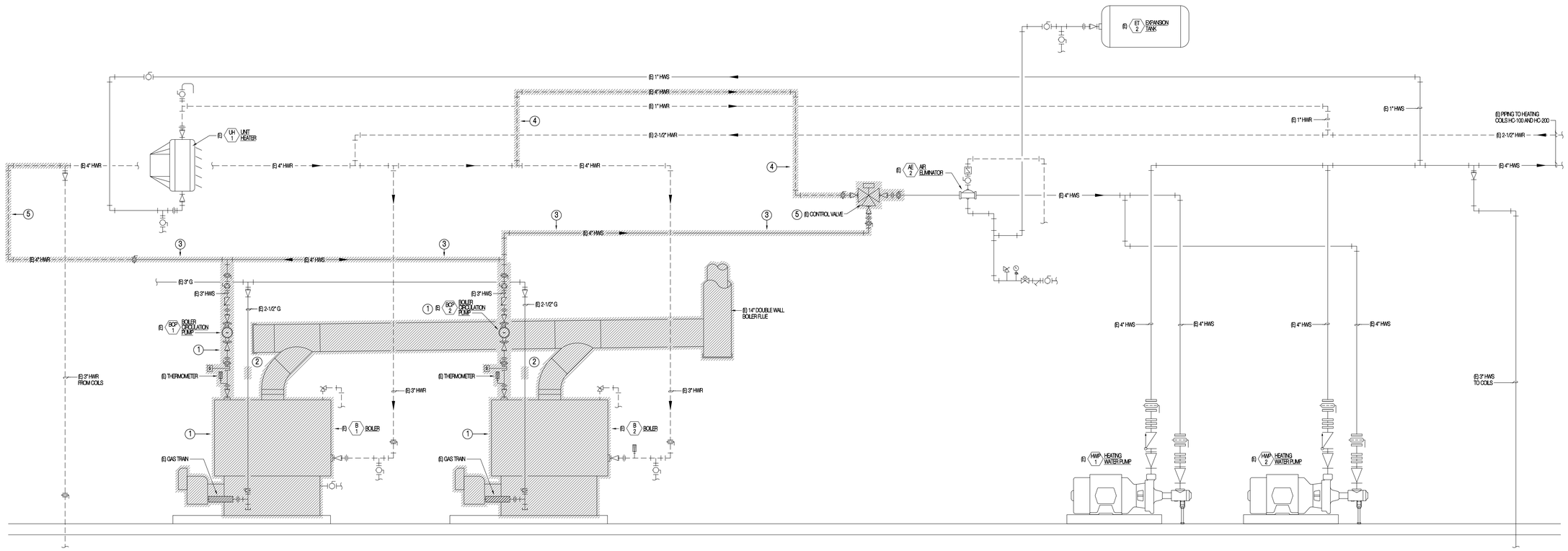

HEATING WATER PIPING DEMOLITION DIAGRAM

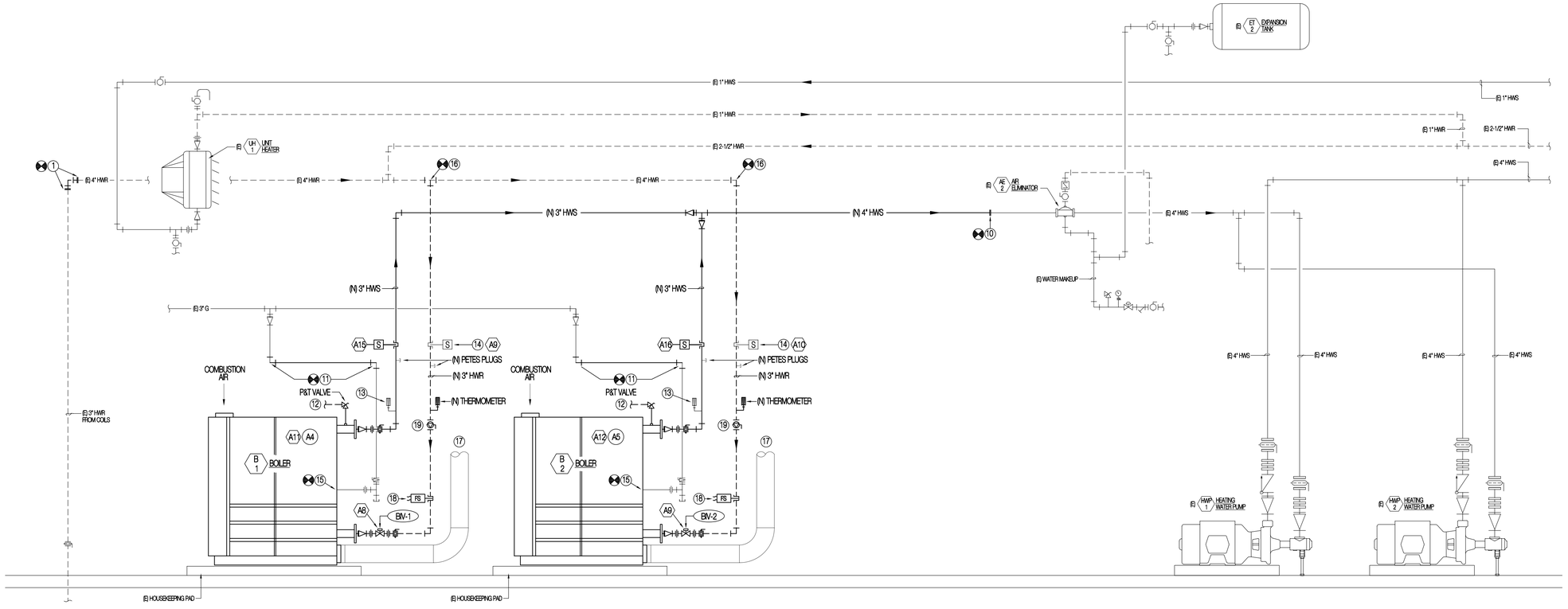

HEATING WATER PIPING REMODEL DIAGRAM

SCALE 1/8" = 1'-0"

DRAWING NOTES

DEMOLITION NOTES

1. REMOVE EXISTING BOILERS COMPLETE. REMOVAL SHALL INCLUDE BOILER, EXISTING ACCESSORIES, BOILER CONTROLS, CIRCULATION PUMPS, PIPING, FITTINGS AND FLUES AS REQUIRED TO REMOVE EXISTING BOILERS.
2. REMOVE PORTIONS OF EXISTING GAS PIPING SERVING BOILERS AS REQUIRED TO OFFSET PIPING FOR CONNECTION AT NEW BOILERS. SEE REMODEL PLAN THIS SHEET FOR REQUIRED REMODEL WORK.
3. REMOVE PORTIONS OF EXISTING HEATING WATER SUPPLY PIPING PREPARATORY TO NEW WORK.
4. REMOVE PORTIONS OF EXISTING HEATING WATER RETURN PIPING PREPARATORY TO NEW WORK.
5. REMOVE EXISTING CONTROL VALVE PREPARATORY TO NEW WORK.

REMODEL NOTES

10. CONNECT NEW 4" HEATING WATER SUPPLY PIPING TO EXISTING AND EXTEND AS INDICATED.
11. CONNECT NEW 2-1/2" GAS PIPING TO EXISTING AND OFFSET AS REQUIRED TO CONNECT TO NEW BOILERS.
12. P&T VALVE LINE SIZE COPPER DRAIN PIPING TO NEAREST FLOOR DRAIN. SUPPORT DRAIN PIPING WITH UNISTRUT ATTACHED SECURELY TO FLOOR.
13. RE-INSTALL EXISTING THERMOMETER.
14. RE-INSTALL EXISTING SENSOR. RECONNECT SENSOR TO EXISTING CONTROL SYSTEM AND PROVIDE PROGRAMMING TIME TO RE-DISPLAY CONTROL POINT ON EXISTING CONTROL SYSTEM.
15. RE-CONNECT EXISTING GAS PIPING DROP TO NEW BOILER. PROVIDE AND INSTALL ADDITIONAL OFFSETS, AND / OR REDUCERS TO ADAPT EXISTING DROPS TO NEW BOILERS.
16. CONNECT NEW 4" HEATING WATER RETURN PIPING TO EXISTING AND EXTEND AS INDICATED.
17. 8"Ø AL29-4C FLUE PIPING TO BUILDING EXTERIOR. SEE LARGE SCALE PIPING PLAN SHEET M4.1 FOR CONTINUATION.
18. PROVIDE AND INSTALL NEW FLOW SWITCH. SEE CONTROL DIAGRAMS, SHEET ME1.0 FOR ADDITIONAL INFORMATION.
19. PROVIDE AND INSTALL NEW CIRCUIT BALANCE VALVE IN BOILER HEATING WATER RETURN PIPING. ADJUST WATER FLOW THROUGH EACH BOILER TO 120 GPM.

Revisions	Date

Seal

LICENSED PROFESSIONAL ENGINEER
No. 4947211
NORMAN CUNNING
STATE OF IOWA

Mechanical Consultant:

Mechanical Consulting Engineers
Cunning & Associates
201 No. Main Clearfield, Ut. 84015 Ph (801)776-0825
Email: cannon@cuninglas.com Fax (801)776-0830

Client

THE GREAT SEAL OF THE STATE OF UTAH 1896

State of Utah-Department of Administrative Services
DIVISION OF FACILITIES CONSTRUCTION AND MANAGEMENT
4110 State Office Building/Salt Lake City, Utah 84114-1020

Project Name

ROOSEVELT EDUCATION CENTER
BOILER REPLACEMENT
ROOSEVELT, UTAH 84066

Project Number	Issue Date
07189770	10.30.07

Drawing Title

HEATING WATER DEMO./REMODEL DIAGRAMS

Sheet Number

M3.1

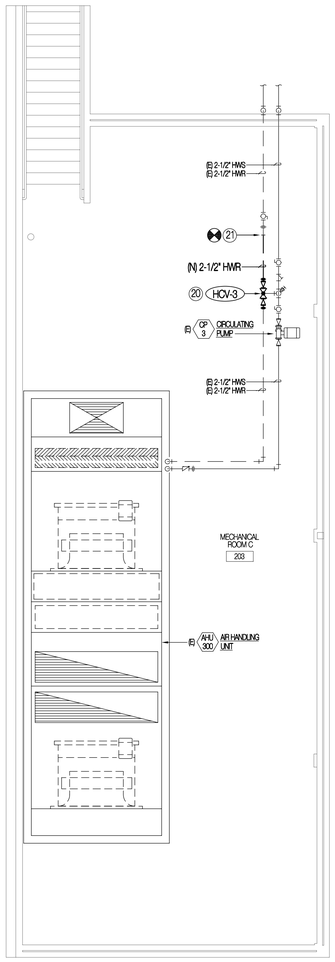

LARGE SCALE MECHANICAL ROOM PIPING REMODEL PLAN

SCALE 1/4" = 1'-0"

NORTH

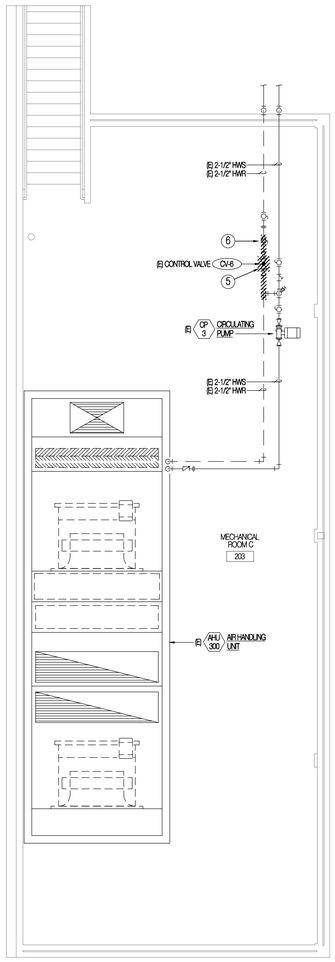

LARGE SCALE MECHANICAL ROOM PIPING DEMOLITION PLAN

SCALE 1/4" = 1'-0"

NORTH

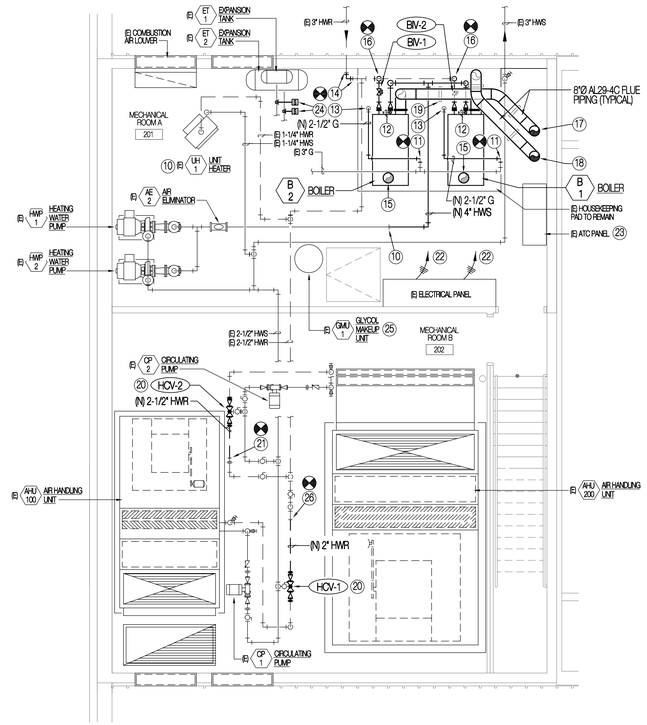

LARGE SCALE MECHANICAL ROOM PIPING REMODEL PLAN

SCALE 1/4" = 1'-0"

NORTH

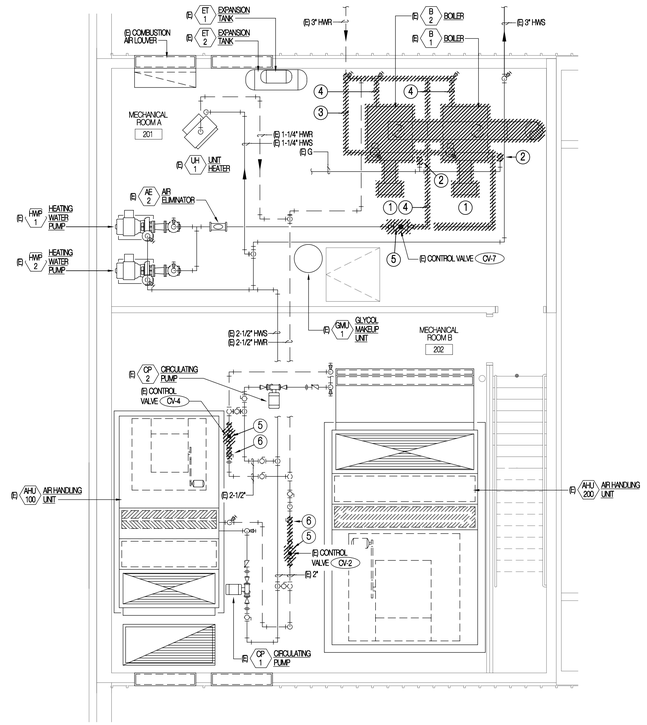

LARGE SCALE MECHANICAL ROOM PIPING DEMOLITION PLAN

SCALE 1/4" = 1'-0"

NORTH

DRAWING NOTES

(25) PROVIDE ALL MATERIALS AND PERFORM ALL LABOR REQUIRED TO TROUBLESHOOT AND REPAIR EXISTING GLYCOL MAKEUP UNIT. CONTRACTOR TO PROVIDE LINE ITEM PRICING FOR REPLACEMENT OF THE FOLLOWING COMPONENTS; MOTOR, PUMP, AND CONTROL PANEL. IN ADDITION PROVIDE LINE ITEM PRICING FOR 10 HOURS OF LABOR ASSOCIATED WITH GLYCOL MAKEUP UNIT REPAIR. CONTRACTOR TO COORDINATE REPAIR WITH ENGINEER IN FIELD AND PROVIDE WRITTEN REPORT REGARDING COMPONENTS RELACED AND HOURS EXPENED. CONTRACTOR SHALL BE PREPARED TO OFFER THE OWNER A CREDIT FOR COMPONENTS PRICED BUT NOT INSTALLED AND HOURS QUOTED BUT NOT EXPENDED.

(26) CONNECT NEW 2" HEATING WATER RETURN PIPING TO EXISTING AND EXTEND TO NEW THREE WAY VALVE. CONNECT PIPING AT THREE WAY VALVE WITH UNION AND DETAILED ACCESSORIES.

DRAWING NOTES

(15) BOILER COMBUSTION AIR INLET, DO NOT OBSTRUCT.

(16) CONNECT NEW 3" HEATING WATER RETURN PIPING TO EXISTING 4" HEADER AND EXTEND TO NEW BOILERS, SEE FLOW DRIAGRAM SHEET M3.0 FOR ADDITIONAL INFORMATION.

(17) RISE NEW 8"Ø AL29-4C FLUE PIPING AND EXTEND OUT EXISTING ROOF OPENING. PROVIDE AND INSTALL NEW ROOF FLASHING AND SEAL WATER TIGHT PER DETAIL 6/M0.1.

(18) RISE NEW 8"Ø AL29-4C FLUE PIPING AND EXTEND OUT NEW ROOF OPENING. PROVIDE AND INSTALL NEW ROOF FLASHING AND SEAL WATER TIGHT PER DETAIL 5/M0.1.

(19) FLUE SUPPORT, TYPICAL.

(20) PROVIDE AND INSTALL NEW THREE WAY CONTROL VALVE. SEE DETAILS 1 & 2/M0.1. REINSTALL EXISTING BALANCE VALVE IN BYPASS LINE OF NEW THREE WAY VALVE.

(21) CONNECT NEW 2-1/2" HEATING WATER RETURN PIPING TO EXISTING AND EXTEND TO NEW THREE WAY VALVE. CONNECT PIPING AT THREE WAY VALVE WITH UNION AND DETAILED ACCESSORIES.

(22) MODIFY EXISTING 120V/1Ø ELECTRICAL SERVICE AS REQUIRED TO SERVE NEW 208-230V/1Ø BOILERS. PROVIDE AND INSTALL NEW CIRCUIT BREAKERS, 2 POLE 20A DISCONNECT SWITCHES, CONDUIT, CONDUCTORS, RELAYS, AND ACCESSORIES. FIELD VERIFY EXISTING ELECTRICAL SERVICE AND INSTALL NEW PER THE LATEST EDITION OF THE NEC.

(23) ATC PANEL CONTAINING EXISTING JOHNSON CONTROLS METASYS N2 STYLE CONTROL SYSTEM. PROVIDE ALL MATERIALS AND PERFORM ALL LABOR REQUIRED TO EXPAND AND REVISE EXISTING ATC PANEL TO SERVE NEW BOILERS AND ADDITIONAL CONTROL POINTS. CONTRACTOR TO PROVIDE AND INSTALL ALL REQUIRED EXPANSION BOARDS, RELAYS, SUBCABINETS, CONDUIT, WIRING, AND ACCESSORIES. IN ADDITION PROVIDE PROGRAMMING TIME TO IMPLEMENT NEW CONTROL SEQUENCES INDICATED IN THE CONTRACT SPECIFICATIONS.

(24) PROVIDE AND INSTALL NEW PRESSURE SENSOR, SIMILAR TO DWYER MODEL 642-4 IN MAKEUP WATER FEED PIPING. PROVIDE TEE IN EXISTING LINE WITH SHUTOFF VALVE AND TERMINATE AT DDC PANEL IN BOILER ROOM. SEE CONTROL DRAWINGS SHEET ME1.0 FOR ADDITIONAL INFORMATION.

DRAWING NOTES

DEMOLITION NOTES

(1) REMOVE EXISTING BOILERS COMPLETE. REMOVAL SHALL INCLUDE BOILER, EXISTING ACCESSORIES, BOILER CONTROLS, CIRCULATION PUMPS, PIPING, FITTINGS AND FLUES AS REQUIRED TO REMOVE EXISTING BOILERS.

(2) REMOVE PORTIONS OF EXISTING GAS PIPING SERVING BOILERS AS REQUIRED TO OFFSET PIPING FOR CONNECTION AT NEW BOILERS. SEE REMODEL PLAN THIS SHEET FOR REQUIRED REMODEL WORK.

(3) REMOVE PORTIONS OF EXISTING HEATING WATER SUPPLY PIPING PREPARATORY TO NEW WORK.

(4) REMOVE PORTIONS OF EXISTING HEATING WATER RETURN PIPING PREPARATORY TO NEW WORK.

(5) REMOVE EXISTING TWO WAY CONTROL VALVE PREPARATORY TO NEW WORK.

(6) REMOVE EXISTING BALANCE VALVE AND STORE FOR RE-INSTALLATION. SEE LARGE SCALE REMODEL PLAN THIS SHEET FOR RE-INSTALLATION LOCATION.

REMODEL NOTES

(10) CONNECT NEW 4" HEATING WATER SUPPLY PIPING TO EXISTING AND EXTEND AS INDICATED, SEE FLOW DIAGRAMS SHEET M3.0 FOR ADDITIONAL INFORMATION.

(11) CONNECT NEW 2-1/2" GAS PIPING TO EXISTING AND OFFSET AS REQUIRED TO CONNECT TO NEW BOILERS.

(12) P&T VALVE LINE SIZE COPPER DRAIN PIPING TO NEAREST FLOOR DRAIN, SUPPORT DRAIN PIPING WITH UNISTRUT ATTACHED SECURELY TO FLOOR.

(13) RE-CONNECT EXISTING GAS PIPING DROP TO NEW BOILER. PROVIDE AND INSTALL ADDITIONAL OFFSETS, AND / OR REDUCERS TO ADAPT EXISTING DROPS TO NEW BOILERS.

(14) CONNECT NEW 4" HEATING WATER RETURN PIPING TO EXISTING AND EXTEND AS INDICATED.

Revisions	Date

Seal

LICENSED PROFESSIONAL ENGINEER
No. 4947211
NORMAN CUNNING
STATE OF UTAH

Mechanical Consultant:

Mechanical Consulting Engineers
Cunning & Associates
291 No. Main Clearfield, Ut. 84015 Ph (801) 776-0895
Email: cannon@cuninglaw.com Fax (801) 775-0430

Client

THE GREAT SEAL OF THE STATE OF UTAH 1896

State of Utah Department of Administrative Services
DIVISION OF FACILITIES CONSTRUCTION AND MANAGEMENT
4110 State Office Building/Salt Lake City, Utah 84114-1013

Project Name

ROOSEVELT EDUCATION CENTER
BOILER REPLACEMENT
ROOSEVELT, UTAH 84066

Project Number	Issue Date
07189770	10.30.07

Drawing Title

LARGE SCALE MECHANICAL PLANS

Sheet Number

M4.1

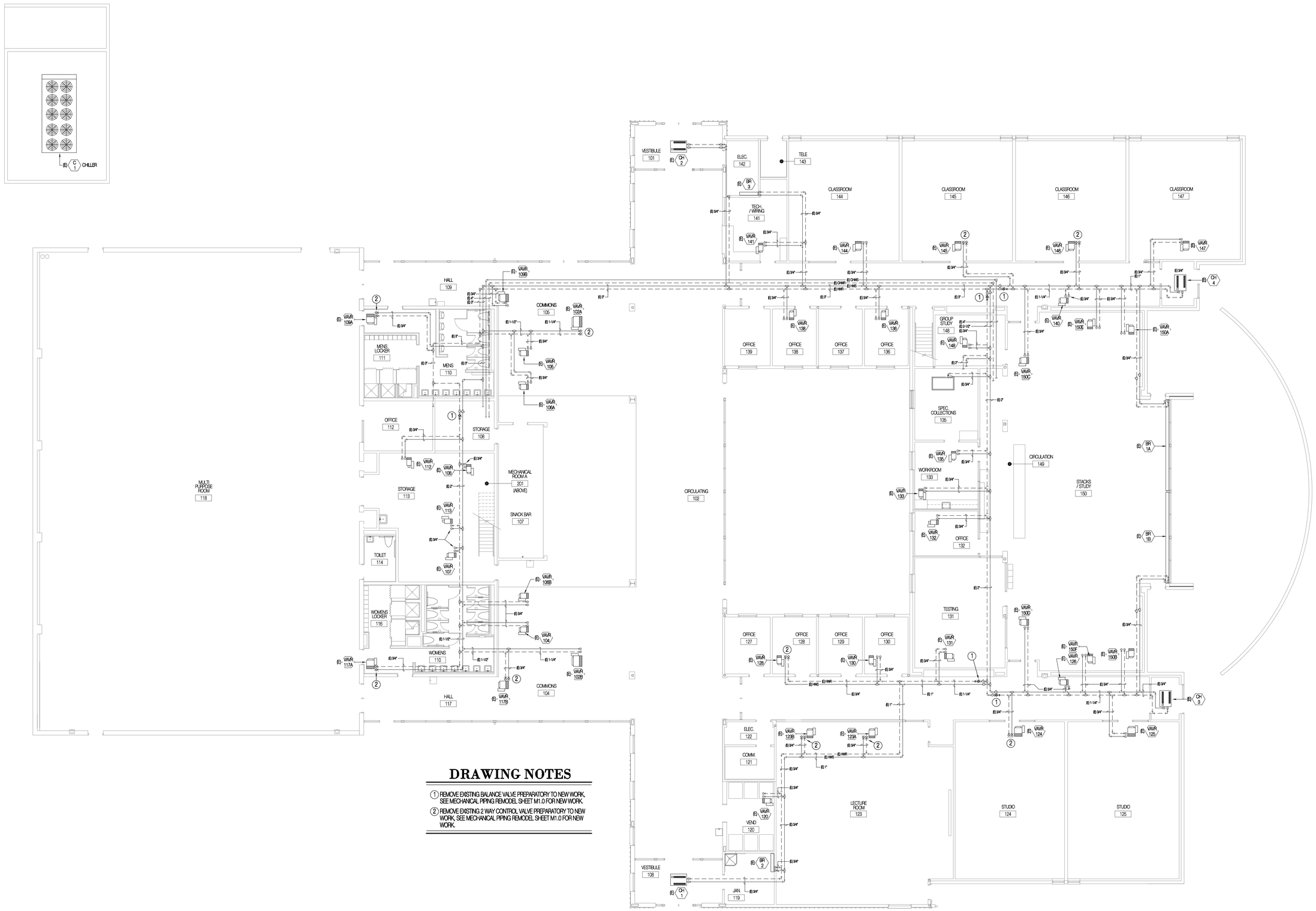

DRAWING NOTES

1. REMOVE EXISTING BALANCE VALVE PREPARATORY TO NEW WORK, SEE MECHANICAL PIPING REMODEL SHEET M1.0 FOR NEW WORK.
2. REMOVE EXISTING 2 WAY CONTROL VALVE PREPARATORY TO NEW WORK, SEE MECHANICAL PIPING REMODEL SHEET M1.0 FOR NEW WORK.

MECHANICAL PIPING DEMOLITION PLAN

SCALE: 1/8" = 1'-0"

NORTH

Revisions	Date

Seal

LICENSED PROFESSIONAL ENGINEER
No. 4947211
NORMAN CUNNING
STATE OF UTAH

Mechanical Consultant:

Mechanical Consulting Engineers
Cunning & Associates
591 No. Main Clearfield, Ut. 84015 Ph (801)-776-0025
Email: cunning@cunningtec.com Fax (801)-773-0039

Client

THE GREAT SEAL OF THE STATE OF UTAH 1896

State of Utah-Department of Administrative Services
DIVISION OF FACILITIES CONSTRUCTION AND MANAGEMENT
4110 State Office Building, Salt Lake City, Utah 84114-1850

Project Name

ROOSEVELT EDUCATION CENTER
BOILER REPLACEMENT
ROOSEVELT, UTAH 84066

Project Number	Issue Date
07189770	10.30.07

Drawing Title

MECHANICAL PIPING DEMO. PLAN

Sheet Number

MD1.0

CONTROL VALVE SCHEDULE (CV)

SYMBOL	VALVE TYPE	OPERATOR TYPE	GPM	MAXIMUM PRESSURE DROP	FLUID	DUTY	REMARKS
HCV-1	3-WAY	ELECTRIC MODULATING	30 GPM	5 FEET	HWS	(E) AHU-100 HEATING COIL	-
HCV-2	3-WAY	ELECTRIC MODULATING	20 GPM	5 FEET	HWS	(E) AHU-200 HEATING COIL	-
HCV-3	3-WAY	ELECTRIC MODULATING	18 GPM	5 FEET	HWS	(E) AHU-300 HEATING COIL	-

GENERAL NOTES FOR MECHANICAL CONTROLS

1. ALL ELECTRICAL INSTALLATION, INCLUDING POWER DISTRIBUTION AND SPECIAL SYSTEMS, IS INCLUDED IN THE SCOPE OF THE GENERAL CONTRACT, OF SPECIFIC CONCERN ARE THE CONTROL SYSTEMS RELATED TO MECHANICAL EQUIPMENT. RESPONSIBILITY FOR THE CONTROL SYSTEMS RELATED TO MECHANICAL EQUIPMENT. RESPONSIBILITY FOR THE CONTROL WORK IS DIVIDED BETWEEN THE PROJECT ELECTRICIAN (DIV. 16000) AND A SPECIALTY CONTROLS CONTRACTOR (DIV 15000).
2. ALL ELECTRICAL WORK SHALL BE IN ACCORDANCE WITH DIVISION 16000 AND TO THE FULLEST EXTENT POSSIBLE, PRODUCTS AND PRATICES SHALL BE SIMILAR FOR ALL INSTALLATIONS.
3. THE ELECTRICIAN SHALL PROVIDE ALL POWER TO AND THROUGHOUT THE BUILDING, TO INCLUDE MOTOR CONTROL CENTERS, BREAKER PANELS AND ALL OTHER SYSTEMS DESIGNATED TO THE ELECTRICIANS.
4. THE ELECTRICIAN SHALL RUN AND CONNECT ALL WIRING AND DEVICES 120 VOLTS AND ABOVE WHICH POWER MOTORS AND OTHER MECHANICAL DEVICES. WHERE CONTROL DEVICES ARE LOCATED IN POWER CIRCUIT, THE CONTROLS CONTRACTOR SHALL INTERRUPT THE CIRCUIT IN THE MECHANICAL EQUIPMENT JUNCTION BOX, WIRE THROUGH THE CONTROL DEVICE AND BACK TO THE JUNCTION BOX.
5. THE CONTROLS CONTRACTOR SHALL PROVIDE SHOP DRAWINGS FOR CONTROL SYSTEM CIRCUITS.
6. BREAKERS AND DISCONNECTS, AUXILIARY CONTACTS, STANDARD PILOT LIGHTS AND MAGNETIC STARTERS ARE THE RESPONSIBILITY OF DIVISION 16000.
7. AUXILIARY RELAYS, LOW VOLTAGE TRANSFORMERS, CONTROL PANEL SWITCHES & DEVICES, THERMOSTATS, PRESSURE SWITCHES, ELECTRIC OPERATED VALVES, ETC., ARE THE RESPONSIBILITY OF DIVISION 15000.
8. ANY QUESTION OF RESPONSIBILITY SHALL BE CLARIFIED BY THE GENERAL CONTRACTOR
9. ALL WIRING SHALL TERMINATE AT LABELED TERMINAL STRIPS.

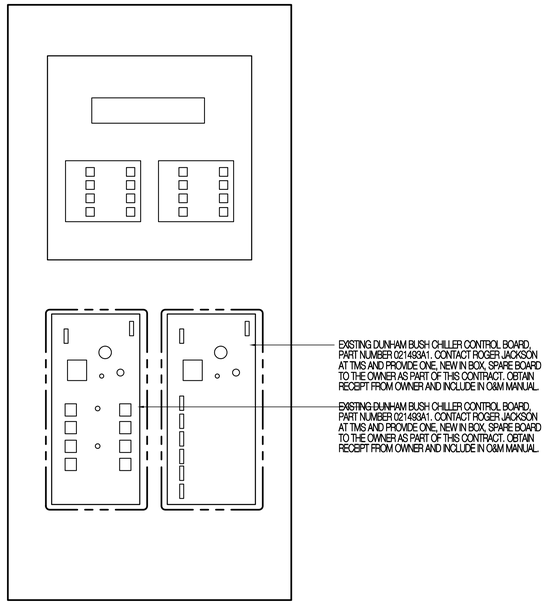

CHILLER CONTROL PANEL CONTROL DIAGRAM

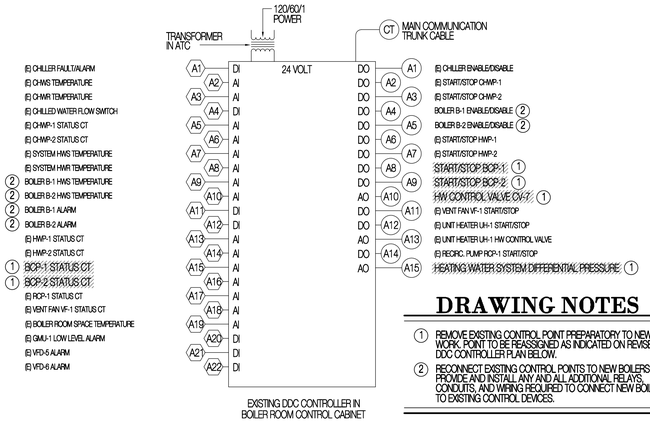

DRAWING NOTES

1. REMOVE EXISTING CONTROL POINT PREPARATORY TO NEW WORK. POINT TO BE REASSIGNED AS INDICATED ON REVISED DDC CONTROLLER PLAN BELOW.
2. RECONNECT EXISTING CONTROL POINTS TO NEW BOILERS. PROVIDE AND INSTALL ANY AND ALL ADDITIONAL RELAYS, CONDUITS, AND WIRING REQUIRED TO CONNECT NEW BOILERS TO EXISTING CONTROL DEVICES.

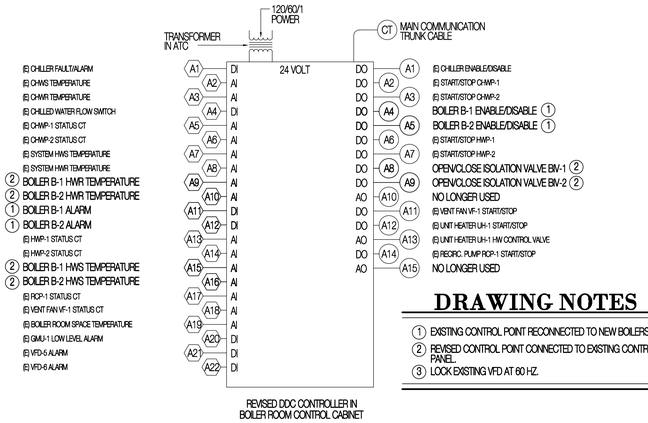

DRAWING NOTES

1. EXISTING CONTROL POINT RECONNECTED TO NEW BOILERS.
2. REVISED CONTROL POINT CONNECTED TO EXISTING CONTROL PANEL.
3. LOCK EXISTING VFD AT 60 HZ.

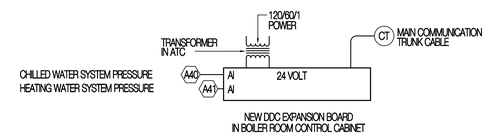

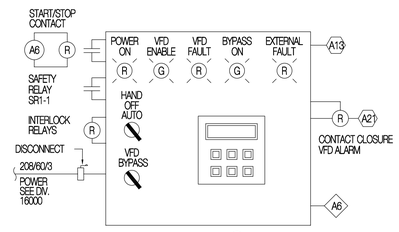

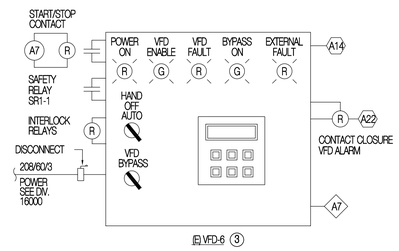

CENTRAL CHILLED WATER, HEATING WATER AND MISCELLANEOUS CONTROL PANEL REVISION DIAGRAMS

Revisions	Date

Seal

LICENSED PROFESSIONAL ENGINEER No. 4947211 NORMAN CUNNING STATE OF UTAH

Mechanical Consultant:

Mechanical Consulting Engineers
Cunning & Associates
201 No. Main Clearfield, Ut. 84015 Ph (801) 776-0825
Email: cannon@cmaindes.com Fax (801) 776-0839

Client

THE GREAT SEAL OF THE STATE OF UTAH 1896

State of Utah-Department of Administrative Services
DIVISION OF FACILITIES CONSTRUCTION AND MANAGEMENT
4110 State Office Building/Salt Lake City, Utah 84114-1850

Project Name
ROOSEVELT EDUCATION CENTER
BOILER REPLACEMENT
ROOSEVELT, UTAH 84066

Project Number	Issue Date
07189770	10.30.07

Drawing Title
MECHANICAL CONTROLS

Sheet Number
ME1.1