VAV BOX SCHEDULE

ID	MANUFACTURER AND MODEL NUMBER	INLET SIZE (IN)	AIR: COOLING MAXIMUM AIR (5) (CFM)	AIR: HEATING MAXIMUM AIR (CFM)	AIR: MINIMUM AIR (3) (CFM)	AIR: ENTERING AIR TEMP. DB (DEG. F)	AIR: LEAVING AIR TEMP. DB (DEG. F)	AIR: S.P. LOSS AT MAX CFM (4) (IN H20)	AIR: NC AT 1" H2O (1) S.P.	FLUID (2): HEAT LOAD (MB)	FLUID (2): TOTAL FLUID FLOW (GPM)	FLUID (2): ENT. FLUID TEMP (DEG. F)	FLUID (2): WORKING FLUID	FLUID (2): MAX. FLUID PRESSURE DROP (FT)	COIL: MIN. COIL ROWS	COIL: PIPE SIZE (IN)	COIL: BALANCING VALVE SIZE (IN)	REMARKS
VR-1	PRICE SDV	6	255	225	80	52	96.9	0.23	18	4911	0.6	180	WATER	0.2	2	3/4		1,2,3,4,5,6
VR-2	PRICE SDV	5	235	165	80	52	96.4	0.07	19	3519	0.5	180	WATER	0.15	1	3/4		1,2,3,4,5,6
VR-3	PRICE SDV	7	435	270	180	52	96.9	0.16	25	5785	0.7	180	WATER	0.34	1	3/4		1,2,3,4,5,6
VR-4	PRICE SDV	5	235	100	100	52	92.3	0.07	19	1779	0.5	180	WATER	0.15	1	3/4		1,2,3,4,5,6
VR-5	PRICE SDV	6	285	190	100	52	96.9	0.18	25	5785	0.7	180	WATER	0.34	1	3/4		1,2,3,4,5,6
VR-6	PRICE SDV	5	200	80	80	52	80	0.06	18	0	0.5	180	WATER	0.15	1	3/4		1,2,3,4,5,6
VR-7	PRICE SDV	6	300	360	90	52	96.8	0.26	20	7818	0.9	180	WATER	0.57	2	3/4		1,2,3,4,5,6
VR-8	PRICE SDV	5	245	200	80	52	96.8	0.07	20	4333	0.5	180	WATER	0.16	1	3/4		1,2,3,4,5,6
VR-9	PRICE SDV	5	245	135	80	52	96.8	0.07	20	2934	0.5	180	WATER	0.15	1	3/4		1,2,3,4,5,6
VR-10	PRICE SDV	6	310	305	95	52	96.8	0.28	21	6617	0.8	180	WATER	0.35	2	3/4		1,2,3,4,5,6
VR-11	PRICE SDV	6	290	90	90	52	80	0.18	20	0	0.5	180	WATER	0.15	1	3/4		1,2,3,4,5,6
VR-12	PRICE SDV	6	285	90	90	52	80	0.18	20	0	0.5	180	WATER	0.15	1	3/4		1,2,3,4,5,6
VR-13	PRICE SDV	24X16	2760	1320	830	52	96.9	0.15	30	28783	3.5	180	WATER	4.25	1	1		1,2,3,4,5,6
VR-14	PRICE SDV	5	125	195	80	52	96.8	0.05	17	4235	0.5	180	WATER	0.16	1	3/4		1,2,3,4,5,6
VR-15	PRICE SDV	6	280	90	90	52	80	0.18	19	0	0.5	180	WATER	0.15	1	3/4		1,2,3,4,5,6
VR-16	PRICE SDV	5	230	115	115	52	80	0.07	19	0	0.5	180	WATER	0.15	1	3/4		1,2,3,4,5,6
VR-17	PRICE SDV	12	1120	615	480	52	96.9	0.18	27	13424	1.6	180	WATER	2.94	1	3/4		1,2,3,4,5,6
VR-18	PRICE SDV	12	1280	765	480	52	96.8	0.22	28	16633	2	180	WATER	4.32	1	3/4		1,2,3,4,5,6
VR-19	PRICE SDV	24X16	2560	885	885	52	86.8	0.13	29	11496	1.8	180	WATER	1.18	1	3/4		1,2,3,4,5,6
VR-20	PRICE SDV	24X16	2560	885	885	52	86.8	0.13	29	11496	1.8	180	WATER	1.18	1	3/4		1,2,3,4,5,6
VR-21	PRICE SDV	24X16	2640	885	885	52	93.1	0.14	29	16342	2.1	180	WATER	1.31	1	3/4		1,2,3,4,5,6
VR-22	PRICE SDV	24X16	2640	885	885	52	93.1	0.14	29	16342	2.1	180	WATER	1.31	1	3/4		1,2,3,4,5,6
VR-23	PRICE SDV	5	100	80	80	52	80	0.02	17	0	0.5	180	WATER	0.15	1	3/4		1,2,3,4,5,6
VR-24	PRICE SDV	14	1600	1635	500	52	96.9	0.13	28	35690	4.3	180	WATER	3.95	1	1		1,2,3,4,5,6
VR-25	PRICE SDV	14	1520	600	600	52	93.5	0.16	28	11310	1.5	180	WATER	3.55	1	3/4		1,2,3,4,5,6
VR-26	PRICE SDV	10	930	420	420	52	80	0.22	25	0	0.7	180	WATER	0.48	1	3/4		1,2,3,4,5,6
VR-27	PRICE SDV	24X16	2880	865	865	52	80	0.15	30	0	1.4	180	WATER	0.78	1	3/4		1,2,3,4,5,6
VR-28	PRICE SDV	16	2400	2335	720	52	97	0.12	29	51048	6.1	180	WATER	7.08	1	1 1/4		1,2,3,4,5,6
VR-29	PRICE SDV	6	280	210	85	52	96.6	0.18	19	4521	0.5	180	WATER	0.18	1	3/4		1,2,3,4,5,6
VR-30	PRICE SDV	5	125	80	80	52	80	0.03	17	0	0.5	180	WATER	0.15	1	3/4		1,2,3,4,5,6
VR-31	PRICE SDV	14	1625	965	500	52	97	0.18	29	21076	2.5	180	WATER	1.25	1	3/4		1,2,3,4,5,6
VR-32	PRICE SDV	10	885	460	270	52	96.9	0.21	25	10003	1.2	180	WATER	1.29	1	3/4		1,2,3,4,5,6
VR-33	PRICE SDV	9	750	245	245	52	80	0.16	27	0	5	180	WATER	0.27	1	1		1,2,3,4,5,6
VR-34	PRICE SDV	5	125	80	80	52	80	0.03	17	0	0.5	180	WATER	0.15	1	3/4		1,2,3,4,5,6
VR-35	PRICE SDV	5	155	110	80	52	95.9	0.04	18	2297	0.5	180	WATER	0.15	1	3/4		1,2,3,4,5,6
VR-36	PRICE SDV	6	295	155	90	52	96.6	0.19	20	3330	0.5	180	WATER	0.15	1	3/4		1,2,3,4,5,6
VR-37	PRICE SDV	5	195	80	80	52	80	0.05	18	0	0.5	180	WATER	0.15	1	3/4		1,2,3,4,5,6
VR-38	PRICE SDV	5	195	80	80	52	80	0.05	18	0	0.5	180	WATER	0.15	1	3/4		1,2,3,4,5,6
VR-39	PRICE SDV	5	195	80	80	52	80	0.05	18	0	0.5	180	WATER	0.15	1	3/4		1,2,3,4,5,6
VR-40	PRICE SDV	24X16	3400	1905	1020	52	97	0.2	33	41591	5	180	WATER	6.25	1	1		1,2,3,4,5,6
VR-41	PRICE SDV	16	2480	2565	745	52	97	0.13	29	56074	6.7	180	WATER	7.62	1	1 1/4		1,2,3,4,5,6
VR-42	PRICE SDV	14	1580	1170	500	52	96.9	0.17	28	25495	3.1	180	WATER	1.35	1	1		1,2,3,4,5,6
VR-43	PRICE SDV	16	2310	1165	695	52	97	0.22	29	25450	3.1	180	WATER	1.76	1	1		1,2,3,4,5,6
VR-44	PRICE SDV	5	150	80	80	52	80	0.04	17	0	0.5	180	WATER	0.15	1	3/4		1,2,3,4,5,6
VR-45	PRICE SDV	6	280	370	85	52	96.6	0.24	19	7116	0.9	180	WATER	0.49	2	3/4		1,2,3,4,5,6
VR-46	PRICE SDV	24X16	3040	1625	915	52	96.9	0.17	31	35459	4.3	180	WATER	4.84	1	1		1,2,3,4,5,6
VR-47	PRICE SDV	9	660	380	200	52	96.8	0.13	27	8254	1	180	WATER	0.92	1	3/4		1,2,3,4,5,6
VR-48	PRICE SDV	6	275	380	85	52	96.8	0.28	19	8254	1	180	WATER	0.63	2	3/4		1,2,3,4,5,6
VR-49	PRICE SDV	10	900	270	270	52	81.8	0.2	25	2319	0.5	180	WATER	0.27	1	3/4		1,2,3,4,5,6
VR-50	PRICE SDV	5	230	80	80	52	95.7	0.06	19	1660	0.5	180	WATER	0.5	1	3/4		1,2,3,4,5,6
VR-51	PRICE SDV	16	2040	835	650	52	96.9	0.17	27	18190	2.2	180	WATER	1.03	1	3/4		1,2,3,4,5,6
VR-52	PRICE SDV	16	2040	835	650	52	96.9	0.17	27	18190	2.2	180	WATER	1.03	1	3/4		1,2,3,4,5,6
VR-53	PRICE SDV	16	2040	835	650	52	96.9	0.17	27	18190	2.2	180	WATER	1.03	1	3/4		1,2,3,4,5,6
VR-54	PRICE SDV	7	450	135	135	52	81.8	0.12	25	1160	0.5	180	WATER	0.19	1	3/4		1,2,3,4,5,6
VR-55	PRICE SDV	9	840	575	255	52	96.8	0.11	28	12487	1.5	180	WATER	2.61	1	3/4		1,2,3,4,5,6
VR-56	PRICE SDV	7	440	135	135	52	81.6	0.12	25	1129	0.5	180	WATER	0.19	1	3/4		1,2,3,4,5,6

1. MAXIMUM DISCHARGE NC AT BOX DIFFENTIAL PRESSURE BASED ON ARI STANDARD 880-89
2. COIL HEATING CAPACITY BASED ON HEATING MAIXMUM AIR FLOW (60% OF MAXIMUM COOLING CFM).
3. MINIMUM CFM IS LOWEST CONTROLLABLE CFM SETTING (BASED ON 400 FPM INLET VELOCITY).
4. MAXIMUM STATIC PRSSURE DROP PERMISSABLE ACROSS BOX AND COIL AT MAXIMUM COOLING CFM.
5. BOX COOLING MAXIMUM IS THE SUM OF DIFFUSERS CFM VALUES AS SHOWN IN THE DRAWINGS. BOX MINIMUM CFM TO BE SET AT 30% OF THIS MAXIMUM. BOX HEATING CFM TO BE SET AT 60% OF THIS SAME MAXIMUM. TYPICAL UNLESS OTHERWISE NOTED.
6. PRESSURE INDEPENDENT TYPE BOX.

EXPANSION TANK SCHEDULE

ID	MANUFACTURER AND MODEL NUMBER	LOCATION	TYPE	FLUID: WORKING FLUID	FLUID: MIN. TANK/ ACCEPTANCE (GAL)	PHYSICAL: TANK SIZE (GAL)	PHYSICAL: RELIEF VALVE (PSIG)	PHYSICAL: DIA./ HEIGHT (IN)	PHYSICAL: NPT FITTING (IN)	NOTES
ET-1	B&G D144V	MECH/HOT WATER	DIAPHRAGM	WATER	77/34	77	60	24/49.5	1	1
ET-2	B&G D60V	MECH/HOT WATER	DIAPHRAGM	45% P.GLY.	33.6/11.5	33.6	60	16/45.5	0.5	2
ET-3	B&G D20V	MECH/HOT WATER	DIAPHRAGM	30% P.GLY.	10.9/2.5	10.9	60	12.0/26.0	1/2	3
ET-4	B&G D60V	MECH/HOT WATER	DIAPHRAGM	40% P.GLY.	33.6/11.5	33.6	60	16/45.5	0.5	4

1. RE-HEAT HOT WATER
2. PRE-HEAT HOT WATER
3. CHILLED WATER
4. SNOW MELT

SPLIT SYSTEM A/C UNITS

ID	MANUF.	MODEL	LOCATION	COOLING CAPACITY (BTU)	INDOOR UNIT: CFM RANGE	INDOOR UNIT: DIMENSIONS W" x H" x D"	INDOOR UNIT: WEIGHT (LBS.)	INDOOR UNIT: AMPS (MCA)	INDOOR UNIT: VOLTS/PH/HZ.	OUTDOOR UNIT: DIMENSIONS W" x H" x D"	OUTDOOR UNIT: WEIGHT (LBS.)	OUTDOOR UNIT: AMPS (MCA)	OUTDOOR UNIT: VOLTS/PH/HZ.	REFRIGERANT LINES: LIQUID	REFRIGERANT LINES: GAS	COMMENTS
CU-1	MITSUBISHI	PKA-A30FAL&PUY-A30NHA	SERVER ROOM	30,000	530-705	55.2/9.25/13.4	53	1.0	208/230/1/60	37.5/13.1/37.2	163	25	208/230/1/60	3/8	5/8	(1)(2)(3)(4)(5)
CU-2	MITSUBISHI	PKA-A30FAL&PUY-A30NHA	SERVER ROOM	30,000	530-705	55.2/9.25/13.4	53	1.0	208/230/1/60	37.5/13.1/37.2	163	25	208/230/1/60	3/8	5/8	(1)(2)(3)(4)(5)
CU-3	MITSUBISHI	PKA-A24FAL&PUY-A24NHA	DATA	24,000	530-705	55.2/9.25/13.4	53	1.0	208/230/1/60	37.5/13.1/37.2	163	18	208/230/1/60	3/8	5/8	(1)(2)(3)(4)(5)
CU-4	MITSUBISHI	PKA-A24FAL&PUY-A24NHA	DATA	24,000	530-705	55.2/9.25/13.4	53	1.0	208/230/1/60	37.5/13.1/37.2	163	18	208/230/1/60	3/8	5/8	(1)(2)(3)(4)(5)
CU-5	MITSUBISHI	PKA-A24FAL&PUY-A24NHA	DATA	24,000	530-705	55.2/9.25/13.4	53	1.0	208/230/1/60	37.5/13.1/37.2	163	18	208/230/1/60	3/8	5/8	(1)(2)(3)(4)(5)
CU-6	MITSUBISHI	PKA-A24FAL&PUY-A24NHA	ELECTRICAL	24,000	530-705	55.2/9.25/13.4	53	1.0	208/230/1/60	37.5/13.1/37.2	163	18	208/230/1/60	3/8	5/8	(1)(2)(3)(4)(5)

(1) PROVIDE WITH LOW AMBIENT CONTROLLER TO ALLOW COOLING OPERATION DOWN TO 0 DEG. F. D.B.
(2) R410A REFRIGERANT.
(3) PROVIDE WITH HARD-WIRED REMOTE CONTROLLER.
(4) PROVIDE WITH INVERTER-DRIVEN COMPRESSOR.
(5) VERIFY PIPE SIZE WITH MANUFACTURER'S INSTALATION INSTRUCTIONS.

AIR SEPARATOR SCHEDULE

ID	MANUFACTURER AND MODEL NUMBER	LOCATION	FLUID: FLOW RATE (GPM)	FLUID: WORKING FLUID	FLUID: HEAD LOSS (FT)	PHYSICAL: LENGTH / WIDTH / HEIGHT (IN)	NOTES
AS-1	B&G R-3	MECH/HOT WATER	108	WATER	1.501	16.75/10.75/25.69	
AS-2	B&G R-3	MECH/HOT WATER	108	45% P.GLYCOL	1.501	16.75/10.75/25.69	
AS-3	B&G R-4	MECH/HOTWATER	223	30% P.GLYCOL	2.729	20.5/15.0/30.75	
AS-4	SPIROTHERM VSR 200	MECH/HOTWATER	36	40% P.GLYCOL		15.2/6.3/19.0	

FAN POWERED TERMINAL BOX SCHEDULE

ID	MANUFACTURER AND MODEL NUMBER	LOCATION	USE TYPE	PRIMARY INLET SIZE (IN)	AIR: HEATING SEASON AIRFLOW RATE (CFM)	AIR: COOLING SEASON AIRFLOW RATE (CFM)	AIR: MINIMUM AIRFLOW (CFM)	AIR: LOAD (BTUH)	AIR: ENTERING/ LEAVING TEMP. DB (°F)	AIR: STATIC PRESSURE DROP (IN H20)	FLUID: FLOW RATE (GPM)	FLUID: ENTERING/ LEAVING TEMP (°F)	FLUID: WORKING FLUID	FLUID: PRESSURE DROP (FT)	ELECTRICAL: FAN MOTOR SIZE (HP)	ELECTRICAL: VOLT/PH	PHYSICAL: MINIMUM NO. ROWS/ FINS PER INCH	NOTES
FP-1	PRICE FDCQ2	STACKS		12	714	1360	390	14,392	52/95	0.22	1	180/150	WATER	20.6	1	230/1/60	1/6	
FP-2	PRICE FDCQ2	STACKS		12	714	1360	390	33,120	72/95	0.22	1	180/150	WATER	20.6	1	230/1/60	1/6	
FP-3	PRICE FDCQ2	STACKS		10	0	575	75	0	52/95	0.22	1	180/150	WATER	17.6	1	230/1/60	1/6	
FP-4	PRICE FDCQ2	STACKS		10	0	575	75	0	52/95	0.22	1	180/150	WATER	17.6	1	230/1/60	1/6	
FP-5	PRICE FDCQ2	STACKS		10	0	400	152	0	52/95	0.22	1	180/150	WATER	17.6	1	230/1/60	1/6	
FP-6	PRICE FDCQ2	STACKS		10	0	400	152	0	52/95	0.22	1	180/150	WATER	17.6	1	230/1/60	1/6	

HOT WATER UNIT HEATER SCHEDULE

ID	MANUFACTURER AND MODEL NUMBER	LOCATION	TYPE	USE TYPE	AIR: AIRFLOW RATE (CFM)	AIR: LOAD (BTU/H)	FLUID: ENTERING TEMP. DB (°F)	FLUID: LEAVING TEMP. DB (°F)	FLUID: FLOW RATE (GPM)	FLUID: ENTERING/ LEAVING TEMP. (°F)	FLUID: WORKING FLUID	FLUID: HEAD LOSS (FT)	ELECTRICAL: MOTOR SIZE (HP)	ELECTRICAL: MOTOR SPEED (RPM)	ELECTRICAL: VOLT/PH/HZ	PHYSICAL: MINIMUM NO. ROWS/ FINS PER INCH	NOTES
UH-1	RITTLING RH-33	MECH/HOT WATER	HOT WATER	HEATING	630	24,500	70	112	2.5	180/150	WATER	0.83	1/30	1550	120/1/60	1/12	
UH-2	RITTLING RH-47	MECHANICAL	HOT WATER	HEATING	730	33,800	70	120	3.4	180/150	WATER	0.21	1/15	1550	120/1/60	1/12	
UH-3	RITTLING RH-47	MECHANICAL	HOT WATER	HEATING	730	33,800	70	120	3.4	180/150	WATER	0.21	1/15	1550	120/1/60	1/12	
UH-4	RITTLING RH-86	MECHANICAL	HOT WATER	HEATING	1340	61,900	70	103	6.2	180/150	WATER	0.79	1/10	1550	120/1/60	1/12	

COOPER ROBERTS SIMONSEN ASSOCIATES
crsa
700 North 200 West
Salt Lake City, UT 84103
(801) 355-5915 phone
(801) 355-9885 fax
crsa-us.com

SNOW COLLEGE

State of Utah-Department of Administrative Services
DIVISION OF FACILITIES CONSTRUCTION AND MANAGEMENT
4110 State Office Building•Salt Lake City, Utah 84114•538-3018

Civil Engineer
Great Basin Engineering
Contact: Dave Waldron
5746 South 1475 East, Suite 200
Ogden, UT 84403
(801) 521-0222 FAX (801) 392-7544
dave@gbenorth.com

Landscape Architect
G. Brown Design
Contact: Mathew Winward
610 E. South Temple, Suite 50
Salt Lake City, UT 84102
(801) 575-6066 FAX (801) 575-6166
mwinward@gbrowndesign.com

Structural Engineer
Reaveley Engineers
Contact: Cameron Empey
675 East 500 South, Suite 400
Salt Lake City, UT 84105
(801) 486-3853 FAX (801) 485-0911
cempey@reaveley.com

Mechanical Engineer
Van Boerum & Frank
Contact: Neil Spencer
330 South 300 East
Salt Lake City, UT 84111
(801) 530-3148 FAX (801) 910-9917
nspencer@vbfa.com

Electrical Engineer
Spectrum Engineers
Contact: Dave Wesemann, PE
175 South Main Street, Suite 300
Salt Lake City, UT 84111
(801) 328-5151 FAX (801) 328-5155
dew@spectrum-engineers.com

AV Consultant
Spectrum Engineers
Contact: Kurtis Dallinga, PE
175 South Main Street, Suite 300
Salt Lake City, UT 84111
(801) 328-5151 FAX (801) 328-5155
kdd@spectrum-engineers.com

Library Consultant
Michaels Associates Design Consultants, Inc.
Contact: Andrea Michaels
14809 North 73rd Street, Suite 100
Scottsdale, AZ 85260
(480) 998-7476 FAX (480) 998-9390
andrea@madcinc.com

STAMP:

REGISTERED PROFESSIONAL ENGINEER BRIGGS No. 318608 10/10/08 STATE OF UTAH

PROJECT NAME:

Snow College Library

150 College Avenue
Ephraim, Utah 84627

REVISIONS:

100% CD, October 10, 2008
100% CD Review, September 15, 2008
100% CD Review, August 4, 2008

ISSUE DATE:

OCTOBER 10 2008, 100% CD

ARCHITECT'S PROJECT NUMBER:

B07-051

DFCM PROJECT NUMBER:

07258700

SHEET TITLE:

mechanical schedules

SHEET NUMBER:

MH602

EXPANSION JOINT SCHEDULE

ID	MANUFACTURER AND MODEL NUMBER	LOCATION	PRESSURE RATING (PSI)	DIAMETER (IN)	TRAVERSE (IN)	TYPE WITH BASE	NOTES
EJ-1	HYSPAN 6502-167-8	STEAM TUNNEL	150	8	8	6502AB	
EJ-2	HYSPAN 6502-140-8	STEAM TUNNEL	150	3	8	6502AB	
EJ-3	HYSPAN 6502-167-8	STEAM TUNNEL	150	8	6	6502AB	
EJ-4	HYSPAN 6502-140-8	STEAM TUNNEL	150	3	6	6502AB	
EJ-5	HYSPAN 6502-160-4	STEAM TUNNEL	150	6	2	6502AB	
EJ-6	HYSPAN 6502-140-4	STEAM TUNNEL	150	3	2	6502AB	

PUMP SCHEDULE

ID	MANUFACTURER AND MODEL NUMBER	LOCATION	TYPE	FLUID FLOW RATE (GPM)	FLUID WORKING FLUID	PUMP HEAD LOSS (FT)	PUMP EFFICIENCY (%)	ELECTRICAL MOTOR SIZE (HP)	ELECTRICAL MOTOR BHP (HP)	ELECTRICAL MOTOR SPEED (RPM)	ELECTRICAL VOLT/PH/HZ	NOTES
P-1	B&G 1510 1-1/4AC	REHEAT		98	WATER	100	57	5	4.377	3504	460/3/60	1,2
P-2	B&G 1510 1-1/4AC	REHEAT		98	WATER	100	57	5	4.377	3504	460/3/60	1,2
P-3	B&G 1510 2AC	CHILLED WATER		223	30%P.GLYCOL	110	72	10	9.201	3500	460/3/60	1,2
P-4	B&G 1510 2AC	CHILLED WATER		223	30%P.GLYCOL	110	72	10	9.201	3500	460/3/60	1,2
P-5	B&G 1510 1-1/4AC	PREHEAT		108	45% P.GLYCOL	100	85.3	7.5	5.535	3500	460/3/60	1,2
P-6	B&G 1510 1-1/4AC	PREHEAT		108	45% P.GLYCOL	100	85.3	7.5	5.535	3500	460/3/60	1,2
P-7	GRUNDFOS CR5-4	SNOWMELT		36	40% P.GLYCOL	47	28.2	2	1365	3600	460/3/60	1

1. VFD, SEE ELECTRICAL DRAWINGS AND SPECS FOR PUMPS.
2. PRIMARY STANDBY OPERATION

LOUVER SCHEDULE

ID	MANUFACTURER AND MODEL NUMBER	LOCATION	TYPE	AIR MAXIMUM AIRFLOW RATE (CFM)	AIR STATIC PRESSURE (IN. WATER)	PHYSICAL WIDTH/ HEIGHT/ THICKNESS (IN)	NOTES
L-1	AIROLITE K6776	ATTIC	DRAINABLE	50,000	0.1	276/58/6	
L-2	AIROLITE K6776	ATTIC	DRAINABLE	12,100	0.1	120/36/6	
L-3	AIROLITE K6776	ATTIC	DRAINABLE	15,525	0.1	304/76/6	(1)(2)
L-4	AIROLITE K6776	ATTIC	DRAINABLE	15,525	0.1	304/76/6	(1)(2)
L-5	AIROLITE K6776	ATTIC	DRAINABLE	15,525	0.1	304/76/6	(1)(2)
L-6	AIROLITE K6776	ATTIC	DRAINABLE	15,525	0.1	304/76/6	(1)(2)
L-7	AIROLITE K6776	AUDITORIUM	DRAINABLE	800	0.1	36/12/6	
L-8	AIROLITE K6776	MECH/HOT WATER	DRAINABLE	1,000	0.1	24/24/6	
L-9	AIROLITE K6776	MECH/HOT WATER	DRAINABLE	1,000	0.1	24/24/6	
L-10	AIROLITE K6776	AUDITORIUM	DRAINABLE	565	0.1	24/24/6	

1. TRIANGULAR
2. MOTORIZED DAMPERS

GRILLES, REGISTERS AND DIFFUSERS

ID	MANUFACTURER	MODEL	MAX NC	DESCRIPTION
CD-1	EH PRICE	SCDA	30	LOUVER FACE (4-CONE) CEILING DIFFUSERS. ADJUSTABLE AIR PATTERN, C.W./O.B.D. FRAME SHALL BE FOR SURFACE OR LAY-IN MOUNTING AS REQUIRED BY CEILING TYPE. LAY-IN FRAMES SHALL BE 24" x 24", 24" x 12" OR 12" x 12" AS REQUIRED TO FIT CEILING TILE SPACE AVAILABLE. PROVIDE ROUND NECK ADAPTER.
CD-2	EH PRICE	SDS 100	30	3 SLOT LINEAR CEILING DIFFUSER WITH FULLY ADJUSTABLE AIR PATTERN AND FLOW CONTROL VANES FOR ONE OR TWO WAY THROW PATTERN. UNITS SHALL HAVE 1" SLOTS AND INSULATED PLENUM WITH ROUND DUCT CONNECTION. FOR SURFACE OR LAY-IN MOUNTING AS REQUIRED. UNIT SHALL BE CURVED FACE FOR EXPOSED DUCT MOUNTING AS REQUIED.
SWS-1	EH PRICE	HCD1	30	DRUM LOUVER SUPPLY GRILLE WITH ADJUSTABLE VANES WITH A ROTATABLE DRUM. DRUM SHALL HAVE MECHANISM TO FIX DRUM ANGLE AND BE ADJUSTABLE THROUGH 60 DEGREES. MOUNTING FRAME C/W COUNTER SUNK HOLES FOR DUCT MOUNTING
RG-1	EH PRICE	PDDR	30	PERFORATED FACE RETURN AIR UNIT, REMOVABLE FACE & CORE. FRAME SHALL BE FOR SURFACE OR LAY-IN MOUNTING AS REQUIRED BY CEILING TYPE. LAY-IN FRAMES HSLL BE 24" x 24", 24" x 12" OR 12" x 12" AS REQUIRED TO FIT CEILING TILE SPACE AVAILABLE. AIR QUANTITY SHALL MATCH ROOM SUPPLY OR EXHAUST AIR QUANTITY.
SWR-1	EH PRICE	91	30	HEAVY DUTY SIDE WALL RETURN AIR GRILLE. STATIONARY HORIZONTAL 45 DEG DEFLECTION VANES SPACED AT 1/2 INCH O.C. 1 1/4 INCH FLANGE. FRAME MADE OF 16 GAUGE STEEL. INSTALL INTERMEDIATE SUPPORT CHANNELS AS REQUIRED.
EG-1	EH PRICE	80	20	CRATE TYPE CEILING RETURN AIR UNIT, WITH OBD. REMOVABLE FACE AND CORE. FRAME SHALL BE FOR SURFACE OR LAY-IN MOUNTING AS REQUIRED BY CEILING TYPE. LAY-IN FRAMES SHALL BE 24" x 24", 24" x 12" OR 12" x 12" AS REQUIRED TO FIT CEILING TILE SPACE AVAILABLE. UNITS SHALL HAVE 1/2" x 1/2" x 1/2" SQUARES.

AIR HANDLER SCHEDULE

ID	MANUFACTURER AND MODEL NUMBER	LOCATION	AIR SUPPLY AIRFLOW (CFM)	COMPONENTS FANS	COMPONENTS COILS	COMPONENTS FILTERS	ELECTRICAL SINGLE POINT VOLT/PH/HZ	PHYSICAL CABINET LENGTH/ WIDTH/HEIGHT (IN)	PHYSICAL APPROXIMATE WEIGHT (LB)	NOTES
AH-1	TEMTROL	ATTIC	12,100	SF-1.1-SF-1.3,RF-1.1-RF-1.3	HC-1.CC-1	MERV 13	460/3/60	300/108.75/59.87	33,984	1
AH-2	TEMTROL	ATTIC	50,000	SF-2.1-SF-2.15,RF-2.1-RF-2.15	HC-2.1,HC-2.2,CC-2	MERV 13	460/3/60	399/204.75/115.38	85,100	1

1. WEIGHT INCLUDES THE 4 INCH CONCRETE HOUSE KEEPING PAD

CONDENSATE RETURN, PUMP SCHEDULE

ID	MANUFACTURER AND MODEL NUMBER	LOCATION	CONDENSATE FLOW RATE (GPM)	CONDENSATE HEAD LOSS (FT)	PUMP CONSTRUCTION	ELECTRICAL MOTOR SIZE (HP)	ELECTRICAL MOTOR BHP (HP)	ELECTRICAL MOTOR SPEED (RPM)	ELECTRICAL VOLT/PH/HZ	NOTES
CRP-1	B&G 616B	MECH/HOT WATER	15	92.245	CAST IRON	1-1/2	-	3500	460/3/60	1

1. 23 GALLON RECEIVER SIZE

COOPER ROBERTS SIMONSEN ASSOCIATES

crsa
700 North 200 West
Salt Lake City, UT 84103
(801) 355-5915 phone
(801) 355-9885 fax
crsa-us.com

SNOW COLLEGE

State of Utah-Department of Administrative Services
DIVISION OF FACILITIES CONSTRUCTION AND MANAGEMENT
4110 State Office Building/Salt Lake City, Utah 84114-5018

Civil Engineer
Great Basin Engineering
Contact: Dave Waldron
5746 South 1475 East, Suite 200
Ogden, UT 84403
(801) 521-0222 FAX (801) 392-7544
dave@gbenorth.com

Landscape Architect
G. Brown Design
Contact: Mathew Winward
610 E. South Temple, Suite 50
Salt Lake City, UT 84102
(801) 575-6066 FAX (801) 575-6166
mwinward@gbrowndesign.com

Structural Engineer
Reaveley Engineers
Contact: Cameron Empey
675 East 500 South, Suite 400
Salt Lake City, UT 84105
(801) 486-3853 FAX (801) 485-0911
cempey@reaveley.com

Mechanical Engineer
Van Boerum & Frank
Contact: Neil Spencer
330 South 300 East
Salt Lake City, UT 84111
(801) 530-3148 FAX (801) 910-9917
nspencer@vbfa.com

Electrical Engineer
Spectrum Engineers
Contact: Dave Wesemann, PE
175 South Main Street, Suite 300
Salt Lake City, UT 84111
(801) 328-5151 FAX (801) 328-5155
dew@spectrum-engineers.com

AV Consultant
Spectrum Engineers
Contact: Kurtis Dallinga, PE
175 South Main Street, Suite 300
Salt Lake City, UT 84111
(801) 328-5151 FAX (801) 328-5155
kdd@spectrum-engineers.com

Library Consultant
Michaels Associates Design Consultants, Inc.
Contact: Andrea Michaels
14809 North 73rd Street, Suite 100
Scottsdale, AZ 85260
(480) 998-7476 FAX (480) 998-9390
andrea@madcinc.com

STAMP:

Brent Brockbank
BROCKBANK
No. 318658
10/10/08
STATE OF UTAH

PROJECT NAME:

Snow College Library

150 College Avenue
Ephraim, Utah 84627

REVISIONS:

100% CD, October 10, 2008
100% CD Review, September 15, 2008
100% CD Review, August 4, 2008

ISSUE DATE:

OCTOBER 10 2008, 100% CD

ARCHITECT'S PROJECT NUMBER:

B07-051

DFCM PROJECT NUMBER:

07258700

SHEET TITLE:

mechanical schedules

SHEET NUMBER:

MH603

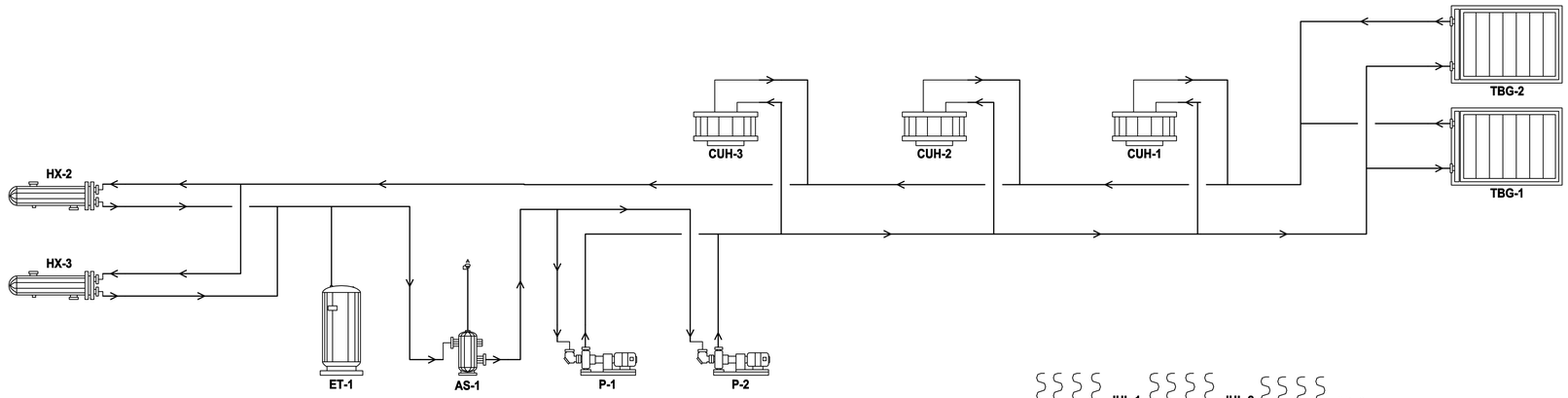

1 MH701 HOT WATER PIPING SCHEMATIC
DETAIL
NO SCALE

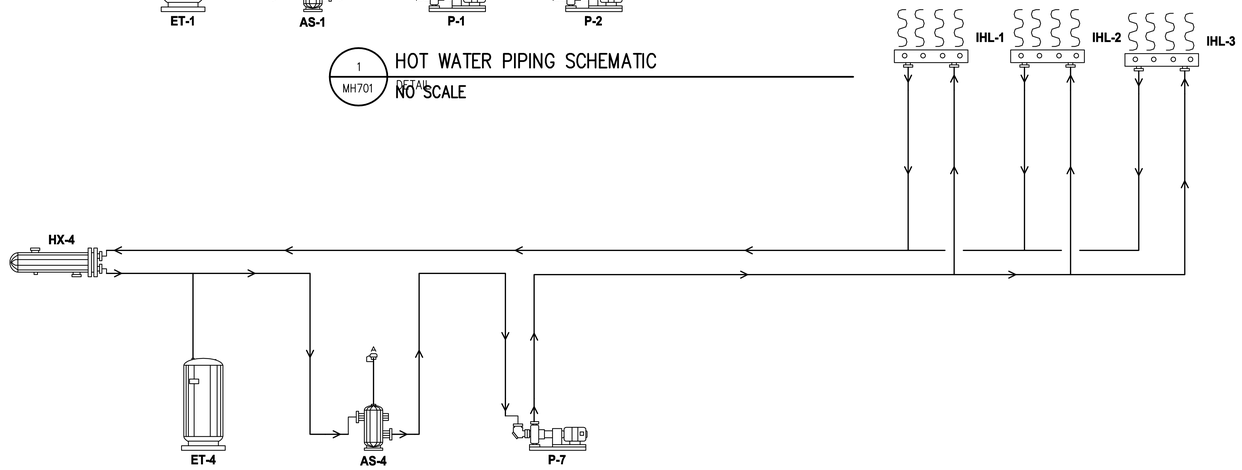

1 MH701 SNOW MELT PIPING SCHEMATIC
DETAIL
NO SCALE

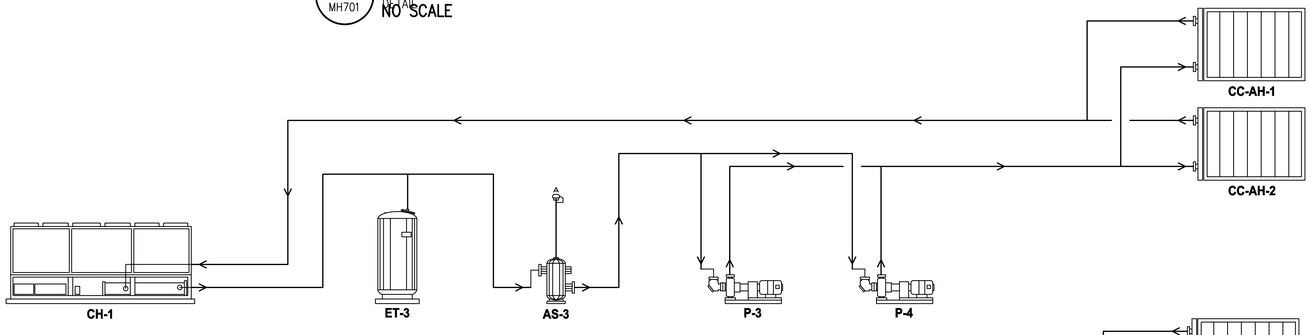

3 MH701 CHILLED WATER PIPING SCHEMATIC
NO SCALE

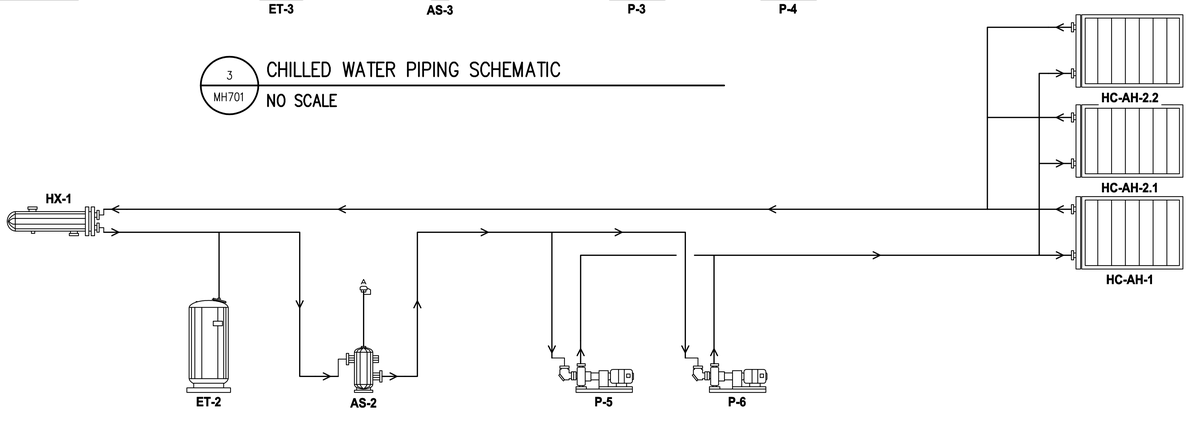

4 MH701 GLYCOL HOT WATER PIPING SCHEMATIC
NO SCALE

COOPER ROBERTS SIMONSEN ASSOCIATES
crsa
700 North 200 West
Salt Lake City, UT 84103
(801) 355-5915 phone
(801) 355-9885 fax
crsa-us.com

SNOW COLLEGE

State of Utah-Department of Administrative Services
DIVISION OF FACILITIES CONSTRUCTION AND MANAGEMENT
4110 State Office Building/Salt Lake City, Utah 84114/538-3018

Civil Engineer
Great Basin Engineering
Contact: Dave Waldron
5746 South 1475 East, Suite 200
Ogden, UT 84403
(801) 521-0222 FAX (801) 392-7544
dave@gbenorth.com

Landscape Architect
G. Brown Design
Contact: Mathew Winward
610 E. South Temple, Suite 50
Salt Lake City, UT 84102
(801) 575-6066 FAX (801) 575-6166
mwinward@gbrowndesign.com

Structural Engineer
Reaveley Engineers
Contact: Cameron Empey
675 East 500 South, Suite 400
Salt Lake City, UT 84105
(801) 486-3883 FAX (801) 485-0911
cempey@reaveley.com

Mechanical Engineer
Van Boerum & Frank
Contact: Neil Spencer
330 South 300 East
Salt Lake City, UT 84111
(801) 530-3148 FAX (801) 910-9917
nspencer@vbfa.com

Electrical Engineer
Spectrum Engineers
Contact: Dave Wesemann, PE
175 South Main Street, Suite 300
Salt Lake City, UT 84111
(801) 328-5151 FAX (801) 328-5155
dew@spectrum-engineers.com

AV Consultant
Spectrum Engineers
Contact: Kurtis Dallinga, PE
175 South Main Street, Suite 300
Salt Lake City, UT 84111
(801) 328-5151 FAX (801) 328-5155
kdd@spectrum-engineers.com

Library Consultant
Michaels Associates Design Consultants, Inc.
Contact: Andrea Michaels
14809 North 73rd Street, Suite 100
Scottsdale, AZ 85260
(480) 998-7476 FAX (480) 998-9390
andrea@madcinc.com

STAMP:

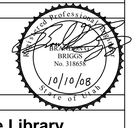

PROJECT NAME:

Snow College Library

150 College Avenue
Ephraim, Utah 84627

REVISIONS:

100% CD, October 10, 2008
100% CD Review, September 15, 2008
100% CD Review, August 4, 2008

ISSUE DATE:
OCTOBER 10 2008, 100% CD

ARCHITECT'S PROJECT NUMBER:
B07-051

DFCM PROJECT NUMBER:
07258700

SHEET TITLE:
mechanical schematics

SHEET NUMBER:
MH701

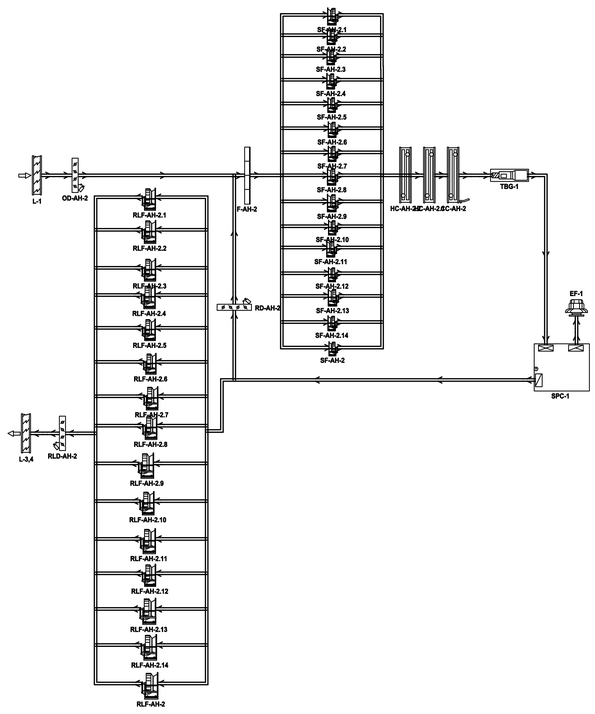

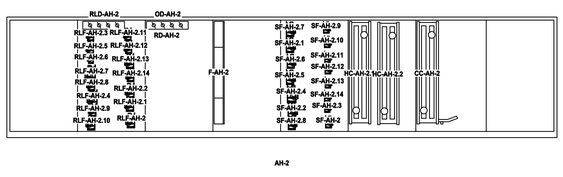

2 MH702 AH-2 AIRFLOW SCHEMATIC
NO SCALE
DETAIL

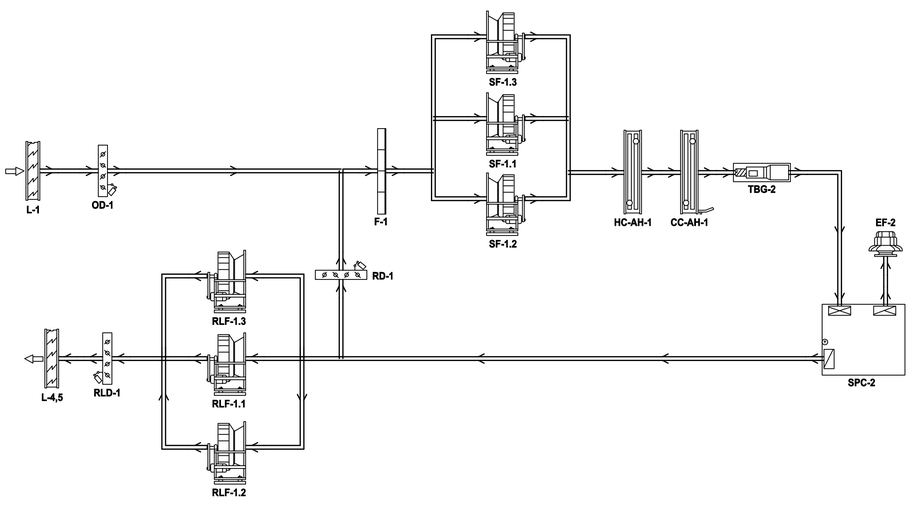

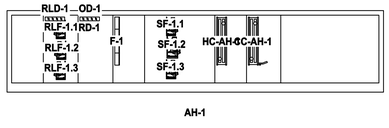

2 MH702 AH-1 AIRFLOW SCHEMATIC
NO SCALE
DETAIL

COOPER
ROBERTS
SIMONSEN
ASSOCIATES

crsa
700 North 200 West
Salt Lake City, UT 84103
(801) 355-5915 phone
(801) 355-9885 fax
crsa-us.com

SNOW COLLEGE

State of Utah-Department of Administrative Services
DIVISION OF FACILITIES CONSTRUCTION AND MANAGEMENT
4110 State Office Building/Salt Lake City, Utah 84114/538-3018

Civil Engineer
Great Basin Engineering
Contact: Dave Waldron
5746 South 1475 East, Suite 200
Ogden, UT 84403
(801) 521-0222 FAX (801) 392-7544
dave@gbenorth.com

Landscape Architect
G. Brown Design
Contact: Mathew Winward
610 E. South Temple, Suite 50
Salt Lake City, UT 84102
(801) 575-6066 FAX (801) 575-6166
mwinward@gbrowndesign.com

Structural Engineer
Reaveley Engineers
Contact: Cameron Empey
675 East 500 South, Suite 400
Salt Lake City, UT 84105
(801) 486-3883 FAX (801) 485-0911
cempey@reaveley.com

Mechanical Engineer
Van Boerum & Frank
Contact: Neil Spencer
330 South 300 East
Salt Lake City, UT 84111
(801) 530-3148 FAX (801) 910-9917
nspencer@vbfa.com

Electrical Engineer
Spectrum Engineers
Contact: Dave Wesemann, PE
175 South Main Street, Suite 300
Salt Lake City, UT 84111
(801) 328-5151 FAX (801) 328-5155
dew@spectrum-engineers.com

AV Consultant
Spectrum Engineers
Contact: Kurtis Dallinga, PE
175 South Main Street, Suite 300
Salt Lake City, UT 84111
(801) 328-5151 FAX (801) 328-5155
kdd@spectrum-engineers.com

Library Consultant
Michaels Associates Design Consultants, Inc.
Contact: Andrea Michaels
14809 North 73rd Street, Suite 100
Scottsdale, AZ 85260
(480) 998-7476 FAX (480) 998-9390
andrea@madcinc.com

STAMP:
Registered Professional Engineer
BRIGGS
No. 318658
10/10/08
State of Utah

PROJECT NAME:
Snow College Library

150 College Avenue
Ephraim, Utah 84627

REVISIONS:

100% CD, October 10, 2008
100% CD Review, September 15, 2008
100% CD Review, August 4, 2008

ISSUE DATE:
OCTOBER 10 2008, 100% CD

ARCHITECT'S PROJECT NUMBER:
B07-051

DFCM PROJECT NUMBER:
07258700

SHEET TITLE:
mechanical schematics

SHEET NUMBER:
MH702

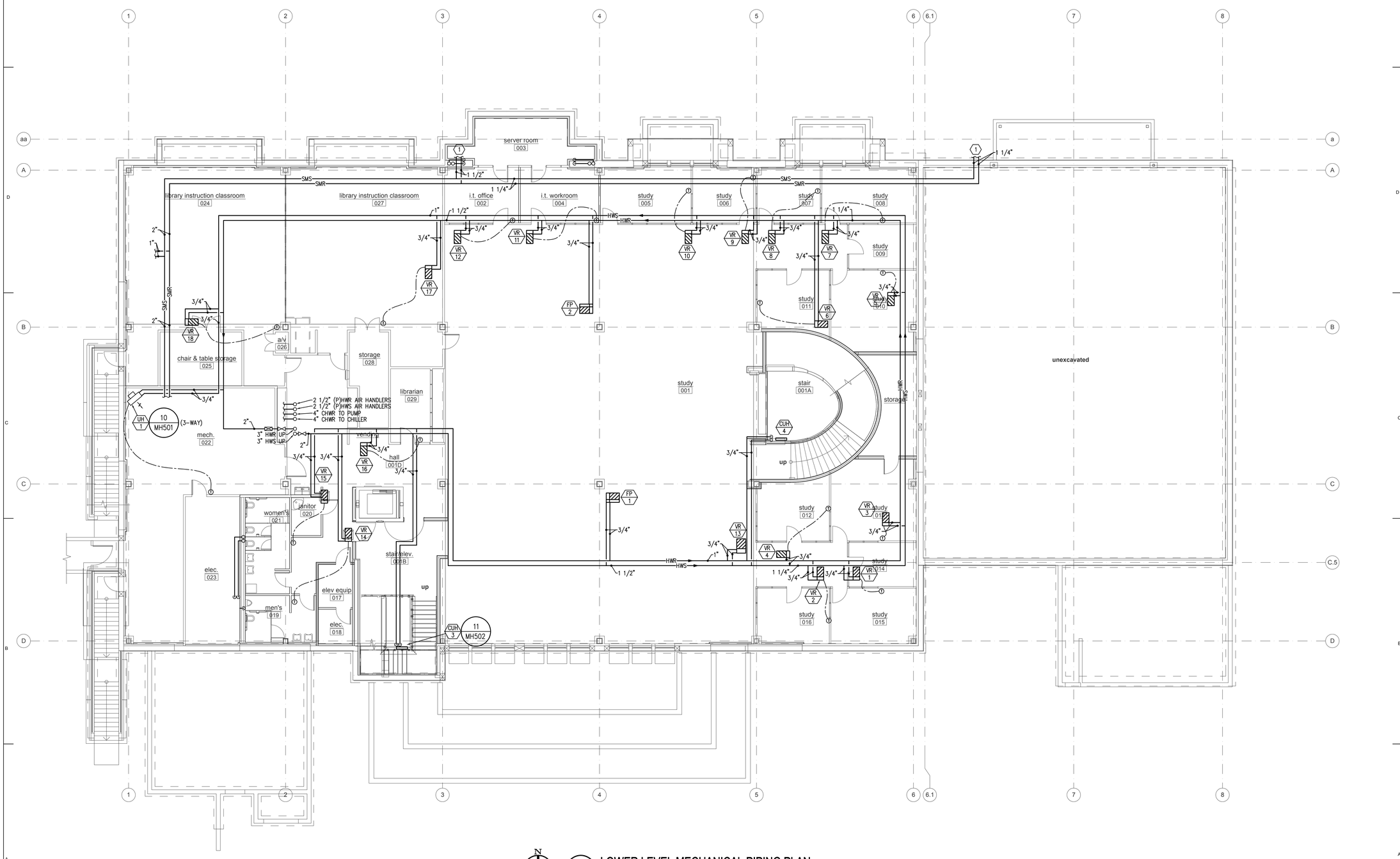

LOWER LEVEL MECHANICAL PIPING PLAN

MP101 SCALE: 1/8" = 1'-0"

0' 8' 16'

COOPER
ROBERTS
SIMONSEN
ASSOCIATES

crsa

700 North 200 West
Salt Lake City, UT 84103
(801) 355-5915 phone
(801) 355-9885 fax
crsa-us.com

SNOW COLLEGE

State of Utah-Department of Administrative Services

DIVISION OF FACILITIES CONSTRUCTION AND MANAGEMENT

4110 State Office Building/Salt Lake City, Utah 84114/538-3018

Civil Engineer

Great Basin Engineering
Contact: Dave Waldron
5746 South 1475 East, Suite 200
Ogden, UT 84403
(801) 521-0222 FAX (801) 392-7544
dave@gbenorth.com

Landscape Architect

G. Brown Design
Contact: Mathew Winward
610 E. South Temple, Suite 50
Salt Lake City, UT 84102
(801) 575-6066 FAX (801) 575-6166
mwinward@gbrowndesign.com

Structural Engineer

Reaveley Engineers
Contact: Cameron Empey
675 East 500 South, Suite 400
Salt Lake City, UT 84105
(801) 486-3883 FAX (801) 485-0911
cempey@reaveley.com

Mechanical Engineer

Van Boerum & Frank
Contact: Neil Spencer
330 South 300 East
Salt Lake City, UT 84111
(801) 530-3148 FAX (801) 910-9917
nspencer@vbfa.com

Electrical Engineer

Spectrum Engineers
Contact: Dave Wesemann, PE
175 South Main Street, Suite 300
Salt Lake City, UT 84111
(801) 328-5151 FAX (801) 328-5155
dew@spectrum-engineers.com

AV Consultant

Spectrum Engineers
Contact: Kurtis Dallinga, PE
175 South Main Street, Suite 300
Salt Lake City, UT 84111
(801) 328-5151 FAX (801) 328-5155
kdd@spectrum-engineers.com

Library Consultant

Michaels Associates Design Consultants, Inc.
Contact: Andrea Michaels
14809 North 73rd Street, Suite 100
Scottsdale, AZ 85260
(480) 998-7476 FAX (480) 998-9390
andrea@madcinc.com

STAMP:

Licensed Professional Engineer
BRIGGS
No. 318658
10/10/08
State of Utah

PROJECT NAME:

Snow College Library

150 College Avenue
Ephraim, Utah 84627

REVISIONS:

100% CD, October 10, 2008
100% CD Review, September 15, 2008
100% CD Review, August 4, 2008

ISSUE DATE:

OCTOBER 10 2008, 100% CD

ARCHITECT'S PROJECT NUMBER:

B07-051

DFCM PROJECT NUMBER:

07258700

SHEET TITLE:

lower level mechanical piping plan

SHEET NUMBER:

MP101

KEYED NOTES

1. SNOW MELT ZONE 1. SEE SHEET MP101 FOR PIPES TO SERVE THIS AREA.
2. SNOW MELT ZONE 2. SEE SHEET MP101 FOR PIPES TO SERVE THIS AREA.
3. SNOW MELT ZONE 3. SEE SHEET MP101 FOR PIPES TO SERVE THIS AREA.

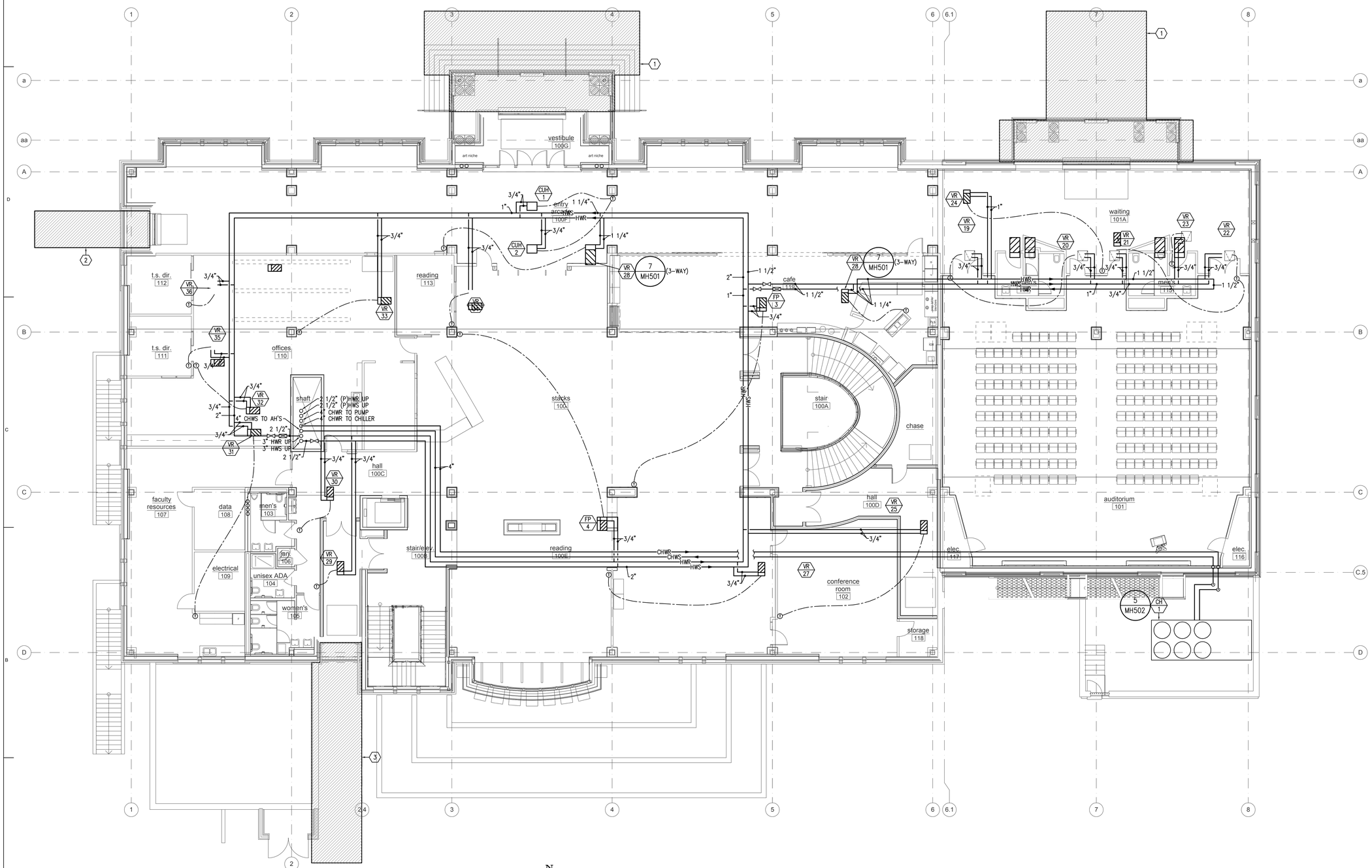

MAIN LEVEL MECHANICAL PIPING PLAN

MP102 SCALE: 1/8" = 1'-0"

0' 8' 16'

COOPER ROBERTS SIMONSEN ASSOCIATES

crsa

700 North 200 West
Salt Lake City, UT 84103
(801) 355-5915 phone
(801) 355-9885 fax
crsa-us.com

SNOW COLLEGE

State of Utah-Department of Administrative Services

DIVISION OF FACILITIES CONSTRUCTION AND MANAGEMENT

4110 State Office Building/Salt Lake City, Utah 84114-5018

Civil Engineer

Great Basin Engineering
Contact: Dave Waldron
5746 South 1475 East, Suite 200
Ogden, UT 84403
(801) 521-0222 FAX (801) 392-7544
dave@gbenorth.com

Landscape Architect

G. Brown Design
Contact: Mathew Winward
610 E. South Temple, Suite 50
Salt Lake City, UT 84102
(801) 575-6066 FAX (801) 575-6166
mwinward@gbrowndesign.com

Structural Engineer

Reaveley Engineers
Contact: Cameron Empey
675 East 500 South, Suite 400
Salt Lake City, UT 84105
(801) 486-3883 FAX (801) 485-0911
cempey@reaveley.com

Mechanical Engineer

Van Boerum & Frank
Contact: Neil Spencer
330 South 300 East
Salt Lake City, UT 84111
(801) 530-3148 FAX (801) 910-9917
nspencer@vbfa.com

Electrical Engineer

Spectrum Engineers
Contact: Dave Wesemann, PE
175 South Main Street, Suite 300
Salt Lake City, UT 84111
(801) 328-5151 FAX (801) 328-5155
dew@spectrum-engineers.com

AV Consultant

Spectrum Engineers
Contact: Kurtis Dallinga, PE
175 South Main Street, Suite 300
Salt Lake City, UT 84111
(801) 328-5151 FAX (801) 328-5155
kdd@spectrum-engineers.com

Library Consultant

Michaels Associates Design Consultants, Inc.
Contact: Andrea Michaels
14809 North 73rd Street, Suite 100
Scottsdale, AZ 85260
(480) 998-7476 FAX (480) 998-9390
andrea@madcinc.com

STAMP:

PROJECT NAME:

Snow College Library

150 College Avenue
Ephraim, Utah 84627

REVISIONS:

100% CD, October 10, 2008
100% CD Review, September 15, 2008
100% CD Review, August 4, 2008

ISSUE DATE:

OCTOBER 10 2008, 100% CD

ARCHITECT'S PROJECT NUMBER:

B07-051

DFCM PROJECT NUMBER:

07258700

SHEET TITLE:

main level mechanical piping plan

SHEET NUMBER:

MP102

KEYED NOTES

1. –

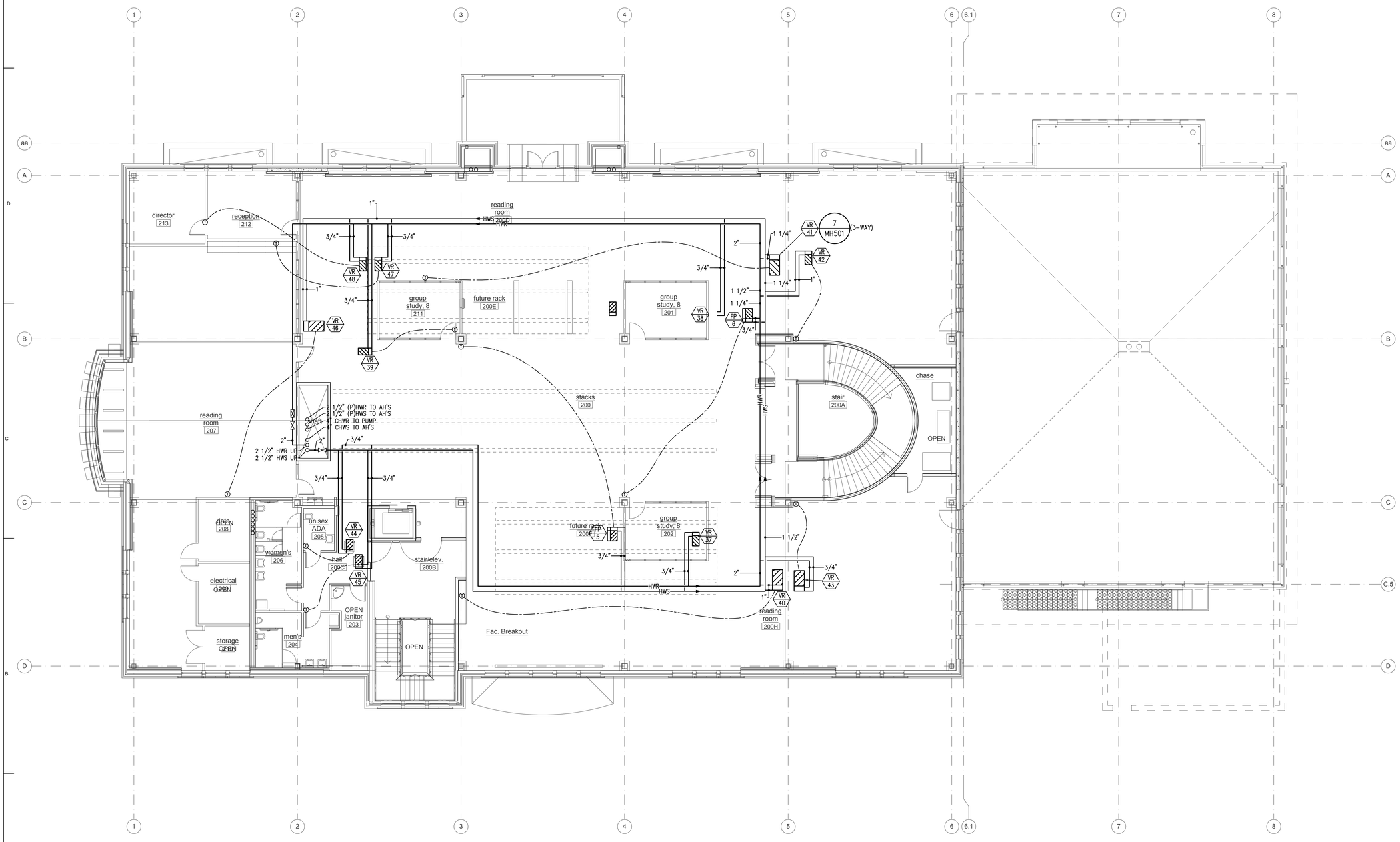

UPPER LEVEL MECHANICAL PIPING PLAN

MP103 SCALE: 1/8" = 1'-0"

0' 8' 16'

COOPER ROBERTS SIMONSEN ASSOCIATES

crsa

700 North 200 West
Salt Lake City, UT 84103
(801) 355-5915 phone
(801) 355-9885 fax
crsa-us.com

SNOW COLLEGE

State of Utah-Department of Administrative Services

DIVISION OF FACILITIES CONSTRUCTION AND MANAGEMENT

4110 State Office Building/Salt Lake City, Utah 84114/538-3018

Civil Engineer

Great Basin Engineering
Contact: Dave Waldron
5746 South 1475 East, Suite 200
Ogden, UT 84403
(801) 521-0222 FAX (801) 392-7544
dave@gbenorth.com

Landscape Architect

G. Brown Design
Contact: Mathew Winward
610 E. South Temple, Suite 50
Salt Lake City, UT 84102
(801) 575-6066 FAX (801) 575-6166
mwinward@gbrowndesign.com

Structural Engineer

Reaveley Engineers
Contact: Cameron Empey
675 East 500 South, Suite 400
Salt Lake City, UT 84105
(801) 486-3883 FAX (801) 485-0911
cempey@reaveley.com

Mechanical Engineer

Van Boerum & Frank
Contact: Neil Spencer
330 South 300 East
Salt Lake City, UT 84111
(801) 530-3148 FAX (801) 910-9917
nspencer@vbfa.com

Electrical Engineer

Spectrum Engineers
Contact: Dave Wesemann, PE
175 South Main Street, Suite 300
Salt Lake City, UT 84111
(801) 328-5151 FAX (801) 328-5155
dew@spectrum-engineers.com

AV Consultant

Spectrum Engineers
Contact: Kurtis Dallinga, PE
175 South Main Street, Suite 300
Salt Lake City, UT 84111
(801) 328-5151 FAX (801) 328-5155
kdd@spectrum-engineers.com

Library Consultant

Michaels Associates Design Consultants, Inc.
Contact: Andrea Michaels
14809 North 73rd Street, Suite 100
Scottsdale, AZ 85260
(480) 998-7476 FAX (480) 998-9390
andrea@madcinc.com

STAMP:

Registered Professional Engineer
BRIGGS
No. 318658
10/10/08
State of Utah

PROJECT NAME:

Snow College Library

150 College Avenue
Ephraim, Utah 84627

REVISIONS:

100% CD, October 10, 2008
100% CD Review, September 15, 2008
100% CD Review, August 4, 2008

ISSUE DATE:

OCTOBER 10 2008, 100% CD

ARCHITECT'S PROJECT NUMBER:

B07-051

DFCM PROJECT NUMBER:

07258700

SHEET TITLE:

upper level mechanical piping plan

SHEET NUMBER:

MP103

KEYED NOTES

1. –

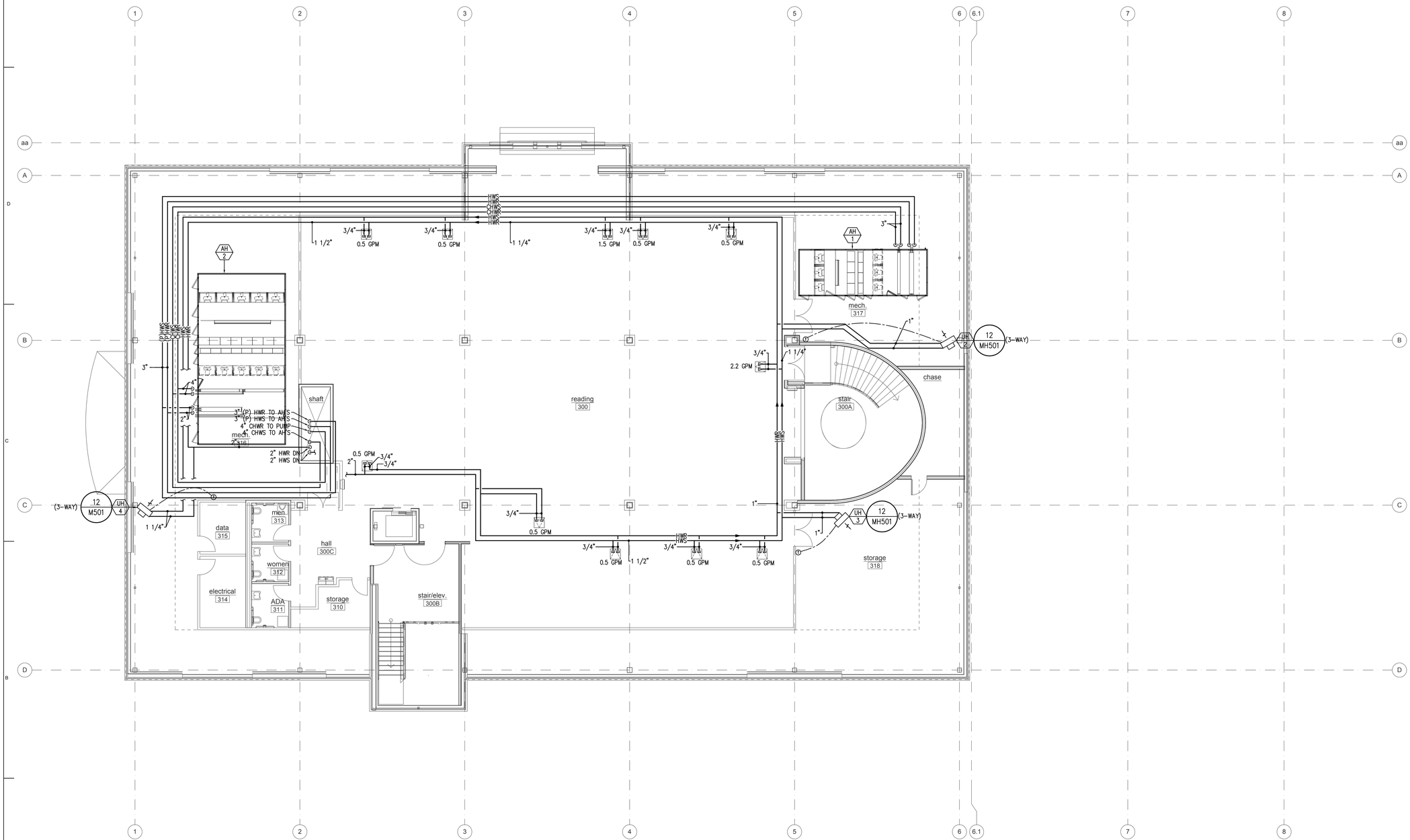

N

MP104 ATTIC MECHANICAL PIPING PLAN

SCALE: 1/8" = 1'-0"

0' 8' 16'

COOPER ROBERTS SIMONSEN ASSOCIATES

crsa

700 North 200 West
Salt Lake City, UT 84103
(801) 355-5915 phone
(801) 355-9885 fax
crsa-us.com

SNOW COLLEGE

State of Utah-Department of Administrative Services

DIVISION OF FACILITIES CONSTRUCTION AND MANAGEMENT

4110 State Office Building/Salt Lake City, Utah 84114-5018

Civil Engineer

Great Basin Engineering
Contact: Dave Waldron
5746 South 1475 East, Suite 200
Ogden, UT 84403
(801) 521-0222 FAX (801) 392-7544
dave@gbenorth.com

Landscape Architect

G. Brown Design
Contact: Mathew Winward
610 E. South Temple, Suite 50
Salt Lake City, UT 84102
(801) 575-6066 FAX (801) 575-6166
mwinward@gbrowndesign.com

Structural Engineer

Reaveley Engineers
Contact: Cameron Empey
675 East 500 South, Suite 400
Salt Lake City, UT 84105
(801) 486-3853 FAX (801) 485-0911
cempey@reaveley.com

Mechanical Engineer

Van Boerum & Frank
Contact: Neil Spencer
330 South 300 East
Salt Lake City, UT 84111
(801) 530-3148 FAX (801) 910-9917
nspencer@vbfa.com

Electrical Engineer

Spectrum Engineers
Contact: Dave Wesemann, PE
175 South Main Street, Suite 300
Salt Lake City, UT 84111
(801) 328-5151 FAX (801) 328-5155
dew@spectrum-engineers.com

AV Consultant

Spectrum Engineers
Contact: Kurtis Dallinga, PE
175 South Main Street, Suite 300
Salt Lake City, UT 84111
(801) 328-5151 FAX (801) 328-5155
kdd@spectrum-engineers.com

Library Consultant

Michaels Associates Design Consultants, Inc.
Contact: Andrea Michaels
14809 North 73rd Street, Suite 100
Scottsdale, AZ 85260
(480) 998-7476 FAX (480) 998-9390
andrea@madcinc.com

STAMP:

Registered Professional Engineer
BRIGGS
No. 318658
10/10/08
State of Utah

PROJECT NAME:

Snow College Library

150 College Avenue
Ephraim, Utah 84627

REVISIONS:

100% CD, October 10, 2008
100% CD Review, September 15, 2008
100% CD Review, August 4, 2008

ISSUE DATE:

OCTOBER 10 2008, 100% CD

ARCHITECT'S PROJECT NUMBER:

B07-051

DFCM PROJECT NUMBER:

07258700

SHEET TITLE:

attic mechanical piping plan

SHEET NUMBER:

MP104

KEYED NOTES

1. –

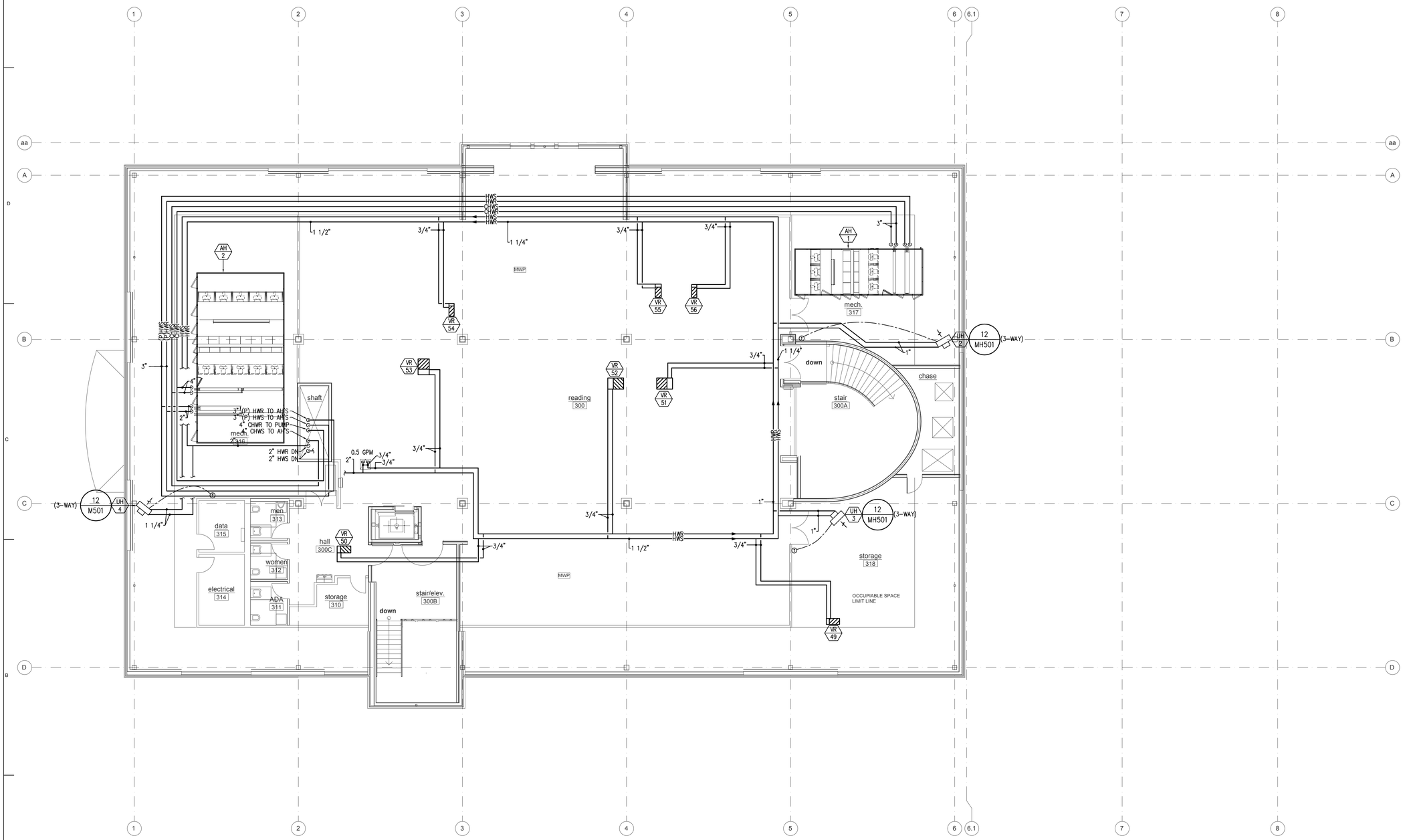

ADD ALT. ATTIC MECHANICAL PIPING PLAN

MP104A SCALE: 1/8" = 1'-0"

0' 8' 16'

COOPER ROBERTS SIMONSEN ASSOCIATES

crsa

700 North 200 West
Salt Lake City, UT 84103
(801) 355-5915 phone
(801) 355-9885 fax
crsa-us.com

SNOW COLLEGE

State of Utah-Department of Administrative Services

DIVISION OF FACILITIES CONSTRUCTION AND MANAGEMENT
4110 State Office Building/Salt Lake City, Utah 84114/538-3018

Civil Engineer
Great Basin Engineering
Contact: Dave Waldron
5746 South 1475 East, Suite 200
Ogden, UT 84403
(801) 521-0222 FAX (801) 392-7544
dave@gbenorth.com

Landscape Architect
G. Brown Design
Contact: Mathew Winward
610 E. South Temple, Suite 50
Salt Lake City, UT 84102
(801) 575-6066 FAX (801) 575-6166
mwinward@gbrowndesign.com

Structural Engineer
Reaveley Engineers
Contact: Cameron Empey
675 East 500 South, Suite 400
Salt Lake City, UT 84105
(801) 486-3883 FAX (801) 485-0911
cempey@reaveley.com

Mechanical Engineer
Van Boerum & Frank
Contact: Neil Spencer
330 South 300 East
Salt Lake City, UT 84111
(801) 530-3148 FAX (801) 910-9917
nspencer@vbfa.com

Electrical Engineer
Spectrum Engineers
Contact: Dave Wesemann, PE
175 South Main Street, Suite 300
Salt Lake City, UT 84111
(801) 328-5151 FAX (801) 328-5155
dew@spectrum-engineers.com

AV Consultant
Spectrum Engineers
Contact: Kurtis Dallinga, PE
175 South Main Street, Suite 300
Salt Lake City, UT 84111
(801) 328-5151 FAX (801) 328-5155
kdd@spectrum-engineers.com

Library Consultant
Michaels Associates Design Consultants, Inc.
Contact: Andrea Michaels
14809 North 73rd Street, Suite 100
Scottsdale, AZ 85260
(480) 998-7476 FAX (480) 998-9390
andrea@madcinc.com

STAMP:

Registered Professional Engineer
BRIGGS
No. 318658
10/10/08
State of Utah

PROJECT NAME:

Snow College Library

150 College Avenue
Ephraim, Utah 84627

REVISIONS:

100% CD, October 10, 2008
100% CD Review, September 15, 2008
100% CD Review, August 4, 2008

ISSUE DATE:

OCTOBER 10 2008, 100% CD

ARCHITECT'S PROJECT NUMBER:

B07-051

DFCM PROJECT NUMBER:

07258700

SHEET TITLE:

add alt. attic mechanical piping plan

SHEET NUMBER:

MP104A

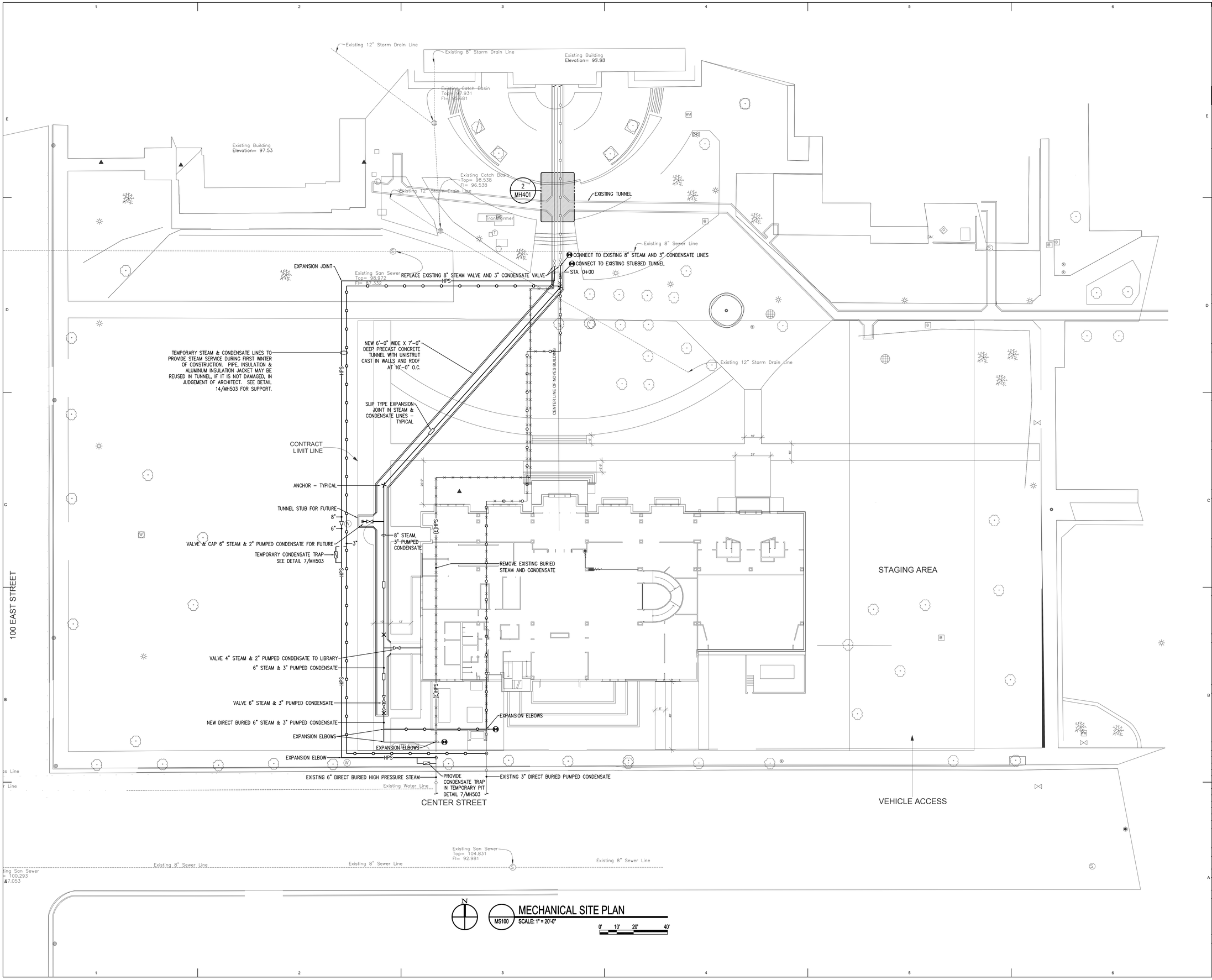

MS100 MECHANICAL SITE PLAN
SCALE: 1" = 20'-0"
0' 10' 20' 40'

COOPER ROBERTS SIMONSEN ASSOCIATES
crsa
700 North 200 West
Salt Lake City, UT 84103
(801) 355-5915 phone
(801) 355-9885 fax
crsa-us.com

SNOW COLLEGE

State of Utah-Department of Administrative Services
DIVISION OF FACILITIES CONSTRUCTION AND MANAGEMENT
4110 State Office Building•Salt Lake City, Utah 84114•538-3018

Civil Engineer
Great Basin Engineering
Contact: Dave Waldron
5746 South 1475 East, Suite 200
Ogden, UT 84403
(801) 521-0222 FAX (801) 392-7544
dave@gbenorth.com

Landscape Architect
G. Brown Design
Contact: Mathew Winward
610 E. South Temple, Suite 50
Salt Lake City, UT 84102
(801) 575-6066 FAX (801) 575-6166
mwinward@gbrowndesign.com

Structural Engineer
Reaveley Engineers
Contact: Cameron Empey
675 East 500 South, Suite 400
Salt Lake City, UT 84105
(801) 486-3853 FAX (801) 485-0911
cempey@reaveley.com

Mechanical Engineer
Van Boerum & Frank
Contact: Neil Spencer
330 South 300 East
Salt Lake City, UT 84111
(801) 530-3148 FAX (801) 910-9917
nspencer@vbfa.com

Electrical Engineer
Spectrum Engineers
Contact: Dave Wesemann, PE
175 South Main Street, Suite 300
Salt Lake City, UT 84111
(801) 328-5151 FAX (801) 328-5155
dew@spectrum-engineers.com

AV Consultant
Spectrum Engineers
Contact: Kurtis Dallinga, PE
175 South Main Street, Suite 300
Salt Lake City, UT 84111
(801) 328-5151 FAX (801) 328-5155
kdd@spectrum-engineers.com

Library Consultant
Michaels Associates Design Consultants, Inc.
Contact: Andrea Michaels
14809 North 73rd Street, Suite 100
Scottsdale, AZ 85260
(480) 998-7476 FAX (480) 998-9390
andrea@madcinc.com

STAMP:

PROJECT NAME:

Snow College Library

150 College Avenue
Ephraim, Utah 84627

REVISIONS:

100% CD, October 10, 2008
100% CD Review, September 15, 2008
100% CD Review, August 4, 2008

ISSUE DATE:
OCTOBER 10 2008, 100% CD

ARCHITECT'S PROJECT NUMBER:
B07-051

DFCM PROJECT NUMBER:
07258700

SHEET TITLE:
mechanical site plan

SHEET NUMBER:
MS100

KEYED NOTES

1. RISE TO FDC ON MAIN FLOOR.
2. HOSE VALVE LOCATED IN CABINET.

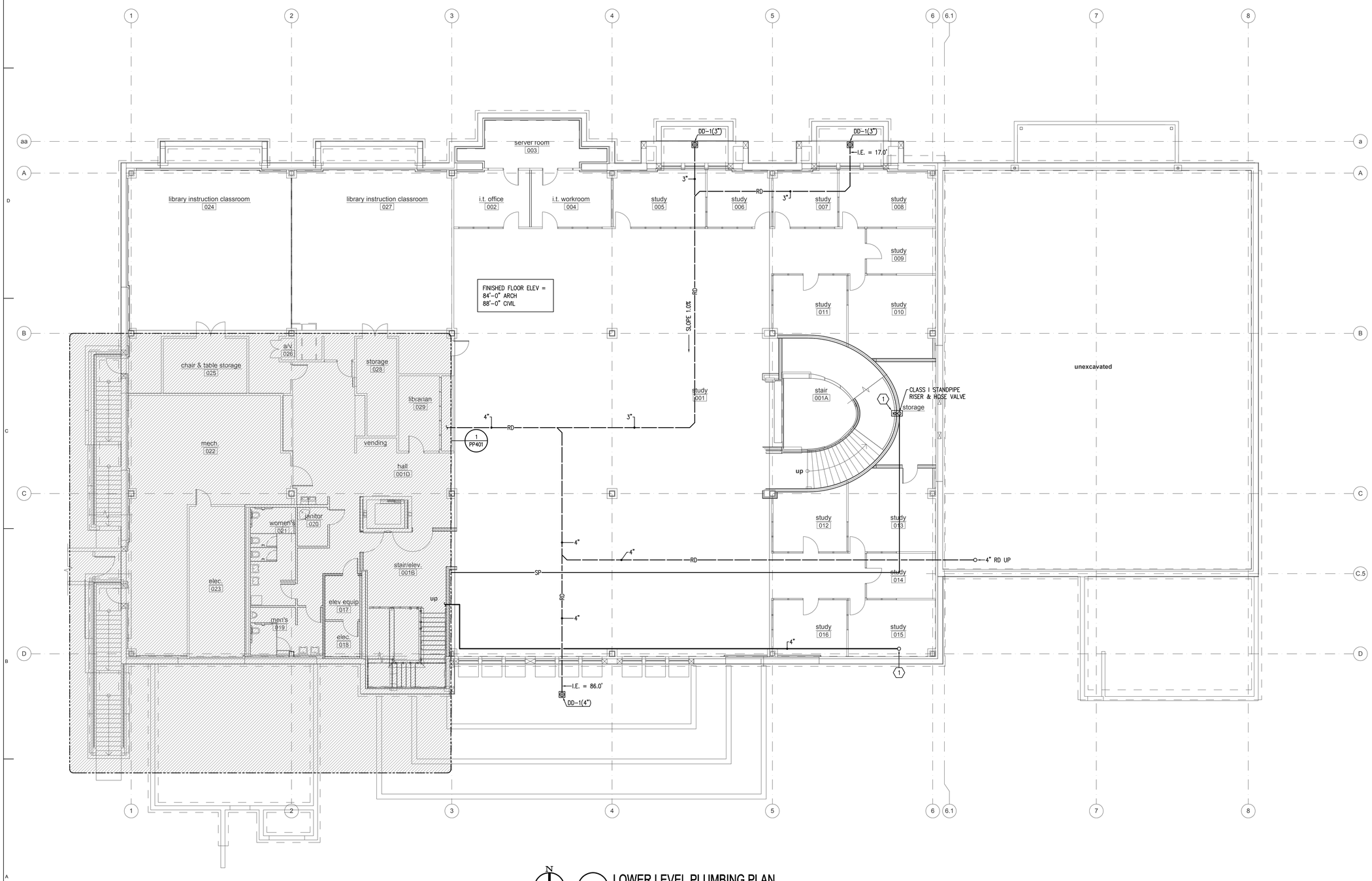

LOWER LEVEL PLUMBING PLAN

PP101 SCALE: 1/8" = 1'-0"

0' 8' 16'

COOPER ROBERTS SIMONSEN ASSOCIATES

crsa

700 North 200 West
Salt Lake City, UT 84103
(801) 355-5915 phone
(801) 355-9885 fax
crsa-us.com

SNOW COLLEGE

State of Utah-Department of Administrative Services

DIVISION OF FACILITIES CONSTRUCTION AND MANAGEMENT

4110 State Office Building/Salt Lake City, Utah 84114/538-3018

Civil Engineer

Great Basin Engineering
Contact: Dave Waldron
5746 South 1475 East, Suite 200
Ogden, UT 84403
(801) 521-0222 FAX (801) 392-7544
dave@gbenorth.com

Landscape Architect

G. Brown Design
Contact: Mathew Winward
610 E. South Temple, Suite 50
Salt Lake City, UT 84102
(801) 575-6066 FAX (801) 575-6166
mwinward@gbrowndesign.com

Structural Engineer

Reaveley Engineers
Contact: Cameron Empey
675 East 500 South, Suite 400
Salt Lake City, UT 84105
(801) 486-3883 FAX (801) 485-0911
cempey@reaveley.com

Mechanical Engineer

Van Boerum & Frank
Contact: Neil Spencer
330 South 300 East
Salt Lake City, UT 84111
(801) 530-3148 FAX (801) 910-9917
nspencer@vbfa.com

Electrical Engineer

Spectrum Engineers
Contact: Dave Wesemann, PE
175 South Main Street, Suite 300
Salt Lake City, UT 84111
(801) 328-5151 FAX (801) 328-5155
dew@spectrum-engineers.com

AV Consultant

Spectrum Engineers
Contact: Kurtis Dallinga, PE
175 South Main Street, Suite 300
Salt Lake City, UT 84111
(801) 328-5151 FAX (801) 328-5155
kdd@spectrum-engineers.com

Library Consultant

Michaels Associates Design Consultants, Inc.
Contact: Andrea Michaels
14809 North 73rd Street, Suite 100
Scottsdale, AZ 85260
(480) 998-7476 FAX (480) 998-9390
andrea@madcinc.com

STAMP:

REGISTERED PROFESSIONAL ENGINEER
BRIGGS
No. 318658
10/10/08
State of Utah

PROJECT NAME:

Snow College Library

150 College Avenue
Ephraim, Utah 84627

REVISIONS:

100% CD, October 10, 2008
100% CD Review, September 15, 2008
100% CD Review, August 4, 2008

ISSUE DATE:

OCTOBER 10 2008, 100% CD

ARCHITECT'S PROJECT NUMBER:

B07-051

DFCM PROJECT NUMBER:

07258700

SHEET TITLE:

lower level plumbing plan

SHEET NUMBER:

PP101

KEYED NOTES

1. LOCATE SUT-OFF VALVES OUTSIDE OF SHAFT.
2. 2" CW UP/ 3" CW DN, 1 1/2" HW UP/ 1 1/2" HW DN, 3/4" HWR UP/ 1" HWR DN.
3. 4" LINE FROM BELOW.
4. FIRE SPRINKLER CABINET WITH FLOOR CONTROL ASSEMBLY. SEE DETAIL
5. HOSE VALVE LOCATED IN CABINET.
6. ZONE CHECK LOCATION AND ACCESS.

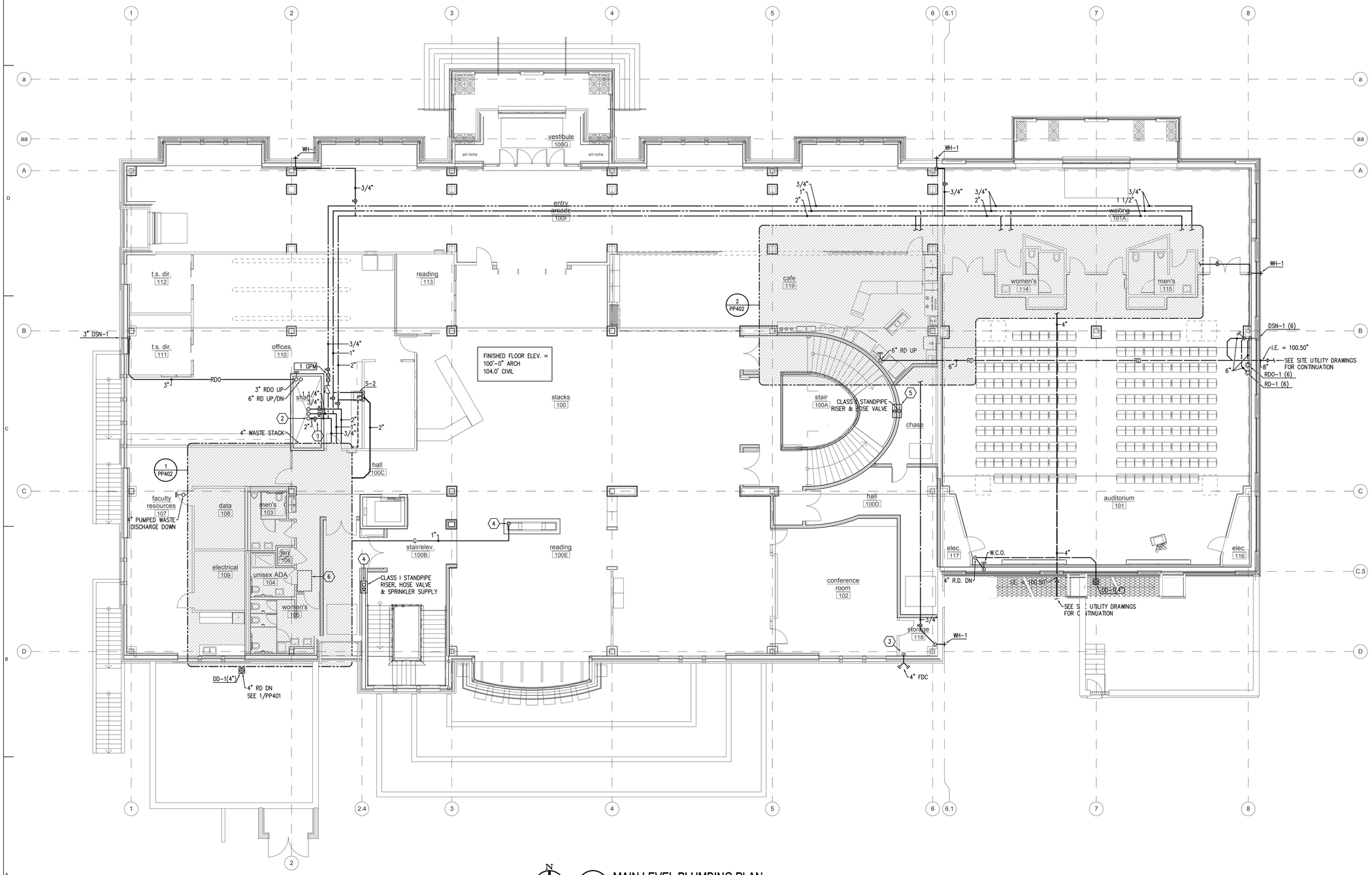

MAIN LEVEL PLUMBING PLAN

PP102 SCALE: 1/8" = 1'-0"

0' 8' 16'

COOPER ROBERTS SIMONSEN ASSOCIATES

crsa

700 North 200 West
Salt Lake City, UT 84103
(801) 355-5915 phone
(801) 355-9885 fax
crsa-us.com

SNOW COLLEGE

State of Utah-Department of Administrative Services

DIVISION OF FACILITIES CONSTRUCTION AND MANAGEMENT

4110 State Office Building/Salt Lake City, Utah 84114/538-3018

Civil Engineer

Great Basin Engineering
Contact: Dave Waldron
5746 South 1475 East, Suite 200
Ogden, UT 84403
(801) 521-0222 FAX (801) 392-7544
dave@gbenorth.com

Landscape Architect

G. Brown Design
Contact: Mathew Winward
610 E. South Temple, Suite 50
Salt Lake City, UT 84102
(801) 575-6066 FAX (801) 575-6166
mwinward@gbrowndesign.com

Structural Engineer

Reaveley Engineers
Contact: Cameron Empey
675 East 500 South, Suite 400
Salt Lake City, UT 84105
(801) 486-3853 FAX (801) 485-0911
cempey@reaveley.com

Mechanical Engineer

Van Boerum & Frank
Contact: Neil Spencer
330 South 300 East
Salt Lake City, UT 84111
(801) 530-3148 FAX (801) 910-9917
nspencer@vbfa.com

Electrical Engineer

Spectrum Engineers
Contact: Dave Wesemann, PE
175 South Main Street, Suite 300
Salt Lake City, UT 84111
(801) 328-5151 FAX (801) 328-5155
dew@spectrum-engineers.com

AV Consultant

Spectrum Engineers
Contact: Kurtis Dallinga, PE
175 South Main Street, Suite 300
Salt Lake City, UT 84111
(801) 328-5151 FAX (801) 328-5155
kdd@spectrum-engineers.com

Library Consultant

Michaels Associates Design Consultants, Inc.
Contact: Andrea Michaels
14809 North 73rd Street, Suite 100
Scottsdale, AZ 85260
(480) 998-7476 FAX (480) 998-9390
andrea@madcinc.com

STAMP:

Licensed Professional Engineer
BRIGGS
No. 318655
10/10/08
State of Utah

PROJECT NAME:

Snow College Library

150 College Avenue
Ephraim, Utah 84627

REVISIONS:

100% CD, October 10, 2008
100% CD Review, September 15, 2008
100% CD Review, August 4, 2008

ISSUE DATE:

OCTOBER 10 2008, 100% CD

ARCHITECT'S PROJECT NUMBER:

B07-051

DFCM PROJECT NUMBER:

07258700

SHEET TITLE:

main level plumbing plan

SHEET NUMBER:

PP102

KEYED NOTES

1. 2" CW UP/ 2" CW DN, 1" HW UP/ 1 1/2" HW DN, 3/4" HWR UP/ DN.
2. 3" RD UP.
3. FIRE SPRINKLER CABINET WITH FLOOR CONTROL ASSEMBLY. SEE DETAIL
4. HOSE VALVE LOCATED IN CABINET.
5. ZONE CHECK LOCATION AND ACCESS.

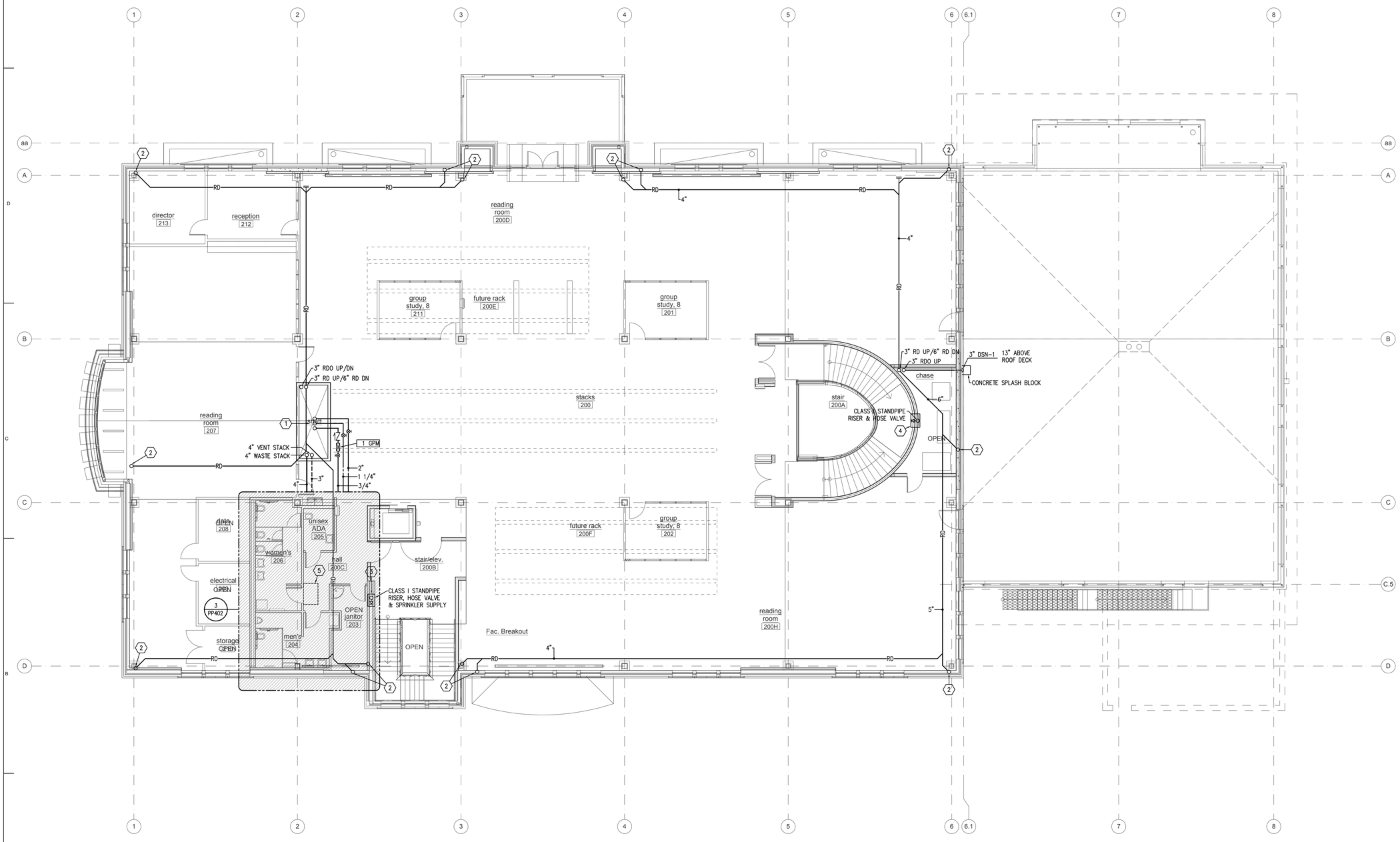

UPPER LEVEL PLUMBING PLAN

PP103 SCALE: 1/8" = 1'-0"

0' 8' 16'

COOPER ROBERTS SIMONSEN ASSOCIATES

crsa

700 North 200 West
Salt Lake City, UT 84103
(801) 355-5915 phone
(801) 355-9885 fax
crsa-us.com

SNOW COLLEGE

State of Utah-Department of Administrative Services

DIVISION OF FACILITIES CONSTRUCTION AND MANAGEMENT

4110 State Office Building/Salt Lake City, Utah 84114/538-3018

Civil Engineer

Great Basin Engineering
Contact: Dave Waldron
5746 South 1475 East, Suite 200
Ogden, UT 84403
(801) 521-0222 FAX (801) 392-7544
dave@gbenorth.com

Landscape Architect

G. Brown Design
Contact: Mathew Winward
610 E. South Temple, Suite 50
Salt Lake City, UT 84102
(801) 575-6066 FAX (801) 575-6166
mwinward@gbrowndesign.com

Structural Engineer

Reaveley Engineers
Contact: Cameron Empey
675 East 500 South, Suite 400
Salt Lake City, UT 84105
(801) 486-3883 FAX (801) 485-0911
cempey@reaveley.com

Mechanical Engineer

Van Boerum & Frank
Contact: Neil Spencer
330 South 300 East
Salt Lake City, UT 84111
(801) 530-3148 FAX (801) 910-9917
nspencer@vbfa.com

Electrical Engineer

Spectrum Engineers
Contact: Dave Wesemann, PE
175 South Main Street, Suite 300
Salt Lake City, UT 84111
(801) 328-5151 FAX (801) 328-5155
dew@spectrum-engineers.com

AV Consultant

Spectrum Engineers
Contact: Kurtis Dallinga, PE
175 South Main Street, Suite 300
Salt Lake City, UT 84111
(801) 328-5151 FAX (801) 328-5155
kdd@spectrum-engineers.com

Library Consultant

Michaels Associates Design Consultants, Inc.
Contact: Andrea Michaels
14809 North 73rd Street, Suite 100
Scottsdale, AZ 85260
(480) 998-7476 FAX (480) 998-9390
andrea@madcinc.com

STAMP:

Registered Professional Engineer
BRIGGS
No. 318658
10/10/08
State of Utah

PROJECT NAME:

Snow College Library

150 College Avenue
Ephraim, Utah 84627

REVISIONS:

100% CD, October 10, 2008
100% CD Review, September 15, 2008
100% CD Review, August 4, 2008

ISSUE DATE:

OCTOBER 10 2008, 100% CD

ARCHITECT'S PROJECT NUMBER:

B07-051

DFCM PROJECT NUMBER:

07258700

SHEET TITLE:

upper level plumbing plan

SHEET NUMBER:

PP103

KEYED NOTES

1. ELECTRONIC TRAP PRIMER.
2. 2" CW, 1" HW, 3/4" HWR DN.
3. CONNECT TO 3" DOWNSPOUT. SEE ARCH ROOF PLAN AND DETAILS. DROP TO LEVEL 3 CEILING.
4. FIRE SPRINKLER CABINET WITH FLOOR CONTROL ASSEMBLY. SEE DETAIL
5. HOSE VALVE LOCATED IN CABINET.
6. ZONE CHECK LOCATION AND ACCESS.
7. STANDPIPE TO RISE TO ROOF.
8. POST INDICATOR VALVE WITH TAMPER SWITCH (NORMALLY CLOSED POSITION). OPERATOR ON ROOF.
9. BALL DRIP VALVE INSTALLED BEYOND INDICATOR VALVE. PIPE TO NEAREST COIL CONDENSATE DRIP PAN OR DIRECTLY OUT OF THE BUILDING.
10. DOUBLE HOSE VALVE 2 1/2" WITH 1 1/2" REDUCER AND CAP ON ROOF.

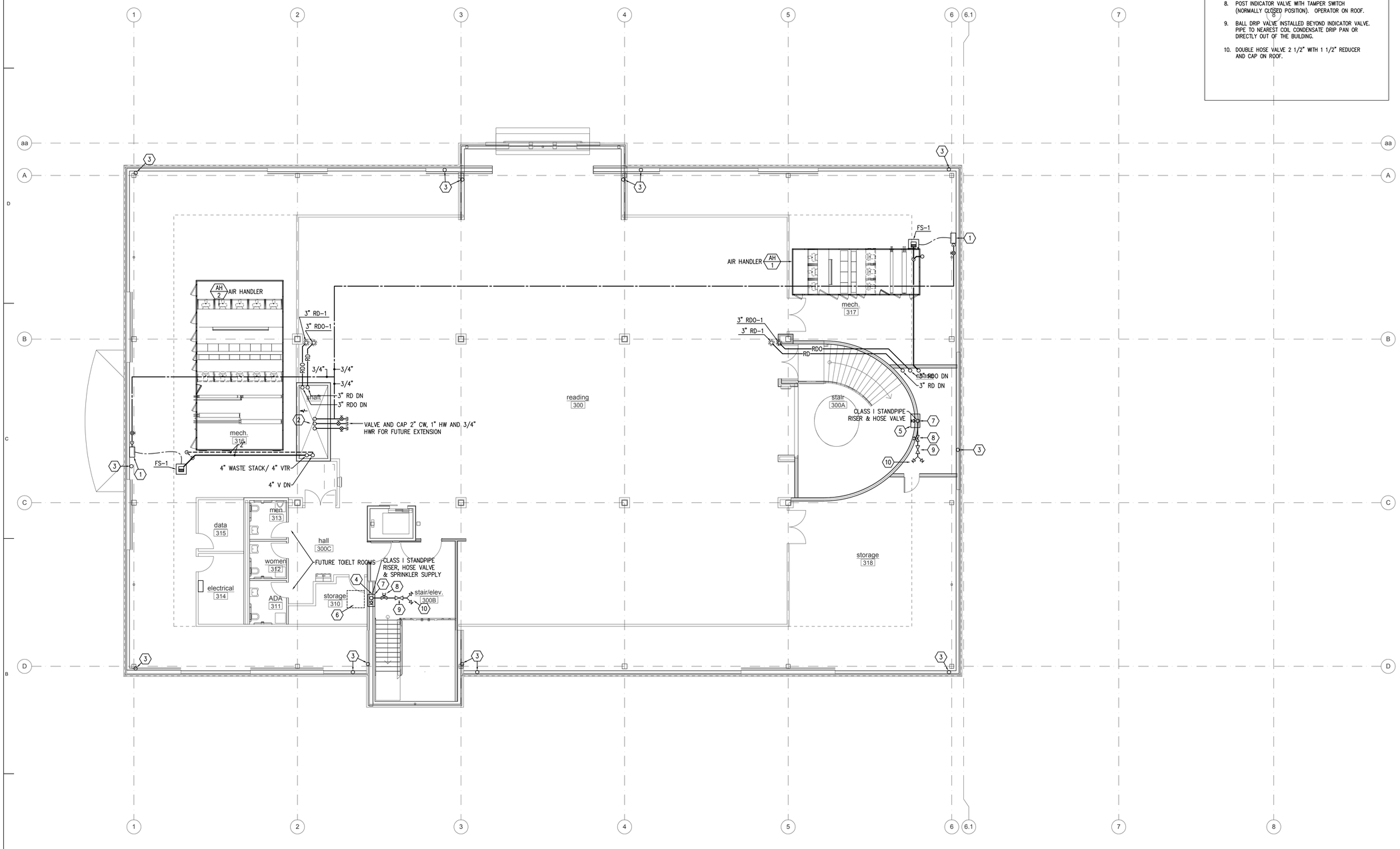

N

PP104 ATTIC PLUMBING PLAN

SCALE: 1/8" = 1'-0"

0' 8' 16'

COOPER ROBERTS SIMONSEN ASSOCIATES

crsa

700 North 200 West
Salt Lake City, UT 84103
(801) 355-5915 phone
(801) 355-9885 fax
crsa-us.com

SNOW COLLEGE

State of Utah-Department of Administrative Services

DIVISION OF FACILITIES CONSTRUCTION AND MANAGEMENT
4110 State Office Building/Salt Lake City, Utah 84114-5018

Civil Engineer

Great Basin Engineering
Contact: Dave Waldron
5746 South 1475 East, Suite 200
Ogden, UT 84403
(801) 521-0222 FAX (801) 392-7544
dave@gbenorth.com

Landscape Architect

G. Brown Design
Contact: Mathew Winward
610 E. South Temple, Suite 50
Salt Lake City, UT 84102
(801) 575-6066 FAX (801) 575-6166
mwinward@gbrowndesign.com

Structural Engineer

Reaveley Engineers
Contact: Cameron Empey
675 East 500 South, Suite 400
Salt Lake City, UT 84105
(801) 486-3853 FAX (801) 485-0911
cempey@reaveley.com

Mechanical Engineer

Van Boerum & Frank
Contact: Neil Spencer
330 South 300 East
Salt Lake City, UT 84111
(801) 530-3148 FAX (801) 910-9917
nspencer@vbfa.com

Electrical Engineer

Spectrum Engineers
Contact: Dave Wesemann, PE
175 South Main Street, Suite 300
Salt Lake City, UT 84111
(801) 328-5151 FAX (801) 328-5155
dew@spectrum-engineers.com

AV Consultant

Spectrum Engineers
Contact: Kurtis Dallinga, PE
175 South Main Street, Suite 300
Salt Lake City, UT 84111
(801) 328-5151 FAX (801) 328-5155
kdd@spectrum-engineers.com

Library Consultant

Michaels Associates Design Consultants, Inc.
Contact: Andrea Michaels
14809 North 73rd Street, Suite 100
Scottsdale, AZ 85260
(480) 998-7476 FAX (480) 998-9390
andrea@madcinc.com

STAMP:

Professional Engineer
Brent Briggs
BRIGGS
No. 318668
10/10/08
State of Utah

PROJECT NAME:

Snow College Library

150 College Avenue
Ephraim, Utah 84627

REVISIONS:

100% CD, October 10, 2008
100% CD Review, September 15, 2008
100% CD Review, August 4, 2008

ISSUE DATE:

OCTOBER 10 2008, 100% CD

ARCHITECT'S PROJECT NUMBER:

B07-051

DFCM PROJECT NUMBER:

07258700

SHEET TITLE:

attic plumbing plan

SHEET NUMBER:

PP104

KEYED NOTES

1. ELECTRONIC TRAP PRIMER.
2. 2" CW, 1" HW, 3/4" HWR DN.
3. CONNECT TO 3" DOWNSPOUT. SEE ARCH ROOF PLAN AND DETAILS. DROP TO LEVEL 3 CEILING.
4. FIRE SPRINKLER CABINET WITH FLOOR CONTROL ASSEMBLY. SEE DETAIL
5. HOSE VALVE LOCATED IN CABINET.
6. ZONE CHECK LOCATION AND ACCESS.
7. STANDPIPE TO RISE TO ROOF.
8. POST INDICATOR VALVE WITH TAMPER SWITCH (NORMALLY CLOSED POSITION). OPERATOR ON ROOF.
9. BALL DRIP VALVE INSTALLED BEYOND INDICATOR VALVE. PIPE TO NEAREST COIL CONDENSATE DRIP PAN OR DIRECTLY OUT OF THE BUILDING.
10. DOUBLE HOSE VALVE 2 1/2" WITH 1 1/2" REDUCER AND CAP ON ROOF.

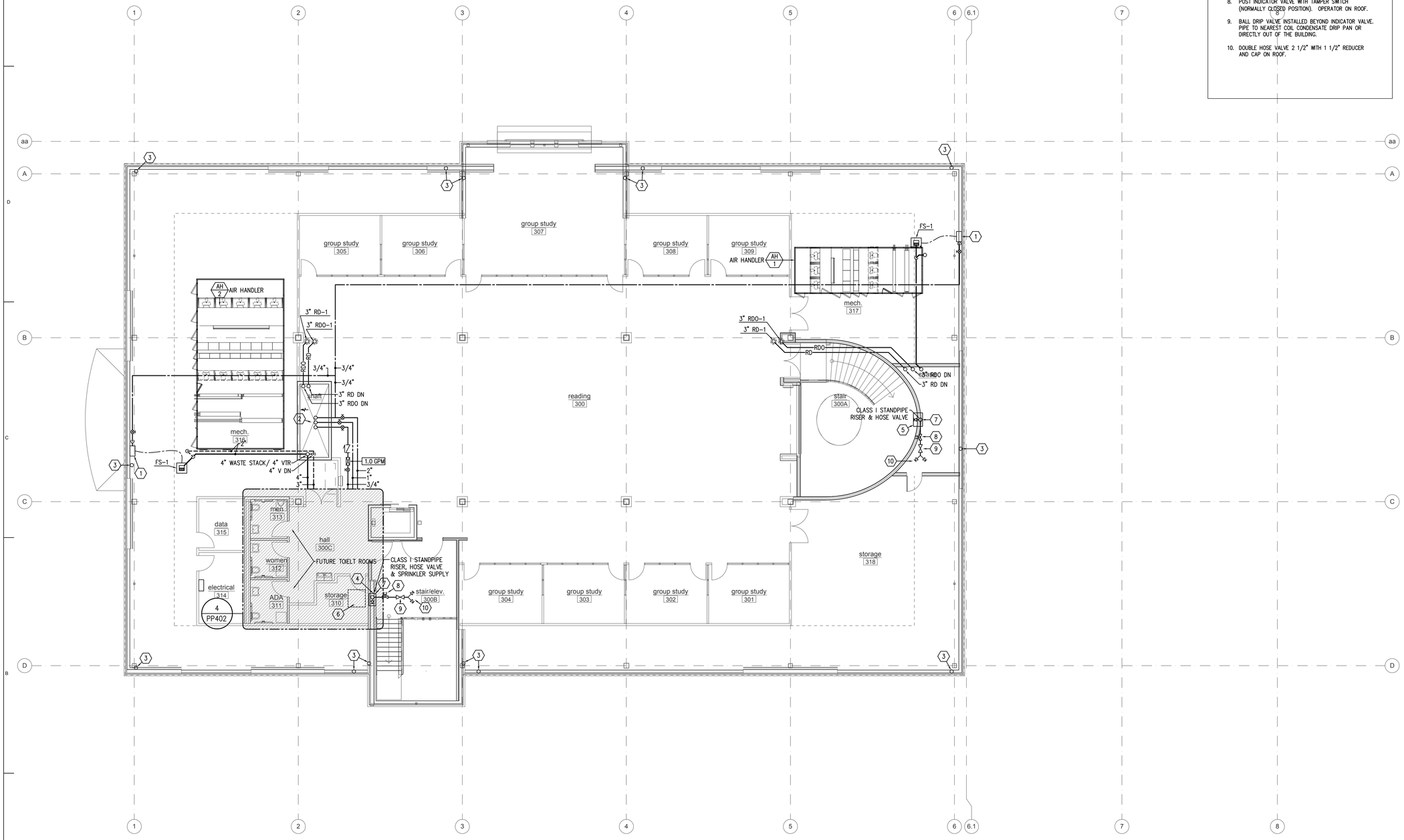

N

PP104a ATTIC ADD ALT. PLUMBING PLAN
SCALE: 1/8" = 1'-0"
0' 8' 16'

COOPER ROBERTS SIMONSEN ASSOCIATES
crsa
700 North 200 West
Salt Lake City, UT 84103
(801) 355-5915 phone
(801) 355-9885 fax
crsa-us.com

SNOW COLLEGE

State of Utah-Department of Administrative Services
DIVISION OF FACILITIES CONSTRUCTION AND MANAGEMENT
4110 State Office Building/Salt Lake City, Utah 84114-5018

Civil Engineer
Great Basin Engineering
Contact: Dave Waldron
5746 South 1475 East, Suite 200
Ogden, UT 84403
(801) 521-0222 FAX (801) 392-7544
dave@gbenorth.com

Landscape Architect
G. Brown Design
Contact: Mathew Winward
610 E. South Temple, Suite 50
Salt Lake City, UT 84102
(801) 575-6066 FAX (801) 575-6166
mwinward@gbrowndesign.com

Structural Engineer
Reaveley Engineers
Contact: Cameron Empey
675 East 500 South, Suite 400
Salt Lake City, UT 84105
(801) 486-3853 FAX (801) 485-0911
cempey@reaveley.com

Mechanical Engineer
Van Boerum & Frank
Contact: Neil Spencer
330 South 300 East
Salt Lake City, UT 84111
(801) 530-3148 FAX (801) 910-9917
nspencer@vbfa.com

Electrical Engineer
Spectrum Engineers
Contact: Dave Wesemann, PE
175 South Main Street, Suite 300
Salt Lake City, UT 84111
(801) 328-5151 FAX (801) 328-5155
dew@spectrum-engineers.com

AV Consultant
Spectrum Engineers
Contact: Kurtis Dallinga, PE
175 South Main Street, Suite 300
Salt Lake City, UT 84111
(801) 328-5151 FAX (801) 328-5155
kdd@spectrum-engineers.com

Library Consultant
Michaels Associates Design Consultants, Inc.
Contact: Andrea Michaels
14809 North 73rd Street, Suite 100
Scottsdale, AZ 85260
(480) 998-7476 FAX (480) 998-9390
andrea@madcinc.com

STAMP:

PROJECT NAME:

Snow College Library

150 College Avenue
Ephraim, Utah 84627

REVISIONS:

100% CD, October 10, 2008
100% CD Review, September 15, 2008
100% CD Review, August 4, 2008

ISSUE DATE:
OCTOBER 10 2008, 100% CD

ARCHITECT'S PROJECT NUMBER:
B07-051

DFCM PROJECT NUMBER:
07258700

SHEET TITLE:
attic add alt. plumbing plan

SHEET NUMBER:
PP104A

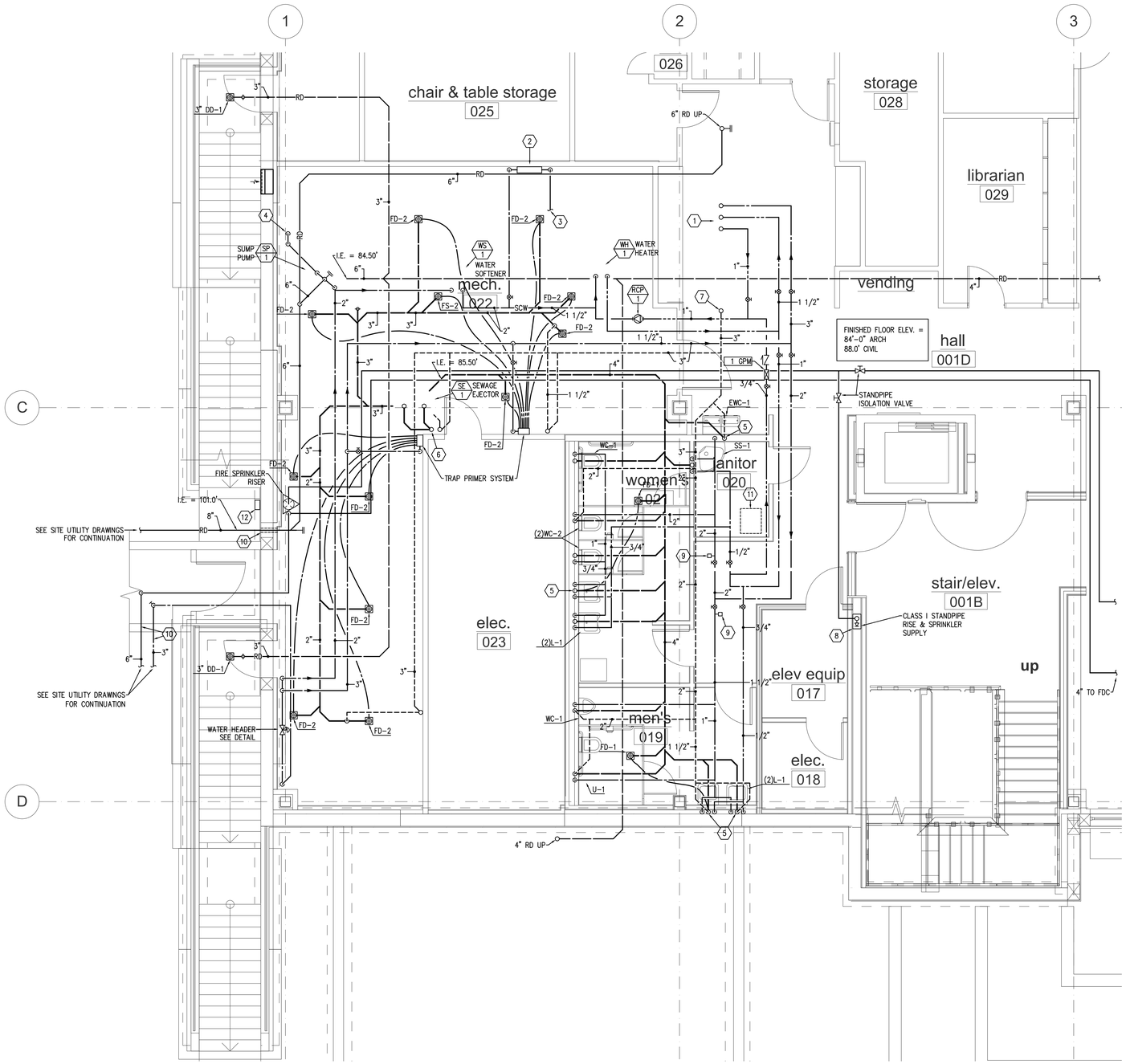

N

1 PP401 MECHANICAL ROOM PLUMBING PLAN

SCALE: 1/4" = 1'-0"

0' 4' 8'

KEYED NOTES

1. 3" CW, 1 1/2" HW, 1" HWR UP.
2. REDUCED PRESSURE ZONE BACK FLOW PREVENTER.
3. NON-POTABLE CW TO HEATING WATER SYSTEM.
4. TURN VENT DOWN AND TERMINATE 7'-0" ABOVE FLOOR.
5. TRAP FED TRAP PRIMER EXTEND 1/2" SUPPLY TO FLOOR DRAIN.
6. 4" PUMP DISCHARGE UP.
7. 4" VENT UP.
8. FIRE SPRINKLER CABINET WITH FLOOR CONTROL ASSEMBLY. SEE DETAIL.
9. WATER HAMMER ARRESTER.
10. SIGMA CORP "OMNI SLEEVE" PIPE PENETRATION SLEEVE TO ALLOW DEFLECTION.
11. ZONE CHECK LOCATION AND ACCESS.
12. ELECTRONIC HORN/STROBE AT TOP OF STAIRS. COORDINATE WIRING WITH ELECTRICAL.

COOPER ROBERTS SIMONSEN ASSOCIATES

crsa

700 North 200 West
Salt Lake City, UT 84103
(801) 355-5915 phone
(801) 355-9885 fax
crsa-us.com

SNOW COLLEGE

State of Utah-Department of Administrative Services

DIVISION OF FACILITIES CONSTRUCTION AND MANAGEMENT
4110 State Office Building/Salt Lake City, Utah 84114-5018

Civil Engineer

Great Basin Engineering
Contact: Dave Waldron
5746 South 1475 East, Suite 200
Ogden, UT 84403
(801) 521-0222 FAX (801) 392-7544
dave@gbenorth.com

Landscape Architect

G. Brown Design
Contact: Mathew Winward
610 E. South Temple, Suite 50
Salt Lake City, UT 84102
(801) 575-6066 FAX (801) 575-6166
mwinward@gbrowndesign.com

Structural Engineer

Reaveley Engineers
Contact: Cameron Empey
675 East 500 South, Suite 400
Salt Lake City, UT 84105
(801) 486-3853 FAX (801) 485-0911
cempey@reaveley.com

Mechanical Engineer

Van Boerum & Frank
Contact: Neil Spencer
330 South 300 East
Salt Lake City, UT 84111
(801) 530-3148 FAX (801) 910-9917
nspencer@vbfa.com

Electrical Engineer

Spectrum Engineers
Contact: Dave Wesemann, PE
175 South Main Street, Suite 300
Salt Lake City, UT 84111
(801) 328-5151 FAX (801) 328-5155
dew@spectrum-engineers.com

AV Consultant

Spectrum Engineers
Contact: Kurtis Dallinga, PE
175 South Main Street, Suite 300
Salt Lake City, UT 84111
(801) 328-5151 FAX (801) 328-5155
kdd@spectrum-engineers.com

Library Consultant

Michaels Associates Design Consultants, Inc.
Contact: Andrea Michaels
14809 North 73rd Street, Suite 100
Scottsdale, AZ 85260
(480) 998-7476 FAX (480) 998-9390
andrea@madcinc.com

STAMP:

PROJECT NAME:

Snow College Library

150 College Avenue
Ephraim, Utah 84627

REVISIONS:

100% CD, October 10, 2008
100% CD Review, September 15, 2008
100% CD Review, August 4, 2008

ISSUE DATE:

OCTOBER 10 2008, 100% CD

ARCHITECT'S PROJECT NUMBER:

B07-051

DFCM PROJECT NUMBER:

07258700

SHEET TITLE:

mechanical room plumbing plan

SHEET NUMBER:

PP401

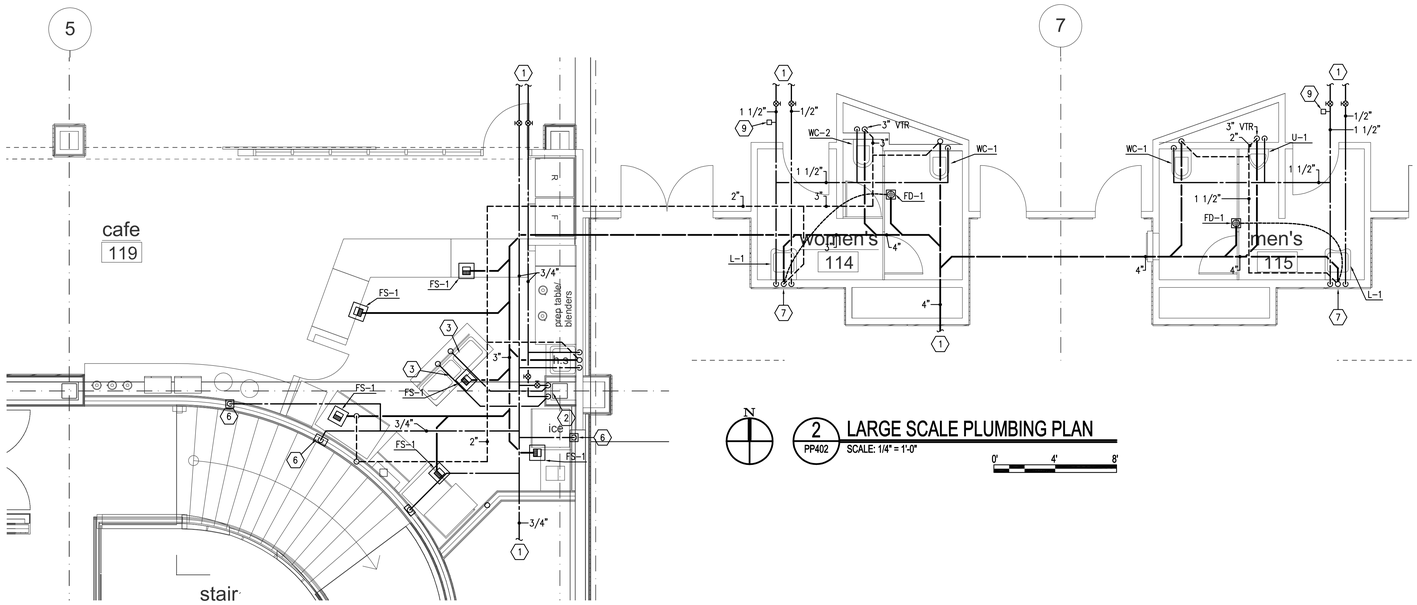

2 PP402 LARGE SCALE PLUMBING PLAN
SCALE: 1/4" = 1'-0"

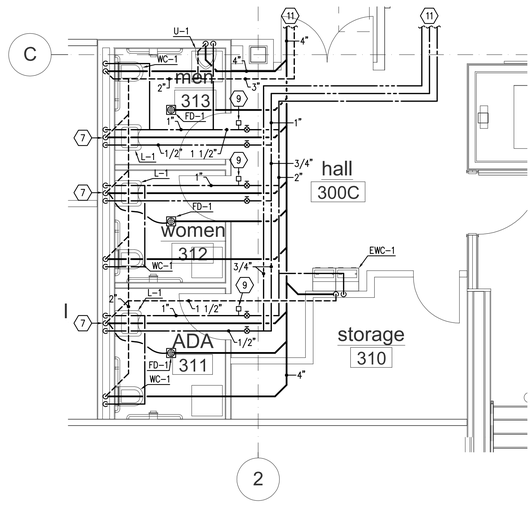

4 PP402 ADD ALT
LARGE SCALE PLUMBING PLAN
SCALE: 1/4" = 1'-0"

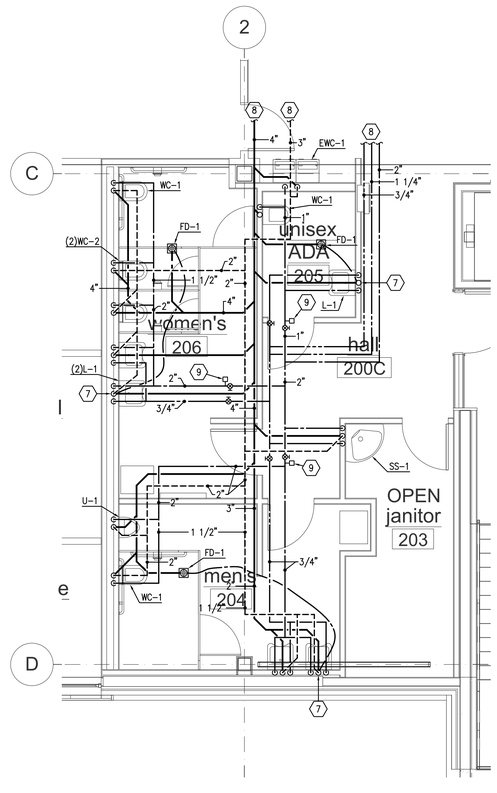

3 PP402 LARGE SCALE PLUMBING PLAN
SCALE: 1/4" = 1'-0"

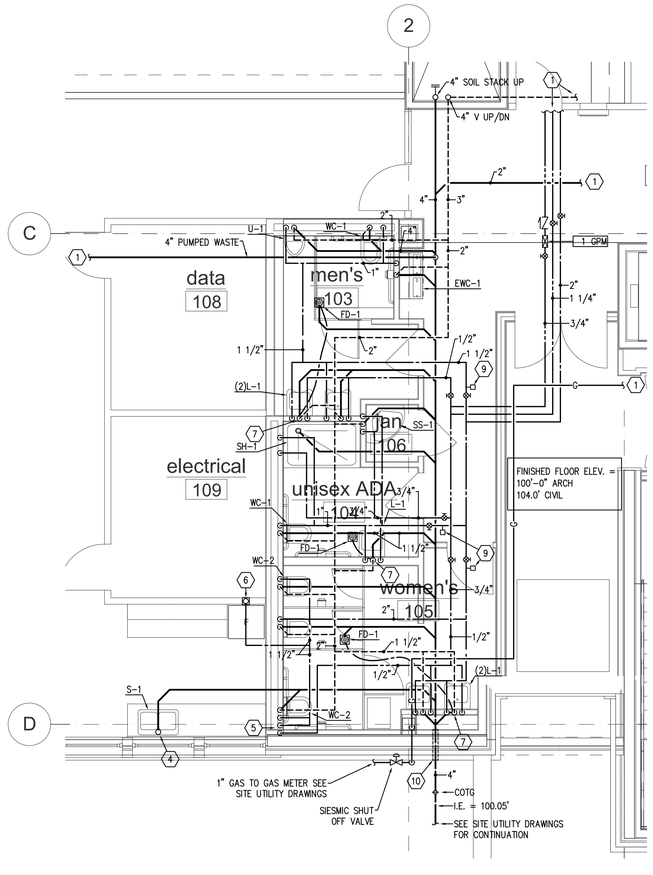

1 PP402 LARGE SCALE PLUMBING PLAN
SCALE: 1/4" = 1'-0"

KEYED NOTES

1. SEE SHEET PP102 FOR CONTINUATION.
2. DROP 1/2" HW AND CW LINES BELOW FLOOR.
3. WATER LINES BELOW FLOOR.
4. PROVIDE AIR ADMITTANCE VALVE IN CABINET SPACE.
5. DROP WATER LINES DOWN, RUN BELOW CABINET TOP TO SINK.
6. WATER-TITE MODEL W9200HA ICE MAKER VALVE BOX WITH WATER HAMMER ARRESTOR.
7. TRAP FED TRAP PRIMER EXTEND 1/2" SUPPLY TO FLOOR DRAIN.
8. SEE SHEET PP103 FOR CONTINUATION.
9. WATER HAMMER ARRESTER.
10. SIGMA CORP "OMNI SLEEVE" PIPE PENETRATION SLEEVE TO ALLOW DEFLECTION.
11. SEE P104A FOR CONTINUATION.

COOPER ROBERTS SIMONSEN ASSOCIATES
crsa
700 North 200 West
Salt Lake City, UT 84103
(801) 355-5915 phone
(801) 355-9885 fax
crsa-us.com

SNOW COLLEGE

State of Utah-Department of Administrative Services
DIVISION OF FACILITIES CONSTRUCTION AND MANAGEMENT
4110 State Office Building•Salt Lake City, Utah 84114•538-3018

Civil Engineer
Great Basin Engineering
Contact: Dave Waldron
5746 South 1475 East, Suite 200
Ogden, UT 84403
(801) 521-0222 FAX (801) 392-7544
dave@gbenorth.com

Landscape Architect
G. Brown Design
Contact: Mathew Winward
610 E. South Temple, Suite 50
Salt Lake City, UT 84102
(801) 575-6066 FAX (801) 575-6166
mwinward@gbrowndesign.com

Structural Engineer
Reaveley Engineers
Contact: Cameron Empey
675 East 500 South, Suite 400
Salt Lake City, UT 84105
(801) 486-3853 FAX (801) 485-0911
cempey@reaveley.com

Mechanical Engineer
Van Boerum & Frank
Contact: Neil Spencer
330 South 300 East
Salt Lake City, UT 84111
(801) 530-3148 FAX (801) 910-9917
nspencer@vbfa.com

Electrical Engineer
Spectrum Engineers
Contact: Dave Wesemann, PE
175 South Main Street, Suite 300
Salt Lake City, UT 84111
(801) 328-5151 FAX (801) 328-5155
dew@spectrum-engineers.com

AV Consultant
Spectrum Engineers
Contact: Kurtis Dallinga, PE
175 South Main Street, Suite 300
Salt Lake City, UT 84111
(801) 328-5151 FAX (801) 328-5155
kdd@spectrum-engineers.com

Library Consultant
Michaels Associates Design Consultants, Inc.
Contact: Andrea Michaels
14809 North 73rd Street, Suite 100
Scottsdale, AZ 85260
(480) 998-7476 FAX (480) 998-9390
andrea@madcinc.com

STAMP:

Robert Briggs
BRIGGS
No. 318658
10/10/08
State of Utah

PROJECT NAME:

Snow College Library

150 College Avenue
Ephraim, Utah 84627

REVISIONS:

100% CD, October 10, 2008
100% CD Review, September 15, 2008
100% CD Review, August 4, 2008

ISSUE DATE:
OCTOBER 10 2008, 100% CD

ARCHITECT'S PROJECT NUMBER:
B07-051

DFCM PROJECT NUMBER:
07258700

SHEET TITLE:
large scale plumbing plans

SHEET NUMBER:
PP402

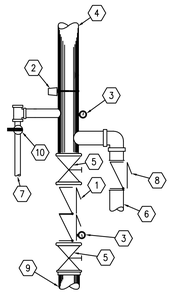

1. DOUBLE CHECK VALVE ASSEMBLY
2. FLOW SWITCH TO HORN STROBE ALARM, WIRING BY DIVISION 16.
3. WATER PRESSURE GAGE
4. TO WET SYSTEM STANDPIPES.
5. CONTROL VALVE WITH TAMPER SWITCH, WIRING BY DIVISION 16.
6. TO FIRE DEPARTMENT CONNECTION.
7. MAIN DRAIN PIPED TO EXTERIOR.
8. CHECK VALVE
9. FIRE LINE FROM SUPPLY. PROVIDE GALVANIZED PIPING UP TO VALVE ASSEMBLY. PROVIDE RESTRAINTS, FLEXIBLE COUPLINGS, AND ANNULAR CLEARANCE AS REQUIRED BY NFPA.
10. MAINTENANCE VALVE.

D2 / PP501 **FIRE SPRINKLER RISER DETAIL**
NO SCALE

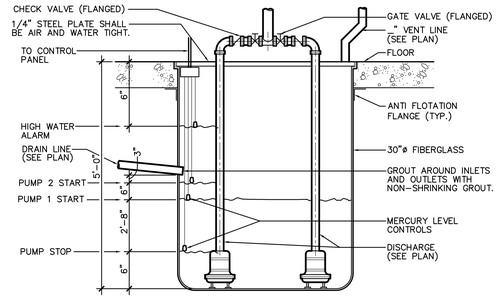

D3 / PP501 **SEWAGE EJECTION DETAIL**
NO SCALE

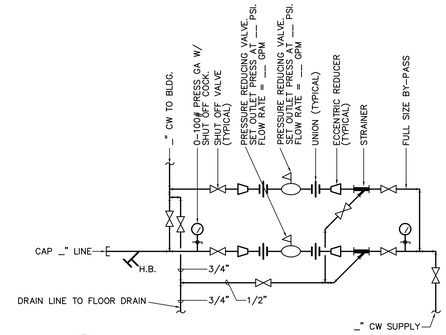

D5 / PP501 **WATER HEADER DETAIL**
NO SCALE

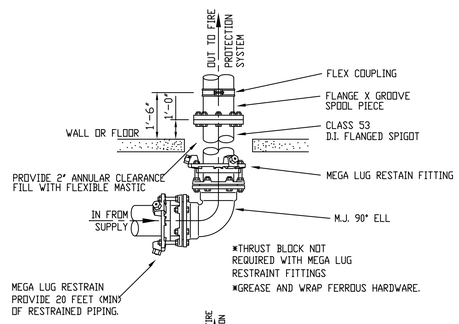

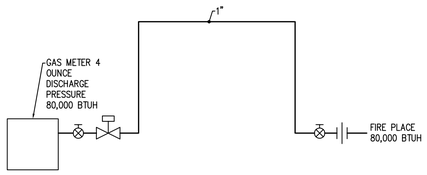

C3 / PP501 **GAS PIPING DIAGRAM**
NO SCALE

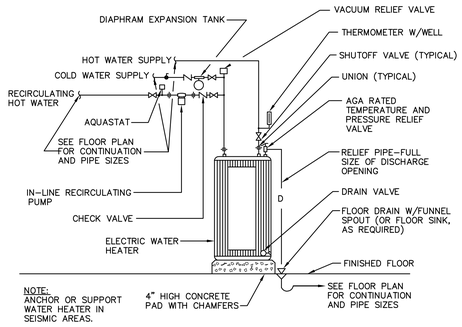

C5 / PP501 **ELECTRIC WATER HEATER DETAIL**
NO SCALE

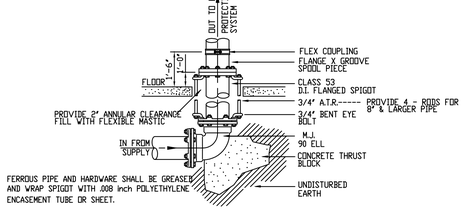

B2 / PP501 **FLANGED SPIGOT THROUGH FLOOR**
NO SCALE

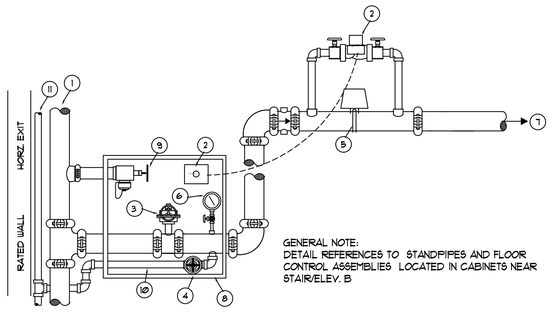

GENERAL NOTE:
DETAIL REFERENCES TO STANDPIPES AND FLOOR CONTROL ASSEMBLIES LOCATED IN CABINETS NEAR STAIR/ELEV. B

LEGEND

1. CLASS I AUTOMATIC WET, COMBINED STANDPIPE
2. ZONE CHECK FLOW SWITCH TESTER "SYSTEM SENSOR" BRAND, WITH PUMP & TEST SWITCH.
3. INDICATING TYPE FLOOR CONTROL VALVE WITH SUPERVISORY SWITCH.
4. AUXILLARY DRAIN
5. VANE TYPE WATERFLOW SWITCH.
6. PRESSURE GAUGE, AND 3-WAY VALVE WITH PLUG AND NIPPLES.
7. TO SPRINKLERS.
8. VALVE CABINET- SIZE AS REQUIRED FOR DEVICE CLEARANCES
9. 2 1/2" HOSE VALVE WITH 1 1/2" REDUCER AND CAP
10. PIPE TO 2" EXPRESS DRAIN
11. EXPRESS DRAIN

A3 / PP501 **STANDPIPE & FLOOR CONTROL ASSEMBLY DETAIL**
NO SCALE

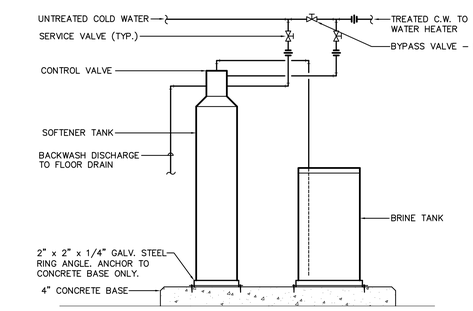

B5 / PP501 **WATER SOFTENER DETAIL**
NO SCALE

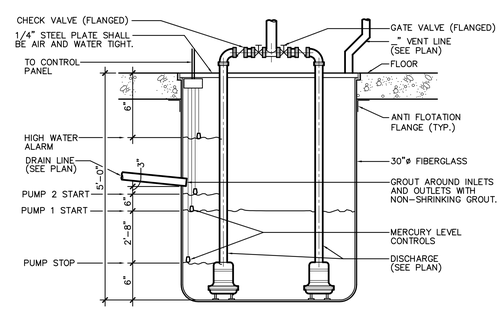

A5 / PP501 **SUMP PUMP DETAIL**
NO SCALE

COOPER ROBERTS SIMONSEN ASSOCIATES
crsa
700 North 200 West
Salt Lake City, UT 84103
(801) 355-5915 phone
(801) 355-9885 fax
crsa-us.com

SNOW COLLEGE

State of Utah-Department of Administrative Services
DIVISION OF FACILITIES CONSTRUCTION AND MANAGEMENT
4110 State Office Building•Salt Lake City, Utah 84114•538-3018

Civil Engineer
Great Basin Engineering
Contact: Dave Waldron
5746 South 1475 East, Suite 200
Ogden, UT 84403
(801) 521-0222 FAX (801) 392-7544
dave@gbenorth.com

Landscape Architect
G. Brown Design
Contact: Mathew Winward
610 E. South Temple, Suite 50
Salt Lake City, UT 84102
(801) 575-6066 FAX (801) 575-6166
mwinward@gbrowndesign.com

Structural Engineer
Reaveley Engineers
Contact: Cameron Empey
675 East 500 South, Suite 400
Salt Lake City, UT 84105
(801) 486-3853 FAX (801) 485-0911
cempey@reaveley.com

Mechanical Engineer
Van Boerum & Frank
Contact: Neil Spencer
330 South 300 East
Salt Lake City, UT 84111
(801) 530-3148 FAX (801) 910-9917
nspencer@vbfa.com

Electrical Engineer
Spectrum Engineers
Contact: Dave Wesemann, PE
175 South Main Street, Suite 300
Salt Lake City, UT 84111
(801) 328-5151 FAX (801) 328-5155
dew@spectrum-engineers.com

AV Consultant
Spectrum Engineers
Contact: Kurtis Dallinga, PE
175 South Main Street, Suite 300
Salt Lake City, UT 84111
(801) 328-5151 FAX (801) 328-5155
kdd@spectrum-engineers.com

Library Consultant
Michaels Associates Design Consultants, Inc.
Contact: Andrea Michaels
14809 North 73rd Street, Suite 100
Scottsdale, AZ 85260
(480) 998-7476 FAX (480) 998-9390
andrea@madcinc.com

STAMP:

Professional Engineer
BRIAN G. BRIGGS
No. 318658
10/10/08
STATE OF UTAH

PROJECT NAME:

Snow College Library

150 College Avenue
Ephraim, Utah 84627

REVISIONS:

100% CD, October 10, 2008
100% CD Review, September 15, 2008
100% CD Review, August 4, 2008

ISSUE DATE:
OCTOBER 10 2008, 100% CD

ARCHITECT'S PROJECT NUMBER:
B07-051

DFCM PROJECT NUMBER:
07258700

SHEET TITLE:
plumbing details

SHEET NUMBER:
PP501

SEWAGE EJECTION STATION SCHEDULE

				FLUID			PUMP		ELECTRICAL				
ID	MANUFACTURER	MODEL	TYPE	FLOW RATE (GPM)	WORKING FLUID	HEAD LOSS (FT)	EFFICIENCY (%)	CONSTRUCTION	MOTOR SIZE (HP)	MOTOR BHP (HP)	MOTOR SPEED (RPM)	VOLT/PH/HZ	NOTES
SE-1	HYDROMATIC	SP50AB	SUBMERSIBLE	50	SEWAGE	25	50	CAST IRON	1/2	NA	1750	208/3/60	1,2
SP-1	HYDROMATIC	SPD100H	SUBMERSIBLE	100	WATER	25	50	CAST IRON	1	NA	3450	208/3/60	1,2

1. PUMP PACKAGE TO INCLUDE PUMPS, CONTROL PANEL, AND LEVEL CONTROLS
2. DUPLEX PUMPS. CAPACITIES NOTED ARE FOR EACH PUMP.

WATER SOFTENER SCHEDULE

ID	MANUFACTURER	MODEL	TYPE	TOTAL (GRAINS)	NORMAL / MAX WATER FLOW/UNIT @ 15/25 PSI LOSS	BACKWASH FLOW RATE (GPM)	RESIN QUANTITY (FT^3)	RESIN TANK HGHT/DIA (IN/IN)	BRINE TANK HGHT/DIA (IN/IN)	ELECTRICAL (VOLT/PH)	NOTES
WS-1	CULLIGAN	HC-150-1.5	SIMPLEX	150,000	40/55	15	5	54/21	48/24	115/1	

DOMESTIC PUMP SCHEDULE

				FLUID			PUMP		ELECTRICAL				
ID	MANUFACTURER	MODEL	TYPE	FLOW RATE (GPM)	WORKING FLUID	HEAD LOSS (FT)	EFFICIENCY (%)	CONSTRUCTION	MOTOR SIZE (HP)	MOTOR BHP (HP)	MOTOR SPEED (RPM)	VOLT/PH/HZ	NOTES
RCP-1	BELL & GOSSETT	SERIES PR-1* AB	IN-LINE	5	WATER	10	70	ALL BRONZE	1/6	-	1750	115/1/60	

ELECTRIC WATER HEATER SCHEDULE

						ELECTRICAL		PHYSICAL			
ID	MANUFACTURER	MODEL	TYPE	TEMP. IN/ TEMP. OUT (DEG. F.)	RECOVERY RATE (GPH)	(KW)	V/PH	EFFICIENCY (%)	TANK SIZE (GAL)	HEIGHT/ DIA. (IN)	NOTES
WH-1	A. O. SMITH	DEL-50	TANK	40/130	23	5	208/3	100	50	32/26	

WATER SOFTENER SCHEDULE

ID	MANUFACTURER	MODEL	TYPE	TOTAL (GRAINS)	NORMAL / MAX WATER FLOW/UNIT @ 15/25 PSI LOSS	BACKWASH FLOW RATE (GPM)	RESIN QUANTITY (FT^3)	RESIN TANK HGHT/DIA (IN/IN)	BRINE TANK HGHT/DIA (IN/IN)	ELECTRICAL (VOLT/PH)	NOTES
WS-1	CULLIGAN	HC-150-1.5	SIMPLEX	150,000	40/55	15	5	54/21	48/24	115/1	

DOMESTIC EXPANSION TANK SCHEDULE

				FLUID		PHYSICAL				
ID	MANUFACTURER	MODEL	TYPE	WORKING FLUID	MIN. TANK ACCEPTANCE (GAL)	TANK SIZE (GAL)	RELIEF VALVE (PSIG)	DIA./ HEIGHT (IN)	NPT FITTING (IN)	NOTES
DET-1	BELL & GOSSETT	PT-25V	DIAPGHRAM	WATER	3.2	4.4	-	15/19	3/4	1

1. TANK LINER SUITABLE FOR POTABLE WATER

PLUMBING FIXTURE SCHEDULE

ID	FIXTURE	CW (IN)	HW (IN)	W (IN)	V (IN)	NOTES
WC-1	WATER CLOSET	1	-.-	4	2	WALL HUNG, FLUSH VALVE, ADA
WC-2	WATER CLOSET	1	-.-	4	2	WALL HUNG, FLUSH VALVE
U-1	URINAL	3/4	-.-	2	2	WALL HUNG, WATERLESS, ADA, CAP WATER SUPPLY
L-1	LAVATORY	1/2	1/2	1 1/2	1 1/2	WALL HUNG, ADA
S-1	SINK	1/2	1/2	2	1 1/2	COUNTER MOUNTED, DOUBLE COMPARTMENT
S-2	SINK	1/2	1/2	2	1 1/2	COUNTER MOUNTED, SINGLE COMPARTMENT
SS-1	SERVICE SINK	3/4	3/4	3	2	-.-
SH-2	SHOWER	1/2	1/2	2	2	-.-
EWC-1	WATER COOLER	1/2	-.-	1 1/2	1 1/2	WALL HUNG DUAL LEVEL
WH-1	NON FREEZE WALL HYDRANT	3/4	-.-	-.-	-.-	-.-
FD-1	FLOOR DRAIN	-.-	-.-	2	2	RESTROOM
FD-2	MECHANICAL ROOM DRAIN	-.-	-.-	2	2	MECHANICAL ROOM
FS-1	FLOOR SINK	-.-	-.-	2	2	
FS-2	FLOOR SINK	-.-	-.-	3	2	
RD-1	ROOF DRAIN	-.-	-.-	-.-	-.-	SEE PLANS FOR SIZE
RDO-1	ROOF DRAIN OVERFLOW	-.-	-.-	-.-	-.-	SEE PLANS FOR SIZE
DSN-1	DOWN SPOUT NOZZLE	-.-	-.-	-.-	-.-	SEE PLANS FOR SIZE
DD-1	DECK DRAIN	-.-	-.-	-.-	-.-	SEE PLANS FOR SIZE

1. ALL UNDER GROUND WASTE AND VENT SHALL BE 2" OR GREATER PER DRAWINGS.

COOPER ROBERTS SIMONSEN ASSOCIATES
crsa
700 North 200 West
Salt Lake City, UT 84103
(801) 355-5915 phone
(801) 355-9885 fax
crsa-us.com

SNOW COLLEGE

State of Utah-Department of Administrative Services
DIVISION OF FACILITIES CONSTRUCTION AND MANAGEMENT
4110 State Office Building/Salt Lake City, Utah 84114-5018

Civil Engineer
Great Basin Engineering
Contact: Dave Waldron
5746 South 1475 East, Suite 200
Ogden, UT 84403
(801) 521-0222 FAX (801) 392-7544
dave@gbenorth.com

Landscape Architect
G. Brown Design
Contact: Mathew Winward
610 E. South Temple, Suite 50
Salt Lake City, UT 84102
(801) 575-6066 FAX (801) 575-6166
mwinward@gbrowndesign.com

Structural Engineer
Reaveley Engineers
Contact: Cameron Empey
675 East 500 South, Suite 400
Salt Lake City, UT 84105
(801) 486-3853 FAX (801) 485-0911
cempey@reaveley.com

Mechanical Engineer
Van Boerum & Frank
Contact: Neil Spencer
330 South 300 East
Salt Lake City, UT 84111
(801) 530-3148 FAX (801) 910-9917
nspencer@vbfa.com

Electrical Engineer
Spectrum Engineers
Contact: Dave Wesemann, PE
175 South Main Street, Suite 300
Salt Lake City, UT 84111
(801) 328-5151 FAX (801) 328-5155
dew@spectrum-engineers.com

AV Consultant
Spectrum Engineers
Contact: Kurtis Dallinga, PE
175 South Main Street, Suite 300
Salt Lake City, UT 84111
(801) 328-5151 FAX (801) 328-5155
kdd@spectrum-engineers.com

Library Consultant
Michaels Associates Design Consultants, Inc.
Contact: Andrea Michaels
14809 North 73rd Street, Suite 100
Scottsdale, AZ 85260
(480) 998-7476 FAX (480) 998-9390
andrea@madcinc.com

STAMP:

Brian Bridges
BRIGGS
No. 318658
10/10/08
STATE OF UTAH

PROJECT NAME:

Snow College Library

150 College Avenue
Ephraim, Utah 84627

REVISIONS:

100% CD, October 10, 2008
100% CD Review, September 15, 2008
100% CD Review, August 4, 2008

ISSUE DATE:

OCTOBER 10 2008, 100% CD

ARCHITECT'S PROJECT NUMBER:

B07-051

DFCM PROJECT NUMBER:

07258700

SHEET TITLE:

plumbing schedules

SHEET NUMBER:

PP601

SYMBOL LEGEND

SYMBOL	DESCRIPTION
REFERENCE AND LINE SYMBOLS	
A5 E-501	DETAIL INDICATOR: A5 INDICATES DETAIL NUMBER, E-501 INDICATES DRAWING SHEET WHERE DETAIL IS SHOWN.
A5 E-201	ELEVATION OR SECTION INDICATOR, EXTERIOR: A5 INDICATES ELEVATION OR SECTION NUMBER, E-201 INDICATES DRAWING SHEET WHERE ELEVATION OR SECTION IS SHOWN.
A5 E-201	ELEVATION OR SECTION INDICATOR, INTERIOR: A5 INDICATES ELEVATION OR SECTION NUMBER, E-201 INDICATES DRAWING SHEET WHERE ELEVATION OR SECTION IS SHOWN.
100	ROOM OR SPACE NUMBER.
1	KEYNOTE INDICATOR.
1	REVISION INDICATOR.
CU-1	EQUIPMENT INDICATOR.
	BREAK, STRAIGHT: TO BREAK PARTS OF DRAWING.
MATCH LINE SEE XX/X-XXX	MATCH LINE INDICATOR: CENTER, EXTRA WIDE LINE.
	NEW LINE: MEDIUM LINE.
	DEMOLITION LINE: DASHED, MEDIUM LINE.
WIRING METHODS	
	WIRING.
	WIRING TURNED UP OR TOWARDS OBSERVER.
	WIRING TURNED DOWN OR AWAY FROM OBSERVER.
A-1,3,5	BRANCH CIRCUIT HOME RUN TO PANELBOARD: NUMBER OF ARROWS INDICATES NUMBER OF CIRCUITS. LETTER AND NUMBER NOTATIONS IDENTIFY PANEL AND CIRCUIT NUMBERS. USE #12 CONDUCTORS, EXCEPT #10 CONDUCTORS SHALL BE INSTALLED IF DISTANCES EXCEED THOSE SPECIFIED IN SECTION 16120.
1 A-1,3,5	BRANCH CIRCUIT HOME RUN TO PANELBOARD: NUMBER OF ARROWS INDICATES NUMBER OF CIRCUITS. LETTER AND NUMBER NOTATIONS IDENTIFY PANEL AND CIRCUIT NUMBERS. NUMBER IN BOX REFERS TO THE CONDUCTOR AND CONDUIT SCHEDULE.
	FLEXIBLE WIRING.
— X —	WIRING AND/OR RACEWAY: THIN LINE. WHERE "X" = : CATV = CABLE TELEVISION CCTV = CLOSED CIRCUIT TELEVISION FA = FIRE ALARM FO = FIBER OPTICS I = INTERCOM NC = NURSE CALL P = POWER R = RIGID CONDUIT S = SOUND T = TELEPHONE TV = TELEVISION OTHERS AS NOTED IN OTHER SCHEDULES. RACEWAYS AND WIRING SHALL BE SIZED AS SHOWN AND/OR SPECIFIED.
	LOW VOLTAGE WIRING: DIVIDE, MEDIUM LINE.
	CONDUIT STUB. DIMENSION RECORD DRAWINGS AND MARK.
1	CONDUCTOR & CONDUIT ("CC") SCHEDULE INDICATOR. REFER TO ONE-LINE DIAGRAM.
	JUNCTION BOX.
SC	JUNCTION BOX, SYSTEMS FURNITURE COMMUNICATION CONNECTION.
SP	JUNCTION BOX, SYSTEMS FURNITURE POWER CONNECTION.
C C	CABLE TRAY ABOVE ACCESSIBLE CEILING.
A A	CABLE TRAY BELOW ACCESSIBLE CEILING.
WIRING DEVICES	
	RECEPTACLE, DUPLEX: NEMA 5-20R.
A	RECEPTACLE, DUPLEX, ABOVE COUNTER: NEMA 5-20R.
C	RECEPTACLE, DUPLEX, CEILING: NEMA 5-20R.
D	RECEPTACLE, DUPLEX, DEDICATED CIRCUIT: NEMA 5-20R.
DF	RECEPTACLE, DUPLEX, DRINKING FOUNTAIN: CONCEAL WATER COOLER RECEPTACLE BEHIND WATER COOLER. SEE DIVISION 15 SHOP DRAWINGS FOR INSTALLATION REQUIREMENTS.
IG	RECEPTACLE, DUPLEX, ISOLATED GROUND: NEMA 5-20R.
W	RECEPTACLE, DUPLEX WITH GROUND FAULT CIRCUIT INTERRUPTER, WET LABEL, "WEATHERPROOF IN USE": NEMA 5-20R.
WP	RECEPTACLE, DUPLEX WITH GROUND FAULT CIRCUIT INTERRUPTER, WEATHERPROOF: NEMA 5-20R.
	RECEPTACLE, DUPLEX ON EMERGENCY POWER: NEMA 5-20R.
	RECEPTACLE, DUPLEX WITH GROUND FAULT CIRCUIT INTERRUPTER: NEMA 5-20R.
WP	RECEPTACLE, DUPLEX WITH GROUND FAULT CIRCUIT INTERRUPTER, WEATHERPROOF: NEMA 5-20R.
	RECEPTACLE, QUADRAPLEX: NEMA 5-20R.
	RECEPTACLE, QUADRAPLEX ON EMERGENCY POWER: NEMA 5-20R.
	RECEPTACLE, SPECIAL PURPOSE. PROVIDE RECEPTACLE TO MATCH EQUIPMENT PLUG.
	MULTI-OUTLET ASSEMBLY: NEMA 5-20R.
D	DROP CORD. SEE DETAIL.
FB#	FLUSH FLOOR BOX. "#" SHOWN ON DRAWINGS. REFER TO WIRING DEVICE SCHEDULE IN SECTION 16140 FOR CONFIGURATION AND DEVICES.
PT#	FLUSH FIRE RATED POKE THRU. "#" SHOWN ON DRAWINGS. REFER TO WIRING DEVICE SCHEDULE IN SECTION 16140 FOR CONFIGURATION AND DEVICES.
	SWITCH, DIMMER.
X $	SWITCH, SINGLE POLE ("x" INDICATES FIXTURES CONTROLLED).
X $2	SWITCH, DOUBLE POLE ("x" INDICATES FIXTURES CONTROLLED).
X $3	SWITCH, THREE-WAY ("x" INDICATES FIXTURES CONTROLLED).
X $4	SWITCH, FOUR-WAY ("x" INDICATES FIXTURES CONTROLLED).
$K	SWITCH, KEY OPERATED.
$M	SWITCH, MOMENTARY.
$OS	SWITCH, OCCUPANCY SENSOR.

SYMBOL LEGEND

SYMBOL	DESCRIPTION
$P	SWITCH, PILOT LIGHT.
$T	SWITCH, TIMER OPERATED.
$WP	SWITCH, WEATHERPROOF.
T	RECEPTACLE, DUPLEX, TAMPER RESISTANT: NEMA 5-20R.
SITE ELECTRICAL AND COMMUNICATIONS UTILITIES	
C	UTILITY, COMMUNICATIONS MANHOLE.
E	UTILITY, ELECTRICAL MANHOLE.
T	TRANSFORMER.
ELECTRICAL POWER AND DISTRIBUTION	
	FUSE WITH RATING (ONE-LINE DIAGRAM).
	DISCONNECT, FUSED (ONE-LINE DIAGRAM).
	DISCONNECT, NONFUSED (ONE-LINE DIAGRAM).
	DISCONNECT WITH FUSE AND MOTOR STARTER COMBINATION (ONE-LINE DIAGRAM).
	OVERLOAD RELAY (ONE-LINE DIAGRAM).
	STARTER (ONE-LINE DIAGRAM).
	CIRCUIT BREAKER, MOLDED CASE (ONE-LINE DIAGRAM).
	CIRCUIT BREAKER, MOLDED CASE WITH SHUNT TRIP (ONE-LINE DIAGRAM).
MCP	CIRCUIT BREAKER, MOTOR CIRCUIT PROTECTION (ONE-LINE DIAGRAM).
	CIRCUIT BREAKER, SOLID STATE (ONE-LINE DIAGRAM).
GFP	CIRCUIT BREAKER, SOLID STATE WITH GROUND FAULT PROTECTION (ONE-LINE DIAGRAM).
	MOTOR.
	HEATER, ELECTRIC RESISTANCE.
	TRANSFORMER (ONE-LINE DIAGRAM).
	TRANSFORMER, CURRENT (ONE-LINE DIAGRAM).
	BATTERY (ONE-LINE DIAGRAM).
	CAPACITOR (ONE-LINE DIAGRAM).
	DELTA CONNECTION (ONE-LINE DIAGRAM).
	WYE CONNECTION (ONE-LINE DIAGRAM).
"1H"	PANELBOARD (ONE-LINE DIAGRAM).
225/3 "1H"	PANELBOARD WITH MAIN LUGS ONLY. BUS SIZE AND PHASE AS SHOWN (ONE-LINE DIAGRAM).
225/3 "1H"	PANELBOARD WITH MAIN CIRCUIT BREAKER. SIZE AND PHASE AS SHOWN (ONE-LINE DIAGRAM).
225/3 "1H" 60/3	PANELBOARD WITH MAIN AND SUB FEED CIRCUIT BREAKER (ONE-LINE DIAGRAM).
225/3 "1H" 25/3	PANELBOARD WITH MAIN LUGS ONLY AND SURGE PROTECTION WITH CIRCUIT BREAKER (ONE-LINE DIAGRAM).
225/3 "1H" 225/3 "1H"	PANELBOARD WITH SUB FEED LUGS (ONE-LINE DIAGRAM).
225/3 "1H" "1H"	PANELBOARD WITH CIRCUIT BREAKER AND SUB FEED LUGS (ONE-LINE DIAGRAM).
	TRANSITION CABINET (ONE-LINE DIAGRAM).
	CT CABINET PER UTILITY'S REQUIREMENTS (ONE-LINE DIAGRAM).
	TRANSFER SWITCH (ONE-LINE DIAGRAM).

SYMBOL LEGEND

SYMBOL	DESCRIPTION
DMM	DIGITAL MULTIMETER (ONE-LINE DIAGRAM).
	SERVICE ENTRANCE SURGE PROTECTION (ONE-LINE DIAGRAM).
G	GENERATOR, ANNUNCIATOR (ONE-LINE DIAGRAM).
G	GENERATOR, POWER (ONE-LINE DIAGRAM).
M	METER.
BBF	BROAD BAND FILTER (ONE-LINE DIAGRAM).
VFC	VARIABLE FREQUENCY CONTROLLER (ONE-LINE DIAGRAM).
F	DISCONNECT SWITCH, FUSED.
	DISCONNECT SWITCH, UNFUSED.
	STARTER, COMBINATION WITH DISCONNECT SWITCH.
	STARTER OR MOTOR CONTROLLER.
	PUSHBUTTON.
	PUSHBUTTONS, MOTOR CONTROL.
	PANELBOARD CABINET, FLUSH MOUNTED.
	PANELBOARD CABINET, SURFACE MOUNTED, 1 SECTION.
	PANELBOARD CABINET, SURFACE MOUNTED, 2 SECTION.
DP#	DISTRIBUTION PANEL OR SWITCHBOARD.
LP	LIGHTING RELAY, CONTACTOR PANEL, OR DIMMING ENCLOSURE.
	LIGHTING CONTROL STATION.
	DIMMING ENTRY STATION OR CONTROL STATION, FLUSH MOUNTED.
$ST	SWITCH, TOGGLE MOTOR STARTER WITH OVERLOAD PROTECTION.
75	TRANSFORMER: NUMBER INDICATES kVA.
	RELAY CONTACT, NORMALLY CLOSED (ONE-LINE DIAGRAM).
	RELAY CONTACT, NORMALLY OPEN (ONE-LINE DIAGRAM).
	PUSHBUTTON, NORMALLY CLOSED (ONE-LINE DIAGRAM).
	PUSHBUTTON, NORMALLY OPEN (ONE-LINE DIAGRAM).
	SWITCH, MULTIPOSITION (ONE-LINE DIAGRAM).
	SWITCH, SINGLE BREAK (ONE-LINE DIAGRAM).
HC	ACCESSIBLE DOOR ENTRY PUSH PLATE OPERATOR.
LIGHTING (REFER TO FIXTURE SCHEDULE FOR SYMBOLS)	
(W-3)	FIXTURE IDENTIFICATION: (W-3) INDICATES FIXTURE TYPE AS SCHEDULED.
(W-3)	FIXTURE IDENTIFICATION, EMERGENCY WITH BATTERY PACK, CONNECTED TO GENERATOR AS INDICATED: (W-3) INDICATES FIXTURE TYPE AS SCHEDULED.
EM	EMERGENCY.
NL	NIGHT LIGHT: DO NOT SWITCH.
	EGRESS DIRECTION ARROW.
LV	LOW VOLTAGE LIGHTING TRANSFORMER.
	EXIT SIGN: SINGLE FACE.
	EXIT SIGN: DUAL FACE.
LIGHTING CONTROL	
	OCCUPANCY SENSOR, DUAL TECHNOLOGY, CEILING.
	OCCUPANCY SENSOR, DUAL TECHNOLOGY, WALL.
	OCCUPANCY SENSOR, DUAL TECHNOLOGY, DIRECTIONAL.
U	OCCUPANCY SENSOR, ULTRASONIC, CEILING.
R	OCCUPANCY SENSOR CONTROL RELAY.
P	PHOTOCELL.
STRUCTURED CABLING	
X	TELEPHONE, WALL MOUNTED ("X" INDICATES QUANTITY OF CABLES).
P	TELEPHONE, WALL MOUNTED: PAY PHONE.
W	TELEPHONE, WALL MOUNTED: WALL PHONE.
X	OUTLET, DATA COMMUNICATION ("X" INDICATES QUANTITY OF CABLES).
	OUTLET, BUILDING STANDARD COMBINATION TELEPHONE/DATA COMMUNICATION.
	TELEPHONE TERMINAL BOARD, FIRE TREATED PLYWOOD PAINTED.
	LAN RACK, FLOOR STANDING.
D	DATA CABLE, CATEGORY 6 (ONE-LINE DIAGRAM).
V	VOICE CABLE, CATEGORY 3 (ONE-LINE DIAGRAM).
FIRE ALARM	
FSA	FIRE SYSTEM ANNUNCIATOR.
FCP	FIRE ALARM CONTROL PANEL, SEMI-RECESSED.
FPS	FIRE ALARM NOTIFICATION POWER SUPPLY.
FTR	FIRE ALARM TRANSPONDER OR TRANSMITTER.
HVA	SMOKE CONTROL PANEL.
C	AUTOMATIC DOOR CLOSERS: DOOR CLOSERS SHALL BE FURNISHED WITH DOOR HARDWARE AND CONNECTED TO BY DIVISION 16 INSTALLERS.
CM	CONTROL MODULE.
MM	MONITOR MODULE.
P	FIRE ALARM MANUAL PULL STATION.
R	SHUT DOWN RELAY: INSTALL RELAY IN CONTROL CIRCUIT OF EQUIPMENT TO BE CONTROLLED IN THE EVENT OF A FIRE.
	MAGNETIC DOOR HOLDER.

SYMBOL LEGEND

SYMBOL	DESCRIPTION
	DETECTOR, SMOKE.
A	DETECTOR, SMOKE WITH AUXILIARY CONTACT.
	DETECTOR, SMOKE, DUCT WITH HOUSING AND SAMPLING TUBE.
	DETECTOR, HEAT.
	INDICATOR LAMP.
75	STROBE. SUBSCRIPT INDICATES CANDELA RATING.
WP	ALARM, HORN/SPEAKER, WEATHERPROOF.
75	ALARM, HORN/STROBE, ONE ASSEMBLY. SUBSCRIPT INDICATES CANDELA RATING.
E	SPEAKER, EVACUATION.
E	SPEAKER, EVACUATION, COMBINATION STROBE.
	DETECTOR, FLOW SWITCH: FLOW SWITCHES SHALL BE PROVIDED AND INSTALLED WITH FIRE SPRINKLER SYSTEM AND SHALL BE CONNECTED TO LOCATIONS SHOWN ON THE FIRE SPRINKLER SHOP DRAWINGS.
	DETECTOR, TAMPER SWITCH WITH VALVE: TAMPER SWITCHES SHALL BE PROVIDED AND INSTALLED WITH FIRE SPRINKLER SYSTEM AND SHALL BE CONNECTED TO LOCATIONS SHOWN ON THE FIRE SPRINKLER SHOP DRAWINGS.
SD	SMOKE DAMPER.
FSD	FIRE AND SMOKE DAMPER.
CLOCK	
C	CLOCK.
CCTV	
CCTV	CCTV HEADEND EQUIPMENT.
M	CCTV MONITOR.
	CCTV CAMERA/ENCLOSURE.
360°	PANNING CAMERA TRANSVERSE ANGLE.
SECURITY	
#1	CARD ACCESS DOOR TYPE #1 OR AS NOTED. SEE SCHEDULE.
CR	CARD READER.
TV DISTRIBUTION	
	TV OUTLET.

DEFINITIONS

NOTE: ALL DEFINITIONS MAY NOT BE USED.

INDICATED: THE TERM "INDICATED" REFERS TO GRAPHIC REPRESENTATIONS, NOTES, OR SCHEDULES ON THE DRAWINGS, OTHER PARAGRAPHS OR SCHEDULES IN THE SPECIFICATIONS, AND SIMILAR REQUIREMENTS IN THE CONTRACT DOCUMENTS. WHERE TERMS SUCH AS "SHOWN", "NOTED", "SCHEDULED", AND "SPECIFIED" ARE USED, IT IS TO HELP THE READER LOCATE THE REFERENCE, NO LIMITATION ON LOCATION IS INTENDED.

DIRECTED: TERMS SUCH AS "DIRECTED", "REQUESTED", AUTHORIZED", "SELECTED", "APPROVED", "REQUIRED", AND "PERMITTED" MEAN "DIRECTED BY THE ENGINEER", "REQUESTED BY THE ENGINEER", AND SIMILAR PHRASES.

APPROVED: THE TERM "APPROVED", WHERE USED IN CONJUNCTION WITH THE ENGINEER'S ACTION ON THE CONTRACTOR'S SUBMITTALS, APPLICATIONS, AND REQUESTS, IS LIMITED TO THE ENGINEER'S DUTIES AND RESPONSIBILITIES AS STATED IN GENERAL AND SUPPLEMENTARY CONDITIONS.

FURNISH: THE TERM "FURNISH" IS USED TO MEAN "SUPPLY AND DELIVER TO THE PROJECT SITE, READY FOR UNLOADING, UNPACKING, ASSEMBLY, INSTALLATION, AND SIMILAR OPERATIONS."

INSTALL: THE TERM "INSTALL" IS USED TO DESCRIBE OPERATIONS AT PROJECT SITE INCLUDING THE ACTUAL "UNLOADING, UNPACKING, ASSEMBLY, ERECTION, PLACING, ANCHORING, APPLYING, WORKING TO DIMENSION, FINISHING, CURING, PROTECTING, CLEANING, AND SIMILAR OPERATIONS."

PROVIDE: THE TERM "PROVIDE" MEANS "TO FURNISH AND INSTALL, COMPLETE AND READY FOR THE INTENDED USE."

INSTALLER: AN "INSTALLER" IS THE CONTRACTOR OR AN ENTITY ENGAGED BY THE CONTRACTOR, EITHER AS AN EMPLOYEE, SUBCONTRACTOR, OR SUB-SUBCONTRACTOR, FOR PERFORMANCE OF A PARTICULAR CONSTRUCTION ACTIVITY, INCLUDING INSTALLATION, ERECTION, APPLICATION, AND SIMILAR OPERATIONS. INSTALLERS ARE REQUIRED TO BE EXPERIENCED IN THE OPERATIONS THEY ARE ENGAGED TO PERFORM.

ELECTRICAL SHEET INDEX

SHEET NO	SHEET TITLE
EE-001	SYMBOL LEGEND LIST AND SHEET INDEX
EE-501	DETAILS
EE-502	DETAILS
EE-601	TELECOMM. RACEWAY AND GROUNDING RISER DIAGRAMS
EE-701	TYPICAL MOUNTING HEIGHT DETAILS
ES-101	SITE ELECTRICAL PLAN, ADD ALTERNATE 1, SCHEME A
ES-101a	SITE ELECTRICAL PLAN, ADD ALTERNATE 1, SCHEME B
ES-401	ENLARGED ELECTRICAL TUNNEL PLANS
EP-101	BASEMENT LEVEL POWER PLAN
EP-102	LEVEL 1, MAIN LEVEL POWER PLAN
EP-103	LEVEL 2 POWER PLAN
EP-104	LEVEL 3, ATTIC POWER PLAN
EP-104a	LEVEL 3, ATTIC ADD ALT POWER PLAN
EP-105	ROOF POWER PLAN
EP-601	POWER ONE-LINE DIAGRAM
EP-602	POWER ONE-LINE DIAGRAM
EP-603	EQUIPMENT SCHEDULE
EP-604	PANEL SCHEDULES
EP-605	PANEL SCHEDULES
EP-606	PANEL SCHEDULES
EL-101	BASEMENT LEVEL LIGHTING PLAN
EL-102	LEVEL 1, MAIN LEVEL LIGHTING PLAN
EL-103	LEVEL 2 LIGHTING PLAN
EL-104	LEVEL 3, ATTIC LIGHTING PLAN
EL-104a	LEVEL 3, ATTIC ADD ALT LIGHTING PLAN
EL-501	LIGHTING CONTROL SCHEDULES AND DETAILS
EL-601	LIGHTING FIXTURE SCHEDULE
EL-602	LIGHTING RELAY, CONTROL SCHEDULES AND DETAILS
ET-101	BASEMENT LEVEL TECHNOLOGY PLAN
ET-102	LEVEL 1, MAIN LEVEL TECHNOLOGY PLAN
ET-103	LEVEL 2 TECHNOLOGY PLAN
ET-104	LEVEL 3, ATTIC TECHNOLOGY PLAN
ET-104a	LEVEL 3, ATTIC ADD ALT TECHNOLOGY PLAN
ET-601	TECHNOLOGY ROUGH-IN SCHEDULE, NOTES AND DETAILS
ET-602	TECHNOLOGY ROUGH-IN RISER DIAGRAMS
EY-101	BASEMENT LEVEL AUXILIARY PLAN
EY-102	LEVEL 1, MAIN LEVEL AUXILIARY PLAN
EY-103	LEVEL 2 AUXILIARY PLAN
EY-104	LEVEL 3, ATTIC AUXILIARY PLAN
EY-104a	LEVEL 3, ATTIC ADD ALT AUXILIARY PLAN
EY-601	AUXILIRAY SYSTEM DETAILS AND DIAGRAM
EY-602	FIRE ALARM RISER DIAGRAM AND MATRIX

GENERAL ELECTRICAL NOTES

1. CLARIFICATION METHODS: AT THE TIME OF BIDDING, BIDDERS SHALL FAMILIARIZE THEMSELVES WITH THE DRAWINGS AND SPECIFICATIONS. ANY QUESTIONS, MISUNDERSTANDINGS, CONFLICTS, DELETIONS, DISCONTINUED PRODUCTS, CATALOG NUMBER DISCREPANCIES, DISCREPANCIES BETWEEN THE EQUIPMENT SUPPLIED AND THE INTENT OR FUNCTION OF THE EQUIPMENT, ETC, SHALL BE SUBMITTED TO THE ARCHITECT/ENGINEER IN WRITING FOR CLARIFICATION PRIOR TO ISSUANCE OF THE FINAL ADDENDUM AND BIDDING OF THE PROJECT. WHERE DISCREPANCIES OR MULTIPLE INTERPRETATIONS OCCUR, THE MOST STRINGENT (WHICH IS GENERALLY RECOGNIZED AS THE MOST COSTLY) THAT MEETS THE INTENT OF THE DOCUMENTS SHALL BE ENFORCED.
2. OWNER FURNISHED ITEMS: THE OWNER WILL FURNISH MATERIAL AND EQUIPMENT AS INDICATED IN THE CONTRACT DOCUMENTS TO BE INCORPORATED INTO THE WORK. THESE ITEMS ARE ASSIGNED TO THE INSTALLER AND COSTS FOR RECEIVING, HANDLING, STORAGE, IF REQUIRED, AND INSTALLATION ARE INCLUDED IN THE CONTRACT SUM.
   - 2.1. THE INSTALLER'S RESPONSIBILITIES ARE THE SAME AS IF THE INSTALLER FURNISHED THE MATERIALS OR EQUIPMENT.
   - 2.2. THE OWNER WILL ARRANGE AND PAY FOR DELIVERY OF OWNER FURNISHED ITEMS FREIGHT ON BOARD JOB SITE AND THE INSTALLER WILL INSPECT DELIVERIES FOR DAMAGE. IF OWNER FURNISHED ITEMS ARE DAMAGED, DEFECTIVE OR MISSING, DOCUMENT DAMAGED ITEMS WITH THE TRANSPORT COMPANY AND THE OWNER WILL ARRANGE FOR REPLACEMENT. THE OWNER WILL ALSO ARRANGE FOR MANUFACTURER'S FIELD SERVICES, AND THE DELIVERY OF MANUFACTURER'S WARRANTIES AND BONDS TO THE INSTALLER.
   - 2.3. THE INSTALLER IS RESPONSIBLE FOR DESIGNATING THE DELIVERY DATES OF OWNER FURNISHED ITEMS AND FOR RECEIVING, UNLOADING AND HANDLING OWNER FURNISHED ITEMS AT THE SITE. THE INSTALLER IS RESPONSIBLE FOR PROTECTING OWNER FURNISHED ITEMS FROM DAMAGE, INCLUDING DAMAGE FROM EXPOSURE TO THE ELEMENTS, AND TO REPAIR OR REPLACE ITEMS DAMAGED AS A RESULT OF HIS OPERATIONS.
3. EXPOSED STRUCTURE AREAS (EXCLUDING MECHANICAL, ELECTRICAL, AND COMMUNICATION SPACES): INSTALL RACEWAYS BETWEEN DECK AND STRUCTURE WHEREVER POSSIBLE IN EXPOSED STRUCTURE CEILING AREAS. ROUTE RACEWAYS IN CONCEALED AREAS WHEREVER POSSIBLE. REFER ALL CONDITIONS WHERE RACEWAYS MUST BE INSTALLED WHICH CANNOT COMPLY WITH THESE REQUIREMENTS TO THE ARCHITECT.
4. SUBMITTALS: PROVIDE SUBMITTALS IN THREE RING BINDERS WITH JOB NAME, SUBCONTRACTOR, AND VOLUME ON THE BINDING. PREPARE TABS FOR EACH SPECIFICATION SECTION REQUIRING SUBMITTALS. PREPARE INDEX OF EQUIPMENT SUBMITTED IN EACH TAB.
5. REFLECTED CEILING PLANS: COORDINATE THE LOCATION OF LIGHT FIXTURES WITH THE ARCHITECTURAL REFLECTED CEILING PLANS. REFER ALL DISCREPANCIES TO THE ARCHITECT AND ENGINEER.

ABBREVIATIONS

NOTE: ALL ABBREVIATIONS MAY NOT BE USED.

1P	SINGLE POLE	LRA	LOCKED ROTOR AMPS
1PH	SINGLE-PHASE	LTG	LIGHTING
3PH	THREE-PHASE	LV	LOW VOLTAGE
4W	FOUR-WIRE	MATV	MASTER ANTENNA TELEVISION SYSTEM
AC	ARMORED CABLE	MAX	MAXIMUM
ADA	AMERICANS WITH DISABILITIES ACT	MC	METAL CLAD
ADJ	ADJACENT	MCA	MINIMUM CIRCUIT AMPS
AFF	ABOVE FINISHED FLOOR	MCB	MAIN CIRCUIT BREAKER
AIC	AMPERE INTERRUPTING CAPACITY	MCC	MOTOR CONTROL CENTER
ALUM	ALUMINUM	MCP	MOTOR CIRCUIT PROTECTION
AMP	AMPERE	MDP	MAIN DISTRIBUTION PANEL
ANN	ANNUNCIATOR	MH	MANHOLE
AR	AS REQUIRED	MIN	MINIMUM
ATS	AUTOMATIC TRANSFER SWITCH	MLO	MAIN LUGS ONLY
AV	AUDIO VISUAL	MOCP	MAXIMUM OVERCURRENT PROTECTION
AWG	AMERICAN WIRE GAGE	NA	NOT APPLICABLE
C	CEILING MOUNTED	NC	NORMALLY CLOSED
CATV	COMMUNITY ANTENNA TELEVISION	NEC	NATIONAL ELECTRICAL CODE
CB	CIRCUIT BREAKER	NFPA	NATIONAL FIRE PROTECTION ASSOCIATION
CCTV	CLOSED CIRCUIT TELEVISION	NIC	NOT IN CONTRACT
CKT	CIRCUIT	NL	NIGHT LIGHT
CND	CONDUIT	NO	NORMALLY OPEN
CO	CONVENIENCE OUTLET	NTS	NOT TO SCALE
CP	CONTROL PANEL	OC	ON CENTER
CT	CURRENT TRANSFORMER	OCP	OVER CURRENT PROTECTION
CTV	CABLE TELEVISION	OFP	OBTAIN FROM PLANS
CU	COPPER	OH DR	OVERHEAD (COILING) DOOR
dBA	UNIT OF SOUND LEVEL	OL	OVERLOAD
DPDT	DOUBLE POLE DOUBLE THROW	PB	PUSHBUTTON
EA	EACH	PF	POWER FACTOR
EM	EMERGENCY	PH	PHASE
EMT	ELECTRICAL METALLIC TUBING	PNL	PANEL
EPO	EMERGENCY POWER OFF	PT	POTENTIAL TRANSFORMER
EQUIP	EQUIPMENT	PTZ	PAN/TILT/ZOOM
EXIST	EXISTING	QTY	QUANTITY
FA	FIRE ALARM	R	REMOVE
FCP	FIRE ALARM CONTROL PANEL	RCP	REFLECTED CEILING PLAN
FLA	FULL LOAD AMPS	RMC	RIGID METAL CONDUIT
FMC	FLEXIBLE METALCONDUIT	RNC	RIGID NONMETALLIC CONDUIT
FVNR	FULL VOLTAGE NON-REVERSING	RPM	REVOLUTIONS PER MINUTE
FVR	FULL VOLTAGE REVERSING	SCA	SHORT CIRCUIT AMPS
G	GROUND	SF	SQUARE FOOT (FEET)
GEN	GENERATOR	SPDT	SINGLE POLE, DOUBLE THROW
GFCI	GROUND FAULT CIRCUIT INTERRUPTER	SPEC	SPECIFICATION
GFP	GROUND FAULT PROTECTION	SPST	SINGLE POLE, SINGLE THROW
HD	HEAVY DUTY	S/S	START/STOP
HID	HIGH INTENSITY DISCHARGE	ST	SINGLE THROW
HOA	HAND-OFF-AUTOMATIC	SWBD	SWITCHBOARD
HP	HORSE POWER	TL	TWIST LOCK
HPF	HIGH POWER FACTOR	TP	TWISTED PAIR
HPS	HIGH PRESSURE SODIUM	TTB	TELEPHONE TERMINAL BOARD
HV	HIGH VOLTAGE	TV	TELEVISION
IG	ISOLATED GROUND	TVSS	TRANSIENT VOLTAGE SURGE SUPPRESSER
IMC	INTERMEDIATE METAL CONDUIT	TYP	TYPICAL
IN/IS	INSULATED/ISOLATED	UF	UNDERFLOOR
I/O	INPUT/OUTPUT	UGND	UNDERGROUND
IR	INFRARED	UPS	UNINTERRUPTIBLE POWER SUPPLY
J-BOX	JUNCTION BOX	V	VOLTS
KV	KILOVOLT	VA	VOLT AMPERE
KVA	KILOVOLT AMPERE	VFC	VARIABLE FREQUENCY CONTROLLER
kVAR	KILOVOLT AMPERE REACTIVE	W/	WITH
kW	KILOWATT	W/O	WITHOUT
kWh	KILOWATT HOUR	WP	WEATHERPROOF
LED	LIGHT EMITTING DIODE	XFMR	TRANSFORMER
LFMC	LIQUID TIGHT FLEXIBLE METAL CONDUIT		

COOPER ROBERTS SIMONSEN ASSOCIATES

crsa

700 North 200 West
Salt Lake City, UT 84103
(801) 355-5915 phone
(801) 355-9885 fax
crsa-us.com

SNOW COLLEGE

State of Utah-Department of Administrative Services

DIVISION OF FACILITIES CONSTRUCTION AND MANAGEMENT

4110 State Office Building/East Lake City, Utah 84114/538-3018

Civil Engineer

Great Basin Engineering
Contact: Dave Walldron
5746 South 1475 East, Suite 200
Ogden, UT 84403
(801) 521-0222 FAX (801) 392-7544
dave@gbenorth.com

Landscape Architect

G. Brown Design
Contact: Mathew Winward
610 E. South Temple, Suite 50
Salt Lake City, UT 84102
(801) 575-6066 FAX (801) 575-6166
mwinward@gbrowndesign.com

Structural Engineer

Reaveley Engineers
Contact: Cameron Empey
675 East 500 South, Suite 400
Salt Lake City, UT 84105
(801) 486-3883 FAX (801) 485-0911
cempey@reaveley.com

Mechanical Engineer

Van Boerum & Frank
Contact: Neil Spencer
330 South 300 East
Salt Lake City, UT 84111
(801) 530-3148 FAX (801) 910-9917
nspencer@vbfa.com

Electrical Engineer

Spectrum Engineers
Contact: Dave Wesemann, PE
175 South Main Street, Suite 300
Salt Lake City, UT 84111
(801) 328-5151 FAX (801) 328-5155
dew@spectrum-engineers.com

AV Consultant

Spectrum Engineers
Contact: Kurtis Dallinga, PE
175 South Main Street, Suite 300
Salt Lake City, UT 84111
(801) 328-5151 FAX (801) 328-5155
kdd@spectrum-engineers.com

Library Consultant

Michaels Associates Design Consultants, Inc.
Contact: Andrea Michaels
14809 North 73rd Street, Suite 100
Scottsdale, AZ 85260
(480) 998-7476 FAX (480) 998-9390
andrea@madcinc.com

STAMP:

LICENSED PROFESSIONAL ENGINEER
No. 181563
DAVID E. WESEMANN
STATE OF UTAH

PROJECT NAME:

Snow College Library

150 College Avenue
Ephraim, Utah 84627

REVISIONS:

- 100% CD, October 13, 2008
- 100% CD, September 15, 2008
- 100% CD Review, Aug 26, 2008
- 100% CD, June 25, 2008
- 100% CD Review, June 20, 2008
- 50% CD Review, May 27, 2008
- CD Review Set, May 2, 2008
- DD Set, April 18, 2008
- DD Review, April 4, 2008

ISSUE DATE:

SEPTEMBER 15 2008, 100% CD

ARCHITECT'S PROJECT NUMBER:

B07-051

DFCM PROJECT NUMBER:

07258700

SHEET TITLE:

SYMBOL LEGEND LIST AND SHEET INDEX

SHEET NUMBER:

EE-001

File Name: P:\2007\20070473\Drawings\Sheet\73EE-001.dwg Last Plotted: 2008/10/14 @ 10:07 AM By: dlm

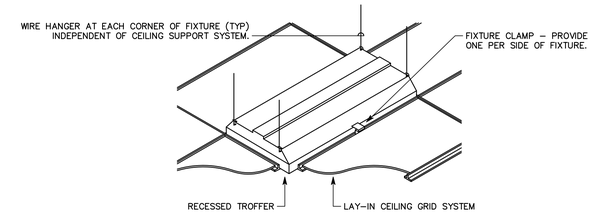

E5 RECESSED FIXTURE MOUNTING DETAIL

SCALE: N.T.S.

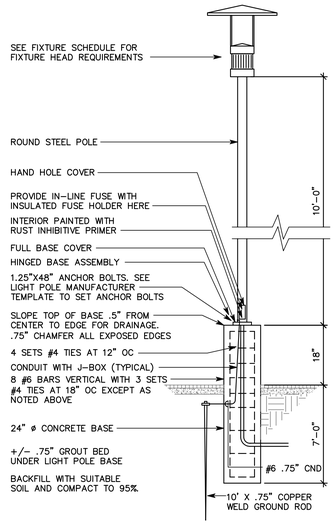

C4 LIGHT POLE BASE DETAIL

SCALE: N.T.S. (TYPE ZX–21)

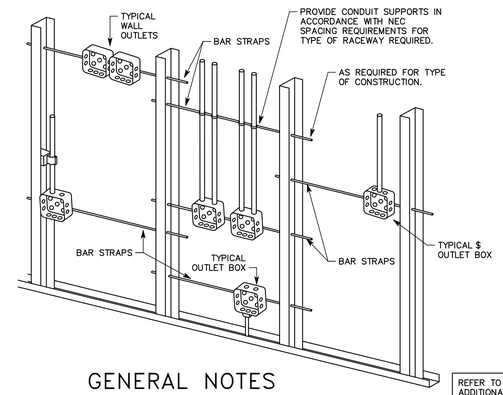

GENERAL NOTES

1. TYPICAL FOR WOOD AND METAL STUD ROUGH–IN.
2. PLASTER RINGS NOT SHOWN.
3. LOCATE ALL OUTLET BOXES IN ACCORDANCE WITH ARCHITECTURAL AND MECHANICAL DRAWINGS AND WITH ALL APPLICABLE SHOP DRAWINGS.
4. IN ACCORDANCE WITH IBC 711.3.2 EXCEPTION 1, OUTLETS ON OPPOSITE SIDES OF WALLS OR PARTITIONS IN THE SAME STUD SPACE IN A RATED FIRE SEPARATION WALL MUST BE SEPARATED BY A MINIMUM OF 24" HORIZONTAL DISTANCE.
5. IN NON–RATED WALLS, OUTLETS ON OPPOSITE SIDES OF WALLS OR PARTITIONS MUST BE SEPARATED BY 16" FOR SOUND ATTENUATION.

REFER TO SHEET A3.02 FOR ADDITIONAL REQUIREMENTS IN SOUND WALLS. SOUND INSULATION AROUND ELECTRICAL BOXES IS THE RESPONSIBILITY OF THE ELECTRICAL INSTALLER.

C5 TYPICAL ROUGH–IN REQUIREMENTS DETAIL

SCALE: N.T.S.

NOTES:

1. PROVIDE SPACERS APPROVED FOR SIZE OF CONDUIT PROVIDED.
2. THE LAST 10' OF DUCTS ENTERING MANHOLE, PULL BOX, TUNNEL OR DUCT TRENCH SHALL BE RMC WITH O–2/GEDNEY BELL ENDS.
3. TIE DUCT BUNDLES WITH PLASTIC TAPE. DO NOT USE METAL WIRE.
4. ANCHOR DUCT BUNDLES DOWN WITH #3 OR LARGER REBAR DRIVEN INTO GROUND BETWEEN DUCTS.
5. SEE DRAWINGS FOR SIZE AND NUMBER OF CONDUITS IN DUCT BANK.
6. ALL BENDS SHALL BE LARGE RADIUS.
7. ALL CONDUIT ABOVE GROUND, ALL BENDS AND FIRST 10' BELOW GROUND SHALL BE WRAPPED RMC. CONDUIT BELOW GROUND MAY BE PVC.
8. PROVIDE POLYPROPYLENE PULL ROPE IN EMPTY CONDUITS.
9. PROVIDE 2 EACH #4/O COPPER GROUND CONDUCTORS IN DUCT BANK CONCRETE. BOND CONDUCTORS TO GROUND SYSTEM AT EACH END OF DUCT BANK.
10. DUCT BANKS SHALL HAVE A MINIMUM SLOPE OF 4" PER 100 FEET.
11. PROVIDE RED DYE IN CONCRETE.

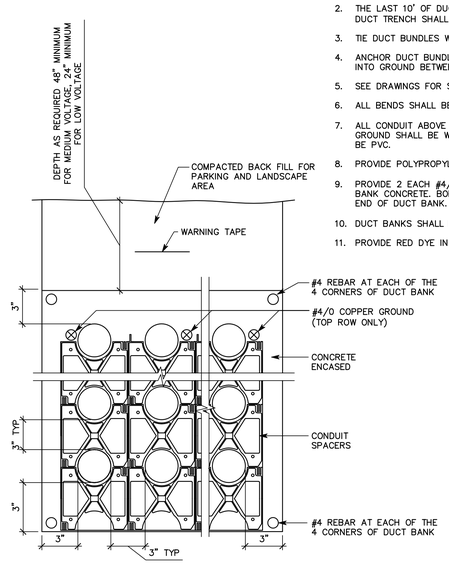

A1 TYPICAL CONDUIT DUCT BANK DETAIL

NTS

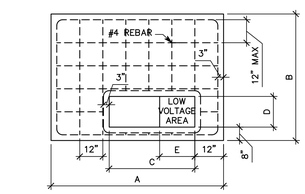

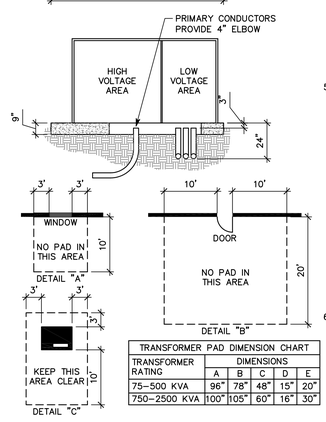

TRANSFORMER PAD DIMENSION CHART					
TRANSFORMER RATING	DIMENSIONS				
	A	B	C	D	E
75–500 KVA	96"	78"	48"	15"	20"
750–2500 KVA	100"	105"	60"	16"	30"

CONTRACTOR GENERAL NOTES

1. SITE PREPARATION. ALL SOIL BENEATH THE PAD SITE MUST BE COMPACTED AND LEVEL PRIOR TO SETTING OR POURING THE PAD TO PREVENT SETTLING.
2. CONCRETE. STEEL REINFORCEMENT SHALL BE #4 BARS, PLACED ACCORDING TO THE DRAWING. THE PAD MUST BE POURED AT LEAST SEVEN FULL DAYS PRIOR TO SETTING THE TRANSFORMER. THE FINISHED SURFACE MUST BE COMPLETELY FLAT AND LEVEL. SEE STANDARD 73 036 FOR CONCRETE SPECIFICATIONS.
3. PREFABRICATION. THE PAD MAY EITHER BE CONSTRUCTED ON THE SITE OR PREFABRICATED ACCORDING TO SPECIFICATIONS.
4. CONDUIT WINDOW LAYOUT. LOW VOLTAGE CONDUITS SHALL BE FORMED AS TIGHTLY AS POSSIBLE AGAINST THE RIGHT SIDE OF THE OPENING AND SHALL IN NO CASE EXTEND FURTHER THAN 20" FROM THE RIGHT SIDE OF THE CONDUIT WINDOW ON THE SMALL PAD OR 30" ON THE LARGE PAD. NO MORE THAN 8 CONDUITS WILL BE USED ON THE LOW VOLTAGE SIDE (NOT INCLUDING THE METERING CONDUIT). DO NOT PUT ANY CONCRETE IN OR UNDER THE CONDUIT WINDOW. USE SOIL TO SEPARATE CONDUITS. BELL ENDS ARE REQUIRED FOR ALL METAL CONDUIT, BUT NOT FOR PLASTIC CONDUIT.
5. CLEARANCES. THE FRONT OF THE PAD SHOULD ALWAYS FACE AWAY FROM ADJACENT STRUCTURES AND BE FREE OF OBSTRUCTIONS. AT LEAST 3 FEET MUST SEPARATE THE EDGES OF THE PAD FROM ANY ADJACENT STRUCTURE. THE EDGES OF THE PAD MUST BE AT LEAST 10 FEET FROM ANY COMBUSTIBLE STRUCTURE. IF AN ADJACENT STRUCTURE HAS ANY OVERHANG OR EAVE WITHIN 27 VERTICAL FEET OF THE TOP OF THE PAD, CLEARANCES MUST BE MEASURED FROM THE OUTSIDE OF THE OVERHANG. THE PAD MUST NOT BE PLACED IN AN AREA 10 FEET IN LINE WITH OR 3 FEET TO EITHER SIDE OF ANY WINDOW IN AN ADJACENT STRUCTURE (SEE DETAIL "A"). CLEARANCE FOR A DOOR MUST BE 20 FEET IN LINE WITH IT AND 10 FEET ON THE SIDES (SEE DETAIL "B"). PADS MUST NOT BE PLACED WITHIN 15 FEET OF ANY VALVE OR WITHIN 20 FEET OF ANY PLUMBING OR STORAGE FACILITY CONTAINING FLAMMABLE MATERIAL. NO WALLS, FENCES, OR ANY OTHER OBSTRUCTIONS WILL BE PLACED WITHIN 3 FEET OF THE SIDES OR BACK OF THE PAD, OR WITHIN 10 FEET OF THE FRONT OF THE PAD (SEE DETAIL "C"). THE AREA IN FRONT OF THE PAD MUST HAVE 10 FEET OF CLEAR, LEVEL WORKING AREA FOR MAINTENANCE OF THE TRANSFORMER. THE PAD MAY NOT BE PLACED IN LINE WITH AN AIR INTAKE WITHIN 32 VERTICAL FEET OF THE SURFACE PAD. ALSO VERTICALLY, IT MUST NOT BE PLACED WITHIN 12 FEET OF A DOOR OR WINDOW.
6. IF THE TRANSFORMER WILL NOT COVER THE CABLE OPENINGS ON THESE STANDARD PADS, SEAL THE SIDES OF THE CABLE OPENING TO FIT THE TRANSFORMER USING SAKRETE OR COMPARABLE.

A3 TRANSFORMER PAD DETAIL (SWITCHGEAR PAD SIMILAR)

SCALE: N.T.S.

NOTE: THE WIRE SHALL NOT BE USED AS A COMPONENT OF ANY RACEWAY HANGER SYSTEM.

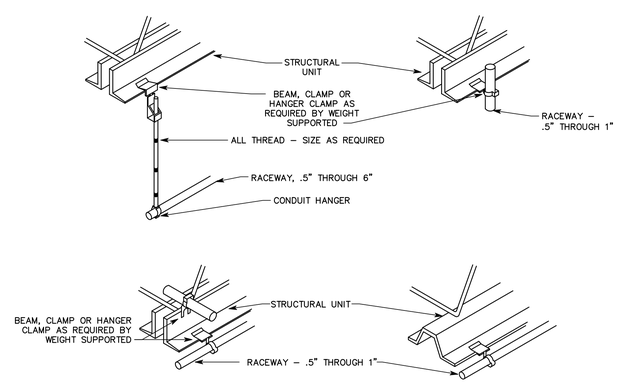

A5 TYPICAL RACEWAY SUPPORT METHODS DETAIL

SCALE: N.T.S.

COOPER ROBERTS SIMONSEN ASSOCIATES
crsa
700 North 200 West
Salt Lake City, UT 84103
(801) 355-5915 phone
(801) 355-9885 fax
crsa-us.com

SNOW COLLEGE

State of Utah-Department of Administrative Services

DIVISION OF FACILITIES CONSTRUCTION AND MANAGEMENT
4110 State Office Building/Salt Lake City, Utah 84114/538-3018

Civil Engineer
Great Basin Engineering
Contact: Dave Waldron
5746 South 1475 East, Suite 200
Ogden, UT 84403
(801) 521-0222 FAX (801) 392-7544
dave@gbenorth.com

Landscape Architect
G. Brown Design
Contact: Mathew Winward
610 E. South Temple, Suite 50
Salt Lake City, UT 84102
(801) 575-6066 FAX (801) 575-6166
mwinward@gbrowndesign.com

Structural Engineer
Reaveley Engineers
Contact: Cameron Empey
675 East 500 South, Suite 400
Salt Lake City, UT 84105
(801) 486-3883 FAX (801) 485-0911
cempey@reaveley.com

Mechanical Engineer
Van Boerum & Frank
Contact: Neil Spencer
330 South 300 East
Salt Lake City, UT 84111
(801) 530-3148 FAX (801) 910-9917
nspencer@vbfa.com

Electrical Engineer
Spectrum Engineers
Contact: Dave Wesemann, PE
175 South Main Street, Suite 300
Salt Lake City, UT 84111
(801) 328-5151 FAX (801) 328-5155
dew@spectrum-engineers.com

AV Consultant
Spectrum Engineers
Contact: Kurtis Dallinga, PE
175 South Main Street, Suite 300
Salt Lake City, UT 84111
(801) 328-5151 FAX (801) 328-5155
kdd@spectrum-engineers.com

Library Consultant
Michaels Associates Design Consultants, Inc.
Contact: Andrea Michaels
14809 North 73rd Street, Suite 100
Scottsdale, AZ 85260
(480) 998-7476 FAX (480) 998-9390
andrea@madcinc.com

STAMP:

LICENSED PROFESSIONAL ENGINEER
No. 181563
DAVID E. WESEMANN
STATE OF UTAH

PROJECT NAME:

Snow College Library

150 College Avenue
Ephraim, Utah 84627

REVISIONS:

- 100% CD, October 13, 2008
- 100% CD, September 15, 2008
- 100% CD Review, Aug 26, 2008
- 100% CD, June 25, 2008
- 100% CD Review, June 20, 2008
- 50% CD Review, May 27, 2008
- CD Review Set, May 2, 2008
- DD Set, April 18, 2008
- DD Review, April 4, 2008

ISSUE DATE:

SEPTEMBER 15 2008, 100% CD

ARCHITECT'S PROJECT NUMBER:

B07-051

DFCM PROJECT NUMBER:

07258700

SHEET TITLE:

DETAILS

SHEET NUMBER:

EE-501

File Name: P:\2007\20070473\Drawings\Sheet\73EE-501.dwg Last Plotted: 2008/10/14 @ 10:07 AM By: dim

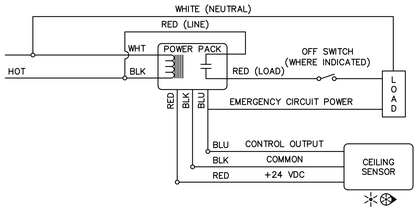

E1 TYPICAL ROOM WITH ONE CEILING SENSOR, WITH OR WITHOUT WALL SWITCH

SCALE: N.T.S.

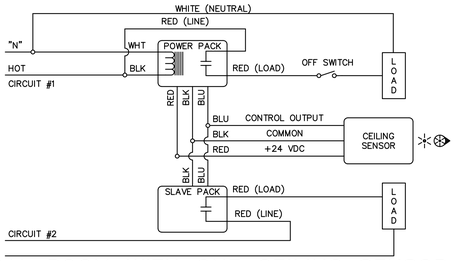

D1 TYPICAL ROOM WITH ONE CEILING SENSOR, CONTROLLING TWO CIRCUITS

SCALE: N.T.S.

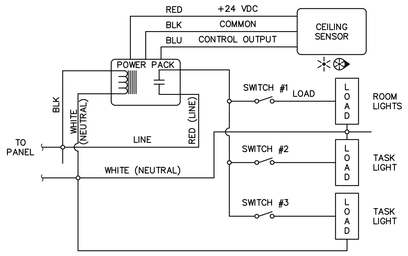

C1 TYPICAL ROOM WITH ONE CEILING SENSOR, ONE CIRCUIT AND MULTIPLE SWITCHED LOADS

SCALE: N.T.S.

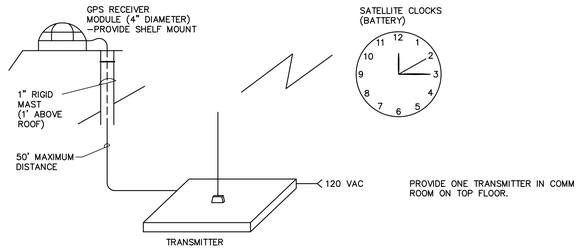

PROVIDE ONE TRANSMITTER IN COMM ROOM ON TOP FLOOR.

D3 MASTER – SATELLITE CLOCK SYSTEM

SCALE: N.T.S.

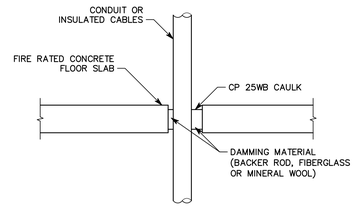

C3 TYPICAL FIRE STOP FOR CABLES/ CONDUIT THROUGH CONCRETE FLOORING

SCALE: N.T.S.

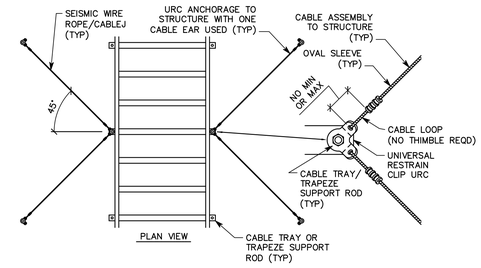

C5 SEISMIC WIRE ROPE/CABLEJ BRACING

SCALE: N.T.S.

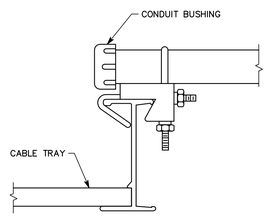

B1 CONDUIT TO TRAY ADAPTER

SCALE: N.T.S.

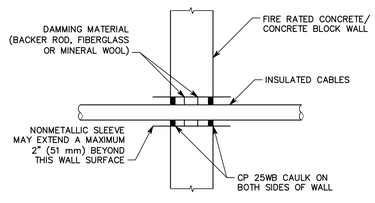

B2 TYPICAL FIRE STOP FOR CABLES/ CONDUIT THROUGH CONCRETE WALLS

SCALE: N.T.S.

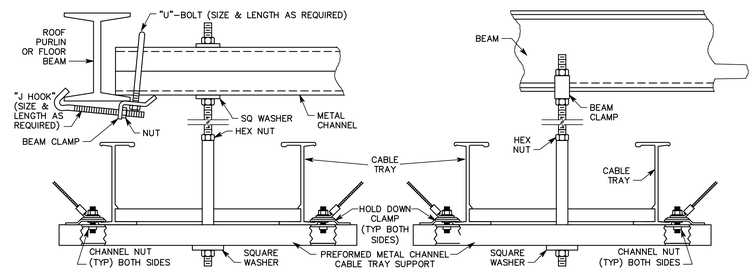

B4 INDOOR MOUNTING DETAIL

SCALE: N.T.S.

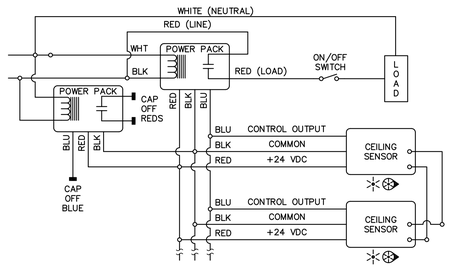

A1 TYPICAL ROOM WITH MULTIPLE CEILING SENSORS

SCALE: N.T.S.

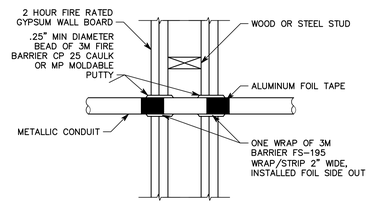

A3 FIRE STOP FOR METAL CONDUIT THROUGH GYPSUM WALL BOARD

SCALE: N.T.S.

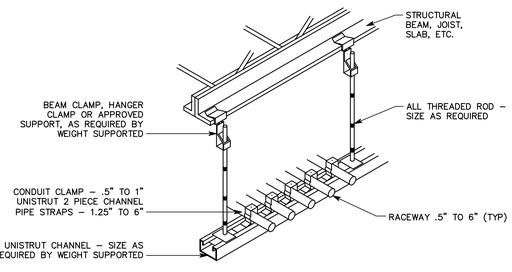

A5 TYPICAL CONDUIT RACK DETAIL

SCALE: N.T.S.

GENERAL SHEET NOTES

1. PLANS, IN GENERAL, SHOW CABLE TRAYS IN PLAN AND DO NOT DETAIL CHANGES IN ELEVATION. COORDINATE LAYOUT AND INSTALLATION OF CABLE TRAYS AND SUSPENSION SYSTEM WITH OTHER CONSTRUCTION ELEMESCALE: N.T.S., INCLUDE TRANSITIONS, OFFSETS, AND CHANGES IN ELEVATION. COORDINATE ITEMS THAT PENETRATE CEILINGS ORE ARE SUPPORTED BY THEM, INCLUDING LIGHT FIXTURE, HVAC EQUIPMENT, FIRE SUPPRESSION SYSTEM AND PARTITION ASSEMBLIES.

2. PROVIDE FIRE STOPPING MATERIALS TO MAINTAIN FIRE RATINGS CONSISTENT WITH PENETRATED BARRIERS. PROVIDE SLEEVES FOR PENETRATION SLOTS/OPENINGS. MATCH CROSS SECTIONAL AREA OF CABLE TRAY. PROVIDE SEALING FILLERS

COOPER ROBERTS SIMONSEN ASSOCIATES
crsa
700 North 200 West
Salt Lake City, UT 84103
(801) 355-5915 phone
(801) 355-9885 fax
crsa-us.com

SNOW COLLEGE

State of Utah-Department of Administrative Services

DIVISION OF FACILITIES CONSTRUCTION AND MANAGEMENT

4110 State Office Building/Salt Lake City, Utah 84114/538-3018

Civil Engineer
Great Basin Engineering
Contact: Dave Waldron
5746 South 1475 East, Suite 200
Ogden, UT 84403
(801) 521-0222 FAX (801) 392-7544
dave@gbenorth.com

Landscape Architect
G. Brown Design
Contact: Mathew Winward
610 E. South Temple, Suite 50
Salt Lake City, UT 84102
(801) 575-6066 FAX (801) 575-6166
mwinward@gbrowndesign.com

Structural Engineer
Reaveley Engineers
Contact: Cameron Empey
675 East 500 South, Suite 400
Salt Lake City, UT 84105
(801) 486-3883 FAX (801) 485-0911
cempey@reaveley.com

Mechanical Engineer
Van Boerum & Frank
Contact: Neil Spencer
330 South 300 East
Salt Lake City, UT 84111
(801) 530-3148 FAX (801) 910-9917
nspencer@vbfa.com

Electrical Engineer
Spectrum Engineers
Contact: Dave Wesemann, PE
175 South Main Street, Suite 300
Salt Lake City, UT 84111
(801) 328-5151 FAX (801) 328-5155
dew@spectrum-engineers.com

AV Consultant
Spectrum Engineers
Contact: Kurtis Dallinga, PE
175 South Main Street, Suite 300
Salt Lake City, UT 84111
(801) 328-5151 FAX (801) 328-5155
kdd@spectrum-engineers.com

Library Consultant
Michaels Associates Design Consultants, Inc.
Contact: Andrea Michaels
14809 North 73rd Street, Suite 100
Scottsdale, AZ 85260
(480) 998-7476 FAX (480) 998-9390
andrea@madcinc.com

STAMP:

LICENSED PROFESSIONAL ENGINEER
No. 181563
DAVID E. WESEMANN
STATE OF UTAH

PROJECT NAME:

Snow College Library

150 College Avenue
Ephraim, Utah 84627

REVISIONS:

- 100% CD, October 13, 2008
- 100% CD, September 15, 2008
- 100% CD Review, Aug 26, 2008
- 100% CD, June 25, 2008
- 100% CD Review, June 20, 2008
- 50% CD Review, May 27, 2008
- CD Review Set, May 2, 2008
- DD Set, April 18, 2008
- DD Review, April 4, 2008

ISSUE DATE:

SEPTEMBER 15 2008, 100% CD

ARCHITECT'S PROJECT NUMBER:

B07-051

DFCM PROJECT NUMBER:

07258700

SHEET TITLE:

DETAILS

SHEET NUMBER:

EE-502

File Name: P:\2007\20070473\1Drawings\Sheet\7SEE-502.dwg Last Plotted: 2008/10/14 @ 10:07 AM By: dlm

GENERAL SHEET NOTES

1. REFER TO ONE-LINES, PLANS, AND SPECIFICATIONS FOR ADDITIONAL GROUNDING REQUIREMENTS.
2. BOND SPECIFIED GROUND CONDUCTOR TO INDIVIDUAL EQUIPMENT RACKS.

⬡SHEET KEYNOTES

1. PROVIDE 0.75" THICK X 8" HIGH FIRE-HEATED, PAINTED PLYWOOD ON ALL WALLS OF COMMUNICATIONS ROOMS.
2. PROVIDE DEEP 4" SQUARE BOX WITH SINGLE GANG MUD RING AND COVER PLATE.
3. STUB CONDUITS ALL THE WAY TO CABLE TRAY. PROVIDE INSULATED THROATS.
4. STUB 3EA 4" CND SLEEVES THROUGH WALL ABOVE CEILING INTO COMMUNICATIONS ROOM.
5. PROVIDE 4" CONDUITS BETWEEN FLOORS. FIRE STOP AFTER CABLING INSTALLATION IS COMPLETE.
6. STUB CONDUITS TO ROOF. PROVIDE FLASHING AND CAP.
7. TYPICAL CONDUIT STUB FOR EACH ROW OF SEATS IN LECTURE HALL.

COOPER ROBERTS SIMONSEN ASSOCIATES

crsa

700 North 200 West
Salt Lake City, UT 84103
(801) 355-5915 phone
(801) 355-9885 fax
crsa-us.com

SNOW COLLEGE

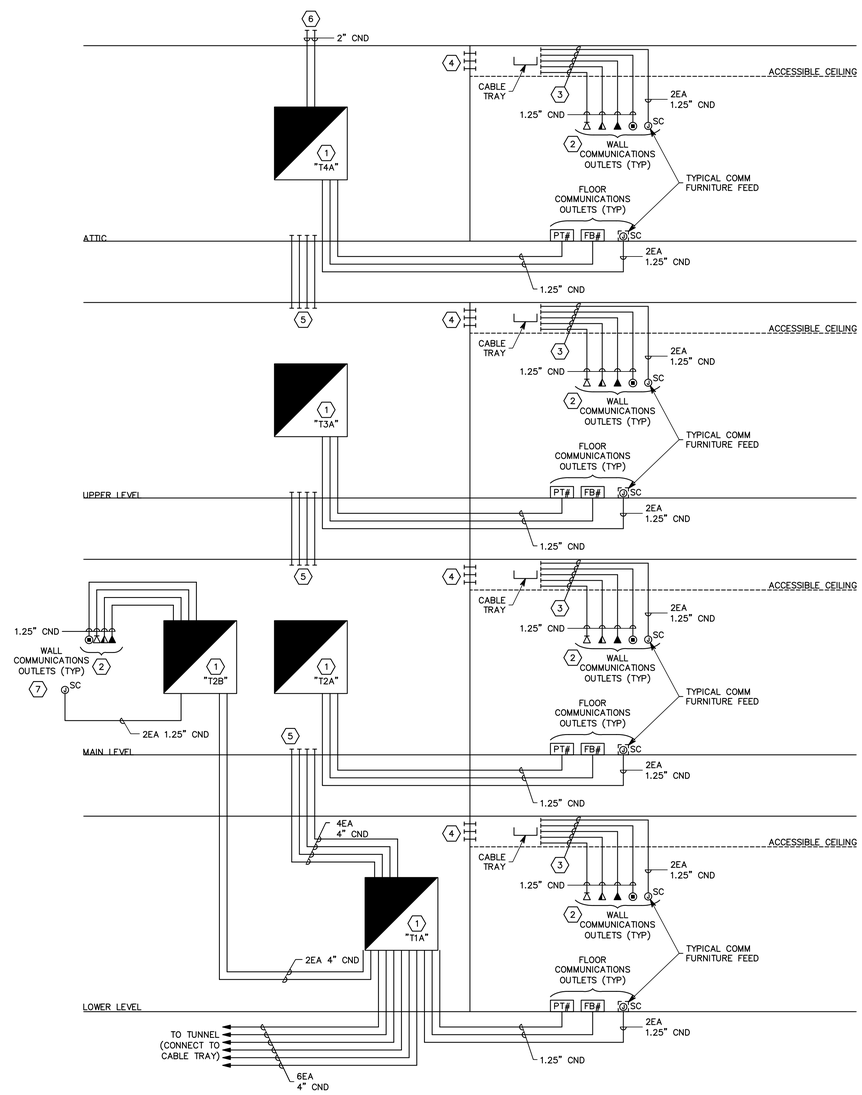

A1 TELECOMM RACEWAY RISER DIAGRAM

SCALE: N.T.S.

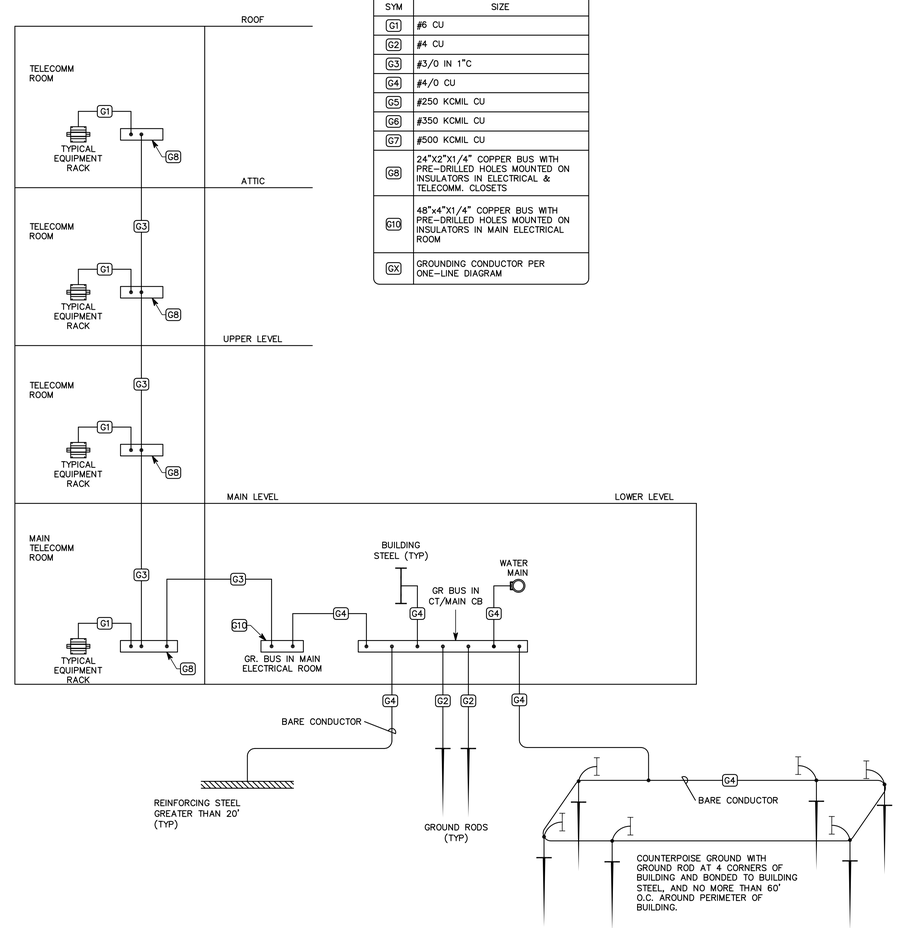

GROUNDING SCHEDULE

ALL CONDUCTORS ARE INSULATED UNLESS INDICATED OTHERWISE

SYM	SIZE
G1	#6 CU
G2	#4 CU
G3	#3/0 IN 1"C
G4	#4/0 CU
G5	#250 KCMIL CU
G6	#350 KCMIL CU
G7	#500 KCMIL CU
G8	24"X2"X1/4" COPPER BUS WITH PRE-DRILLED HOLES MOUNTED ON INSULATORS IN ELECTRICAL & TELECOMM. CLOSETS
G10	48"x4"X1/4" COPPER BUS WITH PRE-DRILLED HOLES MOUNTED ON INSULATORS IN MAIN ELECTRICAL ROOM
GX	GROUNDING CONDUCTOR PER ONE-LINE DIAGRAM

A4 GROUNDING RISER DIAGRAM

SCALE: N.T.S.

State of Utah-Department of Administrative Services

DIVISION OF FACILITIES CONSTRUCTION AND MANAGEMENT
4110 State Office Building/Salt Lake City, Utah 84114/538-3018

Civil Engineer
Great Basin Engineering
Contact: Dave Waldron
5746 South 1475 East, Suite 200
Ogden, UT 84403
(801) 521-0222 FAX (801) 392-7544
dave@gbenorth.com

Landscape Architect
G. Brown Design
Contact: Mathew Winward
610 E. South Temple, Suite 50
Salt Lake City, UT 84102
(801) 575-6066 FAX (801) 575-6166
mwinward@gbrowndesign.com

Structural Engineer
Reaveley Engineers
Contact: Cameron Empey
675 East 500 South, Suite 400
Salt Lake City, UT 84105
(801) 486-3883 FAX (801) 485-0911
cempey@reaveley.com

Mechanical Engineer
Van Boerum & Frank
Contact: Neil Spencer
330 South 300 East
Salt Lake City, UT 84111
(801) 530-3148 FAX (801) 910-9917
nspencer@vbfa.com

Electrical Engineer
Spectrum Engineers
Contact: Dave Wesemann, PE
175 South Main Street, Suite 300
Salt Lake City, UT 84111
(801) 328-5151 FAX (801) 328-5155
dew@spectrum-engineers.com

AV Consultant
Spectrum Engineers
Contact: Kurtis Dallinga, PE
175 South Main Street, Suite 300
Salt Lake City, UT 84111
(801) 328-5151 FAX (801) 328-5155
kdd@spectrum-engineers.com

Library Consultant
Michaels Associates Design Consultants, Inc.
Contact: Andrea Michaels
14809 North 73rd Street, Suite 100
Scottsdale, AZ 85260
(480) 998-7476 FAX (480) 998-9390
andrea@madcinc.com

STAMP:

LICENSED PROFESSIONAL ENGINEER No. 181563 DAVID E. WESEMANN STATE OF UTAH

PROJECT NAME:

Snow College Library

150 College Avenue
Ephraim, Utah 84627

REVISIONS:

- 100% CD, October 13, 2008
- 100% CD, September 15, 2008
- 100% CD Review, Aug 26, 2008
- 100% CD, June 25, 2008
- 100% CD Review, June 20, 2008
- 50% CD Review, May 27, 2008
- CD Review Set, May 2, 2008
- DD Set, April 18, 2008
- DD Review, April 4, 2008

ISSUE DATE:

SEPTEMBER 15 2008, 100% CD

ARCHITECT'S PROJECT NUMBER:

B07-051

DFCM PROJECT NUMBER:

07258700

SHEET TITLE:

TELECOMM. RACEWAY AND GROUNDING RISER DIAGRAMS

SHEET NUMBER:

EE-601

File Name: P:\2007\20070473\1Drawings\Sheet\73EE-601.dwg Last Plotted: 2008/10/14 @ 10:07 AM By: dim

GENERAL SHEET NOTES

1. DETERMINE MOUNTING HEIGHTS OF ELECTRICAL AND ELECTRONIC EQUIPMENT IN THE FOLLOWING ORDER OF PRIORITY:
   1 – ELEVATIONS (ARCHITECTURAL, ELECTRICAL, MECHANICAL, ETC).
   2 – EQUIPMENT SHOP DRAWINGS.
   3 – FIELD INSTRUCTIONS.
2. LOCATE RECEPTACLES SERVING THE SAME TYPE OF USE AT A UNIFORM HEIGHT UNLESS DIRECTED OTHERWISE.
3. MECHANICAL, ELECTRICAL, AND COMMUNICATION ROOMS: COORDINATE LOCATION OF LIGHTING AND POWER RECEPTACLES WITH EQUIPMENT, PIPING, AND DUCTWORK. DO NOT INSTALL RECEPTACLES BEHIND EQUIPMENT OR WHERE OTHERWISE INACCESSIBLE. POSITION LIGHTING REGARDLESS OF WHERE SHOWN ON DRAWING TO PROVIDE PROPER ILLUMINATION.
4. MOUNT RECEPTACLE BOXES FOR SWITCHES AND RECEPTACLES WITH LONG AXIS OF THE DEVICE VERTICAL UNLESS OTHERWISE INDICATED.
5. SET BOXES WITH PLASTER RINGS FLUSH WITH FINISHED SURFACE.
6. LOCATE BOX COVERS OR DEVICE PLATES SO THEY WILL NOT SPAN DIFFERENT TYPES OF BUILDING FINISHES EITHER VERTICALLY OR HORIZONTALLY.
7. VERIFY ALL DOOR CONDITIONS ON ARCHITECTURAL DRAWINGS PRIOR TO INSTALLING SWITCHES.
8. LOCATE WIRING DEVICES WHICH ARE ADJACENT AND ARE COMPATIBLE VOLTAGES IN ONE PLATE.

SHEET KEYNOTES

1. LOCATE RECEPTACLES BEHIND DRINKING FOUNTAINS.
2. REFER TO ARCHITECTURAL ELEVATIONS FOR PLACEMENT OF OUTLETS.
3. LOCATE AT BOTTOM OF BEAMS (OR JOISTS) OR AT CEILING. (REDUCE SPACING BY .5 PERPENDICULAR TO BEAM OR JOIST DIRECTION.) FOR OTHER CONDITIONS, REFER TO NFPA 72.
4. LOCATE SMOKE DETECTOR ANYWHERE IN SHADED AREA.
5. LOCATE AT BOTTOM OF BEAMS IF EITHER D/H < .1 OR W/H < .4; OTHERWISE, LOCATE IN BEAM POCKET.

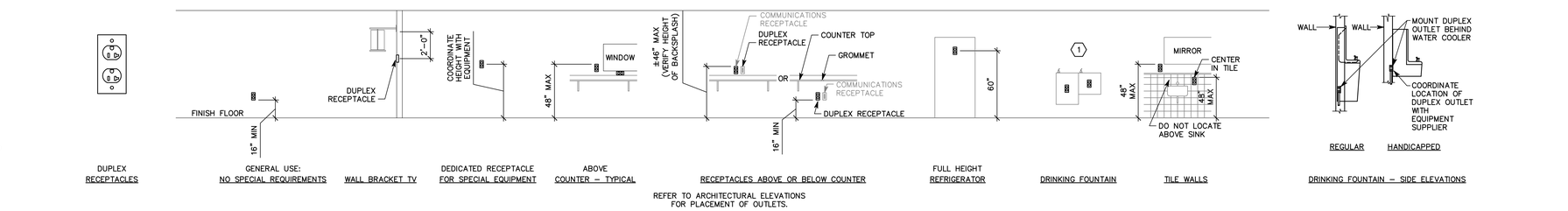

DUPLEX RECEPTACLES | GENERAL USE: NO SPECIAL REQUIREMENTS | WALL BRACKET TV | DEDICATED RECEPTACLE FOR SPECIAL EQUIPMENT | ABOVE COUNTER – TYPICAL | RECEPTACLES ABOVE OR BELOW COUNTER | FULL HEIGHT REFRIGERATOR | DRINKING FOUNTAIN | TILE WALLS | DRINKING FOUNTAIN – SIDE ELEVATIONS

REFER TO ARCHITECTURAL ELEVATIONS FOR PLACEMENT OF OUTLETS.

D1 RECEPTACLE MOUNTING DETAILS
NTS

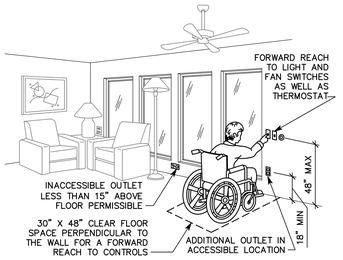

C1 ADA DETAIL
NTS

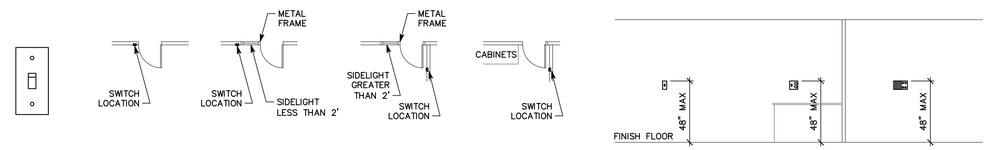

SWITCHES | STANDARD DOOR | DOOR WITH SIDELIGHT LESS THAN 2' | DOOR WITH SIDELIGHT GREATER THAN 2' | DOOR WITH NO PLACE FOR SWITCH AT LATCH SIDE | GENERAL USE: ADA | COMBINATION 48" MAX PLATE FOR SWITCH AND RECEPTACLE IN RESIDENTIAL BATHROOM | LIGHTING CONTROL STATION

C3 SWITCH MOUNTING DETAILS
NTS

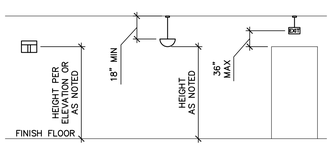

WALL MOUNTED LIGHT FIXTURE | PENDANT LIGHT FIXTURE | PENDANT EXIT SIGNS

B1 LIGHTING MOUNTING DETAILS
NTS

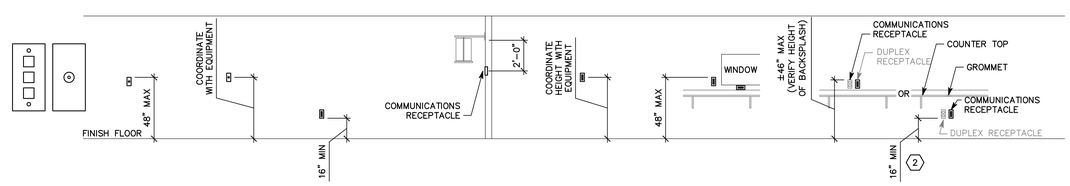

COMMUNICATION RECEPTACLES | WALL PHONE | PAY PHONE | GENERAL USE: NO SPECIAL REQUIREMENTS | WALL BRACKET TV | DEDICATED RECEPTACLE FOR SPECIAL EQUIPMENT | ABOVE COUNTER – TYPICAL | RECEPTACLES ABOVE OR BELOW COUNTER

B2 COMMUNICATION MOUNTING DETAILS
NTS

BOXES ON OPPOSITE SIDES OF WALL

B5 BOX MOUNTING DETAILS
NTS

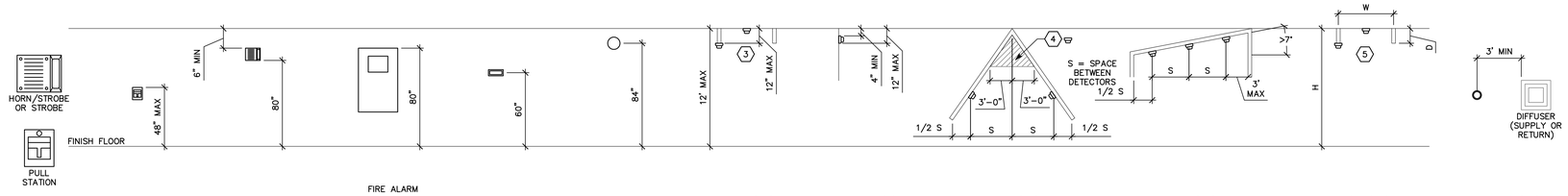

FIRE ALARM | PULL STATION | HORN, CHIME, OR STROBE | FIRE ALARM CONTROL PANEL "FCP" | FIRE SYSTEM ANNUNCIATOR "FSA" | BELL | SMOKE DETECTOR BETWEEN BEAMS | WALL MOUNTED SMOKE DETECTOR | SMOKE DETECTOR ON SLOPED CEILING (PEAKED) | SMOKE DETECTOR ON SLOPED CEILING (SHED) | HEAT DETECTOR BETWEEN BEAMS | SMOKE DETECTOR ADJACENT TO SUPPLY AIR

A1 FIRE ALARM MOUNTING DETAILS
NTS

COOPER ROBERTS SIMONSEN ASSOCIATES
crsa
700 North 200 West
Salt Lake City, UT 84103
(801) 355-5915 phone
(801) 355-9885 fax
crsa-us.com

SNOW COLLEGE

State of Utah-Department of Administrative Services
DIVISION OF FACILITIES CONSTRUCTION AND MANAGEMENT
4110 State Office Building/East Lake City, Utah 84114/538-3018

Civil Engineer
Great Basin Engineering
Contact: Dave Waldron
5746 South 1475 East, Suite 200
Ogden, UT 84403
(801) 521-0222 FAX (801) 392-7544
dave@gbenorth.com

Landscape Architect
G. Brown Design
Contact: Mathew Winward
610 E. South Temple, Suite 50
Salt Lake City, UT 84102
(801) 575-6066 FAX (801) 575-6166
mwinward@gbrowndesign.com

Structural Engineer
Reaveley Engineers
Contact: Cameron Empey
675 East 500 South, Suite 400
Salt Lake City, UT 84105
(801) 486-3883 FAX (801) 485-0911
cempey@reaveley.com

Mechanical Engineer
Van Boerum & Frank
Contact: Neil Spencer
330 South 300 East
Salt Lake City, UT 84111
(801) 530-3148 FAX (801) 910-9917
nspencer@vbfa.com

Electrical Engineer
Spectrum Engineers
Contact: Dave Wesemann, PE
175 South Main Street, Suite 300
Salt Lake City, UT 84111
(801) 328-5151 FAX (801) 328-5155
dew@spectrum-engineers.com

AV Consultant
Spectrum Engineers
Contact: Kurtis Dallinga, PE
175 South Main Street, Suite 300
Salt Lake City, UT 84111
(801) 328-5151 FAX (801) 328-5155
kdd@spectrum-engineers.com

Library Consultant
Michaels Associates Design Consultants, Inc.
Contact: Andrea Michaels
14809 North 73rd Street, Suite 100
Scottsdale, AZ 85260
(480) 998-7476 FAX (480) 998-9390
andrea@madcinc.com

STAMP:

LICENSED PROFESSIONAL ENGINEER
No. 181563
DAVID E. WESEMANN
STATE OF UTAH

PROJECT NAME:

Snow College Library

150 College Avenue
Ephraim, Utah 84627

REVISIONS:

- 100% CD, October 13, 2008
- 100% CD, September 15, 2008
- 100% CD Review, Aug 26, 2008
- 100% CD, June 25, 2008
- 100% CD Review, June 20, 2008
- 50% CD Review, May 27, 2008
- CD Review Set, May 2, 2008
- DD Set, April 18, 2008
- DD Review, April 4, 2008

ISSUE DATE:
SEPTEMBER 15 2008, 100% CD

ARCHITECT'S PROJECT NUMBER:
B07-051

DFCM PROJECT NUMBER:
07258700

SHEET TITLE:
TYPICAL MOUNTING HEIGHT DETAILS

SHEET NUMBER:
EE-701

File Name: P:\2007\20070473\Drawings\Sheet\73EE-701.dwg Last Plotted: 2008/10/14 @ 10:07 AM By: dlm

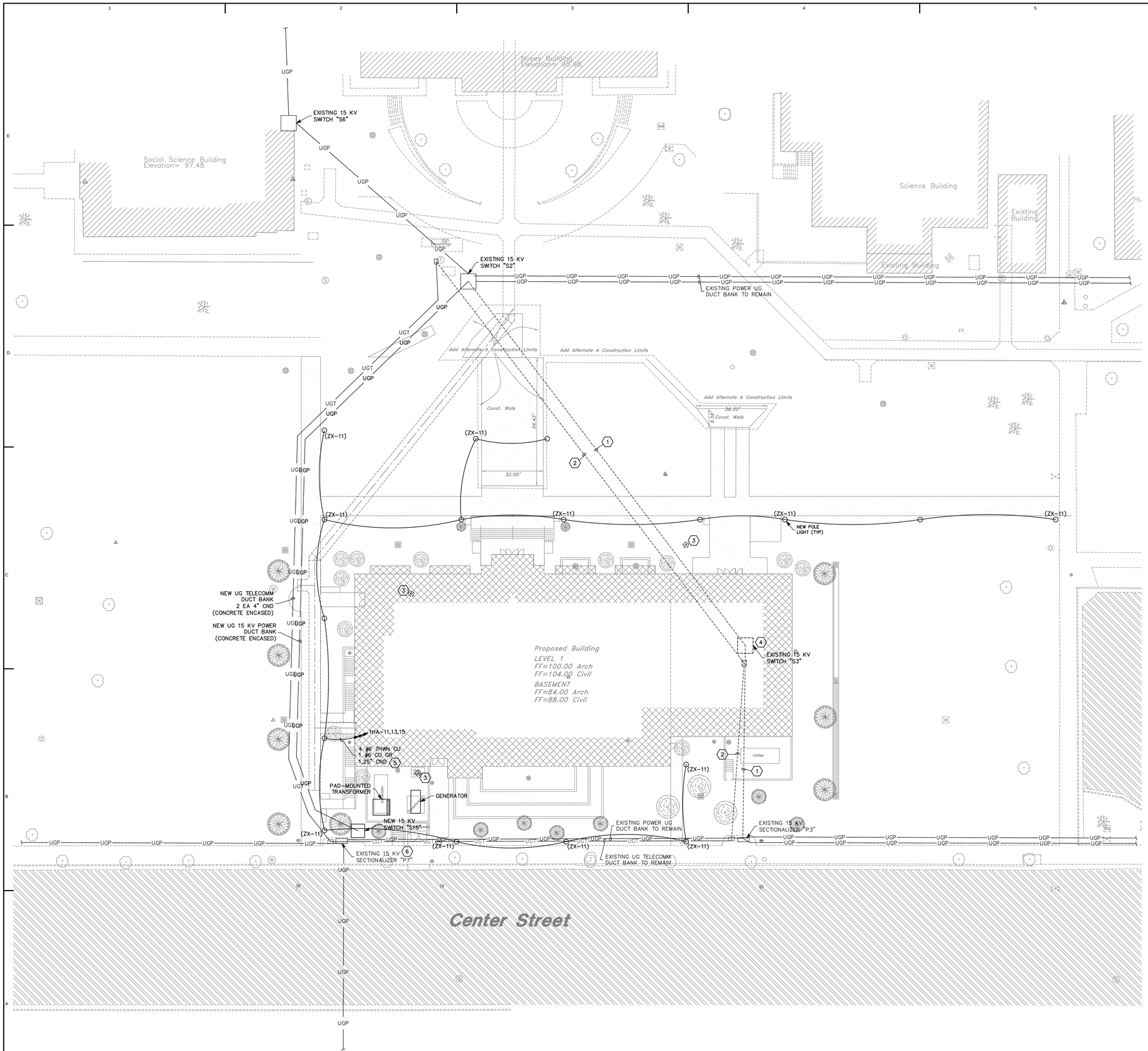

A1 SITE ELECTRICAL PLAN, ADD ALT 1, SCHEME A

SCALE: 1/20" = 1'-0"

SHEET KEYNOTES

1. REMOVE EXISTING UNDERGROUND POWER DUCT BANK.
2. EXISTING UNDERGROUND TELECOMMUNICATIONS DUCT BANK TO BE RELOCATED AROUND NEW BUILDING.
3. REMOVE EXISTING POLE LIGHT WITH ASSOCIATED CONDUIT AND WIRING BACK TO PANELBOARD OR NEXT ACTIVE JUNCTION BOX. MAINTAIN CIRCUIT CONTINUITY FOR DOWNSTREAM FIXTURES THAT REMAIN.
4. REMOVE EXISTING 15 KV SWITCH "S3".
5. EXTEND SAME CONDUIT AND WIRE SIZE TO ALL POLES. RUN ALL CIRCUITS THROUGH EVERY POLE AND CONNECT POLES TO ALTERNATING CIRCUITS.
6. REMOVE EXISTING SECTIONALIZER "P7" AND PROVIDE NEW SWITCH "S15". SPLICE AND EXTEND EXISTING FEEDERS INTO NEW SWITCH AS INDICATED.

COOPER ROBERTS SIMONSEN ASSOCIATES

crsa

700 North 200 West
Salt Lake City, UT 84103
(801) 355-5915 phone
(801) 355-9885 fax
crsa-us.com

SNOW COLLEGE

State of Utah-Department of Administrative Services

DIVISION OF FACILITIES CONSTRUCTION AND MANAGEMENT

4110 State Office Building/Salt Lake City, Utah 84114/38.918

Civil Engineer

Great Basin Engineering
Contact: Dave Waldron
5746 South 1475 East, Suite 200
Ogden, UT 84403
(801) 521-0222 FAX (801) 392-7544
dave@gbenorth.com

Landscape Architect

G. Brown Design
Contact: Mathew Winward
610 E. South Temple, Suite 50
Salt Lake City, UT 84102
(801) 575-6066 FAX (801) 575-6166
mwinward@gbrowndesign.com

Structural Engineer

Reaveley Engineers
Contact: Cameron Empey
675 East 500 South, Suite 400
Salt Lake City, UT 84105
(801) 486-3883 FAX (801) 485-0911
cempey@reaveley.com

Mechanical Engineer

Van Boerum & Frank
Contact: Neil Spencer
330 South 300 East
Salt Lake City, UT 84111
(801) 530-3148 FAX (801) 910-9917
nspencer@vbfa.com

Electrical Engineer

Spectrum Engineers
Contact: Dave Wesemann, PE
175 South Main Street, Suite 300
Salt Lake City, UT 84111
(801) 328-5151 FAX (801) 328-5155
dew@spectrum-engineers.com

AV Consultant

Spectrum Engineers
Contact: Kurtis Dallinga, PE
175 South Main Street, Suite 300
Salt Lake City, UT 84111
(801) 328-5151 FAX (801) 328-5155
kdd@spectrum-engineers.com

Library Consultant

Michaels Associates Design Consultants, Inc.
Contact: Andrea Michaels
14809 North 73rd Street, Suite 100
Scottsdale, AZ 85260
(480) 998-7476 FAX (480) 998-9390
andrea@madcinc.com

STAMP:

LICENSED PROFESSIONAL ENGINEER
No. 181563
DAVID E. WESEMANN
STATE OF UTAH

PROJECT NAME:

Snow College Library

150 College Avenue
Ephraim, Utah 84627

REVISIONS:

- 100% CD, October 13, 2008
- 100% CD, September 15, 2008
- 100% CD Review, Aug 26, 2008
- 100% CD, June 25, 2008
- 100% CD Review, June 20, 2008
- 50% CD Review, May 27, 2008
- CD Review Set, May 2, 2008
- DD Set, April 18, 2008
- DD Review, April 4, 2008

ISSUE DATE:

SEPTEMBER 15 2008, 100% CD

ARCHITECT'S PROJECT NUMBER:

B07-051

DFCM PROJECT NUMBER:

07258700

SHEET TITLE:

SITE ELECTRICAL PLAN, ADD ALT 1, SCHEME A

SHEET NUMBER:

ES-101

File Name: P:\2007\20070473\Drawings\Sheet\73ES-101.dwg Last Plotted: 2008/10/14 @ 10:07 AM By: dlm

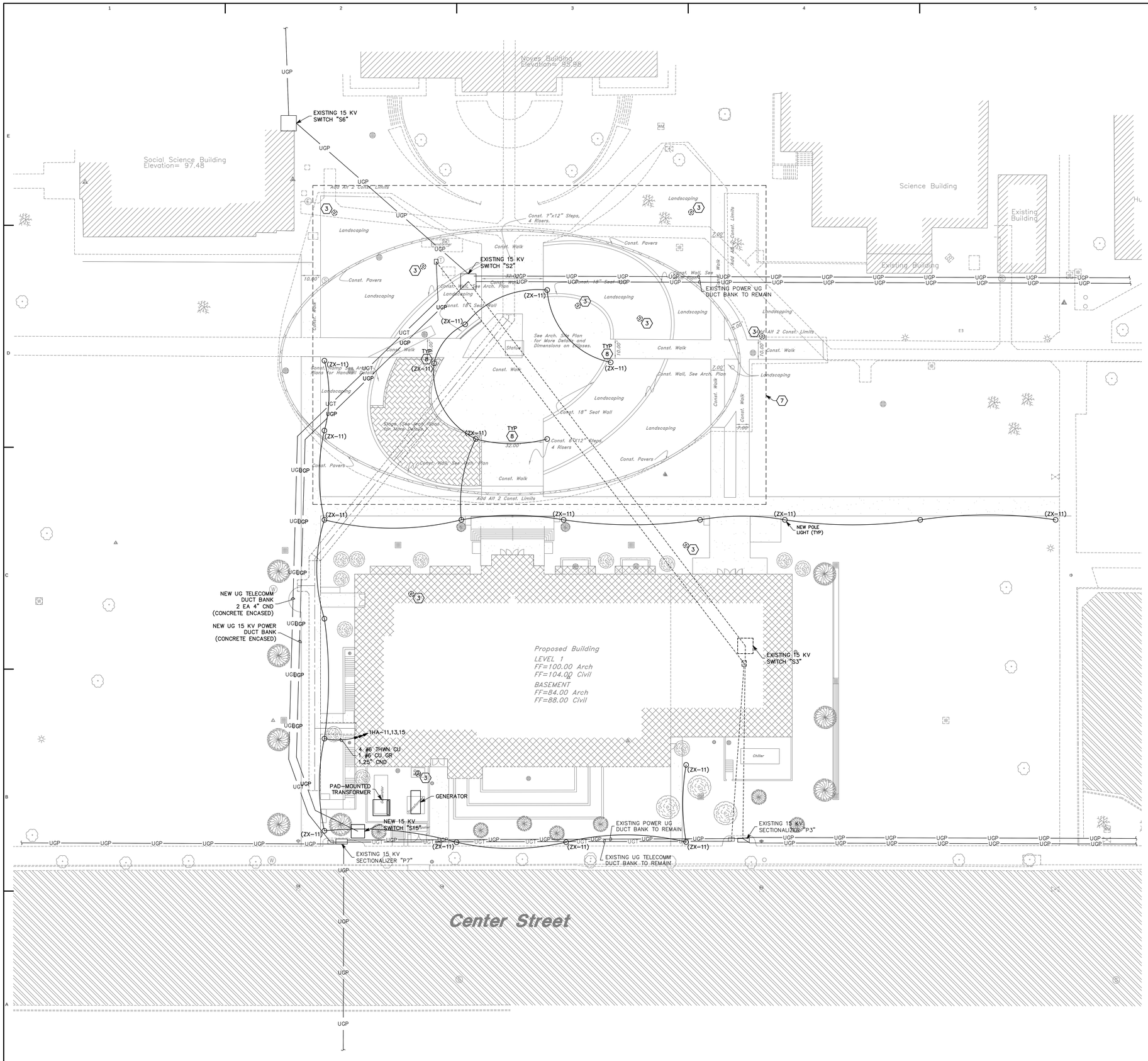

A1 SITE ELECTRICAL PLAN, ADD ALT 1, SCHEME B

SCALE: 1/20" = 1'-0"

SHEET KEYNOTES

1. REMOVE EXISTING UNDERGROUND POWER DUCT BANK.
2. EXISTING UNDERGROUND TELECOMMUNICATIONS DUCT BANK TO BE RELOCATED AROUND NEW BUILDING.
3. REMOVE EXISTING POLE LIGHT WITH ASSOCIATED CONDUIT AND WIRING BACK TO PANELBOARD OR NEXT ACTIVE JUNCTION BOX. MAINTAIN CIRCUIT CONTINUITY FOR DOWNSTREAM FIXTURES THAT REMAIN.
4. REMOVE EXISTING 15 KV SWITCH "S3".
5. EXTEND SAME CONDUIT AND WIRE SIZE TO ALL POLES. RUN ALL CIRCUITS THROUGH EVERY POLE AND CONNECT POLES TO ALTERNATING CIRCUITS.
6. REMOVE EXISTING SECTIONALIZER "P7" AND PROVIDE NEW SWITCH "S15". SPLICE AND EXTEND EXISTING FEEDERS INTO NEW SWITCH AS INDICATED.
7. NEW POLE LIGHTS AND REMOVAL OF EXISTING POLE LIGHTS IN THIS AREA IS PART OF BID ALTERNATE.
8. COORDINATE EXACT PLACEMENT OF POLE LIGHTS WITH ARCHITECT.

COOPER ROBERTS SIMONSEN ASSOCIATES

crsa

700 North 200 West
Salt Lake City, UT 84103
(801) 355-5915 phone
(801) 355-9885 fax
crsa-us.com

SNOW COLLEGE

State of Utah-Department of Administrative Services

DIVISION OF FACILITIES CONSTRUCTION AND MANAGEMENT

4110 State Office Building/East Lake City, Utah 84114/538-3018

Civil Engineer

Great Basin Engineering
Contact: Dave Waldron
5746 South 1475 East, Suite 200
Ogden, UT 84403
(801) 521-0222 FAX (801) 392-7544
dave@gbenorth.com

Landscape Architect

G. Brown Design
Contact: Mathew Winward
610 E. South Temple, Suite 50
Salt Lake City, UT 84102
(801) 575-6066 FAX (801) 575-6166
mwinward@gbrowndesign.com

Structural Engineer

Reaveley Engineers
Contact: Cameron Empey
675 East 500 South, Suite 400
Salt Lake City, UT 84105
(801) 486-3883 FAX (801) 485-0911
cempey@reaveley.com

Mechanical Engineer

Van Boerum & Frank
Contact: Neil Spencer
330 South 300 East
Salt Lake City, UT 84111
(801) 530-3148 FAX (801) 910-9917
nspencer@vbfa.com

Electrical Engineer

Spectrum Engineers
Contact: Dave Wesemann, PE
175 South Main Street, Suite 300
Salt Lake City, UT 84111
(801) 328-5151 FAX (801) 328-5155
dew@spectrum-engineers.com

AV Consultant

Spectrum Engineers
Contact: Kurtis Dallinga, PE
175 South Main Street, Suite 300
Salt Lake City, UT 84111
(801) 328-5151 FAX (801) 328-5155
kdd@spectrum-engineers.com

Library Consultant

Michaels Associates Design Consultants, Inc.
Contact: Andrea Michaels
14809 North 73rd Street, Suite 100
Scottsdale, AZ 85260
(480) 998-7476 FAX (480) 998-9390
andrea@madcinc.com

STAMP:

LICENSED PROFESSIONAL ENGINEER No. 181563 DAVID E. WESEMANN STATE OF UTAH

PROJECT NAME:

Snow College Library

150 College Avenue
Ephraim, Utah 84627

REVISIONS:

- 100% CD, October 13, 2008
- 100% CD, September 15, 2008
- 100% CD Review, Aug 26, 2008
- 100% CD, June 25, 2008
- 100% CD Review, June 20, 2008
- 50% CD Review, May 27, 2008
- CD Review Set, May 2, 2008
- DD Set, April 18, 2008
- DD Review, April 4, 2008

ISSUE DATE:

SEPTEMBER 15 2008, 100% CD

ARCHITECT'S PROJECT NUMBER:

B07-051

DFCM PROJECT NUMBER:

07258700

SHEET TITLE:

SITE ELECTRICAL PLAN - ADD ALT 1, SCHEME B

SHEET NUMBER:

ES-101a

File Name: P:\2007\20070473\Drawings\Sheet\73ES-101a.dwg Last Plotted: 2008/10/14 @ 10:07 AM By: dim

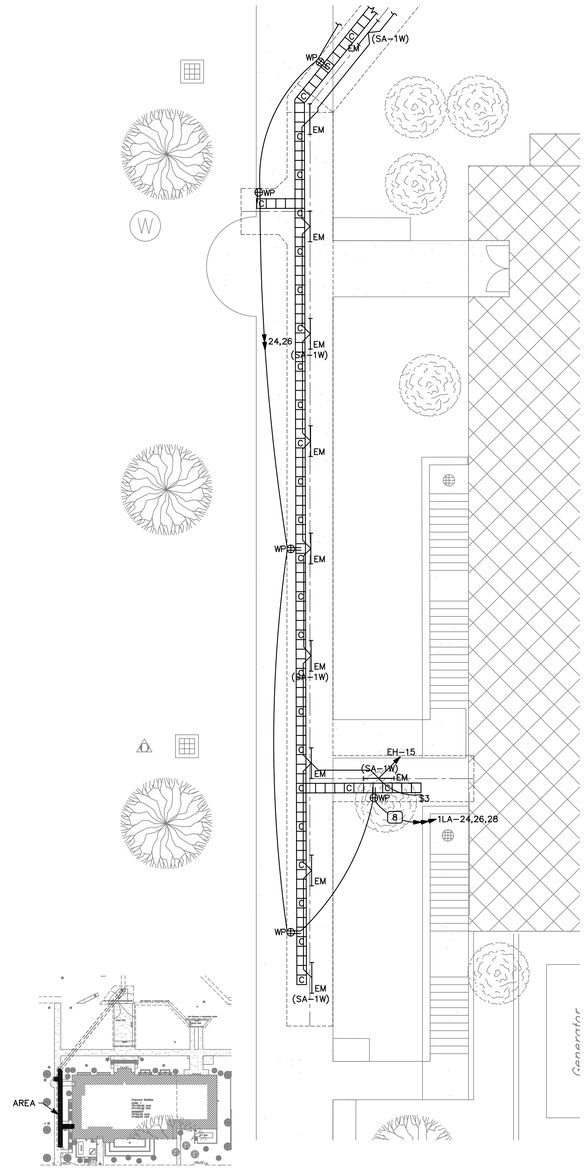

KEY PLAN

A1 1/8" = 1'-0"

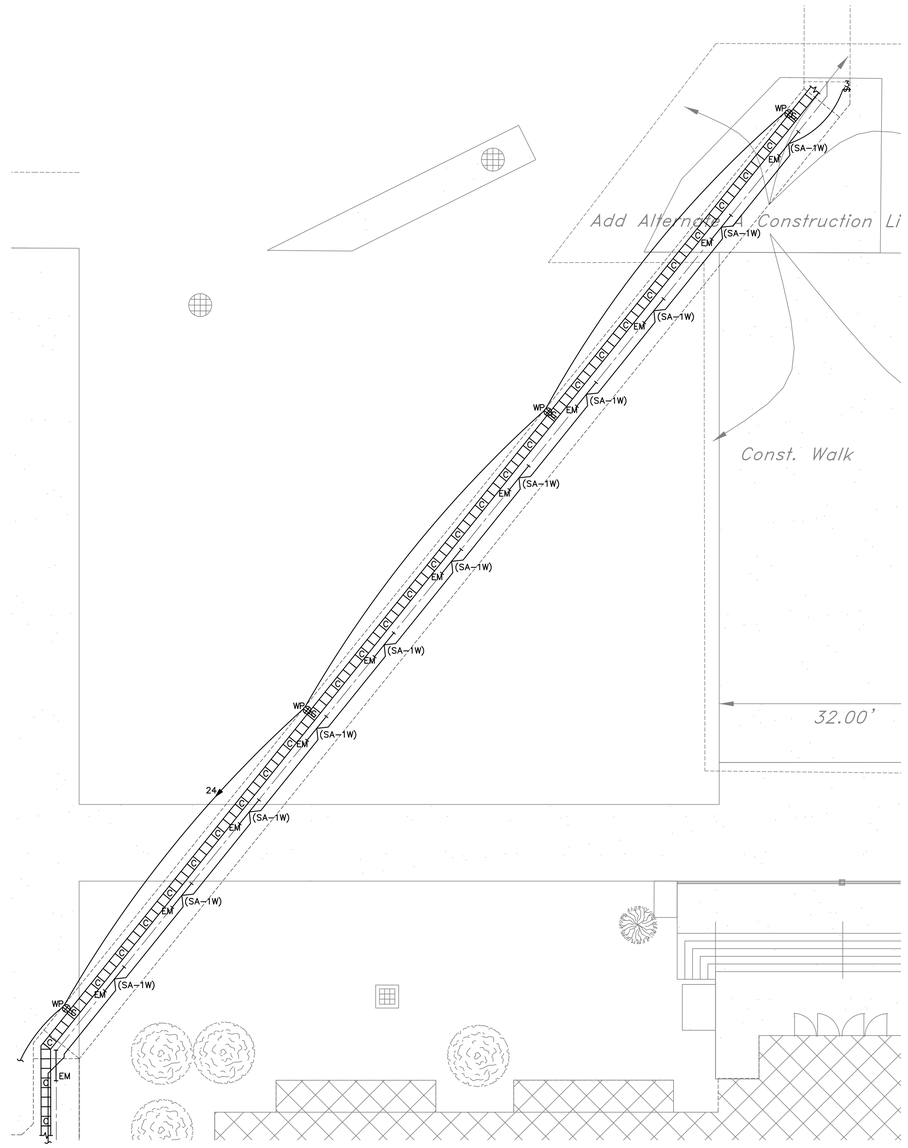

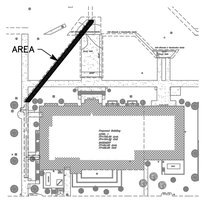

KEY PLAN

A3 1/8" = 1'-0"

COOPER ROBERTS SIMONSEN ASSOCIATES

crsa

700 North 200 West
Salt Lake City, UT 84103
(801) 355-5915 phone
(801) 355-9885 fax
crsa-us.com

SNOW COLLEGE

State of Utah-Department of Administrative Services

DIVISION OF FACILITIES CONSTRUCTION AND MANAGEMENT

4110 State Office Building/Salt Lake City, Utah 84114/538-3018

Civil Engineer

Great Basin Engineering
Contact: Dave Waldron
5746 South 1475 East, Suite 200
Ogden, UT 84403
(801) 521-0222 FAX (801) 392-7544
dave@gbenorth.com

Landscape Architect

G. Brown Design
Contact: Mathew Winward
610 E. South Temple, Suite 50
Salt Lake City, UT 84102
(801) 575-6066 FAX (801) 575-6166
mwinward@gbrowndesign.com

Structural Engineer

Reaveley Engineers
Contact: Cameron Empey
675 East 500 South, Suite 400
Salt Lake City, UT 84105
(801) 486-3883 FAX (801) 485-0911
cempey@reaveley.com

Mechanical Engineer

Van Boerum & Frank
Contact: Neil Spencer
330 South 300 East
Salt Lake City, UT 84111
(801) 530-3148 FAX (801) 910-9917
nspencer@vbfa.com

Electrical Engineer

Spectrum Engineers
Contact: Dave Wesemann, PE
175 South Main Street, Suite 300
Salt Lake City, UT 84111
(801) 328-5151 FAX (801) 328-5155
dew@spectrum-engineers.com

AV Consultant

Spectrum Engineers
Contact: Kurtis Dallinga, PE
175 South Main Street, Suite 300
Salt Lake City, UT 84111
(801) 328-5151 FAX (801) 328-5155
kdd@spectrum-engineers.com

Library Consultant

Michaels Associates Design Consultants, Inc.
Contact: Andrea Michaels
14809 North 73rd Street, Suite 100
Scottsdale, AZ 85260
(480) 998-7476 FAX (480) 998-9390
andrea@madcinc.com

STAMP:

LICENSED PROFESSIONAL ENGINEER
No. 181563
DAVID E. WESEMANN
STATE OF UTAH

PROJECT NAME:

Snow College Library

150 College Avenue
Ephraim, Utah 84627

REVISIONS:

- 100% CD, October 13, 2008
- 100% CD, September 15, 2008
- 100% CD Review, Aug 26, 2008
- 100% CD, June 25, 2008
- 100% CD Review, June 20, 2008
- 50% CD Review, May 27, 2008
- CD Review Set, May 2, 2008
- DD Set, April 18, 2008
- DD Review, April 4, 2008

ISSUE DATE:

SEPTEMBER 15 2008, 100% CD

ARCHITECT'S PROJECT NUMBER:

B07-051

DFCM PROJECT NUMBER:

07258700

SHEET TITLE:

ENLARGED ELECTRICAL TUNNEL PLANS

SHEET NUMBER:

ES-401

File Name: P:\2007\20070473\1Drawings\Sheet\73ES-401.dwg Last Plotted: 2008/10/14 @ 10:08 AM By: dim

GENERAL SHEET NOTES

1. VERIFY LOCATION OF EACH FLOORBOX AND POKE-THOUGH OUTLET WITH ARCHITECT PRIOR TO INSTALLATION.

⬡SHEET KEYNOTES

1. OUTLET FLUSH MOUNTED IN CEILING FOR PROJECTOR OR DOCUMENT CAMERA. COORDINATE EXACT LOCATION WITH A/V INSTALLER.
2. PROVIDE ELECTRICAL CONNECTIONS TO PROJECTION SCREEN WITH ALL POWER AND CONTROL WIRING PER MANUFACTURER'S WRITTEN INSTRUCTIONS, WITH CONTROL SWITCH ON WALL NEAR TEACHING STATION. COORDINATE WITH A/V INSTALLER.
3. OUTLET UP HIGH FOR A/V MONITOR. COORDINATE EXACT LOCATION WITH A/V INSTALLER.
4. J-BOX IN CEILING FOR BMS CONTROL TRANSFORMER. COORDINATE LOCATIONS AND QUANTITY WITH MECHANICAL CONTROLS CONTRACTOR.
5. J-BOX AND SPARE CIRCUITS FOR MISCELLANEOUS MECHANICAL EQUIPMENT REQUIRING 120V CONNECTIONS. ALLOW 100' OF CONDUIT AND SIRING PER CIRCUIT AND FINAL CONNECTIONS TO EQUIPMENT. COORDINATE WITH MECHANICAL INSTALLER.

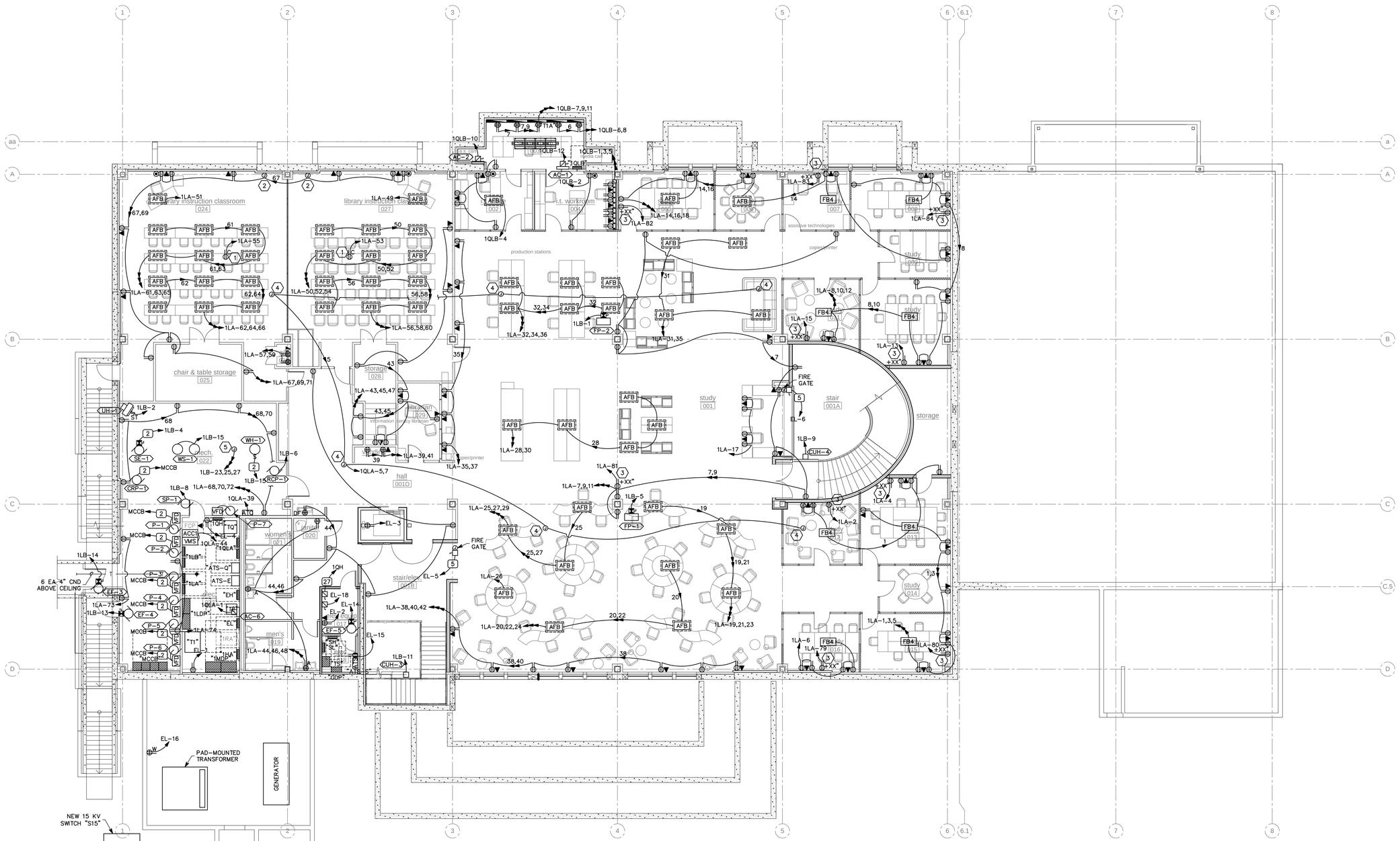

A1 BASEMENT LEVEL POWER PLAN

SCALE: 1/8" = 1'-0"

COOPER ROBERTS SIMONSEN ASSOCIATES

crsa

700 North 200 West
Salt Lake City, UT 84103
(801) 355-5915 phone
(801) 355-9885 fax
crsa-us.com

SNOW COLLEGE

State of Utah-Department of Administrative Services

DIVISION OF FACILITIES CONSTRUCTION AND MANAGEMENT
4110 State Office Building/Salt Lake City, Utah 84114/538-3018

Civil Engineer

Great Basin Engineering
Contact: Dave Waldron
5746 South 1475 East, Suite 200
Ogden, UT 84403
(801) 521-0222 FAX (801) 392-7544
dave@gbenorth.com

Landscape Architect

G. Brown Design
Contact: Mathew Winward
610 E. South Temple, Suite 50
Salt Lake City, UT 84102
(801) 575-6066 FAX (801) 575-6166
mwinward@gbrowndesign.com

Structural Engineer

Reaveley Engineers
Contact: Cameron Empey
675 East 500 South, Suite 400
Salt Lake City, UT 84105
(801) 486-3883 FAX (801) 485-0911
cempey@reaveley.com

Mechanical Engineer

Van Boerum & Frank
Contact: Neil Spencer
330 South 300 East
Salt Lake City, UT 84111
(801) 530-3148 FAX (801) 910-9917
nspencer@vbfa.com

Electrical Engineer

Spectrum Engineers
Contact: Dave Wesemann, PE
175 South Main Street, Suite 300
Salt Lake City, UT 84111
(801) 328-5151 FAX (801) 328-5155
dew@spectrum-engineers.com

AV Consultant

Spectrum Engineers
Contact: Kurtis Dallinga, PE
175 South Main Street, Suite 300
Salt Lake City, UT 84111
(801) 328-5151 FAX (801) 328-5155
kdd@spectrum-engineers.com

Library Consultant

Michaels Associates Design Consultants, Inc.
Contact: Andrea Michaels
14809 North 73rd Street, Suite 100
Scottsdale, AZ 85260
(480) 998-7476 FAX (480) 998-9390
andrea@madcinc.com

STAMP:

LICENSED PROFESSIONAL ENGINEER
No. 181563
DAVID E. WESEMANN
STATE OF UTAH

PROJECT NAME:

Snow College Library

150 College Avenue
Ephraim, Utah 84627

REVISIONS:

- 100% CD, October 13, 2008
- 100% CD, September 15, 2008
- 100% CD Review, Aug 26, 2008
- 100% CD, June 25, 2008
- 100% CD Review, June 20, 2008
- 50% CD Review, May 27, 2008
- CD Review Set, May 2, 2008
- DD Set, April 18, 2008
- DD Review, April 4, 2008

ISSUE DATE:

SEPTEMBER 15 2008, 100% CD

ARCHITECT'S PROJECT NUMBER:

B07-051

DFCM PROJECT NUMBER:

07258700

SHEET TITLE:

BASEMENT LEVEL POWER PLAN

SHEET NUMBER:

EP-101

File Name: P:\2007\20070473\Drawings\Sheet\73EP-101.dwg Last Plotted: 2008/10/14 @ 10:08 AM By: dim

GENERAL SHEET NOTES

1. VERIFY LOCATION OF EACH FLOORBOX AND POKE THROUGH OUTLET WITH ARCHITECT PRIOR TO INSTALLATION.

SHEET KEYNOTES

1. OUTLET FLUSH MOUNTED IN CEILING FOR PROJECTOR OR DOCUMENT CAMERA. COORDINATE EXACT LOCATION WITH A/V INSTALLER.
2. PROVIDE ELECTRICAL CONNECTIONS TO PROJECTION SCREEN WITH ALL POWER AND CONTROL WIRING PER MANUFACTURER'S WRITTEN INSTRUCTIONS, WITH CONTROL SWITCH ON WALL NEAR TEACHING STATION. COORDINATE WITH A/V INSTALLER.
3. OUTLET UP HIGH FOR A/V MONITOR. COORDINATE EXACT LOCATION WITH A/V INSTALLER.
4. PROVIDE ELECTRICAL CONNECTIONS TO LIBRARY SECURITY SYSTEMS PER MANUFACTURER'S WRITTEN INSTRUCTIONS.
5. PROVIDE ELECTRICAL CONNECTIONS TO 4-CIRCUIT, 8 WIRE SYSTEM FURNITURE PER MANUFACTURER'S WRITTEN INSTRUCTIONS. COORDINATE EXACT LOCATIONS AND REQUIREMENTS WITH ARCHITECT AND FURNITURE SUPPLIER.
6. STUB 2 EA 1.25" CND FROM COMM CLOSET "T2B" INTO THE ENDS OF EACH ROW FOR SYSTEMS FURNITURE CABLING. COORDINATE EXACT LOCATIONS AND REQUIREMENTS WITH ARCHITECT AND FURNITURE SUPPLIER.
7. PROVIDE ELECTRICAL CONNECTIONS TO MOTOR OPERATED DOOR WITH ALL ASSOCIATED POWER AND CONTROL WIRING PER MANUFACTURER'S WRITTEN INSTRUCTIONS.
8. COORDINATE EXACT LOCATION OF OUTLETS WITH KITCHEN CONSULTANT OR ARCHITECT.

SHEET KEYNOTES

9. PROVIDE ELECTRICAL CONNECTIONS TO FIRE PLACE PER MANUFACTURERS WRITTEN INSTRUCTIONS WITH ALL POWER AND CONTROL WIRING FOR COMPLETE OPERATION.
10. PROVIDE PANEL SKIRT ABOVE AND BELOW PANEL "K" TO CONCEAL CONDUITS. PAINT TO MATCH WALL COLOR PER ARCHITECTURAL SELECTION ON PAINTING.
11. J-BOX IN CEILING FOR BMS CONTROL TRANSFORMER. COORDINATE LOCATIONS AND QUANTITY WITH MECHANICAL CONTROLS CONTRACTOR.

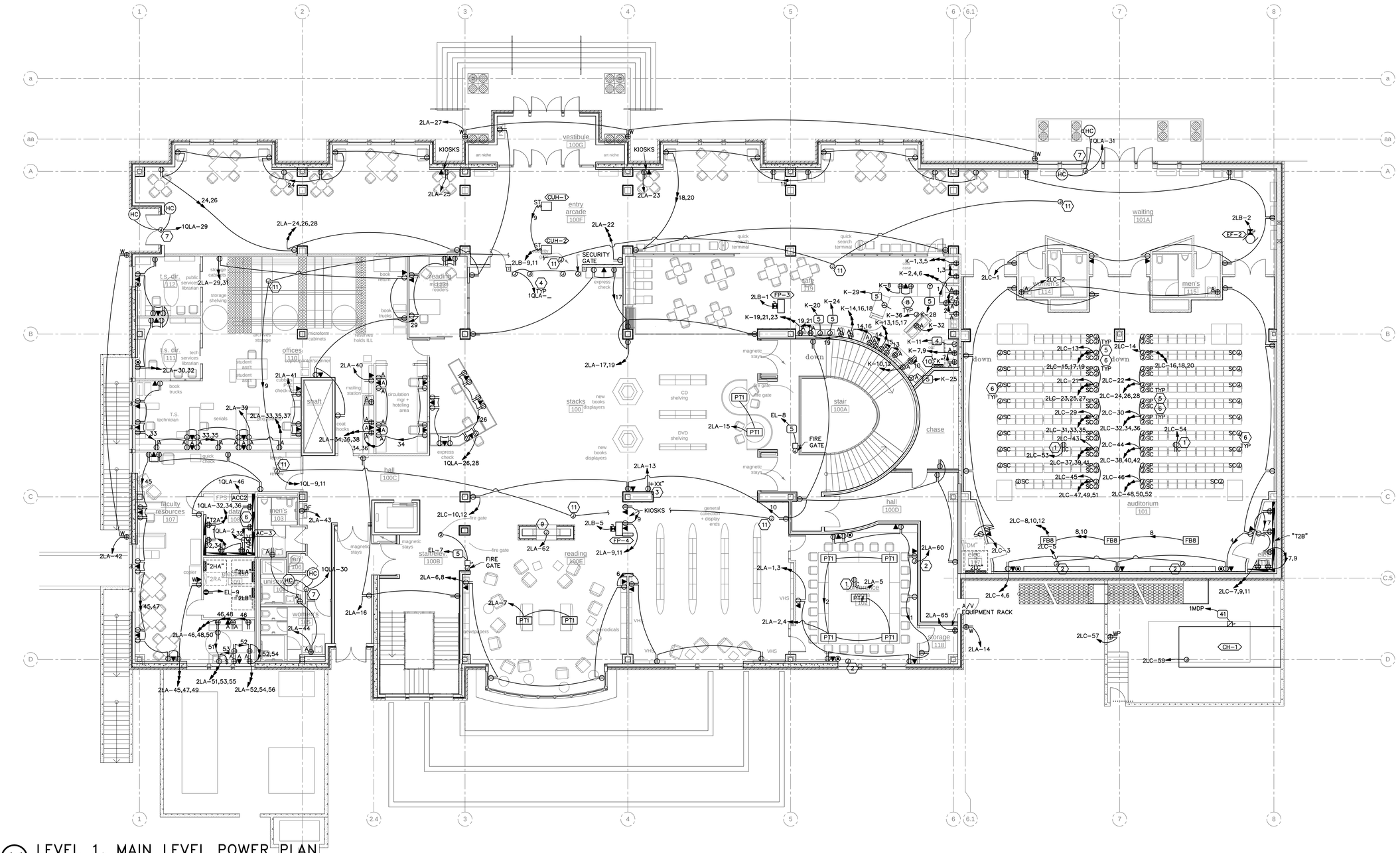

A1 LEVEL 1, MAIN LEVEL POWER PLAN

SCALE: 1/8" = 1'-0"

COOPER ROBERTS SIMONSEN ASSOCIATES

crsa

700 North 200 West
Salt Lake City, UT 84103
(801) 355-5915 phone
(801) 355-9885 fax
crsa-us.com

SNOW COLLEGE

State of Utah-Department of Administrative Services

DIVISION OF FACILITIES CONSTRUCTION AND MANAGEMENT

4110 State Office Building/Salt Lake City, Utah 84114/38.3018

Civil Engineer

Great Basin Engineering
Contact: Dave Waldron
5746 South 1475 East, Suite 200
Ogden, UT 84403
(801) 521-0222 FAX (801) 392-7544
dave@gbenorth.com

Landscape Architect

G. Brown Design
Contact: Mathew Winward
610 E. South Temple, Suite 50
Salt Lake City, UT 84102
(801) 575-6066 FAX (801) 575-6166
mwinward@gbrowndesign.com

Structural Engineer

Reaveley Engineers
Contact: Cameron Empey
675 East 500 South, Suite 400
Salt Lake City, UT 84105
(801) 486-3883 FAX (801) 485-0911
cempey@reaveley.com

Mechanical Engineer

Van Boerum & Frank
Contact: Neil Spencer
330 South 300 East
Salt Lake City, UT 84111
(801) 530-3148 FAX (801) 910-9917
nspencer@vbfa.com

Electrical Engineer

Spectrum Engineers
Contact: Dave Wesemann, PE
175 South Main Street, Suite 300
Salt Lake City, UT 84111
(801) 328-5151 FAX (801) 328-5155
dew@spectrum-engineers.com

AV Consultant

Spectrum Engineers
Contact: Kurtis Dallinga, PE
175 South Main Street, Suite 300
Salt Lake City, UT 84111
(801) 328-5151 FAX (801) 328-5155
kdd@spectrum-engineers.com

Library Consultant

Michaels Associates Design Consultants, Inc.
Contact: Andrea Michaels
14809 North 73rd Street, Suite 100
Scottsdale, AZ 85260
(480) 998-7476 FAX (480) 998-9390
andrea@madcinc.com

STAMP:

LICENSED PROFESSIONAL ENGINEER
No. 181563
DAVID E. WESEMANN
STATE OF UTAH

PROJECT NAME:

Snow College Library

150 College Avenue
Ephraim, Utah 84627

REVISIONS:

- 100% CD, October 13, 2008
- 100% CD, September 15, 2008
- 100% CD Review, Aug 26, 2008
- 100% CD, June 25, 2008
- 100% CD Review, June 20, 2008
- 50% CD Review, May 27, 2008
- CD Review Set, May 2, 2008
- DD Set, April 18, 2008
- DD Review, April 4, 2008

ISSUE DATE:

SEPTEMBER 15 2008, 100% CD

ARCHITECT'S PROJECT NUMBER:

B07-051

DFCM PROJECT NUMBER:

07258700

SHEET TITLE:

LEVEL 1, MAIN LEVEL POWER PLAN

SHEET NUMBER:

EP-102

File Name: P:\2007\20070473\Drawings\Sheet\73EP-102.dwg Last Plotted: 2008/10/14 @ 10:08 AM By: dim

GENERAL SHEET NOTES

1. VERIFY LOCATION OF EACH FLOORBOX AND POKE THROUGH OUTLET WITH ARCHITECT PRIOR TO INSTALLATION.

SHEET KEYNOTES

1. OUTLET FLUSH MOUNTED IN CEILING FOR PROJECTOR OR DOCUMENT CAMERA. COORDINATE EXACT LOCATION WITH A/V INSTALLER.
2. PROVIDE ELECTRICAL CONNECTIONS TO PROJECTION SCREEN WITH ALL POWER AND CONTROL WIRING PER MANUFACTURER'S WRITTEN INSTRUCTIONS. WITH CONTROL SWITCH ON WALL NEAR TEACHING STATION. COORDINATE WITH A/V INSTALLER.
3. OUTLET UP HIGH FOR A/V MONITROR. COORDINATE EXACT LOCATION WITH A/V INSTALLER.
4. J-BOX IN CEILING FOR BMS CONTROL TRANSFORMER. COORDINATE LOCATIONS AND QUANTITY WITH MECHANICAL CONTROLS CONTRACTOR.

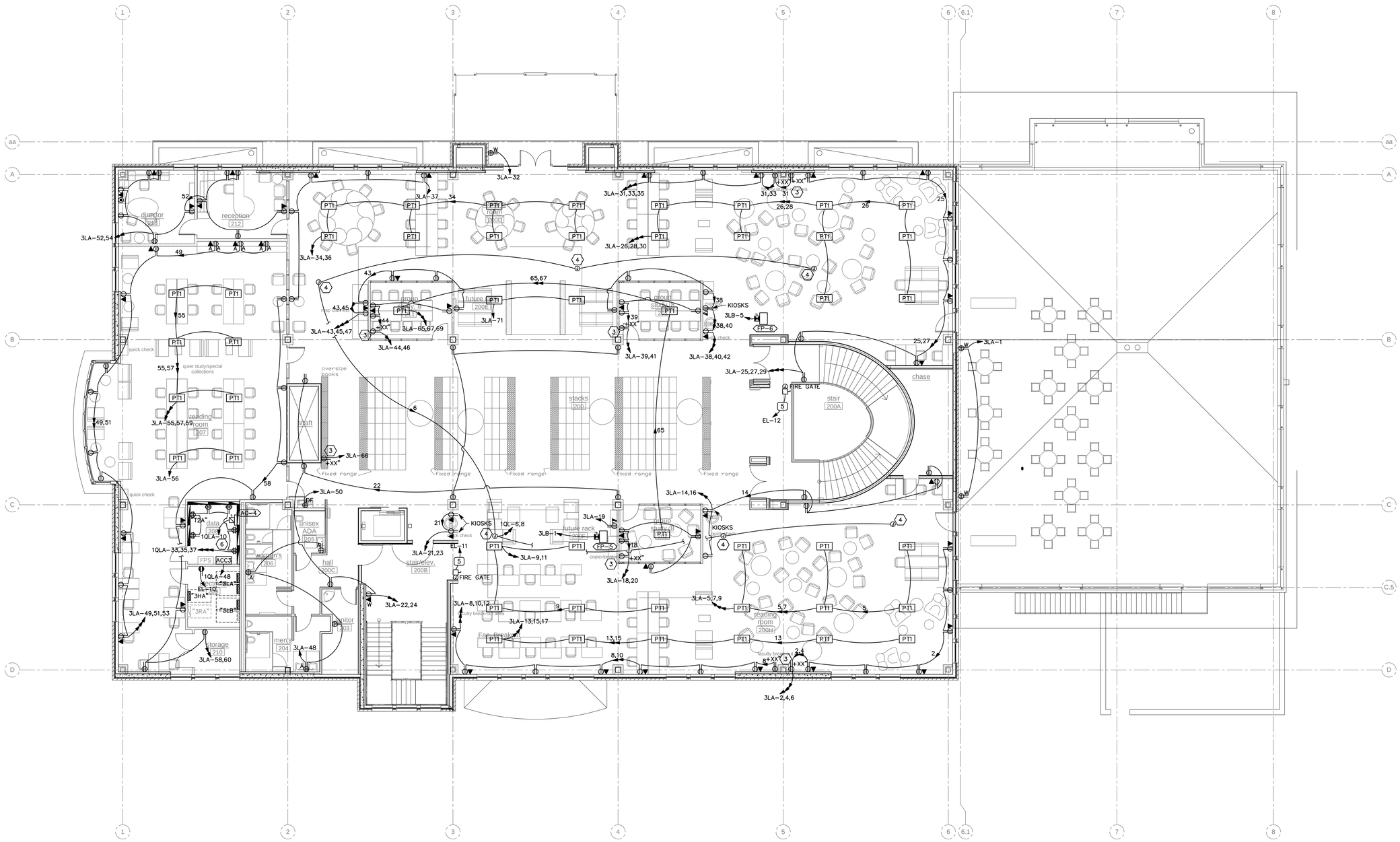

A1 LEVEL 2 POWER PLAN

SCALE: 1/8" = 1'-0"

File Name: P:\2007\20070473\1Drawings\Sheet\73EP-103.dwg Last Plotted: 2008/10/14 @ 10:08 AM By: dim

COOPER ROBERTS SIMONSEN ASSOCIATES

crsa

700 North 200 West
Salt Lake City, UT 84103
(801) 355-5915 phone
(801) 355-9885 fax
crsa-us.com

SNOW COLLEGE

State of Utah-Department of Administrative Services

DIVISION OF FACILITIES CONSTRUCTION AND MANAGEMENT

4110 State Office Building/Salt Lake City, Utah 84114/538-3018

Civil Engineer

Great Basin Engineering
Contact: Dave Waldron
5746 South 1475 East, Suite 200
Ogden, UT 84403
(801) 521-0222 FAX (801) 392-7544
dave@gbenorth.com

Landscape Architect

G. Brown Design
Contact: Mathew Winward
610 E. South Temple, Suite 50
Salt Lake City, UT 84102
(801) 575-6066 FAX (801) 575-6166
mwinward@gbrowndesign.com

Structural Engineer

Reaveley Engineers
Contact: Cameron Empey
675 East 500 South, Suite 400
Salt Lake City, UT 84105
(801) 486-3883 FAX (801) 485-0911
cempey@reaveley.com

Mechanical Engineer

Van Boerum & Frank
Contact: Neil Spencer
330 South 300 East
Salt Lake City, UT 84111
(801) 530-3148 FAX (801) 910-9917
nspencer@vbfa.com

Electrical Engineer

Spectrum Engineers
Contact: Dave Wesemann, PE
175 South Main Street, Suite 300
Salt Lake City, UT 84111
(801) 328-5151 FAX (801) 328-5155
dew@spectrum-engineers.com

AV Consultant

Spectrum Engineers
Contact: Kurtis Dallinga, PE
175 South Main Street, Suite 300
Salt Lake City, UT 84111
(801) 328-5151 FAX (801) 328-5155
kdd@spectrum-engineers.com

Library Consultant

Michaels Associates Design Consultants, Inc.
Contact: Andrea Michaels
14809 North 73rd Street, Suite 100
Scottsdale, AZ 85260
(480) 998-7476 FAX (480) 998-9390
andrea@madcinc.com

STAMP:

LICENSED PROFESSIONAL ENGINEER
No. 181563
DAVID E. WESEMANN
STATE OF UTAH

PROJECT NAME:

Snow College Library

150 College Avenue
Ephraim, Utah 84627

REVISIONS:

- 100% CD, October 13, 2008
- 100% CD, September 15, 2008
- 100% CD Review, Aug 26, 2008
- 100% CD, June 25, 2008
- 100% CD Review, June 20, 2008
- 50% CD Review, May 27, 2008
- CD Review Set, May 2, 2008
- DD Set, April 18, 2008
- DD Review, April 4, 2008

ISSUE DATE:

SEPTEMBER 15 2008, 100% CD

ARCHITECT'S PROJECT NUMBER:

B07-051

DFCM PROJECT NUMBER:

07258700

SHEET TITLE:

LEVEL 2 POWER PLAN

SHEET NUMBER:

EP-103

SHEET KEYNOTES

1. NOT USED.
2. NOT USED.
3. NOT USED.
4. PROVIDE CONNECTIONS TO AIR HANDLER LIGHTS AND SWITCHES.

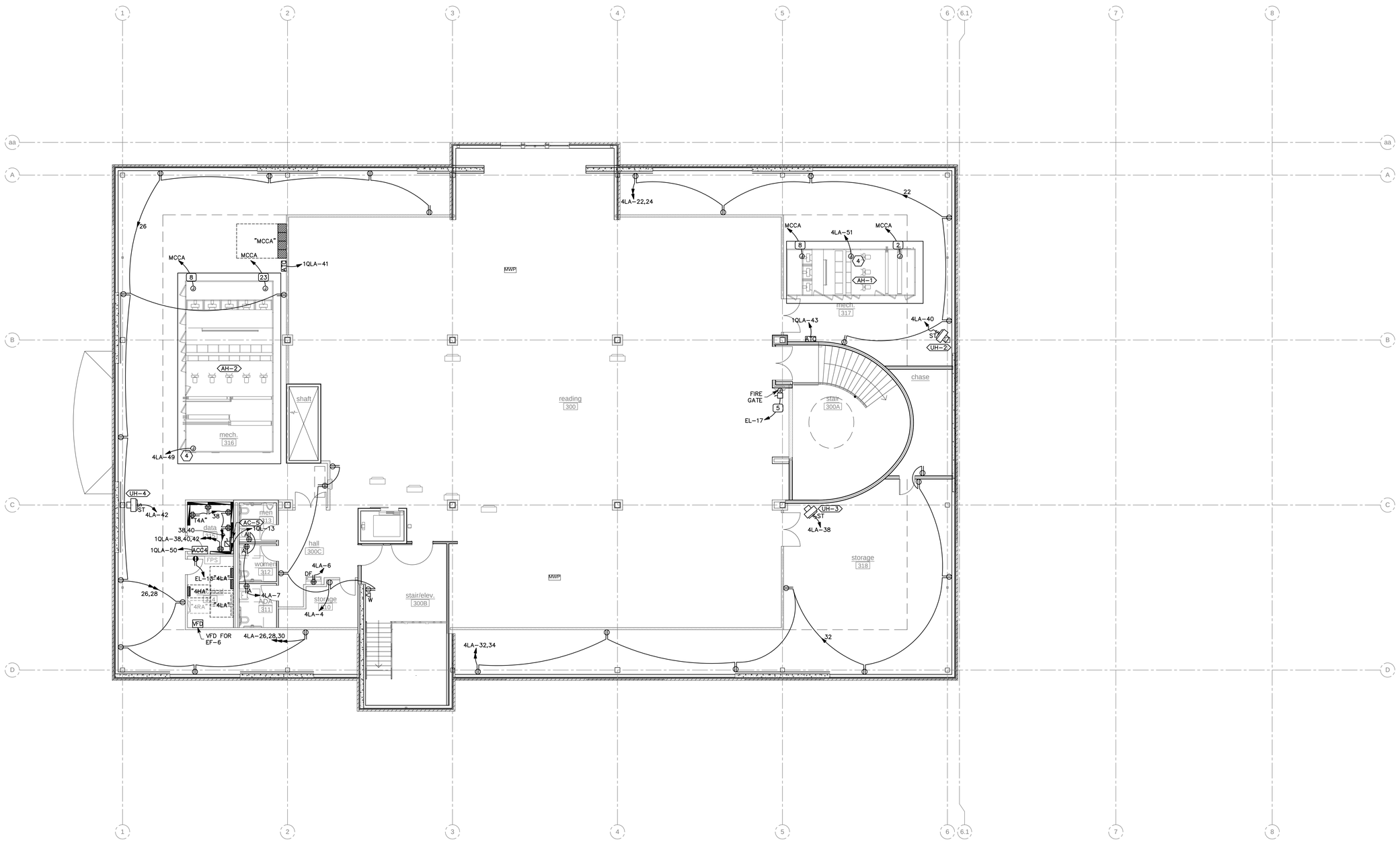

A1 LEVEL 3, ATTIC POWER PLAN
SCALE: 1/8" = 1'-0"

File Name: P:\2007\20070473\1Drawings\Sheet\73EP-104.dwg Last Plotted: 2008/10/14 @ 10:08 AM By: dim

COOPER
ROBERTS
SIMONSEN
ASSOCIATES

crsa

700 North 200 West
Salt Lake City, UT 84103
(801) 355-5915 phone
(801) 355-9885 fax
crsa-us.com

SNOW COLLEGE

State of Utah-Department of Administrative Services

DIVISION OF FACILITIES CONSTRUCTION AND MANAGEMENT
4110 State Office Building/Salt Lake City, Utah 84114/538-3018

Civil Engineer

Great Basin Engineering
Contact: Dave Waldron
5746 South 1475 East, Suite 200
Ogden, UT 84403
(801) 521-0222 FAX (801) 392-7544
dave@gbenorth.com

Landscape Architect

G. Brown Design
Contact: Mathew Winward
610 E. South Temple, Suite 50
Salt Lake City, UT 84102
(801) 575-6066 FAX (801) 575-6166
mwinward@gbrowndesign.com

Structural Engineer

Reaveley Engineers
Contact: Cameron Empey
675 East 500 South, Suite 400
Salt Lake City, UT 84105
(801) 486-3883 FAX (801) 485-0911
cempey@reaveley.com

Mechanical Engineer

Van Boerum & Frank
Contact: Neil Spencer
330 South 300 East
Salt Lake City, UT 84111
(801) 530-3148 FAX (801) 910-9917
nspencer@vbfa.com

Electrical Engineer

Spectrum Engineers
Contact: Dave Wesemann, PE
175 South Main Street, Suite 300
Salt Lake City, UT 84111
(801) 328-5151 FAX (801) 328-5155
dew@spectrum-engineers.com

AV Consultant

Spectrum Engineers
Contact: Kurtis Dallinga, PE
175 South Main Street, Suite 300
Salt Lake City, UT 84111
(801) 328-5151 FAX (801) 328-5155
kdd@spectrum-engineers.com

Library Consultant

Michaels Associates Design Consultants, Inc.
Contact: Andrea Michaels
14809 North 73rd Street, Suite 100
Scottsdale, AZ 85260
(480) 998-7476 FAX (480) 998-9390
andrea@madcinc.com

STAMP:

LICENSED PROFESSIONAL ENGINEER
No. 181563
DAVID E. WESEMANN
STATE OF UTAH

PROJECT NAME:

Snow College Library

150 College Avenue
Ephraim, Utah 84627

REVISIONS:

- 100% CD, October 13, 2008
- 100% CD, September 15, 2008
- 100% CD Review, Aug 26, 2008
- 100% CD, June 25, 2008
- 100% CD Review, June 20, 2008
- 50% CD Review, May 27, 2008
- CD Review Set, May 2, 2008
- DD Set, April 18, 2008
- DD Review, April 4, 2008

ISSUE DATE:

SEPTEMBER 15 2008, 100% CD

ARCHITECT'S PROJECT NUMBER:

B07-051

DFCM PROJECT NUMBER:

07258700

SHEET TITLE:

LEVEL 3, ATTIC POWER PLAN

SHEET NUMBER:

EP-104

GENERAL SHEET NOTES

1. VERIFY LOCATION OF EACH FLOORBOX AND POKE-THOUGH OUTLET WITH ARCHITECT PRIOR TO INSTALLATION.

⬡SHEET KEYNOTES

1. OUTLET FLUSH MOUNTED IN CEILING FOR PROJECTOR OR DOCUMENT CAMERA. COORDINATE EXACT LOCATION WITH A/V INSTALLER.
2. PROVIDE ELECTRICAL CONNECTIONS TO PROJECTION SCREEN WITH ALL POWER AND CONTROL WIRING PER MANUFACTURER'S WRITTEN INSTRUCTIONS, WITH CONTROL SWITCH ON WALL NEAR TEACHING STATION. COORDINATE WITH A/V INSTALLER.
3. OUTLET UP HIGH FOR A/V MONITROR. COORDINATE EXACT LOCATION WITH A/V INSTALLER.
4. PROVIDE CONNECTIONS TO AIR HANDLER LIGHTS AND SWITCHES.

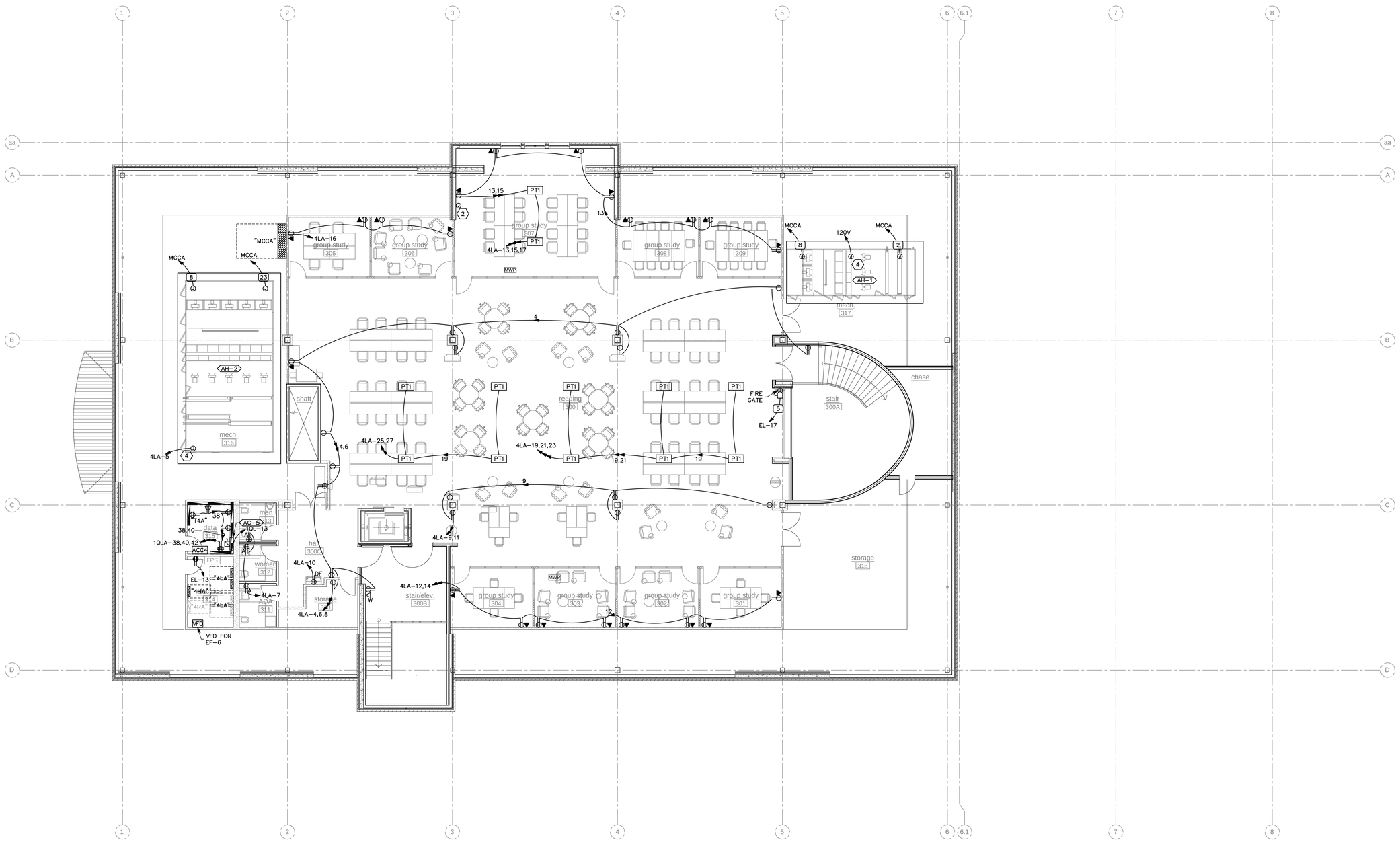

A1 LEVEL 3, ATTIC ADD ALT POWER PLAN

SCALE: 1/8" = 1'-0"

COOPER ROBERTS SIMONSEN ASSOCIATES

crsa

700 North 200 West
Salt Lake City, UT 84103
(801) 355-5915 phone
(801) 355-9885 fax
crsa-us.com

SNOW COLLEGE

State of Utah-Department of Administrative Services

DIVISION OF FACILITIES CONSTRUCTION AND MANAGEMENT

4110 State Office Building/Salt Lake City, Utah 84114/538-3018

Civil Engineer

Great Basin Engineering
Contact: Dave Waldron
5746 South 1475 East, Suite 200
Ogden, UT 84403
(801) 521-0222 FAX (801) 392-7544
dave@gbenorth.com

Landscape Architect

G. Brown Design
Contact: Mathew Winward
610 E. South Temple, Suite 50
Salt Lake City, UT 84102
(801) 575-6066 FAX (801) 575-6166
mwinward@gbrowndesign.com

Structural Engineer

Reaveley Engineers
Contact: Cameron Empey
675 East 500 South, Suite 400
Salt Lake City, UT 84105
(801) 486-3883 FAX (801) 485-0911
cempey@reaveley.com

Mechanical Engineer

Van Boerum & Frank
Contact: Neil Spencer
330 South 300 East
Salt Lake City, UT 84111
(801) 530-3148 FAX (801) 910-9917
nspencer@vbfa.com

Electrical Engineer

Spectrum Engineers
Contact: Dave Wesemann, PE
175 South Main Street, Suite 300
Salt Lake City, UT 84111
(801) 328-5151 FAX (801) 328-5155
dew@spectrum-engineers.com

AV Consultant

Spectrum Engineers
Contact: Kurtis Dallinga, PE
175 South Main Street, Suite 300
Salt Lake City, UT 84111
(801) 328-5151 FAX (801) 328-5155
kdd@spectrum-engineers.com

Library Consultant

Michaels Associates Design Consultants, Inc.
Contact: Andrea Michaels
14809 North 73rd Street, Suite 100
Scottsdale, AZ 85260
(480) 998-7476 FAX (480) 998-9390
andrea@madcinc.com

STAMP:

LICENSED PROFESSIONAL ENGINEER
No. 181563
DAVID E. WESEMANN
STATE OF UTAH

PROJECT NAME:

Snow College Library

150 College Avenue
Ephraim, Utah 84627

REVISIONS:

- 100% CD, October 13, 2008
- 100% CD, September 15, 2008
- 100% CD Review, Aug 26, 2008
- 100% CD, June 25, 2008
- 100% CD Review, June 20, 2008
- 50% CD Review, May 27, 2008
- CD Review Set, May 2, 2008
- DD Set, April 18, 2008
- DD Review, April 4, 2008

ISSUE DATE:

SEPTEMBER 15 2008, 100% CD

ARCHITECT'S PROJECT NUMBER:

B07-051

DFCM PROJECT NUMBER:

07258700

SHEET TITLE:

LEVEL 3, ATTIC ADD ALT POWER PLAN

SHEET NUMBER:

EP-104a

File Name: P:\2007\20070473\1Drawings\Sheet\736P-104a.dwg Last Plotted: 2008/10/14 @ 10:08 AM By: dim

SHEET KEYNOTES

1. PROVIDE 120V CONNECTIONS TO 120V ITEMS IN AIR HANDLER.
2. PROVIDE ELECTRICAL CONNECTIONS TO HEAT TRACE IN ALL GUTTERS AND DOWNSPOUTS. COORDINATE WITH MECHANICAL INSTALLER. VERIFY VOLTAGE CABLE LENGTH AND CIRCUIT CAPACITY PRIOR TO INSTALLATION AND REPORT DISCREPANCIES TO ENGINEER. CONNECT CIRCUIT BREAKER WITH 30 MA GFI TRIP.

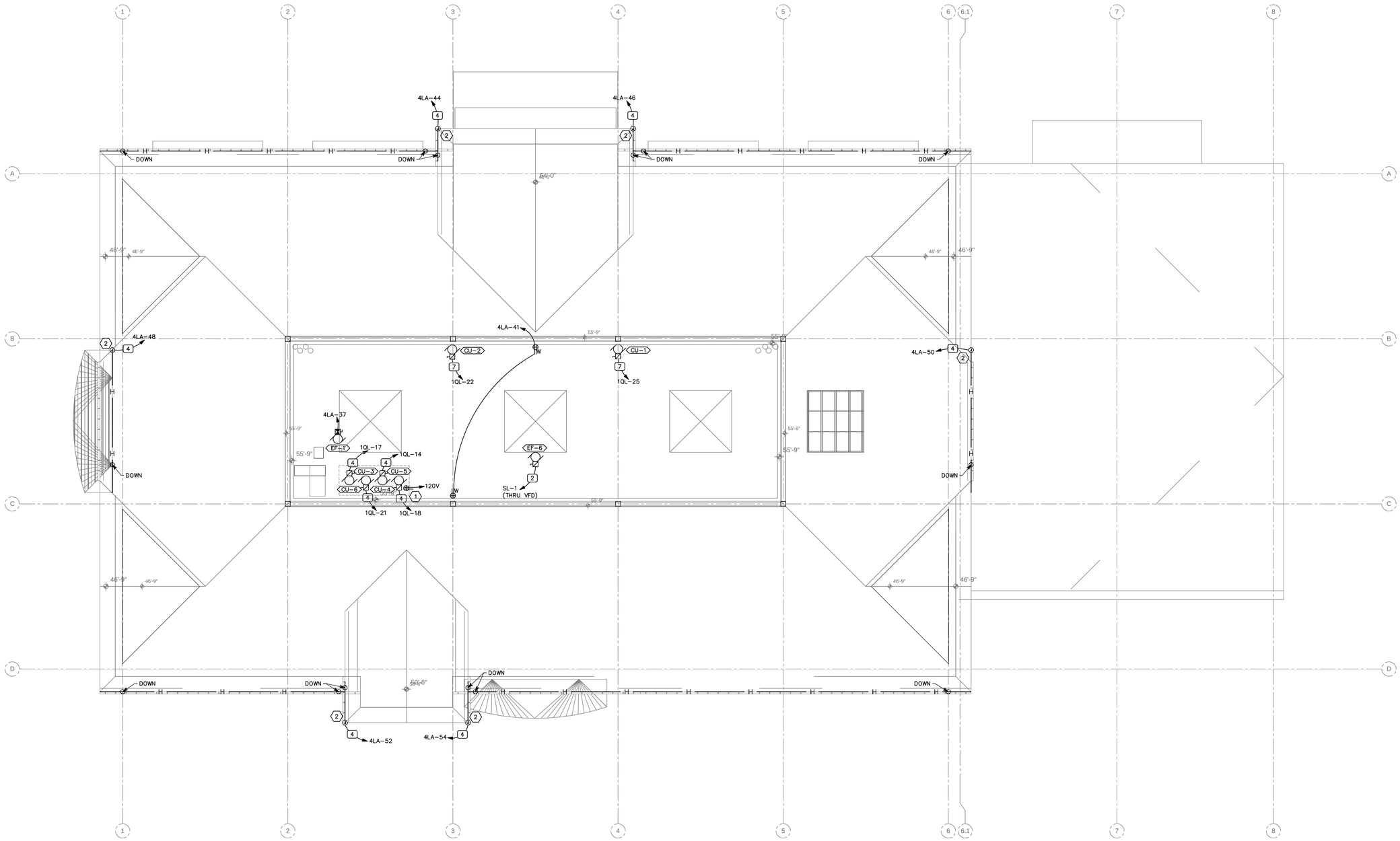

A1 ROOF POWER PLAN
SCALE: 1/8" = 1'-0"

COOPER ROBERTS SIMONSEN ASSOCIATES
crsa
700 North 200 West
Salt Lake City, UT 84103
(801) 355-5915 phone
(801) 355-9885 fax
crsa-us.com

SNOW COLLEGE

State of Utah-Department of Administrative Services
DIVISION OF FACILITIES CONSTRUCTION AND MANAGEMENT
4110 State Office Building/Salt Lake City, Utah 84114/538-3018

Civil Engineer
Great Basin Engineering
Contact: Dave Waldron
5746 South 1475 East, Suite 200
Ogden, UT 84403
(801) 521-0222 FAX (801) 392-7544
dave@gbenorth.com

Landscape Architect
G. Brown Design
Contact: Mathew Winward
610 E. South Temple, Suite 50
Salt Lake City, UT 84102
(801) 575-6066 FAX (801) 575-6166
mwinward@gbrowndesign.com

Structural Engineer
Reaveley Engineers
Contact: Cameron Empey
675 East 500 South, Suite 400
Salt Lake City, UT 84105
(801) 486-3883 FAX (801) 485-0911
cempey@reaveley.com

Mechanical Engineer
Van Boerum & Frank
Contact: Neil Spencer
330 South 300 East
Salt Lake City, UT 84111
(801) 530-3148 FAX (801) 910-9917
nspencer@vbfa.com

Electrical Engineer
Spectrum Engineers
Contact: Dave Wesemann, PE
175 South Main Street, Suite 300
Salt Lake City, UT 84111
(801) 328-5151 FAX (801) 328-5155
dew@spectrum-engineers.com

AV Consultant
Spectrum Engineers
Contact: Kurtis Dallinga, PE
175 South Main Street, Suite 300
Salt Lake City, UT 84111
(801) 328-5151 FAX (801) 328-5155
kdd@spectrum-engineers.com

Library Consultant
Michaels Associates Design Consultants, Inc.
Contact: Andrea Michaels
14809 North 73rd Street, Suite 100
Scottsdale, AZ 85260
(480) 998-7476 FAX (480) 998-9390
andrea@madcinc.com

STAMP:
LICENSED PROFESSIONAL ENGINEER
No. 181563
DAVID E. WESEMANN
STATE OF UTAH

PROJECT NAME:

Snow College Library

150 College Avenue
Ephraim, Utah 84627

REVISIONS:

- 100% CD, October 13, 2008
- 100% CD, September 15, 2008
- 100% CD Review, Aug 26, 2008
- 100% CD, June 25, 2008
- 100% CD Review, June 20, 2008
- 50% CD Review, May 27, 2008
- CD Review Set, May 2, 2008
- DD Set, April 18, 2008
- DD Review, April 4, 2008

ISSUE DATE:
SEPTEMBER 15 2008, 100% CD

ARCHITECT'S PROJECT NUMBER:
B07-051

DFCM PROJECT NUMBER:
07258700

SHEET TITLE:
ROOF POWER PLAN

SHEET NUMBER:
EP-105

File Name: P:\2007\20070473\1Drawings\Sheet\736P-105.dwg Last Plotted: 2008/10/14 @ 10:08 AM By: dlm

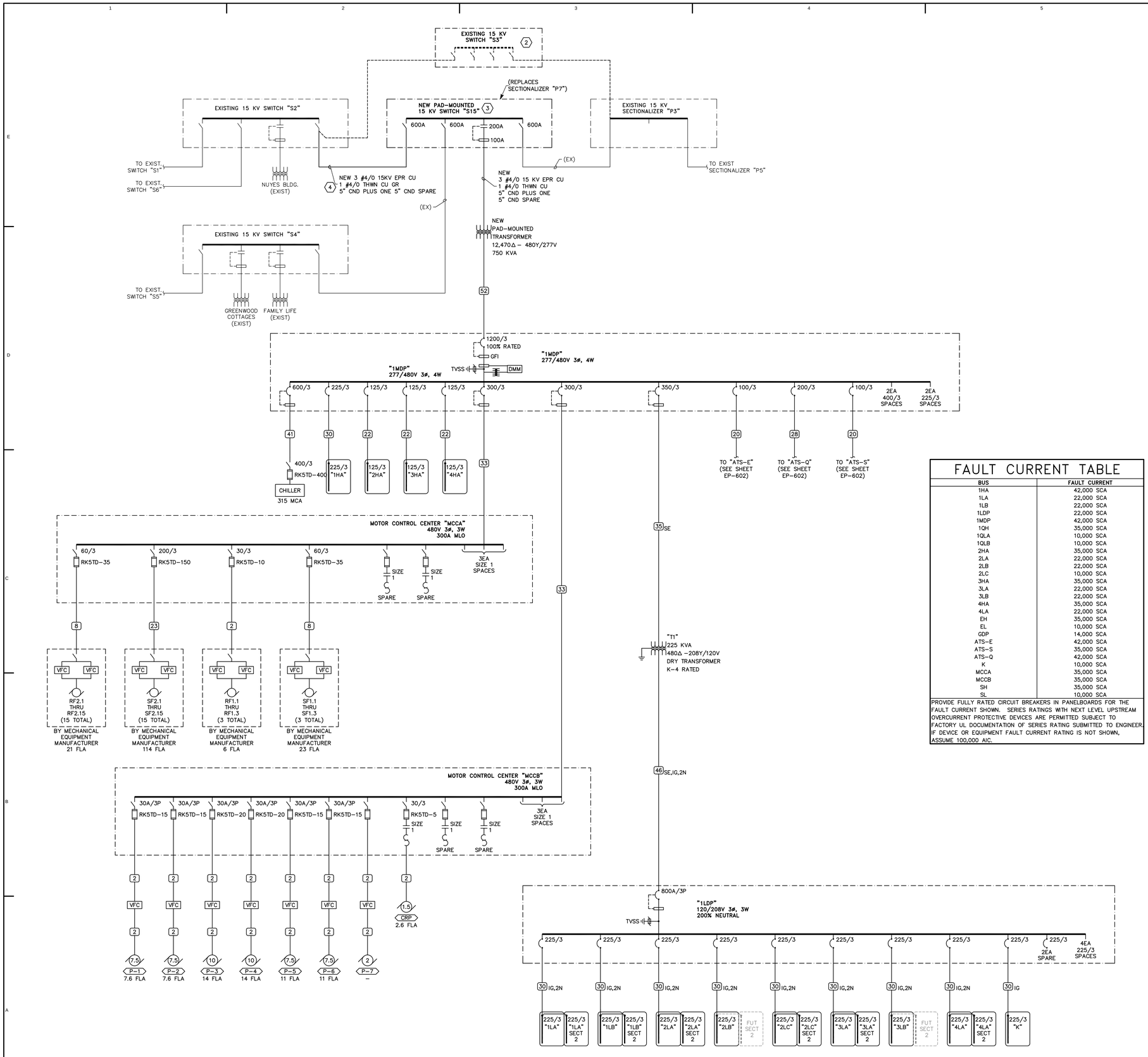

FAULT CURRENT TABLE

BUS	FAULT CURRENT
1HA	42,000 SCA
1LA	22,000 SCA
1LB	22,000 SCA
1LDP	22,000 SCA
1MDP	42,000 SCA
1QH	35,000 SCA
1QLA	10,000 SCA
1QLB	10,000 SCA
2HA	35,000 SCA
2LA	22,000 SCA
2LB	22,000 SCA
2LC	10,000 SCA
3HA	35,000 SCA
3LA	22,000 SCA
3LB	22,000 SCA
4HA	35,000 SCA
4LA	22,000 SCA
EH	35,000 SCA
EL	10,000 SCA
GDP	14,000 SCA
ATS–E	42,000 SCA
ATS–S	35,000 SCA
ATS–Q	42,000 SCA
K	10,000 SCA
MCCA	35,000 SCA
MCCB	35,000 SCA
SH	35,000 SCA
SL	10,000 SCA

PROVIDE FULLY RATED CIRCUIT BREAKERS IN PANELBOARDS FOR THE FAULT CURRENT SHOWN. SERIES RATINGS WITH NEXT LEVEL UPSTREAM OVERCURRENT PROTECTIVE DEVICES ARE PERMITTED SUBJECT TO FACTORY UL DOCUMENTATION OF SERIES RATING SUBMITTED TO ENGINEER. IF DEVICE OR EQUIPMENT FAULT CURRENT RATING IS NOT SHOWN, ASSUME 100,000 AIC.

A1 POWER ONE–LINE DIAGRAM

SCALE: N.T.S.

GENERAL SHEET NOTES

1. PROVIDE NEMA 3R ENCLOSURES FOR EQUIPMENT LOCATED OUTDOORS. REFER TO PLANS FOR EQUIPMENT LOCATIONS.
2. REFER TO PLANS FOR CONSTRAINTS ON PHYSICAL DIMENSIONS AND CLEARANCE REQUIREMENTS OF EQUIPMENT. PROVIDE EQUIPMENT DIMENSIONS THAT FALL WITHIN THE CONSTRAINTS OF EACH SPECIFIC LOCATION.
3. ALL EQUIPMENT SHALL BE CONSTRUCTED AND BRACED FOR THE SEISMIC CONDITIONS OF THE PROJECT. REFER TO SPECIFICATIONS SECTION 16071 FOR REQUIREMENTS.
4. DO NOT DISRUPT POWER TO ANY BUILDING ON CAMPUS. COORDINATE WORK ON 15 KV SYSTEM WITH CAMPUS FACILITIES DEPARTMENT.

⬡SHEET KEYNOTES

1. PROVIDE CONDUIT AND CONTROL WIRING PER MANUFACTURER'S WRITTEN INSTRUCTIONS.
2. REMOVE EXISTING 15 KV SWITCH "S3" WITH ASSOCIATE FEEDERS TO/FROM "P3" AND "S2".
3. REMOVE EXISTING SECTIONALIZER "P7" AND PROVIDE NEW SWITCH "S15". SPLICE AND EXTEND EXISTING FEEDERS INTO NEW SWITCH AS INDICATED.
4. NEW FEEDER FROM "S15" TO "S2" TO COMPLETE CAMPUS LOOP.

CONDUCTOR AND CONDUIT SCHEDULE

SCHEDULE NUMBER
SUBSCRIPT (NOTE 5)
(E.G.) 5 IG

SYM	AMP	CONDUIT SIZE	CONDUCTOR(NOTE 1) QTY	SIZE	G	IG	SE	NOTES
1	20	.75	2	12	12	12	8	2
2	20	.75	3	12	12	12	8	2,3
3	20	.75	4	12	12	12	8	2,3
4	30	.75	2	10	10	10	8	2
5	30	.75	3	10	10	10	8	2
6	30	.75	4	10	10	10	8	2
7	40	1	2	8	10	8	6	2
8	40	1	3	8	10	8	6	2
9	40	1	4	8	10	8	6	2
10	55	1	2	6	10	8	4	2
11	55	1	3	6	10	8	4	2
12	55	1.25	4	6	10	8	4	2
13	70	1	2	4	8	4	2	2
14	70	1.25	3	4	8	4	2	2
15	70	1.25	4	4	8	4	2	2
16	85	1.25	2	3	8	3	2	2
17	85	1.25	3	3	8	3	2	2
18	85	1.25	4	3	8	3	2	2
19	95	1.25	3	2	8	2	2	2
20	95	1.50	4	2	8	2	2	2
21	130	1.50	3	1	6	2	2	2
22	130	1.50	4	1	6	2	2	2
23	150	2	3	1/0	6	2	1/0	2
24	150	2	4	1/0	6	2	1/0	2
25	175	2	3	2/0	6	2	2/0	2
26	175	2	4	2/0	6	2	2/0	2
27	200	2	3	3/0	6	2	2/0	2
28	200	2.50	4	3/0	6	2	2/0	2
29	230	2.50	3	4/0	4	2	2/0	2
30	230	2.50	4	4/0	4	2	2/0	2
31	255	2.50	3	250	4	1	2/0	2
32	255	2.50	4	250	4	1	2/0	2
33	310	3	3	350	3	1/0	3/0	2
34	310	3	4	350	3	1/0	3/0	2
35	380	3.50	3	500	3	3/0	3/0	2
36	380	4	4	500	3	3/0	3/0	2
37	400	2 EA 2	3	3/0	3	3/0	3/0	2
38	400	2 EA 2.50	4	3/0	3	3/0	3/0	2
39	510	2 EA 2.50	3	250	1	4/0	3/0	2
40	510	2 EA 3	4	250	1	4/0	3/0	2
41	620	2 EA 3	3	350	1/0	4/0	3/0	2,4
42	620	2 EA 3	4	350	1/0	4/0	3/0	2,4
43	760	2 EA 3.50	3	500	1/0	4/0	3/0	2,4
44	760	2 EA 4	4	500	1/0	4/0	3/0	2,4
45	855	3 EA 3	3	300	2/0	4/0	3/0	2,4
46	855	3 EA 3	4	300	2/0	4/0	3/0	2,4
47	1000	3 EA 3.50	3	400	2/0	4/0	3/0	4
48	1000	3 EA 3.50	4	400	2/0	4/0	3/0	4
49	1140	3 EA 4	3	500	3/0	4/0	3/0	4
50	1140	3 EA 4	4	500	3/0	4/0	3/0	4
51	1240	4 EA 3	3	350	3/0	4/0	3/0	4
52	1240	4 EA 3	4	350	3/0	4/0	3/0	4
53	1675	5 EA 3.50	4	400	4/0	4/0	4/0	4
54	2010	6 EA 3.50	4	400	250	250	250	4
55	2660	7 EA 4	4	500	350	350	350	4
56	3040	8 EA 4	4	500	500	500	500	4
57	4180	11 EA 4	4	500	500	500	500	4
58		5 EA 4						6
59		5						6
60		10 EA 4						6

CONDUCTOR AND CONDUIT SCHEDULE NOTES

1. CONDUCTORS SHOWN ARE SHOWN FOR EACH CONDUIT WITH MODIFICATIONS AS NOTED IN NOTE 5. ALL CONDUCTORS SHOWN ARE THWN UNLESS OTHERWISE NOTED.
2. PROVIDE EQUIPMENT GROUND CONDUCTORS PER TABLE 250–122 WHEN CIRCUIT BREAKERS ARE SIZED GREATER THAN AMPERE RATING SHOWN IN TABLE.
3. PROVIDE #10 NEUTRALS FOR MULTIWIRE BRANCH CIRCUITS SERVING COMPUTERS.
4. GROUND (G) CONDUCTOR MAY BE DELETED ON SERVICE ENTRANCE CONDUCTORS.
5. WHEN SYMBOL SUBSCRIPT INDICATES "IG", INCLUDE "IG" OR INSULATED GROUND CONDUCTOR SCHEDULED ALONG WITH GROUND OR EQUIPMENT GROUND CONDUCTOR. WHEN SYMBOL SUBSCRIPT INDICATES "SE", SUBSTITUTE "SE" CONDUCTOR FOR "G" CONDUCTOR SHOWN WHICH IS SIZED FOR THE GROUNDING OF THE SECONDARY OF THE SEPARATELY DERIVED SYSTEMS. WHEN A SYMBOL SUBSCRIPT INDICATES "2N", PROVIDE TWO NEUTRAL CONDUCTORS OF THE SIZE INDICATED.
6. RACEWAY ONLY. CONDUCTORS PROVIDED BY UTILITY.

COOPER ROBERTS SIMONSEN ASSOCIATES
crsa
700 North 200 West
Salt Lake City, UT 84103
(801) 355-5915 phone
(801) 355-9885 fax
crsa-us.com

SNOW COLLEGE

State of Utah-Department of Administrative Services
DIVISION OF FACILITIES CONSTRUCTION AND MANAGEMENT
4110 State Office Building/Salt Lake City, Utah 84114/538-3018

Civil Engineer
Great Basin Engineering
Contact: Dave Waldron
5746 South 1475 East, Suite 200
Ogden, UT 84403
(801) 521-0222 FAX (801) 392-7544
dave@gbenorth.com

Landscape Architect
G. Brown Design
Contact: Mathew Winward
610 E. South Temple, Suite 50
Salt Lake City, UT 84102
(801) 575-6066 FAX (801) 575-6166
mwinward@gbrowndesign.com

Structural Engineer
Reaveley Engineers
Contact: Cameron Empey
675 East 500 South, Suite 400
Salt Lake City, UT 84105
(801) 486-3883 FAX (801) 485-0911
cempey@reaveley.com

Mechanical Engineer
Van Boerum & Frank
Contact: Neil Spencer
330 South 300 East
Salt Lake City, UT 84111
(801) 530-3148 FAX (801) 910-9917
nspencer@vbfa.com

Electrical Engineer
Spectrum Engineers
Contact: Dave Wesemann, PE
175 South Main Street, Suite 300
Salt Lake City, UT 84111
(801) 328-5151 FAX (801) 328-5155
dew@spectrum-engineers.com

AV Consultant
Spectrum Engineers
Contact: Kurtis Dallinga, PE
175 South Main Street, Suite 300
Salt Lake City, UT 84111
(801) 328-5151 FAX (801) 328-5155
kdd@spectrum-engineers.com

Library Consultant
Michaels Associates Design Consultants, Inc.
Contact: Andrea Michaels
14809 North 73rd Street, Suite 100
Scottsdale, AZ 85260
(480) 998-7476 FAX (480) 998-9390
andrea@madcinc.com

STAMP:
LICENSED PROFESSIONAL ENGINEER No. 181563 DAVID E. WESEMANN STATE OF UTAH

PROJECT NAME:

Snow College Library

150 College Avenue
Ephraim, Utah 84627

REVISIONS:

- 100% CD, October 13, 2008
- 100% CD, September 15, 2008
- 100% CD Review, Aug 26, 2008
- 100% CD, June 25, 2008
- 100% CD Review, June 20, 2008
- 50% CD Review, May 27, 2008
- CD Review Set, May 2, 2008
- DD Set, April 18, 2008
- DD Review, April 4, 2008

ISSUE DATE:
SEPTEMBER 15 2008, 100% CD

ARCHITECT'S PROJECT NUMBER:
B07-051

DFCM PROJECT NUMBER:
07258700

SHEET TITLE:
POWER ONE-LINE DIAGRAM

SHEET NUMBER:
EP-601

File Name: P:\2007\20070473\Drawings\Sheet\73EP-601.dwg Last Plotted: 2008/10/14 @ 10:09 AM By: dim

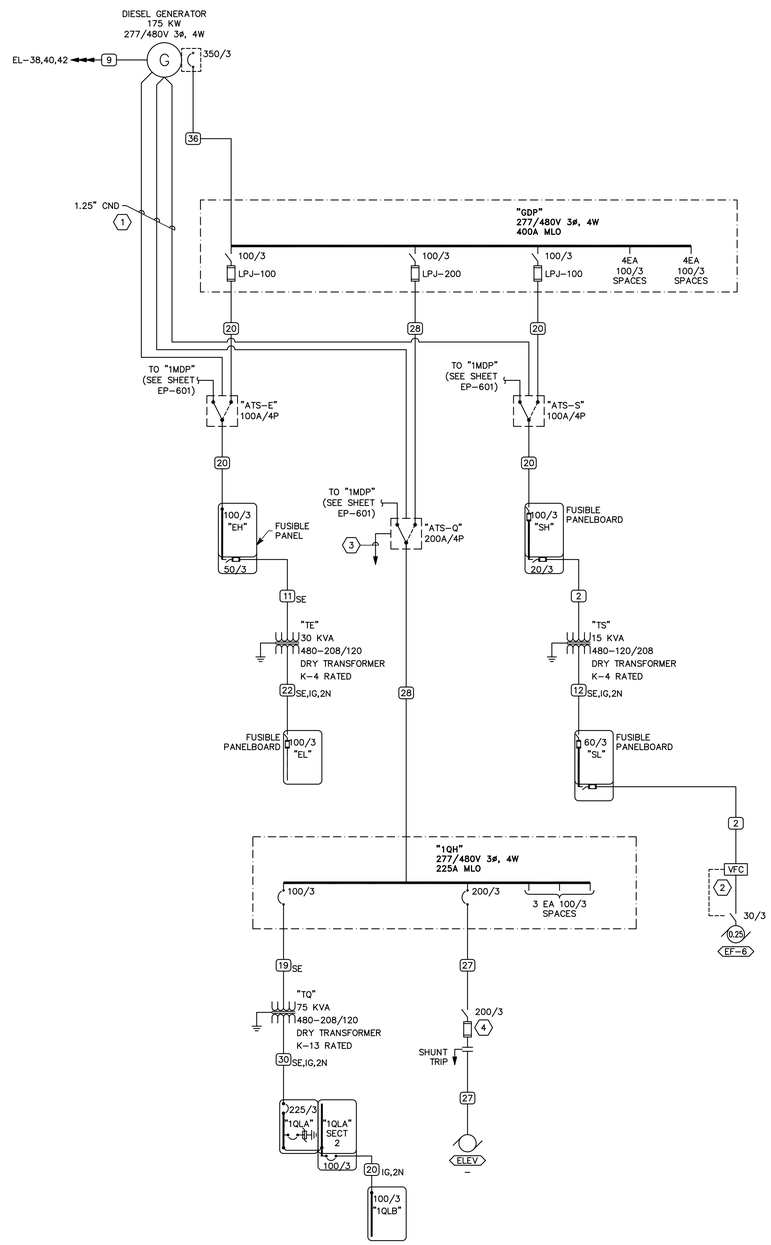

A1 POWER ONE-LINE DIAGRAM

SCALE: N.T.S.

GENERAL SHEET NOTES

1. PROVIDE NEMA 3R ENCLOSURES FOR EQUIPMENT LOCATED OUTDOORS. REFER TO PLANS FOR EQUIPMENT LOCATIONS.
2. REFER TO PLANS FOR CONSTRAINTS ON PHYSICAL DIMENSIONS AND CLEARANCE REQUIREMENTS OF EQUIPMENT. PROVIDE EQUIPMENT DIMENSIONS THAT FALL WITHIN THE CONSTRAINTS OF EACH SPECIFIC LOCATION.
3. ALL EQUIPMENT SHALL BE CONSTRUCTED AND BRACED FOR THE SEISMIC CONDITIONS OF THE PROJECT. REFER TO SPECIFICATIONS SECTION 16071 FOR REQUIREMENTS.

⬡SHEET KEYNOTES

1. PROVIDE CONDUIT AND CONTROL WIRING PER MANUFACTURER'S WRITTEN INSTRUCTIONS.
2. INTERLOCK WIRING BETWEEN VFD AND DISCONNECT SWITCH.
3. CONDUIT AND WIRING TO ELEVATOR CONTROLLER FOR "SIGNAL BEFORE TRANSFER" AND "CONNECTED TO GENERATOR" CONTROL SIGNALS COORDINATE WITH ELEVATOR INSTALLER.
4. VERIFY FUSE SIZE WITH ELEVATOR MANUFACTURER.

CONDUCTOR AND CONDUIT SCHEDULE

SCHEDULE NUMBER
SUBSCRIPT (NOTE 5)
(E.G.) 5 IG

SYM	AMP	CONDUIT SIZE	CONDUCTOR(NOTE 1) QTY	SIZE	G	IG	SE	NOTES
1	20	.75	2	12	12	12	8	2
2	20	.75	3	12	12	12	8	2,3
3	20	.75	4	12	12	12	8	2,3
4	30	.75	2	10	10	10	8	2
5	30	.75	3	10	10	10	8	2
6	30	.75	4	10	10	10	8	2
7	40	1	2	8	10	8	6	2
8	40	1	3	8	10	8	6	2
9	40	1	4	8	10	8	6	2
10	55	1	2	6	10	8	4	2
11	55	1	3	6	10	8	4	2
12	55	1.25	4	6	10	8	4	2
13	70	1	2	4	8	4	2	2
14	70	1.25	3	4	8	4	2	2
15	70	1.25	4	4	8	4	2	2
16	85	1.25	2	3	8	3	2	2
17	85	1.25	3	3	8	3	2	2
18	85	1.25	4	3	8	3	2	2
19	95	1.25	3	2	8	2	2	2
20	95	1.50	4	2	8	2	2	2
21	130	1.50	3	1	6	2	2	2
22	130	1.50	4	1	6	2	2	2
23	150	2	3	1/0	6	2	1/0	2
24	150	2	4	1/0	6	2	1/0	2
25	175	2	3	2/0	6	2	2/0	2
26	175	2	4	2/0	6	2	2/0	2
27	200	2	3	3/0	6	2	2/0	2
28	200	2.50	4	3/0	6	2	2/0	2
29	230	2.50	3	4/0	4	2	2/0	2
30	230	2.50	4	4/0	4	2	2/0	2
31	255	2.50	3	250	4	1	2/0	2
32	255	2.50	4	250	4	1	2/0	2
33	310	3	3	350	3	1/0	3/0	2
34	310	3	4	350	3	1/0	3/0	2
35	380	3.50	3	500	3	3/0	3/0	2
36	380	4	4	500	3	3/0	3/0	2
37	400	2 EA 2	3	3/0	3	3/0	3/0	2
38	400	2 EA 2.50	4	3/0	3	3/0	3/0	2
39	510	2 EA 2.50	3	250	1	4/0	3/0	2
40	510	2 EA 3	4	250	1	4/0	3/0	2
41	620	2 EA 3	3	350	1/0	4/0	3/0	2,4
42	620	2 EA 3	4	350	1/0	4/0	3/0	2,4
43	760	2 EA 3.50	3	500	1/0	4/0	3/0	2,4
44	760	2 EA 4	4	500	1/0	4/0	3/0	2,4
45	855	3 EA 3	3	300	2/0	4/0	3/0	2,4
46	855	3 EA 3	4	300	2/0	4/0	3/0	2,4
47	1000	3 EA 3.50	3	400	2/0	4/0	3/0	4
48	1000	3 EA 3.50	4	400	2/0	4/0	3/0	4
49	1140	3 EA 4	3	500	3/0	4/0	3/0	4
50	1140	3 EA 4	4	500	3/0	4/0	3/0	4
51	1240	4 EA 3	3	350	3/0	4/0	3/0	4
52	1240	4 EA 3	4	350	3/0	4/0	3/0	4
53	1675	5 EA 3.50	4	400	4/0	4/0	4/0	4
54	2010	6 EA 3.50	4	400	250	250	250	4
55	2660	7 EA 4	4	500	350	350	350	4
56	3040	8 EA 4	4	500	500	500	500	4
57	4180	11 EA 4	4	500	500	500	500	4
58		5 EA 4						6
59		5						6
60		10 EA 4						6

CONDUCTOR AND CONDUIT SCHEDULE NOTES

1. CONDUCTORS SHOWN ARE SHOWN FOR EACH CONDUIT WITH MODIFICATIONS AS NOTED IN NOTE 5. ALL CONDUCTORS SHOWN ARE THWN UNLESS OTHERWISE NOTED.
2. PROVIDE EQUIPMENT GROUND CONDUCTORS PER TABLE 250-122 WHEN CIRCUIT BREAKERS ARE SIZED GREATER THAN AMPERE RATING SHOWN IN TABLE.
3. PROVIDE #10 NEUTRALS FOR MULTIWIRE BRANCH CIRCUITS SERVING COMPUTERS.
4. GROUND (G) CONDUCTOR MAY BE DELETED ON SERVICE ENTRANCE CONDUCTORS.
5. WHEN SYMBOL SUBSCRIPT INDICATES "IG", INCLUDE "IG" OR INSULATED GROUND CONDUCTOR SCHEDULED ALONG WITH GROUND OR EQUIPMENT GROUND CONDUCTOR. WHEN SYMBOL SUBSCRIPT INDICATES "SE", SUBSTITUTE "SE" CONDUCTOR FOR "G" CONDUCTOR SHOWN WHICH IS SIZED FOR THE GROUNDING OF THE SECONDARY OF THE SEPARATELY DERIVED SYSTEMS. WHEN A SYMBOL SUBSCRIPT INDICATES "2N", PROVIDE TWO NEUTRAL CONDUCTORS OF THE SIZE INDICATED.
6. RACEWAY ONLY. CONDUCTORS PROVIDED BY UTILITY.

COOPER ROBERTS SIMONSEN ASSOCIATES
crsa
700 North 200 West
Salt Lake City, UT 84103
(801) 355-5915 phone
(801) 355-9885 fax
crsa-us.com

SNOW COLLEGE

State of Utah-Department of Administrative Services
DIVISION OF FACILITIES CONSTRUCTION AND MANAGEMENT
4110 State Office Building/Salt Lake City, Utah 84114/538-3018

Civil Engineer
Great Basin Engineering
Contact: Dave Waldron
5746 South 1475 East, Suite 200
Ogden, UT 84403
(801) 521-0222 FAX (801) 392-7544
dave@gbenorth.com

Landscape Architect
G. Brown Design
Contact: Mathew Winward
610 E. South Temple, Suite 50
Salt Lake City, UT 84102
(801) 575-6066 FAX (801) 575-6166
mwinward@gbrowndesign.com

Structural Engineer
Reaveley Engineers
Contact: Cameron Empey
675 East 500 South, Suite 400
Salt Lake City, UT 84105
(801) 486-3883 FAX (801) 485-0911
cempey@reaveley.com

Mechanical Engineer
Van Boerum & Frank
Contact: Neil Spencer
330 South 300 East
Salt Lake City, UT 84111
(801) 530-3148 FAX (801) 910-9917
nspencer@vbfa.com

Electrical Engineer
Spectrum Engineers
Contact: Dave Wesemann, PE
175 South Main Street, Suite 300
Salt Lake City, UT 84111
(801) 328-5151 FAX (801) 328-5155
dew@spectrum-engineers.com

AV Consultant
Spectrum Engineers
Contact: Kurtis Dallinga, PE
175 South Main Street, Suite 300
Salt Lake City, UT 84111
(801) 328-5151 FAX (801) 328-5155
kdd@spectrum-engineers.com

Library Consultant
Michaels Associates Design Consultants, Inc.
Contact: Andrea Michaels
14809 North 73rd Street, Suite 100
Scottsdale, AZ 85260
(480) 998-7476 FAX (480) 998-9390
andrea@madcinc.com

STAMP:

LICENSED PROFESSIONAL ENGINEER
No. 181563
DAVID E. WESEMANN
STATE OF UTAH

PROJECT NAME:

Snow College Library

150 College Avenue
Ephraim, Utah 84627

REVISIONS:

- 100% CD, October 13, 2008
- 100% CD, September 15, 2008
- 100% CD Review, Aug 26, 2008
- 100% CD, June 25, 2008
- 100% CD Review, June 20, 2008
- 50% CD Review, May 27, 2008
- CD Review Set, May 2, 2008
- DD Set, April 18, 2008
- DD Review, April 4, 2008

ISSUE DATE:

SEPTEMBER 15 2008, 100% CD

ARCHITECT'S PROJECT NUMBER:

B07-051

DFCM PROJECT NUMBER:

07258700

SHEET TITLE:

POWER ONE-LINE DIAGRAM

SHEET NUMBER:

EP-602

File Name: P:\2007\20070473\(Drawings\Sheet\73EP-602.dwg Last Plotted: 2008/10/14 @ 10:09 AM By: dlm

EQUIPMENT SCHEDULE

MARK	QTY	ITEM DESCRIPTION	LOAD DATA							WIRE AND CONDUIT SIZE	OVERCURRENT PROTECTION			DISCONNECT			STARTER DATA													NOTES	MARK
			HP	kW	MCA	FLA	VOLT	PH	Hz		FURN BY	DEVICE	LOCATION	FURN BY	DEVICE	LOCATION	FURN BY	DEVICE	LOCATION	SIZE	SPEED	CTRL VOLT	SELECTOR SWITCH	PUSH BUTTON	PILOT LAMP	NORMALLY OPEN CONTACTS	NORMALLY CLOSED CONTACTS	PHASE FAILURE RELAY	SCHEMATIC REFERENCE	REMOTE CTRL		
AC-1		CONDENSING UNIT (INDOOR)			1		208	1	60	2 #12, #12 GR 0.75"C	E	15A/2P CB	PANEL	E	30A/2P FRN-5	ADJ. TO EQUIP.	Q															AC-1
AC-2		CONDENSING UNIT (INDOOR)			1		208	1	60	2 #12, #12 GR 0.75"C	E	15A/2P CB	PANEL	E	30A/2P FRN-5	ADJ. TO EQUIP.	Q															AC-2
AC-3		CONDENSING UNIT (INDOOR)			1		208	1	60	2 #12, #12 GR 0.75"C	E	15A/2P CB	PANEL	E	30A/2P FRN-5	ADJ. TO EQUIP.	Q															AC-3
AC-4		CONDENSING UNIT (INDOOR)			1		208	1	60	2 #12, #12 GR 0.75"C	E	15A/2P CB	PANEL	E	30A/2P FRN-5	ADJ. TO EQUIP.	Q															AC-4
AC-5		CONDENSING UNIT (INDOOR)			1		208	1	60	2 #12, #12 GR 0.75"C	E	15A/2P CB	PANEL	E	30A/2P FRN-5	ADJ. TO EQUIP.	Q															AC-5
AC-6		CONDENSING UNIT (INDOOR)			1		208	1	60	2 #12, #12 GR 0.75"C	E	15A/2P CB	PANEL	E	30A/2P FRN-5	ADJ. TO EQUIP.	Q															AC-6
CH-1		CHILLER			315		480	3	60	2 EA 3 #350, #1 GR 2 EA 3"C	E	600A/3P CB	PANEL	E	400A/3P FRS-400	ADJ. TO EQUIP.	Q															CH-1
CRP-1		CONDENSATE RETURN PUMP	1.5				480	3	60	3 #12, #12 GR 0.75"C	E	30A/3P FRS-5	MCC	E	30A/3P FRS-5	ADJ. TO EQUIP.	E	FVNR	MCC	1			HOA		R,G	2	2					CRP-1
CU-1		CONDENSING UNIT (OUTDOOR)			25		208	1	60	2 #8, #10 GR 1"C	E	40A/2P CB	PANEL	E	60A/3P FRN-35	ADJ. TO EQUIP.	Q															CU-1
CU-2		CONDENSING UNIT (OUTDOOR)			25		208	1	60	2 #8, #10 GR 1"C	E	40A/2P CB	PANEL	E	60A/3P FRN-35	ADJ. TO EQUIP.	Q															CU-2
CU-3		CONDENSING UNIT (OUTDOOR)			18		208	1	60	2 #10, #10 GR 0.75"C	E	30A/2P CB	PANEL	E	30A/2P FRN-25	ADJ. TO EQUIP.	Q															CU-3
CU-4		CONDENSING UNIT (OUTDOOR)			18		208	1	60	2 #10, #10 GR 0.75"C	E	30A/2P CB	PANEL	E	30A/2P FRN-25	ADJ. TO EQUIP.	Q															CU-4
CU-5		CONDENSING UNIT (OUTDOOR)			18		208	1	60	2 #10, #10 GR 0.75"C	E	30A/2P CB	PANEL	E	30A/2P FRN-25	ADJ. TO EQUIP.	Q															CU-5
CU-6		CONDENSING UNIT (OUTDOOR)			18		208	1	60	2 #10, #10 GR 0.75"C	E	30A/2P CB	PANEL	E	30A/2P FRN-25	ADJ. TO EQUIP.	Q															CU-6
CUH-1 TO CUH-2		CABINET UNIT HEATER	1/9				120	1	60	2 #12, #12 GR 0.75"C	E	15A/1P CB	PANEL	E	THERMAL SWITCH	ADJ. TO EQUIP.	E	CONTROL RELAY	ADJ. TO EQUIP.													CUH-1 TO CUH-2
CUH-3		CABINET UNIT HEATER	1/6				120	1	60	2 #12, #12 GR 0.75"C	E	15A/1P CB	PANEL	E	THERMAL SWITCH	ADJ. TO EQUIP.	E	CONTROL RELAY	ADJ. TO EQUIP.													CUH-3
CUH-4		CABINET UNIT HEATER	1/9				120	1	60	2 #12, #12 GR 0.75"C	E	15A/1P CB	PANEL	E	THERMAL SWITCH	ADJ. TO EQUIP.	E	CONTROL RELAY	ADJ. TO EQUIP.													CUH-4
EF-1		EXHAUST FAN	1				208	1	60	2 #12, #12 GR 0.75"C	E	20A/2P CB	PANEL	E	30A/2P FRN-15	ADJ. TO EQUIP.	E	FVNR	ADJ. TO EQUIP.	0			HOA		R,G	2	2					EF-1
EF-2		EXHAUST FAN	.5				120	1	60	2 #12, #12 GR 0.75"C	E	20A/1P CB	PANEL	E	THERMAL SWITCH	ADJ. TO EQUIP.	E	FVNR	ADJ. TO EQUIP.	0			HOA		R,G	2	2					EF-2
EF-3		EXHAUST FAN	1/6				120	1	60	2 #12, #12 GR 0.75"C	E	20A/1P CB	PANEL	E	THERMAL SWITCH	ADJ. TO EQUIP.	E	FVNR	ADJ. TO EQUIP.	0			HOA		R,G	2	2					EF-3
EF-4		EXHAUST FAN	1/6				120	1	60	2 #12, #12 GR 0.75"C	E	20A/1P CB	PANEL	E	THERMAL SWITCH	ADJ. TO EQUIP.	E	FVNR	ADJ. TO EQUIP.	0			HOA		R,G	2	2					EF-4
EF-5		EXHAUST FAN	.5				120	1	60	2 #12, #12 GR 0.75"C	E	20A/1P CB	PANEL	E	THERMAL SWITCH	ADJ. TO EQUIP.	E	FVNR	ADJ. TO EQUIP.	0			HOA		R,G	2	2					EF-5
EF-6		EXHAUST FAN	3/4				208	3	60	3 #12, #12 GR 0.75"C	E	20A/3P CB	PANEL	E	30A/3P NFRT	ADJ. TO EQUIP.	E	VFD	SEE PLAN												NOTE 2,3	EF-6
FP-1 TO FP-6		FAN POWERED TERMINAL BOX	1				208	1	60	2 #12, #12 GR 0.75"C	E	20A/2P CB	PANEL	E	30A/2P FRN-15	ADJ. TO EQUIP.	E	FVNR	ADJ. TO EQUIP.	0			HOA		R,G	2	2					FP-1 TO FP-6
P-1 TO P-2		PUMP	5				480	3	60	3 #12, #12 GR 0.75"C	E	30A/3P FRS-15	MCC	E	SAME AS OCPD	ADJ. TO EQUIP.	E	VFD	ADJ. TO EQUIP.													P-1 TO P-2
P-3 TO P-4		PUMP	10				480	3	60	3 #12, #12 GR 0.75"C	E	30A/3P FRS-20	MCC	E	SAME AS OCPD	ADJ. TO EQUIP.	E	VFD	ADJ. TO EQUIP.													P-3 TO P-4
P-5 TO P-6		PUMP	7.5				480	3	60	3 #12, #12 GR 0.75"C	E	30A/3P FRS-15	MCC	E	SAME AS OCPD	ADJ. TO EQUIP.	E	VFD	ADJ. TO EQUIP.													P-5 TO P-6
P-7		PUMP	2				480	3	60	3 #12, #12 GR 0.75"C		30A/3P FRS-5	MCC	E	SAME AS OCPD	ADJ. TO EQUIP.	E	VFD	ADJ. TO EQUIP.													P-7
RCP-1		DOMESTIC PUMP	1/6				120	1	60	2 #12, #12 GR 0.75"C	E	20A/1P CB	PANEL	E	THERMAL SWITCH	ADJ. TO EQUIP.	E	CONTROL RELAY	ADJ. TO EQUIP.													RCP-1
RF-1.1 TO RF-1.3	3	RELIEF FAN	1				480	3	60	3 #12, #12 GR 0.75"C	E	30A/3P FRS-10	MCC	Q			Q															RF-1.1 TO RF-1.3
RF-2.1 TO RF-2.15	15	RELIEF FAN	.75				480	3	60	3 #8, #10 GR 1"C	E	60A/3P FRS-35	MCC	Q			Q															RF-2.1 TO RF-2.15
SE-1		SEWAGE EJECTION	.5				120	1	60	2 #10, #10 GR 0.75"C	E	20A/1P CB	PANEL	E	THERMAL SWITCH	ADJ. TO EQUIP.	Q													NOTE 1	SE-1
SF-1.1 TO SF-1.3	3	SUPPLY FAN	5				480	3	60	3 #8, #10 GR 1"C	E	60A/3P FRS-35	MCC	Q			Q															SF-1.1 TO SF-1.3
SF-2.1 TO SF-2.15	15	SUPPLY FAN	5				480	3	60	3 #1/0, #6 GR 2"C	E	200A/3P FRS-125	MCC	Q			Q															SF-2.1 TO SF-2.15
SP-1		SEWAGE EJECTION	1				208	3	60	3 #12, #12 GR 0.75"C	E	20A/3P CB	PANEL	E	30A/3P FRN-15	ADJ. TO EQUIP.	Q													NOTE 1	SP-1
UH-1		UNIT HEATER	1/30				120	1	60	2 #12, #12 GR 0.75"C	E	15A/1P CB	PANEL	E	THERMAL SWITCH	ADJ. TO EQUIP.	E	CONTROL RELAY	ADJ. TO EQUIP.													UH-1
UH-2		UNIT HEATER	1/15				120	1	60	2 #12, #12 GR 0.75"C	E	15A/1P CB	PANEL	E	THERMAL SWITCH	ADJ. TO EQUIP.	E	CONTROL RELAY	ADJ. TO EQUIP.													UH-2
UH-3		UNIT HEATER	1/15				120	1	60	2 #12, #12 GR 0.75"C	E	15A/1P CB	PANEL	E	THERMAL SWITCH	ADJ. TO EQUIP.	E	CONTROL RELAY	ADJ. TO EQUIP.													UH-3
UH-4		UNIT HEATER	1/10				120	1	60	2 #12, #12 GR 0.75"C	E	15A/1P CB	PANEL	E	THERMAL SWITCH	ADJ. TO EQUIP.	E	CONTROL RELAY	ADJ. TO EQUIP.													UH-4
WH-1		WATER HEATER		5			208	3	60	3 #12, #12 GR 0.75"C	E	20A/3P CB	PANEL	E	20A/3P SWITCH	ADJ. TO EQUIP.	Q															WH-1
WS-1		WATER SOFTENER					120	1	60	2 #12, #12 GR 0.75"C	E	20A/1P CB	PANEL	E	CORD & PLUG	ADJ. TO EQUIP.	Q															WS-1

NOTES LEGEND:

1. WIRING METHODS TO EQUIPMENT SHALL MEET EXPLOSION PROOF REQUIREMENTS OF N.E.C. PROVIDE ALL INTERCONNECT WIRING BETWEEN CONTROL PANEL AND PUMP.
2. SMOKE PRESSURIZATION FAN.
3. PROVIDE QUICK-BREAK, SLOW-MAKE AUX CONTACTS ON DISCONNECT WITH INTERLOCK WIRING TO VFD TO DE-ENGERIZE VFD UPON ACTIVATION.

EQUIPMENT SCHEDULE KEY

E	DIVISION 16
Q	FURNISHED WITH THE EQUIPMENT
*	COORDINATE WITH THE DIVISION 15 TEMPERATURE CONTROL INSTALLER
**	AUTOMATIC CONTROL WIRING BY DIVISION 15

COOPER ROBERTS SIMONSEN ASSOCIATES

crsa

700 North 200 West
Salt Lake City, UT 84103
(801) 355-5915 phone
(801) 355-9885 fax
crsa-us.com

SNOW COLLEGE

State of Utah-Department of Administrative Services

DIVISION OF FACILITIES CONSTRUCTION AND MANAGEMENT
4110 State Office Building/East Lake City, Utah 84114/538-3018

Civil Engineer

Great Basin Engineering
Contact: Dave Waldron
5746 South 1475 East, Suite 200
Ogden, UT 84403
(801) 521-0222 FAX (801) 392-7544
dave@gbenorth.com

Landscape Architect

G. Brown Design
Contact: Mathew Winward
610 E. South Temple, Suite 50
Salt Lake City, UT 84102
(801) 575-6066 FAX (801) 575-6166
mwinward@gbrowndesign.com

Structural Engineer

Reaveley Engineers
Contact: Cameron Empey
675 East 500 South, Suite 400
Salt Lake City, UT 84105
(801) 486-3883 FAX (801) 485-0911
cempey@reaveley.com

Mechanical Engineer

Van Boerum & Frank
Contact: Neil Spencer
330 South 300 East
Salt Lake City, UT 84111
(801) 530-3148 FAX (801) 910-9917
nspencer@vbfa.com

Electrical Engineer

Spectrum Engineers
Contact: Dave Wesemann, PE
175 South Main Street, Suite 300
Salt Lake City, UT 84111
(801) 328-5151 FAX (801) 328-5155
dew@spectrum-engineers.com

AV Consultant

Spectrum Engineers
Contact: Kurtis Dallinga, PE
175 South Main Street, Suite 300
Salt Lake City, UT 84111
(801) 328-5151 FAX (801) 328-5155
kdd@spectrum-engineers.com

Library Consultant

Michaels Associates Design Consultants, Inc.
Contact: Andrea Michaels
14809 North 73rd Street, Suite 100
Scottsdale, AZ 85260
(480) 998-7476 FAX (480) 998-9390
andrea@madcinc.com

STAMP:

LICENSED PROFESSIONAL ENGINEER
No. 181563
DAVID E. WESEMANN
STATE OF UTAH

PROJECT NAME:

Snow College Library

150 College Avenue
Ephraim, Utah 84627

REVISIONS:

- 100% CD, October 13, 2008
- 100% CD, September 15, 2008
- 100% CD Review, Aug 26, 2008
- 100% CD, June 25, 2008
- 100% CD Review, June 20, 2008
- 50% CD Review, May 27, 2008
- CD Review Set, May 2, 2008
- DD Set, April 18, 2008
- DD Review, April 4, 2008

ISSUE DATE:

SEPTEMBER 15 2008, 100% CD

ARCHITECT'S PROJECT NUMBER:

B07-051

DFCM PROJECT NUMBER:

07258700

SHEET TITLE:

EQUIPMENT SCHEDULE

SHEET NUMBER:

EP-603

File Name: P:\2007\20070473\Drawings\Sheet\73EP-603.dwg Last Plotted: 2008/10/14 @ 10:09 AM By: dim

PANEL "1HA"

VOLTS/PHASE/WIRE:	PANEL SIZE & TYPE:	MAIN SIZE & TYPE:	LOCATION:	CABINET:	NOTES:
277/480 V, 3 PH 4 WIRE	22" W x 6" D, BOLT-ON	225 AMPERE MAIN LUGS			

ACCESSORIES: PANEL DIRECTORY, IDENTIFICATION, GROUNDING BAR

CKT	OCP		LOAD (kVA)			DESCRIPTION	LCL	PHASE LOAD			LCL	DESCRIPTION	LOAD (kVA)			OCP		CKT
NO	AMP	POLE	LTG	CO	PWR		kVA	A	B	C	kVA		LTG	CO	PWR	AMP	POLE	NO
1	20	1	2.4			LTG: Study Rooms	3.0	4.1			2.1	LTG: Corridors	1.7			20	1	2
3	20	1	2.9			LTG: N. Reading Area	3.6		5.0		2.7	LTG: Bathrooms/Mech Room	2.1			20	1	4
5	20	1	3.0			LTG: Central Study Area	3.8			4.3	1.6	LTG: Classroom 127	1.3			20	1	6
7	20	1	2.1			LTG: S. Study Area	2.6	3.5			1.7	LTG: Classroom 122	1.4			20	1	8
9	20	1	0.3			LTG: S. Outdoor	0.4		0.3		0.0	SPARE				20	1	10
11	20	1	1.2			OUTDOOR POLE LIGHTS	1.5			1.2	0.0	SPARE				20	1	12
13	20	1	1.2			OUTDOOR POLE LIGHTS	1.5	1.2			0.0	SPARE				20	1	14
15	20	1	1.2			OUTDOOR POLE LIGHTS	1.5		1.2		0.0	SPARE				20	1	16
17	20	1				SPARE	0.0			0.0	0.0	SPARE				20	1	18
19	20	1				SPARE	0.0	0.0			0.0	SPARE				20	1	20
21	20	1				SPARE	0.0		0.0		0.0	SPARE				20	1	22
23	20	1				SPARE	0.0			0.0	0.0	SPARE				20	1	24
25	20	1				SPARE	0.0	0.0			0.0	SPARE				20	1	26
27	20	1				SPARE	0.0		0.0		0.0	SPARE				20	1	28
29	20	1				SPARE	0.0			0.0	0.0	SPARE				20	1	30
31	20	1				SPARE	0.0	0.0			0.0	SPARE				20	1	32
33	20	1				SPARE	0.0		0.0		0.0	SPARE				20	1	34
35	20	1				SPARE	0.0			0.0	0.0	SPARE				20	1	36
37	20	1				SPARE	0.0	0.0			0.0	SPARE				20	1	38
39	20	1				SPARE	0.0		0.0		0.0	SPARE				20	1	40
41	20	1				SPARE	0.0			0.0	0.0	SPARE				20	1	42

TOTALS: CONNECTED kVA PER PHASE **9 7 5** — CONNECTED TOTAL kVA **21**
CONNECTED AMPS PER PHASE **32 24 20** — CONNECTED AVERAGE AMPS PER PHASE **25**

NEC DIVERSIFIED LOAD CALCULATIONS
LIGHTING 21kVA @125% = **26** kVA — ALL OTHER LOADS @100% = **0** kVA — DIVERSIFIED TOTAL kVA = **26**
RECEPTACLES 0kVA @100% = **0** kVA — 25% OF LARGEST MOTOR = **0** kVA — AVERAGE AMPS PER PHASE = **31**
REMAINDER 0kVA @ 50% = **0** kVA

PANEL "1LA"

VOLTS/PHASE/WIRE:	PANEL SIZE & TYPE:	MAIN SIZE & TYPE:	LOCATION:	CABINET:	NOTES:
120/208 V, 3 PH 4 WIRE	22" W x 6" D, BOLT-ON	225 AMPERE MAIN LUG			

ACCESSORIES: PANEL DIRECTORY, IDENTIFICATION, GROUNDING BAR, INSULATED GROUND BAR, SUBFEED LUGS, 200% NEUTRAL

CKT	OCP		LOAD (kVA)			DESCRIPTION	LCL	PHASE LOAD			LCL	DESCRIPTION	LOAD (kVA)			OCP		CKT
NO	AMP	POLE	LTG	CO	PWR		kVA	A	B	C	kVA		LTG	CO	PWR	AMP	POLE	NO
1	20	1		0.8		CO: Study Room 111	0.8	1.3			0.5	PWR: AV Monitor Room 111			0.5	20	1	2
3	20	1		1.4		CO: Study Room 112	1.4		1.9		0.5	PWR: AV Monitor Room 112			0.5	20	1	4
5	20	1		1.4		CO: Study Rooms 113, 114	1.4			2.6	1.2	CO: Study Room 115		1.2		20	1	6
7	20	1		1.0		CO: NE Corridor & Study Areas	1.0	2.4			1.4	CO: Study Room 108		1.4		20	1	8
9	20	1		0.8		CO: Near W. Stairs	0.8		2.2		1.4	CO: Study Room 109		1.4		20	1	10
11	20	1		0.4		CO: Column in Study Area	0.4			1.2	0.8	CO: Study Room 110		0.8		20	1	12
13	20	1			0.5	PWR: AV Monitor Room 109	0.5	1.5			1.0	CO: Study Rooms 106, 108		1.0		20	1	14
15	20	1			0.5	PWR: AV Monitor Room 110	0.5		1.3		0.8	CO: Study Room 105		0.8		20	1	16
17	20	1		0.8		CO: Study Desks near W. Stair	0.8			1.8	1.0	CO: Study Room 104		1.0		20	1	18
19	20	1		0.4		CO: S. Study Area AFB	0.4	0.8			0.4	CO: S. Study Area AFB		0.4		20	1	20
21	20	1		0.4		CO: S. Study Area AFB	0.4		0.8		0.4	CO: S. Study Area AFB		0.4		20	1	22
23	20	1		0.4		CO: S. Study Area AFB	0.4			0.8	0.4	CO: S. Study Area AFB		0.4		20	1	24
25	20	1		0.4		CO: S. Study Area AFB	0.4	0.8			0.4	CO: S. Study Area AFB		0.4		20	1	26
27	20	1		0.4		CO: S. Study Area AFB	0.4		1.6		1.2	CO: Central Study Area AFB		1.2		20	1	28
29	20	1		0.4		CO: S. Study Area AFB	0.4			1.2	0.8	CO: Central Study Area AFB		0.8		20	1	30
31	20	1		0.8		CO: N. Study Area AFB	0.8	1.6			0.8	CO: N. Study Area AFB		0.8		20	1	32
33	20	1		0.8		CO: N. Study Area AFB	0.8		1.6		0.8	CO: N. Study Area AFB		0.8		20	1	34
35	20	1		0.6		CO: N. Study Area Wall Outlets	0.6			1.4	0.8	CO: N. Study Area AFB		0.8		20	1	36
37	20	1		0.6		CO: Central Study Area Wall Outlets	0.6	1.2			0.6	CO: S. Study Area Wall Outlets		0.6		20	1	38
39	20	1		0.2		CO: Vending	0.2		0.6		0.4	CO: S. Study Area Wall Outlets		0.4		20	1	40
41	20	1		0.2		CO: Vending	0.2			0.6	0.4	CO: S. Study Area Wall Outlets		0.4		20	1	42
43	20	1		0.8		CO: Classroom 127 Wall Outlets	0.8	1.3			0.5	PWR: Drinking Fountain			0.5	20	1	44
45	20	1		0.6		CO: Librarian's Office, Rm 125	0.6		1.4		0.8	CO: Hallways Near Bathroom		0.8		20	1	46
47	20	1		0.4		CO: Wall Outlets near Lib. Office	0.4			1.0	0.6	CO: Bathrooms		0.6		20	1	48
49	20	1		0.4		CO: Classroom 127 AFB	0.4	1.2			0.8	CO: Classroom 127 AFB		0.8		20	1	50
51	20	1		0.4		CO: Classroom 122 AFB	0.4		1.2		0.8	CO: Classroom 127 AFB		0.8		20	1	52
53	20	1			0.8	PWR: Classroom 127 Projector	0.8			1.6	0.8	CO: Classroom 127 AFB		0.8		20	1	54
55	20	1			0.8	PWR: Classroom 122 Projector	0.8	1.6			0.8	CO: Classroom 127 AFB		0.8		20	1	56
57	20	1		0.4		CO: AV Closet Outlets	0.4		1.2		0.8	CO: Classroom 127 AFB		0.8		20	1	58
59	20	1		0.4		CO: AV Closet Outlets	0.4			1.2	0.8	CO: Classroom 127 AFB		0.8		20	1	60
61	20	1		0.8		CO: Classroom 122 AFB	0.8	1.6			0.8	CO: Classroom 122 AFB		0.8		20	1	62
63	20	1		0.8		CO: Classroom 122 AFB	0.8		1.6		0.8	CO: Classroom 122 AFB		0.8		20	1	64
65	20	1		0.8		CO: Classroom 122 AFB	0.8			1.6	0.8	CO: Classroom 122 AFB		0.8		20	1	66
67	20	1		0.6		CO: Classroom 127 Wall Outlets	0.6	1.0			0.4	CO: Mechanical Room 120		0.4		20	1	68
69	20	1		0.6		CO: Classroom 122 Wall Outlets	0.6		1.0		0.4	CO: Mechanical Room 120		0.4		20	1	70
71	20	1		1.2		CO: Classroom 122 Wall Outlets	1.2			1.6	0.4	CO: Mechanical Room 120		0.4		20	1	72
73	20	1		0.4		CO: Mechanical Room 120	0.4	0.8			0.4	CO: Mechanical Room 120		0.4		20	1	74
75	20	1	0.4			LTG: Classroom 127	0.5		0.8		0.5	LTG: Classroom 122	0.4			20	1	76
77	20	1	0.0			LTG: Elevator Pit	0.1			0.3	0.4	LTG: E. Stair Tracklights	0.3			20	1	78
79	20	1			0.5	PWR: AV Monitor Room 115	0.5	1.0			0.5	PWR: AV Monitor Room 114			0.5	20	1	80
81	20	1			0.5	PWR: AV Monitor Central Study	0.5		1.0		0.5	PWR: AV Monitor Room 104			0.5	20	1	82
83	20	1			0.5	PWR: AV Monitor Room 106	0.5			1.0	0.5	PWR: AV Monitor Room 107			0.5	20	1	84

TOTALS: CONNECTED kVA PER PHASE **18 18 18** — CONNECTED TOTAL kVA **54**
CONNECTED AMPS PER PHASE **151 151 150** — CONNECTED AVERAGE AMPS PER PHASE **151**

NEC DIVERSIFIED LOAD CALCULATIONS
LIGHTING 1kVA @125% = **1** kVA — ALL OTHER LOADS @100% = **7** kVA — DIVERSIFIED TOTAL kVA = **36**
RECEPTACLES 10kVA @100% = **10** kVA — 25% OF LARGEST MOTOR = **0** kVA — AVERAGE AMPS PER PHASE = **101**
REMAINDER 36kVA @ 50% = **18** kVA

PANEL "1LB"

VOLTS/PHASE/WIRE:	PANEL SIZE & TYPE:	MAIN SIZE & TYPE:	LOCATION:	CABINET:	NOTES:
120/208 V, 3 PH 4 WIRE	22" W x 6" D, BOLT-ON	225 AMPERE MAIN LUG			

ACCESSORIES: PANEL DIRECTORY, IDENTIFICATION, GROUNDING BAR, INSULATED GROUND BAR, SUBFEED LUGS, 200% NEUTRAL

CKT	OCP		LOAD (kVA)			DESCRIPTION	LCL	PHASE LOAD			LCL	DESCRIPTION	LOAD (kVA)			OCP		CKT
NO	AMP	POLE	LTG	CO	PWR		kVA	A	B	C	kVA		LTG	CO	PWR	AMP	POLE	NO
1	20	2			0.8	FP-2	0.8	0.9			0.1	UH-1			0.1	15	1	2
3	–	–			0.8	–	0.8		0.8		0.0	SPARE				20	1	4
5	20	2			0.8	FP-1	0.8			1.4	0.6	RCP-1			0.6	20	1	6
7	–	–			0.8	–	0.8	1.4			0.6	SP-1			0.6	20	3	8
9	20	1			0.3	CUH-4	0.3		0.9		0.6	–			0.6	–	–	10
11	20	1			0.3	CUH-3	0.3			0.9	0.6	–			0.6	–	–	12
13	20	1			0.6	EF-4	0.6	1.2			0.6	EF-3			0.6	20	1	14
15	20	3			1.0	WATER HEATER	1.0		1.0		0.0	SPARE				20	1	16
17	–	–			1.0	–	1.0			1.2	0.2	SE-1			0.2	20	3	18
19	–	–			1.0	–	1.0	1.2			0.2	–			0.2	–	–	20
21	20	1			0.5	SMOKE DAMPERS/MAGS	0.5		0.7		0.2	–			0.2	–	–	22
23	20	1			0.5	MISC. 120V MECHANICAL	0.5			1.1	0.6	TUNNEL OUTLETS		0.6		20	1	24
25	20	1			0.5	MISC. 120V MECHANICAL	0.5	1.1			0.6	TUNNEL OUTLETS		0.6		20	1	26
27	20	1			0.5	MISC. 120V MECHANICAL	0.5		1.1		0.6	TUNNEL OUTLETS		0.6		20	1	28
29	20	1				SPARE	0.0			0.0	0.0	SPARE				20	1	30
31	20	1				SPARE	0.0	0.0			0.0	SPARE				20	1	32
33	20	1				SPARE	0.0		0.0		0.0	SPARE				20	1	34
35	20	1				SPARE	0.0			0.0	0.0	SPARE				20	1	36
37	20	1				SPARE	0.0	0.0			0.0	SPARE				20	1	38
39	20	1				SPARE	0.0		0.0		0.0	SPARE				20	1	40
41	20	1				SPARE	0.0			0.0	0.0	SPARE				20	1	42
43	20	1				SPARE	0.0	0.0			0.0	SPARE				20	1	44
45	20	1				SPARE	0.0		0.0		0.0	SPARE				20	1	46
47	20	1				SPARE	0.0			0.0	0.0	SPARE				20	1	48
49	20	1				SPARE	0.0	0.0			0.0	SPARE				20	1	50
51	20	1				SPARE	0.0		0.0		0.0	SPARE				20	1	52
53	20	1				SPARE	0.0			0.0	0.0	SPARE				20	1	54
55	20	1				SPARE	0.0	0.0			0.0	SPARE				20	1	56
57	20	1				SPARE	0.0		0.0		0.0	SPARE				20	1	58
59	20	1				SPARE	0.0			0.0	0.0	SPARE				20	1	60
61	20	1				SPARE	0.0	0.0			0.0	SPARE				20	1	62
63	20	1				SPARE	0.0		0.0		0.0	SPARE				20	1	64
65	20	1				SPARE	0.0			0.0	0.0	SPARE				20	1	66
67	20	1				SPARE	0.0	0.0			0.0	SPARE				20	1	68
69	20	1				SPARE	0.0		0.0		0.0	SPARE				20	1	70
71	20	1				SPARE	0.0			0.0	0.0	SPARE				20	1	72
73	20	1				SPARE	0.0	0.0			0.0	SPARE				20	1	74
75	20	1				SPARE	0.0		0.0		0.0	SPARE				20	1	76
77	20	1				SPARE	0.0			0.0	0.0	SPARE				20	1	78
79	20	1				SPARE	0.0	0.0			0.0	SPARE				20	1	80
81	20	1				SPARE	0.0		0.0		0.0	SPARE				20	1	82
83	20	1				SPARE	0.0			0.0	0.0	SPARE				20	1	84

TOTALS: CONNECTED kVA PER PHASE **6 5 5** — CONNECTED TOTAL kVA **15**
CONNECTED AMPS PER PHASE **48 38 38** — CONNECTED AVERAGE AMPS PER PHASE **41**

NEC DIVERSIFIED LOAD CALCULATIONS
LIGHTING 0kVA @125% = **0** kVA — ALL OTHER LOADS @100% = **13** kVA — DIVERSIFIED TOTAL kVA = **15**
RECEPTACLES 2kVA @100% = **2** kVA — 25% OF LARGEST MOTOR = **0** kVA — AVERAGE AMPS PER PHASE = **41**
REMAINDER 0kVA @ 50% = **0** kVA

PANEL "1QLA"

VOLTS/PHASE/WIRE:	PANEL SIZE & TYPE:	MAIN SIZE & TYPE:	LOCATION:	CABINET:	NOTES:
120/208 V, 3 PH 4 WIRE	22" W x 6" D, BOLT-ON	225 AMPERE MAIN LUG			

ACCESSORIES: PANEL DIRECTORY, IDENTIFICATION, GROUNDING BAR, INSULATED GROUND BAR, SUBFEED LUGS, 200% NEUTRAL

CKT	OCP		LOAD (kVA)			DESCRIPTION	LCL	PHASE LOAD			LCL	DESCRIPTION	LOAD (kVA)			OCP		CKT
NO	AMP	POLE	LTG	CO	PWR		kVA	A	B	C	kVA		LTG	CO	PWR	AMP	POLE	NO
1	15	2			0.1	AC-6	0.1	0.2			0.1	AC-3			0.1	15	2	2
3	–	–			0.1	–	0.1		0.2		0.1	–			0.1	–	–	4
5	20	1			0.5	VAV CONTROL XFMR	0.5			1.0	0.5	VAV CONTROL XFMR			0.5	20	1	6
7	20	1			0.5	VAV CONTROL XFMR	0.5	1.0			0.5	VAV CONTROL XFMR			0.5	20	1	8
9	20	1			0.5	VAV CONTROL XFMR	0.5		0.6		0.1	AC-4			0.1	15	2	10
11	20	1			0.5	VAV CONTROL XFMR	0.5			0.6	0.1	–			0.1	–	–	12
13	15	2			0.1	CU-4A	0.1	2.0			1.9	CU-4B			1.9	30	2	14
15	–	–			0.1	–	0.1		2.0		1.9	–			1.9	–	–	16
17	30	2			1.9	CU-6B	1.9			3.8	1.9	CU-5B			1.9	30	2	18
19	–	–			1.9	–	1.9	3.8			1.9	–			1.9	–	–	20
21	30	2			1.9	CU-3B	1.9		4.5		2.6	CU-2B			2.6	40	2	22
23	–	–			1.9	–	1.9			4.5	2.6	–			2.6	–	–	24
25	40	2			2.6	CU-1B	2.6	3.4			0.8	CO: Circulation Desk (2nd)		0.8		20	1	26
27	–	–			2.6	–	2.6		3.8		1.2	CO: Circulation Desk (2nd)		1.2		20	1	28
29	20	1			0.5	CO: NW HC Door Opener	0.5			1.0	0.5	CO: Bathrm HC Door Opener			0.5	20	1	30
31	20	1			0.5	CO: NE HC Door Opener	0.5	1.3			0.8	CO: Data Room 208		0.8		20	1	32
33	20	1		0.8		CO: Data Room 308	0.8		1.6		0.8	CO: Data Room 208		0.8		20	1	34
35	20	1		0.8		CO: Data Room 308	0.8			1.6	0.8	CO: Data Room 208		0.8		20	1	36
37	20	1		1.2		CO: Data Room 308	1.2	2.0			0.8	CO: Data Room 413		0.8		20	1	38
39	20	1			0.5	ATC PANEL	0.5		1.3		0.8	CO: Data Room 413		0.8		20	1	40
41	20	1			0.5	ATC PANEL	0.5			0.9	0.4	CO: Data Room 413		0.4		20	1	42
43	20	1			0.5	ATC PANEL	0.5	1.0			0.5	SECURITY PANELS			0.5	20	1	44
45	20	1				SPARE	0.0		0.5		0.5	SECURITY PANELS			0.5	20	1	46
47	20	1				SPARE	0.0			0.5	0.5	SECURITY PANELS			0.5	20	1	48
49	20	1				SPARE	0.0	0.5			0.5	SECURITY PANELS			0.5	20	1	50
51	20	1				SPARE	0.0		0.0		0.0	SPARE				20	1	52
53	20	1				SPARE	0.0			0.0	0.0	SPARE				20	1	54
55	20	1				SPARE	0.0	0.0			0.0	SPARE				20	1	56
57	20	1				SPARE	0.0		0.0		0.0	SPARE				20	1	58
59	20	1				SPARE	0.0			0.0	0.0	SPARE				20	1	60
61	20	1				SPARE	0.0	0.0			0.0	SPARE				20	1	62
63	20	1				SPARE	0.0		0.0		0.0	SPARE				20	1	64
65	20	1				SPARE	0.0			0.0	0.0	SPARE				20	1	66
67	20	1				SPARE	0.0	0.0			0.0	SPARE				20	1	68
69	20	1				SPARE	0.0		0.0		0.0	SPARE				20	1	70
71	20	1				SPARE	0.0			0.0	0.0	SPARE				20	1	72
73	20	1				SPARE	0.0	0.0			0.0	SPARE				20	1	74
75	20	1				SPARE	0.0		0.0		0.0	SPARE				20	1	76
77	20	1				SPARE	0.0			0.0	0.0	SPARE				20	1	78
79	20	1				SPARE	0.0	1.6			1.6	–	0.0	1.6		–	–	80
81	20	1				SPARE	0.0		2.4		2.4	1QLB	0.0	2.4		100	3	82
83	20	1				SPARE	0.0			1.2	1.2	–	0	1.2		–	–	84

TOTALS: CONNECTED kVA PER PHASE **17 17 15** — CONNECTED TOTAL kVA **49**
CONNECTED AMPS PER PHASE **140 141 126** — CONNECTED AVERAGE AMPS PER PHASE **136**

NEC DIVERSIFIED LOAD CALCULATIONS
LIGHTING 0kVA @125% = **0** kVA — ALL OTHER LOADS @100% = **34** kVA — DIVERSIFIED TOTAL kVA = **47**
RECEPTACLES 10kVA @100% = **10** kVA — 25% OF LARGEST MOTOR = **0** kVA — AVERAGE AMPS PER PHASE = **129**
REMAINDER 4kVA @ 50% = **2** kVA

PANEL "1QLB"

VOLTS/PHASE/WIRE:	PANEL SIZE & TYPE:	MAIN SIZE & TYPE:	LOCATION:	CABINET:	NOTES:
120/208 V, 3 PH 4 WIRE	22" W x 6" D, BOLT-ON	225 AMPERE MAIN LUG			

ACCESSORIES: PANEL DIRECTORY, IDENTIFICATION, GROUNDING BAR, INSULATED GROUND BAR, SUBFEED LUGS, 200% NEUTRAL

CKT	OCP		LOAD (kVA)			DESCRIPTION	LCL	PHASE LOAD			LCL	DESCRIPTION	LOAD (kVA)			OCP		CKT
NO	AMP	POLE	LTG	CO	PWR		kVA	A	B	C	kVA		LTG	CO	PWR	AMP	POLE	NO
1	20	1		0.4		CO: Wall Outlets Rm 102	0.4	0.8			0.4	CO: IT Room 102		0.4		20	1	2
3	20	1		0.4		CO: Wall Outlets Rm 102	0.4		2.0		1.6	CO: IT Room 101		1.6		20	1	4
5	20	1		0.4		CO: Wall Outlets Rm 102	0.4			0.8	0.4	CO: Wall Outlets Rm 103		0.4		20	1	6
7	20	1		0.4		CO: Wall Outlets Rm 103	0.4	0.8			0.4	CO: Wall Outlets Rm 103		0.4		20	1	8
9	20	1		0.4		CO: Wall Outlets Rm 103	0.4		0.4		0.0	AC-1				15	2	10
11	20	1		0.4		CO: Wall Outlets Rm 103	0.4			0.4	0.0	–				–	–	12
13	20	1				SPARE	0.0	0.0			0.0	AC-2				15	2	14
15	20	1				SPARE	0.0		0.0		0.0	–				–	–	16
17	20	1				SPARE	0.0			0.0	0.0	SPARE				20	1	18
19	20	1				SPARE	0.0	0.0			0.0	SPARE				20	1	20
21	20	1				SPARE	0.0		0.0		0.0	SPARE				20	1	22
23	20	1				SPARE	0.0			0.0	0.0	SPARE				20	1	24
25	20	1				SPARE	0.0	0.0			0.0	SPARE				20	1	26
27	20	1				SPARE	0.0		0.0		0.0	SPARE				20	1	28
29	20	1				SPARE	0.0			0.0	0.0	SPARE				20	1	30
31	20	1				SPARE	0.0	0.0			0.0	SPARE				20	1	32
33	20	1				SPARE	0.0		0.0		0.0	SPARE				20	1	34
35	20	1				SPARE	0.0			0.0	0.0	SPARE				20	1	36
37	20	1				SPARE	0.0	0.0			0.0	SPARE				20	1	38
39	20	1				SPARE	0.0		0.0		0.0	SPARE				20	1	40
41	20	1				SPARE	0.0			0.0	0.0	SPARE				20	1	42

TOTALS: CONNECTED kVA PER PHASE **2 2 1** — CONNECTED TOTAL kVA **5**
CONNECTED AMPS PER PHASE **13 20 10** — CONNECTED AVERAGE AMPS PER PHASE **14**

NEC DIVERSIFIED LOAD CALCULATIONS
LIGHTING 0kVA @125% = **0** kVA — ALL OTHER LOADS @100% = **0** kVA — DIVERSIFIED TOTAL kVA = **5**
RECEPTACLES 5kVA @100% = **5** kVA — 25% OF LARGEST MOTOR = **0** kVA — AVERAGE AMPS PER PHASE = **14**
REMAINDER 0kVA @ 50% = **0** kVA

PANEL "2HA"

VOLTS/PHASE/WIRE:	PANEL SIZE & TYPE:	MAIN SIZE & TYPE:	LOCATION:	CABINET:	NOTES:
277/480 V, 3 PH 4 WIRE	22" W x 6" D, BOLT-ON	125 AMPERE MAIN LUGS			

ACCESSORIES: PANEL DIRECTORY, IDENTIFICATION, GROUNDING BAR

CKT	OCP		LOAD (kVA)			DESCRIPTION	LCL	PHASE LOAD			LCL	DESCRIPTION	LOAD (kVA)			OCP		CKT
NO	AMP	POLE	LTG	CO	PWR		kVA	A	B	C	kVA		LTG	CO	PWR	AMP	POLE	NO
1	20	1	2.0			LTG: Conference Room 202	2.6	5.5			4.4	LTG: Auditorium Waiting	3.5			20	1	2
3	20	1	1.7			LTG: South Reading Area	2.1		5.3		4.5	LTG: N Corridor/Entry	3.6			20	1	4
5	20	1	2.3			LTG: South Reading Area	2.9			5.9	4.5	LTG: N. Entry/Stacks	3.6			20	1	6
7	20	1	1.2			LTG: N. Window Areas	1.5	4.2			3.7	LTG: Bathroom Corridors	3.0			20	1	8
9	20	1	3.1			LTG: Café	3.9		4.9		2.3	LTG: Offices 210	1.8			20	1	10
11	20	1	0.9			LTG: Auditorium Bathrooms	1.1			3.4	3.2	LTG: Faculty Res./Bathrooms	2.5			20	1	12
13	20	1	0.4			LTG: N. Outdoor	0.6	2.7			2.8	LTG: AS-16d W. Auditorium	2.3			20	1	14
15	20	1	2.3			LTG: AS-16-d E. Auditorium	2.8		4.7		3.0	LTG: All other W. Auditorium	2.4			20	1	16
17	20	1	2.4			LTG: All other E. Auditorium	3.0			2.4	0.0	SPARE				20	1	18
19	20	1				SPARE	0.0	0.0			0.0	SPARE				20	1	20
21	20	1				SPARE	0.0		0.0		0.0	SPARE				20	1	22
23	20	1				SPARE	0.0			0.0	0.0	SPARE				20	1	24
25	20	1				SPARE	0.0	0.0			0.0	SPARE				20	1	26
27	20	1				SPARE	0.0		0.0		0.0	SPARE				20	1	28
29	20	1				SPARE	0.0			0.0	0.0	SPARE				20	1	30
31	20	1				SPARE	0.0	0.0			0.0	SPARE				20	1	32
33	20	1				SPARE	0.0		0.0		0.0	SPARE				20	1	34
35	20	1				SPARE	0.0			0.0	0.0	SPARE				20	1	36
37	20	1				SPARE	0.0	0.0			0.0	SPARE				20	1	38
39	20	1				SPARE	0.0		0.0		0.0	SPARE				20	1	40
41	20	1				SPARE	0.0			0.0	0.0	SPARE				20	1	42

TOTALS: CONNECTED kVA PER PHASE **12 15 12** — CONNECTED TOTAL kVA **39**
CONNECTED AMPS PER PHASE **45 54 42** — CONNECTED AVERAGE AMPS PER PHASE **47**

NEC DIVERSIFIED LOAD CALCULATIONS
LIGHTING 39kVA @125% = **49** kVA — ALL OTHER LOADS @100% = **0** kVA — DIVERSIFIED TOTAL kVA = **49**
RECEPTACLES 0kVA @100% = **0** kVA — 25% OF LARGEST MOTOR = **0** kVA — AVERAGE AMPS PER PHASE = **59**
REMAINDER 0kVA @ 50% = **0** kVA

COOPER ROBERTS SIMONSEN ASSOCIATES

crsa
700 North 200 West
Salt Lake City, UT 84103
(801) 355-5915 phone
(801) 355-9885 fax
crsa-us.com

SNOW COLLEGE

State of Utah-Department of Administrative Services
DIVISION OF FACILITIES CONSTRUCTION AND MANAGEMENT
4110 State Office Building/Salt Lake City, Utah 84114/538-3018

Civil Engineer
Great Basin Engineering
Contact: Dave Waldron
5746 South 1475 East, Suite 200
Ogden, UT 84403
(801) 521-0222 FAX (801) 392-7544
dave@gbenorth.com

Landscape Architect
G. Brown Design
Contact: Mathew Winward
610 E. South Temple, Suite 50
Salt Lake City, UT 84102
(801) 575-6066 FAX (801) 575-6166
mwinward@gbrowndesign.com

Structural Engineer
Reaveley Engineers
Contact: Cameron Empey
675 East 500 South, Suite 400
Salt Lake City, UT 84105
(801) 486-3883 FAX (801) 485-0911
cempey@reaveley.com

Mechanical Engineer
Van Boerum & Frank
Contact: Neil Spencer
330 South 300 East
Salt Lake City, UT 84111
(801) 530-3148 FAX (801) 910-9917
nspencer@vbfa.com

Electrical Engineer
Spectrum Engineers
Contact: Dave Wesemann, PE
175 South Main Street, Suite 300
Salt Lake City, UT 84111
(801) 328-5151 FAX (801) 328-5155
dew@spectrum-engineers.com

AV Consultant
Spectrum Engineers
Contact: Kurtis Dallinga, PE
175 South Main Street, Suite 300
Salt Lake City, UT 84111
(801) 328-5151 FAX (801) 328-5155
kdd@spectrum-engineers.com

Library Consultant
Michaels Associates Design Consultants, Inc.
Contact: Andrea Michaels
14809 North 73rd Street, Suite 100
Scottsdale, AZ 85260
(480) 998-7476 FAX (480) 998-9390
andrea@madcinc.com

STAMP:
LICENSED PROFESSIONAL ENGINEER
No. 181563
DAVID E. WESEMANN
STATE OF UTAH

PROJECT NAME:
Snow College Library
150 College Avenue
Ephraim, Utah 84627

REVISIONS:
100% CD, October 13, 2008
100% CD, September 15, 2008
100% CD Review, Aug 26, 2008
100% CD, June 25, 2008
100% CD Review, June 20, 2008
50% CD Review, May 27, 2008
CD Review Set, May 2, 2008
DD Set, April 18, 2008
DD Review, April 4, 2008

ISSUE DATE:
SEPTEMBER 15 2008, 100% CD

ARCHITECT'S PROJECT NUMBER:
B07-051

DFCM PROJECT NUMBER:
07258700

SHEET TITLE:
PANEL SCHEDULES

SHEET NUMBER:
EP-604

File Name: P:\2007\20070473\1Drawings\Sheet\73EP-604.dwg Last Plotted: 2008/10/14 @ 10:09 AM By: dlm

PANEL "2LA"

VOLTS/PHASE/WIRE:	PANEL SIZE & TYPE:	MAIN SIZE & TYPE:	LOCATION:	CABINET:	NOTES:
120/208 V, 3 PH 4 WIRE	22" W x 6" D, BOLT–ON	225 AMPERE MAIN LUG			

ACCESSORIES: PANEL DIRECTORY, IDENTIFICATION, GROUNDING BAR, INSULATED GROUND BAR, SUBFEED LUGS, 200% NEUTRAL

CKT	OCP		LOAD (kVA)			DESCRIPTION	LCL	PHASE LOAD			LCL	DESCRIPTION	LOAD (kVA)			OCP		CKT
NO	AMP	POLE	LTG	CO	PWR		kVA	A	B	C	kVA		LTG	CO	PWR	AMP	POLE	NO
1	20	1		1.0		CO: Conference Rm 202	1.0	1.8			0.8	CO: Conference Rm 202 PT		0.8		20	1	2
3	20	1		0.8		CO: Conference Rm 202	0.8		1.6		0.8	CO: Conference Rm 202 PT		0.8		20	1	4
5	20	1			0.8	PWR: Projector Conf. Rm. 202	0.8			1.6	0.8	CO: S. Reading Area		0.8		20	1	6
7	20	1		0.8		CO: S. Reading Area FB	0.8	1.6			0.8	CO: S. Reading Area		0.8		20	1	8
9	20	1		0.2		CO: S. Reading Area Kiosk	0.2		1.0		0.8	CO: E. Stair		0.8		20	1	10
11	20	1		0.2		CO: S. Reading Area Kiosk	0.2			0.8	0.6	CO: Between S. Reading & Stacks		0.6		20	1	12
13	20	1			0.5	PWR: AV Monitor S. Column	0.5	0.7			0.2	CO: Outdoor SE Corner		0.2		20	1	14
15	20	1		0.8		CO: FBs near E. Stairs	0.8		1.4		0.6	CO: S. Hall & Stair		0.6		20	1	16
17	20	1		0.6		CO: Café	0.6			1.4	0.8	CO: N. Wall		0.8		20	1	18
19	20	1		0.6		CO: Stacks Entry	0.6	1.2			0.6	CO: N. Wall		0.6		20	1	20
21	20	1				SPARE	0.0		0.6		0.6	CO: Outer Café Wall		0.6		20	1	22
23	20	1		0.2		CO: Kiosk near Entry	0.2			0.8	0.6	CO: NW Wall		0.6		20	1	24
25	20	1		0.2		CO: Kiosk near Entry	0.2	1.0			0.8	CO: NW Wall		0.8		20	1	26
27	20	1		0.6		CO: Outdoors along N. Wall	0.6		1.4		0.8	CO: NW Area		0.8		20	1	28
29	20	1		0.8		CO: Reading Room 212	0.8			1.6	0.8	CO: Room 212		0.8		20	1	30
31	20	1		1.0		CO: Offices 210	1.0	1.6			0.6	CO: Room 211		0.6		20	1	32
33	20	1		0.8		CO: Offices 210	0.8		1.6		0.8	CO: Offices 210		0.8		20	1	34
35	20	1		0.6		CO: Offices 210	0.6			1.4	0.8	CO: Offices 210		0.8		20	1	36
37	20	1		0.8		CO: Offices 210	0.8	1.4			0.6	CO: Offices 210		0.6		20	1	38
39	20	1		0.4		CO: Offices 210	0.4		0.6		0.2	CO: Offices 210		0.2		20	1	40
41	20	1		0.6		CO: Offices 210	0.6			1.0	0.4	CO: Outside W. Wall		0.4		20	1	42
43	20	1			0.5	PWR: Drinking Fountain	0.5	1.1			0.6	CO: Bathrooms		0.6		20	1	44
45	20	1		1.0		CO: Visiting Faculty Rm 207	1.0		1.5		0.5	CO: Refrigerator			0.5	20	1	46
47	20	1		0.8		CO: Visiting Faculty Rm 207	0.8			1.0	0.2	CO: Break Room		0.2		20	1	48
49	20	1		0.8		CO: Visiting Faculty Rm 207	0.8	1.0			0.2	CO: Break Room		0.2		20	1	50
51	20	1		0.2		CO: Break Room	0.2		0.4		0.2	CO: Break Room		0.2		20	1	52
53	20	1		0.2		CO: Break Room	0.2			0.4	0.2	CO: Break Room		0.2		20	1	54
55	20	1			0.5	CO: Disposal	0.5	0.7			0.2	CO: Break Room		0.2		20	1	56
57	20	1	0.7			LTG: NW Track Lights	0.8		0.9		0.3	LTG: Café Track Lights	0.2			20	1	58
59	20	1	0.5			LTG: NW Track Lights	0.7			0.6	0.1	PWR: Projector Screen Control	0.1			20	1	60
61	20	1				SPARE	0.0	0.1			0.1	Fireplace			0.1	20	1	62
63	20	1				SPARE	0.0		0.0		0.0	SPARE				20	1	64
65	20	1		0.4		A/V EQUIPMENT RACK	0.4			0.4	0.0	SPARE				20	1	66
67	20	1				SPARE	0.0	0.0			0.0	SPARE				20	1	68
69	20	1				SPARE	0.0		0.0		0.0	SPARE				20	1	70
71	20	1				SPARE	0.0			0.0	0.0	SPARE				20	1	72
73	20	1				SPARE	0.0	0.0			0.0	SPARE				20	1	74
75	20	1				SPARE	0.0		0.0		0.0	SPARE				20	1	76
77	20	1				SPARE	0.0			0.0	0.0	SPARE				20	1	78
79	20	1				SPARE	0.0	0.0			0.0	SPARE				20	1	80
81	20	1				SPARE	0.0		0.0		0.0	SPARE				20	1	82
83	20	1				SPARE	0.0			0.0	0.0	SPARE				20	1	84

TOTALS: CONNECTED kVA PER PHASE **12 11 11** — CONNECTED TOTAL kVA **34**
CONNECTED AMPS PER PHASE **102 92 92** — CONNECTED AVERAGE AMPS PER PHASE **95**

NEC DIVERSIFIED LOAD CALCULATIONS

LIGHTING 2kVA @125% =	**2** kVA	ALL OTHER LOADS @100% =	**3** kVA	DIVERSIFIED TOTAL kVA =	**25**
RECEPTACLES 10kVA @100% =	**10** kVA	25% OF LARGEST MOTOR =	**0** kVA	AVERAGE AMPS PER PHASE =	**69**
REMAINDER 20kVA @ 50% =	**10** kVA				

PANEL "2LB"

VOLTS/PHASE/WIRE:	PANEL SIZE & TYPE:	MAIN SIZE & TYPE:	LOCATION:	CABINET:	NOTES:
120/208 V, 3 PH 4 WIRE	22" W x 6" D, BOLT–ON	225 AMPERE MAIN LUG			

ACCESSORIES: PANEL DIRECTORY, IDENTIFICATION, GROUNDING BAR, INSULATED GROUND BAR, SUBFEED LUGS, 200% NEUTRAL

CKT	OCP		LOAD (kVA)			DESCRIPTION	LCL	PHASE LOAD			LCL	DESCRIPTION	LOAD (kVA)			OCP		CKT
NO	AMP	POLE	LTG	CO	PWR		kVA	A	B	C	kVA		LTG	CO	PWR	AMP	POLE	NO
1	20	2			0.8	FP–3	0.8	2.0			1.2	EF–2			1.2	20	1	2
3	–	–			0.8	–	0.8		1.3		0.5	SMOKE DAMPERS/MAGS			0.5	20	1	4
5	20	2			0.8	FP–4	0.8			0.8	0.0	SPARE				20	1	6
7	–	–			0.8	–	0.8	0.8			0.0	SPARE				20	1	8
9	15	1			0.2	CUH–1	0.2		0.2		0.0	SPARE				20	1	10
11	15	1			0.2	CUH–2	0.2			0.2	0.0	SPARE				20	1	12
13	20	1				SPARE	0.0	0.0			0.0	SPARE				20	1	14
15	20	1				SPARE	0.0		0.0		0.0	SPARE				20	1	16
17	20	1				SPARE	0.0			0.0	0.0	SPARE				20	1	18
19	20	1				SPARE	0.0	0.0			0.0	SPARE				20	1	20
21	20	1				SPARE	0.0		0.0		0.0	SPARE				20	1	22
23	20	1				SPARE	0.0			0.0	0.0	SPARE				20	1	24
25	20	1				SPARE	0.0	0.0			0.0	SPARE				20	1	26
27	20	1				SPARE	0.0		0.0		0.0	SPARE				20	1	28
29	20	1				SPARE	0.0			0.0	0.0	SPARE				20	1	30
31	20	1				SPARE	0.0	0.0			0.0	SPARE				20	1	32
33	20	1				SPARE	0.0		0.0		0.0	SPARE				20	1	34
35	20	1				SPARE	0.0			0.0	0.0	SPARE				20	1	36
37	20	1				SPARE	0.0	0.0			0.0	SPARE				20	1	38
39	20	1				SPARE	0.0		0.0		0.0	SPARE				20	2	40
41	20	1				SPARE	0.0			0.0	0.0	SPARE				–	–	42

TOTALS: CONNECTED kVA PER PHASE **3 2 1** — CONNECTED TOTAL kVA **5**
CONNECTED AMPS PER PHASE **23 13 8** — CONNECTED AVERAGE AMPS PER PHASE **15**

NEC DIVERSIFIED LOAD CALCULATIONS

LIGHTING 0kVA @125% =	**0** kVA	ALL OTHER LOADS @100% =	**5** kVA	DIVERSIFIED TOTAL kVA =	**5**
RECEPTACLES 0kVA @100% =	**0** kVA	25% OF LARGEST MOTOR =	**0** kVA	AVERAGE AMPS PER PHASE =	**15**
REMAINDER 0kVA @ 50% =	**0** kVA				

PANEL "2LC"

VOLTS/PHASE/WIRE:	PANEL SIZE & TYPE:	MAIN SIZE & TYPE:	LOCATION:	CABINET:	NOTES:
120/208 V, 3 PH 4 WIRE	22" W x 6" D, BOLT–ON	225 AMPERE MAIN LUG			

ACCESSORIES: PANEL DIRECTORY, IDENTIFICATION, GROUNDING BAR, INSULATED GROUND BAR, SUBFEED LUGS, 200% NEUTRAL

CKT	OCP		LOAD (kVA)			DESCRIPTION	LCL	PHASE LOAD			LCL	DESCRIPTION	LOAD (kVA)			OCP		CKT
NO	AMP	POLE	LTG	CO	PWR		kVA	A	B	C	kVA		LTG	CO	PWR	AMP	POLE	NO
1	20	1		1.2		CO: Waiting Area	1.2	1.6			0.4	CO: Bathrooms		0.4		20	1	2
3	20	1		1.0		CO: W. Auditorium Wall	1.0		1.8		0.8	CO: E. Auditorium Wall		0.8		20	1	4
5	20	1			0.2	PWR: Projector Screen Control	0.2			0.8	0.6	CO: S. Auditorium Wall		0.6		20	1	6
7	20	1		0.6		CO: Electrical Room 213	0.6	1.0			0.4	CO: FB8		0.4		20	1	8
9	20	1		0.8		CO: Electrical Room 213	0.8		1.2		0.4	CO: FB8		0.4		20	1	10
11	20	1		0.8		CO: Electrical Room 213	0.8			1.2	0.4	CO: FB8		0.4		20	1	12
13	20	1		1.0		CO: Furniture Connections	1.0	2.0			1.0	CO: Furniture Connections		1.0		20	1	14
15	20	1		1.0		CO: Furniture Connections	1.0		2.0		1.0	CO: Furniture Connections		1.0		20	1	16
17	20	1		1.0		CO: Furniture Connections	1.0			2.0	1.0	CO: Furniture Connections		1.0		20	1	18
19	20	1		1.0		CO: Furniture Connections	1.0	2.0			1.0	CO: Furniture Connections		1.0		20	1	20
21	20	1		1.0		CO: Furniture Connections	1.0		2.0		1.0	CO: Furniture Connections		1.0		20	1	22
23	20	1		1.0		CO: Furniture Connections	1.0			2.0	1.0	CO: Furniture Connections		1.0		20	1	24
25	20	1		1.0		CO: Furniture Connections	1.0	2.0			1.0	CO: Furniture Connections		1.0		20	1	26
27	20	1		1.0		CO: Furniture Connections	1.0		2.0		1.0	CO: Furniture Connections		1.0		20	1	28
29	20	1		1.0		CO: Furniture Connections	1.0			2.0	1.0	CO: Furniture Connections		1.0		20	1	30
31	20	1		1.0		CO: Furniture Connections	1.0	2.0			1.0	CO: Furniture Connections		1.0		20	1	32
33	20	1		1.0		CO: Furniture Connections	1.0		2.0		1.0	CO: Furniture Connections		1.0		20	1	34
35	20	1		1.0		CO: Furniture Connections	1.0			2.0	1.0	CO: Furniture Connections		1.0		20	1	36
37	20	1		1.0		CO: Furniture Connections	1.0	2.0			1.0	CO: Furniture Connections		1.0		20	1	38
39	20	1		1.0		CO: Furniture Connections	1.0		2.0		1.0	CO: Furniture Connections		1.0		20	1	40
41	20	1		1.0		CO: Furniture Connections	1.0			2.0	1.0	CO: Furniture Connections		1.0		20	1	42
43	20	1		1.0		CO: Furniture Connections	1.0	2.0			1.0	CO: Furniture Connections		1.0		20	1	44
45	20	1		1.0		CO: Furniture Connections	1.0		2.0		1.0	CO: Furniture Connections		1.0		20	1	46
47	20	1		1.0		CO: Furniture Connections	1.0			2.0	1.0	CO: Furniture Connections		1.0		20	1	48
49	20	1		1.0		CO: Furniture Connections	1.0	2.0			1.0	CO: Furniture Connections		1.0		20	1	50
51	20	1		1.0		CO: Furniture Connections	1.0		2.0		1.0	CO: Furniture Connections		1.0		20	1	52
53	20	1			0.8	PWR: Ceiling Projector	0.8			1.6	0.8	PWR: Ceiling Projector			0.8	20	1	54
55	20	1			0.2	SMOKE DAMPERS	0.2	0.2			0.0	SPARE				20	1	56
57	20	1		0.2		CHILLER OUTLET	0.2		0.2		0.0	SPARE				20	1	58
59	20	1			0.5	CHILLER CONTROL	0.5			0.5	0.0	SPARE				20	1	60
61	20	1				SPARE	0.0	0.0			0.0	SPARE				20	1	62
63	20	1				SPARE	0.0		0.0		0.0	SPARE				20	1	64
65	20	1				SPARE	0.0			0.0	0.0	SPARE				20	1	66
67	20	1				SPARE	0.0	0.0			0.0	SPARE				20	1	68
69	20	1				SPARE	0.0		0.0		0.0	SPARE				20	1	70
71	20	1				SPARE	0.0			0.0	0.0	SPARE				20	1	72
73	20	1				SPARE	0.0	0.0			0.0	SPARE				20	1	74
75	20	1				SPARE	0.0		0.0		0.0	SPARE				20	1	76
77	20	1				SPARE	0.0			0.0	0.0	SPARE				20	1	78
79	20	1				SPARE	0.0	0.0			0.0	SPARE				20	1	80
81	20	1				SPARE	0.0		0.0		0.0	SPARE				20	1	82
83	20	1				SPARE	0.0			0.0	0.0	SPARE				20	1	84

TOTALS: CONNECTED kVA PER PHASE **17 17 16** — CONNECTED TOTAL kVA **50**
CONNECTED AMPS PER PHASE **140 143 134** — CONNECTED AVERAGE AMPS PER PHASE **139**

NEC DIVERSIFIED LOAD CALCULATIONS

LIGHTING 0kVA @125% =	**0** kVA	ALL OTHER LOADS @100% =	**3** kVA	DIVERSIFIED TOTAL kVA =	**31**
RECEPTACLES 10kVA @100% =	**10** kVA	25% OF LARGEST MOTOR =	**0** kVA	AVERAGE AMPS PER PHASE =	**87**
REMAINDER 38kVA @ 50% =	**19** kVA				

PANEL "3HA"

VOLTS/PHASE/WIRE:	PANEL SIZE & TYPE:	MAIN SIZE & TYPE:	LOCATION:	CABINET:	NOTES:
277/480 V, 3 PH 4 WIRE	22" W x 6" D, BOLT–ON	125 AMPERE MAIN LUGS			

ACCESSORIES: PANEL DIRECTORY, IDENTIFICATION, GROUNDING BAR

CKT	OCP		LOAD (kVA)			DESCRIPTION	LCL	PHASE LOAD			LCL	DESCRIPTION	LOAD (kVA)			OCP		CKT
NO	AMP	POLE	LTG	CO	PWR		kVA	A	B	C	kVA		LTG	CO	PWR	AMP	POLE	NO
1	20	1	2.8			LTG: S. Reading Area	3.5	4.0			1.5	LTG: N. Reading Area	1.2			20	1	2
3	20	1	3.4			LTG: Central Stacks	4.3		4.5		1.3	LTG: N. Reading Area	1.1			20	1	4
5	20	1	2.8			LTG: Central Stacks, Corridor	3.5			3.9	1.4	LTG: N. Reading Area	1.1			20	1	6
7	20	1	1.0			LTG: Group Study/NW Corner	1.2	1.3			0.4	LTG: W. Window Area	0.3			20	1	8
9	20	1	2.8			LTG: W. Reading Room	3.5		2.8		0.0	SPARE				20	1	10
11	20	1	1.5			LTG: Bathrooms	1.9			1.5	0.0	SPARE				20	1	12
13	20	1				SPARE	0.0	0.0			0.0	SPARE				20	1	14
15	20	1				SPARE	0.0		0.0		0.0	SPARE				20	1	16
17	20	1				SPARE	0.0			0.0	0.0	SPARE				20	1	18
19	20	1				SPARE	0.0	0.0			0.0	SPARE				20	1	20
21	20	1				SPARE	0.0		0.0		0.0	SPARE				20	1	22
23	20	1				SPARE	0.0			0.0	0.0	SPARE				20	1	24
25	20	1				SPARE	0.0	0.0			0.0	SPARE				20	1	26
27	20	1				SPARE	0.0		0.0		0.0	SPARE				20	1	28
29	20	1				SPARE	0.0			0.0	0.0	SPARE				20	1	30
31	20	1				SPARE	0.0	0.0			0.0	SPARE				20	1	32
33	20	1				SPARE	0.0		0.0		0.0	SPARE				20	1	34
35	20	1				SPARE	0.0			0.0	0.0	SPARE				20	1	36
37	20	1				SPARE	0.0	0.0			0.0	SPARE				20	1	38
39	20	1				SPARE	0.0		0.0		0.0	SPARE				20	1	40
41	20	1				SPARE	0.0			0.0	0.0	SPARE				20	1	42

TOTALS: CONNECTED kVA PER PHASE **5 7 5** — CONNECTED TOTAL kVA **18**
CONNECTED AMPS PER PHASE **19 26 20** — CONNECTED AVERAGE AMPS PER PHASE **22**

NEC DIVERSIFIED LOAD CALCULATIONS

LIGHTING 18kVA @125% =	**22** kVA	ALL OTHER LOADS @100% =	**0** kVA	DIVERSIFIED TOTAL kVA =	**22**
RECEPTACLES 0kVA @100% =	**0** kVA	25% OF LARGEST MOTOR =	**0** kVA	AVERAGE AMPS PER PHASE =	**27**
REMAINDER 0kVA @ 50% =	**0** kVA				

PANEL "3LA"

VOLTS/PHASE/WIRE:	PANEL SIZE & TYPE:	MAIN SIZE & TYPE:	LOCATION:	CABINET:	NOTES:
120/208 V, 3 PH 4 WIRE	22" W x 6" D, BOLT–ON	225 AMPERE MAIN LUG			

ACCESSORIES: PANEL DIRECTORY, IDENTIFICATION, GROUNDING BAR, INSULATED GROUND BAR, SUBFEED LUGS, 200% NEUTRAL

CKT	OCP		LOAD (kVA)			DESCRIPTION	LCL	PHASE LOAD			LCL	DESCRIPTION	LOAD (kVA)			OCP		CKT
NO	AMP	POLE	LTG	CO	PWR		kVA	A	B	C	kVA		LTG	CO	PWR	AMP	POLE	NO
1	20	1		0.4		CO: Patio	0.4	1.0			0.6	CO: SE Reading Area		0.6		20	1	2
3	20	1		0.8		CO: SE Reading Area FB	0.8		1.4		0.6	CO: SE Reading Area		0.6		20	1	4
5	20	1		0.8		CO: SE Reading Area FB	0.8			1.3	0.5	PWR: SE Reading Area Monitor			0.5	20	1	6
7	20	1		0.8		CO: SE Reading Area FB	0.8	1.3			0.5	PWR: SE Reading Area Monitor			0.5	20	1	8
9	20	1		0.4		CO: SE Reading Area FB	0.4		1.0		0.6	CO: SE Reading Area		0.6		20	1	10
11	20	1		0.8		CO: SE Reading Area FB	0.8			1.6	0.8	CO: S Reading Area		0.8		20	1	12
13	20	1		0.8		CO: S Reading Area FB	0.8	1.4			0.6	CO: SE Reading Area		0.6		20	1	14
15	20	1		0.8		CO: S Reading Area FB	0.8		1.2		0.4	CO: SE Reading Area Kiosks		0.4		20	1	16
17	20	1		0.8		CO: S Reading Area FB	0.8			1.6	0.8	CO: Group Study 302		0.8		20	1	18
19	20	1		0.2		CO: Near S. Reading Area	0.2	0.7			0.5	PWR: Group Study 302 Monitor			0.5	20	1	20
21	20	1		0.2		CO: Kiosk near S. Stair	0.2		1.0		0.8	CO: Stacks		0.8		20	1	22
23	20	1		0.2		CO: Kiosk near S. Stair	0.2			1.0	0.8	CO: Near Bathrooms		0.8		20	1	24
25	20	1		0.6		CO: NE Reading Area	0.6	1.4			0.8	CO: NE Reading Area FB		0.8		20	1	26
27	20	1		0.6		CO: NE Reading Area	0.6		1.4		0.8	CO: NE Reading Area FB		0.8		20	1	28
29	20	1		0.6		CO: NE Reading Area	0.6			1.4	0.8	CO: NE Reading Area FB		0.8		20	1	30
31	20	1			0.5	PWR: AV Monitor NE Reading Area	0.5	0.7			0.2	CO: Outside N. Wall		0.2		20	1	32
33	20	1			0.5	PWR: AV Monitor NE Reading Area	0.5		1.3		0.8	CO: N Reading Area FB		0.8		20	1	34
35	20	1		0.6		CO: NE Reading Area	0.6			1.4	0.8	CO: N Reading Area FB		0.8		20	1	36
37	20	1		1.0		CO: N Reading Area	1.0	1.6			0.6	CO: Outside Wall Rm 301		0.6		20	1	38
39	20	1		0.6		CO: Group Study 301	0.6		0.8		0.2	CO: NE Kiosk		0.2		20	1	40
41	20	1			0.5	PWR: AV Monitor Rm 301	0.5			0.7	0.2	CO: NE Kiosk		0.2		20	1	42
43	20	1		0.6		CO: Outside Wall Rm 311	0.6	1.2			0.6	CO: Group Study 311		0.6		20	1	44
45	20	1		0.2		CO: Outside Wall Rm 311	0.2		0.7		0.5	PWR: Group Study 311 Monitor			0.5	20	1	46
47	20	1		0.2		CO: Outside Wall Rm 311	0.2			1.0	0.8	CO: Bathrooms		0.8		20	1	48
49	20	1		0.6		CO: W. Reading Room	0.6	1.1			0.5	PWR: Drinking Fountain			0.5	20	1	50
51	20	1		0.8		CO: W. Reading Room	0.8		1.8		1.0	CO: Reception Room 312		1.0		20	1	52
53	20	1		1.0		CO: W. Reading Room	1.0			2.2	1.2	CO: Director's Office 313		1.2		20	1	54
55	20	1		0.8		CO: W. Reading Room FB	0.8	1.6			0.8	CO: W. Reading Room FB		0.8		20	1	56
57	20	1		0.8		CO: W. Reading Room FB	0.8		1.4		0.6	CO: W. Reading Room		0.6		20	1	58
59	20	1		0.8		CO: W. Reading Room FB	0.8			1.8	1.0	CO: W. Reading Room		1.0		20	1	60
61	20	1	0.3			LTG: Tracklight NE Corner	0.4	1.1			0.9	LTG: N. Reading Rm Tracklight	0.8			20	1	62
63	20	1	0.3			LTG: Tracklight SE Corner	0.4		0.8		0.5	PWR: AV Monitor W. Stacks			0.5	20	1	64
65	20	1		0.4		CO: PT Room 302	0.4			0.9	0.5	STACKS 300 A/V MONITOR			0.5	20	1	66
67	20	1		0.4		CO: PT Room 301	0.4	0.4			0.0	SPARE				20	1	68
69	20	1		0.4		CO: PT Room 311	0.4		0.4		0.0	SPARE				20	1	70
71	20	1		0.4		CO: PT Room 313	0.4			0.4	0.0	SPARE				20	1	72
73	20	1				SPARE	0.0	0.0			0.0	SPARE				20	1	74
75	20	1				SPARE	0.0		0.0		0.0	SPARE				20	1	76
77	20	1				SPARE	0.0			0.0	0.0	SPARE				20	1	78
79	20	1				SPARE	0.0	0.0			0.0	SPARE				20	1	80
81	20	1				SPARE	0.0		0.0		0.0	SPARE				20	1	82
83	20	1				SPARE	0.0			0.0	0.0	SPARE				20	1	84

TOTALS: CONNECTED kVA PER PHASE **13 13 15** — CONNECTED TOTAL kVA **42**
CONNECTED AMPS PER PHASE **112 110 128** — CONNECTED AVERAGE AMPS PER PHASE **117**

NEC DIVERSIFIED LOAD CALCULATIONS

LIGHTING 1kVA @125% =	**2** kVA	ALL OTHER LOADS @100% =	**5** kVA	DIVERSIFIED TOTAL kVA =	**29**
RECEPTACLES 10kVA @100% =	**10** kVA	25% OF LARGEST MOTOR =	**0** kVA	AVERAGE AMPS PER PHASE =	**82**
REMAINDER 26kVA @ 50% =	**13** kVA				

PANEL "3LB"

VOLTS/PHASE/WIRE:	PANEL SIZE & TYPE:	MAIN SIZE & TYPE:	LOCATION:	CABINET:	NOTES:
120/208 V, 3 PH 4 WIRE	22" W x 6" D, BOLT–ON	225 AMPERE MAIN LUG			

ACCESSORIES: PANEL DIRECTORY, IDENTIFICATION, GROUNDING BAR, INSULATED GROUND BAR, SUBFEED LUGS, 200% NEUTRAL

CKT	OCP		LOAD (kVA)			DESCRIPTION	LCL	PHASE LOAD			LCL	DESCRIPTION	LOAD (kVA)			OCP		CKT
NO	AMP	POLE	LTG	CO	PWR		kVA	A	B	C	kVA		LTG	CO	PWR	AMP	POLE	NO
1	20	2			0.8	FP–5	0.8	0.8			0.0	SMOKE DAMPERS/MAGS				20	1	2
3	–	–			0.8	–	0.8		0.8		0.0	SPARE				20	1	4
5	20	2			0.8	FP–6	0.8			0.8	0.0	SPARE				20	1	6
7	–	–			0.8	–	0.8	0.8			0.0	SPARE				20	1	8
9	20	1				SPARE	0.0		0.0		0.0	SPARE				20	1	10
11	20	1				SPARE	0.0			0.0	0.0	SPARE				20	1	12
13	20	1				SPARE	0.0	0.0			0.0	SPARE				20	1	14
15	20	1				SPARE	0.0		0.0		0.0	SPARE				20	1	16
17	20	1				SPARE	0.0			0.0	0.0	SPARE				20	1	18
19	20	1				SPARE	0.0	0.0			0.0	SPARE				20	1	20
21	20	1				SPARE	0.0		0.0		0.0	SPARE				20	1	22
23	20	1				SPARE	0.0			0.0	0.0	SPARE				20	1	24
25	20	1				SPARE	0.0	0.0			0.0	SPARE				20	1	26
27	20	1				SPARE	0.0		0.0		0.0	SPARE				20	1	28
29	20	1				SPARE	0.0			0.0	0.0	SPARE				20	1	30
31	20	1				SPARE	0.0	0.0			0.0	SPARE				20	1	32
33	20	1				SPARE	0.0		0.0		0.0	SPARE				20	1	34
35	20	1				SPARE	0.0			0.0	0.0	SPARE				20	1	36
37	20	1				SPARE	0.0	0.0			0.0	SPARE				20	1	38
39	20	1				SPARE	0.0		0.0		0.0	SPARE				20	1	40
41	20	1				SPARE	0.0			0.0	0.0	SPARE				20	1	42

TOTALS: CONNECTED kVA PER PHASE **2 1 1** — CONNECTED TOTAL kVA **3**
CONNECTED AMPS PER PHASE **13 7 7** — CONNECTED AVERAGE AMPS PER PHASE **9**

NEC DIVERSIFIED LOAD CALCULATIONS

LIGHTING 0kVA @125% =	**0** kVA	ALL OTHER LOADS @100% =	**3** kVA	DIVERSIFIED TOTAL kVA =	**3**
RECEPTACLES 0kVA @100% =	**0** kVA	25% OF LARGEST MOTOR =	**0** kVA	AVERAGE AMPS PER PHASE =	**9**
REMAINDER 0kVA @ 50% =	**0** kVA				

COOPER ROBERTS SIMONSEN ASSOCIATES

crsa

700 North 200 West
Salt Lake City, UT 84103
(801) 355-5915 phone
(801) 355-9885 fax
crsa-us.com

SNOW COLLEGE

THE GREAT SEAL OF THE STATE OF UTAH 1896

State of Utah-Department of Administrative Services
DIVISION OF FACILITIES CONSTRUCTION AND MANAGEMENT
4110 State Office Building/Salt Lake City, Utah 84114/538-3018

Civil Engineer
Great Basin Engineering
Contact: Dave Waldron
5746 South 1475 East, Suite 200
Ogden, UT 84403
(801) 521-0222 FAX (801) 392-7544
dave@gbenorth.com

Landscape Architect
G. Brown Design
Contact: Mathew Winward
610 E. South Temple, Suite 50
Salt Lake City, UT 84102
(801) 575-6066 FAX (801) 575-6166
mwinward@gbrowndesign.com

Structural Engineer
Reaveley Engineers
Contact: Cameron Empey
675 East 500 South, Suite 400
Salt Lake City, UT 84105
(801) 486-3883 FAX (801) 485-0911
cempey@reaveley.com

Mechanical Engineer
Van Boerum & Frank
Contact: Neil Spencer
330 South 300 East
Salt Lake City, UT 84111
(801) 530-3148 FAX (801) 910-9917
nspencer@vbfa.com

Electrical Engineer
Spectrum Engineers
Contact: Dave Wesemann, PE
175 South Main Street, Suite 300
Salt Lake City, UT 84111
(801) 328-5151 FAX (801) 328-5155
dew@spectrum-engineers.com

AV Consultant
Spectrum Engineers
Contact: Kurtis Dallinga, PE
175 South Main Street, Suite 300
Salt Lake City, UT 84111
(801) 328-5151 FAX (801) 328-5155
kdd@spectrum-engineers.com

Library Consultant
Michaels Associates Design Consultants, Inc.
Contact: Andrea Michaels
14809 North 73rd Street, Suite 100
Scottsdale, AZ 85260
(480) 998-7476 FAX (480) 998-9390
andrea@madcinc.com

STAMP:
LICENSED PROFESSIONAL ENGINEER No. 181563 DAVID E. WESEMANN STATE OF UTAH

PROJECT NAME:
Snow College Library
150 College Avenue
Ephraim, Utah 84627

REVISIONS:
100% CD, October 13, 2008
100% CD, September 15, 2008
100% CD Review, Aug 26, 2008
100% CD, June 25, 2008
100% CD Review, June 20, 2008
50% CD Review, May 27, 2008
CD Review Set, May 2, 2008
DD Set, April 18, 2008
DD Review, April 4, 2008

ISSUE DATE:
SEPTEMBER 15 2008, 100% CD

ARCHITECT'S PROJECT NUMBER:
B07-051

DFCM PROJECT NUMBER:
07258700

SHEET TITLE:
PANEL SCHEDULES

SHEET NUMBER:
EP-605

File Name: P:\2007\20070473\1Drawings\Sheet\73EP-605.dwg Last Plotted: 2008/10/14 @ 10:09 AM By: dlm

PANEL "4HA"

VOLTS/PHASE/WIRE:	PANEL SIZE & TYPE:	MAIN SIZE & TYPE:	LOCATION:	CABINET:	NOTES:
277/480 V, 3 PH 4 WIRE	22" W x 6" D, BOLT–ON	125 AMPERE MAIN LUGS			

ACCESSORIES: PANEL DIRECTORY, IDENTIFICATION, GROUNDING BAR

CKT	OCP		LOAD (kVA)			DESCRIPTION	LCL	PHASE LOAD			LCL	DESCRIPTION	LOAD (kVA)			OCP		CKT
NO	AMP	POLE	LTG	CO	PWR		kVA	A	B	C	kVA		LTG	CO	PWR	AMP	POLE	NO
1	20	1	0.5			LTG: Base Bid Public Areas	0.6	2.5			2.5	LTG: Study Rooms	2.0			20	1	2
3	20	1	0.9			LTG: Bathrooms	1.1		3.6		3.4	LTG: Central Area	2.7			20	1	4
5	20	1	2.7			LTG: Mech Rooms	3.4			5.4	3.4	LTG: Central Area	2.7			20	1	6
7	20	1	2.1			LTG: Skylights	2.6	2.1			0.0	SPARE				20	1	8
9	20	1	3.2			LTG: Skylights	4.0		3.2		0.0	SPARE				20	1	10
11	20	1				SPARE	0.0			0.0	0.0	SPARE				20	1	12
13	20	1				SPARE	0.0	0.0			0.0	SPARE				20	1	14
15	20	1				SPARE	0.0		0.0		0.0	SPARE				20	1	16
17	20	1				SPARE	0.0			0.0	0.0	SPARE				20	1	18
19	20	1				SPARE	0.0	0.0			0.0	SPARE				20	1	20
21	20	1				SPARE	0.0		0.0		0.0	SPARE				20	1	22
23	20	1				SPARE	0.0			0.0	0.0	SPARE				20	1	24
25	20	1				SPARE	0.0	0.0			0.0	SPARE				20	1	26
27	20	1				SPARE	0.0		0.0		0.0	SPARE				20	1	28
29	20	1				SPARE	0.0			0.0	0.0	SPARE				20	1	30
31	20	1				SPARE	0.0	0.0			0.0	SPARE				20	1	32
33	20	1				SPARE	0.0		0.0		0.0	SPARE				20	1	34
35	20	1				SPARE	0.0			0.0	0.0	SPARE				20	1	36
37	20	1				SPARE	0.0	0.0			0.0	SPARE				20	1	38
39	20	1				SPARE	0.0		0.0		0.0	SPARE				20	1	40
41	20	1				SPARE	0.0			0.0	0.0	SPARE				20	1	42
TOTALS:						CONNECTED kVA PER PHASE		5	7	5		CONNECTED TOTAL kVA				17		
						CONNECTED AMPS PER PHASE		17	25	20		CONNECTED AVERAGE AMPS PER PHASE				20		

NEC DIVERSIFIED LOAD CALCULATIONS

LIGHTING 17kVA @125% =	21 kVA	ALL OTHER LOADS @100% =	0 kVA	DIVERSIFIED TOTAL kVA =	21
RECEPTACLES 0kVA @100% =	0 kVA	25% OF LARGEST MOTOR =	0 kVA	AVERAGE AMPS PER PHASE =	25
REMAINDER 0kVA @ 50% =	0 kVA				

PANEL "4LA"

VOLTS/PHASE/WIRE:	PANEL SIZE & TYPE:	MAIN SIZE & TYPE:	LOCATION:	CABINET:	NOTES:
120/208 V, 3 PH 4 WIRE	22" W x 6" D, BOLT–ON	225 AMPERE MAIN LUG			

ACCESSORIES: PANEL DIRECTORY, IDENTIFICATION, GROUNDING BAR, INSULATED GROUND BAR, SUBFEED LUGS, 200% NEUTRAL

CKT	OCP		LOAD (kVA)			DESCRIPTION	LCL	PHASE LOAD			LCL	DESCRIPTION	LOAD (kVA)			OCP		CKT
NO	AMP	POLE	LTG	CO	PWR		kVA	A	B	C	kVA		LTG	CO	PWR	AMP	POLE	NO
1	20	1			0.5	ATC PANEL	0.5	0.6			0.1	WATER SOFTENER			0.1	20	1	2
3	20	1			0.5	AH–1 CONTROL POWER	0.5		1.5		1.0	CO: Storage Rm 410, Hallway		1.0		20	1	4
5	20	1			0.5	AH–1 CONTROL POWER	0.5			1.3	0.8	CO: N. Columns		0.8		20	1	6
7	20	1		0.4		CO: Bathrooms	0.4	1.2			0.8	CO: N. Columns		0.8		20	1	8
9	20	1		0.6		CO: S. Columns	0.6		1.1		0.5	PWR: Drinking Fountain			0.5	20	1	10
11	20	1		0.4		CO: S. Columns	0.4			1.2	0.8	CO: SE Group Study Room		0.8		20	1	12
13	20	1		0.8		CO: NE Group Study Rooms	0.8	1.6			0.8	CO: S. Group Study Rooms		0.8		20	1	14
15	20	1		0.8		CO: Large Group Study Room	0.8		1.6		0.8	CO: NW Group Study Rooms		0.8		20	1	16
17	20	1		0.8		CO: Large Group Study Rm PT	0.8			1.3	0.5	PWR: Drinking Fountain			0.5	20	1	18
19	20	1		0.4		CO: PT Reading Area	0.4	0.9			0.5	SPARE			0.5	20	1	20
21	20	1		0.4		CO: PT Reading Area	0.4		1.0		0.6	CO: Mech. Room		0.6		20	1	22
23	20	1		0.4		CO: PT Reading Area	0.4			1.0	0.6	CO: Mech. Room		0.6		20	1	24
25	20	1		0.4		CO: PT Reading Area	0.4	1.0			0.6	CO: Mech. Room		0.6		20	1	26
27	20	1		0.4		CO: PT Reading Area	0.4		1.0		0.6	CO: Mech. Room		0.6		20	1	28
29	20	1				SPARE	0.0			0.6	0.6	CO: Mech. Room		0.6		20	1	30
31	20	1				SPARE	0.0	0.6			0.6	CO: Mech. Room		0.6		20	1	32
33	20	1				SPARE	0.0		0.6		0.6	CO: Mech. Room		0.6		20	1	34
35	20	1				SPARE	0.0			0.0	0.0	SPARE				20	1	36
37	20	2			1.0	EF–1	1.0	1.2			0.2	UNIT HEATER			0.2	20	1	38
39	–	–			1.0	–	1.0		1.2		0.2	UNIT HEATER			0.2	20	1	40
41	20	1		0.4		ROOF OUTLETS	0.4			0.6	0.2	UNIT HEATER			0.2	20	1	42
43	20	1				SMOKE DAMPERS	0.0	1.0			1.0	Roof Heat Trace (30mA FGI)			1.0	20	1GFI	44
45	20	1			0.2	GPS CLOCK TRANSMITTER	0.2		1.2		1.0	Roof Heat Trace (30mA FGI)			1.0	20	1GFI	46
47	20	1	0.5			STAIR CHANDALIER	0.6			1.5	1.0	Roof Heat Trace (30mA FGI)			1.0	20	1GFI	48
49	20	1	1.0			AH–1 LIGHTS	1.3	2.0			1.0	Roof Heat Trace (30mA FGI)			1.0	20	1GFI	50
51	20	1	1.0			AH–2 LIGHTS	1.3		2.0		1.0	Roof Heat Trace (30mA FGI)			1.0	20	1GFI	52
53	20	1				SPARE	0.0			1.0	1.0	Roof Heat Trace (30mA FGI)			1.0	20	1GFI	54
55	20	1				SPARE	0.0	0.0			0.0	SPARE				20	1	56
57	20	1				SPARE	0.0		0.0		0.0	SPARE				20	1	58
59	20	1				SPARE	0.0			0.0	0.0	SPARE				20	1	60
61	20	1				SPARE	0.0	0.0			0.0	SPARE				20	1	62
63	20	1				SPARE	0.0		0.0		0.0	SPARE				20	1	64
65	20	1				SPARE	0.0			0.0	0.0	SPARE				20	1	66
67	20	1				SPARE	0.0	0.0			0.0	SPARE				20	1	68
69	20	1				SPARE	0.0		0.0		0.0	SPARE				20	1	70
71	20	1				SPARE	0.0			0.0	0.0	SPARE				20	1	72
73	20	1				SPARE	0.0	0.0			0.0	SPARE				20	1	74
75	20	1				SPARE	0.0		0.0		0.0	SPARE				20	1	76
77	20	1				SPARE	0.0			0.0	0.0	SPARE				20	1	78
79	20	1				SPARE	0.0	0.0			0.0	SPARE				20	1	80
81	20	1				SPARE	0.0		0.0		0.0	SPARE				20	1	82
83	20	1				SPARE	0.0			0.0	0.0	SPARE				20	1	84
TOTALS:						CONNECTED kVA PER PHASE		10	11	9		CONNECTED TOTAL kVA				30		
						CONNECTED AMPS PER PHASE		84	93	71		CONNECTED AVERAGE AMPS PER PHASE				83		

NEC DIVERSIFIED LOAD CALCULATIONS

LIGHTING 3kVA @125% =	3 kVA	ALL OTHER LOADS @100% =	12 kVA	DIVERSIFIED TOTAL kVA =	28
RECEPTACLES 10kVA @100% =	10 kVA	25% OF LARGEST MOTOR =	0 kVA	AVERAGE AMPS PER PHASE =	77
REMAINDER 5kVA @ 50% =	3 kVA				

PANEL "EH"

VOLTS/PHASE/WIRE:	PANEL SIZE & TYPE:	MAIN SIZE & TYPE:	LOCATION:	CABINET:	NOTES:
277/480 V, 3 PH 4 WIRE	22" W x 6" D,FUSIBLE	100 AMPERE MAIN LUGS			

ACCESSORIES: PANEL DIRECTORY, IDENTIFICATION, GROUNDING BAR, SUBFEED LUGS, HINGED FRONT COVER

CKT	OCP		LOAD (kVA)			DESCRIPTION	LCL	PHASE LOAD			LCL	DESCRIPTION	LOAD (kVA)			OCP		CKT
NO	AMP	POLE	LTG	CO	PWR		kVA	A	B	C	kVA		LTG	CO	PWR	AMP	POLE	NO
1	20	1	2.3			LTG: Lower Level EM	2.9	4.1			2.3	LTG: East Stairs EM	1.8			20	1	2
3	20	1	1.4			LTG: Lower Level EM	1.8		3.4		2.5	OUTDOOR EM LIGHTS	2.0			20	1	4
5	20	1	1.0			LTG: South Stairs EM	1.2			3.3	2.9	LTG: Auditorium & Waiting	2.3			20	1	6
7	20	1	1.5			LTG: Main Level EM	1.9	3.6			2.7	LTG: Main Level EM	2.1			20	1	8
9	20	1	1.9			SPARE	2.4		3.9		2.4	LTG: Main Level EM	1.9			20	1	10
11	20	1	1.8			LTG: Upper Level EM	2.2			3.3	1.8	LTG: Attic Alternate Bid EM	1.5			20	1	12
13	20	1	2.0			LTG: Upper Level EM	2.5	3.6			2.0	LTG: Attic Base Bid EM	1.6			20	1	14
15	20	1	1.4			TUNNEL LIGHTS	1.8		1.4		0.0	SPARE				20	1	16
17	20	1				SPARE	0.0			0.0	0.0	SPARE				20	1	18
19	20	1				SPARE	0.0	0.0			0.0	SPARE				20	1	20
21	20	1				SPARE	0.0		0.0		0.0	SPARE				20	1	22
23	20	1				SPARE	0.0			0.0	0.0	SPARE				20	1	24
25	20	1				SPARE	0.0	0.0			0.0	SPARE				20	1	26
27	20	1				SPARE	0.0		0.0		0.0	SPARE				20	1	28
29	20	1				SPARE	0.0			0.0	0.0	SPARE				20	1	30
31	20	1				SPARE	0.0	0.0			0.0	SPARE				20	1	32
33	20	1				SPARE	0.0		0.0		0.0	SPARE				20	1	34
35	20	1				SPARE	0.0			0.0	0.0	SPARE				20	1	36
37	50	3	0.0	0.6	5.2	EL thru TXFR TE	5.8	5.8			0.0	SPARE				20	1	38
39	–	–	0.0	1.2	3.5		4.7		4.7		0.0	SPARE				20	1	40
41	–	–	0.0	0.0	4.0		4.0			4.0	0.0	SPARE				20	1	42
TOTALS:						CONNECTED kVA PER PHASE		17	13	11		CONNECTED TOTAL kVA				41		
						CONNECTED AMPS PER PHASE		62	48	38		CONNECTED AVERAGE AMPS PER PHASE				49		

NEC DIVERSIFIED LOAD CALCULATIONS

LIGHTING 26kVA @125% =	33 kVA	ALL OTHER LOADS @100% =	13 kVA	DIVERSIFIED TOTAL kVA =	48
RECEPTACLES 2kVA @100% =	2 kVA	25% OF LARGEST MOTOR =	0 kVA	AVERAGE AMPS PER PHASE =	57
REMAINDER 0kVA @ 50% =	0 kVA				

PANEL "EL"

VOLTS/PHASE/WIRE:	PANEL SIZE & TYPE:	MAIN SIZE & TYPE:	LOCATION:	CABINET:	NOTES:
120/208 V, 3 PH 4 WIRE	22" W x 6" D,FUSIBLE	100 AMPERE MAIN FUSE			

ACCESSORIES: PANEL DIRECTORY, IDENTIFICATION, GROUNDING BAR, INSULATED GROUND BAR, SUBFEED LUGS, 200% NEUTRAL

CKT	OCP		LOAD (kVA)			DESCRIPTION	LCL	PHASE LOAD			LCL	DESCRIPTION	LOAD (kVA)			OCP		CKT
NO	AMP	POLE	LTG	CO	PWR		kVA	A	B	C	kVA		LTG	CO	PWR	AMP	POLE	NO
1	20	1		0.2		CO: Electrical Room 121	0.2	0.4			0.2	CO: Elev. Equipment Rm 116		0.2		20	1	2
3	20	1		0.2		CO: Elevator Shaft (1st)	0.2		0.4		0.2	CO: Electrical Room 121		0.2		20	1	4
5	20	1			0.2	PWR: Fire Gate (S. Stair, 1st)	0.2			0.4	0.2	PWR: Fire Gate (E. Stair, 1st)			0.2	20	1	6
7	20	1			0.2	PWR: Fire Gate (S. Stair, 2nd)	0.2	0.4			0.2	PWR: Fire Gate (E. Stair, 2nd)			0.2	20	1	8
9	20	1		0.2		CO: Electrical Room 209	0.2		0.4		0.2	CO: Electrical Room 309		0.2		20	1	10
11	20	1			0.2	PWR: Fire Gate (S. Stair 3rd)	0.2			0.4	0.2	PWR: Fire Gate (E. Stair, 3rd)			0.2	20	1	12
13	20	1		0.2		CO: Electrical Room 412	0.2	1.4			1.2	EF–5			1.2	20	1	14
15	20	1		0.2		CO: Electrical Room 1xx	0.2		0.4		0.2	OUTDOOR OUTLETS		0.2		20	1	16
17	20	1			0.2	PWR: Fire Gate (E. Stair, 4TH)	0.2			1.2	1.0	ELEVATOR CAR			1.0	20	1	18
19	20	1			0.5	MAIN FIRE ALARM PANEL	0.5	0.6			0.1	FIRE BELL			0.1	20	1	20
21	20	1			0.5	FIRE ALARM POWER	0.5		0.5		0.0	SPARE				20	1	22
23	20	1			0.5	FIRE ALARM POWER	0.5			0.5	0.0	SPARE				20	1	24
25	20	1			0.5	FIRE ALARM POWER	0.5	0.5			0.0	SPARE				20	1	26
27	20	1			0.5	ELEVATOR SMOKE CURTAIN	0.5		0.5		0.0	SPARE				20	1	28
29	20	1			0.5	ELEVATOR SMOKE CURTAIN	0.5			0.5	0.0	SPARE				20	1	30
31	20	1			0.5	ELEVATOR SMOKE CURTAIN	0.5	0.5			0.0	SPARE				20	1	32
33	20	1			0.5	ELEVATOR SMOKE CURTAIN	0.5		0.5		0.0	SPARE				20	1	34
35	20	1				SPARE	0.0			0.0	0.0	SPARE				20	1	36
37	20	1				SPARE	0.0	2.0			2.0	Generator Auxiliaries			2.0	30	2	38
39	20	1				SPARE	0.0		2.0		2.0	Generator Auxiliaries			2.0	–	–	40
41	20	1				SPARE	0.0			1.0	1.0	Generator Auxiliaries			1.0	20	1	42
TOTALS:						CONNECTED kVA PER PHASE		6	5	4		CONNECTED TOTAL kVA				15		
						CONNECTED AMPS PER PHASE		48	39	33		CONNECTED AVERAGE AMPS PER PHASE				40		

NEC DIVERSIFIED LOAD CALCULATIONS

LIGHTING 0kVA @125% =	0 kVA	ALL OTHER LOADS @100% =	13 kVA	DIVERSIFIED TOTAL kVA =	15
RECEPTACLES 2kVA @100% =	2 kVA	25% OF LARGEST MOTOR =	0 kVA	AVERAGE AMPS PER PHASE =	40
REMAINDER 0kVA @ 50% =	0 kVA				

PANEL "K"

VOLTS/PHASE/WIRE:	PANEL SIZE & TYPE:	MAIN SIZE & TYPE:	LOCATION:	CABINET:	NOTES:
120/208 V, 3 PH 4 WIRE	22" W x 6" D, BOLT–ON	225 AMPERE MAIN LUG			

ACCESSORIES: PANEL DIRECTORY, IDENTIFICATION, GROUNDING BAR, INSULATED GROUND BAR, SUBFEED LUGS, PANEL SKIRT

CKT	OCP		LOAD (kVA)			DESCRIPTION	LCL	PHASE LOAD			LCL	DESCRIPTION	LOAD (kVA)			OCP		CKT
NO	AMP	POLE	LTG	CO	PWR		kVA	A	B	C	kVA		LTG	CO	PWR	AMP	POLE	NO
1	20	1			0.9	PWR: Prep Table	0.9	1.1			0.2	CO: Above Prep Table		0.2		20	1	2
3	20	1			1.6	PWR: Glass Door Freezer	1.6		1.8		0.2	CO: Above Prep Table		0.2		20	1	4
5	20	1				PWR: Glass Door Fridge	0.0			0.2	0.2	CO: Above Prep Table		0.2		20	1	6
7	20	1			0.5	PWR: Coffee Brewer	0.5	0.9			0.4	CO: Cash Registers		0.4		20	1	8
9	20	1		0.2		CO: Near Coffee Brewer	0.2		0.9		0.7	PWR: UC Freezer			0.7	20	1	10
11	30	1			3.0	PWR: Ice Maker	3.0			3.2	0.2	CO: Next to Ice Cream		0.2		20	1	12
13	20	1		0.2		CO: Back Counter	0.2	0.4			0.2	CO: Back Counter		0.2		20	1	14
15	20	1		0.2		CO: Back Counter	0.2		0.4		0.2	CO: Back Counter		0.2		20	1	16
17	20	1			0.6	PWR: UC Refrigerator	0.6			0.8	0.2	CO: Soup Kettle		0.2		20	1	18
19	20	1		0.2		CO: Soup Kettle	0.2	2.8			2.6	PWR: Sonic Steamer Oven			2.6	30	2	20
21	20	1		0.2		CO: Coffee Warmer	0.2		2.8		2.6	–			2.6	–	–	22
23	20	1		0.2		CO: Coffee Warmer	0.2			2.8	2.6	PWR: Sonic Steamer Oven			2.6	30	2	24
25	30	2			3.1	PWR: Ice Cream Machine	3.1	5.7			2.6	–			2.6	–	–	26
27	–	–			3.1	–	3.1		4.3		1.2	PWR: E. Cold Case			1.2	20	2	28
29	20	2			1.2	PWR: W. Cold Case	1.2			2.4	1.2	–			1.2	–	–	30
31	–	–			1.2	–	1.2	2.2			1.0	J–BOX (FUTURE SIGN)			1.0	20	1	32
33	20	1		0.2		COUNTER OUTLET	0.2		0.2		0.0	SPARE				20	1	34
35	20	1				SPARE	0.0			0.0	0.0	SPARE				20	1	36
37	20	1				SPARE	0.0	0.0			0.0	SPARE				20	1	38
39	20	1				SPARE	0.0		0.0		0.0	SPARE				20	1	40
41	20	1				SPARE	0.0			0.0	0.0	SPARE				20	1	42
TOTALS:						CONNECTED kVA PER PHASE		13	10	9		CONNECTED TOTAL kVA				33		
						CONNECTED AMPS PER PHASE		110	87	78		CONNECTED AVERAGE AMPS PER PHASE				91		

NEC DIVERSIFIED LOAD CALCULATIONS

LIGHTING 0kVA @125% =	0 kVA	ALL OTHER LOADS @100% =	30 kVA	DIVERSIFIED TOTAL kVA =	33
RECEPTACLES 3kVA @100% =	3 kVA	25% OF LARGEST MOTOR =	0 kVA	AVERAGE AMPS PER PHASE =	91
REMAINDER 0kVA @ 50% =	0 kVA				

PANEL "SL"

VOLTS/PHASE/WIRE:	PANEL SIZE & TYPE:	MAIN SIZE & TYPE:	LOCATION:	CABINET:	NOTES:
120/208 V, 3 PH 4 WIRE	22" W x 6" D,FUSIBLE	100 AMPERE MAIN FUSE			

ACCESSORIES: PANEL DIRECTORY, IDENTIFICATION, GROUNDING BAR, INSULATED GROUND BAR, SUBFEED LUGS, 200% NEUTRAL

CKT	OCP		LOAD (kVA)			DESCRIPTION	LCL	PHASE LOAD			LCL	DESCRIPTION	LOAD (kVA)			OCP		CKT
NO	AMP	POLE	LTG	CO	PWR		kVA	A	B	C	kVA		LTG	CO	PWR	AMP	POLE	NO
1	20	3			0.5	EF–6	0.5	0.5			0.0	SPARE				20	1	2
3	–	–			0.5	–	0.5		0.5		0.0	SPARE				20	1	4
5	–	–			0.5	–	0.5			0.5	0.0	SPARE				20	1	6
7	20	1				SPARE	0.0	0.0			0.0	SPARE				20	1	8
9	20	1				SPARE	0.0		0.0		0.0	SPARE				20	1	10
11	20	1				SPARE	0.0			0.0	0.0	SPARE				20	1	12
13	20	1				SPARE	0.0	0.0			0.0	SPARE				20	1	14
15	20	1				SPARE	0.0		0.0		0.0	SPARE				20	1	16
17	20	1				SPARE	0.0			0.0	0.0	SPARE				20	1	18
19	20	1				SPARE	0.0	0.0			0.0	SPARE				20	1	20
TOTALS:						CONNECTED kVA PER PHASE		1	1	1		CONNECTED TOTAL kVA				2		
						CONNECTED AMPS PER PHASE		4	4	4		CONNECTED AVERAGE AMPS PER PHASE				4		

NEC DIVERSIFIED LOAD CALCULATIONS

LIGHTING 0kVA @125% =	0 kVA	ALL OTHER LOADS @100% =	2 kVA	DIVERSIFIED TOTAL kVA =	2
RECEPTACLES 0kVA @100% =	0 kVA	25% OF LARGEST MOTOR =	0 kVA	AVERAGE AMPS PER PHASE =	4
REMAINDER 0kVA @ 50% =	0 kVA				

PANEL "SH"

VOLTS/PHASE/WIRE:	PANEL SIZE & TYPE:	MAIN SIZE & TYPE:	LOCATION:	CABINET:	NOTES:
277/480 V, 3 PH 4 WIRE	22" W x 6" D,FUSIBLE	100 AMPERE MAIN LUGS			

ACCESSORIES: PANEL DIRECTORY, IDENTIFICATION, GROUNDING BAR, SUBFEED LUGS, HINGED FRONT COVER

CKT	OCP		LOAD (kVA)			DESCRIPTION	LCL	PHASE LOAD			LCL	DESCRIPTION	LOAD (kVA)			OCP		CKT
NO	AMP	POLE	LTG	CO	PWR		kVA	A	B	C	kVA		LTG	CO	PWR	AMP	POLE	NO
1	50	3	0.0	0.0	0.5	PANEL SL thru XFMR	0.5	0.5			0.0	SPARE				20	1	2
3	–	–	0.0	0.0	0.5	–	0.5		0.5		0.0	SPARE				20	1	4
5	–	–	0.0	0.0	0.5	–	0.5			0.5	0.0	SPARE				20	1	6
7	20	1				SPARE	0.0	0.0			0.0	SPARE				20	1	8
9	20	1				SPARE	0.0		0.0		0.0	SPARE				20	1	10
11	20	1				SPARE	0.0			0.0	0.0	SPARE				20	1	12
13	20	1				SPARE	0.0	0.0			0.0	SPARE				20	1	14
15	20	1				SPARE	0.0		0.0		0.0	SPARE				20	1	16
17	20	1				SPARE	0.0			0.0	0.0	SPARE				20	1	18
19	20	1				SPARE	0.0	0.0			0.0	SPARE				20	1	20
TOTALS:						CONNECTED kVA PER PHASE		1	1	1		CONNECTED TOTAL kVA				2		
						CONNECTED AMPS PER PHASE		2	2	2		CONNECTED AVERAGE AMPS PER PHASE				2		

NEC DIVERSIFIED LOAD CALCULATIONS

LIGHTING 0kVA @125% =	0 kVA	ALL OTHER LOADS @100% =	2 kVA	DIVERSIFIED TOTAL kVA =	2
RECEPTACLES 0kVA @100% =	0 kVA	25% OF LARGEST MOTOR =	0 kVA	AVERAGE AMPS PER PHASE =	2
REMAINDER 0kVA @ 50% =	0 kVA				

COOPER ROBERTS SIMONSEN ASSOCIATES

crsa

700 North 200 West
Salt Lake City, UT 84103
(801) 355-5915 phone
(801) 355-9885 fax
crsa-us.com

SNOW COLLEGE

THE GREAT SEAL OF THE STATE OF UTAH 1896

State of Utah-Department of Administrative Services

DIVISION OF FACILITIES CONSTRUCTION AND MANAGEMENT

4110 State Office Building/Salt Lake City, Utah 84114/538-3018

Civil Engineer

Great Basin Engineering
Contact: Dave Waldron
5746 South 1475 East, Suite 200
Ogden, UT 84403
(801) 521-0222 FAX (801) 392-7544
dave@gbenorth.com

Landscape Architect

G. Brown Design
Contact: Mathew Winward
610 E. South Temple, Suite 50
Salt Lake City, UT 84102
(801) 575-6066 FAX (801) 575-6166
mwinward@gbrowndesign.com

Structural Engineer

Reaveley Engineers
Contact: Cameron Empey
675 East 500 South, Suite 400
Salt Lake City, UT 84105
(801) 486-3883 FAX (801) 485-0911
cempey@reaveley.com

Mechanical Engineer

Van Boerum & Frank
Contact: Neil Spencer
330 South 300 East
Salt Lake City, UT 84111
(801) 530-3148 FAX (801) 910-9917
nspencer@vbfa.com

Electrical Engineer

Spectrum Engineers
Contact: Dave Wesemann, PE
175 South Main Street, Suite 300
Salt Lake City, UT 84111
(801) 328-5151 FAX (801) 328-5155
dew@spectrum-engineers.com

AV Consultant

Spectrum Engineers
Contact: Kurtis Dallinga, PE
175 South Main Street, Suite 300
Salt Lake City, UT 84111
(801) 328-5151 FAX (801) 328-5155
kdd@spectrum-engineers.com

Library Consultant

Michaels Associates Design Consultants, Inc.
Contact: Andrea Michaels
14809 North 73rd Street, Suite 100
Scottsdale, AZ 85260
(480) 998-7476 FAX (480) 998-9390
andrea@madcinc.com

STAMP:

LICENSED PROFESSIONAL ENGINEER
No. 181563
DAVID E. WESEMANN
STATE OF UTAH

PROJECT NAME:

Snow College Library

150 College Avenue
Ephraim, Utah 84627

REVISIONS:

- 100% CD, October 13, 2008
- 100% CD, September 15, 2008
- 100% CD Review, Aug 26, 2008
- 100% CD, June 25, 2008
- 100% CD Review, June 20, 2008
- 50% CD Review, May 27, 2008
- CD Review Set, May 2, 2008
- DD Set, April 18, 2008
- DD Review, April 4, 2008

ISSUE DATE:

SEPTEMBER 15 2008, 100% CD

ARCHITECT'S PROJECT NUMBER:

B07-051

DFCM PROJECT NUMBER:

07258700

SHEET TITLE:

PANEL SCHEDULES

SHEET NUMBER:

EP-606

File Name: P:\2007\20070473\1Drawings\Sheet\73EP-606.dwg Last Plotted: 2008/10/14 @ 10:09 AM By: dlm

SHEET KEYNOTES

1. CIRCUIT LIGHT WITH ELEVATOR MACHINE ROOM OUTLET.

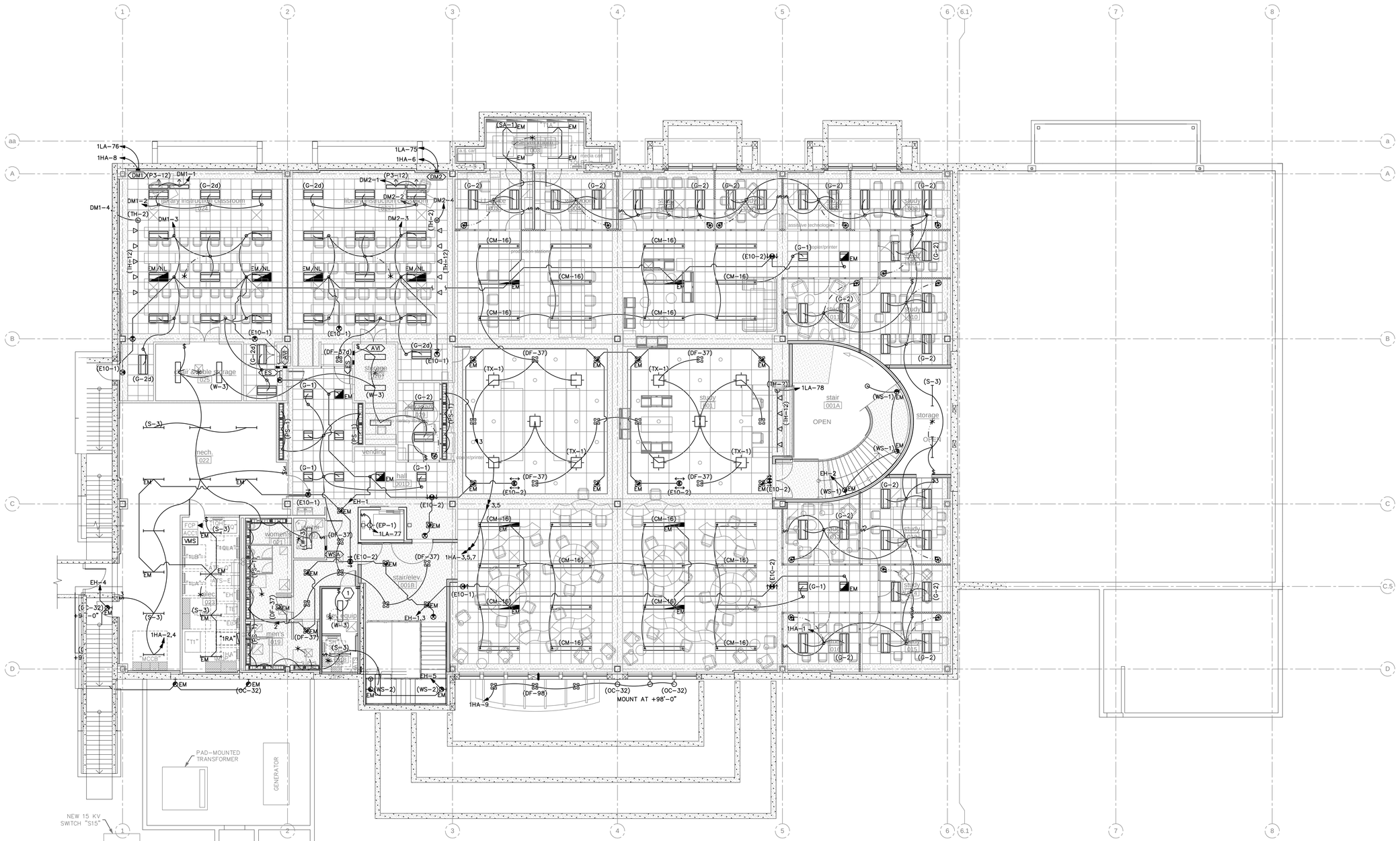

A1 BASEMENT LEVEL LIGHTING PLAN

SCALE: 1/8" = 1'-0"

COOPER ROBERTS SIMONSEN ASSOCIATES

crsa

700 North 200 West
Salt Lake City, UT 84103
(801) 355-5915 phone
(801) 355-9885 fax
crsa-us.com

SNOW COLLEGE

State of Utah-Department of Administrative Services

DIVISION OF FACILITIES CONSTRUCTION AND MANAGEMENT

4110 State Office Building/Salt Lake City, Utah 84114/538-3018

Civil Engineer

Great Basin Engineering
Contact: Dave Waldron
5746 South 1475 East, Suite 200
Ogden, UT 84403
(801) 521-0222 FAX (801) 392-7544
dave@gbenorth.com

Landscape Architect

G. Brown Design
Contact: Mathew Winward
610 E. South Temple, Suite 50
Salt Lake City, UT 84102
(801) 575-6066 FAX (801) 575-6166
mwinward@gbrowndesign.com

Structural Engineer

Reaveley Engineers
Contact: Cameron Empey
675 East 500 South, Suite 400
Salt Lake City, UT 84105
(801) 486-3883 FAX (801) 485-0911
cempey@reaveley.com

Mechanical Engineer

Van Boerum & Frank
Contact: Neil Spencer
330 South 300 East
Salt Lake City, UT 84111
(801) 530-3148 FAX (801) 910-9917
nspencer@vbfa.com

Electrical Engineer

Spectrum Engineers
Contact: Dave Wesemann, PE
175 South Main Street, Suite 300
Salt Lake City, UT 84111
(801) 328-5151 FAX (801) 328-5155
dew@spectrum-engineers.com

AV Consultant

Spectrum Engineers
Contact: Kurtis Dallinga, PE
175 South Main Street, Suite 300
Salt Lake City, UT 84111
(801) 328-5151 FAX (801) 328-5155
kdd@spectrum-engineers.com

Library Consultant

Michaels Associates Design Consultants, Inc.
Contact: Andrea Michaels
14809 North 73rd Street, Suite 100
Scottsdale, AZ 85260
(480) 998-7476 FAX (480) 998-9390
andrea@madcinc.com

STAMP:

LICENSED PROFESSIONAL ENGINEER No. 181563 DAVID E. WESEMANN STATE OF UTAH

PROJECT NAME:

Snow College Library

150 College Avenue
Ephraim, Utah 84627

REVISIONS:

- 100% CD, October 13, 2008
- 100% CD, September 15, 2008
- 100% CD Review, Aug 26, 2008
- 100% CD, June 25, 2008
- 100% CD Review, June 20, 2008
- 50% CD Review, May 27, 2008
- CD Review Set, May 2, 2008
- DD Set, April 18, 2008
- DD Review, April 4, 2008

ISSUE DATE:

SEPTEMBER 15 2008, 100% CD

ARCHITECT'S PROJECT NUMBER:

B07-051

DFCM PROJECT NUMBER:

07258700

SHEET TITLE:

BASEMENT LEVEL LIGHTING PLAN

SHEET NUMBER:

EL-101

File Name: P:\2007\20070473\Drawings\Sheet\73EL-101.dwg Last Plotted: 2008/10/14 @ 10:10 AM By: rxr

SHEET KEYNOTES

1. (G-1) FIXTURE AT THIS LOCATION TO HAVE FLANGE KIT.
2. CIRCUIT (TX-6) FIXTURES TO ADJACENT OUTLET.
3. MOUNTING HEIGHT TO BE BETWEEN 12" TO 18" AFF, SEE ARCHITECTURAL DETAILS. COORDINATE WITH ARCHITECTURAL ELEVATIONS.

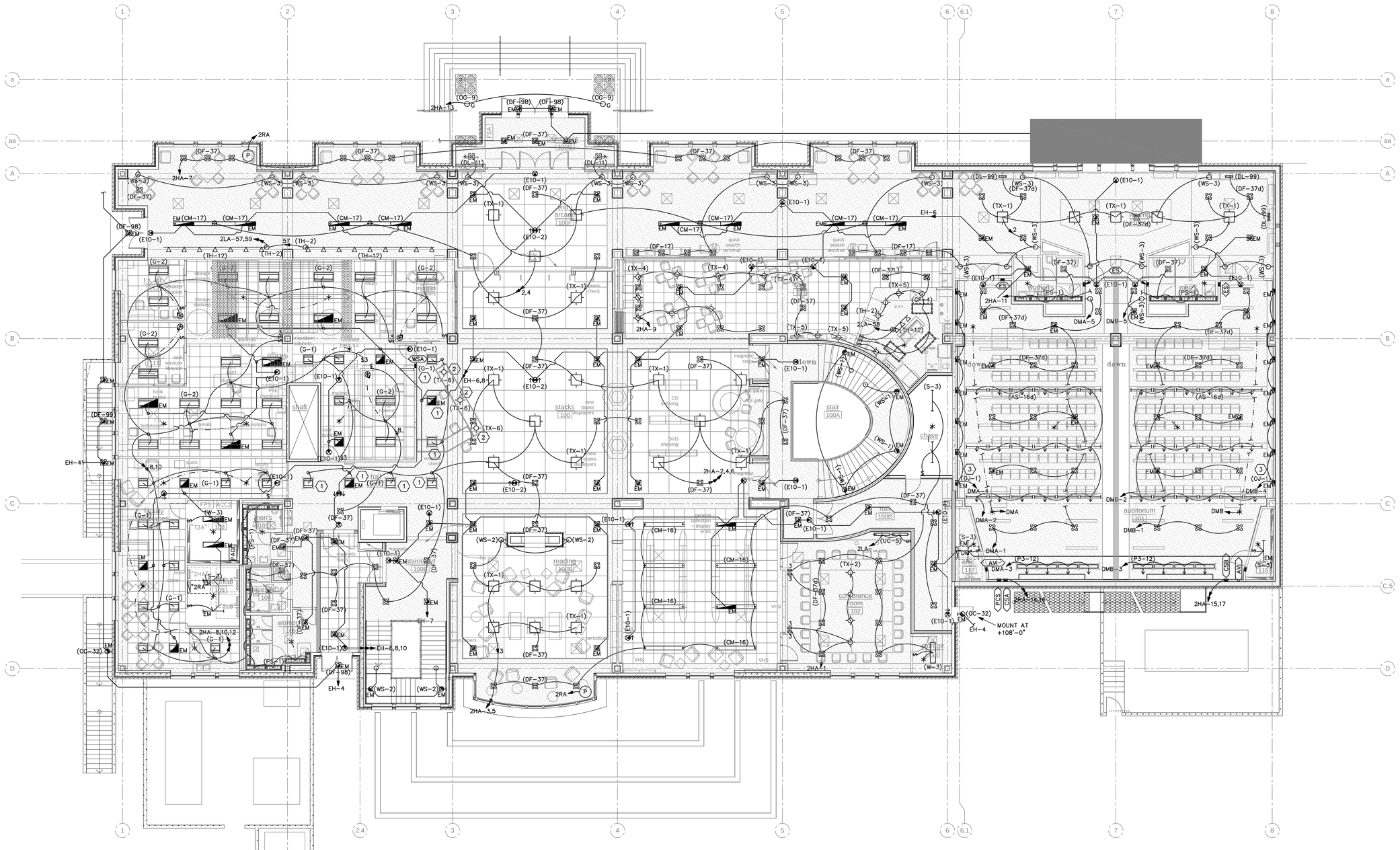

A1 LEVEL 1, MAIN LEVEL LIGHTING PLAN
SCALE: 1/8" = 1'-0"

COOPER ROBERTS SIMONSEN ASSOCIATES
crsa
700 North 200 West
Salt Lake City, UT 84103
(801) 355-5915 phone
(801) 355-9885 fax
crsa-us.com

SNOW COLLEGE

State of Utah-Department of Administrative Services
DIVISION OF FACILITIES CONSTRUCTION AND MANAGEMENT
4110 State Office Building/Salt Lake City, Utah 84114/538-3018

Civil Engineer
Great Basin Engineering
Contact: Dave Waldron
5746 South 1475 East, Suite 200
Ogden, UT 84403
(801) 521-0222 FAX (801) 392-7544
dave@gbenorth.com

Landscape Architect
G. Brown Design
Contact: Mathew Winward
610 E. South Temple, Suite 50
Salt Lake City, UT 84102
(801) 575-6066 FAX (801) 575-6166
mwinward@gbrowndesign.com

Structural Engineer
Reaveley Engineers
Contact: Cameron Empey
675 East 500 South, Suite 400
Salt Lake City, UT 84105
(801) 486-3883 FAX (801) 485-0911
cempey@reaveley.com

Mechanical Engineer
Van Boerum & Frank
Contact: Neil Spencer
330 South 300 East
Salt Lake City, UT 84111
(801) 530-3148 FAX (801) 910-9917
nspencer@vbfa.com

Electrical Engineer
Spectrum Engineers
Contact: Dave Wesemann, PE
175 South Main Street, Suite 300
Salt Lake City, UT 84111
(801) 328-5151 FAX (801) 328-5155
dew@spectrum-engineers.com

AV Consultant
Spectrum Engineers
Contact: Kurtis Dalinga, PE
175 South Main Street, Suite 300
Salt Lake City, UT 84111
(801) 328-5151 FAX (801) 328-5155
kdd@spectrum-engineers.com

Library Consultant
Michaels Associates Design Consultants, Inc.
Contact: Andrea Michaels
14809 North 73rd Street, Suite 100
Scottsdale, AZ 85260
(480) 998-7476 FAX (480) 998-9390
andrea@madcinc.com

STAMP:
LICENSED PROFESSIONAL ENGINEER No. 181563 DAVID E. WESEMANN STATE OF UTAH

PROJECT NAME:
Snow College Library

150 College Avenue
Ephraim, Utah 84627

REVISIONS:
- 100% CD, October 13, 2008
- 100% CD, September 15, 2008
- 100% CD Review, Aug 26, 2008
- 100% CD, June 25, 2008
- 100% CD Review, June 20, 2008
- 50% CD Review, May 27, 2008
- CD Review Set, May 2, 2008
- DD Set, April 18, 2008
- DD Review, April 4, 2008

ISSUE DATE:
SEPTEMBER 15 2008, 100% CD

ARCHITECT'S PROJECT NUMBER:
B07-051

DFCM PROJECT NUMBER:
07258700

SHEET TITLE:
LEVEL 1, MAIN LEVEL LIGHTING PLAN

SHEET NUMBER:
EL-102

File Name: P:\2007\20070473\Drawings\Sheet\73EL-102.dwg Last Plotted: 2008/10/14 @ 10:10 AM By: dim

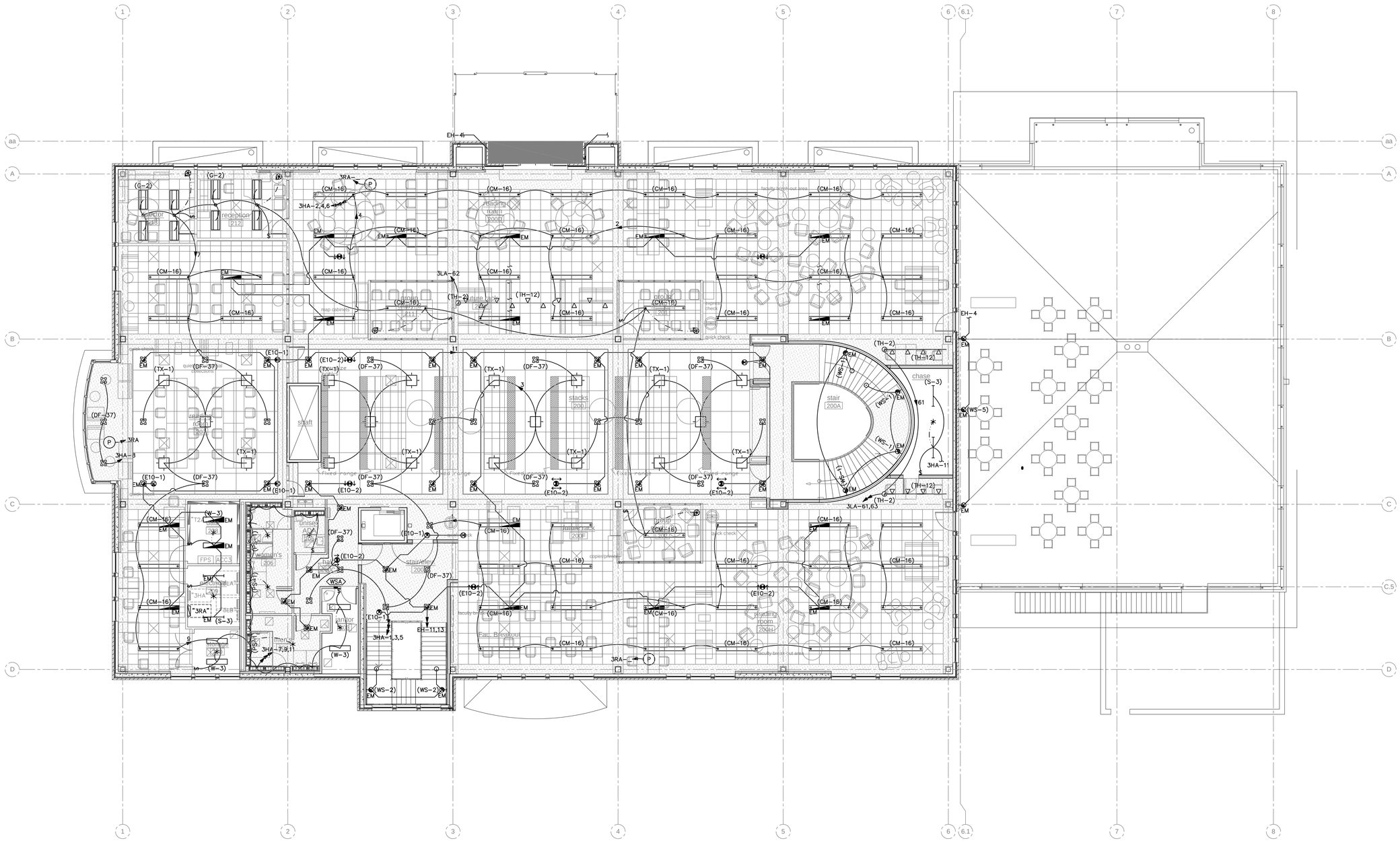

A1 LEVEL 2 LIGHTING PLAN

SCALE: 1/8" = 1'-0"

File Name: P:\2007\20070473\1Drawings\Sheet\73EL-103.dwg Last Plotted: 2008/10/14 @ 10:10 AM By: dim

COOPER ROBERTS SIMONSEN ASSOCIATES

crsa

700 North 200 West
Salt Lake City, UT 84103
(801) 355-5915 phone
(801) 355-9885 fax
crsa-us.com

SNOW COLLEGE

State of Utah-Department of Administrative Services

DIVISION OF FACILITIES CONSTRUCTION AND MANAGEMENT

4110 State Office Building/Salt Lake City, Utah 84114/538-3018

Civil Engineer

Great Basin Engineering
Contact: Dave Waldron
5746 South 1475 East, Suite 200
Ogden, UT 84403
(801) 521-0222 FAX (801) 392-7544
dave@gbenorth.com

Landscape Architect

G. Brown Design
Contact: Mathew Winward
610 E. South Temple, Suite 50
Salt Lake City, UT 84102
(801) 575-6066 FAX (801) 575-6166
mwinward@gbrowndesign.com

Structural Engineer

Reaveley Engineers
Contact: Cameron Empey
675 East 500 South, Suite 400
Salt Lake City, UT 84105
(801) 486-3883 FAX (801) 485-0911
cempey@reaveley.com

Mechanical Engineer

Van Boerum & Frank
Contact: Neil Spencer
330 South 300 East
Salt Lake City, UT 84111
(801) 530-3148 FAX (801) 910-9917
nspencer@vbfa.com

Electrical Engineer

Spectrum Engineers
Contact: Dave Wesemann, PE
175 South Main Street, Suite 300
Salt Lake City, UT 84111
(801) 328-5151 FAX (801) 328-5155
dew@spectrum-engineers.com

AV Consultant

Spectrum Engineers
Contact: Kurtis Dallinga, PE
175 South Main Street, Suite 300
Salt Lake City, UT 84111
(801) 328-5151 FAX (801) 328-5155
kdd@spectrum-engineers.com

Library Consultant

Michaels Associates Design Consultants, Inc.
Contact: Andrea Michaels
14809 North 73rd Street, Suite 100
Scottsdale, AZ 85260
(480) 998-7476 FAX (480) 998-9390
andrea@madcinc.com

STAMP:

LICENSED PROFESSIONAL ENGINEER
No. 181563
DAVID E. WESEMANN
STATE OF UTAH

PROJECT NAME:

Snow College Library

150 College Avenue
Ephraim, Utah 84627

REVISIONS:

- 100% CD, October 13, 2008
- 100% CD, September 15, 2008
- 100% CD Review, Aug 26, 2008
- 100% CD, June 25, 2008
- 100% CD Review, June 20, 2008
- 50% CD Review, May 27, 2008
- CD Review Set, May 2, 2008
- DD Set, April 18, 2008
- DD Review, April 4, 2008

ISSUE DATE:

SEPTEMBER 15 2008, 100% CD

ARCHITECT'S PROJECT NUMBER:

B07-051

DFCM PROJECT NUMBER:

07258700

SHEET TITLE:

LEVEL 2 LIGHTING PLAN

SHEET NUMBER:

EL-103

SHEET KEYNOTES

1. COORDINATE FIXTURES WITH MECHANICAL EQUIPMENT IN THIS AREA.
2. BASE BID. STAIRS, RESTROOMS, MECHCANICAL ROOMS.
3. ALTERNATE BID. SEE DIVISION 1. INSIDE INDICATED LINE.

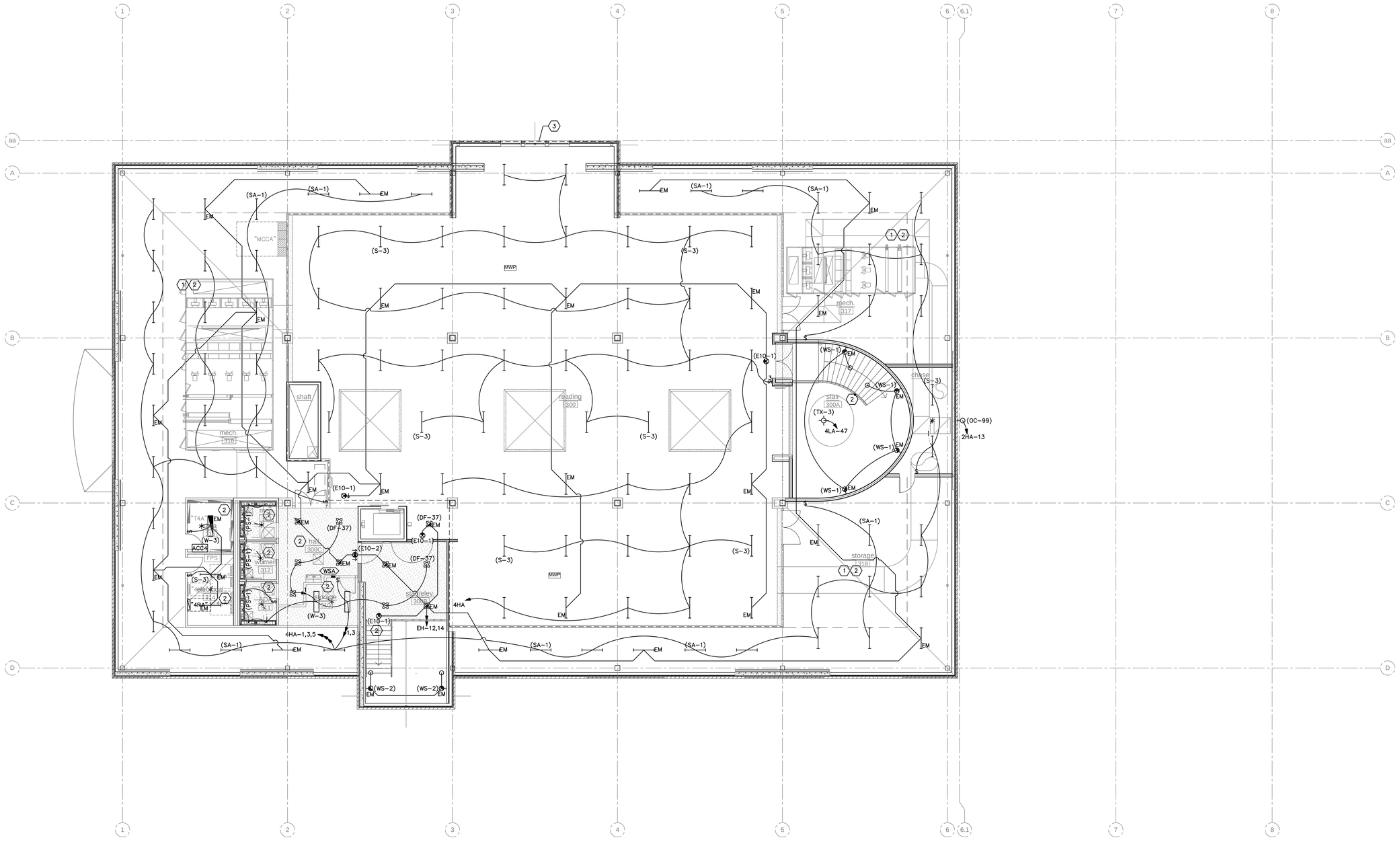

A1 LEVEL 3, ATTIC LIGHTING PLAN

SCALE: 1/8" = 1'-0"

COOPER ROBERTS SIMONSEN ASSOCIATES

crsa

700 North 200 West
Salt Lake City, UT 84103
(801) 355-5915 phone
(801) 355-9885 fax
crsa-us.com

SNOW COLLEGE

State of Utah-Department of Administrative Services

DIVISION OF FACILITIES CONSTRUCTION AND MANAGEMENT

4110 State Office Building/Salt Lake City, Utah 84114/538-3018

Civil Engineer

Great Basin Engineering
Contact: Dave Waldron
5746 South 1475 East, Suite 200
Ogden, UT 84403
(801) 521-0222 FAX (801) 392-7544
dave@gbenorth.com

Landscape Architect

G. Brown Design
Contact: Mathew Winward
610 E. South Temple, Suite 50
Salt Lake City, UT 84102
(801) 575-6066 FAX (801) 575-6166
mwinward@gbrowndesign.com

Structural Engineer

Reaveley Engineers
Contact: Cameron Empey
675 East 500 South, Suite 400
Salt Lake City, UT 84105
(801) 486-3883 FAX (801) 485-0911
cempey@reaveley.com

Mechanical Engineer

Van Boerum & Frank
Contact: Neil Spencer
330 South 300 East
Salt Lake City, UT 84111
(801) 530-3148 FAX (801) 910-9917
nspencer@vbfa.com

Electrical Engineer

Spectrum Engineers
Contact: Dave Wesemann, PE
175 South Main Street, Suite 300
Salt Lake City, UT 84111
(801) 328-5151 FAX (801) 328-5155
dew@spectrum-engineers.com

AV Consultant

Spectrum Engineers
Contact: Kurtis Dallinga, PE
175 South Main Street, Suite 300
Salt Lake City, UT 84111
(801) 328-5151 FAX (801) 328-5155
kdd@spectrum-engineers.com

Library Consultant

Michaels Associates Design Consultants, Inc.
Contact: Andrea Michaels
14809 North 73rd Street, Suite 100
Scottsdale, AZ 85260
(480) 998-7476 FAX (480) 998-9390
andrea@madcinc.com

STAMP:

LICENSED PROFESSIONAL ENGINEER
No. 181563
DAVID E. WESEMANN
STATE OF UTAH

PROJECT NAME:

Snow College Library

150 College Avenue
Ephraim, Utah 84627

REVISIONS:

- 100% CD, October 13, 2008
- 100% CD, September 15, 2008
- 100% CD Review, Aug 26, 2008
- 100% CD, June 25, 2008
- 100% CD Review, June 20, 2008
- 50% CD Review, May 27, 2008
- CD Review Set, May 2, 2008
- DD Set, April 18, 2008
- DD Review, April 4, 2008

ISSUE DATE:

SEPTEMBER 15 2008, 100% CD

ARCHITECT'S PROJECT NUMBER:

B07-051

DFCM PROJECT NUMBER:

07258700

SHEET TITLE:

LEVEL 3, ATTIC LIGHTING PLAN

SHEET NUMBER:

EL-104

File Name: P:\2007\20070473\Drawings\Sheet\73EL-104.dwg Last Plotted: 2008/10/14 @ 10:10 AM By: dlm

SHEET KEYNOTES

1. COORDINATE FIXTURES WITH MECHANICAL EQUIPMENT IN THIS AREA.
2. BASE BID. STAIRS, RESTROOMS, MECHCANICAL ROOMS.
3. ALTERNATE BID. SEE DIVISION 1. INSIDE INDICATED LINE.

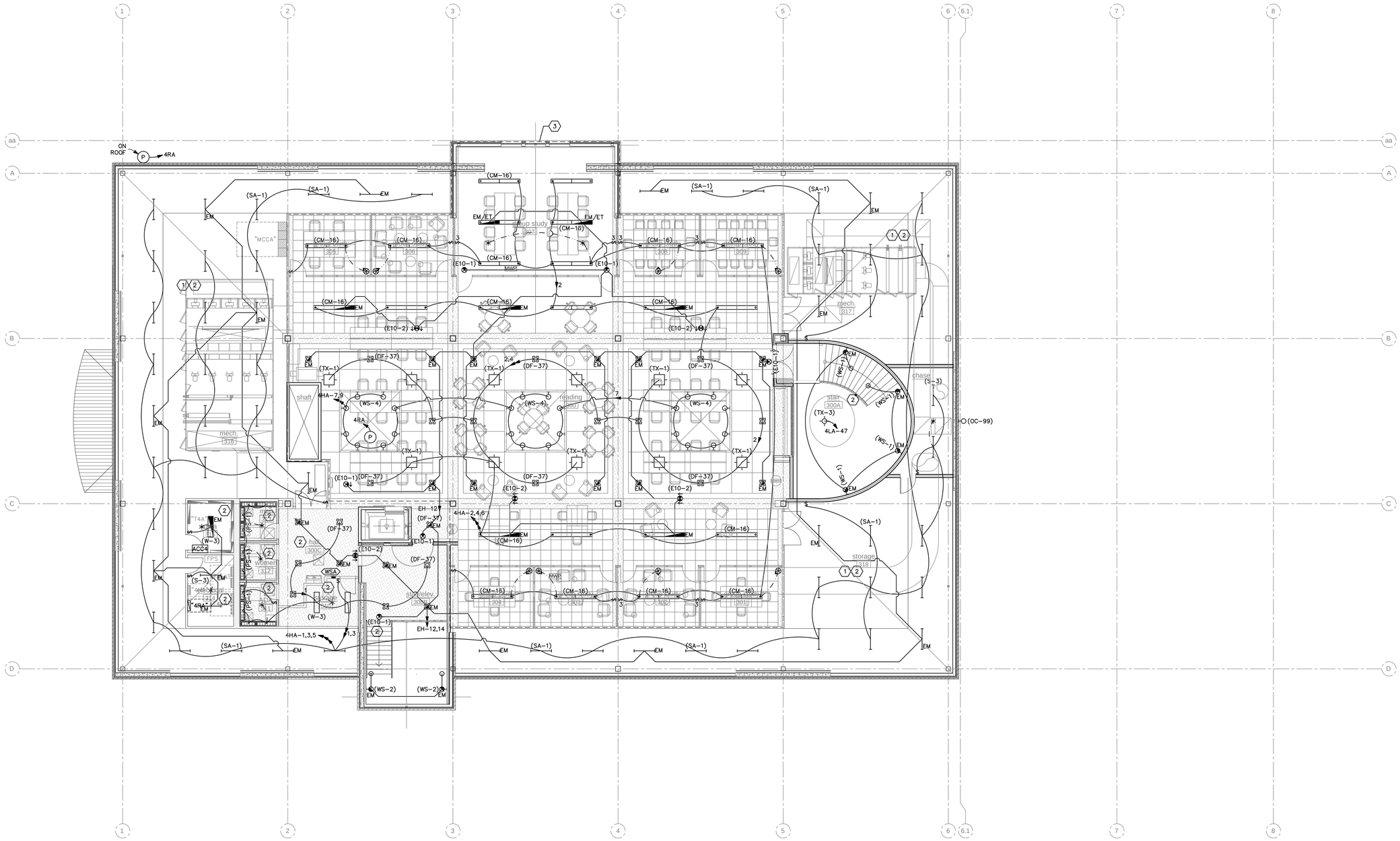

A1 LEVEL 3, ATTIC ADD ALT LIGHTING PLAN

SCALE: 1/8" = 1'-0"

COOPER ROBERTS SIMONSEN ASSOCIATES

crsa

700 North 200 West
Salt Lake City, UT 84103
(801) 355-5915 phone
(801) 355-9885 fax
crsa-us.com

SNOW COLLEGE

State of Utah-Department of Administrative Services

DIVISION OF FACILITIES CONSTRUCTION AND MANAGEMENT

4110 State Office Building/Salt Lake City, Utah 84114/538-3018

Civil Engineer

Great Basin Engineering
Contact: Dave Waldron
5746 South 1475 East, Suite 200
Ogden, UT 84403
(801) 521-0222 FAX (801) 392-7544
dave@gbenorth.com

Landscape Architect

G. Brown Design
Contact: Mathew Winward
610 E. South Temple, Suite 50
Salt Lake City, UT 84102
(801) 575-6066 FAX (801) 575-6166
mwinward@gbrowndesign.com

Structural Engineer

Reaveley Engineers
Contact: Cameron Empey
675 East 500 South, Suite 400
Salt Lake City, UT 84105
(801) 486-3883 FAX (801) 485-0911
cempey@reaveley.com

Mechanical Engineer

Van Boerum & Frank
Contact: Neil Spencer
330 South 300 East
Salt Lake City, UT 84111
(801) 530-3148 FAX (801) 910-9917
nspencer@vbfa.com

Electrical Engineer

Spectrum Engineers
Contact: Dave Wesemann, PE
175 South Main Street, Suite 300
Salt Lake City, UT 84111
(801) 328-5151 FAX (801) 328-5155
dew@spectrum-engineers.com

AV Consultant

Spectrum Engineers
Contact: Kurtis Dallinga, PE
175 South Main Street, Suite 300
Salt Lake City, UT 84111
(801) 328-5151 FAX (801) 328-5155
kdd@spectrum-engineers.com

Library Consultant

Michaels Associates Design Consultants, Inc.
Contact: Andrea Michaels
14809 North 73rd Street, Suite 100
Scottsdale, AZ 85260
(480) 998-7476 FAX (480) 998-9390
andrea@madcinc.com

STAMP:

LICENSED PROFESSIONAL ENGINEER
No. 181563
DAVID E. WESEMANN
STATE OF UTAH

PROJECT NAME:

Snow College Library

150 College Avenue
Ephraim, Utah 84627

REVISIONS:

- 100% CD, October 13, 2008
- 100% CD, September 15, 2008
- 100% CD Review, Aug 26, 2008
- 100% CD, June 25, 2008
- 100% CD Review, June 20, 2008
- 50% CD Review, May 27, 2008
- CD Review Set, May 2, 2008
- DD Set, April 18, 2008
- DD Review, April 4, 2008

ISSUE DATE:

SEPTEMBER 15 2008, 100% CD

ARCHITECT'S PROJECT NUMBER:

B07-051

DFCM PROJECT NUMBER:

07258700

SHEET TITLE:

LEVEL 3, ATTIC
ADD ALT
LIGHTING PLAN

SHEET NUMBER:

EL-104a

File Name: P:\2007\20070473\1Drawings\Sheet\V3EL-104a.dwg Last Plotted: 2008/10/14 @ 10:10 AM By: dim

LOAD SCHEDULE — ROOM 122

DEVICE	CIRCUIT	LIGHTING ID	LOAD (WATTS)	DIMMER NUMBER & CONTROL CHANNEL	COMMENTS
DM1		WHITEBOARD	200	DM1–1	DIRECT FROM DM, PROGRAM AS NON–DIM.
		FRONT	300	DM1–2	POWER BOOSTER 277V
		CLASSROOM	1000	DM1–3	POWER BOOSTER 277V
		CLASSROOM–EM	100	DM1–3EM	POWER BOOSTER 277V, EMERGENCY TRANSFER DEVICES
		TRACK	800	DM1–4	DIRECT FROM DM
				DM1–EM	CONSTANT FEED FOR EMERGENCY SENSE

LOAD SCHEDULE — ROOM 127

DEVICE	CIRCUIT	LIGHTING ID	LOAD (WATTS)	DIMMER NUMBER & CONTROL CHANNEL	COMMENTS
DM2		WHITEBOARD	200	DM2–1	DIRECT FROM DM, PROGRAM AS NON–DIM.
		FRONT	300	DM2–2	POWER BOOSTER 277V
		CLASSROOM	1000	DM2–3	POWER BOOSTER 277V
		CLASSROOM–EM	100	DM2–3EM	POWER BOOSTER 277V, EMERGENCY TRANSFER DEVICES
		TRACK	800	DM2–4	DIRECT FROM DM
				DM2–EM	CONSTANT FEED FOR EMERGENCY SENSE

LOAD SCHEDULE — ROOM 201

DEVICE	CIRCUIT	LIGHTING ID	LOAD (WATTS)	DIMMER NUMBER & CONTROL CHANNEL	COMMENTS
DMA		DOWNLIGHTS	975	DMA–1	POWER BOOSTER 277V
		DOWNLIGHTS–EM	375	DMA–1EM	POWER BOOSTER 277V, EMERGENCY TRANSFER DEVICES
		COVE	1800	DMA–2	POWER BOOSTER 277V
		WHITEBOARD	400	DMA–3	DIRECT FROM DM, PROGRAM AS NON–DIM.
		STEP LIGHTS–EM	350	DMA–4EM	POWER BOOSTER 277V, EMERGENCY TRANSFER DEVICES
		WALL SCONCE	120	DMA–5	DIRECT FROM DM
				DMA–EM	CONSTANT FEED FOR EMERGENCY SENSE

LOAD SCHEDULE — ROOM 201

DEVICE	CIRCUIT	LIGHTING ID	LOAD (WATTS)	DIMMER NUMBER & CONTROL CHANNEL	COMMENTS
DMB		DOWNLIGHTS	975	DMB–1	POWER BOOSTER 277V
		DOWNLIGHTS–EM	375	DMB–1EM	POWER BOOSTER 277V, EMERGENCY TRANSFER DEVICES
		COVE	1800	DMB–2	POWER BOOSTER 277V
		WHITEBOARD	400	DMB–3	DIRECT FROM DM, PROGRAM AS NON–DIM.
		STEP LIGHTS–EM	350	DMB–4EM	POWER BOOSTER 277V, EMERGENCY TRANSFER DEVICES
		WALL SCONCE	120	DMB–5	DIRECT FROM DM
				DMB–EM	CONSTANT FEED FOR EMERGENCY SENSE

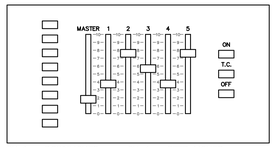

CH 1 = DOWNLIGHTS
CH 2 = COVE
CH 3 = WHITEBOARD
CH 4 = STEP LIGHTS
CH 5 = WALL SCONCE

SILKSCREEN INFORMATION WILL BE PROVIDED WITH SUBMITTAL RETURN.
ALLOW 3 LABELS.
MOUNT AT +42" AFF.

DMA / DMB

E5 CONTROL STATION
NTS

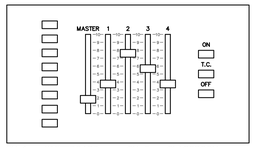

CH 1 = WHITEBOARD
CH 2 = FRONT
CH 3 = CLASSROOM
CH 4 = TRACK

SILKSCREEN INFORMATION WILL BE PROVIDED WITH SUBMITTAL RETURN.
ALLOW 3 LABELS.
MOUNT AT +42" AFF.

DM1 / DM2

E6 CONTROL STATION
NTS

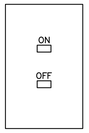

CONFIGURE TO TURN ON SELECTED CIRCUITS ONLY.
MOUNT AT +42" AFF.

ES

C4 ENTRY STATION
NTS

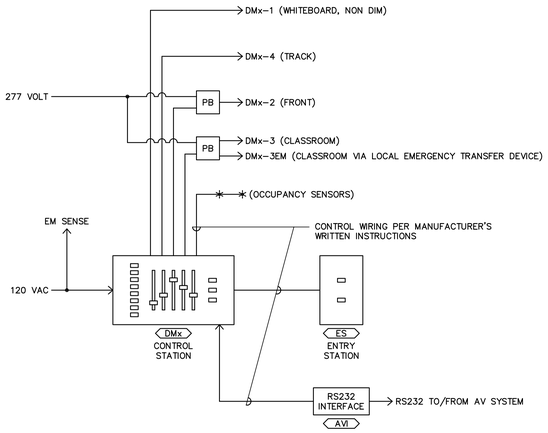

TYPICAL OF CLASSROOMS 122 AND 127

DM1 / DM2

C5 TYPICAL CLASSROOM LIGHTING CONTROL SCHEMATIC
NTS

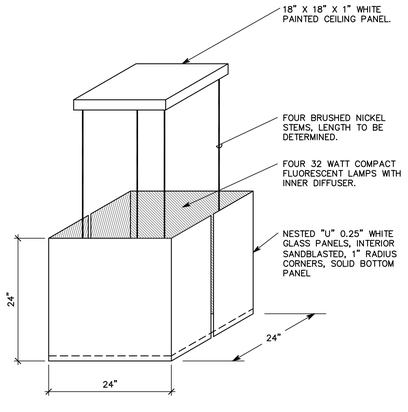

FIXTURE TYPE (TX–1) CENTRAL STACKS PENDANT.
FIXTURE TYPE (TX–2) CONFERENCE ROOM PENDANT, DIMMABLE.

A2 CUSTOM PENDANT FIXTURE DETAIL
NTS

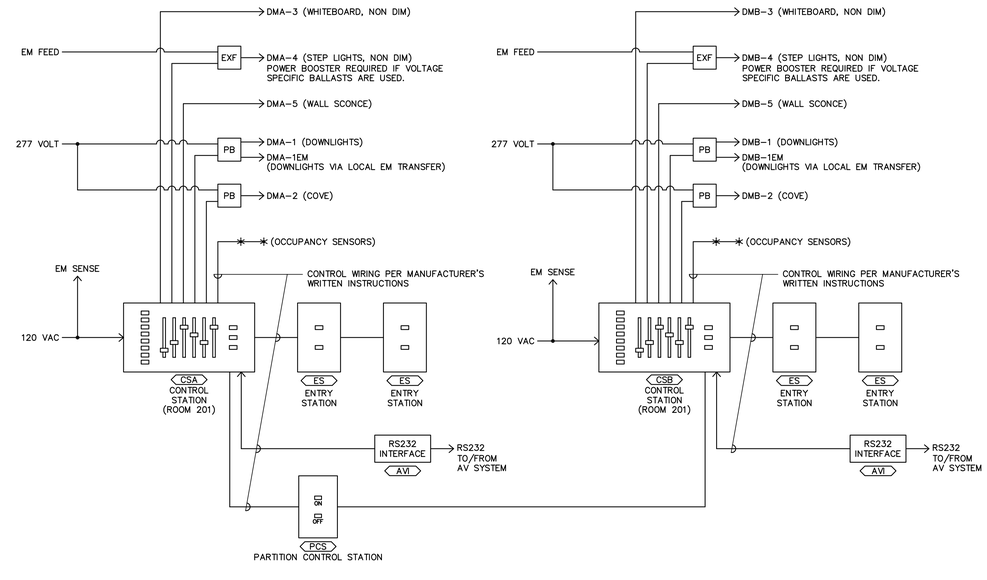

TYPICAL OF AUDITORIUM 201:
CONTROL SYSTEMS ACT INDEPENDENTLY WITH PARTITION CLOSED AND INTEGRALLY WITH PARTITION OPEN (EITHER CONTROL STATION CONTROLS BOTH ROOMS).

DMA / DMB

A4 AUDITORIUM LIGHTING CONTROL SCHEMATIC
NTS

COOPER ROBERTS SIMONSEN ASSOCIATES
crsa
700 North 200 West
Salt Lake City, UT 84103
(801) 355-5915 phone
(801) 355-9885 fax
crsa-us.com

SNOW COLLEGE

State of Utah-Department of Administrative Services
DIVISION OF FACILITIES CONSTRUCTION AND MANAGEMENT
4110 State Office Building/Salt Lake City, Utah 84114/538-3018

Civil Engineer
Great Basin Engineering
Contact: Dave Waldron
5746 South 1475 East, Suite 200
Ogden, UT 84403
(801) 521-0222 FAX (801) 392-7544
dave@gbenorth.com

Landscape Architect
G. Brown Design
Contact: Mathew Winward
610 E. South Temple, Suite 50
Salt Lake City, UT 84102
(801) 575-6066 FAX (801) 575-6166
mwinward@gbrowndesign.com

Structural Engineer
Reaveley Engineers
Contact: Cameron Empey
675 East 500 South, Suite 400
Salt Lake City, UT 84105
(801) 486-3883 FAX (801) 485-0911
cempey@reaveley.com

Mechanical Engineer
Van Boerum & Frank
Contact: Neil Spencer
330 South 300 East
Salt Lake City, UT 84111
(801) 530-3148 FAX (801) 910-9917
nspencer@vbfa.com

Electrical Engineer
Spectrum Engineers
Contact: Dave Wesemann, PE
175 South Main Street, Suite 300
Salt Lake City, UT 84111
(801) 328-5151 FAX (801) 328-5155
dew@spectrum-engineers.com

AV Consultant
Spectrum Engineers
Contact: Kurtis Dallinga, PE
175 South Main Street, Suite 300
Salt Lake City, UT 84111
(801) 328-5151 FAX (801) 328-5155
kdd@spectrum-engineers.com

Library Consultant
Michaels Associates Design Consultants, Inc.
Contact: Andrea Michaels
14809 North 73rd Street, Suite 100
Scottsdale, AZ 85260
(480) 998-7476 FAX (480) 998-9390
andrea@madcinc.com

STAMP:

LICENSED PROFESSIONAL ENGINEER
No. 181563
DAVID E. WESEMANN
STATE OF UTAH

PROJECT NAME:

Snow College Library

150 College Avenue
Ephraim, Utah 84627

REVISIONS:

- 100% CD, October 13, 2008
- 100% CD, September 15, 2008
- 100% CD Review, Aug 26, 2008
- 100% CD, June 25, 2008
- 100% CD Review, June 20, 2008
- 50% CD Review, May 27, 2008
- CD Review Set, May 2, 2008
- DD Set, April 18, 2008
- DD Review, April 4, 2008

ISSUE DATE:
SEPTEMBER 15 2008, 100% CD

ARCHITECT'S PROJECT NUMBER:
B07-051

DFCM PROJECT NUMBER:
07258700

SHEET TITLE:
LIGHTING CONTROL SCHEDULES AND DETAILS

SHEET NUMBER:
EL-501

File Name: P:\2007\20070473\Drawings\Sheet\73EL-501.dwg Last Plotted: 2008/10/14 @ 10:10 AM By: wdo

LIGHTING FIXTURE SCHEDULE

SNOW COLLEGE LIBRARY

NOTE TO BIDDERS: COMPLY WITH SECTIONS 16511, 16521, AND 16570 OF THE SPECIFICATIONS.
REFER TO SPECIFICATIONS FOR IMPORTANT TECHNICAL REQUIREMENTS FOR LIGHTING FIXTURES, BALLASTS, AND LAMPS. THE CATALOG NUMBERS LISTED BELOW HAVE BEEN CAREFULLY PREPARED TO ASSIST BIDDERS IN SELECTING PRODUCTS TO ACHIEVE THE DESIGN CONCEPT, HOWEVER, PRIOR TO BIDDING, EACH MANUFACTURER SHALL COMPARE THE CATALOG NUMBERS SHOWN WITH THE DESCRIPTION AND REQUIREMENTS ON THE DRAWINGS, AND SHALL NOTIFY THE ARCHITECT/ENGINEER OF ANY DISCREPANCIES. SPECIFICALLY INCLUDED IN THIS EVALUATION SHALL BE THE VERIFYING OF PROPER MOUNTING KITS OR ACCESSORIES TO FACILITATE INSTALLATION AS SHOWN AT EACH LOCATION ON THE DRAWINGS. NO ALLOWANCE OR REDRESS WILL BE ALLOWED FOR DISCREPANCIES THAT WERE NOT REPORTED TO THE ARCHITECT/ENGINEER IN TIME FOR CORRECTION OR CLARIFICATION BEFORE THE BID. THE REPORTING OF ANY AMBIGUITY IS THE RESPONSIBILITY OF THE BIDDER. PROVIDE UNIT PRICES AND FIXTURE BRAND SELECTED FOR ADD/DELETE CHANGES FOR EACH FIXTURE TYPES SHOWN WITHIN 48 BUSINESS HOURS OF THE BID DATE. FAILURE TO COMPLY WITH THIS REQUIREMENT MAY DISQUALIFY THE PRODUCTS AND EMPOWER THE ENGINEER TO DETERMINE FAIR VALUE FOR FIXTURE AND INSTALLATION CHANGES, WITHOUT FURTHER INPUT FROM THE CONTRACTOR OR INSTALLER. SUBMITTAL PACKAGE SHALL INCLUDE LAMP MANUFACTURER AND CATALOG NUMBER ON EACH FIXTURE SHEET. ON ALL PENDANT MOUNTED FIXTURES, PROVIDE A SECOND SET OF PENDANTS, OF A DIFFERENT LENGTH, AS DIRECTED BY THE ARCHITECT/ENGINEER, PROVIDED AND INSTALLED AT NO ADDITIONAL CHARGE. ALL FIXTURES SHALL BE APPROVED BY UL OR ANOTHER ACCEPTABLE TESTING LAB FOR THE PURPOSE INTENDED AND WITH THE LAMP AND BALLAST PROPOSED. CONTRACTOR ALLOWANCE PRICES ARE ACCURATE WHEN THIS JOB WAS SPECIFIED, CONTRACTOR AND ELECTRICAL DISTRIBUTOR SHALL VERIFY THIS ALLOWANCE AND REPORT ANY PROBLEMS TO THE ENGINEER BEFORE THE BID. ALLOWANCE PRICE MAY OR MAY NOT INCLUDE LAMP(S) OR FREIGHT AS NOTED, AND DO NOT INCLUDE ANY TAXES. UNIVERSAL VOLTAGE (120/277) BALLASTS REQUIRED UNLESS NOTED OTHERWISE.
LINEAR FLUORESCENT FIXTURES MARKED "HIGH EFFICIENCY" USE 32 WATT 3100 INITIAL LUMEN LAMPS WITH .71 BALLAST FACTOR ELECTRONIC BALLAST. LAMPS: OSI "XPS" SERIES, PHILIPS "ADV" SERIES, GE "T8 ULTRA HIGH LUMEN",
BALLASTS; ADVANCE "IOP" SERIES, OSI " PROSTART PSX", GE ULTRASTART SERIES.

SYMBOL	MARK	FIXTURE CHARACTERISTICS: BODY / AIR / MOUNTING / DOOR LENS/LOUVER/REFLECTOR/OTHER	LAMP	WATTS	VOLTS	MANUFACTURER	CATALOG NUMBER	NOTES
	AS	INDIRECT LIGHT: ASYMMETRIC OPTICS, ALUMINUM REFLECTOR; WHITE PAINTED FINISH; MOUNTING AS SHOWN; REMOTE BALLASTS (FLUORESCENT – PROGRAMMED RAPID START ELECTRONIC, METAL HALIDE – PULSE START HPF MAGNETIC), UNLESS INDICATED INTEGRAL BALLAST (IB); ONE BALLAST PER FIXTURE WHERE POSSIBLE.						
	AS-16d	4' LINEAR FLUORESCENT, COVE MOUNT. MUST FIT ARCHITECTURAL SPACE PROVIDED. 8" X 4" NOMINAL. 100%-5% DIMMING 2 WIRE TYPE	2-F54T5HO RE841	125W	277V	LITECONTROL ELLIPTIPAR LAM PINNACLE PRUDENTIAL	CC-AI30-24T5HO-CWM-DIM-277 F307-T1F54T5HO-S00V-DIM HPD-A-2T5HO-CM-A-SGW-277-DM2 C105-2T5HO-XX-DB-277 P45I-2T5HO-04-BWE-SC-277DIM	
	CM	STEEL LINEAR FIXTURES: LENGTHS AND CONFIGURATIONS SHOWN ON THE DRAWINGS; LAMPS FOUR FOOT WHERE POSSIBLE; PROGRAM START ELECTRONIC BALLASTS; T8 LAMPS; INTERNAL CONCEALED FASTENERS; COLOR AS NOTED AND/OR APPROVED BY ARCHITECT; ORIENT FIXTURE ACCORDING TO ARCHITECTS/ ENGINEER'S INSTRUCTIONS. SWIVEL STEM MOUNT UNLESS NOTED OTHERWISE. INSTALL LEVEL AND STRAIGHT WITH INVISIBLE SPLICES. PROVIDE ALL REQUIRED HANGERS, SPLICERS, END CAPS, JOINTS, FEEDS, ETC., FOR A COMPLETE INSTALLATION, WHITE LOUVER FINISH.						
	CM-16	MODULAR, 80% DIRECT/INDIRECT, 9.25"X2.625" LENGTH AS SHOWN. HIGH EFFICIENCY BALLAST. WHITE LOUVERS SWIVEL STEM HANGERS	3-F32T8 RE841 3100 LU	71W/4'	277/ 120V	LEDALITE GAMALUX FINELITE	721-6-T03-W-G-12-U-E-W GB93BW-3T8-PBB/WT-CBA-PX S16-WCB-XX-3T8-SC-91W-STO-WNV-S-FE-SPEB	
	CM-17	MODULAR, 80% DIRECT/INDIRECT, 9.25"X2.625" LENGTH AS SHOWN. HIGH EFFICIENCY BALLAST. WHITE LOUVERS SWIVEL STEM HANGERS	3-F32T8 RE841 3100 LU	71W/4'	277/ 120V	LEDALITE	7505F01QN	
	DF	FLUORESCENT DOWNLIGHT; THERMALLY PROTECTED HOUSING: TO ACCOMMODATE MULTIPLE TRIMS AND REFLECTOR ASSEMBLIES FOR LAMPS AS LISTED BELOW; ELECTRONIC BALLASTS; WHITE REFLECTOR FINISH (EVEN IF NOT SHOWN IN CATALOG #); SELF FLANGING TRIM UNLESS NOTED.						
	DF-17	RECESSED DOWNLIGHT; VERTICAL, 6" APERTURE, 32W CF-AMALGAM LAMP, CLEAR.	1-CF-A32 RE835	50W	277/ 120V	PORTFOLIO INFINITY LIGHTOLIER LITHONIA OMEGA PRESCOLITE	C6032E-6051LI PV60 132T-EB (GX24Q-3) 277 BH 8021CCLW/6132HU AFV 32TRT 6AR MVOLT S632PLT-U-T6-CS CFT632EB-STF602	
	DF-37	RECESSED DOWNLIGHT; 8- 10" APERTURE, HORIZONTAL, 2-32W CF-AMALGAM LAMPS, WHITE CONE EDF-37 INCLUDES 1100 LUMEN BATTERY PACK, TEST SWITCH	2-CF-A32 RE841	100W	277/ 120V	PORTFOLIO INFINITY LIGHTOLIER LITHONIA OMEGA PRESCOLITE	C9232E-9251LI (17-15/16 X 16-1/2 X 9-3/8) PH10 232T-EB (GX24Q-3) 277 BH (23 X 17 X 9) 8039CLW/8232HU (15-5/8 X 14 X 9) AF 2/32TRT 10AR MVOLT (17-1/2 X 17-3/16 X 9-3/4) S82H32-U-T82HPLT-CS (14-11/16 X 13-1/4 X 6-11/16) CFT932HEB-STF902H (16-1/4 X 14-7/16 X 8-9/16)	
	DF-37d	RECESSED DOWNLIGHT; 8- 10" APERTURE, HORIZONTAL, 2-32W CF-AMALGAM LAMPS, WHITE CONE 100%-5% DIMMING 2 WIRE TYPE	2-CF-A32 RE841	100W	277/ 120V	PORTFOLIO INFINITY LIGHTOLIER LITHONIA OMEGA PRESCOLITE	C9232E-9251LI-DIM (17-15/16 X 16-1/2 X 9-3/8) PH10 232T-EB-DIM (GX24Q-3) 277 BH (23 X 17 X 9) 8039CLW/8232HU-DIM (15-5/8 X 14 X 9) AF 2/32TRT 10AR MVOLT-DIM (17-1/2 X 17-3/16 X 9-3/4) S82H32-U-T82HPLT-CS-DIM (14-11/16 X 13-1/4 X 6-11/16) CFT932HEB-STF902H-DIM (16-1/4 X 14-7/16 X 8-9/16)	
	DF-37L	RECESSED DOWNLIGHT; 8- 10" APERTURE, HORIZONTAL, 2-32W CF-AMALGAM LAMPS, WHITE CONE, LENS	2-CF-A32 RE841	100W	277/ 120V	PORTFOLIO INFINITY LIGHTOLIER LITHONIA OMEGA PRESCOLITE	C9232E-9251LI (17-15/16 X 16-1/2 X 9-3/8) PH10 232T-EB (GX24Q-3) 277 BH (23 X 17 X 9) 8039CLW/8232HU (15-5/8 X 14 X 9) AF 2/32TRT 10AR MVOLT (17-1/2 X 17-3/16 X 9-3/4) S82H32-U-T82HPLT-CS (14-11/16 X 13-1/4 X 6-11/16) CFT932HEB-STF902H (16-1/4 X 14-7/16 X 8-9/16)	
	DF-98	EXTERIOR DOWNLIGHT, COMPACT FLUORESCENT, LENSED, WHITE FLANGE, SHALLOW, NON-IC, MATCH FINISH 7 1/4" DIAM. 6"DEEP.	2-CF26Q RE830	60W	120V	LIGHTOLIER	8096 CCLW/S7218HU	
	DF-99	EXTERIOR DOWNLIGHT, COMPACT FLUORESCENT, LENSED, WHITE FLANGE, SHALLOW,IC RATED, MATCH FINISH 7 1/4" DIAM. 6"DEEP.	2-CF26Q RE830	60W	120V	LIGHTOLIER	1126T/1102T26	
	DL	LOW VOLTAGE DOWNLIGHTS, RECESSED, THERMALLY PROTECTED HOUSING, TO ACCOMMODATE MULTIPLE TRIMS AND REFLECTOR ASSEMBLIES FOR LOW VOLTAGE LAMPS AS LISTED BELOW, 4" APERTURE FOR MR16'S AND 6" NOMINAL FOR PAR36'S, MAX 7 1/2" DEEP.PROVIDE SAFETY GLASS LENS AS STANDARD, AND ACCESSORIES WHEN NOTED. PROVIDE EXZ LAMP (MR16) UNLESS INSTRUCTED OTHERWISE AT SUBMITTAL REVIEW. MAGNETIC DIMMABLE TRANSFORMERS, UNLESS NOTED OTHERWISE.						
	DL-11	LOW VOLTAGE ADJUSTABLE PIN SPOT, OVAL APERTURE, MR16 LAMP, WHITE ALUMINUM TRIM, INTEGRAL 12V TRANSFORMER.	50W/MR16 12V	80W	120V	PRESCOLITE HALO INFINITY LIGHTOLIER CAPRI LITHONIA	LVH4-LV3 H1499T-1420P LV45 50 (1MR16/GU5.3) 120 SLA MWT BH 2000LV-2006 LV1EX/120-LC119 LV3 120 3VA5	
	DL-99	4-LAMP ADJUSTABLE MULTI LAMP ASSEMBLY, RECESSED, MATTE WHITE FINISH, TRIMLESS, HEX LOUVERS	4-50MR16	220W	120V	LIGHTOLIER	PS4M165EWTL/AF25-AL25HC	
	E10	EXIT SIGN: METAL HOUSING; CEILING MOUNT, SEE DRAWINGS; ARROWS PER PLANS; LED LAMPS; EDGE LIGHTED CLEAR LENS; GREEN LETTERS ON CLEAR BACKGROUND. MUST MEET NFPA ILLUMINATION STANDARDS. UNITS SHOWN ARE CEILING MOUNT MODELS. CONTRACTOR TO PROVIDE MATCHING LOW LEVEL WALL MOUNTED UNITS WHERE REQUIRED.						
	E10-1	SINGLE FACE:	LED	20W	277/ 120V	DUAL-LITE MCPHILBEN EELP LITHONIA ISOLITE CHLORIDE LIGHTOLIER	LECSGWA 45VL-1-GC-XX EDG 1 GC W EM LRP W 1 GC XX 120/277 EDGL-S-S-G-BK (BLACK HOUSING) STDLX-X-1-GC-X LEAC1GCX	
	E10-2	DUAL FACE:	LED	20W	277/ 120V	DUAL-LITE MCPHILBEN EELP LITHONIA ISOLITE CHLORIDE LIGHTOLIER	LECDGWA 45VL-2-GM-XX EDG 2 GC W EM LRP W 2 GMR XX 120/277 EDGL-D-S-G-BK (BLACK HOUSING) STDLX-X-2-GC-X LEAC2GC7	
	EP	ELEVATOR PIT LIGHTS: INCANDESCENT VAPORTIGHT; COPPER-FREE CAST ALUMINUM BODY AND GUARD; CAST ALUMINUM ADAPTERS FOR MOUNTING AS NOTED, CLEAR TEMPERED GLASS GLOBE, U.L. LISTED FOR USE IN WET LOCATIONS.						
	EP-1	WALL ARM MOUNT ON FLUSH OR RECESSED OUTLET BOX.	1-CF32A RE841	40W	277/ 120V	SPERO GUTH EXCELINE NRL BASELITE	VW15-41-G-VB32-CF VPW-32T-S RLW32HFLCGC-UNV IPEV-32F-U-GC-GP-WB E1CLCGXX32CFE16	
	ET	TRANSFER DEVICE FOR FLUORESCENT BALLASTS, LOCATE ON FIRST EMERGENCY FIXTURE IN ROOM PER CIRCUIT TO TRANSFER EMERGENCY PORTION OF CIRCUIT TO EMERGENCY FEED, CONNECT TO NORMAL SIDE FOR SENSING, AND TO BOTH NORMAL FEED AND EMERGENCY CIRCUIT. USE 2 POLE FOR NORMAL CIRCUITS AND 3 POLES FOR DIMMED CIRCUITS.						
		CIRCUIT LEVEL TRANSFER DEVICE 20A MIN RATING				BODINE NINE24inc LIGHTGUARD CHLORIDE IOTA SIDE-LITE	GEN-20 BLTC-X LIGHTSTAR SERIES LIGHTSTAR SERIES ETS SB20	
	G	INDIRECT TROFFERS: RECESSED FOR LAY-IN GRID; HINGED FLUSH STEEL DOOR WITH LATCH; EARTHQUAKE CLIPS, PROGRAM START ELECTRONIC BALLASTS; LONG COMPACT FLUORESCENT LAMPS; ONE BALLAST PER FIXTURE, 100-10% DIMMING BALLAST WHERE SHOWN.						
	G-1	2X2, 2-LAMP. CENTER BASKET , PERFORATED NOTE: (7) FIXTURES ON SHEET EL102 REQUIRE FLANGE KITS.	2-F55BX RE841	114W	277/ 120V	LIGHTOLIER FOCAL POINT DAYBRITE LITECONTROL LITHONIA	QHE2GPF0P2FT FLU-22-B-2BX55-S-UNV-PS-WH 2AVG2CF55-PMW-UNV-SPEB GDTD22C-22BX55-CWM-ELB 2AVG2CF55MDR120SPEBPS	
	G-2	2X4, 3-LAMP. CENTER BASKET , PERFORATED HIGH EFFICIENCY BALLAST.	3-F32T8 RE841	71W	277/ 120V	LIGHTOLIER FOCAL POINT LITHONIA DAYBRITE LITECONTROL	QHE2GPF0P332 FLU-24-B-3T8-S-UNV-SPEB-WH 2AVG332MDR120SPEBPS 2AVG332-PMW-UNV-SPEB GDTD24C34T8CWMELBHET8-UNV	
	G-2d	2X4, 3-LAMP. CENTER BASKET , PERFORATED 100%-5% DIMMING 2 WIRE TYPE	3-F32T8 RE841	100w	277/ 120V	LIGHTOLIER FOCAL POINT LITECONTROL DAYBRITE LITHONIA	QHE2GPF0P332-DIM FLU-24-B-3T8-S-DIM-WH 2AVG332MDR120DIM 2AVG332-PMW-UNV-DIM 2AVG332MDR120DIM	
	GF	TROFFERS: RECESSED FOR FLANGE MOUNTED CEILING; STATIC; HINGED AND LATCHED STEEL DOOR; 125 ACRYLIC PRISMATIC LENS, MINIMUM 1/8"; PRORGAM START ELECTRONIC BALLASTS; T8 LAMPS; ONE BALLAST PER FIXTURE WHERE POSSIBLE, UNLESS TWO LEVEL SWITCHING IS SHOWN ON THE PLANS. MAX 5" DEEP. SPECIFICATION GRADE.						
	GF-4	2X4, 3 LAMP. HIGH EFFICIENCY BALLAST.	3-F32T8 RE835	95W	277/ 120V	LITHONIA METALUX DAYBRITE COLUMBIA LIGHTOLIER LSI	2SP8F 332 A12125 1/3 MVOLT TUBRHP 2FP-332A125-UNV-EB81-PROGRAM START 2DPF332-FS21-UNV-1/3EB-SPEC ST824-332F-FSA12.125-3EB8LHPRUNV XT2FV332-U-03P FLA125 332 SD SSO10PS UE	
	OC	WALL PACK: ADJUSTABLE CUT OFF; FULL PERIMETER GASKETING: WET LOCATION; STAINLESS STEEL HINGES AND LATCHES; PROJECTING LENS; HPF BALLAST; SEE ELEVATION FOR MOUNTING HEIGHT, COLOR AS SPECIFIED BY ARCHITECT.						
	OC-32	CF42, RECESSED J BOX. MEDIUM THROW, SQUARE, DECORATIVE	CF42 RE841	50W	277/ 120V	MCPHILBEN LSI LITHONIA VISIONAIRE LUMARK DECO	101MT-42TRF-CBA-DT GBWS-FTM-42CFL-F-120/277-XX-NO WST 42TRT MD MVOLT SIL-173-42CF-UNV-DL-CBA PLIP-T-42-MT-XX D443-42C-CDT	
	OC-99	CF250PSMH, RECESSED J BOX. MEDIUM THROW, SQUARE,	250PSMH	320w	277/ 120V	MCPHILBEN		
	OG	GROUND LIGHT: ROUND WITH PRE-WIRED; ISOLATED SPLICE COMPARTMENT; INTEGRAL BALLAST COMPARTMENT LAMP STYLE PER MANUFACTURER'S REQUIREMENTS. INSTALLER TO PROVIDE CORRECT MOUNTING ACCESSORIES OR SLEEVES COORDINATED WITH GROUND MATERIAL, CONCRETE, GRAVEL, DIRT, ETC.						
	OG-9	ADJUSTABLE REFLECTOR; NEARLY FLAT DUAL LENS, SPOT OPTICS.	175MH	220W	277V	HYDREL	M9720 A 175M 277 SP 34SNPT	
	OJ	RECESSED WALL STEP AND WALL LIGHTS; 3- 4 1/2" RECESSING DEPTH; WELDED STEEL HOUSING; DIECAST LOUVERED FACEPLATES; FACEPLATES FINISHED IN TEXTURED FINISH PER ARCHITECT, FULLY GASKETED; WET LABEL; TYPES AND WATTAGES AS INDICATED.						
	OJ-1	AUDITORIUM STEP LIGHT. RECESSED, CONCELED LAMP SILVER OR SILVER/GREY	LED	5W	277V	COLE	T141-LED	
	P3	PARABOLIC LOUVER FIXTURES WITH 3" LOUVERS IN PLASTIC PROTECTORS AND FULL DEPTH REFLECTOR; SIZE AS NOTED; PROGRAM START ELECTRONIC BALLASTS PER SPECS; T8 LAMPS; ONE BALLAST PER FIXTURE UNLESS NOTED FOR SWITCHING; STATIC OR AIR RETURN AND HEAT REMOVAL; EARTHQUAKE CLIPS INSTALLED ON ON GRID FIXTURES; HINGED AND LATCHED DOOR; WHITE LOUVER FINISH, VERTICAL GRAIN DIE STAMPED LOUVERS; TWO FORMED BALLAST COVERS; MAX 1300 CD/M2 ABOVE 45 DEGREES.						
	P3-12	1X4, LINEAR WALLWASHER; WHITE LOUVERS, STATIC, HIGH EFFICIENCY BALLAST.	1-F32T8 RE835	40W	277/ 120V	COLUMBIA LIGHTOLIER METALUX LITHONIA DAYBRITE	PW84-1-32-G-WH-B-EBRS120/277 PROG WMRL143-U-SOP-WHITE RWW-WHITE-132I-UNV-PROGRAM START WWG1-32-IRWH-MVOLT-TUBRHP 1LP3GS232-18W-UNV-SPEB	
	PS	PARABOLIC WALL SLOT: 9" PERIMETER WALL SLOT WITH MOUNTING MOUNTED TO CEILING; WITH FLANGE ASSEMBLY FOR GYP BOARD CEILING; TWO LAMPS CONTINUOUS AND TELESCOPIC LAMPS AT CORNERS; 1 1/2" FREE FLOATING PARABOLIC LOUVER WITH MITERED CORNERS (BOTH 90 DEGREES AND 45 DEGREE); PROVIDE 4' LAMPS WHEREVER POSSIBLE; DIMENSIONS SHALL BE FIELD DETERMINED, PROGRAM START ELECTRONIC BALLASTS; T8 LAMPS; ONE BALLAST PER FIXTURE WHERE POSSIBLE, UNLESS TWO LEVEL SWITCHING IS SHOWN ON THE PLANS; LOW IRIDESCENT LOUVER FINISH (EVEN IF NOT SHOWN IN CATALOG #).						
	PS-1	SEMI-SPECULAR SILVER LOUVER. HIGH EFFICIENCY BALLAST.	2-F32T8 RE835	25WPF	277/ 120V	COLUMBIA LIGHTOLIER PRUDENTIAL NATIONAL LINEAR PMC LSI	AL11N-49-2L-EB8120/277 PROG PTS8-2-X-X-X-SSPB-U-SOP P80-2T8PROGRAM START-SPL-X3B-LI-UNIVOLT SLWW-232-PX-120/277-EB-SPEC-TEL WW2-D-2ET8-UNV-PL2-R-NO SPS-SR-FL-2/OCT-PBL-XX-UNV-EB 99 4 2 32WT8 PL UE	
	S	FLUORESCENT STRIP LIGHT: STEEL CONSTRUCTION; WHITE PAINTED FINISH; SUITABLE FOR MOUNTING ON LOW DENSITY CEILINGS; PROGRAM START ELECTRONIC BALLASTS; T8 LAMPS; ONE BALLAST PER FIXTURE WHERE POSSIBLE, UNLESS TWO LEVEL SWITCHING IS SHOWN ON THE PLANS.						
	S-3	4', 2-LAMP. HIGH EFFICIENT SYSTEM	2-F32T8 RE835	48W	277/ 120V	LITHONIA LIGHTOLIER METALUX DAYBRITE HUBBELL COLUMBIA	C232-MVOLT-TUBRHP SW232-U-SOP SS-232-UNV-PROGRAM START T232-UNV-1/2-EB-SPEC C232UPS CS4-232-EB8120/277 PROG	
	SA	GENERAL PURPOSE INDUSTRIAL: WHITE ENAMEL, APERTURED REFLECTOR; PROGRAM START ELECTRONIC BALLASTS; T8 LAMPS; ONE BALLAST PER FIXTURE WHERE POSSIBLE; UNLESS TWO LEVEL SWITCHING IS SHOWN ON THE PLANS; STEM MOUNTED WITH TONG HANGERS.						
	SA-1	4', 2-LAMP. HIGH EFFICIENCY BALLAST. SA-1W SAME AS SA-1, WITH WIRE GUARD	2-F32T8 RE835	65W	277/ 120V	LITHONIA LIGHTOLIER METALUX HUBBELL COLUMBIA DAYBRITE	EJA232-MVOLT-TUBRHP-THUN KWA232-U-SOP IA-232-UNV-PROGRAM START IG142R-PP10-UPS CSR4-232U-EB8120/277 PROG-CSTH IA232-UNV-1/2-EB-SPEC	
	TH	TRACK AND TRACK LIGHTS: LENGTH OF TRACK AND NUMBER OF FIXTURES AND ACCESSORIES AS SHOWN ON DRAWINGS. TRACK FEEDENDS, DEADENDS, TURNS, HANGING DEVICES, ETC., ARE AS REQUIRED TO INSTALL TRACKS AS SHOWN ON DRAWINGS AND/OR SPECIFIED, IN COMPLIANCE WITH NEC 410-104. INSTALLERS ARE CAUTIONED TO ENSURE TRACK HEADS AND TRACK ARE COMPATIBLE (I.E., ADAPTER FOR TWO CIRCUIT TRACK WHERE REQUIRED).						
	TH-2	DUAL CIRCUIT TRACK, SURFACE MOUNT, WHITE.		180VA	/2'	HALO PRESCOLITE STAFF LIGHTOLIER CAPRI HUBBELL LITHONIA	L64X-P SERIES TT-WH SERIES 58043-WH SERIES 6100WH SERIES CT/W SERIES HTTRAXXWH SERIES L2T WH SERIES	
	TH-12	TRACKLIGHT; ROUNDBACK CYLINDER BLACK BAFFLE; WHITE.	75W/PAR30	75W	120V	HALO PRESCOLITE STAFF CAPRI LIGHTOLIER HUBBELL LITHONIA	L746P TV113WH 8301 WH CT2330 9530WH HTA330WH LTC RNDB PAR30 MB WH	
	TX	SPECIAL FIXTURES AS INDICATED. MEET ALL REQUIREMENTS OF SPECIFICATIONS AND FIXTURE SCHEDULE. VISUAL AND FINISH APPROVAL REQUIRED.						
	TX-1	CENTRAL STACKS PENDANT, SQUARE	2-CF42 RE841	100W	277V	WINONA	5601-F-SST-M277-OA-BAL-MOD	
	TX-2	CONFERENCE ROOM PENDANT DIMMING BALLAST (100%-5%)	2-CF42 RE841	100W	277V	WINONA	5601-F-SST-M277-OA-BAL-MOD-DIM	
	TX-3	GRAND STAIRS PENDANT. CUSTOM ASSEMBLY. 4' X 44' CONTRACTOR TO INSTALL & SUPPORT 500 POUNDS.	50-10WLV	500W	120V	BOCCI CONTRACTOR	14 SERIES LOW VOLTAGE PENDANT ALLOWANCE: $40,000.00 EACH	
	TX-4	CAFÉ SEATING PENDANT	7-15WLV	210W	120V	ITRE	CUBI 16	
	TX-5	CAFÉ SERVING PENDANT	LED	10W	120V	WINONA	LED-POP-SO1-9-X(CAT)-M-X/HO-ND120-BAL-X	
	TX-6	CIRCULATION DESK TABLE LIGHT	CF26 RE841	29w	120V	ITRE	CUBI ZERO	
	UC	UNDERCABINET LIGHT: LOW PROFILE X 5 1/4"DEEP X LENGTH AS NOTED; ACRYLIC DIFFUSER.						
	UC-5	33 1/2" LONG, WHITE.	T5/8W T5/13W	40W	120V	NULITE FSC LIGHTOLIER CREATIVE DURAY EELP	NU 33 120 3033 TSL1813W120 TI-33 DUC 813 TUS2133T5ELB	
	W	LOW PROFILE WRAPAROUND: SURFACE MOUNTED SUITABLE FOR MOUNTING ON LOW DENSITY CEILINGS WRAPAROUND ACRYLIC PRISMATIC DIFFUSER; WHITE ENAMEL ENDPLATES; MINIMUM CU OF 70 @ 80/50/20 AND RCR=1; PROGRAM START ELECTRONIC BALLASTS; T8 LAMPS; ONE BALLAST PER FIXTURE WHERE POSSIBLE, UNLESS TWO LEVEL SWITCHING IS SHOWN ON THE PLANS.						
	W-3	NARROW BODY WRAPAROUND; 2-LAMP, APPROX; 3" X 10" X 48". HIGH EFFICIENT SYSTEM	2-F32T8 RE841	47W	277/ 120V	LITHONIA DAYBRITE METALUX LIGHTOLIER LSI COLUMBIA	LB232-MVOLT-TUBPHP CAN232-UNV-1/2-EB-SPEC WS-232A-UNV-PROGRAM START WA232-U-SOP PR 232 SSO10PRS UE WC4-232-EBPS120/277	
	WS	WALL SCONCES, AS SHOWN AND DESCRIBED HEREIN, VISUAL APPROVAL REQUIRED. MOUNT AS SHOWN ON ARCHITECTURAL DRAWINGS. ELECTRONIC BALLASTS.						
	WS-1	CIRCULAR STAIRWELL WALL SCONCE	2-Q26 RE841	60W	277V	STUDIO ITALIA	MABEL-AP-2CF26-NT-030-277	
	WS-2	STAIRWELL WALL SCONCE	2-Q26 RE841	60W	277V	WINONA	5251-W1-F-277-OA-BAL	
	WS-3	ENTRY ARCADE WALL SCONCE	2-CF13D RE841	50W	277V	WINONA	5451-F-277-OA-BN	
	WS-4	SKYLIGHT UPLIGHT WALL SCONCE, SEMI RECESSED UPLIGHT WITH INTERNAL LOUVERS	1-CF55 RE841	65W	277V	WINONA	P2-LS-1FT155-277-LSRW-SGW-PB	
	WS-5	PATIO WALL SCONCES WET LABEL, BRUSHED ALUMINUM FINISH.	1-CF42 RE841	50W	277V	WINONA	5301-WL26-F-277-CPF-1MB	
	ZX	OUTDOOR POLE LIGHTS; BASE AND MOUNTING PER MANUFACTURER'S WRITTEN INSTRUCTIONS.						
	ZX-11	DECORATIVE POST-TOP LUMINAIRE SINGLE HEAD, MULTI-TAP BALLAST; TYPE V DISTRIBUTION. 150PSMH 12 RAS POLE, HINGED BASE	150PSMH	220W	MTB	KIM	BNS1/FM/BNS1H/150PMHUNV/DB-P/ PRA124125FM-DB-PA	

COOPER ROBERTS SIMONSEN ASSOCIATES
crsa
700 North 200 West
Salt Lake City, UT 84103
(801) 355-5915 phone
(801) 355-9885 fax
crsa-us.com

SNOW COLLEGE

State of Utah-Department of Administrative Services
DIVISION OF FACILITIES CONSTRUCTION AND MANAGEMENT
4110 State Office Building/East Lake City, Utah 84114/538-3018

Civil Engineer
Great Basin Engineering
Contact: Dave Waldron
5746 South 1475 East, Suite 200
Ogden, UT 84403
(801) 521-0222 FAX (801) 392-7544
dave@gbenorth.com

Landscape Architect
G. Brown Design
Contact: Mathew Winward
610 E. South Temple, Suite 50
Salt Lake City, UT 84102
(801) 575-6066 FAX (801) 575-6166
mwinward@gbrowndesign.com

Structural Engineer
Reaveley Engineers
Contact: Cameron Empey
675 East 500 South, Suite 400
Salt Lake City, UT 84105
(801) 486-3883 FAX (801) 485-0911
cempey@reaveley.com

Mechanical Engineer
Van Boerum & Frank
Contact: Neil Spencer
330 South 300 East
Salt Lake City, UT 84111
(801) 530-3148 FAX (801) 910-9917
nspencer@vbfa.com

Electrical Engineer
Spectrum Engineers
Contact: Dave Wesemann, PE
175 South Main Street, Suite 300
Salt Lake City, UT 84111
(801) 328-5151 FAX (801) 328-5155
dew@spectrum-engineers.com

AV Consultant
Spectrum Engineers
Contact: Kurtis Dallinga, PE
175 South Main Street, Suite 300
Salt Lake City, UT 84111
(801) 328-5151 FAX (801) 328-5155
kdd@spectrum-engineers.com

Library Consultant
Michaels Associates Design Consultants, Inc.
Contact: Andrea Michaels
14809 North 73rd Street, Suite 100
Scottsdale, AZ 85260
(480) 998-7476 FAX (480) 998-9390
andrea@madcinc.com

STAMP:
LICENSED PROFESSIONAL ENGINEER No. 181563 DAVID E. WESEMANN STATE OF UTAH

PROJECT NAME:
Snow College Library
150 College Avenue
Ephraim, Utah 84627

REVISIONS:
100% CD, October 13, 2008
100% CD, September 15, 2008
100% CD Review, Aug 26, 2008
100% CD, June 25, 2008
100% CD Review, June 20, 2008
50% CD Review, May 27, 2008
CD Review Set, May 2, 2008
DD Set, April 18, 2008
DD Review, April 4, 2008

ISSUE DATE:
SEPTEMBER 15 2008, 100% CD

ARCHITECT'S PROJECT NUMBER:
B07-051

DFCM PROJECT NUMBER:
07258700

SHEET TITLE:
LIGHTING FIXTURE SCHEDULE

SHEET NUMBER:
EL-601

File Name: P:\2007\20070473\Drawings\Sheet\73EL-601.dwg Last Plotted: 2008/10/14 @ 10:10 AM By: dlm

COMcheck Software Version 3.5.2
Interior Lighting and Power Compliance Certificate

90.1 (2004) Standard
Report Date: 09/14/08
Data filename: P:\2007\20070473\0Quality_Control\Design_and_Calculations\16Electrical\Lighting\2008-08-26-COMCHECK.cck

Section 1: Project Information
Project Type: **New Construction**
Project Title : Snow College Library

Construction Site:
150 College Avenue
Ephraim, UT 84627

Owner/Agent:
State of Utah
DFCM
Salt Lake City, UT

Designer/Contractor:
Spectrum Engineers, Inc.
175 South Main
Suite 300
Salt Lake City, UT 84111
801 328-5151
dew@spectrum-engineers.com

Section 2: General Information
Building Use Description by:

Building Type	Floor Area
Library	69590

Section 3: Requirements Checklist

Interior Lighting:

- [x] 1. Total proposed watts must be less than or equal to total allowed watts.

Allowed Watts	Proposed Watts	Complies
90467	72694	YES

- [x] 2. Exit signs 5 Watts or less per side.

Controls, Switching, and Wiring:

- [x] 3. Independent manual or occupancy sensing controls for each space (remote switch with indicator allowed for safety or security).
- [x] 4. Occupant sensing control in class rooms, conference/meeting rooms, and employee lunch and break rooms.
  Exceptions:
  Spaces with multi-scene control; shop classrooms, laboratory classrooms, and preschool through 12th grade classrooms.
- [x] 5. Automatic shutoff control for lighting in >5000 sq.ft buildings by time-of-day device, occupant sensor, or other automatic control.
  Exceptions:
  24 hour operation lighting; patient care areas; where auto shutoff would endanger safety or security.
- [ ] 6. Master switch at entry to hotel/motel guest room.
- [x] 7. Separate control device for display/accent lighting, case lighting, task lighting, nonvisual lighting, lighting for sale, and demonstration lighting.
- [x] 8. Photocell/astronomical time switch on exterior lights.
  Exceptions:
  Covered vehicle entrance/exit areas requiring lighting for safety, security and eye adaptation.
- [x] 9. Tandem wired one-lamp and three-lamp ballasted luminaires (No single-lamp ballasts).
  Exceptions:
  Electronic high-frequency ballasts;
  Luminaires not on same switch;
  Recessed luminaires 10 ft. apart or surface/pendant not continuous;
  Luminaires on emergency circuits.

Voltage Drop:

- [ ] 10. Feeder conductors have been designed for a maximum voltage drop of 2 percent.
- [ ] 11. Branch circuit conductors have been designed for a maximum voltage drop of 3 percent.

Section 4: Compliance Statement
Compliance Statement: The proposed lighting design represented in this document is consistent with the building plans, specifications and other calculations submitted with this permit application. The proposed lighting system has been designed to meet the 90.1 (2004) Standard requirements in COM*check* Version 3.5.2 and to comply with the mandatory requirements in the Requirements Checklist.

Joseph L M Good III, LC, FIES, IALD Lighting Designer — [signature] — 9/15/08
Name - Title — Signature — Date

Section 5: Post Construction Compliance Statement

Record Drawings and Operating and Maintenance Manuals:

- [ ] 1. Construction documents with record drawings and operating and maintenance manuals provided to the owner.

Lighting Designer or Contractor Name — Signature — Date

Project Notes:
LEd luminaires used. These are coded as noted.

COMcheck Software Version 3.5.2
Interior Lighting Application Worksheet

90.1 (2004) Standard
Report Date:
Data filename: P:\2007\20070473\0Quality_Control\Design_and_Calculations\16Electrical\Lighting\2008-08-26-COMCHECK.cck

Section 1: Allowed Lighting Power Calculation

A	B Floor Area	C Allowed Watts / ft2	D Allowed Watts
Library	69590	1.3	90467
		Total Allowed Watts =	90467

Section 2: Proposed Lighting Power Calculation

A Fixture ID : Description / Lamp / Wattage Per Lamp / Ballast	B Lamps/ Fixture	C # of Fixtures	D Fixture Watt.	E (C X D)
Library (69590 sq.ft.)				
Linear Fluorescent 1: AS-16d: DIMMING / 46" T5 HO 54W / Electronic	2	36	125	4500
Linear Fluorescent 2: CM-16: 48" T8 32W (Super T8) / Electronic	6	121	132	15972
Linear Fluorescent 3: CM-17: 48" T8 32W (Super T8) / Electronic	6	8	132	1056
Compact Fluorescent 1: DF-17: Triple 4-pin 32W / Electronic	1	8	36	288
Compact Fluorescent 2: DF-37: Triple 4-pin 32W / Electronic	2	209	68	14212
Compact Fluorescent 3: DF-37d: DIMMING / Triple 4-pin 32W / Electronic	2	44	76	3344
Compact Fluorescent 4: DF-37L: Triple 4-pin 32W / Electronic	2	2	68	136
Incandescent 1: DL-11: Incandescent 50W	1	2	55	110
Incandescent 2: DL-99: Incandescent 50W	4	3	220	660
Compact Fluorescent 5: G-1: Other / Electronic	2	37	109	4033
Linear Fluorescent 4: G-2: 48" T8 32W (Super T8) / Electronic	3	70	66	4620
Linear Fluorescent 5: G-2d: DIMMING / 48" T8 32W (Super T8) / Electronic	3	28	102	2856
Linear Fluorescent 6: GF-4: 48" T8 32W (Super T8) / Electronic	3	3	66	198
Compact Fluorescent 6: OJ-1: LED Steplight / Other / Electronic	1	14	5	70
Linear Fluorescent 7: P3-12: 48" T8 32W (Super T8) / Electronic	1	13	36	468
Linear Fluorescent 8: PS-1: 48" T8 32W (Super T8) / Electronic	2	248	11	2728
Linear Fluorescent 9: S-3: 48" T8 32W (Super T8) / Electronic	2	22	44	968
Linear Fluorescent 10: SA-1: 48" T8 32W (Super T8) / Electronic	2	60	44	2640
Incandescent 3: TH-12: Incandescent 75W	1	51	75	3825
Compact Fluorescent 7: TX-1: Triple 4-pin 42W / Electronic	2	67	46	3082
Compact Fluorescent 8: TX-2: DIMMING / Triple 4-pin 42W / Electronic	2	4	98	392
Linear Fluorescent 11: UC-5: Other / Electronic	1	3	33	99
Linear Fluorescent 12: W-3: 48" T8 32W (Super T8) / Electronic	2	20	44	880
Compact Fluorescent 9: WS-1: Quad 2-pin 26W / Electronic	2	15	54	810
Compact Fluorescent 10: WS-2: Quad 2-pin 26W / Electronic	2	10	54	540
Compact Fluorescent 11: WS-3: Triple 4-pin 13W / Electronic	2	22	30	660
Compact Fluorescent 12: WS-4: Twin Tube 55W / Electronic	1	24	51	1224
Incandescent 4: TX-3: 50-10W LV / Other	1	1	500	500
Incandescent 5: TX-4: 7-15W LV / Other	7	9	115	1035
Incandescent 6: TX-5: LED / Other	1	7	10	70
Compact Fluorescent 13: TX-6: Triple 4-pin 26W / Electronic	1	2	29	58
Compact Fluorescent 11 copy 1: WS-3: Triple 4-pin 13W / Electronic	2	22	30	660
			Total Proposed Watts =	72694

Section 3: Compliance Calculation
If the Total Allowed Watts minus the Total Proposed Watts is greater than or equal to zero, the building complies.

Total Allowed Watts =	90467
Total Proposed Watts =	72694
Project Compliance =	17773

Interior Lighting PASSES: Design 20% better than code.

Interior Lighting and Power Compliance Certificate

90.1 (2004) Standard
Report Date: 09/14/08
Data filename: P:\2007\20070473\0Quality_Control\Design_and_Calculations\16Electrical\Lighting\2008-08-26-COMCHECK.cck

Section 1: Project Information
Project Type: **New Construction**
Project Title : Snow College Library

Construction Site:
150 College Avenue
Ephraim, UT 84627

Owner/Agent:
State of Utah
DFCM
Salt Lake City, UT

Designer/Contractor:
Spectrum Engineers, Inc.
175 South Main
Suite 300
Salt Lake City, UT 84111
801 328-5151
dew@spectrum-engineers.com

Section 2: General Information
Building Use Description by:

Building Type	Floor Area
Library	69590

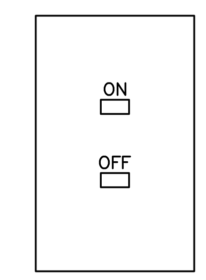

CONFIGURE TO TURN ON SELECTED CIRCUITS ONLY.
MOUNT AT +42" AFF.

WS
D4 WALL STATION
SCALE: N.T.S.

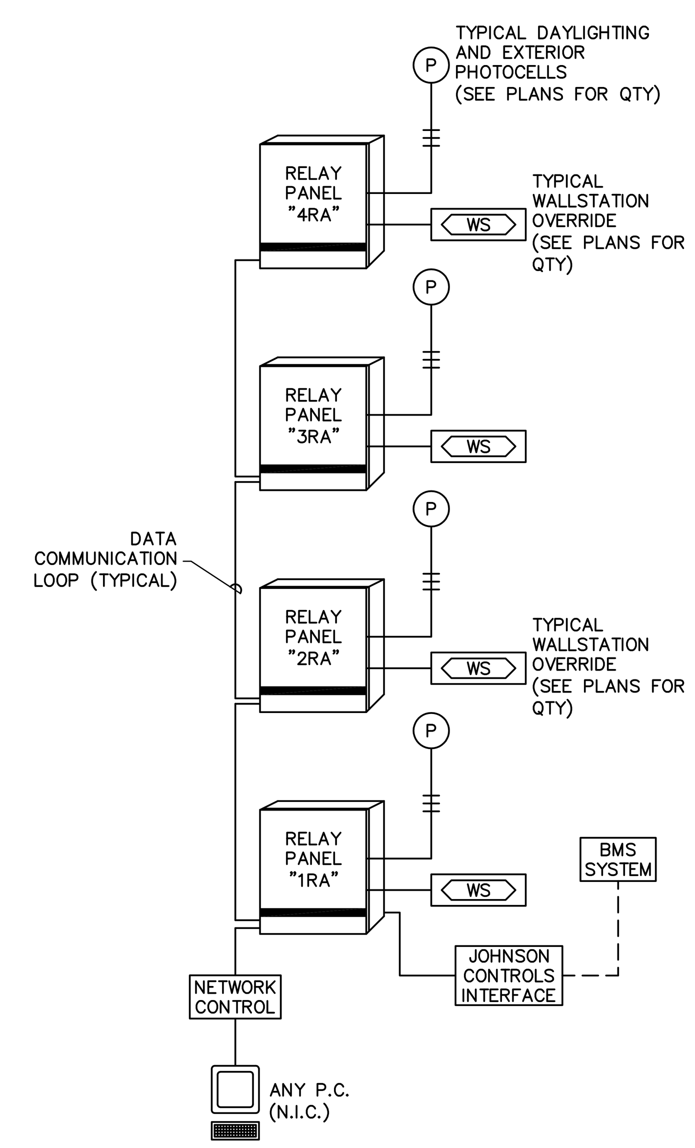

B4 LIGHTING CONTROL SCHEMATIC
SCALE: N.T.S.

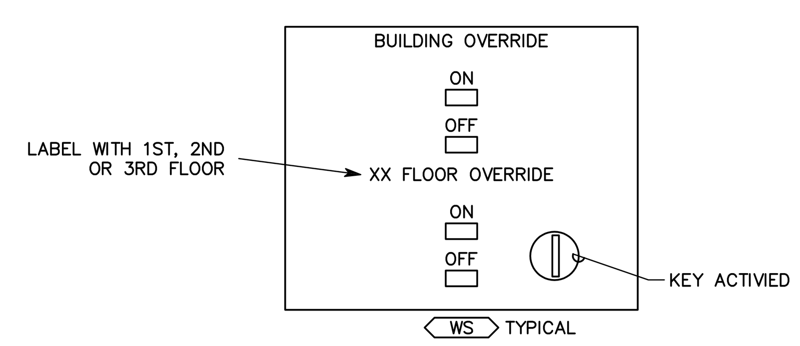

A3 TYPICAL COMMON AREA WALLSTATION OVERRIDE SWITCH
SCALE: N.T.S.

RELAY PANEL SCHEDULE

RELAY CABINET: "1RA"

RELAY #	PANEL CIRCUIT #	CONTROL GROUP	CONTROL METHOD	LOAD DESCRIPTION
1	1HA–2	A	1	Corridor Lights
2	1HA–3	A	1	N. Reading Area Lights
3	1HA–5	A	1	Central Study Area Lights
4	1HA–7	A	1	S. Study Area Lights
5	1HA–9	C	3	S. Outdoor Lights
6	1HA–11	D	4	OUTDOOR POLE LIGHTS
7	1HA–13	D	4	OUTDOOR POLE LIGHTS
8	1HA–15	D	4	OUTDOOR POLE LIGHTS
9				Spare Relay
10				Spare Relay
11				Spare Relay
12				Spare Relay
EMERGENCY/NORMAL POWER BARRIER				
14	EH–4	F	3	OUTDOOR EM LIGHTS
15				Spare Relay
16				Spare Relay

RELAY PANEL SCHEDULE

RELAY CABINET: "3RA"

RELAY #	PANEL CIRCUIT #	CONTROL GROUP	CONTROL METHOD	LOAD DESCRIPTION
1	3HA–1	A	1	S. Reading Area Lights
2	3HA–2	A	1	N. Reading Area Lights
3	3HA–3	A	1	Central Stacks Lights
4	3HA–4	A	1	N. Reading Area Lights
5	3HA–5	A	1	Central Stacks/Corridor Lights
6	3HA–6	A	1	N. Reading Area Lights
7	3HA–8	B	2	W. Window Lights
8	3HA–9	A	1	W. Reading Area
9				Spare Relay
10				Spare Relay
11				Spare Relay
12				Spare Relay

RELAY PANEL SCHEDULE

RELAY CABINET: "2RA"

RELAY #	PANEL CIRCUIT #	CONTROL GROUP	CONTROL METHOD	LOAD DESCRIPTION
1	2HA–2	A	1	Auditorium Waiting Lights
2	2HA–3	A	1	South Reading Area Lights
3	2HA–4	A	1	Corridor/Entry Lights
4	2HA–5	A	1	South Reading Area Lights
5	2HA–6	A	1	N. Entry/Stacks Lights
6	2HA–7	B	2	N. Window Area Lights
7	2HA–8	A	1	Bathroom Corridor Lights
8	2HA–13	C	3	N. Outdoor Lights
9				Spare Relay
10				Spare Relay
11				Spare Relay
12				Spare Relay

RELAY PANEL SCHEDULE

RELAY CABINET: "4RA"

RELAY #	PANEL CIRCUIT #	CONTROL GROUP	CONTROL METHOD	LOAD DESCRIPTION
1	4HA–1	A	1	Corridors
2	4HA–4	A	1	Central Reading Area Lights
3	4HA–6	A	1	Central Reading Area Lights
4	4HA–7	B	2	Skylight Lights
5	4HA–9	B	2	Skylight Lights
6	4LA–47	A	1	Spare Relay
7				Spare Relay
8				Spare Relay
9				Spare Relay
10				Spare Relay
11				Spare Relay
12				Spare Relay

LIGHTING CONTROL GROUPS

A	CORRIDOR AND COMMON AREAS
B	CORRIDOR AND COMMON DAYLIGHTING AREAS
C	OUTDOOR NIGHT LIGHTS
D	OUTDOOR LIGHTS
F	OUTDOOR EM LIGHTS

LIGHTING CONTROL METHODS

1	ON/OFF WITH OCCUPIED/UNOCCUPIED MODE, WALL STATION ON/OFF OVERRRIDE
2	ON/OFF WITH INTERIOR PHOTOCELL, OFF IN UNOCCUPIED MODE, WALL STATION OVERIDE
3	ON/OFF WITH EXTERIOR PHOTOCELL
4	ON W/ EXTERIOR PHOTOCELL, OFF W/ TIMECLOCK

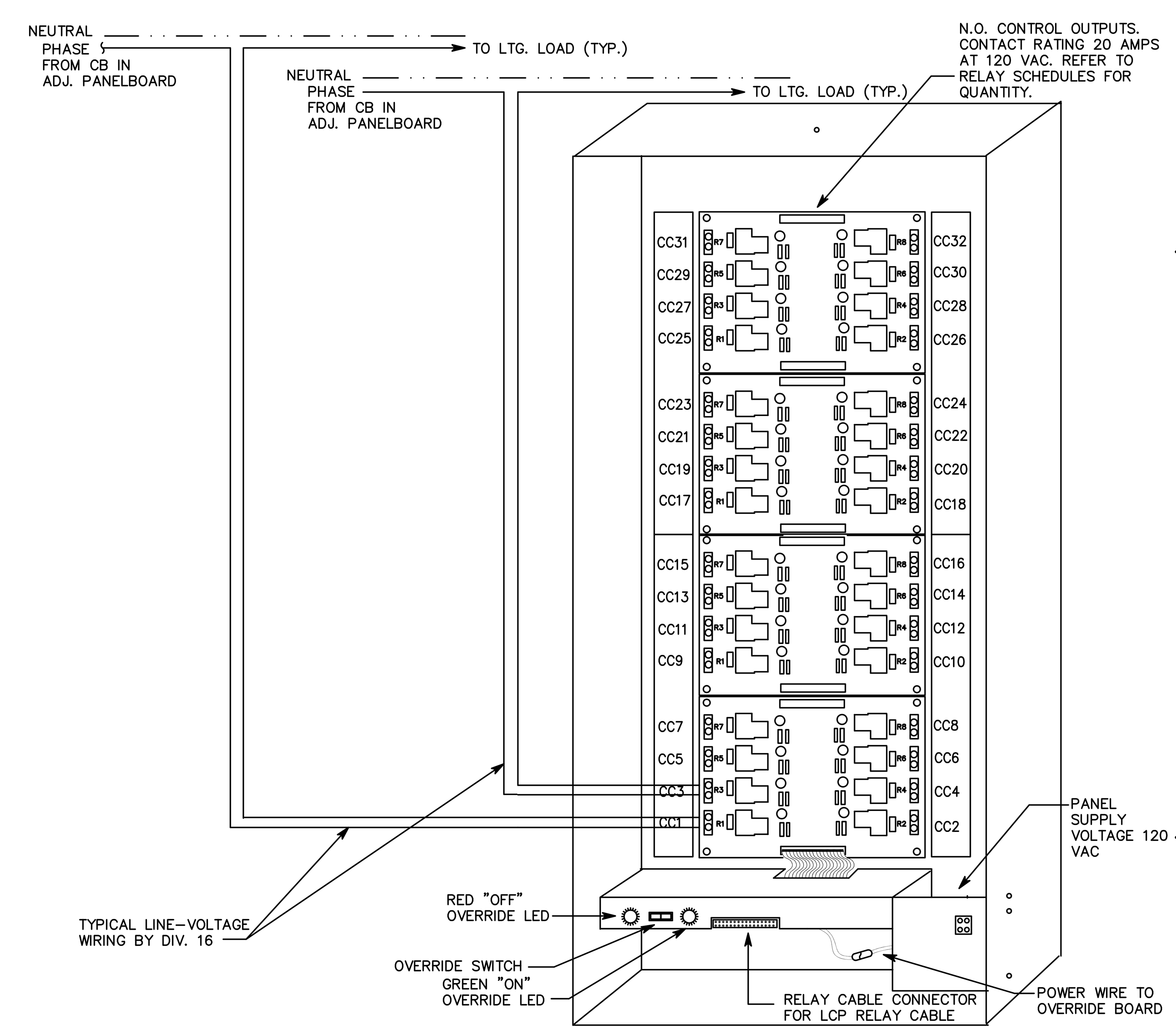

A5 TYPICAL RELAY PANEL WIRING DETAIL
SCALE: N.T.S.

COOPER ROBERTS SIMONSEN ASSOCIATES
crsa
700 North 200 West
Salt Lake City, UT 84103
(801) 355-5915 phone
(801) 355-9885 fax
crsa-us.com

SNOW COLLEGE

THE GREAT SEAL OF THE STATE OF UTAH 1896
State of Utah-Department of Administrative Services
DIVISION OF FACILITIES CONSTRUCTION AND MANAGEMENT
4110 State Office Building/Salt Lake City, Utah 84114/538-3018

Civil Engineer
Great Basin Engineering
Contact: Dave Waldron
5746 South 1475 East, Suite 200
Ogden, UT 84403
(801) 521-0222 FAX (801) 392-7544
dave@gbenorth.com

Landscape Architect
G. Brown Design
Contact: Mathew Winward
610 E. South Temple, Suite 50
Salt Lake City, UT 84102
(801) 575-6066 FAX (801) 575-6166
mwinward@gbrowndesign.com

Structural Engineer
Reaveley Engineers
Contact: Cameron Empey
675 East 500 South, Suite 400
Salt Lake City, UT 84105
(801) 486-3883 FAX (801) 485-0911
cempey@reaveley.com

Mechanical Engineer
Van Boerum & Frank
Contact: Neil Spencer
330 South 300 East
Salt Lake City, UT 84111
(801) 530-3148 FAX (801) 910-9917
nspencer@vbfa.com

Electrical Engineer
Spectrum Engineers
Contact: Dave Wesemann, PE
175 South Main Street, Suite 300
Salt Lake City, UT 84111
(801) 328-5151 FAX (801) 328-5155
dew@spectrum-engineers.com

AV Consultant
Spectrum Engineers
Contact: Kurtis Dallinga, PE
175 South Main Street, Suite 300
Salt Lake City, UT 84111
(801) 328-5151 FAX (801) 328-5155
kdd@spectrum-engineers.com

Library Consultant
Michaels Associates Design Consultants, Inc.
Contact: Andrea Michaels
14809 North 73rd Street, Suite 100
Scottsdale, AZ 85260
(480) 998-7476 FAX (480) 998-9390
andrea@madcinc.com

STAMP:
LICENSED PROFESSIONAL ENGINEER No. 181563 DAVID E. WESEMANN STATE OF UTAH

PROJECT NAME:
Snow College Library

150 College Avenue
Ephraim, Utah 84627

REVISIONS:
100% CD, October 13, 2008
100% CD, September 15, 2008
100% CD Review, Aug 26, 2008
100% CD, June 25, 2008
100% CD Review, June 20, 2008
50% CD Review, May 27, 2008
CD Review Set, May 2, 2008
DD Set, April 18, 2008
DD Review, April 4, 2008

ISSUE DATE:
SEPTEMBER 15 2008, 100% CD

ARCHITECT'S PROJECT NUMBER:
B07-051

DFCM PROJECT NUMBER:
07258700

SHEET TITLE:
LIGHTING RELAY, CONTROL SCHEDULES AND DETAILS

SHEET NUMBER:
EL-602

File Name: P:\2007\20070473\1Drawings\Sheet\73EL-602.dwg Last Plotted: 2008/10/14 @ 10:10 AM By: dlm

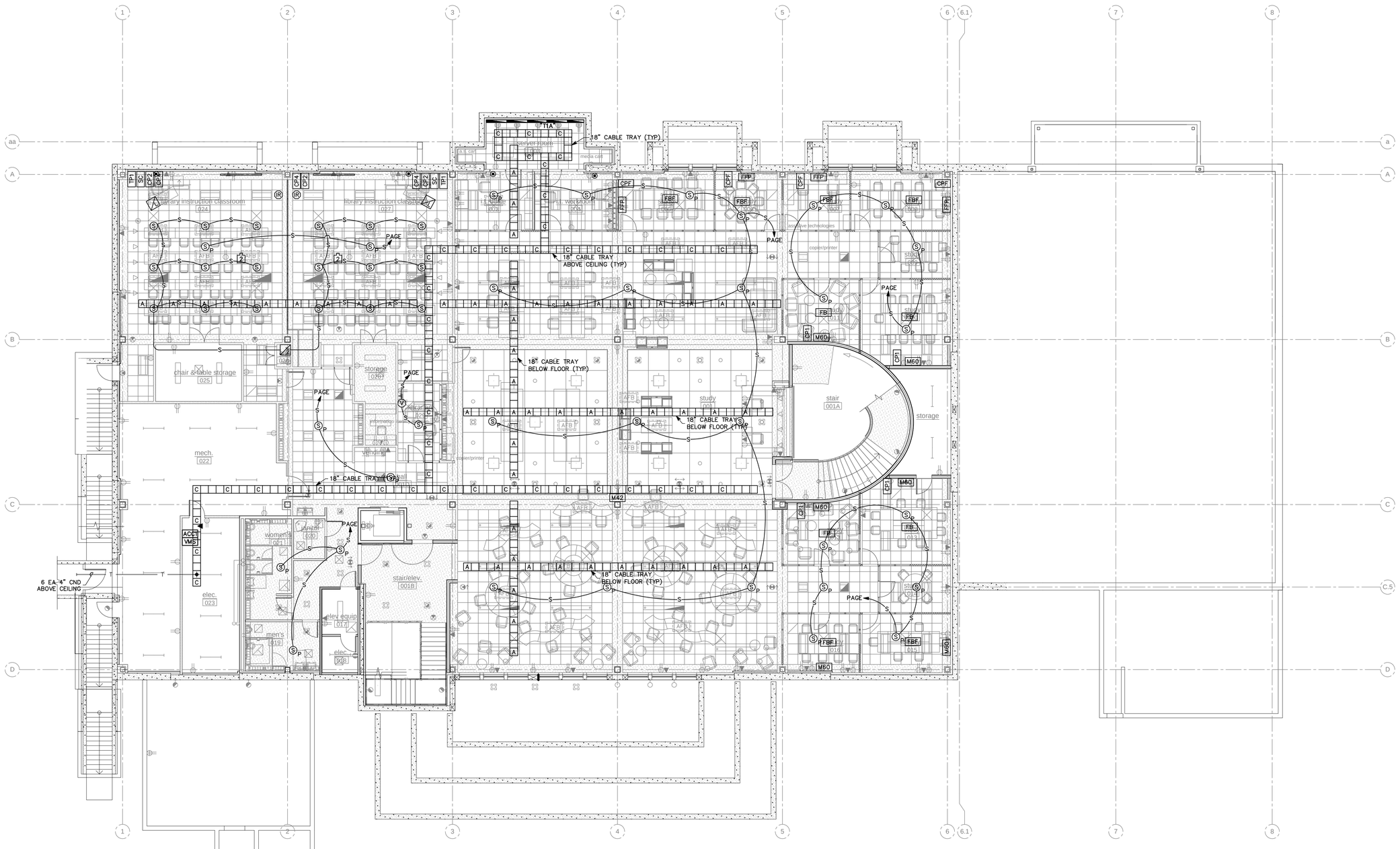

A1 BASEMENT LEVEL TECHNOLOGY PLAN

SCALE: 1/8" = 1'-0"

COOPER ROBERTS SIMONSEN ASSOCIATES

crsa

700 North 200 West
Salt Lake City, UT 84103
(801) 355-5915 phone
(801) 355-9885 fax
crsa-us.com

SNOW COLLEGE

State of Utah-Department of Administrative Services

DIVISION OF FACILITIES CONSTRUCTION AND MANAGEMENT

4110 State Office Building/Salt Lake City, Utah 84114/538-3018

Civil Engineer

Great Basin Engineering
Contact: Dave Waldron
5746 South 1475 East, Suite 200
Ogden, UT 84403
(801) 521-0222 FAX (801) 392-7544
dave@gbenorth.com

Landscape Architect

G. Brown Design
Contact: Mathew Winward
610 E. South Temple, Suite 50
Salt Lake City, UT 84102
(801) 575-6066 FAX (801) 575-6166
mwinward@gbrowndesign.com

Structural Engineer

Reaveley Engineers
Contact: Cameron Empey
675 East 500 South, Suite 400
Salt Lake City, UT 84105
(801) 486-3883 FAX (801) 485-0911
cempey@reaveley.com

Mechanical Engineer

Van Boerum & Frank
Contact: Neil Spencer
330 South 300 East
Salt Lake City, UT 84111
(801) 530-3148 FAX (801) 910-9917
nspencer@vbfa.com

Electrical Engineer

Spectrum Engineers
Contact: Dave Wesemann, PE
175 South Main Street, Suite 300
Salt Lake City, UT 84111
(801) 328-5151 FAX (801) 328-5155
dew@spectrum-engineers.com

AV Consultant

Spectrum Engineers
Contact: Kurtis Dallinga, PE
175 South Main Street, Suite 300
Salt Lake City, UT 84111
(801) 328-5151 FAX (801) 328-5155
kdd@spectrum-engineers.com

Library Consultant

Michaels Associates Design Consultants, Inc.
Contact: Andrea Michaels
14809 North 73rd Street, Suite 100
Scottsdale, AZ 85260
(480) 998-7476 FAX (480) 998-9390
andrea@madcinc.com

STAMP:

LICENSED PROFESSIONAL ENGINEER No. 181563 DAVID E. WESEMANN STATE OF UTAH

PROJECT NAME:

Snow College Library

150 College Avenue
Ephraim, Utah 84627

REVISIONS:

- 100% CD, October 13, 2008
- 100% CD, September 15, 2008
- 100% CD Review, Aug 26, 2008
- 100% CD, June 25, 2008
- 100% CD Review, June 20, 2008
- 50% CD Review, May 27, 2008
- CD Review Set, May 2, 2008
- DD Set, April 18, 2008
- DD Review, April 4, 2008

ISSUE DATE:

SEPTEMBER 15 2008, 100% CD

ARCHITECT'S PROJECT NUMBER:

B07-051

DFCM PROJECT NUMBER:

07258700

SHEET TITLE:

BASEMENT LEVEL TECHNOLOGY PLAN

SHEET NUMBER:

ET-101

File Name: P:\2007\20070473\1Drawings\Sheet\73ET-101.dwg Last Plotted: 2008/10/14 @ 10:12 AM By: dlm

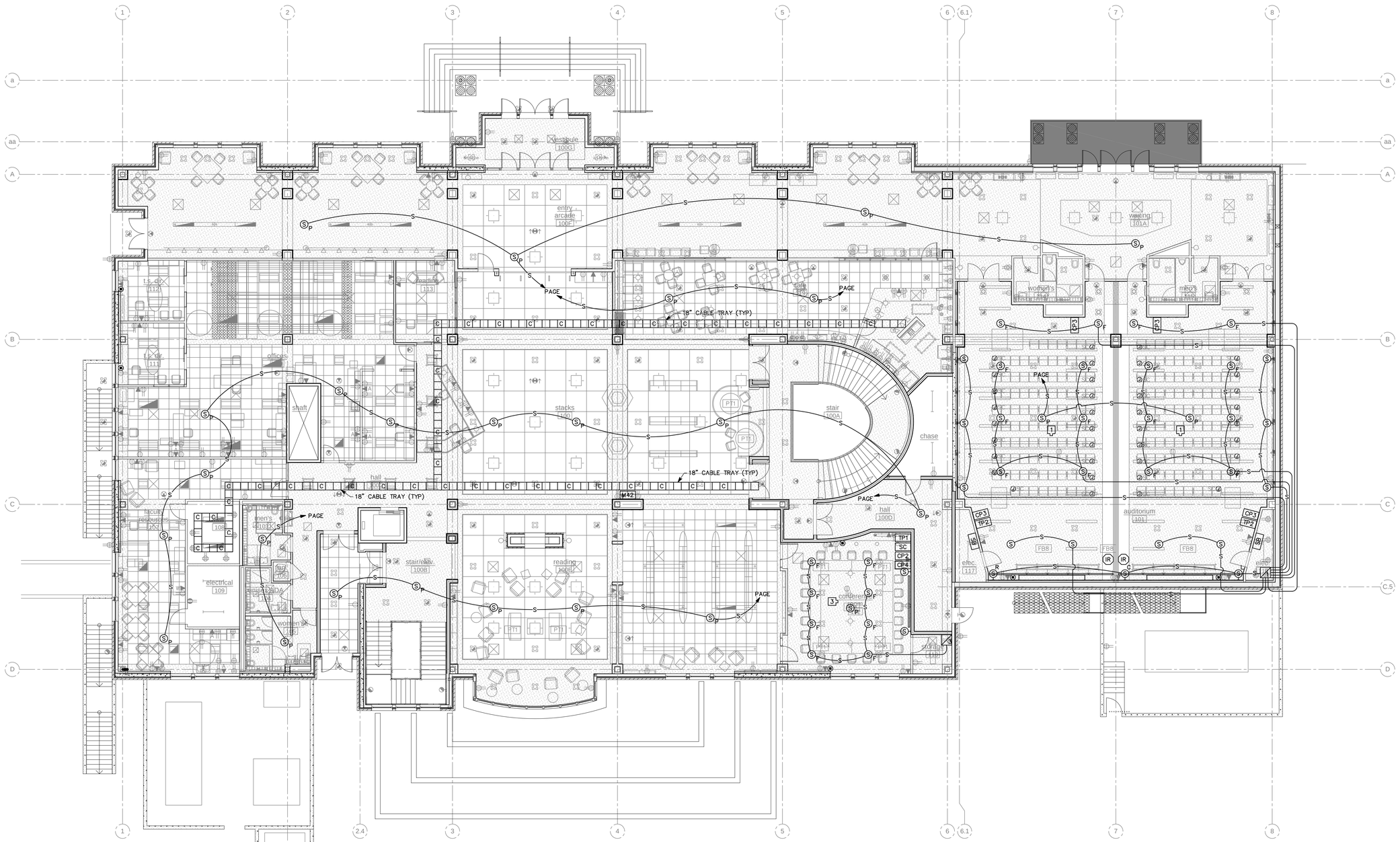

A1 LEVEL 1, MAIN LEVEL TECHNOLOGY PLAN

SCALE: 1/8" = 1'-0"

COOPER ROBERTS SIMONSEN ASSOCIATES

crsa

700 North 200 West
Salt Lake City, UT 84103
(801) 355-5915 phone
(801) 355-9885 fax
crsa-us.com

SNOW COLLEGE

State of Utah-Department of Administrative Services

DIVISION OF FACILITIES CONSTRUCTION AND MANAGEMENT

4110 State Office Building/Salt Lake City, Utah 84114/538-3018

Civil Engineer

Great Basin Engineering
Contact: Dave Waldron
5746 South 1475 East, Suite 200
Ogden, UT 84403
(801) 521-0222 FAX (801) 392-7544
dave@gbenorth.com

Landscape Architect

G. Brown Design
Contact: Mathew Winward
610 E. South Temple, Suite 50
Salt Lake City, UT 84102
(801) 575-6066 FAX (801) 575-6166
mwinward@gbrowndesign.com

Structural Engineer

Reaveley Engineers
Contact: Cameron Empey
675 East 500 South, Suite 400
Salt Lake City, UT 84105
(801) 486-3883 FAX (801) 485-0911
cempey@reaveley.com

Mechanical Engineer

Van Boerum & Frank
Contact: Neil Spencer
330 South 300 East
Salt Lake City, UT 84111
(801) 530-3148 FAX (801) 910-9917
nspencer@vbfa.com

Electrical Engineer

Spectrum Engineers
Contact: Dave Wesemann, PE
175 South Main Street, Suite 300
Salt Lake City, UT 84111
(801) 328-5151 FAX (801) 328-5155
dew@spectrum-engineers.com

AV Consultant

Spectrum Engineers
Contact: Kurtis Dallinga, PE
175 South Main Street, Suite 300
Salt Lake City, UT 84111
(801) 328-5151 FAX (801) 328-5155
kdd@spectrum-engineers.com

Library Consultant

Michaels Associates Design Consultants, Inc.
Contact: Andrea Michaels
14809 North 73rd Street, Suite 100
Scottsdale, AZ 85260
(480) 998-7476 FAX (480) 998-9390
andrea@madcinc.com

STAMP:

LICENSED PROFESSIONAL ENGINEER
No. 181563
DAVID E. WESEMANN
STATE OF UTAH

PROJECT NAME:

Snow College Library

150 College Avenue
Ephraim, Utah 84627

REVISIONS:

- 100% CD, October 13, 2008
- 100% CD, September 15, 2008
- 100% CD Review, Aug 26, 2008
- 100% CD, June 25, 2008
- 100% CD Review, June 20, 2008
- 50% CD Review, May 27, 2008
- CD Review Set, May 2, 2008
- DD Set, April 18, 2008
- DD Review, April 4, 2008

ISSUE DATE:

SEPTEMBER 15 2008, 100% CD

ARCHITECT'S PROJECT NUMBER:

B07-051

DFCM PROJECT NUMBER:

07258700

SHEET TITLE:

LEVEL 1, MAIN LEVEL TECHNOLOGY PLAN

SHEET NUMBER:

ET-102

File Name: P:\2007\20070473\Drawings\Sheet\73ET-102.dwg Last Plotted: 2008/10/14 @ 10:12 AM By: dim

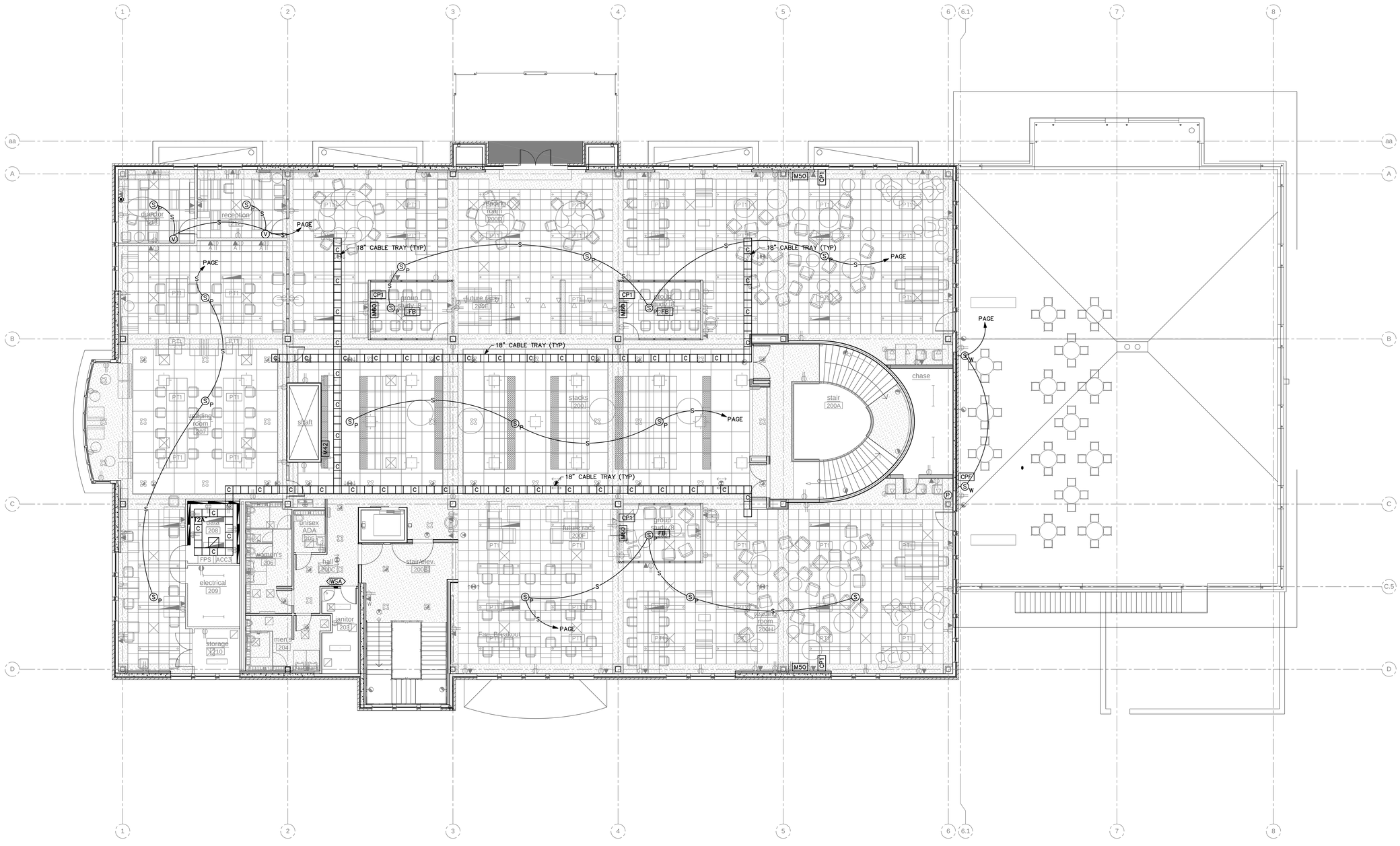

A1 LEVEL 2 TECHNOLOGY PLAN

SCALE: 1/8" = 1'-0"

File Name: P:\2007\20070473\1Drawings\Sheet\73ET-103.dwg Last Plotted: 2008/10/14 @ 10:12 AM By: dim

COOPER ROBERTS SIMONSEN ASSOCIATES

crsa

700 North 200 West
Salt Lake City, UT 84103
(801) 355-5915 phone
(801) 355-9885 fax
crsa-us.com

SNOW COLLEGE

State of Utah-Department of Administrative Services

DIVISION OF FACILITIES CONSTRUCTION AND MANAGEMENT

4110 State Office Building/Salt Lake City, Utah 84114/538-3018

Civil Engineer

Great Basin Engineering
Contact: Dave Waldron
5746 South 1475 East, Suite 200
Ogden, UT 84403
(801) 521-0222 FAX (801) 392-7544
dave@gbenorth.com

Landscape Architect

G. Brown Design
Contact: Mathew Winward
610 E. South Temple, Suite 50
Salt Lake City, UT 84102
(801) 575-6066 FAX (801) 575-6166
mwinward@gbrowndesign.com

Structural Engineer

Reaveley Engineers
Contact: Cameron Empey
675 East 500 South, Suite 400
Salt Lake City, UT 84105
(801) 486-3883 FAX (801) 485-0911
cempey@reaveley.com

Mechanical Engineer

Van Boerum & Frank
Contact: Neil Spencer
330 South 300 East
Salt Lake City, UT 84111
(801) 530-3148 FAX (801) 910-9917
nspencer@vbfa.com

Electrical Engineer

Spectrum Engineers
Contact: Dave Wesemann, PE
175 South Main Street, Suite 300
Salt Lake City, UT 84111
(801) 328-5151 FAX (801) 328-5155
dew@spectrum-engineers.com

AV Consultant

Spectrum Engineers
Contact: Kurtis Dallinga, PE
175 South Main Street, Suite 300
Salt Lake City, UT 84111
(801) 328-5151 FAX (801) 328-5155
kdd@spectrum-engineers.com

Library Consultant

Michaels Associates Design Consultants, Inc.
Contact: Andrea Michaels
14809 North 73rd Street, Suite 100
Scottsdale, AZ 85260
(480) 998-7476 FAX (480) 998-9390
andrea@madcinc.com

STAMP:

LICENSED PROFESSIONAL ENGINEER
No. 181563
DAVID E. WESEMANN
STATE OF UTAH

PROJECT NAME:

Snow College Library

150 College Avenue
Ephraim, Utah 84627

REVISIONS:

- 100% CD, October 13, 2008
- 100% CD, September 15, 2008
- 100% CD Review, Aug 26, 2008
- 100% CD, June 25, 2008
- 100% CD Review, June 20, 2008
- 50% CD Review, May 27, 2008
- CD Review Set, May 2, 2008
- DD Set, April 18, 2008
- DD Review, April 4, 2008

ISSUE DATE:

SEPTEMBER 15 2008, 100% CD

ARCHITECT'S PROJECT NUMBER:

B07-051

DFCM PROJECT NUMBER:

07258700

SHEET TITLE:

LEVEL 2 TECHNOLOGY PLAN

SHEET NUMBER:

ET-103

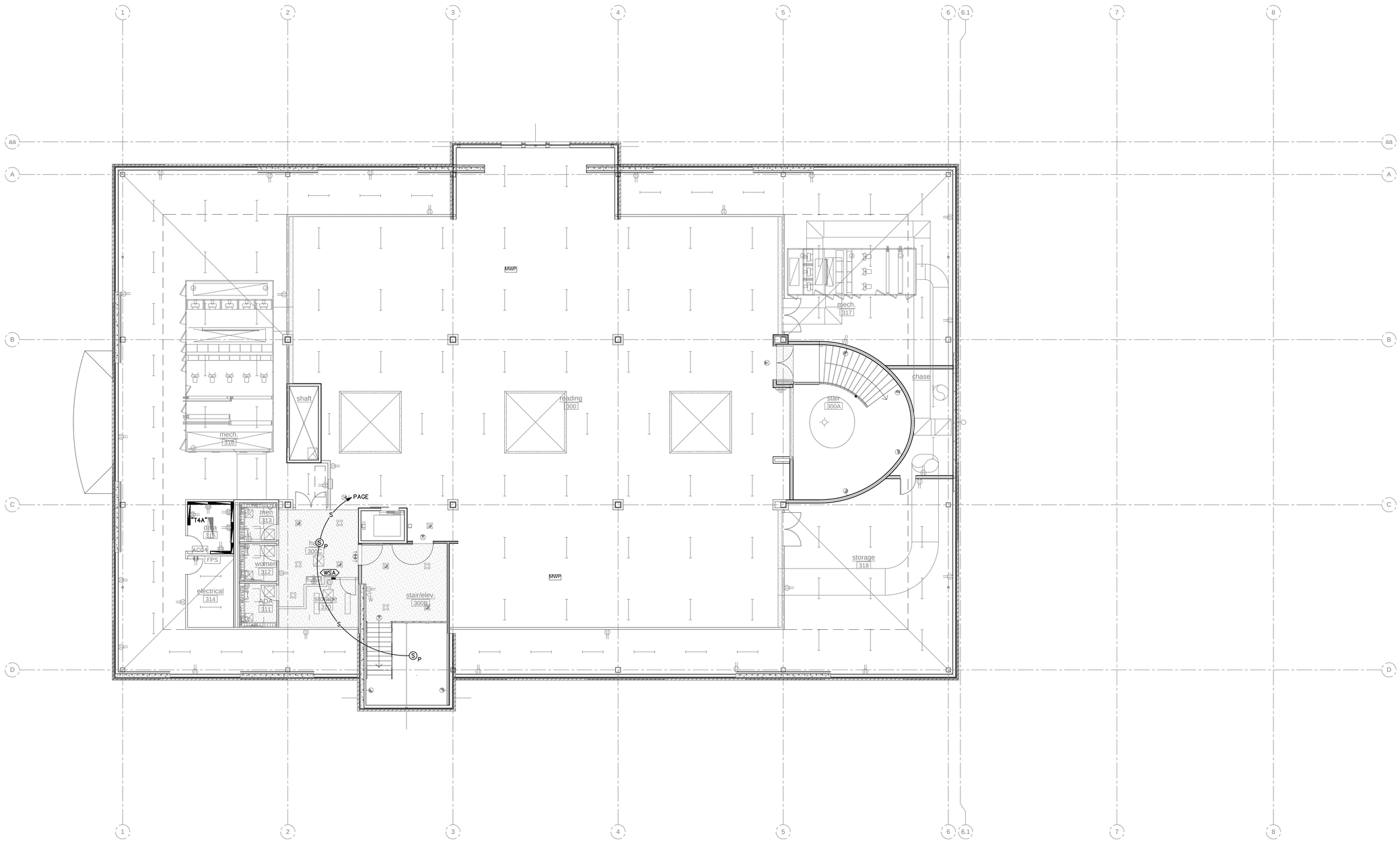

A1 LEVEL 3, ATTIC TECHNOLOGY PLAN

SCALE: 1/8" = 1'-0"

File Name: P:\2007\20070473\Drawings\Sheet\73ET-104.dwg Last Plotted: 2008/10/14 @ 10:12 AM By: dlm

COOPER
ROBERTS
SIMONSEN
ASSOCIATES

crsa

700 North 200 West
Salt Lake City, UT 84103
(801) 355-5915 phone
(801) 355-9885 fax
crsa-us.com

SNOW COLLEGE

State of Utah-Department of Administrative Services

DIVISION OF FACILITIES CONSTRUCTION AND MANAGEMENT

4110 State Office Building/Salt Lake City, Utah 84114/538-3018

Civil Engineer

Great Basin Engineering
Contact: Dave Waldron
5746 South 1475 East, Suite 200
Ogden, UT 84403
(801) 521-0222 FAX (801) 392-7544
dave@gbenorth.com

Landscape Architect

G. Brown Design
Contact: Mathew Winward
610 E. South Temple, Suite 50
Salt Lake City, UT 84102
(801) 575-6066 FAX (801) 575-6166
mwinward@gbrowndesign.com

Structural Engineer

Reaveley Engineers
Contact: Cameron Empey
675 East 500 South, Suite 400
Salt Lake City, UT 84105
(801) 486-3883 FAX (801) 485-0911
cempey@reaveley.com

Mechanical Engineer

Van Boerum & Frank
Contact: Neil Spencer
330 South 300 East
Salt Lake City, UT 84111
(801) 530-3148 FAX (801) 910-9917
nspencer@vbfa.com

Electrical Engineer

Spectrum Engineers
Contact: Dave Wesemann, PE
175 South Main Street, Suite 300
Salt Lake City, UT 84111
(801) 328-5151 FAX (801) 328-5155
dew@spectrum-engineers.com

AV Consultant

Spectrum Engineers
Contact: Kurtis Dallinga, PE
175 South Main Street, Suite 300
Salt Lake City, UT 84111
(801) 328-5151 FAX (801) 328-5155
kdd@spectrum-engineers.com

Library Consultant

Michaels Associates Design Consultants, Inc.
Contact: Andrea Michaels
14809 North 73rd Street, Suite 100
Scottsdale, AZ 85260
(480) 998-7476 FAX (480) 998-9390
andrea@madcinc.com

STAMP:

LICENSED PROFESSIONAL ENGINEER
No. 181563
DAVID E. WESEMANN
STATE OF UTAH

PROJECT NAME:

Snow College Library

150 College Avenue
Ephraim, Utah 84627

REVISIONS:

- 100% CD, October 13, 2008
- 100% CD, September 15, 2008
- 100% CD Review, Aug 26, 2008
- 100% CD, June 25, 2008
- 100% CD Review, June 20, 2008
- 50% CD Review, May 27, 2008
- CD Review Set, May 2, 2008
- DD Set, April 18, 2008
- DD Review, April 4, 2008

ISSUE DATE:

SEPTEMBER 15 2008, 100% CD

ARCHITECT'S PROJECT NUMBER:

B07-051

DFCM PROJECT NUMBER:

07258700

SHEET TITLE:

LEVEL 3, ATTIC TECHNOLOGY PLAN

SHEET NUMBER:

ET-104

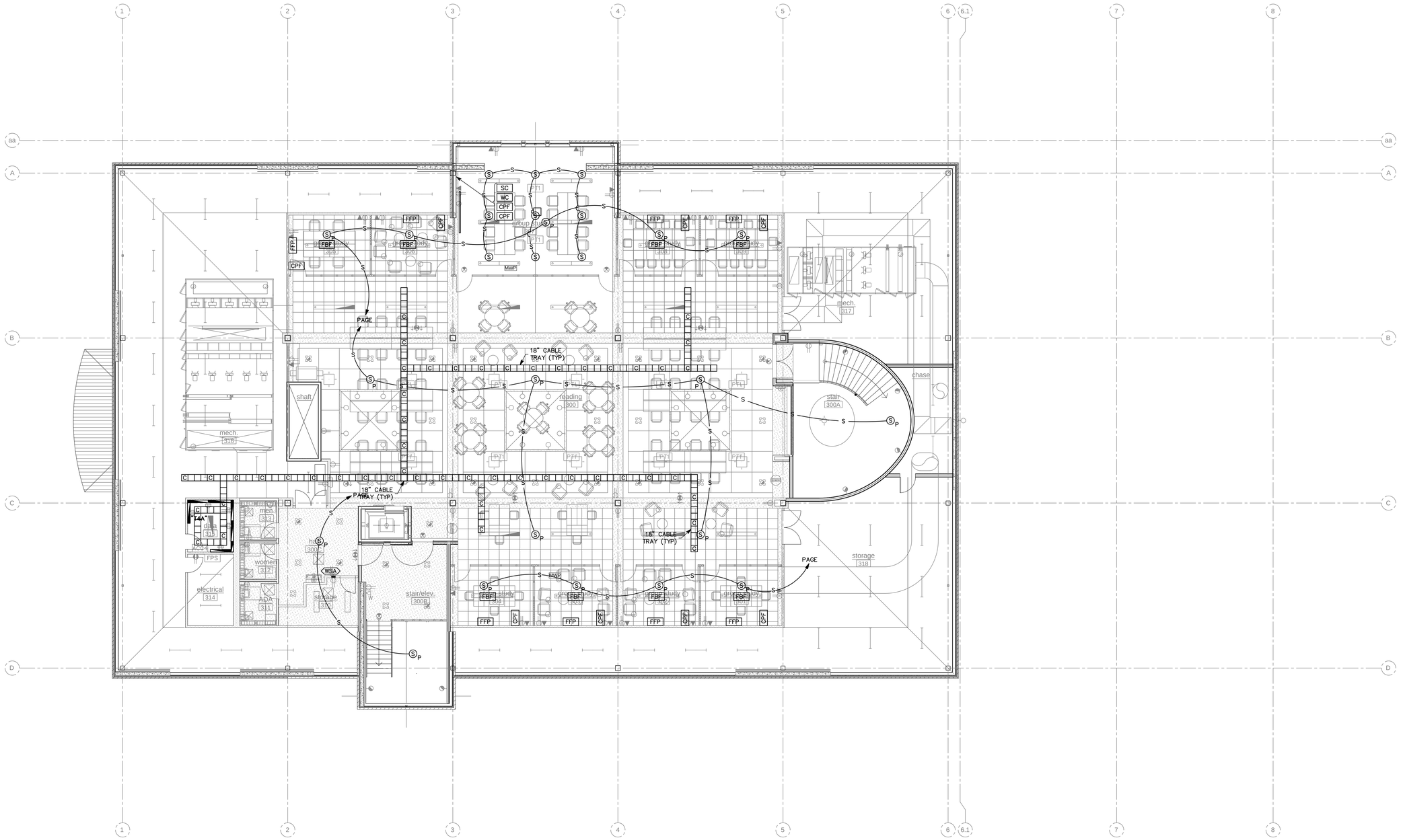

A1 LEVEL 3, ATTIC ADD ALT TECHNOLOGY PLAN

SCALE: 1/8" = 1'-0"

COOPER ROBERTS SIMONSEN ASSOCIATES

crsa

700 North 200 West
Salt Lake City, UT 84103
(801) 355-5915 phone
(801) 355-9885 fax
crsa-us.com

SNOW COLLEGE

State of Utah-Department of Administrative Services

DIVISION OF FACILITIES CONSTRUCTION AND MANAGEMENT

4110 State Office Building/Salt Lake City, Utah 84114/538-3018

Civil Engineer

Great Basin Engineering
Contact: Dave Waldron
5746 South 1475 East, Suite 200
Ogden, UT 84403
(801) 521-0222 FAX (801) 392-7544
dave@gbenorth.com

Landscape Architect

G. Brown Design
Contact: Mathew Winward
610 E. South Temple, Suite 50
Salt Lake City, UT 84102
(801) 575-6066 FAX (801) 575-6166
mwinward@gbrowndesign.com

Structural Engineer

Reaveley Engineers
Contact: Cameron Empey
675 East 500 South, Suite 400
Salt Lake City, UT 84105
(801) 486-3883 FAX (801) 485-0911
cempey@reaveley.com

Mechanical Engineer

Van Boerum & Frank
Contact: Neil Spencer
330 South 300 East
Salt Lake City, UT 84111
(801) 530-3148 FAX (801) 910-9917
nspencer@vbfa.com

Electrical Engineer

Spectrum Engineers
Contact: Dave Wesemann, PE
175 South Main Street, Suite 300
Salt Lake City, UT 84111
(801) 328-5151 FAX (801) 328-5155
dew@spectrum-engineers.com

AV Consultant

Spectrum Engineers
Contact: Kurtis Dallinga, PE
175 South Main Street, Suite 300
Salt Lake City, UT 84111
(801) 328-5151 FAX (801) 328-5155
kdd@spectrum-engineers.com

Library Consultant

Michaels Associates Design Consultants, Inc.
Contact: Andrea Michaels
14809 North 73rd Street, Suite 100
Scottsdale, AZ 85260
(480) 998-7476 FAX (480) 998-9390
andrea@madcinc.com

STAMP:

LICENSED PROFESSIONAL ENGINEER
No. 181563
DAVID E. WESEMANN
STATE OF UTAH

PROJECT NAME:

Snow College Library

150 College Avenue
Ephraim, Utah 84627

REVISIONS:

- 100% CD, October 13, 2008
- 100% CD, September 15, 2008
- 100% CD Review, Aug 26, 2008
- 100% CD, June 25, 2008
- 100% CD Review, June 20, 2008
- 50% CD Review, May 27, 2008
- CD Review Set, May 2, 2008
- DD Set, April 18, 2008
- DD Review, April 4, 2008

ISSUE DATE:

SEPTEMBER 15 2008, 100% CD

ARCHITECT'S PROJECT NUMBER:

B07-051

DFCM PROJECT NUMBER:

07258700

SHEET TITLE:

LEVEL 3, ATTIC ADD ALT TECHNOLOGY PLAN

SHEET NUMBER:

ET-104a

File Name: P:\2007\20070473\1Drawings\Sheet\J3ET-104a.dwg Last Plotted: 2008/10/14 @ 10:12 AM By: dim

AUDIO/VIDEO SYSTEM RACEWAY EQUIPMENT SCHEDULE

SYMBOL	MOUNTING	DESCRIPTION	SPECIAL INSTRUCTIONS
CPF CP2 CP4 CP5	WALL @ ELECTRICAL OUTLET HEIGHT OR AS NOTED	4-11/16" SQUARE JUNCTION BOX, MAXIMUM DEPTH FOR STUD SPACE WITH DOUBLE GANG MUD RING.	COORDINATE MOUNTING DETAILS
CP1	WALL @ ELECTRICAL OUTLET HEIGHT OR AS NOTED	4-11/16" SQUARE JUNCTION BOX, MAXIMUM DEPTH FOR STUD SPACE WITH SINGLE GANG MUD RING.	
CP3	WALL @ ELECTRICAL OUTLET HEIGHT	3" DEEP, SINGLE GANG BOX	COORDINATE MOUNTING DETAILS
SC P	WALL @ ELECTRICAL SWITCH HEIGHT	3" DEEP, SINGLE GANG BOX	
IR	CEILING	3" DEEP, SINGLE GANG BOX	
PT#	FLOOR	PROVIDE AS INDICATED ON EP SHEETS	INSTALL CONDUIT PER DETAIL
TP1 TP2 TP3	WALL @ ELECTRICAL SWITCH HEIGHT	TOUCH PANEL BACKBOX	FURNISHED BY AV INSTALLER. INSTALLED BY ELECTRICAL
	WALL @ 50" AFF	4-11/16" SQUARE JUNCTION BOX, WITH DOUBLE GANG MUD RING.	
#	ABOVE ACCESSIBLE CEILING/FLUSH IN FINISHED CEILING	4-11/16" SQUARE JUNCTION BOX, WITH DOUBLE GANG MUD RING.	TYPICAL OF ALL TYPES (1, 2, 3) INSTALL BOXES FLUSH IN GYPSUM BOARD CEILINGS. INSTALL BOXES ABOVE LAY-IN TILE CEILINGS. VERIFY EXACT LOCATION WITH AV INSTALLER.
	ABOVE FINISHED CEILING	PROJECTION SCREEN BOX/FITTINGS	TERMINATE CONDUIT TO SCREEN ENCLOSURE. COORDINATE WITH SUBMITTALS
S S W	WALL AT 84" AFF OR AS NOTED	3" DEEP, SINGLE GANG BOX	
S F	FLUSH IN FINISHED CEILING	SPEAKER ENCLOSURE FOR 6" SPEAKER: ATLAS SOUND FA97-8	REFER TO REFLECTED CEILING PLANS FOR CONDUIT ROUTING
S S P	FLUSH IN FINISHED CEILING	SPEAKER ENCLOSURE	FURNISHED AND INSTALLED BY AV INSTALLER
1 2	WALL/FLOOR	GUTTER 4" X 20" X 4" AND FLOOR BOX 4" X 20" X 20"	COORDINATE WITH DETAIL
3	WALL	14"x14" JUNCTION BOX	COORDINATE WITH DETAIL
	CONCEALED	CONDUIT, .75" MINIMUM	REFER TO RACEWAY SYSTEMS RISER DIAGRAM FOR QUANTITIES & SIZES
S	CONCEALED	CONDUIT, .75" MINIMUM	PROVIDE WHEN SHOWN ABOVE NON-ACCESSIBLE OR EXPOSED CEILING. CONDUIT NOT REQUIRED ABOVE ACCESSIBLE CEILING
FPP M60	WALL @ 52" AFF	4-11/16" SQUARE JUNCTION BOX, MAXIMUM DEPTH FOR STUD SPACE WITH DOUBLE GANG MUD RING.	
L	FLOOR	FSR RFL-QAV	
WC	WALL @ ELECTRICAL SWITCH HEIGHT	3" DEEP, TRIPLE GANG BOX	
FB# FBF	FLOOR	FSR FL-500P-6	ARCHITECT TO CHOOSE TRIM COLOR
S L S R	WALL	SPEAKER ENCLOSURE, VERIFY MOUNTING HEIGHT WITH ARCHITECTURAL ELEVATIONS	FURNISHED AND INSTALLED BY AV INSTALLER

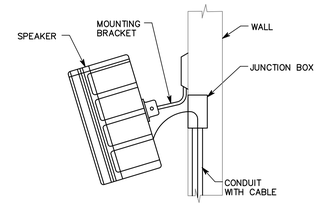

E5 SPEAKER MOUNTING DETAIL
NTS

GENERAL NOTES

1. FURNISH AND INSTALL ALL RACEWAY SYSTEMS FOR AV SYSTEMS. RACEWAY SYSTEMS INCLUDE BUT ARE NOT LIMITED TO, CONDUIT, BOXES, MISCELANEOUS ENCLOSURES AND SPEAKER ENCLOSURES. CONCEAL ALL CONDUIT BEHIND BUILDING FINISHED SURFACES. FLUSH MOUNT ALL SPECIFIED BOXES. UNLESS NOTED OTHERWISE, SURFACE MOUNTED RACEWAY SYSTEMS WILL NOT BE ACCEPTABLE. IN ADDITION, INSTALL DIVISION 13 FURNISHED EQUIPMENT WHERE NOTED. ALL AV ELECTRONIC EQUIPMENT AND CABLING IS TO BE BID IN A FUTURE PACKAGE. PROVIDE COORDINATION WITH AV INSTALLER.
2. IF A SPECIFIED DEVICE, INCLUDING BUT NOT LIMITED TO BOXES, ENCLOSURES, AND EQUIPMENT RACKS ARE NOT MANUFACTURED WITH THE SIZE OF KNOCK OUTS REQUIRED FOR TERMINATION OF THE CONDUIT SPECIFIED, FIELD CUT REQUIRED CONDUIT TERMINATION PENETRATIONS.
3. MAINTAIN MAXIMUM POSSIBLE SEPARATION BETWEEN CONDUIT CONTAINING AV CABLE AND POWER CONDUCTORS.
4. INSTALL NYLON PULL STRINGS IN ALL EMPTY CONDUIT. LABEL IN STRICT COMPLIANCE WITH THE SPECIFICATIONS.
5. PROVIDE BLANK COVER PLATES FOR ALL AV JUNCTION BOXES.
6. CONDUIT FOR AV CABLE IS TO HAVE NO MORE THAN 180° IN TOTAL BEND RADIUS. WHERE ADDITIONAL BENDS ARE REQUIRED INCREASE CONDUIT TRADE SIZE BY ONE FOR EACH 90° IN BENDS. COMPLY WITH ANSI/TIA/EIA 569-A.

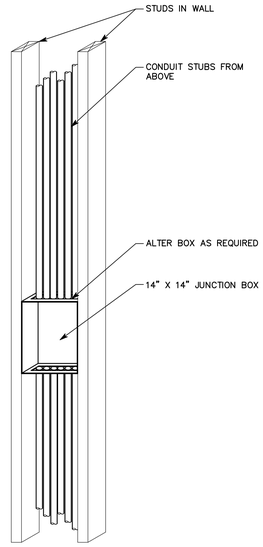

C4 14" X 14" IN WALL JUNCTION BOX DETAIL
NTS

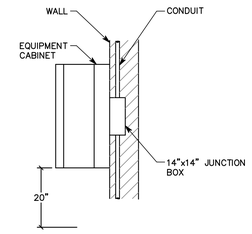

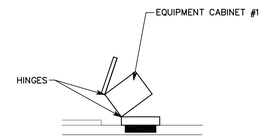

NOTES:

1. PROVIDE ADEQUATE SUPPORT BEHIND CABINET. MOUNT WITH SIX LUGS MINIMUM.
2. CONTRACTOR IS REQUIRED TO MOUNT EQUIPMENT CABINET SUCH THAT IT CAN BE FULLY OPENED WHEN INSTALLED.

D5 EQUIPMENT CABINET #3 MOUNTING DETAIL
NTS

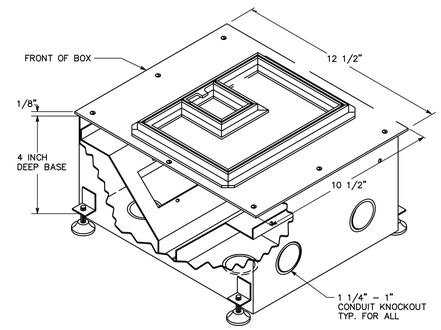

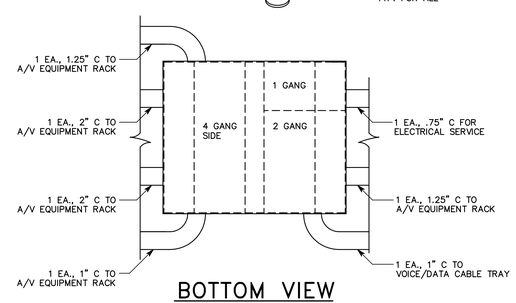

BOTTOM VIEW

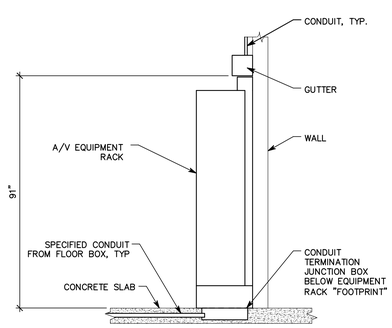

SIDE VIEW

A3 EQUIPMENT RACK #1, #2 INSTALLATION DETAIL
NTS

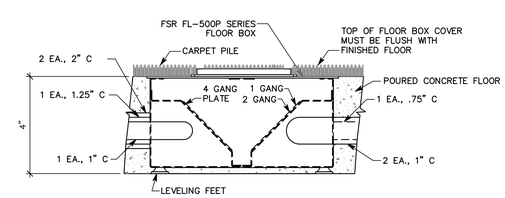

SIDE VIEW

NOTE: WHERE BOX IS MOUNTED ON THE UPPER FLOORS, PROVIDE A LOCATION WHERE THE DEPTH BETWEEN THE STRUCTURAL SLAB AND THE TOPPING SLAB WILL PROVIDE SUFFICIENT DEPTH TO MOUNT THE BOX. IF THE BOX IS TO BE MOVED MORE THAN 3", NOTIFY THE ARCHITECT/ENGINEER.

A5 FLOOR BOX CONDUIT TERMINATION DETAIL
NTS

COOPER ROBERTS SIMONSEN ASSOCIATES
crsa
700 North 200 West
Salt Lake City, UT 84103
(801) 355-5915 phone
(801) 355-9885 fax
crsa-us.com

SNOW COLLEGE

State of Utah-Department of Administrative Services
DIVISION OF FACILITIES CONSTRUCTION AND MANAGEMENT
4110 State Office Building/East Lake City, Utah 84114/538-3018

Civil Engineer
Great Basin Engineering
Contact: Dave Waldron
5746 South 1475 East, Suite 200
Ogden, UT 84403
(801) 521-0222 FAX (801) 392-7544
dave@gbenorth.com

Landscape Architect
G. Brown Design
Contact: Mathew Winward
610 E. South Temple, Suite 50
Salt Lake City, UT 84102
(801) 575-6066 FAX (801) 575-6166
mwinward@gbrowndesign.com

Structural Engineer
Reaveley Engineers
Contact: Cameron Empey
675 East 500 South, Suite 400
Salt Lake City, UT 84105
(801) 486-3883 FAX (801) 485-0911
cempey@reaveley.com

Mechanical Engineer
Van Boerum & Frank
Contact: Neil Spencer
330 South 300 East
Salt Lake City, UT 84111
(801) 530-3148 FAX (801) 910-9917
nspencer@vbfa.com

Electrical Engineer
Spectrum Engineers
Contact: Dave Wesemann, PE
175 South Main Street, Suite 300
Salt Lake City, UT 84111
(801) 328-5151 FAX (801) 328-5155
dew@spectrum-engineers.com

AV Consultant
Spectrum Engineers
Contact: Kurtis Dallinga, PE
175 South Main Street, Suite 300
Salt Lake City, UT 84111
(801) 328-5151 FAX (801) 328-5155
kdd@spectrum-engineers.com

Library Consultant
Michaels Associates Design Consultants, Inc.
Contact: Andrea Michaels
14809 North 73rd Street, Suite 100
Scottsdale, AZ 85260
(480) 998-7476 FAX (480) 998-9390
andrea@madcinc.com

STAMP:

LICENSED PROFESSIONAL ENGINEER
No. 181563
DAVID E. WESEMANN
STATE OF UTAH

PROJECT NAME:

Snow College Library

150 College Avenue
Ephraim, Utah 84627

REVISIONS:

- 100% CD, October 13, 2008
- 100% CD, September 15, 2008
- 100% CD Review, Aug 26, 2008
- 100% CD, June 25, 2008
- 100% CD Review, June 20, 2008
- 50% CD Review, May 27, 2008
- CD Review Set, May 2, 2008
- DD Set, April 18, 2008
- DD Review, April 4, 2008

ISSUE DATE:

SEPTEMBER 15 2008, 100% CD

ARCHITECT'S PROJECT NUMBER:

B07-051

DFCM PROJECT NUMBER:

07258700

SHEET TITLE:

TECHNOLOGY ROUGH-IN SCHEDULE, NOTES AND DETAILS

SHEET NUMBER:

ET-601

File Name: P:\2007\20070473\Drawings\Sheet\73ET-601.dwg Last Plotted: 2008/10/14 @ 10:12 AM By: sjt

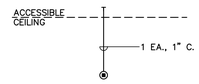

E5 TV ROUGH-IN RISER DIAGRAM
NTS

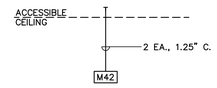

E6 DIGITAL SIGNAGE CONDUIT ROUGH-IN RISER DIAGRAM
NTS

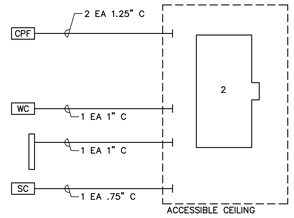

D5 GROUP STUDY (LARGE ROOM) RISER DIAGRAM
NTS

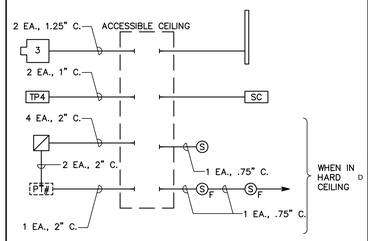

D6 CONFERENCE ROOM 202 RISER DIAGRAM
NTS

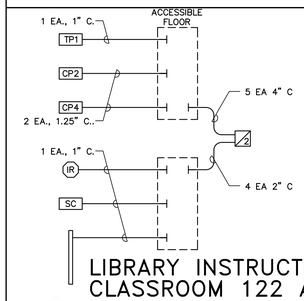

C5 LIBRARY INSTRUCTION CLASSROOM 122 AND 127 RISER DIAGRAM
NTS

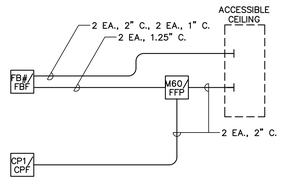

C6 STUDY AND GROUP ROUGH-IN RISER DIAGRAM
NTS

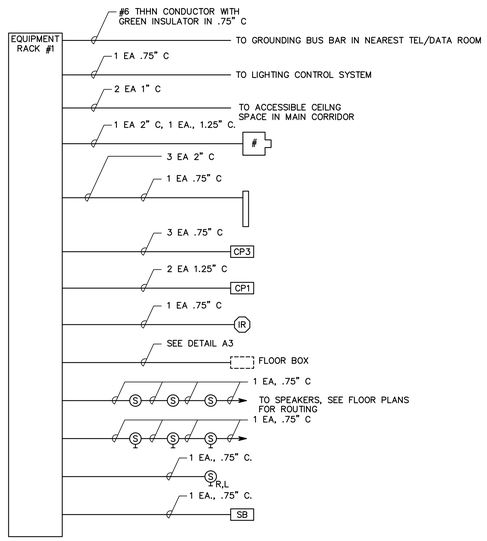

A5 AUDITORIUM 201 ROUGH-IN RISER DIAGRAM
NTS

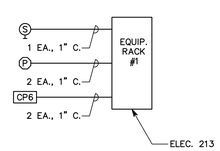

A4 OUTDOOR AUDIO ROUGH-IN RISER DIAGRAM
NTS

COOPER ROBERTS SIMONSEN ASSOCIATES

crsa

700 North 200 West
Salt Lake City, UT 84103
(801) 355-5915 phone
(801) 355-9885 fax
crsa-us.com

SNOW COLLEGE

State of Utah-Department of Administrative Services

DIVISION OF FACILITIES CONSTRUCTION AND MANAGEMENT
4110 State Office Building/Salt Lake City, Utah 84114/538-3018

Civil Engineer

Great Basin Engineering
Contact: Dave Waldron
5746 South 1475 East, Suite 200
Ogden, UT 84403
(801) 521-0222 FAX (801) 392-7544
dave@gbenorth.com

Landscape Architect

G. Brown Design
Contact: Mathew Winward
610 E. South Temple, Suite 50
Salt Lake City, UT 84102
(801) 575-6066 FAX (801) 575-6166
mwinward@gbrowndesign.com

Structural Engineer

Reaveley Engineers
Contact: Cameron Empey
675 East 500 South, Suite 400
Salt Lake City, UT 84105
(801) 486-3883 FAX (801) 485-0911
cempey@reaveley.com

Mechanical Engineer

Van Boerum & Frank
Contact: Neil Spencer
330 South 300 East
Salt Lake City, UT 84111
(801) 530-3148 FAX (801) 910-9917
nspencer@vbfa.com

Electrical Engineer

Spectrum Engineers
Contact: Dave Wesemann, PE
175 South Main Street, Suite 300
Salt Lake City, UT 84111
(801) 328-5151 FAX (801) 328-5155
dew@spectrum-engineers.com

AV Consultant

Spectrum Engineers
Contact: Kurtis Dallinga, PE
175 South Main Street, Suite 300
Salt Lake City, UT 84111
(801) 328-5151 FAX (801) 328-5155
kdd@spectrum-engineers.com

Library Consultant

Michaels Associates Design Consultants, Inc.
Contact: Andrea Michaels
14809 North 73rd Street, Suite 100
Scottsdale, AZ 85260
(480) 998-7476 FAX (480) 998-9390
andrea@madcinc.com

STAMP:

LICENSED PROFESSIONAL ENGINEER
No. 181563
DAVID E. WESEMANN
STATE OF UTAH

PROJECT NAME:

Snow College Library

150 College Avenue
Ephraim, Utah 84627

REVISIONS:

- 100% CD, October 13, 2008
- 100% CD, September 15, 2008
- 100% CD Review, Aug 26, 2008
- 100% CD, June 25, 2008
- 100% CD Review, June 20, 2008
- 50% CD Review, May 27, 2008
- CD Review Set, May 2, 2008
- DD Set, April 18, 2008
- DD Review, April 4, 2008

ISSUE DATE:

SEPTEMBER 15 2008, 100% CD

ARCHITECT'S PROJECT NUMBER:

B07-051

DFCM PROJECT NUMBER:

07258700

SHEET TITLE:

TECHNOLOGY ROUGH-IN RISER DIAGRAMS

SHEET NUMBER:

ET-602

File Name: P:\2007\20070473\Drawings\Sheet\73ET-602.dwg Last Plotted: 2008/10/14 @ 10:12 AM By: sjt

GENERAL SHEET NOTES

1. FOR EACH SMOKE DAMPER PROVIDE DUCT SMOKE DETECTOR, CONTROL MODULE AND RELAY WITH POWER AND FIRE ALARM CONNECTIONS. REFER TO TYPICAL SMOKE DAMPER DETAIL ON SHEET EY-602 FOR ADDITIONAL INFORMATION. REFER TO MECHANICAL DRAWINGS, ADDENDA AND APPROVED SHOP DRAWINGS FOR EXACT LOCATIONS AND QUANTITIES OF ALL SMOKE DAMPERS.

2. PROVIDE FIRE ALARM CONNECTIONS TO ALL FLOW AND TAMPER SWITCHES, WITH ON CONTROL MODULE PER SWITCH. REFER TO DIVISION 15 DOCUMENTS AND FIRE SPRINKLER SHOP DRAWINGS FOR EXACT QUANTITIES AND LOCATIONS OF ALL FLOW AND TAMPER SWITCHES.

SHEET KEYNOTES

1. ACTIVE FIREGATES/SMOKE DOORS ONLY UPON SMOKE DETECTION OF NEAREST SMOKE DETECTORS ON EITHER SIDE OF GATE.

2. ELEVATOR SMOKE CURTAIN.

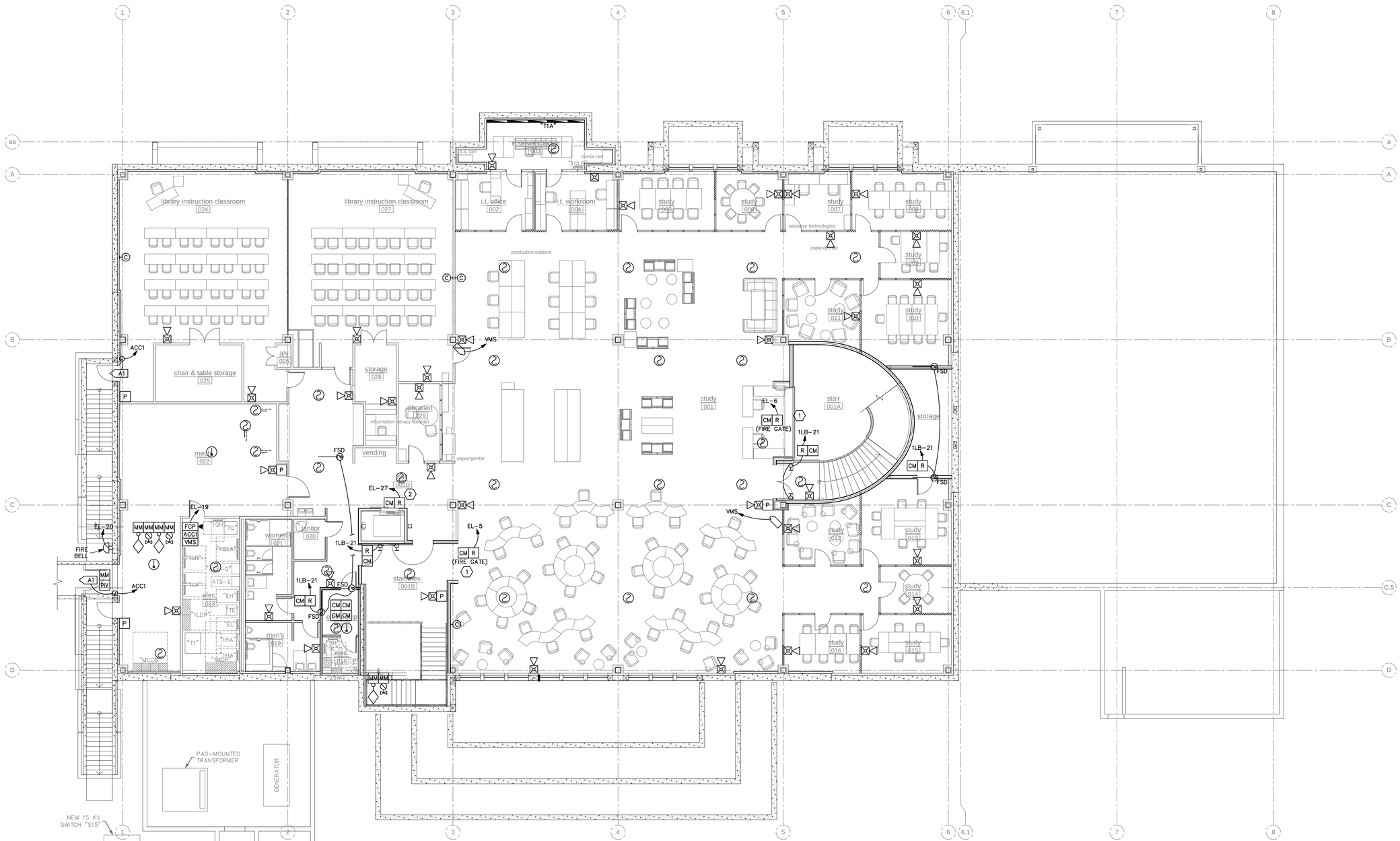

A1 BASEMENT LEVEL AUXILIARY PLAN
SCALE: 1/8" = 1'-0"

COOPER ROBERTS SIMONSEN ASSOCIATES
crsa
700 North 200 West
Salt Lake City, UT 84103
(801) 355-5915 phone
(801) 355-9885 fax
crsa-us.com

SNOW COLLEGE

State of Utah-Department of Administrative Services

DIVISION OF FACILITIES CONSTRUCTION AND MANAGEMENT
4110 State Office Building/Salt Lake City, Utah 84114/538-3018

Civil Engineer
Great Basin Engineering
Contact: Dave Waldron
5746 South 1475 East, Suite 200
Ogden, UT 84403
(801) 521-0222 FAX (801) 392-7544
dave@gbenorth.com

Landscape Architect
G. Brown Design
Contact: Mathew Winward
610 E. South Temple, Suite 50
Salt Lake City, UT 84102
(801) 575-6066 FAX (801) 575-6166
mwinward@gbrowndesign.com

Structural Engineer
Reaveley Engineers
Contact: Cameron Empey
675 East 500 South, Suite 400
Salt Lake City, UT 84105
(801) 486-3883 FAX (801) 485-0911
cempey@reaveley.com

Mechanical Engineer
Van Boerum & Frank
Contact: Neil Spencer
330 South 300 East
Salt Lake City, UT 84111
(801) 530-3148 FAX (801) 910-9917
nspencer@vbfa.com

Electrical Engineer
Spectrum Engineers
Contact: Dave Wesemann, PE
175 South Main Street, Suite 300
Salt Lake City, UT 84111
(801) 328-5151 FAX (801) 328-5155
dew@spectrum-engineers.com

AV Consultant
Spectrum Engineers
Contact: Kurtis Dallinga, PE
175 South Main Street, Suite 300
Salt Lake City, UT 84111
(801) 328-5151 FAX (801) 328-5155
kdd@spectrum-engineers.com

Library Consultant
Michaels Associates Design Consultants, Inc.
Contact: Andrea Michaels
14809 North 73rd Street, Suite 100
Scottsdale, AZ 85260
(480) 998-7476 FAX (480) 998-9390
andrea@madcinc.com

STAMP:

LICENSED PROFESSIONAL ENGINEER
No. 181563
DAVID E. WESEMANN
STATE OF UTAH

PROJECT NAME:

Snow College Library

150 College Avenue
Ephraim, Utah 84627

REVISIONS:

- 100% CD, October 13, 2008
- 100% CD, September 15, 2008
- 100% CD Review, Aug 26, 2008
- 100% CD, June 25, 2008
- 100% CD Review, June 20, 2008
- 50% CD Review, May 27, 2008
- CD Review Set, May 2, 2008
- DD Set, April 18, 2008
- DD Review, April 4, 2008

ISSUE DATE:

SEPTEMBER 15 2008, 100% CD

ARCHITECT'S PROJECT NUMBER:

B07-051

DFCM PROJECT NUMBER:

07258700

SHEET TITLE:

BASEMENT LEVEL AUXILIARY PLAN

SHEET NUMBER:

EY-101

File Name: P:\2007\20070473\Drawings\Sheet\73EY-101.dwg Last Plotted: 2008/10/14 @ 10:14 AM By: dlm

GENERAL SHEET NOTES

1. FOR EACH SMOKE DAMPER PROVIDE DUCT SMOKE DETECTOR, CONTROL MODULE AND RELAY WITH POWER AND FIRE ALARM CONNECTIONS. REFER TO TYPICAL SMOKE DAMPER DETAIL ON SHEET EY-602 FOR ADDITIONAL INFORMATION. REFER TO MECHANICAL DRAWINGS, ADDENDA AND APPROVED SHOP DRAWINGS FOR EXACT LOCATIONS AND QUANTITIES OF ALL SMOKE DAMPERS.
2. PROVIDE FIRE ALARM CONNECTIONS TO ALL FLOW AND TAMPER SWITCHES, WITH ON CONTROL MODULE PER SWITCH. REFER TO DIVISION 15 DOCUMENTS AND FIRE SPRINKLER SHOP DRAWINGS FOR EXACT QUANTITIES AND LOCATIONS OF ALL FLOW AND TAMPER SWITCHES.

SHEET KEYNOTES

1. ACTIVE FIREGATES/SMOKE DOORS ONLY UPON SMOKE DETECTION OF NEAREST SMOKE DETECTORS ON EITHER SIDE OF GATE.
2. ELEVATOR SMOKE CURTAINS.

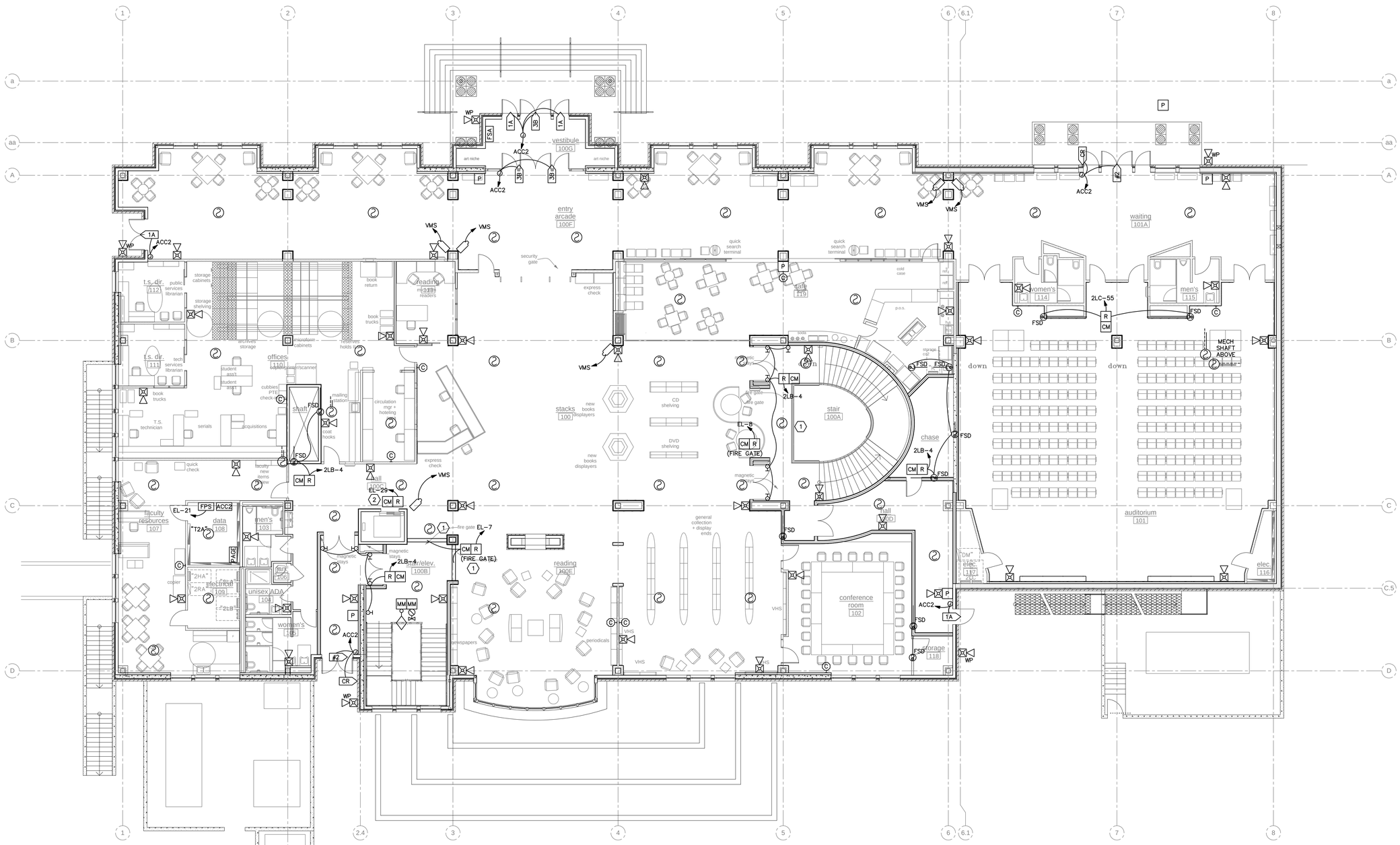

A1 LEVEL 1, MAIN LEVEL AUXILIARY PLAN

SCALE: 1/8" = 1'-0"

COOPER ROBERTS SIMONSEN ASSOCIATES

crsa

700 North 200 West
Salt Lake City, UT 84103
(801) 355-5915 phone
(801) 355-9885 fax
crsa-us.com

SNOW COLLEGE

State of Utah-Department of Administrative Services

DIVISION OF FACILITIES CONSTRUCTION AND MANAGEMENT

4110 State Office Building/Salt Lake City, Utah 84114/538-3018

Civil Engineer

Great Basin Engineering
Contact: Dave Waldron
5746 South 1475 East, Suite 200
Ogden, UT 84403
(801) 521-0222 FAX (801) 392-7544
dave@gbenorth.com

Landscape Architect

G. Brown Design
Contact: Mathew Winward
610 E. South Temple, Suite 50
Salt Lake City, UT 84102
(801) 575-6066 FAX (801) 575-6166
mwinward@gbrowndesign.com

Structural Engineer

Reaveley Engineers
Contact: Cameron Empey
675 East 500 South, Suite 400
Salt Lake City, UT 84105
(801) 486-3883 FAX (801) 485-0911
cempey@reaveley.com

Mechanical Engineer

Van Boerum & Frank
Contact: Neil Spencer
330 South 300 East
Salt Lake City, UT 84111
(801) 530-3148 FAX (801) 910-9917
nspencer@vbfa.com

Electrical Engineer

Spectrum Engineers
Contact: Dave Wesemann, PE
175 South Main Street, Suite 300
Salt Lake City, UT 84111
(801) 328-5151 FAX (801) 328-5155
dew@spectrum-engineers.com

AV Consultant

Spectrum Engineers
Contact: Kurtis Dallinga, PE
175 South Main Street, Suite 300
Salt Lake City, UT 84111
(801) 328-5151 FAX (801) 328-5155
kdd@spectrum-engineers.com

Library Consultant

Michaels Associates Design Consultants, Inc.
Contact: Andrea Michaels
14809 North 73rd Street, Suite 100
Scottsdale, AZ 85260
(480) 998-7476 FAX (480) 998-9390
andrea@madcinc.com

STAMP:

LICENSED PROFESSIONAL ENGINEER
No. 181563
DAVID E. WESEMANN
STATE OF UTAH

PROJECT NAME:

Snow College Library

150 College Avenue
Ephraim, Utah 84627

REVISIONS:

- 100% CD, October 13, 2008
- 100% CD, September 15, 2008
- 100% CD Review, Aug 26, 2008
- 100% CD, June 25, 2008
- 100% CD Review, June 20, 2008
- 50% CD Review, May 27, 2008
- CD Review Set, May 2, 2008
- DD Set, April 18, 2008
- DD Review, April 4, 2008

ISSUE DATE:

SEPTEMBER 15 2008, 100% CD

ARCHITECT'S PROJECT NUMBER:

B07-051

DFCM PROJECT NUMBER:

07258700

SHEET TITLE:

LEVEL 1, MAIN LEVEL AUXILIARY PLAN

SHEET NUMBER:

EY-102

File Name: P:\2007\20070473\Drawings\Sheet\73EY-102.dwg Last Plotted: 2008/10/14 @ 10:14 AM By: dim

GENERAL SHEET NOTES

1. FOR EACH SMOKE DAMPER PROVIDE DUCT SMOKE DETECTOR, CONTROL MODULE AND RELAY WITH POWER AND FIRE ALARM CONNECTIONS. REFER TO TYPICAL SMOKE DAMPER DETAIL ON SHEET EY-602 FOR ADDITIONAL INFORMATION. REFER TO MECHANICAL DRAWINGS, ADDENDA AND APPROVED SHOP DRAWINGS FOR EXACT LOCATIONS AND QUANTITIES OF ALL SMOKE DAMPERS.
2. PROVIDE FIRE ALARM CONNECTIONS TO ALL FLOW AND TAMPER SWITCHES, WITH ON CONTROL MODULE PER SWITCH. REFER TO DIVISION 15 DOCUMENTS AND FIRE SPRINKLER SHOP DRAWINGS FOR EXACT QUANTITIES AND LOCATIONS OF ALL FLOW AND TAMPER SWITCHES.

SHEET KEYNOTES

1. ACTIVE FIREGATES/SMOKE DOORS ONLY UPON SMOKE DETECTION OF NEAREST SMOKE DETECTORS ON EITHER SIDE OF GATE.
2. ELEVATOR SMOKE CURTAIN.

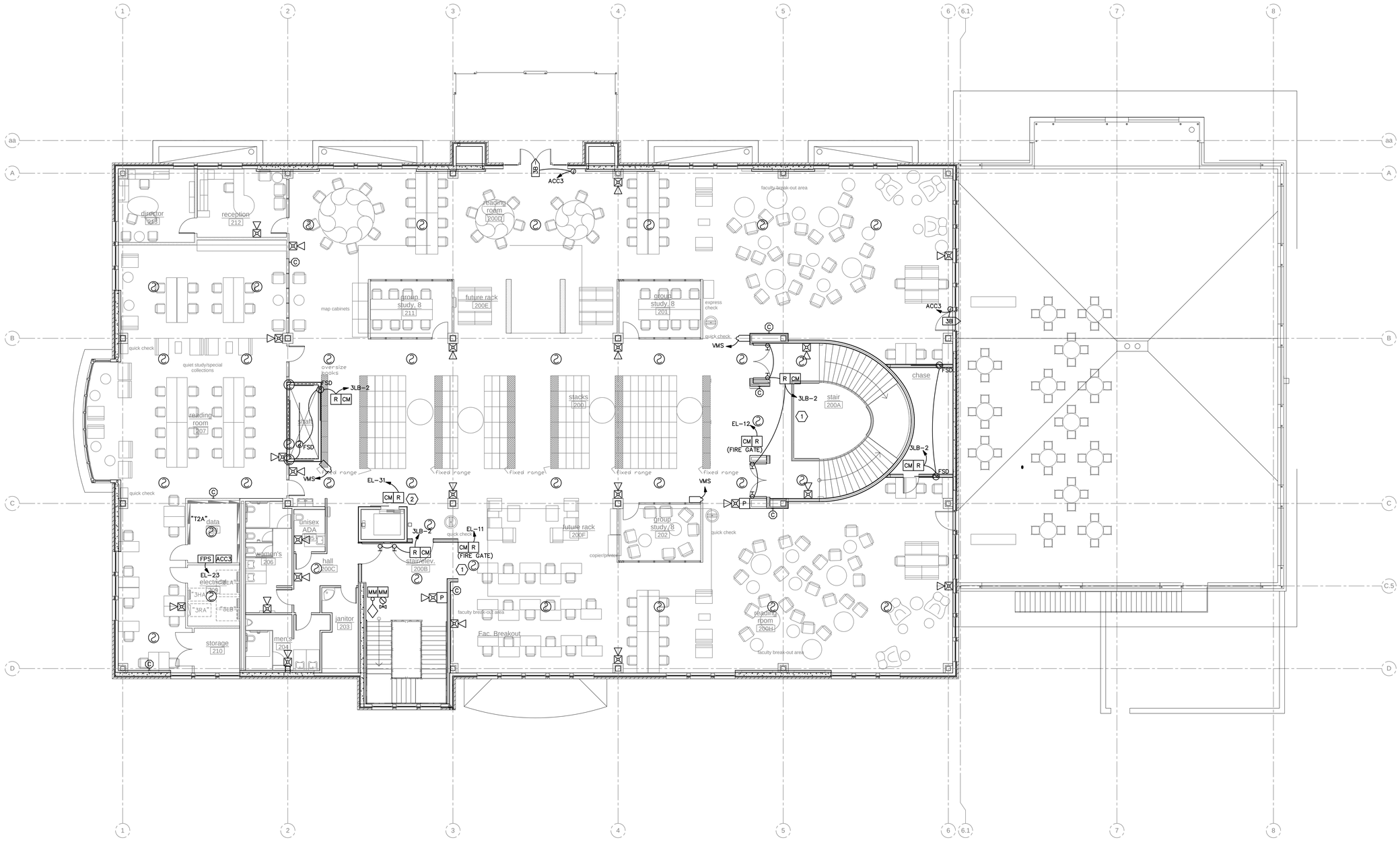

A1 LEVEL 2 AUXILIARY PLAN
SCALE: 1/8" = 1'-0"

COOPER ROBERTS SIMONSEN ASSOCIATES

crsa

700 North 200 West
Salt Lake City, UT 84103
(801) 355-5915 phone
(801) 355-9885 fax
crsa-us.com

SNOW COLLEGE

State of Utah-Department of Administrative Services
DIVISION OF FACILITIES CONSTRUCTION AND MANAGEMENT
4110 State Office Building/Salt Lake City, Utah 84114/538-3018

Civil Engineer
Great Basin Engineering
Contact: Dave Waldron
5746 South 1475 East, Suite 200
Ogden, UT 84403
(801) 521-0222 FAX (801) 392-7544
dave@gbenorth.com

Landscape Architect
G. Brown Design
Contact: Mathew Winward
610 E. South Temple, Suite 50
Salt Lake City, UT 84102
(801) 575-6066 FAX (801) 575-6166
mwinward@gbrowndesign.com

Structural Engineer
Reaveley Engineers
Contact: Cameron Empey
675 East 500 South, Suite 400
Salt Lake City, UT 84105
(801) 486-3883 FAX (801) 485-0911
cempey@reaveley.com

Mechanical Engineer
Van Boerum & Frank
Contact: Neil Spencer
330 South 300 East
Salt Lake City, UT 84111
(801) 530-3148 FAX (801) 910-9917
nspencer@vbfa.com

Electrical Engineer
Spectrum Engineers
Contact: Dave Wesemann, PE
175 South Main Street, Suite 300
Salt Lake City, UT 84111
(801) 328-5151 FAX (801) 328-5155
dew@spectrum-engineers.com

AV Consultant
Spectrum Engineers
Contact: Kurtis Dallinga, PE
175 South Main Street, Suite 300
Salt Lake City, UT 84111
(801) 328-5151 FAX (801) 328-5155
kdd@spectrum-engineers.com

Library Consultant
Michaels Associates Design Consultants, Inc.
Contact: Andrea Michaels
14809 North 73rd Street, Suite 100
Scottsdale, AZ 85260
(480) 998-7476 FAX (480) 998-9390
andrea@madcinc.com

STAMP:

LICENSED PROFESSIONAL ENGINEER
No. 181563
DAVID E. WESEMANN
STATE OF UTAH

PROJECT NAME:

Snow College Library

150 College Avenue
Ephraim, Utah 84627

REVISIONS:

- 100% CD, October 13, 2008
- 100% CD, September 15, 2008
- 100% CD Review, Aug 26, 2008
- 100% CD, June 25, 2008
- 100% CD Review, June 20, 2008
- 50% CD Review, May 27, 2008
- CD Review Set, May 2, 2008
- DD Set, April 18, 2008
- DD Review, April 4, 2008

ISSUE DATE:

SEPTEMBER 15 2008, 100% CD

ARCHITECT'S PROJECT NUMBER:

B07-051

DFCM PROJECT NUMBER:

07258700

SHEET TITLE:

LEVEL 2
AUXILIARY PLAN

SHEET NUMBER:

EY-103

File Name: P:\2007\20070473\1Drawings\Sheet\73EY-103.dwg Last Plotted: 2008/10/14 @ 10:14 AM By: dlm

GENERAL SHEET NOTES

1. FOR EACH SMOKE DAMPER PROVIDE DUCT SMOKE DETECTOR, CONTROL MODULE AND RELAY WITH POWER AND FIRE ALARM CONNECTIONS. REFER TO TYPICAL SMOKE DAMPER DETAIL ON SHEET EY-602 FOR ADDITIONAL INFORMATION. REFER TO MECHANICAL DRAWINGS, ADDENDA AND APPROVED SHOP DRAWINGS FOR EXACT LOCATIONS AND QUANTITIES OF ALL SMOKE DAMPERS.
2. PROVIDE FIRE ALARM CONNECTIONS TO ALL FLOW AND TAMPER SWITCHES, WITH ON CONTROL MODULE PER SWITCH. REFER TO DIVISION 15 DOCUMENTS AND FIRE SPRINKLER SHOP DRAWINGS FOR EXACT QUANTITIES AND LOCATIONS OF ALL FLOW AND TAMPER SWITCHES.

SHEET KEYNOTES

1. ACTIVE FIREGATES/SMOKE DOORS ONLY UPON SMOKE DETECTION OF NEAREST SMOKE DETECTORS ON EITHER SIDE OF GATE.
2. ELEVATOR SMOKE CURTAIN
3. GPS CLOCK RECEIVER AND TRANSMITTER.

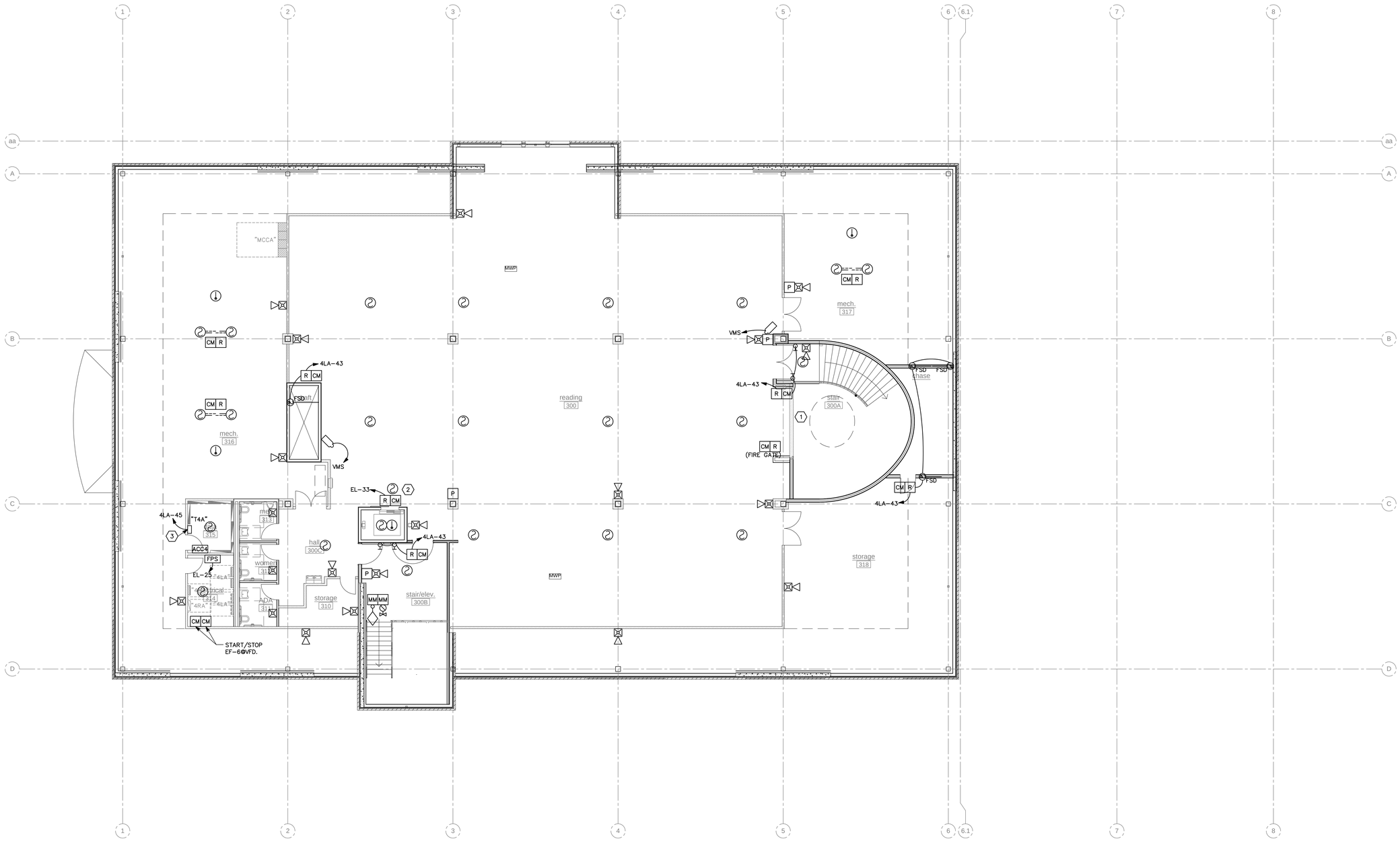

A1 LEVEL 3, ATTIC AUXILIARY PLAN
SCALE: 1/8" = 1'-0"

COOPER ROBERTS SIMONSEN ASSOCIATES
crsa
700 North 200 West
Salt Lake City, UT 84103
(801) 355-5915 phone
(801) 355-9885 fax
crsa-us.com

SNOW COLLEGE

State of Utah-Department of Administrative Services
DIVISION OF FACILITIES CONSTRUCTION AND MANAGEMENT
4110 State Office Building/Salt Lake City, Utah 84114/538-3018

Civil Engineer
Great Basin Engineering
Contact: Dave Waldron
5746 South 1475 East, Suite 200
Ogden, UT 84403
(801) 521-0222 FAX (801) 392-7544
dave@gbenorth.com

Landscape Architect
G. Brown Design
Contact: Mathew Winward
610 E. South Temple, Suite 50
Salt Lake City, UT 84102
(801) 575-6066 FAX (801) 575-6166
mwinward@gbrowndesign.com

Structural Engineer
Reaveley Engineers
Contact: Cameron Empey
675 East 500 South, Suite 400
Salt Lake City, UT 84105
(801) 486-3883 FAX (801) 485-0911
cempey@reaveley.com

Mechanical Engineer
Van Boerum & Frank
Contact: Neil Spencer
330 South 300 East
Salt Lake City, UT 84111
(801) 530-3148 FAX (801) 910-9917
nspencer@vbfa.com

Electrical Engineer
Spectrum Engineers
Contact: Dave Wesemann, PE
175 South Main Street, Suite 300
Salt Lake City, UT 84111
(801) 328-5151 FAX (801) 328-5155
dew@spectrum-engineers.com

AV Consultant
Spectrum Engineers
Contact: Kurtis Dallinga, PE
175 South Main Street, Suite 300
Salt Lake City, UT 84111
(801) 328-5151 FAX (801) 328-5155
kdd@spectrum-engineers.com

Library Consultant
Michaels Associates Design Consultants, Inc.
Contact: Andrea Michaels
14809 North 73rd Street, Suite 100
Scottsdale, AZ 85260
(480) 998-7476 FAX (480) 998-9390
andrea@madcinc.com

STAMP:
LICENSED PROFESSIONAL ENGINEER
No. 181563
DAVID E. WESEMANN
STATE OF UTAH

PROJECT NAME:

Snow College Library

150 College Avenue
Ephraim, Utah 84627

REVISIONS:

- 100% CD, October 13, 2008
- 100% CD, September 15, 2008
- 100% CD Review, Aug 26, 2008
- 100% CD, June 25, 2008
- 100% CD Review, June 20, 2008
- 50% CD Review, May 27, 2008
- CD Review Set, May 2, 2008
- DD Set, April 18, 2008
- DD Review, April 4, 2008

ISSUE DATE:
SEPTEMBER 15 2008, 100% CD

ARCHITECT'S PROJECT NUMBER:
B07-051

DFCM PROJECT NUMBER:
07258700

SHEET TITLE:
LEVEL 3, ATTIC AUXILIARY PLAN

SHEET NUMBER:
EY-104

File Name: P:\2007\20070473\Drawings\Sheet\73EY-104.dwg Last Plotted: 2008/10/14 @ 10:14 AM By: dim

GENERAL SHEET NOTES

1. FOR EACH SMOKE DAMPER PROVIDE DUCT SMOKE DETECTOR, CONTROL MODULE AND RELAY WITH POWER AND FIRE ALARM CONNECTIONS. REFER TO TYPICAL SMOKE DAMPER DETAIL ON SHEET EY-602 FOR ADDITIONAL INFORMATION. REFER TO MECHANICAL DRAWINGS, ADDENDA AND APPROVED SHOP DRAWINGS FOR EXACT LOCATIONS AND QUANTITIES OF ALL SMOKE DAMPERS.
2. PROVIDE FIRE ALARM CONNECTIONS TO ALL FLOW AND TAMPER SWITCHES, WITH ON CONTROL MODULE PER SWITCH. REFER TO DIVISION 15 DOCUMENTS AND FIRE SPRINKLER SHOP DRAWINGS FOR EXACT QUANTITIES AND LOCATIONS OF ALL FLOW AND TAMPER SWITCHES.

SHEET KEYNOTES

1. ACTIVE FIREGATES/SMOKE DOORS ONLY UPON SMOKE DETECTION OF NEAREST SMOKE DETECTORS ON EITHER SIDE OF GATE.
2. ELEVATOR SMOKE CURTAIL.
3. GPS CLOCK RECEIVER AND TRANSMITTER.

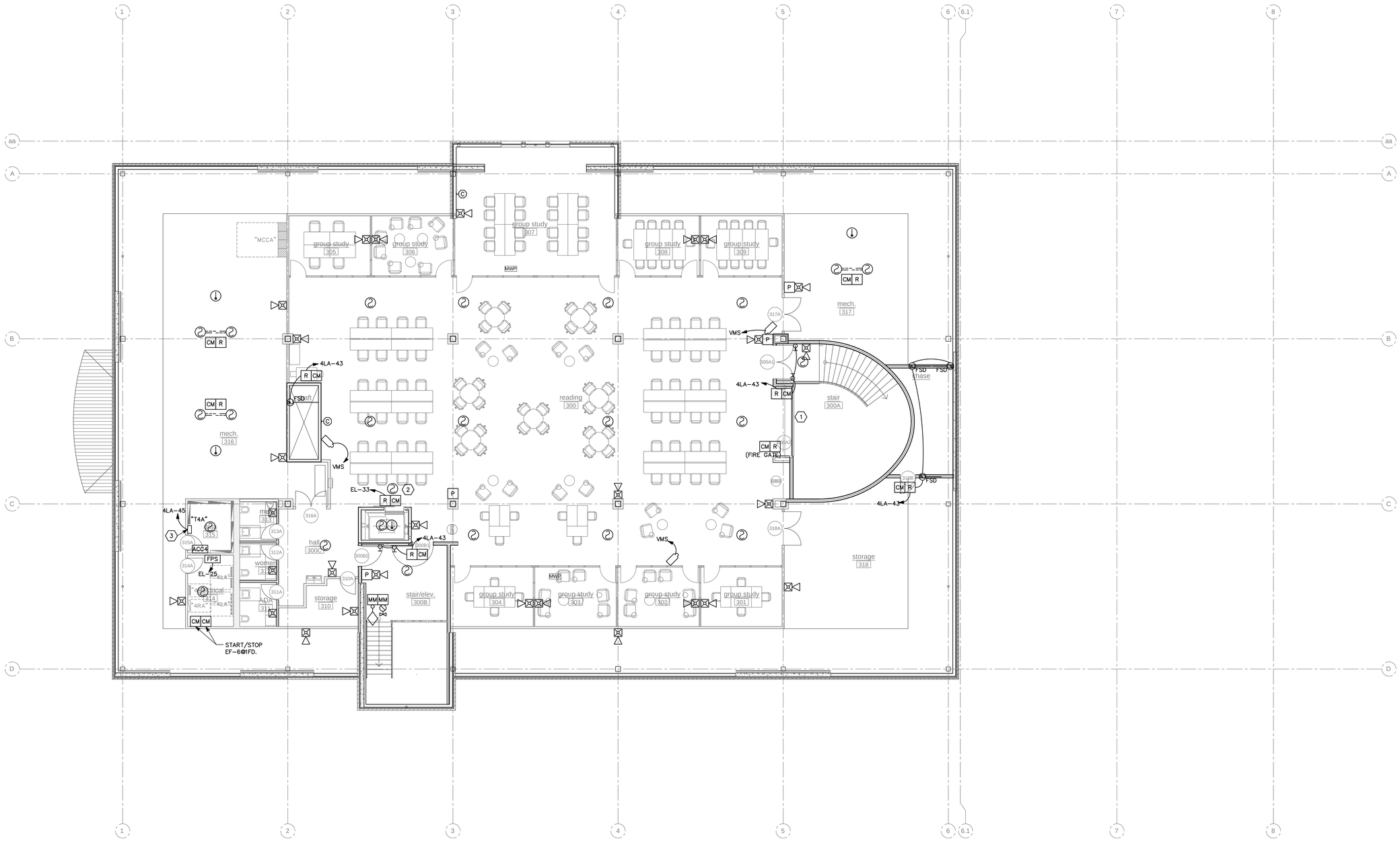

A1 LEVEL 3, ATTIC ADD ALT AUXILIARY PLAN

SCALE: 1/8" = 1'-0"

COOPER ROBERTS SIMONSEN ASSOCIATES

crsa

700 North 200 West
Salt Lake City, UT 84103
(801) 355-5915 phone
(801) 355-9885 fax
crsa-us.com

SNOW COLLEGE

State of Utah-Department of Administrative Services

DIVISION OF FACILITIES CONSTRUCTION AND MANAGEMENT

4110 State Office Building/Salt Lake City, Utah 84114/538-3018

Civil Engineer

Great Basin Engineering
Contact: Dave Waldron
5746 South 1475 East, Suite 200
Ogden, UT 84403
(801) 521-0222 FAX (801) 392-7544
dave@gbenorth.com

Landscape Architect

G. Brown Design
Contact: Mathew Winward
610 E. South Temple, Suite 50
Salt Lake City, UT 84102
(801) 575-6066 FAX (801) 575-6166
mwinward@gbrowndesign.com

Structural Engineer

Reaveley Engineers
Contact: Cameron Empey
675 East 500 South, Suite 400
Salt Lake City, UT 84105
(801) 486-3883 FAX (801) 485-0911
cempey@reaveley.com

Mechanical Engineer

Van Boerum & Frank
Contact: Neil Spencer
330 South 300 East
Salt Lake City, UT 84111
(801) 530-3148 FAX (801) 910-9917
nspencer@vbfa.com

Electrical Engineer

Spectrum Engineers
Contact: Dave Wesemann, PE
175 South Main Street, Suite 300
Salt Lake City, UT 84111
(801) 328-5151 FAX (801) 328-5155
dew@spectrum-engineers.com

AV Consultant

Spectrum Engineers
Contact: Kurtis Dallinga, PE
175 South Main Street, Suite 300
Salt Lake City, UT 84111
(801) 328-5151 FAX (801) 328-5155
kdd@spectrum-engineers.com

Library Consultant

Michaels Associates Design Consultants, Inc.
Contact: Andrea Michaels
14809 North 73rd Street, Suite 100
Scottsdale, AZ 85260
(480) 998-7476 FAX (480) 998-9390
andrea@madcinc.com

STAMP:

LICENSED PROFESSIONAL ENGINEER
No. 181563
DAVID E. WESEMANN
STATE OF UTAH

PROJECT NAME:

Snow College Library

150 College Avenue
Ephraim, Utah 84627

REVISIONS:

- 100% CD, October 13, 2008
- 100% CD, September 15, 2008
- 100% CD Review, Aug 26, 2008
- 100% CD, June 25, 2008
- 100% CD Review, June 20, 2008
- 50% CD Review, May 27, 2008
- CD Review Set, May 2, 2008
- DD Set, April 18, 2008
- DD Review, April 4, 2008

ISSUE DATE:

SEPTEMBER 15 2008, 100% CD

ARCHITECT'S PROJECT NUMBER:

B07-051

DFCM PROJECT NUMBER:

07258700

SHEET TITLE:

LEVEL 3, ATTIC
ADD ALT
AUXILIARY PLAN

SHEET NUMBER:

EY-104a

File Name: P:\2007\20070473\Drawings\Sheet\73EY-104a.dwg Last Plotted: 2008/10/14 @ 10:15 AM By: dlm

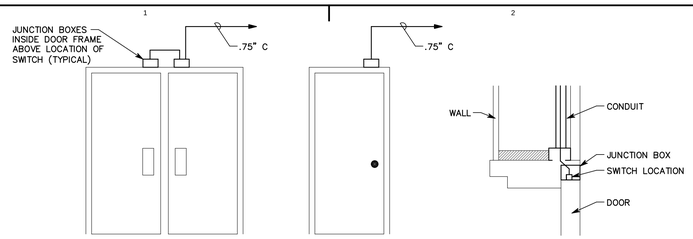

E1 DOOR CONTACT SWITCH DETAIL

NTS

NOTES:

1. DRILL .125" HOLE TO INDICATE SWITCH LOCATION AND IDENTIFY WHERE JUNCTION BOX IS.
2. THE INTENT OF THIS DETAIL IS TO PROVIDE A GROUT-FREE ENVIRONMENT FOR, AND EASIER CABLE ACCESS TO, THE CONTACT SWITCH LOCATION. SUBMIT METHOD OF PROVIDING GROUT FREE ENVIRONMENT DURING SUBMITTAL PROCESS. ADDRESS ANY QUESTIONS TO THE ENGINEER.
3. PRIOR TO ANY ROUGH-IN MEET WITH SCHOOL PERSONEL TO CONFIRM ROUGH-IN.

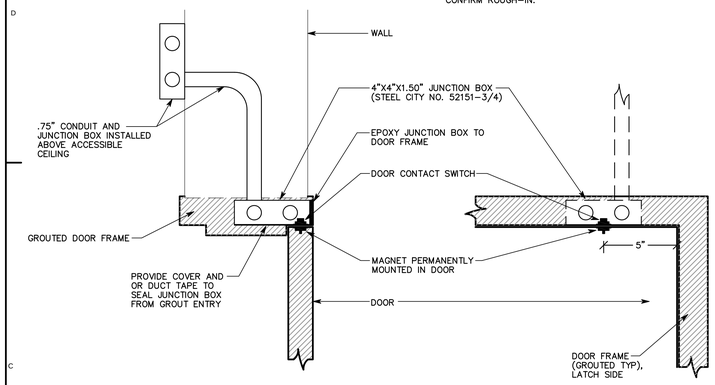

C1 DOOR CONTACT SWITCH DETAILS

NTS

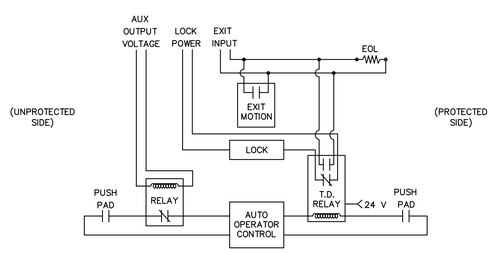

NOTES:

1. DISABLE UNPROTECTED SIDE PUSH-PAD WHEN DOOR IS LOCKED. ENABLE PUSH-PAD UPON VALID CARD READ AND DURING UNLOCKED PERIODS.

2. MONITOR PROTECTED SIDE PUSH-PAD CIRCUIT WITH POWERED TIME-DELAY RELAY. INTERRUPT LOCK POWER WITH TIME-DELAY RELAY WHILE AUTO-OPERATION IS INITIATED. USE TIME-DELAY RELAY SECOND POLE CONTACTS, OR SECOND RELAY, TO TRIP REX CIRCUIT WHEN PROTECTED SIDE PUSH-PAD IS OPERATED. RELAY DIODES NOT SHOWN. PROVIDE AS NECESSARY.

3. EXIT MOTION DETECTOR SHALL NOT INITIATE DOOR UNLOCKING, BUT RATHER IT SHALL DETECT EXITING USERS JUST BEFORE OPERATING EXIT HARDWARE AND SIGNAL SYSTEM. CONTACT INDICATOR SIGNAL SHALL PROMPT SYSTEM FORCED OPEN ALARM IF NOT IMMEDIATELY PROCEEDED BY REX SIGNAL.

A1 AUTO-DOOR ACCESS CONTROL DETAIL (TYPICAL)

NTS

CARD ACCESS DOOR TYPE SCHEDULE

DOOR TYPE #	SYMBOL	DESCRIPTION	PROTECTED SIDE ELEVATION	UNPROTECTED SIDE ELEVATION	LOCK TYPE(S)	INCLUDES:
TYPE 1:	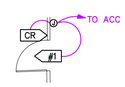	SINGLE DOOR, 1 CARD READER, (FREE EGRESS)	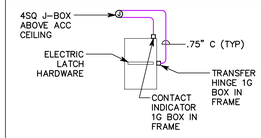	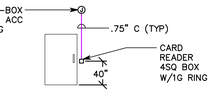	ELECTRIC LATCH OR TRIM	* CARD READER * REX IN HARDWARE * CONTACT INDICATOR IN HARDWARE * LOCK PWR (LOCKS BY DOOR HDWR) * LATCH HARDWARE & POWER TRANSFER HINGES BY DOOR HARDWARE
TYPE 1A:	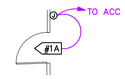	SINGLE DOOR, NO CARD READER	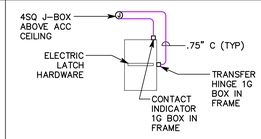		ELECTRIC LATCH OR TRIM	* REX IN HARDWARE * CONTACT INDICATOR IN HARDWARE * LOCK PWR (LOCKS BY DOOR HDWR) * LATCH HARDWARE & POWER TRANSFER HINGES BY DOOR HARDWARE TRANSFER HINGES BY DOOR HDWR)
TYPE 2:	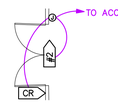	DOUBLE DOOR, 1 CARD READER, SINGLE DIR EGRESS, WITH AUTO-DOOR, AND REMOVABLE MULLION	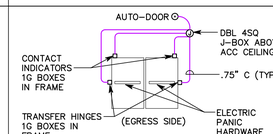	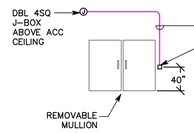	ELECTRIC PANIC HARDWARE	* CARD READER * REX IN HARDWARE * CONTACT INDICATORS IN HARDWARE * LOCK PWR (PWR SUPPLY & LOCKS BY DOOR HDWR) * TRANSFER HINGES (PWR TRANSFER HINGES BY DOOR HDWR) * ELEC PANIC HDWR PANIC HDWR & PWR SUPPLY BY DOOR HDWR FOR LOCKING * AUTO-DOOR RELAYS (REFER TO AUTO-DOOR ACCESS CONTROL DETAIL) * AUTO-DOOR PUSH-PADS (PUSH-PAD BOX LOCATIONS SHOWN ON FLPL'S)
TYPE 3:	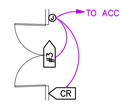	DOUBLE DOOR, 1 CARD READER, SINGLE DIR EGRESS, WITHOUT AUTO-DOOR, AND REMOVABLE MULLION	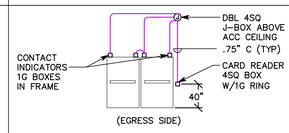	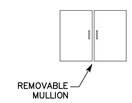	MAG LOCKS	* CARD READER * CONTACT INDICATORS IN HARDWARE * LOCK PWR (LOCKS BY DOOR HDWR)
TYPE 3A:	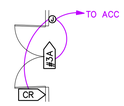	DOUBLE DOOR, 1 CARD READER, SINGLE DIR EGRESS, WITHOUT AUTO-DOOR, AND REMOVABLE MULLION	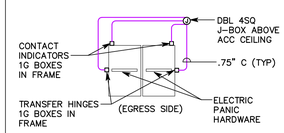	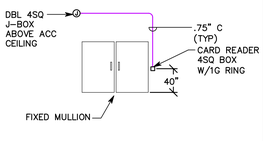	ELECTRIC PANIC HARDWARE	* CARD READER * REX IN HARDWARE * CONTACT INDICATORS IN HARDWARE * LOCK PWR (PWR SUPPLY & LOCKS BY DOOR HDWR) * TRANSFER HINGES (PWR TRANSFER HINGES BY DOOR HDWR) * ELEC PANIC HDWR PANIC HDWR & PWR SUPPLY BY DOOR HDWR FOR LOCKING
TYPE 3B:	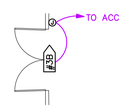	DOUBLE DOOR, NO CARD READER, SINGLE DIR EGRESS, WITHOUT AUTO-DOOR, AND FIXED MULLION	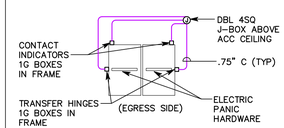	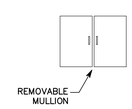	ELECTRIC PANIC HARDWARE	* REX IN HARDWARE * CONTACT INDICATORS IN HARDWARE * LOCK PWR (PWR SUPPLY & LOCKS BY DOOR HDWR) * TRANSFER HINGES (PWR TRANSFER HINGES BY DOOR HDWR) * ELEC PANIC HDWR PANIC HDWR & PWR SUPPLY BY DOOR HDWR FOR LOCKING
TYPE 4:	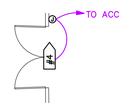	DOUBLE DOOR, NO CARD READER, EXIT ONLY WITH FIXED LEAFS (FLUSH BOLTS)	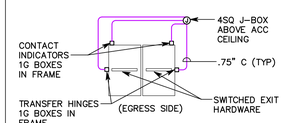		NO ELECTRIC LOCK-FLUSH BOLTS	* REX IN HARDWARE * CONTACT INDICATORS IN HARDWARE * SWITCHED EXIT HARDWARE (EXIT SWITCHES AND PWR TRANSFER HINGES BY DOOR HDWR)

NOTES

1. PROVIDE RACEWAY AND EQUIPMENT AS INDICATED FOR CARD ACCESS DOOR TYPE INDICATED. COORDINATE WITH OWNER AND SECURITY SYSTEMS INSTALLER.
2. PROVIDE CONCEALED .75" C TYPICAL FOR LINES SHOWN TO DEVICE BOXES ON PROTECTED SIDE AND UNPROTECTED SIDE ELEVATIONS.
3. CONFIRM CORRECT CARD ACCESS DOOR RACEWAY, LOCK VOLTAGE, AND EXIT SWITCH CURRENT RATING (2 AMPS MIN.) WITH DIV. 8 FURNISHED CARD ACCESS DOOR HARDWARE PER DIV. 8 DOOR HARDWARE SUBMITTALS.
4. POWER SUPPLIES FOR ELECTRIC LATCH RETRACTION EXIT HARDWARE FOR FIRE ALARM CONTROL BY DIV. 8.
5. LOCATE CARD READER BOX AS INDICATED ON FLOOR PLANS. RACEWAY AND BOXES BY DIV. 16.
6. DOUBLE 4SQ J-BOX ON PROTECTED SIDE OF DOORWAY (SIDE OPPOSITE OF CARD READER) ABOVE ACCESSIBLE CEILING OR IN OTHER ACCESSIBLE LOCATION. PROVIDE COVER FOR J-BOX.
7. ELECTRIC LOCKING HARDWARE (LATCHES, LOCKSETS, POWER TRANSFER HINGES, ETC.) BY DIV 8. REVIEW DOOR HARDWARE FURNISHED AND VERIFY LOCK VOLTAGES AND OPERATIONAL FUNCTIONALITY OF LOCKS. CONTACT ENGINEER WITH QUESTIONS OR CONCERNS.

ABBREVIATIONS

DBL = DOUBLE
DIR = DIRECTION
HDWR = HARDWARE
C = CONDUIT
4SQ = FOUR SQUARE
W/ = WITH
1G = 1 GANG
PWR = POWER
ACC = ACCESSIBLE
OCC = OCCUPANCY
TYP = TYPICAL

COOPER ROBERTS SIMONSEN ASSOCIATES
crsa
700 North 200 West
Salt Lake City, UT 84103
(801) 355-5915 phone
(801) 355-9885 fax
crsa-us.com

SNOW COLLEGE

State of Utah-Department of Administrative Services
DIVISION OF FACILITIES CONSTRUCTION AND MANAGEMENT
4110 State Office Building/East Lane City, Utah 84114/538-3018

Civil Engineer
Great Basin Engineering
Contact: Dave Waldron
5746 South 1475 East, Suite 200
Ogden, UT 84403
(801) 521-0222 FAX (801) 392-7544
dave@gbenorth.com

Landscape Architect
G. Brown Design
Contact: Mathew Winward
610 E. South Temple, Suite 50
Salt Lake City, UT 84102
(801) 575-6066 FAX (801) 575-6166
mwinward@gbrowndesign.com

Structural Engineer
Reaveley Engineers
Contact: Cameron Empey
675 East 500 South, Suite 400
Salt Lake City, UT 84105
(801) 486-3883 FAX (801) 485-0911
cempey@reaveley.com

Mechanical Engineer
Van Boerum & Frank
Contact: Neil Spencer
330 South 300 East
Salt Lake City, UT 84111
(801) 530-3148 FAX (801) 910-9917
nspencer@vbfa.com

Electrical Engineer
Spectrum Engineers
Contact: Dave Wesemann, PE
175 South Main Street, Suite 300
Salt Lake City, UT 84111
(801) 328-5151 FAX (801) 328-5155
dew@spectrum-engineers.com

AV Consultant
Spectrum Engineers
Contact: Kurtis Dallinga, PE
175 South Main Street, Suite 300
Salt Lake City, UT 84111
(801) 328-5151 FAX (801) 328-5155
kdd@spectrum-engineers.com

Library Consultant
Michaels Associates Design Consultants, Inc.
Contact: Andrea Michaels
14809 North 73rd Street, Suite 100
Scottsdale, AZ 85260
(480) 998-7476 FAX (480) 998-9390
andrea@madcinc.com

STAMP:

LICENSED PROFESSIONAL ENGINEER
No. 181563
DAVID E. WESEMANN
STATE OF UTAH

PROJECT NAME:

Snow College Library

150 College Avenue
Ephraim, Utah 84627

REVISIONS:

100% CD, October 13, 2008
100% CD, September 15, 2008
100% CD Review, Aug 26, 2008
100% CD, June 25, 2008
100% CD Review, June 20, 2008
50% CD Review, May 27, 2008
CD Review Set, May 2, 2008
DD Set, April 18, 2008
DD Review, April 4, 2008

ISSUE DATE:
SEPTEMBER 15 2008, 100% CD

ARCHITECT'S PROJECT NUMBER:
B07-051

DFCM PROJECT NUMBER:
07258700

SHEET TITLE:
AUXILIARY SYSTEM DETAILS AND DIAGRAM

SHEET NUMBER:
EY-601

File Name: P:\2007\20070473\Drawings\Sheet\73EY-601.dwg Last Plotted: 2008/10/14 @ 10:15 AM By: rxr

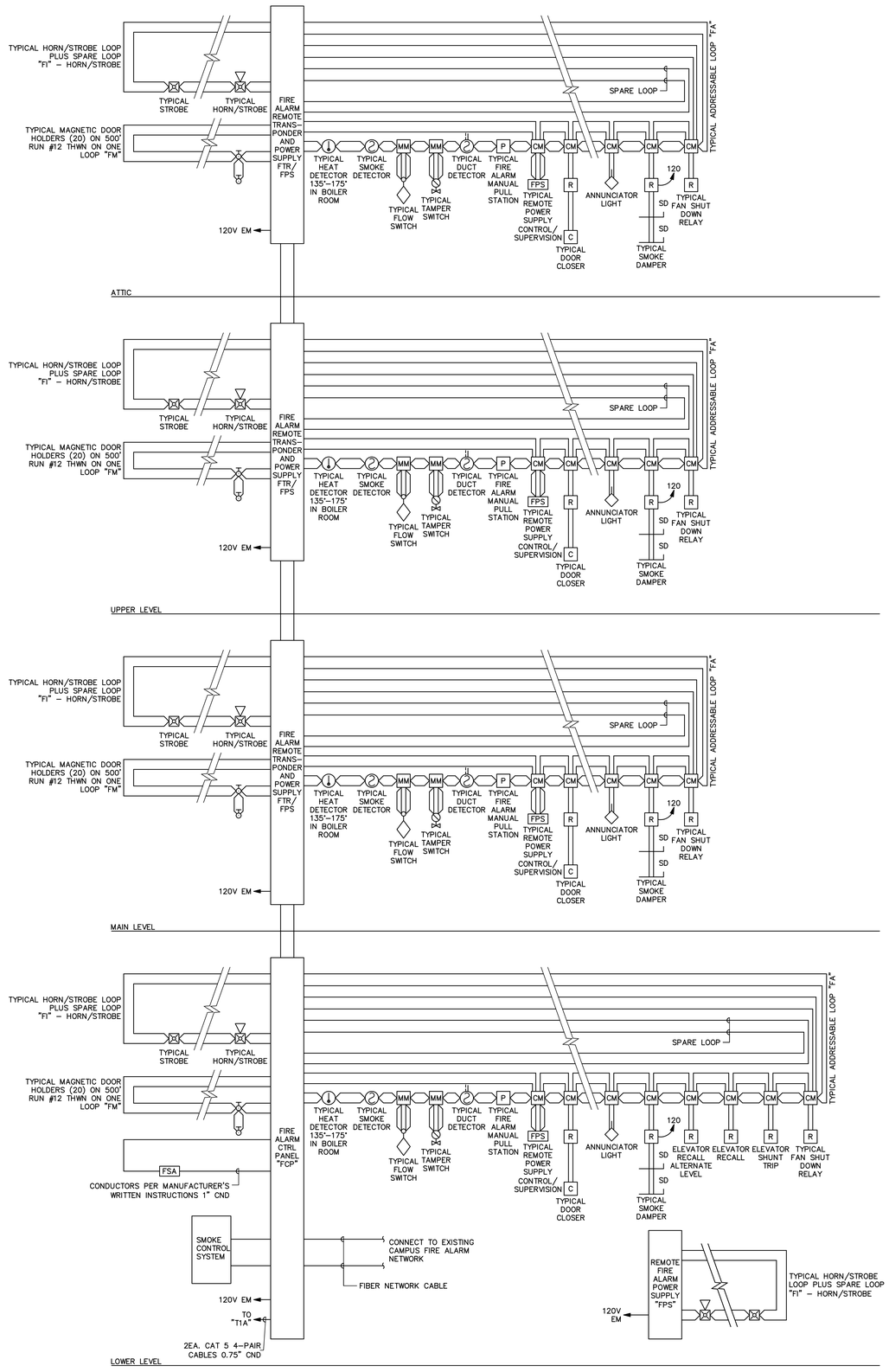

A1 FIRE ALARM RISER DIAGRAM

SCALE: N.T.S.

FIRE ALARM INPUT/OUTPUT MATRIX

	ZONE	GENERAL ALARM	DOOR HOLDER/CLOSERS	ELEVATOR RECALL MAIN LEVEL	ELEVATOR RECALL ALTERNATE LEVEL	FAN SHUTDOWN	SMOKE DAMPER	MAIN LEVEL ELEVATOR DOORS HOLD OPENS	2ND LEVEL ELEVATOR DOORS HOLD OPENS	3RD LEVEL ELEVATOR DOORS HOLD OPENS	ELEVATOR SHUNT TRIP	TROUBLE ALARM			NOTES
		OUTPUT DEVICES													
INITIATING DEVICES	1 MAIN FLOW	●	●			●	●	●	●	●					
	2 MAIN TAMPER											●			
	3 MAIN LEVEL FLOW	●	●			●	●	●	●	●					
	4 MAIN LEVEL TAMPER														
	5 2ND LEVEL FLOW	●	●			●	●	●	●	●					
	6 2ND LEVEL TAMPER														
	7 3RD LEVEL FLOW	●	●			●	●	●	●	●					
	8 3RD LEVEL TAMPER														
	9 MAIN LEVEL INITIATING LOOP	●	●			●	●	●	●	●					
	10 MAIN LEVEL ELEVATOR DETECTOR	●	●		●	●	●	●	●	●					
	11 MAIN LEVEL DUCT DETECTOR	●	●			●	●	●	●	●					
	12 2ND LEVEL INITIATING LOOP	●	●			●	●	●	●	●					
	13 2ND LEVEL ELEVATOR DETECTOR	●	●	●		●	●	●	●	●					
	14 2ND LEVEL DUCT DETECTOR	●	●			●	●	●	●	●					
	15 3RD LEVEL INITIATING LOOP	●	●			●	●	●	●	●					
	16 3RD LEVEL ELEVATOR DETECTOR	●	●	●		●	●	●	●	●					
	17 3RD LEVEL DUCT DETECTOR	●	●			●	●	●	●	●					
	18 ELEVATOR MACHINE ROOM SMOKE DETECTORS	●	●	●		●	●	●	●	●					
	19 ELEVATOR SPRINKLER HEAT DETECTORS										●	●			RECALL ELEVATORS FIRST

WIRING SCHEDULE

FUNCTION	< 500'	< 1000'	1000'–3000'	> 3000'
ADDRESSABLE LOOP	#18 TSP	#18 TSP	#16 TSP	#14 TSP
POWER LOOP	#14 THWN	#14 THWN	#12 THWN	#10 THWN
SPARE LOOP	#14 THWN	#14 THWN	#12 THWN	#10 THWN
STROBE HORNS	#14 THWN	#14 THWN	#12 THWN	#10 THWN
MAGNETIC DOOR HOLDER	#12 THWN	#10 THWN		
SPEAKERS	#16 TSP	#16 TSP	#14 TSP	#14 TSP

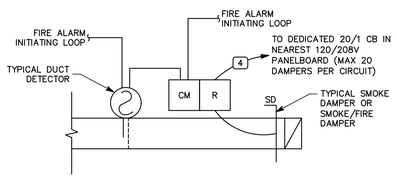

NOTES:

1. FOR EACH SMOKE DAMPER SHOWN ON PLANS, PROVIDE ALL DEVICES AND WIRING PER THIS DETAIL. THESE ARE NOT SHOWN ON PLANS FOR LEGIBILITY PURPOSES.

2. DUCT DETECTOR WITHIN 5' OF EVERY SMOKE DAMPER TO CLOSE DAMPER UPON ACTIVATION PER IMC REQUIREMENTS.

3. VERIFY QUANTITY AND LOCATIONS OF ALL SMOKE DAMPERS WITH THE DIV. 15 INSTALLER.

4. PROVIDE ONE CONTROL MODULE PER SMOKE DAMPER, UNLESS THE REQUIRED CONTROL SEQUENCE ALLOWS GROUPING OF DAMPERS, IN WHICH CASE EACH GROUPING OF DAMPERS MAY SHARE ONE CONTROL MODULE.

A4 TYPICAL SMOKE DAMPER FIRE ALARM DETAIL

SCALE: N.T.S.

GENERAL SHEET NOTES

1. PLANS ARE BASED UPON 99 MONITOR AND CONTROL DEVICES PER ADDRESSABLE LOOP. OTHER CONFIGURATIONS ARE ACCEPTABLE SUBJECT TO CONTRACTOR ALLOWING FOR INCREASED WIRING REQUIREMENTS AND SUBMITTAL DRAWINGS SHOWING NEW WIRING CONFIGURATION. MAXIMUM INITIAL DEVICES PER LOOP SHALL NOT EXCEED 75% MAXIMUM ALLOWABLE.
2. PLANS ARE BASED UPON THE WIRING SCHEDULE SHOWN. WHERE MANUFACTURER'S REQUIREMENTS EXCEED REQUIREMENTS SHOWN, INCLUDE ADDITIONAL ASSOCIATED COSTS AND SUBMITTAL DRAWINGS INDICATING NEW WIRING CONFIGURATION.
3. PLANS ARE BASED UPON 2 AMPS AT 24 VDC, NOT TO EXCEED 75% (1.50 AMPS AVAILABLE), POWER SUPPLY CAPACITY PER NOTIFICATION CIRCUIT. NOTIFICATION DEVICE LOADS ARE BASED UPON NOTIFICATION DEVICE SCHEDULE SHOWN. INCLUDE ADDITIONAL ASSOCIATED COSTS FOR INCREASED WIRING AND POWER SUPPLY CAPACITY IF LOADS OF ACTUAL DEVICES PROVIDED EXCEED CIRCUIT CAPACITY, OR IF LOAD OUTPUT OF ACTUAL POWER SUPPLIES PROVIDED IS SIZED DIFFERENTLY. PROVIDE SUBMITTAL DRAWINGS SHOWING NEW WIRING CONFIGURATION.
4. FLOW AND TAMPER CONFIGURATION BASED UPON FIRE SPRINKLER DESIGN CONCEPT. FIELD VERIFY ACTUAL REQUIREMENTS. INCLUDE ANY ADDITIONAL MONITOR MODULES REQUIRED BY ACTUAL DESIGN REQUIREMENTS.
5. HEAT DETECTORS WHEN INSTALLED IN ELEVATOR SHAFTS OR MECHANICAL ROOMS FOR ELEVATOR SHUT DOWN SHALL HAVE HEAT DETECTOR WITH LOWER RESPONSE TIME INDEX THAN SPRINKLER HEAD.
6. PROVIDE POWER SUPPLY CAPACITY AS REQUIRED FOR DOOR HOLD OPENS SHOWN.
7. BATTERY CAPACITY TO BE ADEQUATE TO OPERATE 15 MINUTES AFTER 24 HOURS PLUS 25% SPARE CAPACITY.
8. VFD REQUIRES TWO RELAYS, ONE FOR SMOKE CONTROL, ONE SPARE.
9. RUN SPARE LOOPS IN SAME CONDUIT. DO NOT EXCEED 40% AREA FILL OF CONDUITS.
10. PROVIDE DUCT DETECTORS FOR SUPPLY AND RETURN AIR SYSTEMS OVER 2000 CFM. INSTALL DUCT DETECTORS PER NFPA 72 REQUIREMENTS AND PROVIDE ADDITIONAL DUCT DETECTORS DEPENDING UPON FINAL DUCT ARRANGEMENT.
11. PROVIDE DUCT DETECTOR AT EACH FLOOR, PRIOR TO CONNECTION TO A COMMON RETURN AND PRIOR TO RECIRCULATING OR FRESH AIR INLET IN AIR RETURN SYSTEMS OVER 15,000 CFM CAPACITY AND SERVING MORE THAN ONE STORY.
12. PROVIDE MANUAL PULL STATIONS IN BOILER ROOMS AND KITCHENS.
13. PROVIDE ONE YEAR OFF SITE MONITORING INCLUDING ALL INTERFACE DEVICES AND MONITORING CHARGES. COORDINATE WITH BUILDING OWNER'S OFF SITE MONITORING COMPANY.
14. LOCATE SMOKE DETECTORS MINIMUM 3' FROM AIR SUPPLY AND RETURN LOUVERS.
15. PROVIDE SYNCHRONIZED STROBES THROUGHOUT FACILITY. PROVIDE SYNCHRONIZATION MODULES PER MANUFACTURER'S REQUIREMENTS. INCLUDE ADDITIONAL WIRING, IF REQUIRED.
16. INITIATING AND INDICATING LOOPS SHALL NOT SERVE AN AREA OF GREATER THAN 22,500 SQUARE FEET. PROVIDE ADDITIONAL LOOPS FOR AREAS LARGER THAN THIS.
17. ALL OUTPUT DEVICES ARE DESIGNED ON SYSTEMS WITH 2 AMP POWER SUPPLY.
18. HORN/STROBE BASED ON 120 MILLIAMPS, DOOR HOLDERS BASED ON 70 MILLIAMPS.
19. INSTALL DUCT DETECTORS PER NFPA 72 REQUIREMENTS AND PROVIDE ADDITIONAL DUCT DETECTORS DEPENDING UPON FINAL DUCT ARRANGEMENT.

COOPER ROBERTS SIMONSEN ASSOCIATES
crsa
700 North 200 West
Salt Lake City, UT 84103
(801) 355-5915 phone
(801) 355-9885 fax
crsa-us.com

SNOW COLLEGE

State of Utah-Department of Administrative Services
DIVISION OF FACILITIES CONSTRUCTION AND MANAGEMENT
4110 State Office Building/Salt Lake City, Utah 84114/538-3018

Civil Engineer
Great Basin Engineering
Contact: Dave Waldron
5746 South 1475 East, Suite 200
Ogden, UT 84403
(801) 521-0222 FAX (801) 392-7544
dave@gbenorth.com

Landscape Architect
G. Brown Design
Contact: Mathew Winward
610 E. South Temple, Suite 50
Salt Lake City, UT 84102
(801) 575-6066 FAX (801) 575-6166
mwinward@gbrowndesign.com

Structural Engineer
Reaveley Engineers
Contact: Cameron Empey
675 East 500 South, Suite 400
Salt Lake City, UT 84105
(801) 486-3883 FAX (801) 485-0911
cempey@reaveley.com

Mechanical Engineer
Van Boerum & Frank
Contact: Neil Spencer
330 South 300 East
Salt Lake City, UT 84111
(801) 530-3148 FAX (801) 910-9917
nspencer@vbfa.com

Electrical Engineer
Spectrum Engineers
Contact: Dave Wesemann, PE
175 South Main Street, Suite 300
Salt Lake City, UT 84111
(801) 328-5151 FAX (801) 328-5155
dew@spectrum-engineers.com

AV Consultant
Spectrum Engineers
Contact: Kurtis Dallinga, PE
175 South Main Street, Suite 300
Salt Lake City, UT 84111
(801) 328-5151 FAX (801) 328-5155
kdd@spectrum-engineers.com

Library Consultant
Michaels Associates Design Consultants, Inc.
Contact: Andrea Michaels
14809 North 73rd Street, Suite 100
Scottsdale, AZ 85260
(480) 998-7476 FAX (480) 998-9390
andrea@madcinc.com

STAMP:

LICENSED PROFESSIONAL ENGINEER
No. 181563
DAVID E. WESEMANN
STATE OF UTAH

PROJECT NAME:

Snow College Library

150 College Avenue
Ephraim, Utah 84627

REVISIONS:

- 100% CD, October 13, 2008
- 100% CD, September 15, 2008
- 100% CD Review, Aug 26, 2008
- 100% CD, June 25, 2008
- 100% CD Review, June 20, 2008
- 50% CD Review, May 27, 2008
- CD Review Set, May 2, 2008
- DD Set, April 18, 2008
- DD Review, April 4, 2008

ISSUE DATE:

SEPTEMBER 15 2008, 100% CD

ARCHITECT'S PROJECT NUMBER:

B07-051

DFCM PROJECT NUMBER:

07258700

SHEET TITLE:

FIRE ALARM RISER DIAGRAM AND MATRIX

SHEET NUMBER:

EY-602

File Name: P:\2007\20070473\Drawings\Sheet\73EY-602.dwg Last Plotted: 2008/10/14 @ 10:15 AM By: dlm

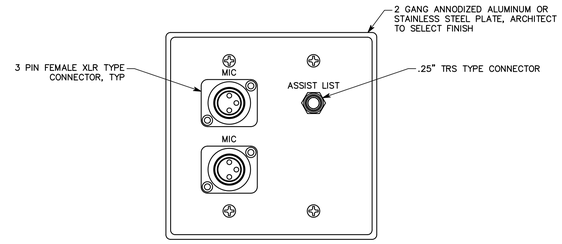

E3 CONNECTION PANEL DETAIL

NTS

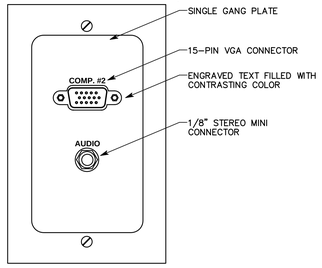

E5 FLOOR BOX CONNECTION PANEL DETAIL

NTS

FB#

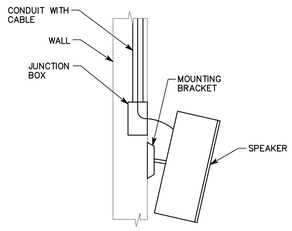

D3 SPEAKER MOUNTING DETAIL

NTS

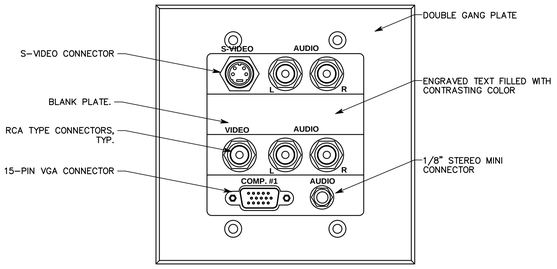

D5 CONNECTION PANEL #1 DETAIL

NTS

CP1

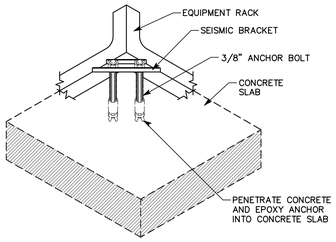

NOTE: TYPICAL OF 4 CORNERS OF EQUIPMENT RACK.

C3 EQUIPMENT RACK ANCHORAGE DETAIL

NTS – TYPICAL OF EQUIPMENT RACKS #1, & #2

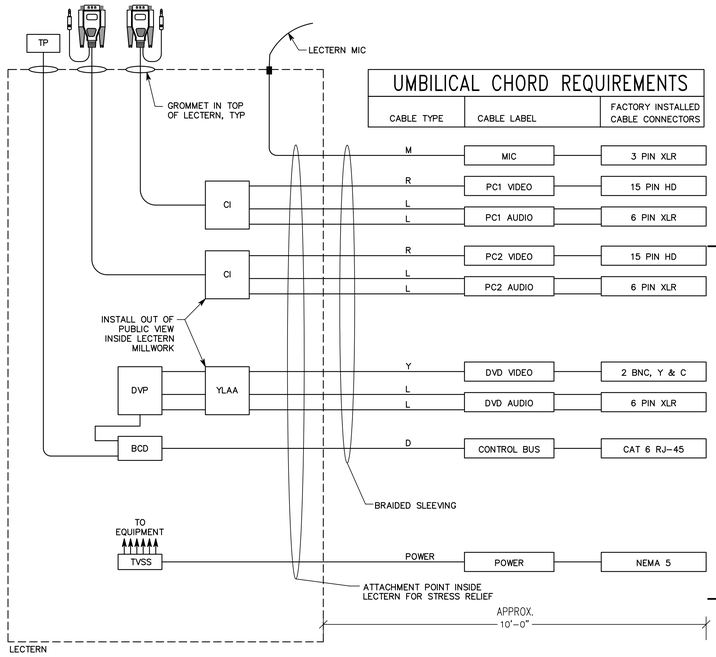

UMBILICAL CHORD REQUIREMENTS

CABLE TYPE	CABLE LABEL	FACTORY INSTALLED CABLE CONNECTORS
M	MIC	3 PIN XLR
R	PC1 VIDEO	15 PIN HD
L	PC1 AUDIO	6 PIN XLR
R	PC2 VIDEO	15 PIN HD
L	PC2 AUDIO	6 PIN XLR
Y	DVD VIDEO	2 BNC, Y & C
L	DVD AUDIO	6 PIN XLR
D	CONTROL BUS	CAT 6 RJ-45
POWER	POWER	NEMA 5

NOTES:

1. PROVIDE UMBILICAL CORDS WITH FACTORY INSTALLED CONNECTORS. DO NOT FABRICATE CONNECTORS ON SITE OR AT SHOP.
2. CONFIRM THE OWNER'S DESIRED UMBILICAL CORD LENGTH PRIOR TO FABRICATION.

A5 LECTERN UMBILICAL CORD DETAIL

NTS – TYPICAL OF LECTERNS IN THC LECTURE 109, CLASSROOM 101, & TANNER/SEMINAR 143 (THREE LECTERNS)

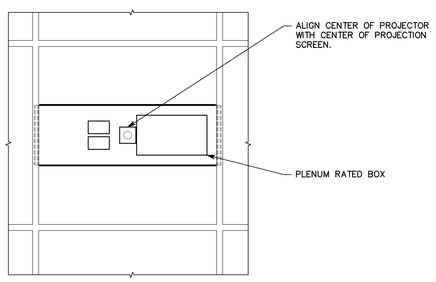

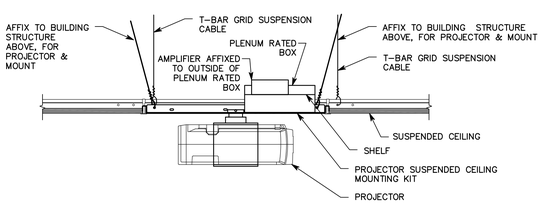

A1 PROJECTOR MOUNTING DETAIL–LAY IN CEILING TILE AREAS

NTS

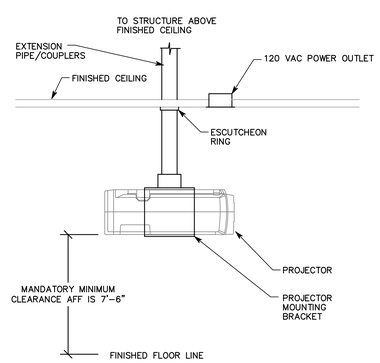

A3 PROJECTOR MOUNTING DETAIL

NTS

COOPER ROBERTS SIMONSEN ASSOCIATES

crsa

700 North 200 West
Salt Lake City, UT 84103
(801) 355-5915 phone
(801) 355-9885 fax
crsa-us.com

SNOW COLLEGE

State of Utah-Department of Administrative Services

DIVISION OF FACILITIES CONSTRUCTION AND MANAGEMENT

4110 State Office Building/Salt Lake City, Utah 84114/38.3018

Civil Engineer

Great Basin Engineering
Contact: Dave Waldron
5746 South 1475 East, Suite 200
Ogden, UT 84403
(801) 521-0222 FAX (801) 392-7544
dave@gbenorth.com

Landscape Architect

G. Brown Design
Contact: Mathew Winward
610 E. South Temple, Suite 50
Salt Lake City, UT 84102
(801) 575-6066 FAX (801) 575-6166
mwinward@gbrowndesign.com

Structural Engineer

Reaveley Engineers
Contact: Cameron Empey
675 East 500 South, Suite 400
Salt Lake City, UT 84105
(801) 486-3883 FAX (801) 485-0911
cempey@reaveley.com

Mechanical Engineer

Van Boerum & Frank
Contact: Neil Spencer
330 South 300 East
Salt Lake City, UT 84111
(801) 530-3148 FAX (801) 910-9917
nspencer@vbfa.com

Electrical Engineer

Spectrum Engineers
Contact: Dave Wesemann, PE
175 South Main Street, Suite 300
Salt Lake City, UT 84111
(801) 328-5151 FAX (801) 328-5155
dew@spectrum-engineers.com

AV Consultant

Spectrum Engineers
Contact: Kurtis Dallinga, PE
175 South Main Street, Suite 300
Salt Lake City, UT 84111
(801) 328-5151 FAX (801) 328-5155
kdd@spectrum-engineers.com

Library Consultant

Michaels Associates Design Consultants, Inc.
Contact: Andrea Michaels
14809 North 73rd Street, Suite 100
Scottsdale, AZ 85260
(480) 998-7476 FAX (480) 998-9390
andrea@madcinc.com

STAMP:

LICENSED PROFESSIONAL ENGINEER No. 181563 DAVID E. WESEMANN STATE OF UTAH

PROJECT NAME:

Snow College Library

150 College Avenue
Ephraim, Utah 84627

REVISIONS:

- 100% CD, September 15, 2008
- 100% CD Review, Aug 26, 2008
- 100% CD, June 25, 2008
- 100% CD Review, June 20, 2008
- 50% CD Review, May 27, 2008
- CD Review Set, May 2, 2008
- DD Set, April 18, 2008
- DD Review, April 4, 2008

ISSUE DATE:

SEPTEMBER 15 2008, 100% CD

ARCHITECT'S PROJECT NUMBER:

B07-051

DFCM PROJECT NUMBER:

07258700

SHEET TITLE:

AUDIO/VIDEO DETAILS

SHEET NUMBER:

TA-501

File Name: P:\2007\20070473\Drawings\Sheet\73TA-501.dwg Last Plotted: 2008/09/15 @ 1:39 PM By: sjt

AUDIO AND VIDEO SYSTEM EQUIPMENT LIST

THE ITEMS INDICATED BELOW SHALL NOT BE CONSTRUED AS A "BILL OF MATERIALS". THIS LIST IDENTIFIES ITEMS OF SIGNIFICANCE USED DURING THE DESIGN OF THE ELECTRONIC SYSTEMS INSTALLATION. WHERE THE ITEMS INDICATED ARE ONE PORTION OF AN ASSEMBLY, THE ENTIRE ASSEMBLY SHALL BE PROVIDED UNLESS SPECIFIED OTHERWISE. PROVIDE ALL MISCELLANEOUS HARDWARE AND SUPPORTS WHICH MAY NOT BE LISTED HERE, FOR A COMPLETE INSTALLATION. COMPARE CATALOG NUMBERS WITH DESCRIPTIONS AND NOTIFY ENGINEER OF DISCREPANCIES PRIOR TO BID. IF CATALOG NUMBERS DO NOT MATCH DESCRIPTIONS, THE DESCRIPTIONS TAKE PRECEDENCE. PROVIDE COMPLETE SUBMITTAL FOR APPROVAL PRIOR TO PURCHASING ANY EQUIPMENT OR CABLE. REFER TO SPECIFICATIONS FOR ADDITIONAL REQUIREMENTS.

SYMBOL	DESCRIPTION	QUANTITY	ACCEPTABLE TYPES – SEE SPECIAL PROJECT NOTE 1, APPLICABLE TO ALL ITEMS ON LIST
TP	TOUCH PANEL, 6.4", 640 X 480, DESKTOP MOUNT W/ HATCHBACK	OFP	CRESTRON TPS-3000/HBK 3000
BCD	BUS CONTROL DEVICE	A/R	CRESTRON ST-COM
PR	POWER RELAY	A/R	CRESTRON CNPC-1A
CS1	CONTROL SYSTEM CENTRAL PROCESSOR #1 W/RS-232, IR, RELAYS	OFP	CRESTRON AV2/ST-COM
CS2	CONTROL SYSTEM CENTRAL PROCESSOR #2 W/RS-232, IR, RELAYS	OFP	CRESTRON CP2E
VOL	VOLUME CONTROL	A/R	CRESTRON C2N-VEQ4/C2VEQ-4
PS	POWER SUPPLY	A/R	CRESTRON PW-2420RU
	CONTROL SYSTEM CENTRAL PROCESSOR ETHER NET CARD, NOTE 15	A/R	CRESTRON C2ENET1
CNV	RS-485 TO RS-2332 CONVERTOR	A/R	AAXEON STD 1918
RC	REMOTE CONTROLLER, RS-232, WHITE, SEE NOTE 18	OFP	EXTRON MLC 52 RS
DVP	DIGITAL VERSATILE DISK AND S-VIDEO TAPE PLAYER W/RS-232 CONTROL	OFP	JVC SR-MV50US
DVD	DVD PLAYER	OFP	MARANTZ DN-V300
CP5	CONNECTION PANEL #5, COMPUTER INTERFACE SEE NOTE 18	OFP	EXTRON RGB 460XI
CP#	CONNECTION PANEL #1 – #3 CUSTOM SEE DETAIL	A/R	
CP#	CONNECTION PANEL #4, #6, SEE NOTE 18	OFP	EXTRON CPM 102 & 104 W/ACCESSORIES, AS DETAILED
CI	COMPUTER INTERFACE, UNIVERSAL W/MOUNTING KIT	OFP	EXTRON RGB 160XI
RSA	RGBHV SWITCHER W/AUDIO, 6 X 1	OFP	EXTRON SW6 RGBHV
SCL	SCALER, VIDEO AND RGB W/AUDIO	OFP	EXTRON DVS 304A
YSA	S-VIDEO SWITCHER W/AUDIO, 4 X 1	OFP	EXTRON SW 4SVA
WR	WIRELESS MICROPHONE SYSTEM NOTE 1: TRANSMITTER, HAND HELD	OFP	SHURE ULXS/58
	TRANSMITTER, BODY WORN W/ LAPEL AND HEAD WORN ELEMENTS	OFP	SHURE ULXS/WL184/WH20
	RECEIVER W/ DUAL RACK MOUNT KIT	OFP	SHURE UC4
AM	AUTOMATIC MIXER 8 CHANNEL/4 CHANNEL	OFP	SHURE SCM 810/SCM 410
MIX	MIXER, 8 CHANNEL, MANUAL	OFP	SHURE SCM 800
DSP	DIGITAL SIGNAL PROCESSOR	OFP	RANE RPM2
MAP	MULTI-CHANNEL AUDIO PROCESSOR	OFP	CRESTRON C2N-DAP8
	POWER AMPLIFIER, DUAL CHANNEL, 600 WATTS PER CHANNEL	OFP	CROWN CTS 1200 QSC CX902
	POWER AMPLIFIER, 4 CHANNEL, 70V, 200 WATTS PER CHANNEL	OFP	CROWN CTS 4200 QSC CX204V
	POWER AMPLIFIER, 8 CHANNEL, 70V, 200 WATTS PER CHANNEL	OFP	CROWN CTS 8200 QSC CX204V (TWO)
S	SPEAKER ASSEMBLY, CEILING MOUNTED, FULL FREQUENCY 6" SPEAKER, TRANSFORMER & GRILLE, 70V	OFP	ATLAS SOUND FA136T87/FA-720-6
+S LF & RF	SPEAKER, WALL MOUNTED, COMPRESSION DRIVEN, 2 WAY 300 W, WITH WALL MOUNT BRACKET, ARCHITECT TO SELECT COLOR	OFP	JBL CONTROL 29AV-1
S SW	SPEAKER, SUB WOOFER, DUAL 10" DRIVERS, 300 W	OFP	JBL CONTROL SB 210
+S LS, RS, LB, RB	SPEAKER, WALL MOUNTED, DOME TWEETER, 2 WAY, 175 WATTS WITH WALL MOUNTING BRACKET, ARCHITECT TO SELECT COLOR	OFP	JBL CONTROL 28
	EQUIPMENT RACK, PIVOTING, FLOOR/WALL MOUNTED, W/FRONT DOOR, 40 RU	OFP	MIDDLE ATLANTIC SR-40-32/VFD-40
	PROJECTION SCREEN, FIXED FRAME, 16:9 W/PEARLESCENT SURFACE: THC LECTURE 109 IMAGE SIZE 108" X 192"	1	DALITE CINEMA CONTOUR SERIES
	CLASSROOM 101 IMAGE SIZE 78" X 138"	1	DALITE CINEMA CONTOUR SERIES
SC	PROJECTION SCREEN, ELECTRIC ROLL-UP, 4:3, W/LOW VOLTAGE CONTROL INTERFACE, CONTROL SWITCH AND VIDEO SPECTRA SURFACE: TANNER SEMINAR 143 IMAGE SIZE 72" X 96"	1	DALITE ADVANTAGE ELECTROL SERIES
1	PROJECTOR, W/LENS, NATIVE 1366 X 768, 6000 ANSI LUMENS	1	PANASONIC
	PROJECTOR CEILING MOUNT KIT, PROVIDE PIPE, COUPLERS, STEEL, ADAPTORS, UNISTRUT, THREADED ROD, FASTENERS, ANCHORS, AND ANY OTHER REQUIRED COMPONENTS TO SPAN STRUCTURE, AIR DUCTS, EXTEND/REDUCE SUPPORT SYSTEM FOR APPROPRIATE ELEVATION AS NEEDED FOR INSTALLATION OF THE SPECIFIED DEVICE. SECURE PROJECTORS TO MOUNTS UTILIZING SECURITY SCREWS.	1	CHIEF RPA ELITE SERIES W/MATING PLATE FOR SPECIFIED PROJECTOR & ALL REQUIRED ACCESSORIES
2	PROJECTOR, W/LENS, NATIVE 1366 X 768, 4000 ANSI LUMENS	1	PANASONIC
	PROJECTOR CEILING MOUNT KIT, PROVIDE PIPE, COUPLERS, STEEL, ADAPTORS, UNISTRUT, THREADED ROD, FASTENERS, ANCHORS, AND ANY OTHER REQUIRED COMPONENTS TO SPAN STRUCTURE, AIR DUCTS, EXTEND/REDUCE SUPPORT SYSTEM FOR APPROPRIATE ELEVATION AS NEEDED FOR INSTALLATION OF THE SPECIFIED DEVICE. SECURE PROJECTORS TO MOUNTS UTILIZING SECURITY SCREWS.	1	CHIEF RPA ELITE SERIES W/MATING PLATE FOR SPECIFIED PROJECTOR & ALL REQUIRED ACCESSORIES
3	PROJECTOR, W/LENS, NATIVE 1366 X 768, 3000 ANSI LUMENS	1	PANASONIC
	PROJECTOR CEILING MOUNT KIT, PROVIDE PIPE, COUPLERS, STEEL, ADAPTORS, UNISTRUT, THREADED ROD, FASTENERS, ANCHORS, AND ANY OTHER REQUIRED COMPONENTS TO SPAN STRUCTURE, AIR DUCTS, EXTEND/REDUCE SUPPORT SYSTEM FOR APPROPRIATE ELEVATION AS NEEDED FOR INSTALLATION OF THE SPECIFIED DEVICE. SECURE PROJECTORS TO MOUNTS UTILIZING SECURITY SCREWS.	1	CHIEF RPA ELITE SERIES W/MATING PLATE FOR SPECIFIED PROJECTOR & ALL REQUIRED ACCESSORIES
	LECTERN MIC – REMOVABLE XLR CONNECTION, WITH SHOCKMOUNT, SUPER CARDIOID PATTERN, SEE NOTE 17	4	SHURE MICROFLEX MX418S WITH SHOCKMOUNT
	MICROPHONE GENERAL PURPOSE WITH SWITCH	2	SHURE BETA 58A-S
	30' MICROPHONE CORD	2	PRO CO C-CM 30
	MICROPHONE FLOOR STAND	1	ATLAS SOUND MS-20E
	MICROPHONE TABLE STAND	1	ATLAS SOUND DS-7E
	MULTI INPUT BOX	1	EMTECH EJ-8

AUDIO AND VIDEO SYSTEM EQUIPMENT LIST, CONT.

SYMBOL	DESCRIPTION	QUANTITY	ACCEPTABLE TYPES – SEE SPECIAL PROJECT NOTE 1, APPLICABLE TO ALL ITEMS ON LIST
TVSS	TRANSIENT VOLTAGE SURGE SUPPRESSOR, 20A	A/R	TRIPP LITE IBAR 12-20 ULTRA
PS	POWER SUPPLY FOR EXTRON EQUIPMENT, SEE NOTE 18	A/R	EXTRON
LM	MIXER, LINE LEVEL, 3X1	OFP	RADIO DESIGN LABS ST-MX3 EXTRON MIX 301
	TRANSFORMER, BALANCED TO UNBALANCED	A/R	RADIO DESIGN LABS TX SERIES
RDA	RGBHV DA 1X2	A/R	EXTRON DA2 RGBHV
AI	AUDIO INTERFACE	A/R	RADIO DESIGN LABS STA-1
ADA	AUDIO DISTRIBUTION AMPLIFIER 1 X 3	OFP	RADIO DESIGN LABS ST-DA3
A	ATTENUATOR, PRECISION, 1.5 dB PER STEP	OFP	ATLAS SOUND E408 SERIES
YLAA	YC LINE AMPLIFIER W/ AUDIO	OFP	EXTRON SVEQ100
	UMBILICAL CORD, LECTERN	OFP	CUSTOM, SEE DETAIL
	CUSTOM RACK MOUNT KITS, SEE NOTE 10	A/R	MIDDLE ATLANTIC RSH SERIES
	CONNECTORS, SEE NOTE 5	A/R	
	POWER SUPPLIES, MISC. TRANSFORMERS, SIGNAL SENSORS, PROTOCOL CONVERTERS, SEE NOTES 4, 7, 8	A/R	
	PATCH CORDS, SEE NOTE 6	A/R	
	ADAPTER CABLES, SEE NOTE 9	A/R	
	CABLE, SEE AV CABLE SCHEDULE	A/R	

AUDIO/VIDEO CABLE SCHEDULE

CABLE TYPE	DESCRIPTION	ACCEPTABLE TYPES	SPECIAL INSTRUCTIONS
M	MICROPHONE CABLE, 22 AWG, SHIELDED, TWISTED PAIR W/ DRAIN	BELDEN 8451 WEST PENN CL2 452 CANARE L-4E5AT	NOTE 14
L	LINE LEVEL CABLE, 22 AWG, SHIELDED, TWISTED PAIR W/ DRAIN	BELDEN 8451 WEST PENN CL2 452 CANARE L-4E5AT	NOTE 14
S	SPEAKER CABLE, 70 V, 16 AWG, TWISTED PAIR	BELDEN 8471 WEST PENN CL2 225 CANARE 4S8	NOTE 14
R	RGBHV CABLE, 5 COAXIAL, HIGH RESOLUTION	EXTRON SHR-5 CANARE V5-5CFB	NOTE 14, REQUIRED FOR "R" TYPE CABLE RUNS GREATER THAN 80'
		EXTRON BNC-5 MINI HR	NOTE 14, REQUIRED FOR "R" TYPE CABLE RUNS LESS THAN 80'
C	CONTROL CABLE, 24 AWG, 4 PAIR, OVERALL SHIELD	BELDEN 8104 WEST PENN D2404	NOTE 14
D	DATA CABLE, CAT 5E	BELDEN 1501A	
Y	S-VIDEO CABLE, 2 COAXIAL, HIGH RESOLUTION, 75 OHM	EXTRON S-VIDEO CABLE, TWO CONDUCTOR	NOTE 14
Z	SPEAKER CABLE, 8 OHM, 14 AWG TWISTED PAIR, UNSHIELDED	WEST PENN 226 BELDEN 8473	NOTE 14

ABBREVIATIONS

NOTE: ALL ABBREVIATIONS MAY NOT BE USED.

"A"	AUDIO
"A/R"	AS REQUIRED
"ADJ"	ADJACENT
"C"	CONDUIT
"CAT"	CATEGORY
"CFI"	CONTRACTOR FURNISHED AND INSTALLED
"CV"	COMPOSITE VIDEO
"E"	ENHANCED
"EA"	EACH
"EX"	EXISTING
"GR"	GROUND
"I.O.F."	INSTALLATION OF OWNER FURNISHED EQUIPMENT
"L"	LEFT AUDIO CHANNEL, LINE LEVEL
"MIC"	MIC LEVEL AUDIO
"N.I.C."	NOT IN CONTRACT
"OFCI"	OWNER FURNISHED AND CONTRACTOR INSTALLED
"OFI"	OWNER FURNISHED AND INSTALLED
"OFP"	OBTAIN FROM PLANS
"QTY"	QUANTITY
"OP"	OWNER PROVIDED
"R"	RIGHT AUDIO CHANNEL, LINE LEVEL
"RGBHV"	COMPUTER VIDEO
"RMK"	RACK MOUNT KIT
"RU"	RACK UNIT, 1.75"
"TYP"	TYPICAL
"V"	VOLT
"W/"	WITH
"YC"	S-VIDEO

DEFINITIONS

NOTE: ALL DEFINITIONS MAY NOT BE USED.

INDICATED: THE TERM "INDICATED" REFERS TO GRAPHIC REPRESENTATIONS, NOTES, OR SCHEDULES ON THE DRAWINGS, OTHER PARAGRAPHS OR SCHEDULES IN THE SPECIFICATIONS, AND SIMILAR REQUIREMENO SCALE IN THE CONTRACT DOCUMENO SCALE. WHERE TERMS SUCH AS "SHOWN", "NOTED", "SCHEDULED", AND "SPECIFIED" ARE USED, IT IS TO HELP THE READER LOCATE THE REFERENCE, NO LIMITATION ON LOCATION IS INTENDED.

DIRECTED: TERMS SUCH AS "DIRECTED", "REQUESTED", AUTHORIZED", "SELECTED", "APPROVED", "REQUIRED", AND "PERMITTED" MEAN "DIRECTED BY THE ENGINEER", "REQUESTED BY THE ENGINEER", AND SIMILAR PHRASES.

APPROVE: THE TERM "APPROVED", WHERE USED IN CONJUNCTION WITH THE ENGINEER'S ACTION ON THE CONTRACTOR'S SUBMITTALS, APPLICATIONS, AND REQUESTS, IS LIMITED TO THE ENGINEER'S DUTIES AND RESPONSIBILITIES AS STATED IN GENERAL AND SUPPLEMENTARY CONDITIONS.

FURNISH: THE TERM "FURNISH" IS USED TO MEAN "SUPPLY AND DELIVER TO THE PROJECT SITE, READY FOR UNLOADING, UNPACKING, ASSEMBLY, INSTALLATION, AND SIMILAR OPERATIONS."

INSTALL: THE TERM "INSTALL" IS USED TO DESCRIBE OPERATIONS AT PROJECT SITE INCLUDING THE ACTUAL "UNLOADING, UNPACKING, ASSEMBLY, ERECTION, PLACING, ANCHORING, APPLYING, WORKING TO DIMENSION, FINISHING, CURING, PROTECTING, CLEANING, AND SIMILAR OPERATIONS."

PROVIDE: THE TERM "PROVIDE" MEANS "TO FURNISH AND INSTALL, COMPLETE AND READY FOR THE INTENDED USE."

INSTALLER: AN "INSTALLER" IS THE CONTRACTOR OR AN ENTITY ENGAGED BY THE CONTRACTOR, EITHER AS AN EMPLOYEE, SUBCONTRACTOR, OR SUB-SUBCONTRACTOR, FOR PERFORMANCE OF A PARTICULAR CONSTRUCTION ACTIVITY, INCLUDING INSTALLATION, ERECTION, APPLICATION, AND SIMILAR OPERATIONS. INSTALLERS ARE REQUIRED TO BE EXPERIENCED IN THE OPERATIONS THEY ARE ENGAGED TO PERFORM.

TECHNOLOGY SYSTEMS: THE TERM "TECHNOLOGY SYSTEMS" IS USED TO DESCRIBE ALL LOW VOLTAGE SYSTEMS. THESE SYSTEMS INCLUDE BUT ARE NOT NECESSARILY LIMITED TO ALL SYSTEMS WHICH UTILIZE VOLTAGES OF LESS THAN 71 VOLTS SUCH AS SOUND SYSTEMS, VIDEO SYSTEMS, TV SYSTEMS, SECURITY SYSTEMS, VOICE AND DATA CABLING SYSTEMS, ETC...

SPECIAL PROJECT NOTES

1. THE AUDIO AND VIDEO SYSTEM EQUIPMENT LIST FOUND ON SHEET TA603 IDENTIFIES EQUIPMENT ITEMS OF SIGNIFICANCE BY MANUFACTURER AND MODEL NUMBER. THE SOLE PURPOSE FOR THIS IS TO ESTABLISH LEVELS OF QUALITY AND INDIVIDUAL COMPONENT CAPABILITY FOR ALL EQUIPMENT ITEMS. IT IS NOT THE INTENT OF THE AUDIO AND VIDEO SYSTEM EQUIPMENT LIST TO PRECLUDE THE INSTALLATION OF EQUIPMENT ITEMS FABRICATED BY MANUFACTURERS OTHER THAN THOSE LISTED, SO FAR AS THEY ARE JUDGED TO BE EQUAL TO THOSE EQUIPMENT ITEMS IDENTIFIED IN THE LIST. IF BIDDERS WISH TO FURNISH AND INSTALL ITEMS OTHER THAN THOSE IDENTIFIED IN THE AUDIO AND VIDEO SYSTEM EQUIPMENT LIST APPROVAL MUST BE OBTAINED DURING THE BIDDING PROCESS. TO THIS END, A SUBSTITUTION REQUEST PROCESS HAS BEEN IDENTIFIED IN THE DIVISION 1 SPECIFICATIONS FOR OBTAINING APPROVAL TO FURNISH AND INSTALL APPROVED EQUAL EQUIPMENT ITEMS. THE SPECIFICATIONS AND COMPONENT CAPABILITY OF ALL PROPOSED EQUAL EQUIPMENT ITEMS THAT ARE SUBMITTED IN FULL COMPLIANCE WITH THE SUBSTITUTION PROCESS WILL BE STRICTLY EVALUATED DURING THE BIDDING PROCESS. FINAL DECISIONS REGARDING ALL EQUIPMENT SUBSTITUTION REQUESTS WILL BE MADE BY THE PROJECT ARCHITECT/ENGINEER (A&E).

GENERAL A/V NOTES

1. CONDUCT AN RF FREQUENCY AUDIT OF THE SITE PRIOR TO SELECTION OF WIRELESS RF OPERATING FREQUENCIES. SELECT FREQUENCIES TO ASSURE INTERFERENCE FREE OPERATION. INSTALL ANTENNAS/TRANCEIVERS OUTSIDE OF THE EQUIPMENT RACK, AT AN ARCHITECT APPROVED LOCATION, WHERE THE BEST SYSTEM PERFORMANCE IS ACHIEVED.
2. FILL ALL UNUSED RACK SPACE WITH BLANK/VENT PANELS.
3. INSTALL ALL EQUIPMENT IN COMPLIANCE WITH THE MANUFACTURERS WRITTEN INSTRUCTIONS, SEISMIC CODES, AND INDUSTRY WIDE ACCEPTED RIGGING PRACTICES. SUPPORT EQUIPMENT WEIGHT FROM STRUCTURE ABOVE CEILINGS. DURING THE SUBMITTAL PROCESS, PROVIDE SHOP DRAWINGS WHICH DETAIL PROPOSED MOUNTING FOR ALL SUCH EQUIPMENT.
4. PROVIDE MANUFACTURER RECOMMENDED POWER SUPPLIES AND/OR TRANSFORMERS FOR ALL SPECIFIED EQUIPMENT.
5. FURNISH AND INSTALL ALL CABLE AND CONNECTORS REQUIRED FOR ALL AUDIO AND VIDEO SYSTEMS TO COMPLETE MANUFACTURER RECOMMENDED CABLE TO EQUIPMENT TERMINATION TO FORM A COMPLETE AND FULLY FUNCTIONAL SYSTEM AS SHOWN. SELECT CONNECTORS WHICH PASS FULL BANDWIDTH CAPABILITY OF SPECIFIED CABLE. PROVIDE CABLE TYPES AS IDENTIFIED IN THE AUDIO/VIDEO CABLE SCHEDULE.
6. PROVIDE PATCH CABLES TO FULLY INTERCONNECT ALL SPECIFIED AND/OR OWNER FURNISHED EQUIPMENT WITH THE SPECIFIED CONNECTION PANELS, SYSTEM INTERFACES, AND MISCELLANEOUS EQUIPMENT.
7. PROVIDE MANUFACTURER RECOMMENDED, AND INDUSTRY STANDARD, SIGNAL LEVELS AND COMMUNICATION PROTOCOLS THROUGHOUT ENTIRE SYSTEM REGARDLESS OF CABLE LENGTHS. PROVIDE ALL REQUIRED DISTRIBUTION AND PROCESSING EQUIPMENT, INCLUDING BUT NOT LIMITED TO SIGNAL DISTRIBUTION AMPLIFIERS, LINE AMPLIFIERS, LINE DRIVERS, EQUALIZING AMPLIFIERS, GROUND/HUM ISOLATORS, MATCHING/ISOLATION TRANSFORMERS, CONTROL BUS DEVICES, COMMUNICATIONS CONVERTERS, ETC..., WHETHER SHOWN IN THE SINGLE LINE DIAGRAMS OR NOT.
8. PROVIDE POWER, CURRENT, AND/OR SIGNAL SENSORS FOR ALL EQUIPMENT WHERE IT IS NECESSARY FOR CORRECT CONTROL SYSTEM OPERATION.
9. PROVIDE PRE-MANUFACTURED ADAPTER CABLES WHERE REQUIRED FOR MATING CABLE TO CONNECTORS. THESE WILL INCLUDE, BUT ARE NOT LIMITED TO, ADAPTERS WHICH MATE RGBHV CABLE TO 15 PIN HD CONNECTORS, TWO VIDEO CABLES TO 4 PIN DIN CONNECTORS, AND OTHER SIMILAR TERMINATION REQUIREMENT SCALE.
10. PROVIDE RACK MOUNT KITS FOR ALL RACK MOUNTED EQUIPMENT. WHERE MANUFACTURERS DO NOT PROVIDE RACK MOUNT KITS, PROVIDE CUSTOM RACK MOUNT KITS AS SPECIFIED.
11. WHERE ANY CABLE IS INSTALLED IN A FASHION WHERE EXPOSED TO PUBLIC VIEW, INSTALL CABLE INSIDE THE SPECIFIED BRAIDED EXPANDABLE SLEEVING. EXAMPLES OF SUCH LOCATIONS INCLUDE, BUT ARE NOT LIMITED TO EQUIPMENT ITEMS ON LECTERNS AND CEILING MOUNTED PROJECTORS.
12. LOCATE AND INSTALL PROJECTOR AND MOUNT SUCH THAT THE IMAGE SIZE SPECIFIED IN THE PROJECTION SCREEN SCHEDULE IS ACHIEVED.
13. CONTROL SPECIFIED DEVICES UTILIZING THE MOST SOPHISTICATED COMMUNICATIONS PROTOCOL AVAILABLE ON THE DEVICE TO BE CONTROLLED. ALWAYS USE RS-232 WHEN AVAILABLE.
14. IF AN INSTANCE IS ENCOUNTERED WHERE CABLE MUST BE INSTALLED INSIDE OF AN AIR PLENUM, FURNISH THE PLENUM RATED EQUIVALENT TO THE CABLE SPECIFIED. PROVIDE PLENUM RATED CABLE IN INTL. SEMINAR 211, SEMINAR 351, AND TANNER LIBRARY 459.
15. INSTALL THE SPECIFIED ETHERNET CARDS INSIDE THE EXISTING CONTROL SYSTEM CENTRAL PROCESSOR. CONNECT TO THE OWNER'S NETWORK AND MAKE REMOTE ACCESS FULLY FUNCTIONAL.
16. PROVIDE EQUIPMENT RACK #3 WITH THE MAXIMUM VERTICAL HEIGHT THAT WILL FIT IN THE CUSTOM FABRICATED MILLWORK. PLANNED PRELIMINARY HEIGHT WILL ACCOMMODATE A 9 RU RACK. HOWEVER, CONFIRM VERTICAL MILLWORK OPENING WITH THE MILLWORK SHOP DRAWINGS PRIOR TO ORDERING. FIELD CUT RACK RAILS TO FIT IN VERTICAL OPENING IF REQUIRED.
17. INSTALL THE SPECIFIED GOOSENECK MIC AND SHOCK MOUNT ON THE LECTERNS.
18. PROVIDE POWER SUPPLIES FOR ALL ACTIVE EXTRON CONNECTION PANELS AND REMOTE CONTROL PANELS. LOCATE POWER SUPPLIES IN EQUIPMENT RACK, AND POWER DEVICES REMOTELY.

COOPER ROBERTS SIMONSEN ASSOCIATES
crsa
700 North 200 West
Salt Lake City, UT 84103
(801) 355-5915 phone
(801) 355-9885 fax
crsa-us.com

SNOW COLLEGE

State of Utah-Department of Administrative Services
DIVISION OF FACILITIES CONSTRUCTION AND MANAGEMENT
4110 State Office Building/East Lake City, Utah 84114/538-3018

Civil Engineer
Great Basin Engineering
Contact: Dave Waldron
5746 South 1475 East, Suite 200
Ogden, UT 84403
(801) 521-0222 FAX (801) 392-7544
dave@gbenorth.com

Landscape Architect
G. Brown Design
Contact: Mathew Winward
610 E. South Temple, Suite 50
Salt Lake City, UT 84102
(801) 575-6066 FAX (801) 575-6166
mwinward@gbrowndesign.com

Structural Engineer
Reaveley Engineers
Contact: Cameron Empey
675 East 500 South, Suite 400
Salt Lake City, UT 84105
(801) 486-3883 FAX (801) 485-0911
cempey@reaveley.com

Mechanical Engineer
Van Boerum & Frank
Contact: Neil Spencer
330 South 300 East
Salt Lake City, UT 84111
(801) 530-3148 FAX (801) 910-9917
nspencer@vbfa.com

Electrical Engineer
Spectrum Engineers
Contact: Dave Wesemann, PE
175 South Main Street, Suite 300
Salt Lake City, UT 84111
(801) 328-5151 FAX (801) 328-5155
dew@spectrum-engineers.com

AV Consultant
Spectrum Engineers
Contact: Kurtis Dallinga, PE
175 South Main Street, Suite 300
Salt Lake City, UT 84111
(801) 328-5151 FAX (801) 328-5155
kdd@spectrum-engineers.com

Library Consultant
Michaels Associates Design Consultants, Inc.
Contact: Andrea Michaels
14809 North 73rd Street, Suite 100
Scottsdale, AZ 85260
(480) 998-7476 FAX (480) 998-9390
andrea@madcinc.com

STAMP:

LICENSED PROFESSIONAL ENGINEER
No. 181563
DAVID E. WESEMANN
STATE OF UTAH

PROJECT NAME:

Snow College Library

150 College Avenue
Ephraim, Utah 84627

REVISIONS:

100% CD, September 15, 2008
100% CD Review, Aug 26, 2008
100% CD, June 25, 2008
100% CD Review, June 20, 2008
50% CD Review, May 27, 2008
CD Review Set, May 2, 2008
DD Set, April 18, 2008
DD Review, April 4, 2008

ISSUE DATE:
SEPTEMBER 15 2008, 100% CD

ARCHITECT'S PROJECT NUMBER:
B07-051

DFCM PROJECT NUMBER:
07258700

SHEET TITLE:
AUDIO/VIDEO SCHEDULES AND NOTES

SHEET NUMBER:
TA-601

File Name: P:\2007\20070473\Drawings\Sheet\737A-601.dwg Last Plotted: 2008/09/15 @ 1:39 PM By: smn

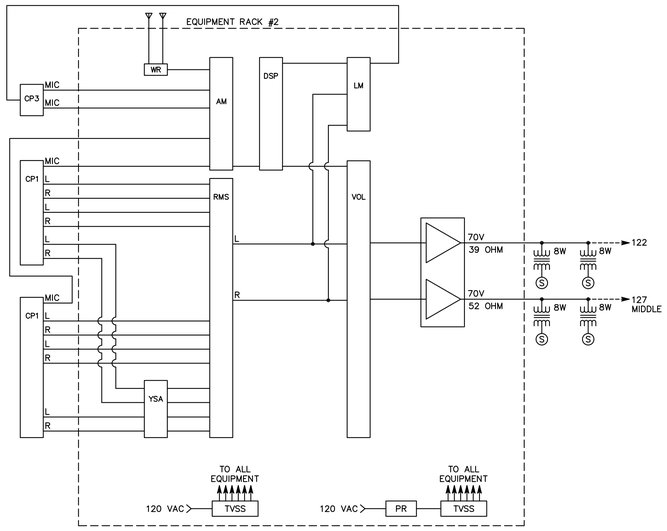

C1 AUDIO SYSTEM SINGLE LINE DIAGRAM–LIBRARY INSTRUCTIONAL 122, 127

NTS

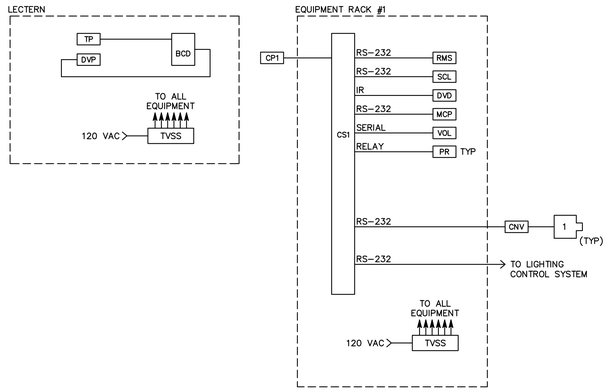

C3 CONTROL SYSTEM SINGLE LINE DIAGRAM – AUDITORIUM

NTS

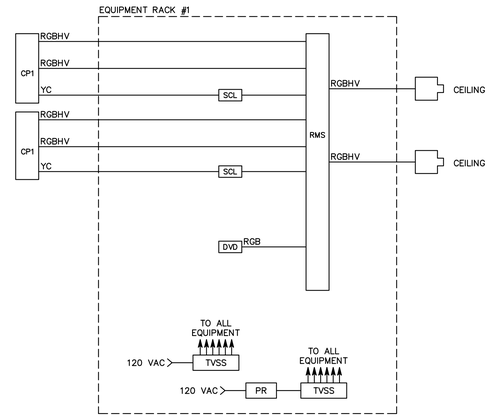

C5 VIDEO SYSTEM SINGLE LINE DIAGRAM – AUDITORIUM

NTS

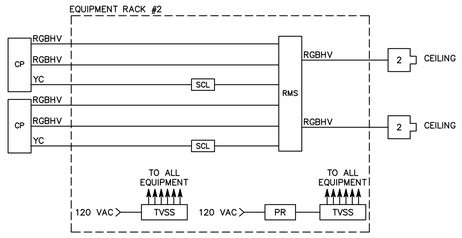

8 VIDEO SYSTEM SINGLE LINE DIAGRAM–LIBRARY INSTRUCTIONAL 122, 127

NOSSCALE

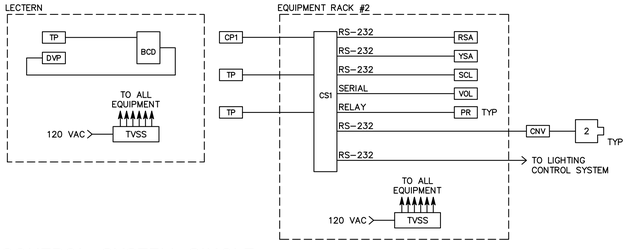

B1 CONTROL SYSTEM SINGLE LINE DIAGRAM–LIBRARY INSTRUCTIONAL 122, 127

NTS

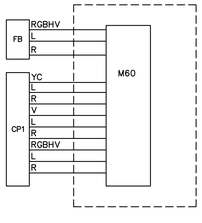

A1 AUDIO, VIDEO AND CONTROL SYSTEM SINGLE LINE DIAGRAM – STUDY, AND GROUP STUDY AREAS

NTS

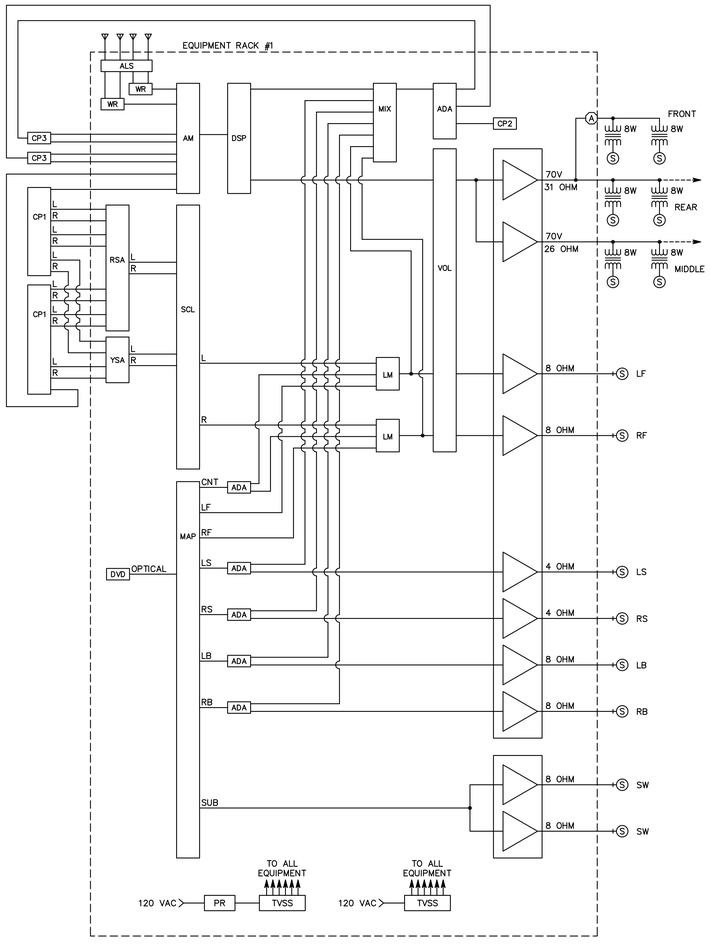

A3 AUDIO SYSTEM SINGLE LINE DIAGRAM – AUDITORIUM

NTS

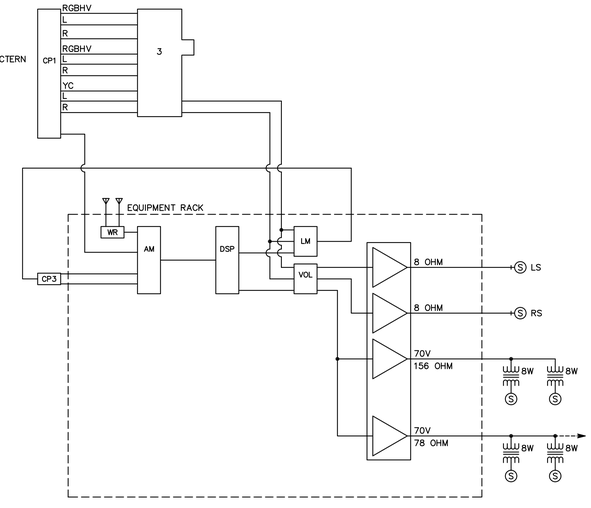

B5 AUDIO & VIDEO SYSTEM SINGLE LINE DIAGRAM – CONFERENCE

NTS

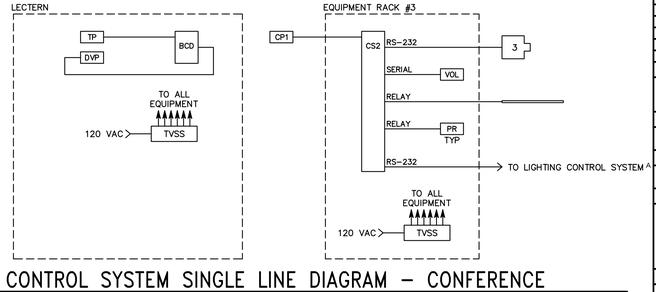

A5 CONTROL SYSTEM SINGLE LINE DIAGRAM – CONFERENCE

NTS

COOPER ROBERTS SIMONSEN ASSOCIATES

crsa

700 North 200 West
Salt Lake City, UT 84103
(801) 355-5915 phone
(801) 355-9885 fax
crsa-us.com

SNOW COLLEGE

State of Utah-Department of Administrative Services

DIVISION OF FACILITIES CONSTRUCTION AND MANAGEMENT

4110 State Office Building/Salt Lake City, Utah 84114/38.3018

Civil Engineer

Great Basin Engineering
Contact: Dave Waldron
5746 South 1475 East, Suite 200
Ogden, UT 84403
(801) 521-0222 FAX (801) 392-7544
dave@gbenorth.com

Landscape Architect

G. Brown Design
Contact: Mathew Winward
610 E. South Temple, Suite 50
Salt Lake City, UT 84102
(801) 575-6066 FAX (801) 575-6166
mwinward@gbrowndesign.com

Structural Engineer

Reaveley Engineers
Contact: Cameron Empey
675 East 500 South, Suite 400
Salt Lake City, UT 84105
(801) 486-3883 FAX (801) 485-0911
cempey@reaveley.com

Mechanical Engineer

Van Boerum & Frank
Contact: Neil Spencer
330 South 300 East
Salt Lake City, UT 84111
(801) 530-3148 FAX (801) 910-9917
nspencer@vbfa.com

Electrical Engineer

Spectrum Engineers
Contact: Dave Wesemann, PE
175 South Main Street, Suite 300
Salt Lake City, UT 84111
(801) 328-5151 FAX (801) 328-5155
dew@spectrum-engineers.com

AV Consultant

Spectrum Engineers
Contact: Kurtis Dallinga, PE
175 South Main Street, Suite 300
Salt Lake City, UT 84111
(801) 328-5151 FAX (801) 328-5155
kdd@spectrum-engineers.com

Library Consultant

Michaels Associates Design Consultants, Inc.
Contact: Andrea Michaels
14809 North 73rd Street, Suite 100
Scottsdale, AZ 85260
(480) 998-7476 FAX (480) 998-9390
andrea@madcinc.com

STAMP:

LICENSED PROFESSIONAL ENGINEER
No. 181563
DAVID E. WESEMANN
STATE OF UTAH

PROJECT NAME:

Snow College Library

150 College Avenue
Ephraim, Utah 84627

REVISIONS:

- 100% CD, September 15, 2008
- 100% CD Review, Aug 26, 2008
- 100% CD, June 25, 2008
- 100% CD Review, June 20, 2008
- 50% CD Review, May 27, 2008
- CD Review Set, May 2, 2008
- DD Set, April 18, 2008
- DD Review, April 4, 2008

ISSUE DATE:

SEPTEMBER 15 2008, 100% CD

ARCHITECT'S PROJECT NUMBER:

B07-051

DFCM PROJECT NUMBER:

07258700

SHEET TITLE:

AUDIO/VIDEO RISER DIAGRAMS

SHEET NUMBER:

TA-602

File Name: P:\2007\20070473\Drawings\Sheet\73TA-602.dwg Last Plotted: 2008/09/15 @ 1:39 PM By: sjt