\\Lee\egpt\Sand hollow corrected coordinates\Sand Hollow Ohv Campground Title Sheet.dwg, 6/10/2008 8:49:36 AM, DMF

PROJECT NO.	SHEET NO.
07265510	1

ISSUE DATE 4-25-2008

STATE OF UTAH
DIVISION OF FACILITIES AND CONSTRUCTION MANAGEMENT

SAND HOLLOW STATE PARK
OHV CAMPGROUND

PROJECT NO. 07265510

2008

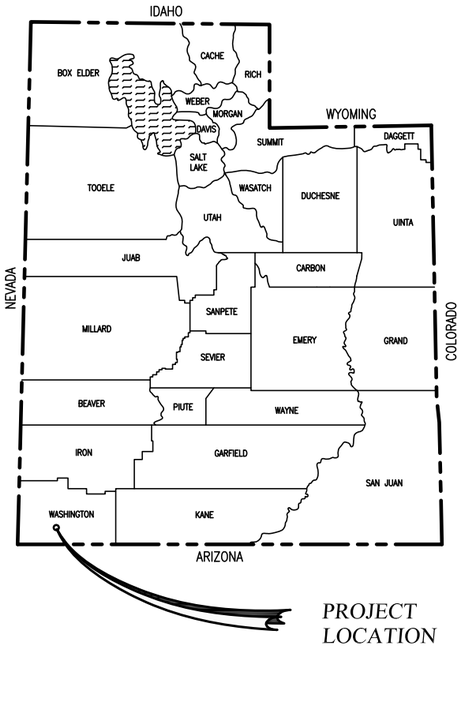

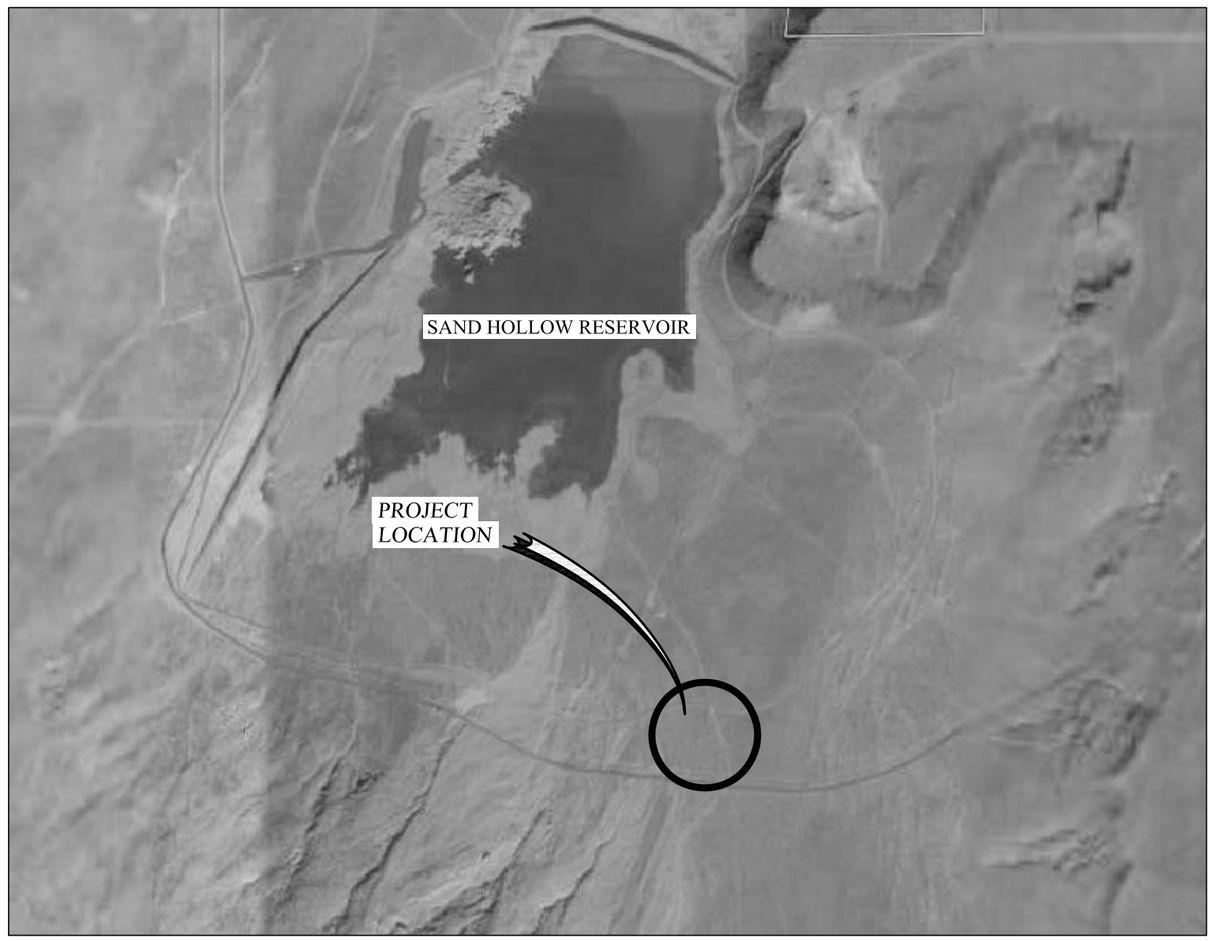

N

RECOMMENDED FOR APPROVAL:

Craig E. Johansen — 4-25-08

PROJECT ENGINEER — DATE

LICENSED PROFESSIONAL ENGINEER No. 146602 CRAIG E. JOHANSEN STATE OF UTAH

APPROVALS:

4-25-08

STATE OF UTAH DFCM — DATE

4-25-08

UTAH STATE DIVISION OF PARKS AND RECREATION — DATE

johansen & tuttle ENGINEERING INC.
BOX 487, CASTLE DALE, UTAH 84513 (435) 381-2523
FAX (435) 381-2522 email jt@etv.net

INDEX TO SHEETS

SHEETS	DESCRIPTION
1	TITLE SHEET
1A	INDEX TO SHEETS AND SUMMARY OF ITEMS
2	TYPICAL SECTIONS MAIN ROAD
3	TYPICAL SECTIONS LOOP ROAD, SIDE ROAD AND CAMPER PAD.
4	CAMPER PAD DETAILS
5	DETAILS
6	PLAN VIEW OVERALL
7	PLAN VIEW NORTHWEST AREA
8	PLAN VIEW NORTHEAST AREA
9	PLAN VIEW SOUTHEAST AREA
10	PLAN VIEW SOUTHWEST AREA
11	PROFILE MAIN ROAD
12	PROFILE SIDE ROAD
13	PROFILE LOOP ROAD

SUMMARY OF ITEMS

ITEM	SPEC. SECTION	DESCRIPTION	UNIT	QUANTITY USE
1	2	CLEARING AND GRUBBING	LUMP	1
2	8	MOBILIZATION	LUMP	1
3	10	HOT MIX ASPHALT, (AC-30) 1/2-INCH MAX (ALTERNATIVE ADDITIVE)	SQ. FT.	26000
4	21	MOTOR GRADER	HOUR	120
5	21	COMPACTOR	HOUR	120
6	23	UNTREATED BASE COURSE (1-INCH MAX.)	CU. Y.D.	6500
7	23	GRANULAR BARROW	CU. Y.D.	13500
8	32	24-INCH CONCRETE CURB AND GUTTER	LIN. FT.	210
9	32	5-FT SIDEWALK	LIN. FT.	131
10	32	PEDESTRIAN ACCESS	EACH	1
11	47	2-INCH DIA. PE PIPE	LIN. FT.	440
12	47	1-INCH DIA. PE PIPE	LIN. FT.	370
13	47	6-FOOT FROST FREE HYDRANT	EACH	8
14	49	SEWER CONNECTION	EACH	1
15	51	24-INCH CSP CULVERT (POLYMERIC COATING)	LIN. FT.	150
16	51	12-INCH CSP CULVERT (POLYMERIC COATING)	LIN. FT.	80
17	51	METAL END SECTION (24-INCH) (POLYMERIC COATING)	EACH	4
18	51	METAL END SECTION (12-INCH) (POLYMERIC COATING)	EACH	2
17	93	PAVEMENT MARKING PAINT	LUMP	1
18	94	TRAFFIC SIGN 30" X 30", TYPE A-2, METAL POST P2	EACH	1
19	16000	ELECTRICAL	LUMP	1

DESIGNED	HRT	4-08	CHECKED CEJ 4-08
DRAWN	JNT	4-08	CHECKED CEJ 4-08
SURVEYED	BHT	4-08	CHECKED LMS 4-08
R.O.W.	LMS	4-08	CHECKED CEJ 4-08

THIS DRAWING IS TO BE USED FOR THIS PROJECT AND THIS PROJECT ONLY UNLESS AUTHORIZED BY THE PROJECT ENGINEER, H. JOHNSEN & TUTTLE ENGINEERS INC.

REV.	DESCRIPTION	BY	DATE
-			-/-/-

Johansen & Tuttle ENGINEERING INC.
BOX 487, CASTLE DALE, UTAH 84513 (435) 381-2523
FAX (435) 381-2522 EMAIL jt@etv.net

STATE of UTAH DFCM
SAND HOLLOW STATE PARK
OHV CAMPGROUND
PROJECT NO. 07265510

INDEX SHEET AND SUMMARY OF ITEMS

PROJECT NO. 07265510

SHEET NO. 1A

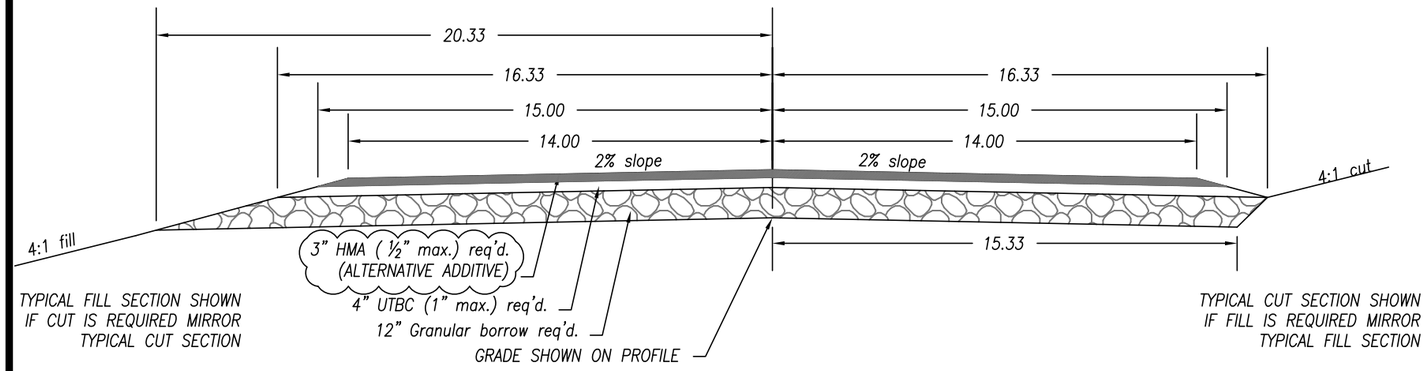

TYPICAL SECTION MAIN ROAD
STA. 50+00 TO 54+27.74
STA. 55+86.52 TO 56+33.84

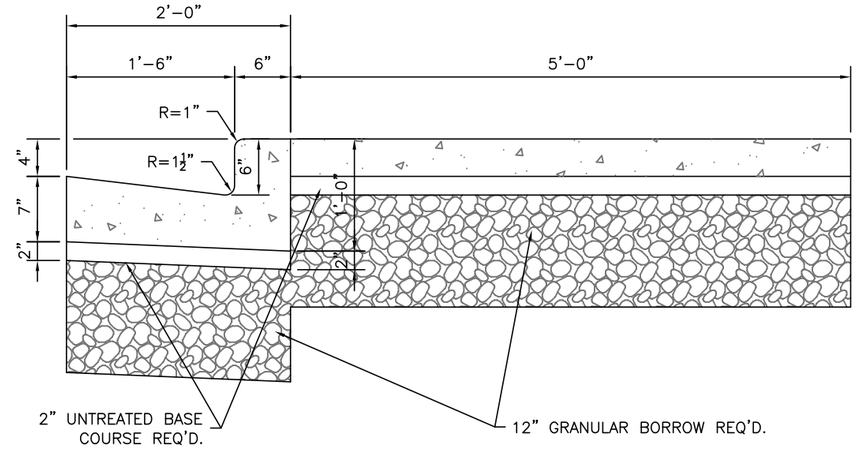

TYPICAL SIDEWALK, CURB & GUTTER

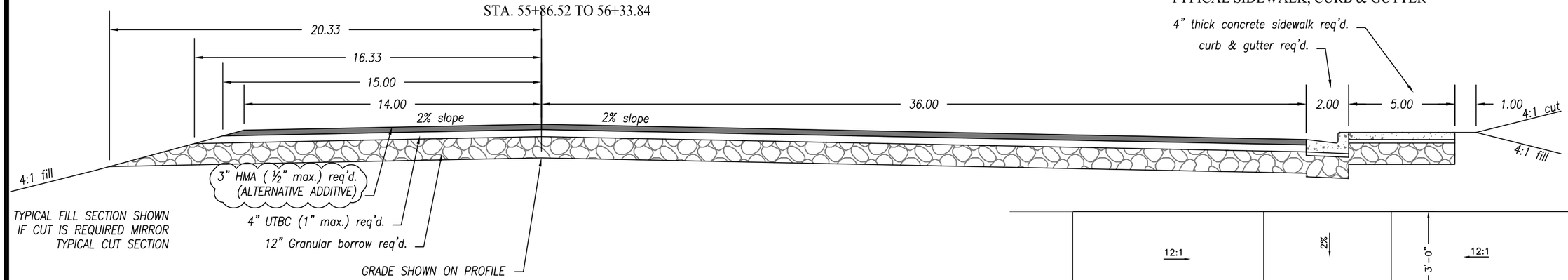

TYPICAL SECTION MAIN ROAD
STA. 54+27.74 TO 55+27.74

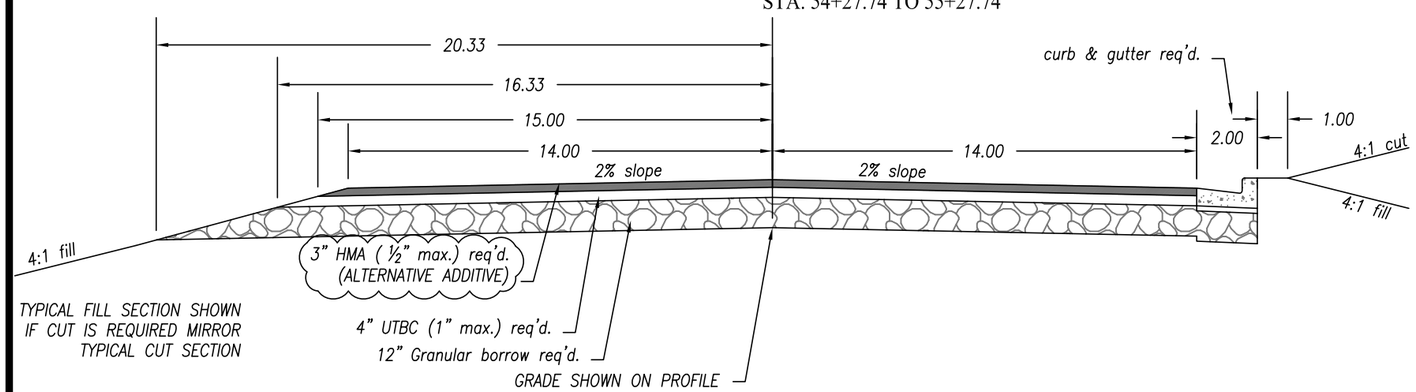

TYPICAL SECTION MAIN ROAD
STA. 55+27.74 TO 55+86.52

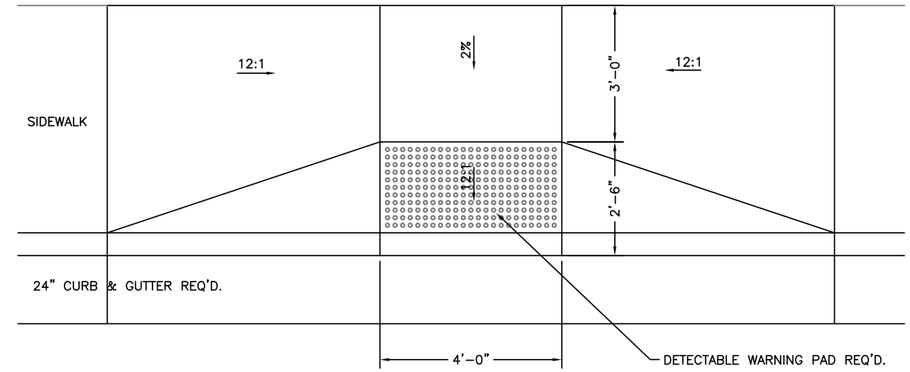

PEDESTRIAN ACCESS
PLAN VIEW

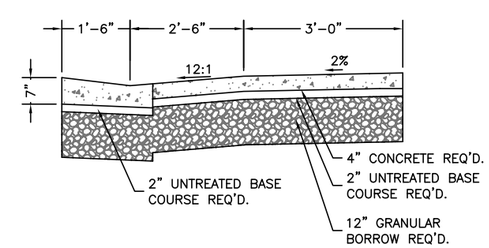

PEDESTRIAN ACCESS
SECTIONAL VIEW

REV.	DESCRIPTION	DESIGNED HRT 4-08	CHECKED CEJ 4-08
–	–	DRAWN JNT 4-08	CHECKED CEJ 4-08
–	–	SURVEYED BHT 4-08	CHECKED LMS 4-08
–	–	R.O.W. LMS 4-08	CHECKED CEJ 4-08

THIS DRAWING IS TO BE USED FOR THIS PROJECT AND THIS PROJECT ONLY UNLESS AUTHORIZED BY THE PROJECT ENGINEER AT JOHANSEN & TUTTLE ENGINEERS INC.

Johansen & Tuttle ENGINEERING INC.
BOX 487, CASTLE DALE, UTAH 84513 (435) 381-2523
FAX (435) 381-2522 EMAIL jt@etv.net

STATE of UTAH DFCM
SAND HOLLOW STATE PARK
OHV CAMPGROUND
PROJECT NO. 07265510

TYPICAL SECTIONS
MAIN ROAD

PROJECT NO.
07265510

SHEET NO.
2

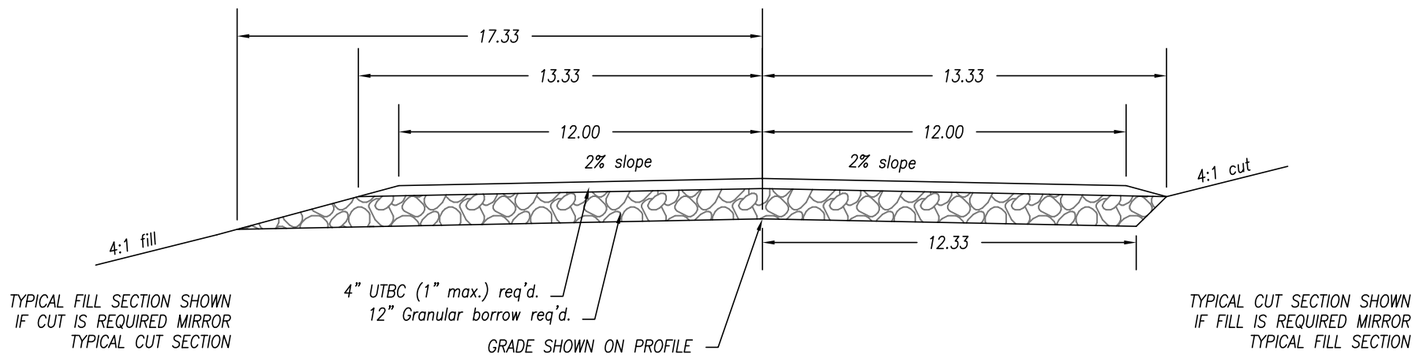

TYPICAL SECTION
LOOP ROAD STA. 0+14 TO 20+67.70
SIDE ROAD STA. 80+14 TO 84+70.39

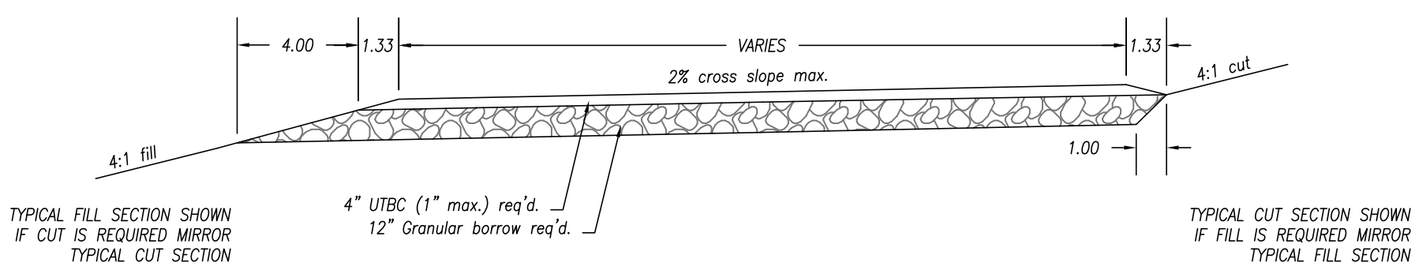

TYPICAL SECTION
CAMPER PAD

DESIGNED	HRT	4-08	CHECKED CEJ 4-08
DRAWN	JNT	4-08	CHECKED CEJ 4-08
SURVEYED	BHT	4-08	CHECKED LMS 4-08
R.O.W.	LMS	4-08	CHECKED CEJ 4-08

THIS DRAWING IS TO BE USED FOR THIS PROJECT AND THIS PROJECT ONLY UNLESS AUTHORIZED BY THE PROJECT ENGINEER AT JOHANSEN & TUTTLE ENGINEERS INC.

DESCRIPTION

johansen & tuttle ENGINEERING INC.
BOX 487, CASTLE DALE, UTAH 84513 (435) 381-2523
FAX (435) 381-2522 EMAIL jt@etv.net

STATE of UTAH DFCM
SAND HOLLOW STATE PARK
OHV CAMPGROUND
PROJECT NO. 07265510

TYPICAL SECTIONS
LOOP ROAD, SIDE
ROAD AND CAMPER
PAD

PROJECT NO.
07265510

SHEET NO.
3

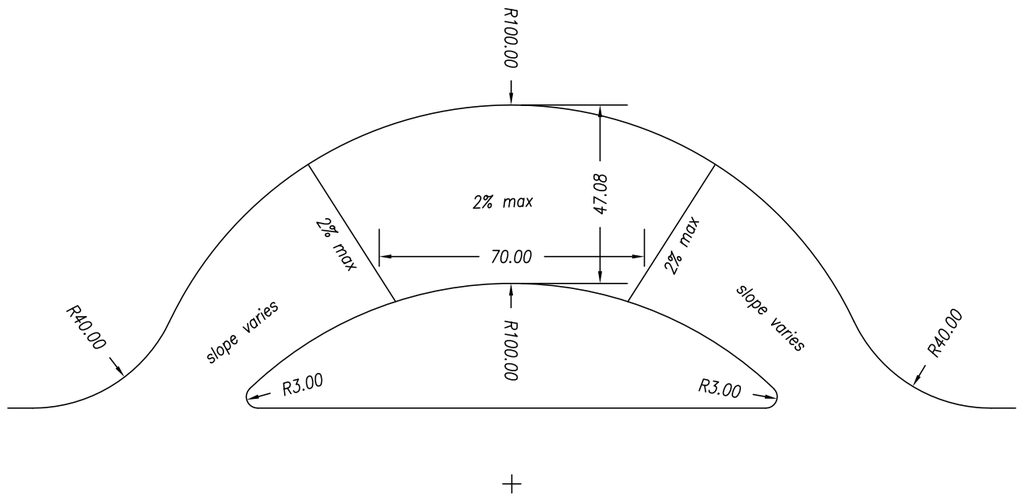

TYPICAL DOUBLE CAMPER PAD

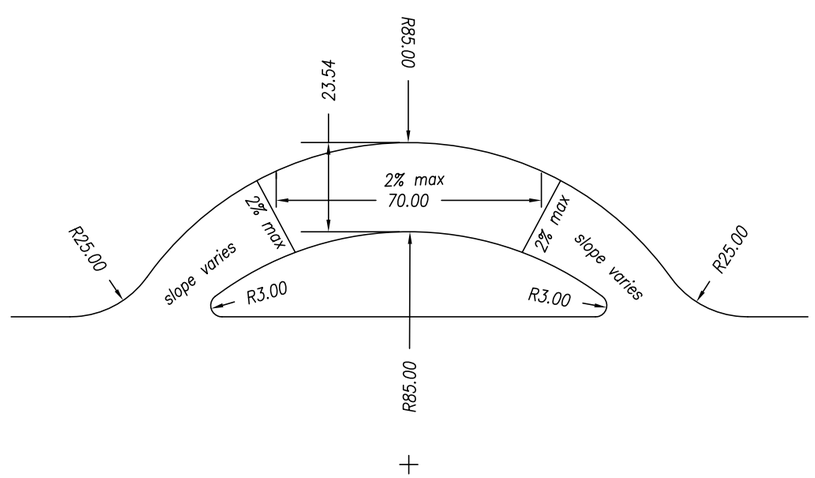

TYPICAL SINGLE CAMPER PAD

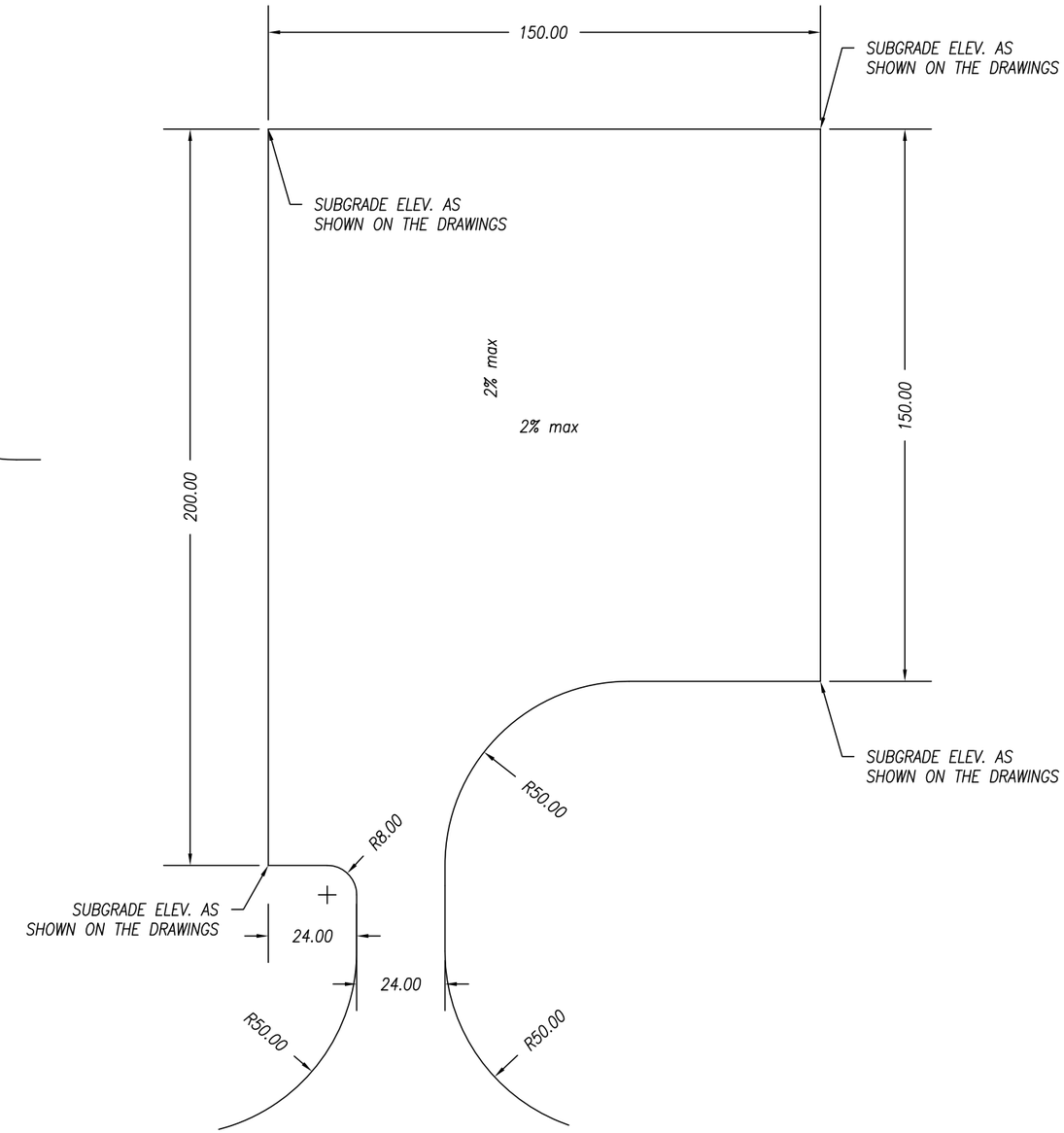

TYPICAL GROUP CAMPER PAD

DESIGNED	HRT	4-08	CHECKED CEJ 4-08
DRAWN	JNT	4-08	CHECKED CEJ 4-08
SURVEYED	BHT	4-08	CHECKED LMS 4-08
R.O.W.	LMS	4-08	CHECKED CEJ 4-08

THIS DRAWING IS TO BE USED FOR THIS PROJECT AND THIS PROJECT ONLY UNLESS AUTHORIZED BY THE PROJECT ENGINEER AT JOHANSEN & TUTTLE ENGINEERS INC.

DESCRIPTION

Johansen & Tuttle ENGINEERING INC.
BOX 487, CASTLE DALE, UTAH 84513 (435) 381-2523
FAX (435) 381-2522 EMAIL jt@etv.net

STATE of UTAH DFCM
SAND HOLLOW STATE PARK
OHV CAMPGROUND
PROJECT NO. 07265510

CAMPER PAD DETAILS

PROJECT NO. 07265510

SHEET NO. 4

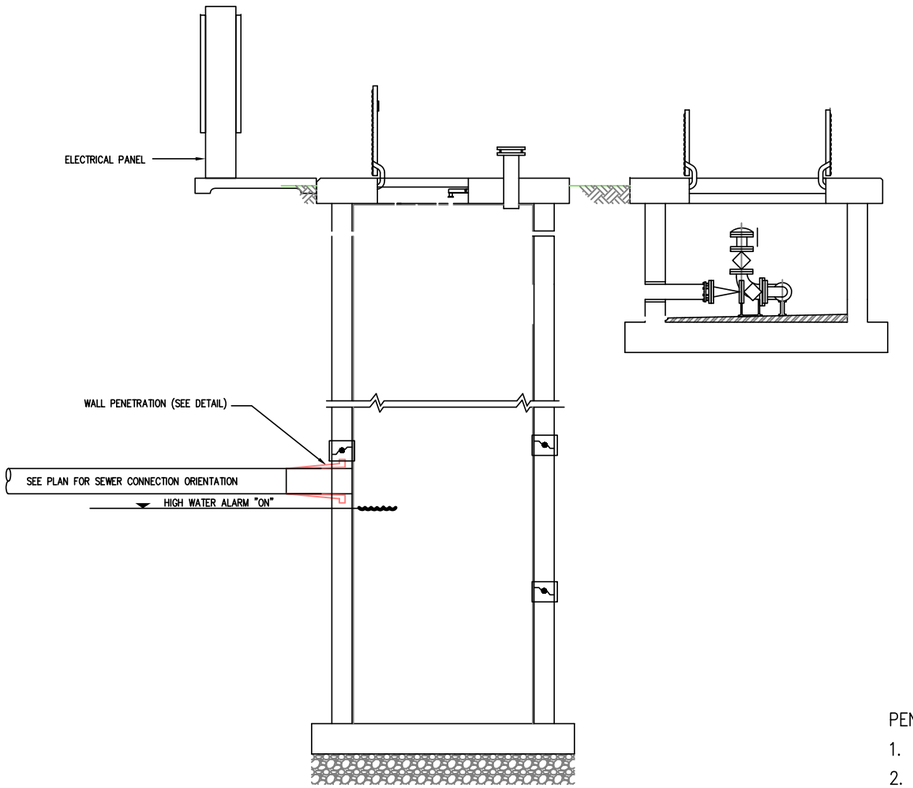

EXISTING PUMP STATION DETAIL

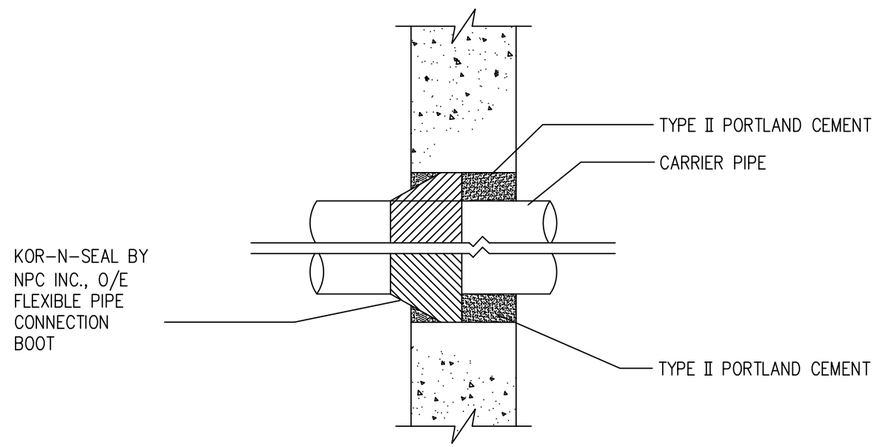

WALL PENETRATION DETAIL

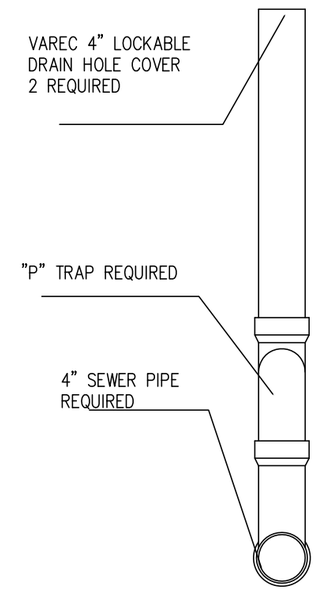

SEWER HOOK UP DETAIL

PENETRATION NOTES:

1. ALL METAL PARTS OF PENETRATION SEAL SHALL BE 316 STAINLESS STEEL (INCLUDING BANDS)
2. WALL PENETRATIONS SHALL BE CORE BIT DRILLED. ANY EXPOSED REINFORCING BARS SHALL BE EPOXY COATED.

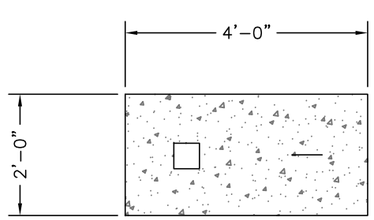

SERVICE PAD DETAIL
PLAN VIEW

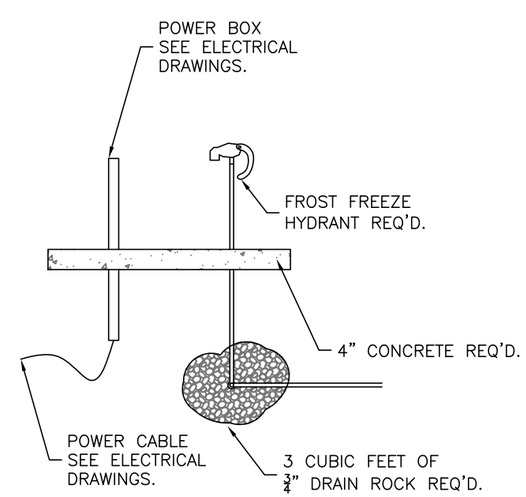

SERVICE PAD DETAIL
SECTIONAL VIEW

DESIGNED	HRT	4-08	CHECKED CEJ 4-08
DRAWN	JNT	4-08	CHECKED CEJ 4-08
SURVEYED	BHT	4-08	CHECKED LMS 4-08
R.O.W.	LMS	4-08	CHECKED CEJ 4-08

THIS DRAWING IS TO BE USED FOR THIS PROJECT AND THIS PROJECT ONLY UNLESS AUTHORIZED BY THE PROJECT ENGINEER AT JOHANSEN & TUTTLE ENGINEERS INC.

DESCRIPTION

johansen & tuttle ENGINEERING INC.
BOX 487, CASTLE DALE, UTAH 84513 (435) 381-2523
FAX (435) 381-2522 EMAIL jt@etv.net

STATE of UTAH DFCM
SAND HOLLOW STATE PARK
OHV CAMPGROUND
PROJECT NO. 07265510

DETAILS

PROJECT NO. 07265510

SHEET NO. 5

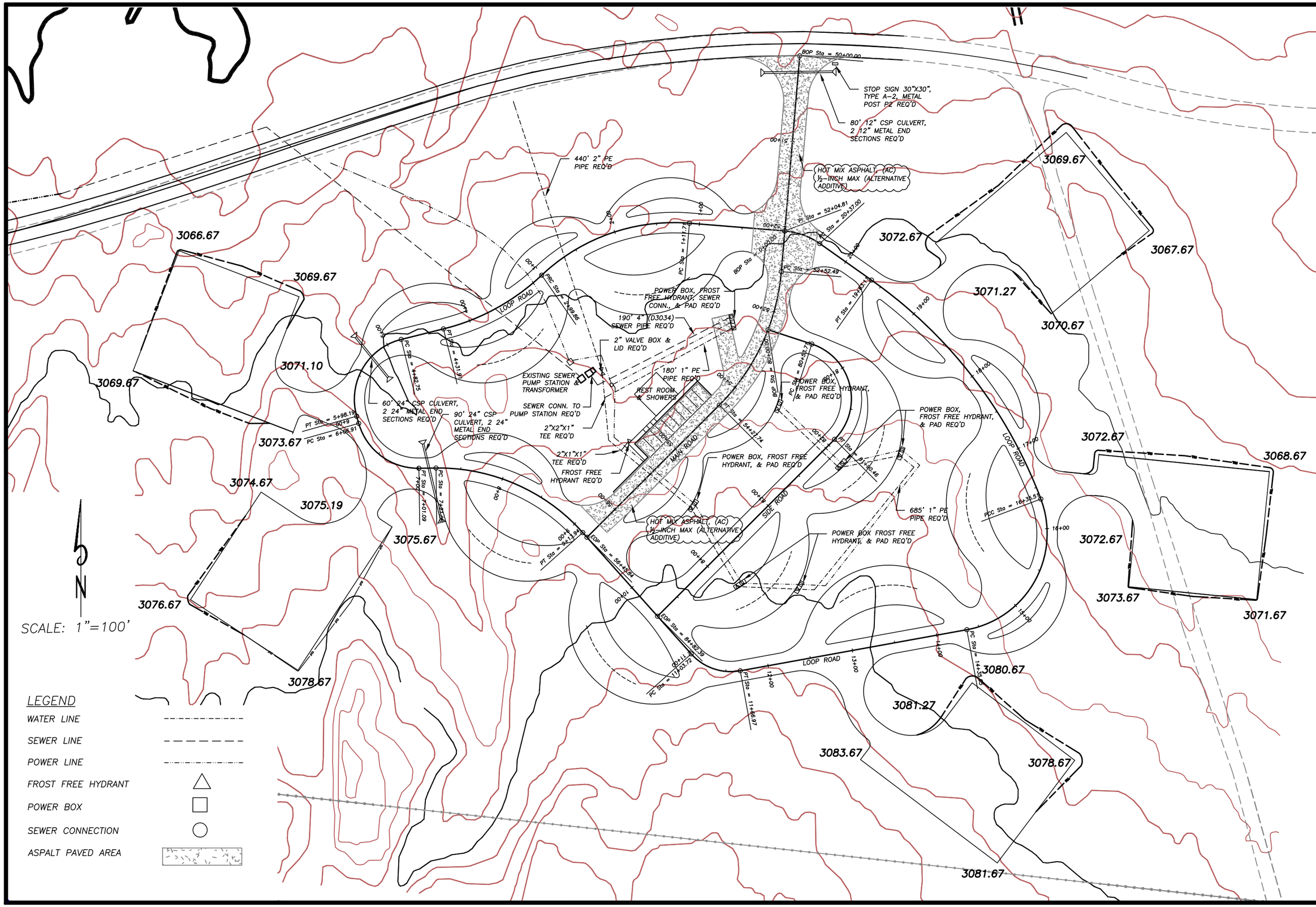

DESIGNED	HRT	4-08	CHECKED CEJ 4-08
DRAWN	JNT	4-08	CHECKED CEJ 4-08
SURVEYED	BHT	4-08	CHECKED LMS 4-08
R.O.W.	LMS	4-08	CHECKED CEJ 4-08

THIS DRAWING IS TO BE USED FOR THIS PROJECT AND THIS PROJECT ONLY UNLESS AUTHORIZED BY THE PROJECT ENGINEER AT JOHANSEN & TUTTLE ENGINEERS INC.

REV.	DESCRIPTION

johansen & tuttle ENGINEERING INC.
BOX 487, CASTLE DALE, UTAH 84513 (435) 381-2523
FAX (435) 381-2522 EMAIL jt@etv.net

STATE of UTAH DFCM
SAND HOLLOW STATE PARK
OHV CAMPGROUND
PROJECT NO. 07265510

OHV CAMPGROUND
PLAN VIEW OVERALL

PROJECT NO. 07265510

SHEET NO. 6

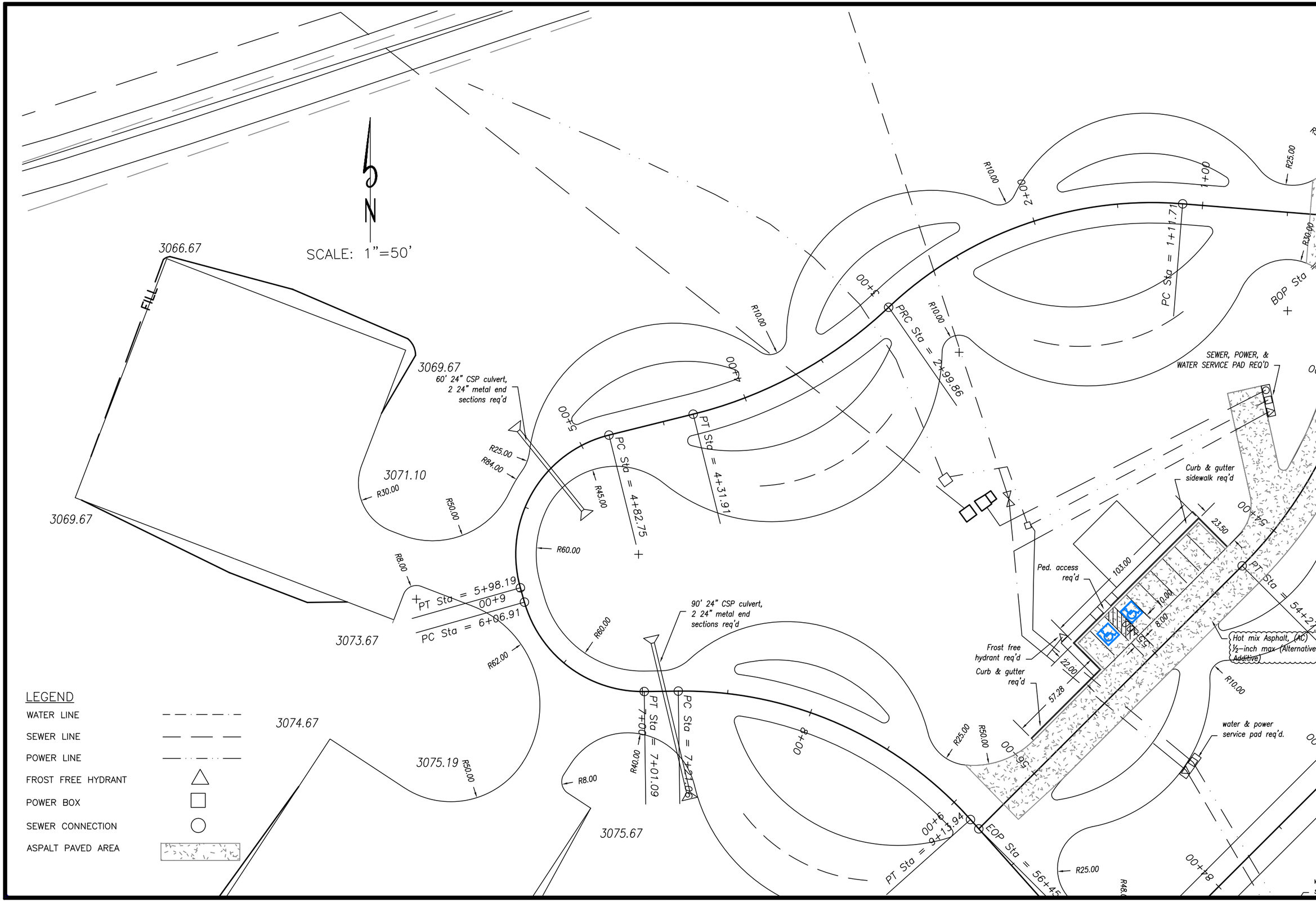

REV.	DESCRIPTION	DESIGNED	HRT	4-08	CHECKED	CEJ	4-08
		DRAWN	JNT	4-08	CHECKED	CEJ	4-08
		SURVEYED	BHT	4-08	CHECKED	LMS	4-08
		R.O.W.	LMS	4-08	CHECKED	CEJ	4-08

THIS DRAWING IS TO BE USED FOR THIS PROJECT AND THIS PROJECT ONLY UNLESS AUTHORIZED BY THE PROJECT ENGINEER AT JOHANSEN & TUTTLE ENGINEERING INC.

Johansen & Tuttle ENGINEERING INC.
BOX 487, CASTLE DALE, UTAH 84513 (435) 381-2523
FAX (435) 381-2522 EMAIL jt@etv.net

STATE of UTAH DFCM
SAND HOLLOW STATE PARK
OHV CAMPGROUND
PROJECT NO. 07265510

PLAN VIEW
NORTHWEST AREA

PROJECT NO.
07265510

SHEET NO.
7

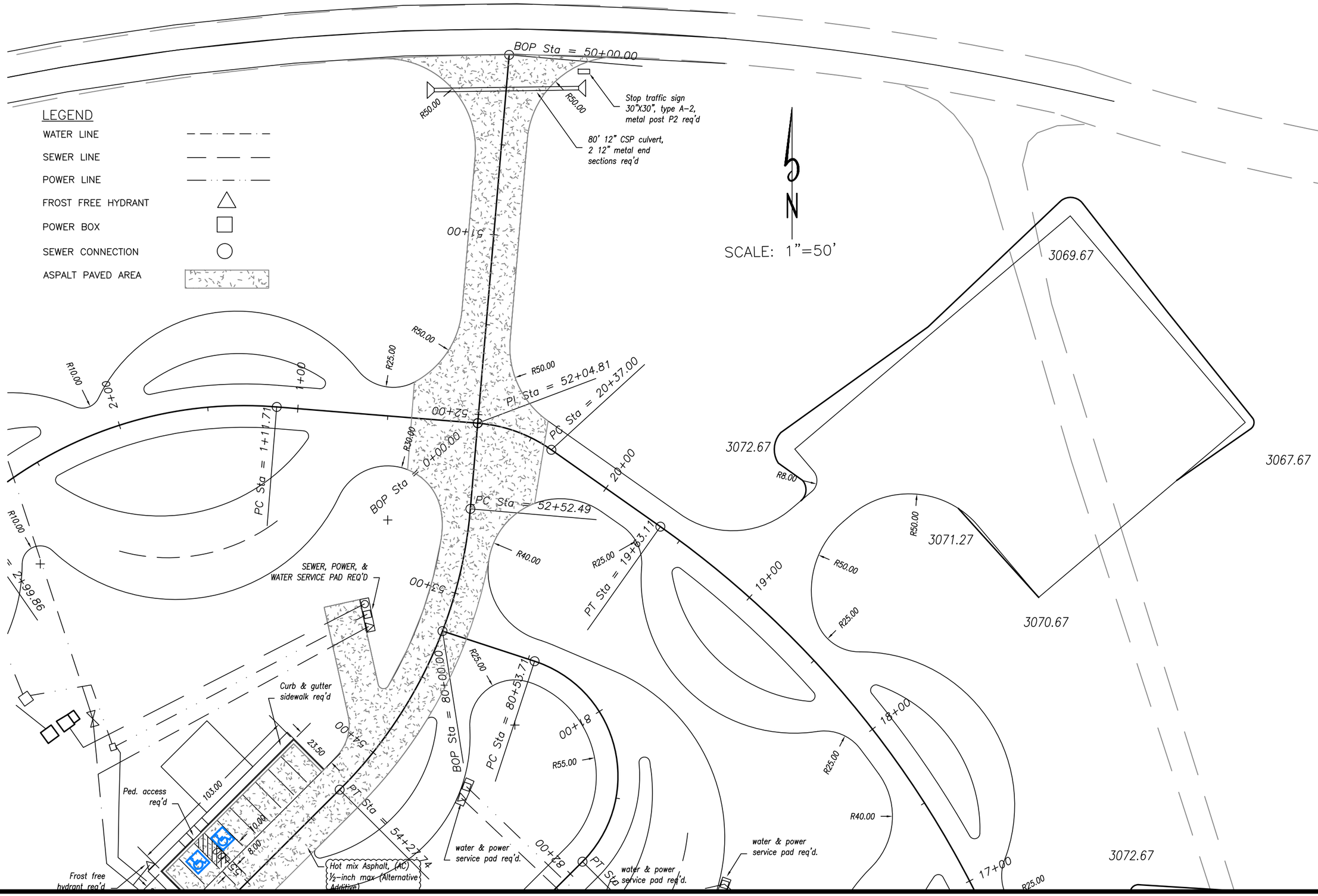

REV.	DESCRIPTION	DESIGNED	HRT	4-08	CHECKED	CEJ	4-08
		DRAWN	JNT	4-08	CHECKED	CEJ	4-08
		SURVEYED	BHT	4-08	CHECKED	LMS	4-08
-'-'	-'-'	R.O.W.	LMS	4-08	CHECKED	CEJ	4-08

THIS DRAWING IS TO BE USED FOR THIS PROJECT AND THIS PROJECT ONLY UNLESS AUTHORIZED BY THE PROJECT ENGINEER AT JOHANSEN & TUTTLE ENGINEERING INC.

Johansen & Tuttle ENGINEERING INC.
BOX 487, CASTLE DALE, UTAH 84513 (435) 381-2523
FAX (435) 381-2522 EMAIL jt@etv.net

STATE of UTAH DFCM
SAND HOLLOW STATE PARK
OHV CAMPGROUND
PROJECT NO. 07265510

PLAN VIEW
NORTHEAST AREA

PROJECT NO. 07265510

SHEET NO. 8

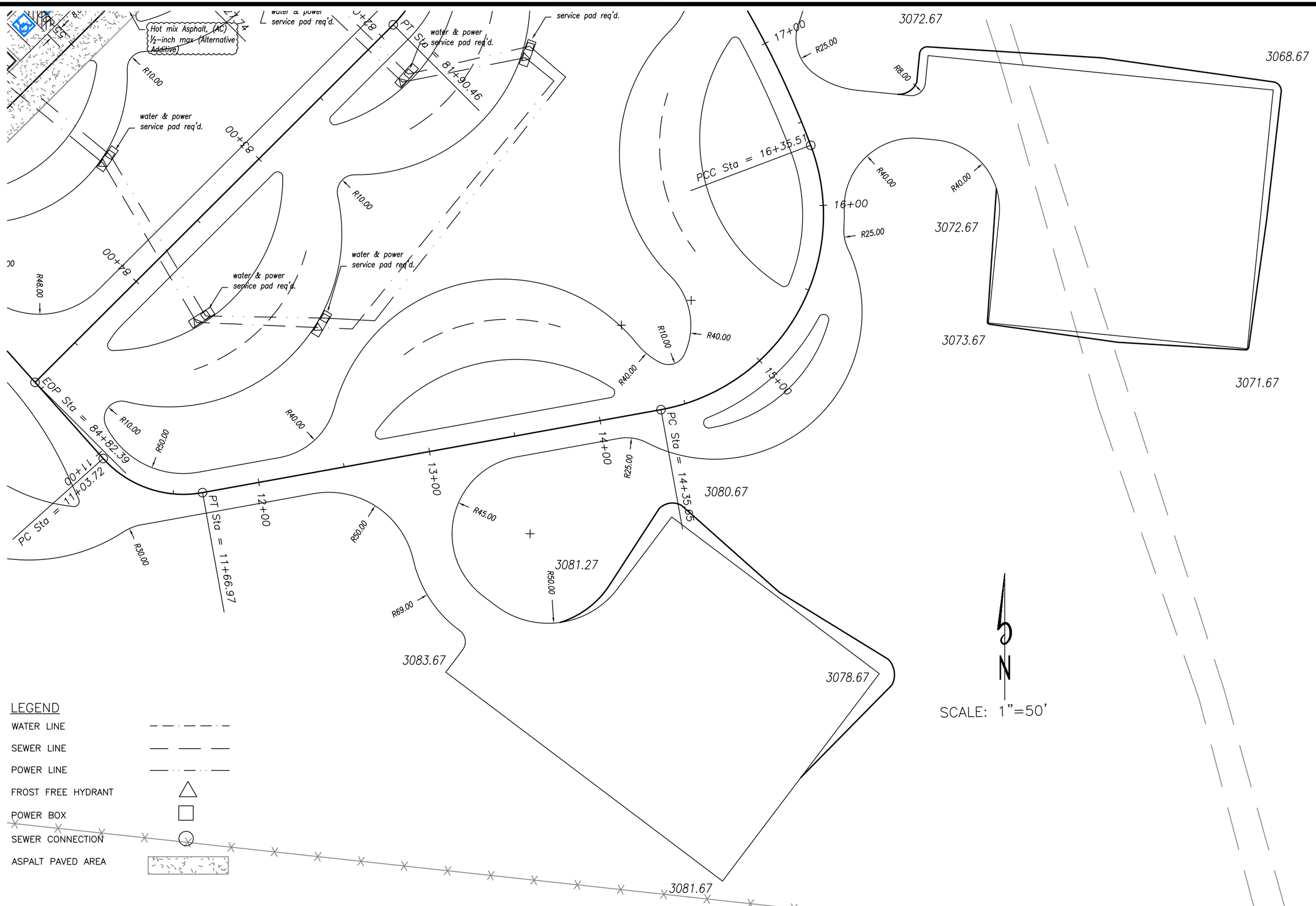

DESIGNED	HRT	4-08	CHECKED	CEJ 4-08
DRAWN	JNT	4-08	CHECKED	CEJ 4-08
SURVEYED	BHT	4-08	CHECKED	LMS 4-08
R.O.W.	LMS	4-08	CHECKED	CEJ 4-08

THIS DRAWING IS TO BE USED FOR THIS PROJECT AND THIS PROJECT ONLY UNLESS AUTHORIZED BY THE PROJECT ENGINEER AT JOHANSEN & TUTTLE ENGINEERS INC.

REV.	DESCRIPTION
-	-

Johansen & Tuttle ENGINEERING INC.
BOX 487, CASTLE DALE, UTAH 84513 (435) 381-2523
FAX (435) 381-2522 EMAIL jt@etv.net

STATE of UTAH DFCM
SAND HOLLOW STATE PARK
OHV CAMPGROUND
PROJECT NO. 07265510

PLAN VIEW
SOUTHEAST AREA

PROJECT NO. 07265510

SHEET NO. 9

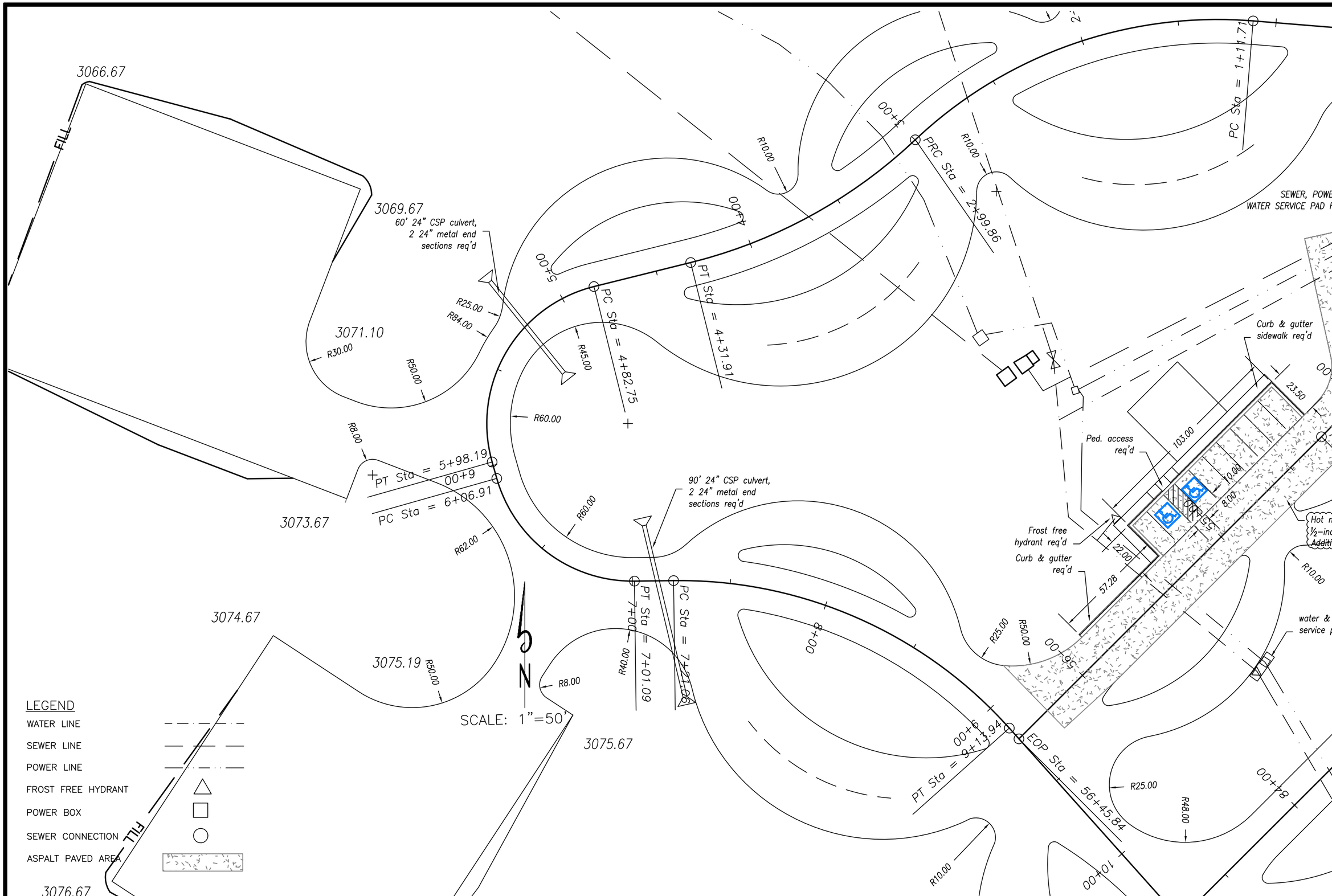

REV.	DESCRIPTION	DESIGNED	HRT	4-08	CHECKED	CEJ	4-08
		DRAWN	JNT	4-08	CHECKED	CEJ	4-08
		SURVEYED	BHT	4-08	CHECKED	LMS	4-08
		R.O.W.	LMS	4-08	CHECKED	CEJ	4-08

THIS DRAWING IS TO BE USED FOR THIS PROJECT AND THIS PROJECT ONLY UNLESS AUTHORIZED BY THE PROJECT ENGINEER AT JOHANSEN & TUTTLE ENGINEERING INC.

johansen & tuttle ENGINEERING INC.
BOX 487, CASTLE DALE, UTAH 84513 (435) 381-2523
FAX (435) 381-2522 EMAIL jt@etv.net

STATE of UTAH DFCM
SAND HOLLOW STATE PARK
OHV CAMPGROUND
PROJECT NO. 07265510

PLAN VIEW
SOUTHWEST AREA

PROJECT NO.
07265510

SHEET NO.
10

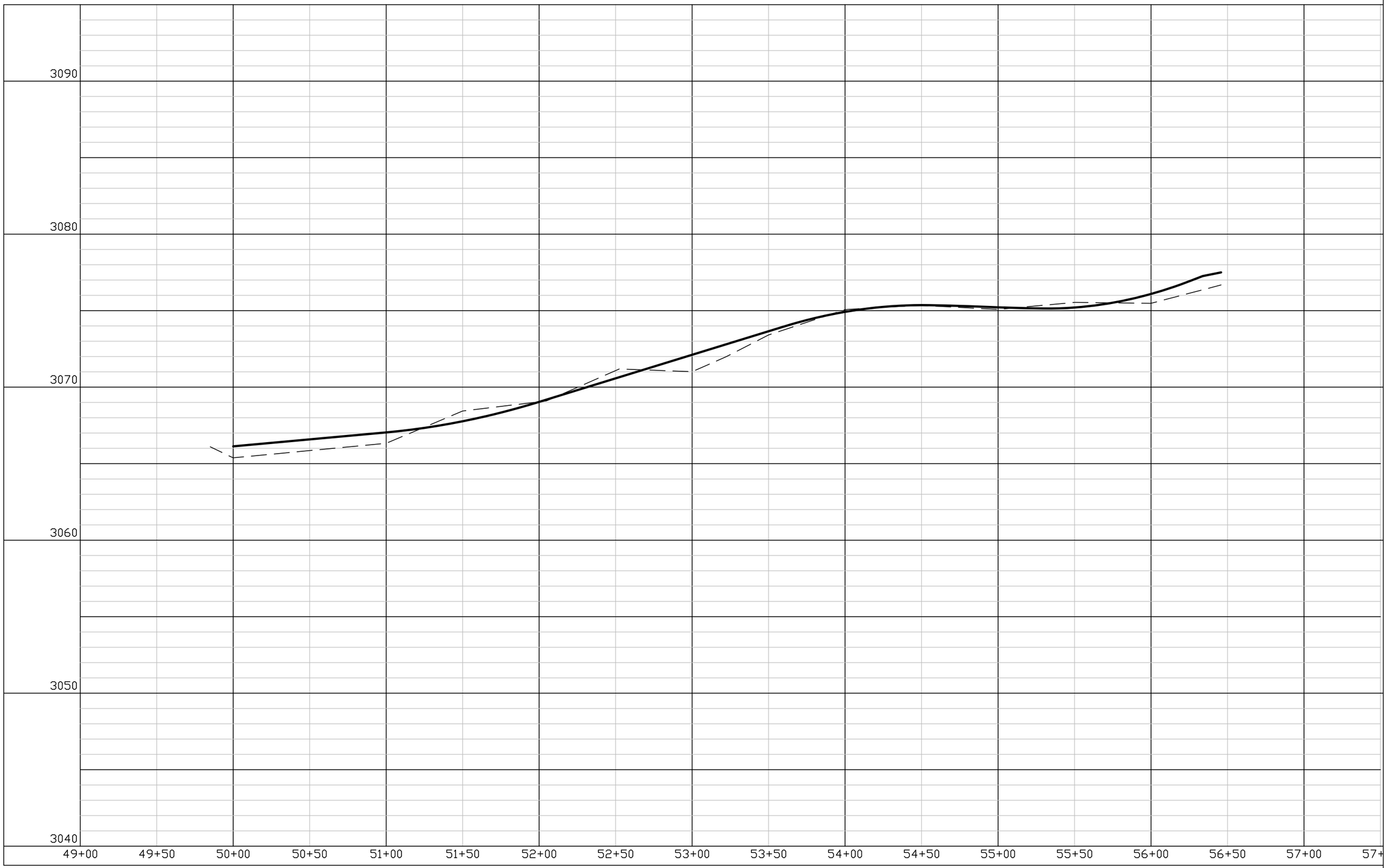

DESIGNED	HRT	4-08	CHECKED CEJ 4-08
DRAWN	JNT	4-08	CHECKED CEJ 4-08
SURVEYED	BHT	4-08	CHECKED LMS 4-08
R.O.W.	LMS	4-08	CHECKED CEJ 4-08

THIS DRAWING IS TO BE USED FOR THIS PROJECT AND THIS PROJECT ONLY UNLESS AUTHORIZED BY THE PROJECT ENGINEER AT JOHANSEN & TUTTLE ENGINEERS INC.

REV.	DESCRIPTION
-	----------

johansen & tuttle ENGINEERING INC.
BOX 487, CASTLE DALE, UTAH 84513 (435) 381-2523
FAX (435) 381-2522 EMAIL jt@elv.net

STATE of UTAH DFCM
SAND HOLLOW STATE PARK
OHV CAMPGROUND
PROJECT NO. 07265510

PROFILE
MAIN ROAD

PROJECT NO.
07265510

SHEET NO.
11

DESIGNED	HRT	4-08	CHECKED	CEJ 4-08
DRAWN	JNT	4-08	CHECKED	CEJ 4-08
SURVEYED	BHT	4-08	CHECKED	LMS 4-08
R.O.W.	LMS	4-08	CHECKED	CEJ 4-08

REV.	DESCRIPTION
-	
-	
-	

THIS DRAWING IS TO BE USED FOR THIS PROJECT AND THIS PROJECT ONLY UNLESS AUTHORIZED BY THE PROJECT ENGINEER AT JOHANSEN & TUTTLE ENGINEERS INC.

Johansen & Tuttle ENGINEERING INC.
BOX 487, CASTLE DALE, UTAH 84513 (435) 381-2523
FAX (435) 381-2522 EMAIL jt@elev.net

STATE of UTAH DFCM
SAND HOLLOW STATE PARK
OHV CAMPGROUND
PROJECT NO. 07265510

PROFILE
SIDE ROAD

PROJECT NO.
07265510

SHEET NO.
12

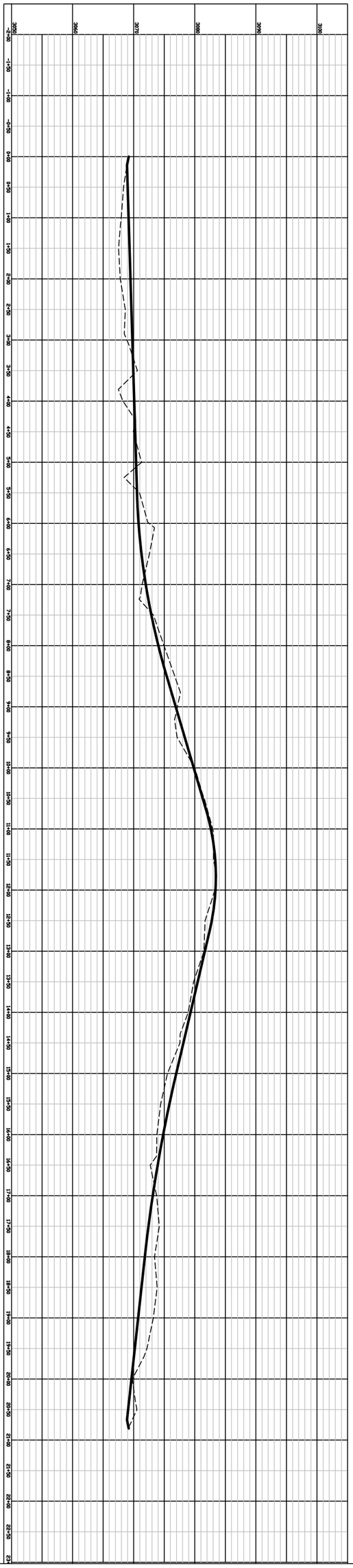

PROJECT NO. 07265510
SHEET NO. 13

PROFILE
LOOP ROAD

STATE of UTAH DFCM
SAND HOLLOW STATE PARK
OHV CAMPGROUND
PROJECT NO. 07265510

johansen & tuttle ENGINEERING INC.
BOX 487, CASTLE DALE, UTAH 84513 (435) 381-2523
FAX (435) 381-2522 EMAIL jt@etv.net

THIS DRAWING IS TO BE USED FOR THIS PROJECT AND THIS PROJECT ONLY UNLESS AUTHORIZED BY THE PROJECT ENGINEER AT JOHANSEN & TUTTLE ENGINEERS INC.

REV.	DESCRIPTION
-	

DESIGNED	HRT	4-08	CHECKED CEJ	4-08
DRAWN	JNT	4-08	CHECKED CEJ	4-08
SURVEYED	BHT	4-08	CHECKED LMS	4-08
R.O.W.	LMS	4-08	CHECKED CEJ	4-08