# NORTH TEMPLE LIQUOR STORE

## DEPARTMENT OF ALCOHOLIC BEVERAGE CONTROL

1225 WEST NORTH TEMPLE, SALT LAKE CITY, UTAH

## UTAH D.F.C.M. PROJECT NO. 07269030

### CONSTRUCTION DOCUMENT / BID SET

February 25, 2008

## DESIGN TEAM


- ARCHITECT:

  EATON ARCHITECTURE, LLC
  77 WEST 200 SOUTH SUITE 302
  SALT LAKE CITY, UTAH 84101
  TELEPHONE: (801) 328-2982
  FACSIMILE: (801) 328-2111

- CIVIL ENGINEER:

  WARD ENGINEERING GROUP
  231 WEST 800 SOUTH SUITE A
  SALT LAKE CITY, UTAH 84101
  TELEPHONE: (801) 487-8040

- STRUCTURAL ENGINEER:

  SHEN ENGINEERS, INC.
  3335 SOUTH 900 EAST, #250
  SALT LAKE CITY, UTAH 84106
  TELEPHONE: (801) 466-2625
  FACSIMILE: (801) 466-2656

- MECHANICAL ENGINEER:

  VAN BOERUM AND FRANK ASSOC., INC.
  330 SOUTH 300 EAST
  SALT LAKE CITY, UTAH 84111
  TELEPHONE: (801) 530-3148
  FACSIMILE: (801) 530-3150

- ELECTRICAL ENGINEER:

  ENVISION ENGINEERING, INC
  244 WEST 300 NORTH, #100
  SALT LAKE CITY, UTAH 84103
  TELEPHONE: (801) 534-1130
  FACSIMILE: (801) 530-1080


Eaton Architecture
77 West 200 South, Suite 302
Salt Lake City, UT 84101
Tel 801/328-2982 Fax 801/328-2111

STATE OF UTAH — ROBERT JAN EATON — 751 — LICENSED ARCHITECT

State of Utah—Department of Administrative Services

DIVISION OF FACILITIES CONSTRUCTION AND MANAGEMENT

4110 State Office Building/Salt Lake City, Utah 84114/538-3018

General note: Construction of new State buildings and remodeling of existing buildings shall comply with all the requirements of the DFCM Standards, including enhanced accessibility. The DFCM Standards can be found at the following web site: .

General note: Every structure, and portion thereof, including nonstructural components that are permanently attached to structures and their supports and attachments, shall be designed and constructed to resist the effects of earthquake motions in accordance with ASCE 7-05. Reference IBC Section 1613.1

## LIST OF DRAWINGS:


CIVIL

C100 COVER
C101 GENERAL NOTES
C102 ABBREVIATIONS AND LEGEND
C201 SITE PLAN
C301 GRADING AND DRAINAGE PLAN
C401 DETAILS - SITE
C402 DETAILS - DRAINAGE
C500 STORM WATER POLLUTION PREVENTION PLAN

ARCHITECTURAL

A001 ARCHITECTURAL SITE PLAN
AD101 DEMOLITION PLAN
A101 FLOOR PLAN
A110 REFLECTED CEILING PLAN
A120 ROOF PLAN
A201 EXTERIOR ELEVATIONS
A301 BUILDING SECTIONS
A302 BUILDING SECTIONS
A310 WALL SECTIONS
A311 WALL SECTIONS
A401 ENLARGED PLAN AND INTERIOR ELEVATIONS
A501 DETAILS
A601 DOOR & WINDOW SCHEDULE AND DETAILS

STRUCTURAL

S101 STRUCTURAL GENERAL NOTES AND DETAILS
S102 STRUCTURAL DETAILS
S201 FTG. / FDTN. PLAN AND ROOF FRAMING PLAN
S301 STRUCTURAL DETAILS
S401 STRUCTURAL DETAILS

MECHANICAL

M001 LEGEND AND SYMBOLS
M101 MAIN LEVEL MECHANICAL PLAN
M102 ROOF LEVEL MECHANICAL PLAN
M601 MECHANICAL DETAILS AND SCHEDULES

PLUMBING

EP101 PLUMBING FLOOR PLAN
EP501 PLUMBING DETAILS
EP601 PLUMBING SCHEDULES

ELECTRICAL

EG001 SYMBOLS AND SHEDULES
EG501 DETAILS
ES101 SITE PLAN
ED101 DEMOLITION PLAN
EL101 LIGHTING PLAN
EL601 LIGHT FIXTURE SCHEDULE
EP101 POWER PLAN
EP601 EQUIPMENT SCHEDULE
EP701 ONE-LINE DIAGRAM


## CODE ANALYSIS

APPLICABLE CODES

| | YEAR | | YEAR |
|---|---|---|---|
| INTERNATIONAL BUILDING CODE | 2006 | NATIONAL ELECTRICAL CODE | 2005 |
| INTERNATIONAL MECHANICAL CODE | 2006 | UNIFORM CODE FOR BUILDING CONSERVATION | N/A |
| INTERNATIONAL PLUMBING CODE | 2006 | | |
| INTERNATIONAL FIRE CODE | 2006 | ADA ACCESSIBILITY GUIDELINES | 2005 |
| INTERNATIONAL ENERGY CONSERVATION CODE | 2006 | | |

A. OCCUPANCY AND GROUP: M/ S-1 (NON SEPERATED)

CHANGE IN USE: YES ____ NO X MIXED OCCUPANCY: YES X NO ____
SPECIAL USE AND OCCUPANCY (E.G. HIGH RISE, COVERED MALL): ____

B. SEISMIC DESIGN CATEGORY: E DESIGN WIND SPEED: 90 MPH

C. TYPE OF CONSTRUCTION(CIRCLE ONE):

I/A I/B II/A II/B III/A III/B IV/HT V/A V/B

D. FIRE RESISTANCE RATING. REQUIREMENTS FOR THE EXTERIOR WALLS BASED ON THE FIRE SEPARATION DISTANCE (IN HOURS):

NORTH: Ø SOUTH: Ø EAST: 2 WEST: Ø

E. MIXED OCCUPANCIES: ____ NONSEPERATED USES: YES

F. SPRINKLERS:

REQUIRED: YES PROVIDED: YES TYPE OF SPRINKLER SYSTEM: WET

G. NUMBER OF STORIES: 1 BUILDING HEIGHT: 18'

H. ACTUAL AREA PER FLOOR (SQUARE FEET): 7206 S.F.

I. TABULAR AREA: 9000 S.F.

J. AREA MODIFICATIONS:

a) $A_a = 9{,}000 + \left[9{,}000 \times .14\right] + \left[9{,}000 \times 3\right] = 37{,}216$ $\quad I_f = \left[\frac{205}{505} - 0.25\right]\frac{26}{30} = .14$

b) SUM OF THE RATIO CALCULATIONS FOR MIXED OCCUPANCIES:

$\frac{\text{ACTUAL AREA}}{\text{ALLOWABLE AREA}} \leq 1$

c) TOTAL ALLOWABLE AREA FOR:

1) ONE STORY: 37216 S.F. W/AREA INCREASE
2. TWO STORY: Aa(2) ____
3. THREE STORY: Aa(3) ____

d) UNLIMITED AREA BUILDING: YES ____ NO X CODE SECTION: ____

K. FIRE RESISTANCE RATING REQUIREMENTS FOR BUILDING ELEMENTS (HOURS):

| ELEMENT | Hrs. | ASSEMBLY LISTING | ELEMENT | Hrs. | ASSEMBLY LISTING |
|---|---|---|---|---|---|
| EXTERIOR BEARING WALLS | Ø | | FLOORS-CEILING FLOORS | Ø | |
| INTERIOR WALLS | Ø | | ROOFS-CEILING ROOFS | Ø | |
| EXTERIOR NON-BEARING WALLS | Ø | | EXTERIOR DOORS AND WINDOWS | Ø | |
| STRUCTURAL FRAME | Ø | | SHAFT ENCLOSURES | Ø | |
| PARTITIONS-PERMANENT | Ø | | FIRE WALLS | Ø | |
| FIRE BARRIERS | Ø | | FIRE PARTITIONS | Ø | |
| EXT. FIRE SEPARATION WALL | 2 | Ø CMU/PB-1.4 IBC TABLE 720.1 | SMOKE PARTITIONS | Ø | |

L. DESIGN OCCUPANT LOAD: 111

EXIT WIDTH REQUIRED: 6' EXIT WIDTH PROVIDED: 9'

M. MINIMUM NUMBER OF REQUIRED PLUMBING FACILITIES:

a) WATER CLOSETS-REQUIRED(M) 1 (F) 1 PROVIDED(M) 1 (F) 1
b) LAVATORIES - REQUIRED(M) 1 (F) 1 PROVIDED(M) 1 (F) 1
c) BATH TUBS OR SHOWERS: Ø
d) DRINKING FOUNTAINS: 1 SERVICE SINKS 1

FOOTNOTES:

1) IN CASE OF CONFLICT WITH THE U.S. DEPARTMENT OF JUSTICE FEDERAL REGISTERS PARTS I THROUGH V - ADA GUIDELINES AND SPECIFIC REFERENCE TO THE INTERNATIONAL BUILDING CODE ACCESSIBILITY CHAPTERS, THE MORE RESTRICTIVE REQUIREMENT SHALL GOVERN.

2) ADDITIONAL CODEINFORMATION SHALL BE PROVIDED AT THE DISCRETION OF THE BUILDING OFFICIAL FOR COMPLEX BUILDINGS. INCLUDING, BUT NOT LIMITED TO:

a) HIGH RISE REQUIREMENTS.
b) ATRIUMS.
c) PERFORMANCE BASED CRITERIA.
d) MEANS OR EGRESS ANALYSIS.
e) FIRE ASSEMBLY LOCATOR SHEET.
f) EXTERIOR AND INTERIOR ACCESSIBILITY ROUTE.
g) FIRE STOPPING, INCLUDING TESTED DESIGN NUMBER.

## DEFFERED SUBMITTALS:

1. FIRE SPRINKLER PIPING, HEAD LOCATIONS, AND SPECIFICATIONS
   DATE: ____
2. STATE FIRE MARSHALL APPROVAL
   DATE: ____

# PROJECT NOTES

## GENERAL NOTES

1. All materials and construction shall be performed in accordance with all and current applicable laws, rules, regulations, ordinances, OSHA requirements, standards and specifications whether or not any specific reference is made to such in these plans and specifications. The Contractor shall be properly licensed in the State of Utah to perform all of the work described in these Contract documents. Such licensing shall remain in effect continuously throughout the entirety of this project including from time of bid submission through project completion and warranty period. The Contractor shall carry appropriate insurance, and performance and payment bonds as required.

2. All work shall conform to these Plans and to the requirements of the project specifications. In the event of any conflicts these plans shall govern. In the event that any other conflicts are discovered, the Contractor shall notify the Engineer in writing, and the Engineer, at their sole discretion, shall determine which requirements govern. The Contractor shall keep one record copy of all Specifications, Drawings, Addenda, Modifications, and Shop Drawings at the site in good order and annotated to show all changes made during the construction process. These shall be available to the Engineer and shall be delivered to him for the Owner upon completion of the Project.

3. The Contractor shall thoroughly familiarize themselves with all aspects of the plans and documents, perform a site visit to satisfy themselves as to the site conditions, attend all preconstruction and construction meetings, and thoroughly satisfy themselves as to the true meaning and intention of this Contract. The Contractor shall be competent and experienced to perform all work required. All work shall be subject to the approval of the Engineer.

4. The Contractor shall indemnify and hold harmless the Owner and the Engineer and their agents and employees from and against all claims, damages, losses and expenses including attorneys fees arising out of or resulting from the performance of the Work, provided that any such claim, damage, loss or expenses is attributable to bodily injury, sickness, disease or death, or to injury to or destruction of tangible property (other than the Work itself) including the loss of use resulting therefrom; and is caused in whole or in part by any negligent act or omission of the Contractor, any Subcontractor, anyone directly or indirectly employed by any of them or anyone for whose acts any of them may be liable, regardless of whether or not it is caused in part by a party indemnified hereunder. In any and all claims against the Owner or the Engineer or any of their agents or employees by any employee of the Contractor, and Subcontractor, anyone directly or indirectly employed by any of them or anyone for whose acts any of them may be liable, said indemnification obligation shall not be limited in any way by any limitation on the amount or type of damages, compensation or benefits payable by or for the Contractor or any subcontractor under workmen's compensation acts, disability benefit acts or other employee benefit acts.

5. The Contractor warrants and guarantees to the Owner and Engineer that all material and equipment used in the performance of this work shall be new unless otherwise specified and that all Work shall be of good quality and free from faults or defects for a period of one year from the date of substantial completion. If required by the Engineer, the Contractor shall furnish satisfactory evidence as to the kind and quality of materials and equipment. All materials and equipment shall be applied, installed, connected, erected, used, cleaned and conditioned in accordance with the instructions of the applicable manufacturer, fabricator or processor, except as otherwise provided in the plans and documents.

6. The Contractor shall be responsible for all permits, licenses and fees required for the performance and completion of the work and shall ensure that all work is performed in accordance with the requirements of said permits and licenses. The Contractor shall provide all construction signage, barricading and traffic control in conformance to Utah Department of Transportation Traffic Control Standards and to the most recent edition of the Manual of Uniform Traffic Control Devices. The Contractor shall furnish all materials, equipment, labor, transportation, construction equipment and machinery, tools, appliances, fuel, power, light, heat, telephone, water, sanitary facilities, and all other facilities and incidentals necessary for the execution, testing, initial operation and completion of the work.

7. The Contractor shall at all times be responsible for providing dust, mud, and erosion control, and proper drainage. The Contractor shall be responsible to properly handle and dispose of all construction water. The Contractor shall limit travel on the project site to roadways only, except where construction specifically requires travel elsewhere. Any damage caused by such unauthorized travel shall be corrected at the Contractor's expense and to the satisfaction of the Owner of the property parcel. The Contractor shall at all times keep the premises free from accumulations of waste material, rubbish and other debris resulting from the Work. Equipment and construction materials, etc., shall be stored onsite only at the satisfaction of the Owner of the property parcel whereon they are stored. At the completion of the Work, all waste materials, rubbish and debris shall be removed from the premises as well as all tools, construction equipment and machinery, and surplus materials. The Contractor shall restore to their original condition those portions of the site not designated for alteration by the plans and document.

8. The Contractor shall be responsible for adequately scheduling all required testing and inspections a minimum of 48 hours in advance. In the event that testing and inspection services are furnished by the Owner, such services shall be paid for by the Owner; however, any retesting/reinspection that is required as a result of insufficient or defective work shall be conducted at the Contractor's expense. Neither observations by the Engineer nor inspections, tests or approvals by persons other than the Contractor shall relieve the Contractor from his obligations to perform the Work in accordance with the requirements of the plans and documetns

9. The Contractor is solely responsible for jobsite conditions throughout the project, including subsurface conditions and utility location. Ward Engineering Group assumes no responsibility for existing utility locations. Any existing utilities or other Improvements shown on the plans have been derived from field investigations and/or available record information. The Contractor shall field verify existing utility locations and invert elevations of existing manholes prior to constructing any new utility. The Contractor shall take all precautionary measures necessary to protect existing improvements which are to remain in place. The Contractor shall be solely responsible for any damage to existing facilities resulting directly or indirectly from his operations, whether or not such facilities are shown in these plans. All improvements damaged by the Contractor's operation shall be expeditiously repaired or reconstructed to the Engineer's satisfaction at the Contractor's expense without additional compensation. No excavation of any nature shall be performed without first contacting "Blue Stakes" at least 48 hours prior to such excavation.

10. The Contractor shall take all necessary precautions to assure sound excavation and grading practices. For all excavations exceeding a depth of 4 feet, the Contractor shall provide appropriate shoring, bracing, sloping or other appropriate provisions as specified by OSHA that are necessary to protect the safety of those at the site. All open trenches must be properly covered at the end of work each day. Hard hats shall be worn by all persons at the site. The Contractor shall familiarize themselves with the conditions and recommendations of the Geotechnical Investigation Report, perpared for this site and in conjunction with this project.
11. All Specifications, Drawings and copies thereof furnished by the Engineer shall remain his property. They shall not be used on another project and, with exception of those sets which have been signed in connection with the execution of the Agreement, shall be returned to the Engineer upon request at completion of the project.

## CONSTRUCTION NOTES

### Water Improvement Requirements

1. All water mains and appurtenances, shall be designed, constructed, disinfected, tested, and placed in service in accordance with all applicable laws, rules, regulations, ordinances, and requirements including, but not limited to, the requirements of OSHA, the State Division of Drinking Water, City of Salt Lake

2. All construction within public rights-of-way shall comply with City of Salt Lake Standards.

3. All materials which may contact the drinking water shall be ANSI certified as meeting NSF Standard 61.

4. Water laterals shall be copper type K . Installation and testing shall be performed in accordance with AWWA C600. Disinfection shall be performed in accordance with AWWA C105.

5. All buried DI pipes, valves and fittings shall be poly-wrapped and the nuts greased in accordance with AWWA C105.

6. All DI water pipelines, valves and fitting shall have Portland cement mortar lining, or Engineer approved equal.

7. All buried pipelines shall have tracer wire (12 Gauge) directly above pipe which shall be tied to all valves. All utility piping shall have warning tape installed 12" min. above and along the entire length, including service lateral. Tape shall be labeled according to utility.

8. The open ends of all pipelines under construction shall be covered and effectively sealed at the end of each day's work.

9. If poor soils (safe bearing load less than 1,000 psf) are encountered where a thrust block is required, then the thrust block shall be redesigned by the Engineer. The redesigned thrust block shall not be placed until the Engineer has approved of the redesign.

10. Any proposed connection to existing pipelines, or any non-flanged fitting or valve is required to be restrained or thrust blocked.

11. All water lines shall be constructed to a depth so as to maintain 48" min ground cover.

12. Contractor shall notify City of Salt Lake 48 hours in advance of making any connections to water or sewer lines.

### Sewer Improvement Requirements

1. All sewer mains and appurtenances shall be designed, constructed, tested, and placed in service in accordance with all applicable laws, rules, regulations, ordinances, and requirements including, but not limited to, the requirements of OSHA, the State Division of Water Quality.

2. All construction within public rights-of-way shall comply with City of Salt Lake Standards.

3. Any flushing into the existing sanitary sewer system is strictly prohibited.

4. Gravity sewer pipelines shall be PVC with integral bell and spigot joints and a standard dimension ratio (SDR) of 35.

5. Deflection testing shall be performed no sooner than 30 days after the final backfill has been placed. Testing shall be performed using a mandrel with a diameter equal to 95 percent of the inside diameter of the pipe.

6. The location of the stub ends of all laterals shall be marked in the field using a 2" x 4" post extending from the end of the lateral to a minimum of three feet above the ground surface. The 2" x 4" post shall be painted using green paint. Record drawings shall be maintained at the project site showing accurate locations of all lateral connections measured from the nearest manhole and all lateral stubs measured from the nearest property line. No laterals shall be directly connected to manholes.

7. Following placement of asphalt, all sewer lines shall be flushed and cleaned, and all manhole lids adjusted to 0.1 feet below finished grade and in accordance with the requirements herein.

8. The Owner reserves the right to televise, at their expense, any or all portions of this work prior to placing such facilities in service, and the Contractor shall give the Owner sufficient advance notice of their intent to place these facilities in service as will allow the Owner to schedule such televising.

### Concrete

1. All concrete work shall be normal weight concrete with a compressive strength equal to at least 4,000 psi within 28 days after pouring. The water cement ratio shall be no greater than 0.45 and slump shall be between 1" to 4.5" or less. Minimum cement content shall be 6.5 sacks per cubic yard. Provide 5.5%-7.5% air entrainment for concrete of this class used in slabs and walls.

2. Unless otherwise noted, all construction joints shall be keyed with a key 1-1/2 in. deep, a length 2 in. Less than the member, and a width 1/2 of the member. Reinforcing shall be continuous through the joint.

3. All concrete work shall be placed, cured, stripped, and protected as directed by the project specifications.

4. Before concrete is poured check with all trades to insure proper placement of all openings, sleeves, curbs, conduits, bolts, inserts, etc. relative to work.

5. Contractor is responsible for all shoring and formwork.

### Grading Notes

1. The contractor shall exercise sufficient supervisory control during grading and construction to insure compliance with the plans, soils report, specifications, and code within his purview.

2. Surface drainage to be one (1%) percent minimum to approved drainage facilities, except as waived by the Building Official, or directed by the Engineer.

3. All fill except that underneath paved surfaces, within road right of way or underneath building slabs, sidewalks & footings, shall be compacted to a minimum of ninety-five (95%) percent maximum density and +/- 3% optimum moisture content as determined by ASTM D1557 and certified by tests and reports from soils engineer.

4. All fill underneath roadways and parking areas shall be classification A+1-a through A+4 as defined by AASHTO M 145 and compacted to a minimum of ninety-five (95%) percent maximum dry density and +/- 2% optimum moisture content as specified by ASTMDi557. For all fill underneath building slabs and footings, refer to structural plans and geotechnical report.

5. Fill material shall be placed in layers not exceeding six (6) inches in compacted thickness and compacted at optimum moisture content to the required maximum dry density.

6. All fill areas to be cleared of all vegetation and other unsuitable materials and the area scarified to a depth of six (6) inches, or to a depth to remove top soil, refer to geotechnical report.

7. Contractor shall remove all topsoil and organic materials from structurally loaded embankments and build footprint location according to the recommendations of the geotechnical report.

### Paving Improvements

1. Bituminous surface course for parking shall be 1/2" gradation asphalt cement shall be AC-20. asphalt shall be compacted to 95% of the marshall (50 blow) maximum density or 92% of the theoretical maximum density. for roadways refer to typical section.

2. Untreated base course shall be 3/4" or 1" gradation and shall be compacted to 95% maximum dry density as determined by astm d-1557, and shall be ±2% optimum moisture.

3. Hot mix paving activities shall be conducted only when air and roadbed temperatures in the shade are 45 deg. f. and rising. cease paving if air temperatures fall below 50 deg. f.

4. Contractor shall compact sub grade to 95% maximum dry density and +/- 2% optimum moisture content as specified by astmd-1557. contractor shall notify engineer of any encountered subsurface conditions unsuitable or potentially unsuitable for construction.

### Clearing and Grubbing

1. Remove and dispose of trees, stumps, logs, limbs, sticks, vegetation, debris, and other material on the natural ground surface.

2. Dispose of all material off the property to a facility licensed to accept the material type.

3. Contractor shall remove all top soil within the area of construction. Stockpile or remove from site per owner instructions.

### Storm Drainage Improvements

1. All storm drainage pipes and culverts shall be HDPE Pipe as noted on plans and shall be installed according to these plans and manufacturer's recommendations unless otherwise directed or approved by the Engineer.

**North Temple Store**
**1255 w. North Temple**
**General Notes**

231 West 800 South Salt Lake City, Utah 84101
*Ward Engineering Group*
Planning • Engineering • Surveying
PH: 801 . 487 . 8040 FX: 801 . 487 . 8668

CLIENT: Eaton Architects
DWG: General Notes
JOB No: EA01
DO NOT SCALE THIS DRAWING DRAWING IS REDUCED IF LESS THAN 22in x 34in - DIMENSIONS AND NOTES TAKE PRECEDENCE

DRAWN BY: cdr
DESIGN BY: cdr
CHECKED BY: MTD
DATE: 1-23-08

REVISIONS

SHEET
C-101

FILENAME: T:\Eaton Architecture\EA001n. temple liquor store\Design\Preliminary\General Notes.dwg TAB: Layout1 PLOT DATE AND TIME: 3/31/2008 4:20 PM

# ABBREVIATIONS AND LEGEND

## ABBREVIATIONS

| | |
|---|---|
| ABUT. | = ABUTMENT |
| AGG. | = AGGREGATE |
| APPROX. | = APPROXIMATE |
| A.S. | = AS SHOWN |
| AUX. | = AUXILIARY |
| AVG. | = AVERAGE |
| BCR | = BEGIN OF CURB RETURN |
| BOW | = BACK OF WALK |
| BRG. | = BEARING |
| ℄/C.L. | = CONTROL LINE/CENTER LINE |
| CATV | = CABLE TELEVISION |
| CI | = CAST IRON |
| CLR. | = CLEAR/CLEARANCE |
| CMP | = CORRUGATED METAL PIPE |
| COL | = COLUMN |
| CONC. | = CONCRETE |
| CONN | = CONNECTION |
| CONST. | = CONSTRUCTION |
| CONT. | = CONTINUOS |
| COR. | = CORNER |
| CP | = CONTROL POINT |
| C.F. | = CUBIC FEET |
| DI | = DUCTILE IRON |
| DIA./Ø | = DIAMETER |
| DIP | = DUCTILE IRON PIPE |
| DIM. | = DIMENSION |
| DR | = DIMENSION RATIO |
| DWG. | = DRAWING |
| E | = EAST |
| EA | = EACH |
| ECR | = END OF CURB RETURN |
| EL./ELEV. | = ELEVATION |
| ELEC | = ELECTRIC |
| EO | = EDGE OF OIL |
| EST. | = ESTIMATED |
| EXIST | = EXISTING |
| F.F. | = FINISHED FLOOR |
| F.G. | = FINISHED GRADE |
| FL/FL | = FLOW LINE |
| FT. | = FEET |
| FLG. | = FLANGE |
| GA. | = GAUGE |
| G | = GALLON |
| GALV. | = GALVANIZED |
| GMH | = GAS MANHOLE |
| GV | = GAS VALVE |
| HA | = HECTARE |
| HDPE | = HIGH DENSITY POLYETHYLENE |
| HGL | = HYDRAULIC GRADE LINE |
| HMA | = HOT MIX ASPHALT |
| HORIZ. | = HORIZONTAL |
| HP | = HIGH PRESSURE/HIGH POINT |
| HWY | = HIGHWAY |
| I.D. | = INSIDE DIAMETER |
| INCL. | = INCLUDES |
| INT | = INTERSECTION |
| INV | = INVERT |
| IRRIG | = IRRIGATION |
| L | = LENGTH |
| LIN. FT. | = LINEAR FEET |
| LOC | = LIP OF CURB |
| LOC. | = LOCATION |
| LP | = LIGHT POLE/LOW POINT |
| LT | = LEFT |
| M.J. | = MECHANICAL JOINT FITTING |
| MISC. | = MISCELLANEOUS |
| MPa | = MEGAPASCAL |
| MAX. | = MAXIMUM |
| MG | = MEGAGRAM |
| MH | = MANHOLE |
| MIN. | = MINIMUM |
| N/NO. | = NORTH |
| NO./# | = NUMBER |
| N.T.S. | = NOT TO SCALE |
| O.C. | = ON CENTER |
| O.D. | = OUTER DIAMETER |
| OHP | = OVER HEAD POWER |
| PC | = POINT OF CURVATURE |
| PED | = PEDESTRIAN |
| PI/P.I. | = POINT OF INTERSECTION |
| PIP | = PLASTIC IRRIGATION PIPE |
| PL | = PROPERTY LINE |
| POC | = POINT ON CURVE |
| PP | = POWER POLE |
| PT | = POINT |
| PT | = POINT OF TANGENCY |
| PVC | = POLYVINYL CHLORIDE PLASTIC |
| PVC | = POINT OF VERTICAL CURVATURE |
| PVT | = POINT OF VERTICAL TANGENCY |
| PVI | = POINT OF VERTICAL INTERSECTION |
| PVMNT | = PAVEMENT |
| PVRC | = POINT OF VERTICAL REVERSE CURVE |
| R/RAD. | = RADIUS |
| R/C | = REBAR AND CAP |
| Rd. | = ROAD |
| RCP | = REINFORCED CONCRETE PIPE |
| R/W | = RIGHT OF WAY |
| REINF. | = REINFORCING |
| REQ'D | = REQUIRED |
| RET. | = RETAINING |
| R.P. | = REFERENCE POST |
| RT | = RIGHT |
| S | = SLOPE |
| S/SO. | = SOUTH |
| SCH | = SCHEDULE |
| SD | = STORM DRAIN |
| SDMH | = STORM DRAIN MANHOLE |
| SDR | = STANDARD DIMENSION RATIO |
| SDWLK | = SIDEWALK |
| SECT./SEC | = SECTION |
| SHLD | = SHOULDER |
| SHT | = SHEET |
| SPA. | = SPACING/SPACES |
| SQ. | = SQUARE |
| STA. | = STATION |
| STD. | = STANDARD |
| STD. | = STANDARD DRAWING |
| STR. | = STRUCTURE |
| SS | = SANITARY SEWER |
| SSMH | = SANITARY SEWER MANHOLE |
| T | = TANGENT DISTANCE |
| T.B. | = THRUST BLOCK |
| TBC | = TOP BACK OF CURB |
| TBW | = TOP BACK OF WALK |
| TEL | = TELEPHONE |
| TEMP | = TEMPORARY |
| TMH | = TELEPHONE MANHOLE |
| TOW | = TOP OF WALL |
| TYP. | = TYPICAL |
| UG | = UNDERGROUND |
| UTIL. | = UTILITY |
| VC | = VERTICAL CURVE |
| VERT. | = VERTICAL |
| W | = WEST |
| W/ | = WITH |
| WC | = WITNESS CORNER |
| WMH | = WATER MANHOLE |
| WV | = WATER VALVE |
| YD $^2$ YD2 | = SQUARE YARD |
| YD $^3$ YD3 | = CUBIC YARD |
| YD. | = YARD |
| YR | = YEAR |

## LEGEND

| | |
|---|---|
| OHP | EXISTING OVER HEAD POWER LINE |
| Ex SS | EXISTING SANITARY SEWER LINE |
| Ex W | EXISTING WATER LINE |
| Ex ELEC | EXISTING UNDERGROUND ELECTRICAL LINE |
| Ex SD | EXISTING STORM DRAIN LINE |
| X | EXISTING FENCE |
| | EXISTING EDGE OF ASPHALT |
| | PROPERTY LINE |
| | EASEMENT LINE |
| | EXISTING CATCH BASIN |
| | REQ'D CATCH BASIN |
| FG=4759.71 × | PROPOSED FINISHED GRADE ELEVATION |
| | PROPOSED CONCRETE |
| | PROPOSED ASPHALT PAVING |

**North Temple Store**
**1255 w. North Temple**
**Abbreviations and Legend**


231 West 800 South Salt Lake City, Utah 84101
*Ward Engineering Group*
Planning • Engineering • Surveying
PH: 801 . 487 . 8040 FX: 801 . 487 . 8668


CLIENT: **Eaton Architects**
DWG: **Abbrev.&Legend**
JOB No: **EA01**
DO NOT SCALE THIS DRAWING (DRAWING IS REDUCED IF LESS THAN 22in x 34in - DIMENSIONS AND NOTES TAKE PRECEDENCE)

DRAWN BY: **cdr**
DESIGN BY: **cdr**
CHECKED BY: **MTD**
DATE: **1-23-08**

REVISIONS

SHEET
**C-102**

FILENAME: T:\Eaton Architecture\EA001n. temple liquor store\Design\Preliminary\Abbrev.&Legend.dwg TAB: Layout1 PLOT DATE AND TIME: 3/31/2008 4:20 PM

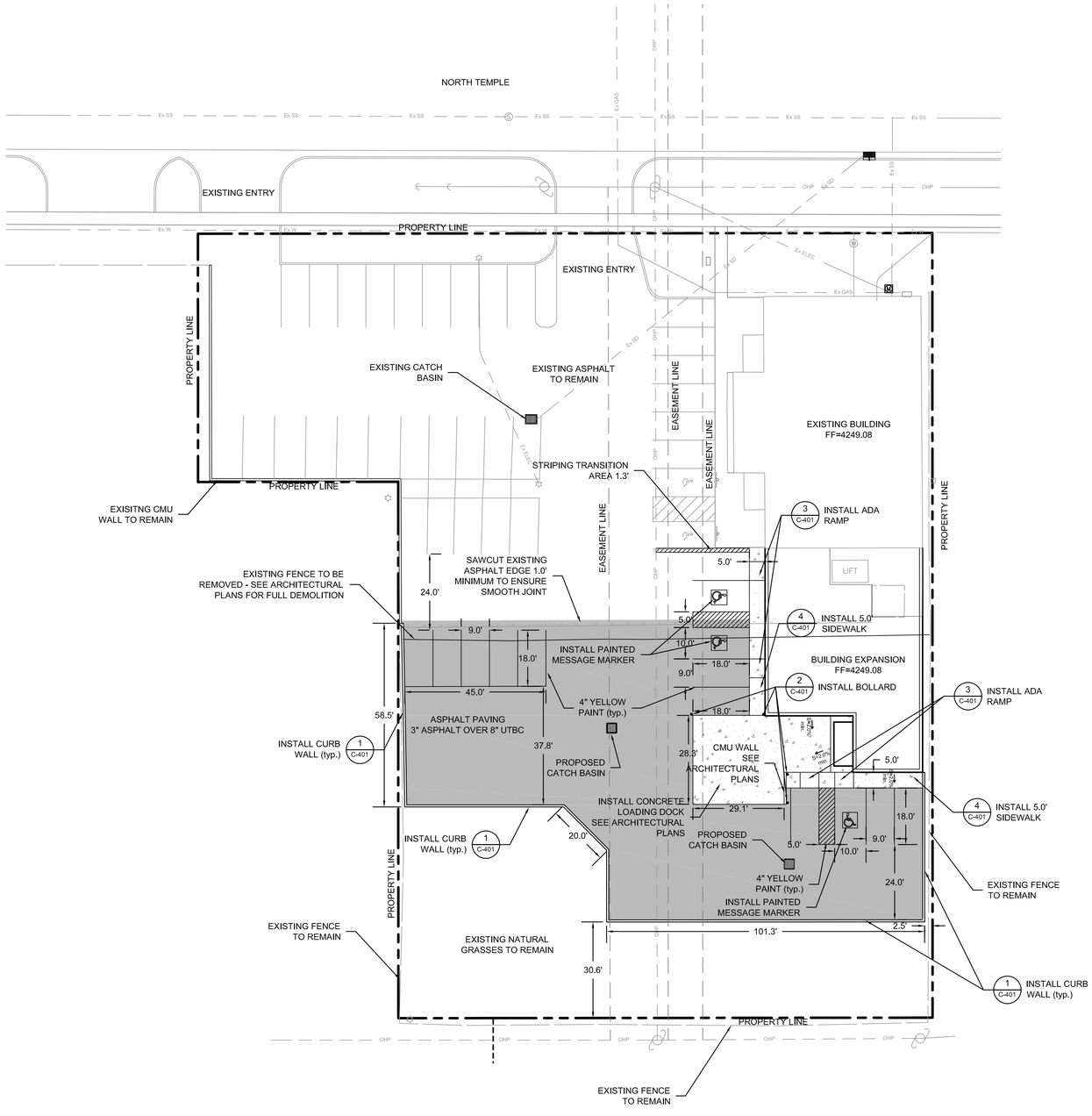


# North Temple Store
# 1255 w. North Temple
## Site Plan


231 West 800 South Salt Lake City, Utah 84101
Ward Engineering Group
Planning • Engineering • Surveying
PH: 801 . 487 . 8040 FX: 801 . 487 . 8668


CLIENT: Eaton Architects
DWG: Site Plan
JOB No: EA01
DO NOT SCALE THIS DRAWING DRAWING IS REDUCED IF LESS THAT 22in x 34in - DIMENSIONS AND NOTES TAKE PRECEDENCE

DRAWN BY: cdr
DESIGN BY: cdr
CHECKED BY: MTD
DATE: 1-23-08

REVISIONS

SHEET
C-201

FILENAME: T:\Eaton Architecture\EA001n. temple liquor store\Design\Preliminary\Site Plan.dwg TAB: Layout1 PLOT DATE AND TIME: 3/31/2008 4:19 PM

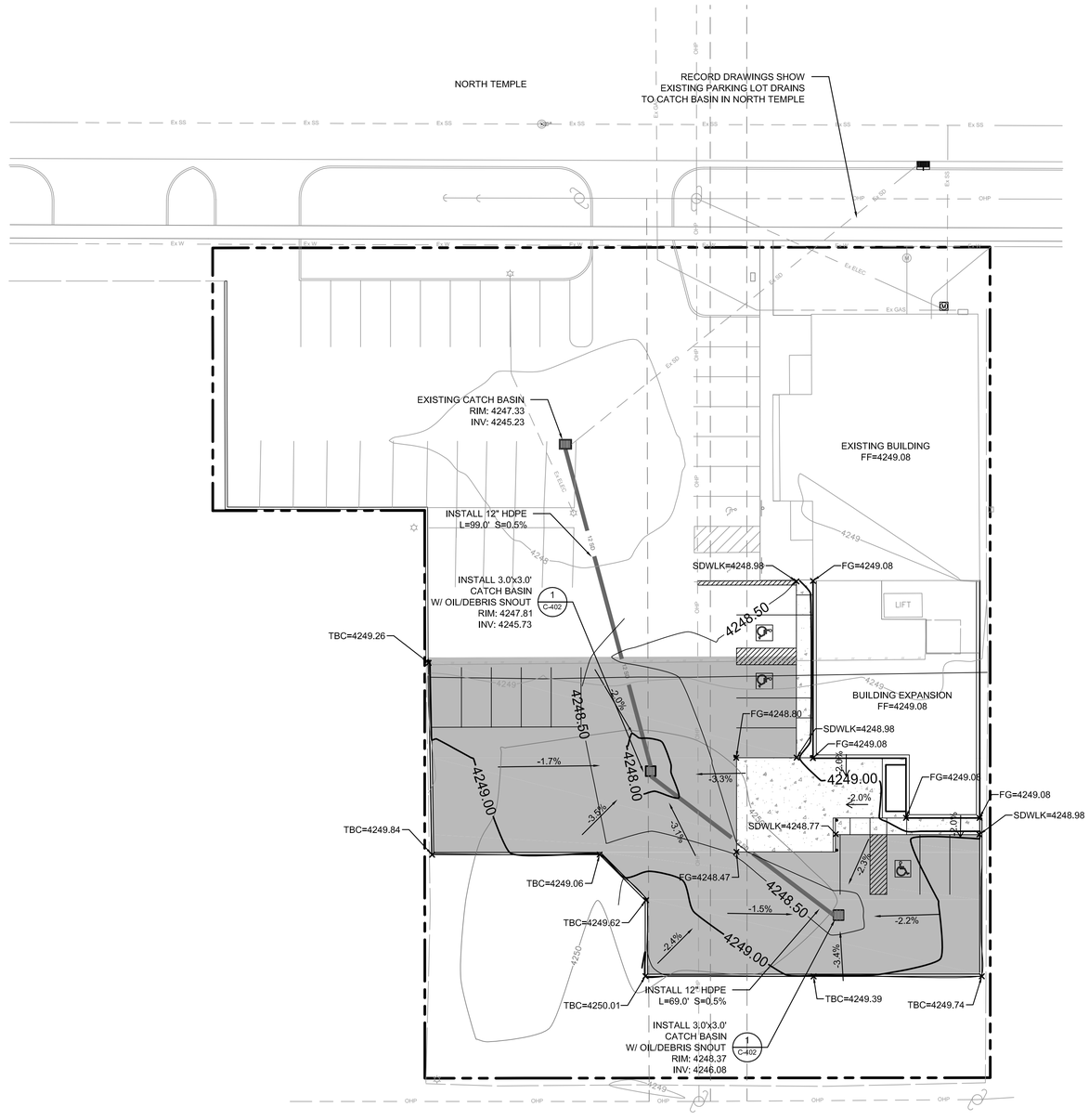


## North Temple Store

0.49 Ac. Expansion

### Developed Conditions

**Assumptions:**

Type II Storm
10/100 - Year Frequency
Time of Concentration 15 min.
Rainfall Depth (in) 24 Hr. Storm: 1.97/2.79

| Basin Components | Area (ac) | CN |
|---|---|---|
| Roof | 0.07 | 98 |
| Paved | 0.26 | 98 |
| Open Space | 0.16 | 69 |
| **Total** | **0.49** | **89** |

**Computed Peak Flow per TR-55 Tabular Method**

**$Q_{10}$= 0.55 cfs**
**$Q_{100}$= 0.96 cfs**

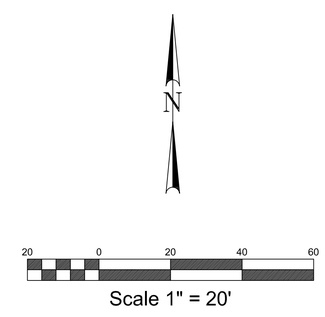


# North Temple Store
# 1255 w. North Temple
# Grading and Drainage Plan


231 West 800 South Salt Lake City, Utah 84101
Ward Engineering Group
Planning • Engineering • Surveying
PH: 801 . 487 . 8040 FX: 801 . 487 . 8668


CLIENT: Eaton Architects
DWG: Grading plan
JOB No: EA01
DO NOT SCALE THIS DRAWING DRAWING IS REDUCED IF LESS THAN 22in x 34in - DIMENSIONS AND NOTES TAKE PRECEDENCE

DRAWN BY: cdr
DESIGN BY: cdr
CHECKED BY: MTD
DATE: 1-23-08

REVISIONS

SHEET
C-301

FILENAME: T:\Eaton Architecture\EA001n. temple liquor store\Design\Preliminary\Grading plan.dwg TAB: Layout1 PLOT DATE AND TIME: 3/31/2008 4:19 PM

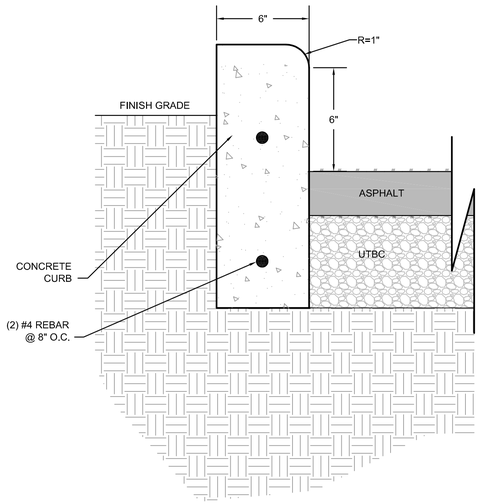


NOTES:
1. UNTREATED BASE COURSE: PROVIDE MATERIAL AS PER SPECIFICATIONS. DO NOT USE GRAVEL OR SEWER ROCK. PLACE AS PER SPECIFICATIONS. COMPACT AS STATED IN SPECIFICATIONS TO A MODIFIED PROCTOR DENSITY OF 95 PERCENT OR GREATER. MAXIMUM LIFT THICKNESS IS 6-INCHES BEFORE COMPACTION.

2. CONCRETE: CURBS SHALL BE CONSTRUCTED OF 4000 PSI CONCRETE.
A. IF NECESSARY, PROVIDE CONCRETE THAT ACHIEVES DESIGN STRENGTH IN LESS THAN 7 DAYS. USE CAUTION, HOWEVER AS SPIDER CRACKS DEVELOP IF AIR TEMPERATURE EXCEEDS 90 DEGREES F.
B. UNLESS SHOWN OTHERWISE, PROVIDE 1/2 INCH RADIUS ON CONCRETE EDGES EXPOSED TO PUBLIC VIEW.

3. EXPANSION JOINTS: FULL DEPTH 1/2 INCH THICK TYPE F1 JOINT FILLER MATERIAL PER SPECIFICATIONS. SET TOP OF FILLER FLUSH WITH SURFACE FOR CONCRETE. PLACE JOINTS TO MATCH EXPANSION JOINT LOCATIONS IN SIDEWALK.

4. CONTRACTION JOINTS: PLACE JOINTS AT 10 FEET INTERVALS. MAKE ALL JOINTS AT LEAST 1/8 INCH WIDE AND 2 INCHES DEEP.

5. PATTERN: PLACE PATTERN UNIFORMLY OVER SURFACE TO A DEPTH OF 1/2 INCH.

## 1 CURB WALL DETAIL
NTS

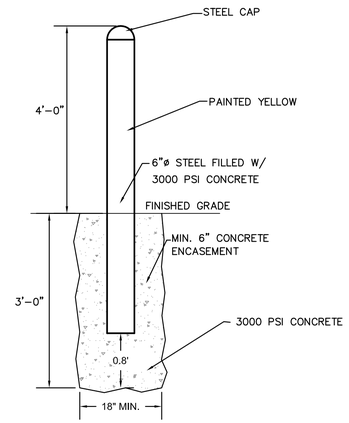


## 2 BOLLARD DETAIL
NTS

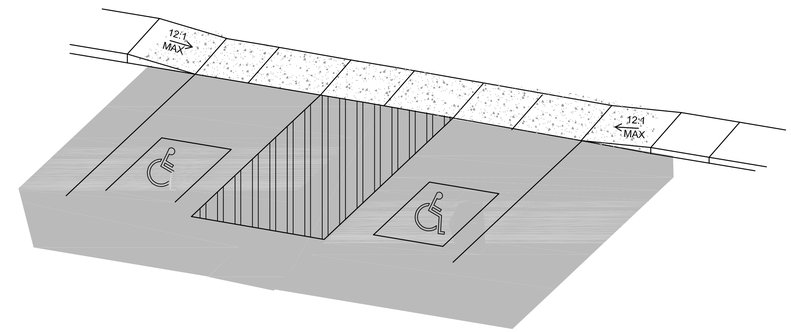


## 3 ADA RAMP DETAIL
NTS

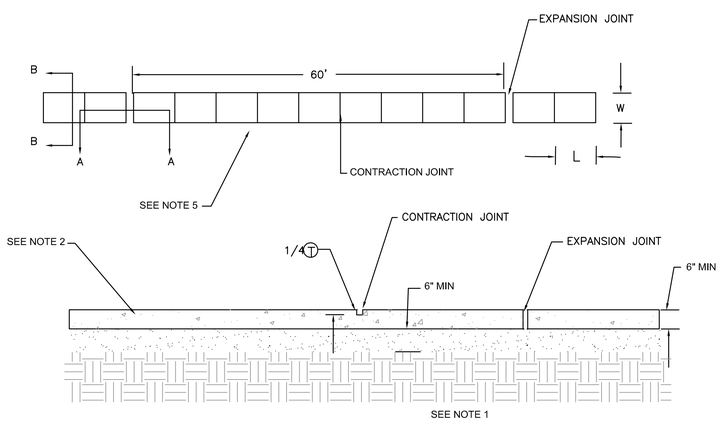


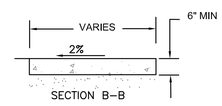


NOTES:
1. UNTREATED BASE COURSE: PROVIDE MATERIAL AS PER SPECIFICATIONS. DO NOT USE GRAVEL OR SEWER ROCK. PLACE AS PER SPECIFICATIONS. COMPACT AS STATED IN SPECIFICATIONS TO A MODIFIED PROCTOR DENSITY OF 95 PERCENT OR GREATER. MAXIMUM LIFT THICKNESS IS 8-INCHES BEFORE COMPACTION.

2. CONCRETE: SIDEWALKS SHALL BE CONSTRUCTED OF 4000 PSI CONCRETE AND BE A MINIMUM OF 6 INCHES THICK. PLACE PER SPECIFICATIONS.
A. IF NECESSARY, PROVIDE CONCRETE THAT ACHIEVES DESIGN STRENGTH IN LESS THAN 7 DAYS. USE CAUTION, HOWEVER AS SPIDER CRACKS DEVELOP IF AIR TEMPERATURE EXCEEDS 90 DEGREES F.
B. UNLESS SHOWN OTHERWISE, PROVIDE 1/2 INCH RADIUS ON CONCRETE EDGES EXPOSED TO PUBLIC VIEW.

3. EXPANSION JOINTS: FULL DEPTH 1/2 INCH THICK TYPE F1 JOINT FILLER MATERIAL PER SPECIFICATIONS. SET TOP OF FILLER FLUSH WITH SURFACE FOR CONCRETE. PLACE JOINTS TO MATCH EXPANSION JOINT LOCATIONS IN SIDEWALK.

4. CONTRACTION JOINTS: MAKE CONTRACTION JOINTS VERTICAL.
A. MAKE JOINTS AT LEAST 1/8 INCH WIDE AND 1 INCH DEEP OR 1/4 SLAB THICKNESS IF THE SLAB IS GREATER THAN 4 INCHES THICK.
B. PROVIDE A 1/2 INCH RADIUS TOOLED UP
C. MAXIMUM LENGTH TO WIDTH RATIO FOR NON SQUARE PANELS IS 1.5 TO 1.
D. MAXIMUM PANEL LENGTH IS 15 FEET.

5. PATTERN: PLACE PATTERN UNIFORMLY OVER SURFACE TO A DEPTH OF 1/2 INCH.

## 4 SIDEWALK DETAIL
NTS

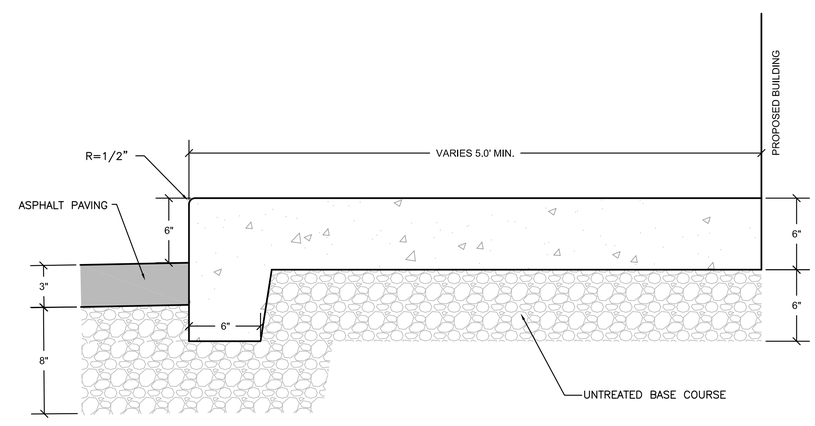


**North Temple Store**
**1255 w. North Temple**
**Details - Site**


231 West 800 South Salt Lake City, Utah 84101
*Ward Engineering Group*
Planning • Engineering • Surveying
PH: 801 . 487 . 8040 FX: 801 . 487 . 8668


CLIENT: **Eaton Architects**
DWG: **Details**
JOB No: **EA01**
DO NOT SCALE THIS DRAWING DRAWING IS REDUCED IF LESS THAN 22in x 34in – DIMENSIONS AND NOTES TAKE PRECEDENCE

DRAWN BY: **cdr**
DESIGN BY: **cdr**
CHECKED BY: **MTD**
DATE: **1-23-08**

REVISIONS

SHEET
**C-401**

FILENAME: T:\Eaton Architecture\EA001n. temple liquor store\Design\Preliminary\Details.dwg TAB: Layout1 PLOT DATE AND TIME: 3/31/2008 4:18 PM

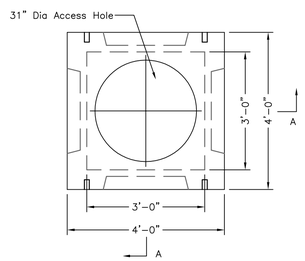


**PLAN VIEW**

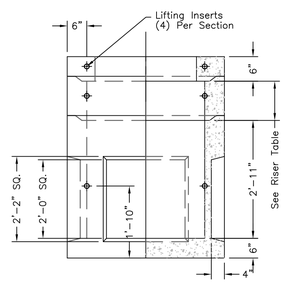


**SECTION A-A**

SCALE: 1/2"=1'-0"

Oldcastle Precast AMCOR Vault Division
Ogden, Utah, North Salt Lake, Utah, West Jordan Utah
Hurricane Utah & Las Vegas Nevada
Phone: 801.399.1171 Fax: 801.392.7849

**CB3X3B**

FILE NAME: 210DIC3X30000B.DWG
ISSUE DATE: January,2002
www.oldcastleprecast.com

**3'-0" x 3'-0" I.D. Catch Basin**

Copyright © 2001 Oldcastle Precast, Inc.

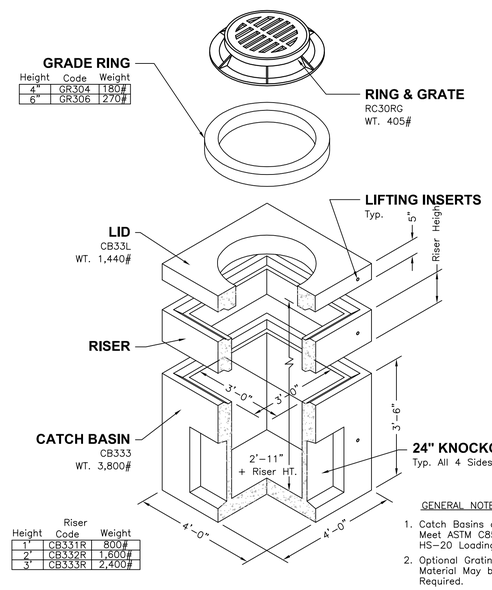


| Height | Code | Weight |
|---|---|---|
| 4" | GR304 | 180# |
| 6" | GR306 | 270# |

| Height | Riser Code | Weight |
|---|---|---|
| 1' | CB331R | 800# |
| 2' | CB332R | 1,600# |
| 3' | CB333R | 2,400# |

GENERAL NOTES:

1. Catch Basins are Designed to Meet ASTM C858 with AASHTO HS-20 Loading.
2. Optional Grating or Cover Material May be Cast in as Required.
3. Openings May be Sized and Located as Required.
4. Check Hardware Section for Optional Accessories.

Oldcastle Precast AMCOR Vault Division
Ogden, Utah, North Salt Lake, Utah, West Jordan Utah
Hurricane Utah & Las Vegas Nevada
Phone: 801.399.1171 Fax: 801.392.7849

**CB3X3**

FILE NAME: 210DIC3X30000F.DWG
ISSUE DATE: January,2002
www.oldcastleprecast.com

**3'-0" x 3'-0" I.D. Catch Basin**

Copyright © 2001 Oldcastle Precast

1 3.0'X3.0' CATCH BASIN DETAIL
NTS

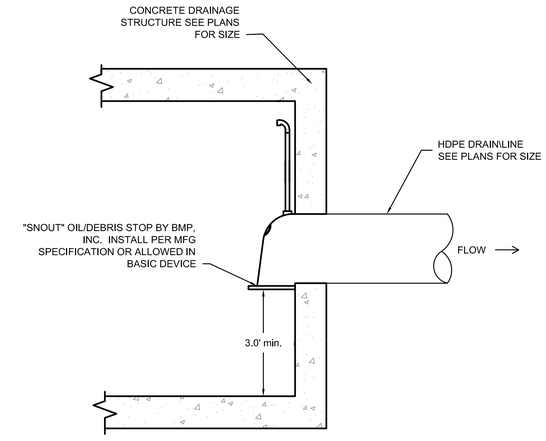


2 OIL/DEBRIS SNOUT DETAIL
NTS

**North Temple Store**
**1255 w. North Temple**
**Details - Drainage**

231 West 800 South Salt Lake City, Utah 84101
*Ward Engineering Group*
Planning • Engineering • Surveying
PH: 801.487.8040 FX: 801.487.8668

CLIENT: **Eaton Architects**
DWG: **Details**
JOB No: **EA01**
DO NOT SCALE THIS DRAWING DRAWING IS REDUCED IF LESS THAN 22x34 - DIMENSIONS AND NOTES TAKE PRECEDENCE

DRAWN BY: **cdr**
DESIGN BY: **cdr**
CHECKED BY: **MTD**
DATE: **1-23-08**

REVISIONS

SHEET
**C-402**

FILENAME: T:\Eaton Architecture\EA001n. temple liquor store\Design\Preliminary\Details.dwg TAB: Layout2 PLOT DATE AND TIME: 3/31/2008 4:18 PM

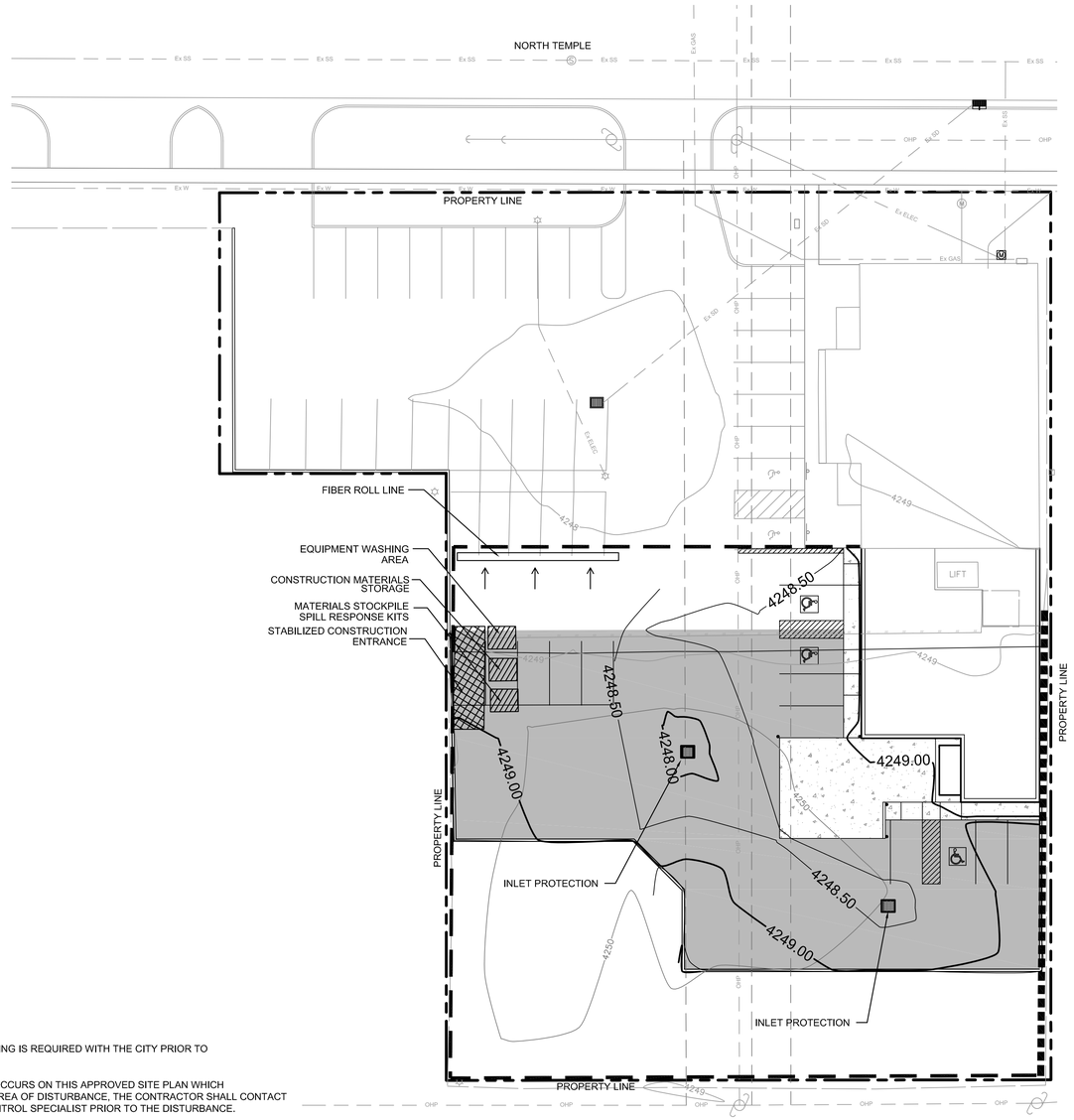


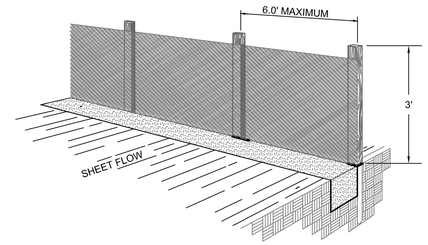


## General Silt Fence Notes

1. WHERE POSSIBLE, LAYOUT THE SILT FENCE 5.0' TO 10.0' BEYOND THE TOE OF SLOPE.
2. ALIGN THE FENCE ALONG THE CONTOUR AS CLOSE AS POSSIBLE.
3. WHEN EXCAVATING THE TRENCH, USE MACHINERY THAT WILL PRODUCE NO MORE THAN THE DESIRED DIMENSIONS.
4. EXTEND THE BOTTOM 3" OF FILTER FABRIC TO LINE ALL THREE SIDES OF THE TRENCH.
5. TO AVOID EXCESSIVE PONDING OF WATER AT LOW POINTS ALONG THE FENCE, PROVIDE AN OPENING IN THE SILT FENCE AND INSTALL A CHECK DAM.
6. AVOID USING JOINTS ALONG THE FENCE AS MUCH AS POSSIBLE. IF A JOINT IS NECESSARY, SPLICE THE FILTER FABRIC AT A POST WITH A 0.50' OVERLAPS AND SECURELY FASTEN BOTH ENDS TO THE POST.
7. MAINTAIN A PROPERLY FUNCTIONING SILT FENCE THROUGHOUT THE DURATION OF THE PROJECT OR UNTIL DISTURBED AREAS HAVE BEEN VEGETATED.

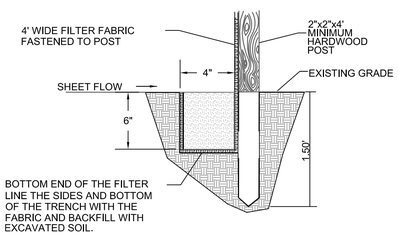


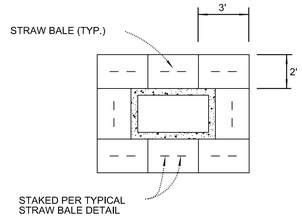


STABILIZED CONSTRUCTION ENTRANCE NOTES:

1. STONE SIZE - USE 4" STONE, OR RECLAIMED CONCRETE EQUIVALENT.
2. LENGTH - AS REQUIRED, BUT NOT LESS THAN 50 FEET
3. THICKNESS - NOT LESS THAN EIGHT (8) INCHES.
4. WIDTH - TEN (10) FOOT MINIMUM, BUT NOT LESS THAN THE FULL WIDTH AT POINTS WHERE INGRESS OF EGRESS OCCURS.
5. SURFACE WATER - ALL SURFACE WATER FLOWING OR DIVERTED TOWARD CONSTRUCTION ENTRANCES SHALL BE PIPED ACROSS THE ENTRANCE. IF PIPING IS IMPRACTICAL, A MOUNTABLE BERM WITH 5:1 SIDE SLOPES WILL BE PERMITTED.
6. MAINTENANCE - THE ENTRANCE SHALL BE MAINTAINED IN A CONDITION WHICH WILL PREVENT TRACKING OR FLOWING OF SEDIMENT ONTO PUBLIC RIGHT-OF-WAYS. THIS MAY REQUIRE PERIODIC TOP DRESSING WITH ADDITIONAL STONE AS CONDITIONS DEMAND AND REPAIR AND/OR CLEANOUT OF ANY MEASURES USED TO TRAP SEDIMENT. ALL SEDIMENT SPILLED, DROPPED, WASHED OR TRACKED ONTO PUBLIC RIGHT-OF-WAYS MUST BE REMOVED IMMEDIATELY.
7. PERIODIC INSPECTION AND NEEDED MAINTENANCE SHALL BE PROVIDED AFTER EACH RAINFALL.

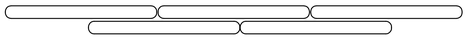

PLACE FIBER ROLLS TIGHTLY TOGETGER ALONG STRETCH OVERLAPPING $\frac{1}{2}$ THE LENGTH OF THE ROLL

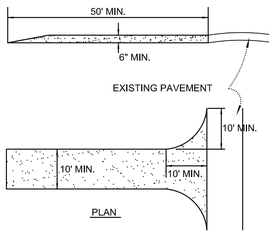


1. PRE CONSTRUCTION MEETING IS REQUIRED WITH THE CITY PRIOR TO DISTURBANCE.

2. IN THE EVENT A CHANGE OCCURS ON THIS APPROVED SITE PLAN WHICH INVOLVES ENLARGING THE AREA OF DISTURBANCE, THE CONTRACTOR SHALL CONTACT MURRAY CITYY EROSION CONTROL SPECIALIST PRIOR TO THE DISTURBANCE.

3. THE CONTRACTOR WILL FILL OUT "EROSION AND SEDIMENT CONTROL PLAN, INSPECTION AND MAINTENANCE FORM EVERY FOURTEEN DAYS AND WITHIN 24 HOURS OF A RAINFALL EVENT AND/OR A HEAVY SNOW MELT.

4. THE CONTRACTOR WILL COMPLY WITH THE INSTALLATION AND MAINTENANCE OF THE "BEST MANAGEMENT PRACTICE" (BMP) USED ON THE EROSION AND SEDIMENT CONTROL PLANS UNTIL REVEGITATION OR PERMANENT STABILIZATION HAS TAKEN PLACE

5. THE CONTRACTOR WILL MAINTAIN STREETS TO BE FREE FROM SOIL AND DEBRIS 24 HOURS PER DAY, SEVEN DAYS A WEEK.

6. DUST CONTROL MEASURES WILL BE ON SITE AND IN WORKING ORDER WHEN SOIL IS DISTURBED. DUST CONTROL WILL BE USED 24 HOURS, SEVEN DAYS PER WEEK AS CONDITIONS DICTATE. THE CONTRACTOR WILL INCREASE EQUIPMENT AS NEEDED TO CONTROL DUST.

7. THE CONTRACTOR WILL PREVENT SEDIMENTS FROM ENTERING UTILITIES BY INSTALLING FILTER FABRIC OR OTHER APPROVED DEVICES AROUND STRUCTURES.

8. ALL EXCAVATED MATERIAL MUST BE KEPT WITHIN THE "LIMITS OF DISTURBANCE."

9. PLACE GEOTEXTILE STYLE SILT FENCES PRIOR TO ANY EXCAVATIONS INDICATED BY THE EROSION CONTROL DRAWINGS. THE EROSION/SEDIMENTATION CONTROL (E.S.C.) MEASURES SHOWN ARE THE MINIMUM REQUIREMENTS FOR THE ANTICIPATED CONSTRUCTION.

## LEGEND

- CONSTRUCTION FENCE
- SILT FENCE
- STORM DRAIN INLET PROTECTION

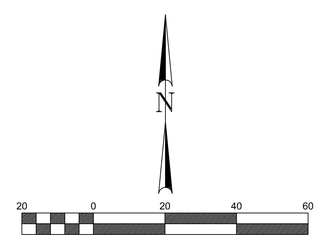


# North Temple Store
# 1255 w. North Temple
# Storm Water Pollution Prevention Plan


231 West 800 South Salt Lake City, Utah 84101
Ward Engineering Group
Planning • Engineering • Surveying
PH: 801 . 487 . 8040 FX: 801 . 487 . 8668


CLIENT: Eaton Architects
DWG: SWPPP
JOB No: EA01
DO NOT SCALE THIS DRAWING (DRAWING IS REDUCED IF LESS THAN 24in x 36in - DIMENSIONS AND NOTES TAKE PRECEDENCE)

DRAWN BY: cdr
DESIGN BY: cdr
CHECKED BY: MTD
DATE: 1-23-08

REVISIONS

SHEET
C-500

FILENAME: T:\Eaton Architecture\EA001n. temple ikpour store\Design\Preliminary\SWPPP.dwg TAB: Layout1 PLOT DATE AND TIME: 3/31/2008 4:18 PM

# REFERENCE NOTES

1. DEMO. / REMOVE EXIST. LIFT UNIT.
2. DEMO. / REMOVE EXIST. FENCE TRASH BIN ENCLOSURE.
3. DEMO. / REMOVE EXIST. CONC. PAVING.
4. DEMO. / REMOVE EXIST. ASPH. PAVING AT NEW BLDG. ADDITION AREA.
5. NEW 4" CONC. SLAB ON 4" GRANULAR BASE W/ CONTROL JOINTS AT 5'-0" MAX. SPACING. SLOPE AWAY FROM BUILINDG AT 2% MIN.
6. NEW 6" CONC. SLAB ON 4" GRANULAR BASE W/ CONTROL JOINTS AT 10'-0" MAX. SPACING. SLOPE AWAY FROM BUILDING AT 2% MIN.
7. NEW PAINTED PARKING STRIPING.
8. NEW 3" ASPH. PAVING ON 8" ROAD BASE.
9. EXIST. ASPH. PAVING TO REMAIN.
10. DEMO. / REMOVE EXIST. CHAIN-LINK FENCE AND GATE.
11. NEW 8" x 12" HIGH REINF. CONC. BARRIER WALL BEHIND THE DUMPSTER.
12. NEW PAINTED STEEL PIPE BOLLARD.
13. NEW CONT. CONC. CURB W/ CONTROL JOINTS AT 10'-0" MAX. SPACING.
14. EXIST. NATURAL GRASSES TO REMAIN.
15. EXIST. FENCE TO REMAIN.
16. NEW CONC. WHEEL STOP.
17. PROVIDE CONSTRUCTION FENCING W/ GATE AT THIS LOCATION. ALLOW FOR EXISTING ACCESSIBLE PARKING.
18. AREA BEYOND CONSTRUCTION FENCING RESERVED FOR CONSTRUCTION STAGING.
19. NEW CATCH BASIN
20. DUMPSTER LOCATION
21. DASHED LINE HERE REPRESENTS THE LOADING TRUCK PATH OF TRAVEL
22. EXISTING PARKING AREA TO RECEIVER SLURRY SEAL WHERE NEEDE

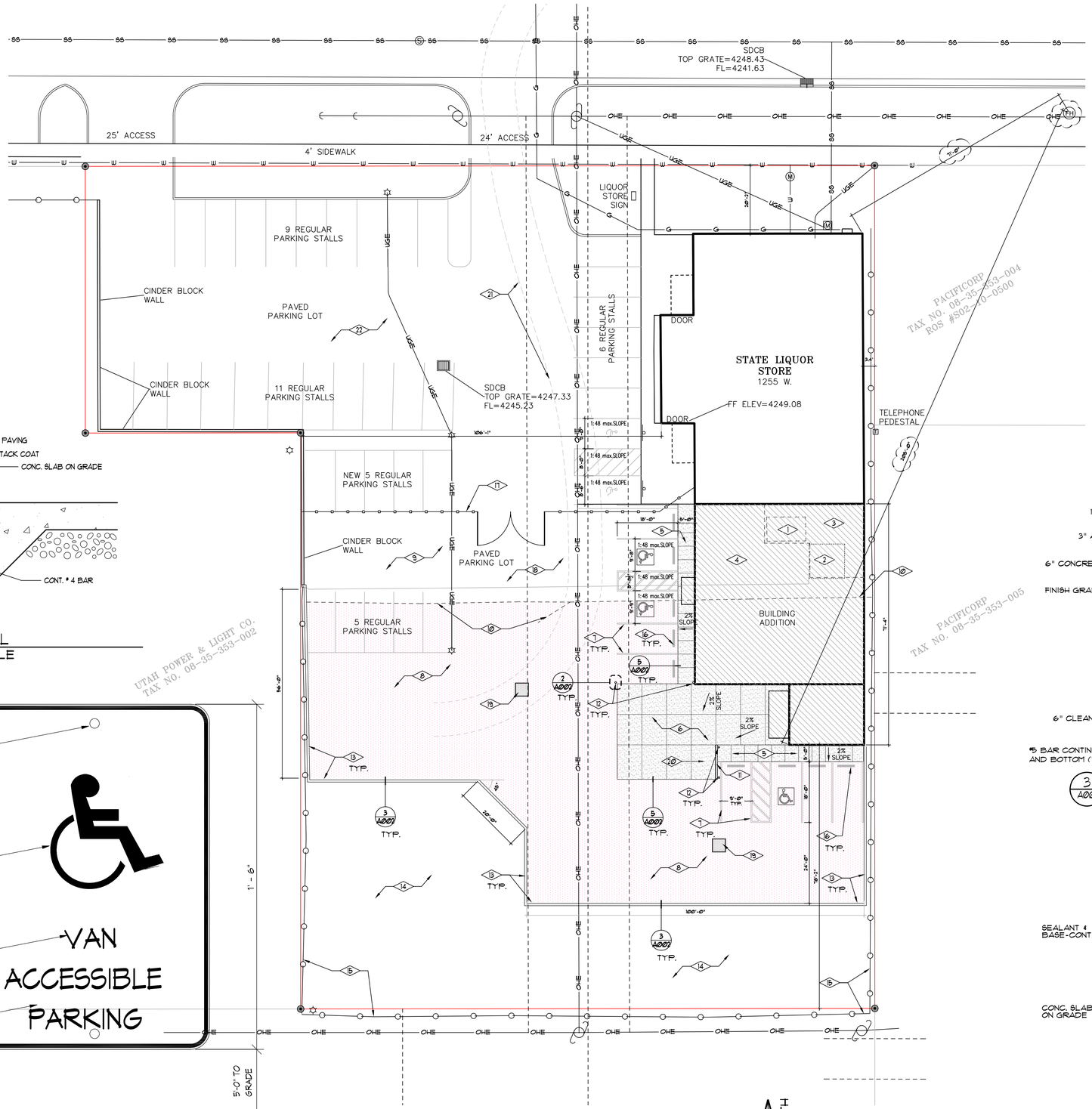


1 A001 SITE PLAN
SCALE: 1/16" = 1'-0"

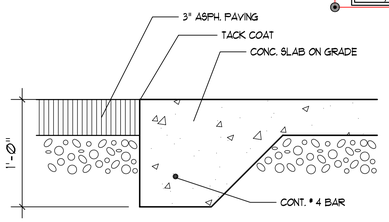


5 A001 SIDEWALK DETAIL
SCALE: NOT TO SCALE

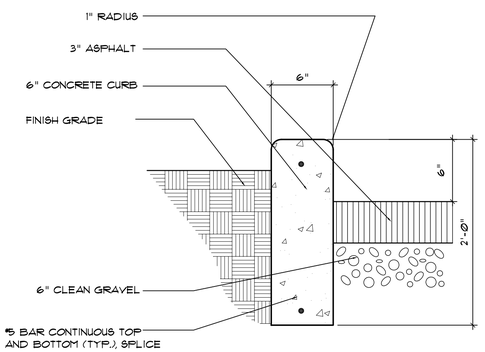


3 A001 CURB DETAIL
SCALE: NOT TO SCALE

4 A001 WALL MOUNTED ACCESSIBLE SIGNAGE DETAIL
SCALE: NOT TO SCALE

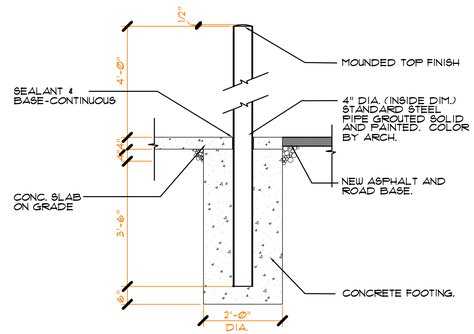


2 A001 PIPE BOLLARD DETAIL
SCALE: NOT TO SCALE


Eaton architecture
77 West 200 South, Suite 302
Salt Lake City, UT 84101
Tel 801/328-2982 Fax 801/328-2111


CONSULTANTS

STATE OF UTAH
ROBERT JAN EATON
751
LICENSED ARCHITECT

NORTH TEMPLE LIQUOR STORE REMODEL/ADD.
1255 WEST NORTH TEMPLE
SALT LAKE CITY, UTAH
100% REVIEW SET
D.F.C.M. # 07269030

OWNER
UTAH D.F.C.M./ DEPT. OF ALCOHOLIC BEVERAGE CONTROL

| MARK | DATE | DESCRIPTION |
|---|---|---|
| | 02-25-08 | CD / BID SET |
| | 01-28-08 | 100% REVIEW SET |

PROJECT NUMBER: 2007-23
DRAWING FILE:
DRAWN BY: AAF.
CHECKED BY:


COPYRIGHT 2003 EATON ARCHITECTURE, LLC


SHEET TITLE

ARCHITECTURAL SITE PLAN

A001

OF

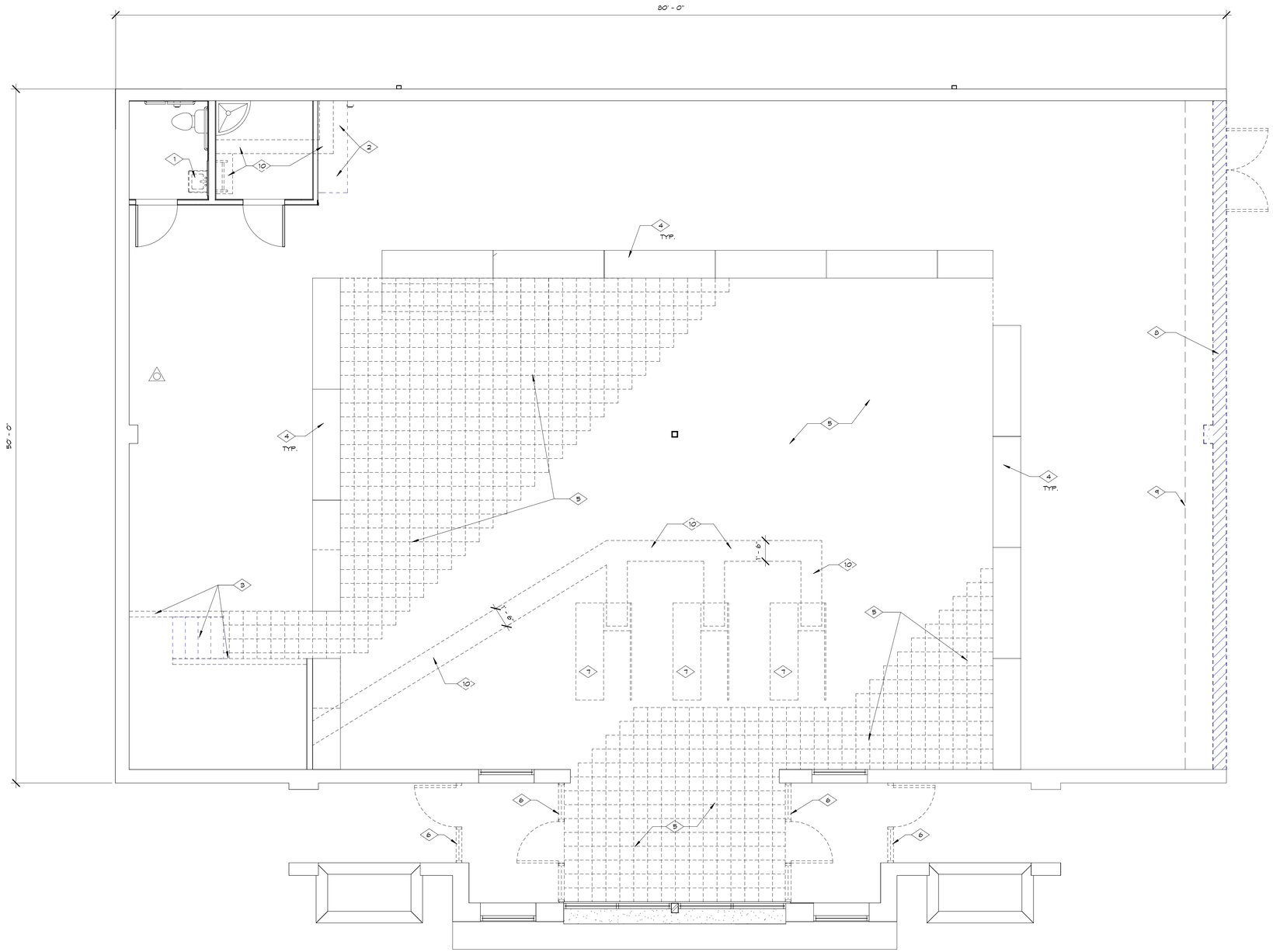


1 AD101 DEMOLITION PLAN
1/4" = 1'-0"

NORTH

## REFERENCE NOTES

1. DEMO./REMOVE EXIST. LAV. SEE PLUMB. SHEETS.
2. DEMO./REMOVE EXIST. CSWK. AND SINK. SALVAGE EXIST. CHILLER UNIT FOR REINSTALLATION. SEE PLUMB. SHEETS.
3. DEMO./ REMOVE EXIST. WALLS, STAIRS AND HANDRAILS. INSTALL FLOOR STRUCT. SHORING PRIOR TO DEMO. SEE STRUCT. SHEETS.
4. EXIST. SHELVING UNITS, TO REMAIN. RELOCATED/ REINSTALLED BY OWNER. (N.I.C.) SHELVING UNITS REQUIRE SEISMIC ANCHORING SUBMITTAL REQUIRED AS PER I.B.C.
5. DEMO./ REMOVE EXIST. TILE AND PREP. CONC. SLAB FOR NEW THICK-TILE INSTALLATION.
6. DEMO./ REMOVE EXIST. STORE FRONT, GLAZING, DOORS AND HDWR.
7. DEMO./ REMOVE EXIST. CASHIER CSWK. FXTR.'S.
8. DEMO./ REMOVE EXIST. 8" C.M.U. BEARING WALL W/ FURRING, GYP. BD. AND EIFS. CUT-DOWN EXIST. CONC. FDTN. WALL. SEE STRUCT. SHEETS AND DEMO. PHASING NOTES.
9. SAW-CUT/ DEMO. EXIST. CONC. FLOOR SLAB AS RQD. TO DEMO FDTN. WALL AND FOR NEW FTG. WORK.
10. SAW-CUT/ DEMO. EXIST. CONC. FLOOR SLAB FOR UNDERGROUND LINES.
11. SEE SITE PLAN A001 FOR SITE DEMO. WORK.

## SYMBOL LEGEND

EXIST. WALL TO REMAIN.

EXIST. WALL/ ITEM TO BE DEMOLISHED.

## DEMOLITION PHASING NOTES

1. EXIST. STORE TO REMAIN FULLY OCCUPIED AND OPERATIONAL DURING CONST. OF NEW ADDITION. CONTRACTOR SHALL COORD. W/ D.A.B.C.
2. ALL DEMOLITION WORK AT EXIST. BLDG. INTERIOR SHALL OCCUR FOLLOWING COMPLETION OF THE NEW ADDITION TO MINIMIZE THE TIME PERIOD WHEN THE STORE WILL BE CLOSED.
3. SCHEDULE DEMO. OF EXIST. MASONRY BEARING WALL W/ D.A.B.C. TO MINIMIZE THE IMPACT ON OPERATION HOURS. INSTALL STRUCT. SHORING FOR ROOF STRUCT. PRIOR TO WALL DEMOLITION. SEE STRUCT. SHEETS.
4. SHEDULE W/ D.A.B.C. DEMO. WORK AT EXIST. BLDG.
5. DEMO. EXIST. MASONRY BEARING WALL FOLLOWING CONST. OF NEW ADDITION BLDG. SHELL TO MAINTAIN SECURE ENCLOSURE THOUGHOUT CONST.

Eaton architecture
77 West 200 South, Suite 302
Salt Lake City, Utah 84101
Tel 801/328-2982 Fax 801/328-2111

CONSULTANTS

STATE OF UTAH
ROBERT JAN EATON
751
LICENSED ARCHITECT

# NORTH TEMPLE LIQUOR STORE REMODEL/ADD.

1255 WEST NORTH TEMPLE
SALT LAKE CITY, UTAH

100% REVIEW SET
D.F.C.M. # 07269030

**OWNER:**
UTAH D.F.C.M./ DEPT. OF ALCOHOLIC BEVERAGE CONTROL

| MARK | DATE | DESCRIPTION |
|---|---|---|
| | 01-28-08 | 100 % REVIEW SET |
| | 02-25-08 | CD / BID SET |
| | | |
| | | |
| | | |
| | | |
| | | |

PROJECT NUMBER: 2007-23
DRAWING FILE:
DRAWN BY: AAF.
CHECKED BY:

COPYRIGHT 2007 EATON ARCHITECTURE, INC.

SHEET TITLE

DEMOLITION PLAN

AD101

S:\Current Project Files\2007\2007-23 North Temple Liquor Store\Drawings\Revit\North Temple Liquor Store - Record Drawings.rvt

3/31/2008 9:35:32 AM

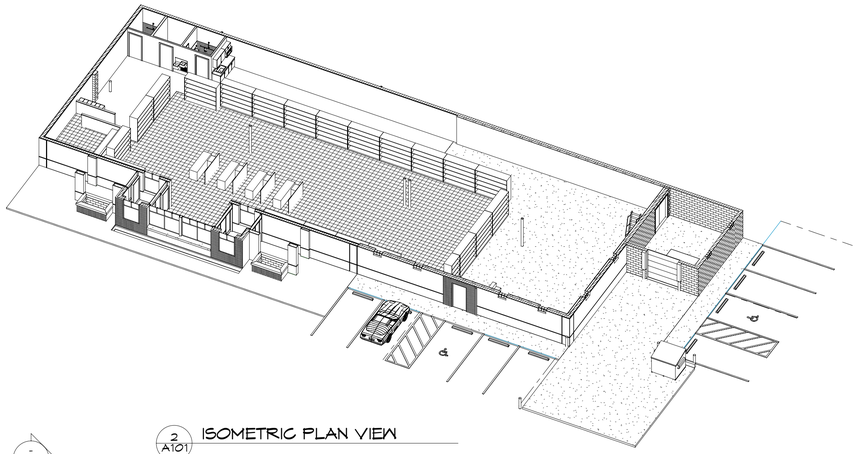

2 A101 ISOMETRIC PLAN VIEW

## SYMBOL LEGEND

- EXIST. WALLS TO REMAIN
- NEW 8" CMU. WALL CONST. W/6" MTL. STUD FURRING W/ R-19 BATT INSUL. W/ 5/8" PAINTED GYP. BD. AT INTERIOR SIDE AT EIFS. STUCCO AT EXTERIOR.
- NEW MTL. STUD FRAMED PARTITION W/ 5/8" PAINTED GYP. PAINTED GYP. BD. AT EXPOSED SIDES.
- 8" CMU. WALL.
- NEW CONC. SLAB.

## REFERENCE NOTES

1. NEW PLUMB. FIXTRS.
2. NEW STAIRS W/ HANDRAILS.
3. P.O.S. CASEWORK BY OWNER. (N.I.C.).
4. SHELVING BY OWNER. (N.I.C.) TO BE INSTALLED W/ SEISMIC ANCHORING. SEISMIC ANCHORING SUBMITTAL REQUIRED PER I.B.C. 105.2.
5. NEW CASEWORK UNIT.
6. NEW SHIPS LADDER TO ROOF.
7. NEW DOCK LEVELER.
8. BAILER UNIT BY OWNER.
9. DEMO./REMOVE EXIST FLOOR TILE. INSTALL NEW THICK-SET PORCELAIN PAVER TILE FLOORING.
10. DEMO. EXIST. STORE FRONT AND DOOR. INSTALL NEW STORE FRONT AND POWERED SLIDING STORE FRONT DOOR.
11. INSTALL NEW 4" CONC. FLOOR SLAB ON 4" GRANULAR BASE. SEE STRUCT. SHEETS.
12. NEW 6" CONC. PAVING ON 4" GRANULAR.
13. NEW 4" CONC. SLAB ON 4" GRANULAR BASE.
14. NOT USED.
15. NOT USED.
16. TRASH BIN BY OWNER. (N.I.C.)
17. PAINTED STEEL PIPES BOLLARD.
18. NEW PARKING STRIPING.
19. WHEEL STOP.
20. NEW LOCKERS W/ BENCH.
21. NEW ENTRY WALK OFF MAT TO REPLACE EXISTING. COORDINATE SIZE W/ EXISTING.
22. NEW DISPLAY CASES BY OWNER (N.I.C.).
23. NEW HI/LOW DRINKING FOUNTAIN.
24. PROVIDE PUSH BUTTON AUTO DOOR AT ACCESSIBLE RESTROOM.
25. FIRE ALARM PANEL TO BE TRIMMED OUT AT WALL.
26. ELECT. PANELS AT OFFICE WALL TO BE INSTALLED AND ARRANGED IN AN ORDERLY FASHION (IE LINE UP TOPS). SEE ELECT.
27. PROVIDE CHAIR RAIL AT SHOPPING CART STORAGE TO PROTECT WALL.
28. PROVIDE DIRECT ADHERED FRIP SHEET AND TOOL HOOKS OR CLAMPS FOR SNOW SHOVELS, BROOMS, ETC IN THIS LOCATION OR PER OWNER.

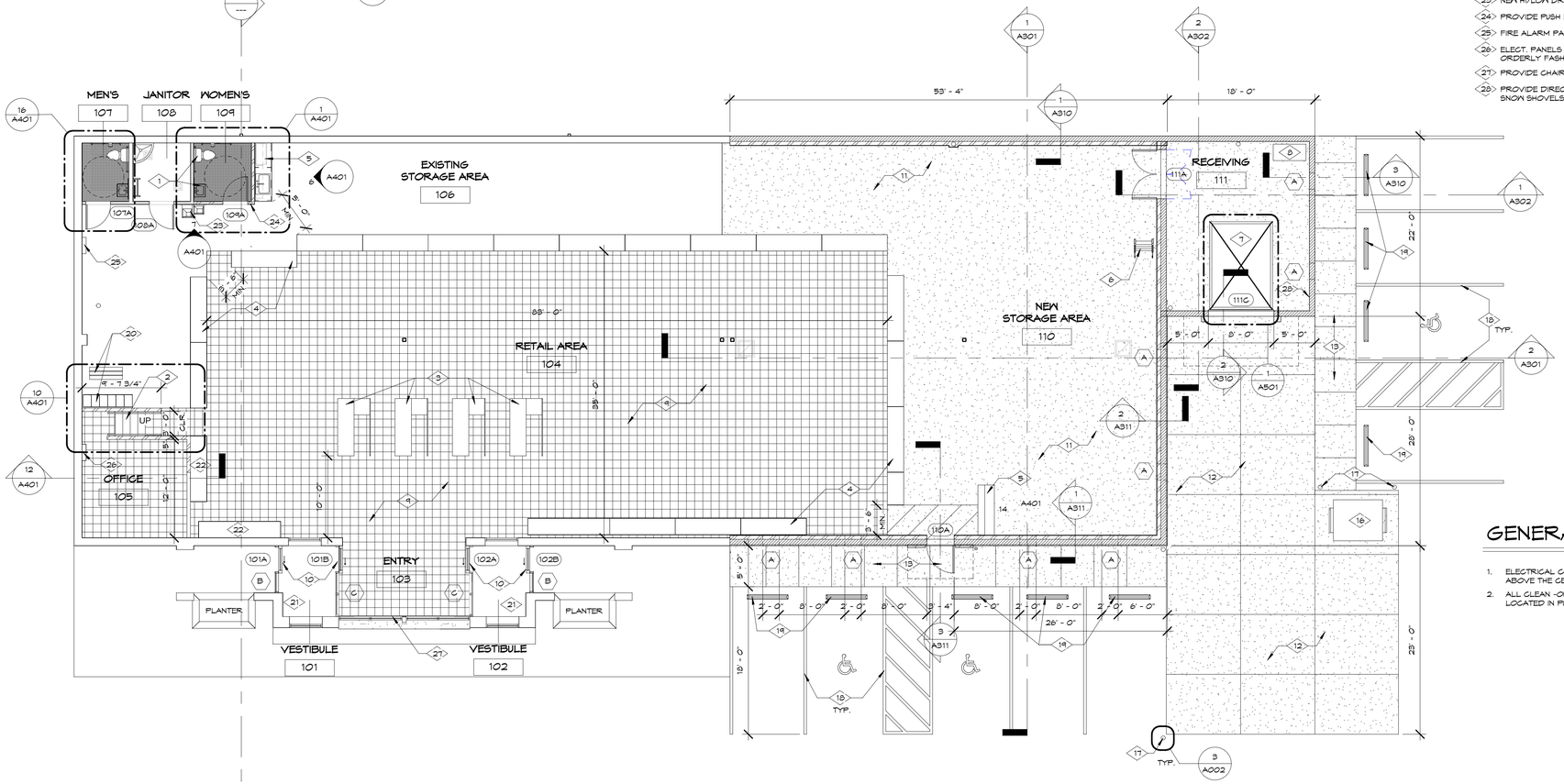


1 A101 FLOOR PLAN
1/8" = 1'-0"

NORTH

## GENERAL NOTES

1. ELECTRICAL CONTRACTOR SHALL LOCATE ALL JUNCTION BOXES ABOVE THE CEILING GRID WHERE POSSIBLE.
2. ALL CLEAN -OUT, COVER PLATES, AND DOORS, SHALL NOT BE LOCATED IN PUBLIC SPACES (IE ENTRY, RETAIL, RESTROOMS)


Eaton Architecture
77 West 200 South, Suite 302
Salt Lake City, Utah 84101
Tel 801/328-2982 Fax 801/328-2111


CONSULTANTS

STATE OF UTAH
ROBERT JAN EATON
751
LICENSED ARCHITECT

# NORTH TEMPLE LIQUOR STORE REMODEL/ADD.

1255 WEST NORTH TEMPLE
SALT LAKE CITY, UTAH

100% REVIEW SET
D.F.C.M. # 07269030

OWNER:
UTAH D.F.C.M./ DEPT. OF ALCOHOLIC BEVERAGE CONTROL

| MARK | DATE | DESCRIPTION |
|---|---|---|
| | 01-28-08 | 100 % REVIEW SET |
| | 02-25-08 | CD / BID SET |

PROJECT NUMBER: 2007-23
DRAWING FILE:
DRAWN BY: AAF.
CHECKED BY:


COPYRIGHT 2007 EATON ARCHITECTURE, INC.


SHEET TITLE

FLOOR PLAN

A101


S:\Current Project Files\2007\2007-23 North Temple Liquor Store\Drawings\Revit\North Temple Liquor Store - Record Drawings.rvt


3/31/2008 9:28:05 AM

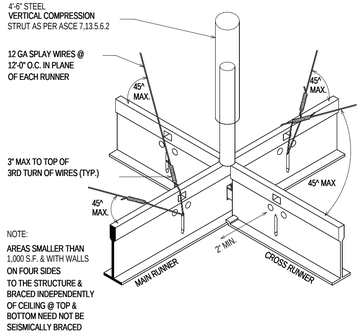


2 A110 SUSP. CEILING SEISMIC BRACING

NOT TO SCALE

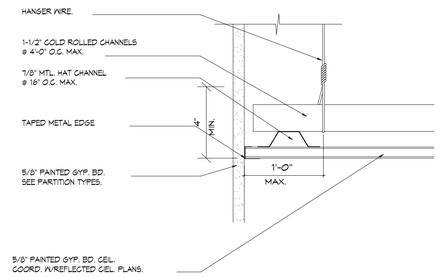


3 A110 TYP. SUSP. HARD GYP. BD. EDGE DETAIL

NOT TO SCALE

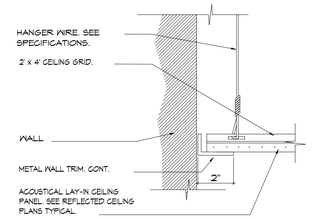


4 A110 TYP. SUSP. CEIL. EDGE DETAIL

NOT TO SCALE

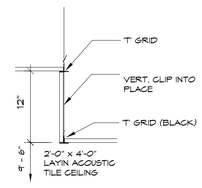


5 A110 CEILING DETAIL

NOT TO SCALE

## REFERENCE NOTES

1. MODIFY EXIST. CEIL. GRID TO EXTEND RAISED CEILING AREA.
2. TIE NEW CEIL. GRID TO EXIST.
3. EXIST. CEIL./ SOFFIT TO REMAIN.
4. CEILING MOUNTED SIGN TO READ: "ACCESSIBLE PUBLIC RESTROOMS THIS WAY".
5. DASHED LINE HERE INDICATE LOCATION OF SHELVINGS.

## CEILING LEGEND

- EXIST. LIGHT FIXTR. TO REMAIN. SALVAGED OR REMOVED LIGHTS TO RE-INSTALL AT NEW LOCATIONS. SEE ELEC. SHEETS.
- NEW 2'X4' DIRECT-INDIRECT LAY-IN LT. FIXTR.
- 1'X4' CHAIN SUSPENDED LT. FIXTR.
- ROOF ACCESS HATCH 2'-6" X 6'X6".
- HVAC SUPPLY-AIR DIFFUSER.
- HVAC RETURN-AIR DIFFUSER.
- LINEAR WALL MOUNTED LT. FIXTR.
- NEW SUSP. CEIL. GRID AND PANELS AT ADDITION AREA.
- EXIST. CEIL. GRID TO REMAIN. DEMO. EXIST. PANELS. INSTALL NEW PANELS.
- OPEN TO STRUCTURE.
- EXIT — EXIT SIGNAGE

## GENERAL NOTES

1. JUNCTION BOXES TO BE LOCATED ABOVE CEILING WHERE POSSIBLE.
2. FIRE SPRINKLERS TO BE CENTERED IN NEAREST SUSPEND GRID PANEL.

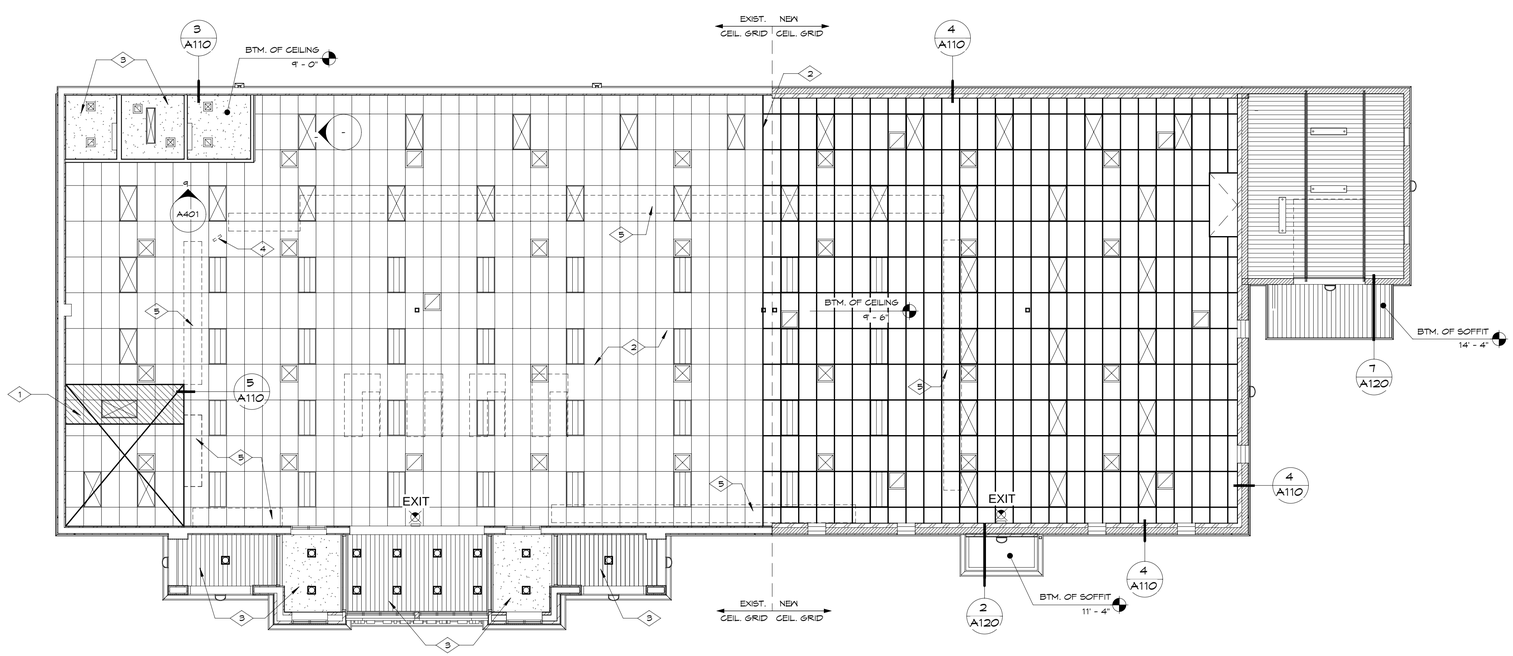


1 A110 REFLECTED CEILING PLAN

1/8" = 1'-0"

NORTH

Eaton architecture
77 West 200 South, Suite 302
Salt Lake City, Utah 84101
Tel 801/328-2982 Fax 801/328-2111

CONSULTANTS

STATE OF UTAH — ROBERT JAN EATON — 751 — LICENSED ARCHITECT

NORTH TEMPLE LIQUOR STORE REMODEL/ADD.

1255 WEST NORTH TEMPLE
SALT LAKE CITY, UTAH

100% REVIEW SET
D.F.C.M. # 07269030

OWNER:
UTAH D.F.C.M./ DEPT. OF ALCOHOLIC BEVERAGE CONTROL

| MARK | DATE | DESCRIPTION |
|---|---|---|
| | 01-28-08 | 100 % REVIEW SET |
| | 02-25-08 | CD / BID SET |

PROJECT NUMBER: 2007-23
DRAWING FILE:
DRAWN BY: AAF.
CHECKED BY:

COPYRIGHT 2007 EATON ARCHITECTURE, INC.

SHEET TITLE

REFLECTED CEILING PLAN

A110

S:\Current Project Files\2007\2007-23 North Temple Liquor Store\Drawings\Revit\North Temple Liquor Store - Record Drawings.rvt

3/31/2008 9:29:10 AM

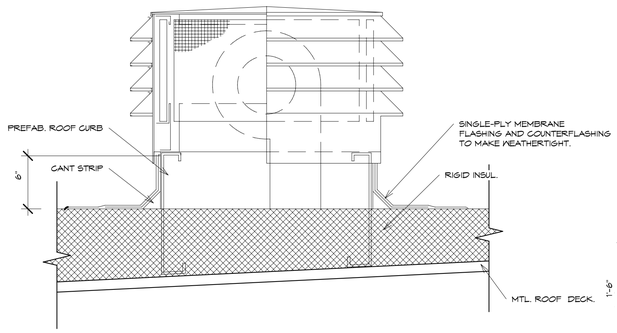


9 A120 TYP. ROOF TOP MECH. EQUIP. CURB DETAIL
1 : 1

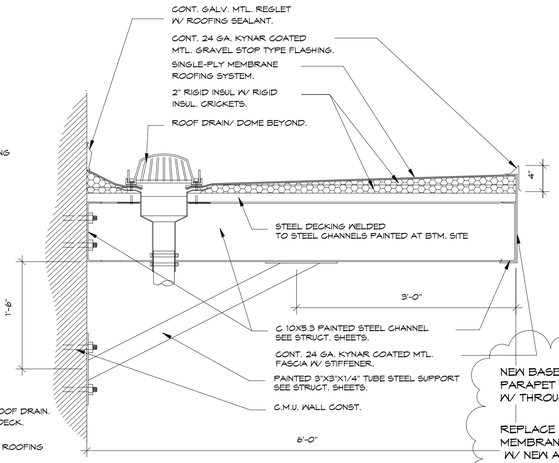


7 A120 CANOPY SECTION
1" = 1'-0"

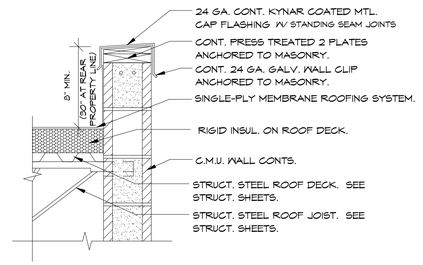


6 A120 ROOF PARAPET DETAIL
1" = 1'-0"

## REFERENCE NOTES

1. SINGLE-PLY MEMBRANE ROOF SYSTEM ON 1 1/2" RIGID INSUL.
2. RIGID INSUL. ROOF CRICKET.
3. PRIMARY/SECONDARY ROOF DRAIN. SEE PLUMB. SHEETS.
4. ROOF TOP MECH. UNIT. SEE MECH. SHEETS.
5. ROOF ACCESS HATCH W/ GUARD RAILS.
6. DOCK CANOPY.
7. CONT. KYNAR COATED 24 GA. MTL. CAP FLASHING.
8. ROOF EXPANSION CURB JOINT.
9. ROOF WALK PADS.
10. METAL ROOF DECK AND BUILT-UP SYSTEM TO BE REMOVED BACK TO JOIST AS PER STRUCTURAL IN THIS LOCATION. BUILT UP ROOF SYSTEM TO BE REPLACED TO MATCH EXISTING IN THIS AREA AFTER ROOF CURB AND ROOF CONNECTION HAS BEEN DONE MEMBRANE TO CONTINUE UP TO CURB CAP FLASHING. SEE STRUCTURAL.

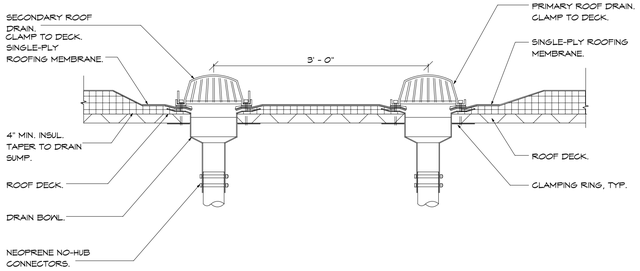


8 A120 PRIMARY & SECONDARY ROOF DRAIN DETAIL
1" = 1'-0"

NEW BASE PLATE FOR PARAPET WALL ATTACHED W/ THROUGH BOLT.

REPLACE BUILT UP ROOF MEMBRANE AND BALLAST W/ NEW AFTER ROOF CURB AND ROOF CONNECTION

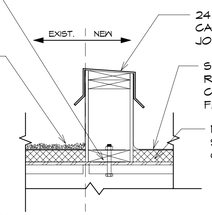


24 GA. CONT. KYNAR COATED MTL. CAP FLASHING W/ STANDING SEAM JOINTS.

SINGLE-PLY MEMBRANE ROOFING SYSTEM TO BE CONTINUOS TO CURB CAP FLASHING

NEW OVERLAPING STEEL DECK SECTION SPANNING ACROSS NEW AND OLD DECK.,

5 A120 ROOF DETAIL
1" = 1'-0"

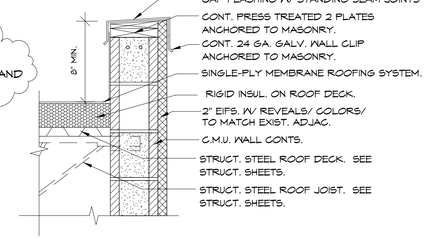


4 A120 ROOF PARAPET DETAIL.
1" = 1'-0"

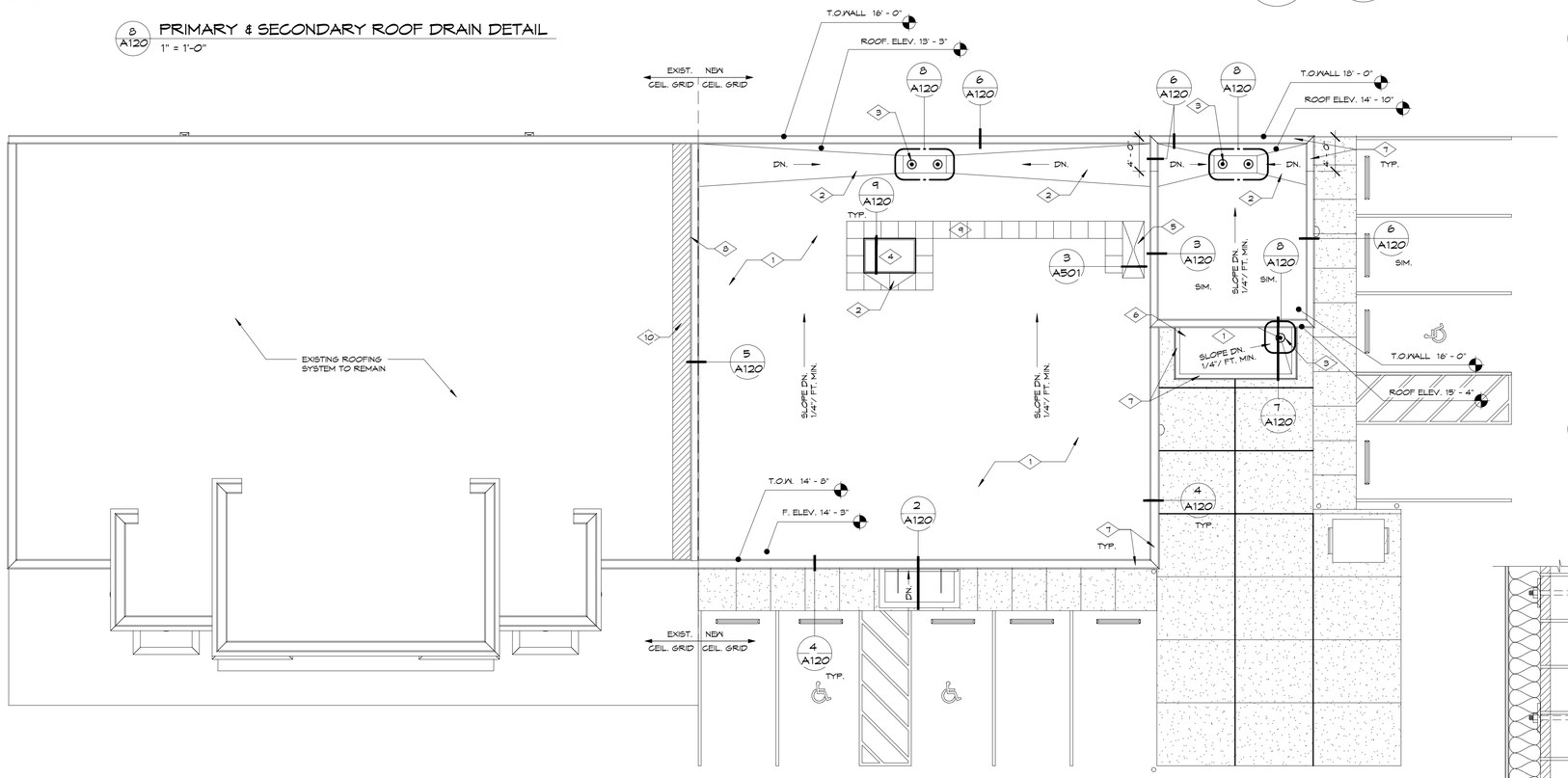


1 A120 ROOF PLAN
1/8" = 1'-0"

NORTH

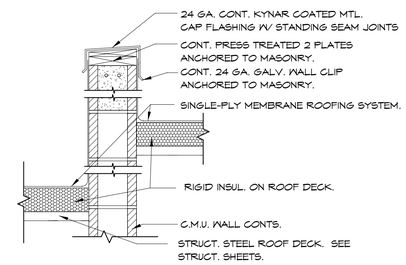


3 A120 ROOF PARAPET DETAIL..
1" = 1'-0"

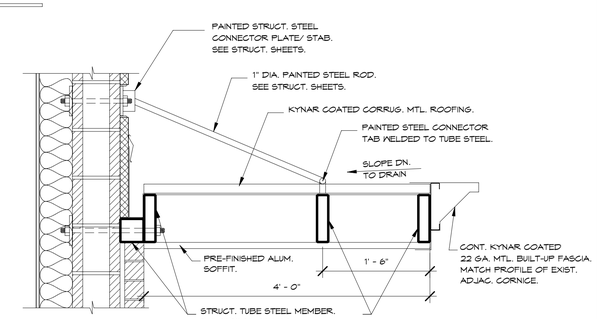


2 A120 CANOPY SECTION.
1" = 1'-0"


Eaton Architecture
77 West 200 South, Suite 302
Salt Lake City, Utah 84101
Tel 801/328-2982 Fax 801/328-2111


CONSULTANTS

STATE OF UTAH
ROBERT JAN EATON
751
LICENSED ARCHITECT

# NORTH TEMPLE LIQUOR STORE REMODEL/ADD.

1255 WEST NORTH TEMPLE
SALT LAKE CITY, UTAH

100% REVIEW SET
D.F.C.M. # 07269030

OWNER:
UTAH D.F.C.M./ DEPT. OF ALCOHOLIC BEVERAGE CONTROL

| MARK | DATE | DESCRIPTION |
|---|---|---|
| | 01-28-08 | 100 % REVIEW SET |
| | 02-25-08 | CD / BID SET |

PROJECT NUMBER: 2007-23
DRAWING FILE:
DRAWN BY: AAF.
CHECKED BY:


COPYRIGHT 2007 EATON ARCHITECTURE, INC.


SHEET TITLE

ROOF PLAN

A120


S:\Current Project Files\2007\2007-23 North Temple Liquor Store\Drawings\Revit\North Temple Liquor Store - Record Drawings.rvt

## REFERENCE NOTES

1. EIFS. STUCCO SYSTEM TO MATCH EXIST.
2. PAINTED CMU.
3. NEW PAINTED STEEL CANOPY. SEE ROOF PLAN.
4. NEW PAINTED MTL. DOOR.
5. NEW GLASS BLOCK WINDOW.
6. NEW OVERHEAD DOOR.
7. TRASH BIN BY OWNER. (N.I.C.)
8. PAINTED STEEL GUARD RAIL.
9. PAINTED STEEL PIPE BOLLARD.
10. ACCESSIBLE PKG. SIGN.
11. NEW EXT. LIGHT FIXTURE. SEE ELECT.
12. NEW BRICK VENEER TO MATCH EXIST.
13. NEW CONCRETE BARRIER WALL . SEE SITE PLAN
14. EIFS. OR CERAMIC DETAIL TO MATCH EXISTING.
15. EIFS. REVEAL TO MATCH EXISTING.

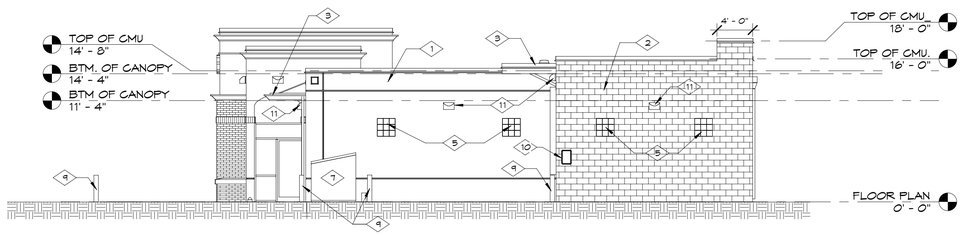


3 A201 SOUTH ELEVATION
1/8" = 1'-0"

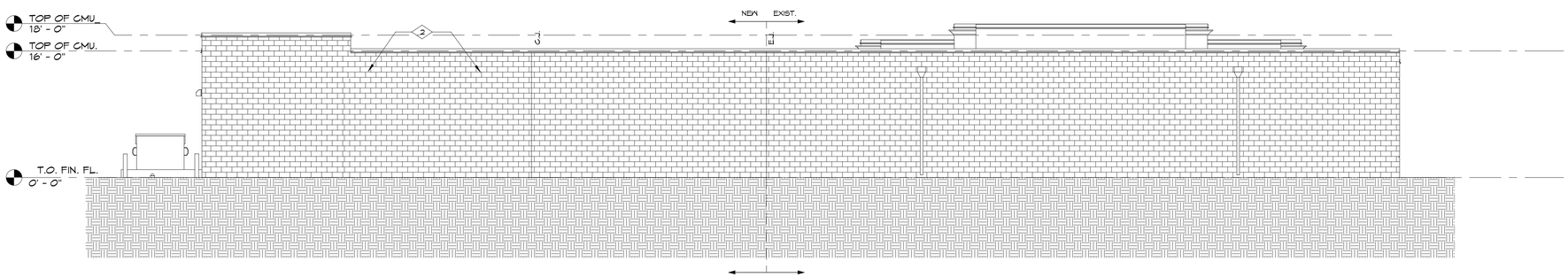


2 A201 EAST ELEVATION
1/8" = 1'-0"

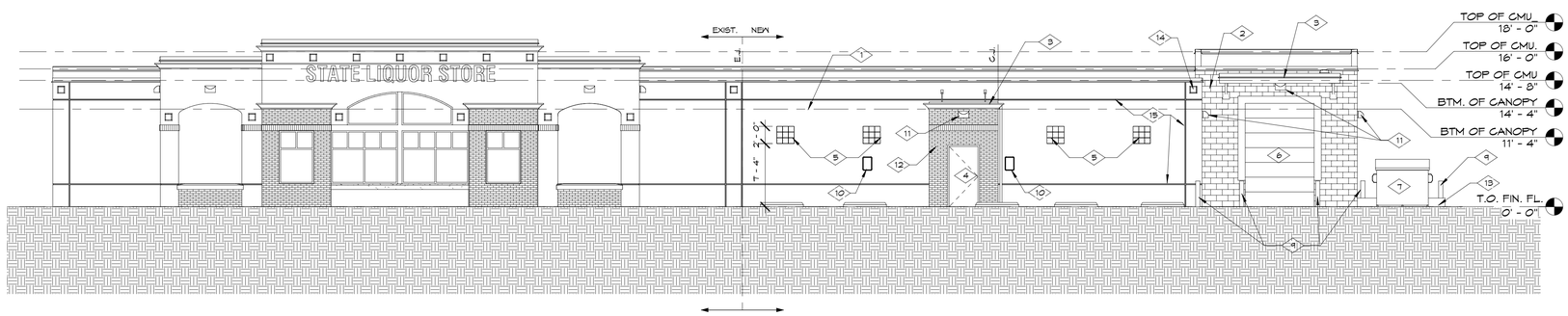


1 A201 WEST ELEVATION
1/8" = 1'-0"


Eaton Architecture
77 West 200 South, Suite 302
Salt Lake City, Utah 84101
Tel 801/328-2982 Fax 801/328-2111


CONSULTANTS

STATE OF UTAH
ROBERT SAN EATON
751
LICENSED ARCHITECT

NORTH TEMPLE LIQUOR STORE REMODEL/ADD.
1255 WEST NORTH TEMPLE
SALT LAKE CITY, UTAH
100% REVIEW SET
D.F.C.M. # 07269030
OWNER:
UTAH D.F.C.M./ DEPT. OF ALCOHOLIC BEVERAGE CONTROL

| MARK | DATE | DESCRIPTION |
|---|---|---|
| | 01-28-08 | 100 % REVIEW SET |
| | 02-25-08 | CD / BID SET |

PROJECT NUMBER: 2007-23
DRAWING FILE:
DRAWN BY: AAF.
CHECKED BY:


COPYRIGHT 2007 EATON ARCHITECTURE, INC.


SHEET TITLE
EXTERIOR ELEVATIONS

A201


S:\Current Project Files\2007\2007-23 North Temple Liquor Store\Drawings\Revit\North Temple Liquor Store - Record Drawings.rvt
3/31/2008 9:30:58 AM

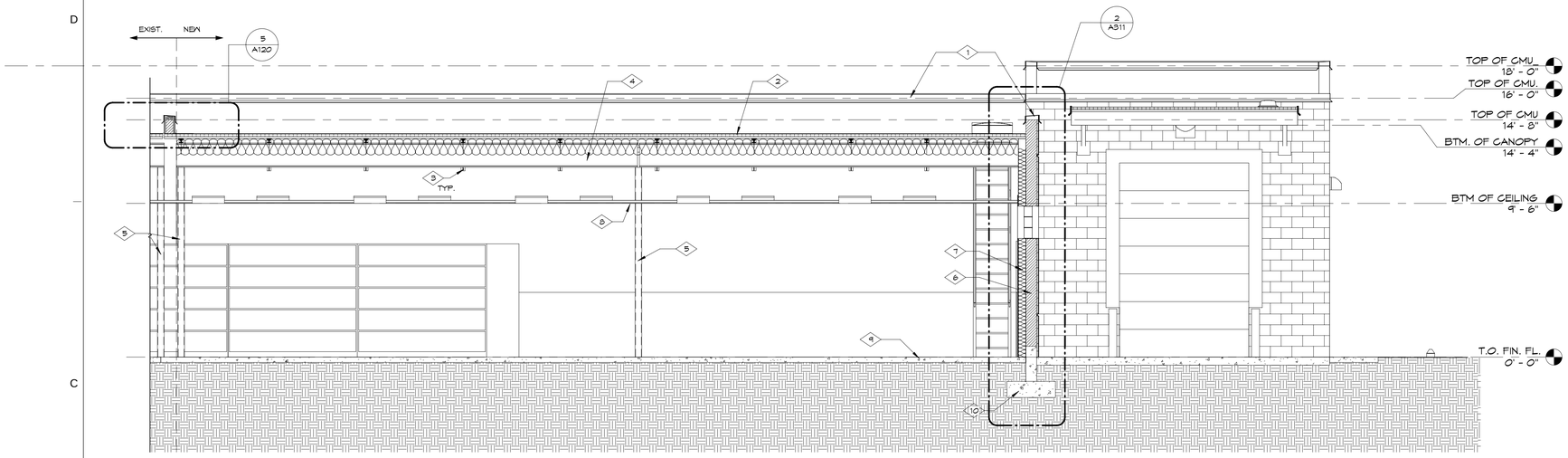


2 A301 BUILDING SECTION # 2
1/4" = 1'-0"

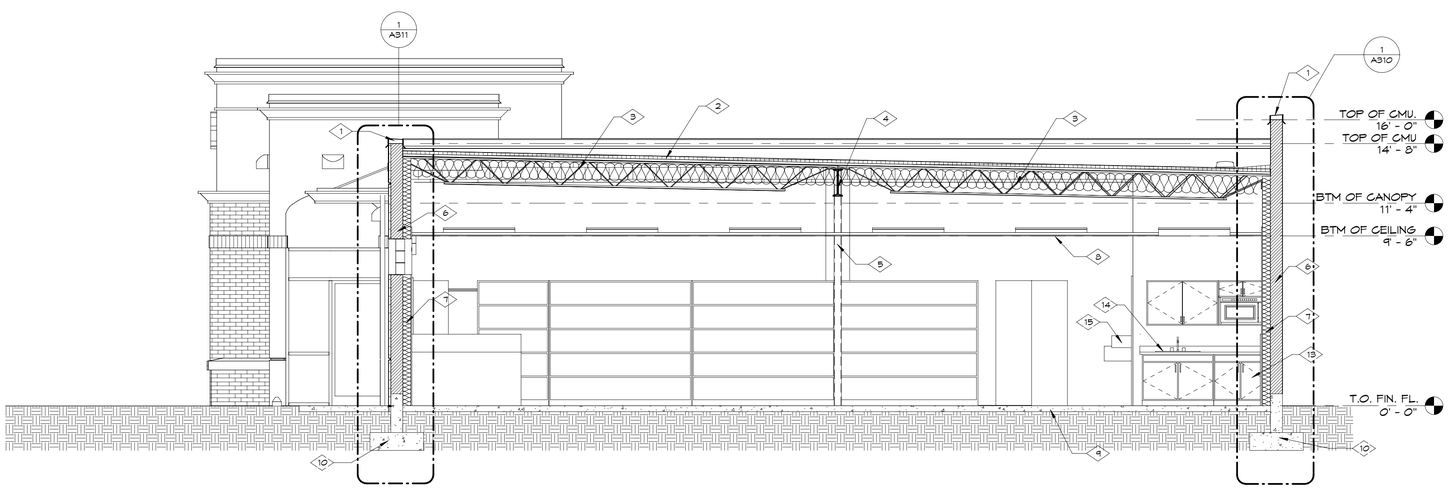


1 A301 BUILDING SECTION # 1
1/4" = 1'-0"

## REFERENCE NOTES

1. CONT. KYNAR COATED 24 GA. CAP FLASHING.
2. SINGLE-PLY MEMBRANE ROOFING ON 1 1/2" RIGID INSUL. ON METAL ROOF DECK.
3. STRUCT. STEEL ROOF JOIST. SEE STRUCT. SHEETS.
4. STRUCT. STEEL ROOF BEAM. SEE STRUCT. SHEETS.
5. PAINTED STRUCT. STEEL COLUMN. SEE STRUCT. SHEETS.
6. 8" C.M.U. WALL CONST. SEE STRUCT. SHEETS.
7. 6" MTL. STUD FURRING W/ R-19 BATT INSUL.
8. SUSPENDED GRID AND PANELCEIL SYSTEM.
9. 4" CONC. SLAB ON 4" GRANULAR BASE.
10. CONT. 8" REINF. CONC. FDTN. WALL ON CONT. REINF. CONC. FTG. SEE STRUCT. SHEETS.
11. CONT. 8" REINF. CONC. RETAINING WALL. SEE STRUCT SHEETS.
12. PAINTED STEEL PIPE GUARD RAIL.
13. NEW LAMINATE COVERED BASE AND UPPER CABINET AND COUNTER TOP.
14. NEW SINK. SEE PLUMBING.
15. NEW HI/LOW DRINKING FOUNTAIN. SEE PLUMBING.

Eaton architecture
77 West 200 South, Suite 302
Salt Lake City, Utah 84101
Tel 801/328-2982 Fax 801/328-2111

CONSULTANTS

STATE OF UTAH
ROBERT JAN EATON
751
LICENSED ARCHITECT

NORTH TEMPLE LIQUOR STORE REMODEL/ADD.
1255 WEST NORTH TEMPLE
SALT LAKE CITY, UTAH
100% REVIEW SET
D.F.C.M. # 07269030
OWNER:
UTAH D.F.C.M./ DEPT. OF ALCOHOLIC BEVERAGE CONTROL

| MARK | DATE | DESCRIPTION |
|---|---|---|
| | 01-28-08 | 100 % REVIEW SET |
| | 02-25-08 | CD / BID SET |

PROJECT NUMBER: 2007-23
DRAWING FILE:
DRAWN BY: AAF.
CHECKED BY:

COPYRIGHT 2007 EATON ARCHITECTURE, INC.

SHEET TITLE
BUILDING SECTIONS

A301

S:\Current Project Files\2007\2007-23 North Temple Liquor Store\Drawings\Revit\North Temple Liquor Store - Record Drawings.rvt

3/31/2008 9:32:01 AM

## REFERENCE NOTES

1. CONT. KYNAR COATED 24 GA. CAP FLASHING.
2. SINGLE-PLY MEMBRANE ROOFING ON 1 1/2" RIGID INSUL. ON METAL ROOF DECK.
3. STRUCT. STEEL ROOF JOIST. SEE STRUCT. SHEETS.
4. STRUCT. STEEL ROOF BEAM. SEE STRUCT. SHEETS.
5. PAINTED STRUCT. STEEL COLUMN. SEE STRUCT. SHEETS.
6. 8" C.M.U. WALL CONST. SEE STRUCT. SHEETS.
7. 6" MTL. STUD FURRING W/ R-19 BATT INSUL.
8. SUSPENDED GRID AND PANELCEIL SYSTEM.
9. 4" CONC. SLAB ON 4" GRANULAR BASE.
10. CONT. 8" REINF. CONC. FDTN. WALL ON CONT. REINF. CONC. FTG. SEE STRUCT. SHEETS.
11. CONT. 8" REINF. CONC. RETAINING WALL. SEE STRUCT SHEETS.
12. PAINTED STEEL PIPE GUARD RAIL.

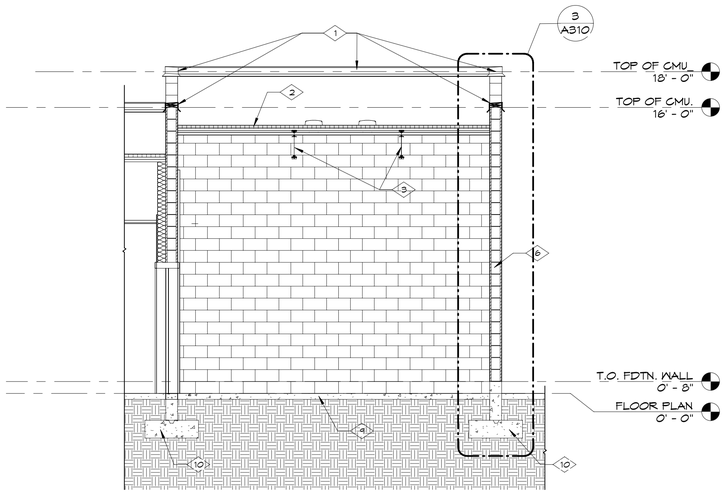


1 A302 BUILDING SECTION # 3
1/4" = 1'-0"

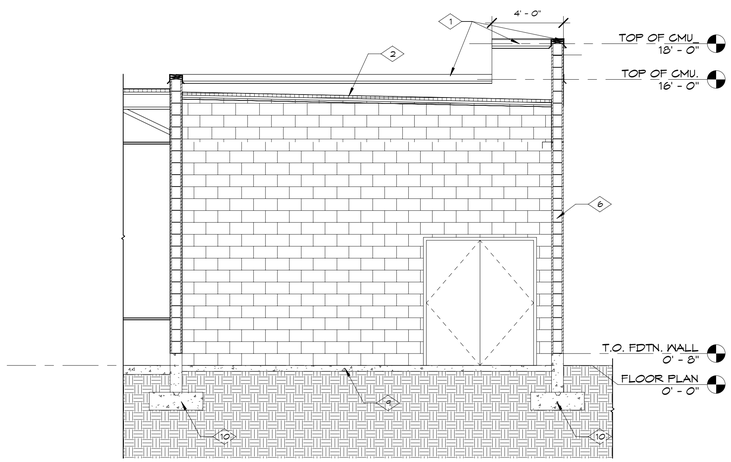


2 A302 BUILDING SECTION # 4
1/4" = 1'-0"


Eaton architecture
77 West 200 South, Suite 302
Salt Lake City, Utah 84101
Tel 801/328-2982 Fax 801/328-2111


CONSULTANTS

STATE OF UTAH
ROBERT JAN EATON
751
LICENSED ARCHITECT

NORTH TEMPLE LIQUOR STORE REMODEL/ADD.
1255 WEST NORTH TEMPLE
SALT LAKE CITY, UTAH
100% REVIEW SET
D.F.C.M. # 07269030
OWNER:
UTAH D.F.C.M./ DEPT. OF ALCOHOLIC BEVERAGE CONTROL

| MARK | DATE | DESCRIPTION |
|---|---|---|
| | 01-28-08 | 100 % REVIEW SET |
| | 02-25-08 | CD / BID SET |

PROJECT NUMBER: 2007-23
DRAWING FILE:
DRAWN BY: AAF.
CHECKED BY:


COPYRIGHT 2007 EATON ARCHITECTURE, INC.


SHEET TITLE
BUILDING SECTIONS

A302


S:\Current Project Files\2007\2007-23 North Temple Liquor Store\Drawings\Revit\North Temple Liquor Store - Record Drawings.rvt
3/31/2008 9:32:33 AM

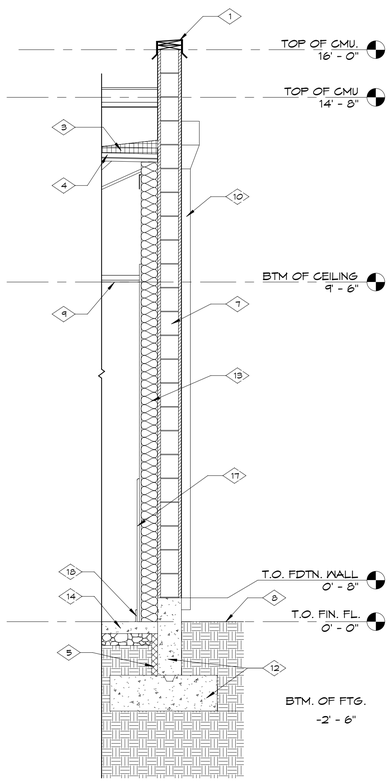


1 A310 WALL SECTION # 1
1/2" = 1'-0"

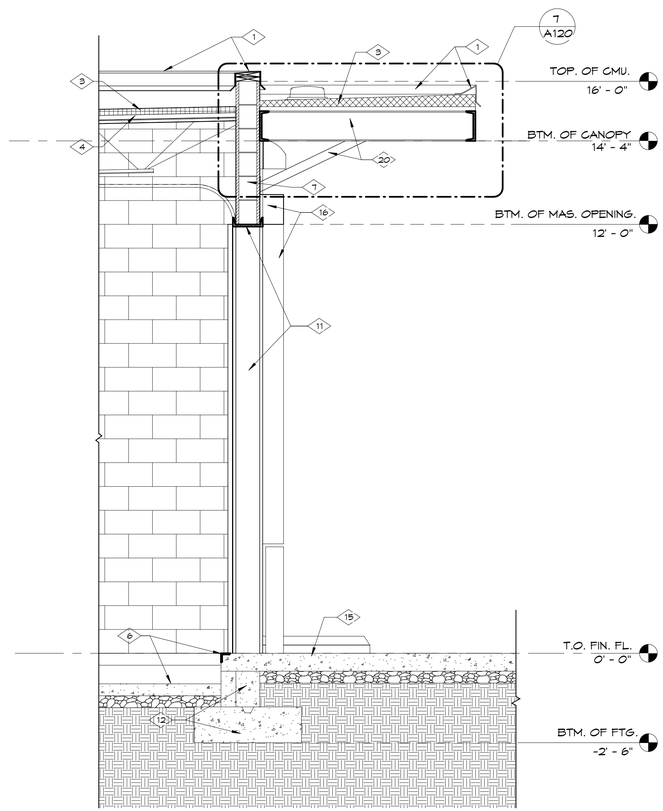


2 A310 WALL SECTION # 2
1/2" = 1'-0"

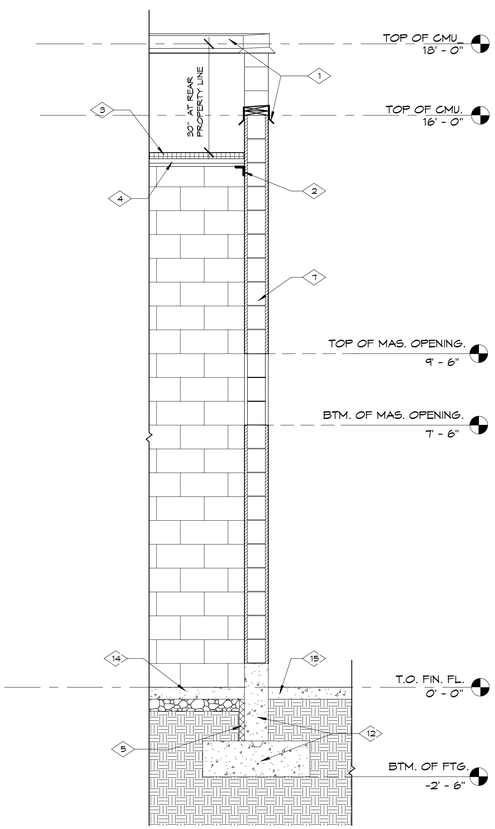


3 A310 WALL SECTION # 3
1/2" = 1'-0"

## REFERENCE NOTES

1. CONT. 24 GA. KYNAR COATED MTL. CAP FLASHING ON 2x8 P.T. TOP PLATES.
2. STRUCT. STEEL ANGLE ANCHORED TO MASONRY. SEE STRUCT. SHEETS.
3. SINGLE-PLY MEMBRANE ROOF SYSTEM ON 1-1/2" RIGID INSUL.
4. STRUCT. STEEL ROOF DECK ON STRUCT. STEEL ROOF JOISTS. SEE STRUCT. SHEETS.
5. CONT. 2" RIGID INSUL. BD. AT FDTN.
6. CONC. DOCK LEVELER PIT W/STEEL ANGLES AT EXPOSED EDGES/CORNERS.
7. REINF. 8" C.M.U. STRUCT. BEARING WALL SYSTEM. SEE STRUCT. SHEETS.
8. ADJAC. FINISHED GRADE. SEE CIVIL SHEETS.
9. SUSP. ACOUST. GRID AND PANEL CEILING SYSTEM.
10. KYNAR COATED 22 GA. MTL. DOWN SPOUT.
11. PAINTED STEEL CHANNEL JAMB/HEADER ANCHORED TO MASONRY.
12. CONT. REINF. 8" CONC. FDTN. ON CONT. REINF. CONC. FTG. SEE STRUCT. SHEETS.
13. 6" MTL. STUD FURRING AT 24" O.C. W/R-19 BATT INSUL. W/5/8" PAINTED GYP. BD.
14. 4" SEALED CONC. FLOOR SLAB ON 4" GRANULAR BASE. SEE STRUCT. SHEETS.
15. EXT. PAVING ON GRANULAR BASE. SEE SHEET.
16. DOCK SEALS.
17. 4' HIGH SEALED 3/4" PART. BD. WAINSCOT W/ CHAMFER AT TOP EDGE AT ALL STORAGE AREA PERIMETER WALLS.
18. 4" COVED RUBBER WALL BASE.
19. DOCK BUMBER.
20. PAINTED STEEL CANOPY STRUCTURE.
21. PAINTED STEEL PIPE GUARD RAIL BEYOND.
22. REINF. CONC. RETAINING WALL BEYOND.
23. PAINTED HOLLOW MTL. DOOR/FRAME.
24. EXT. WALL PACK LT. FXTR.

Eaton architecture
77 West 200 South, Suite 302
Salt Lake City, Utah 84101
Tel 801/328-2982 Fax 801/328-2111

CONSULTANTS

STATE OF UTAH
ROBERT JAN EATON
751
LICENSED ARCHITECT

NORTH TEMPLE LIQUOR STORE REMODEL/ADD.
1255 WEST NORTH TEMPLE
SALT LAKE CITY, UTAH
100% REVIEW SET
D.F.C.M. # 07269030
OWNER:
UTAH D.F.C.M./ DEPT. OF ALCOHOLIC BEVERAGE CONTROL

| MARK | DATE | DESCRIPTION |
|---|---|---|
| | 01-28-08 | 100 % REVIEW SET |
| | 02-25-08 | CD / BID SET |

PROJECT NUMBER: 2007-23
DRAWING FILE:
DRAWN BY: AAF.
CHECKED BY:

COPYRIGHT 2007 EATON ARCHITECTURE, INC.

SHEET TITLE
WALL SECTIONS

A310

S:\Current Project Files\2007\2007-23 North Temple Liquor Store\Drawings\Revit\North Temple Liquor Store - Record Drawings.rvt

3/31/2008 9:33:01 AM

## REFERENCE NOTES

1. CONT. 24 GA. KYNAR COATED MTL. CAP FLASHING ON 2x8 P.T. TOP PLATES.
2. STRUCT. STEEL ANGLE ANCHORED TO MASONRY. SEE STRUCT. SHEETS.
3. SINGLE-PLY MEMBRANE ROOF SYSTEM ON 1-1/2" RIGID INSUL.
4. STRUCT. STEEL ROOF DECK ON STRUCT. STEEL ROOF JOISTS. SEE STRUCT. SHEETS.
5. CONT. 2" RIGID INSUL. BD. AT FDTN.
6. 2" EIFS. W/ REVEALS/ COLORS/ TO MATCH EXIST. ADJAC.
7. REINF. 8" C.M.U. STRUCT. BEARING WALL SYSTEM. SEE STRUCT. SHEETS.
8. SHIPS LADDER BEYOND.
9. SUSP. ACOUST. GRID AND PANEL CEILING SYSTEM.
10. CASEWORK FXTR. BEYOND.
11. CONT. VENT TRACK AT BTM. OF EIFS.
12. CONT. REINF. 8" CONC. FDTN. ON CONT. REINF. CONC. FTG. SEE STRUCT. SHEETS.
13. 6" MTL. STUD FURRING AT 24" O.C. W/R-19 BATT INSUL. W/5/8" PAINTED GYP. BD.
14. 4" SEALED CONC. FLOOR SLAB ON 4" GRANULAR BASE. SEE STRUCT. SHEETS.
15. EXT. PAVING ON GRANULAR BASE. SEE SHEET.
16. NOT USED.
17. 4" HIGH SEALED 3/4" PART. BD. WAINSCOT W/ CHAMFER AT TOP EDGE AT ALL STORAGE AREA PERIMETER WALLS.
18. 4" COVED RUBBER WALL BASE.
19. NEW BRICK VENEER TO MATCH EXISTING.

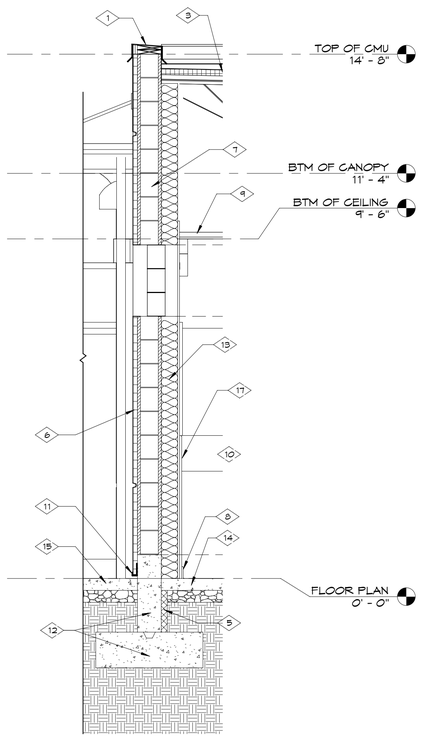


1 A311 WALL SECTION # 4
1/2" = 1'-0"

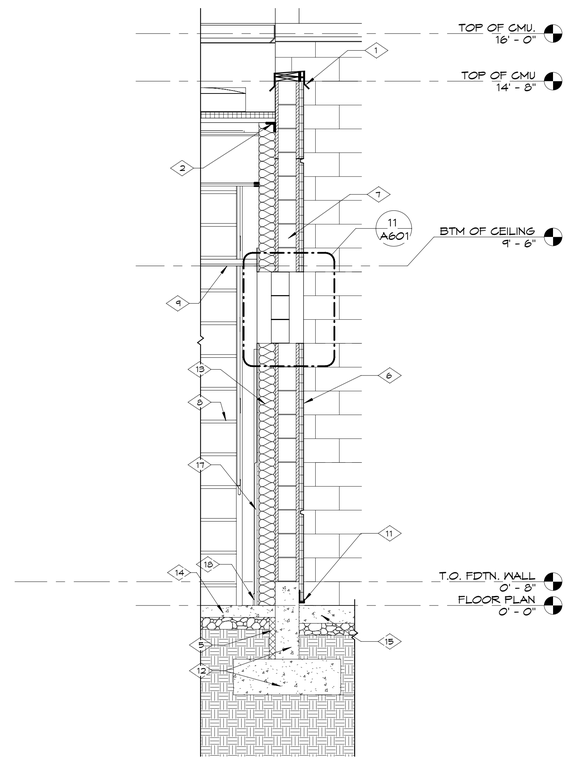


2 A311 WALL SECTION # 5
1/2" = 1'-0"

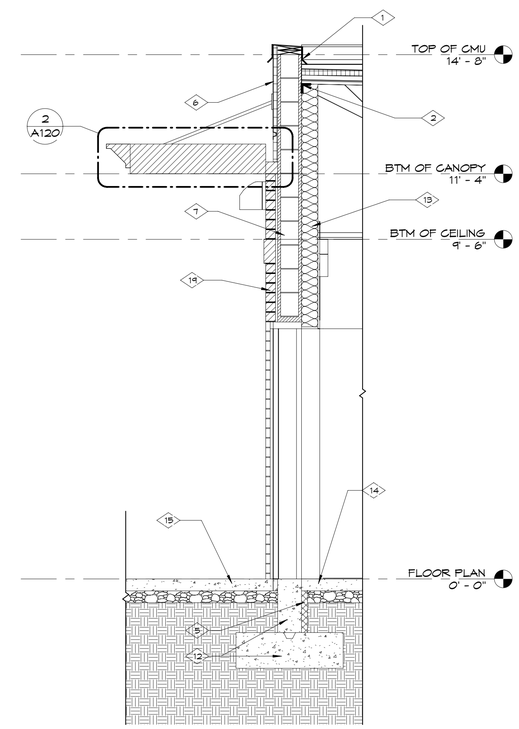


3 A311 WALL SECTION # 6
1/2" = 1'-0"


Eaton architecture
77 West 200 South, Suite 302
Salt Lake City, Utah 84101
Tel 801/328-2982 Fax 801/328-2111


CONSULTANTS

STATE OF UTAH
ROBERT JAN EATON
751
LICENSED ARCHITECT

NORTH TEMPLE LIQUOR STORE REMODEL/ADD.
1255 WEST NORTH TEMPLE
SALT LAKE CITY, UTAH
100% REVIEW SET
D.F.C.M. # 07269030
OWNER:
UTAH D.F.C.M./ DEPT. OF ALCOHOLIC BEVERAGE CONTROL

| MARK | DATE | DESCRIPTION |
|---|---|---|
| | 01-28-08 | 100 % REVIEW SET |
| | 02-25-08 | CD / BID SET |

PROJECT NUMBER: 2007-23
DRAWING FILE:
DRAWN BY: AAF.
CHECKED BY:


COPYRIGHT 2007 EATON ARCHITECTURE, INC.


SHEET TITLE
WALL SECTIONS

A311


S:\Current Project Files\2007\2007-23 North Temple Liquor Store\Drawings\Revit\North Temple Liquor Store - Record Drawings.rvt
3/31/2008 9:33:43 AM

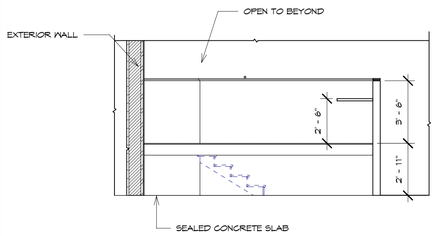


12 A401 OFFICE SECTION
1/4" = 1'-0"

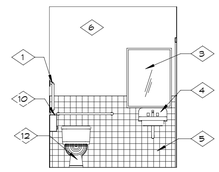


18 A401 SOUTH.
1/4" = 1'-0"

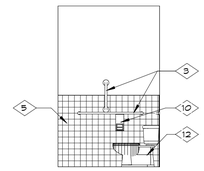


17 A401 EAST.
1/4" = 1'-0"

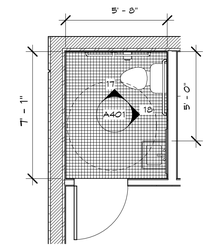


16 A401 ENLARGED PLAN.
1/4" = 1'-0"

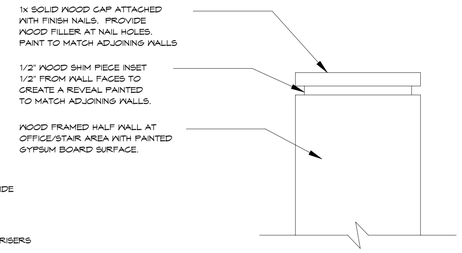


13 A401 WALL CAP DETAIL
3/8" = 1'-0"

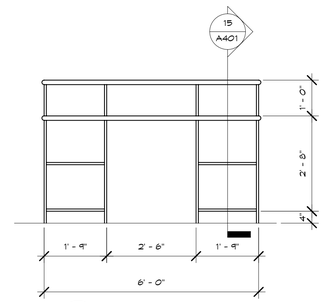


14 A401 CASEWORK ELEV.
1/2" = 1'-0"

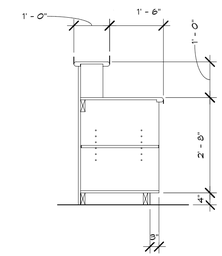


15 A401 CASEWORK SECTION
1/2" = 1'-0"

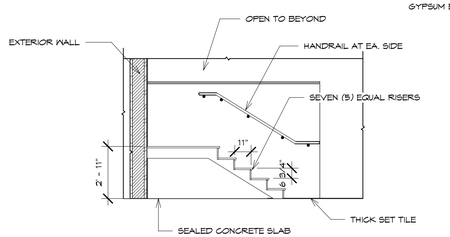


11 A401 SECTION AT OFFICE STAIR
1/4" = 1'-0"

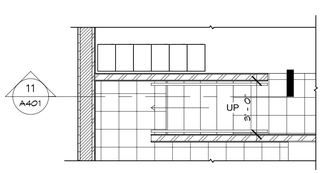


10 A401 STAIR ENLARGED PLAN
1/4" = 1'-0"

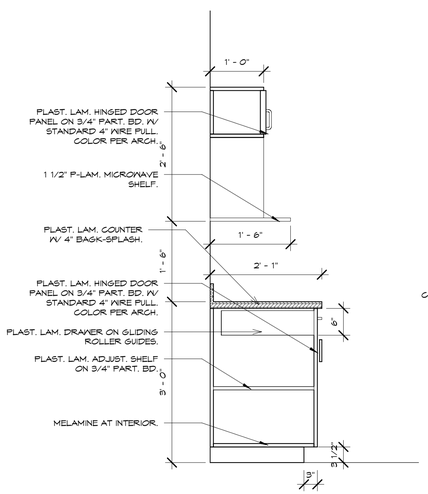


9 A401 CASEWORK SECTION 2
3/4" = 1'-0"

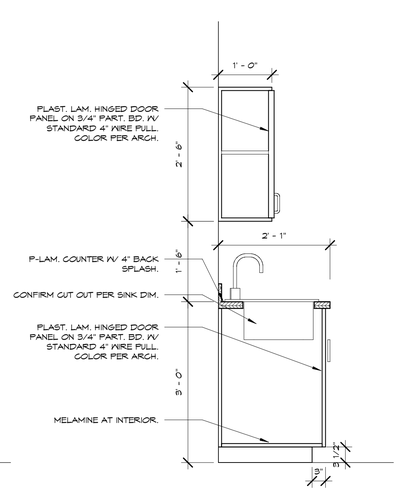


8 A401 CASEWORK SECTION 1
3/4" = 1'-0"

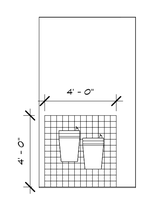


7 A401 WATER COOLER ELEV.
1/4" = 1'-0"

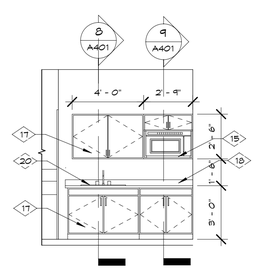


6 A401 CSWK. ELEV.
1/4" = 1'-0"

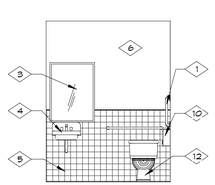


5 A401 NORTH
1/4" = 1'-0"

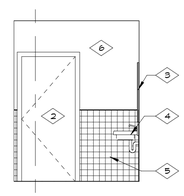


4 A401 WEST
1/4" = 1'-0"

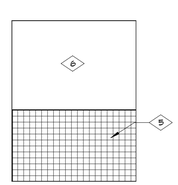


3 A401 SOUTH
1/4" = 1'-0"

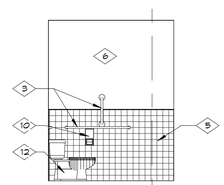


2 A401 EAST
1/4" = 1'-0"

## REFERENCE NOTES

1. 1 1/2" O.D. STAINLESS STEEL WALL MOUNTED GRAB BAR. INSTALL SOLID WOOD BLOCKING @ WALLS
2. DOOR AND FRAME, AS SCHEDULED.
3. STAINLESS STEEL FRAMED MIRROR. INSTALL PLYWD. BACKING AT UPPER PORTION FOR FLUSH MOUNTING. PAINT EXPOSED EDGES BLACK.
4. ACCESSIBLE WALL-HUNG LAVATORY W/INSULATED SUPPLY & DRAIN LINES. SEE PLUMBING SHEETS.
5. CERAMIC WALL TILE WAINSCOT.
6. PAINTED GYPSUM BOARD WALL.
7. THICK-SET CERAMIC TILE FLOORING SLOPED TO DRAIN.
8. FLOOR DRAIN. SEE PLUMBING SHEETS.
9. V.C.T. FLOORING.
10. WALL MOUNTED TOILET TISSUE DISPENSER.
11. NOT USED.
12. FLOOR MOUNTED ACCESSIBLE TOILET FXTR. SEE PLUMB. SHEETS.
13. NOT USED.
14. FLOOR MOP SINK. SEE PLUMB SHEETS.
15. PROVIDE OPENING IN BACK PANEL FOR ELEC. RECEPTACLE. COORD. LOCATION OF OPENING.
16. NOT USED.
17. P-LAM. CABINETS/ DRAWERS W/ STANDARD 4" WIRE PULLS AND P-LAM. ADJUSTABLE SHELVES.
18. P-LAM. COUNTER W/ 4" BACK SPLASH AT WALLS.
19. 3/4" X12" DEEP PLAST LAM. SHELVES (5) ON HVY. DUTY. ADJUST. MOUNTING BRACKET HDWR INSTAL SOLID WD. BLOCKING AT WALLS AS RQD.
20. SET-IN COUNTER SINK. SEE PLUMB. SHEETS.

## FIXTURE MOUNTING DATA

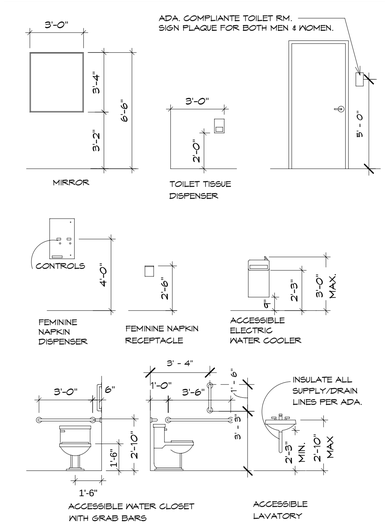


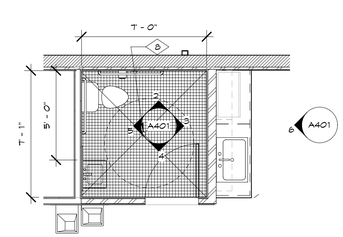


1 A401 ENLARGED PLAN
1/4" = 1'-0"

Eaton architecture
77 West 200 South, Suite 302
Salt Lake City, Utah 84101
Tel 801/328-2982 Fax 801/328-2111

CONSULTANTS

STATE OF UTAH
ROBERT JAN EATON
751
LICENSED ARCHITECT

NORTH TEMPLE LIQUOR STORE REMODEL/ADD.
1255 WEST NORTH TEMPLE
SALT LAKE CITY, UTAH
100% REVIEW SET
D.F.C.M. # 07269030
OWNER:
UTAH D.F.C.M./ DEPT. OF ALCOHOLIC BEVERAGE CONTROL

| MARK | DATE | DESCRIPTION |
|---|---|---|
| | 01-28-08 | 100 % REVIEW SET |
| | 02-25-08 | CD / BID SET |
| | | |
| | | |
| | | |
| | | |
| | | |

PROJECT NUMBER: 2007-23
DRAWING FILE:
DRAWN BY: AAF
CHECKED BY:

COPYRIGHT 2007 EATON ARCHITECTURE, INC.

SHEET TITLE
ENLARGED PLAN AND INTERIOR ELEVATIONS

A401

S:\Current Project Files\2007\2007-23 North Temple Liquor Store\Drawings\Revit\North Temple Liquor Store - Record Drawings.rvt

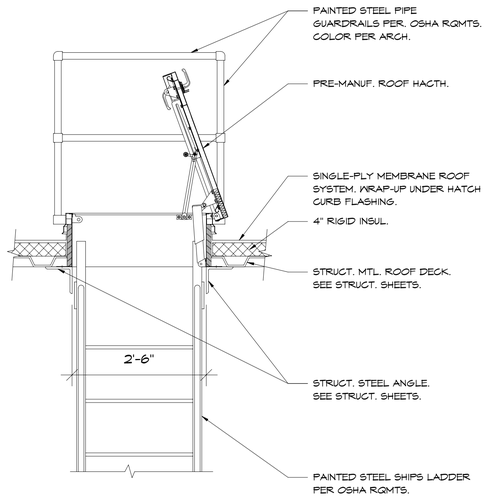


3 A501 ROOF HATCH DETAIL
3/4" = 1'-0"

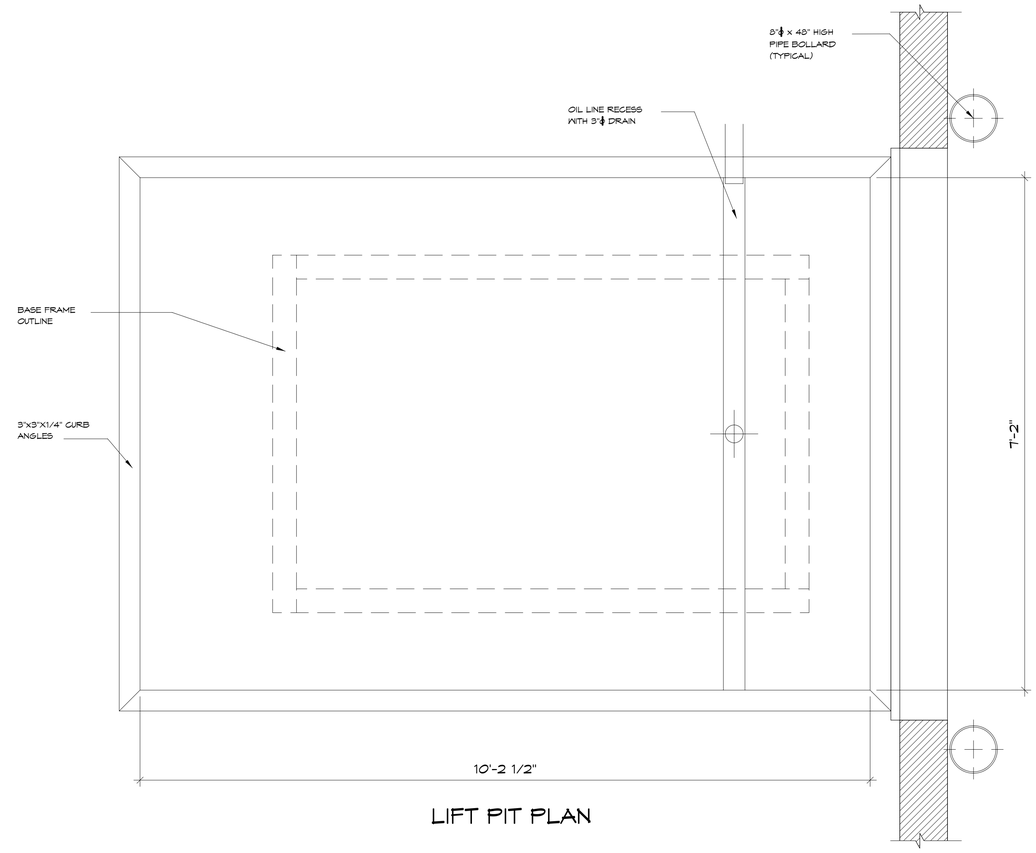


LIFT PIT PLAN

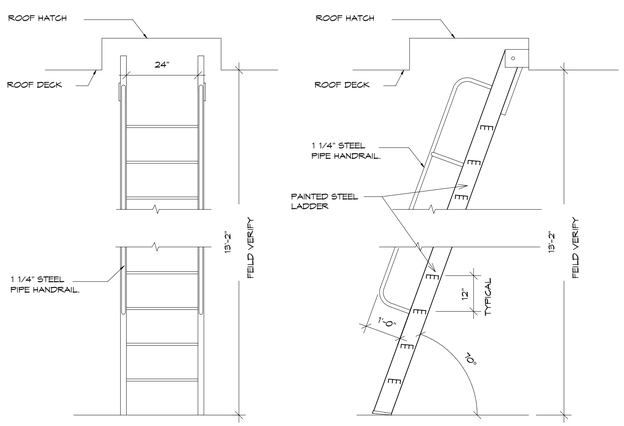


2 A501 SHIPS LADDER DETAIL
1/2" = 1'-0"

LIFT PIT SECTION

1 A501 POWERED LIFT DETAIL
1" = 1'-0"

Eaton architecture
77 West 200 South, Suite 302
Salt Lake City, Utah 84101
Tel 801/328-2982 Fax 801/328-2111

CONSULTANTS

STATE OF UTAH
ROBERT JAN EATON
751
LICENSED ARCHITECT

NORTH TEMPLE LIQUOR STORE REMODEL/ADD.
1255 WEST NORTH TEMPLE
SALT LAKE CITY, UTAH
100% REVIEW SET
D.F.C.M. # 07269030
OWNER:
UTAH D.F.C.M./ DEPT. OF ALCOHOLIC BEVERAGE CONTROL

| MARK | DATE | DESCRIPTION |
|---|---|---|
| | 01-28-08 | 100 % REVIEW SET |
| | 02-25-08 | CD / BID SET |

PROJECT NUMBER: 2007-23
DRAWING FILE:
DRAWN BY: AAF.
CHECKED BY:

COPYRIGHT 2007 EATON ARCHITECTURE, INC.

SHEET TITLE
DETAILS

A501

S:\Current Project Files\2007\2007-23 North Temple Liquor Store\Drawings\Revit\North Temple Liquor Store - Record Drawings.rvt

3/31/2008 9:34:42 AM

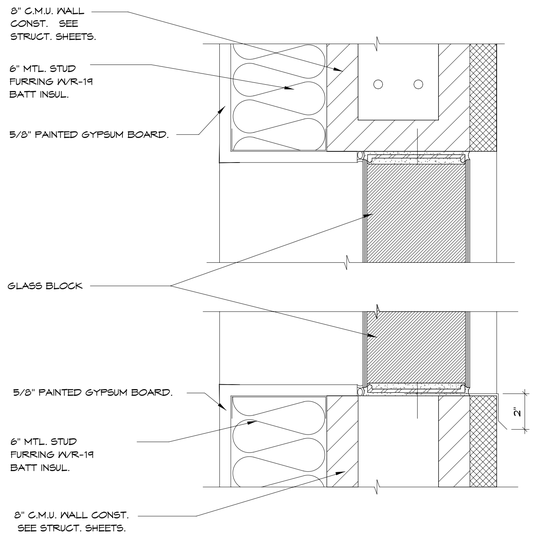


11 A601 WINDOW HEAD/SILL DETAIL (JAMB SIM.)
3" = 1'-0"

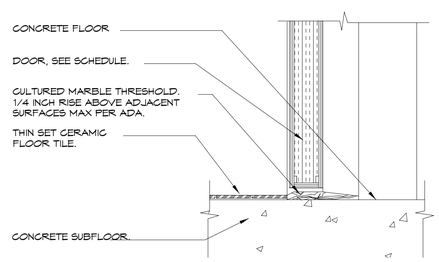


10 A601 THRESHOLD DETAIL
3" = 1'-0"

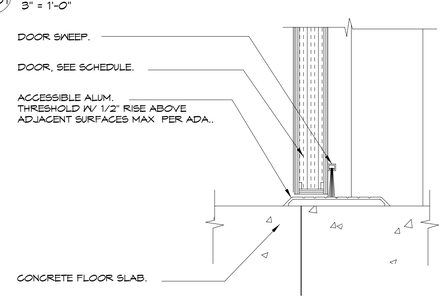


9 A601 THRESHOLD DETAIL
3" = 1'-0"

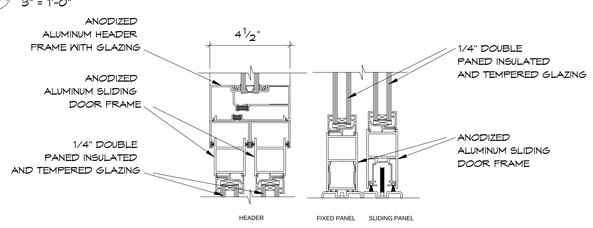


8 A601 SLIDING DOOR DETAIL
3" = 1'-0"

DOOR AND FRAME SCHEDULE

| DOOR NUMBER | LOCATION | DOOR: DOOR SIZE: WIDTH | HEIGHT | THICKNESS | SINGLE/ PAIR | TYPE | MATERIAL: WOOD | ALUM. | METAL | TYPE | FRAME: MATERIAL: METAL | ALUM. | DEPTH | DETAILS -A601: HEAD | JAMB | THRESH | RATING | HARDWARE GROUP | NOTES | KICKPLATE | DOOR NUMBER |
|---|---|---|---|---|---|---|---|---|---|---|---|---|---|---|---|---|---|---|---|---|---|
| 101A | VESTIBULE | 3' - 0" | 7' - 0" | 0' - 1 3/4" | S | C | | A | | | | A | 4 1/2" | 8 | | 8 | - | | | | 101A |
| 101B | VESTIBULE | 3' - 0" | 7' - 0" | 0' - 1 3/4" | S | C | | A | | | | A | 4 1/2" | 8 | | 8 | - | | | | 101B |
| 102A | VESTIBULE | 3' - 0" | 7' - 0" | 0' - 1 3/4" | S | C | | A | | | | A | 4 1/2" | 8 | | 8 | - | | | | 102A |
| 102B | VESTIBULE | 3' - 0" | 7' - 0" | 0' - 1 3/4" | S | C | | A | | | | A | 4 1/2" | 8 | | 8 | - | | | | 102B |
| 107A | MEN'S | 3' - 0" | 7' - 0" | 0' - 1 3/4" | S | B | W | | | 1 | M | | | - | | - | - | | EXISTING | | 107A |
| 108A | JANITOR | 3' - 0" | 7' - 0" | 0' - 1 3/4" | S | B | W | | | 1 | M | | | - | | - | - | | EXISTING | | 108A |
| 109A | WOMEN'S | 3' - 0" | 7' - 0" | 0' - 1 3/4" | S | B | W | | | 1 | M | | | 7 | 7 | 10 | - | | | | 109A |
| 110A | STOCK AREA | 3' - 4" | 7' - 0" | 0' - 1 3/4" | S | A | | | M | 2 | M | | | 4 | 4 | 9 | - | | | YES | 110A |
| 111A | RECEIVING | 6' - 0" | 7' - 0" | 0' - 2" | P | D | | | M | 3 | M | | | 6 | 6 | - | - | | | YES | 111A |
| 111C | RECEIVING | 8' - 0" | 12' - 0" | 0' - 1 1/2" | S | E | | | M | 4 | M | | | 5 | 5 | - | - | | | | 111C |

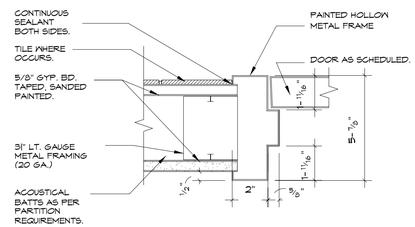


7 A601 DOOR HEAD/JAMB DETAIL
3" = 1'-0"

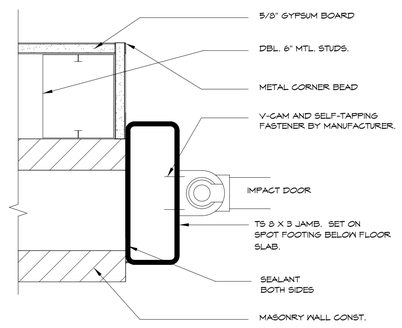


6 A601 IMPACT DOOR JAMB/ HEAD SIM.
3" = 1'-0"

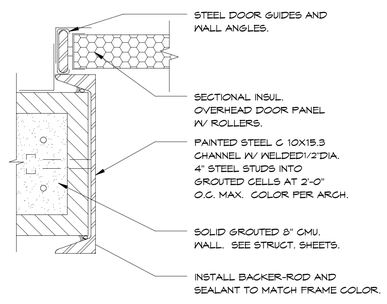


5 A601 DOOR JAMB/ HEAD DETAIL
3" = 1'-0"

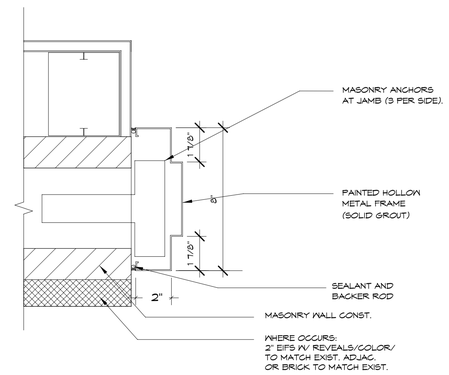


4 A601 DOOR HEAD / JAMB DETAIL
3" = 1'-0"

## GLAZING TYPES

(A) 1/4" DBL. PANED INSUL. TINTED GLASS

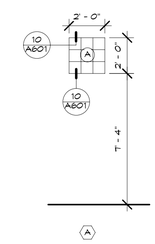


3 A601 WINDOW TYPES
1/4" = 1'-0"

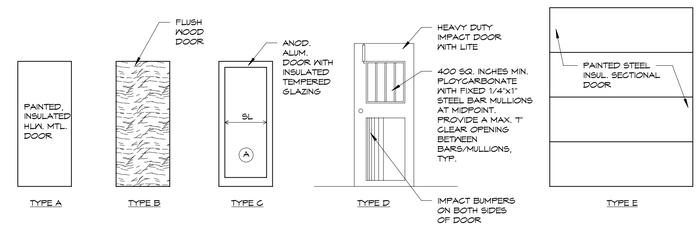


2 A601 DOOR TYPES
1/4" = 1'-0"

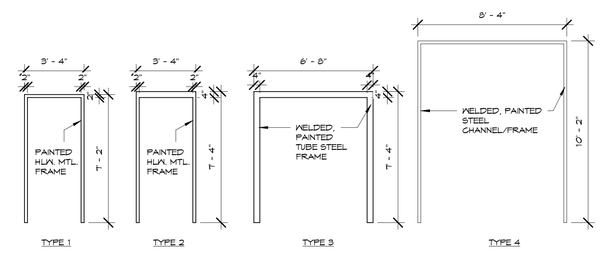


1 A601 FRAME TYPES
1/4" = 1'-0"


Eaton architecture
77 West 200 South, Suite 302
Salt Lake City, Utah 84101
Tel 801/328-2982 Fax 801/328-2111


CONSULTANTS

STATE OF UTAH ROBERT JAN EATON 751 LICENSED ARCHITECT

NORTH TEMPLE LIQUOR STORE REMODEL/ADD.
1255 WEST NORTH TEMPLE
SALT LAKE CITY, UTAH
100% REVIEW SET
D.F.C.M. # 07269030
OWNER:
UTAH D.F.C.M./ DEPT. OF ALCOHOLIC BEVERAGE CONTROL

| MARK | DATE | DESCRIPTION |
|---|---|---|
| | 01-28-08 | 100 % REVIEW SET |
| | 02-25-08 | CD / BID SET |

PROJECT NUMBER: 2007-23
DRAWING FILE:
DRAWN BY: AAF.
CHECKED BY:

COPYRIGHT 2007 EATON ARCHITECTURE, INC.

SHEET TITLE
DOOR & WINDOW SHEDULE AND DETAILS

A601

S:\Current Project Files\2007\2007-23 North Temple Liquor Store\Drawings\Revit\North Temple Liquor Store - Record Drawings.rvt

# GENERAL STRUCTURAL NOTES:

I. GENERAL:
- A. THE STRUCTURAL DRAWINGS SHOW THE COMPLETED PROJECT. DETAILS, SECTIONS, AND NOTES SHOWN ON THE DRAWINGS SHALL BE TYPICAL AND APPLY TO SIMILAR SITUATIONS ELSEWHERE UNLESS NOTED OR SHOWN OTHERWISE.
- B. REFER TO THE SPECIFICATIONS FOR INFORMATION NOT COVERED BY THESE NOTES OR STRUCTURAL DRAWINGS. WHERE THE STRUCTURAL NOTES, DRAWINGS OR SPECIFICATIONS DISAGREE, THE CONTRACTOR MAY REQUEST A CLARIFICATION. OTHERWISE THE MORE STRINGENT REQUIREMENTS SHALL CONTROL.
- C. CONTRACTOR SHALL COMPARE ALL DIMENSIONS AND CONDITIONS ON CONTRACT DOCUMENTS AND AT THE SITE. ANY OMISSION OR CONFLICT SHALL BE BROUGHT TO THE ATTENTION OF THE ARCHITECT/ENGINEER. IN CASE OF ANY CONFLICT FOLLOW THE MOST STRINGENT REQUIREMENT AS DIRECTED BY ARCHITECT/ENGINEER.
- D. SEE THE ARCHITECTURAL DRAWINGS FOR DOORS, WINDOWS, NON-BEARING INTERIOR AND EXTERIOR WALLS, RECESSES, DEPRESSIONS, ETC.
- E. THE CONTRACTOR SHALL BE RESPONSIBLE FOR SAFETY AND PROTECTION IN AND AROUND THE JOB SITE AND ADJACENT PROPERTIES
- F. CONTRACTOR SHALL PROVIDE ADEQUATE TEMPORARY BRACING FOR ALL PORTIONS OF THE BUILDING UNTIL THE ENTIRE STRUCTURE OF THE BUILDING IS COMPLETE.
- G. OBSERVATION VISITS TO THE SITE BY STRUCTURAL ENGINEER'S FIELD REPRESENTATIVES SHALL NOT BE CONSTRUED AS INSPECTION OR APPROVAL OF CONSTRUCTION.
- H. ANY ENGINEERING DESIGN PROVIDED BY OTHERS AND SUBMITTED FOR REVIEW SHALL BEAR THE SEAL AND SIGNATURE OF A STRUCTURAL ENGINEER REGISTERED IN UTAH.

II. DESIGN CRITERIA:
- A. BUILDING CODE: 2006 INTERNATIONAL BUILDING CODE (IBC) W/ AMENDMENTS
- B. LOADINGS:
  1. ROOF DEAD/LIVE LOAD - 20/30 PSF
  GROUND SNOW: 43 PSF, Cs=0.7, I=1.0
  2. BASIC WIND LOAD - 90 MPH ZONE - EXP. C, I=1.
  3. SEISMIC DESIGN CATEGORY: E, Ss=1.78, I=1, R=3, Fa=1.0, SITE CLASS: D.
- C. FOUNDATION:
  1. PER SOILS INVESTIGATION REPORT BY "GSHGC, INC.", JOB NO. 0005-0071-071.
  2. ALL EXTERIOR FOOTINGS ARE TO BE FOUNDED AT NOT LESS THAN 30" BELOW LOWEST ADJACENT FINISH FLOOR OR FINISH GRADE ONTO THE NATIVE SOILS AND/OR ON PROPERLY PLACED AND COMPACTED STRUCTURAL FILL AND BE DESIGNED USING AN ALLOWABLE BEARING CAPACITY OF UP TO 2500 PSF. INTERIOR FOOTINGS ARE TO BE FOUNDED AT NOT LESS THAN 15" BELOW LOWEST ADJACENT FINISH FLOOR OR FINISH GRADE.
  3. ALL FOOTING EXCAVATIONS ARE TO BE REVIEWED BY A QUALIFIED GEO-TECHNICAL REPRESENTATIVE WHO IS FAMILIAR WITH THE ABOVE REFERENCED SOILS REPORT, TO VERIFY THE SUITABILITY OF THE DESIGN BEARING PRESSURE USED.

III. CONCRETE:
- A. ALL MATERIALS SHALL COMPLY WITH ACI 318 AND ACI 347 PUBLICATIONS AND APPLICABLE ASTM PUBLICATIONS.
- B. CONCRETE MATERIAL PROPERTIES: 28-DAY COMPRESSIVE STRENGTHS ARE TO BE 3000 PSI TYPICAL UNLESS NOTED OTHERWISE. DESIGN BASED ON 2500 PSI. CONCRETE SLAB ON GRADE TO BE 4000 PSI.
  4000 PSI CONCRETE w/w/C=0.5 MAX. AND TYP. II CEMENT ARE TO BE USED FOR ALL CONCRETE CONTACT WITH THE SITE SOIL.
- C. CAST-IN-PLACE CONCRETE:
  1. SPACING OF CONSTRUCTION JOINTS OR CONTROL JOINTS IN WALLS EXPOSED TO VIEW SHALL NOT EXCEED 40 FEET UNLESS SPECIFICALLY NOTED OTHERWISE ON THE DRAWINGS.
  2. PROVIDE A 3/4" CHAMFER ON ALL EXPOSED CORNERS OF CONCRETE UNLESS NOTED OTHERWISE.
  3. PROVIDE CLASS B LAP SPLICES FOR ALL REINFORCING UNLESS NOTED OTHERWISE.
  4. PROVIDE ISOLATION JOINTS AROUND ALL COLUMNS AT ALL EXPOSED SLAB ON GRADE AREAS.

IV. REINFORCING STEEL:
- A. ALL BARS #4 AND LARGER TO BE ASTM A 615, GRADE 60. ALL #2 AND #3 BARS TO BE ASTM A 615, GRADE 40. DETAILED, FABRICATED AND ERECTED IN ACCORDANCE WITH ACI-318, LATEST ADOPTION.
- B. ALL REINFORCING STEEL SHALL BE BENT, DETAILED AND CHAIRED AS PER "ACI MANUAL OF STANDARD PRACTICE FOR DETAILING REINFORCING CONCRETE STRUCTURES".
- C. WELDED WIRE FABRIC TO BE IN ACCORDANCE WITH ASTM A 185.
- D. ALL BARS INDICATED ON THE PLANS TO BE WELDED SHALL CONFORM TO ASTM A706 (GRADE 60).
- E. CONCRETE COVER REQUIREMENTS FOR DEFORMED BAR REINFORCING STEEL SHALL COMPLY WITH ACI 318, "BUILDING CODE REQUIREMENTS FOR REINFORCING CONCRETE".
  1. CAST-IN-PLACE CONCRETE:
     a) CONCRETE CAST AGAINST AND PERMANENTLY EXPOSED TO EARTH: 3"
     b) FORMED CONCRETE EXPOSED TO EARTH OR WEATHER:
        #6 BARS AND LARGER: 2"
        #5 BARS AND SMALLER: 1-1/2"
     c) CONCRETE NOT EXPOSED TO WEATHER OR IN CONTACT WITH GROUND:
        SLABS, WALLS JOISTS: #11 BARS OR SMALLER: 3/4"
        BEAMS, COLUMNS: PRIMARY REINFORCING, TIES, STIRRUPS, SPIRALS: 1-1/2"
- F. DETAILING: SUBMIT PLACING DRAWINGS PER ACI DETAILING MANUAL, ACI SP-66. FABRICATE ONLY AFTER REVIEW AND APPROVAL. REINFORCING BARS SHALL NOT BE WELDED UNLESS SPECIFICALLY SHOWN ON DRAWINGS.
  1. LAP SPLICE LENGTHS SHALL BE AS FOLLOWS:
     30 BAR DIAMETER FOR #3 AND #4 BARS
     40 BAR DIAMETER FOR #5 THROUGH #8 BARS
     DO NOT SPLICE STIRRUPS AND TIES
     DO NOT SPLICE VERTICAL BARS IN RETAINING WALLS UNLESS SPECIFICALLY SHOWN.

V. MASONRY:
- A. GENERAL:
  1. LIGHTWEIGHT HOLLOW CONCRETE MASONRY UNIT TO BE ASTM C 90, GRADE N-1 AND HAVE A MINIMUM UNIT STRENGTH OF 2800 PSI AND f'm OF 2000 PSI. MORTAR TO BE TYPE "S". GROUT FILL TO BE 2000 PSI AT 28 DAYS.
  2. MASONRY DESIGN IS BASED ON VALUES WITH LEVEL 2 INSPECTION PER ACI 530-05.
  3. SEE CONCRETE FOR REQUIREMENTS FOR REINFORCING.
- B. MASONRY REINFORCING:
  1. MINIMUM REINFORCING OF CONCRETE MASONRY UNIT WALLS:
     ALL MASONRY WALLS SHALL BE REINFORCING AS SCHEDULED.
  2. CMU WALLS ARE TO HAVE #5 VERTICALS AT ALL CORNERS, ENDS, JAMBS, INTERSECTIONS AND BOTH SIDES OF CONTROL JOINTS, TYPICAL UNLESS NOTED OTHERWISE.
  3. ADDITIONAL VERTICAL REINFORCING SHOWN ON PLAN IS IN LIEU OF TYPICAL REINFORCING. PLACE ONE BAR PER CELL IN SOLID GROUT. EXTEND BARS A MINIMUM OF 30 BAR DIAMETERS BEYOND THE ROOF LEVEL ABOVE.
  4. BUILDING WALLS ARE TO HAVE 4 #5 BARS CONTINUOUS IN A MINIMUM 16" DEEP BOND BEAM AT ALL ROOF LEVELS UNLESS NOTED OTHERWISE.
  5. BUILDING WALLS ARE TO HAVE 1 #5 BAR CONTINUOUS IN A MINIMUM 8" DEEP BOND BEAM AT THE TOP OF ALL PARAPETS UNLESS NOTED OTHERWISE.
  6. PROVIDE A MINIMUM OF 2 #5 BARS X (THE WIDTH OF THE OPENING PLUS 4'-0") IN A MINIMUM 8" DEEP BOND BEAM BELOW ALL WINDOW AND MECHANICAL OPENINGS UNLESS NOTED OTHERWISE.
- C. MASONRY LINTELS:
  1. ALL REINFORCING IS TO EXTEND A MINIMUM OF 2'-0" BEYOND THE JAMB AND TO BE GROUTED SOLID FOR THE ENTIRE DEPTH INDICATED.
  2. ALL CONCRETE MASONRY UNITS USED IN THE LENGTH ARE TO BE "OPEN-END" TYPE, TO INSURE FULLY GROUTED HEAD JOINTS.
  3. ALL LINTELS ARE TO BE PROPERLY SHORED FOR THEIR WEIGHT PLUS ANY CONSTRUCTION LOADS AND LATERALLY BRACED TO PREVENT ANY LATERAL MOVEMENT FOR A MINIMUM OF 7 DAYS AFTER GROUTING, UNLESS NOTED OTHERWISE.
- D. MASONRY GROUTING PROCEDURES:
  1. GROUTED MASONRY SHALL BE CONSTRUCTED IN SUCH A MANNER THAT ALL ELEMENTS OF THE MASONRY ACT TOGETHER AS A STRUCTURAL ELEMENT.
  2. PRIOR TO GROUTING, THE GROUT SPACE SHALL BE CLEANED SO THAT ALL SPACES TO BE FILLED WITH GROUT DO NOT CONTAIN MORTAR PROJECTIONS GREATER THAN 1/2". MORTAR DROPPINGS OR OTHER FOREIGN MATERIAL.
  3. GROUT MATERIALS AND WATER CONTENT SHALL BE CONTROLLED TO PROVIDE ADEQUATE FLUIDITY FOR PLACEMENT, WITHOUT SEGREGATION OF THE CONSTITUENTS AND SHALL BE MIXED THOROUGHLY. SEGREGATION OF THE GROUT MATERIALS AND DAMAGE TO THE MASONRY SHALL BE AVOIDED DURING THE GROUTING PROCESS.
  4. THE GROUTING OF ANY SECTION OF WALL SHALL BE COMPLETED IN ONE DAY WITH NO INTERRUPTIONS GREATER THAN ONE HOUR.
  5. BETWEEN GROUT POURS, A HORIZONTAL CONSTRUCTION JOINT SHALL BE FORMED BY STOPPING ALL WYTHES AT THE SAME ELEVATION AND WITH THE GROUT STOPPING A MINIMUM OF 1 1/2 INCHES BELOW A MORTAR JOINT, EXCEPT AT THE TOP OF THE WALL. WHERE BOND BEAMS OCCUR, STOP GROUT POUR A MINIMUM OF 1/2 INCH BELOW THE TOP OF THE MASONRY.
  6. ALL CELLS AND SPACES CONTAINING REINFORCING BARS SHALL BE FILLED WITH GROUT. GROUT SHALL BE PLACED SO THAT ALL SPACES TO BE GROUTED DO NOT CONTAIN VOIDS.
  7. GROUT SHALL BE CONSOLIDATED BY MECHANICAL VIBRATION DURING PLACING BEFORE LOSS OF PLASTICITY IN A MANNER TO FILL THE GROUT SPACE. GROUT POURS GREATER THAN 12 INCHES SHALL BE RECONSOLIDATED BY MECHANICAL VIBRATION TO MINIMIZE VOIDS DUE TO WATER LOSS. GROUT POURS 12 INCHES OR LESS IN HEIGHT SHALL BE MECHANICALLY VIBRATED OR RUDDLED.
  8. GROUT POURS ARE NOT EXCEED 5 FEET, OR IF THE FOLLOWING CONDITIONS ARE MET, PLACE GROUT IN LIFTS NOT EXCEEDING 12'-8":
     a. THE MASONRY HAS CURED FOR AT LEAST 4 HOURS.
     b. THE GROUT SLUMP IS MAINTAINED BETWEEN 10 & 11 INCHES.
     c. NO INTERMEDIATE REINFORCED BOND BEAMS ARE PLACES BETWEEN THE TOP AND BOTTOM OF THE POUR HEIGHT.
  9. REINFORCING SHALL BE CONTINUOUS THE FULL HEIGHT OF THE GROUT POUR PLUS ANY REQUIRED LAP ABOVE. REINFORCEMENT SHALL BE SECURED AGAINST DISPLACEMENT PRIOR TO GROUTING BY WIRE POSITIONERS OR OTHER SUITABLE DEVICES AT INTERVALS NOT TO EXCEED 200 BAR DIAMETERS NOR 10 FEET.
  10. TOLERANCE FOR THE PLACEMENT OF STEEL IN WALLS AND FLEXURAL ELEMENTS SHALL BE PLUS OR MINUS 1/2 INCH FOR "D" EQUAL TO 8 INCHES OR LESS, PLUS OR MINUS ONE INCH FOR "D" EQUAL TO 24 INCHES OR LESS BUT GREATER THAN 8 INCHES, AND PLUS OR MINUS 1 1/4 INCH FOR "D" GREATER THAN 24 INCHES.

VI. STRUCTURAL AND MISCELLANEOUS STEEL:
- A. MATERIAL PROPERTIES:
  1. ALL SHAPES, PLATES, ANGLES, AND CHANNELS TO BE ASTM A-36 UNLESS NOTED OTHERWISE.
  2. ALL WF SHAPES WEIGHING 84 POUNDS PER LINEAR FOOT OR LESS TO BE ASTM A 572, GRADE 50. ALL WF SHAPES WEIGHING MORE THAN 84 POUNDS PER LINEAR FOOT TO BE ASTM A 572, GRADE 36.
  3. SQUARE OR RECTANGULAR TUBES TO BE ASTM A 500, GRADE B, Fy = 46 KSI.
  4. ALL STEEL TO BE DETAILED, FABRICATED AND ERECTED IN ACCORDANCE WITH A.I.S.C. SPECIFICATIONS, LATEST ADOPTION.
- B. WELDING:
  1. FOR STRUCTURAL STEEL TO BE IN ACCORDANCE WITH A.W.S. REQUIREMENTS FOR E70XX ELECTRODES. E60XX MAY BE USED FOR WELDING STEEL FLOOR AND ROOF DECKS.
  2. MINIMUM WELDS: ALL INTERSECTING STEEL SHAPES THAT ARE NOT BOLTED SHALL BE CONNECTED BY A FILLET WELD ALL AROUND, UNLESS NOTED OTHERWISE. FILLET WELD SIZES THAT ARE NOT SHOWN SHALL BE 1/16" LESS THAN THE THINNEST OF THE CONNECTED PARTS FOR THICKNESS 1/4" AND LARGER. FILLET WELDS ON PLATES LESS THAN 1/4" SHALL BE OF THE SAME SIZE AS THE THINNEST OF THE CONNECTED PART.
- C. BOLTS:
  1. ALL BOLTS TO BE 3/4" DIAMETER ASTM A 325-N UNLESS NOTED OTHERWISE. A325N BOLTS SHALL BE USED IN CONNECTIONS FOR SIMPLE SPAN FRAMING AND BEAMS TO BEARING PLATE CONNECTIONS. TIGHTEN BOLTS TO SNUG TIGHT CONDITION
  2. BOLTS, NUTS AND WASHERS SHALL NOT BE REUSED.
  3. ~~ANCHOR BOLTS SHALL BE ASTM A 307 OR A 36.~~
  4. EPOXY BOLTS ARE 3/4" DIAMETER SIMPSON "SET" FOR CMU APPLICATION (ICC ER5273) AND HILTI HIT RE 500-SD EPOXY BOLTS FOR CONCRETE APPLICATIONS (ICC ES ESR 2322).

VII. SPECIAL INSPECTION: SPECIAL INSPECTION IS REQUIRED IN ACCORDANCE WITH IBC CHAPTER 1704.
- A. ALL CONCRETE MASONRY UNITS AND REINFORCING-LEVEL 2 AT EA. LIFT.
- B. FIELD WELDING(CONTINUOUS).
- C. SOILS PER SOIL REPORT(PERIODIC).
- D. EPOXY BOLTS (CONTINUOUS).

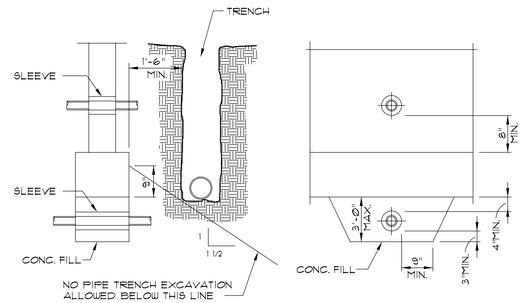


NOTE: CONCRETE FILL TO BE THE SAME WIDTH AS FOOTING & FULL WIDTH OF PIPE TRENCH. PIPE TO CLEAR SLEEVE BY 1/2" ALL AROUND

## 4 PIPES AT CONCRETE FOOTING

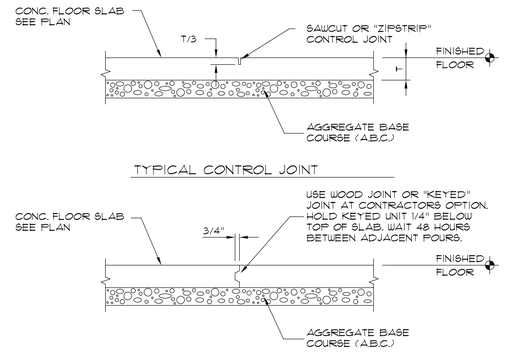


## 1 TYPICAL CONCRETE FLOOR JOINTS

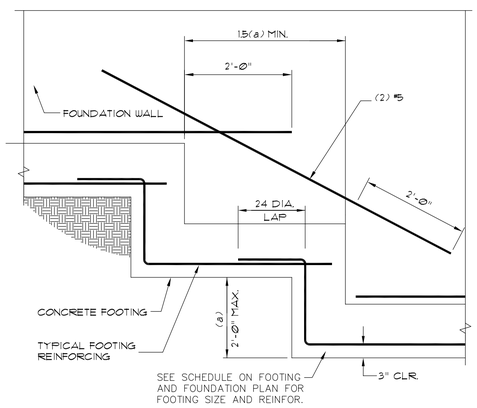


NOTE: REINFORCING MAY BE CONTINUOUS

## 5 TYPICAL STEPPED FOOTING

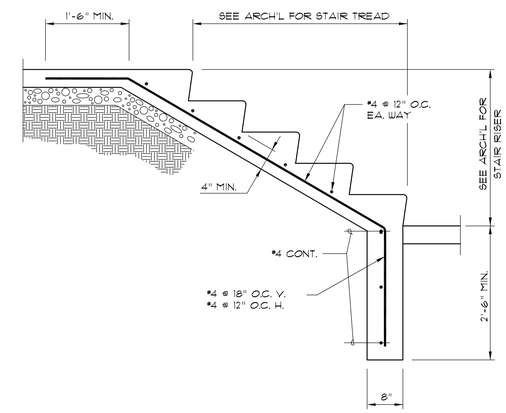


## 2 CONCRETE STAIR ON GRADE

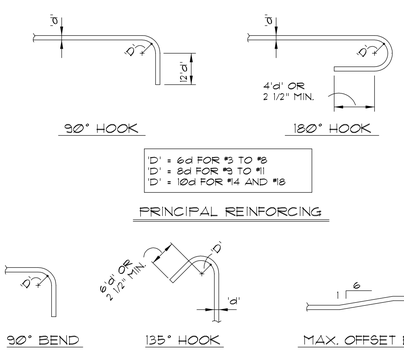


## 6 TYPICAL REINFORCING BAR BENDS

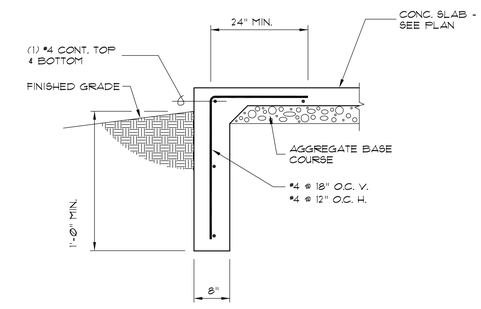


## 3 TYPICAL TURNDOWN FOOTING


Eaton architecture
77 West 200 South, Suite 302
Salt Lake City, UT 84101
Tel 801/328-2982 Fax 801/328-2111


CONSULTANTS


Shen Engineers, Inc.
Structural/Seismic Consultants
3335 South 900 East, Suite 250
Salt Lake City, UT 84106
Telephone 801 466-2625
Facsimile 801 466-2696
E-mail: shengeng@msn.com


LICENSED PROFESSIONAL ENGINEER No. 260129 HUA SHEN STATE OF UTAH

NORTH TEMPLE LIQUOR STORAGE

OWNER
DEPARTMENT OF ALCOHOLIC BEVERAGE CONTROL

| MARK | DATE | DESCRIPTION |
|---|---|---|
| REVISION 1 | FEB. 2008 | CITY COMMENTS & REPLIES |
| | | |
| | | |
| | | |
| | | |
| | 12/07 | |

PROJECT NUMBER: SE07346
DRAWING FILE:
DRAWN BY: YX
CHECKED BY: HS


COPYRIGHT 2003 EATON ARCHITECTURE, LLC


SHEET TITLE

S-101

OF

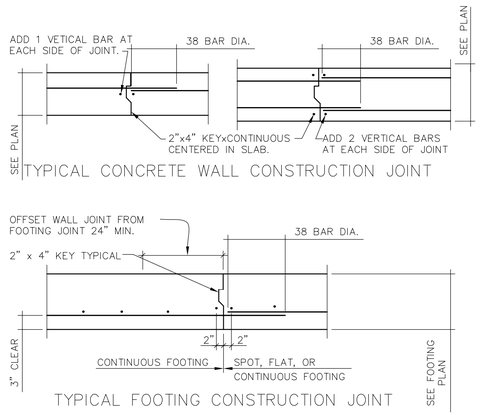


## 10 TYP. FTG. & WALL CONSTRUCTION JOINT

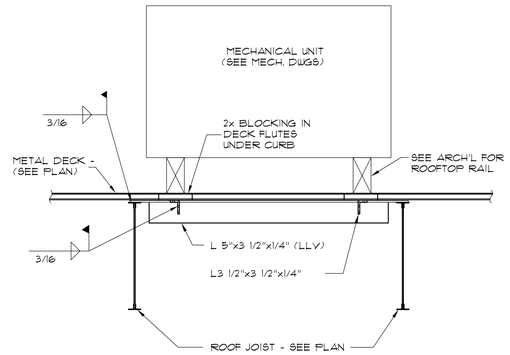


## 7 TYPICAL MECHANICAL UNIT SUPPORT

ALL REINFORCING TO EXTEND A MINIMUM OF 2'-Ø" BEYOND JAMBS AND BE GROUTED SOLID FOR DEPTH "D".

ALL CONCRETE MASONRY UNITS USED IN LENGTH OF LINTEL TO BE "OPEN-END" TYPE, TO INSURE FULLY GROUTED HEAD JOINTS.

ALL LINTELS TO BE PROPERLY SHORED DURING GROUTING AND REMAIN IN PLACE FOR A MINIMUM OF 7 DAYS FOLLOWING GROUTING.

ALL GROUT TO BE MINIMUM OF 2000 PSI AT 28 DAYS.

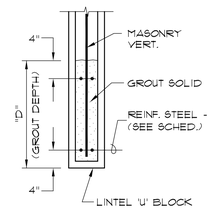


## 4 MASONRY LINTEL SCHEDULE

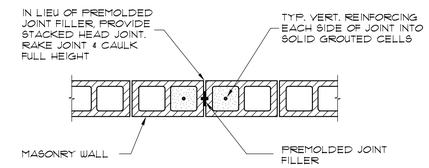


NOTES:

1. ALL HORIZONTAL JOINT REINFORCING DISCONTINUES AT JOINT. ALL BOND BEAM REINFORCING CONTINUES THRU JOINT.
2. SEE ARCHITECTURAL DRAWINGS FOR CONTROL JOINTS LOCATE AT 50'-Ø" O.C. MAXIMUM BUT NOT LESS THAN 2'-Ø" FROM BEARING PLATE OR JAMB OF AN OPENING SUBMIT FOR REVIEW PRIOR TO CONSTRUCTION

## 1 TYPICAL MASONRY WALL CONRTOL JOINT

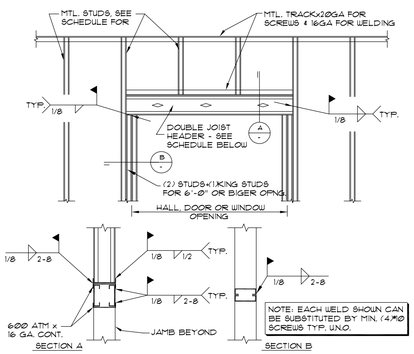


| OPENING | HEADER REQ'D. |
|---|---|
| 1'-5" TO 3'-4" | (2) 600 EUC 18 GA. |
| 3'-5" TO 5'-0" | (2) 800 EUC 18 GA. |
| 5'-1" TO 7'-0" | (2) 1000 EUC 18 GA. |
| 7'-1" TO 8'-4" | (2) 1000 EUC 16 GA. |
| 8'-5" TO 10'-6" | (2) 1000 EUC 16 GA. |

**INTERIOR NON-BEARING METAL STUD WALL SCHEDULE**

| STUDS | S/P SPACING | ALLOWABLE WALL HEIGHT |
|---|---|---|
| 3 1/2" x 20 GA. | 16" O.C. | 16'-0" |
| 4" x 20 GA. | 16" O.C. | 17'-9" |
| 6" x 20 GA. | 16" O.C. | 24'-7" |
| 6" x 18 GA. | 16" O.C. | 26'-7" |

## 11 TYPICAL METAL STUD HEADER SCHEDULE

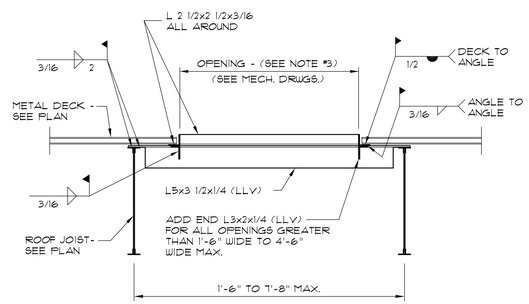


NOTES:

1. TYPICAL FOR ALL OPENINGS IN ROOF WITH GREATER THAN 12" DIMENSION.
2. METAL DECK SUPPLIER TO FURNISH ALL SUMP PANS AND REINFORCING PLATES FOR OPENINGS UP TO 12".
3. MISCELLANEOUS STEEL CONTRACTOR TO VERIFY WITH ALL TRADES, FOR NUMBER AND LOCATION OF FRAMED OPENINGS REQUIRED.

## 8 TYPICAL FRAMING @ ROOF OPENING

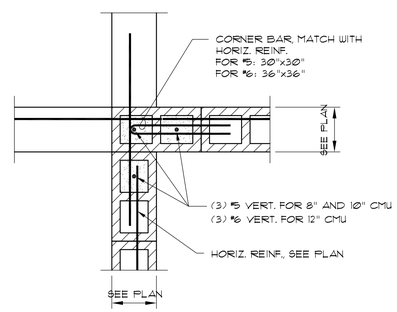


## 5 TYP. REINF. @ CORNER OR INTERSECTION OF WALLS

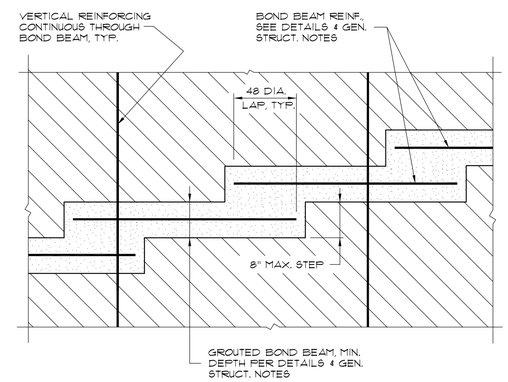


## 2 TYPICAL STEPPED BOND BEAM

NOTE:

FOR 6" STUD USE 2 1/2"x16 GA W/1/2" FLANGE HORIZONTAL BRIDGING.

FOR 3 5/8" OR 4" STUD USE 1 1/2"x16 GA W/ 1/2" FLANGE HORIZONTAL BRIDGING.

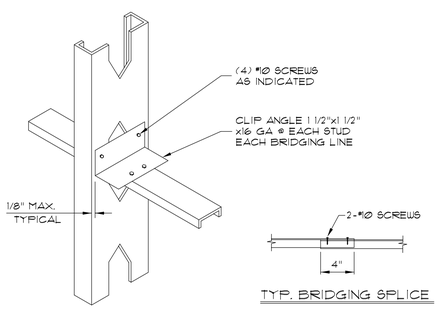


## 12 TYPICAL METAL WALL STUD BRIDGING

MIN. REQUIRED SHEAR CAPACITY FOR DECKS AND CONNECTIONS

1. 1 1/2" HSB-36 20GA. DECK - V = 840 PLF

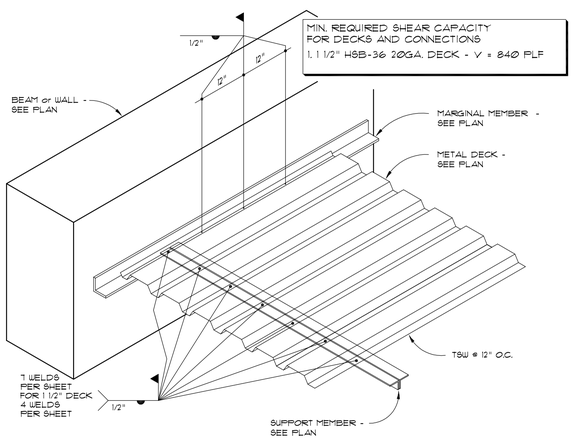


## 9 METAL ROOF DECK WELDING PATTERN

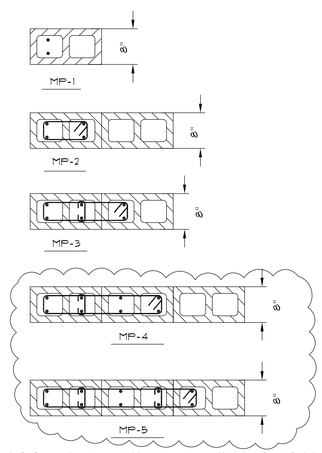


## 6 MASONRY PIER CONFIGURATION

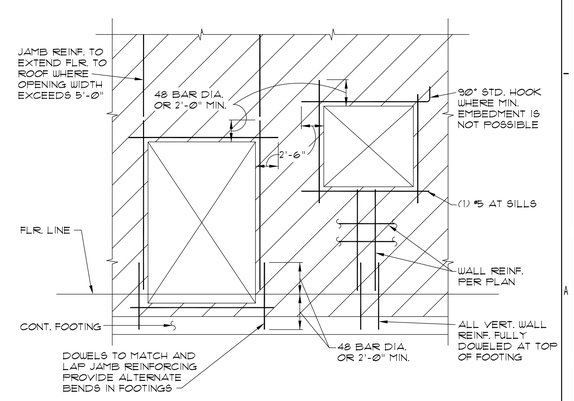


## 3 TYPICAL MASONRY WALL CONSTRUCTION


Eaton Architecture
77 West 200 South, Suite 302
Salt Lake City, UT 84101
Tel 801/328-2982 Fax 801/328-2111


CONSULTANTS


Shen Engineers, Inc.
Structural/Seismic Consultants
3335 South 900 East, Suite 250
Salt Lake City, UT 84106
Telephone 801 466-2625
Facsimile 801 466-2656
E-mail: shenen@msn.com


LICENSED PROFESSIONAL ENGINEER No. 260129 HUA SHEN STATE OF UTAH

# NORTH TEMPLE LIQUOR STORAGE

OWNER
DEPARTMENT OF ALCOHOLIC BEVERAGE CONTROL

| MARK | DATE | DESCRIPTION |
|---|---|---|
| | | |
| | | |
| | | |
| | | |
| | 12/07 | |
| REVISION 1 | FEB., 2008 | CITY COMMENTS & REPLIES |

PROJECT NUMBER: SE07346
DRAWING FILE:
DRAWN BY: YX
CHECKED BY: HS

COPYRIGHT 2003 EATON ARCHITECTURE, LLC

SHEET TITLE

S-102

OF

April 08, 1998 3:28:37 p.m.
Drawing: C:\M13\CAWVRIOTOS\S12.DWG (RAD)

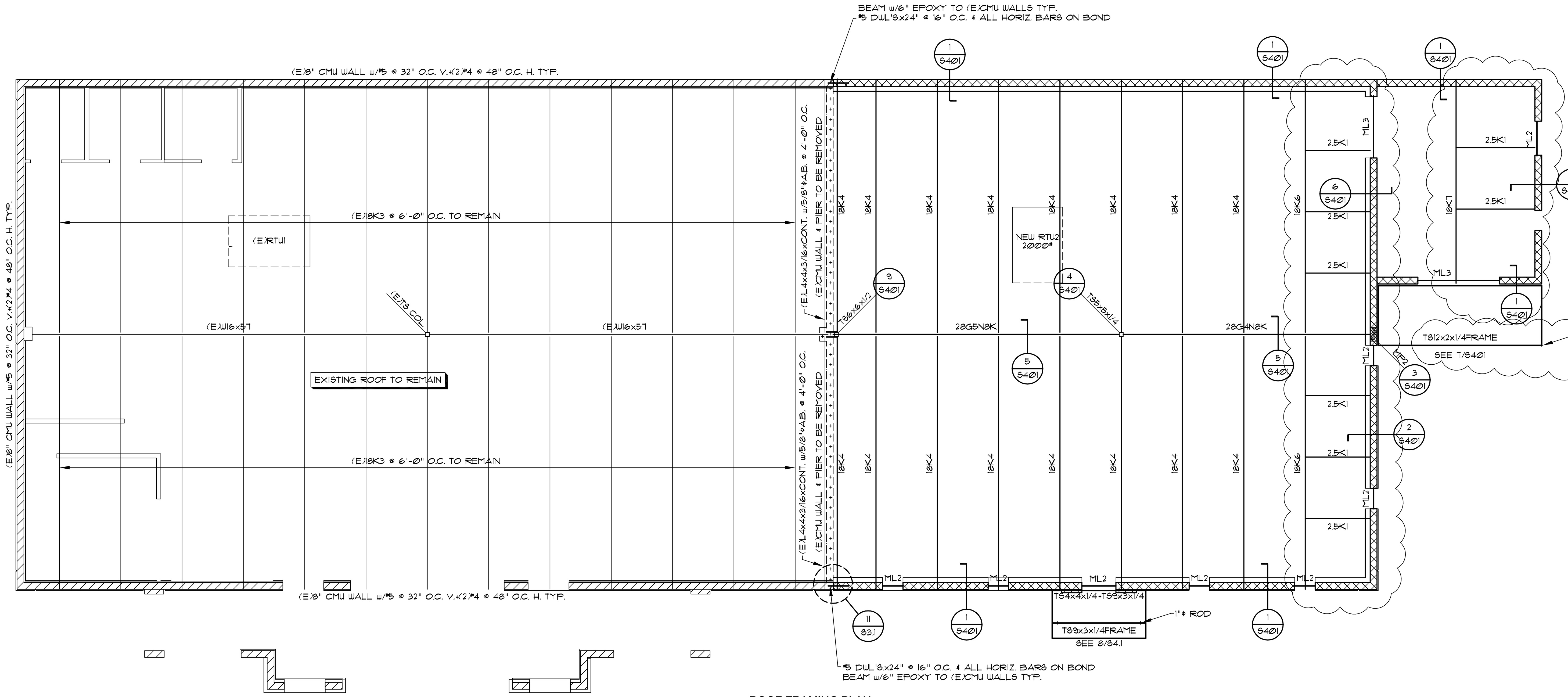


## ROOF FRAMING PLAN

SCALE 1/8" = 1'-0"

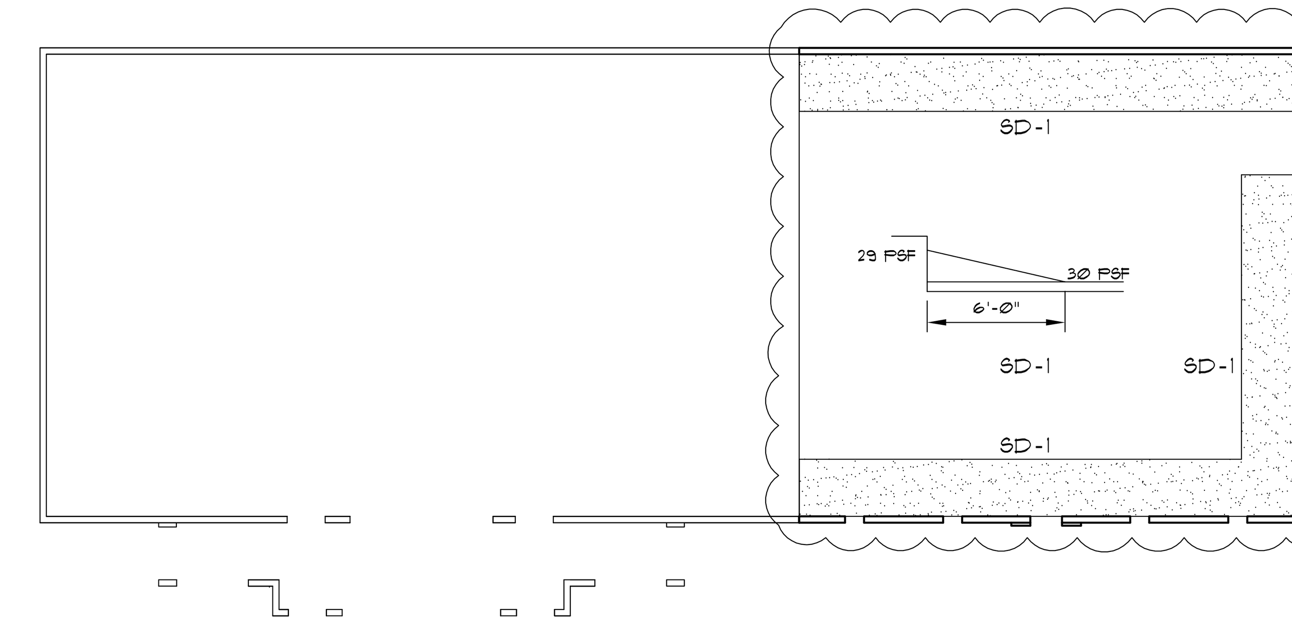


## SNOW DRIFT KEYPLAN

TYPICAL ROOF DECK:
1. 1 1/2" DEEP 20 GA. MTL. DECK TYPE HSB-36 BY VERCO OR APPROVED EQUAL. WITH GALV. FINISH.
2. END LAP 2" MINIMUM AT SUPPORTS
3. FASTEN DECK TO EACH SUPPORT WITH 5/8" DIAMETER PUDDLE WELDS. WITH 7 WELDS PER SHEET.
4. FASTEN DECK TO SUPPORTS PARALLEL TO DECK SPAN WITH 5/8" DIAMETER PUDDLE WELDS @ 12" O.C.
5. FASTEN SIDE LAPS BY 1 1/2" LONG TOP SEAM WELD AT 12" O.C.

NON-BRG. WALL MTL. HEADER SCHEDULE-SSMA OR EQ.

| OPENING | HEADER REQ'D. | TRIM STUDS @ EA. END | KING STUDS @ EA. END |
|---|---|---|---|
| 1'-5" TO 3'-4" | (2) 600S162-33 | (1) 3 5/8"x24GA | (1)3 5/8"x24GA |
| 3'-5" TO 5'-0" | (2) 800S162-43 | (2) 3 5/8"x24GA | (1)3 5/8"x24GA |
| 5'-1" TO 7'-0" | (2) 1000S162-43 | (2) 3 5/8"x24GA | (2)3 5/8"x24GA |
| 7'-1" TO 8'-4" | (2) 1000S162-54 | (2) 3 5/8"x24GA | (2)3 5/8"x24GA |
| 8'-5" TO 10'-6" | (2) 1000S200-54 | (2) 4"x22GA | (2)4"x22GA |
| 10'-6" TO 12'-0" | (2) 1000S200-68 | (2) 4"x22GA | (2)4"x22GA |
| 15'-0" TO 18'-6" | (3) 1200S200-68 | (3) 6"x20GA | (3)6"x20GA |

MASONRY PIER SCHEDULE

| MARK | SIZE | REINF. | TIES | BEARING PLATES | |
|---|---|---|---|---|---|
| MP-1 | 8" x 8" | (2) #5 | NONE | BP1 | 1/2"x6"x8" PL. w/ (2)3/4"⌀ H.S.x5" |
| MP-2 | 8" x 16" | (4) #5 | #2 @ 8" O.C. | BP2 | 5/8"x6"x14" PL. w/ (4)3/4"⌀ H.S.x5" |
| MP-3 | 8" x 24" | (6) #5 | #2 @ 8" O.C. | BP3 | 3/4"x6"x22" PL. w/ (6)3/4"⌀ H.S.x5" |
| MP-4 | 8" x 32" | (8) #5 | #2 @ 8" O.C. | | |
| MP-5 | 8" x 40" | (10) #6 | #2 @ 8" O.C. | | |
| MP-6 | 8" x 48" | (12) #5 | #2 @ 8" O.C. | | |

NOTE: SEE DETAIL 6/S1.3 FOR CMU PIER REINFORCEMENT CONFIGURATION TYPICAL.

INTERIOR NON-BEARING METAL STUD WALL SCHEDULE

| STUDS | SPACING | ALLOWABLE WALL HEIGHT |
|---|---|---|
| 362S125-18 | 16" O.C. | 14'-4" |
| 362S125-33 | 16" O.C. | 16'-5" |
| 362S125-43 | 16" O.C. | 18'-0" |
| 400S125-18 | 16" O.C. | 15'-4" |
| 400S125-33 | 16" O.C. | 18'-4" |
| 400S125-43 | 16" O.C. | 19'-5" |
| 600S125-18 | 16" O.C. | 19'-9" |
| 600S125-33 | 16" O.C. | 24'-6" |
| 600S125-43 | 16" O.C. | 28'-3" |
| 800S125-43 | 16" O.C. | 34'-4" |

ROOF FRAMING PLAN NOTES:
1. SEE SHEET S1.1 AND S1.3 FOR:
   A. GENERAL STRUCTURAL NOTES
   B. TYPICAL ROOF METAL DECK WELDING PATTERN
   C. TYPICAL ROOF OPENING DETAIL
   D. MECH. UNIT SUPPORT DETAILS
   E. MASONRY LINTEL SCHEDULE
2. J. B. = ROOF JOIST BEARING ELEVATION.
3. PROVIDE JOIST BRIDGING PER S.J.I.
4. ESTABLISH AND VERIFY ALL OPENINGS & INSERTS FOR MECHANICAL, ELECTRICAL & PLUMBING WITH THE APPROPRIATE TRADES, DRAWINGS AND SUBCONTRACTORS PRIOR TO CONSTRUCTION.
5. JOIST & JOIST GIRDER DESIGNATIONS DO NOT INCLUDE MECHANICAL WEIGHTS. DESIGN JOISTS & JOIST GIRDERS @ MECH. UNITS TO SUPPORT WEIGHTS INDICATED @ ANY POINT WITHIN 5 FEET EITHER WAY ALONG THE SPAN.
6. JOIST MANUF. TO ADJUST ALL JOIST SIZES AND DESIGN STRESSES AS REQUIRED BASED ON THE SPECIFIC UL RATING NOTED ON THE ARCHITECTURAL DRAWINGS.
8. HANGING CEILING, DUCTWORK OR OTHER ITEMS FROM THE ROOF METAL DECK IS NOT ALLOWED.
9. [300#] DENOTES MECH. UNIT APPROX. LOCATION AND MAXIMUM WEIGHT. COORDINATE WITH MECH. DWG's. PROVIDE SUPPORT AND OPENING FRAMES PER DETAILS ON SHT. S1.3.
10. [X] DENOTES OPENING IN ROOF DECK COORDINATED SIZE & LOCATION w/ MECH. DRAWINGS. PROVIDE OPENING FRAMES PER DETAILS ON SHEET S1.3.

| MASONRY WALL SCHEDULE | | | | SPECIAL INSPECTION ON CMU TYP. | |
|---|---|---|---|---|---|
| MARK | WALL THICKNESS | VERT. REINF. | HORIZ. REINF. | BOND BM. @ ROOF LVL | REMARKS |
| MW1 | 8" | #5 @ 24" O.C. | #5 @ 48" O.C. | 8"x16" MIN. w/ (4)#5 HORIZ. | GROUT REBAR CELLS TYP FOR 8" CMU WALLS, U.N.O. |

1. TERMINATE HORIZ. REBARS AT WALL JOINTS TYP.
2. CONTINUE HORIZ. REBARS FOR BOND BEAM AT WALL JOINTS TYP.
3. SOLID GROUT ALL CELLS FOR WALLS UNDER FINISHED GRADE TYP.
4. SOLID GROUT PARAPET WALLS WHICH ARE HIGHER THAN 6'-0"(COUNT FROM DECK BRG.) AND SOLID GROUT WALLS 4'-0" DOWN FROM THE DECK BRG.

| MARK | SIZE OF LINTEL | REINFORCING | MIN. END BRG. | REMARKS |
|---|---|---|---|---|
| ML-1 | 8"x8" | (2) #5 | MP-1 | |
| ML-2 | 8"x16" | (2) #5 T&B | MP-1 | |
| ML-3 | 8"x24" | (2)#5 T&B | MP-2 | |
| ML-4 | 8"x32" | (2)#5 T&B | MP-2 | |
| ML-5 | 8"x40" | (4)#5 T (4)#5 B | MP-2 | |
| ML-6 | 8"x48" | (4)#5 T (4)#5 B | MP-2 | |

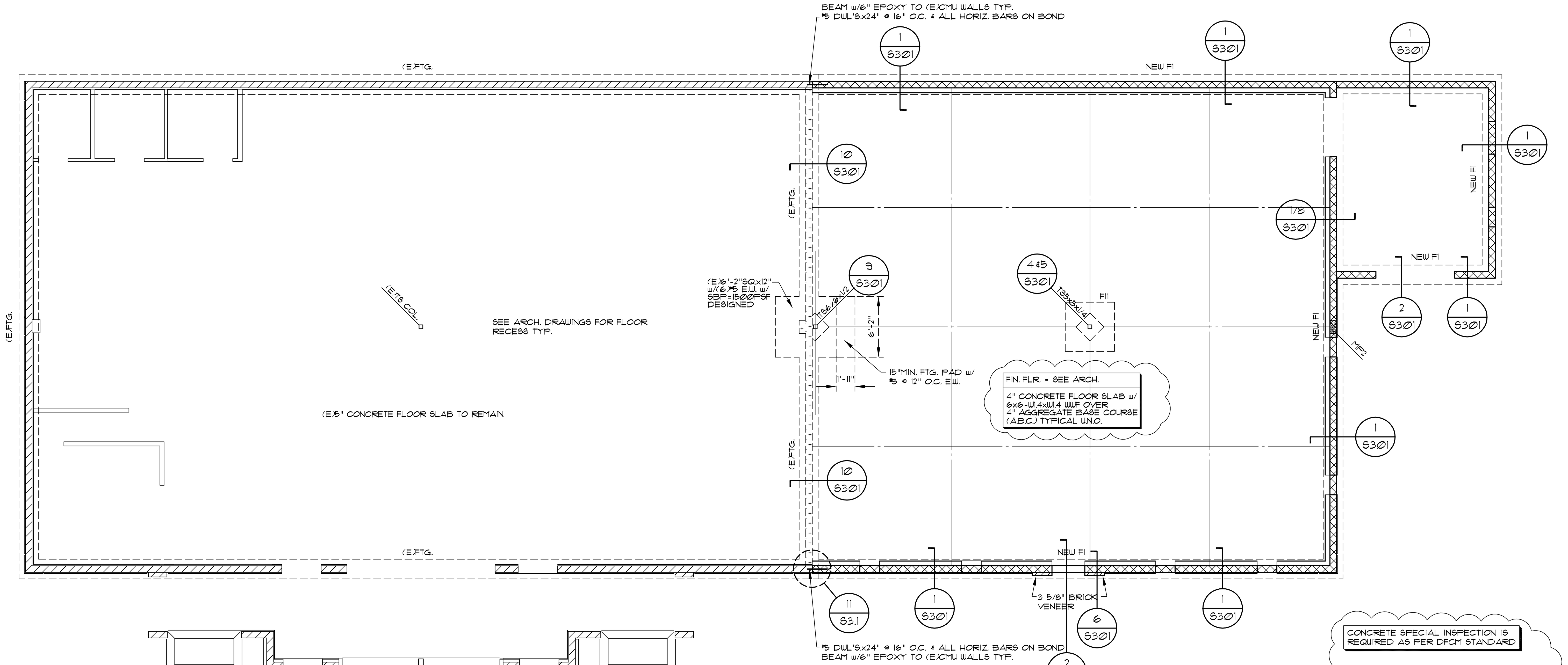


## FOOTING & FOUNDATION PLAN

SCALE 1/8" = 1'-0"

CONCRETE SPECIAL INSPECTION IS REQUIRED AS PER DFCM STANDARD

THE SUBMITTAL SHALL INCLUDE ANY APPROVED FABRICATEOR REQUIREMENT FOR STRUCTURAL STEEL, PRE-ENGINEERED STEEL JOISTS AND GIRDERS.

FIN. FLR. = 100'-0"(SEE ARCH. DWG.)
4"/6" CONCRETE FLOOR SLAB(SEE ARCH.) w/6x6-W1.4xW1.4 WWF OVER 4" AGGREGATE BASE COURSE - (A.B.C.) TYPICAL U.N.O.

NOTE:
IN THIS PROJECT, ALL METAL BEAMS, JOISTS, HEADERS AND STUDS CALLED OUT ARE BASED ON THE PRODUCTS FROM "SSMA-STEEL STUD MANUFACTURERS ASSOCIATION" ICBO ER-4943P. G.C. CAN PICK DIFFERENT PRODUCTS WHICH ARE EQUAL OR BETTER.THE FOLLOWS ARE THE IDENTIFICATION OF "SSMA" PRODUCTS:
FOR EXAMPLE "600 S 162 - 54"
600 INDICATES MEMBER DEPTH WHICH IS FROM 1 5/8"(162) TO 12"(1200) ETC.
S-STUD OR JOIST SECTIONS± T-TRACK SECTIONS, U-CHANNEL SECTIONS, F-FURRING
162 INDICATES FLANGE WIDTH WHICH IS FROM 1 1/4"(125) TO 2 1/2"(250)
54 INDICATES MEMBER THICKNESS:FOR INSTANCE
18 - 25 GA, 27 - 22 GA, 30 AND 33 - 20 GA, 43 - 18 GA, 54 - 16 GA, 68 - 14 GA

CONCRETE POUR NOTES:
1. VERIFY FTG STEP LOCATIONS AND HEIGHT WITH ARCHITECT IN FIELD PRIOR TO FORMING FOOTINGS. MAKE FTG REBAR CONTINUOUS THROUGH FTGS WITH BENT BARS AT CORNERS. LAP BARS 40 BAR DIAMETERS AT SPLICES AND TIE.
2. THE DIMENSIONS ARE TO FACE OF CONCRETE UNLESS OTHERWISE NOTED. NOTE THAT DIMENSIONS ON ARCITECTURAL PLANS ARE TO FACE OF STUD AND FACE OF STUD IS 1" OUT FROM FACE OF CONCRETE (TYPICAL).
3. ACCURATELY LOCATE ANCHOR BOLTS AND HOLDDOWNS FROM THE ARCHITECTURAL PLAN AND VERIFY WITH THE ARCHITECT PRIOR TO PLACING CONCRETE.
4. DO NOT POUR ANY CONCRETE UNTIL THE FORMS ARE ADEQUATELY BOLSTERED AND SUPPORTED AND ALL REBAR IS IN PLACE AND SECURED.
5. DO NOT PERMIT FIN. GRADE TO COME CLOSER THAN 6" TO TOP OF CONCRETE.
6. BEARING SURFACES FOR PRECAST CONCRETE, STEEL OR TIMBER MEMBERS SHALL BE PREPARED TO A TRUE AND LEVEL LINE.

AN APPLICATION TO PERFORM OF-SITE FABRICATION MUST BE SUBMITTED TO THE INSPECTION DIVISION FOR APPROVAL PRIOR TO FABRICATION.

A CERTIFICATE OF COMPLIANCE FOR OFF-SITE FABRICATION MUST BE COMPLETED AND SUBMITTED TO THE INSPECTION SERVICE DIVISION PRIOR TO ERECTION OF PRE-FABRICATED COMPONENTS.

A CERTIFICATE OF SATISFACTORY COMPLETION OF WORK REQUIREING SPECIAL INSPECTION MUST BE COMPLETED AND SUBMITTED TO THE INSPECTION SERVICE DIVISION.

NOTE: ALL ANCHORS USED AT THE NEW CURB REINFORCEMENT, AT THE HOLDOWN ANCHORS IN EXISTING FOOTINGS AND AT THE NEW ANCHOR BOLTS IN EXISTING FOOTINGS ARE TO BE "SIMPSON STRONG-TIES SET HIGH STRENGTH EPOXY" AS PER ICBO/ICC CODE "ER-5279.
THE INSTALLING REQUIREMENT FOR ANCHOR BOLTS AND/OR REBAR DOWELS ARE AS FOLLOWED:
DIAMETER/DRILL DIA./EMBED. DEPTH/EDGE DIST./SPACING DIST.
1/2" / 5/8" / 4 1/4" / 1 3/4" / 6 3/8"
5/8" / 3/4" / 5" / 1 3/4" / 7 1/2"
3/4" / 7/8" / 6 3/4" / 1 3/4" / 10 1/8"

| FOOTING SCHEDULE | | BASED ON SOIL BEARING = 2500 PSF SEE SOIL REPORT | |
|---|---|---|---|
| MARK | SIZE | REINFORCING | REMARKS |
| F1 | 2'-0" x CONT. x 12" | (2) #4 CONT. | |
| F2 | 2'-6" x CONT. x 12" | (3) #4 CONT. | |
| F3 | 3'-0" x CONT. x 12" | (3) #4 CONT. | |
| F4 | 1'-4" x CONT. x 12" | (1) #4 CONT. | THICKENED SLAB |
| F5 | 2'-0" x CONT. x 12" | (2) #4 CONT. | THICKENED SLAB |
| F6 | 2'-6" SQ. x 12" | (2) #5 E.W. | |
| F7 | 3'-0" SQ. x 12" | (3) #5 E.W. | |
| F8 | 3'-6" SQ. x 12" | (4) #5 E.W. | |
| F9 | 4'-0" SQ. x 12" | (4) #5 E.W. | |
| F10 | 4'-6" SQ. x 12" | (5) #5 E.W. | |
| F11 | 5'-0" SQ. x 12" | (5) #5 E.W. | |
| F12 | 5'-6" SQ. x 13" | (6) #5 E.W. | |
| F13 | 6'-0" SQ. x 13" | (6) #5 E.W. | |
| F14 | 7'-0" SQ. x 14" | (7) #6 E.W. | |

FOUNDATION PLAN NOTES:
1. SEE SHEET S1.1, S1.2, AND S1.3 FOR:
   A. GENERAL STRUCTURAL NOTES
   B. TYPICAL EXCAVATION ADJACENT TO FOOTING
   C. TYPICAL SLAB JOINT DETAILS
   D. TYPICAL STEPPED FOOTING
   E. TYPICAL MASONRY CONTROL JOINT
2. MP1 - DENOTES CMU PIER MARK - SEE SCHED. THIS SHEET.
3. F1 - DENOTES FOOTING MARK - SEE SCHED. THIS SHEET.
4. K.C.J. - DENOTES KEYED CONSTR. JOINT - SEE DETAIL 1/S1.2.
5. C.J. - DENOTES CONTROL JOINT - SEE DETAIL 1/S1.2.
6. W.J. - DENOTES MASONRY WALL FULL HEIGHT CONTROL JOINT. SEE DETAIL 1/S1.3
7. CONTRACTOR TO VERIFY ALL DIMENSIONS AND ELEVATIONS WITH ARCHITECTURAL DRAWINGS PRIOR TO CONSTRUCTION. SEE ARCHITECTURAL FOR ALL DIMENSIONS, SLAB SLOPES & DEPRESSIONS NOT NOTED.
8. ALL SLABS ON GRADE ARE TO BE JOINTED AT NO MORE THAN 15'-0" EACH WAY USING JOINTS AS PER DETAIL 5/S1.2. IN ADDITION, NO SECTION OF CONCRETE SHALL HAVE AN ASPECT RATIO OF GREATER THAN 1 1/2:1. PROVIDE (2) #4 x 4'-0" MID-HEIGHT SLAB BARS ADJACENT TO ALL DISCONTINUOUS JOINT LOCATIONS. ALL COLUMN ISOLATION JOINT CORNERS ARE TO BE INTERSECTED BY A SLAB JOINT OR REINFORCED WITH SLAB BARS PER ABOVE. SUBMIT COMPLETE JOINT LAYOUT PLAN TO THE ARCHITECT FOR PRIOR REVIEW.

Eaton architecture
77 West 200 South, Suite 302
Salt Lake City, UT 84101
Tel 801/328-2982 Fax 801/328-2111

CONSULTANTS

Shen Engineers, Inc.
Structural/Seismic Consultants
3335 South 900 East, Suite 250
Salt Lake City, UT 84106
Telephone 801 466-2625
Facsimile 801 466-2656
E-mail: sheneng@msn.com

LICENSED PROFESSIONAL ENGINEER No. 260129 HUA SHEN STATE OF UTAH

# NORTH TEMPLE LIQUOR STORAGE

OWNER
DEPARTMENT OF ALCOHOLIC BEVERAGE CONTROL

| MARK | DATE | DESCRIPTION |
|---|---|---|
| REVISION 1 | FEB. 2008 | CITY COMMENTS & REPLIES |
| | 12/07 | |

PROJECT NUMBER: SE07346
DRAWING FILE:
DRAWN BY: YX
CHECKED BY: HS

COPYRIGHT 2003 EATON ARCHITECTURE, LLC

SHEET TITLE

S-201

OF

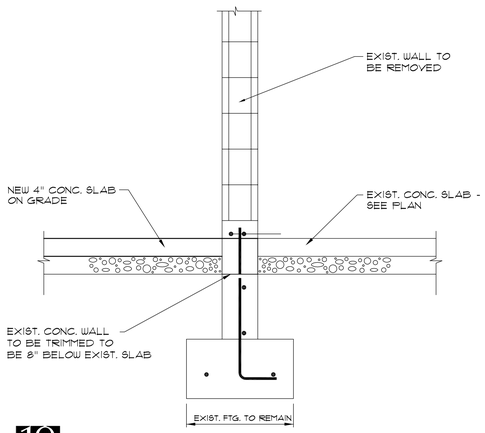


10

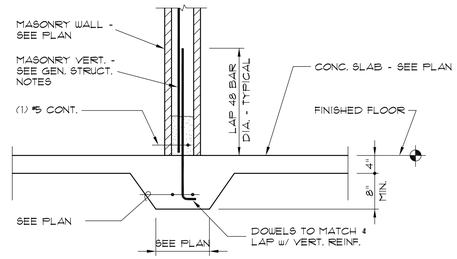


NOTE: THREADED INSERT MAY BE USED IN LIEU OF DOWEL

7 INTERIOR CMU WALL & FOOTING

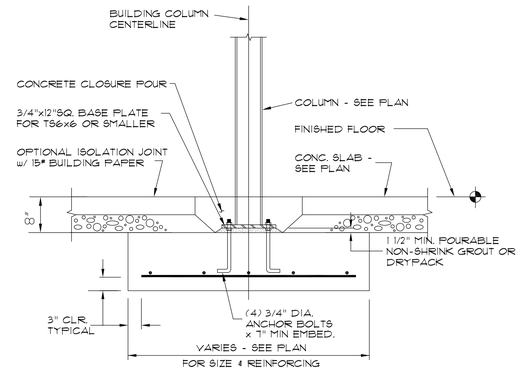


4

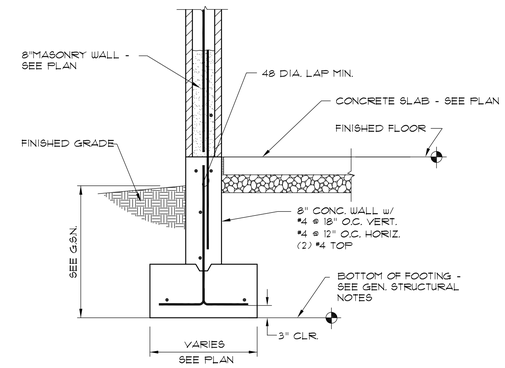


1

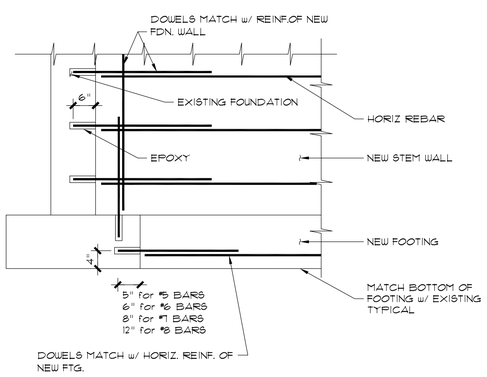


11 NEW FTG./WALL TO EXIST. FTG./WALL CONN.

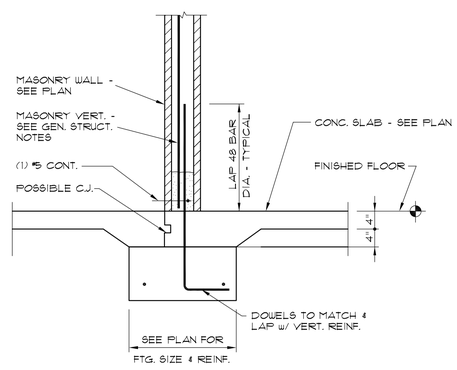


8 INTERIOR CMU WALL & FOOTING

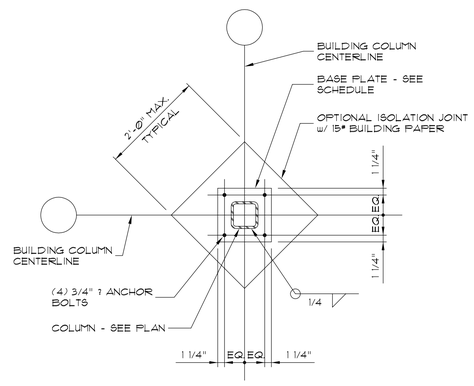


5

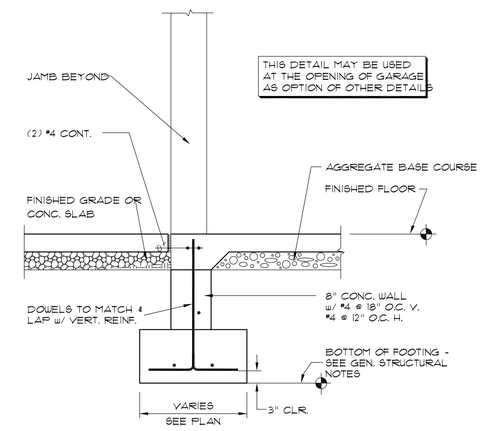


2

PLAN - CONT.

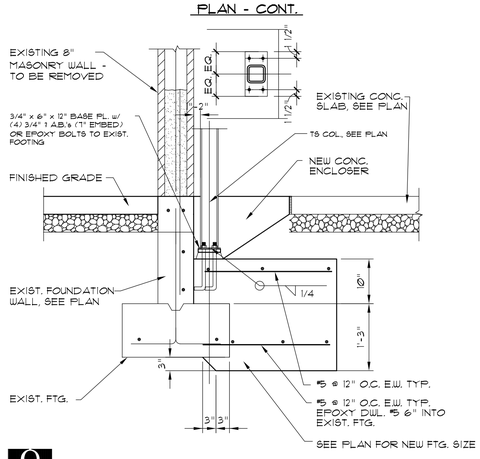


9

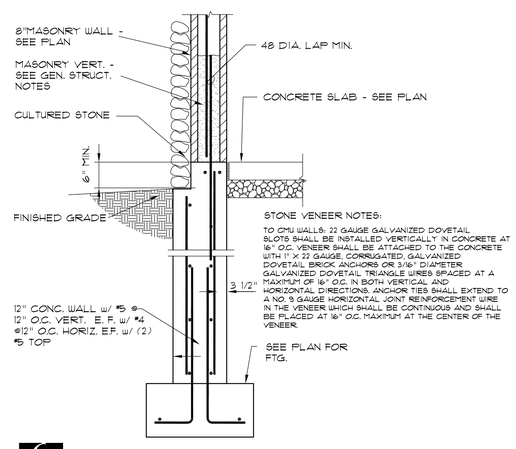


STONE VENEER NOTES:

TO CMU WALLS: 22 GAUGE GALVANIZED DOVETAIL SLOTS SHALL BE INSTALLED VERTICALLY IN CONCRETE AT 16" O.C. VENEER SHALL BE ATTACHED TO THE CONCRETE WITH 1" X 22 GAUGE CORRUGATED, GALVANIZED DOVETAIL BRICK ANCHORS OR 3/16" DIAMETER GALVANIZED DOVETAIL TRIANGLE WIRES SPACED AT A MAXIMUM OF 16" O.C. IN BOTH VERTICAL AND HORIZONTAL DIRECTIONS. ANCHOR TIES SHALL EXTEND TO A NO. 9 GAUGE HORIZONTAL JOINT REINFORCEMENT WIRE IN THE VENEER WHICH SHALL BE CONTINUOUS AND SHALL BE PLACED AT 16" O.C. MAXIMUM AT THE CENTER OF THE VENEER.

6

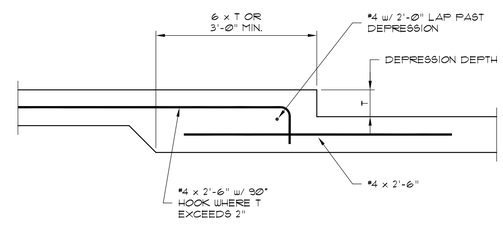


3 TYP. DEPRESSED SLAB ON GRADE


Eaton Architecture
77 West 200 South, Suite 302
Salt Lake City, UT 84101
Tel 801/328-2982 Fax 801/328-2111


CONSULTANTS


Shen Engineers, Inc.
Structural/Seismic Consultants
3335 South 900 East, Suite 250
Salt Lake City, UT 84106
Telephone 801 466-2625
Facsimile 801 466-2656
E-mail: shenen@msn.com


LICENSED PROFESSIONAL ENGINEER No. 260129 HUA SHEN STATE OF UTAH

# NORTH TEMPLE LIQUOR STORAGE

OWNER
DEPARTMENT OF ALCOHOLIC BEVERAGE CONTROL

| MARK | DATE | DESCRIPTION |
|---|---|---|
| REVISION 1 | FEB. 2008 | CITY COMMENTS & REPLIES |
| | 12/07 | |

| | |
|---|---|
| PROJECT NUMBER: | SE07346 |
| DRAWING FILE: | |
| DRAWN BY: | YX |
| CHECKED BY: | HS |

COPYRIGHT 2003 EATON ARCHITECTURE, LLC

SHEET TITLE

S-301

OF

April 08, 1996 3:28:37 p.m.
Drawing: C:\R13\COM\PROTOS\D12.DWG (RJG)

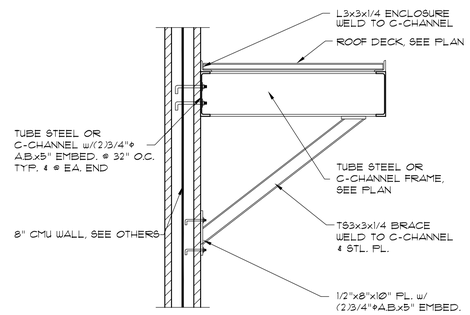


7

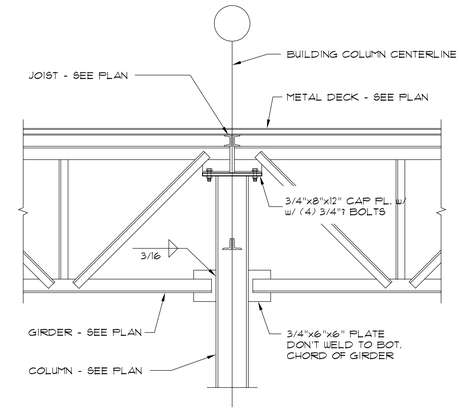


4

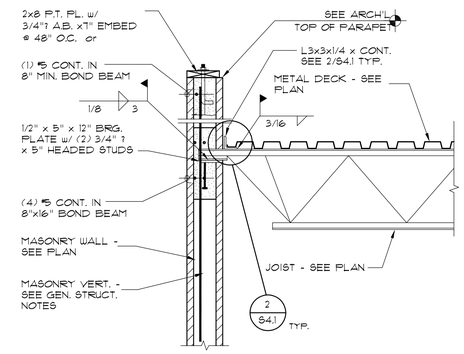


1

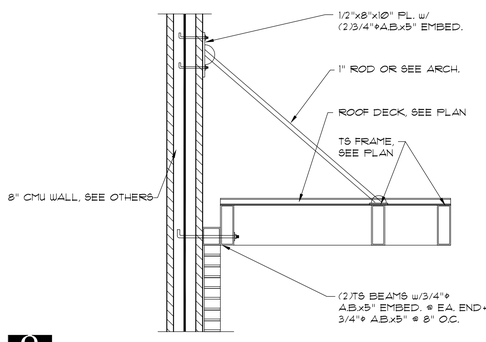


8

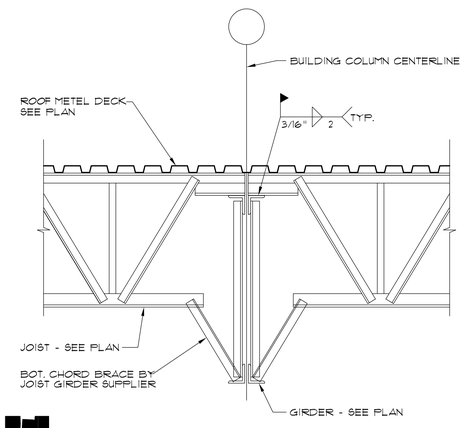


5

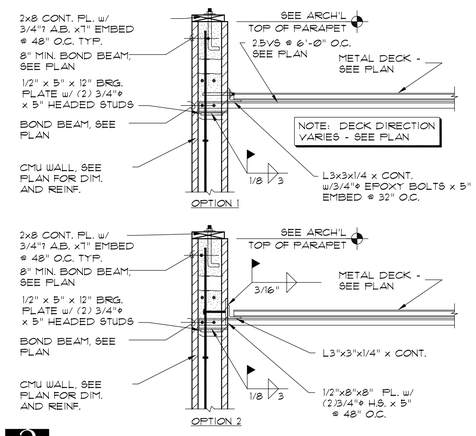


2 ROOF DIAPHRAGM-WALL CONN. TYP.

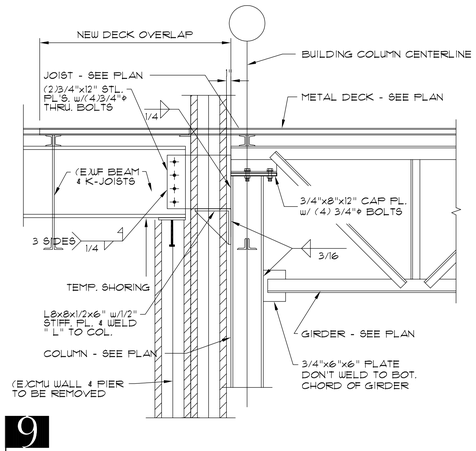


9

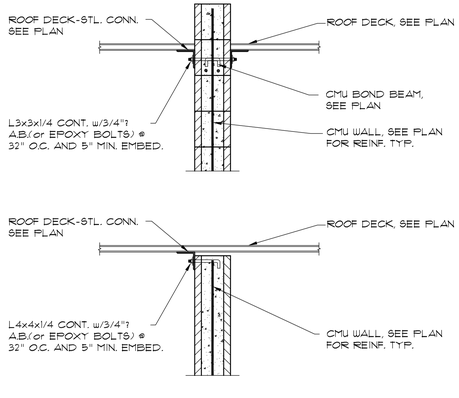


6

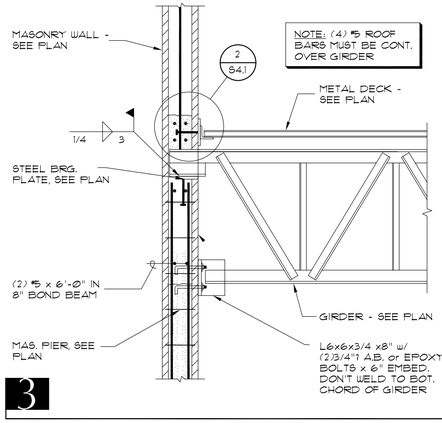


3


Eaton Architecture
77 West 200 South, Suite 302
Salt Lake City, UT 84101
Tel 801/328-2982 Fax 801/328-2111


CONSULTANTS


Shen Engineers, Inc.
Structural/Seismic Consultants
3335 South 500 East, Suite 250
Salt Lake City, UT 84106
Telephone 801 466-2625
Facsimile 801 466-2656
E-mail: shenen@msn.com


LICENSED PROFESSIONAL ENGINEER No. 260129 HUA SHEN STATE OF UTAH

# NORTH TEMPLE LIQUOR STORAGE

OWNER
DEPARTMENT OF ALCOHOLIC BEVERAGE CONTROL

| MARK | DATE | DESCRIPTION |
|---|---|---|
| REVISION 1 | FEB., 2008 | CITY COMMENTS & REPLIES |
| | 12/07 | |

PROJECT NUMBER: SE07346
DRAWING FILE:
DRAWN BY: YX
CHECKED BY: HS

COPYRIGHT 2003 EATON ARCHITECTURE, LLC

SHEET TITLE

S-401

OF

April 08, 1998, 3:28:37 p.m.
Drawing: C:\M13\CAD\PROTOS\S12.DWG (RAD)

# LEGEND OF MECHANICAL SYMBOLS AND ABBREVIATIONS

## MECHANICAL

- POSITIVE PRESSURE DUCT – RISE
- POSITIVE PRESSURE DUCT – DROP
- NEGATIVE PRESSURE DUCT – RISE
- NEGATIVE PRESSURE DUCT – DROP
- ROUND DUCT – RISE
- ROUND DUCT – DROP
- UNDER FLOOR DUCT
- TURNING VANES
- FRESH AIR LOUVER
- RELIEF AIR OR EXHAUST AIR LOUVER
- 12X12 / 200 — CEILING SUPPLY DIFFUSER
- 22X22 / 200 — CEILING RETURN REGISTER
- 12X12 / 200 — CEILING EXHAUST REGISTER, (BALANCE TO MATCH SUPPLY IF RETURN CFM IS NOT SHOWN)
- 24X10 / 200 — SIDEWALL SUPPLY REGISTER
- 24X10 / 200 — SIDEWALL EXHAUST OR RETURN REGISTER
- 12X12 / 200 — CEILING SUPPLY DIFFUSER WITH FLEXIBLE DUCT
- 12X12 / 200 — CEILING AIR GRILLE WITH FLEXIBLE DUCT

  (TOP FIGURES INDICATE NECK SIZE. BOTTOM FIGURE INDICATES CFM.)
- CEILING RETURN AIR GRILE W/ SOUND BOOT
- 3–1" SLOTS, 45 400 — LINEAR DIFFUSER WITH PLENUM AND FLEXIBLE DUCT CONNECTION. NO. OF SLOTS & SIZE OF SLOT ON TOP, ACTIVE LENGTH AND CFM ON BOTTOM
- FLEXIBLE DUCT CONNECTION
- FLEXIBLE DUCT
- FAN
- 12/8 FO — FLAT OVAL DUCT WITH NET INSIDE DIMENSIONS SHOWN IN INCHES.
- 12/8 — RECTANGULAR DUCT WITH NET INSIDE DIMENSIONS SHOWN IN INCHES.
- 12ø — ROUND DUCT WITH NET INSIDE DIMENSIONS SHOWN IN INCHES.
- UP — INCLINED RISE
- DN — INCLINED DROP

  (WITH RESPECT TO AIR FLOW 15° NOMINAL INCLINE WITH RADIUS TURNS=DEPTH OF DUCT.)
- W, R — R/W=1. ROUND DUCT SIMILAR TO RECTANGULAR
- 12/12, 8/8 — RECTANGULAR TO RECTANGULAR OR ROUND TO ROUND DUCT TRANSFORMATION MAXIMUM 15° INCLUDED ANGLE EXCEPT WHERE SHOWN OTHERWISE.
- 12/12, 12ø — RECTANGULAR TO ROUND DUCT TRANSFORMATION
- R — BRANCH DUCT SPLIT WITH 6" WIDTH AND MIN. R=WIDTH OF BRANCH DUCT DOWNSTREAM. ELBOW TURNING VANE OPTIONAL.
- 1.50, 1.50, 45°, DH1, DH1 — TAP ENTRY AREA EQUALS 150% OF BRANCH AREA
- 12ø, 12/12, REF, REF — HIGH EFFICIENCY FITTING
- MANUAL VOLUME DAMPER
- FD — FIRE DAMPER IN DUCT, W/ ACCESS PANEL REQD.
- FSD — COMBINATION FIRE/SMOKE DAMPER W/ ACCESS PANEL
- SD — SMOKE DAMPER W/ ACCESS PANEL
- BDD — BACK DRAFT DAMPER
- ATC, OR — ATC DAMPER
- AD — ACCESS PANEL IN DUCT OR PLENUM
- HEATING OR COOLING COIL IN DUCT
- SINGLE DUCT AIR TERMINAL BOX VARIABLE OR CONSTANT VOLUME. MIN. 1-1/2 TERMINAL INLET SIZE STRAIGHT DUCT AT TERMINAL INLET.
- 4-WAY BLOW PATTERN
- 3-WAY BLOW PATTERN
- 2-WAY BLOW PATTERN
- 2-WAY BLOW PATTERN
- 1-WAY BLOW PATTERN
- SD — DUCT SMOKE DETECTOR
- UNIT HEATER

## PLUMBING

- FLOOR SINK
- FLOOR DRAIN
- FCO, COTG — FLOOR CLEAN-OUT OR CLEAN-OUT TO GRADE
- ROOF DRAIN
- DOWNSPOUT NOZZLE
- ARROW INDICATES DIRECTION OF FLOW IN PIPE
- CHECK VALVE
- PRESSURE REDUCING, EXTERNAL PRESSURE VALVE
- PRESSURE REDUCING, SELF CONTAINED VALVE
- ATC VALVE – 2 WAY
- ATC VALVE – 3 WAY
- SOLENOID VALVE
- GATE VALVE
- GATE VALVE – NON RISING STEM
- GLOBE VALVE
- TEMPERATURE AND PRESSURE TEST PORT
- PS — PRESSURE SWITCH
- GAS COCK
- 6.8 GPM — CALIBRATED BALANCING VALVE WITH GPM INDICATED
- RPBP — REDUCED PRESSURE BACKFLOW PREVENTOR W/ DRAIN PAN
- BRANCH – BOTTOM CONNECTION
- BRANCH – TOP CONNECTION
- BRANCH – SIDE CONNECTION
- RISE OR DROP
- RISER – DOWN (ELBOW)
- RISER – DOWN (ELBOW)
- VTR — VENT THRU ROOF
- WATER HAMMER ARRESTOR
- INLINE PUMP
- INLINE PUMP
- CLEAN-OUT
- RELIEF VALVE
- ANGLE VALVE
- FLOW METER
- UNION
- BALANCING COCK
- SHUT-OFF COCK FOR USE WITH PRESSURE GAUGE
- FLEXIBLE EXPANSION JOINT
- THERMOMETER – TEMP RANGE AS INDICATED
- PRESSURE GAUGE WITH SHUT-OFF COCK
- PRESSURE GAUGE WITH PIGTAIL
- LATERAL STRAINER WITH BLOW-OFF VALVE, PROVIDE HOSE END WITH CAP WHERE DISCHARGE IS NOT PIPED TO DRAIN
- BALL VALVE (PIPE SIZES 2" AND SMALLER) BUTTERFLY VALVE (PIPE SIZES 2-1/2" AND LARGER)
- MOTOR OPERATED BUTTERFLY VALVE
- VALVE IN RISE
- AIR VENT-MANUAL
- AIR VENT-AUTO
- FLOW SWITCH
- REDUCER
- CONCENTRIC REDUCER
- ECCENTRIC REDUCER

## PLUMBING CONT.

- THERMOSTATIC MIXING VALVE
- HOSE BIBB
- PIPE CAP
- S — SWITCH
- S — SENSOR
- T — THERMOSTAT
- TN — NIGHT THERMOSTAT
- FILL PORT
- DRAIN PAN AND P-TRAP
- (NAME) — FIXTURE FROM LEVEL ABOVE
- GPM, LB/HR — FLOW METER ORIFICE
- FLANGE
- 90° ELBOW
- STEAM TRAP, F&T=FLOAT & THERMOSTATIC 45° ELBOW
- F&T — B=BUCKET, T=THERMOSTATIC
- DN — LEADER INDICATES DOWNWARD SLOPE
- DEMOLITION
- ALIGNMENT GUIDE
- ANCHOR
- LUBRICATED PLUG COCK

## SYMBOLS

- P-1 — PLUMBING FIXTURES
- POINT OF CONNECTION
- A, M-101 — SECTION TAG – TOP FIGURE IS SECTION NO. BOTTOM FIGURE IS SHEET NO.
- A, M101 — DETAIL TAG – TOP FIGURE IS DETAIL NO. BOTTOM FIGURE IS SHEET NO.
- EF, 1 — EQUIPMENT IDENTIFICATION
- 1 — KEYED NOTE IDENTIFICATION

## FIRE

- HOSE VALVE
- NRS GATE VALVE WITH SUPERVISION
- FLOW SWITCH
- FR — FIRE RISER
- SPRINKLER HEAD
- F — FIRE SPRINKLER WATER

## LINETYPES

- AV — ACID VENT
- AW — ACID WASTE
- BBD — BOILER BLOW DOWN
- BF — BOILER FEED WATER
- B — BRINE
- CO2 — CARBON DIOXIDE
- CA — COMPRESSED AIR
- CF — CHEMICAL FEED
- CHWS — CHILLED WATER SUPPLY
- CHWR — CHILLED WATER RETURN
- CS — CONDENSER WATER SUPPLY
- CR — CONDENSER WATER RETURN
- DOMESTIC COLD WATER (DCW)
- DOMESTIC HOT WATER (DHW)
- DOMESTIC HOT WATER RETURN (DHWR)
- DI — DEIONIZED WATER SUPPLY
- DIR — DEIONIZED WATER RETURN
- E(NAME) — EXISTING PIPING
- (NAME) — EXISTING PIPING TO BE REMOVED
- GHR — GLYCOL HEAT RECOVERY PIPING
- G(NAME) — GLYCOL PIPING SOLUTION
- FOR — FUEL OIL RETURN
- FOS — FUEL OIL SUPPLY
- FOV — FUEL OIL VENT
- G — NATURAL GAS
- HG — HOT GAS
- HFR — HELICOPTER FUEL RETURN
- HFS — HELICOPTER FUEL SUPPLY
- HP(NAME) — HIGH PRESSURE DOMESTIC WATER
- HPC — HIGH PRESSURE CONDENSATE
- HPS — HIGH PRESSURE STEAM
- HWR — HEATING HOT WATER RETURN
- HWS — HEATING HOT WATER SUPPLY
- IA — INSTRUMENT AIR
- IA 120 — INSTRUMENT AIR AT PRESSURE INDICATED
- LA — LAB AIR
- LV — LAB VACUUM
- LPC — LOW PRESSURE CONDENSATE
- LPG — LIQUIFIED PETROLEUM GAS
- LPS — LOW PRESSURE STEAM
- MA — MEDICAL AIR
- MA 120 — MEDICAL AIR AT PRESSURE INDICATED
- MPC — MEDIUM PRESSURE CONDENSATE
- MPS — MEDIUM PRESSURE STEAM
- MUW — MAKE UP WATER
- MV — MEDICAL VACUUM
- N — NITROGEN
- N2O — NITROUS OXIDE
- OX — MEDICAL OXYGEN
- OX 120 — MEDICAL OXYGEN AT PRESSURE INDICATED
- PUMPED CONDENSATE

## LINETYPES CONT.

- RO — REVERSE OSMOSIS WATER SUPPLY
- ROR — REVERSE OSMOSIS WATER RETURN
- RD — ROOF DRAIN
- RDO — ROOF DRAIN OVERFLOW
- RL — REFRIGERANT LIQUID
- RS — REFRIGERANT SUCTION
- SEWER (BELOW GRADE)
- SEWER (ABOVE GRADE)
- SW — SOFT DOMESTIC WATER (SW)
- V — VACUUM
- VENT (SEWER)


Eaton architecture
77 West 200 South, Suite 302
Salt Lake City, UT 84101
Tel 801/328-2982 Fax 801/328-2111


CONSULTANTS


VAN BOERUM & FRANK ASSOCIATES INC.
WWW.VBFA.COM CONSULTING ENGINEERS
Salt Lake City · Logan · St. George · Phoenix
330 South 300 East 801.530.3148 T
Salt Lake City, UT 84111 801.530.3150 F
VBFA Project Number:7536


LICENSED PROFESSIONAL ENGINEER No. 4537 JOHN D. FRANK STATE OF UTAH

N. TEMPLE LIQUOR STORE REMODEL/ADDITION
1255 WEST NORTH TEMPLE
SALT LAKE CITY, UTAH

OWNER: UTAH D.F.C.M./ DEPT. OF ALCOHOLIC BEVERAGE CONTROL

| MARK | DATE | DESCRIPTION |
|---|---|---|
| | 02-20-08 | |

PROJECT NUMBER: 2007-23
DRAWING FILE:
DRAWN BY: MED
CHECKED BY: MO


COPYRIGHT 2003 EATON ARCHITECTURE, LLC


SHEET TITLE
LEGEND AND SYMBOLS

M001

OF


N:\07\07500\07536 North Temple Liquor Store\01_Cadd_Phase 1\Mechanical_Mechanical\7536_M001.dwg, 3/31/2008 11:29:49 AM, Doug

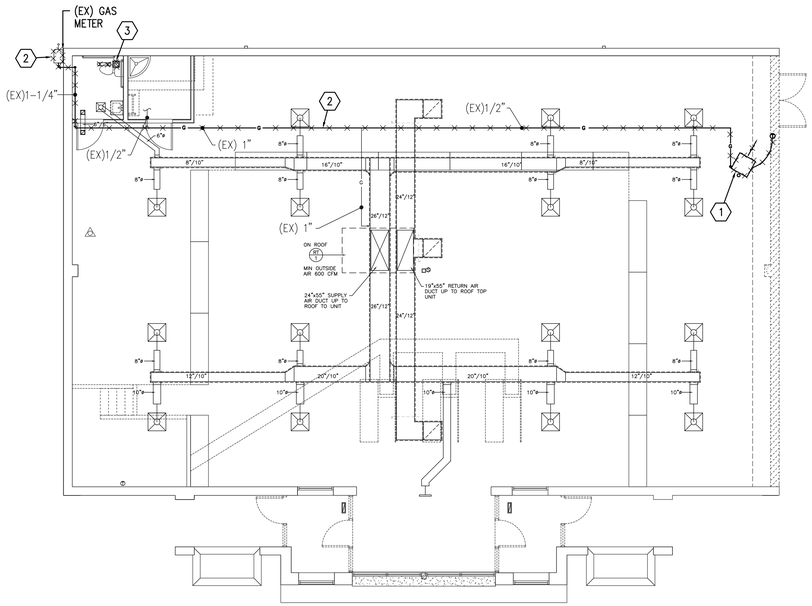


1 / M101 MAIN LEVEL MECHANICAL PLAN (DEMOLITION)
SCALE: 1/8" = 1'-0"

NORTH

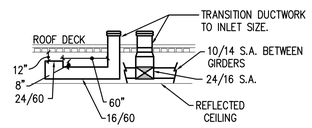


A / M101 SECTION
SCALE: 1/8" = 1'-0"

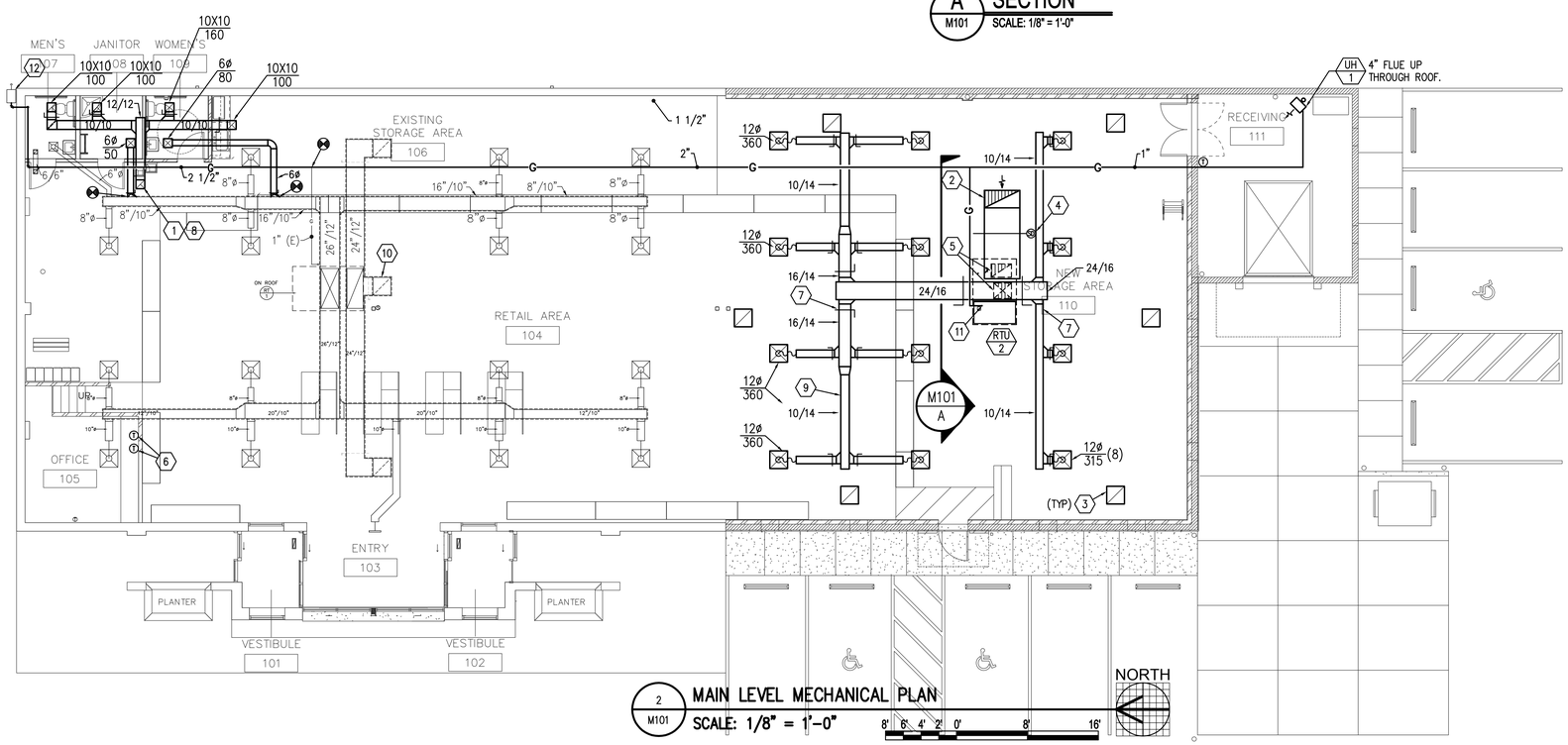


2 / M101 MAIN LEVEL MECHANICAL PLAN
SCALE: 1/8" = 1'-0"

NORTH

## # DEMO NOTES

1. EXISTING UNIT HEATER TO BE REMOVED AND RETURNED TO OWNER.
2. REMOVE EXISTING GAS PIPING TO METER AND METER. REFER TO KEYED NOTE 12 AND MAIN LEVEL MECHANICAL PLAN ON THIS SHEET.
3. REMOVE EXISTING EXHAUST FAN AND ASSOCIATED DUCTWORK.

## # KEYED NOTES

1. 12/12 EXHAUST DUCT UP THROUGH ROOF TO EF-1.
2. 16/60 RETURN AIR UP TO ROOFTOP UNIT. REFER TO SECTION FOR DETAIL ON RETURN TRAP.
3. 22"x22" RETURN AIR GRILLE.
4. SMOKE DETECTOR FURNISHED BY ELECTRICAL, INSTALLED BY MECHANICAL.
5. SUPPLY AND RETURN DUCTS UP THROUGH ROOF, FULL SIZE OF UNIT CONNECTIONS, TO ROOF MOUNTED HVAC UNIT.
6. PROVIDE A NEW THERMOSTATS AND REMOTE SENSORS FOR EXISTING RTU-1, AND NEW RTU-2.
7. ROUTE DUCTWORK UNDERNEATH STRUCTURAL BEAM.
8. SAW CUT OUT AND FRAME EXISTING ROOF FOR EXHAUST DUCTWORK OPENING. PATCH TO MATCH EXISTING.
9. ROUTE DUCT BETWEEN ROOF JOIST.
10. EXISTING SMOKE DETECTOR TO BE REMOVED FROM SUPPLY AIR DUCT AND INSTALLED IN RETURN AIR DUCT. FIELD VERIFY EXISTING CONDITIONS.
11. GAS PIPING UP THROUGH ROOF TO RTU.
12. GAS METER CAPACITY IS NOT SUFFICIENT TO MEET ADDITIONAL GAS LOAD AND WILL NEED TO BE REPLACED BY QUESTAR. CONTRACTOR WILL COORDINATE WITH QUESTAR TO CHANGE METER. FIELD VERIFY EXISTING CONDITIONS. SEE SHEET M102 FOR GAS SCHEMATIC. UNDERGROUND, BURIED GAS PIPING FROM METER TO BE REPLACED WITH FEDERALLY APPROVED NATURAL GAS SERVICE PLASTIC PIPE PER CORRESPONDENCE FROM UTAH DEPARTMENT OF COMMERCE DIVISION OF PUBLIC UTILITIES.

## GENERAL NOTES

1. ALL CEILING DIFFUSERS SHOWN AS SUCH ARE CD-1, CFM AS NOTED UNLESS OTHERWISE NOTED. REFER TO DETAIL SHEET.
2. ALL CEILING RETURN GRILLES SHOWN AS SUCH ARE RG-1 UNLESS OTHERWISE NOTED. PROVIDE SOUND BOOT PER DETAIL.
3. ALL CEILING EXHAUST GRILLES SHOWN AS SUCH ARE EG-1, CFM AS NOTED, UNLESS OTHERWISE NOTED.
4. DO NOT ROUTE DUCTS AND PIPES ABOVE ELECTRICAL PANELS. ALL ELECTRICAL PANELS MUST HAVE CLEAR ACCESS SPACE IN FRONT HIGH. DO NOT ROUTE DUCTS AND DEEP AND 6'-6 OF PANEL 4'-0 PIPES IN ELECTRICAL ROOMS, EXCEPT DUCTS AND PIPES SERVING THE ROOM.
5. COORDINATE EXACT LOCATIONS OF CEILING DIFFUSERS AND GRILLES WITH ARCHITECTURAL REFLECTED CEILING PLANS.
6. ALL DUCT DIMENSIONS ARE INSIDE FREE AREA DIMENSIONS. ADJUST SHEET METAL DIMENSION FOR LINED DUCT.
7. PROVIDE CEILING ACCESS PANELS AS REQUIRED WHERE MECHANICAL EQUIPMENT, VALVES, VAV BOXES, FIRE DAMPERS ETC. ARE LOCATED ABOVE INACCESSIBLE CEILINGS.


Eaton architecture
77 West 200 South, Suite 302
Salt Lake City, UT 84101
*Tel* 801/328-2982 *Fax* 801/328-2111


CONSULTANTS


VAN BOERUM & FRANK ASSOCIATES INC.
WWW.VBFA.COM CONSULTING ENGINEERS
Salt Lake City · Logan · St. George · Phoenix
330 South 300 East 801.530.3148 T
Salt Lake City, UT 84111 801.530.3150 F
VBFA Project Number:7536


LICENSED PROFESSIONAL ENGINEER
No. 4537
JOHN D. FRANK
STATE OF UTAH

# N. TEMPLE LIQUOR STORE REMODEL/ADDITION

1255 WEST NORTH TEMPLE
SALT LAKE CITY, UTAH

OWNER
UTAH D.F.C.M./ DEPT. OF ALCOHOLIC BEVERAGE CONTROL

| MARK | DATE | DESCRIPTION |
|---|---|---|
| | 02-20-08 | |

PROJECT NUMBER: 2007-23
DRAWING FILE:
DRAWN BY: MED
CHECKED BY: MO


COPYRIGHT 2003 EATON ARCHITECTURE, LLC


SHEET TITLE
MAIN LEVEL MECHANICAL PLAN

M101
OF


N:\07\07500\07536 North Temple Liquor Store\01_Cadd_Phase 1\Mechanical_Mechanical\7536_M101.dwg, 3/31/2008 11:29:43 AM, Doug

## KEYED NOTES

1. GAS PIPING DOWN THRU ROOF INTO CEILING PLENUM.

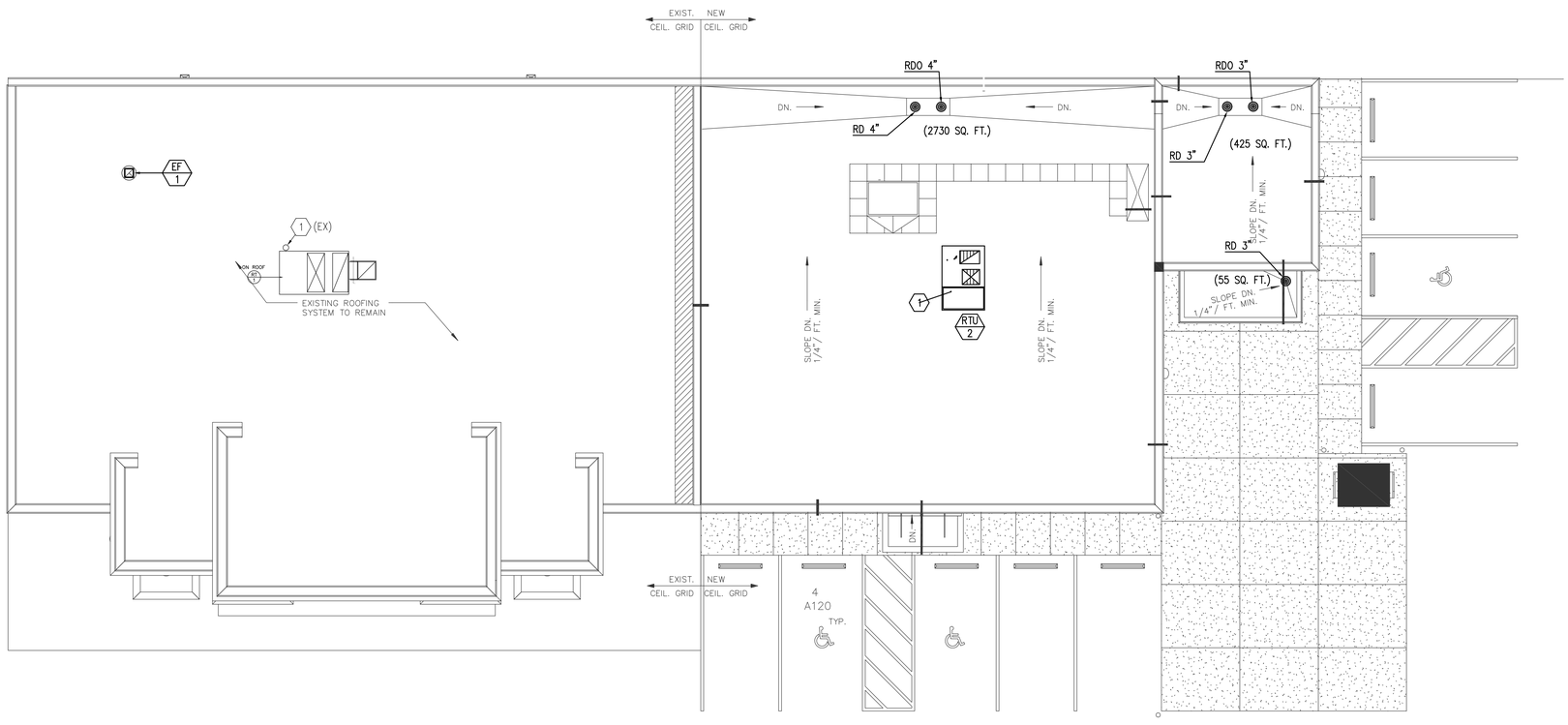


| GAS SIZING TABLE | |
|---|---|
| PIPE SIZE (IN.) | CFH |
| 1/2" | 28 |
| 3/4" | 58 |
| 1" | 109 |
| 1 1/4" | 224 |
| 1 1/2" | 336 |
| 2" | 648 |
| 2 1/2" | 1030 |

NOTES:
1. (.25 PSIG INLET PRESSURE, 0.6 SPECIFIC GRAVITY, .3" W.C. PRESSURE DROP. 2006 IFGC.
2. BASED ON A TOTAL DEVELOPED LENGTH OF 175 FEET.

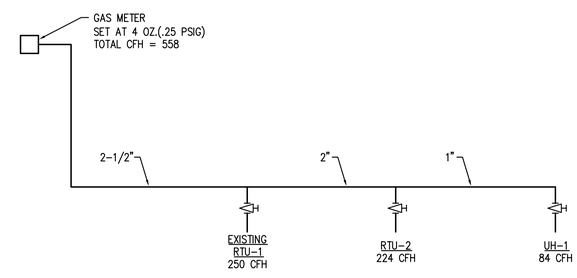


1 / M102 ROOF LEVEL MECHANICAL PLAN
SCALE: 1/8" = 1'-0"

NORTH

8' 6' 4' 2' 0' 8' 16'

2 / M102 GAS SCHEMATIC
SCALE: NONE


Eaton architecture
77 West 200 South, Suite 302
Salt Lake City, UT 84101
Tel 801/328-2982 Fax 801/328-2111


CONSULTANTS


VAN BOERUM & FRANK ASSOCIATES INC.
WWW.VBFA.COM CONSULTING ENGINEERS
Salt Lake City · Logan · St. George · Phoenix
330 South 300 East 801.530.3148 T
Salt Lake City, UT 84111 801.530.3150 F
VBFA Project Number:7536


LICENSED PROFESSIONAL ENGINEER
No. 4537
JOHN D. FRANK
STATE OF UTAH

# N. TEMPLE LIQUOR STORE REMODEL/ADDITION

1255 WEST NORTH TEMPLE
SALT LAKE CITY, UTAH

OWNER
UTAH D.F.C.M./ DEPT. OF ALCOHOLIC BEVERAGE CONTROL

| MARK | DATE | DESCRIPTION |
|---|---|---|
| | 02-20-08 | |

PROJECT NUMBER: 2007-23
DRAWING FILE:
DRAWN BY: MED
CHECKED BY: MO


COPYRIGHT 2003 EATON ARCHITECTURE, LLC


SHEET TITLE
ROOF LEVEL MECHANICAL PLAN

M102

OF


N:\07075000\7536 North Temple Liquor Store\01_Cadd_Phase 1\Mechanical_Mechanical\7536_M102.dwg, 3/31/2008 11:29:36 AM, Doug

## ROOFTOP UNIT SCHEDULE

| ID | MANUFACTURER | MODEL NO. | SUPPLY CFM | MIN. OSA CFM | SUPPLY ESP (IN W.G.) | RELIEF CFM | RELIEF ESP (IN W.G.) | COOLING CAPACITY E.A.T. DB/WB (F) | L.A.T. DB/WB (F) | TOTAL MBH | SENSIBLE MBH | NAT. GAS HEATING CAPACITY (2 STAGE) MBH INPUT | MBH OUTPUT | EAT DB (F) | ELECTRICAL DATA EVAPORATOR FAN FLA | CONDENSER FAN FLA (EA) | COMPR RLA (1,2,3) | COMB AIR FAN FLA | V/PH | POWER EXHAUST/RELIEF FLA | MCA | UNIT MCA | UNIT MOCP | OPERATING WEIGHT (LBS) | SEER/EER @ ARI | OVERALL SIZE, LXWXH (IN) | COMMENTS |
|---|---|---|---|---|---|---|---|---|---|---|---|---|---|---|---|---|---|---|---|---|---|---|---|---|---|---|---|
| *RTU-1 (Existing)* | *BRYANT* | *580DPV120224ABAA* | 4000 | 600 | 1.00 | - | - | - | - | 125 | - | 224 | 179 | - | 5.8 | (2) 1.4 | (2) 17.9 | 0.6 | 208/3 | N/A | N/A | 48.9 | 60 | - | -/9.0 | - | 10 |
| RTU-2 (NEW) | YORK | ZH150N20NZTAA4 | 4500 | 900 | 1.50 | 4500 | 0.50 | 80/61 | 49/- | 133 | 127 | 199 | 160 | 60 | 5 HP | - | - | - | 208/3 | 6.6 | - | 88.4 | 110 | 2000 | -/11.2 | 120/59/51 | 1,2,3,4,5,6,7,8,9 |

(1) CAPACITIES LISTED ARE AT 4,200' ALTITUDE
(2) COOLING CAPACITIES ARE BASED ON 110 DEG. F. AMBIENT TEMP/ 75 DEG.F. RETURN AIR TEMPERATURE.
(3) PROVIDE UNIT WITH MOTOR STARTERS AND DISCONNECTS FACTORY INSTALLED AND PREWIRED, CONFIGURED FOR SINGLE POINT POWER CONNNECTION, AND FULLY MODULATING CENTRIFUGAL POWER EXHAUST.
(4) UNIT SHALL INCLUDE 2" MERV 7 FILTERS, DRAINPANS, COLORED WIRING DIAGRAMS, 2000 HR SALT SPRAY TEST PAINT.
(5) PROVIDE UNIT WITH LOW AMBIENT COOLING KIT, FACTORY INSTALLED AND WIRED ECONOMIZER AND MODULATING OUTSIDE AIR/RETURN AIR DAMPERS AND FACTORY INSTALLED AND WIRED 120V CONVENIENCE OUTLET.
(6) PROVIDE UNIT WITH FACTORY SUPPLIED CO2 DETECTORS FOR DEMAND CONTROL OUTSIDE AIR.
(7) PROVIDE UNIT WITH FIELD INSTALLED SPRING VIBRATION ISOLATION 14" ROOF CURB.
(8) PROVIDE UNIT WITH RETURN AIR SMOKE DETECTORS.
(9) FACTORY INSTALLED OVERSIZED BLOWER MOTOR.
(9) CAPACITY INFORMATION TAKEN FROM OWNER SUPPLIED RECORD DRAWINGS AND EXISTING ROOFTOP UNIT NAMEPLATE. R-22 REF. SYSTEM.

## EXHAUST FAN SCHEDULE

| ID | MANUFACTURER AND MODEL NUMBER | LOCATION | TYPE | AIR MAXIMUM AIRFLOW RATE (CFM) | EXTERNAL STATIC PRESSURE (IN. WATER) | FAN SPEED (RPM) | SONES AT E.S.P. | ELECTRICAL MOTOR SIZE (HP) | FLA (A) | MOTOR SPEED (RPM) | VOLT/PH/HZ | BAROMETRIC DAMPER | WEIGHT (LBS) | NOTES |
|---|---|---|---|---|---|---|---|---|---|---|---|---|---|---|
| EF-1 | GREENHECK GB-091 | RESTROOMS | EXHAUST | 460 | 0.5 | 1217 | 7.3 | 1/4 | 5.8 | 1725 | 115/60/1 | YES | 60 | 1,2 |

1. PROVIDE FACTORY MOUNTED ROOF CURB.
2. FAN TO BE CONTROLLED BY TIME CLOCK. COORDINATE WITH ELECTRICAL.

## GAS UNIT HEATER SCHEDULE

| ID | MANUFACTURER AND MODEL NUMBER | LOCATION | TYPE | USE TYPE | BLOWER AIRFLOW RATE (CFM) | ESP | HEATER INPUT (MBH) | OUTPUT (MBH) | ELECTRICAL MOTOR SIZE (HP) | VOLT/PH/HZ | PHYSICAL FLUE DIAMETER | WEIGHT (LBS.) | NOTES |
|---|---|---|---|---|---|---|---|---|---|---|---|---|---|
| UH-1 | REZNOR UDAP-75 | RECEIVING | GAS | HEATING | 960 | - | 75 | 62 | 1/15 | 120/1/60 | 4" | 100 | 1 |

1. PROVIDE FOUR POINT SUSPENSION KIT.

## GRILLES, REGISTERS AND DIFFUSERS

| ID | MANUFACTURER | MODEL | MAX NC | DESCRIPTION |
|---|---|---|---|---|
| CD-1 | EH PRICE | SCDA | 30 | LOUVER FACE (4-CONE) CEILING DIFFUSERS. ADJUSTABLE AIR PATTERN, C.W.O.B.D. FRAME SHALL BE FOR SURFACE OR LAY-IN MOUNTING AS REQUIRED BY CEILING TYPE. LAY-IN FRAMES SHALL BE 24" x 24", 24" x 12" OR 12" x 12" AS REQUIRED TO FIT CEILING TILE SPACE AVAILABLE. PROVIDE ROUND NECK ADAPTER. |
| EG-1 | EH PRICE | PDDR | 20 | PERFORATED FACE EXHAUST AIR UNIT, REMOVABLE FACE & CORE. FRAME SHALL BE FOR SURFACE OR LAY-IN MOUNTING AS REQUIRED BY CEILING TYPE. LAY-IN FRAMES HSLL BE 24" x 24", 24" x 12" OR 12" x 12" AS REQUIRED TO FIT CEILING TILE SPACE AVAILABLE. |
| RG-1 | EH PRICE | PDDR | 30 | PERFORATED FACE RETURN AIR UNIT, REMOVABLE FACE & CORE. FRAME SHALL BE FOR SURFACE OR LAY-IN MOUNTING AS REQUIRED BY CEILING TYPE. LAY-IN FRAMES HSLL BE 24" x 24", 24" x 12" OR 12" x 12" AS REQUIRED TO FIT CEILING TILE SPACE AVAILABLE. AIR QUANTITY SHALL MATCH ROOM SUPPLY OR EXHAUST AIR QUANTITY. |
| SWR-1 | EH PRICE | 535 | 30 | SIDEWALL RETURN AIR GRILLE. HORIZONTAL STATIONARY 45 DEG DEFLECTION VANES SET ON 1/2 INCH CENTER, COMPLETE WITH OBD ADJUSTABLE THROUGH FACE. |

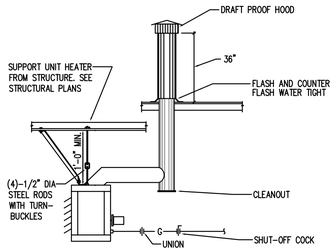


7 M601 GAS FIRED UNIT HEATER DETAIL
NO SCALE

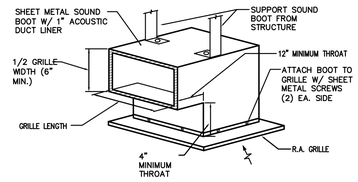


4 M601 R.A. GRILLE WITH SOUND BOOT
NO SCALE

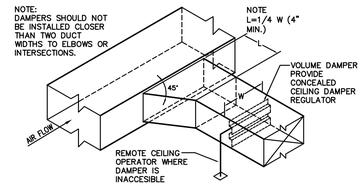


1 M601 BRANCH DUCT TAKE-OFF & DAMPER DETAIL
NO SCALE

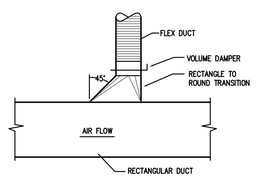


5 M601 HIGH EFFICIENCY TAKE-OFF DETAIL
NO SCALE

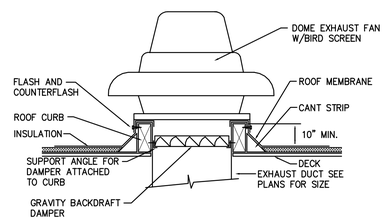


2 M601 EXHAUST FAN DETAIL
NO SCALE

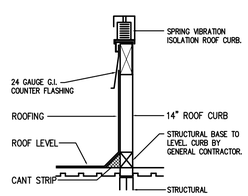


6 M601 ROOF CURB DETAIL
NO SCALE

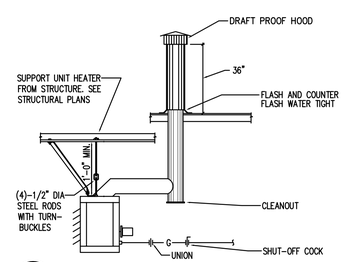


3 M601 GAS FIRED UNIT HEATER DETAIL
NO SCALE


Eaton architecture
77 West 200 South, Suite 302
Salt Lake City, UT 84101
*Tel* 801/328-2982 *Fax* 801/328-2111

CONSULTANTS
VAN BOERUM & FRANK ASSOCIATES INC.
WWW.VBFA.COM CONSULTING ENGINEERS
Salt Lake City · Logan · St. George · Phoenix
330 South 300 East 801.530.3148 T
Salt Lake City, UT 84111 801.530.3150 F
VBFA Project Number:7536


LICENSED PROFESSIONAL ENGINEER
No. 4537
JOHN D. FRANK
STATE OF UTAH

# N. TEMPLE LIQUOR STORE REMODEL/ADDITION
1255 WEST NORTH TEMPLE
SALT LAKE CITY, UTAH

OWNER
UTAH D.F.C.M./ DEPT. OF ALCOHOLIC BEVERAGE CONTROL

| MARK | DATE | DESCRIPTION |
|---|---|---|
| | 02-20-08 | |

PROJECT NUMBER: 2007-23
DRAWING FILE:
DRAWN BY: MED
CHECKED BY: MO

COPYRIGHT 2003 EATON ARCHITECTURE, LLC

SHEET TITLE
MECHANICAL DETAILS AND SCHEDULES

M601
OF

N:\07\07500\07536 North Temple Liquor Store\01_Cadd_Phase 1\Mechanical_Mechanical\7536_M601.dwg, 3/31/2008 11:29:54 AM, Doug

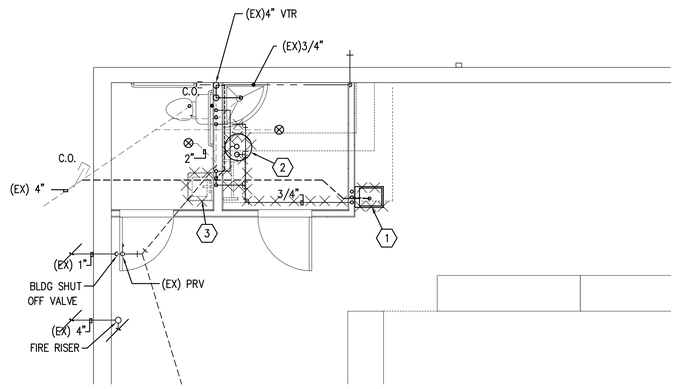


1 P101 PLUMBING FLOOR PLAN (DEMOLITION)
SCALE: 1/4" = 1'-0"

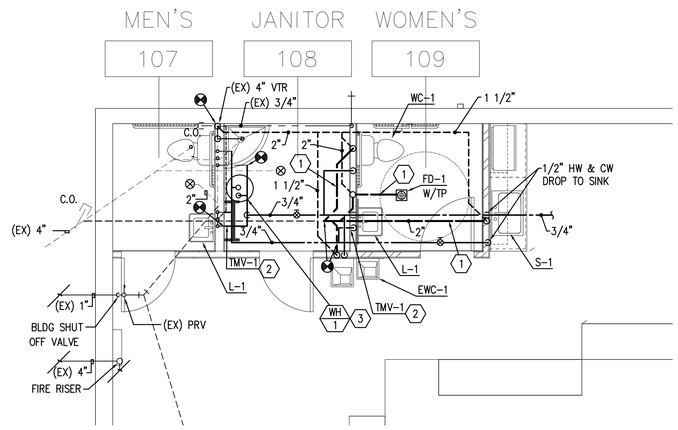


2 P101 PLUMBING FLOOR PLAN (ENLARGED)
SCALE: 1/4" = 1'-0"

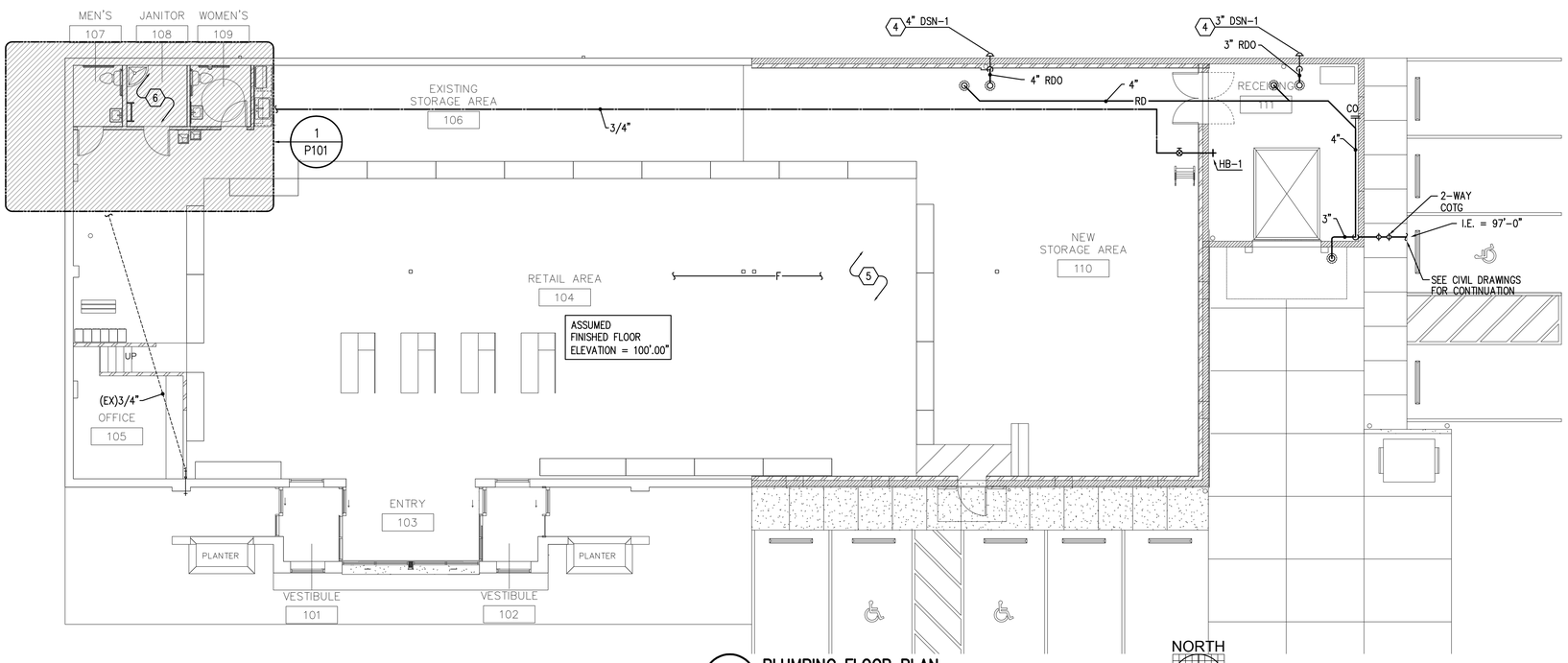


3 P101 PLUMBING FLOOR PLAN
SCALE: 1/8" = 1'-0"

## # DEMO NOTES

1. REMOVE EXISTING BREAKROOM SINK, UNDER SINK MOUNTED WATER CHILLER, AND ALL ASSOCIATED PIPING. FIELD VERIFY EXISTING CONDITIONS/LOCATION OF WASTE AND WATER FOR FEASABILITY OF REUSING EXISTING PIPING AND MAKING NEW CONNECTIONS. IF NOT FEASIBLE, REFER TO ENLARGED PLAN FOR NEW ROUTING.
2. REMOVE EXISTING WATER HEATER AND EXPANSION TANK. FIELD VERIFY EXISTING CONDITIONS FOR REWORKING DOMESTIC PIPING IN THIS AREA FOR INSTALLATION OF NEW WATER HEATER AND EXPANSION TANK, AND CONNECTING TO EXISTING PLUMBING FIXTURES.
3. REMOVE EXISTING LAVATORY AND ASSOCIATED PIPING TO WALL. LEAVE WASTE AND PIPING STUB-OUTS FOR NEW SINK IN THIS AREA. FIELD VERIFY EXISTING CONDITIONS.

## # KEYED NOTES

1. SAWCUT EXISTING FLOOR TO ROUTE NEW WASTE LINE. PATCH FLOOR TO MATCH EXISTING.
2. PROVIDE WATTS No.7 (OR EQUAL) CHECK VALVES IN HOT AND COLD WATER PIPING ACCESSIBLE ABOVE CEILING.
3. EXISTING WATER HEATER AND EXPANSION TANK TO BE REMOVED AND NEW WATER HEATER AND EXPANSION TANK INSTALLED. VERIFY EXITING CONDITIONS AND REQUIREMENTS FOR SUPPORTING AND REROUTING DOMESTIC WATER PIPING. REFER TO WATER HEATER DETAIL 7 ON SHEET P501.
4. OVERFLOW DRAIN PIPING DOWN TO SPLASHBLOCK. REFER TO DETAIL 4 ON SHEET P501.
5. PROVIDE FIRE SPRINKLERS IN ADDITION, CONNECT TO NEAREST FIRE SPRINKLER MAIN. CONTRACTOR TO FIELD VERIFY LOCATION.
6. RELOCATE/ADD FIRE SPRINKLER HEADS IN REMODELED AREA.

## GENERAL NOTES

1. UNLESS OTHERWISE NOTED, SLOPE PIPE AS FOLLOWS: WASTE BRANCHES: 1/4" PER FOOT; WASTE MAINS: 1/8" PER FOOT; ROOF DRAIN/ROOF DRAIN OVERFLOW: 1/8" PER FOOT.
2. SLEEVE PIPING THRU WALLS/FOUNDATIONS WHERE REQUIRED.
3. PLUMBING DRAWINGS ARE SCHEMATIC IN NATURE. FIELD VERIFY EXACT PIPE ROUTING AND COORDINATE WITH ALL OTHER TRADES.
4. ALL PIPING IN PLUMBING CHASES SHALL BE ARRANGED TO ALLOW MAINTENANCE ACCESS.
5. NO PIPING TO RUN OVER ELECTRICAL PANELS, VFD'S OR MCC'S. PROTECT EQUIPMENT WITH A 42" DEEP ZONE IN FRONT OF PANELS, VFD'S, AND MCC'S.
6. NO FIRE PROTECTION LINE SHALL BE DESIGNED OR INSTALLED PRIOR TO CLOSE COORDINATION WITH ALL OTHER DISCIPLINES. DUCTWORK, MECHANICAL PIPING AND PLUMBING TAKE SPACE PRECEDENCE OVER FIRE PROTECTION PIPING. FAILURE TO COMPLY WILL RESULT IN THE FIRE PROTECTION REMOVAL AND REINSTALLATION AT THE FIRE PROTECTION CONTRACTORS EXPENSE.
7. SLEEVE/CONFIGURE CMU WALLS FOR EMBEDDED PIPING AND PIPE PENETRATIONS AS REQUIRED.
8. REFER TO ARCHITECTURAL DRAWINGS FOR FIXTURE MOUNTING HEIGHTS, DIMENSIONS, AND OTHER REQUIREMENTS.
9. CONTRACTOR TO VERIFY CONNECTION SIDE OF ADA FIXTURES AND ADJUST ACCORDINGLY.
10. LOCATE ALL VENTS MINIMUM 25' AWAY FROM AIR INTAKES.
11. INSTALL ALL DOMESTIC WATER LINES BELOW DUCTWORK.
12. INSTALL A 24" X 24" ACCESS DOOR BELOW ALL ISOLATION VALVES & CIRCUIT SETTERS WHERE MOUNTED ABOVE HARD CEILINGS.
13. MOUNT ALL ISOLATION VALVES, CONTROL VALVES, CIRCUIT SETTERS, ETC. NEAR CEILING HEIGHT FOR ACCESSIBILITY.
14. INSTALL ALL EQUIPMENT WITH SUFFICIENT CLEARANCE FOR MAINTENANCE PER MANUFACTURERS RECOMMENDATION.
15. COORDINATE ALL FLOOR PENETRATIONS WITH STRUCTURAL AND PROVIDE SLEEVES AS NECESSARY.
16. COORDINATE EXACT LOCATION OF PLUMBING WITH STRUCTURAL MEMBERS, LIGHTS, REFLECTED CEILING, CABLE TRAY, DUCTWORK, MECHANICAL PIPING, MEDICAL GASES, FIRE PROTECTION AND OTHER TRADES, TYPICAL.
17. COORDINATE THE LOCATION OF THE FLOOR DRAIN, SHOWER DRAIN, OR FLOOR SINK WITH ARCHITECTURAL AND STRUCTURAL, TYPICAL.
18. ACCESS DOORS SHALL BE PROVIDED TO ALL WATER HAMMER ARRESTORS IN WALLS OR ABOVE CEILINGS.
19. COORDINATE ROOF PENETRATIONS WITH STRUCTURAL.
20. HOSE BIBBS SHOWN AT LAVATORIES ARE TO BE MOUNTED AT AN ACCESSIBLE LOCATION UNDER THE LAVATORY.
21. COORDINATE THE EXACT LOCATION OF ROOF DRAINS AND OVERFLOWS WITH ARCHITECTURAL ROOF PLAN.
22. PROVIDE ACCESS PANELS TO ALL VALVES LOCATED ABOVE HARD CEILINGS.
23. ROOF DRAIN LINES MUST HAVE AT LEAST 45 DEGREE SLOPE TO TIE INTO THE VERTICAL LEADER.
24. WHERE NOT SHOWN EXTEND ROOF DRAIN AND WASTE LINES TO OUTSIDE UTILITIES AT LEAST 5 FEET BEYOND BUILDINGS, AND IF NEEDED BEYOND 5 FEET TO CLEANOUT OR MANHOLE SHOWN ON SITE UTILITY DRAWINGS.
25. ALL PIPE AND DUCT SIZES SHALL REMAIN THE SAME SIZE SHOWN, IN THE DIRECTION OF FLOW, UNTIL SHOWN OTHERWISE.
26. INSTALL CLEANOUTS IN DRAIN PIPING (INCLUDING ROOF DRAINS) AS INDICATED, AND WHERE NOT INDICATED, ACCORDING TO THE FOLLOWING.
    A. SIZE SAME AS DRAINAGE PIPING UP TO 4" NPS. USE 4" NPS FOR LARGER DRAINAGE PIPING UNLESS LARGER CLEANOUT IS INDICATED.
    B. LOCATE AT EACH CHANGE IN DIRECTION OF PIPING GREATER THAN 45 DEGREES.
    C. LOCATE AT MINIMUM INTERVALS OF 50 FT FOR PIPING 4" NPS AND SMALLER AND 100 FT FOR LARGER PIPING
    D. LOCATE AT THE BASE OF EACH VERTICAL STACK


Eaton architecture
77 West 200 South, Suite 302
Salt Lake City, UT 84101
*Tel* 801/328-2982 *Fax* 801/328-2111


CONSULTANTS


VAN BOERUM & FRANK ASSOCIATES INC.
WWW.VBFA.COM CONSULTING ENGINEERS
Salt Lake City · Logan · St. George · Phoenix
330 South 300 East 801.530.3148 T
Salt Lake City, UT 84111 801.530.3150 F
VBFA Project Number:7536


LICENSED PROFESSIONAL ENGINEER No. 4537 JOHN D. FRANK STATE OF UTAH

# N. TEMPLE LIQUOR STORE REMODEL/ADDITION

1255 WEST NORTH TEMPLE
SALT LAKE CITY, UTAH

OWNER
UTAH D.F.C.M./ DEPT. OF ALCOHOLIC BEVERAGE CONTROL

| MARK | DATE | DESCRIPTION |
|---|---|---|
| | 02-20-08 | |

PROJECT NUMBER: 2007-23
DRAWING FILE:
DRAWN BY: MED
CHECKED BY: MO


COPYRIGHT 2003 EATON ARCHITECTURE, LLC


SHEET TITLE

PLUMBING FLOOR PLAN

P101

OF


N:\07\07500\07536 North Temple Liquor Store\01_Cadd_Phase 1\Mechanical_Plumbing\7536_P101.dwg, 3/31/2008 11:30:11 AM, Doug

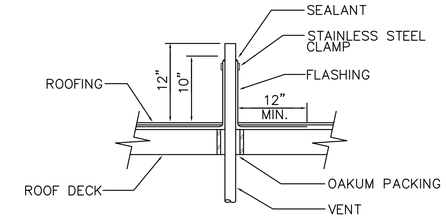


5 / P501 **VENT THRU ROOF FLASHING & SLEEVING DETAIL**
**NO SCALE**

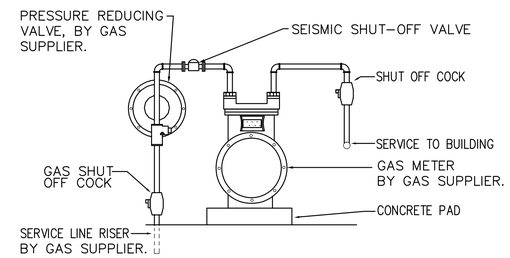


6 / P501 **GAS METER DETAIL**
**NO SCALE**

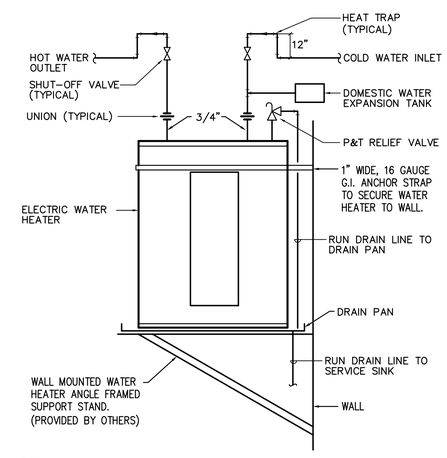


7 / P501 **ELECTRIC WATER HEATER DETAIL**
**NO SCALE**

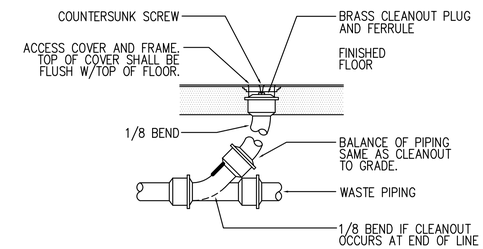


1 / P501 **FLOOR CLEANOUT DETAIL**
**NO SCALE**

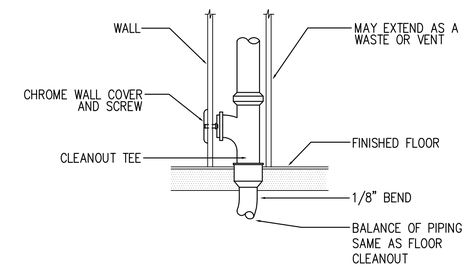


2 / P501 **WALL CLEANOUT DETAIL**
**NO SCALE**

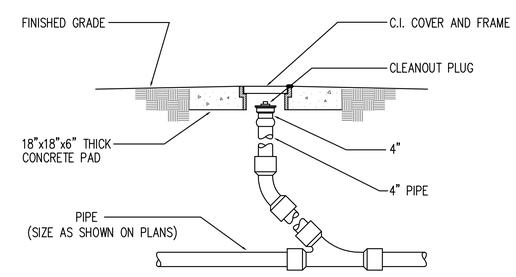


3 / P501 **CLEANOUT TO GRADE DETAIL (COTG)**
**NO SCALE**

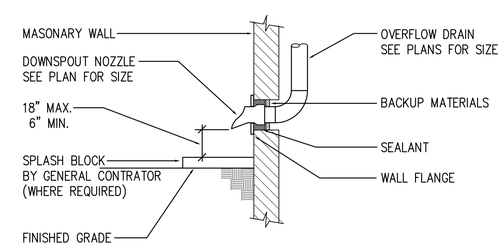


4 / P501 **DOWNSPOUT NOZZLE DETAIL**
**NO SCALE**


Eaton architecture
77 West 200 South, Suite 302
Salt Lake City, UT 84101
*Tel* 801/328-2982 *Fax* 801/328-2111


CONSULTANTS


VAN BOERUM & FRANK ASSOCIATES INC.
WWW.VBFA.COM CONSULTING ENGINEERS
Salt Lake City · Logan · St. George · Phoenix
330 South 300 East 801.530.3148 T
Salt Lake City, UT 84111 801.530.3150 F
VBFA Project Number:7536


LICENSED PROFESSIONAL ENGINEER
No. 4537
JOHN D. FRANK
STATE OF UTAH

# N. TEMPLE LIQUOR STORE REMODEL/ADDITION

1255 WEST NORTH TEMPLE
SALT LAKE CITY, UTAH

OWNER
UTAH D.F.C.M./ DEPT. OF ALCOHOLIC BEVERAGE CONTROL

| MARK | DATE | DESCRIPTION |
|---|---|---|
| | 02-20-08 | |

PROJECT NUMBER: 2007-23
DRAWING FILE:
DRAWN BY: MED
CHECKED BY: MO


COPYRIGHT 2003 EATON ARCHITECTURE, LLC


SHEET TITLE
PLUMBING DETAILS

P501
OF


N:\07\07500\07536 North Temple Liquor Store\01_Cad\1_Phase 1\Mechanical_Plumbing\7536_P501.dwg, 3/31/2008 11:30:04 AM, Doug

## ELECTRIC WATER HEATER SCHEDULE

| ID | MANUFACTURER AND MODEL NUMBER | LOCATION | TYPE | RECOVERY RATE @ 100 F DELTA T | ELECTRICAL (WATTS) | FLA | V/PH | PHYSICAL EFFICIENCY (%) | TANK SIZE (GAL) | HEIGHT/ DIA. (IN) | EMPTY WEIGHT APPROX. (LBS.) | NOTES |
|---|---|---|---|---|---|---|---|---|---|---|---|---|
| WH-1 | A.O. SMITH DEL-20 | STORAGE | ELECTRIC | 10 | 2500 | 12 | 208/1 | - | 20 | 22/22 | 75 | 1,2 |

1. PROVIDE WITH B&G MODEL No. PTA-5 EXPANSION TANK.
2. MOUNT WATER HEATER ABOVE FLOOR ON STAND (PROVIDED BY OTHERS).

## PLUMBING FIXTURE SCHEDULE

| ID | FIXTURE | CW (IN) | HW (IN) | W (IN) | V (IN) | NOTES |
|---|---|---|---|---|---|---|
| DSN-1 | DOWN SPOUT NOZZLE | -.- | -.- | -.- | -.- | SEE PLANS FOR SIZE |
| DSP-1 | GARBAGE DISPOSER | -.- | -.- | 1 1/2 | 1 1/2 | 120 V/60 Hz/1 Ph. |
| FD-1 | FLOOR DRAIN | -.- | -.- | 2 | 2 | RESTROOM |
| HB-1 | HOSE BIB | 3/4 | -.- | -.- | -.- | -.- |
| L-1 | LAVATORY | 1/2 | 1/2 | 1 1/2 | 1 1/2 | COUNTER MOUNTED |
| NFH-1 | NON FREEZE WALL HYDRANT | 3/4 | -.- | -.- | -.- | -.- |
| RD | ROOF DRAIN | -.- | -.- | -.- | -.- | SEE PLANS FOR SIZE |
| RDO | ROOF DRAIN OVERFLOW | -.- | -.- | -.- | -.- | SEE PLANS FOR SIZE |
| S-1 | SINK | 1/2 | 1/2 | 2 | 1 1/2 | COUNTER MOUNTED, SINGLE COMPARTMENT |
| TP-1 | TRAP PRIMER | 1/2 | -.- | -.- | -.- | -.- |
| WC-1 | WATER CLOSET | 1/2 | -.- | 4 | 2 | FLOOR MOUNTED, FLUSH TANK, ADA |
| TMV-1 | THERMOSTATIC TEMPERED MIXING VALVE | 1/2 | 1/2 | -.- | -.- | SEE SPECIFICATIONS |
| EWC-1 | ELECTRIC WATER COOLER | 1/2 | -.- | 1 1/2 | 1 1/2 | 120 V/60 Hz/1 Ph. |

1. ALL UNDER GROUND WASTE AND VENT SHALL BE 2" OR GREATER PER DRAWINGS.


Eaton architecture
77 West 200 South, Suite 302
Salt Lake City, UT 84101
*Tel* 801/328-2982 *Fax* 801/328-2111


CONSULTANTS


VAN BOERUM & FRANK ASSOCIATES INC.
WWW.VBFA.COM CONSULTING ENGINEERS
Salt Lake City · Logan · St. George · Phoenix
330 South 300 East 801.530.3148 T
Salt Lake City, UT 84111 801.530.3150 F
VBFA Project Number:7536


LICENSED PROFESSIONAL ENGINEER
No. 4537
JOHN D. FRANK
STATE OF UTAH

# N. TEMPLE LIQUOR STORE REMODEL/ADDITION

1255 WEST NORTH TEMPLE
SALT LAKE CITY, UTAH

OWNER
UTAH D.F.C.M./ DEPT. OF ALCOHOLIC BEVERAGE CONTROL

| MARK | DATE | DESCRIPTION |
|---|---|---|
| | 02-20-08 | |

PROJECT NUMBER: 2007-23
DRAWING FILE:
DRAWN BY: MED
CHECKED BY: MO


COPYRIGHT 2003 EATON ARCHITECTURE, LLC


SHEET TITLE
PLUMBING SCHEDULES

P601
OF


N:\07\07500\07536 North Temple Liquor Store\01_Cadd_Phase 1\Mechanical_Plumbing\7536_P601.dwg, 3/31/2008 11:30:19 AM, Doug

## FIRE ALARM SYMBOLS

| SYMBOL | DESCRIPTION | MOUNTING | REMARKS |
|---|---|---|---|
| BDT | BEAM DETECTOR - TRANSMITTER | 4" BELOW CEILING TO TOP OF DETECTOR | |
| BDR | BEAM DETECTOR - RECEIVER | 4" BELOW CEILING TO TOP OF DETECTOR | |
| EOL | END OF LINE DEVICE | PER MANUFACTURER RECOMMENDATIONS | |
| T | TAMPER SWITCH | AT VALVE | |
| FS | WATER FLOW INDICATOR | ON FIRE RISER | |
| FSD | FIRE/SMOKE DAMPER | TOP AT 12" | |
| I | HEAT DETECTOR | CEILING | |
| I | SMOKE DETECTOR | CEILING | |
| ----- I D | DUCT SMOKE DETECTOR | SIDE OF DUCT | |
| F | FIRE ALARM MANUAL STATION | +48" | |
| Z | CONTROL MODULE | AT DEVICE(S) TO BE CONTROLLED | |
| I | MONITOR MODULE | AT DEVICE(S) TO MONITOR | |
| R | FAN SHUTDOWN RELAY | AT FAN CONTROL PANEL | |
| | MAGNETIC DOOR HOLDER | COORDINATE WITH DOOR INSTALLER | COORDINATE WITH DOOR INSTALLER; SUBSCRIPT 'F' INDICATES TO MOUNT AT FLOOR LEVEL |
| WF | WATER FLOOD INDICATOR | FLOOR | |
| H | AUDIO HORN | MOUNT AT LESSOR OF EITHER 80" AFF OR 6" BELOW CEILING. | SUBSCRIPT 'WP' INDICATES THAT A WEATHER PROOF BACK BOX IS REQ. SUBSCRIPT 'C' INDICATES CEILING MOUNTING. NUMERIC SUBSCRIPT INDICATES CANDELLA RATING OF STROBE (I.E. - 15, 75, 110) |
| H | MINI AUDIO HORN | | |
| S | FIRE ALARM VISUAL STROBE | | |
| HS | FIRE ALARM AUDIO/VISUAL HORN/STROBE | | |
| HS | MINI AUDIO/VISUAL HORN/STROBE | | |
| S | FIRE ALARM AUDIO SPEAKER | | |
| S | FIRE ALARM AUDIO/VISUAL SPEAKER/STROBE | | |
| | FIRE PROTECTION SPRINKLER RISER BELL | +90" | FURNISHED BY FIRE PROTECTION CONTRACTOR AND INSTALLED AND CONNECTED BY DIV. 16000 |

## WIRING DEVICE SYMBOLS

| SYMBOL | DESCRIPTION | MOUNTING | REMARKS |
|---|---|---|---|
| $ | SINGLE-POLE TOGGLE SWITCH | +48" | |
| $° | SINGLE-POLE TOGGLE SWITCH | +48" | SUBSCRIPT KEYS SWITCH TO FIXTURES CONTROLLED. |
| $2 | DOUBLE-POLE TOGGLE SWITCH | +48" | |
| $3 | THREE-WAY TOGGLE SWITCH | +48" | |
| $4 | FOUR-WAY TOGGLE SWITCH | +48" | |
| $K | KEY-OPERATED SINGLE-POLE TOGGLE SWITCH | +48" | |
| $P | SINGLE-POLE TOGGLE SWITCH WITH PILOT LIGHT | +48" | |
| $DIM | DIMMER SWITCH | +48" | RATE DIMMER SWITCH FOR MAXIMUM POSSIBLE WATTAGE |
| $TIM | TIMER SWITCH | +48" | |
| $$ | (2) SINGLE-POLE TOGGLE SWITCH | +48" | DUAL LEVEL SWITCH OUTBOARD LAMPS SEPARATELY FROM INBOARD LAMPS. |
| $°LV | LOW VOLTAGE MOMENTARY CONTACT SWITCH | +48" | |
| $3PM | 3-POSITION MOMENTARY CONTACT SWITCH | +48" | REFER TO DETAIL UP-ON; CENTER-NEUTRAL; DOWN-OFF |
| $3PN | 3-POSITION MAINTAINED CONTACT SWITCH | +48" | UP-ON; CENTER-OFF; DOWN-ON |
| C/W | OCCUPANCY SENSOR | AS NOTED | CEILING MOUNTED WITH SUBSCRIPT 'C'; WALL-MOUNTED WITH SUBSCRIPT 'W' |
| | SPLIT-WIRED DUPLEX RECEPTACLE | +18" | |
| | SIMPLEX RECEPTACLE | +18" | |
| | DUPLEX RECEPTACLE | +18" | |
| | FOURPLEX RECEPTACLE | +18" | |
| | 125/250V RECEPTACLE | +18" | RANGE -- NEMA 14-50R DRYER -- NEMA 14-30R |
| | GROUND FAULT CIRCUIT INTERRUPTER DUPLEX RECEPTACLE | +18" | |
| | GROUND FAULT CIRCUIT INTERRUPTER FOURPLEX RECEPTACLE | +18" | |
| | EMERGENCY DUPLEX RECEPTACLE | +18" | |
| | EMERGENCY FOURPLEX RECEPTACLE | +18" | |
| | MULTI-OUTLET ASSEMBLY | 4" ABOVE BACKSPLASH | |
| | POWER / TELEPHONE POLE | FLOOR/CEILING | |
| | CORD DROP WITH DUPLEX RECEPTACLE | +18" | REFER TO DETAIL |
| (5-20R) | SPECIAL PURPOSE OUTLET | +18" | SUBSCRIPT IN PARENTHESIS INDICATES NEMA CONFIGURATION IF SHOWN. REFER TO DRAWINGS AND/OR EQUIPMENT SCHEDULES. CONFIRM EXACT CONFIGURATION WITH OWNER PRIOR TO INSTALLATION. |

## ACCESS CONTROL SYMBOLS

| SYMBOL | DESCRIPTION | MOUNTING | REMARKS |
|---|---|---|---|
| REX | REQUEST-TO-EXIT MOTION DETECTOR | CEILING | |
| | ELECTROMAGNETIC DOOR STRIKE | DOOR | |
| | MAGNETIC DOOR CONTACT SWITCH | DOOR | |
| | MAGNETIC LOCK | DOOR | |
| K | KEYPAD | +48" | |
| PK | PROXIMITY CARD READER / KEYPAD | +48" | |
| MK | MAGNETIC STRIP CARD READER / KEYPAD | +48" | |
| PR | PROXIMITY CARD READER | +48" | |
| MR | MAGNETIC STRIP CARD READER | +48" | |

## SECURITY SYMBOLS

| SYMBOL | DESCRIPTION | MOUNTING | REMARKS |
|---|---|---|---|
| MD | MOTION DETECTOR | CEILING | SUBSCRIPT DENOTES DEGREES OF MONITORED AREA |
| D | DURESS PUSH-BUTTON | BELOW DESK | |
| OHS | OVERHEAD MAGNETIC CONTACT DOOR SWITCH | DOOR | |
| | MAGNETIC CONTACT DOOR SWITCH | DOOR | |
| | GLASS BREAK DETECTOR | CEILING | |
| | SIREN | +90" | |

## LIGHTING SYMBOLS

1. LIGHT FIXTURE SYMBOLS ARE GENERAL IN NATURE AND MAY BE SHOWN ON THE DRAWINGS IN VARIOUS SIZES AND SHAPES. REFER TO THE LIGHT FIXTURE SCHEDULE FOR SPECIFICATION INFORMATION.
2. ARROWS INDICATE AIMING DIRECTION.

| SYMBOL | DESCRIPTION | MOUNTING | REMARKS |
|---|---|---|---|
| | ARM-MOUNTED SINGLE-HEAD LIGHT FIXTURE AND POLE | AS SPECIFIED OR DETAILED | |
| | ARM-MOUNTED DOUBLE-HEAD LIGHT FIXTURE AND POLE | AS SPECIFIED OR DETAILED | |
| | POST-TOP SINGLE-HEAD, LIGHT FIXTURE AND POLE | AS SPECIFIED OR DETAILED | |
| | WALL-MOUNTED FIXTURE | AS SPECIFIED OR DETAILED | REFER TO ARCHITECTURAL EXTERIOR ELEVATIONS FOR MOUNTING HEIGHT |
| | LIGHT BOLLARD | AS SPECIFIED OR DETAILED | |
| | FLOOD LIGHT | AS SPECIFIED OR DETAILED | |
| | RECESSED WALL FIXTURE OR STEP LIGHT | AS SPECIFIED OR DETAILED | REFER TO ARCHITECTURAL EXTERIOR ELEVATIONS FOR MOUNTING HEIGHT |
| | FLUORESCENT LIGHT FIXTURES | AS SPECIFIED OR DETAILED | |
| | PARABOLIC - LOUVERED LIGHT FIXTURES | AS SPECIFIED OR DETAILED | |
| | RECESSED INDIRECT FLUORESCENT LIGHT FIXTURES | AS SPECIFIED OR DETAILED | |
| | WALL-MOUNTED LINEAR FLUORESCENT LIGHT FIXTURE | AS SPECIFIED OR DETAILED | |
| | FLUORESCENT LINEAR WALL WASHER | AS SPECIFIED OR DETAILED | |
| | RECESSED DOWN LIGHT | AS SPECIFIED OR DETAILED | |
| | RECESSED WALL-WASHER OR DIRECTIONAL DOWNLIGHT | AS SPECIFIED OR DETAILED | IF SHOWN, ARROW INDICATES AIMING DIRECTION |
| | SURFACE OR PENDANT-MOUNTED LIGHT FIXTURE | AS SPECIFIED OR DETAILED | |
| | WALL-MOUNTED LIGHT FIXTURE | AS SPECIFIED OR DETAILED | REFER TO ARCHITECTURAL EXTERIOR ELEVATIONS FOR MOUNTING HEIGHT |
| | TRACK OR MONO-POINT LIGHT FIXTURE | AS SPECIFIED OR DETAILED | IF SHOWN, ARROW INDICATES AIMING DIRECTION |
| | WALL SCONCE | AS SPECIFIED OR DETAILED | |
| | FLUORESCENT EGRESS LIGHT FIXTURE | AS SPECIFIED OR DETAILED | THIS IS AN EXAMPLE OF AN EGRESS LIGHT FIXTURE. EGRESS LIGHT FIXTURES ARE HALF-SHADED DIAGONALLY. |
| | FLUORESCENT EMERGENCY (NON-EGRESS) LIGHT FIXTURE | AS SPECIFIED OR DETAILED | THIS IN AN EXAMPLE OF AN EMERGENCY (NON-EGRESS) LIGHT FIXTURE. EMERGENCY FIXTURES ARE FULLY-SHADED. |
| | CEILING MOUNTED EXIT SIGN | CEILING | DARKENED PORTION OF SIGN INDICATES FACE(S); ARROW(S) INDICATE CHEVRON DIRECTION(S) |
| | WALL-MOUNTED EXIT SIGN | WALL ABOVE DOOR | |
| | WALL-MOUNTED EXIT SIGN W/ EMERGENCY LIGHT FIXTURE | WALL ABOVE DOOR | |
| TC | TIME CLOCK | | |
| | EMERGENCY LIGHT FIXTURE | AS NOTED | |
| P | ELECTRIC PHOTOCELL | N/A | MOUNT ON ROOF FACING NORTH SKY |
| XX | LIGHT FIXTURE CALLOUT (LETTER DENOTES FIXTURE TYPE) | | |

## FLOOR BOX & POKE THRU SYMBOLS

| SYMBOL | DESCRIPTION | MOUNTING | REMARKS |
|---|---|---|---|
| | SINGLE-GANG FLOOR BOX WITH DEVICE | FLOOR | DEVICES SHOWN ARE EXAMPLES OF WHAT MAY BE SHOWN ON DRAWINGS. REFER TO WIRING DEVICE SCHEDULE FOR SYMBOL DESCRIPTIONS |
| | DOUBLE-GANG FLOOR BOX WITH DEVICES | FLOOR | |
| | TRIPLE-GANG FLOOR BOX WITH DEVICES | FLOOR | |
| IG | MULTI-SERIVCE FLOOR BOX WITH DEVICES | FLOOR | |
| | FLUSH MULTI-SERVICE POKE-THRU WITH DUPLEX RECEPTACLE & COMMUNICATIONS PORTS | FLOOR | |
| | MULTI-SERVICE POKE-THRU WITH FURNITURE FEED CONNECTIONS. (POWER & COMMUNICATIONS) | FLOOR | PROVIDE ELECTRICAL CONNECTIONS TO SYSTEMS FURNITURE. COORDINATE PLACEMENT OF OUTLETS WITH SYSTEM FURNITURE INSTALLER PRIOR TO ROUGH-IN. |
| P | POKE-THRU WITH FURNITURE FEED CONNECTIONS. (POWER ONLY) | FLOOR | |
| C | POKE-THRU WITH FURNITURE FEED CONNECTIONS. (COMMUNICATIONS ONLY) | FLOOR | |
| P | OUTLET BOX WITH FURNITURE FEED CONNECTIONS. (POWER ONLY) | +18" | |
| C | OUTLET BOX WITH FURNITURE FEED CONNECTIONS. (COMMUNICATIONS ONLY) | +18" | |
| P | UNDERFLOOR DISTRIBUTION BOX WITH FURNITURE FEED CONNECTIONS. (POWER ONLY) | BELOW RAISED FLOOR | |
| C | UNDERFLOOR DISTRIBUTION BOX WITH FURNITURE FEED CONNECTIONS. (COMMUNICATIONS ONLY) | BELOW RAISED FLOOR | |
| | MULTI-SERVICE FLOOR BOX WITH FURNITURE FEED CONNECTIONS | FLOOR | |
| | POWER POLE WITH FURNITURE FEED CONNECTIONS | FLOOR/CEILING | |

## ELECTRICAL SYMBOL SCHEDULE GENERAL NOTES

1. MOUNT ALL OUTLETS, DEVICES, AND EQUIPMENT AT HEIGHTS INDICATED BELOW, UNLESS NOTED OTHERWISE ON THE DRAWINGS. UNLESS NOTED OTHERWISE, HEIGHTS ARE GIVEN FROM FINISHED FLOOR TO CENTER OF OUTLET BOX.
2. WHERE OUTLETS, DEVICES, AND EQUIPMENT ARE NOTED BY SUBSCRIPTS, REFER TO ABBREVIATION SCHEDULE FOR DEFINED REQUIREMENTS.
3. WHERE OUTLETS, DEVICES AND EQUIPMENT ARE NOTED BY THE SUBSCRIPT 'A', MOUNT AT 4" ABOVE COUNTER. IF COUNTER HAS A BACK SPLASH, MOUNT AT 4" ABOVE BACK SPLASH. REFER TO ARCHITECTURAL INTERIOR ELEVATIONS AND COORDINATE WITH CASEWORK SUPPLIER.
4. NOT ALL ELECTRICAL SYMBOLS MAY BE USED.

## GENERAL SYMBOLS

| SYMBOL | DESCRIPTION | REMARKS |
|---|---|---|
| XX | KEYED NOTE | |
| 1 E-1 | DETAIL REFERENCE | TOP NUMBER INDICATES DETAIL NUMBER; BOTTOM LETTER-NUMBER INDICATES DRAWING SHEET WHERE DETAIL IS SHOWN. WHERE NOT SPECIFICALLY REFERENCED, DETAIL IS GENERAL IN NATURE AND SHALL APPLY WHERE APPLICABLE. |
| 2 E-2 | ELEVATION REFERENCE | TOP NUMBER INDICATES ELEVATION NUMBER; BOTTOM LETTER-NUMBER INDICATES WHERE ELEVATION IS SHOWN. |
| 3 E-3 | SECTION REFERENCE | TOP NUMBER INDICATES SECTION NUMBER; BOTTOM LETTER NUMBER INDICATES WHERE SECTION IS SHOWN. |
| 100 | ARCHITECTURAL ROOM NUMBER | |
| AHU 1 | EQUIPMENT NAME / NUMBER | TOP NUMBER ABBREVIATES EQUIPMENT NAME OR TYPE; BOTTOM NUMBER INDICATES EQUIPMENT NUMBER. REFER TO EQUIPMENT SCHEDULE. |
| 1 | REVISION NUMBER | USED TO DENOTE CHANGES EITHER ISSUED BY ADDENDUM OR DURING CONSTRUCTION AND TO DENOTE RECORD DRAWING CHANGES. |
| | BREAKLINE | USED TO BREAK DRAWINGS. |

## BRANCH CIRCUITING SYMBOLS

| SYMBOL | DESCRIPTION | REMARKS |
|---|---|---|
| | 1 CIRCUIT, 2 WIRE BRANCH CIRCUIT HOME RUN TO PANEL | ARROWS: NUMBER OF ARROWS INDICATES NUMBER OF CIRCUITS REQUIRED. SHORT CROSS LINES: NUMBER OF SHORT CROSS LINES INDICATES NUMBER OF PHASE, TRAVELER, AND/OR SWITCHED CONDUCTORS REQUIRED IF GREATER THAN 1 (ONE). LONG CROSS LINES: NUMBER OF LONG CROSS LINES INDICATES NUMBER OF NEUTRAL CONDUCTORS REQUIRED FOR MULTI-WIRE HOME RUNS. EQUIPMENT GROUND AND ISOLATED GROUND CONDUCTORS: EQUIPMENT GROUND AND ISOLATED GROUND CONDUCTORS ARE NOT SHOWN, BUT ARE REQUIRED AS NOTED ON THE DRAWINGS OR IN THE SPECIFICATIONS. |
| | 2 CIRCUIT, 3 WIRE BRANCH CIRCUIT HOME RUN TO PANEL | |
| | 3 CIRCUIT, 4 WIRE BRANCH CIRCUIT HOME RUN TO PANEL | |
| | MULTIPLE WIRE BRANCH CIRCUITING BETWEEN FIXTURES, SWITCHES, DEVICES, ETC. | |
| | BRANCH CIRCUITING (U.N.O.) TURNED UP OR TOWARDS OBSERVER. | |
| | BRANCH CIRCUITING (U.N.O.) TURNED DOWN OR AWAY FROM OBSERVER. | |
| | BRANCH CIRCUITING (U.N.O.) CONTINUATION | |
| | CONDUIT STUB-IN | CAP AND MARK |
| | INCOMING SERVICE | |
| J | JUNCTION BOX | MOUNT AS NOTED. SUBSCRIPT 'F' INDICATES TO PROVIDE A FLOOR BOX WITH BLANK COVERPLATE |

## ELECTRONIC SYSTEM GENERAL SYMBOLS

| SYMBOL | DESCRIPTION | MOUNTING | REMARKS |
|---|---|---|---|
| PANEL NAME | ELECTRONIC SYSTEM PANELBOARD (SURFACE MOUNT) | TOP AT 72" | ELECTRONIC SYSTEMS MAY INCLUDE BUT ARE NOT SPECIFICALLY LIMITED TO, TELEPHONE, DATA, TELEVISION, LIGHTING CONTROL, CLOCKS, FIRE ALARM, ACCESS CONTROL, SECURITY, CCTV, SOUND SYSTEM, NURSE CALL, OR INTERCOM. |
| PANEL NAME | ELECTRONIC SYSTEM PANELBOARD (FLUSH MOUNT) | TOP AT 72" | |
| | ELECTRONIC SYSTEM TERMINAL BOARD | TOP AT 72" | |

## TELEPHONE / DATA SYMBOLS

| SYMBOL | DESCRIPTION | MOUNTING | REMARKS |
|---|---|---|---|
| | TELEPHONE OUTLET | +18" | |
| | DATA OUTLET | +18" | |
| | COMBINATION TELEPHONE/DATA OUTLET | +18" | |
| | TELEPHONE TERMINAL BOARD | TOP AT 72" | |

## CLOSED CIRCUIT TELEVISION SYMBOLS

| SYMBOL | DESCRIPTION | MOUNTING | REMARKS |
|---|---|---|---|
| FX | CLOSED CIRCUIT TELEVISION CAMERA (FIXED) | CEILING | |
| PTZ | CLOSED CIRCUIT TELEVISION CAMERA (PAN/TILT/ZOOM) | CEILING | |
| PTZ | CLOSED CIRCUIT TELEVISION CAMERA (HIGH SPEED DOME WITH PAN / TILT / ZOOM HEAD) | CEILING | |
| TV | CLOSED CIRCUIT TELEVISION MONITOR | DESK | |
| MATRIX | MATRIX SWITCHER | DESK | |
| FJ | FIBER JUNCTION BOX | 72" TO TOP OF BOX | |

## ELECTRICAL SHEET INDEX


| | |
|---|---|
| EG001 | SYMBOL SCHEDULE |
| EG501 | DETAILS |
| ES101 | SITE PLAN |
| ED101 | DEMOLITION PLAN |
| EL101 | LIGHTING PLAN |
| EL601 | LIGHT FIXTURE & RELAY SCHEDULES |
| EP101 | POWER PLAN |
| EP601 | EQUIPMENT SCHEDULE |
| EP701 | ONE-LINE DIAGRAM |


## GENERAL PROJECT NOTES:

1. DIVISION 16000 CONTRACTOR IS RESPONSIBLE FOR READING AND APPLYING WHAT IS IN THE SPECIFICATIONS TO THIS PROJECT. ANYTHING THAT IS NOT INCLUDED ON THE PROJECT THAT IS CALLED OUT IN THE SPECIFICATION SHALL BE LISTED ON THE SUBSTANTIAL COMPLETION PUNCHLIST. THE CONTRACTOR WILL BE REQUIRED TO REMEDY THESE DEFICIENCIES WITHOUT ADDITIONAL COSTS TO OWNER. THERE WILL BE NO EXCEPTIONS.
2. THE CONTRACTOR MAY SCHEDULE A PRE-CONSTRUCTION MEETING , AT THEIR DISCRETION, WITH THE ELECTRICAL ENGINEER TO REVIEW THE DRAWINGS AND SPECIFICATIONS. THE MEETING SHALL BE A MAXIMUM OF ONE HOUR AND SHALL TAKE PLACE AT THE ENGINEER'S OFFICE.
3. THE FOLLOWING ITEMS ARE SOME OF THE REQUIREMENTS THAT ARE LISTED IN THE SPECIFICATIONS. THESE ITEMS ARE NOT ALL INCLUSIVE, AND THE CONTRACTOR IS RESPONSIBLE FOR COMPLIANCE TO ALL REQUIREMENTS OF THE SPECIFICATIONS:
   - A. INSULATED THROAT CONNECTORS OR PLASTIC BUSHINGS SHALL BE UTILIZED FOR ALL CONDUIT SIZES USED ON THIS PROJECT.
   - B. A #10 AWG NEUTRAL CONDUCTOR WILL BE PROVIDED FOR ALL FLUORESCENT LIGHTING CIRCUITS.
   - C. THE CONTRACTOR IS RESPONSIBLE FOR UPSIZING CONDUCTORS FOR VOLTAGE DROP PER THE NEC REGARDLESS OF WHETHER IT IS SHOWN ON THE PLANS OR NOT.
   - D. THE CONTRACTOR SHALL LABEL ALL ELECTRICAL EQUIPMENT AS IT IS CALLED OUT IN THE SPECIFICATIONS.
   - E. THE CONTRACTOR SHALL PROVIDE SEISMIC SUPPORT AND BRACING FOR ALL LIGHT FIXTURES AND ELECTRICAL EQUIPMENT AS REQUIRED BY APPLICABLE LOCAL AND NATIONAL CODES.
4. THE CONTRACTOR SHALL FOLLOW THE PANELBOARD SCHEDULES AS INDICATED IN THE DRAWINGS. EACH CIRCUIT BREAKER HAS BEEN ASSIGNED TO A SPECIFIC AREA OF THE BUILDING. NO DEVIATION WILL BE ALLOWED WITHOUT WRITTEN APPROVAL FROM THE ELECTRICAL ENGINEER.
5. AT A MINIMUM THE CONTRACTOR SHALL INSTALL THE WIRE SIZE AS CALLED OUT ON THE PANELBOARD SCHEDULES. HOWEVER, THE CONTRACTOR IS RESPONSIBLE TO ENSURE THE WIRE IS SIZED LARGE ENOUGH TO ALLOW FOR VOLTAGE DROP.
6. THE CONTRACTOR SHALL VERIFY ALL MECHANICAL OVERCURRENT DEVICES FOR THE ACTUAL MECHANICAL EQUIPMENT SUPPLIED ON THE JOB, PRIOR TO RELEASE OF ANY ELECTRICAL DISTRIBUTION EQUIPMENT. CONTACT THE ELECTRICAL ENGINEER WITH ANY DISCREPANCIES.
7. THE CONTRACTOR SHALL VISIT THE SITE BEFORE SUBMITTING THE BID, AND SHALL EXAMINE ALL PHYSICAL CONDITIONS WHICH MAY BE MATERIAL TO THE PERFORMANCE OF HIS WORK. NO ADDITIONAL PAYMENTS WILL BE ALLOWED TO THE CONTRACTOR AS A RESULT OF EXTRA WORK MADE NECESSARY BY HIS FAILURE TO DO SO. ANY CASE OF DISCREPANCY OR LACK OF CLARITY SHALL BE PROMPTLY IDENTIFIED TO THE OWNER'S REPRESENTATIVE AND THE ENGINEER FOR CLARIFICATION.

## ABBREVIATION SCHEDULE

NOTE: NOT ALL ABBREVIATIONS MAY BE USED.

| | | | |
|---|---|---|---|
| A | ABOVE COUNTER | ISO | ISOLATED |
| A | AMP OR AMPS | KVA | KILO VOLT AMPERES |
| ADJ | ADJACENT | KW | KILOWATTS |
| AFF | ABOVE FINISHED FLOOR | LFMC | LIQUID-TIGHT METAL CONDUIT |
| AHJ | AUTHORITY HAVING JURISDICTION | LFNC | LIQUID-TIGHT NONMETAL CONDUIT |
| AL | ALUMINUM | MCA | MINIMUM CIRCUIT AMPS |
| C | CONDUIT | MLO | MAIN LUGS ONLY |
| CB | CIRCUIT BREAKER | N.C. | NORMALLY CLOSED |
| CKT | CIRCUIT | N.I.C. | NOT IN CONTRACT |
| C.O.'S | CONVENIENCE OUTLETS | N.L. | NIGHT LIGHT |
| CU | COPPER | N.O. | NORMALLY OPEN |
| EA | EACH | O.C. | ON CENTER(S) |
| ELEC | ELECTRICAL | OCP | OVER CURRENT PROTECTION |
| EM | EMERGENCY | QTY | QUANTITY |
| EMT | ELECTRIC METALLIC TUBING | R | REMOVE |
| ENT | ELECTRIC NONMETALLIC TUBING | REQ. | REQUIREMENTS |
| EQUIP | EQUIPMENT | RMC | RIGID METAL CONDUIT |
| EWC | ELECTRIC WATER COOLER | RNC | RIGID NONMETALLIC CONDUIT |
| E. EX | EXISTING | RR | REMOVE AND RELOCATE |
| EXP | EXPLOSION PROOF | SS | SURGE SUPPRESSION |
| FA | FIRE ALARM | SCP | SECURITY CONTROL PANEL |
| FACP | FIRE ALARM CONTROL PANEL | TR | TAMPER RESISTANT |
| FLA | FULL LOAD AMPS | TYP | TYPICAL |
| FMC | FLEXIBLE METAL CONDUIT | TVSS | TRANSIENT VOLTAGE SURGE SUPPRESSOR |
| FOB | FREIGHT ON BOARD | UF | UNDER FLOOR |
| GND | GROUND CONDUCTOR | UG | UNDERGROUND |
| HOA | HAND-OFF-AUTO | U.N.O. | UNLESS NOTED OTHERWISE |
| HP | HORSE POWER | W/ | WITH |
| IG | ISOLATED GROUND | WP | WEATHER PROOF |
| IMC | INTERMEDIATE METAL CONDUIT | XFMR | TRANSFORMER |
| INS | INSULATED | | |


Eaton Architecture
77 West 200 South, Suite 302
Salt Lake City, UT 84101
Tel 801/328-2982 Fax 801/328-2111


CONSULTANTS


ENVISION ENGINEERING
Direction. Then Velocity.
244 West 300 North, Suite 100
Salt Lake City, Utah 84103
801.534.1130 ph 801.534.1080 fax


REGISTERED PROFESSIONAL ENGINEER
JEFFREY R. OWEN
No.177411
STATE OF UTAH

N. TEMPLE LIQUOR STORE EXPANSION
1255 WEST NORTH TEMPLE
SALT LAKE CITY, UTAH

D.F.C.M. # 07269030
OWNER
UTAH D.F.C.M./ DEPT. OF ALCOHOLIC BEVERAGE CONTROL

| MARK | DATE | DESCRIPTION |
|---|---|---|
| | 2-22-08 | BID SET |

| | |
|---|---|
| PROJECT NUMBER: | 2007-217 |
| DRAWN BY: | BRT |
| DESIGNED BY: | RVV |
| CHECKED BY: | JRO |


COPYRIGHT 2003 EATON ARCHITECTURE, LLC


SHEET TITLE

SYMBOLS AND SCHEDULES

EG001

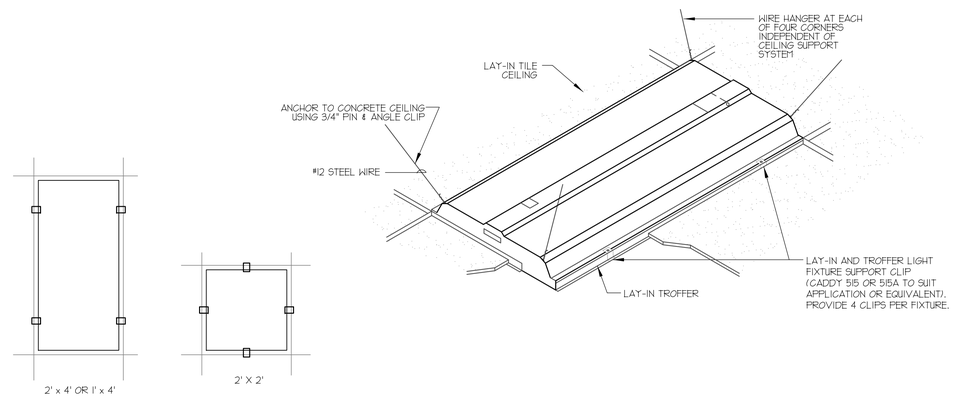


SUPPORT CLIP ARRANGEMENT DIAGRAMS

1 LIGHT FIXTURE SUPPORT DETAIL
SCALE: NONE

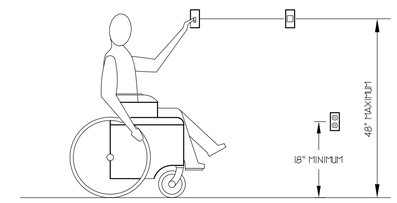


2 ADA ELEVATION DETAIL
SCALE: NONE


Eaton architecture
77 West 200 South, Suite 302
Salt Lake City, UT 84101
*Tel* 801/328-2982 *Fax* 801/328-2111


CONSULTANTS


ENVISION ENGINEERING
Direction. *Then Velocity.*
244 West 300 North, Suite 100
Salt Lake City, Utah 84103
801.534.1130 ph 801.534.1080 fax


REGISTERED PROFESSIONAL ENGINEER
JEFFREY R. OWEN
No.177411
STATE OF UTAH

# N. TEMPLE LIQUOR STORE EXPANSION

1255 WEST NORTH TEMPLE
SALT LAKE CITY, UTAH

D.F.C.M. # 07269030

OWNER
UTAH D.F.C.M./ DEPT. OF ALCOHOLIC BEVERAGE CONTROL

| MARK | DATE | DESCRIPTION |
|---|---|---|
| | 2-22-08 | BID SET |

| | |
|---|---|
| PROJECT NUMBER: | 2007-217 |
| DRAWN BY: | BRT |
| DESIGNED BY: | RVV |
| CHECKED BY: | JRO |

COPYRIGHT 2003 EATON ARCHITECTURE, LLC

SHEET TITLE
DETAILS

EG501

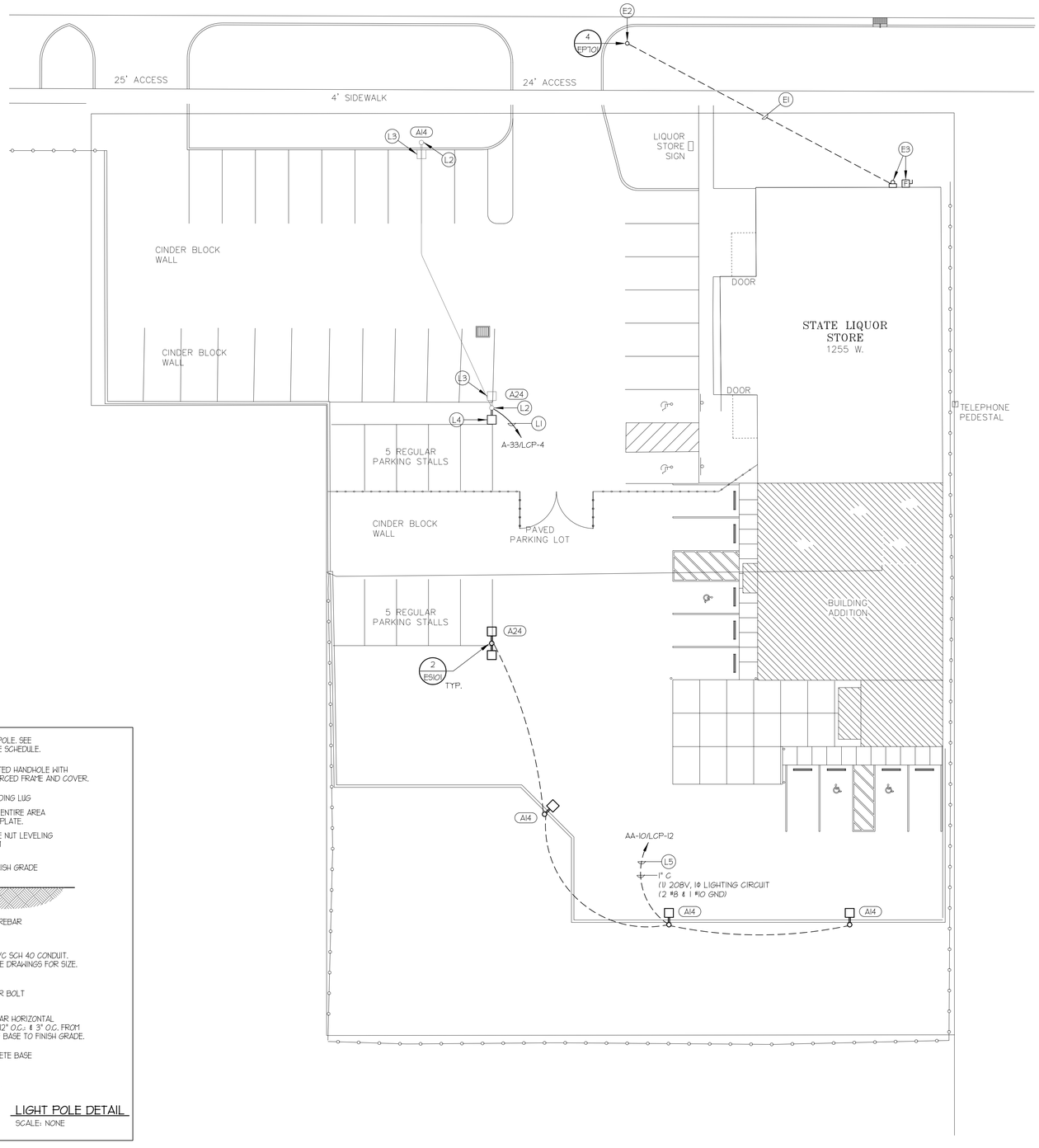


1 ES101 SITE PLAN
SCALE: 1/16" = 1'-0"

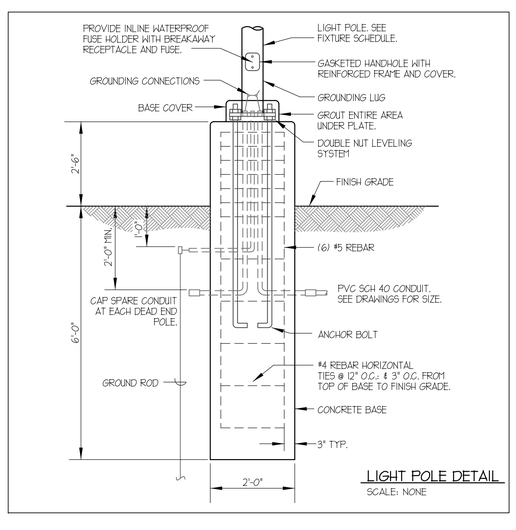


2 ES101 POLE BASE DETAIL

## SITE KEYED NOTES:

### ELECTRICAL SERVICE KEYED NOTES:

E1 REFER TO ONE-LINE DIAGRAM FOR CONDUIT AND CONDUCTOR REQUIREMENTS AND OTHER INFORMATION.

E2 ROCKY MOUNTAIN POWER POWER POLE.

E3 CT METER SECTION AND FUSED DISCONNECT.

### LIGHTING KEYED NOTES:

L1 INTERCEPT EXISTING CIRCUIT SHOWN FROM THE AS-BUILT DRAWINGS AND ROUTE THROUGH TIME CLOCK CONTROLLED LIGHTING CONTROL RELAY PANEL. REFER TO LIGHTING RELAY PANEL, AND SCHEDULE FOR ADDITIONAL INFORMATION.

L2 LIGHT POLE AND BASE ARE EXISTING

L3 LIGHT FIXTURE LAMP AND BALLAST ARE TO BE REPLACED WITH PART #400-S10P-QV OR APPROVED EQUIVALENT. REFER TO THE LIGHT FIXTURE SCHEDULE FOR MORE INFORMATION.

L4 NEW POLE LIGHT HEAD ADDED TO EXISTING POLE. CONTRACTOR TO DRILL HOLES IN EXISTING POLE FOR NEW LIGHT HEAD.

L5 ROUTE THROUGH TIME CLOCK CONTROLLED LIGHTING CONTROL RELAY PANEL. REFER TO LIGHTING RELAY PANEL AND SCHEDULE FOR ADDITIONAL INFORMATION.

## SITE GENERAL NOTES:

1. PROVIDE ALL REQUIRED TRENCHING, BACKFILLING, ETC. FOR ALL CONDUITS. PROVIDE REQUIRED BACKFILL MATERIALS AS DIRECTED BY EACH UTILITY.
2. VERIFY ALL ROCKY MOUNTAIN POWER AND QWEST REQUIREMENTS WITH EACH UTILITY PRIOR TO BID.
3. INCLUDE ALL RELATED UP FRONT COSTS AND FEES REQUIRED BY EACH UTILITY IN THE PROJECT BID. THIS SHALL INCLUDE, BUT IS NOT LIMITED TO, LINE EXTENSION FEES, RELOCATION AND REROUTING OF AERIAL LINES INTERFERING WITH NEW PROJECT, REQUIRED CONDUITS AND THEIR ROUTING, ETC.
4. COORDINATE INSTALLATION OF SERVICE UTILITY EQUIPMENT, WITH RESPECTIVE UTILITY REPRESENTATIVE.
5. ROUTE CONDUITS A MINIMUM OF 2" BELOW THE BUILDING FLOOR SLAB.


Eaton Architecture
77 West 200 South, Suite 302
Salt Lake City, UT 84101
*Tel* 801/328-2982 *Fax* 801/328-2111

CONSULTANTS
ENVISION ENGINEERING
*Direction. Then Velocity.*
244 West 300 North, Suite 100
Salt Lake City, Utah 84103
801.534.1130 ph 801.534.1080 fax

REGISTERED PROFESSIONAL ENGINEER
JEFFREY R. OWEN
No.177411
STATE OF UTAH


# N. TEMPLE LIQUOR STORE EXPANSION

1255 WEST NORTH TEMPLE
SALT LAKE CITY, UTAH

D.F.C.M. # 07269030

OWNER
UTAH D.F.C.M./ DEPT. OF ALCOHOLIC BEVERAGE CONTROL

| MARK | DATE | DESCRIPTION |
|---|---|---|
| | | |
| | | |
| | | |
| | | |
| | | |
| | 2-22-08 | BID SET |

| | |
|---|---|
| PROJECT NUMBER: | 2007-217 |
| DRAWN BY: | BRT |
| DESIGNED BY: | RVV |
| CHECKED BY: | JRO |

COPYRIGHT 2003 EATON ARCHITECTURE, LLC

SHEET TITLE
SITE PLAN

ES101

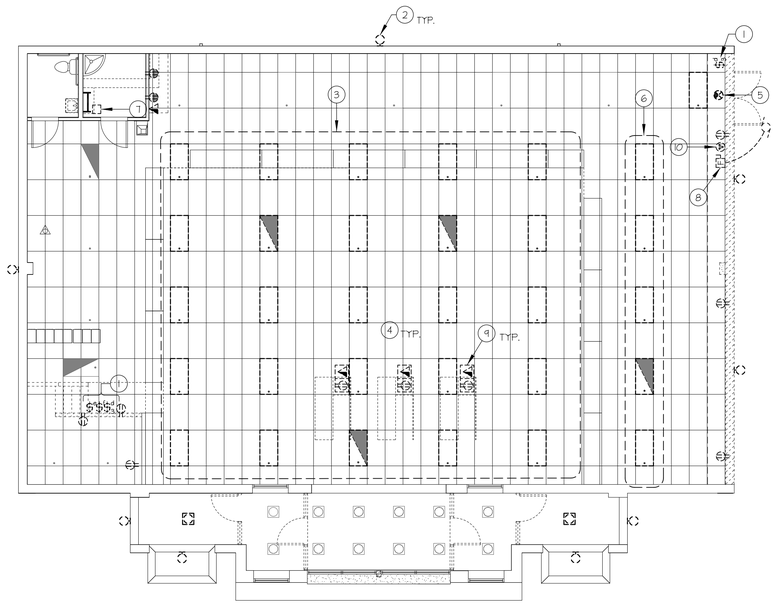


1 ED101 DEMOLITION PLAN
SCALE: 1/8" = 1'-0"

NORTH

## KEYED NOTES:

1. LIGHT SWITCHES ARE TO BE RELOCATED. EXISTING CIRCUITS ARE TO BE RE-USED. REFER TO SHEET EL101 FOR MORE INFORMATION.
2. RETURN ALL EXTERIOR LIGHTS TO OWNER. CIRCUITS ARE TO BE REUSED.
3. LIGHT FIXTURES ARE TO BE STORED AND RE-USED. EXISTING CIRCUITS ARE TO BE RE-USED. REFER TO SHEET EL101 FOR MORE INFORMATION
4. DISCONNECT AND STORE FOR REUSE, ALL DEVICES OBSTRUCTED BY DEMOLITION TO INCLUDE BUT NOT LIMITED TO CCTV CAMERAS, FIRE ALARM DEVICES AND ALARM NOTIFICATION DEVICES.
5. EXIT SIGN TO BE RELOCATED. REFER TO SHEET EL101 FOR MORE INFORMATION.
6. DISCONNECT AND REMOVE EXISTING LIGHTS FROM EXISTING CIRCUIT A-2 AS INDICATED ON THE ASBUILT DRAWINGS. STORE LIGHTS FOR REUSE.
7. DISCONNECT, REMOVE AND STORE DOOR LATCH SECURITY DEVICE FOR REUSE. REFER TO SHEET EP101 FOR NEW LOCATION.
8. DISCONNECT DOOK LEVELER AND RETURN TO OWNER. CAP AND ABANDON CONDUIT FLUSH WITH GRADE AND REMOVE CONDUCTORS.
9. FLOOR BOXES ARE TO BE REMOVED. REFER TO SHEET EP101 FOR SAW-CUTTING PLAN FOR NEW DEVICES.
10. BAILER OUTLET TO BE REMOVED. REFER TO SHEET EP101 FOR NEW LOCATION.

## GENERAL DEMOLITION NOTES:

1. UNLESS SPECIFICALLY NOTED OTHERWISE, REMOVE ALL ELECTRICAL ITEMS SHOWN IN DARK & DASHED LINES. ITEMS SHOWN IN LIGHT & SOLID LINES ARE TO REMAIN. DEMOLITION ITEMS ARE SHOWN TO GIVE A BASIC DESCRIPTION OF THE EXTENTOF DEMOLITION WORK, BUT MAY NOT BE INCLUSIVE. PROVIDE DEMOLITION WORK IN ACCORDANCE WITH THE FOLLOWING REQUIREMENTS:

A. DISCONNECT AND REMOVE ANY/ALL FIXTURES, DEVICES, EQUIPMENT, ETC. REQUIRED FOR PROPER COMPLETION OF THE WORK WHETHER SHOWN OR NOT.

B. RELOCATE, REWIRE, AND/OR RECONNECT ANY/ALL FIXTURES, DEVICES, EQUIPMENT, ETC. THAT FOR ANY REASON OBSTRUCTS CONSTRUCTION.

C. LEAVE ALL EXISTING FIXTURES, DEVICES, EQUIPMENT, ETC. IN PORTIONS OF THE BUILDING NOT BEING REMODELED, IN WORKING CONDITION. RESTORE ALL INTERRUPTED BRANCH CIRCUITS, FEEDERS, ETC.

D. REMOVE AND DISPOSE OF ALL RACEWAYS, CONDUCTORS, BOXES, DEVICES, EQUIPMENT, ETC. THAT ARE NOT TO BE REUSED. TERMINATE AT ACCESSIBLE JUNCTION BOX BY PROVIDING PROPER KNOCK-OUT CLOSURE, TAPE CONDUCTORS, LABEL AS "SPARE" WITH CIRCUIT NO., ZONE NO., OR OTHER CHARACTERISTIC IDENTIFYING SOURCE.

E. EXISTING RACEWAYS MAY BE REUSED, IF IN PLACE, WHERE POSSIBLE, AND WHERE IN COMPLIANCE WITH THE SPECIFICATIONS AND THE INTENT OF THE CONTRACT DOCUMENTS. UPGRADE AND OR PROVIDE NEW CONDUIT SUPPORTS WHERE NECESSARY FOR ALL RACEWAYS BEING REUSED. INSURE INTEGRITY OF EXISITING RACEWAYS BEFORE REUSE.

F. CONCEAL ALL RACEWAY AND WIRING IN EXISTING WALLS, CEILINGS, FLOORS, ETC. THE USE OF WIREMOLD IS PERMITTED ONLY WHERE SPECIFICALLY NOTED ON DRAWING.

G. DO NOT PENETRATE STRUCTURAL ELEMENTS OF FLOORS, WALLS, CEILINGS, ROOFS, ETC.

H. COORDINATE WITH OWNER WHAT EQUIPMENT SHOULD BE DISPOSED OF AND WHAT EQUIPMENT IS TO BE RETURNED TO OWNER.

I. COMPLETELY REMOVE ALL TELEPHONE OR DATA CABLES WHICH ARE TO BE REMOVED BACK TO SOURCE OR AS DIRECTED BY OWNER.

Eaton Architecture
77 West 200 South, Suite 302
Salt Lake City, UT 84101
*Tel* 801/328-2982 *Fax* 801/328-2111

CONSULTANTS

ENVISION ENGINEERING
Direction. *Then Velocity.*
244 West 300 North, Suite 100
Salt Lake City, Utah 84103
801.534.1130 ph 801.534.1080 fax

REGISTERED PROFESSIONAL ENGINEER
JEFFREY R OWEN
No.177411
STATE OF UTAH

# N. TEMPLE LIQUOR STORE EXPANSION

1255 WEST NORTH TEMPLE
SALT LAKE CITY, UTAH

D.F.C.M. # 07269030

OWNER
UTAH D.F.C.M./ DEPT. OF ALCOHOLIC BEVERAGE CONTROL

| MARK | DATE | DESCRIPTION |
|---|---|---|
| | 2-22-08 | BID SET |

| | |
|---|---|
| PROJECT NUMBER: | 2007-217 |
| DRAWN BY: | BRT |
| DESIGNED BY: | RVV |
| CHECKED BY: | JRO |

COPYRIGHT 2003 EATON ARCHITECTURE, LLC

SHEET TITLE
DEMOLITION PLAN

ED101

| OCCUPANCY SENSOR LEGEND | | | |
|---|---|---|---|
| SYMBOL | DESCRIPTION | MOUNTING | REMARKS |
| C | OMNI DT 355 | CEILING | OR APPROVED EQUIVALENT |

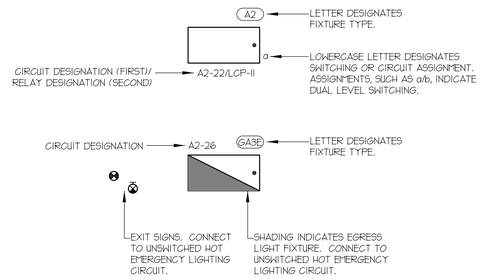


2 TYPICAL LIGHT FIXTURE CONVENTION
SCALE: NONE

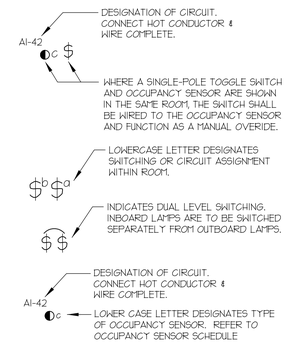


1 TYPICAL SWITCHING CONVENTIONS
SCALE: NONE

## KEYED NOTES:

1. EXISTING EXIT SIGN IN NEW LOCATION USE EXISTING CIRCUIT. CLEAN AND RELAMP PRIOR TO INSTALL. EXTEND BRANCH CIRCUITING AND CONDUIT AS REQUIRED AND WIRE COMPLETE.
2. REMOTE EMERGENCY BATTERY PACK. REUSE EXISTING CIRCUIT AND WIRE COMPLETE.
3. EXISTING LIGHTS IN NEW LOCATION. USE EXISTING CIRCUIT A-2 AND 3-WAY SWITCH. EXTEND BRANCH CIRCUIT AS REQUIRED AND WIRE COMPLETE. CONTRACTOR TO VERIFY EXISTING LOAD TO PREVENT OVERLOADING OF CIRCUIT.
4. USE EXISTING CIRCUITS AND MAINTAIN SWITCHING SCHEME.
5. EXISTING SWITCHES IN NEW LOCATION. EXTEND BRANCH CIRCUITING AS REQUIRED AND WIRE COMPLETE.

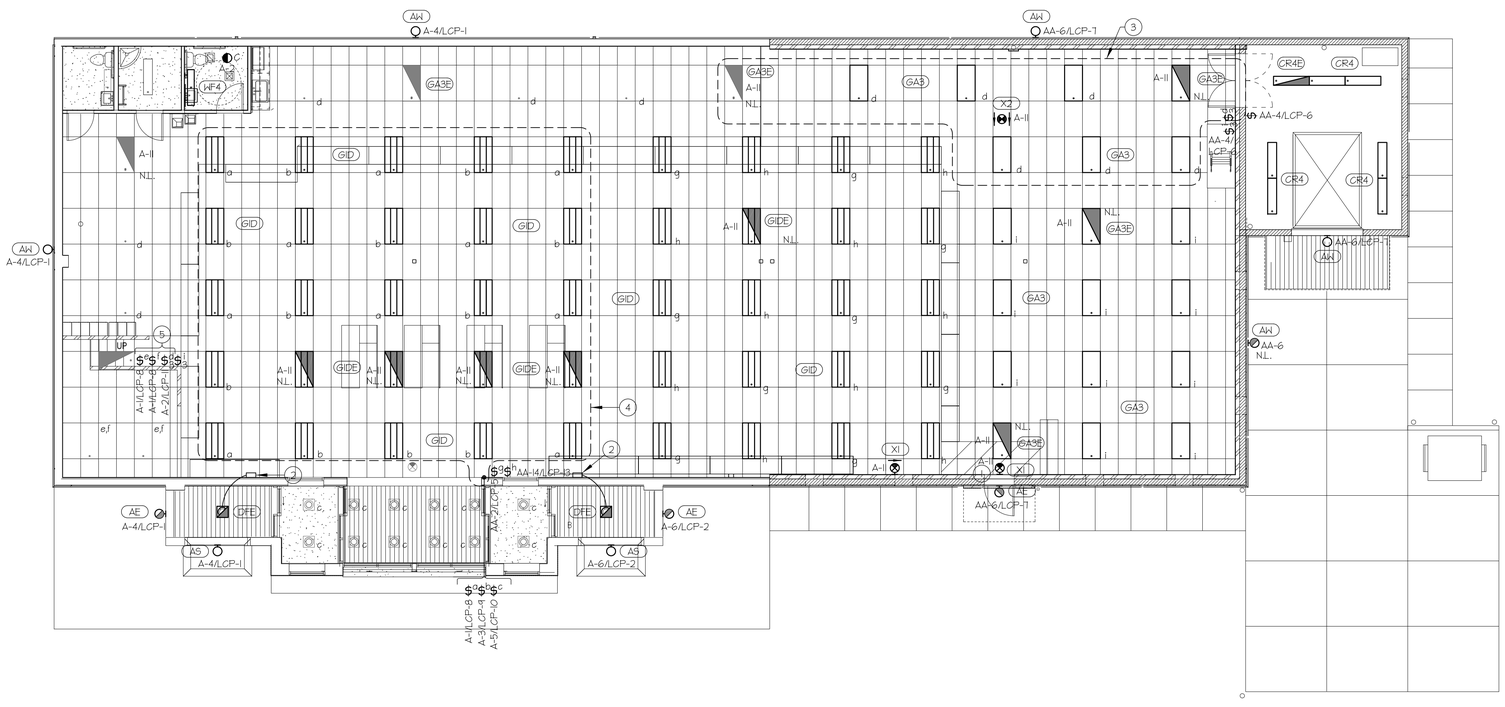


1 LIGHTING PLAN
EL101 SCALE: 1/8" = 1'-0"

NORTH


Eaton Architecture
77 West 200 South, Suite 302
Salt Lake City, UT 84101
Tel 801/328-2982 Fax 801/328-2111

CONSULTANTS
ENVISION ENGINEERING
Direction. Then Velocity.
244 West 300 North, Suite 100
Salt Lake City, Utah 84103
801.534.1130 ph 801.534.1080 fax


REGISTERED PROFESSIONAL ENGINEER
JEFFREY R OWEN
No.177411
STATE OF UTAH

# N. TEMPLE LIQUOR STORE EXPANSION

1255 WEST NORTH TEMPLE
SALT LAKE CITY, UTAH

D.F.C.M. # 07269030

OWNER
UTAH D.F.C.M./ DEPT. OF ALCOHOLIC BEVERAGE CONTROL

| MARK | DATE | DESCRIPTION |
|---|---|---|
| | 2-22-08 | BID SET |

| | |
|---|---|
| PROJECT NUMBER: | 2007-217 |
| DRAWN BY: | BRT |
| DESIGNED BY: | RVV |
| CHECKED BY: | JRO |

COPYRIGHT 2003 EATON ARCHITECTURE, LLC

SHEET TITLE
LIGHTING PLAN

EL101

## LIGHT FIXTURE GENERAL NOTES

1. REFER TO THE ARCHITECTURAL REFLECTED CEILING PLANS FOR LOCATIONS OF LIGHT FIXTURES. BRING ALL DISCREPANCIES OF LOCATIONS AND QUANTITIES TO THE ATTENTION OF THE ARCHITECT AND ELECTRICAL ENGINEER PRIOR TO BIDDING.
2. REFER TO ARCHITECTURAL ELEVATIONS FOR MOUNTING HEIGHTS AND LOCATIONS OF LIGHT FIXTURES. BRING ALL DISCREPANCIES TO THE ATTENTION OF THE ARCHITECT PRIOR TO BIDDING.
3. REFER TO THE SPECIFICATIONS FOR OTHER LIGHT FIXTURE, BALLAST, AND LAMP REQUIREMENTS AND ACCEPTABLE MANUFACTURERS.
4. REFER TO ARCHITECTURAL DRAWINGS FOR LOUVER REQUIREMENTS (IF ANY).
5. CONFIRM AVAILABLE MOUNTING DEPTHS OF ALL LIGHT FIXTURES AND COMPARE WITH DEPTHS SHOWN ON SHOP DRAWING. BRING ALL POTENTIAL CONFLICT AREAS TO THE ATTENTION OF THE ARCHITECT AND ELECTRICAL ENGINEER PRIOR TO RELEASE.

## LIGHT FIXTURE ABBREVIATION SCHEDULE

NOTE: NOT ALL ABBREVIATIONS WILL NECESSARILY BE USED.

| | |
|---|---|
| A.F.F. | ABOVE FINISHED FLOOR |
| WALL@CLG. | WALL MOUNT AT CORNER OF WALL AND CEILING |
| CCBA | CUSTOM PAINTED COLOR AS SELECTED BY THE ARCHITECT |
| SCBA | STANDARD PAINTED COLOR AS SELECTED BY THE ARCHITECT |
| CFBA | CUSTOM FINISH AS SELECTED BY THE ARCHITECT |
| SFBA | STANDARD FINISH AS SELECTED BY THE ARCHITECT |
| MOD | MODIFY STANDARD LIGHT FIXTURE AS INDICATED |

## BIDDING REQUIREMENTS

1. BID ONLY PRODUCTS THAT ARE SPECIFIED OR APPROVED BY ADDENDUM.
2. PACKAGING OF LIGHT FIXTURES WITH OTHER SYSTEMS IS NOT ALLOWED.
3. WHEN ONLY ONE PRODUCT IS APPROVED FOR BIDDING, THE PRICE FOR THAT ITEM SHALL BE BROKEN OUT SEPARATELY WHEN SUBMITTING PRICING TO VARIOUS DISTRIBUTORS AND/OR CONTRACTORS.
4. WHEN A CONTRADICTION EXISTS BETWEEN A SPECIFIC MODEL NUMBER AND THE DESCRIPTION, THE DESCRIPTION SHALL GOVERN.

## LIGHT FIXTURE PRIOR APPROVAL REQUIREMENTS

1. PRIOR APPROVAL IS REQUIRED BEFORE BIDDING THIS PROJECT.
2. PRIOR APPROVALS SHALL BE SUBMITTED TO THE ELECTRICAL ENGINEER'S OFFICE AT LEAST (8) EIGHT WORKING DAYS BEFORE THE BID. PRIOR APPROVALS RECEIVED AFTER THIS TIME PERIOD SHALL BE REJECTED.
3. PRIOR APPROVALS SHALL BE SIGNED BY A PRINCIPAL OF THE SUBMITTING ORGANIZATION STATING THAT THEY HAVE PREPARED AND/OR REVIEWED THE SUBMITTAL AND THAT THE PRODUCTS PROPOSED ARE EQUIVALENT TO THOSE SPECIFIED. ANY EXCEPTIONS SHALL BE SO NOTED.
4. ITEMS THAT ARE SUBMITTED AND HAVE BEEN APPROVED WILL BE LISTED IN THE ADDENDUM(S). VERBAL APPROVAL WILL NOT BE GIVEN ON ANY ITEM.
5. IT IS NOT THE RESPONSIBILITY OF THE ELECTRICAL ENGINEER TO NOTIFY THE SUBMITTING PARTY OF ERRORS IN THE SUBMITTAL. NOTIFICATION OF ERRORS BY THE ELECTRICAL ENGINEER PRIOR TO ISSUANCE OF THE ADDENDUM(S) MAY NOT BE GIVEN.
6. PRIOR APPROVALS SHALL CONSIST OF TWO SETS OF CUT SHEETS DESCRIBING THE PRODUCTS BEING SUBMITTED AS EQUIVALENTS. FAXES ARE NOT ACCEPTABLE. ALL SPECIFICATION INFORMATION SHALL BE CLEARLY MARKED, WITH NON-APPLICABLE INFORMATION CROSSED OUT. COMPLETE PHOTOMETRIC DATA SHALL BE PROVIDED. PRODUCTS WITHOUT PHOTOMETRIC DATA WILL BE NOT BE APPROVED.

## LIGHT FIXTURE SCHEDULE

| TYPE | MANUFACTURER | SERIES | DESCRIPTION | VOLTAGE | LOAD (VA) | MOUNTING | LAMPS NUMBER | LAMPS TYPE | LAMPS WATTS | LAMPS COLOR (KELVIN) | LAMPS CRI | REMARKS |
|---|---|---|---|---|---|---|---|---|---|---|---|---|
| A14 | WIDELITE<br>WIDELITE | SPECTRA (HEAD)<br>SSS (POLE) | SINGLE HEAD LUMINAIRE<br>UL LISTED FOR WET LOCATIONS<br>IES DISTRIBUTION TYPE: IV<br>CUT OFF: FULL CUTOFF<br>LUMINAIRE COLOR: SCBA<br><br>STEEL POLE<br>HEIGHT: 35<br>SHAPE: STRAIGHT SQUARE<br>WIND RATING: 100 MPH WIND LOAD WITH 1.3 GUST FACTOR<br>POLE COLOR: SCBA | 208 | 460 | POLE @ 90 DEG.<br><br>CONCRETE BASE | 1 | PULSE START METAL HALIDE<br>HORIZONTAL ORIENTATION ONLY<br>COATED | 400 | 4100 | 92 | POLE LIGHT IS EXISTING<br>HPS LAMP AND BALLAST<br>SHALL BE RETROFITTED<br>WITH 400 WATT MH LAMP<br>AND NEW METAL HALIDE<br>ELECTRONIC BALLAST ASSEMBLY<br>PART # 400-SIOP-QV |
| A24 | WIDELITE<br>WIDELITE | SPECTRA (HEAD)<br>SSS (POLE) | DOUBLE HEAD LUMINAIRE<br>UL LISTED FOR WET LOCATIONS<br>IES DISTRIBUTION TYPE: IV<br>CUT OFF: FULL CUTOFF<br>LUMINAIRE COLOR: SCBA<br>OPTIONS: FORWARD THROW WITH<br>SPILL LIGHT ELIMINATOR<br><br>STEEL POLE<br>HEIGHT: 35<br>SHAPE: STRAIGHT SQUARE<br>WIND RATING: 100 MPH WIND LOAD WITH 1.3 GUST FACTOR<br>POLE COLOR: SCBA | 208 | 920 | POLE @ 90 DEG.<br><br>CONCRETE BASE | 1 | PULSE START METAL HALIDE<br>HORIZONTAL ORIENTATION ONLY<br>COATED | 400 | 4100 | 92 | POLE LIGHT IS EXISTING<br>HPS LAMP AND BALLAST<br>SHALL BE RETROFITTED<br>WITH A NEW 400 WATT MH<br>LAMP AND NEW METAL HALIDE<br>ELECTRONIC BALLAST ASSEMBLY<br>PART # 400-SIOP-QV<br>SINGLE HEAD SHALL BE<br>RETROFITTED FOR<br>ADDITIONAL HEAD |
| AS | INVUE | ENV-LG | DECORATIVE WALL SCONCE<br>UL LISTED FOR WET LOCATIONS<br>DISTRIBUTION: FTP<br>LUMINAIRE COLOR: SCBA<br>OPTIONS: LG (SCBA) | 120 | 95 | WALL | 1 | METAL HALIDE<br>HORIZONTAL ORIENTATION ONLY<br>COATED LAMP FOR REDUCED GLARE | 70 | 4100 | 92 | |
| AW | INVUE | VWS | WALL AREA LIGHT -DOWN<br>UL LISTED FOR WET LOCATIONS<br>IES DISTRIBUTION TYPE: III<br>LUMINAIRE COLOR: SCBA | 120 | 150 | WALL<br>DIRECT-DOWN | 1 | METAL HALIDE<br>HORIZONTAL ORIENTATION ONLY<br>COATED LAMP FOR REDUCED GLARE | 100 | 4100 | 92 | |
| AE | INVUE | VWS | WALL AREA LIGHT -DOWN<br>UL LISTED FOR WET LOCATIONS<br>IES DISTRIBUTION TYPE: III<br>LUMINAIRE COLOR: SCBA<br>REMOTE EMERGENCY BATTERY PACK | 120 | 42 | WALL<br>DIRECT-DOWN | 1 | TRIPLE TUBE COMPACT FLUORESCENT<br>HORIZONTAL ORIENTATION<br>TCLP COMPLIANT | 42 | 4100 | 92 | |
| CR4 | METALUX | D1240 | HEAVY-DUTY INDUSTRIAL STRIP<br>LENGTH: 4'<br>ELECTRONIC BALLAST(S): QTY: 1; THD: <10%<br>OPTIONS: WIRE GUARD | 120 | 64 | SURFACE | 2 | 48" LINEAR T8 FLUORESCENT<br>TCLP COMPLIANT | 32 | 3500 | 86 | |
| CR4E | METALUX | D1240 | HEAVY-DUTY INDUSTRIAL STRIP<br>LENGTH: 4'<br>ELECTRONIC BALLAST(S): QTY: 1; THD: <10%<br>OPTIONS: WIRE GUARD<br>EMERGENCY BATTERY PACK | 120 | 64 | SURFACE | 2 | 48" LINEAR T8 FLUORESCENT<br>TCLP COMPLIANT | 32 | 3500 | 86 | |
| DFE | PORTFOLIO | C1242 | OPEN REFLECTOR COMPACT FLUORSECENT DOWNLIGHT<br>APPERATURE: 8"<br>REFLECTOR TYPE: CLEAR<br>REFLECTOR FINISH: SPECULAR LOW IRID.<br>LENS TYPE: PRISMATIC TEMPERED GLASS<br>MAXIMUM RECESS DEPTH: 8"<br>ELECTRONIC BALLAST: <10% THD<br>UL LISTED FOR DAMP LOCATIONS<br>EMERGENCY BATTERY PACK | 120 | 84 | RECESSED/<br>LAY-IN GRID | 2 | TRIPLE TUBE COMPACT FLUORESCENT<br>VERTICAL ORIENTATION<br>TCLP COMPLIANT | 42 | 3500 | 82 | |
| GA3 | LIGHTOLIER | PRS2GRFV1340 | SPECIFICATION PREMIUM TROFFER<br>DIMENSIONS: 2'W X 4'L X 3-3/16"D<br>DOOR FRAME: REGRESSED WHITE ALUMINUM<br>DIFFUSER TYPE: .125" THICK #12 PATTERN ACRYLIC<br>ELECTRONIC BALLAST(S): QTY: 1; THD: <10% | 120 | 96 | LAY-IN GRID | 3 | 48" LINEAR T8 FLUORESCENT<br>TCLP COMPLIANT | 32 | 3500 | 86 | EXISTING LIGHT IN NEW LOCATION<br>PROVIDE LIGHT FIXTURE TO<br>MATCH AS REQUIRED<br>CONTRACTOR TO FIELD VERIFY<br>COUNTS AND PROVIDE NEW AS<br>REQUIRED |
| GA3E | LIGHTOLIER | PRS2GRFV1340 | SPECIFICATION PREMIUM TROFFER<br>DIMENSIONS: 2'W X 4'L X 3-3/16"D<br>DOOR FRAME: REGRESSED WHITE ALUMINUM<br>DIFFUSER TYPE: .125" THICK #12 PATTERN ACRYLIC<br>ELECTRONIC BALLAST(S): QTY: 1; THD: <10%<br>EMERGENCY BATTERY PACK | 120 | 96 | LAY-IN GRID | 3 | 48" LINEAR T8 FLUORESCENT<br>TCLP COMPLIANT | 32 | 3500 | 86 | EXISTING LIGHT IN NEW LOCATION<br>PROVIDE LIGHT FIXTURE TO<br>MATCH AS REQUIRED<br>CONTRACTOR TO FIELD VERIFY<br>COUNTS AND PROVIDE NEW AS<br>REQUIRED |
| GID | METALUX | 2RDI | DIRECT/INDIRECT GENERAL LIGHTING<br>DIMENSIONS: 2'W X 4'L X 5-1/2"D<br>DIFFUSER: METAL DIFFUSER, ROUND HOLES<br>LIGHT DISTRIBUTION: SIDE-MOUNTED DIFFUSER<br>ELECTRONIC BALLAST(S): QTY: 1; THD: <10% | 120 | 108 | LAY-IN GRID | 2 | 48" LINEAR T5HO FLUORESCENT<br>TCLP COMPLIANT | 54 | 3500 | 86 | |
| GIDE | METALUX | 2RDI | DIRECT/INDIRECT GENERAL LIGHTING<br>DIMENSIONS: 2'W X 4'L X 5-1/2"D<br>DIFFUSER: METAL DIFFUSER, ROUND HOLES<br>LIGHT DISTRIBUTION: SIDE-MOUNTED DIFFUSER<br>ELECTRONIC BALLAST(S): QTY: 1; THD: <10%<br>EMERGENCY BATTERY PACK | 120 | 108 | LAY-IN GRID | 2 | 48" LINEAR T5HO FLUORESCENT<br>TCLP COMPLIANT | 54 | 3500 | 86 | |
| WF4 | METALUX | BIU | WALL-MOUNTED FLUORESCENT FIXTURE<br>DIMENSIONS: 1-5/8"W X 49"L X 3.5"D<br>NUMBER OF LAMPS IN CROSS SECTION: 2<br>ELECTRONIC BALLAST(S): QTY: 1; THD: <10% | 120 | 64 | WALL<br>ABOVE MIRROR | 2 | 48" LINEAR T8 FLUORESCENT<br>TCLP COMPLIANT | 32 | 3500 | 86 | |
| X1 | EMERGI-LITE | LED-XN | LED DIE-CAST ALL-CONDITIONS ALUMINUM EXIT SIGN<br>OPERATION: EMERGENCY - NICKEL CADMIUM BATTERY<br>FACE TYPE: STENCIL<br>HOUSING COLOR: WHITE<br>NUMBER OF FACES: 1<br>LETTER COLOR: GREEN | 120 | 25 | UNIVERSAL | 1 | LAMP INCLUDED | 25 | N/A | N/A | EXISTING EXIT SIGN IN NEW<br>LOCATION<br>PROVIDE FIXTURE TO MATCH<br>IF REQUIRED |
| X2 | EMERGI-LITE | LED-XN | LED DIE-CAST ALL-CONDITIONS ALUMINUM EXIT SIGN<br>OPERATION: EMERGENCY - NICKEL CADMIUM BATTERY<br>FACE TYPE: STENCIL<br>HOUSING COLOR: WHITE<br>NUMBER OF FACES: 2<br>LETTER COLOR: GREEN | 120 | 25 | UNIVERSAL | 1 | LAMP INCLUDED | 25 | N/A | N/A | |


Eaton architecture
77 West 200 South, Suite 302
Salt Lake City, UT 84101
Tel 801/328-2982 Fax 801/328-2111


CONSULTANTS


ENVISION ENGINEERING
Direction. Then Velocity.
244 West 300 North, Suite 100
Salt Lake City, Utah 84103
801.534.1130 ph 801.534.1080 fax


REGISTERED PROFESSIONAL ENGINEER
JEFFREY R. OWEN
No.177411
STATE OF UTAH

N. TEMPLE LIQUOR STORE EXPANSION
1255 WEST NORTH TEMPLE
SALT LAKE CITY, UTAH

D.F.C.M. # 07269030

OWNER
UTAH D.F.C.M./ DEPT. OF ALCOHOLIC BEVERAGE CONTROL

| MARK | DATE | DESCRIPTION |
|---|---|---|
| | 2-22-08 | BID SET |

| | |
|---|---|
| PROJECT NUMBER: | 2007-217 |
| DRAWN BY: | BRT |
| DESIGNED BY: | RVV |
| CHECKED BY: | JRO |


COPYRIGHT 2003 EATON ARCHITECTURE, LLC


SHEET TITLE

LIGHT FIXTURE SCHEDULE

EL601

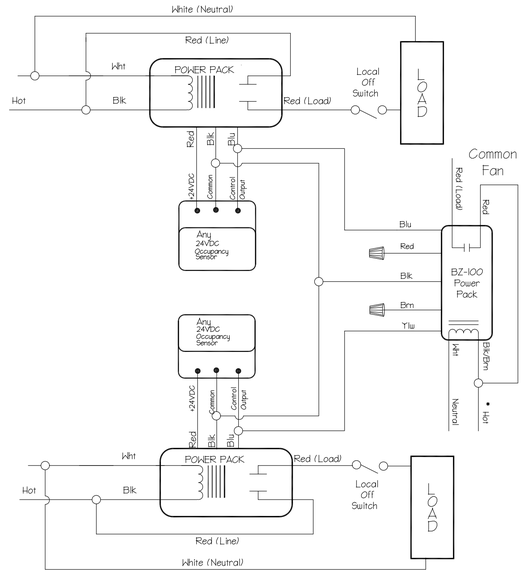


*Note:
Connect only the supply for the voltage being used.
Cap unused power supply wire.

3 2 ROOM SENSOR CONTROL WITH COMMON FAN USING BZ-100
SCALE: NONE

PROVIDE 4"x4"x2-1/8" DEEP JUNCTION BOX WITH SINGLE GANG PLASTER RING AND EXTEND 1" CONDUIT WITH NYLON PULL ROPE TO THE TELEPHONE BOARD. CABLE TO BE PROVIDED BY OWNER.

AI-40 — DESIGNATION OF CIRCUIT. WIRE COMPLETE.

AI-40/IG — ISOLATED GROUND CIRCUIT.

2 TYPICAL OUTLET CONVENTION
SCALE: NONE

## KEYED NOTES:

1. EXISTING SECURITY ANNUNCIATOR KEYPAD.
2. 1" CONDUITS TO 12"X12"X4" JUNCTION BOX IN OFFICE 105. VERIFY EXACT LOCATION WITH MILLWORK SHOP DRAWING PRIOR TO ROUGH IN.
3. STUB CONDUITS UP INTO OFFICE FOR CONNECTION TO OWNER PROVIDED DATA RACK. VERIFY EXACT LOCATION WITH OWNER PRIOR TO INSTALLATION.
4. PROVIDE 4" SQUARE JUNCTION BOX WITH A SINGLE GANG MUD RING.
5. PROVIDE 3/4"C. WITH NYLON PULLSTRING TO TTB FOR DATA.
6. DATA RACK FURNISHED BY OWNER. CONFIRM EXACT LOCATION.
7. INTERCEPT EXISTING SECURITY LOOP FOR THE MOTION DETECTORS. PROVIDE 3/4" C AND WIRING TO SECURITY SYSTEM PANEL.
8. PROVIDE NEW FIRE ALARM DEVICES TO MATCH EXISTING.
9. RELOCATED SECURITY DEVICE FOR ROOF HATCH. EXTEND 3/4" C AND SECURITY WIRING TO SECURITY PANEL AND WIRE COMPLETE.
10. PROVIDE WALKER TYPE RFB4 FLOOR BOX OR APPROVED EQUIVALENT TO MATCH EXISTING. VERIFY DEVICE COVER PLATE AND ACCESSORIES WITH OWNER PRIOR TO ORDERING.
11. 3/4" CONDUIT AND SECURITY SYSTEM WIRING TO SECURITY PANEL.
12. PROVIDE 2" C OVERHEAD TO THE TELEPHONE TERMINAL BOARD.
13. POWER DOOR OPERATOR FURNISHED WITH DOOR INSTALLED AND WIRED BY DIVISION 26000.
14. PROVIDE WINTERGUARD W908 HEAT CABLE SYSTEM OR APPROVED EQUIVALENT. ROUTE CABLE THROUGH DOWNSPOUT AND INSTALL PER MANUFACTURERS RECOMMENDATIONS.
15. SPECIAL PURPOSE OUTLET FOR BAILER. CONFIRM NEMA CONFIGURATION WITH EQUIPMENT MANUFACTURER AND VERIFY EXACT LOCATION WITH OWNER PRIOR TO ROUGH-IN.

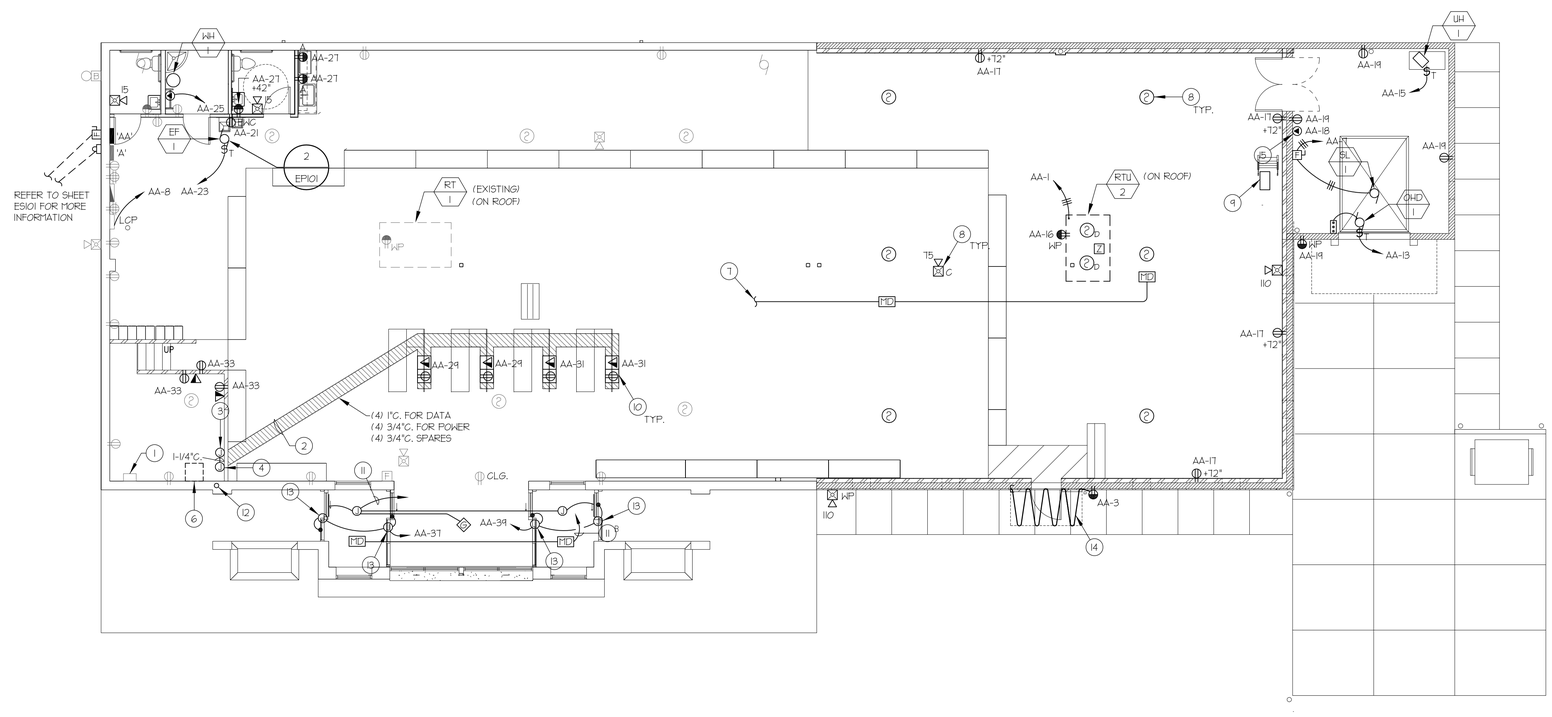


1 POWER PLAN
EP101 SCALE: 1/8" = 1'-0"

NORTH


Eaton Architecture
77 West 200 South, Suite 302
Salt Lake City, UT 84101
Tel 801/328-2982 Fax 801/328-2111


CONSULTANTS


ENVISION ENGINEERING
Direction. Then Velocity.
244 West 300 North, Suite 100
Salt Lake City, Utah 84103
801.534.1130 ph 801.534.1080 fax


REGISTERED PROFESSIONAL ENGINEER
JEFFREY R. OWEN
No.177411
STATE OF UTAH

# N. TEMPLE LIQUOR STORE EXPANSION

1255 WEST NORTH TEMPLE
SALT LAKE CITY, UTAH

D.F.C.M. # 07269030

OWNER
UTAH D.F.C.M./ DEPT. OF ALCOHOLIC BEVERAGE CONTROL

| MARK | DATE | DESCRIPTION |
|---|---|---|
| | 2-22-08 | BID SET |

| | |
|---|---|
| PROJECT NUMBER: | 2007-217 |
| DRAWN BY: | BRT |
| DESIGNED BY: | RVV |
| CHECKED BY: | JRO |


COPYRIGHT 2003 EATON ARCHITECTURE, LLC


SHEET TITLE
POWER PLAN

EP101

# EQUIPMENT SCHEDULE

| UNIT NAME | DESCRIPTION | LOAD | TYPE | VOLTAGE | PHASE | AMPERAGE | CONDUIT SIZE | WIRES NO. | WIRES SIZE | STARTER / DISCONNECT/ CONNECTION AT UNIT: NOTE | STARTER SIZE | OCP SIZE | OCP POLES | DISCONNECT SIZE | DISCONNECT POLES | REMARKS |
|---|---|---|---|---|---|---|---|---|---|---|---|---|---|---|---|---|
| RTU-1 | ROOF TOP UNIT | 88.4 | MCA | 208 | 3 | 88.4 | 1-1/4" | 3 | 2 | 4B & 10B | - | - | - | - | - | |
| EF-1 | EXHAUST FAN | 1/4 | HP | 120 | 1 | 5.8 | 3/4" | 2 | 12 | 1A | - | - | - | 1HP | - | |
| SL | SCISSOR LIFT | 1.5 | HP | 208 | 3 | 25.3 | 3/4" | 3 | 10 | 4B & 10A | - | 40 | 3 | 60 | 3 | |
| UH-1 | UNIT HEATER | 1/15 | HP | 120 | 1 | 4.4 | 3/4" | 2 | 12 | 1A | - | - | - | 1HP | - | |
| WH-1 | WATER HEATER | 12 | FLA | 120 | 1 | 12 | 3/4" | 2 | 12 | 14A | - | - | - | - | - | |

SIZE ALL FUSES IN ACCORDANCE WITH MANUFACTURER'S RECOMMENDATIONS.

STARTER / DISCONNECT NOTES:

1. MANUAL STARTER WITH THERMAL OVERLOAD
2. MANUAL STARTER WITH THERMAL OVERLOAD PROTECTION & LOW VOLTAGE RELAY / CONTACTOR FOR ATC CONTROL
3. COMBINATION MAGNETIC STARTER / FUSED DISCONNECT
4. COMBINATION MAGNETIC STARTER / MOTOR CIRCUIT PROTECTOR (MCP)
5. COMBINATION VARIABLE FREQUENCY DRIVE / MOTOR CIRCUIT PROTECTOR (MCP)
6. REDUCED VOLTAGE STARTER
7. COMBINATION TWO-SPEED STARTER / FUSED DISCONNECT
8. COMBINATION TWO-SPEED STARTER / MOTOR CIRCUIT PROTECTOR (MCP)
9. NON-FUSED DISCONNECT SWITCH
10. FUSED DISCONNECT SWITCH
11. BREAKER AND ENCLOSURE
12. DIRECT CONNECTION
13. DUPLEX RECEPTACLE OUTLET
14. SPECIAL PURPOSE OUTLET
15. SHUNT-TRIP BREAKER AND ENCLOSURE
16. TOGGLE SWITCH
17. MAGNETIC STARTER

INSTALLATION NOTES:

A. FURNISHED, INSTALLED, & CONNECTED UNDER DIVISION 16.
B. FURNISHED & INSTALLED UNDER ANOTHER DIVISION REQUIRING CONNECTIONS UNDER DIVISION 16.
C. FURNISHED UNDER ANOTHER DIVISION BUT INSTALLED AND CONNECTED UNDER DIVISION 16.
D. FURNISHED, INSTALLED, & CONNECTED UNDER ANOTHER DIVISION
E. FURNISHED BY OWNER, INSTALLED & CONNECTED BY DIVISION 16

## KEYED NOTES:

1. PROVIDE PANEL EXTENSION FOR TVSS UNIT.

# LIGHTING AND APPLIANCE PANELBOARD SCHEDULE

PANEL NAME: A (EXISTING) TYPE: NGOD CIRCUIT BREAKERS: [X] BOLT ON [ ] PLUG ON 120 / 208 VOLTAGE 3 PH 4 W

[X] ENGRAVED NAME TAGS BUS MATERIAL: [X] ALUM BUS [ ] CU BUS GROUND: [X] GROUND BUS [ ] ISOL GND BUS NEUTRAL: [X] 100% [ ] 200% LUGS: [X] MAIN [ ] SUB-FEED [ ] FEED-THROUGH MAIN BREAKER: [ ] AMPS ____ BUS AMPS: 225

## BRANCH BREAKERS

| NOTES | ITEM | AMP | POLE | WIRE SIZE | CIR. NO. | LEFT PHASE LOAD A | B | C | RIGHT PHASE LOAD A | B | C | CIR. NO. | AMP | POLE | WIRE SIZE | ITEM | NOTES |
|---|---|---|---|---|---|---|---|---|---|---|---|---|---|---|---|---|---|
| 9 | SALES AREA LIGHTS | | 1 | | 1 | | | | | | | 2 | | 1 | | RESTRM, JANITOR, & WAREHOUSE LTS | 9 |
| 9 | SALES AREA LIGHTS | | 1 | | 3 | | | | | | | 4 | | 1 | | EXTERIOR BUILDING LTS & CONTROL | 9 |
| 9 | ENTRY, VESTIBULES, & OFFICE LTS | | 1 | | 5 | | | | | | | 6 | | 1 | | EXTERIOR BUILDING SIGN | 9 |
| 9 | SPARE | | 1 | | 7 | | | | | | | 8 | | 1 | | EXTERIOR PLANTING AREA SIGN | 9 |
| 9 | TELEPHONE TERMINAL BOARD C.O.S. | | 1 | | 9 | | | | | | | 10 | | 1 | | RESTRM & JANITOR C.O.S | 9 |
| 9 | NIGHT LTS & EXIT LTS | | 1 | | 11 | | | | | | | 12 | | 1 | | SOUTH WAREHOUSE C.O.S & MTR BKR | 9 |
| 9 | EAST WAREHOUSE C.O.S | | 1 | | 13 | | | | | | | 14 | | 1 | | REFRIGERATOR C.O. | 9 |
| 9 | OFFICE AND TIME CLOCK C.O.S | | 1 | | 15 | | | | | | | 16 | | 1 | | BREAK COUNTER C.O. | 9 |
| 9 | NORTH SALES & WAREHOUSE C.O.S | | 1 | | 17 | | | | | | | 18 | | 1 | | BREAK AREA & TIME CLOCK C.O.S | 9 |
| 9 | CHECKSTAND 1 FLOOR C.O. | | 1 | | 19 | | | | | | | 20 | | 1 | | OFFICE 1G C.O. | 9 |
| 9 | CHECKSTAND 2 FLOOR C.O. | | 1 | | 21 | | | | | | | 22 | | 1 | | FIRE ALARM | 9 |
| 9 | CHECKSTAND 3 FLOOR C.O. | | 1 | | 23 | | | | | | | 24 | | 1 | | C.O. ON ROOF | 9 |
| 9 | OFFICE OUTLETS | | 1 | | 25 | | | | | | | 26 | | 1 | | FLOW AND TAMPER SW | 9 |
| 9 | OFICE LTS | | 1 | | 27 | | | | | | | 28 | | 1 | | SPARE | 9 |
| 9 | SPARE | | 1 | | 29 | | | | | | | 30 | | 1 | | SPARE | 9 |
| 9 | SPARE | | 1 | | 31 | | | | | | | 32 | | 3 | | DOOR LEVELER DISCONNECT | 9 |
| 9 | PARKING LOT POLE LTS | | 2 | | 33 | | | | | | | 34 | | - | | - | 9 |
| 9 | - | | - | | 35 | | | | | | | 36 | | - | | - | 9 |
| 9 | ROOFTOP HTG & CLG UNIT RTU | | 3 | | 37 | | | | | | | 38 | | 2 | | WATER HEATER | 9 |
| | - | | - | | 39 | | | | | | | 40 | | - | | - | 9 |
| | - | | - | | 41 | | | | | | | 42 | | - | | BAILER | 9 |
| | | | | | | 0 | 0 | 0 | 0 | 0 | 0 | | | | | | |
| | | | | | | 0 | 0 | 0 | TOTAL | | | | | | | | |
| | | | | | | 0 | 0 | 0 | AMPS / PHASE | | | | | | | | |

FRONT: [X] STANDARD [ ] HINGED [ ] DOOR-IN-DOOR

MOUNTING: [ ] FLUSH [ ] SURFACE [ ] SURFACE W/ SKIRT ABOVE [ ] SURFACE W/ SKIRT BELOW

TVSS: [X] NONE [ ] CATEGORY "C" [ ] CATEGORY "B" [ ] CATEGORY "A"

NEMA RATING: [X] NEMA 1 [ ] NEMA 3R [ ] NEMA 4X [ ] NEMA 12 [ ] STAINLESS STEEL

TOTAL CONNECTED LOAD: 0

SHORT CIRCUIT RATING: [ ] SERIES - RATED [ ] FULLY - RATED

10,000 AMPS RMS SYM

REFER TO ONE-LINE DIAGRAM FOR FEEDER , CONDUIT AND CONDUCTOR SIZES

# LIGHTING AND APPLIANCE PANELBOARD SCHEDULE

PANEL NAME: AA TYPE: NGOD CIRCUIT BREAKERS: [X] BOLT ON [ ] PLUG ON 120 / 208 VOLTAGE 3 PH 4 W

[X] ENGRAVED NAME TAGS BUS MATERIAL: [X] ALUM BUS [ ] CU BUS GROUND: [X] GROUND BUS [ ] ISOL GND BUS NEUTRAL: [X] 100% [ ] 200% LUGS: [X] MAIN [ ] SUB-FEED [ ] FEED-THROUGH MAIN BREAKER: [ ] AMPS ____ BUS AMPS: 400

## BRANCH BREAKERS

| NOTES | ITEM | AMP | POLE | WIRE SIZE | CIR. NO. | LEFT PHASE LOAD A | B | C | RIGHT PHASE LOAD A | B | C | CIR. NO. | AMP | POLE | WIRE SIZE | ITEM | NOTES |
|---|---|---|---|---|---|---|---|---|---|---|---|---|---|---|---|---|---|
| | ROOF TOP UNIT (RTU-1) | 110 | 3 | 2 | 1 | 10600 | | | 1000 | | | 2 | 20 | 1 | 12 | SALES AREA LIGHTS | |
| | - | - | - | - | 3 | | 10600 | | | 1500 | | 4 | 20 | 1 | 12 | STORAGE AREA LTS | |
| | - | - | - | - | 5 | | | 10600 | | | 1500 | 6 | 20 | 1 | 12 | EXTERIOR LTS | |
| | SCISSOR LIFT | 50 | 3 | 10 | 7 | 3035 | | | 500 | | | 8 | 20 | 1 | 12 | LCP | |
| | - | - | - | - | 9 | | 3035 | | | 1200 | | 10 | 20 | 2 | 8 | PARKING LOT POLE LIGHTS | |
| | - | - | - | - | 11 | | | 3035 | | | 1200 | 12 | - | - | - | - | |
| | OHD | 20 | 1 | 12 | 13 | 1500 | | | 1000 | | | 14 | 20 | 1 | 12 | SALES AREA LIGHTS | |
| | UH-1 | 20 | 1 | 12 | 15 | | 528 | | | 180 | | 16 | 20 | 1 | 12 | ROOF CO | |
| | GENERAL PURPOSE CO'S | 20 | 1 | 12 | 17 | | | 720 | | | 2500 | 18 | 30 | 2 | 10 | BAILER | |
| | RECEIVING WTR COOLER | 20 | 1 | 12 | 19 | 720 | | | 2500 | | | 20 | - | - | - | - | |
| | ELECTRIC WTR COOLER | 20 | 1 | 12 | 21 | | 1200 | | | | | 22 | 20 | 1 | | SPARE | |
| | EF-1 | 20 | 1 | 12 | 23 | | | 1200 | | | | 24 | 20 | 1 | | SPARE | |
| | WH-1 | 20 | 1 | 12 | 25 | 1440 | | | | | | 26 | 20 | 1 | | SPARE | |
| | BREAK AREA CO'S | 20 | 1 | 12 | 27 | | 360 | | | | | 28 | 20 | 1 | | SPARE | |
| | FLOOR BOXES | 20 | 1 | 12 | 29 | | | 360 | | | | 30 | 20 | 1 | | SPARE | |
| | FLOOR BOXES | 20 | 1 | 12 | 31 | 360 | | | | | | 32 | 100 | 3 | 1 | TVSS | 1 |
| | OFFICE CO'S | 20 | 1 | 12 | 33 | | 720 | | | | | 34 | - | - | - | - | |
| 3 | HEAT TRACE | 20 | 1 | 12 | 35 | | | 1600 | | | | 36 | - | - | - | - | |
| | FRONT DOORS | 20 | 1 | 12 | 37 | 1200 | | | | | | 38 | 200 | 3 | 3/0 | PANEL 'A' | |
| | FRONT DOORS | 20 | 1 | 12 | 39 | | 1200 | | | | | 40 | - | - | - | - | |
| | SPARE | 20 | 1 | | 41 | | | | | | | 42 | - | - | - | - | |
| | | | | | | 18855 | 17643 | 17515 | 5000 | 2880 | 5200 | | | | | | |
| | | | | | | 23855 | 20523 | 22715 | TOTAL | | | | | | | | |
| | | | | | | 199 | 171 | 189 | AMPS / PHASE | | | | | | | | |

FRONT: [X] STANDARD [ ] HINGED [ ] DOOR-IN-DOOR

MOUNTING: [ ] FLUSH [X] SURFACE [ ] SURFACE W/ SKIRT ABOVE [ ] SURFACE W/ SKIRT BELOW

TVSS: [ ] NONE [X] CATEGORY "C" [ ] CATEGORY "B" [ ] CATEGORY "A"

NEMA RATING: [X] NEMA 1 [ ] NEMA 3R [ ] NEMA 4X [ ] NEMA 12 [ ] STAINLESS STEEL

TOTAL CONNECTED LOAD: 67,093

SHORT CIRCUIT RATING: [ ] SERIES - RATED [X] FULLY - RATED

22,000 AMPS RMS SYM

REFER TO ONE-LINE DIAGRAM FOR FEEDER , CONDUIT AND CONDUCTOR SIZES

PANELBOARD SCHEDULE NOTES:
1. PROVIDE CLASS A GROUND FAULT INTERRUPTER TYPE CIRCUIT BREAKER.
2. PROVIDE ARC FAULT CIRCUIT INTERRUPTER TYPE CIRCUIT BREAKER.
3. PROVIDE 30 MILLIAMPERE EQUIPMENT GROUNG FAULT PROTECTOR TYPE CIRCUIT BREAKER.
4. PROVIDE SHUNT-TRIP TYPE CIRCUIT BREAKER WITH 120V COIL.
5. PROVIDE HACR RATED CIRCUIT BREAKER.
6. PROVIDE HANDLE CLAMP FOR HOLDING CIRCUIT BREAKER IN THE "ON" OR "OFF" POSITION.
7. PROVIDE SWITCHING RATED CIRCUIT BREAKER.
8. PROVIDE NEW CIRCUIT BREAKER IN EXISTING PANELBOARD (WHERE PANEL IS INDICATED AS EXISTING) OF SAME MANUFACTURER AND A.I.C. RATING AS EXISTING.
9. EXISTING LOAD.


Eaton architecture
77 West 200 South, Suite 302
Salt Lake City, UT 84101
Tel 801/328-2982 Fax 801/328-2111


CONSULTANTS


ENVISION ENGINEERING
Direction. Then Velocity.
244 West 300 North, Suite 100
Salt Lake City, Utah 84103
801.534.1130 ph 801.534.1080 fax


REGISTERED PROFESSIONAL ENGINEER
JEFFREY R. OWEN
No.177411
STATE OF UTAH

N. TEMPLE LIQUOR STORE EXPANSION
1255 WEST NORTH TEMPLE
SALT LAKE CITY, UTAH

D.F.C.M. # 07269030

OWNER
UTAH D.F.C.M./ DEPT. OF ALCOHOLIC BEVERAGE CONTROL

| MARK | DATE | DESCRIPTION |
|---|---|---|
| | 2-22-08 | BID SET |

PROJECT NUMBER: 2007-217
DRAWN BY: BRT
DESIGNED BY: RVV
CHECKED BY: JRO


COPYRIGHT 2003 EATON ARCHITECTURE, LLC


SHEET TITLE
EQUIPMENT SCHEDULE

EP601

## UTILITY POLE REQUIREMENTS:

1. THE CONTRACTOR SHALL PROVIDE 1ST STANDOFF, LONG SWEEP GALVANIZED ELBOW, AND ADDITIONAL CONDUIT AS REQUIRED BY UTAH POWER AND QWEST FOR A COMPLETE INSTALLATION. UTAH POWER AND QWEST WILL INSTALL STANDOFFS AND CONDUIT ONTO POLE. COORDINATE ALL REQUIREMENTS WITH UTAH POWER AND QWEST PRIOR TO ROUGH-IN.

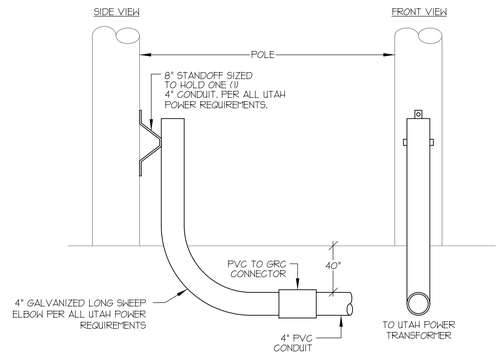


4 UTAH POWER POLE - CONDUIT MOUNTING DETAIL
SCALE: NONE

## FIRE ALARM SYSTEM NOTES:

1. PROVIDE ADDRESSABLE FIRE ALARM SYSTEM, DEVICES TO MATCH EXISTING.
2. CONFIRM ALL WIRING REQUIREMENTS WITH FIRE ALARM SYSTEM SUPPLIER AND PROVIDE IN ACCORDANCE THEREWITH.
3. THE SYSTEM SHALL BE PROGRAMMED SO THAT IF ANY INITIATION DEVICE IS ACTUATED, AN ALARM SIGNAL WHICH IS AUDIBLE THROUGHOUT THE BUILDING WILL BE ACTIVATED.
4. WIRING SHALL BE CONTINUOUS FROM ONE DEVICE TO ANOTHER. NO SPLICING IS ALLOWED.
5. ALL FIRE ALARM CABLING SHALL BE RAN IN CONDUIT. MINIMUM CONDUIT SIZE SHALL BE 3/4". CONTRACTOR SHALL SPRAY PAINT ALL JUNCTION BOXES ASSOCIATED WITH THE FIRE ALARM SYSTEM "FIRE ENGINE RED".
6. THE FIRE ALARM SYSTEM SUPPLIER SHALL PROVIDE A COMPUTER DRAFTED PLAN OF THE FIRE ALARM SYSTEM PER ALL REQUIREMENTS OF THE SPECIFICATIONS. REFER TO SPECIFICATIONS FOR ADDITIONAL INFORMATION.
7. ALL NOTIFICATION DEVICE CIRCUIT VOLTAGE DROP CALCULATIONS SHALL BE DONE IN COMPLIANCE WITH NFPA 72 2007 SECTION 4.4.4.1. THE FIRE ALARM SYSTEM SUPPLIER TO DETERMINE THE AMOUNT NOTIFICATION DEVICE CIRCUITS THAT ARE REQUIRED BASED ON THE NUMBER OF NOTIFICATION DEVICES SHOWN ON THE DRAWINGS.
8. SUBMIT THE FIRE ALARM INSTALLATION DRAWINGS AND MANUFACTURERS CUTSHEETS TO THE LOCAL AUTHORITY HAVING JURISDICTION FOR REVIEW AND APPROVAL PRIOR TO THE ROUGH-IN OF THE SYSTEM.
9. VERIFY AND COMPLY WITH ALL LOCAL AND NATIONAL CODES.
10. FIRE ALARM SYSTEM SUPPLIER TO PROVIDE A COPY OF PROGRAMMING CODES AND OPERATION MANUALS IN A SLEEVED BINDER ATTACHED TO THE FIRE ALARM CONTROL PANEL.

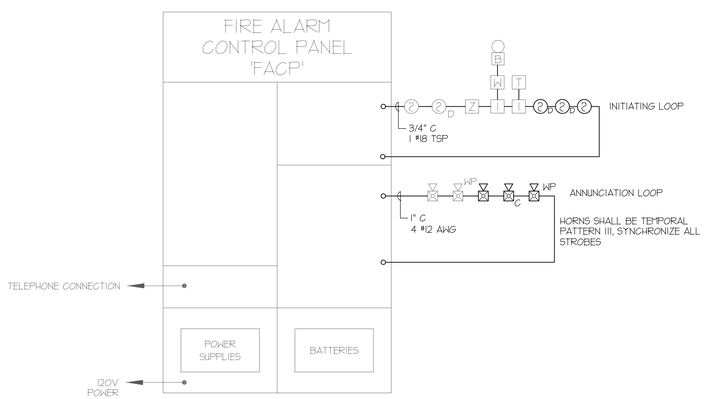


3 FIRE ALARM SYSTEM RISER DIAGRAM
SCALE: NONE

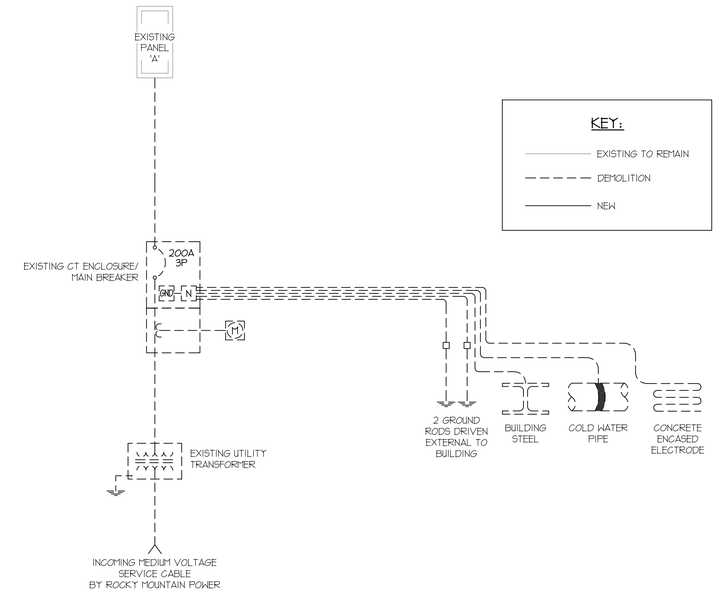


2 DEMOLITION ONE-LINE DIAGRAM
SCALE: NONE

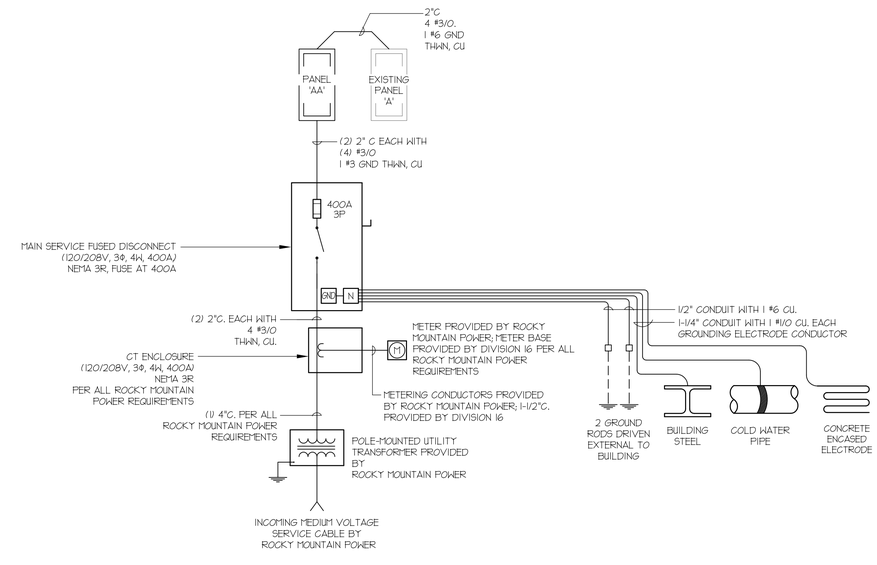


1 ONE-LINE DIAGRAM
SCALE: NONE


Eaton architecture
77 West 200 South, Suite 302
Salt Lake City, UT 84101
Tel 801/328-2982 Fax 801/328-2111


CONSULTANTS


ENVISION ENGINEERING
Direction. Then Velocity.
244 West 300 North, Suite 100
Salt Lake City, Utah 84103
801.534.1130 ph 801.534.1080 fax


REGISTERED PROFESSIONAL ENGINEER
JEFFREY R. OWEN
No.177411
STATE OF UTAH

# N. TEMPLE LIQUOR STORE EXPANSION

1255 WEST NORTH TEMPLE
SALT LAKE CITY, UTAH

D.F.C.M. # 07269030

OWNER
UTAH D.F.C.M./ DEPT. OF ALCOHOLIC BEVERAGE CONTROL

| MARK | DATE | DESCRIPTION |
|---|---|---|
| | 2-22-08 | BID SET |

| | |
|---|---|
| PROJECT NUMBER: | 2007-217 |
| DRAWN BY: | BRT |
| DESIGNED BY: | RVV |
| CHECKED BY: | JRO |


COPYRIGHT 2003 EATON ARCHITECTURE, LLC


SHEET TITLE
ONE-LINE DIAGRAM

EP701