DAUGHTERS OF UTAH PIONEERS PHASE II IMPROVEMENTS

DFCM PROJECT NO. 07273050
300 NORTH MAIN STREET, SALT LAKE CITY, UTAH 84103

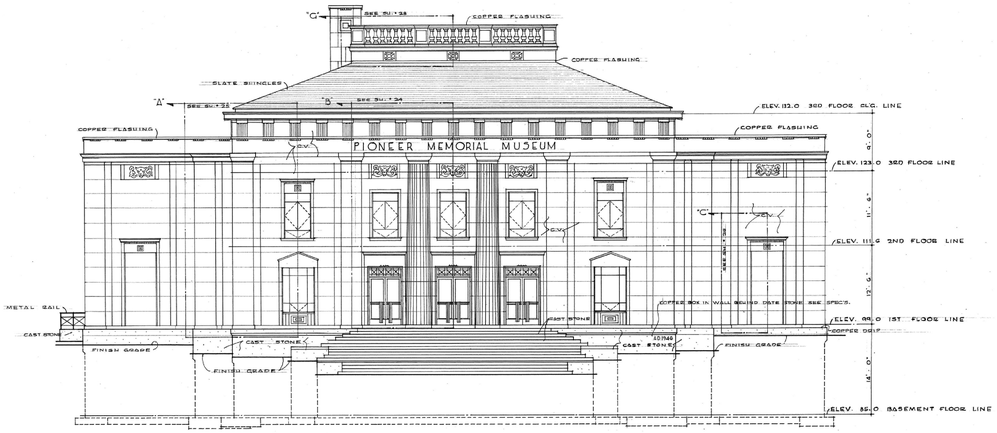

FRONT ELEVATION
SCALE: 1/8" = 1'-0"

PIONEER MEMORIAL MUSEUM / DAUGHTERS OF UTAH PIONEERS

PERMIT SET
JULY 12, 2010

SEE SHEET AG0-01 FOR THE DEFERRED SUBMITTALS LIST

~~DEFERRED SUBMITTALS~~

~~CONTRACTOR TO SUBMIT THE FOLLOWING TO THE DFCM BUILDING OFFICIAL FOR REVIEW WITH AN ACCOMPANYING LETTER FROM THE ARCHITECT STATING THE CONTENTS OF THE SUBMITTAL ARE IN CONFORMANCE WITH THE PROJECT DESIGN. WORK RELATED TO THE DEFERRED SUBMITTAL IS NOT TO COMMENCE UNTIL THE BUILDING OFFICIAL HAS APPROVED THE SUBMITTAL. NOTED DATES ARE SUBJECT TO CHANGE TO ACCOMMODATE THE CONSTRUCTION SCHEDULE:~~

~~- TEMPORARY ACCESSIBLE STAIRS AND RAMP TO ENTRY AT NORTH END OF WEST ELEVATION. (APPROX. SUBMITTAL DATE: SEPTEMBER 15, 2010)~~

THE GREAT SEAL OF THE STATE OF UTAH 1896

State of Utah—Department of Administrative Services

DIVISION OF FACILITIES CONSTRUCTION AND MANAGEMENT

4110 State Office Building/Salt Lake City, Utah 84114/801-538-3018

APPROVALS:

PRIME AGENCY DATE

DFCM DATE

INDEX OF DRAWINGS

GENERAL
AG0-00 COVER SHEET
AG0-01 GENERAL INFORMATION & DESIGN DATA

LANDSCAPE
L1.1 PLANTING PLAN
L1.2 IRRIGATION PLAN

ARCHITECTURAL
AD1-01 SITE DEMOLITION PLAN

AS1-01 SITE PLAN
AS1-02 PARTIAL SITE PLAN
AS1-03 WEST SIDE RAMP LAYOUT
AS1-04 PARTIAL SITE PLAN

AE1-04 ATTIC PLAN
AE1-05 ROOF PLAN

AE2-01 EXTERIOR BUILDING ELEVATION - SOUTH & EAST
AE2-02 EXTERIOR BUILDING ELEVATION - NORTH & WEST
AE2-03 RAMP ELEVATIONS

AE3-01 ATTIC SECTIONS

AE5-01 HAND RAIL DETAILS
AE5-02 MISC DETAILS

STRUCTURAL
SE0-01 GENERAL STRUCTURAL NOTES
SB1-01 RAMP AND RETAINING WALL PLAN
SB5-01 RETAINING WALL DETAILS
SF1-01 ROOF PLAN
SF5-01 ROOF DETAILS

MECHANICAL
M100 MECHANICAL LEGEND
M101 ATTIC MECHANICAL PLAN
M601 MECHANICAL SCHEDULES & DETAILS

ELECTRICAL
E0.1 GENERAL NOTES, DETAILS AND SCHEDULES
E1.1 SITE PLAN ELECTRICAL
E1.2 BASEMENT PLAN ELECTRICAL
E1.3 ATTIC PLAN ELECTRICAL

VICINITY MAP

N

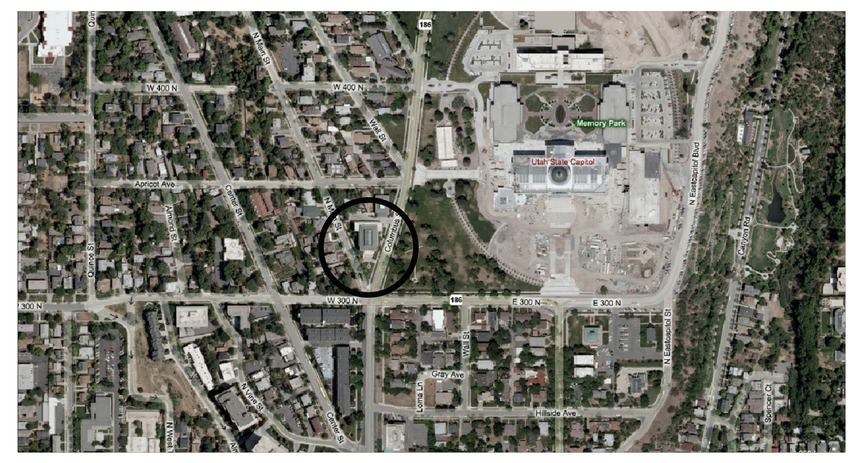

Architect
MJSA ARCHITECTS
357 West Pierpont Avenue
Salt Lake City, Utah 84101
(801) 364-5161
(801) 364-5167 (FAX)

Structural Engineer
Reaveley Engineers & Associates
675 E. 500 South, Ste. 400
Salt Lake City, UT 84102
(801) 486-3883

Mechanical Engineer
Van Boerum & Frank Associates
330 South 300 East
Salt Lake City, Utah 84111
(801) 530-3148

Electrical Engineer
ECE Consulting Engineers
939 South West Temple
Salt Lake City, UT 84101
(801) 521-8007

Landscape Architect
Brent Morris Associates
1074 Raymond Rd.
Fruit Heights, UT 84037
(801) 544-0064

REVISIONS:

PERMIT SET

DAUGHTERS OF UTAH PIONEERS PHASE II IMPROVEMENTS
DFCM PROJECT NO. 07273050
300 NORTH MAIN STREET, SALT LAKE CITY, UTAH 84103

MJSA
357 West Pierpont Avenue □ Salt Lake City, Utah 84101
Telephone 801 364 5161 □ Facsimile 801 364 5167
ARCHITECTURE INTERIOR DESIGN

THESE DRAWINGS ARE INSTRUMENTS OF SERVICE AND SHALL REMAIN THE PROPERTY OF THE ARCHITECT. NO USE OR RE-USE OF THESE DOCUMENTS SHALL BE PERMITTED UNLESS AUTHORIZED IN WRITING BY MJSA ARCHITECTS WITH APPROPRIATE COMPENSATION.

PROJECT NO.: 10011

DATE: 7/12/10

SHEET: AG0-00

S:\10011 - DUP Museum\CAD\06_Sheets\AG-00 Cover.dwg - Tue, 27 Jul 2010 - 5:58pm

CODE ANALYSIS

APPLICABLE CODES

Code	Year	Code	Year
International Building Code	2009	National Electrical Code	2008
International Mechanical Code	2009	International Existing Building Code	2009
International Plumbing Code	2009	ADA Accessibility Guildelines	ICC/ANSI A117.1 - 2009
International Fire Code	2009		
International Energy Conservation Code	2009		

A. Occupancy and Group: B S-1

Change in Use: Yes ______ No X Mixed Occupancy: Yes X No ______
Special Use and Occupancy (e.g. High Rise, Covered Mall): ______

B. Seismic Design Category: D Design Wind Speed: N/A mph

C. Type of Construction (circle one):

I-A, I-B, II-A, II-B, III-A, (III-B circled), IV-HT, V-A, V-B

D. Fire Resistance Rating Requirements for the Exterior Walls based on the fire separation distance (in hours):

North: 0 South: 0 East: 0 West: 0

E. Mixed Occupancies: X Nonseparated Uses: ______

F: Sprinklers:

Required: N/A Provided: N/A Type of Sprinkler System: N/A

G: Number of Stories: 3 Building Height: 49'-8"

H: Actual Area per Floor (square feet): UNCHANGED

I: Tabular Area: UNCHANGED

J: Area Modifications: NO CHANGE FROM EXISTING

a) $A_a = A_t + \left[\frac{A_t\ I_f}{100}\right] + \left[\frac{A_t\ I_s}{100}\right]$ $I_f = 100\left[\frac{F}{P} - 0.25\right]\frac{W}{30}$

b) Sum of the Ratio Calculations for Mixed Occupancies:

$\frac{\text{Actual Area}}{\text{Allowable Area}} \leq 1$

EXTERIOR REMODEL, EXISTING SQUARE FOOTAGE UNCHANGED

c) Total Allowable Area for:
1) One Story: ______
2) Two Story: $A_a(2)$______
3) Three Story: $A_a(3)$______

d) Unlimited Area Building: Yes ______ No X Code Section: ______

K. Fire Resistance Rating Requirements for Building Elements (hours).

Element	Hours	Assembly Listing	Element	Hours	Assembly Listing
Exterior Bearing Walls			Floors - Ceiling Floors		
Interior Bearing Walls			Roofs - Ceiling Roofs		
Exterior Non-Bearing Walls			Exterior Doors and Windows		
Structural Frame			Shaft Enclosures		
Partitions - Permanent			Fire Walls		
Fire Barriers			Fire Partitions		
			Smoke Partitions		

L. Design Occupant Load: N/A
Exit Width Required: EXISTING Exit Width Provided: EXISTING/UNCHANGED

M. Exits Req'd: N/A Exits Provided: N/A, NO CHANGE FROM EXISTING

N. Minimum Number of Required Plumbing Facilities:
a) Water Closets - Required (m) N/A (f) N/A Provided (m) N/A (f) N/A
b) Lavatories - Required (m) N/A (f) N/A Provided (m) N/A (f) N/A
c) Bath Tubs or Showers: N/A
d) Drinking Fountains: N/A Service Sinks: N/A

FOOTNOTES:

1) In case of conflict with the U.S. Department of Justice Federal Registers Parts I through V - ADA Guidelines and specific reference to the International Building Code Accessibility Chapters, the more restrictive requirement shall govern.

2) Additional Code Information shall be provided at the discretion of the Building Official for Complex Buildings. Including, but not limited to:
a) High Rise Requirements.
b) Atriums.
c) Performance Based Criteria.
d) Means or Egress Analysis.
e) Fire Assembly Locator Sheet.
f) Exterior and Interior Accessibility Route.
g) Fire Stopping, Including Tested Design Number.

ABBREVIATIONS

ADA	AMERICANS WITH DISABILITIES ACT
A.F.F.	ABOVE FINISH FLOOR
ANSI	AMERICAN NATIONAL STANDARDS INSTITUTE
B.O.	BOTTOM OF
C.L.	CENTER LINE
CLNG.	CEILING
CONC.	CONCRETE
CONST.	CONSTRUCTION
CONT.	CONTINUOUS
COORD.	COORDINATE
CORRUG.	CORRUGATED
DEMO.	DEMOLISH
DN.	DOWN
DTL.	DETAIL
EA.	EACH
ELEC.	ELECTRICAL
ELECT.	ELECTRICAL
ELEV.	ELEVATION
(E)	EXISTING
EXIST.	EXISTING
F.A.	FINISH FLOOR
FIN.	FINISH
FP	FLOOR PLAN
F.R.P.	FIBER REINFORCED PLASTIC
FT.	FEET
GYP. BD.	GYPSUM BOARD
IBC	INTERNATIONAL BUILDING CODE
ICC	INTERNATIONAL CODE COUNCIL
INCL.	INCLUDED
LTG.	LIGHTING
MANUF.	MANUFACTURER
MECH.	MECHANICAL
MEZZ.	MEZZANINE
MFR.	MANUFACTURER
MIN.	MINIMUM
MTL.	METAL
(N)	NEW
N.I.C.	NOT IN CONTRACT
O.C.	ON CENTER
OPP.	OPPOSITE
PWR.	POWER
RCP	REFLECTED CEILING PLAN
REINF.	REINFORCED
REQ'D.	REQUIRED
SCHED.	SCHEDULE
SIM.	SIMILAR
S.S.	STAINLESS STEEL
SST	STAINLESS STEEL
STL.	STEEL
STOR.	STORAGE
STRUCT.	STRUCTURE
T.O.	TOP OF
TYP.	TYPICAL
U.N.O.	UNLESS NOTED OTHERWISE
UL	UNDERWRITERS LABORATORIES
UTIL.	UTILITY / UTILITIES
V.I.F.	VERIFY IN FIELD

DEFERRED SUBMITTALS

CONTRACTOR TO SUBMIT THE FOLLOWING TO THE DFCM BUILDING OFFICIAL FOR REVIEW WITH AN ACCOMPANYING LETTER FROM THE ARCHITECT STATING THE CONTENTS OF THE SUBMITTAL ARE IN CONFORMANCE WITH THE PROJECT DESIGN. WORK RELATED TO THE DEFERRED SUBMITTAL IS NOT TO COMMENCE UNTIL THE BUILDING OFFICIAL HAS APPROVED THE SUBMITTAL. NOTED DATES ARE SUBJECT TO CHANGE TO ACCOMMODATE THE CONSTRUCTION SCHEDULE:

- TEMPORARY ACCESSIBLE STAIRS AND RAMP TO ENTRY AT NORTH END OF WEST ELEVATION. (APPROX. SUBMITTAL DATE: SEPTEMBER 15, 2010)

- DETAIL OF EXTERIOR STANDARD (LIGHT POLE) BASE, SUPPORT AND CONNECTION. (APPROX. SUBMITTAL DATE : 9/15/10)

- DESIGN/DETAILS FOR PROTECTION OF PUBLIC DURING DEMOLITION AND CONSTRUCTION PER IBC 3302.2 AND 3303.2.

DESIGN STANDARDS

THIS LIMITED SCOPE EXTERIOR BUILDING REMODEL FOLLOWS CURRENT APPLICABLE DFCM STANDARDS (REFER TO: HTTP://DFCM.UTAH.GOV/DOWNLOADS/DESIGN_MANUAL/DESIGN_REQUIREMENTS.PDF DESIGN REQUIREMENTS JUNE 11, 2009). ACCESSIBILITY ENHANCEMENTS NOT APPLICABLE TO ON-GOING BUILDING USE (NON-PUBLIC / STORAGE / LIMITED SECURITY DETAIL).

SPECIAL INSPECTIONS (IBC 1704 AND MISCELLANEOUS AREAS)

ITEM	CONTINUOUS	PERIODIC	DETAILED INSTRUCTIONS AND FREQUENCIES
STEEL (IBC 1704.3)			
SINGLE-PASS FILLET WELDS ? 5/16"	☐ CONTINUOUS	☒ PERIODIC	INSPECT PRIOR TO COVERING
CONCRETE CONSTRUCTION (IBC 1704.4)			
MATERIALS (1704.4.1)	☐ CONTINUOUS	☒ PERIODIC	INSPECT PRIOR TO PLACING CONCRETE
STEEL PLACEMENT	☐ CONTINUOUS	☒ PERIODIC	INSPECT PRIOR TO PLACING CONCRETE
BOLTS PRIOR & DURING PLACEMENT	☒ CONTINUOUS	☐ PERIODIC	SIMPSON STRONG BOLT SPECIAL INSPECTION REQUIREMENTS: INSTALLATIONS MUST BE MADE UNDER SPECIAL INSPECTION IN ACCORDANCE WITH SECTION 1704.13 OF THE IBC. THE SPECIAL INSPECTOR MUST BE ON THE JOBSITE CONTINUALLY DURING ANCHOR INSTALLATION TO VERIFY ANCHOR TYPE, ANCHOR DIMENSIONS, HOLE CLEANLINESS, EMBEDMENT DEPTH, DRILL BID DIAMETER, HOLE DEPTH, EDGE DISTANCE(S), ANCHOR SPACING(S) AND TIGHTENING TORQUE. EXCERPTED FROM ESR-1771.
USE OF REQUIRED DESIGN MIX	☒ CONTINUOUS	☐ PERIODIC	INSPECT UPON DELIVERY
CONCRETE SAMPLING FOR STRENGTH TEST, SLUMP, AIR CONTENT, AND TEMPERATURE OF CONCRETE	☒ CONTINUOUS	☐ PERIODIC	INSPECT UPON DELIVERY
FORM WORK	☐ CONTINUOUS	☒ PERIODIC	INSPECT PRIOR TO PLACING CONCRETE
SOILS CONSTRUCTION (IBC 1704.7)			
SITE PREPARATION	☐ CONTINUOUS	☒ PERIODIC	INSPECT PRIOR TO PLACING FOOTING REINFORCEMENT
STRUCTURAL FILL MATERIAL	☐ CONTINUOUS	☒ PERIODIC	INSPECT PRIOR TO PLACING FOOTING REINFORCEMENT
STRUCTURAL FILL LIFT THICKNESS	☒ CONTINUOUS	☐ PERIODIC	INSPECT AS PLACED
STRUCTURAL FILL SOIL DENSITIES	☒ CONTINUOUS	☐ PERIODIC	INSPECT AS PLACED
BACKFILL SOILS MATERIALS	☐ CONTINUOUS	☒ PERIODIC	INSPECT PRIOR TO PLACING
BACKFILL SOIL DENSITIES	☒ CONTINUOUS	☐ PERIODIC	INSPECT AS PLACED
EPOXY (IBC 1704.13)			
MATERIAL AND INSTALLATION (SPECIFY LOCATIONS)	☒ CONTINUOUS	☐ PERIODIC	FOR ANY BOLT OR BAR IN CONCRETE AS PER MANUFACTURER
MISCELLANEOUS AREAS			
REINFORCEMENT FOR SLAB ON GRADE SIDEWALKS AND DRIVE APPROACHES (SPECIFY LOCATIONS AND FREQUENCY)	☐ CONTINUOUS	☒ PERIODIC	INSPECT PRIOR TO PLACING CONCRETE

SPECIAL INSPECTORS SHALL:
- BE APPROVED BY THE BUILDING OFFICIAL PRIOR TO PERFORMING ANY DUTIES;
- PROVIDE PROOF OF LICENSURE AS A SPECIAL INSPECTOR BY THE STATE OF UTAH FOR EACH TYPE OF INSPECTION;
- INSPECTION REPORTS ARE TO MEET THE REQUIREMENTS OF IBC 1704.1.2 AND DFCM STANDARDS;
- INSPECTION REPORTS ARE TO BE SUBMITTED TO THE CODE CONSULTANT, ARCHITECT, DFCM PROJECT MANAGER, AND THE STATE OF UTAH BUILDING OFFICIAL WITHIN 48 HRS. OF INSPECTIONS;
- A FINAL INSPECTION REPORT SHALL BE SUBMITTED FOLLOWING COMPLETION OF THE PROJECT DOCUMENTING THE TYPES OF SPECIAL INSPECTIONS PERFORMED AND A STATEMENT INDICATING THAT THE STRUCTURE IS IN COMPLIANCE WITH THE DRAWINGS, SPECIFICATIONS AND APPLICABLE CODES. IBC 1704.1.2

PROJECT GENERAL NOTES FOR ALL DRAWINGS

1. ANY CONTRACTOR, SUBCONTRACTOR, VENDOR OR ANY OTHER PERSON PARTICIPATING IN OR BIDDING ON ANY PORTION OF THIS PROJECT SHALL BE RESPONSIBLE FOR THE INFORMATION CONTAINED IN ANY AND ALL DRAWINGS AND SPECIFICATIONS, INCLUDING, BUT NOT LIMITED TO ANY SUBSEQUENT ADDENDA OR CLARIFICATIONS THAT MAY BE ISSUED.
2. THESE CONSTRUCTION DRAWINGS INDICATE THE GENERAL SCOPE OF THE PROJECT IN TERMS OF ARCHITECTURAL DESIGN CONCEPTS, DIMENSIONS OF THE BUILDING, MAJOR ARCHITECTURAL ELEMENTS, AND TYPE OF STRUCTURAL, MECHANICAL, AND ELECTRICAL SYSTEMS. THE DRAWINGS DO NOT NECESSARILY INDICATE OR DESCRIBE ALL WORK REQUIRED FOR FULL PERFORMANCE AND COMPLETION OF THE REQUIREMENTS OF THE CONTRACT DOCUMENTS. ON THE BASIS OF THE GENERAL SCOPE INDICATED OR DESCRIBED, THE CONTRACTOR SHALL FURNISH ALL ITEMS REQUIRED FOR PROPER EXECUTION AND COMPLETION OF THE WORK.
3. DRAWINGS AND SPECIFICATIONS REPRESENT FINISHED CONSTRUCTION UNLESS NOTED OTHERWISE. CONTRACTOR SHALL BE RESPONSIBLE FOR ALL MEANS AND METHODS OF CONSTRUCTION.
4. THE INTENT OF ANY REFERENCED SPECIFICATION SECTION ON THE DRAWINGS OR REFERENCE NOTES IS TO FACILITATE THE CROSS REFERENCING OF THE DRAWINGS AND DESCRIPTIVE INFORMATION PROVIDED IN THE SPECIFICATIONS. THIS IS FOR THE SOLE CONVENIENCE OF THE CONTRACTOR. NO OTHER INTERPRETATIONS ARE INTENDED OR IMPLIED NOR SHALL THE CONTRACTOR ASSIGN ANY OTHER INTERPRETATIONS TO THESE NOTES OR DRAWINGS THAN THAT STATED HEREIN.
5. ANY CONFLICT AMONG VARIOUS ELEMENTS OF THE NOTES, DRAWINGS, SPECIFICATIONS, AND DETAILS SHALL BE BROUGHT TO THE ATTENTION OF THE ARCHITECT AND RESOLVED BEFORE PROCEEDING WITH THE WORK.
6. LARGER SCALE DRAWINGS GOVERN IN CASE OF CONFLICT WITH SMALLER SCALE DRAWINGS.
7. DO NOT SCALE THE DRAWINGS. USE WRITTEN DIMENSIONS. WHERE NO DIMENSION IS PROVIDED, CONSULT THE ARCHITECT FOR CLARIFICATION BEFORE PROCEEDING WITH THE WORK. THE CONTRACTOR IS RESPONSIBLE FOR ALL DIMENSIONS. CEILING HEIGHT DIMENSIONS ARE FROM FINISH FLOOR TO FINISH FACE OF CEILING.
8. DETAILS AND NOTES APPEARING ON ONE DRAWING SHALL APPLY TO ALL OTHER DRAWINGS WHERE SIMILAR CONDITIONS EXIST, WHETHER OR NOT NOTED OR DETAILED.
9. ALL DIMENSIONS, ELEVATIONS, AND EXISTING CONDITIONS SHALL BE CHECKED AND VERIFIED ON THE PROJECT SITE BY THE CONTRACTOR AND EACH TRADE BEFORE WORK BEGINS. DISCREPANCIES WITH THE CONDITIONS SHOWN IN THE CONTRACT DOCUMENTS SHALL BE BROUGHT TO THE ARCHITECT'S ATTENTION BEFORE CONSTRUCTION BEGINS.
10. ALL WORK SHALL MEET OR EXCEED THE REQUIREMENTS OF ALL APPLICABLE LOCAL, STATE, AND FEDERAL CODES AND ORDINANCES, INCLUDING BUT NOT LIMITED TO, BUILDING, ELECTRICAL, PLUMBING, MECHANICAL, ENERGY, FIRE, SAFETY, DISABLED ACCESS, AND HEALTH CODES.
11. THE CONTRACTOR SHALL COORDINATE LAYOUT DIMENSIONS INDICATED ON THE STRUCTURAL, ELECTRICAL, PLUMBING AND MECHANICAL DRAWINGS WITH THOSE INDICATED ON THE ARCHITECTURAL DRAWINGS. ALL DISCREPANCIES SHALL BE REPORTED TO THE ARCHITECT BEFORE PROCEEDING WITH THE WORK.
12. PROTECTION OF EXISTING AREAS TO REMAIN SHALL BE THE CONTRACTOR'S RESPONSIBILITY.
13. THE CONTRACTOR SHALL VERIFY ON SITE THE LOCATION AND DEPTH (ELEVATION) OF ALL EXISTING UTILITIES AND SERVICES BEFORE PERFORMING ANY EXCAVATION WORK.
14. THE CONTRACTOR SHALL BE RESPONSIBLE FOR ALL CUTTING AND PATCHING REGARDING PROPER INSTALLATION OF MATERIALS AND EQUIPMENT, AND FOR PROTECTION OF ADJACENT CONSTRUCTION. CUTTING OR WEAKENING OF EXISTING STRUCTURAL WALL, FLOOR, OR ROOF MEMBERS IS PROHIBITED UNLESS FULLY DETAILED ON THE PLAN.
15. THE DESIGN, ADEQUACY, AND SAFETY OF ERECTION BRACING, SHORING, TEMPORARY SUPPORTS, PEDESTRIAN PROTECTION, ETC. IS THE SOLE RESPONSIBILITY OF THE CONTRACTOR, AND HAS NOT BEEN CONSIDERED BY THE ARCHITECT OR STRUCTURAL ENGINEER. THE CONTRACTOR IS RESPONSIBLE FOR STABILITY AND SAFETY OF THE STRUCTURE DURING CONSTRUCTION.
16. ALL ITEMS ARE NEW UNLESS SPECIFICALLY INDICATED OR NOTED AS EXISTING OR REINSTALLED.
17. ALL WALL, FLOOR AND CEILING PENETRATIONS ARE TO BE SEALED WHETHER OR NOT SPECIFICALLY SHOWN OR DETAILED.
18. BASE BID & ALTERNATES
WORK SHOWN ON THESE DRAWINGS IS PARTIALLY DIFFERENTIATED BETWEEN BASE BID AND ADDITIVE ALTERNATES. REVIEW SCHEDULE OF ALTERNATES IN SPECIFICATION SECTION 01230 TO DETERMINE BASE BID AND EACH ADDITIVE ALTERNATE.

SYMBOL LEGEND

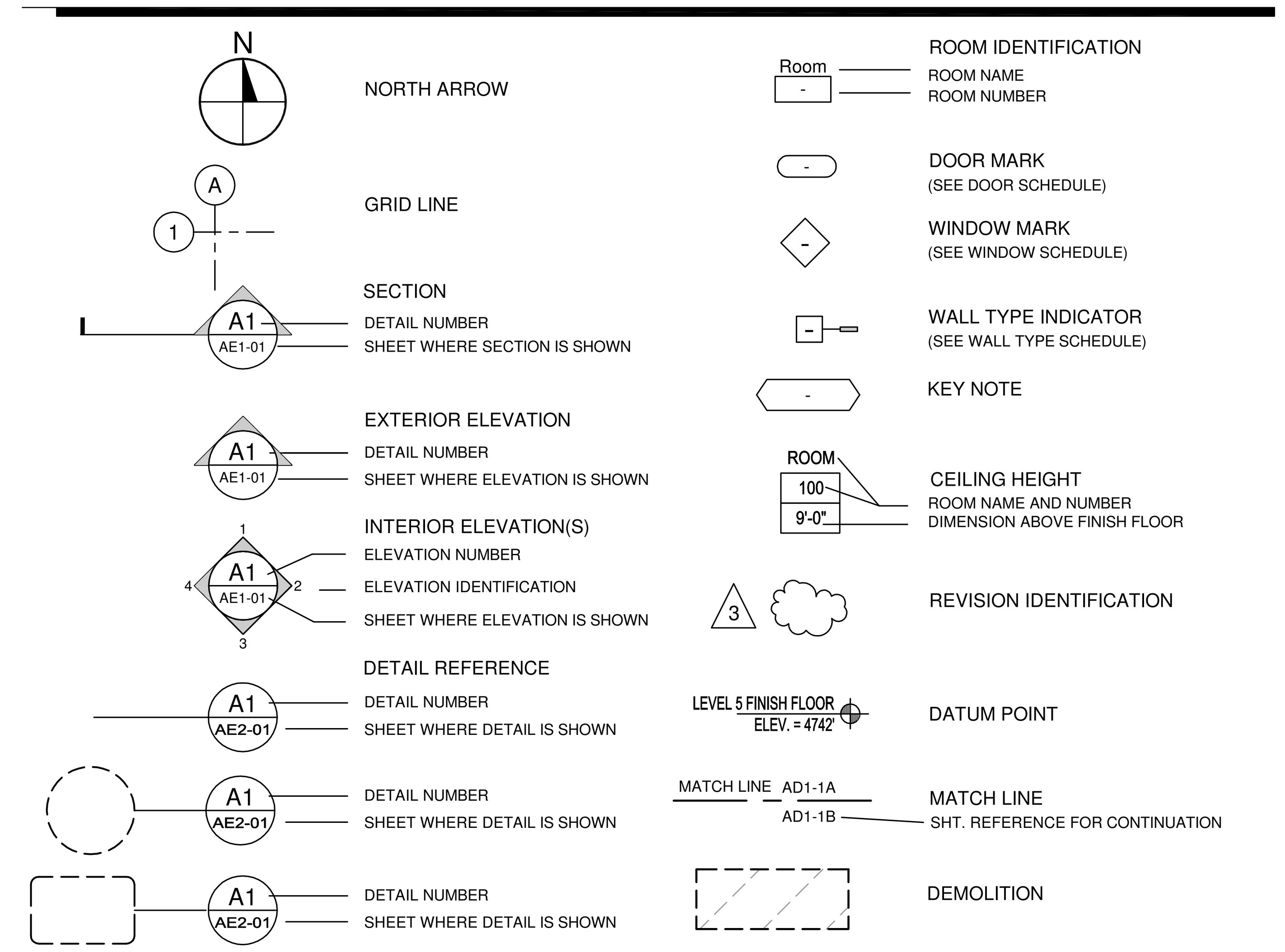

MATERIAL LEGEND

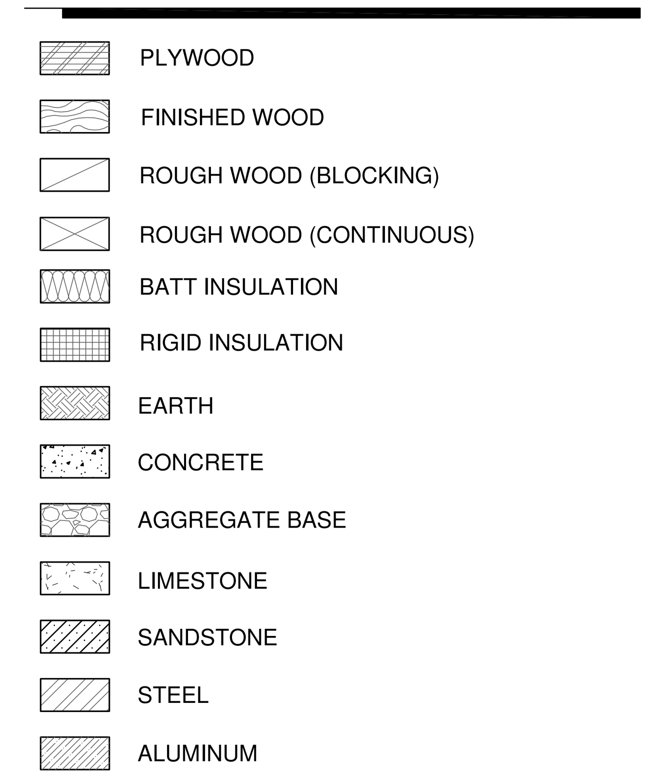

WALL LEGEND

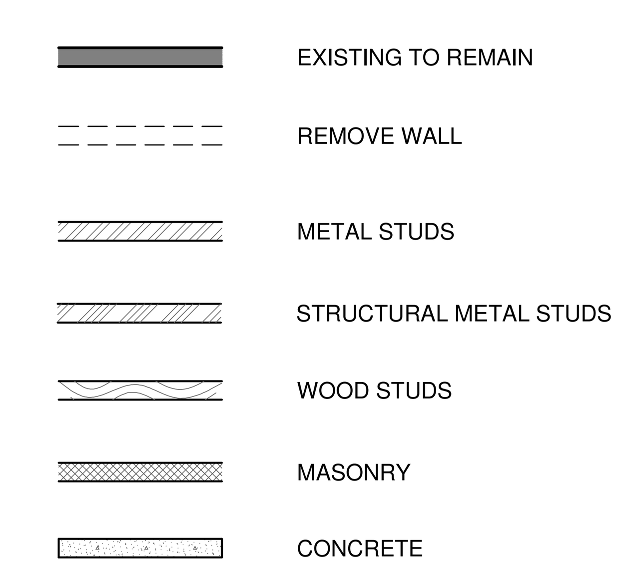

REFERENCE NOTES

REVISIONS:

PERMIT SET

DAUGHTERS OF UTAH PIONEERS PHASE II IMPROVEMENTS
DFCM PROJECT NO. 07273050
300 NORTH MAIN STREET, SALT LAKE CITY, UTAH 84103

MJSA
357 West Pierpont Avenue □ Salt Lake City, Utah 84101
Telephone 801 364 5161 □ Facsimile 801 364 5167
ARCHITECTURE INTERIOR DESIGN

THESE DRAWINGS ARE INSTRUMENTS OF SERVICE AND SHALL REMAIN THE PROPERTY OF THE ARCHITECT. NO USE OR RE-USE OF THESE DOCUMENTS SHALL BE PERMITTED UNLESS AUTHORIZED IN WRITING BY MJSA ARCHITECTS WITH APPROPRIATE COMPENSATION.

STAMP

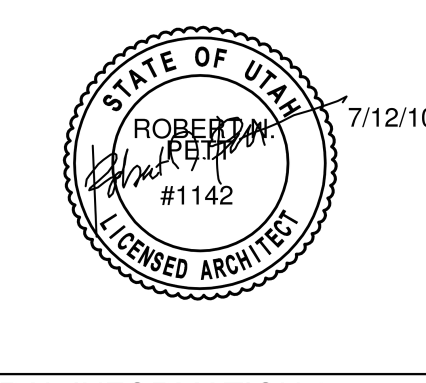

PROJECT NO.: 10011

DATE: 7/12/10

GENERAL INFORMATION & DESIGN DATA

SCALE: AS SHOWN

SHEET: AG0-01

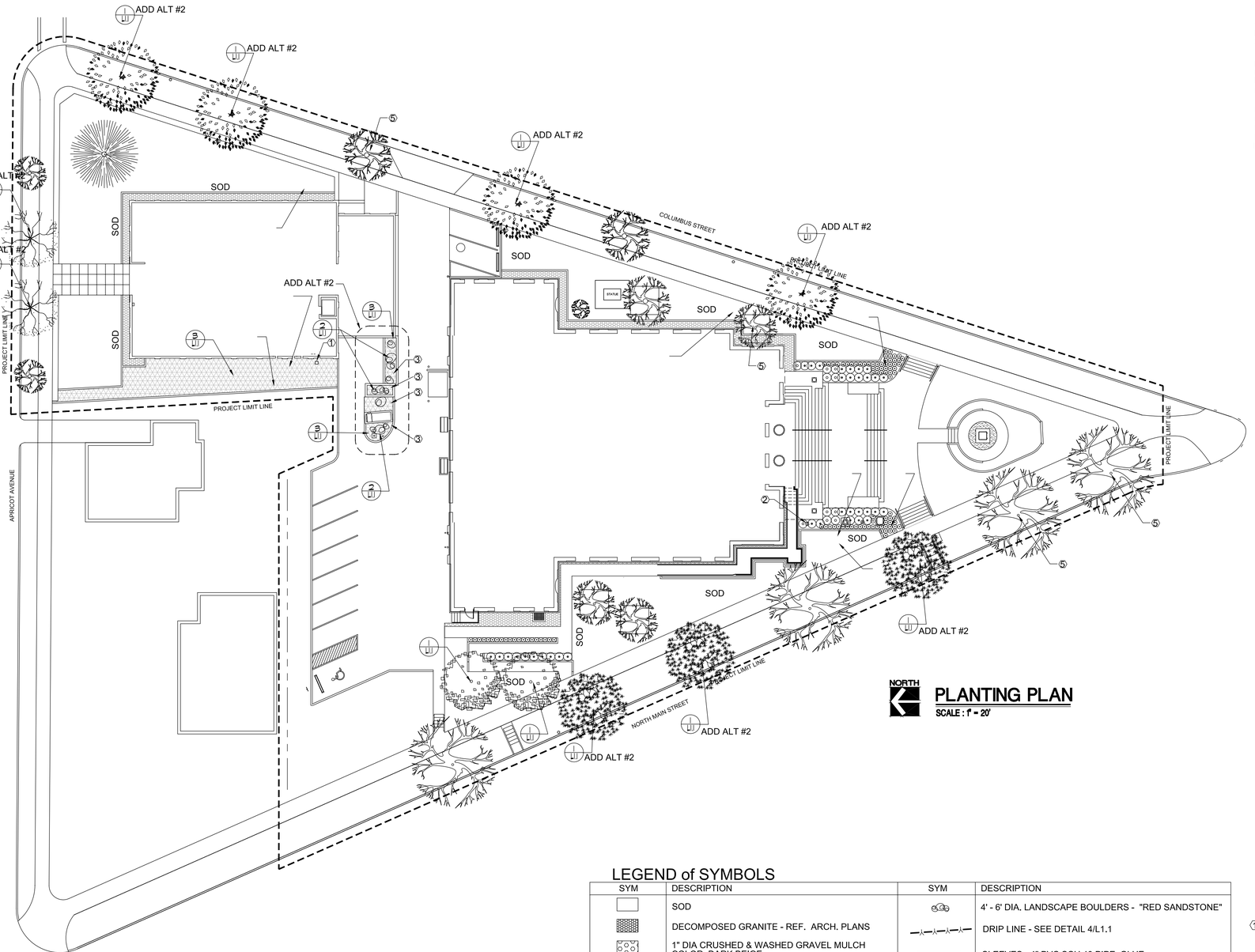

PLANTING PLAN

SCALE : 1" = 20'

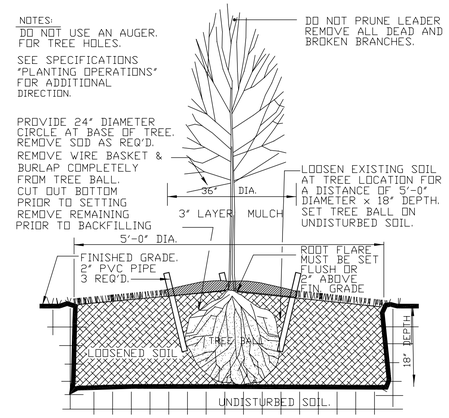

TREE PLANTING DETAIL

Not to Scale

1 / L1.1

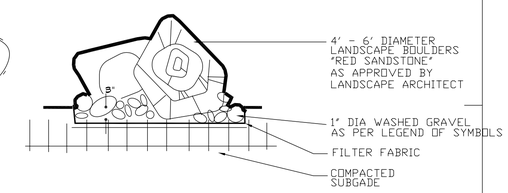

LANDSCAPE BOULDERS

Not to Scale

2 / L1.1

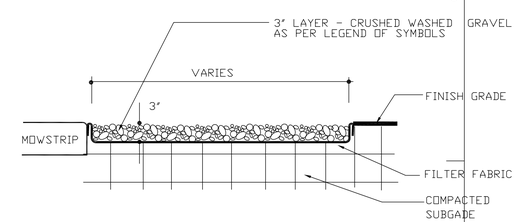

GRAVEL MULCH

SCALE: NO TO SCALE

3 / L1.1

LEGEND of SYMBOLS

SYM	DESCRIPTION	SYM	DESCRIPTION
	SOD		4' - 6' DIA. LANDSCAPE BOULDERS - "RED SANDSTONE"
	DECOMPOSED GRANITE - REF. ARCH. PLANS		DRIP LINE - SEE DETAIL 4/L1.1
	1" DIA CRUSHED & WASHED GRAVEL MULCH COLOR: DARK BEIGE		SLEEVES - 4" PVC SCH 40 PIPE. GLUE JOINTS AS REQUIRED.
	REMODEL EXISTING IRRIGATION SYSTEM		1" PVC SCH 40 PIPE
	FAGUS SYLVATICA 'TRICOLOR' - TRICOLOR BEECH 2" CAL. - B&B		RAINBIRD 100-PESB SERIES ELEC. REMOTE CONTROL VALVE (1")
	FRAXINUS P. CIMARRON - CIMMARON ASH 2" CAL. - B&B ADD ALT #2		ONE 14 GAGE U.F. DIRECT BURIAL WHITE (GROUND) ONE 14 GAGE U.F. DIRECT BURIAL BLUE (SPARE). ONE 14 GAGE U.F. DIRECT BURIAL RED (CONTROL). RED - LAWN; YELLOW - DRIP. CONNECT TO CONTROLLER AS REQUIRED.
	CRAETAGUS LAVALLEI - CARRIER HAWTHORN 2" CAL. - B&B ADD ALT #2		EXISTING TREES TO REMAIN REFER TO PLAN VIEW FOR PRUNNING REQUIREMENTS
	CELTIS RETICULATA - WESTERN HACKBERRY 2" CAL. - B&B ADD ALT #2		4 - 10' SQ TEMP CHAINLINK FENCE ENCLOSURES REQ'D. PROVIDE WATER BASIN & WATER AS PER SPECIFICATIONS
	'CAROLE MACKIE' DAPHNE - 5 GAL		
	'KELSEYI' DOGWOOD - 5 GAL		
	'KNOCKOUT' ROSE - 5 GAL		
	BLUE FESCUE - 1 GAL		

NOTES

1. EXISTING CONTROLLER TO REMAIN. WATERING CYCLES MUST BE MAINTAINED DURING CONSTRUCTION PERIOD. THE CIRICUIT THAT WATERS THE 3 SMALL PLANTERS AT THE DOCK IS TO BE TERMINATED. CAP THE THE IRRIGATION LINE THAT SERVICES THESE 3 AREAS. USE THIS STATION ON THE CLOCK TO CONNECT THE NEW DRIP LINE AS SHOWN ON THE PLAN.
2. EXISTING CONTROLLER TO REMAIN. WATERING CYCLES MUST BE MAINTAINED DURING CONSTRUCTION PERIOD.
3. REMOVE ALL PLANTS & DIRT TO ACCOMODATE NEW GRAVEL MULCH. CAP AND ABANDON IRRIGATION SYSTEM IN THIS AREA.
4. NEW 1" VALVE - SEE LEGEND OF SYMBOLS TAP INTO EXISTING MAINLINE AT THIS APPROX. LOCATION
5. PRUNE & SHAPE EXISTING TREE. ARBORIST MUST BE LICENSED IN THE STATE OF UTAH.

REFERENCE NOTES

REVISIONS:

PERMIT SET

DAUGHTERS OF UTAH PIONEERS PHASE II IMPROVEMENTS

DFCM PROJECT NO. 07273050

300 NORTH MAIN STREET, SALT LAKE CITY, UTAH 84103

MJSA

357 West Pierpont Avenue □ Salt Lake City, Utah 84101
Telephone 801 364 5161 □ Facsimile 801 364 5167

ARCHITECTURE INTERIOR DESIGN

STAMP

LANDSCAPE ARCHITECT UTAH
BRENT D. MORRIS
105710-5301
bma
brent morris associates ■ landscape architects
1074 raymond road fruit heights, utah. 84037 voice 801-544-0064 cell 801-618-7072 email bma@mailcrane.net

THESE DRAWINGS ARE INSTRUMENTS OF SERVICE AND SHALL REMAIN THE PROPERTY OF THE ARCHITECT. NO USE OR RE-USE OF THESE DOCUMENTS SHALL BE PERMITTED UNLESS AUTHORIZED IN WRITING BY MJSA ARCHITECTS WITH APPROPRIATE COMPENSATION.

PROJECT NO.: 10011

DATE: 7/12/10

PLANTING PLAN

SCALE: 1" = 20'

SHEET: L1.1

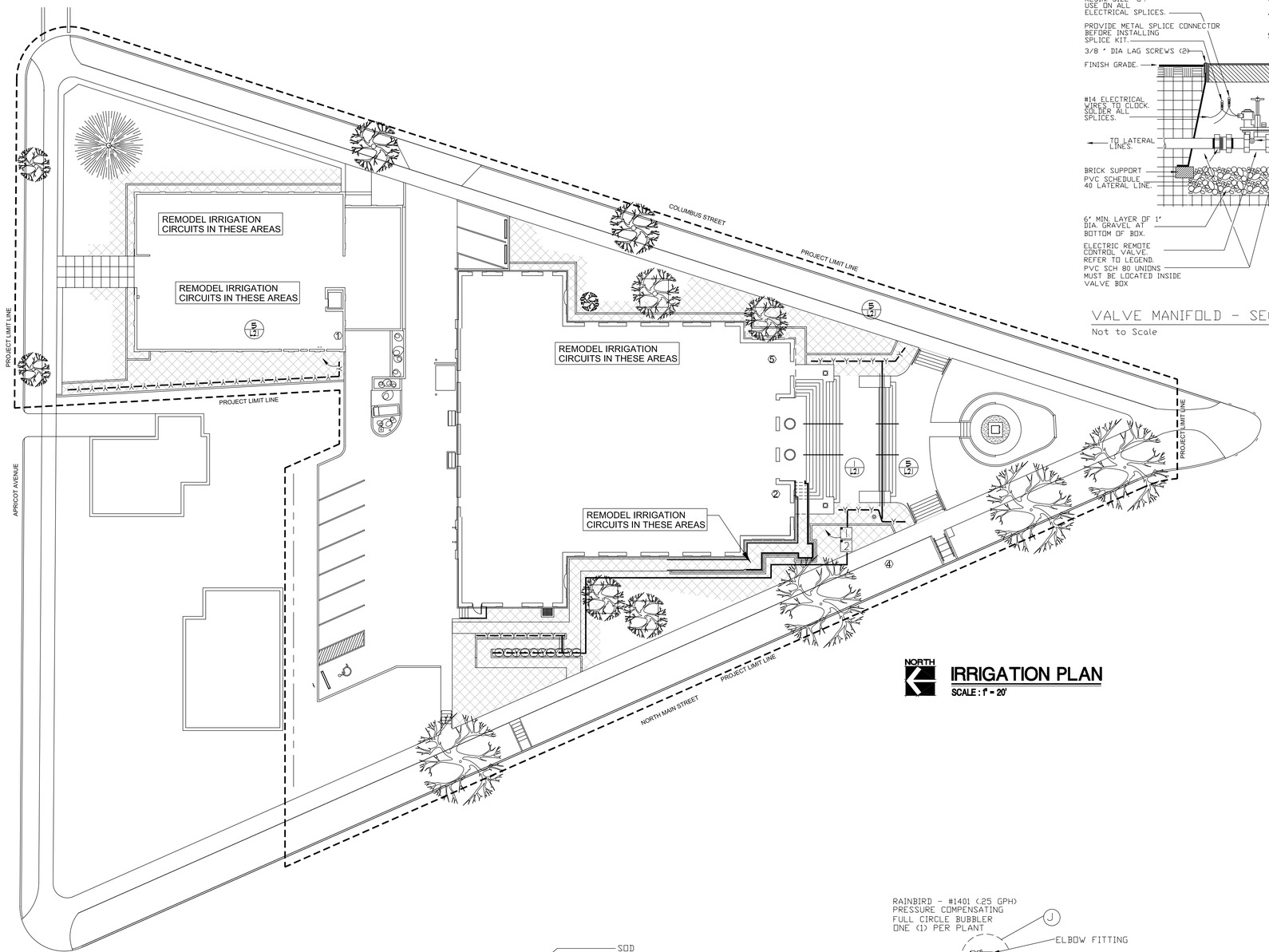

IRRIGATION PLAN

SCALE : 1" = 20'

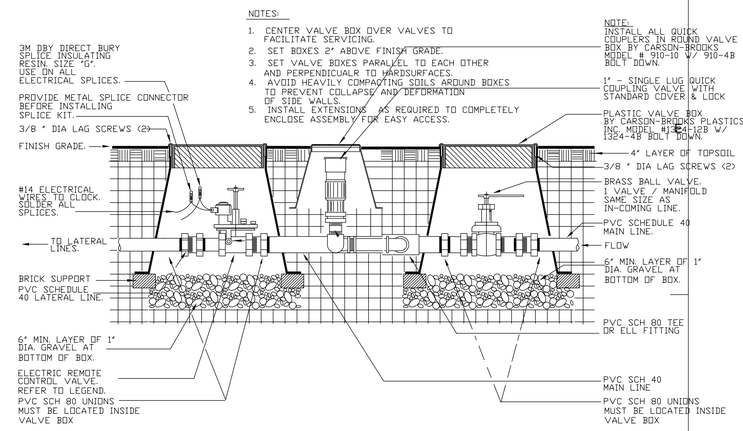

VALVE MANIFOLD - SECTION (1 / L2.1)

Not to Scale

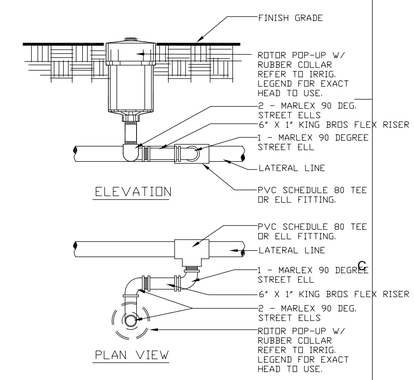

SWING JOINT - ROTOR HEAD (2 / L2.1)

Not to Scale

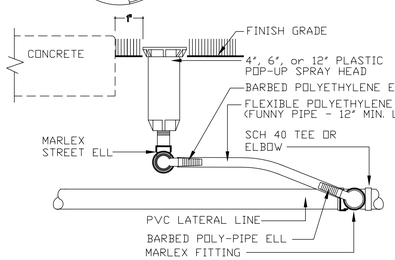

SWING JOINT - SPRAY HEAD (3 / L2.1)

Not to Scale

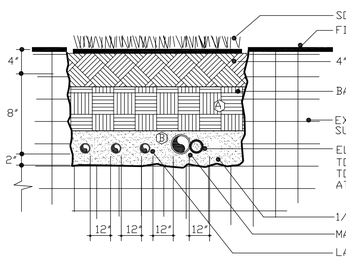

NOTES:

(A) EX. TRENCH M'TRL @ 2" MINUS

(B) USE 2" LAYER OF 1/4" MINUS MATERIAL TO BED ALL PIPES & WIRES.

GENERAL NOTE:

- TRENCHES MUST BE 12" FROM BLDGS; WALKS; HRDSRFCES.
- SETTLE TRENCHES W/ WATER PRIOR TO PLACING TOPSOIL.
- ALL PIPES MUST BE SEPARATED A MIN. OF 12" FROM OUTSIDE OF PIPE TO OUTSIDE OF PIPE IN ALL TRENCHES.

TRENCHING DETAIL (4 / L2.1)

Not to Scale

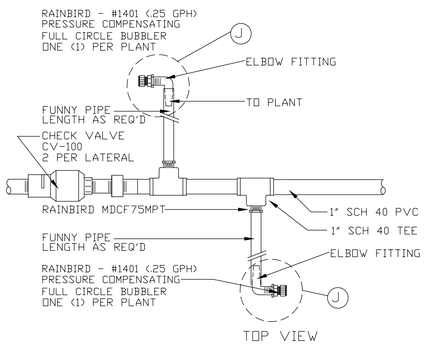

DRIP LINE - LATERAL (5 / L2.1)

SCALE: NOT TO SCALE

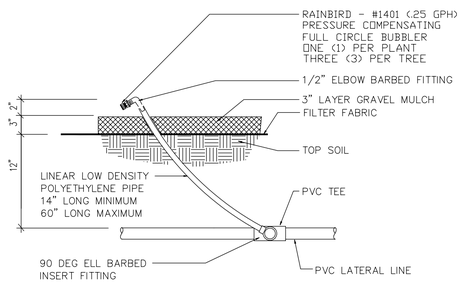

DRIP EMITTER - SECTION (J)

SCALE: NOT TO SCALE

REFERENCE NOTES

REVISIONS:

PERMIT SET

DAUGHTERS OF UTAH PIONEERS PHASE II IMPROVEMENTS

DFCM PROJECT NO. 07273050

300 NORTH MAIN STREET, SALT LAKE CITY, UTAH 84103

MJSA

357 West Pierpont Avenue □ Salt Lake City, Utah 84101
Telephone 801 364 5161 □ Facsimile 801 364 5167

ARCHITECTURE INTERIOR DESIGN

STAMP

THESE DRAWINGS ARE INSTRUMENTS OF SERVICE AND SHALL REMAIN THE PROPERTY OF THE ARCHITECT. NO USE OR REUSE OF THESE DOCUMENTS SHALL BE PERMITTED UNLESS AUTHORIZED IN WRITING BY MJSA ARCHITECTS WITH APPROPRIATE COMPENSATION.

LANDSCAPE ARCHITECT UTAH BRENT D. MORRIS 105710-5301
bma
brent morris associates ■ landscape architects
1074 raymond road fruit heights, utah, 84037 voice 801-544-0064 cell 801-418-0752 email bma@mailcrane.net

PROJECT NO.: 10011

DATE: 7/12/10

IRRIGATION PLAN

SCALE: 1" = 20'

SHEET: L2.1

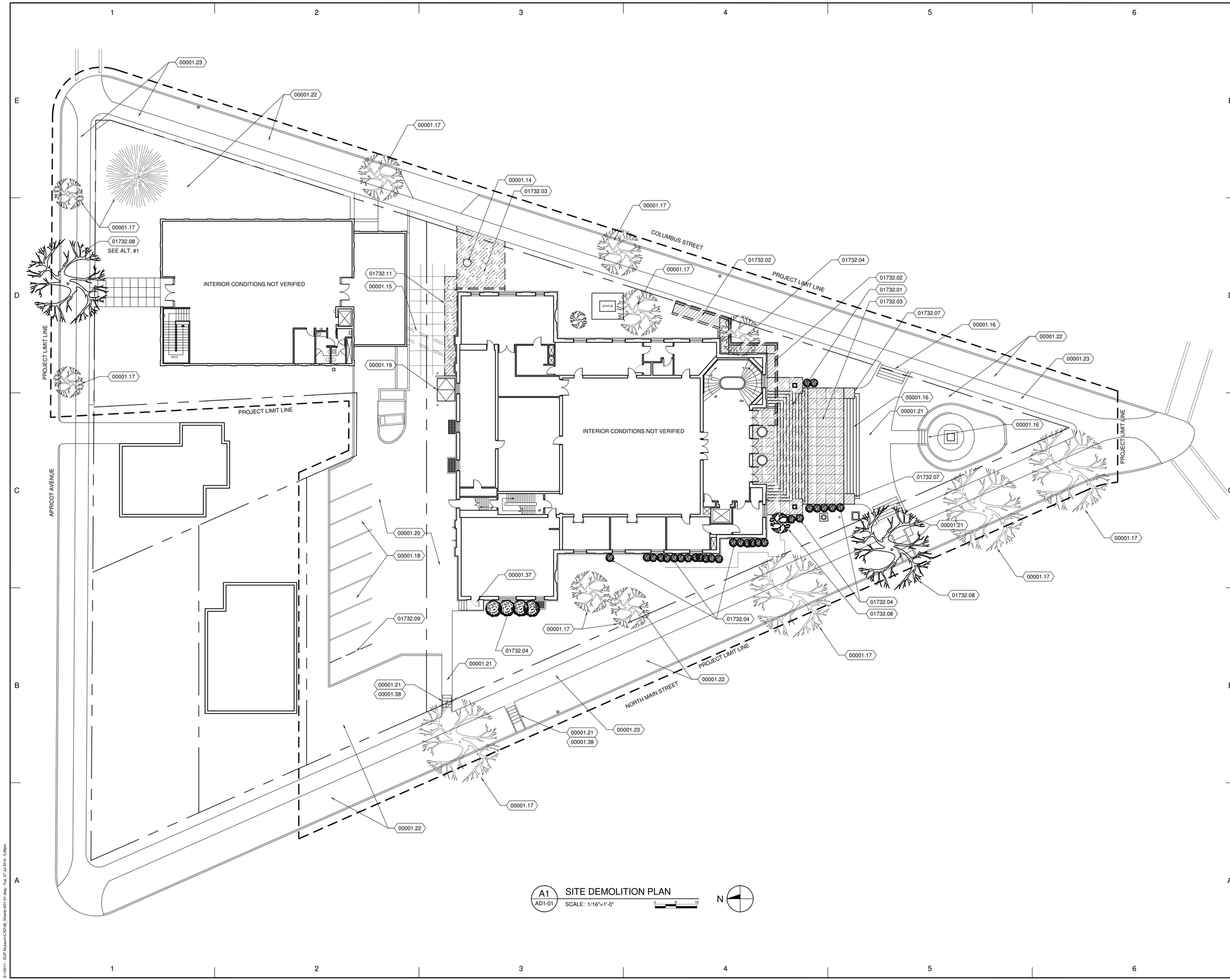

A1 AD1-01 SITE DEMOLITION PLAN
SCALE: 1/16"=1'-0"

REFERENCE NOTES

00001.14	EXIST. MANHOLE - PROTECT IN PLACE
00001.15	EXIST. TUNNEL
00001.16	EXIST. CONC. STAIRS TO REMAIN - PROTECT IN PLACE
00001.17	EXIST. TREE - PROTECT IN PLACE, RE: LANDSCAPE
00001.18	EXIST. PARKING
00001.19	EXIST SERVICE ELEVATOR
00001.20	EXIST. CONC. PARKING SURFACE - PROTECT IN PLACE
00001.21	EXIST. CONC. WALKWAY OR STAIRS - PROTECT IN PLACE
00001.22	EXIST. LANDSCAPING
00001.23	EXIST. SIDEWALK
00001.37	EXIST NORTHWEST DOOR AND STOOP. LOCATION FOR TEMPORARY ADA COMPLIANT BUILDING ACCESS. COORDINATE WITH OWNER
00001.38	EXIST HANDRAIL TO REMAIN
01732.01	REMOVE AND DISPOSE OF CAST STONE STAIR TREADS, LANDINGS, ETC.
01732.02	REMOVE AND DISPOSE OF RAMP
01732.03	REMOVE AND DISPOSE OF SLAB ON GRADE
01732.04	REMOVE AND DISPOSE OF VEGETATION
01732.07	REMOVE AND DISPOSE OF DETERIORATED CONCRETE, SAWCUT ANY VISIBLE JOINT
01732.08	REMOVE AND DISPOSE OF TREE, RE: LANDSCAPE
01732.09	REMOVE PARKING STRIPE
01732.11	REMOVE AND DISPOSE OF SLAB ON GRADE TO EXIST. CONC. JOINT AS SHOWN OR SAWCUT A FINISHED EDGE

REVISIONS:

PERMIT SET

DAUGHTERS OF UTAH PIONEERS PHASE II IMPROVEMENTS
DFCM PROJECT NO. 07273050
300 NORTH MAIN STREET, SALT LAKE CITY, UTAH 84103

MJSA
357 West Pierpont Avenue □ Salt Lake City, Utah 84101
Telephone 801 364 5161 □ Facsimile 801 364 5167
ARCHITECTURE INTERIOR DESIGN

STAMP

STATE OF UTAH
ROBERT J. POTTER
#1142
LICENSED ARCHITECT
7/12/10

THESE DRAWINGS ARE INSTRUMENTS OF SERVICE AND SHALL REMAIN THE PROPERTY OF THE ARCHITECT. NO USE OR RE-USE OF THESE DOCUMENTS SHALL BE PERMITTED UNLESS AUTHORIZED IN WRITING BY MJSA ARCHITECTS WITH APPROPRIATE COMPENSATION.

PROJECT NO.: 10011

DATE: 7/12/10

SHEET: AD1-01

SITE DEMOLITION PLAN
SCALE: AS NOTED

S:\10011 - DUP Museum\CAD\06_Sheets\AD1-01.dwg - Tue, 27 Jul 2010 - 5:58pm

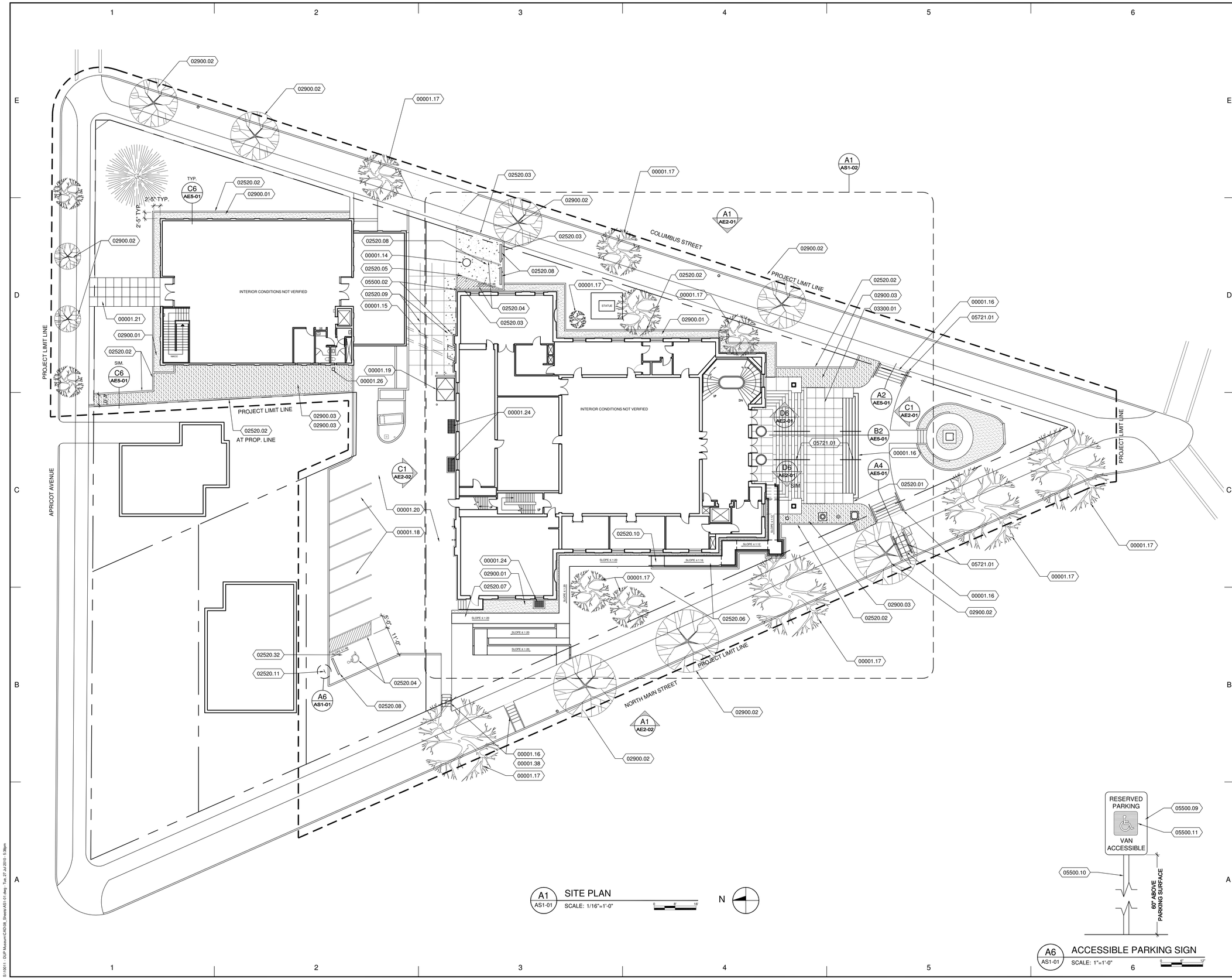

A1 AS1-01 SITE PLAN
SCALE: 1/16"=1'-0"

A6 AS1-01 ACCESSIBLE PARKING SIGN
SCALE: 1"=1'-0"

REFERENCE NOTES

00001.14	EXIST. MANHOLE - PROTECT IN PLACE
00001.15	EXIST. TUNNEL
00001.16	EXIST. CONC. STAIRS TO REMAIN - PROTECT IN PLACE
00001.17	EXIST. TREE - PROTECT IN PLACE, RE: LANDSCAPE
00001.18	EXIST. PARKING
00001.19	EXIST SERVICE ELEVATOR
00001.20	EXIST. CONC. PARKING SURFACE - PROTECT IN PLACE
00001.21	EXIST. CONC. WALKWAY OR STAIRS - PROTECT IN PLACE
00001.24	EXIST. METAL GRATE
00001.26	EXIST. IRRIGATION CONTROLS BOX
00001.38	EXIST HANDRAIL TO REMAIN
02520.01	CONC. CHEEK WALLS - MATCH EXISTING
02520.02	6" X 10" CONC. MOW STRIP
02520.03	CONC. PARKING CURB
02520.04	NEW PARKING STRIPING
02520.05	CONC. PARKING SURFACE
02520.06	ADA COMPLIANT CONC. RAMP, MAX SLOPE = 1:12, MAX CROSS SLOPE FOR DRAINAGE AWAY FROM EXIST. BUILDING = 1:48
02520.07	6" CONC. SIDEWALK, MAX SLOPE = 1:20
02520.08	CONC. WHEEL STOP
02520.09	CONC. DRIVEWAY
02520.10	ADA COMPLIANT LANDING, MAX SLOPE 1:48
02520.11	ADA COMPLIANT VAN ACCESSIBLE PARKING SIGN
02520.32	VAN ACCESSIBLE PARKING SPACE, MAX SLOPE 1:48
02900.01	DRY GRAVEL MOAT, GRAVEL FILL CRUSHED GRANITE, APPROX. 1 1/2" DIA.- 4" MIN. DEPTH SUBMIT TO ARCHITECT FOR APPROVAL, 1/2" MAX BELOW ADJACENT CURB, RAMP, OR SIDEWALK
02900.02	TREE, RE: LANDSCAPE
02900.03	PLANTING BEDS, RE: LANDSCAPE
03300.01	CONCRETE SLAB ON GRADE
05500.02	BOLLARD - "IRONSMITH" MODEL #9028-6 OR SIM., 72" LONG, 36" ABOVE GROUND, DARK BRONZE
05500.09	12" X 18" X 0.08 ALUMINUM SIGN
05500.10	1-3/4" X 1-3/4" X 0.105 PERFORATED SQUARE GALVANIZED STEEL TUBE
05500.11	INTERNATIONAL ACCESSIBLE SYMBOL, COMPLY WITH
05721.01	ORNAMENTAL BRONZE HANDRAIL, 36" ABOVE RAMP

REVISIONS:

PERMIT SET

DAUGHTERS OF UTAH PIONEERS PHASE II IMPROVEMENTS

DFCM PROJECT NO. 07273050
300 NORTH MAIN STREET, SALT LAKE CITY, UTAH 84103

LEDGED

- EXISTING TREE TO REMAIN
- NEW TREE RE: LANDSCAPE DWGS.
- GRAVEL DRY MOAT
- PLANTING BED, RE: LANDSCAPE DWGS.
- CONC. DRIVEWAY AND PARKING

MJSA
357 West Pierpont Avenue □ Salt Lake City, Utah 84101
Telephone 801 364 5151 □ Facsimile 801 364 5167
ARCHITECTURE INTERIOR DESIGN

STAMP

STATE OF UTAH
ROBERT J. PETERSEN
#1142
LICENSED ARCHITECT
7/12/10

THESE DRAWINGS ARE INSTRUMENTS OF SERVICE AND SHALL REMAIN THE PROPERTY OF THE ARCHITECT. NO USE OR RE-USE OF THESE DOCUMENTS SHALL BE PERMITTED UNLESS AUTHORIZED IN WRITING BY MJSA ARCHITECTS WITH APPROPRIATE COMPENSATION.

PROJECT NO.: 10011

DATE: 7/12/10

SITE PLAN

SCALE: AS SHOWN

SHEET: AS1-01

S:\10011 - DUP Museum\CAD\06_Sheets\AS1-01.dwg - Tue, 27 Jul 2010 - 5:38pm

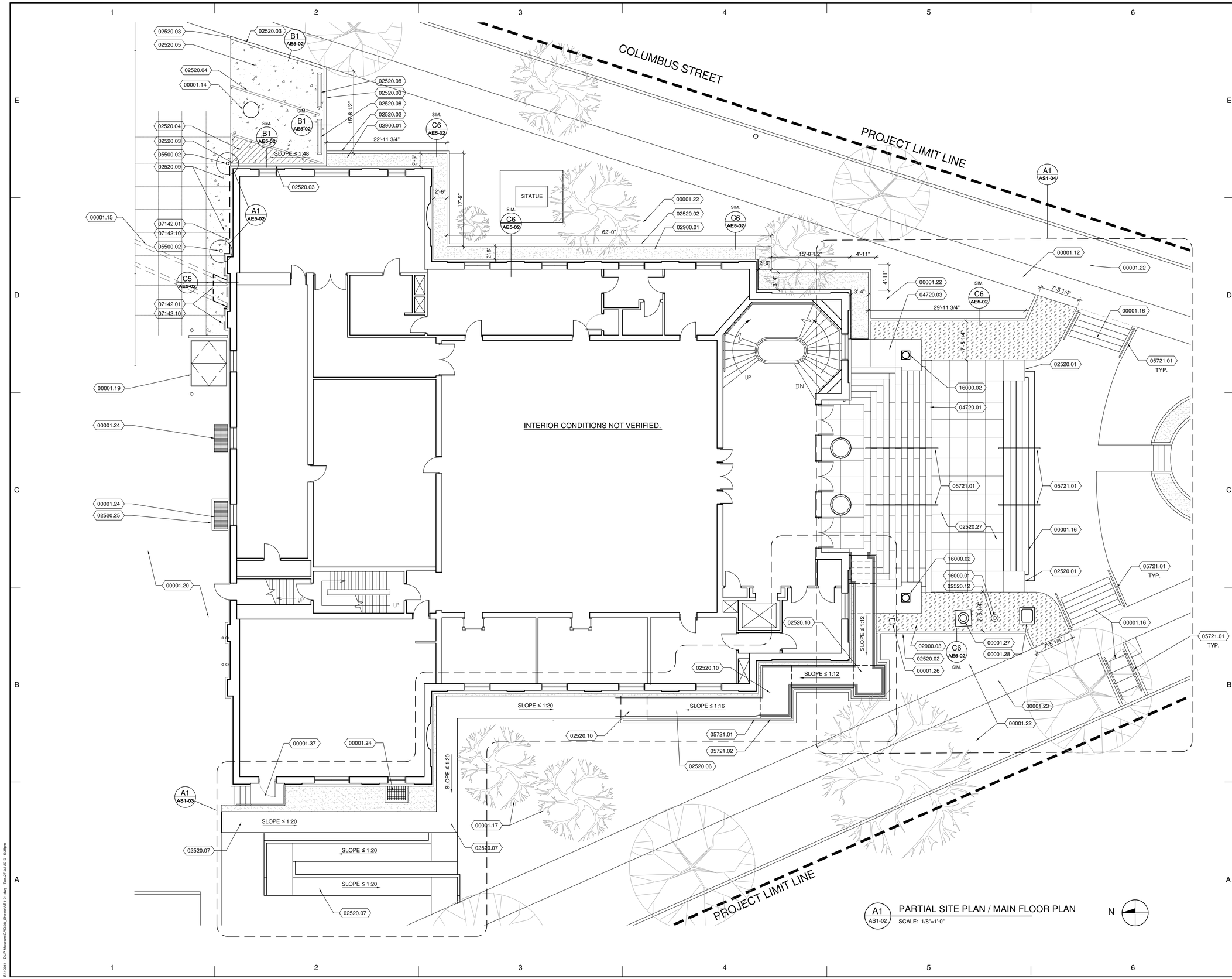

A1 AS1-02 PARTIAL SITE PLAN / MAIN FLOOR PLAN
SCALE: 1/8"=1'-0"

N

REFERENCE NOTES

00001.12	EXISTING SIDEWALK
00001.14	EXIST. MANHOLE - PROTECT IN PLACE
00001.15	EXIST. TUNNEL
00001.16	EXIST. CONC. STAIRS TO REMAIN - PROTECT IN PLACE
00001.17	EXIST. TREE - PROTECT IN PLACE, RE: LANDSCAPE
00001.19	EXIST SERVICE ELEVATOR
00001.20	EXIST. CONC. PARKING SURFACE - PROTECT IN PLACE
00001.22	EXIST. LANDSCAPING
00001.23	EXIST. SIDEWALK
00001.24	EXIST. METAL GRATE
00001.26	EXIST. IRRIGATION CONTROLS BOX
00001.27	EXIST. FLAGPOLE
00001.28	EXISTING MONUMENT
00001.37	EXIST NORTHWEST DOOR AND STOOP. LOCATION FOR TEMPORARY ADA COMPLIANT BUILDING ACCESS. COORDINATE WITH OWNER
02520.01	CONC. CHEEK WALLS - MATCH EXISTING
02520.02	6" X 10" CONC. MOW STRIP
02520.03	CONC. PARKING CURB
02520.04	NEW PARKING STRIPING
02520.05	CONC. PARKING SURFACE
02520.06	ADA COMPLIANT CONC. RAMP, MAX SLOPE = 1:12, MAX CROSS SLOPE FOR DRAINAGE AWAY FROM EXIST. BUILDING = 1:48
02520.07	6" CONC. SIDEWALK, MAX SLOPE = 1:20
02520.08	CONC. WHEEL STOP
02520.09	CONC. DRIVEWAY
02520.10	ADA COMPLIANT LANDING, MAX SLOPE 1:48
02520.12	LIGHTING TO BE EMBEDDED INTO CONC.
02520.25	REPLACE CONC. CURB
02520.27	CONC. WALKWAY
02900.01	DRY GRAVEL MOAT, GRAVEL FILL CRUSHED GRANITE, APPROX. 1 1/2" DIA.- 4" MIN. DEPTH SUBMIT TO ARCHITECT FOR APPROVAL, 1/2" MAX BELOW ADJACENT CURB, RAMP, OR SIDEWALK
02900.03	PLANTING BEDS, RE: LANDSCAPE
04720.01	CAST STONE STAIR TREADS
04720.03	CAST STONE CAP AND CLADDING ON CHEEK WALL, MATCH EXISTING.
05500.02	BOLLARD - "IRONSMITH" MODEL #9028-6 OR SIM., 72" LONG, 36" ABOVE GROUND, DARK BRONZE
05721.01	ORNAMENTAL BRONZE HANDRAIL, 36" ABOVE RAMP
05721.02	ORNAMENTAL BRONZE GUARDRAIL, 42" ABOVE RAMP
07142.01	HOT FLUID-APPLIED RUBBERIZED ASPHALT WATERPROOFING
07142.10	EXTENT OF WATERPROOFING TO BE DETERMINED AFTER EXCAVATION, SEE ALLOWANCE #2
16000.01	FLAGPOLE LIGHTING, RE: ELECTRICAL
16000.02	EXTERIOR LIGHT STANDARD (TORCHIERE), RE: ELECTRICAL.

LEDGED

- EXISTING TREE TO REMAIN
- NEW TREE RE: LANDSCAPE DWGS.
- GRAVEL DRY MOAT
- PLANTING BED, RE: LANDSCAPE DWGS.
- CONC. DRIVEWAY AND PARKING

STAMP

STATE OF UTAH
ROBERT M. POTTER
#1142
LICENSED ARCHITECT
7/12/10

PARTIAL SITE PLAN

SCALE: AS SHOWN

REVISIONS:

PERMIT SET

DAUGHTERS OF UTAH PIONEERS PHASE II IMPROVEMENTS
DFCM PROJECT NO. 07273050
300 NORTH MAIN STREET, SALT LAKE CITY, UTAH 84103

MJSA
357 West Pierpont Avenue □ Salt Lake City, Utah 84101
Telephone 801 364 5161 □ Facsimile 801 364 5167
ARCHITECTURE INTERIOR DESIGN

THESE DRAWINGS ARE INSTRUMENTS OF SERVICE AND SHALL REMAIN THE PROPERTY OF THE ARCHITECT. NO USE OR RE-USE OF THESE DOCUMENTS SHALL BE PERMITTED UNLESS AUTHORIZED IN WRITING BY MJSA ARCHITECTS WITH APPROPRIATE COMPENSATION.

PROJECT NO.: 10011

DATE: 7/12/10

SHEET: AS1-02

S:\10011 - DUP Museum\CAD\06_Sheets\AE1-01.dwg , Tue, 27 Jul 2010 - 5:36pm

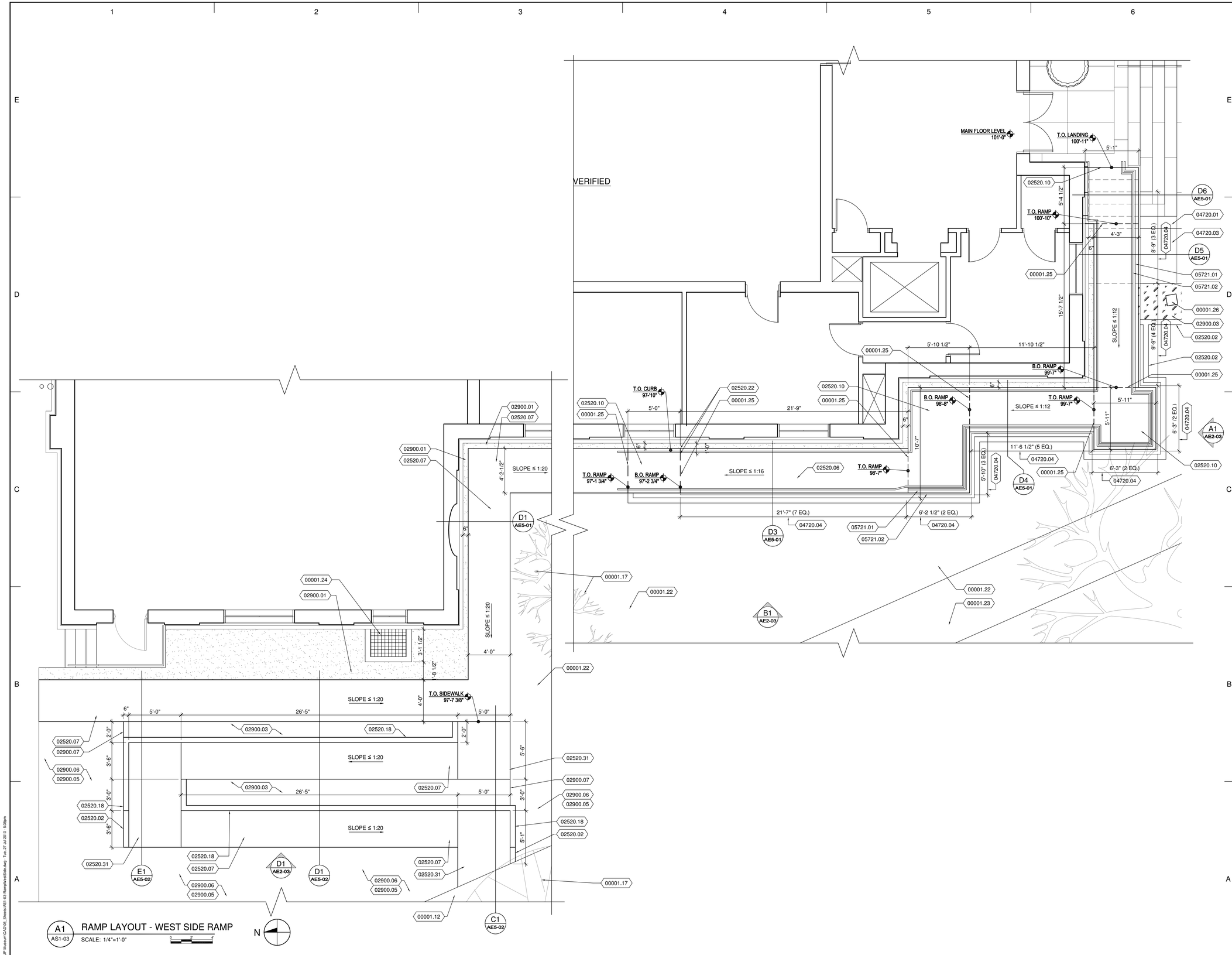

A1 AS1-03 RAMP LAYOUT - WEST SIDE RAMP

SCALE: 1/4"=1'-0"

REFERENCE NOTES

00001.12	EXISTING SIDEWALK
00001.17	EXIST. TREE - PROTECT IN PLACE, RE: LANDSCAPE
00001.22	EXIST. LANDSCAPING
00001.23	EXIST. SIDEWALK
00001.24	EXIST. METAL GRATE
00001.25	CHANGE IN SLOPE
00001.26	EXIST. IRRIGATION CONTROLS BOX
02520.02	6" X 10" CONC. MOW STRIP
02520.06	ADA COMPLIANT CONC. RAMP, MAX SLOPE = 1:12, MAX CROSS SLOPE FOR DRAINAGE AWAY FROM EXIST. BUILDING = 1:48
02520.07	6" CONC. SIDEWALK, MAX SLOPE = 1:20
02520.10	ADA COMPLIANT LANDING, MAX SLOPE 1:48
02520.18	6" CONC. CURB WALL
02520.22	3/4" CHAMFER - ALL EXPOSED EDGES, TYP.
02520.31	6" CONC. SIDEWALK, MAX SLOPE 1:48
02900.01	DRY GRAVEL MOAT, GRAVEL FILL CRUSHED GRANITE, APPROX. 1 1/2" DIA.- 4" MIN. DEPTH SUBMIT TO ARCHITECT FOR APPROVAL, 1/2" MAX BELOW ADJACENT CURB, RAMP, OR SIDEWALK
02900.03	PLANTING BEDS, RE: LANDSCAPE
02900.05	SOD, RE: LANDSCAPE
02900.06	REGRADE AS NECESSARY TO ACCOMMODATE NEW SIDEWALK
02900.07	SURE-LOC, SUREEDGE 5-1/2" ALUMINUM METAL EDGING, OR APPROVED EQUAL
04720.01	CAST STONE STAIR TREADS
04720.03	CAST STONE CAP AND CLADDING ON CHEEK WALL, MATCH EXISTING.
04720.04	CAST STONE CLADDING
05721.01	ORNAMENTAL BRONZE HANDRAIL, 36" ABOVE RAMP
05721.02	ORNAMENTAL BRONZE GUARDRAIL, 42" ABOVE RAMP

LEDGED

- EXISTING TREE TO REMAIN
- NEW TREE RE: LANDSCAPE DWGS.
- GRAVEL DRY MOAT
- PLANTING BED, RE: LANDSCAPE DWGS.
- CONC. DRIVEWAY AND PARKING

STAMP

STATE OF UTAH
ROBERT A. KEHR
#1142
LICENSED ARCHITECT
7/12/10

WEST SIDE RAMP LAYOUT

SCALE: 1/4" = 1'-0"

REVISIONS:

PERMIT SET

DAUGHTERS OF UTAH PIONEERS PHASE II IMPROVEMENTS

DFCM PROJECT NO. 07273050

300 NORTH MAIN STREET, SALT LAKE CITY, UTAH 84103

MJSA

357 West Pierpont Avenue □ Salt Lake City, Utah 84101

Telephone 801 364 5161 □ Facsimile 801 364 5167

ARCHITECTURE INTERIOR DESIGN

THESE DRAWINGS ARE INSTRUMENTS OF SERVICE AND SHALL REMAIN THE PROPERTY OF THE ARCHITECT. NO USE OR RE-USE OF THESE DOCUMENTS SHALL BE PERMITTED UNLESS AUTHORIZED IN WRITING BY MJSA ARCHITECTS WITH APPROPRIATE COMPENSATION.

PROJECT NO.: 10011

DATE: 7/12/10

SHEET: AS1-03

S:\10011 - DUP Museum\CAD\06_Sheets\AE1-03 RampWestSide.dwg - Tue, 27 Jul 2010 - 5:38pm

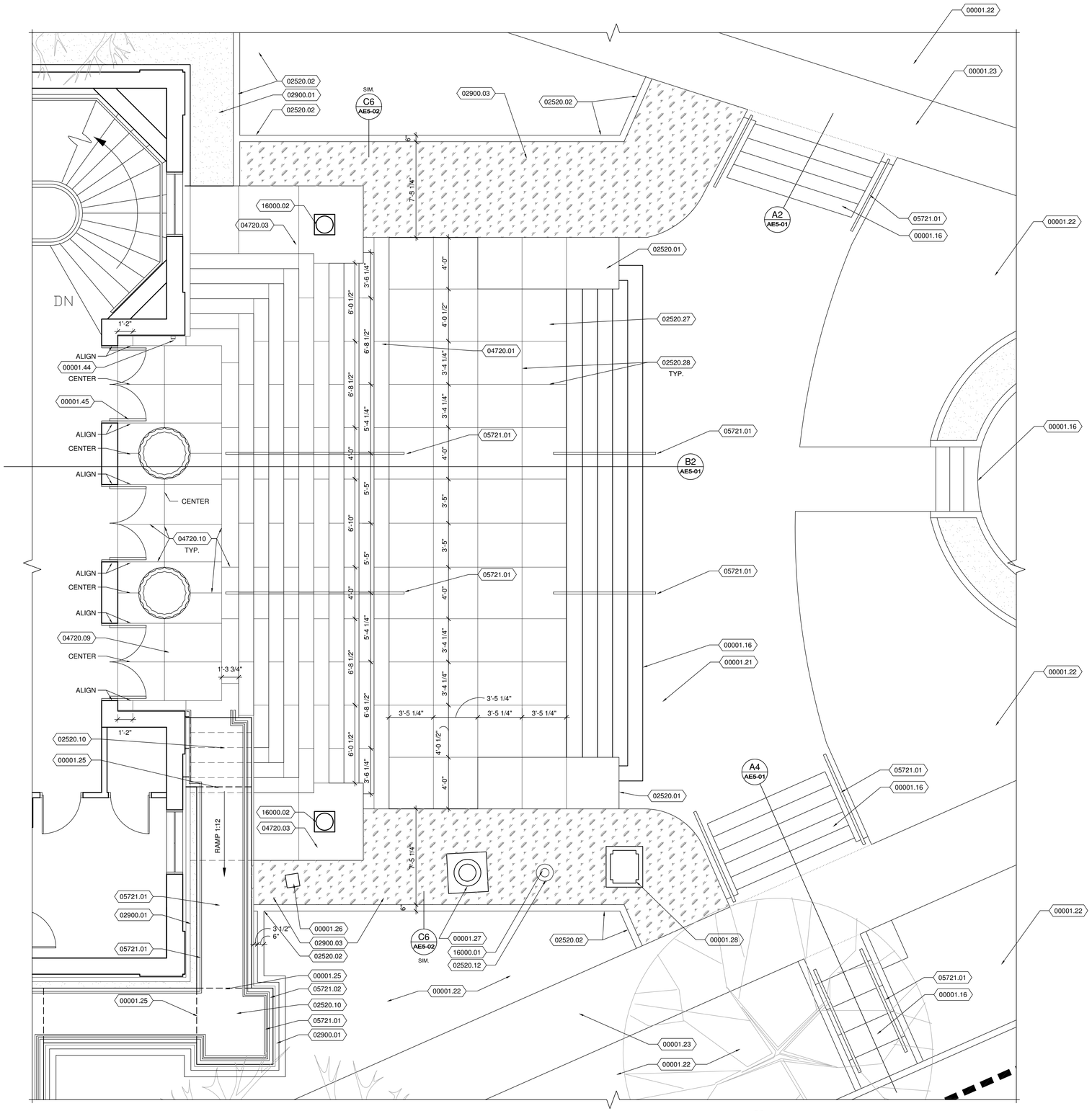

A1 AS1-04 PARTIAL SITE PLAN

SCALE: 1/4"=1'-0"

N

REFERENCE NOTES

00001.16	EXIST. CONC. STAIRS TO REMAIN - PROTECT IN PLACE
00001.21	EXIST. CONC. WALKWAY OR STAIRS - PROTECT IN PLACE
00001.22	EXIST. LANDSCAPING
00001.23	EXIST. SIDEWALK
00001.25	CHANGE IN SLOPE
00001.26	EXIST. IRRIGATION CONTROLS BOX
00001.27	EXIST. FLAGPOLE
00001.28	EXISTING MONUMENT
00001.44	EXIST. DOOR OPENER SWITCH
00001.45	EXIST. DOOR WITH DOOR OPENER
02520.01	CONC. CHEEK WALLS - MATCH EXISTING
02520.02	6" X 10" CONC. MOW STRIP
02520.10	ADA COMPLIANT LANDING, MAX SLOPE 1:48
02520.12	LIGHTING TO BE EMBEDDED INTO CONC.
02520.27	CONC. WALKWAY
02520.28	TOOLED CONC JOINT
02900.01	DRY GRAVEL MOAT, GRAVEL FILL CRUSHED GRANITE, APPROX. 1 1/2" DIA.- 4" MIN. DEPTH SUBMIT TO ARCHITECT FOR APPROVAL, 1/2" MAX BELOW ADJACENT CURB, RAMP, OR SIDEWALK
02900.03	PLANTING BEDS, RE: LANDSCAPE
04720.01	CAST STONE STAIR TREADS
04720.03	CAST STONE CAP AND CLADDING ON CHEEK WALL, MATCH EXISTING.
04720.09	CAST STONE LANDING
04720.10	CAST STONE JOINT, SEALANT
05721.01	ORNAMENTAL BRONZE HANDRAIL, 36" ABOVE RAMP
05721.02	ORNAMENTAL BRONZE GUARDRAIL, 42" ABOVE RAMP
16000.01	FLAGPOLE LIGHTING, RE: ELECTRICAL
16000.02	EXTERIOR LIGHT STANDARD (TORCHIERE), RE: ELECTRICAL.

LEDGED

- EXISTING TREE TO REMAIN
- NEW TREE RE: LANDSCAPE DWGS.
- GRAVEL DRY MOAT
- PLANTING BED, RE: LANDSCAPE DWGS.
- CONC. DRIVEWAY AND PARKING

STAMP

STATE OF UTAH
ROBERT A. KOTTAS
#1142
LICENSED ARCHITECT
7/12/10

PARTIAL SITE PLAN

SCALE: AS SHOWN

REVISIONS:

PERMIT SET

DAUGHTERS OF UTAH PIONEERS PHASE II IMPROVEMENTS

DFCM PROJECT NO. 07273050

300 NORTH MAIN STREET, SALT LAKE CITY, UTAH 84103

MJSA
357 West Pierpont Avenue □ Salt Lake City, Utah 84101
Telephone 801 364 5161 □ Facsimile 801 364 5167
ARCHITECTURE INTERIOR DESIGN

THESE DRAWINGS ARE INSTRUMENTS OF SERVICE AND SHALL REMAIN THE PROPERTY OF THE ARCHITECT. NO USE OR RE-USE OF THESE DOCUMENTS SHALL BE PERMITTED UNLESS AUTHORIZED IN WRITING BY MJSA ARCHITECTS WITH APPROPRIATE COMPENSATION.

PROJECT NO.: 10011

DATE: 7/12/10

SHEET: AS1-04

S:\10011 - DUP Museum\CAD\06_Sheets\AS1-04.dwg - Tue, 27 Jul 2010 - 5:38pm

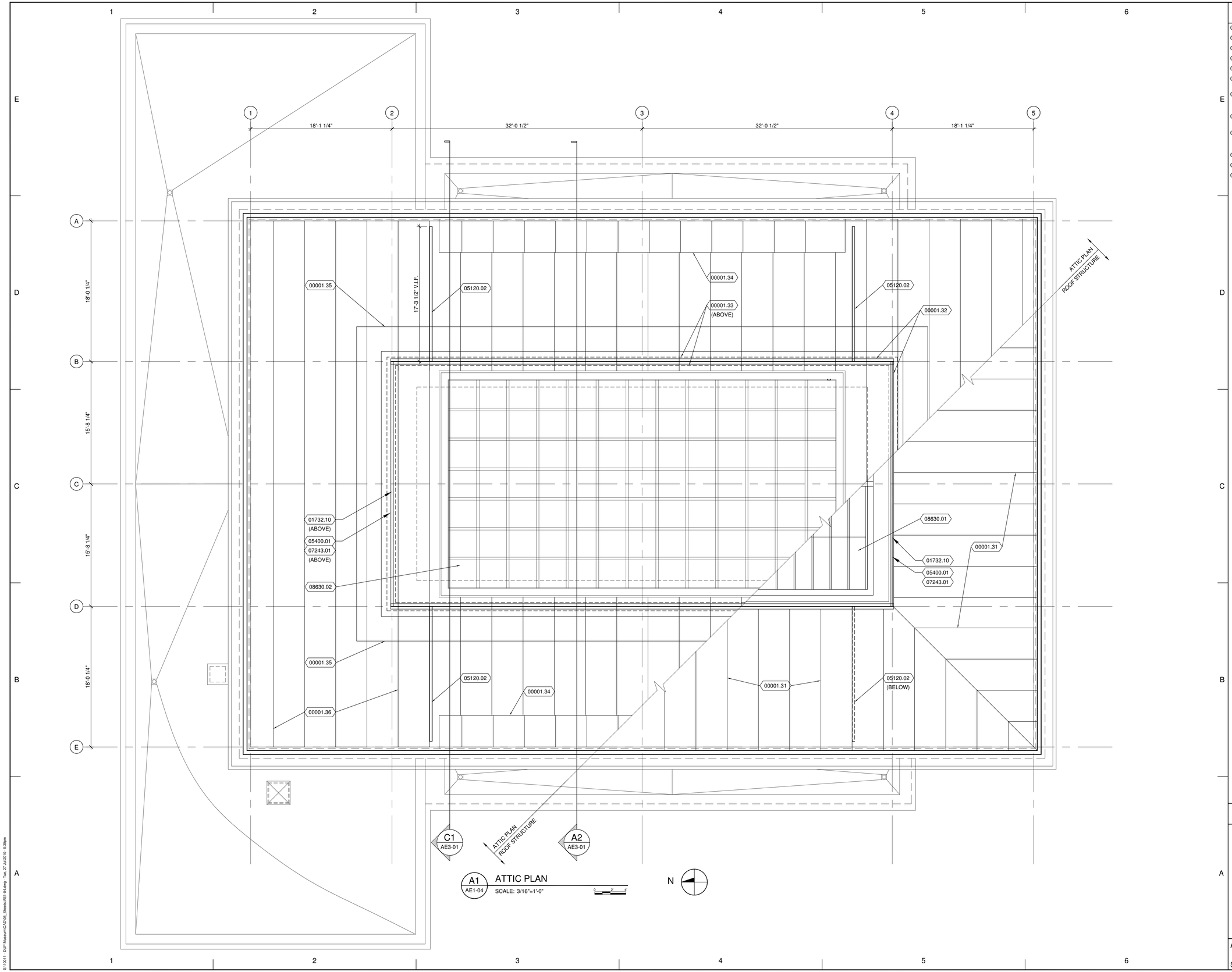

REFERENCE NOTES

00001.31	EXIST. C.B.J. RAFTERS
00001.32	EXIST. TRUSS
00001.33	EXIST. CONC. GUTTER
00001.34	EXIST. LINE OF CEILING DROP
00001.35	EXIST. CATWALK, APPROX. LOCATION
00001.36	EXIST. 1 1/2" C CHANNEL 48" O.C. TO SUPPORT CEILING
01732.10	REMOVE AND DISPOSE OF EXISTING BRICK GABLE WALL, SUPPORT PURLINS BEFORE DEMOLITION
05120.02	BRACE BOTTOM CHORD OF TRUSS TO EXIST. C.B.J. RAFTER, RE: STRUCTURAL DRAWINGS
05400.01	REPLACE BRICK GABLE WALL WITH METAL STUD FRAMED GABLE WALL, USE 350S-162-33 METAL STUDS AT 16" O.C.
07243.01	WATER DRAINAGE EIFS ON GABLE WALL
08630.01	GLASS SKYLIGHT
08630.02	CLEAN EXIST. LAYLIGHT

REVISIONS:

PERMIT SET

DAUGHTERS OF UTAH PIONEERS PHASE II IMPROVEMENTS
DFCM PROJECT NO. 07273050
300 NORTH MAIN STREET, SALT LAKE CITY, UTAH 84103

MJSA
357 West Pierpont Avenue □ Salt Lake City, Utah 84101
Telephone 801 364 5161 □ Facsimile 801 364 5167
ARCHITECTURE INTERIOR DESIGN

STAMP

STATE OF UTAH
ROBERT J. PETERSEN
#1142
LICENSED ARCHITECT
7/12/10

THESE DRAWINGS ARE INSTRUMENTS OF SERVICE AND SHALL REMAIN THE PROPERTY OF THE ARCHITECT. NO USE OR REUSE OF THESE DOCUMENTS SHALL BE PERMITTED UNLESS AUTHORIZED IN WRITING BY MJSA ARCHITECTS WITH APPROPRIATE COMPENSATION.

PROJECT NO.: 10011

DATE: 7/12/10

ATTIC PLAN

SCALE: 3/16" = 1'-0"

SHEET: AE1-04

S:\10011 - DUP Museum\CAD\06_Sheets\AE1-04.dwg - Tue, 27 Jul 2010 - 5:36pm

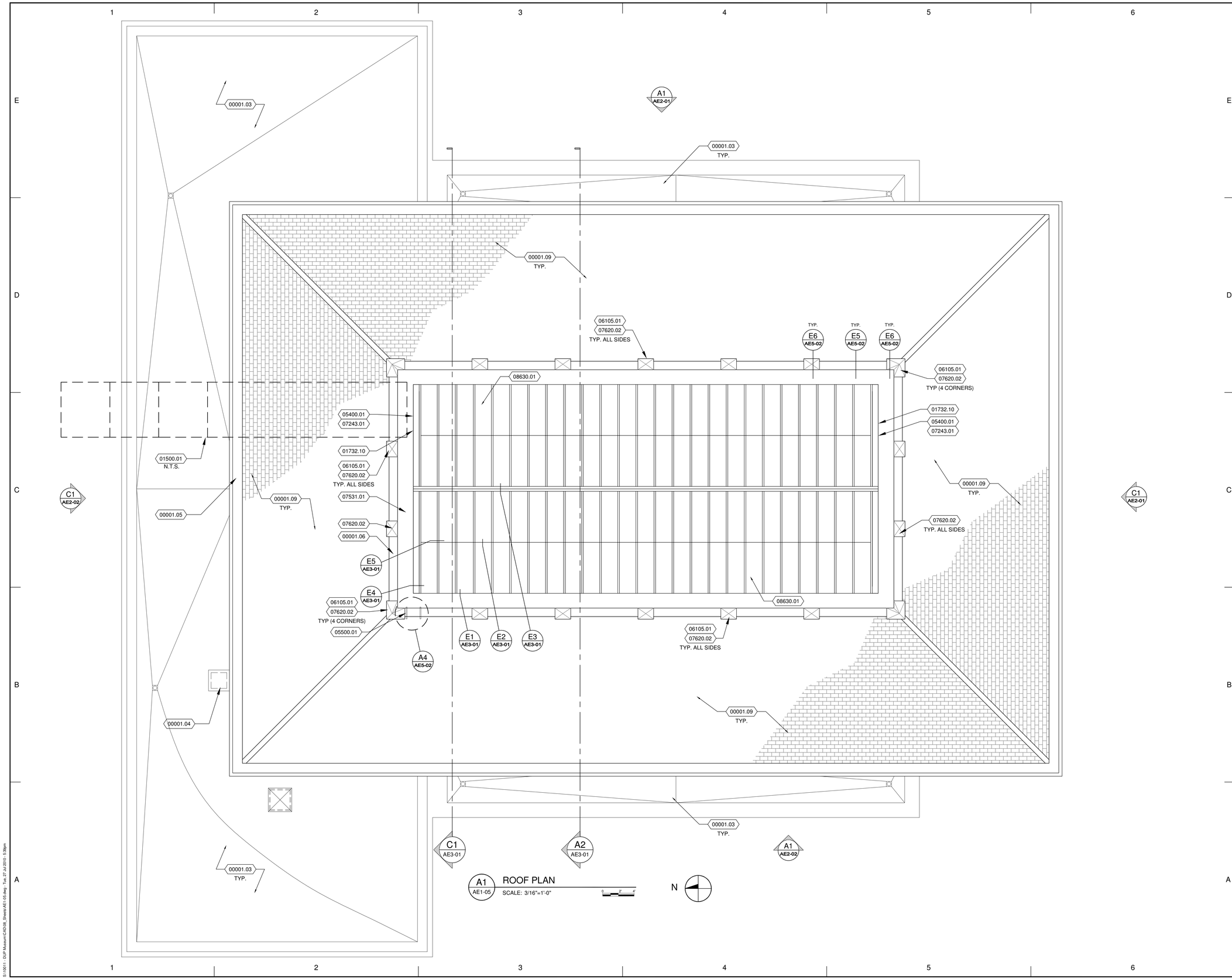

REFERENCE NOTES

00001.03	EXIST. FLAT ROOF BELOW
00001.04	EXIST. SCUTTLE
00001.05	EXIST. GUTTER
00001.06	EXIST. BALUSTRADE / PARAPET
00001.09	EXISTING ROOF - PROTECT IN PLACE AND MINIMIZE FOOT TRAFFIC
01500.01	SCHEMATIC LOCATION OF SCAFFOLDING TO ACCESS SKYLIGHT AND ATTIC WHILE PROTECTING SHINGLES
01732.10	REMOVE AND DISPOSE OF EXISTING BRICK GABLE WALL, SUPPORT PURLINS BEFORE DEMOLITION
05400.01	REPLACE BRICK GABLE WALL WITH METAL STUD FRAMED GABLE WALL, USE 350S-162-33 METAL STUDS AT 16" O.C.
05500.01	STAINLESS STEEL ACCESS LADDER
06105.01	TREATED WOOD BLOCKING UNDER PEDESTAL CAP
07243.01	WATER DRAINAGE EIFS ON GABLE WALL
07531.01	EPDM ROOFING MEMBRANE LINED GUTTER
07620.02	REPLACE PEDESTAL CAP WITH COPPER FLASHING CAP AT EACH PEDESTAL AND EACH CORNER, TYP.
08630.01	GLASS SKYLIGHT

REVISIONS:

PERMIT SET

DAUGHTERS OF UTAH PIONEERS PHASE II IMPROVEMENTS

DFCM PROJECT NO. 07273050

300 NORTH MAIN STREET, SALT LAKE CITY, UTAH 84103

MJSA

357 West Pierpont Avenue □ Salt Lake City, Utah 84101

Telephone 801 364-5161 □ Facsimile 801 364-5167

ARCHITECTURE INTERIOR DESIGN

STAMP

STATE OF UTAH
ROBERT M. JOHNSON
#1142
LICENSED ARCHITECT
7/12/10

THESE DRAWINGS ARE INSTRUMENTS OF SERVICE AND SHALL REMAIN THE PROPERTY OF THE ARCHITECT. NO USE OR RE-USE OF THESE DOCUMENTS SHALL BE PERMITTED UNLESS AUTHORIZED IN WRITING BY MJSA ARCHITECTS WITH APPROPRIATE COMPENSATION.

PROJECT NO.: 10011

DATE: 7/12/10

SHEET: AE1-05

ROOF PLAN

SCALE: 1/8" = 1'-0"

S:\10011 - DUP Museum\CAD\B_Sheets\AE1-05.dwg - Tue, 27 Jul 2010 - 5:36pm

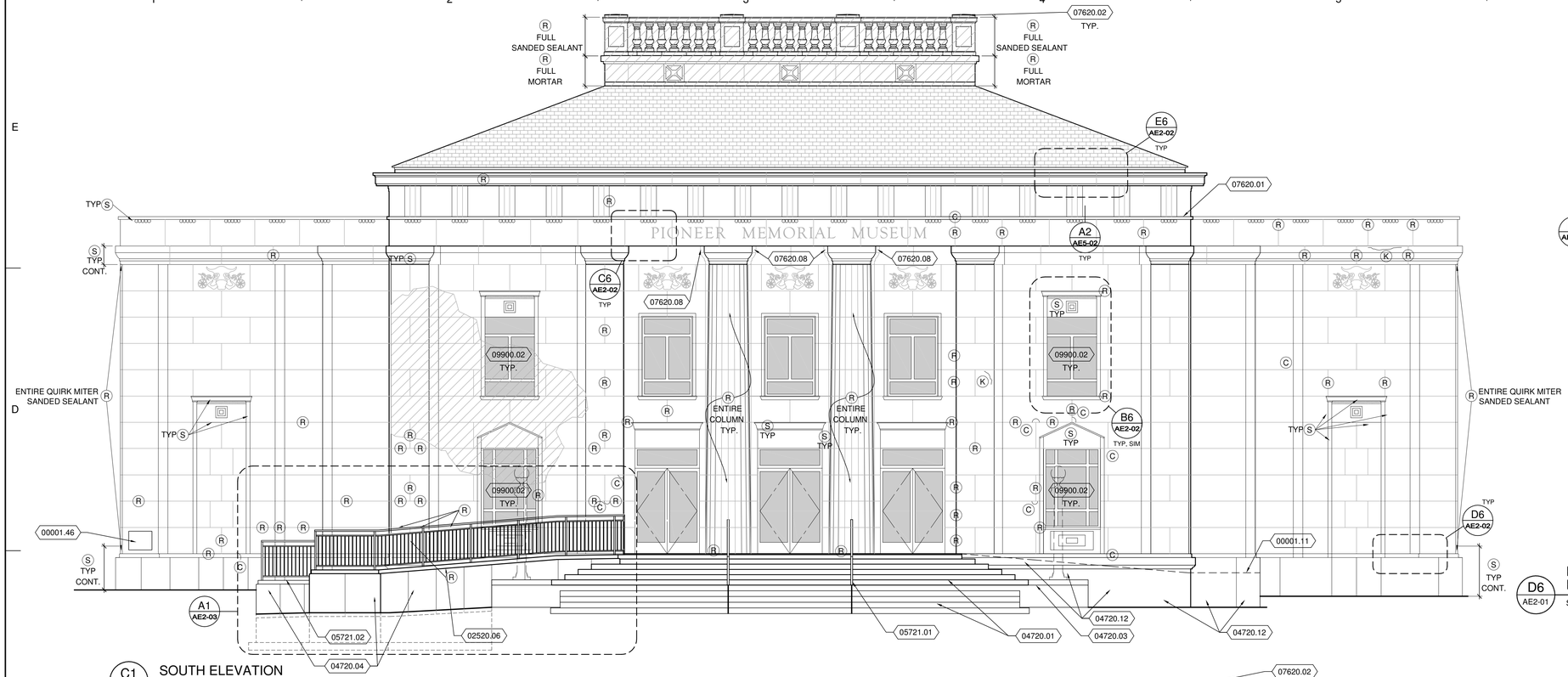

C1 AE2-01 SOUTH ELEVATION
SCALE: 3/16"=1'-0"

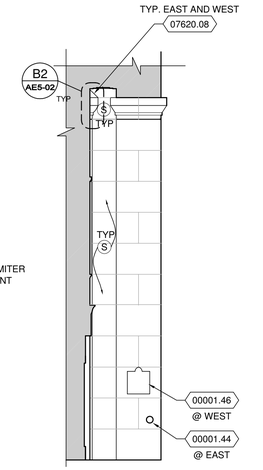

D6 AE2-01 EAST ELEV. AT FRONT ENTRY (WEST SIM./OPP.)
SCALE: 3/16"=1'-0"

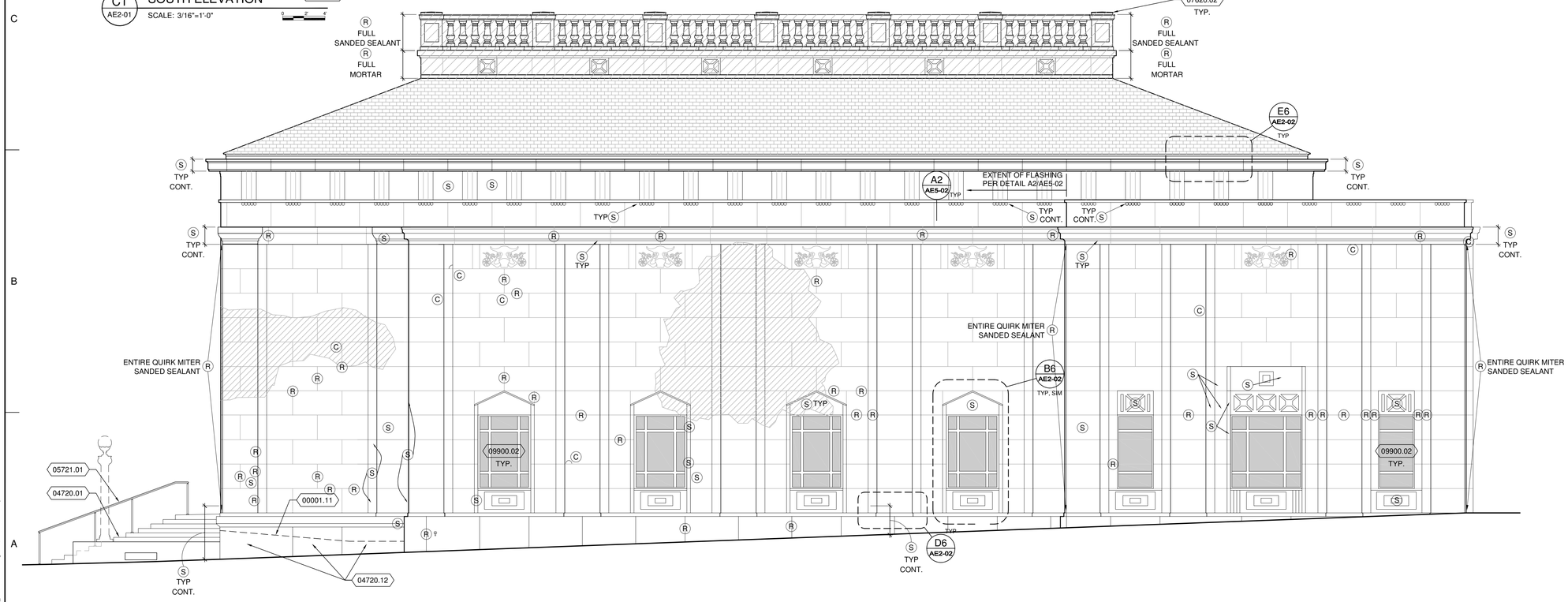

A1 AE2-01 EAST ELEVATION
SCALE: 3/16"=1'-0"

REFERENCE NOTES

00001.11	OUTLINE OF DEMOLISHED RAMP
00001.44	EXIST. DOOR OPENER SWITCH
00001.46	EXIST. COMMEMORATIVE PLAQUE TO REMAIN
02520.06	ADA COMPLIANT CONC. RAMP, MAX SLOPE = 1:12, MAX CROSS SLOPE FOR DRAINAGE AWAY FROM EXIST. BUILDING = 1:48
04720.01	CAST STONE STAIR TREADS
04720.03	CAST STONE CAP AND CLADDING ON CHEEK WALL, MATCH EXISTING.
04720.04	CAST STONE CLADDING
04720.12	REPLACE CAST STONE CLADDING
05721.01	ORNAMENTAL BRONZE HANDRAIL, 36" ABOVE RAMP
05721.02	ORNAMENTAL BRONZE GUARDRAIL, 42" ABOVE RAMP
07620.01	CONT. 16 OZ. COPPER FLASHING
07620.02	REPLACE PEDESTAL CAP WITH COPPER FLASHING CAP AT EACH PEDESTAL AND EACH CORNER, TYP.
07620.08	BIRD DETERRENT FLASHING, MATCH EXPOSED PROFILE OF DRIP AND SLOPE TOP TO REDUCE PERCH AREA. TYP. AT EACH COLUMN AT ENTRY
09900.02	PREP. AND PAINT METAL WINDOW FRAME AND SASH, TYP. EACH WINDOW. MAINTAIN EXIST. WINDOW OPERABILITY.

GENERAL NOTES

A. NOT ALL CAST STONE AND FLASHING DETAILS, JOINTS, ETC. SHOWN.
B. PROVIDE CLEANING PER SPECIFICATION SECTION #04940 TO ALL EXISTING AND NEW CAST STONE.
C. SEE SPECIFICATION SECTION #01210, ALLOWANCE #1.

STONE RESTORATION LEGEND

- (C) CHIP - PATCH AND REPAIR PER SPEC. 04942
- (K) CRACK - PATCH AND REPAIR PER SPEC. 04942
- (R) REPOINT JOINTS PER SPEC. 04942
- (S) STAIN - CLEAN PER SPEC. 04940
- CONCEALED OR INACCESSIBLE MASONRY, SEE ALLOWANCE #1

STAMP

STATE OF UTAH
ROBERT M. POTTER
#1142
LICENSED ARCHITECT
7/12/10

SOUTH & EAST BUILDING ELEVATIONS
SCALE: 3/16" = 1'-0"

REVISIONS:

PERMIT SET

DAUGHTERS OF UTAH PIONEERS PHASE II IMPROVEMENTS
DFCM PROJECT NO. 07273050
300 NORTH MAIN STREET, SALT LAKE CITY, UTAH 84103

MJSA
357 West Pierpont Avenue □ Salt Lake City, Utah 84101
Telephone 801 364 5161 □ Facsimile 801 364 5167
ARCHITECTURE INTERIOR DESIGN

THESE DRAWINGS ARE INSTRUMENTS OF SERVICE AND SHALL REMAIN THE PROPERTY OF THE ARCHITECT. NO USE OR RE-USE OF THESE DOCUMENTS SHALL BE PERMITTED UNLESS AUTHORIZED IN WRITING BY MJSA ARCHITECTS WITH APPROPRIATE COMPENSATION.

PROJECT NO.: 10011
DATE: 7/12/10
SHEET: AE2-01

S:\10011 - DUP Museum\CAD\06_Sheets\AE2-01.dwg - Tue, 27 Jul 2010 - 5:36pm

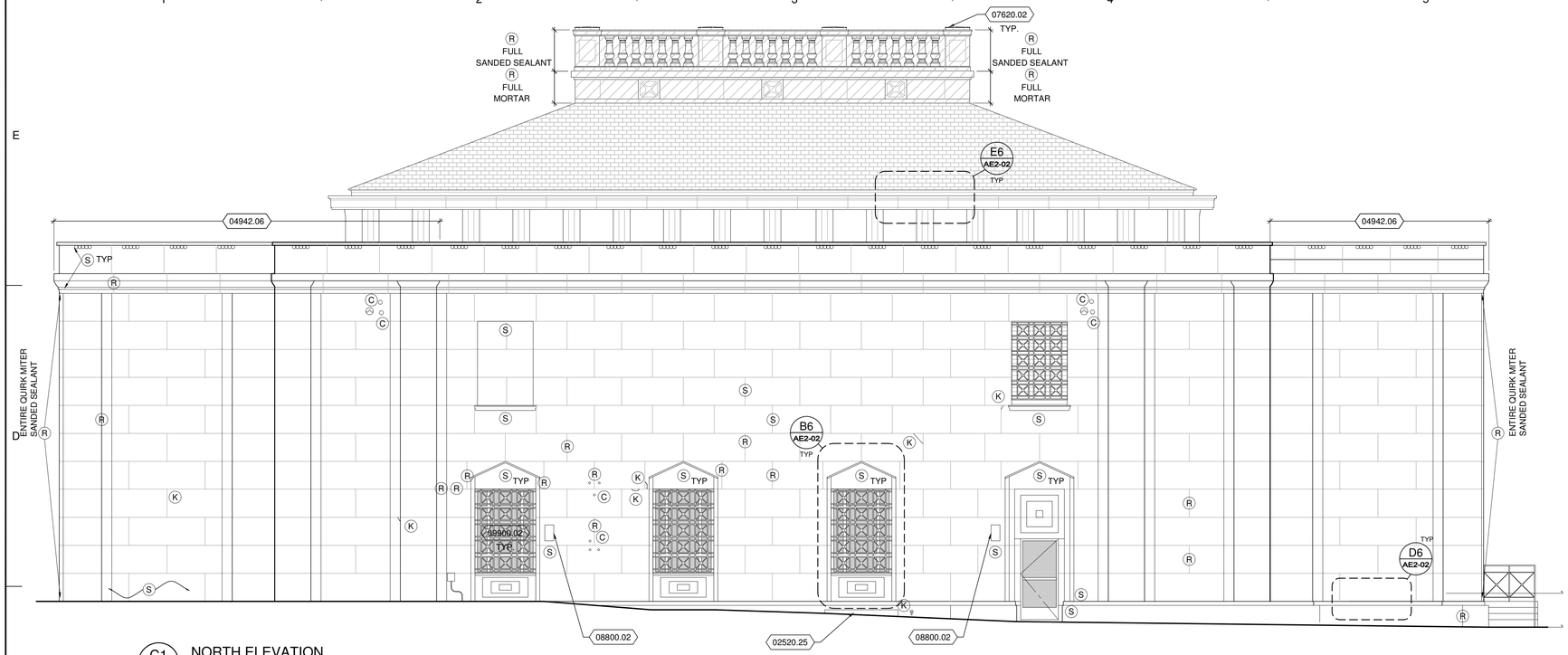

C1 AE2-02 NORTH ELEVATION
SCALE: 3/16"=1'-0"

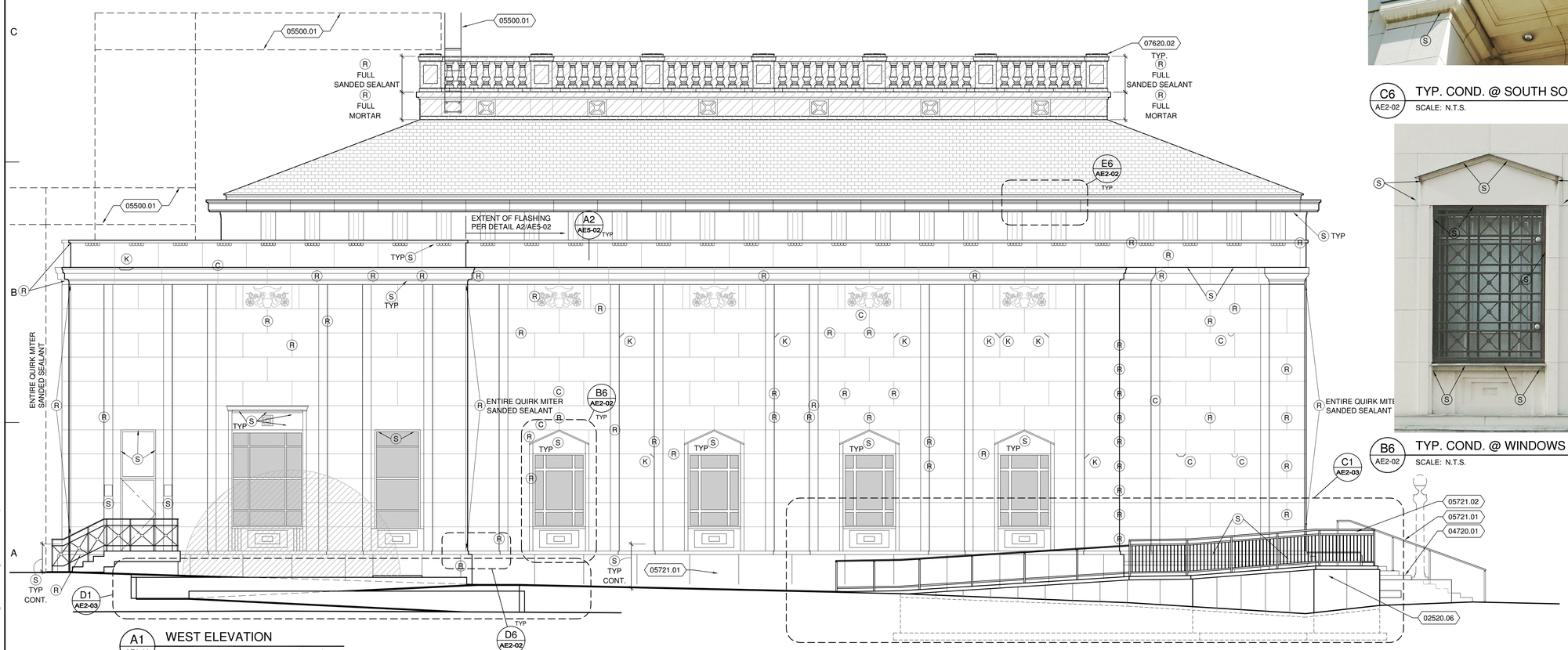

A1 AE2-02 WEST ELEVATION
SCALE: 3/16"=1'-0"

E6 AE2-02 TYP. CONDITION @ BLOCK MODILLION
SCALE: N.T.S.

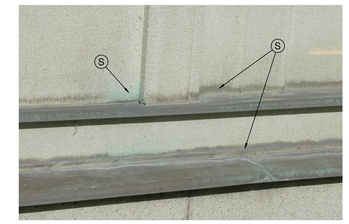

D6 AE2-02 TYP. COND. @ WATER TABLE FLASH.
SCALE: N.T.S.

C6 AE2-02 TYP. COND. @ SOUTH SOFFIT
SCALE: N.T.S.

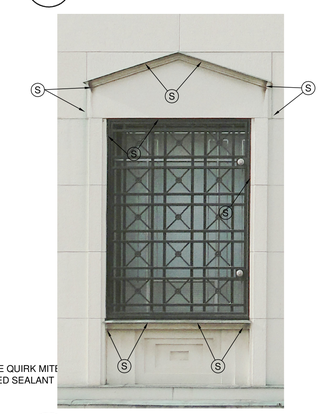

B6 AE2-02 TYP. COND. @ WINDOWS
SCALE: N.T.S.

REFERENCE NOTES

02520.06	ADA COMPLIANT CONC. RAMP, MAX SLOPE = 1:12, MAX CROSS SLOPE FOR DRAINAGE AWAY FROM EXIST. BUILDING = 1:48
02520.25	REPLACE CONC. CURB
04720.01	CAST STONE STAIR TREADS
04942.06	CLEAN/PREP ALL SEALANT FILLED JOINTS, FROM GRADE TO PARAPET. REPOINT
05500.01	STAINLESS STEEL ACCESS LADDER
05721.01	ORNAMENTAL BRONZE HANDRAIL, 36" ABOVE RAMP
05721.02	ORNAMENTAL BRONZE GUARDRAIL, 42" ABOVE RAMP
07620.02	REPLACE PEDESTAL CAP WITH COPPER FLASHING CAP AT EACH PEDESTAL AND EACH CORNER, TYP.
08800.02	REPLACE BROKEN GLASS, MATCH EXISTING
09900.02	PREP. AND PAINT METAL WINDOW FRAME AND SASH, TYP. EACH WINDOW. MAINTAIN EXIST. WINDOW OPERABILITY.

GENERAL NOTES

A. NOT ALL CAST STONE AND FLASHING DETAILS, JOINTS, ETC. SHOWN.
B. PROVIDE CLEANING PER SPECIFICATION SECTION #04940 TO ALL EXISTING AND NEW CAST STONE.
C. SEE SPECIFICATION SECTION #01210, ALLOWANCE #1.

STONE RESTORATION LEGEND

- (C) CHIP - PATCH AND REPAIR PER SPEC. 04942
- (K) CRACK - PATCH AND REPAIR PER SPEC. 04942
- (R) REPOINT JOINTS PER SPEC. 04942
- (S) STAIN - CLEAN PER SPEC. 04940
- CONCEALED OR INACCESSIBLE MASONRY, SEE ALLOWANCE #1

STAMP

STATE OF UTAH
ROBERT D. PETERSON
#1142
LICENSED ARCHITECT
7/12/10

NORTH & WEST BUILDING ELEVATIONS
SCALE: 3/16" = 1'-0"

REVISIONS:

PERMIT SET

DAUGHTERS OF UTAH PIONEERS PHASE II IMPROVEMENTS

DFCM PROJECT NO. 07273050
300 NORTH MAIN STREET, SALT LAKE CITY, UTAH 84103

MJSA
357 West Regent Avenue □ Salt Lake City, Utah 84101
Telephone 801 364 5161 □ Facsimile 801 364 5167
ARCHITECTURE INTERIOR DESIGN

THESE DRAWINGS ARE INSTRUMENTS OF SERVICE AND SHALL REMAIN THE PROPERTY OF THE ARCHITECT. NO USE OR RE-USE OF THESE DOCUMENTS SHALL BE PERMITTED UNLESS AUTHORIZED IN WRITING BY MJSA ARCHITECTS WITH APPROPRIATE COMPENSATION.

PROJECT NO.: 10011

DATE: 7/12/10

SHEET: AE2-02

S:\10011 - DUP Museum\CAD\06_Sheets\AE2-02.dwg - Tue, 27 Jul 2010 - 5:39pm

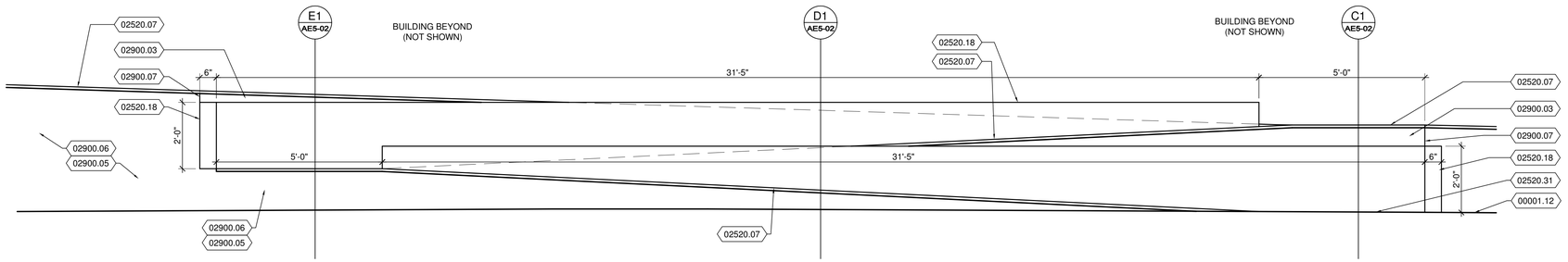

D1 SIDEWALK ELEVATION
AE2-03
SCALE: 1/2"=1'-0"

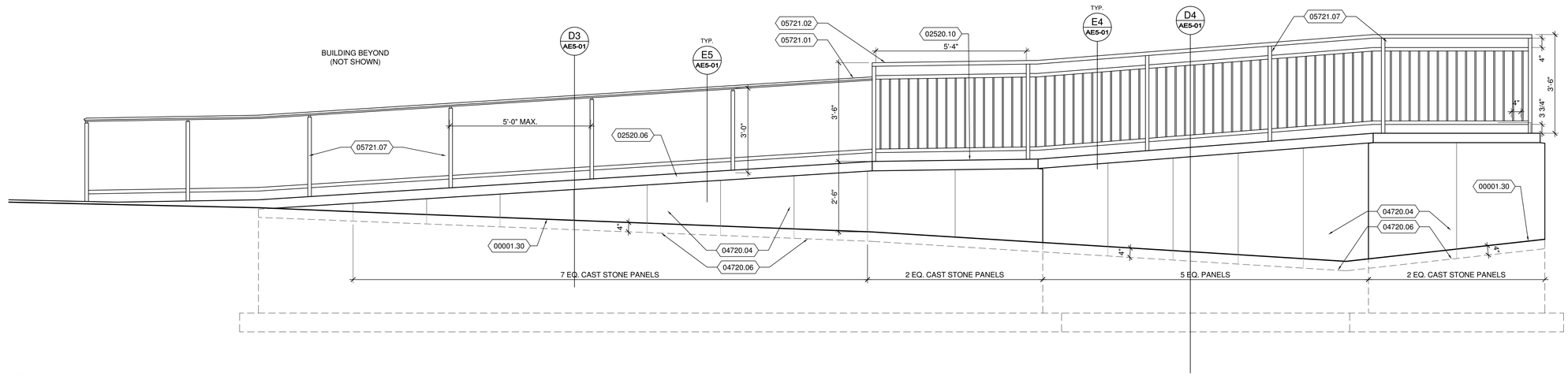

C1 RAMP ELEVATION WEST
AE2-03
SCALE: 1/2"=1'-0"

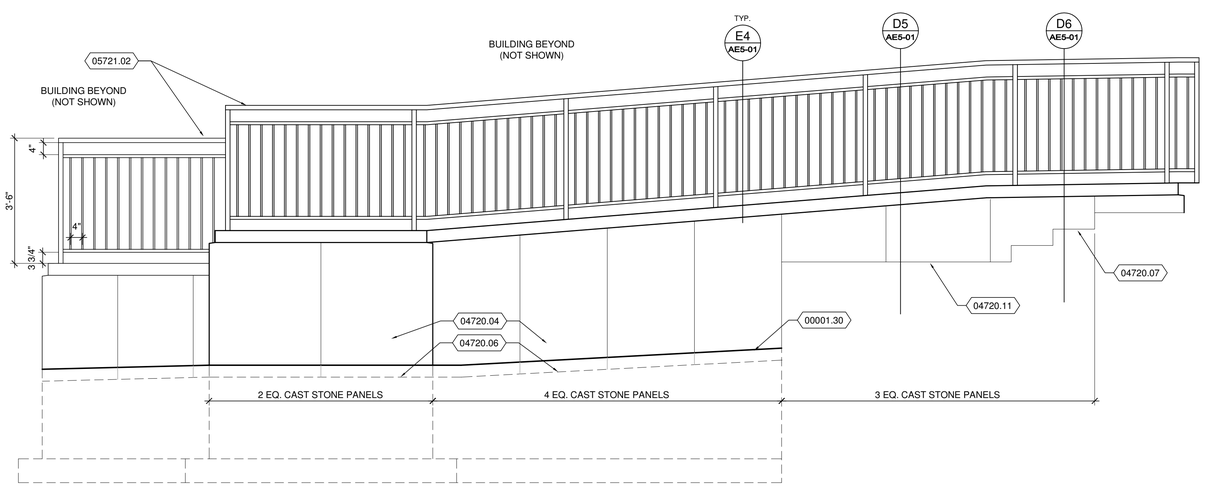

A1 RAMP ELEVATION SOUTH
AE2-03
SCALE: 1/2"=1'-0"

REFERENCE NOTES

00001.12	EXISTING SIDEWALK
00001.30	GRADE
02520.06	ADA COMPLIANT CONC. RAMP, MAX SLOPE = 1:12, MAX CROSS SLOPE FOR DRAINAGE AWAY FROM EXIST. BUILDING = 1:48
02520.07	6" CONC. SIDEWALK, MAX SLOPE = 1:20
02520.10	ADA COMPLIANT LANDING, MAX SLOPE 1:48
02520.18	6" CONC. CURB WALL
02520.31	6" CONC. SIDEWALK, MAX SLOPE 1:48
02900.03	PLANTING BEDS, RE: LANDSCAPE
02900.05	SOD, RE: LANDSCAPE
02900.06	REGRADE AS NECESSARY TO ACCOMMODATE NEW SIDEWALK
02900.07	SURE-LOC, SUREEDGE 5-1/2" ALUMINUM METAL EDGING, OR APPROVED EQUAL
04720.04	CAST STONE CLADDING
04720.06	BOTTOM OF CAST STONE
04720.07	OUTLINE OF CAST STONE STAIR TREADS
04720.11	OUTLINE OF CONC. CHEEK WALL
05721.01	ORNAMENTAL BRONZE HANDRAIL, 36" ABOVE RAMP
05721.02	ORNAMENTAL BRONZE GUARDRAIL, 42" ABOVE RAMP
05721.07	NOT USED

REVISIONS:

PERMIT SET

DAUGHTERS OF UTAH PIONEERS PHASE II IMPROVEMENTS
DFCM PROJECT NO. 07273050
300 NORTH MAIN STREET, SALT LAKE CITY, UTAH 84103

MJSA
357 West Pierpont Avenue □ Salt Lake City, Utah 84101
Telephone 801 364 5161 □ Facsimile 801 364 5167
ARCHITECTURE INTERIOR DESIGN

STAMP

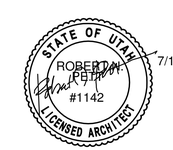

7/12/10

THESE DRAWINGS ARE INSTRUMENTS OF SERVICE AND SHALL REMAIN THE PROPERTY OF THE ARCHITECT. NO USE OR RE-USE OF THESE DOCUMENTS SHALL BE PERMITTED UNLESS AUTHORIZED IN WRITING BY MJSA ARCHITECTS WITH APPROPRIATE COMPENSATION.

PROJECT NO.: 10011

DATE: 7/12/10

RAMP ELEVATIONS

SCALE: AS SHOWN

SHEET: AE2-03

S:\10011 - DUP Museum\CAD\06_Sheets\AE2-03.dwg - Tue, 27 Jul 2010 - 5:38pm

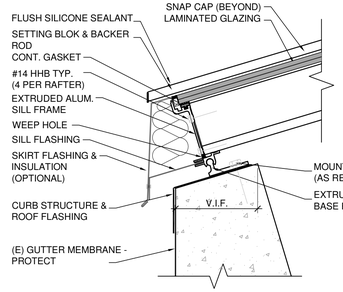

E1 AE3-01 SKYLIGHT RIDGE DETAIL - CURB
SCALE: 3"=1'-0"

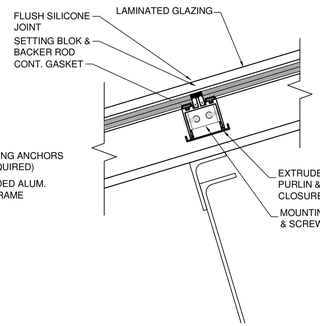

E2 AE3-01 SKYLIGHT DETAIL - PURLIN
SCALE: 3"=1'-0"

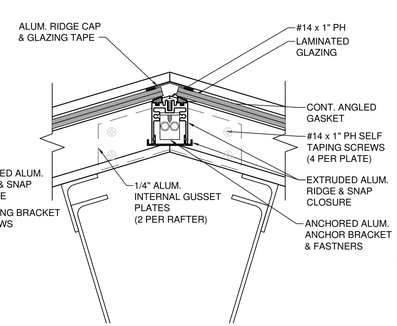

E3 AE3-01 SKYLIGHT DETAIL - RIDGE
SCALE: 3"=1'-0"

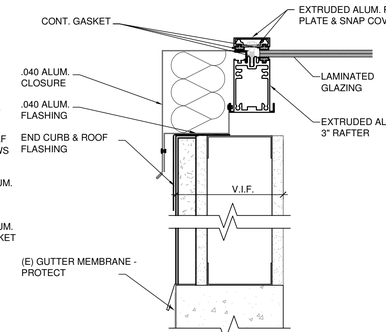

E4 AE3-01 SKYLIGHT DETAIL - GABLE
SCALE: 3"=1'-0"

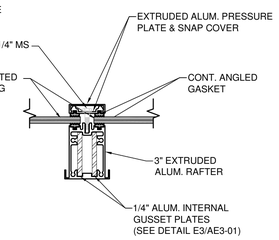

E5 AE3-01 SKYLIGHT DETAIL - RAFTER
SCALE: 3"=1'-0"

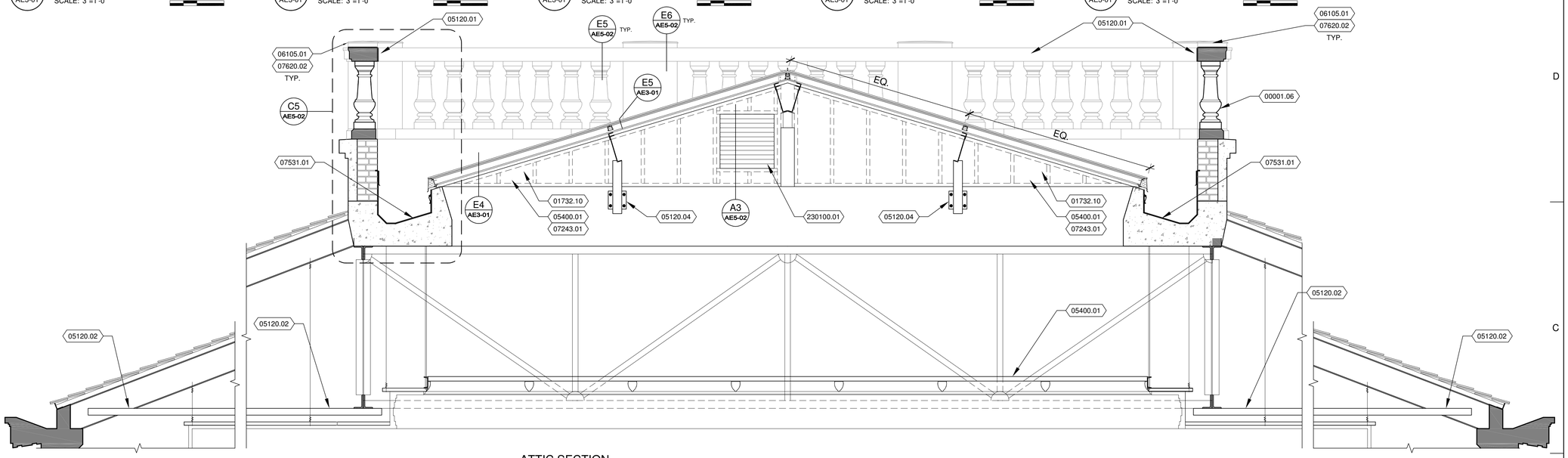

C1 AE3-01 ATTIC SECTION AT WALL
SCALE: 1/4"=1'-0"

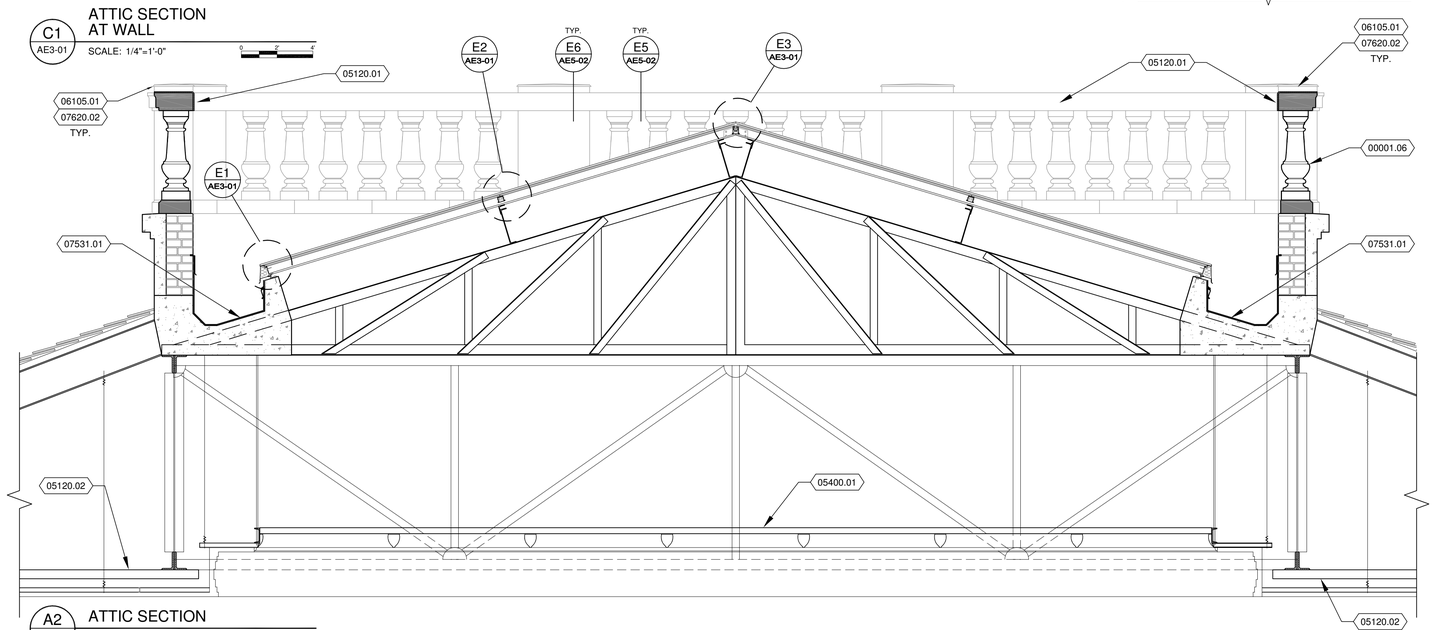

A2 AE3-01 ATTIC SECTION
SCALE: 1/4"=1'-0"

REFERENCE NOTES

00001.06	EXIST. BALUSTRADE / PARAPET
01732.10	REMOVE AND DISPOSE OF EXISTING BRICK GABLE WALL, SUPPORT PURLINS BEFORE DEMOLITION
05120.01	CONT. GALV. STEEL BENT PLATE, ANCHORED TO ALL CAST STONE SEGMENTS, RE: STRUCTURAL DWGS.
05120.02	BRACE BOTTOM CHORD OF TRUSS TO EXIST. C.B.J. RAFTER, RE: STRUCTURAL DRAWINGS
05120.04	STEEL PURLIN SUPPORT, RE: STRUCTURAL
05400.01	REPLACE BRICK GABLE WALL WITH METAL STUD FRAMED GABLE WALL, USE 350S-162-33 METAL STUDS AT 16" O.C.
06105.01	TREATED WOOD BLOCKING UNDER PEDESTAL CAP
07243.01	WATER DRAINAGE EIFS ON GABLE WALL
07531.01	EPDM ROOFING MEMBRANE LINED GUTTER
07620.02	REPLACE PEDESTAL CAP WITH COPPER FLASHING CAP AT EACH PEDESTAL AND EACH CORNER, TYP.
230100.01	LOUVER, DUCT, DAMPER, ETC., RE: MECHANICAL

REVISIONS:

PERMIT SET

DAUGHTERS OF UTAH PIONEERS PHASE II IMPROVEMENTS
DFCM PROJECT NO. 07273050
300 NORTH MAIN STREET, SALT LAKE CITY, UTAH 84103

MJSA
357 West Pierpont Avenue □ Salt Lake City, Utah 84101
Telephone 801 364 5161 □ Facsimile 801 364 5167
ARCHITECTURE INTERIOR DESIGN

STAMP

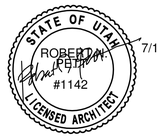

7/12/10

THESE DRAWINGS ARE INSTRUMENTS OF SERVICE AND SHALL REMAIN THE PROPERTY OF THE ARCHITECT. NO USE OR RE-USE OF THESE DOCUMENTS SHALL BE PERMITTED UNLESS AUTHORIZED IN WRITING BY MJSA ARCHITECTS WITH APPROPRIATE COMPENSATION.

PROJECT NO.: 10011

DATE: 7/12/10

ATTIC SECTION

SCALE: AS SHOWN

SHEET: AE3-01

S:\10011 - DUP Museum\CAD\06_Sheets\AE3-01.dwg - Tue, 27 Jul 2010 - 5:40pm

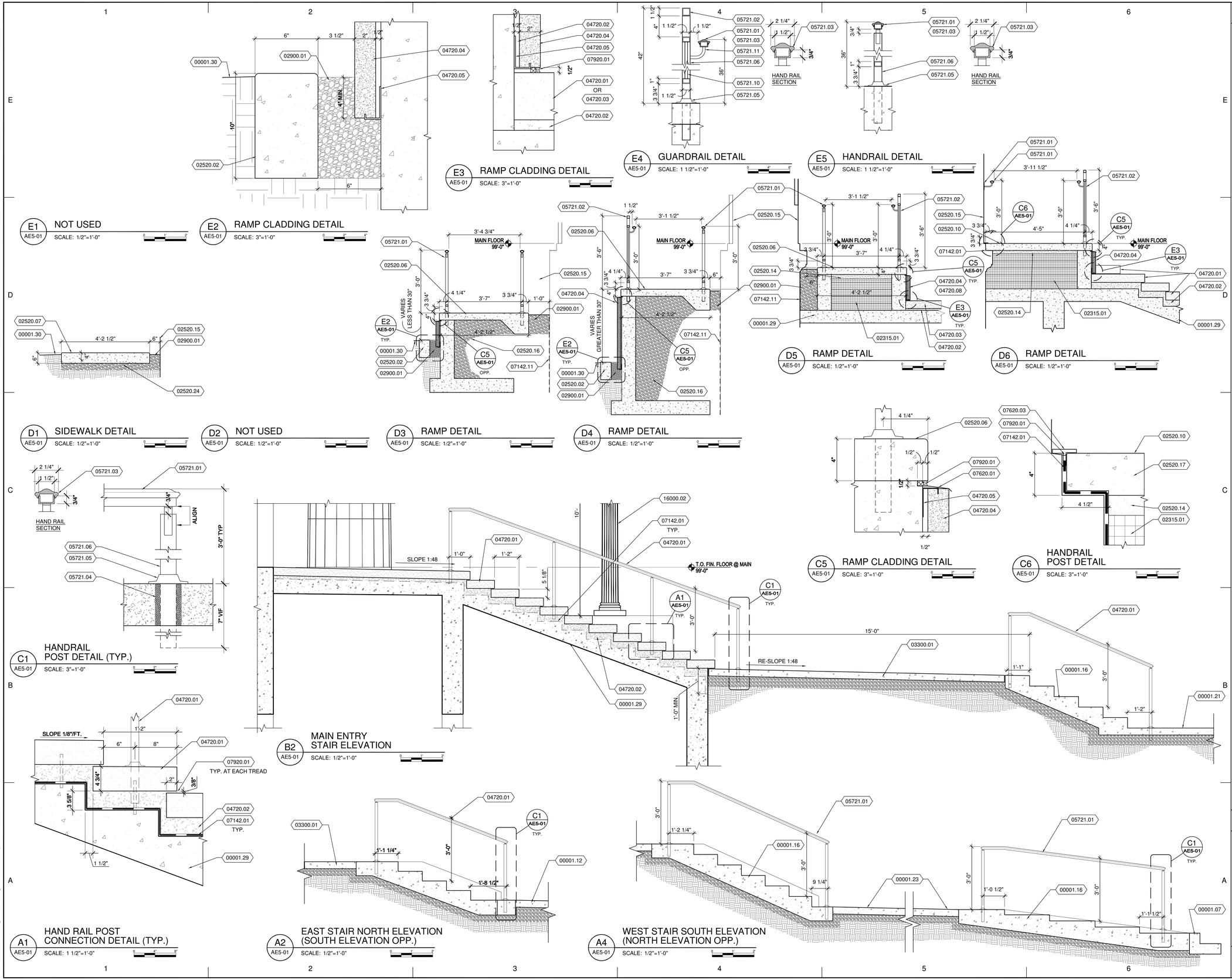

REFERENCE NOTES

00001.07	EXIST. CURB AND GUTTER
00001.12	EXISTING SIDEWALK
00001.16	EXIST. CONC. STAIRS TO REMAIN - PROTECT IN PLACE
00001.21	EXIST. CONC. WALKWAY OR STAIRS - PROTECT IN PLACE
00001.23	EXIST. SIDEWALK
00001.29	EXIST. CONC. STAIR STRUCTURE
00001.30	GRADE
02315.01	EPS GEOFOAM BACKFILL
02520.02	6" X 10" CONC. MOW STRIP
02520.06	ADA COMPLIANT CONC. RAMP, MAX SLOPE = 1:12, MAX CROSS SLOPE FOR DRAINAGE AWAY FROM EXIST. BUILDING = 1:48
02520.07	6" CONC. SIDEWALK, MAX SLOPE = 1:20
02520.10	ADA COMPLIANT LANDING, MAX SLOPE 1:48
02520.14	LEVELING SAND
02520.15	OUTLINE OF EXIST. EXTERIOR WALL
02520.16	GRAVEL BACKFILL
02520.17	#4 REBAR
02520.24	4" GRAVEL BED
02900.01	DRY GRAVEL MOAT, GRAVEL FILL CRUSHED GRANITE, APPROX. 1 1/2" DIA. - 4" MIN. DEPTH SUBMIT TO ARCHITECT FOR APPROVAL. 1/2" MAX BELOW ADJACENT CURB, RAMP, OR SIDEWALK
03300.01	CONCRETE SLAB ON GRADE
04720.01	CAST STONE STAIR TREADS
04720.02	GROUT
04720.03	CAST STONE CAP AND CLADDING ON CHEEK WALL, MATCH EXISTING.
04720.04	CAST STONE CLADDING
04720.05	STAINLESS STEEL STONE ANCHOR CLIP
04720.08	ALIGN WITH FACE OF CAST STONE RISER
05721.01	ORNAMENTAL BRONZE HANDRAIL, 36" ABOVE RAMP
05721.02	ORNAMENTAL BRONZE GUARDRAIL, 42" ABOVE RAMP
05721.03	ORNAMENTAL BRONZE HANDRAIL PERIMETER TO BE 4" TO 6 1/4"
05721.04	CORE DRILL & EPOXY GROUT INTO PLACE
05721.05	BRONZE 3-3/4" X 3-3/4" ESCUTCHEON
05721.06	BRONZE 1-1/2" X 1-1/2" SQUARE HANDRAIL POST, 5'-0" O.C. MAX U.N.O.
05721.10	1/2" X 1/2" BRONZE BALUSTER
05721.11	BRONZE HANDRAIL BRACKET AT EACH POST
07142.01	HOT FLUID-APPLIED RUBBERIZED ASPHALT WATERPROOFING
07142.11	DRAINAGE COMPOSITE, HELD AGAINST EXIST. FOUNDATION WALL OR CLADDING BY BACKFILL. TO RUN THE ENTIRE HEIGHT OF EXCAVATION, NO SEALANT OR ADHESIVE REQ'D.
07620.01	CONT. 16 OZ. COPPER FLASHING
07620.03	COPPER T-CAP
07920.01	SEALANT
16000.02	EXTERIOR LIGHT STANDARD (TORCHIERE), RE: ELECTRICAL.

REVISIONS:

PERMIT SET

DAUGHTERS OF UTAH PIONEERS PHASE II IMPROVEMENTS

DFCM PROJECT NO. 07273050
300 NORTH MAIN STREET, SALT LAKE CITY, UTAH 84103

MJSA
357 West Pierpont Avenue □ Salt Lake City, Utah 84101
Telephone 801 364 5161 □ Facsimile 801 364 5167
ARCHITECTURE INTERIOR DESIGN

STAMP

STATE OF UTAH
ROBERT J. MOSER
#1142
LICENSED ARCHITECT
7/12/10

THESE DRAWINGS ARE INSTRUMENTS OF SERVICE AND SHALL REMAIN THE PROPERTY OF THE ARCHITECT. NO USE OR RE-USE OF THESE DOCUMENTS SHALL BE PERMITTED UNLESS AUTHORIZED IN WRITING BY MJSA ARCHITECTS WITH APPROPRIATE COMPENSATION.

PROJECT NO.: 10011

DATE: 7/12/10

HAND RAIL DETAILS
SCALE: AS NOTED

SHEET: AE5-01

S:\10011 - DUP Museum\CAD\06_Sheets\AE5-01.dwg - Tue, 27 Jul 2010 - 5:40pm

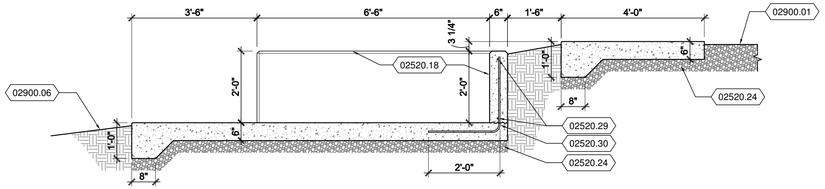

E1 AE5-02 SIDEWALK DETAIL
SCALE: 1/2"=1'-0"

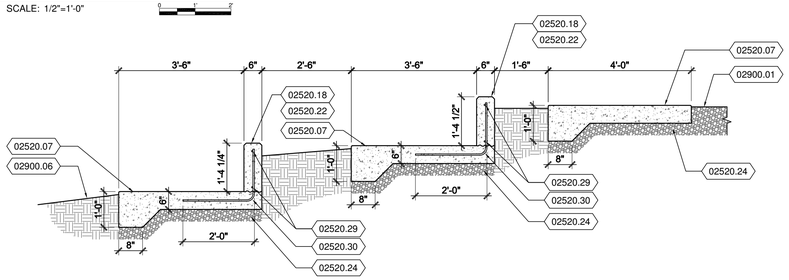

D1 AE5-02 SIDEWALK DETAIL
SCALE: 1/2"=1'-0"

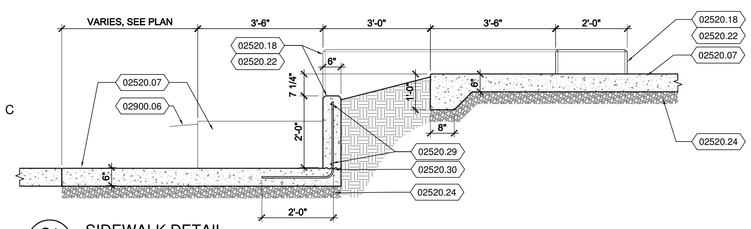

C1 AE5-02 SIDEWALK DETAIL
SCALE: 1/2"=1'-0"

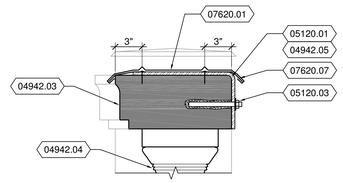

E5 AE5-02 BALUSTRADE CAP DETAIL
SCALE: 1 1/2"=1'-0"

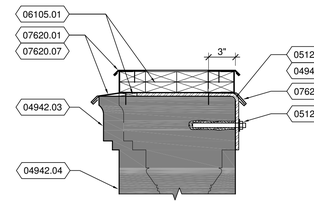

E6 AE5-02 BALUSTRADE CAP DETAIL
SCALE: 1 1/2"=1'-0"

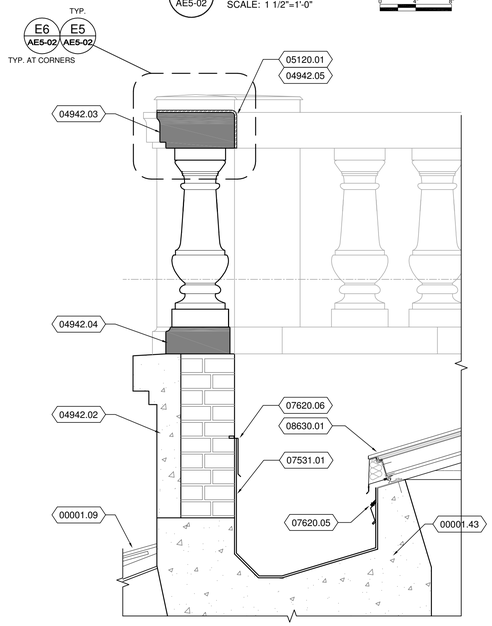

C4 AE5-02 PARAPET DETAIL
SCALE: 1"=1'-0"

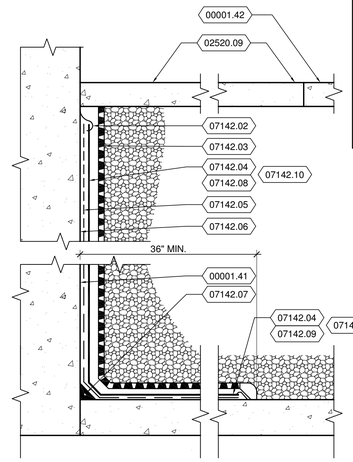

C5 AE5-02 WATERPROOFING DETAIL
SCALE: NTS

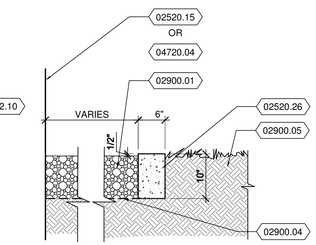

C6 AE5-02 GRAVEL DRY MOAT DETAIL
SCALE: 3/4"=1'-0"

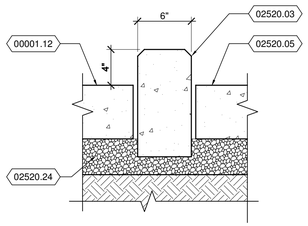

B1 AE5-02 CONC. CURB @ NE PARKING
SCALE: 1 1/2"=1'-0"

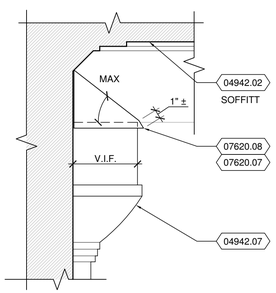

B2 AE5-02 FLASHING @ EXTERIOR SOFFITT
SCALE: 1 1/2"=1'-0"

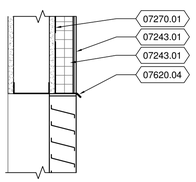

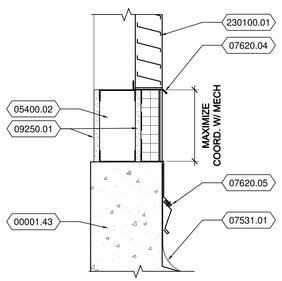

A3 AE5-02 LOUVER DETAIL
SCALE: 1 1/2"=1'-0"

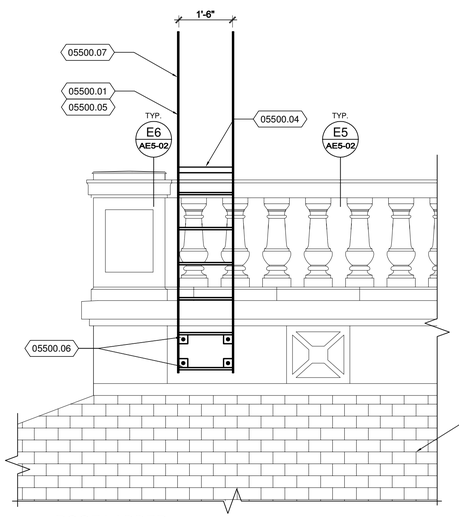

A4 AE5-02 ROOF LADDER SECTION & ELEVATION
SCALE: 1/2"=1'-0"

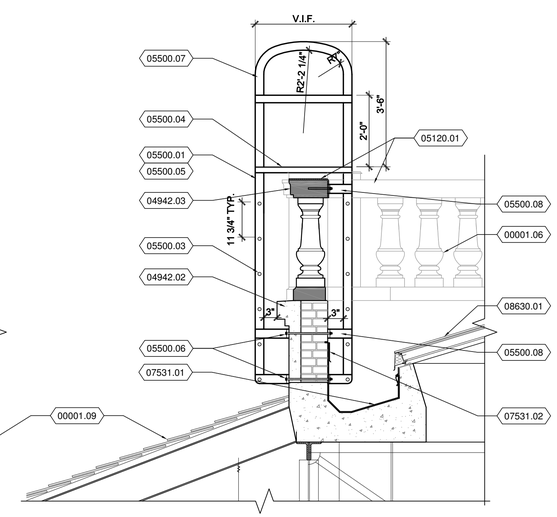

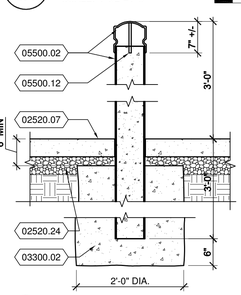

A1 AE5-02 BOLLARD DETAIL
SCALE: 3/4"=1'-0"

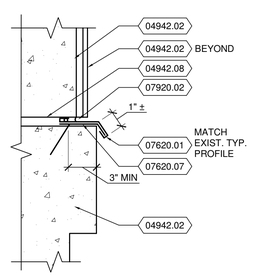

A2 AE5-02 FLASHING DETAIL
SCALE: 1 1/2"=1'-0"

REFERENCE NOTES (CONT.)

07620.06	CONT. 16 OZ. COPPER FLASHING SEALANT-SET IN REGLET/JOINT
07620.07	22 GA. SST HOLD-DOWN CLIPS AS NEEDED
07620.08	BIRD DETERRENT FLASHING, MATCH EXPOSED PROFILE OF DRIP AND SLOPE TOP TO REDUCE PERCH AREA. TYP. AT EACH COLUMN AT ENTRY
07920.02	SEALANT AND BACKER ROD
08630.01	GLASS SKYLIGHT
09250.01	5/8" EXTERIOR GRADE GYPSUM BOARD SHEATHING
230100.01	LOUVER, DUCT, DAMPER, ETC., RE: MECHANICAL

REFERENCE NOTES

00001.06	EXIST. BALUSTRADE / PARAPET
00001.09	EXISTING ROOF - PROTECT IN PLACE AND MINIMIZE FOOT TRAFFIC
00001.12	EXISTING SIDEWALK
00001.41	EXIST. FOUNDATION WALL
00001.42	EXIST. CONC. DRIVEWAY
00001.43	EXIST. CONC. STEM WALL / GUTTER
02520.03	CONC. PARKING CURB
02520.05	CONC. PARKING SURFACE
02520.07	6" CONC. SIDEWALK, MAX SLOPE = 1:20
02520.09	CONC. DRIVEWAY
02520.15	OUTLINE OF EXIST. EXTERIOR WALL
02520.18	6" CONC. CURB WALL
02520.22	3/4" CHAMFER - ALL EXPOSED EDGES, TYP.
02520.24	4" GRAVEL BED
02520.26	CONT. REINF. CONCRETE CURB/MOW STRIP
02520.29	#4 REBAR, CONT. AT TOP AND BOTTOM WHEN CURB WALL HEIGHT IS GREATER THAN 10", BOTTOM ONLY WHEN UNDER 10"
02520.30	#4 REBAR DOWEL AT 24" O.C. CENTERED IN SLAB
02900.01	DRY GRAVEL MOAT, GRAVEL FILL CRUSHED GRANITE, APPROX. 1 1/2" DIA.- 4" MIN. DEPTH SUBMIT TO ARCHITECT FOR APPROVAL, 1/2" MAX BELOW ADJACENT CURB, RAMP, OR SIDEWALK
02900.04	CONT. WEED BARRIER - DE-WHITT PRO-5 OR SIM.
02900.05	SOD, RE: LANDSCAPE
02900.06	REGRADE AS NECESSARY TO ACCOMMODATE NEW SIDEWALK
03300.02	CONCRETE FOOTING FOR BOLLARD
04720.04	CAST STONE CLADDING
04942.02	EXIST. CAST STONE CLADDING
04942.03	EXIST CAST STONE BALUSTRADE CAP
04942.04	FULL REPOINT OF CAST STONE BALUSTRADE W/ SANDED SEALANT
04942.05	MODIFY IN PLACE AS REQ'D CAST STONE BALUSTRADE CAP TO ALLOW FOR INSTALLATION OF BENT STEEL PLATE
04942.07	EXIST. CAST STONE PILASTER 'CORNER' SEGMENT (6 TOTAL)
04942.08	RAKE EXIST. MORTAR JOINT TO RECEIVE FLASHING
05120.01	CONT. GALV. STEEL BENT PLATE, ANCHORED TO ALL CAST STONE SEGMENTS, RE: STRUCTURAL DWGS.
05120.03	EPOXY ANCHOR, RE: STRUCTURAL
05400.02	STEEL STUD WALL, USE 350S-162-33 METAL STUDS AT 16" O.C.
05500.01	STAINLESS STEEL ACCESS LADDER
05500.02	BOLLARD - "IRONSMITH" MODEL #9028-6 OR SIM., 72" LONG, 36" ABOVE GROUND, DARK BRONZE
05500.03	STAINLESS STEEL NONSLIP RUNG 3/4" DIA.
05500.04	STAINLESS STEEL DIAMOND MESH PLATFORM ON STAINLESS STEEL ANGLE FRAME
05500.05	ACCESS LADDER TO CONFORM TO ALL APPLICABLE CODES
05500.06	STAINLESS STEEL THROUGH BOLT
05500.07	STAINLESS STEEL GUARDRAIL
05500.08	STAINLESS STEEL LADDER BRACKET
05500.12	1/2" REBAR CAST INTO CAP; 1-1/2" MIN. EMBED
06105.01	TREATED WOOD BLOCKING UNDER PEDESTAL CAP
07142.02	MASTIC OR VERTICAL GRADE 'LIQUISEAL'
07142.03	DRAINAGE COMPOSITE
07142.04	WATERPROOFING MEMBRANE
07142.05	PRIMER
07142.06	PREP (E) FOUNDATION SURFACE
07142.07	FILLET WITH 3/4" FACE
07142.08	EXTEND WATERPROOFING ON FOUNDATION WALL 24" PAST OUTSIDE FACE OF TUNNEL
07142.09	OVERLAP WATERPROOFING OVER EDGE OF TUNNEL CAP AND EXTEND WATERPROOFING 24" DOWN SIDE OF TUNNEL
07142.10	EXTENT OF WATERPROOFING TO BE DETERMINED AFTER EXCAVATION, SEE ALLOWANCE #2
07243.01	WATER DRAINAGE EIFS ON GABLE WALL
07270.01	2 PLY ASPHALT BLDG PAPER
07531.01	EPDM ROOFING MEMBRANE LINED GUTTER
07531.02	CONT. 16 OZ. COPPER FLASHING SEALANT-SET IN REGLET/JOINT
07620.01	CONT. 16 OZ. COPPER FLASHING
07620.04	COMPATIBLE METAL FLASHING
07620.05	CONT. 16 OZ. COPPER FLASHING W/ REPLACEABLE CONT. COPPER 'EXTENDER'

REVISIONS:

PERMIT SET

DAUGHTERS OF UTAH PIONEERS PHASE II IMPROVEMENTS
DFCM PROJECT NO. 07273050
300 NORTH MAIN STREET, SALT LAKE CITY, UTAH 84103

MJSA
357 West Pierpont Avenue □ Salt Lake City, Utah 84101
Telephone 801 364 5161 □ Facsimile 801 364 5167
ARCHITECTURE INTERIOR DESIGN

STAMP

STATE OF UTAH
ROBERT D. PETERSON
#1142
LICENSED ARCHITECT
7/12/10

THESE DRAWINGS ARE INSTRUMENTS OF SERVICE AND SHALL REMAIN THE PROPERTY OF THE ARCHITECT. NO USE OR RE-USE OF THESE DOCUMENTS SHALL BE PERMITTED UNLESS AUTHORIZED IN WRITING BY MJSA ARCHITECTS WITH APPROPRIATE COMPENSATION.

PROJECT NO.: 10011

DATE: 7/12/10

MISC. DETAILS
SCALE: AS NOTED

SHEET: AE5-02

S:\10011 - DUP Museum\CAD\08_Sheets\AE5-02.dwg , Tue, 27 Jul 2010 - 5:41pm

I. Design Criteria

A. Governing Building Code: 2006 International Building Code (IBC)

B. Floor Live Loading:
1. Exit Facilities & Corridors: ..... 100 psf Live Load
2. Catwalks for maintenance access: ..... 50 psf Live Load

C. Roof Live Loading:
1. Roof Live Load: ..... 20 psf
2. Roof Snow Load: ..... 30 psf + Drift per IBC
   a. Ground Snow Load, P_g: ..... 43 psf
   b. Snow Exposure Factor, C_e: 1.0
   c. Importance Factor, I_s: 1.0
   d. Thermal Factor, C_t: 1.0

D. Wind:
1. Basic Wind Speed (3-second gust): ..... 90 mph
2. Importance Factor, I_w: 1.0
3. Exposure: ..... B
4. Internal Pressure Coefficient, GC_{pi}: 0.18
5. Topographic Factor, K_{zt}: 1.0

E. Foundation:
1. Soil Bearing Pressure: ..... 2000 psf
2. Lateral Soil Pressure Fluid Equivalent Density.
   a. Active: ..... 35 pcf (retaining walls)
   b. At Rest: ..... 55 pcf (rigid foundation walls)
   c. Passive: ..... 300 pcf
   d. Increase for Seismic: ..... 20 pcf
3. Coefficient of Friction: 0.35

II. Earthwork

A. Proof rolling: The natural undisturbed soil below all footings shall be proof rolled prior to placing concrete. Remove all soft spots and replace with compacted structural fill.

B. Compacted structural fill: All fill material shall be a well-graded granular material with a maximum size less than 4 inches and with not more than 10 percent passing a No. 200 sieve. It shall be compacted to 95 percent of the maximum laboratory density as determined by ASTM D1557. All fill shall be tested (See Specifications and the Quality Assurance section of the GSN).

III. Concrete

A. Materials shall comply with the Standards specified in American Concrete Institute (ACI) 318-05, "Building Code Requirements for Structural Concrete."
1. Compressive strengths of concrete at 28 days shall be as follows:
   a. Footings: ..... 3000 psi
   b. Slabs on Grade: ..... 3000 psi
   c. Walls: ..... 4000 psi
   d. Joists, Beams and Suspended Slabs: ..... 4000 psi
   e. All other Site Cast Concrete: ..... 4000 psi
2. Concrete Density (Maximum Air Dry Weight):
   a. Normal weight concrete shall be approximately 145 to 155 pounds per cubic foot.
3. Reinforcement steel:
   a. ASTM A615 Grade 60, fy = 60,000 psi min. unless noted otherwise.
   b. Reinforcement at concrete moment frames and shear wall jambs shall be ASTM A706 or ASTM A615 Grade 60, with the following properties:
      (1) Actual yield strength based on mill tests shall not exceed 78,000 psi.
      (2) Retest shall not exceed 81,000 psi.
      (3) Ratio of actual ultimate tensile stress to the actual yield strength shall not be less than 1.25.
      (4) Mill tests shall be submitted to the Engineer.
4. Admixtures:
   a. Air-entraining admixtures, comply with ASTM C 260 (when used).
      (1) When air content of a trowel finished floor slab exceeds 3%, there is an increased risk for delaminations and blistering to occur. When this situation is present, the contractor shall pay special attention to the finishing procedures to help minimize such risks. Refer to ACI 302.1R-96 "Guide for Concrete Floor and Slab Construction" for proper finishing guidelines.
   b. Calcium chloride shall not be added to the concrete mix.
5. Only one grade or type of concrete shall be poured on the site at any given time.
6. Plastic coated tie wires and chairs shall be used to support reinforcing bars, tie bars and tendons.

B. Formwork shall comply with ACI Standards Publication 347 and the project specifications. The contractor shall be responsible for the design, detailing, care, placement and removal of the formwork and shores.

C. Concrete cover requirements for deformed bar reinforcing steel shall comply with ACI 318, "Building Code Requirements for Structural Concrete".
1. Cast-in-place Concrete: Clear Cover
   a. Cast against and permanently exposed to earth: ..... 3"
   b. Formed concrete exposed to earth or weather:
      #5 and smaller bars ..... 1 1/2"
   c. Concrete not exposed to weather or in contact with ground:
      Walls; #11 bars and smaller ..... 3/4"

D. Construction Joints and Control Joints:
1. Provide a continuous 2 X 4 keyway or a surface intentionally roughened to a full amplitude of approximately ¼" in all wall footings. Adjust the keyway as necessary to provide for proper bar placement.
2. All vertical construction joints shall have a continuous 2 X 4 keyway along the joint or joints shall be intentionally roughened to a full amplitude of approximately ¼", unless noted otherwise.
3. Provide reinforcement dowels to match the member reinforcement across the joint.
4. Construction joints in suspended concrete pours shall be made at the center of spans.
5. Control joints shall be installed in slabs on grade so the length to width ratio of the slab is no more than 1.25:1. Control joints shall be completed within 12 hours of concrete placement. Control joints may be installed by:
   a. Saw cut a depth of 1/4 the thickness of the slab
   b. Tooled joints a depth of 1/4 the thickness of the slab

E. Detailing: All reinforcing shall be detailed, bolstered & supported to comply with ACI 315, "Details and Detailing of Concrete Reinforcement" and the Concrete Reinforcing Steel Institute (CRSI) recommendations. Reinforcing bars shall not be welded unless specifically shown on drawings.
1. Lap splice lengths shall be detailed to comply with the "Reinforcing Bar Lap Splice Schedule" contained within the contract drawings
2. All embedments and dowels shall be securely tied to formwork or to adjacent reinforcing prior to the placement of concrete.
3. Use chairs or other support devices recommended by the CRSI to support and tie reinforcement bars prior to placing concrete.
4. Provide corner bars at intersecting wall corners using the same bar size and spacing as the horizontal wall reinforcing. Unless noted otherwise, corner bar lap lengths shall conform with reinforcing bar lap splice lengths as noted above.
5. All vertical reinforcing shall be doweled to footings, or to the structure below. Dowels shall be the same size and at the same spacing as the vertical reinforcing scheduled (or detailed) for the element above. Lap splice lengths shall comply as noted above or as shown in the drawings. Dowels extending into footings shall terminate with a 90 degree standard ACI hook and shall extend to within 4" of the bottom of the footing. Footing dowels (#8 bars and smaller) with hooks need not extend more than 20" into footings.
6. Horizontal wall reinforcing shall terminate at ends of walls and openings into the far end of the jamb column with a 90-degree standard ACI hook, unless shown otherwise. Lap horizontal bar splices as noted above or as shown in the drawings. Horizontal wall reinforcing shall be continuous through construction and control joints. Splices in horizontal reinforcement shall be staggered, so the splice laps will not overlap. Splices in two curtains where used shall not occur in the same location, splice laps shall not overlap.
7. Contractor shall coordinate placement of all openings, curbs, dowels, sleeves, conduits, bolts, inserts and other embedded items prior to concrete placement.
8. All reinforcement shall be bent cold, and shall be bent only once at the same location. All reinforcement shall be shop bent, unless otherwise permitted by the engineer.

F. Minimum Reinforcing: Wall reinforcing shall be as follows, unless noted otherwise:

Wall Thickness	Horizontal Reinf.	Vertical Reinf.
6"	#4 @ 13" o.c.	#4 @ 18" o.c.
8"	#5 @ 15" o.c.	#4 @ 16" o.c.
10"	#5 @ 12" o.c.	#4 @ 13" o.c.
12"	#4 @ 13" o.c. Each Face	#4 @ 18" o.c. Each Face
Others	0.25% of Wall Area	0.15% of Wall Area

Place steel in the center of the wall (except in walls thicker than 10" and where shown otherwise). Walls thicker than 10" shall have two curtains of reinforcing (placed near each face of the wall), unless otherwise shown on the structural drawings. Spacing shall not exceed three times the wall thickness nor 18". In addition to the above reinforcing, 2 - #5 (or 1 - #7 in 10" walls and thinner) x continuous horizontal bars shall be placed at the bottom of the wall (near the footing) and at each floor level, at the roof level and at the top of wall.

G. No aluminum conduit or product containing aluminum or any other material injurious to concrete shall be embedded in concrete.

H. Unless otherwise noted, all slabs on grade shall be 4" thick.

IV. Structural Steel

A. Material:
1. Rectangular and Square Hollow Structural Sections (HSS): ASTM A500, Grade B (Fy = 46 ksi).
2. All Other Shapes and Plates: ASTM A36 (Fy = 36 ksi), except as noted otherwise

B. Fabrication and construction shall comply with the following Codes and Standards:
1. American Institute of Steel Construction (AISC) 360-05, "Specification for Structural Steel Buildings," dated March 9, 2005.
2. AISC 303-05, "Code of Standard Practice for Steel Buildings and Bridges" excluding the following: Section 3.3 (last sentence of first paragraph), Section 4.4, Section 4.4.1, Section 4.4.2, Section 4.5, and Section 7.13.3.
   a. The architectural drawings are the prime contract drawings. Consultants' drawings by other disciplines are supplementary to the architectural drawings. The structural drawings shall be used in conjunction with the architectural drawings. Detailing and shop drawing production for structural elements will require information (including dimensions) contained in architectural, structural, and/or other consultants' drawings. Refer to VII. Special Instructions, notes VII.B and VII.C on this sheet.
3. AISC/RCSC 2004, "Specification for Structural Joints Using ASTM A325 or A490 Bolts"
4. American Welding Society (AWS) D1.1-04, "Structural Welding Code – Steel" (specific items do not apply when they conflict with the AISC requirements).

C. Structural shapes and plates shall be fabricated from newly rolled (milled) one-piece sections without splices, unless specifically noted otherwise on the structural drawings. Connections for structural steel shall comply with the structural drawings, unless written approval is given by the structural engineer.

D. Welding:
1. Certification of Welders: All shop and field welding shall be executed by AWS certified welders who have been specifically certified for the type of work to be performed. Certification shall be considered current if dated within the past 12 months. Welders will be considered certified if they have been certified under AWS and their work records are current within every six-month period thereafter as required by AWS. Certification and records must comply with AWS Standards. Certification and appropriate records must be provided to the architect prior to beginning work.
2. Electrodes: E-70 XX or as noted otherwise. E60 XX may be used for welding steel floor and roof decks.
3. Minimum Welds: All intersecting steel shapes that are not bolted shall be connected by a fillet weld all around, unless noted otherwise. Fillet weld sizes that are not shown shall be 1/16" less than the thinnest of the connected parts for thicknesses 1/4" and larger. Fillet welds on plates less than 1/4" shall be of the same size as the thinnest of the connected parts.
4. Reinforcing Bars: Do not weld rebar except as specifically detailed in the drawings. In such cases, use only AWS standards. Do not substitute reinforcing bars for deformed bar anchors (DBAs), machine bolts, or headed stud anchors (HSAs).
5. Bolts: Do not apply any welds, including "tack" welds to bolts, including anchor bolts, except as specifically detailed in the drawings.
6. It is recommended the steel erection contractor and steel fabricator contact the Quality Assurance Agency prior to beginning any of the above welds. A program of joint preparation and welding procedures should be worked out between the two parties before the welding is started so that correct welds will be made from the beginning.

E. Bolted Connections:
1. Use ASTM A325N bolts for steel to steel connections, as noted herein or as noted on the drawings. A325N bolts shall be used in connections for simple span framing and beam (or girder) to bearing plate connections. Tighten bolts to a snug tight condition. A snug tight condition is usually attained by a few impacts of an impact wrench or the full effort of a man using an ordinary spud wrench. Bolts shall be tightened until all plies of the joint are in firm contact.
2. Provide hardened washers beneath the turned element of all bolts or nuts. Provide hardened beveled washers, to compensate for the lack of parallelism, where the outer face of the bolted parts has a slope greater than one in twenty with respect to the plane normal to the bolt axis. Hardened washers or plates installed over oversized holes or slotted holes shall be at least 5/16" thick and shall conform to ASTM F436. Plates or bars installed at slotted holes shall have a size sufficient to completely cover the slot after installation.
3. Where a steel to steel beam connection is not detailed in the drawings, provide a standard AISC framed connection with the capacity to support one half of the total uniform load capacity of the given shape for the span and for the steel specified.
4. Bolts, nuts and washers shall not be reused.

V. Special Instructions

A. The project specifications are not superseded by the General Structural Notes but are intended to be complementary to them. Consult the specifications for additional requirements in each section. Notes and specific details on the drawings shall take precedence over General Structural Notes and typical details.

B. The architectural drawings are the prime contract drawings. Consultant drawings by other disciplines are supplementary to the architectural drawings. All omissions or conflicts, including dimensions, between the various elements of the consultants' drawings and/or specifications shall be brought to the attention of the Architect before proceeding with any work involved. In case of conflict, follow the most stringent requirement as directed by the Architect without additional cost to the owner. Any work done by the contractor after discovery of such discrepancy shall be done at the contractor's risk.

C. The structural drawings shall be used in conjunction with the architectural drawings. Primary structural elements and overall structural layout are indicated within the structural plans and details. Some secondary elements, architectural layouts, alcoves, elevations, slopes, depressions, curbs, mechanical equipment and electrical equipment, are not indicated within the structural drawings. Detailing and shop drawing production for structural elements will require information (including dimensions) contained in the architectural, structural and/or other consultants' drawings.

D. Submittals: A copy of all shop drawings that have been submitted for review must be kept at the construction site for reference. These drawings must bear the appropriate review stamps. The shop drawing review shall not relieve the contractor of the responsibility of completing the project according to the contract documents. The general contractor shall review and mark all shop drawings prior to submitting them to the Architect for his review. Shop Drawings made from reproductions of (these) contract drawings will be rejected.

E. Project Coordination: It shall be the responsibility of the general contractor to coordinate with all trades any and all items that are to be integrated into the structural system. Openings or penetrations through, or attachments to the structural system that are not indicated on these drawings shall be the responsibility of the general contractor and shall be coordinated with the Architect/Engineers. The order of construction is the responsibility of the general contractor. It is the contractor's obligation to provide all items necessary for his chosen procedure.

F. Contractor shall field verify all dimensions, and conditions. If the contract drawings do not represent actual conditions, contractor shall notify architect/engineer prior to fabrication or construction within that area.

G. Notice of Copyright: The structural drawings, plans, schedules, notes and details are hereby copyrighted by Reaveley Engineers and Associates, Inc., All Rights reserved. Submission or distribution of documents to meet official regulatory requirements or for similar purposes in connection with the project is not to be construed as publication in derogation of Reaveley Engineers & Associates, Inc.'s reserved rights. The documents defining the structure are instruments of service prepared by Reaveley Engineers and Associates, Inc. for one use only. Furthermore, these documents shall not be reproduced, or copied, in whole or in part by the contractor or his subcontractors for preparation of shop drawings or other submittals.

REFERENCE NOTES

REVISIONS:

PERMIT SET

DAUGHTERS OF UTAH PIONEERS PHASE II IMPROVEMENTS
DFCM PROJECT NO. 07273050
300 NORTH MAIN STREET, SALT LAKE CITY, UTAH 84103

MJSA
357 West Pierpont Avenue □ Salt Lake City, Utah 84101
Telephone 801 364 5161 □ Facsimile 801 364 5167
ARCHITECTURE INTERIOR DESIGN

STAMP

PROFESSIONAL STRUCTURAL ENGINEER
No. 295733
JEROD G. JOHNSON
STATE OF UTAH

THESE DRAWINGS ARE INSTRUMENTS OF SERVICE AND SHALL REMAIN THE PROPERTY OF THE ARCHITECT. NO USE OR RE-USE OF THESE DOCUMENTS SHALL BE PERMITTED UNLESS AUTHORIZED IN WRITING BY MJSA ARCHITECTS WITH APPROPRIATE COMPENSATION.

PROJECT NO.: 10011

DATE: 7/12/10

GENERAL STRUCTURAL NOTES

SCALE: NO SCALE

SHEET: SE001

G:\data\Projects\2010\2010-133-Daughters-of-Utah-Pioneers-Skylight-Evaluation\Drawings\2010-133-SE001.dwg - Mon, 26 Jul 2010 - 3:39pm

VI. Quality Assurance

A. Quality Assurance Agency Requirements:
1. The owner shall engage a qualified Quality Assurance Agency (QAA) to provide all special inspection and quality assurance testing for the project. All quality assurance personnel assigned to the project shall demonstrate competence, to the satisfaction of the building official, for inspection of the particular type of construction or operation requiring special inspection.
2. Prior to construction, the QAA shall prepare a written Quality Assurance Implementation Plan (QAIP) for the project. The QAIP shall include a list of personnel assigned to the project including management personnel, inspection procedures and frequency, proposed testing methods and frequency of testing, and reporting procedures. The QAIP shall also outline methods of documenting deficiencies and reporting corrections. A copy of the QAIP shall be given to the contractor for review and coordination with subcontractors.
3. Prior to construction, the QAA shall submit the following information to the Architect and Engineer of Record for approval:
   a. A copy of the Quality Assurance Implementation Plan for the project.
   b. A copy of the appropriate certification and training records for each individual performing inspections or testing.
   c. A list of the testing equipment designated for the project and recent calibration records for the equipment.
   d. Sample inspection and testing reports and the distribution list for the reports.
4. The special inspector shall inspect the work per Chapter 17 of the IBC for conformance with the contract documents. The special inspector shall send reports to the owner, building official, architect, engineer, and contractor. All discrepancies shall be brought to the immediate attention of the contractor for correction. The QAA shall submit a final signed report stating that the special inspection work was, to the best of their knowledge, in conformance with the plans, specifications and applicable workmanship provisions of the IBC.

B. Special Inspection: Special Inspection shall be provided for the following elements per IBC sections 1704 and 1707:
1. Concrete and elements embedded in concrete shall be special inspected prior to and during placement of concrete. Special inspection of concrete shall include the following:
   a. Reinforcing steel size and placement.
   b. Surface preparation at cold joints including placement of keyways.
   c. Bolt and embed size, configuration and placement.
   d. Concrete shall receive continuous special inspection during placement, and periodic inspection after placement to ensure proper curing and weather protection procedures.
2. Structural steel fabrication and erection shall be special inspected, including the following:
   a. Fillet welds smaller than 5/16" per AWS D1.1.
3. Post-installed anchors, including but not limited to expansion anchors, adhesive anchors and rebar dowels, and low velocity fasteners, shall receive special inspection per the code evaluation reports for the anchors.
   a. Continuous special inspection is required during the installation of all adhesive anchors and rebar dowels. Special inspector shall verify the following:
      (1) Anchor size and steel grade.
      (2) Hole diameter, location, and type of drill bit.
      (3) Cleanliness of hole and anchor.
      (4) Adhesive application.
      (5) Anchor embedment.

C. Structural Testing: The following materials shall be tested per IBC sections 1704 and 1708. The owner reserves the right to test any and all materials using any appropriate non-destructive procedure. Any items found to be deficient shall be corrected and retested at no additional cost to the owner.
1. Earthwork: All compacted structural fill shall be tested to verify soil gradation, lift thickness, and compaction requirements. See the specifications and earthwork section of the GSN for testing frequency and acceptability criteria.
2. Concrete Strength Verification and Testing. All concrete shall be tested to verify strength, slump, unit weight, air content, and temperature. See the specifications for testing criteria, testing frequency and acceptability criteria.
3. Post-installed anchors, including but not limited to expansion anchors, adhesive anchors, and low velocity fasteners, shall be tested per the code evaluation reports for the anchors.

D. Structural Observations by the Engineer of Record.
1. The Engineer of Record may perform structural observations at critical phases of the project. Copies of the engineer's report will be distributed to the architect, contractor, owner, and QAA.
2. Observation visits to the site by the Engineer's field representatives shall not be construed as inspection or approval of construction.
3. Notification of Engineer: The contractor shall notify the engineer twenty-four hours prior to:
   a. Placing concrete in any footing.
   b. Closing any wall forms.
   c. Placing concrete in any suspended slab.

E. Contractor Responsibility: The contractor shall prepare and submit a written statement of responsibility to the building official and the owner prior to commencement of work on the project. As a minimum the statement shall contain the following information:
1. Acknowledgement of the quality assurance requirements for the structure.
2. Acknowledgement of receipt of the Quality Assurance Implementation Plan (QAIP) from the testing agency.
3. Acknowledgement that control will be exercised to obtain conformance to the Contract Documents and the QAIP.
4. Quality control procedures within the contractors organization, methods and frequency of reporting, and distribution of the reports.
5. Identification and qualifications of the person(s) responsible for quality control and their position(s) in the organization.

REFERENCE NOTES

REVISIONS:

PERMIT SET

DAUGHTERS OF UTAH PIONEERS PHASE II IMPROVEMENTS
DFCM PROJECT NO. 07273050
300 NORTH MAIN STREET, SALT LAKE CITY, UTAH 84103

MJSA
357 West Pierpont Avenue □ Salt Lake City, Utah 84101
Telephone 801 364 5161 □ Facsimile 801 364 5167
ARCHITECTURE INTERIOR DESIGN

STAMP

PROFESSIONAL STRUCTURAL ENGINEER
No. 295733
JEROD G. JOHNSON
STATE OF UTAH

THESE DRAWINGS ARE INSTRUMENTS OF SERVICE AND SHALL REMAIN THE PROPERTY OF THE ARCHITECT. NO USE OR RE-USE OF THESE DOCUMENTS SHALL BE PERMITTED UNLESS AUTHORIZED IN WRITING BY MJSA ARCHITECTS WITH APPROPRIATE COMPENSATION.

PROJECT NO.: 10011

DATE: 7/12/10

GENERAL STRUCTURAL NOTES

SCALE: NO SCALE

SHEET: SE002

G:\data\Projects\2010\2010-133-Daughters-of-Utah-Pioneers-Skylight-Evaluation\Drawings\2010-133-SE002.dwg - Mon, 26 Jul 2010 - 3:36pm

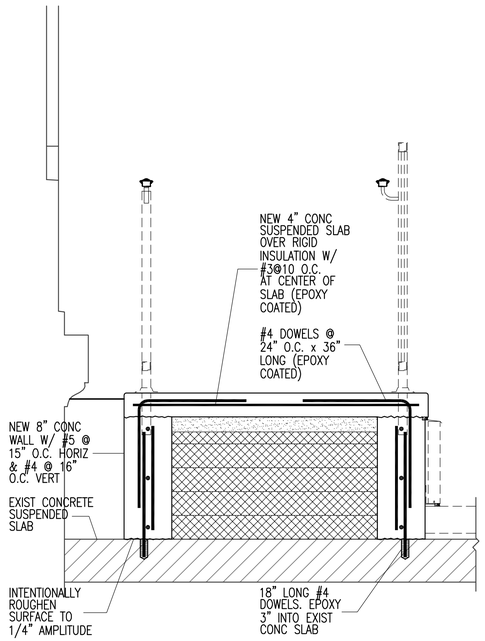

C2 / SB501 NEW CONCRETE SUSPENDED SLAB WALKWAY
NO SCALE

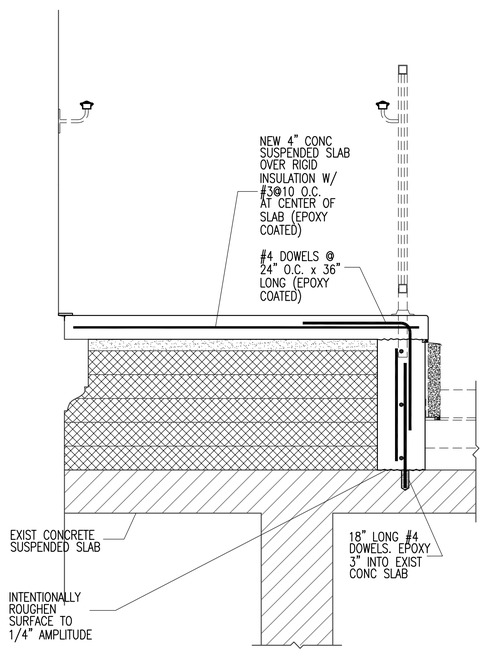

A2 / SB501 NEW CONCRETE SUSPENDED SLAB WALKWAY
NO SCALE

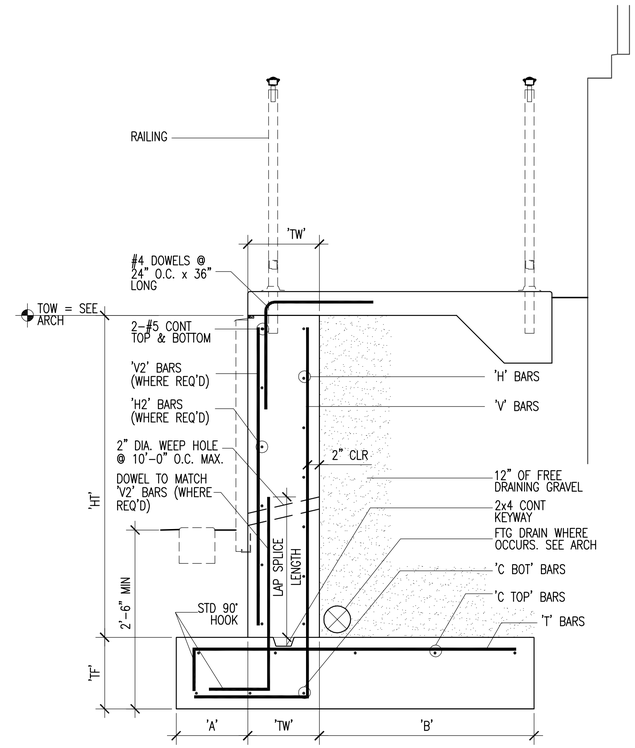

CONCRETE RETAINING WALL SCHEDULE

CRW-RICK

MARK	'HT'	'A'	'B'	'TW'	'TF'	'V' BARS		'H' BARS		'V2' BARS		'H2' BARS		'T' BARS		'C TOP' BARS		'C BOT' BARS	
						SIZE	SPACE	SIZE	SPACE	SIZE	SPACE	SIZE	SPACE	SIZE	SPACE	SIZE	SPACE	SIZE	SPACE
CRW-1	4'-0"	0'-6"	2'-10"	0'-8"	1'-0"	#4	18"	#4	10"	-	-	-	-	#4	9"	6-#4	8.4"	2-#4	8"
CRW-2	6'-0"	1'-0"	3'-6"	0'-8"	1'-0"	#4	9"	#4	10"	-	-	-	-	#4	9"	8-#4	8.5"	2-#4	8"

NOTES:
1. 'V' BARS SHALL NOT BE SPLICED BELOW MID-HEIGHT OF WALL
2. FOR WALLS WITH 'HT' OF 9'-0" & GREATER. ONE HALF OF THE 'V' BARS CAN BE DISCONTINUED FROM MID-HEIGHT TO TOP OF WALL.

A3 / SB501 TYPICAL CONCRETE RETAINING WALL SCHEDULE AND DETAIL
NO SCALE
CRW-1

REFERENCE NOTES

REVISIONS:

PERMIT SET

DAUGHTERS OF UTAH PIONEERS PHASE II IMPROVEMENTS
DFCM PROJECT NO. 07273050
300 NORTH MAIN STREET, SALT LAKE CITY, UTAH 84103

MJSA
357 West Pierpont Avenue □ Salt Lake City, Utah 84101
Telephone 801 364 5161 □ Facsimile 801 364 5167
ARCHITECTURE INTERIOR DESIGN

STAMP

THESE DRAWINGS ARE INSTRUMENTS OF SERVICE AND SHALL REMAIN THE PROPERTY OF THE ARCHITECT. NO USE OR RE-USE OF THESE DOCUMENTS SHALL BE PERMITTED UNLESS AUTHORIZED IN WRITING BY MJSA ARCHITECTS WITH APPROPRIATE COMPENSATION.

PROJECT NO.: 10011

DATE: 7/12/10

DETAILS

SCALE: 1" = 1'-0

SHEET: SB501

G:\data\Projects\2010\2010-133-Daughters-of-Utah-Pioneers-Skylight-Evaluation\Drawings\2010-133-SB501.dwg - Mon, 26 Jul 2010 - 3:56pm

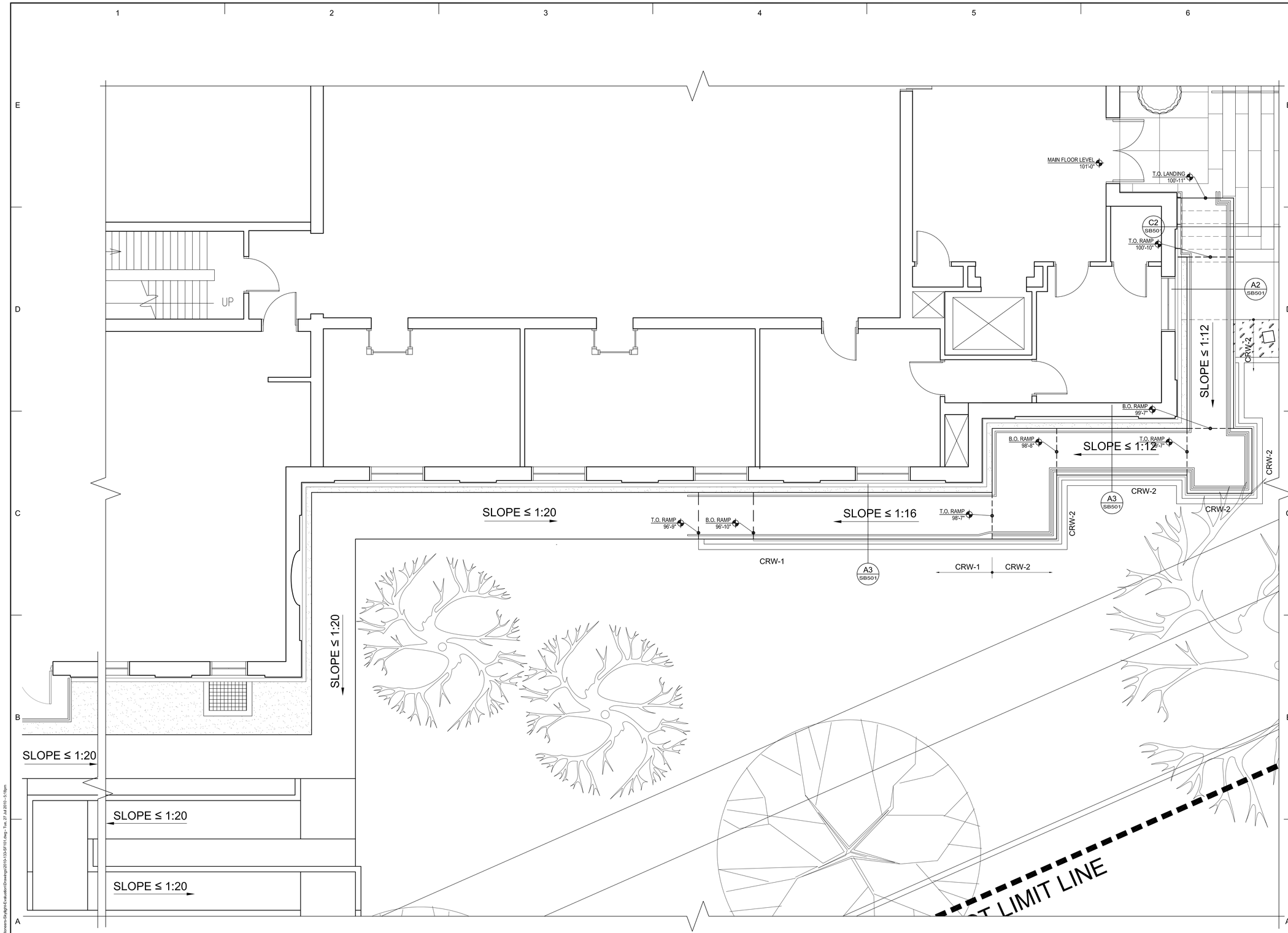

A1 SF101 RAMP LAYOUT - WEST SIDE RAMP

SCALE: 1/4"=1'-0"

N

REFERENCE NOTES

REVISIONS:

PERMIT SET

DAUGHTERS OF UTAH PIONEERS PHASE II IMPROVEMENTS

DFCM PROJECT NO. 07273050

300 NORTH MAIN STREET, SALT LAKE CITY, UTAH 84103

MJSA

357 West Pierpont Avenue □ Salt Lake City, Utah 84101

Telephone 801 364 5161 □ Escalante 801 364 5167

ARCHITECTURE INTERIOR DESIGN

STAMP

PROFESSIONAL STRUCTURAL ENGINEER
No. 295733
JEROD C. JOHNSON
STATE OF UTAH

THESE DRAWINGS ARE INSTRUMENTS OF SERVICE AND SHALL REMAIN THE PROPERTY OF THE ARCHITECT. NO USE OR REUSE OF THESE DOCUMENTS SHALL BE PERMITTED UNLESS AUTHORIZED IN WRITING BY MJSA ARCHITECTS WITH APPROPRIATE COMPENSATION.

PROJECT NO.: 10011

DATE: 7/12/10

SHEET: SF101

WEST SIDE RAMP LAYOUT

SCALE: 1/4" = 1'-0"

G:\data\Projects\2010\2010-133-Daughters-of-Utah-Pioneers-Skylight-Evaluation\Drawings\2010-133-SF101.dwg - Tue, 27 Jul 2010 - 5:18pm

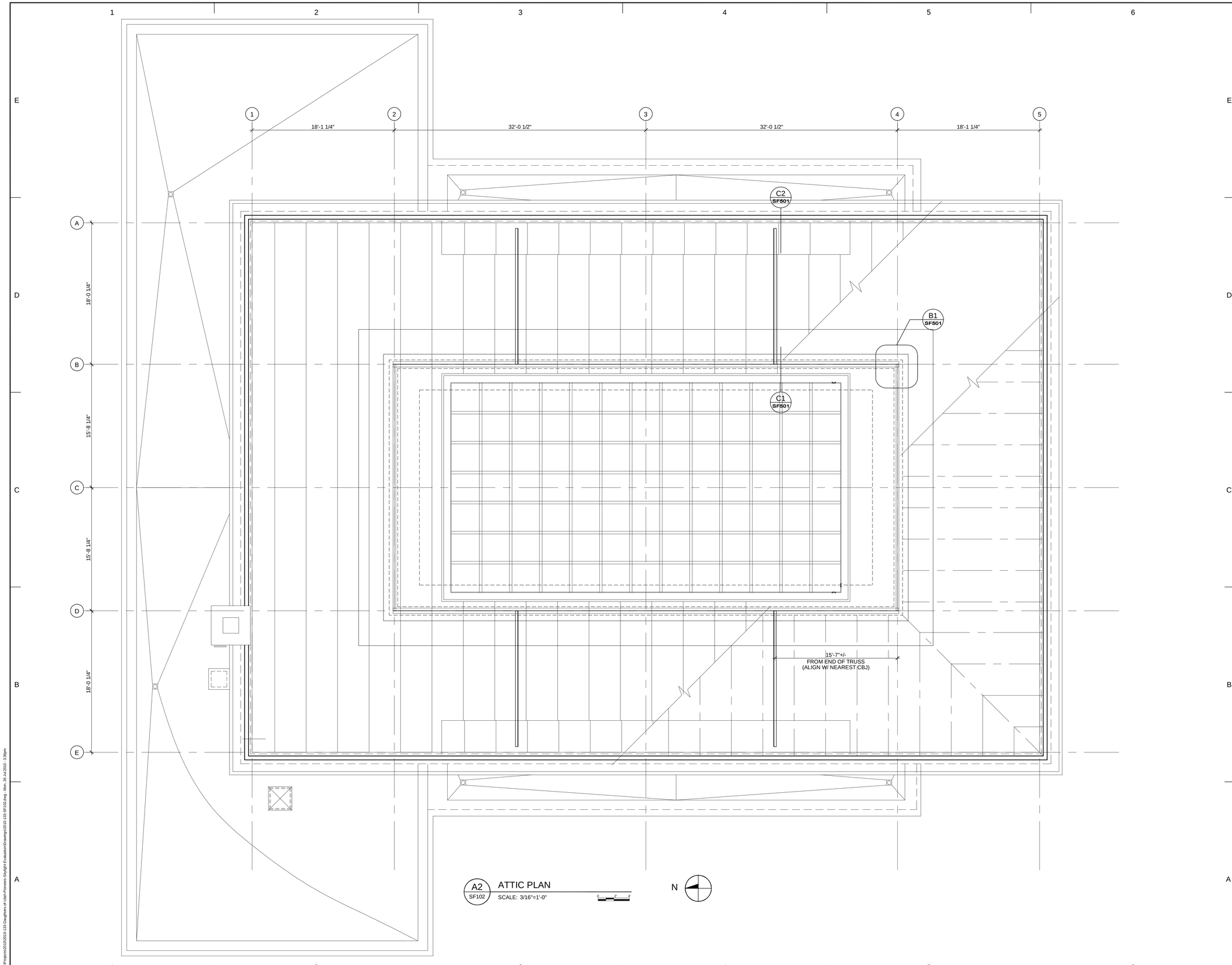

A2
SF102

ATTIC PLAN

SCALE: 3/16"=1'-0"

REFERENCE NOTES

REVISIONS:

PERMIT SET

DAUGHTERS OF UTAH PIONEERS PHASE II IMPROVEMENTS

DFCM PROJECT NO. 07273050

300 NORTH MAIN STREET, SALT LAKE CITY, UTAH 84103

MJSA

357 West Pierpont Avenue □ Salt Lake City, Utah 84101

Telephone 801 364 5161 □ Facsimile 801 364 5167

ARCHITECTURE INTERIOR DESIGN

STAMP

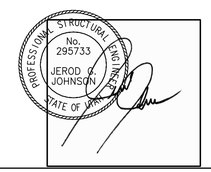

THESE DRAWINGS ARE INSTRUMENTS OF SERVICE AND SHALL REMAIN THE PROPERTY OF THE ARCHITECT. NO USE OR RE-USE OF THESE DOCUMENTS SHALL BE PERMITTED UNLESS AUTHORIZED IN WRITING BY MJSA ARCHITECTS WITH APPROPRIATE COMPENSATION.

PROJECT NO.: 10011

DATE: 7/12/10

ATTIC PLAN

SCALE: 3/16" = 1'-0"

SHEET: SF102

G:\data\Projects\2010\2010-133-Daughters-of-Utah-Pioneers-Skylight-Evaluation\Drawings\2010-133-SF102.dwg - Mon, 26 Jul 2010 - 3:36pm

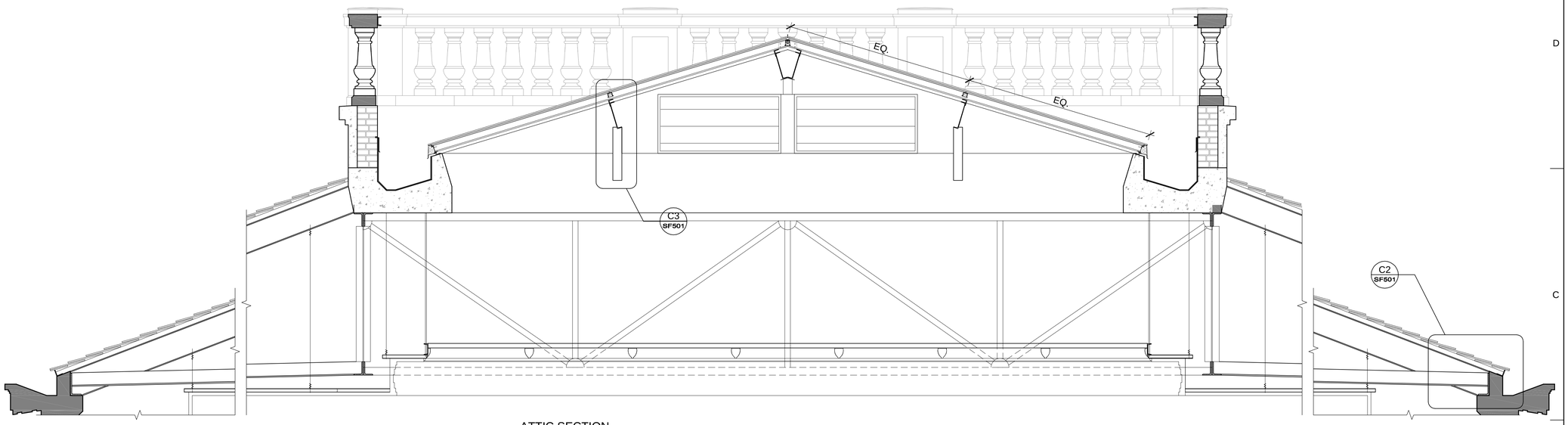

C1 SF201 ATTIC SECTION AT WALL

SCALE: 1/4"=1'-0"

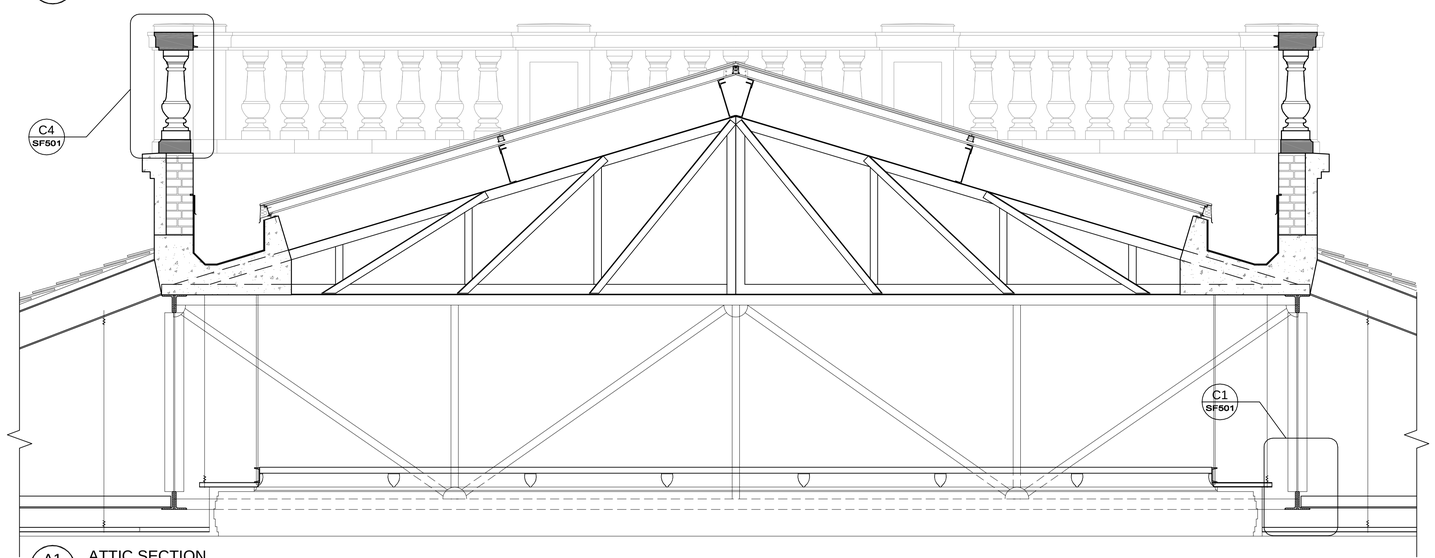

A1 SF201 ATTIC SECTION

SCALE: 1/4"=1'-0"

REFERENCE NOTES

REVISIONS:

PERMIT SET

DAUGHTERS OF UTAH PIONEERS PHASE II IMPROVEMENTS

DFCM PROJECT NO. 07273050

300 NORTH MAIN STREET, SALT LAKE CITY, UTAH 84103

MJSA

357 West Pierpont Avenue □ Salt Lake City, Utah 84101

Telephone 801 364 5161 □ Facsimile 801 364 5167

ARCHITECTURE INTERIOR DESIGN

STAMP

PROFESSIONAL STRUCTURAL ENGINEER No. 295733 JEROD G. JOHNSON STATE OF UTAH

THESE DRAWINGS ARE INSTRUMENTS OF SERVICE AND SHALL REMAIN THE PROPERTY OF THE ARCHITECT. NO USE OR RE-USE OF THESE DOCUMENTS SHALL BE PERMITTED UNLESS AUTHORIZED IN WRITING BY MJSA ARCHITECTS WITH APPROPRIATE COMPENSATION.

PROJECT NO.: 10011

DATE: 7/12/10

ATTIC SECTION

SCALE: AS SHOWN

SHEET: SF201

G:\data\Projects\2010\2010-133-Daughters-of-Utah-Pioneers-Skylight-Evaluation\Drawings\2010-133-SF201.dwg - Mon, 26 Jul 2010 - 3:37pm

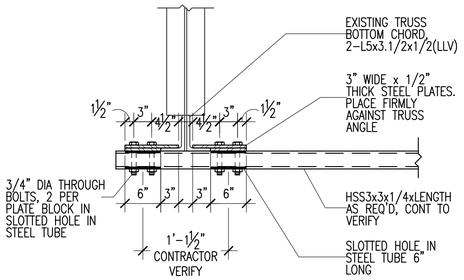

C1 SF501 BRACE CONNECTION TO EXISTING STEEL TRUSS
NO SCALE

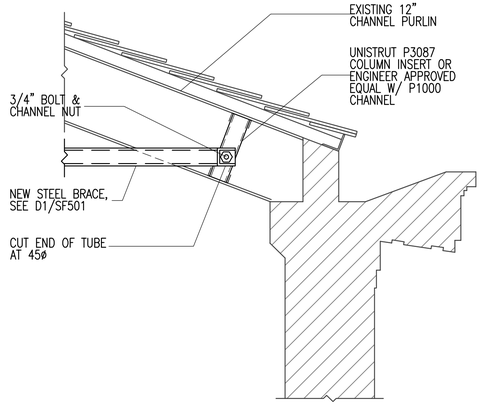

C2 SF501 BRACE CONNECTION TO EXISTING PURLIN
NO SCALE

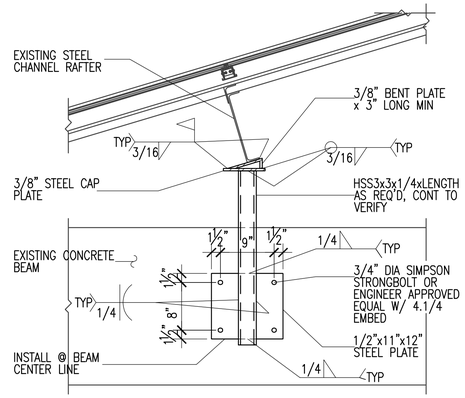

C3 SF501 NEW SUPPORT OF EXISTING STEEL CHANNEL RAFTER
NO SCALE

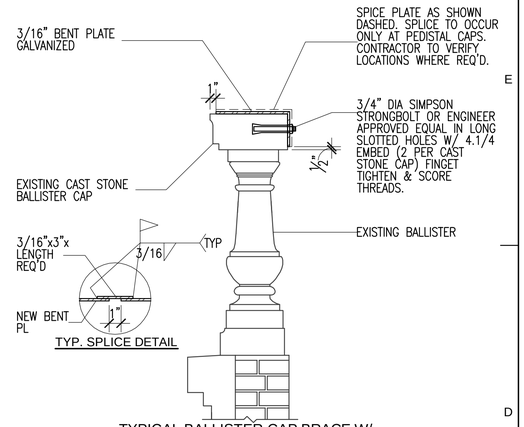

C4 SF501 TYPICAL BALLISTER CAP BRACE W/ BOLTED CONNECTION & SPLICE PLATE
NO SCALE

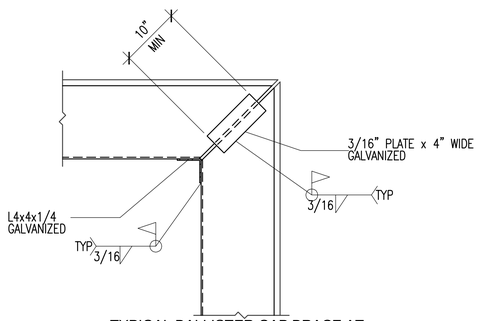

B1 SF501 TYPICAL BALLISTER CAP BRACE AT MITERED CORNERS
NO SCALE

REFERENCE NOTES

REVISIONS:

PERMIT SET

DAUGHTERS OF UTAH PIONEERS PHASE II IMPROVEMENTS
DFCM PROJECT NO. 07273050
300 NORTH MAIN STREET, SALT LAKE CITY, UTAH 84103

MJSA
357 West Pierpont Avenue □ Salt Lake City, Utah 84101
Telephone 801 364 5161 □ Facsimile 801 364 5167
ARCHITECTURE INTERIOR DESIGN

STAMP

THESE DRAWINGS ARE INSTRUMENTS OF SERVICE AND SHALL REMAIN THE PROPERTY OF THE ARCHITECT. NO USE OR RE-USE OF THESE DOCUMENTS SHALL BE PERMITTED UNLESS AUTHORIZED IN WRITING BY MJSA ARCHITECTS WITH APPROPRIATE COMPENSATION.

PROJECT NO.: 10011

DATE: 7/12/10

DETAILS

SCALE: 1" = 1'-0

SHEET: SF501

G:\Data\Projects\2010\2010-133-Daughters of Utah-Pioneers-Skylight Evaluation\Drawings\2010-133-SF501.dwg , Mon, 26 Jul 2010 - 3:37pm

LEGEND OF MECHANICAL SYMBOLS AND ABBREVIATIONS

MECHANICAL

- POSITIVE PRESSURE DUCT – RISE
- POSITIVE PRESSURE DUCT – DROP
- NEGATIVE PRESSURE DUCT – RISE
- NEGATIVE PRESSURE DUCT – DROP
- ROUND DUCT – RISE
- ROUND DUCT – DROP
- UNDER FLOOR DUCT
- TURNING VANES
- FRESH AIR LOUVER
- RELIEF AIR OR EXHAUST AIR LOUVER
- 12X12 / 200 — CEILING SUPPLY DIFFUSER
- 22X22 / 200 — CEILING RETURN REGISTER
- 12X12 / 200 — CEILING EXHAUST REGISTER, (BALANCE TO MATCH SUPPLY IF RETURN CFM IS NOT SHOWN)
- 24X10 / 200 — SIDEWALL SUPPLY REGISTER
- 24X10 / 200 — SIDEWALL EXHAUST OR RETURN REGISTER
- 12X12 / 200 — CEILING SUPPLY DIFFUSER WITH FLEXIBLE DUCT
- 12X12 / 200 — CEILING AIR GRILLE WITH FLEXIBLE DUCT

(TOP FIGURES INDICATE NECK SIZE. BOTTOM FIGURE INDICATES CFM.)

- CEILING RETURN AIR GRILE W/ SOUND BOOT
- 3-1" SLOTS @ 48" 400 — LINEAR DIFFUSER WITH PLENUM AND FLEXIBLE DUCT CONNECTION. NO. OF SLOTS & SIZE OF SLOT ON TOP, ACTIVE LENGTH AND CFM ON BOTTOM
- FLEXIBLE DUCT CONNECTION
- FLEXIBLE DUCT
- FAN
- 12/8 FO — FLAT OVAL DUCT WITH NET INSIDE DIMENSIONS SHOWN IN INCHES.
- 12/8 — RECTANGULAR DUCT WITH NET INSIDE DIMENSIONS SHOWN IN INCHES.
- 12ø — ROUND DUCT WITH NET INSIDE DIMENSIONS SHOWN IN INCHES.
- UP — INCLINED RISE
- DN — INCLINED DROP

(WITH RESPECT TO AIR FLOW 15° NOMINAL INCLINE WITH RADIUS TURNS=DEPTH OF DUCT.)

- W R — R/W=1. ROUND DUCT SIMILAR TO RECTANGULAR
- 12/12 8/8 — RECTANGULAR TO RECTANGULAR OR ROUND TO ROUND DUCT TRANSFORMATION MAXIMUM 15° INCLUDED ANGLE EXCEPT WHERE SHOWN OTHERWISE.
- 12/12 12ø — RECTANGULAR TO ROUND DUCT TRANSFORMATION
- R — BRANCH DUCT SPLIT WITH 6" WIDTH AND MIN. R=WIDTH OF BRANCH DUCT DOWNSTREAM. ELBOW TURNING VANE OPTIONAL.
- 1.00 1.250 45° DBL DBL — TAP ENTRY AREA EQUALS 150% OF BRANCH AREA
- 12ø 12/12 RED RED — HIGH EFFICIENCY FITTING
- MANUAL VOLUME DAMPER
- FD — FIRE DAMPER IN DUCT, W/ ACCESS PANEL REQD.
- FSD — COMBINATION FIRE/SMOKE DAMPER W/ ACCESS PANEL
- SD — SMOKE DAMPER W/ ACCESS PANEL
- BDD — BACK DRAFT DAMPER
- ATC OR — ATC DAMPER
- AD — ACCESS PANEL IN DUCT OR PLENUM
- HEATING OR COOLING COIL IN DUCT
- SINGLE DUCT AIR TERMINAL BOX VARIABLE OR CONSTANT VOLUME. MIN. 1-1/2 TERMINAL INLET SIZE STRAIGHT DUCT AT TERMINAL INLET.
- 4-WAY BLOW PATTERN
- 3-WAY BLOW PATTERN
- 2-WAY BLOW PATTERN
- 2-WAY BLOW PATTERN
- 1-WAY BLOW PATTERN
- SD — DUCT SMOKE DETECTOR
- UNIT HEATER

PLUMBING

- FLOOR SINK
- FLOOR DRAIN
- FCO / COTG — FLOOR CLEAN-OUT OR CLEAN-OUT TO GRADE
- ROOF DRAIN
- DOWNSPOUT NOZZLE
- ARROW INDICATES DIRECTION OF FLOW IN PIPE
- CHECK VALVE
- PRESSURE REDUCING, EXTERNAL PRESSURE VALVE
- PRESSURE REDUCING, SELF CONTAINED VALVE
- ATC VALVE – 2 WAY
- ATC VALVE – 3 WAY
- SOLENOID VALVE
- GATE VALVE
- GATE VALVE – NON RISING STEM
- GLOBE VALVE
- TEMPERATURE AND PRESSURE TEST PORT
- PS — PRESSURE SWITCH
- GAS COCK
- 50 GPM — CALIBRATED BALANCING VALVE WITH GPM INDICATED
- RP BP — REDUCED PRESSURE BACKFLOW PREVENTOR W/ DRAIN PAN
- BRANCH – BOTTOM CONNECTION
- BRANCH – TOP CONNECTION
- BRANCH – SIDE CONNECTION
- RISE OR DROP
- RISER – DOWN (ELBOW)
- RISER – DOWN (ELBOW)
- VTR — VENT THRU ROOF
- WATER HAMMER ARRESTOR
- INLINE PUMP
- INLINE PUMP
- CLEAN-OUT
- RELIEF VALVE
- ANGLE VALVE
- FLOW METER
- UNION
- BALANCING COCK
- SHUT-OFF COCK FOR USE WITH PRESSURE GAUGE
- FLEXIBLE EXPANSION JOINT
- THERMOMETER – TEMP RANGE AS INDICATED
- PRESSURE GAUGE WITH SHUT-OFF COCK
- PRESSURE GAUGE WITH PIGTAIL
- LATERAL STRAINER WITH BLOW-OFF VALVE, PROVIDE HOSE END WITH CAP WHERE DISCHARGE IS NOT PIPED TO DRAIN
- BALL VALVE (PIPE SIZES 2" AND SMALLER) BUTTERFLY VALVE (PIPE SIZES 2-1/2" AND LARGER)
- MOTOR OPERATED BUTTERFLY VALVE
- VALVE IN RISE
- AIR VENT-MANUAL
- AIR VENT-AUTO
- FLOW SWITCH
- REDUCER
- CONCENTRIC REDUCER
- ECCENTRIC REDUCER

PLUMBING CONT.

- THERMOSTATIC MIXING VALVE
- HOSE BIBB
- PIPE CAP
- SWITCH
- S — SENSOR
- T — THERMOSTAT
- TN — NIGHT THERMOSTAT
- FILL PORT
- DRAIN PAN AND P-TRAP
- (NAME) — FIXTURE FROM LEVEL ABOVE
- GPM LB/HR. — FLOW METER ORIFICE
- FLANGE
- 90° ELBOW
- STEAM TRAP, F&T=FLOAT & THERMOSTATIC 45° ELBOW
- F&T — B=BUCKET, T=THERMOSTATIC
- DN — LEADER INDICATES DOWNWARD SLOPE
- DEMOLITION
- ALIGNMENT GUIDE
- ANCHOR
- LUBRICATED PLUG COCK

SYMBOLS

- P-1 — PLUMBING FIXTURES
- POINT OF CONNECTION
- A / M-101 — SECTION TAG – TOP FIGURE IS SECTION NO. BOTTOM FIGURE IS SHEET NO.
- A / M101 — DETAIL TAG – TOP FIGURE IS DETAIL NO. BOTTOM FIGURE IS SHEET NO.
- EF / 1 — EQUIPMENT IDENTIFICATION
- 1 — KEYED NOTE IDENTIFICATION

FIRE

- HOSE VALVE
- NRS GATE VALVE WITH SUPERVISION
- FLOW SWITCH
- FIRE RISER
- SPRINKLER HEAD
- F — FIRE SPRINKLER WATER

LINETYPES

- AV — ACID VENT
- AW — ACID WASTE
- BBD — BOILER BLOW DOWN
- BF — BOILER FEED WATER
- B — BRINE
- CO2 — CARBON DIOXIDE
- CA — COMPRESSED AIR
- CF — CHEMICAL FEED
- CHWS — CHILLED WATER SUPPLY
- CHWR — CHILLED WATER RETURN
- CS — CONDENSER WATER SUPPLY
- CR — CONDENSER WATER RETURN
- DOMESTIC COLD WATER (DCW)
- DOMESTIC HOT WATER (DHW)
- DOMESTIC HOT WATER RETURN (DHWR)
- DI — DEIONIZED WATER SUPPLY
- DIR — DEIONIZED WATER RETURN
- E(NAME) — EXISTING PIPING
- (NAME) — EXISTING PIPING TO BE REMOVED
- GHR — GLYCOL HEAT RECOVERY PIPING
- G(NAME) — GLYCOL PIPING SOLUTION
- FOR — FUEL OIL RETURN
- FOS — FUEL OIL SUPPLY
- FOV — FUEL OIL VENT
- G — NATURAL GAS
- HG — HOT GAS
- HFR — HELICOPTER FUEL RETURN
- HFS — HELICOPTER FUEL SUPPLY
- HP(NAME) — HIGH PRESSURE DOMESTIC WATER
- HPC — HIGH PRESSURE CONDENSATE
- HPS — HIGH PRESSURE STEAM
- HWR — HEATING HOT WATER RETURN
- HWS — HEATING HOT WATER SUPPLY
- IA — INSTRUMENT AIR
- IA 120 — INSTRUMENT AIR AT PRESSURE INDICATED
- LA — LAB AIR
- LV — LAB VACUUM
- LPC — LOW PRESSURE CONDENSATE
- LPG — LIQUIFIED PETROLEUM GAS
- LPS — LOW PRESSURE STEAM
- MA — MEDICAL AIR
- MA 120 — MEDICAL AIR AT PRESSURE INDICATED
- MPC — MEDIUM PRESSURE CONDENSATE
- MPS — MEDIUM PRESSURE STEAM
- MUW — MAKE UP WATER
- MV — MEDICAL VACUUM
- N — NITROGEN
- N2O — NITROUS OXIDE
- OX — MEDICAL OXYGEN
- OX 120 — MEDICAL OXYGEN AT PRESSURE INDICATED
- PUMPED CONDENSATE

LINETYPES CONT.

- RO — REVERSE OSMOSIS WATER SUPPLY
- ROR — REVERSE OSMOSIS WATER RETURN
- RD — ROOF DRAIN
- RDO — ROOF DRAIN OVERFLOW
- RL — REFRIGERANT LIQUID
- RS — REFRIGERANT SUCTION
- SEWER (BELOW GRADE)
- SEWER (ABOVE GRADE)
- SW — SOFT DOMESTIC WATER (SW)
- V — VACUUM
- VENT (SEWER)

REFERENCE NOTES

REVISIONS:

PERMIT SET

DAUGHTERS OF UTAH PIONEERS PHASE II IMPROVEMENTS
DFCM PROJECT NO. 07273050
300 NORTH MAIN STREET, SALT LAKE CITY, UTAH 84103

MJSA
357 West Pierpont Avenue □ Salt Lake City, Utah 84101
Telephone 801.364.5161 □ Facsimile 801.364.5167
ARCHITECTURE INTERIOR DESIGN

VAN BOERUM & FRANK ASSOCIATES, INC.
CONSULTING ENGINEERS
WWW.VBFA.COM
Salt Lake City · Logan · St. George · Tempe · Pocatello
330 South 300 East 801.530.3148 T
Salt Lake City, UT 84111 801.530.3150 F
VBFA Project Number:10276

STAMP

REGISTERED PROFESSIONAL ENGINEER
No. 324030
BRADLY W. ROSENHAN
STATE OF UTAH

THESE DRAWINGS ARE INSTRUMENTS OF SERVICE AND SHALL REMAIN THE PROPERTY OF THE ARCHITECT. NO USE OR RE-USE OF THESE DOCUMENTS SHALL BE PERMITTED UNLESS AUTHORIZED IN WRITING BY MJSA ARCHITECTS WITH APPROPRIATE COMPENSATION.

PROJECT NO.: 10011

DATE: 7/12/10

SHEET: M100

MECHANICAL LEGEND

SCALE: NO SCALE

N:\10\10200\10276 DUP Museum Alloc\01_Cadd_Mechanical\10276_mg-01.dwg - Tue, 13 Jul 2010 - 1:12pm

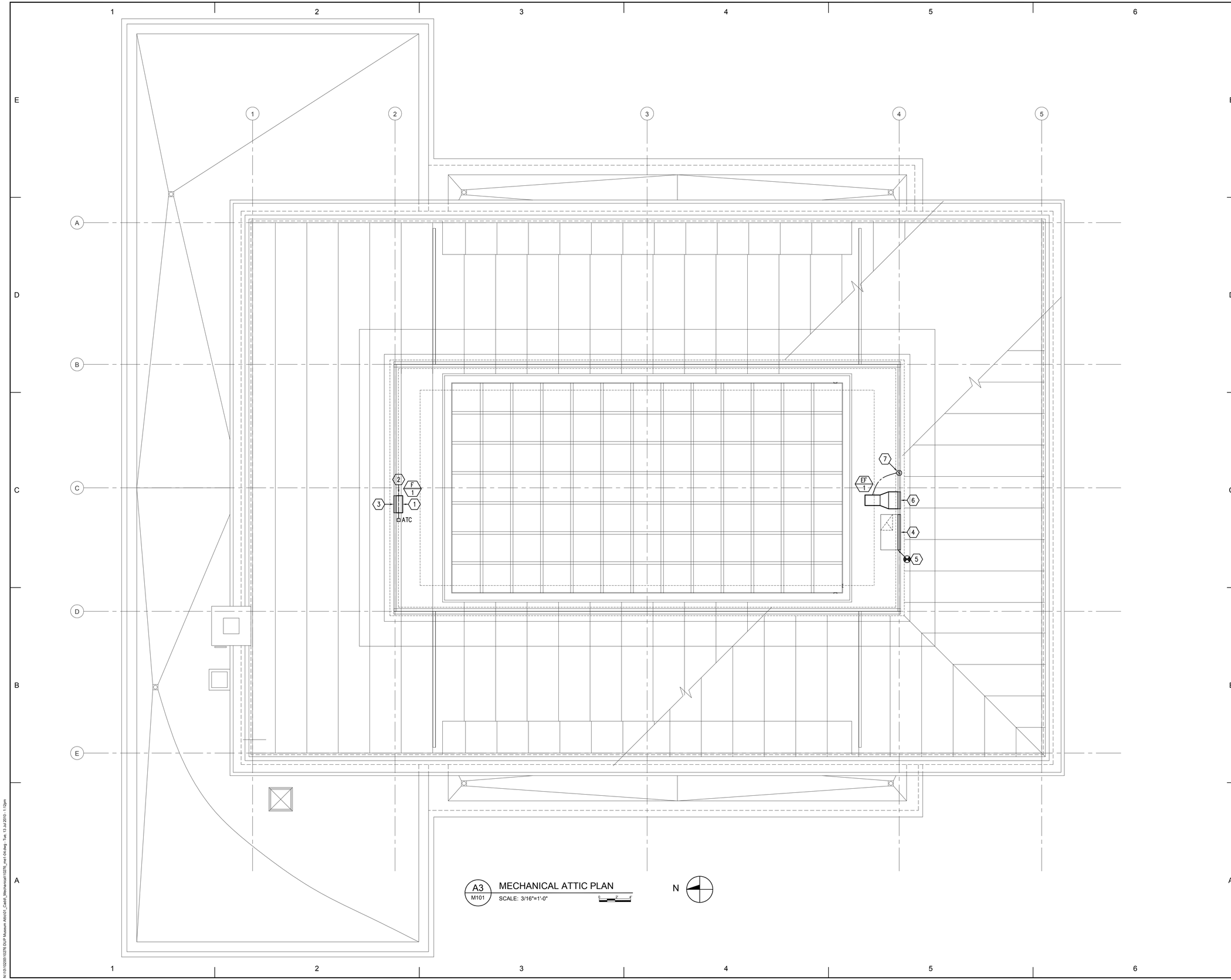

A3 M101 MECHANICAL ATTIC PLAN

SCALE: 3/16"=1'-0"

N

REFERENCE NOTES

KEYED NOTES

1. INSTALL FILTERS ON OUTSIDE AIR DUCT.
2. INTERLOCK ATC DAMPER WITH EXHAUST FAN, EF–1.
3. 24X24 OUTSIDE AIR LOUVER. LOUVER TO BE RUSKIN MODEL L375D. COLOR TO BE APPROVED BY ARCHITECT. SEE ARCHITECTURAL DETAILS FOR INSTALLATION.
4. 52X24 LOUVER. RUSKIN MODEL L375D. COLOR TO BE APPROVED BY ARCHITECT. SEE ARCHITECTURAL DETAILS FOR INSTALLATION.
5. DISCONNECT EXISTING DUCT AND RECONNECT TO NEW LOUVER.
6. 24X18 EXHAUST LOUVER. RUSKIN MODEL L375D. COLOR TO BE APPROVED BY ARCHITECT. SEE ARCHITECTURAL DETAILS FOR INSTALLATION.
7. INSTALL TEMP AND HUMIDITY SENSOR. EXHAUST FAN TO OPERATE WHEN SPACE HUMIDITY EXCEEDS 60% RH OR SPACE TEMPERATURE EXCEEDS 90°F. ATC CONTRACTOR TO INSTALL CONTROL WIRING FOR EXHAUST FAN AND DAMPERS.

VAN BOERUM & FRANK ASSOCIATES, INC.
CONSULTING ENGINEERS
WWW.VBFA.COM
Salt Lake City · Logan · St. George · Tempe · Pocatello
330 South 300 East 801.530.3148 T
Salt Lake City, UT 84111 801.530.3150 F
VBFA Project Number:10276

STAMP

REGISTERED PROFESSIONAL ENGINEER
No. 324030
BRADLY W. ROSENHAN
STATE OF UTAH

ATTIC MECHANICAL PLAN

SCALE: 3/16" = 1'-0"

REVISIONS:

PERMIT SET

DAUGHTERS OF UTAH PIONEERS PHASE II IMPROVEMENTS
DFCM PROJECT NO. 07273050
300 NORTH MAIN STREET, SALT LAKE CITY, UTAH 84103

MJSA
357 West Pierpont Avenue □ Salt Lake City, Utah 84101
Telephone 801.364.5191 □ Facsimile 801.364.5197
ARCHITECTURE INTERIOR DESIGN

THESE DRAWINGS ARE INSTRUMENTS OF SERVICE AND SHALL REMAIN THE PROPERTY OF THE ARCHITECT. NO USE OR RE-USE OF THESE DOCUMENTS SHALL BE PERMITTED UNLESS AUTHORIZED IN WRITING BY MJSA ARCHITECTS WITH APPROPRIATE COMPENSATION.

PROJECT NO.: 10011

DATE: 7/12/10

SHEET: M101

N:\10\10200\10276 DUP Museum Alloc\01_Cadd_Mechanical\10276_mel-04.dwg - Tue, 13 Jul 2010 - 1:12pm

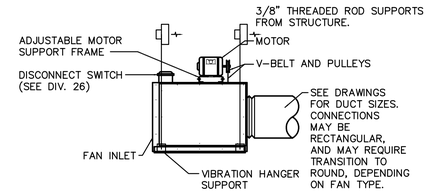

5E / M601 **INLINE EXHAUST FAN**

NO SCALE

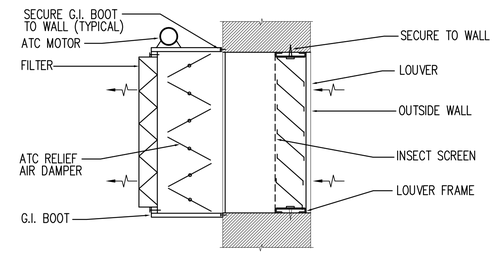

5C / M601 **ATC OUTSIDE AIR DAMPER & LOUVER SECTION**

NO SCALE

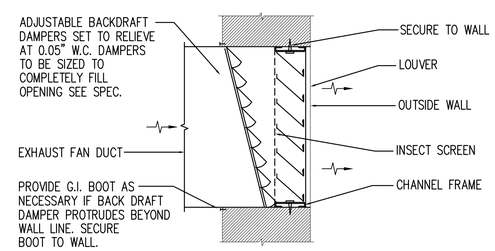

5B / M601 **EXHAUST AIR LOUVER SECTION**

NO SCALE

FILTER SCHEDULE

ID	MANUFACTURER AND MODEL NUMBER	LOCATION	TYPE	EFFICIENCY (MERV)	AIR: CLEAN STATIC PRESSURE (IN. WATER)	AIR: DIRTY STATIC PRESSURE (IN. WATER)	PHYSICAL: NUMBER 24"X24" MODULES	PHYSICAL: NUMBER 12"X24" MODULES	NOTES
F-1	CAMFILFARR AEROPLEAT III	ATTIC	PLEATED	7	0.1	0.65	1	0	

FAN SCHEDULE

ID	MANUFACTURER AND MODEL NUMBER	LOCATION	TYPE	AIR TYPE	AIR: MAXIMUM AIRFLOW RATE (CFM)	AIR: STATIC PRESSURE (IN. WATER)	FAN: OUTLET VELOCITY (FPM)	FAN: FAN SPEED (RPM)	FAN: FAN WHEEL DIAMETER (IN)	FAN: STATIC EFFICIENCY (%)	ELECTRICAL: MOTOR SIZE (HP)	ELECTRICAL: MOTOR BHP (HP)	ELECTRICAL: MOTOR SPEED (RPM)	ELECTRICAL: VOLT/PH/HZ	PHYSICAL: LENGTH/ WIDTH/ HEIGHT (IN)	NOTES
EF-1	COOK 70SQN-B	ATTIC	INLINE	EXHAUST	300	0.75	300	6212		18	0.25	0.195	2373	120/1/60	20/12/12	

REFERENCE NOTES

REVISIONS:

PERMIT SET

DAUGHTERS OF UTAH PIONEERS PHASE II IMPROVEMENTS
DFCM PROJECT NO. 07273050
300 NORTH MAIN STREET, SALT LAKE CITY, UTAH 84103

MJSA
357 West Pierpont Avenue □ Salt Lake City, Utah 84101
Telephone 801 364 5161 □ Facsimile 801 364 5167
ARCHITECTURE INTERIOR DESIGN

VAN BOERUM & FRANK ASSOCIATES, INC.
CONSULTING ENGINEERS
WWW.VBFA.COM
Salt Lake City · Logan · St. George · Tempe · Pocatello
330 South 300 East 801.530.3148 T
Salt Lake City, UT 84111 801.530.3150 F
VBFA Project Number:10276

STAMP

REGISTERED PROFESSIONAL ENGINEER
No. 324030
BRADLY W. ROSENHAN
STATE OF UTAH

THESE DRAWINGS ARE INSTRUMENTS OF SERVICE AND SHALL REMAIN THE PROPERTY OF THE ARCHITECT. NO USE OR RE-USE OF THESE DOCUMENTS SHALL BE PERMITTED UNLESS AUTHORIZED IN WRITING BY MJSA ARCHITECTS WITH APPROPRIATE COMPENSATION.

PROJECT NO.: 10011

DATE: 7/12/10

SHEET: M601

MECHANICAL SCHEDULES AND DETAILS
SCALE: NO SCALE

N:\10\10200\10276 DUP Museum Attic\01_Cadd_Mechanical\10276_mech01.dwg - Tue, 13 Jul 2010 - 1:13pm

MECHANICAL EQUIPMENT SCHEDULE

SYMBOL	EQUIPMENT	ELECTRICAL DATA					FEEDER SIZE			PROTECTION & STARTING				COMMENTS
		HP	KW	FLA	MCA	VOLT/ PHASE	WIRE	GROUND	CONDUIT	DISCONNECT		STARTING FEATURE		
										FUSED/ FUSE	N. FUSED	STARTER	VFD	
EF-1	EXHAUST FAN	0.25		5.8		120	2#12	1#12	3/4"					1

NOTES:

1. PROVIDE THERMAL SITE DISCONNECT.

LIGHTING FIXTURE SCHEDULE

SYMBOL	DESCRIPTION	LAMP/FIXTURE INFORMATION		APPROVED MANUFACTURERS	CATALOG NUMBER	PICTURE
T-1	POST MOUNTED LIGHT FIXTURE. 8" DECORATIVE POLE.	LAMP	70W MH	STERNBERG	G18/508/4200-FP4-70MH-120-BK	
		VOLTAGE	120			
		MOUNT	POLE			
		COLOR	BLACK			
		BALLAST				
T-2	FLAG POLE LIGHT FIXTURE, IN GROUND, DIRECT BURIAL, TOTALLY ENCLOSED, WATER PROOF, STAINLESS HARDWARE, COOL LENS, CAST ALUMINUM DIRECT LOUVER, CAST BRONZE BOX COVER, SPOT REFLECTOR.	LAMP	150W	KIM	6360-C54-150MH-5090DL	
		VOLTAGE	120			
		MOUNT	IN GRADE			
		COLOR				
		BALLAST				
T-3		LAMP				
		VOLTAGE				
		MOUNT				
		COLOR				
		BALLAST				

NOTES:

1. ALL FLUORESCENT LIGHTS SHALL HAVE ELECTRONIC PROGRAMMABLE START BALLASTS, 10%, TOTAL HARMONIC DISTORTION. UNIVERSAL, ADVANCE AND SYLVANIA ARE APPROVED MANUFACTURERS. BALLASTS TO HAVE 5 YEAR WARRANTY.
2. ALL FLUORESCENT LAMPS SHALL HAVE 4100° COLOR TEMPERATURE.
3. FIELD VERIFY ALL LIGHTING VOLTAGES PRIOR TO PLACING ANY ORDER.
4. THE WRITTEN CRITERIA OF THE FIXTURE DESCRIPTION TAKES PRECEDENCE OVER THE CATALOG NUMBER.

GENERAL NOTES:

1. ALL MATERIALS TO BE REMOVED AND RETURNED TO THE OWNER. MATERIALS WHICH THE OWNER DECIDES NOT TO KEEP SHALL BE SALVAGED AND REMOVED FROM THE SITE BY THE CONTRACTOR.
2. ALL CONCEALED CONDUIT THAT CANNOT BE REMOVED SHALL BE CUT FLUSH WITH THE FINISH SURFACES AND CAPPED OFF AFTER THE WIRING HAS BEEN DISCONNECTED AT THE PANEL AND REMOVED FROM THE CONDUIT.
3. IN AREAS WHERE CIRCUIT CONTINUITY IS INTERRUPTED, BUT MUST BE MAINTAINED TO THE DEVICES WHICH ARE TO REMAIN, MAKE ALL THE NECESSARY MODIFICATIONS TO THE CIRCUITS IN ORDER TO MAINTAIN THE CIRCUIT INTEGRITY.
4. THE CONTRACTOR SHALL PATCH THE WALLS AND CEILINGS WHERE THE DEVICES ARE REMOVED TO MATCH THE EXISTING WALLS AND CEILINGS. COORDINATE WITH GENERAL CONTRACTOR.
5. THE COLOR OF THE LIGHT FIXTURES SHALL BE SELECTED BY THE ARCHITECT.
6. PRIOR TO SUBMITTING A BID THE ELECTRICAL CONTRACTOR SHALL INSPECT THE SITE AND INCLUDE IN HIS BID PACKAGE ALL CHARGES DUE TO EXISTING CONDITIONS. SHOP DRAWINGS ARE REQUIRED. ALL LABOR, MATERIAL AND WORKMANSHIP SHALL BE GUARANTEED FOR A PERIOD OF 1 YEAR FROM THE DATE OF ACCEPTANCE BY THE TENANT. REPLACE OR REPAIR ALL DEFECTS DURING THE GUARANTEED PERIOD.
7. THE CONTRACTOR SHALL INFORM THE ARCHITECT/ENGINEER IN WRITING OF ANY DISCREPANCIES FOUND BETWEEN THE INTENDED FUNCTION OF EQUIPMENT AND EQUIPMENT SPECIFIED IN THE CONTRACT DOCUMENTS A MINIMUM OF FIVE (5) WORKING DAYS PRIOR TO ISSUANCE OF THE FINAL BID. FAILURE TO REPORT ANY DISCREPANCY (CATALOG NUMBERS, DISCONTINUED ITEMS, ETC.) DOES NOT RELIEVE THE CONTRACTOR FROM PROVIDING EQUIPMENT WHICH SHALL CONFORM TO AND FULFILL THE INTENT OF THE CONTRACT DOCUMENTS, NOR SHALL IT BE USED AS A CONDITION TO OBTAIN ADDITIONAL FUNDS FROM THE OWNER AFTER THE CONTRACT IS AWARDED. THE CONTRACTOR SHALL REQUEST ALL CLARIFICATIONS OF CONTRACT DOCUMENT REQUIREMENTS IN WRITING TO THE ARCHITECT/ENGINEER A MINIMUM OF FIVE (5) WORKING DAYS PRIOR TO ISSUANCE OF THE FINAL BID.
8. REFER TO THE MECHANICAL SHEETS FOR THE EXACT LOCATION OF THE MECHANICAL EQUIPMENT.
9. ELECTRICAL CONTRACTOR SHALL VERIFY ALL ELECTRICAL LOADS (VOLTAGE, PHASE, CONNECTION REQUIREMENTS, ETC.) OF EQUIPMENT FURNISHED UNDER OTHER DIVISIONS WITH APPROVED SHOP DRAWINGS PRIOR TO BEGINNING ROUGH-IN.
10. MINIMUM SIZE OF CONDUIT TO BE 3/4". ALUMINUM CONDUITS SHALL NOT BE USED.
11. USE RIGID STEEL SET SCREW TYPE FITTINGS ONLY. DIE CAST FITTINGS SHALL NOT BE USED.
12. RUN A NEUTRAL CONDUCTOR FOR EACH PHASE CONDUCTOR (EACH CIRCUIT) IN A CONDUIT. NOT MORE THAN THREE (3) CIRCUITS IN A CONDUIT. THREE (3) PHASE CONDUCTORS, THREE (3) NEUTRAL CONDUCTORS (ONE FOR EACH PHASE) AND ONE (1) GROUND CONDUCTOR FOR A TOTAL OF SEVEN (7) CONDUCTORS.
13. FOR SPECIFICATION OF PULL WIRES IN EMPTY CONDUITS, REFER TO THE ELECTRICAL SPECIFICATION FOR RACEWAYS SECTION 16110.
14. THE MINIMUM SIZE OF THE CONDUCTORS ARE TO BE #12 AWG THHN COPPER, UNLESS INDICATED OTHERWISE ON THE DRAWINGS.
15. ALL J-BOXES SHALL HAVE MINIMUM DEPTH OF 2-1/8" UNLESS OTHERWISE SPECIFIED. SECURE ALL J-BOXES AS SHOWN IN THE DETAILS. FURNISH AND INSTALL PROPER MUD RINGS.
16. ALL NEW EXPOSED CONDUIT MUST RUN AGAINST THE WALLS OR CEILINGS. DO NOT PENDANT MOUNT ANY CONDUIT FROM THE CEILINGS.
17. ALL THE HOMERUNS MUST BE ACCESSIBLE IN THE CEILING PLENUM. DO NOT CARRY A HOMERUN FROM ONE DEVICE TO ANOTHER WHICH IS TIED TO A SEPARATE HOMERUN INSIDE THE WALL. MARK ON ALL THE J-BOXES THE CIRCUIT NAMES AND NUMBERS.
18. AT THE END OF THE JOB, PROVIDE BLANK COVER PLATES TO MATCH THE OTHER COVER PLATES FOR ALL J-BOXES WHERE DEVICES HAVE NOT YET BEEN INSTALLED.
19. SEAL AROUND ALL CONDUIT PENETRATIONS THROUGH FIRE RATED WALLS AND CEILINGS WITH FIRE RATED MATERIAL. 3M IS AN APPROVED MANUFACTURER.
20. ALL ELECTRICAL WIRING MUST BE IN CONDUIT (ROMEX AND MC CABLE NOT PERMITTED).
21. FLEXIBLE CONDUITS CAN ONLY BE USED FOR SHORT RUNS (6' MAXIMUM).
22. NO CONDUIT SHALL RUN IN DUCTWORK.
23. USE NO. 10 THHN CONDUCTORS FOR CONDUCTOR LENGTH OVER 100 FEET, NO. 8 THHN OVER 200 FEET, NO. 6 THHN OVER 300 FEED AND NO. 4 THHN OVER 400 FEET LENGTH.
24. ALL CONDUITS EXPOSED TO THE WEATHER AND IN THE BOILER ROOM SHALL BE GALVANIZED RIGID STEEL, UNLESS OTHERWISE NOTED.
25. THE FIRST 10' LENGTH OF ALL BURIED CONDUIT OVER 1" SHALL BE RIGID GALVANIZED STEEL WHERE THEY ARE LEAVING OR ENTERING THE BUILDING, MANHOLE, VAULT, ETC.
26. ALL METALLIC CONDUITS, JOINTS, FITTINGS, ETC. IN CONTACT WITH THE GROUND SHALL BE SPIRALLY WRAPPED WITH 3M SCOTCHRAP-51, 20 MIL TAPE (OR APPROVED EQUAL). 1/2" OVERLAP IS REQUIRED.
27. ALL UNDERGROUND CONDUIT SHALL BE BURIED 24" MINIMUM UNDER THE GROUND.
28. USE EPOXY ANCHORS TO SUPPORT THE ELECTRICAL EQUIPMENT. EXPANSION ANCHOR BOLTS ARE NOT ACCEPTED.
29. PROVIDE UPDATED, TYPE WRITTEN, PANEL SCHEDULES FOR EXISTING PANELBOARDS SHOWING CIRCUIT CHANGES MADE DURING THIS PROJECT.
30. ALL DISCONNECTS, J-BOXES AND CONDUITS EXPOSED TO THE OUTSIDE WEATHER SHALL BE NON-CORROSIVE, WEATHER PROOF TYPE.
31. ALL DISCONNECTS SHALL BE HEAVY DUTY TYPE.
32. ALL NEW WORK MUST MEET THE CURRENT ADOPTED NATIONAL ELECTRICAL CODE AN TO MEET DFCM REQUIREMENTS.
33. ALL MATERIALS USED IN THIS INSTALLATION SHALL BE UL. APPROVED AND NEW.
34. TEMPORARY ELECTRICAL SERVICE IS TO BE PROVIDED BY THE ELECTRICAL CONTRACTOR AND REMOVED BY THE ELECTRICAL CONTRACTOR.
35. DETAILS ARE SHOWN ON DIFFERENT SHEETS. THE CONTRACTOR SHALL REFER TO THOSE DETAILS WHETHER OF NOT CALLED IN REFERENCE NOTES.
36. CONTRACT DOCUMENTS SHALL TAKE PRECEDENCE OVER SHOP DRAWINGS UNLESS SPECIFICALLY NOTED OTHERWISE.

ELECTRICAL SYSTEMS SYMBOL LIST

SYMBOL	DESCRIPTION
W.P.	INDICATES WEATHER PROOF EQUIPMENT
	DUPLEX CONVENIENCE OUTLET - 20 AMP, GROUND FAULT INTERRUPTER
J	JUNCTION BOX - SIZE AND FUNCTION AS REQUIRED
	MANUAL DISCONNECT WITH THERMAL OVERLOAD PROTECTION
	MOTOR LOCATION
	ELECTRICAL PANEL LOCATION
	CONDUITS CONCEALED IN CEILING AND WALLS - ARROWS INDICATE HOME RUNS
	CONDUITS CONCEALED IN FLOOR OR BELOW GRADE
T-X X	LIGHTING FIXTURE CALLOUT - NUMBER INDICATES SUGGESTED QUANTITY - TO BE VERIFIED
XX-X	MECHANICAL EQUIPMENT CALLOUT
X X	REFERENCE NOTE CALLOUT
	POST MOUNTED PARKING OR WALKWAY LIGHTING
	FLAGPOLE LIGHT - IN GRADE

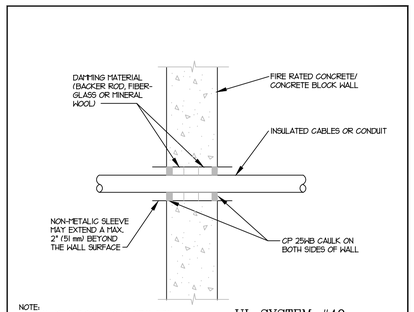

NOTE:
TYPICAL DETAILS SHOWING GENERAL FIRE STOPPING PROCEDURE. ACTUAL PROCEDURE DEPENDS UPON ANNULAR SPACE BETWEEN PIPE AND/OR INSULATION AND OPENING. FOLLOW MANUFACTURER'S INSTRUCTIONS.

UL SYSTEM #49

SCALE: N.T.S. — TYPICAL FIRESTOP FOR CABLES/CONDUIT THROUGH CONCRETE WALLS

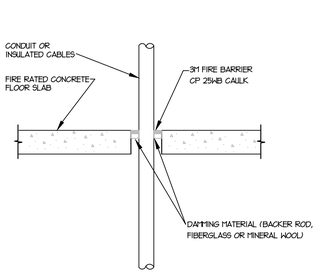

NOTE:
TYPICAL DETAILS SHOWING GENERAL FIRE STOPPING PROCEDURE. ACTUAL PROCEDURE DEPENDS UPON ANNULAR SPACE BETWEEN PIPE AND/OR INSULATION AND OPENING. FOLLOW MANUFACTURER'S INSTRUCTIONS.

UL SYSTEM #49

SCALE: N.T.S. — TYPICAL FIRESTOP FOR CABLES/CONDUIT THROUGH CONCRETE FLOORING

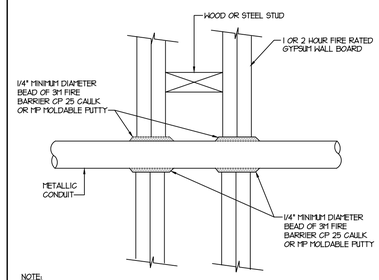

NOTE:
TYPICAL DETAILS SHOWING GENERAL FIRE STOPPING PROCEDURE. ACTUAL PROCEDURE DEPENDS UPON ANNULAR SPACE BETWEEN PIPE AND/OR INSULATION AND OPENING. FOLLOW MANUFACTURER'S INSTRUCTIONS.

SCALE: N.T.S. — FIRESTOP FOR METAL CONDUIT THROUGH GYPSUM WALL BOARD

E.C.E. LLC
Electrical Consulting Engineers
939 So. West Temple
Salt Lake City, Utah 84101
Telephone (801) 521-8007
Telefax (801) 521-8057

ECE JOB #: 4010

STAMP

LICENSED PROFESSIONAL ENGINEER No. 185650 ENAYAT ULLAH NAWABI STATE OF UTAH

GENERAL NOTES, DETAILS

SCALE: AS NOTED

REVISIONS:

PERMIT SET

DAUGHTERS OF UTAH PIONEERS PHASE II IMPROVEMENTS
DFCM PROJECT NO. 07273050
300 NORTH MAIN STREET, SALT LAKE CITY, UTAH 84103

MJSA
357 West Pierpont Avenue □ Salt Lake City, Utah 84101
Telephone 801 364 5161 □ Facsimile 801 364 5167
ARCHITECTURE INTERIOR DESIGN

THESE DRAWINGS ARE INSTRUMENTS OF SERVICE AND SHALL REMAIN THE PROPERTY OF THE ARCHITECT. NO USE OR RE-USE OF THESE DOCUMENTS SHALL BE PERMITTED UNLESS AUTHORIZED IN WRITING BY MJSA ARCHITECTS WITH APPROPRIATE COMPENSATION.

PROJECT NO.: 10011

DATE: 7/12/10

SHEET: E0.1

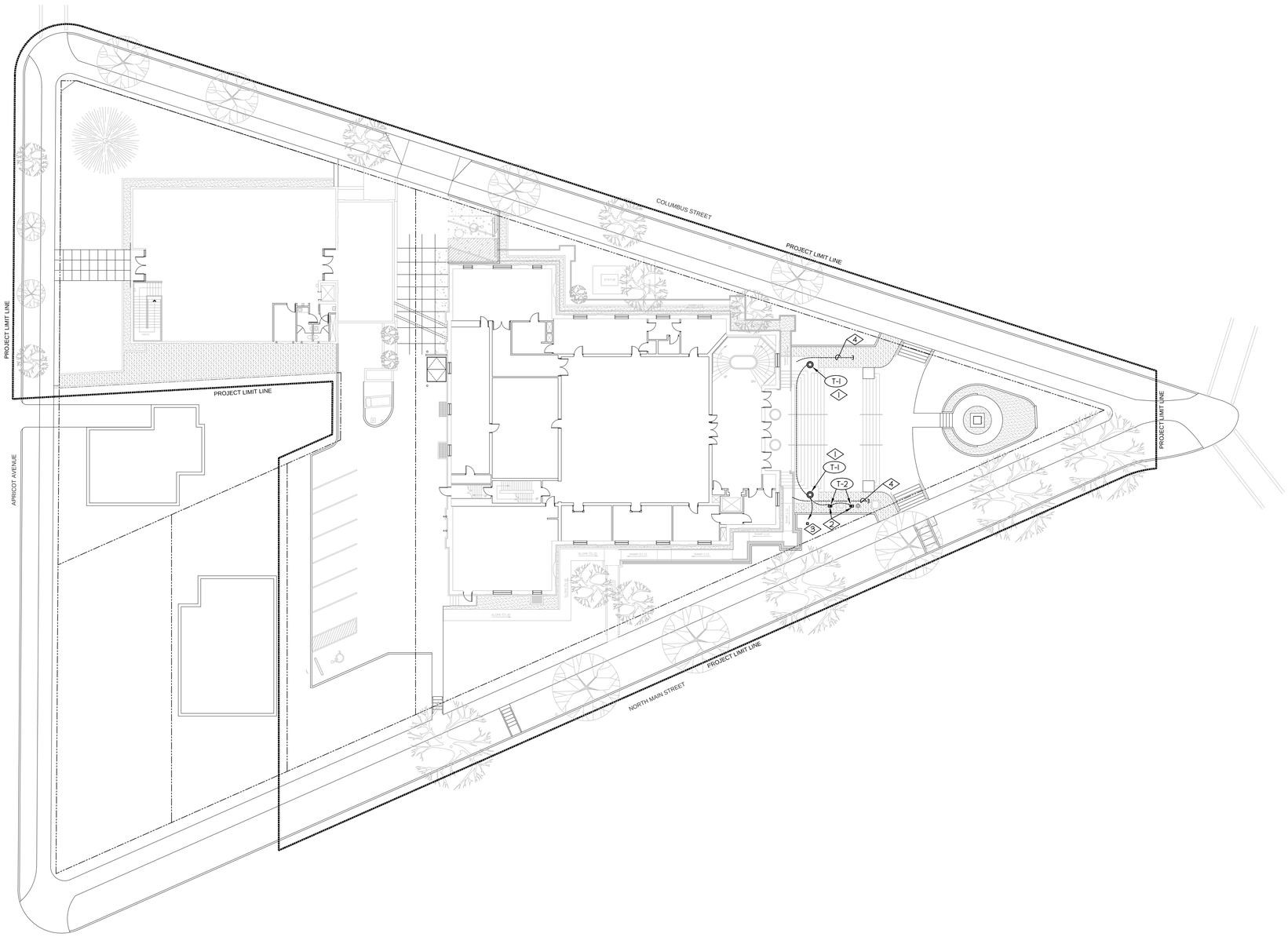

N

SITE PLAN – ELECTRICAL

SCALE: 1" = 20'-0"

REFERENCE NOTES

1. FURNISH AND INSTALL POLE MOUNTED LIGHT FIXTURES IN THE APPROXIMATE LOCATIONS AS SHOWN. SECURE THE FIXTURES ON THE EXISTING CONCRETE SURFACES. CORE DRILL EXISTING CONCRETE SURFACES TO INTERCEPT NEW CIRCUITS IN THE BASEMENT AREA THRU THE NEW CONTROL TIMERS.
2. FURNISH AND INSTALL TOTALLY ENCLOSED WATER PROOF LIGHT FIXTURES TO ILLUMINATE THE EXISTING FLAG POLE. TIE THE CIRCUIT FEEDING THESE TWO LIGHTS THRU THE SECOND CHANNEL OF THE NEW CONTROL TIMER. INSTALL LIGHT FIXTURES PER MANUFACTURER RECOMMENDATIONS. PROVIDE MINIMUM 24"x24"x24" CONCRETE PAD.
3. REMOVE EXISTING FEEDER TO THE SPRINKLER CONTROLLER. CORE DRILL EXISTING BASEMENT WALL TO RUN EXISTING FEEDER TO THE SPRINKLER TIMER. MINIMUM CONDUIT DEPTH SHALL BE 24" BELOW FINISHED FINAL GRADE.
4. RUN A 3/4" CONDUIT FOR FUTURE USE FROM BASEMENT LEVEL TO THE GRASS AREA. CAP THE CONDUIT ENDS. LABEL EACH CONDUIT. SEAL ALL PENETRATIONS.

NOTE:

SEAL ALL CONDUIT PENETRATIONS FROM BOTH SIDES PER ARCHITECT'S SATISFACTION.

E.C.E. LLC
Electrical Consulting Engineers
939 So. West Temple
Salt Lake City, Utah 84101
Telephone (801) 521-8007
Telefax (801) 521-8057

ECE JOB #: 4010

STAMP

LICENSED PROFESSIONAL ENGINEER
No. 185650
ENAYAT ULLAH NAWABI
STATE OF UTAH

SITE PLAN - ELECTRICAL

SCALE: AS NOTED

REVISIONS:

PERMIT SET

DAUGHTERS OF UTAH PIONEERS PHASE II IMPROVEMENTS
DFCM PROJECT NO. 07273050
300 NORTH MAIN STREET, SALT LAKE CITY, UTAH 84103

MJSA
357 West Pierpont Avenue □ Salt Lake City, Utah 84101
Telephone 801 364 5161 □ Facsimile 801 364 5167
ARCHITECTURE INTERIOR DESIGN

THESE DRAWINGS ARE INSTRUMENTS OF SERVICE AND SHALL REMAIN THE PROPERTY OF THE ARCHITECT. NO USE OR REUSE OF THESE DOCUMENTS SHALL BE PERMITTED UNLESS AUTHORIZED IN WRITING BY MJSA ARCHITECTS WITH APPROPRIATE COMPENSATION.

PROJECT NO.: 10011

DATE: 7/12/10

SHEET: E1.1

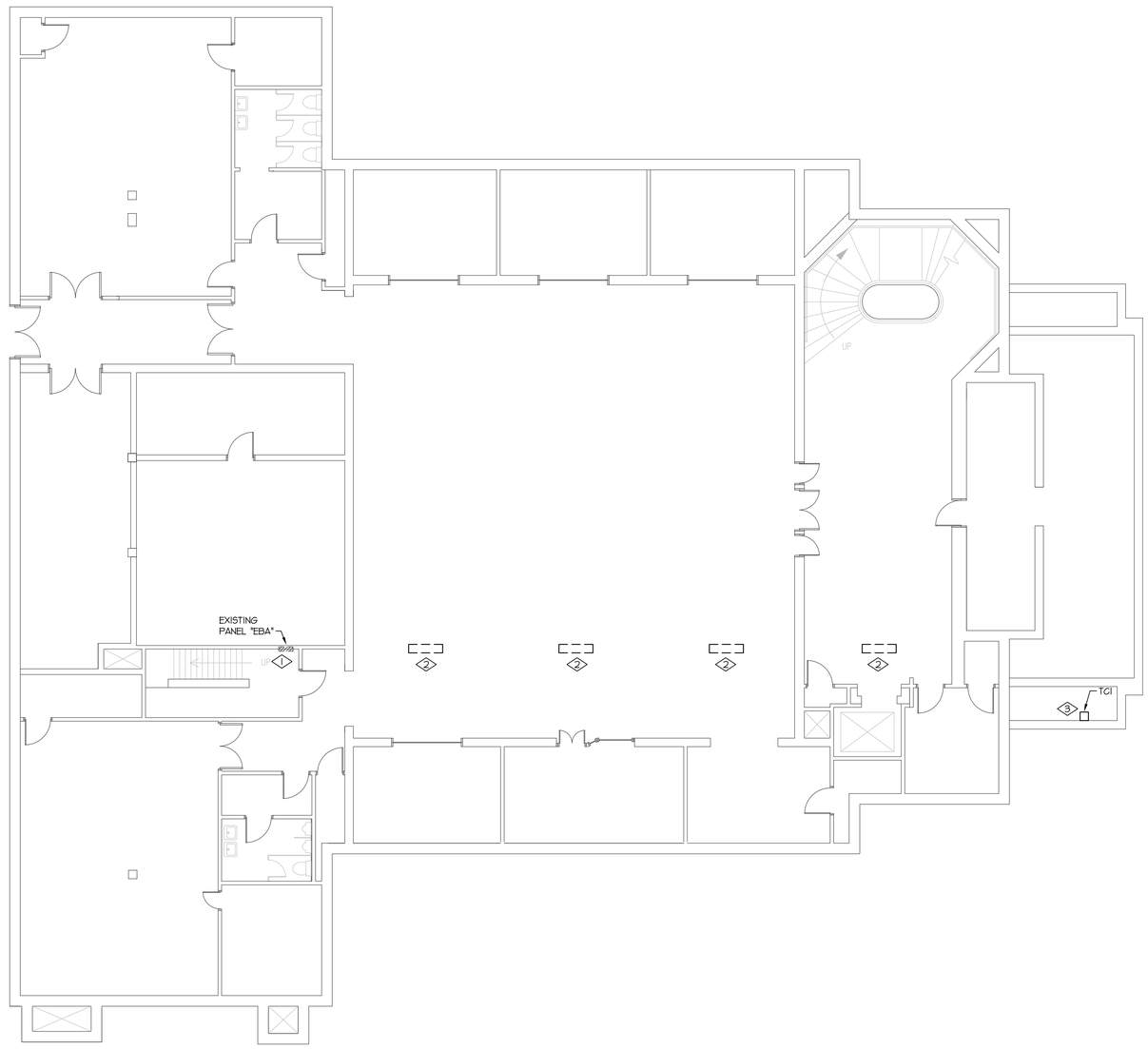

N

BASEMENT PLAN – ELECTRICAL

SCALE: 1/8" = 1'-0"

REFERENCE NOTES

1. EXISTING PANEL "EBA" TO REMAIN. UTILIZE THIS PANEL TO FEED THE NEW POLE MOUNTED LIGHT FIXTURE, FLAG POLE AND THE EXHAUST FAN IN THE ATTIC.

2. EXISTING RECESSED LIGHT FIXTURES SHALL BE REMOVED TO ACCOMMODATE INSTALLATION OF ELECTRICAL SERVICES TO THE LIGHTS AND MECHANICAL EQUIPMENT.

3. FURNISH AND INSTALL NEW 7-DAY FORMAT AS SHOWN. PROVIDE WITH THE FOLLOWING FEATURES:

   1. FURNISH AND INSTALL WHERE NOTED A 2 CHANNEL (OR TWO TIMERS WITH SINGLE CHANNEL) DIGITAL TIME SWITCH.
   2. CONTROLLER SHALL PROGRAM IN AM/PM FORMAT.
   3. CONTROLLER SHALL PROGRAM IN ONE MINUTE RESOLUTION.
   4. DISPLAY SHALL BE OF LCD TYPE.
   5. CONTROLLER SHALL BE CAPABLE OF 99 SET POINTS; SEPARATE SCHEDULING FOR EACH DAY OF THE WEEK.
   6. CONTROLLER SHALL HAVE 365 DAY HOLIDAY CAPABILITIES WITH 24 SINGLE DATES.
   7. CONTROLLER SHALL HAVE DAYLIGHT SAVING OR STANDARD TIME.
   8. CONTROLLER SHALL HAVE AUTOMATIC LEAP YEAR CORRECTION.
   9. SCHEDULES SHALL BE RETAINED FOR 40 YEARS WITHOUT POWER.
   10. CONTROLLER SHALL HAVE 30 DAY BACKUP FOR REAL TIME USING FIELD REPLACEABLE 9V. LITHIUM BATTERY.
   11. CONTROLLER SHALL BE CAPABLE OF MANUAL OVERRIDE ON OR OFF TO THE NEXT SCHEDULED EVENT USING 1 BUTTON.
   12. UNIT SHALL HAVE NEMA TYPE 3 INDOOR/OUTDOOR ENCLOSURE AS STANDARD.
   13. TO ORDER SPECIFY TORK MODEL DW200A.

E.C.E. LLC
Electrical Consulting Engineers
939 So. West Temple
Salt Lake City, Utah 84101
Telephone (801) 521-8007
Telefax (801) 521-8057

ECE JOB #: 4010

STAMP

LICENSED PROFESSIONAL ENGINEER
No. 185650
ENAYAT ULLAH NAWABI
STATE OF UTAH

BASEMENT PLAN - ELECTRICAL

SCALE: AS NOTED

REVISIONS:

PERMIT SET

DAUGHTERS OF UTAH PIONEERS PHASE II IMPROVEMENTS
DFCM PROJECT NO. 07273050
300 NORTH MAIN STREET, SALT LAKE CITY, UTAH 84103

MJSA
357 West Pierpont Avenue □ Salt Lake City, Utah 84101
Telephone 801 364 5161 □ Facsimile 801 364 5167
ARCHITECTURE INTERIOR DESIGN

THESE DRAWINGS ARE INSTRUMENTS OF SERVICE AND SHALL REMAIN THE PROPERTY OF THE ARCHITECT. NO USE OR RE-USE OF THESE DOCUMENTS SHALL BE PERMITTED UNLESS AUTHORIZED IN WRITING BY MJSA ARCHITECTS WITH APPROPRIATE COMPENSATION.

PROJECT NO.: 10011

DATE: 7/12/10

SHEET: E1.2

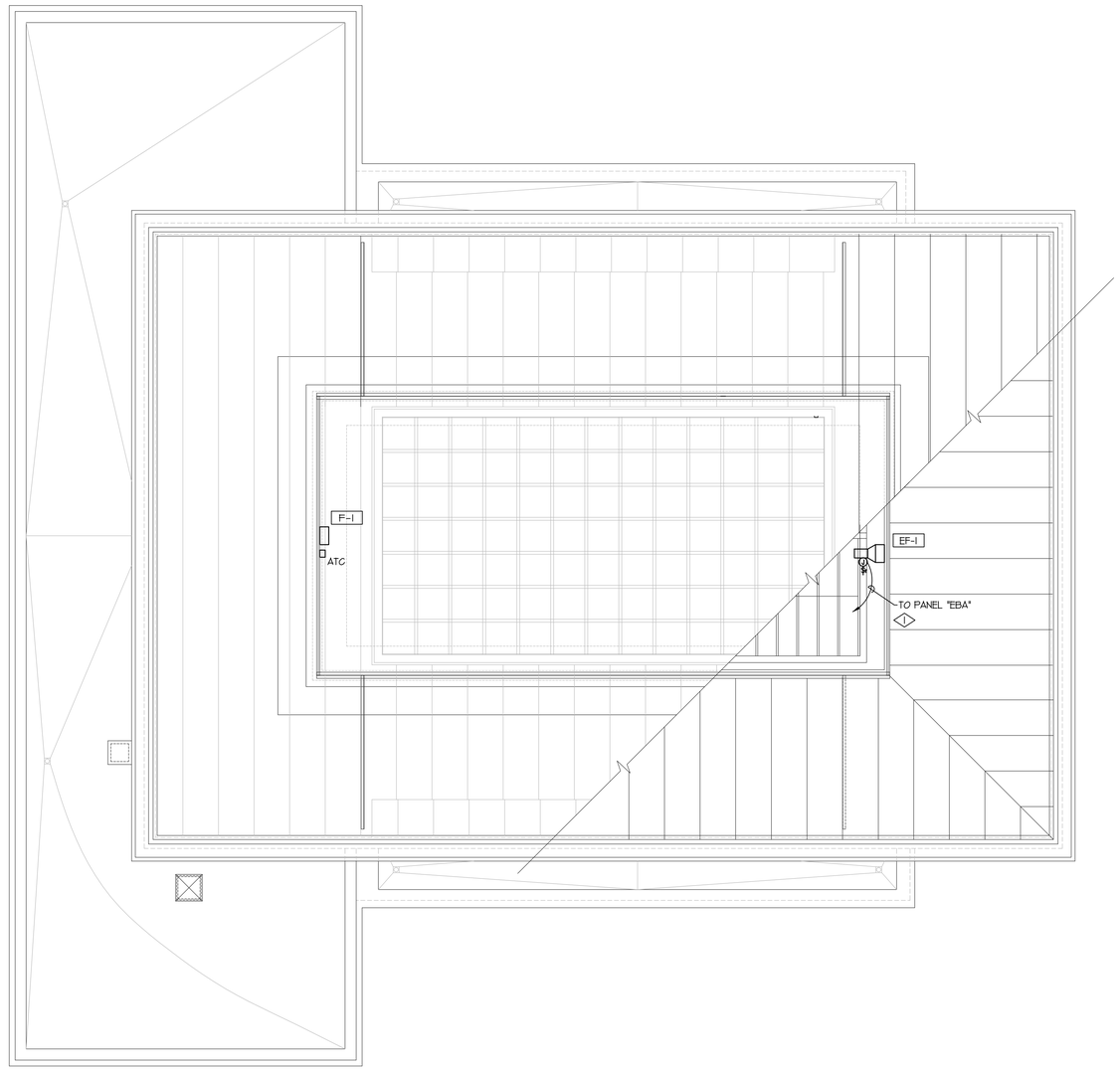

N

ATTIC PLAN – ELECTRICAL

SCALE: 1/8" = 1'-0"

REFERENCE NOTES

1. PROVIDE 120V. POWER THRU A THERMAL SITE SWITCH TO THE NEW EXHAUST FAN FROM EXISTING PANEL LOCATED IN THE BASEMENT LEVEL.

E.C.E. LLC
Electrical Consulting Engineers
939 So. West Temple
Salt Lake City, Utah 84101
Telephone (801) 521-8007
Telefax (801) 521-8057

ECE JOB #: 4010

STAMP

LICENSED PROFESSIONAL ENGINEER
No. 185650
ENAYAT ULLAH NAWABI
STATE OF UTAH

ATTIC PLAN - ELECTRICAL

SCALE: AS NOTED

REVISIONS:

PERMIT SET

DAUGHTERS OF UTAH PIONEERS PHASE II IMPROVEMENTS
DFCM PROJECT NO. 07273050
300 NORTH MAIN STREET, SALT LAKE CITY, UTAH 84103

MJSA
357 West Pierpont Avenue □ Salt Lake City, Utah 84101
Telephone 801 364 5161 □ Facsimile 801 364 5167
ARCHITECTURE INTERIOR DESIGN

THESE DRAWINGS ARE INSTRUMENTS OF SERVICE AND SHALL REMAIN THE PROPERTY OF THE ARCHITECT. NO USE OR RE-USE OF THESE DOCUMENTS SHALL BE PERMITTED UNLESS AUTHORIZED IN WRITING BY MJSA ARCHITECTS WITH APPROPRIATE COMPENSATION.

PROJECT NO.: 10011

DATE: 7/12/10

SHEET: E1.3