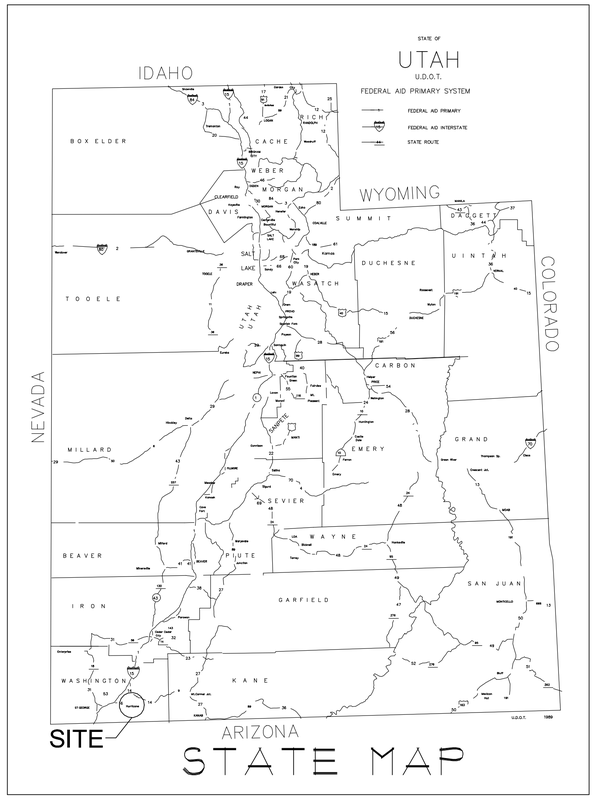

STATE MAP

UDOT MAINTENANCE
ST. GEORGE STATION #4521
HURRICANE STATION #4522
HURRICANE, UTAH

DFCM PROJECT #07292900

CONSTRUCTION DRAWINGS – MARCH 2009

LOCATION MAP

SARGENT DESIGN GROUP
ARCHITECTURE | PLANNING

36 NORTH 300 WEST, SUITE B
CEDAR CITY, UTAH 84720
OFFICE: (435) 586-8510
FAX: (435) 586-4873
jcoltons@email.com

CONSULTANTS

STRUCTURAL
Insite Engineering, P.C.
John Craven
1883 West Royal Hunte Drive
Suite 200
Cedar City, Utah 84720
Office: (435) 867-4565
Fax: (435) 867-4459

MECHANICAL
RJ Robinson Engineering P.C.
Rick M. Robinson
1135 N. Main
Building B
Cedar City, Utah 8472 0
Office: (435) 867 -1702
Fax: (435) 867-1126

ELECTRICAL
Royal Engineering
Steven R. Griffiths
2335 South State
Suite 225
Provo, Utah 84606
Office: (801) 375 -2228
Fax: (801) 375-2676

CIVIL
Insite Engineering, P.C.
Ronald J. Larsen
1883 West Royal Hunte Drive
Suite 200
Cedar City, Utah 84720
Office: (435) 867-4565
Fax: (435) 867-4459

CODE ANALYSIS

APPLICABLE CODES

	Year		Year
International Building Code	2006	National Electrical Code	2006
International Mechanical Code	2006	Uniform Code for	
International Plumbing Code	2006	Building Conservation	N.A.
International Fire Code	2006	ADA Accessibility	
International Energy		Guildelines	2003
Conservation Code	2006		

A. Occupancy and Group: S1 (MAINT. FAC.) B (OFFICE ACCESSORY)

Change in Use: Yes _____ No X Mixed Occupancy: Yes X No _____

Special Use and Occupancy (e.g. High Rise, Covered Mall): N.A.

B. Seismic Design Category: D Design Wind Speed: 90 mph

C. Type of Construction (circle one):

I A | I B | II A | II B | III A | III B | IV HT | V A | (V B)

D. Fire Resistance Rating Requirements for the Exterior Walls based on the fire separation distance (in hours):

North: 0 South: 0 East: 0 West: 0

E. Mixed Occupancies: YES Nonseparated Uses: NO

F: Sprinklers:

Required: NO Provided: YES Type of Sprinkler System: WET SYSTEM

G: Number of Stories: 1 Building Height: 24'-6"

H: Actual Area per Floor (square feet): 17,415 SF. MAIN FLOOR
856 SF. WEST MEZZ AND 2,230 EAST MEZZ

I: Tabular Area: 9000 SF

J: Area Modifications:

a) $A_a = A_t + \left[\frac{A_t I_f}{100}\right] + \left[\frac{A_t I_s}{100}\right]$ $\quad I_f = 100\left[\frac{F}{P} - 0.25\right]\frac{W}{30}$

$\left[\frac{546}{546} - 0.25\right]\frac{30}{30}$ $\quad I_s = 3$

$16020 = 9000 + \left[\frac{9000\ (75)}{100}\right] + \left[\frac{9000\ (3)}{100}\right]$

b) Sum of the Ratio Calculations for Mixed Occupancies:

$\frac{\text{Actual Area}}{\text{Allowable Area}} \leq 1 \quad \frac{17415}{16020\ \text{SF}} = .400$

c) Total Allowable Area for:

1) One Story: 17415 SF
2) Two Story: $A_a(2)$ N.A.
3) Three Story: $A_a(3)$ N.A.

d) Unlimited Area Building: Yes _____ No X Code Section: _____

K. Fire Resistance Rating Requirements for Building Elements (hours).

Element	Hours	Assembly Listing	Element	Hours	Assembly Listing
Exterior Bearing Walls	0	N.A.	Floors - Ceiling Floors	0	N.A.
Interior Bearing Walls	0	N.A.	Roofs - Ceiling Roofs	0	N.A.
Exterior Non-Bearing Walls	0	N.A.	Exterior Doors and Windows	0	N.A.
Structural Frame	0	N.A.	Shaft Enclosures	0	N.A.
Partitions - Permanent	0	N.A.	Fire Walls	0	N.A.
Fire Barriers	0	N.A.	Fire Partitions	0	N.A.
			Smoke Partitions	0	N.A.

L. Design Occupant Load: 20* *IBC TABLE 1004.1.2

Exit Width Required: 6.6" Exit Width Provided: 36"

M. Minimum Number of Required Plumbing Facilities: *UNISEX (IBS SECTION 2902.2 EXPECTION 2)

Design Occupant Load: 10* *BASED ON UDOT STAFFING (15 MAX.)

a) Water Closets - Required (m) 1* (f) 1* Provided (m) 1* (f) 1*

b) Lavatories - Required (m) 1* (f) 1* Provided (m) 1* (f) 1*

c) Bath Tubs or Showers: 1 (EMERGENCY EYEWASH)

d) Drinking Fountains: 1 Service Sinks: 1

MAXIMUM NUMBER OF EMPLOYEES = 15

GENERAL NOTE:

CONSTRUCTION OF NEW STATE BUILDINGS AND REMODELING OF EXISTING BUILDINGS SHALL COMPLY WITH ALL THE REQUIREMENTS OF THE DFCM STANDARDS, INCLUDING ENHANCED ACCESSIBILITY. THE DFCM STANDARDS CAN BE FOUND AT THE FOLLOWING WEB SITE: www.dcm.utah.gov.

SARGENT DESIGN GROUP
ARCHITECTURE | PLANNING
36 NORTH 300 WEST, SUITE B
CEDAR CITY, UTAH 84720
OFFICE: (435) 586-8510
FAX: (435) 586-4873
jcoltons@email.com

State of Utah–Department of Administrative Services
DIVISION OF FACILITIES CONSTRUCTION AND MANAGEMENT
4110 State Office Building/Salt Lake City, Utah 84114/538-3018

Project: UDOT HURRICANE FACILITY DFCM PROJECT NO. 07292900

Sheet Title: COVER SHEET

Revisions:

PROJECT NUMBER:	08521
DATE:	09.17.08
DRAWN BY:	J.C.S.
CHECKED BY:	J.C.S.
APPROVED BY:	J.C.S.

G0.00

SHEET NUMBER:
Sheet of

GENERAL NOTES

1. CONTRACTOR IS RESPONSIBLE FOR VERIFYING ALL DIMENSIONS AND CONDITIONS AT THE SITE BEFORE SUBMITTING A BID OR PROCEEDING WITH ANY PORTION OF THE WORK.
2. WHENEVER QUESTIONS ARISE OR CONDITIONS ARE ENCOUNTERED WHICH ARE NOT COVERED BY OR ARE IN CONFLICT WITH THE CONTRACT DOCUMENTS, CONSULT WITH THE ARCHITECT PRIOR TO TAKING ANY FURTHER ACTION.
3. ALL DIMENSIONS ARE TO FACE OF MASONRY OR FACE OF STUD, U.N.O.
4. DO NOT SCALE DRAWINGS FOR DIMENSIONS.
5. DIMENSIONS NOTED AS N.T.S. ARE TO BE FIELD VERIFIED.
6. ALL WOOD IN CONTACT WITH OR WITHIN 8" OF SOILS IS TO BE FIELD TREATED FOR MOISTURE, RODENT AND INSECT PROTECTION.
7. THE CONTRACTOR SHALL COORDINATE THE SEQUENCING OF WORK WITH THE OWNER AND ARCHITECT TO MEET THE OWNERS SCHEDULE.
8. CONTRACTOR SHALL LEAVE WORK AREAS BROOM CLEAN AND FREE OF TOOLS, EQUIPMENT, ETC., AT THE END OF EACH SHIFT. ALL CONSTRUCTION ACTIVITY SHALL BE CONTAINED WITHIN CONSTRUCTION BARRICADES OR FENCES. CONTRACTOR SHALL PROTECT OWNERS EXISTING CONSTRUCTION AND EQIPMENT ADJACENT TO NEW CONSTRUCTION. CONTRACTOR SHALL CLEAN ALL SURFACES TO "LIKE NEW" CONDITION AT THE COMPLETION OF
9. PROVIDE WATER SUPPLY ROUGH-IN AND ELECTRICAL SUPPLY TO IRRIGATION CONTROLS. PROVIDE PVC SLEEVE UNDER PAVEMENTS AND WALKS
10. THE DESIGN OF THE PRE MANUFACTURED STRUCTURAL ROOF SYSTEM INCLUDING THE STEEL DECK, JOISTS, GIRDERS, COLUMNS AND THE LATERAL FORCE RESISTING SYSTEM (INCLUDING RIGID FRAMES) IS THE RESPONSIBILITY OF THE PRE MANUFACTURED METAL BUILDING SUPPLIER. FOOTINGS, SEEL COLUMNS, CONCRETE PIER SIZES & LOCATIONS SHOWN ARE AN ESTIMATE OF ACTUAL SIZES. ACTUAL SIZES WILL BE PROVIDE AFTER PREFABRICATED METAL BUILDER IS SELECTED. ALL BIDDERS SHALL PROVIDE UNIT PRICES FOR ADDING OR SUBTRACTING VOLUME OF CONCRETE, WEIGHT OF EINFORCING STEEL AND VOLUME OF EARTHWORK.

GRAPHIC SYMBOLS

- EARTH
- SAND
- CONC. W/ FINISH
- TILE W/ BED
- BRICK
- CMU
- LIMESTONE
- WOOD (BLOCKING)
- WOOD FRAMING
- STEEL
- RIGID INSULATION
- PLASTER
- COMP. FILLER
- METAL LATH
- GRAVEL
- CONCRETE
- CAST STONE
- MARBLE
- GRANITE
- STONE
- PLYWOOD
- WOOD FINISH
- ALUMINUM
- BATT INSULATION
- ACOUSTICAL TILE
- BACKER ROD AND FILLER
- GYPSUM BOARD
- FENCE

ARCHITECTURAL LEGEND

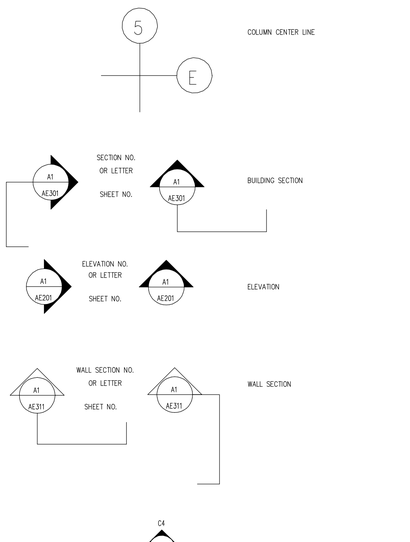

ABBREVIATIONS

ALT.	ALTERNATE
ALUM.	ALUMINUM
A.B.	ANCHOR BOLT
&	AND
ARCH.	ARCHITECTURAL
@	AT OR AT THE
BM.	BEAM
BLK.	BLOCK
BLKG.	BLOCKING
BD.	BOARD
BOT.	BOTTOM
BLDG.	BUILDING
CLKG.	CAULKING
C.I.	CAST IRON
CLG.	CEILING
CEM.	CEMENT
CTR.	CENTER
	CENTER LINE
CER.	CERAMIC
C.T.	CERAMIC TILE
CFCI	CONTRACTOR FURNISH, CONTRACTOR INSTALL
CFOI	CONTRACTOR FURNISH, OWNER INSTALLED
CLR.	CLEAR (...ANCE)
CLO.	CLOSET
COL.	COLUMN
CONC.	CONCRETE
CMU	CONCRETE MASONRY UNIT
CONN.	CONNECTION
CONSTR.	CONSTRUCTION
CONT.	CONTINUE/CONTINUOUS
CONTR.	CONTRACTOR
C.J.	CONTROL JOINT
CORR.	CORRIDOR
CNTR.	COUNTER
CTSK.	COUNTERSUNK
DET.	DETAIL
DIA.	DIAMETER
DIM.	DIMENSION
DN.	DOWN
D.S.	DOWNSPOUT
DWG.	DRAWING
D.F.	DRINKING FOUNTAIN
EA.	EACH
ELEC.	ELECTRIC (AL)
ELEV./EL.	ELEVATION
EQ.	EQUAL
EQUIP.	EQUIPMENT
EXP.	EXPANSION
EXT.	EXTERIOR
EW	EACH WAY
FIN.	FINISH
F.A.	FIRE ALARM
F.E.	FIRE EXTINGUISHER
F.E.C.	F.E. CABINET
FLR./FL.	FLOOR
F.D.	FLOOR DRAIN
FTG.	FOOTING
FDN.	FOUNDATION
GALV.	GALVANIZED
G.I.	GALVANIZED IRON
GA.	GAUGE
GL.	GLASS
GR.	GRADE
GND.	GROUND
GYP.	GYPSUM
GYP. BD.	GYPSUM BOARD
HDWR.	HARDWARE
HDWD.	HARDWOOD
HT.	HEIGHT
H.P.	HIGH POINT
HORIZ.	HORIZONTAL
H.B.	HOSE BIBB
HM	HOLLOW METAL
HR.	HOURS (FIRE RATING)
IN.	INCH
I.D.	INSIDE DIAMETER
INUSL.	INSULATION
INT.	INTERIOR
JAN.	JANITOR
JT.	JOINT
J-BOX	JUNCTION BOX
KIT.	KITCHEN
LAM.	LAMINATE
LAV.	LAVATORY
LT.	LIGHT
L.P.	LOW POINT
MAINT.	MAINTENANCE
MFR.	MANUFACTURER
M.O.	MASONRY OPENING
MAX.	MAXIMUM
MECH.	MECHANICAL
MEMB.	MEMBRANE
MEN	MEN'S TOILET
MTL./MET.	METAL
MIN.	MINIMUM
MIR.	MIRROR
MISC.	MISCELLANEOUS
MTD.	MOUNTED
MUL.	MULLION
NOM.	NOMINAL
N.	NORTH
N.I.C.	NOT IN CONTRACT
N.T.S.	NOT TO SCALE
NO. OR #	NUMBER
OFOI	OWNER FURNISH, OWNER INSTALL
OFCI	OWNER FURNISH, CONTRACTOR INSTALL
OFF.	OFFICE
O.C.	ON CENTER
OPNG.	OPENING
OPP.	OPPOSITE
OPP. H.	OPPOSITE HAND
O.D.	OUTSIDE DIAMETER
PTD.	PAINTED
PR.	PAIR
PART.	PARTITION
PED.	PEDESTRIAN
PLAS.	PLASTER
P. LAM.	PLASTIC LAMINATE
PL	PLATE
PM	PRESSED METAL
PLYWD.	PLYWOOD
PT.	POINT
Q.T.	QUARRY TILE
RAD.	RADIUS
R.W.L.	RAIN WATER LEADER
RE:	REFER TO
REFL.	REFLECTED
REINF.	REINFORCING
REQ.	REQUIRED
REV.	REVISED
R.	RISER
R.D.	ROOF DRAIN
RM.	ROOM
R.O.	ROUGH OPENING
SCHED.	SCHEDULE
SEAL.	SEALANT
SECT.	SECTION
S.SK.	SERVICE SINK
SHT.	SHEET
SIM.	SIMILAR
SL./SLP.	SLOPE
S.C.	SOLID CORE
SPEC.	SPECIFICATIONS
SQ.	SQUARE
STD.	STANDARD
STL.	STEEL
STOR.	STORAGE
STRUCT.	STRUCTURAL/STRUCTURE
SYM.	SYMMETRICAL
S.STL	STAINLESS STEEL
TEL.	TELEPHONE
TEMP.	TEMPORARY/TEMPERED
THK.	THICK (NESS)
T & G	TONGUE AND GROOVE
T/CONC.	TOP OF CONCRETE
T/CURB	TOP OF CURB
T.O.P.	TOP OF PLATE
T/WALL	TOP OF WALL
T.	TREAD
TYP.	TYPICAL
UNF.	UNFINISHED
U.N.O.	UNLESS NOTED OTHERWISE
VAR.	VARY OR VARIES
VERT.	VERTICAL
V.T.R.	VENT THROUGH ROOF
W/	WITH
WD.	WOOD
WP.	WATERPROOF
WSCT.	WAINSCOT
W/O	WITHOUT
W.P.	WORKING POINT
W.R.	WATER RESISTANT

INDEX OF DRAWINGS

G000	COVER SHEET
G001	GENERAL NOTES, ABBREVIATIONS, SYMBOLS, LEGEND & SHEET INDEX
G002	MASTER KEYNOTE LIST

CIVIL

C001	CIVIL NOTES
C101	STORM WATER POLLUTION PREVENTION PLAN
C102	SITE & UTILITES PLAN
C103	SITE & UTILITES PLAN CONTINUED
C104	SITE & UTILITES PLAN CONTINUED
C105	SITE GRADING & DRAINAGE PLAN
C106	SITE GRADING & DRAINAGE PLAN CONTINUED
C107	SITE GRADING & DRAINAGE PLAN CONTINUED
C500	SWPP GENERAL NOTES
C501	SWPP DETAILS
C502	SWPP DETAILS CONTINUED
C503	UDOT DETAILS
C504	HURRICANE CITY DETAILS A
C505	HURRICANE CITY DETTAILS B
C506	CIVIL DETAILS
C507	FENCING DETAILS
C508	POND DETAILS

ARCHITECTURAL

AE101	FIRST FLOOR
AE102	MEZZANINE FLOOR PLANS
AE121	FIRST FLOOR AND MEZZANINE REFLECTED CEILING PLANS
AE141	ROOF PLAN & ROOF DETAILS
AE201	EXTERIOR ELEVATIONS AND DETAILS
AE202	EXTERIOR ELEVATIONS AND DETAILS
AE301	BUILDING SECTIONS AND DETAILS
AE311	WALL SECTIONS
AE401	ENLARGED RESTROOM FLOOR PLAN, INT. ELEVTATIONS AND DETAILS
AE402	ENLARGED MAINTENANCE BAY AND INTERIOR ELEVATIONS
AE403	STAIR PLAN, SECTION, ELEVATIONS AND DETAILS
AE501	WALL TYPES
AE502	SIGNAGE AND MISC. DETAILS
AE601	DOOR SCHEDULE AND DETAILS
AE602	WINDOW FRAME TYPES, GLAZING & FINISH SCHEDULES AND DETAILS
AE701	SITE STRUCTURES – SALT STORAGE PLAN, SECTION & ELEVATIONS
AE702	SITE STRUCTURES – SALT STORAGE DETAILS
AE703	SITE STRUCTURES – WASH RACK PLAN, SECTION & ELEVATIONS

STRUCTURAL

S001	GENERAL STRUCTURAL NOTES
S101	FOOTING AND FOUNDATION PLAN
S102	MEZZANINE FLOOR FRAMING PLAN
S103	OPEN STORAGE FOOTING AND FOUNDATION PLAN
S104	OUT BUILDING PLANS
S501	DETAILS
S502	DETAILS
S503	DETAILS
S504	DETAILS
S505	DETAILS
S601	STRUCTURAL SCHEDULES

MECHANICAL

M001	MECHANICAL SCHEDULE SHEET
M201	MECHANICAL FLOOR PLAN
M601	MECHANICAL DETAIL SHEET
M602	MECHANICAL DETAIL SHEET
M603	MECHANICAL DETAIL SHEET
P001	PLUMBING SCHEDULE SHEET
P201	PLUMBING FLOOR PLAN
P301	PLUMBING ENLARGEMENTS
P601	PLUMBING DETAIL SHEET
P602	PLUMBING DETAIL SHEET
P603	PLUMBING DETAIL SHEET

ELECTRICAL

E0.1	ELECTRICAL SITE PLAN PAGE 1
E0.2	ELECTRICAL SITE PLAN PAGE 2
E1.1	LIGHTING PLAN
E1.2	POWER PLAN
E1.3	AUXILARY BUILDING ELECTRICAL
E2.1	DETAILS
E2.1	DETAILS
E2.2	DETAILS
E2.3	DETAILS
E2.4	ELECTRICAL PANELS AND SCHEDULES
E2.5	ELECTRICAL PANELS AND SCHEDULES

SARGENT DESIGN GROUP
ARCHITECTURE | PLANNING
36 NORTH 300 WEST, SUITE B
CEDAR CITY, UTAH 84720
OFFICE: (435) 586-8510
FAX: (435) 586-4873
jcoltons@email.com

State of Utah-Department of Administrative Services
DIVISION OF FACILITIES CONSTRUCTION AND MANAGEMENT
4110 State Office Building/Salt Lake City, Utah 84414/538-3018

Project: UDOT HURRICANE FACILITY DFCM PROJECT NO. 07292900

Sheet Title: GENERAL NOTES

Revisions:

PROJECT NUMBER:	08527
DATE:	09.17.08
DRAWN BY:	J.C.S.
CHECKED BY:	J.C.S.
APPROVED BY:	J.C.S.

G0.01

SHEET NUMBER:
Sheet of

MASTER KEYNOTE LIST – (APPLIES TO ARCHITECTURAL DRAWINGS ONLY)

DIVISION 1 GENERAL REQUIREMENTS

DIVISION 2 SITEWORK

02000 EARTHWORK

02200.A0 COMPACTED FILL
02200.B0 GRAVEL BASE
02200.C0 SAND

02511 ZERO VOIDS ASPHALT PAVING

02511.A0 ZERO VOIDS ASPHALT PAVING (THICKNESS)

02740 ASPHALT CONCRETE PAVING

02740.A0 ASPHALT CONCRETE PAVING

DIVISION 3 CONCRETE

03053 CONCRETE WATER PROOFING ADMIXTURE

03053.A0 CONCRETE WATER PROOFING ADMIXTURE

03054 OLIOPHOBIC TOPICAL CONCRETE SEALER

03054.A0 OLIOPHOBIC TOPICAL SEALER

03300 CAST-IN-PLACE CONCRETE

03300.A0 CONCRETE – SLAB ON GRADE
03300.A1 CONCRETE SLAB-ON-GRADE – RE: STRUCTURAL
03300.A2 CONCRETE SLAB-ON-GRADE (THICKNESS)
03300.B1 CONCRETE SLAB – RE:STRUCTURAL
03300.B2 CONCRETE SLAB (THICKNESS)
03300.C0 FOOTING
03300.C1 FOOTING – RE: STRUCTURAL
03300.D0 CONCRETE PAD
03300.E0 RETAINING WALL
03300.F0 CAST-IN-PLACE REINFORCED CONCRETE
03300.G0 CONCRETE OVER METAL DECK – RE:STRUCTURAL
03300.H0 FOUNDATION WALL, RE: STRUCTURAL
03300.H1 CONCRETE PIER, RE: STRUCTURAL
03300.J0 REINFORCING
03300.J1 REINFORCING – RE: STRUCTURAL
03300.J2 #4 BARS CONTINUOUS (QUANTITY)
03300.J3 #5 BARS CONTINUOUS (QUANTITY)
03300.K1 CONCRETE PIPE BASE
03300.L1 30# FELT
03300.M1 MOISTURE BARRIER
03300.N0 CONCRETE CURB
03300.P3 CONTROL JOINT RE: STRUCTURAL
03300.P4 CONSTRUCTION JOINT
03300.P6 CHAMFER JOINT
03300.P7 SAWCUT CONSTRUCTION JOINT, TYP.
03300.Q1 CONCRETE BOLLARD – SEE STRUCTURAL
03300.S1 SPLASH BLOCK
03300.S2 CONCRETE SWALE
03300.T1 CONCRETE @ STAIR TREAD

DIVISION 5 METALS

05120 STRUCTURAL STEEL

05120.A1 STEEL BEAM – RE: STRUCTURAL – GALVANIZED
05120.B1 COLUMN – RE: STRUCTURAL – GALVANIZED
05120.C1 TUBE STEEL BEAM – RE: STRUCTURAL – GALVANIZED
05120.D1 TUBE STEEL COLUMN – RE: STRUCTURAL

05310 STEEL DECK

05310.A1 METAL DECK – RE: STRUCTURAL

05400 COLD-FORMED METAL FRAMING

05400.X1 STEEL STUD
05400.X2 STEEL TRACK
05400.X3 STEEL JOIST – RE:STRUCTURAL

05500 METAL FABRICATIONS

05500.A1 ANGLE – RE: STRUCTURAL
05500.A2 STEEL ANGLE (SIZE) – GALVANIZED
05500.B0 CLIP ANGLE
05500.B2 CLIP ANGLE (SIZE)
05500.C1 SHEET METAL ANGLE – 22 GA. – GALVANIZED (SIZE)
05500.D0 CHANNEL (SIZE)
05500.D1 CHANNEL – RE: STRUCTURAL
05500.D2 HAT CHANNEL (SIZE)
05500.E0 PLATE (SIZE)
05500.E1 PLATE – RE: STRUCTURAL
05500.E2 PLATE (SIZE) – GALVANIZED
05500.E3 BENT PLATE – SEE STRUCTURAL
05500.J1 PIPE BOLLARD (DIAMETER) – GALV. & PAINTED
05500.M1 CHECKERED PLATE (SIZE) GALVANIZED
05500.P0 ANCHOR BOLT(S)
05500.P1 ANCHOR BOLTS (DIAMETER, SPACING)

05500 METAL FABRICATIONS (CONT.)

05500.V0 FLOOR PLATE
05500.X1 STEEL STUD (RE:STRUCTURAL)
05500.X2 STEEL RUNNER (RE:STRUCTURAL)
05500.Y0 ROUGH HARDWARE – GALVANIZED
05500.Z0 CHAIN – GALVANIZED

05510 METAL STAIRS

05510.A1 LADDER RUNGS
05510.B0 LADDER RAILS
05510.C0 LADDER MOUNTING BRACKET
05510.D1 RUBBER SHOE AT BOTTOM OF EACH RAIL
05510.E1 NON SKID SURFACE @ NOSING
05510.F0 STEEL STRINGER – (SIZE)
05510.F1 STEEL STRINGER – (SIZE) – GALVANIZED
05510.G1 3/16" STEEL CLOSURE PLATE – GALVANIZED
05510.H0 CONC. FILLED METAL PAN STAIR – GALVANIZED
05510.H1 PRE-FORMED, CONC. FILLED METAL PAN STAIR TREAD – (SIZE) – GALVANIZED
05510.J1 METAL PAN STAIR SUPPORT – (SIZE) – GALVANIZED
05510.J2 PAN ANCHORAGE – (SIZE) – GALVANIZED
05510.K1 STEEL CHANNEL DECK SUPPORT – GALVANIZED

05521 PIPE & TUBE RAILINGS

05521.A1 1 1/2" O.D. STEEL GUARDRAIL
05521.A2 PIPE GUARDRAIL (DIAMETER) – GALVANIZED
05521.A3 1 1/2" O.D. PIPE GUARDRAIL – GALVANIZED
05521.B1 1 1/2" O.D. HANDRAIL
05521.B2 PIPE HANDRAIL (DIAMETER) – GALVANIZED
05521.B3 1 1/2" O.D. PIPE HANDRAIL – GALVANIZED
05521.C2 ESCUTCHEON WITH EASED EDGES (SIZE)
05521.D1 PIPE RAIL SUPPORT – GALVANIZED
05521.E1 1" I.D. PIPE RAILING ANCHOR – GALVANIZED
05521.F1 1/2" DIA. THRU BOLT

05530 GRATINGS

05530.A0 TRENCH FRAME – GALVANIZED
05530.A1 STEEL GRATE 22-W-4 (SIZE) GALVANIZED
05530.B0 ALUMINUM BAR PANELS
05530.C1 METAL GRATE PANEL – GALV.
05530.C2 METAL GRATE TREAD – GALV.

DIVISION 6 WOOD AND PLASTICS

06105 MISCELLANEOUS CARPENTRY

06105.L2 BLOCKING AS REQUIRED
06105.P1 2X4
06105.P2 2X6
06105.P6 4X4
06105.P9 2 x FRAMING, FIRE TREATED
06105.P10 PRESSURE TREATED WOOD TIMBER (SIZE)
06105.Q2 SHIM AS REQUIRED
06105.R2 SHEATHING – PLYWOOD (THICKNESS) GRADE (SIZE)
06105.R3 PROTECTION BOARD (THICKNESS)
06105.V1 EXTERIOR GRADE PLYWOOD (THICKNESS)
06105.V6 PEGBOARD (THICKNESS)
06105.Z0 ANCHOR AS REQUIRED

06402 INTERIOR ARCHITECTURAL WOODWORK

06402.A0 SILL
06402.A1 3/4" PAINTED WOOD SILL
06402.B1 PLASTIC LAMINATE BACKSPLASH (HEIGHT)
06402.C1 PAINT GRADE WOOD CAP (THICK)
06402.H0 SHELF(VES)
06402.H1 ADJUSTABALE SHELVES (FINISH)
06402.H2 SHELVING (DEPTH)
06402.K0 BASE UNIT (FINISH)
06402.K2 BASE UNIT W/ADJ. SHELF(VES) (FINISH)
06402.K3 BASE UNIT W/DRAWERS (FINISH)
06402.K4 BASE UNIT W/DRAWER & ADJ. SHELF(VES) (FINISH)
06402.L2 WALL UNIT W/ADJ. SHELF(VES) (FINISH)
06402.P0 COUNTERTOP
06402.P2 COUNTERTOP – P. LAM. ON 3/4" PLYWOOD
06402.X0 WORKBENCH (DEPTH)

06651 SOLID SURFACE FABRICATIONS

06651.A0 1/2" WHITE SOLID SURFACE WINDOW SILL

DIVISION 7 THERMAL AND MOISTURE PROTECTION

07729.A0 STANDING SEAM METAL ROOF 2 PIPE SNOWGUARD SYSTEM

07901 JOINT SEALANTS

07901.A0 CONT. SEALANT
07901.B0 ASPHALT SATURATED FIBERBOARD
07901.C0 CONT. CAULK
07901.D0 JOINT FILLER
07901.G0 BACKER ROD
07901.H1 5/8" BEAD OF DE NEFF SWELLSEAL WA MASTIC
07901.H2 CONCENTRATED DRY PAC
07901.H3 CONCENTRATED SLURRY COAT

DIVISION 8 DOORS AND WINDOWS

08111 STANDARD STEEL DOORS AND FRAMES

08111.A0 PRESSED METAL FRAME
08111.A1 GROUT-FILLED PRESSED METAL FRAME
08111.B0 HOLLOW METAL DOOR
08111.C0 JAMB ANCHOR

08360 SECTIONAL OVERHEAD DOORS

08360.A0 OVERHEAD SECTIONAL DOOR
08360.B0 3" HEAVY DUTY OVERHEAD SECTIONAL DOOR TRACK
08360.C0 WEATHERSTRIPPING
08360.D0 DOOR GUIDE

08520 ALUMINUM WINDOWS

08520.A0 WINDOW UNIT
08520.B0 FIXED ALUM. WINDOW
08520.C0 ALUM. WINDOW W/SLIDING GLASS PANEL
08520.M0 SILL STARTER, SET IN SEALANT
08520.P0 BREAKMETAL
08520.Q0 WEATHERSTRIPPING
08520.R0 ALUMINUM FLASHING, FINISH TO MATCH WINDOW FRAME

08521 HORIZONTAL SLIDING VINYL (PVC) WINDOWS

08521.B0 FIXED VINYL WINDOW
08521.C0 VINYL WINDOW W/SLIDING GLASS PANEL

08710 DOOR HARDWARE

08710.A0 THRESHOLD
08710.B0 DOOR SWEEP
08710.C0 WEATHERSTRIPPING

08800 GLAZING

08800.C0 WIRE GLASS
08800.G1 CLEAR INSULATING GLASS (SIZE)
08800.G3 OPAQUE INSULATING GLASS

DIVISION 9 FINISHES

09255 GYPSUM BOARD ASSEMBLIES

09255.A1 GYPSUM BOARD (THICKNESS)
09255.A2 WATER RESISTANT GYPSUM BOARD (THICKNESS)
09255.B2 TYPE 'X' GYPSUM BOARD (THICKNESS)
09255.C3 CEMENT BOARD (THICKNESS)
09255.H0 METAL STUD
09255.H1 METAL STUDS (SIZE, SPACING)
09255.J0 METAL RUNNER
09255.K0 DOUBLE STUDS
09255.K1 DOUBLE STUDS (GAGE)
09255.L1 7/8" X 1-3/8" METAL ANGLE
09255.L2 2-1/2" X 2-1/2" METAL ANGLE
09255.M2 METAL CORNER BEAD (TYP)
09255.P0 Z-FURRING CHANNEL
09255.Q0 7/8" METAL FURRING CHANNEL
09255.R2 CHANNEL (SIZE, SPACING)
09255.S1 8 GA. WIRE HANGERS (SPACING)
09255.S2 18 GA. WIRE TIES
09255.S3 18 GA. METAL MOUNTING STRIPS
09255.S4 14 GA. STAINLESS STEEL COUNTER TOP (FINISH)
09255.U1 SUSPENDED CEILING SYSTEM
09255.V0 EDGE TRIM (TYP)
09255.V2 LC-BEAD (PREFERRED USG 200-A TRIM)
09255.V4 VINYL TRIM

09300 TILE

09300.A1 FLOOR TILE – SEE FINISH SCHED.
09300.B1 WALL TILE – SEE FINISH SCHED.
09300.C0 TILE BASE
09300.D1 BULLNOSE TRIM UNIT
09300.E1 1/2" x 6" TILE TRIM PIECE – SEE FINISH SCHED.
09300.G1 MORTAR BED
09300.G4 WATERPROOF MEMBRANE

09660 RESILIENT TILE FLOORING

09660.A1 VINYL COMPOSITION TILE
09660.B1 VINYL TRANSITION STRIP

09678 RESILIENT WALL BASE AND ACCESSORIES

09678.E1 RUBBER BASE (SIZE)

09900 PAINTING

09900.A1 PAINT – SEE FINISH SCHED.

DIVISION 10 SPECIALTIES

10100 VISUAL DISPLAY BOARDS

10100.C0 MARKER BOARD

10425 SIGNS

10425.A0 ROOM SIGNAGE
10425.A1 OIL SIGNAGE
10425.B1 WELDING SIGNAGE
10425.C1 ACCESSIBLE SIGNAGE
10425.D1 ACCESSIBLE/UNISEX RESTROOM SIGNAGE

10500 METAL LOCKERS AND STORAGE CABINETS

10500.A0 METAL LOCKERS (WIDTH)
10500.B0 METAL STORAGE CABINETS

10522 FIRE EXTINGUISHERS, CABINETS, AND ACCESSORIES

10522.A0 FIRE EXTINGUISHER

10800 TOILET AND BATH ACCESSORIES

10800.B0 PAPER TOWEL DISPENSER & WASTE RECEPTACLE
10800.B1 SEMI-RECESSED PAPER TOWEL DISPENSER & WASTE RECEPTACLE
10800.C0 TOILET TISSUE DISPENSER
10800.C1 RECESSED TOILET TISSUE DISPENSER/SAN. NAP. DISPOSAL
10800.D0 MOP RACK
10800.E0 GRAB BAR
10800.E1 GRAB BAR (SHOWER)
10800.F0 ROBE HOOK
10800.F1 DOUBLE PRONG ROBE HOOK
10800.H0 SOAP DISPENSER
10800.H1 SOAP DISH
10800.P1 SHOWER CURTAIN ROD
10800.P2 SHOWER CURTAIN
10800.R1 FRAMED MIRROR (SIZE)
10800.T1 FOLDING SHOWER SEAT
10800.T0 METAL SHELF (SIZE)

DIVISION 11 EQUIPMENT

11151 MOBILE LIFT

11151.A0 MOBILE LIFT – NIC – OWNER FURNISHED

DIVISION 12 FURNISHINGS

12511 HORIZONTAL LOUVER BLINDS

12511.A0 HORIZONTAL LOUVER BLINDS

DIVISION 13 SPECIAL CONSTRUCTION

13125 METAL ARCH BUILDING SYSTEM

13125.A0 METAL ARCH BUILDING SYSTEM
13125.B0 STANDING SEAM METAL ROOF
13125.B1 STANDING SEAM METAL ROOF RIDGE
13125.B2 STANDING SEAM METAL CANOPY
13125.C0 METAL RAIN GUTTER W/DOWNSPOUTS
13125.C1 METAL RAIN GUTTER
13125.C2 DOWNSPOUT
13125.C3 GUTTER STRAP, INSTALL AT EVERY OTHER PANEL RIB
13125.D0 METAL FLASHING
13125.D1 METAL DRIP FLASHING
13125.D2 METAL HEAD FLASHING
13125.D3 METAL SILL FLASHING
13125.D4 METAL FLASHING, FINISH TO MATCH ROOF PANELS
13125.D5 RIDGE FLASHING, TO MATCH ROOF PANELS
13125.D6 DOOR HEAD FLASHING
13125.D7 JAMB FLASHING
13125.D8 CONTINUOUS PRE-FINISHED SHEET METAL CLOSURE
13125.E0 METAL TRIM
13125.E1 JAMB TRIM
13125.E2 PANEL TRIM
13125.E3 RAKE TRIM
13125.E4 RAKE SLIDE
13125.E5 METAL EAVE CLOSURE
13125.E6 WALL CLOSURE
13125.E7 METAL OUTSIDE CLOSURE
13125.E8 CORNER TRIM
13125.E9 FRAMED OPENING HEADER
13125.F0 METAL WALL PANEL
13125.F1 METAL WALL FASTENER
13125.F2 BLIND RIVET
13125.F3 POP RIVET
13125.G0 STANDING SEAM METAL FACIA
13125.H0 BREAK METAL
13125.H1 METAL ANGLE
13125.H2 HIGH RAKE SUPPORT ANGLE
13125.H3 RAKE ANGLE
13125.H4 4" x 4" CONT. ANGLE
13125.H5 BACKUP PLATE ANGLE
13125.H6 EAVE SUPPORT ANGLE
13125.H7 EAVE STRUT

13125 METAL ARCH BUILDING SYSTEM (CONT.)

13125.J0 STRUCTURAL MEMBER – PRIMED AND PAINTED
13125.J1 STRUCTURAL GIRT – PAINTED
13125.J2 ROOF PURLIN – PAINTED
13125.J3 STRUCTURAL GIRT
13125.K0 CLIP
13125.K1 LOW PANEL CLIP
13125.L1 STEEL COLUMN – PAINTED
13125.L2 STEEL COLUMN – GALV. – PAINTED
13125.L3 STEEL COLUMN – GALVANIZED
13125.L4 STEEL COLUMN – PRIMED AND PAINTED
13125.M1 STEEL BEAM – PAINTED
13125.M2 STEEL BEAM – GALV. – PAINTED
13125.M3 STEEL BEAM – GALVANIZED
13125.M4 STEEL BEAM – PRIMED AND PAINTED
13125.N1 ANCHOR
13125.N2 FASTENER (SPACING)
13125.P1 DOUBLE BEAD TAPE SEALER
13125.P2 SEALANT
13125.P3 THERMAL BREAK
13125.Q0 METAL VENT
13125.Q1 VENT MATERIAL
13125.R0 INSULATION & VAPOR BARRIER (R-VALUE)

DIVISION 14 CONVEYING SYSTEMS

14620 TROLLEY HOIST

14620.A0 TROLLEY HOIST (SIZE) – RE: STRUCTURAL

DIVISION 15 EQUIPMENT

15000 MECHANICAL

15050.A1 MECH. PENETRATIONS
15251.A1 PIPE INSULATION AT ALL EXPOSED PIPE
15410.A0 URINAL
15410.A1 URINAL, ACCESSIBLE
15410.B0 SINK FAUCET
15410.B1 SINK FAUCET W/ADA LEVER HANDLES
15410.C0 UTILITY SINK
15410.D1 FLOOR SINK
15410.E0 TRENCH DRAIN
15410.E1 DRAIN W/ SEDIMENT BUCKET
15410.E2 FLOOR DRAIN
15410.F0 TOILET
15412.A0 EMERGENCY SHWR & EYE WASH
15452.A1 DRINKING FOUNTAIN
15460.A1 GAS FIRED WATER HEATER
15490.A0 WASTE OIL PUMP
15490.B0 WASTE OIL CARTS
15490.C0 WASTE OIL PIT
15490.D0 600 GAL WASTE OIL TANK – O.F.C.I.
15491.A0 AIR COMPRESSOR
15491.B0 OVERHEAD LUBE REEL
15491.C0 OVERHEAD HOSE REEL
15600.A0 NATURAL GAS RADIANT HEATING SYSTEM
15611.A1 PROPANE FIRED FURNACE
15838.A0 EXHAUST FAN
15887.A1 LOUVER W/ BIRD SCREEN

DIVISION 16 ELECTRICAL

16442 PANELBOARDS

16442.A0 ELECTRICAL PANEL

16510 INTERIOR LIGHTS

16510.A0 INTERIOR LIGHTS

16520 EXTERIOR LIGHTS

16520.B1 EXTERIOR WALL MOUNTED LIGHTS
16520.B2 EXTERIOR WALL MOUNTED FLOOD LIGHTS

16129.A0 CONTINUOUS HEAT TAPE IN DOWNSPOUTS AND GUTTER

SARGENT DESIGN GROUP
ARCHITECTURE | PLANNING
36 NORTH 300 WEST, SUITE B
CEDAR CITY, UTAH 84720
OFFICE: (435) 586-8510
FAX: (435) 586-4873
jcoltons@email.com

State of Utah–Department of Administrative Services
DIVISION OF FACILITIES CONSTRUCTION AND MANAGEMENT
4110 State Office Building/Salt Lake City, Utah 84114/538-3018

Project:
UDOT HURRICANE FACILITY
DFCM PROJECT NO. 07292900

Sheet Title:
KEY NOTES

Revisions:

PROJECT NUMBER:	08527
DATE:	09.17.08
DRAWN BY:	J.C.S.
CHECKED BY:	J.C.S.
APPROVED BY:	J.C.S.

G0.02

SHEET NUMBER:
Sheet of

CONSTRUCTION DRAWINGS FOR:
THE UDOT HURRICANE FACILITIES
DFCM PROJECT # 07292900

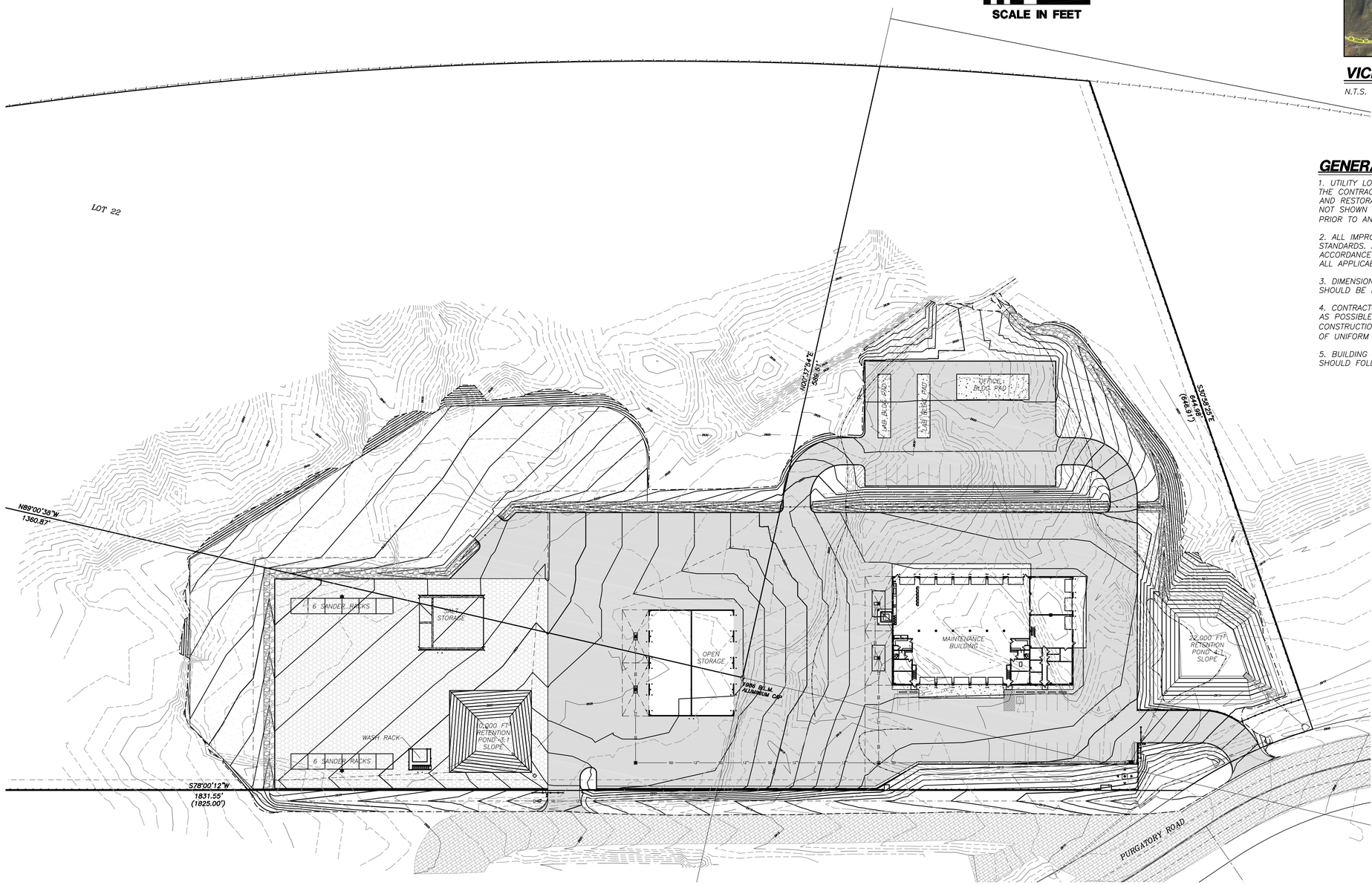

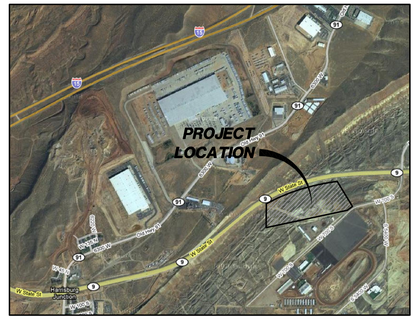

VICINITY MAP
N.T.S.

GENERAL NOTES

1. UTILITY LOCATIONS MUST BE VERIFIED IN THE FIELD BY THE CONTRACTOR. THE CONTRACTOR SHALL BE RESPONSIBLE FOR THE LOCATION, PROTECTION AND RESTORATION OF ALL BURIED OR ABOVE GROUND UTILITIES, SHOWN OR NOT SHOWN ON THE PLANS. THE CONTRACTOR MUST CALL BLUE STAKES PRIOR TO ANY EXCAVATION. (BLUE STAKES 1-800-662-4111)

2. ALL IMPROVEMENTS MUST BE BUILT TO UDOT SPECIFICATIONS AND STANDARDS. ALL CONSTRUCTION SHALL BE INSTALLED AND TESTED IN ACCORDANCE WITH UDOT AND DFCM STANDARDS AND SPECIFICATIONS AND ALL APPLICABLE CODES.

3. DIMENSIONS TAKE PRECEDENCE OVER SCALING, ANY DISCREPANCIES SHOULD BE BROUGHT TO THE ATTENTION OF THE ENGINEER.

4. CONTRACTOR TO MINIMIZE ROAD CLOSURES OF EXISTING ROADS AS MUCH AS POSSIBLE. PROVIDE TRAFFIC CONTROL DEVICES AS REQUIRED FOR CONSTRUCTION AND ROAD CLOSURES PER REQUIREMENTS OF MUTCD (MANUAL OF UNIFORM TRAFFIC CONTROL DEVICES, LATEST EDITION).

5. BUILDING FOUNDATION, EXCAVATION, RETAINING WALLS, AND PAVEMENT SHOULD FOLLOW THE RECOMMENDATIONS OF THE SOILS REPORT.

SHEET INDEX

SHT.	DESCRIPTION
C-100	COVER PAGE
C-101	STORM WATER POLLUTION PREVENTION PLAN
C-102	SITE & UTILITIES PLAN
C-103	SITE & UTILITIES PLAN CONTINUED
C-104	SITE & UTILITIES PLAN CONTINUED
C-105	SITE GRADING & DRAINAGE PLAN
C-106	SITE GRADING & DRAINAGE PLAN CONTINUED
C-107	SITE GRADING & DRAINAGE PLAN CONTINUED
C-500	SWPP GENERAL NOTES
C-501	SWPP DETAILS
C-502	SWPP DETAILS CONTINUED
C-503	UDOT DETAILS
C-504	HURRICANE CITY DETAILS A
C-505	HURRICANE CITY DETAILS B
C-506	CIVIL DETAILS
C-507	FENCING DETAILS
C-508	POND DETAILS

NOTE: ALL EXISTING UTILITY LOCATIONS MUST BE FIELD VERIFIED PRIOR TO CONSTRUCTION.

InSite Engineering, P.C.
Civil Engineers - Land Surveyors - Land Planners
1883 W. Royal Hunte Dr., Suite 200
Cedar City, Utah 84720
phone: (435) 867-4565
fax: (435) 867-4459

SARGENT DESIGN GROUP
ARCHITECTURE | PLANNING
36 NORTH 300 WEST, SUITE B
CEDAR CITY, UTAH 84720
OFFICE: (435) 586-8510
FAX: (435) 586-4873
jcoltons@email.com

State of Utah-Department of Administrative Services
DIVISION OF FACILITIES CONSTRUCTION AND MANAGEMENT
4110 State Office Building/Salt Lake City, Utah 84114/538-3018

Project:
UDOT HURRICANE FACILITY
DFCM PROJECT NO. 07292900

Sheet Title:
COVER PAGE

Revisions:

PROJECT NUMBER: 28498
DATE: MARCH 5, 2009
DRAWN BY: T.S.
CHECKED BY:
APPROVED BY:
SHEET NUMBER:
C-100

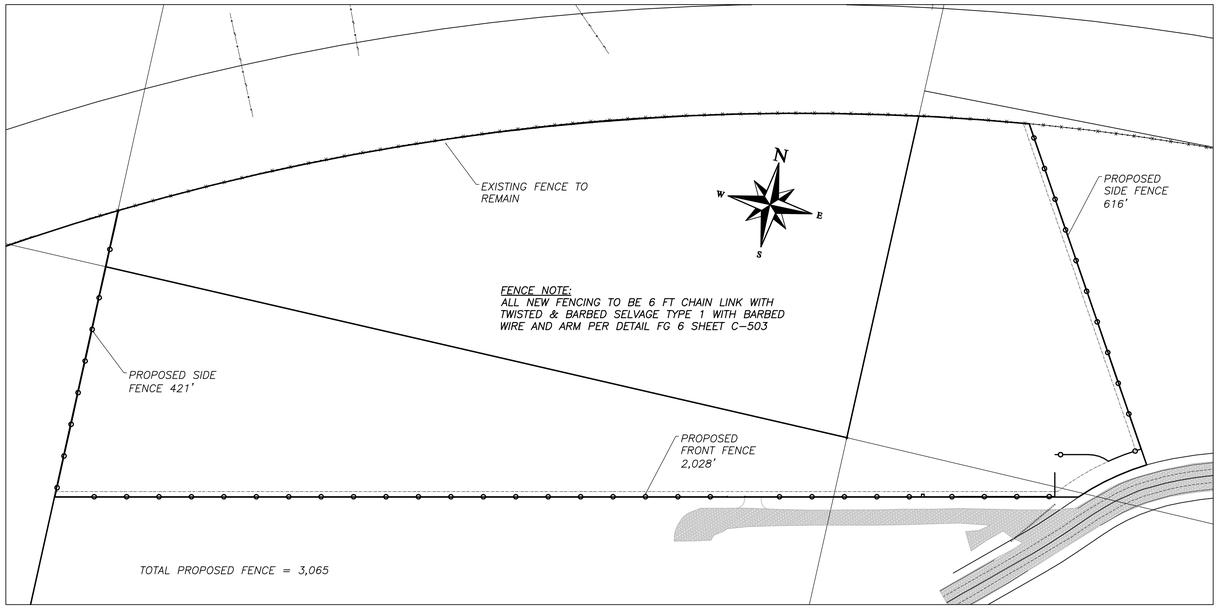

FENCE PLAN

N.T.S.

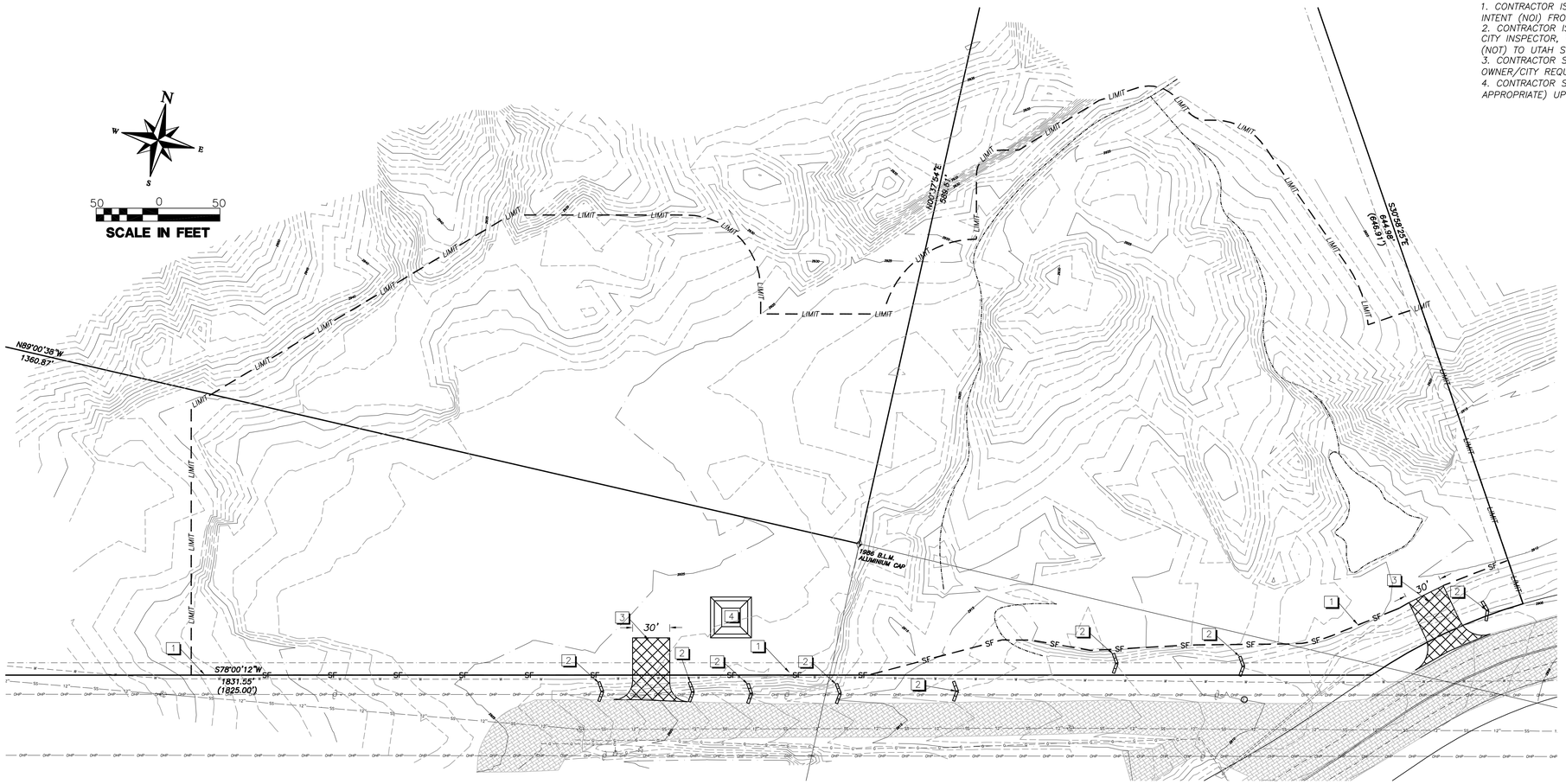

STORM WATER POLLUTION PREVENTION PLAN

PROJECT LEGEND

- LIMIT — CONSTRUCTION LIMITS
- SF — SILT FENCE
- STABILIZED CONSTRUCTION ENTRANCE

CONSTRUCTION NOTES

1. PROPOSED SILT FENCE PER DETAIL EN2 SHEET C-501
2. PROPOSED TEMPORARY EROSION CONTROLE CHECK DAMS PER DETAIL EN1 SHEET C-501
3. PROPOSED STABILIZED CONSTRUCTION ENTRANCE PER DETAIL EN6 SHEET C-502
4. PROPOSED CONCRETE WASHOUT CONTAINMENT PER DETAIL SHEET C-501

NOTE:
SEE SHEETS C-500 TO C-502 FOR ALL STORM WATER POLLUTION PREVENTION PLAN NOTES AND DETAILS.

CONTRACTORS NOTES:

1. CONTRACTOR IS RESPONSIBLE FOR OBTAINING A NOTICE OF INTENT (NOI) FROM UTAH STATE, DIVISION OF WATER QUALITY.
2. CONTRACTOR IS RESPONSIBLE FOR COORDINATING WITH THE CITY INSPECTOR, THE SUBMITTAL OF A NOTE OF TERMINATION (NOT) TO UTAH STATE, DIVISION OF WATER QUALITY.
3. CONTRACTOR SHALL PROVIDE STREET SWEEPING UPON OWNER/CITY REQUEST.
4. CONTRACTOR SHALL REMOVE ALL SWPPP ITEMS (AS APPROPRIATE) UPON FILING N.O.T.

NOTE: ALL EXISTING UTILITY LOCATIONS MUST BE FIELD VERIFIED PRIOR TO CONSTRUCTION.

InSite Engineering, P.C.
Civil Engineers - Land Surveyors - Land Planners
1883 W. Royal Hunte Dr., Suite 200
Cedar City, Utah 84720
phone: (435) 867-4565
fax: (435) 867-4459

SARGENT DESIGN GROUP
ARCHITECTURE | PLANNING
36 NORTH 300 WEST, SUITE B
CEDAR CITY, UTAH 84720
OFFICE: (435) 586-8510
FAX: (435) 586-4873
jcoltons@email.com

State of Utah-Department of Administrative Services
DIVISION OF FACILITIES CONSTRUCTION AND MANAGEMENT
4110 State Office Building/Salt Lake City, Utah 84114-1838

Project:
UDOT
HURRICANE
FACILITY
DFCM PROJECT NO.
07292900

Sheet Title:
STORM WATER POLLUTION PREVENTION PLAN

Revisions:

PROJECT NUMBER: 28493
DATE: MARCH 5, 2009
DRAWN BY: T.S.
CHECKED BY:
APPROVED BY:
SHEET NUMBER:

C-101

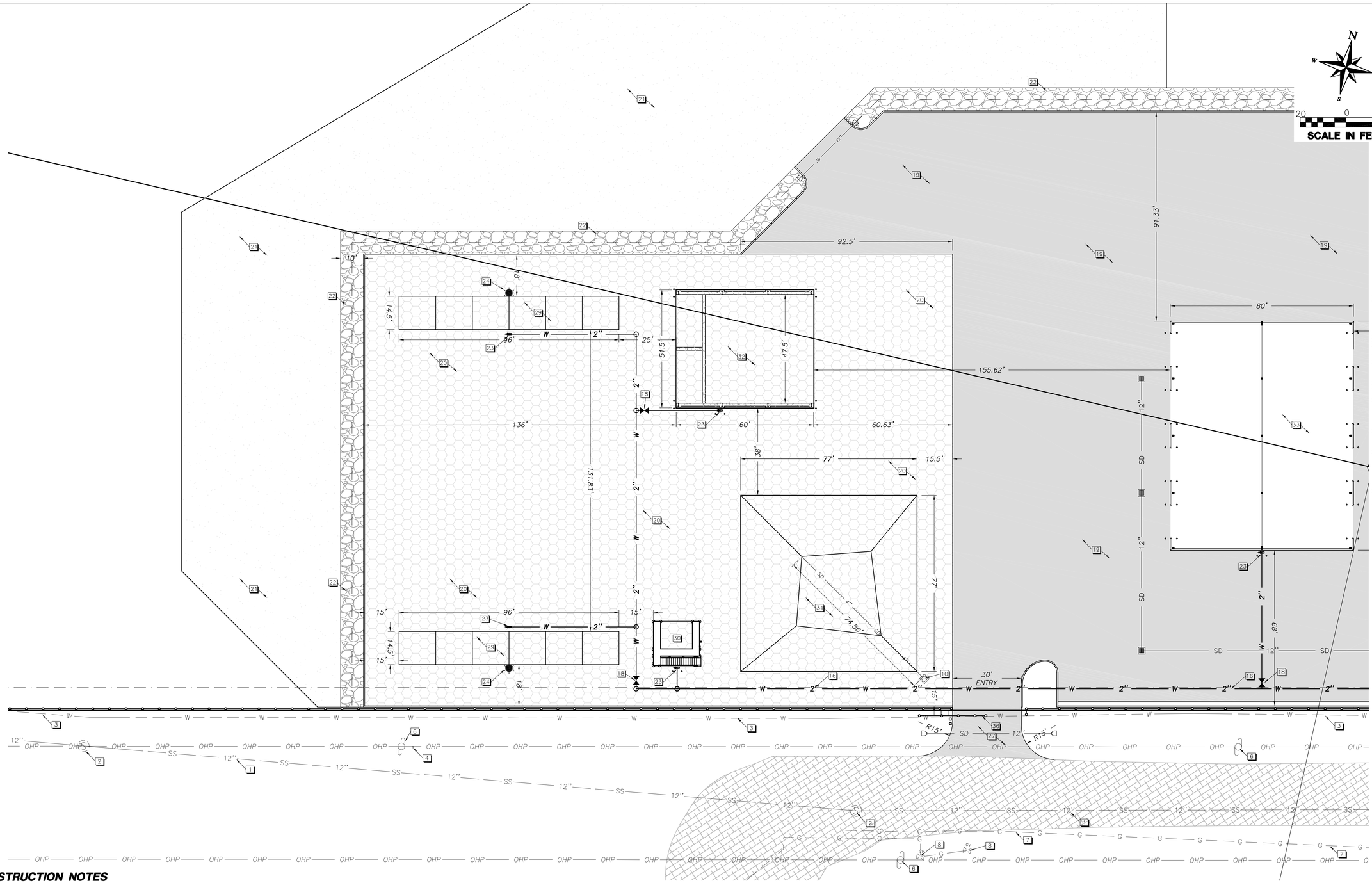

CONSTRUCTION NOTES

1. EXISTING 12"ø SEWER MAIN
2. EXISTING SEWER MANHOLE
3. EXISTING WATER MAIN
4. EXISTING PHONE BOX
5. EXISTING FIBRE OPTICS VAULT
6. EXISTING POWER POLE
7. EXISTING GAS MAIN
8. EXISTING GAS VALVE
9. EXISTING 18"ø CULVERT
10. MONITORING JUNCTION BOX PER DETAIL SHEET C-508
11. PROPOSED 6"ø PVC SDR-35 SEWER LATERAL PER DTL
12. PROPOSED 4"ø PVC SDR-35 SEWER LATERAL PER DTL
13. PROPOSED FIRE HYDRANT PER DETAIL SHEET C-505
14. PROPOSED GAS LINE
15. PROPOSED GAS METER
16. PROPOSED 2"ø WATER LINE
17. PROPOSED 2"ø WATER METER PER CITY DETAIL
18. PROPOSED 2"ø WATER VALVE
19. PROPOSED ASPHALT PER SOILS REPORT
20. PROPOSED ZERO VOIDS ASPHALT PER SOILS REPORT
21. PROPOSED LEVELED AND COMPACTED NATIVE SOIL
22. PROPOSED DRAINAGE SWALE PER DETAIL SHEET C-508
23. 2" FROST-PROOF HYDRANT PER DETAIL SHEET C-506
24. 30' LIGHT POLE (SEE ELEC. PLANS FOR DETAILS)
25. PROPOSED PAINT STRIPING PER DETAIL SHEET C-506
26. PROPOSED SEWER CLEANOUT PER DTL. SHEET C-504
27. PROPOSED DRIVE ENTRY
28. PROPOSED 6" THICK CONCRETE PAD W/ #4 BARS @ 18" O.C. EACH DIRECTION ON 6" COMPACTED ROAD BASE ON COMPACTED SUBGRADE
29. PROPOSED 6 SANDER RACKS – SEE ARCH.
30. PROPOSED WASH RACK – SEE ARCH.
31. 10,000 C.F. RETENTION POND W/ 3:1 SLOPES
32. PROPOSED SALT STORAGE BUILDING – SEE ARCH.
33. PROPOSED OPEN STORAGE – SEE ARCH.
34. 22,000 C.F. DETENTION POND W/ 4:1 SLOPES
35. FLAG POLE WITH LIGHTING COORD. W/ ARCH.
36. PROPOSED FLEC. GATE PER DETAIL SHEET C-507

PROJECT LEGEND

- SS — NEW SEWER LINE (PVC-SDR-35)
- W — NEW WATER LINE (DUCTILE IRON)
- SS — EXISTING SANITARY SEWER
- W — EXISTING WATER LINE
- NEW SEWER LATERAL PER DETAIL
- STOP NEW STOP SIGN
- NEW STREET SIGN
- EXISTING SEWER MANHOLE
- NEW FIRE HYDRANT PER DETAIL
- EXISTING FIRE HYDRANT
- NEW GATE VALVE PER DETAIL
- EXISTING WATER VALVE
- NEW CENTERLINE MONUMENT DETAIL
- SECTION CORNER AS DESCRIBED
- HANDICAP RAMP
- PROPOSED LIGHT POLE PER ARCH DETAIL
- EXISTING ASPHALT
- PROPOSED ZERO VOIDS ASPHALT
- PROPOSED ASPHALT
- PROPOSED RIP-RAP
- PROPOSED DRAINAGE FLOW

ALL EXISTING UTILITY LOCATIONS MUST BE FIELD VERIFIED PRIOR TO CONSTRUCTION.

NOTE – SEE SHEET C-105 FOR DRAINAGE INFORMATION AND DESIGN

InSite Engineering, P.C.
Civil Engineers - Land Surveyors - Land Planners
1883 W. Royal Hunte Dr., Suite 200
Cedar City, Utah 84720
phone: (435) 867-4565
fax: (435) 867-4459

SARGENT DESIGN GROUP
ARCHITECTURE | PLANNING
36 NORTH 300 WEST, SUITE B
CEDAR CITY, UTAH 84720
OFFICE: (435) 586-8510
FAX: (435) 586-4873
jcoltons@email.com

State of Utah-Department of Administrative Services
DIVISION OF FACILITIES CONSTRUCTION AND MANAGEMENT
4110 State Office Building/Salt Lake City, Utah 84114/538-3018

Project: UDOT HURRICANE FACILITY DFCM PROJECT NO. 07292900

Sheet Title: SITE & UTILITIES PLAN

Revisions:

PROJECT NUMBER: 28493
DATE: MARCH 5, 2009
DRAWN BY: T.S.
CHECKED BY:
APPROVED BY:
SHEET NUMBER:

C-102

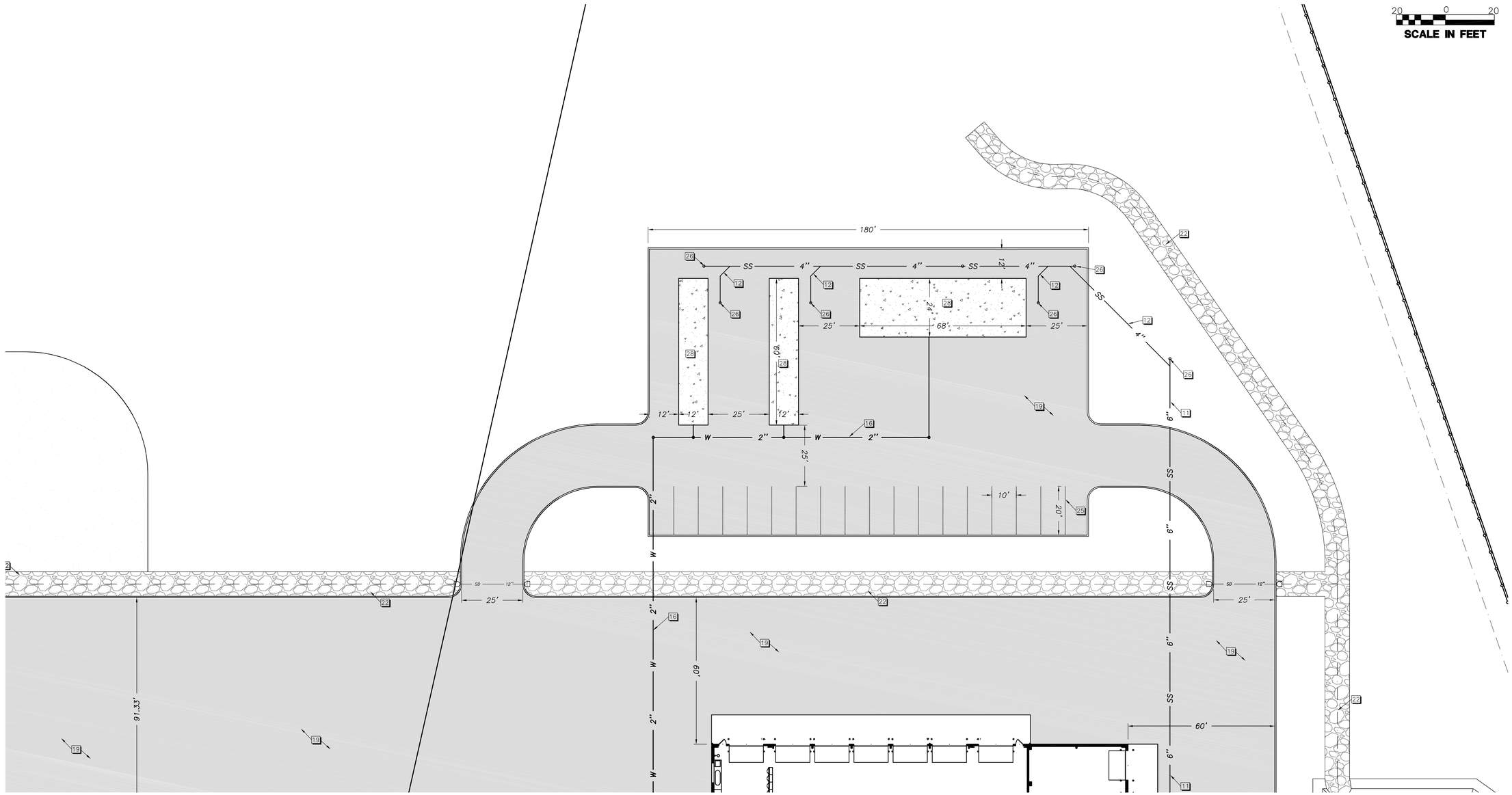

~MATCH LINE SEE SHEET C-103 FOR CONTINUATION~

CONSTRUCTION NOTES

1. EXISTING 12"ø SEWER MAIN
2. EXISTING SEWER MANHOLE
3. EXISTING WATER MAIN
4. EXISTING PHONE BOX
5. EXISTING FIBRE OPTICS VAULT
6. EXISTING POWER POLE
7. EXISTING GAS MAIN
8. EXISTING GAS VALVE
9. EXISTING 18"ø CULVERT
10. MONITORING JUNCTION BOX PER DETAIL SHEET C-508
11. PROPOSED 6"ø PVC SDR-35 SEWER LATERAL PER DTL
12. PROPOSED 4"ø PVC SDR-35 SEWER LATERAL PER DTL
13. PROPOSED FIRE HYDRANT PER DETAIL SHEET C-505
14. PROPOSED GAS LINE
15. PROPOSED GAS METER
16. PROPOSED 2"ø WATER LINE
17. PROPOSED 2"ø WATER METER PER CITY DETAIL
18. PROPOSED 2"ø WATER VALVE
19. PROPOSED ASPHALT PER SOILS REPORT
20. PROPOSED ZERO VOIDS ASPHALT PER SOILS REPORT
21. PROPOSED LEVELED AND COMPACTED NATIVE SOIL
22. PROPOSED DRAINAGE SWALE PER DETAIL SHEET C-508
23. 2" FROST-PROOF HYDRANT PER DETAIL SHEET C-506
24. 30' LIGHT POLE (SEE ELEC. PLANS FOR DETAILS)
25. PROPOSED PAINT STRIPING PER DETAIL SHEET C-506
26. PROPOSED SEWER CLEANOUT PER DTL. SHEET C-504
27. PROPOSED DRIVE ENTRY
28. PROPOSED 6" THICK CONCRETE PAD W/ #4 BARS @ 18" O.C. EACH DIRECTION ON 6" COMPACTED ROAD BASE ON COMPACTED SUBGRADE
29. PROPOSED 6 SANDER RACKS - SEE ARCH.
30. PROPOSED WASH RACK - SEE ARCH.
31. 10,000 C.F. RETENTION POND W/ 3:1 SLOPES
32. PROPOSED SALT STORAGE BUILDING - SEE ARCH.
33. PROPOSED OPEN STORAGE - SEE ARCH.
34. 22,000 C.F. DETENTION POND W/ 4:1 SLOPES
35. FLAG POLE WITH LIGHTING COORD. W/ ARCH.
36. PROPOSED ELEC. GATE PER DETAILS SHEET C-507

PROJECT LEGEND

- SS — NEW SEWER LINE (PVC-SDR-35)
- W — NEW WATER LINE (DUCTILE IRON)
- SS — EXISTING SANITARY SEWER
- W — EXISTING WATER LINE
- NEW SEWER LATERAL PER DETAIL
- STOP — NEW STOP SIGN
- NEW STREET SIGN
- EXISTING SEWER MANHOLE
- NEW FIRE HYDRANT PER DETAIL
- EXISTING FIRE HYDRANT
- NEW GATE VALVE PER DETAIL
- EXISTING WATER VALVE
- NEW CENTERLINE MONUMENT DETAIL
- SECTION CORNER AS DESCRIBED
- HANDICAP RAMP
- PROPOSED LIGHT POLE PER ARCH DETAIL
- EXISTING ASPHALT
- PROPOSED ZERO VOIDS ASPHALT
- PROPOSED ASPHALT
- PROPOSED RIP-RAP
- PROPOSED DRAINAGE FLOW

ALL EXISTING UTILITY LOCATIONS MUST BE FIELD VERIFIED PRIOR TO CONSTRUCTION.

NOTE - SEE SHEET C-107 FOR DRAINAGE INFORMATION AND DESIGN

InSite Engineering, P.C.
Civil Engineers - Land Surveyors - Land Planners
1883 W. Royal Hunte Dr., Suite 200
Cedar City, Utah 84720
phone: (435) 867-4565
fax: (435) 867-4459

SARGENT DESIGN GROUP
ARCHITECTURE | PLANNING
36 NORTH 300 WEST, SUITE B
CEDAR CITY, UTAH 84720
OFFICE: (435) 586-8510
FAX: (435) 586-4873
jcoltons@email.com

State of Utah-Department of Administrative Services
DIVISION OF FACILITIES CONSTRUCTION AND MANAGEMENT
4110 State Office Building/Salt Lake City, Utah 84114/538-3018

Project: UDOT HURRICANE FACILITY DFCM PROJECT NO. 07292900

Sheet Title: SITE & UTILITIES PLAN CONTINUED

Revisions:

PROJECT NUMBER: 28493
DATE: MARCH 5, 2009
DRAWN BY: T.S.
CHECKED BY:
APPROVED BY:
SHEET NUMBER:

C-104

GRADING LEGEND

- EXISTING ASPHALT
- PROPOSED ZERO VOIDS ASPHALT
- PROPOSED ASPHALT
- PROPOSED RIP-RAP
- PROPOSED DRAINAGE FLOW
- XX.XX — TBC GRADE
- (XX.XX) — EXISTING GRADE
- XX.XX — TOP OF ASPHALT/CONCRETE
- PROPOSED GRADE BREAK

SITE GRADING NOTES

1. EXISTING 18"ø CULVERT
2. EXISTING DRAINAGE SWALE
3. PROPOSED MATCH LINE TO EXISTING GROUND
4. PROPOSED ASPHALT PER DETAIL SHEET C-506
5. PROPOSED ZERO-VOID ASPHALT PER DETAIL SHEET C-506
6. PROPOSED GRADED AND COMPACTED NATIVE EARTH
7. PROPOSED END SECTION PER DETAIL SHEET C-506
8. PROPOSED DRAINAGE DITCH PER DETAIL SHEET C-507
9. PROPOSED DETENTION POND OUTLET PER DETAIL SHEET C-508
10. PROPOSED 6" CURB FLUSH W/ ASHPHALT PER DETAIL SHEET C-506
11. PROPOSED TYPE B1 CURB & GUTTER PER UDOT DETAIL GW-2 SHEET C-503
12. PROPOSED DRAINAGE SWALE

STORM DRAIN PIPE TABLE

#	INV. IN	INV. OUT	SIZE	SLOPE	LENGTH	MATERIAL
1	2925.39	2925.10	12"ø	0.92%	31.50 LF	SMOOTH LINED CPP
2	2919.93	2919.68	12"ø	0.50%	48.00 LF	SMOOTH LINED CPP
3	2919.68	2919.03	12"ø	0.97%	66.92 LF	SMOOTH LINED CPP
4	2919.00	2916.98	12"ø	3.69%	54.69 LF	SMOOTH LINED CPP
5	2919.03	2911.53	12"ø	3.31%	226.55 LF	SMOOTH LINED CPP
6	2917.16	2916.09	12"ø	4.04%	26.50 LF	SMOOTH LINED CPP
7	2912.91	2912.78	12"ø	0.50%	26.50 LF	SMOOTH LINED CPP
8	2913.76	2913.51	12"ø	0.50%	49.17 LF	SMOOTH LINED CPP
9	2913.51	2911.53	12"ø	2.06%	96.50 LF	SMOOTH LINED CPP
10	2911.53	2910.38	12"ø	0.49%	234.39 LF	SMOOTH LINED CPP
11	2910.38	2909.04	12"ø	1.88%	71.42 LF	SMOOTH LINED CPP
12	2905.30	2904.92	24"ø	0.80%	47.25 LF	SMOOTH LINED CPP
13	2905.47	2904.99	24"ø	0.72%	66.11 LF	SMOOTH LINED CPP

STORM DRAIN BOX TABLE

#	BOX I.D.	INLET TYPE	RIM/TBC	INVERT	LOCATION
A1	2'X2'X3'	2'X2' TRAFFIC GRATE	2922.93	2919.93	N 10029974.7874 E 1082685.0897
A2	2'X2'X3.25'	2'X2' TRAFFIC GRATE	2922.93	2919.68	N 10029925.8794 E 1082695.4824
A3	2'X2'X3.5'	2'X2' TRAFFIC GRATE	2922.53	2919.03	N 10029858.4622 E 1082709.8083
A4	5'X2'X3'	2'X2' TRAFFIC GRATE	2916.76	2913.76	N 10030052.37 E 1082902.2521
A5	5'X2'X3.25'	2'X2' TRAFFIC GRATE	2916.76	2913.51	N 10030002.3208 E 1082912.8873
A6	2'X2'X4.5'	2'X2' TRAFFIC GRATE	2916.03	2911.53	N 10029905.9664 E 1082933.3622
A7	2'X3'X3.25'	SINGLE CURB INLET	2913.63	2910.38	N 10029953.8359 E 1083166.2275

NOTE - SEE SHEET C-102 FOR UTILITY INFORMATION AND DESIGN

~MATCH LINE SEE SHEET C-106 FOR CONTINUATION~

SCALE IN FEET: 20 0 20

SARGENT DESIGN GROUP
ARCHITECTURE | PLANNING
36 NORTH 300 WEST, SUITE B
CEDAR CITY, UTAH 84720
OFFICE: (435) 586-8510
FAX: (435) 586-4873
jcoltons@email.com

State of Utah-Department of Administrative Services
DIVISION OF FACILITIES CONSTRUCTION AND MANAGEMENT
4110 State Office Building/Salt Lake City, Utah 84114/538-3018

Project:
UDOT
HURRICANE
FACILITY
DFCM PROJECT NO.
07292900

Sheet Title:
SITE GRADING PLAN

Revisions:

PROJECT NUMBER: 28493
DATE: MARCH 5, 2009
DRAWN BY: T.S.
CHECKED BY:
APPROVED BY:
SHEET NUMBER:

C-105

InSite Engineering, P.C.
Civil Engineers - Land Surveyors - Land Planners
1883 W. Royal Hunte Dr., Suite 200
Cedar City, Utah 84720
phone: (435) 867-4565
fax: (435) 867-4459

~MATCH LINE SEE SHEET C-107 FOR CONTINUATION~

~MATCH LINE SEE SHEET C-105 FOR CONTINUATION~

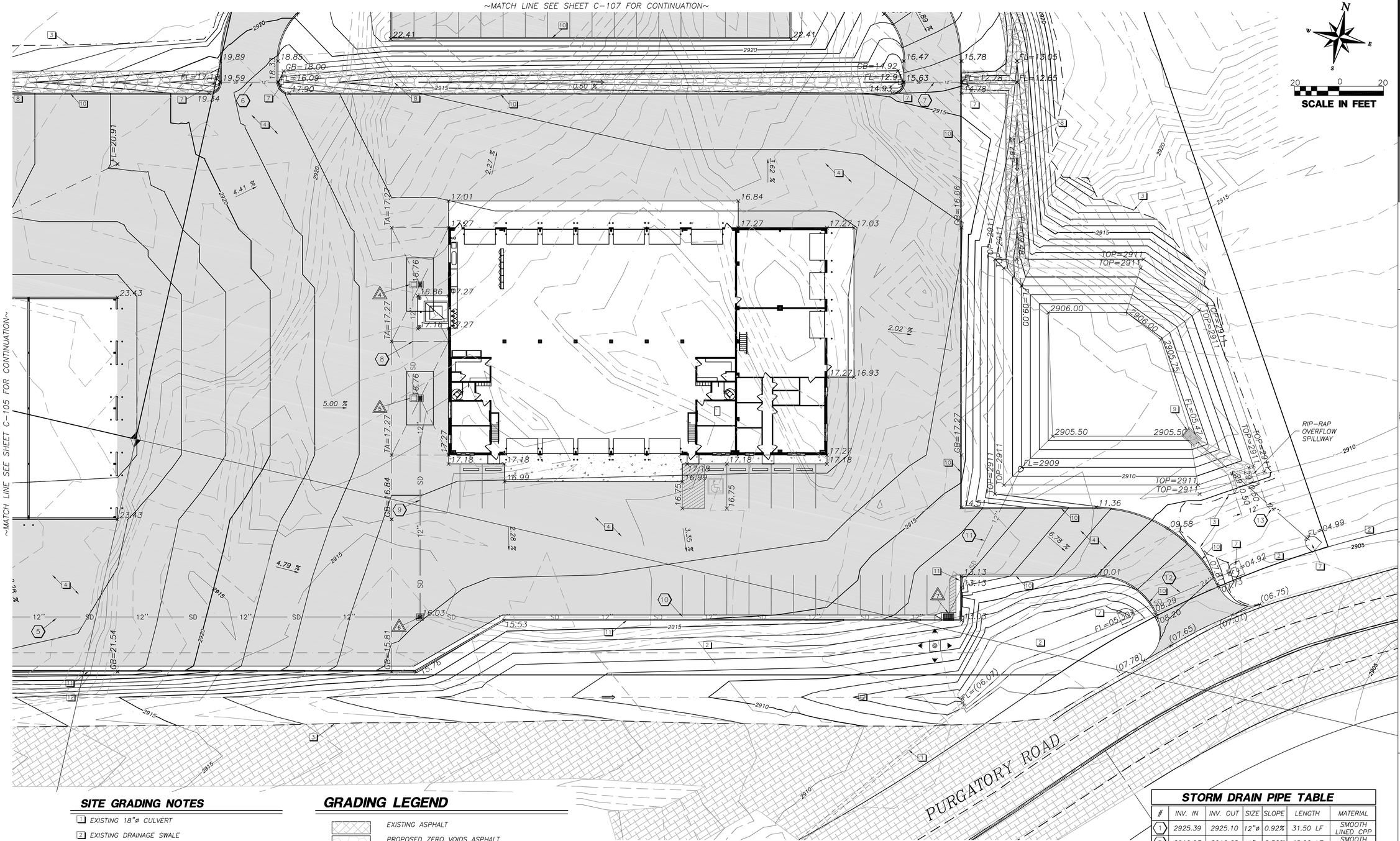

SITE GRADING NOTES

1. EXISTING 18"ø CULVERT
2. EXISTING DRAINAGE SWALE
3. PROPOSED MATCH LINE TO EXISTING GROUND
4. PROPOSED ASPHALT PER DETAIL SHEET C-506
5. PROPOSED ZERO-VOID ASPHALT PER DETAIL SHEET C-506
6. PROPOSED GRADED AND COMPACTED NATIVE EARTH
7. PROPOSED END SECTION PER DETAIL SHEET C-506
8. PROPOSED DRAINAGE DITCH PER DETAIL SHEET C-507
9. PROPOSED DETENTION POND OUTLET PER DETAIL SHEET C-508
10. PROPOSED 6" CURB FLUSH W/ ASHPHALT PER DETAIL SHEET C-506
11. PROPOSED TYPE B1 CURB & GUTTER PER UDOT DETAIL GW-2 SHEET C-503
12. PROPOSED DRAINAGE SWALE

GRADING LEGEND

- EXISTING ASPHALT
- PROPOSED ZERO VOIDS ASPHALT
- PROPOSED ASPHALT
- PROPOSED RIP-RAP
- ⇒ PROPOSED DRAINAGE FLOW
- XX.XX TBC GRADE
- (XX.XX) EXISTING GRADE
- XX.XX TOP OF ASPHALT/CONCRETE
- PROPOSED GRADE BREAK

STORM DRAIN BOX TABLE

#	BOX I.D.	INLET TYPE	RIM/TBC	INVERT	LOCATION
1	2'X2'X3'	2'X2' TRAFFIC GRATE	2922.93	2919.93	N 10029974.7874 E 1082685.0897
2	2'X2'X3.25'	2'X2' TRAFFIC GRATE	2922.93	2919.68	N 10029925.8794 E 1082695.4824
3	2'X2'X3.5'	2'X2' TRAFFIC GRATE	2922.53	2919.03	N 10029858.4622 E 1082709.8083
4	5'X2'X3'	2'X2' TRAFFIC GRATE	2916.76	2913.76	N 10030052.37 E 1082902.2521
5	5'X2'X3.25'	2'X2' TRAFFIC GRATE	2916.76	2913.51	N 10030002.3208 E 1082912.8873
6	2'X2'X4.5'	2'X2' TRAFFIC GRATE	2916.03	2911.53	N 10029905.9664 E 1082933.3622
7	2'X3'X3.25'	SINGLE CURB INLET	2913.63	2910.38	N 10029953.8359 E 1083166.2275

NOTE - SEE SHEET C-103 FOR UTILITY INFORMATION AND DESIGN

STORM DRAIN PIPE TABLE

#	INV. IN	INV. OUT	SIZE	SLOPE	LENGTH	MATERIAL
1	2925.39	2925.10	12"ø	0.92%	31.50 LF	SMOOTH LINED CPP
2	2919.93	2919.68	12"ø	0.50%	48.00 LF	SMOOTH LINED CPP
3	2919.68	2919.03	12"ø	0.97%	66.92 LF	SMOOTH LINED CPP
4	2919.00	2916.98	12"ø	3.69%	54.69 LF	SMOOTH LINED CPP
5	2919.03	2911.53	12"ø	3.31%	226.55 LF	SMOOTH LINED CPP
6	2917.16	2916.09	12"ø	4.04%	26.50 LF	SMOOTH LINED CPP
7	2912.91	2912.78	12"ø	0.50%	26.50 LF	SMOOTH LINED CPP
8	2913.76	2913.51	12"ø	0.50%	49.17 LF	SMOOTH LINED CPP
9	2913.51	2911.53	12"ø	2.06%	96.50 LF	SMOOTH LINED CPP
10	2911.53	2910.38	12"ø	0.49%	234.39 LF	SMOOTH LINED CPP
11	2910.38	2909.04	12"ø	1.88%	71.42 LF	SMOOTH LINED CPP
12	2905.30	2904.92	24"ø	0.80%	47.25 LF	SMOOTH LINED CPP
13	2905.47	2904.99	24"ø	0.72%	66.11 LF	SMOOTH LINED CPP

InSite Engineering, P.C.
Civil Engineers - Land Surveyors - Land Planners
1883 W. Royal Hunte Dr., Suite 200
Cedar City, Utah 84720
phone: (435) 867-4565
fax: (435) 867-4459

SARGENT DESIGN GROUP
ARCHITECTURE | PLANNING
36 NORTH 300 WEST, SUITE B
CEDAR CITY, UTAH 84720
OFFICE: (435) 586-8510
FAX: (435) 586-4873
jcoltons@email.com

State of Utah-Department of Administrative Services
DIVISION OF FACILITIES CONSTRUCTION AND MANAGEMENT
410 State Office Building/Salt Lake City, Utah 84114/538-3018

Project:
UDOT HURRICANE FACILITY
DFCM PROJECT NO. 07292300

Sheet Title:
SITE GRADING PLAN CONTINUED

Revisions:

PROJECT NUMBER: 28495
DATE: MARCH 5, 2009
DRAWN BY: T.S.
CHECKED BY:
APPROVED BY:
SHEET NUMBER:

C-106

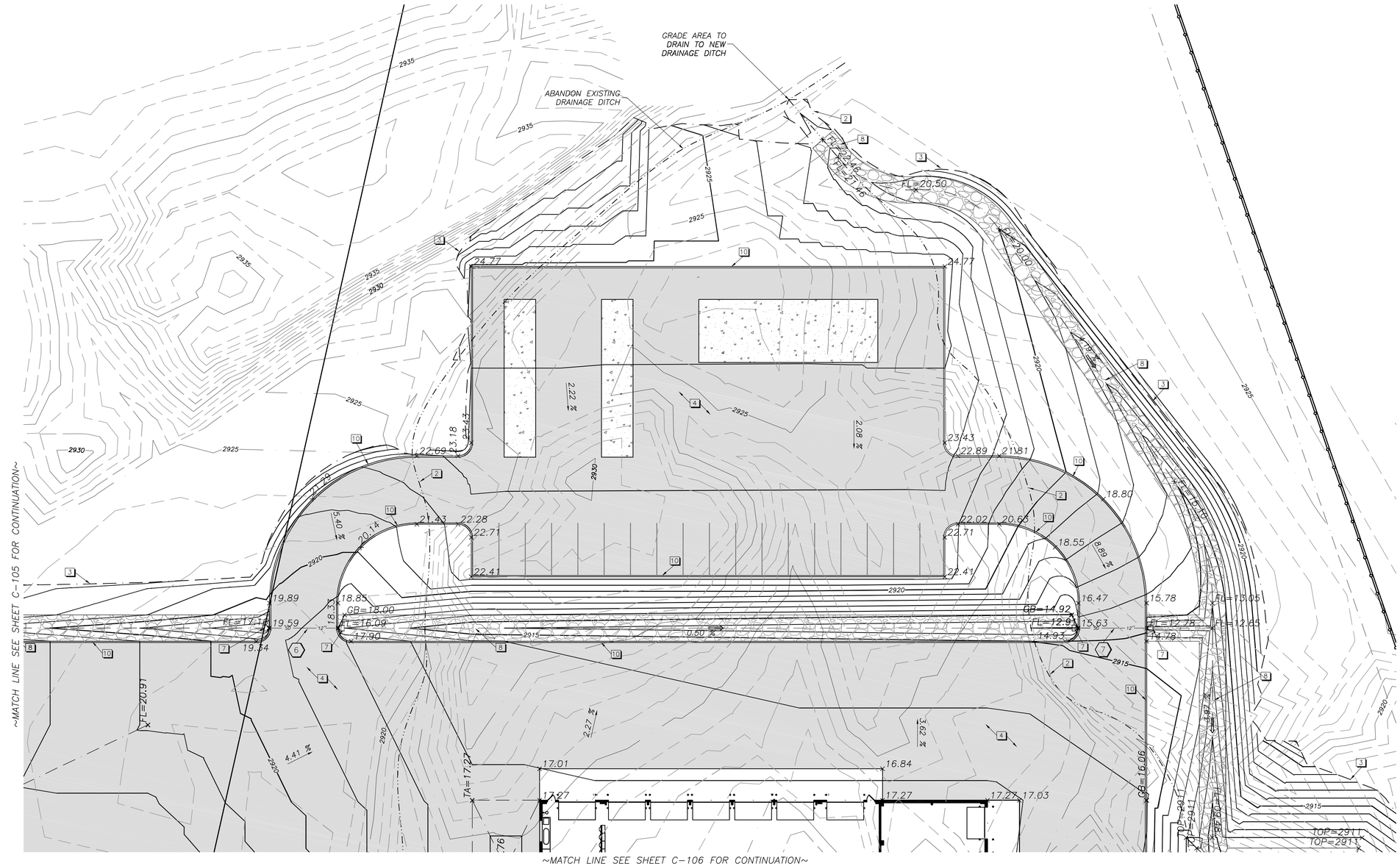

SITE GRADING NOTES

1. EXISTING 18"ø CULVERT
2. EXISTING DRAINAGE SWALE
3. PROPOSED MATCH LINE TO EXISTING GROUND
4. PROPOSED ASPHALT PER DETAIL SHEET C-506
5. PROPOSED ZERO-VOID ASPHALT PER DETAIL SHEET C-506
6. PROPOSED GRADED AND COMPACTED NATIVE EARTH
7. PROPOSED END SECTION PER DETAIL SHEET C-506
8. PROPOSED DRAINAGE DITCH PER DETAIL SHEET C-507
9. PROPOSED DETENTION POND OUTLET PER DETAIL SHEET C-508
10. PROPOSED 6" CURB FLUSH W/ ASHPHALT PER DETAIL SHEET C-506
11. PROPOSED TYPE B1 CURB & GUTTER PER UDOT DETAIL GW-2 SHEET C-503
12. PROPOSED DRAINAGE SWALE

GRADING LEGEND

	EXISTING ASPHALT
	PROPOSED ZERO VOIDS ASPHALT
	PROPOSED ASPHALT
	PROPOSED RIP-RAP
⇒	PROPOSED DRAINAGE FLOW
XX.XX	TBC GRADE
(XX.XX)	EXISTING GRADE
XX.XX	TOP OF ASPHALT/CONCRETE
— — — — —	PROPOSED GRADE BREAK

STORM DRAIN PIPE TABLE

#	INV. IN	INV. OUT	SIZE	SLOPE	LENGTH	MATERIAL
1	2925.39	2925.10	12"ø	0.92%	31.50 LF	SMOOTH LINED CPP
2	2919.93	2919.68	12"ø	0.50%	48.00 LF	SMOOTH LINED CPP
3	2919.68	2919.03	12"ø	0.97%	66.92 LF	SMOOTH LINED CPP
4	2919.00	2916.98	12"ø	3.69%	54.69 LF	SMOOTH LINED CPP
5	2919.03	2911.53	12"ø	3.31%	226.55 LF	SMOOTH LINED CPP
6	2917.16	2916.09	12"ø	4.04%	26.50 LF	SMOOTH LINED CPP
7	2912.91	2912.78	12"ø	0.50%	26.50 LF	SMOOTH LINED CPP
8	2913.76	2913.51	12"ø	0.50%	49.17 LF	SMOOTH LINED CPP
9	2913.51	2911.53	12"ø	2.06%	96.50 LF	SMOOTH LINED CPP
10	2911.53	2910.38	12"ø	0.49%	234.39 LF	SMOOTH LINED CPP
11	2910.38	2909.04	12"ø	1.88%	71.42 LF	SMOOTH LINED CPP
12	2905.30	2904.92	24"ø	0.80%	47.25 LF	SMOOTH LINED CPP
13	2905.47	2904.99	24"ø	0.72%	66.11 LF	SMOOTH LINED CPP

STORM DRAIN BOX TABLE

#	BOX I.D.	INLET TYPE	RIM/TBC	INVERT	LOCATION
1	2'X2'X3'	2'X2' TRAFFIC GRATE	2922.93	2919.93	N 10029974.7874 E 1082685.0897
2	2'X2'X3.25'	2'X2' TRAFFIC GRATE	2922.93	2919.68	N 10029925.8794 E 1082695.4824
3	2'X2'X3.5'	2'X2' TRAFFIC GRATE	2922.53	2919.03	N 10029858.4622 E 1082709.8083
4	5'X2'X3'	2'X2' TRAFFIC GRATE	2916.76	2913.76	N 10030052.37 E 1082902.2521
5	5'X2'X3.25'	2'X2' TRAFFIC GRATE	2916.76	2913.51	N 10030002.3208 E 1082912.8873
6	2'X2'X4.5'	2'X2' TRAFFIC GRATE	2916.03	2911.53	N 10029905.9664 E 1082933.3622
7	2'X3'X3.25'	SINGLE CURB INLET	2913.63	2910.38	N 1002995.1.8359 E 1083166.2275

NOTE - SEE SHEET C-104 FOR UTILITY INFORMATION AND DESIGN

InSite Engineering, P.C.
Civil Engineers - Land Surveyors - Land Planners
1883 W. Royal Hunte Dr., Suite 200
Cedar City, Utah 84720
phone: (435) 867-4565
fax: (435) 867-4459

SARGENT DESIGN GROUP
ARCHITECTURE | PLANNING
36 NORTH 300 WEST, SUITE B
CEDAR CITY, UTAH 84720
OFFICE: (435) 586-8510
FAX: (435) 586-4873
jcoltons@email.com

State of Utah-Department of Administrative Services
DIVISION OF FACILITIES CONSTRUCTION AND MANAGEMENT
410 State Office Building/Salt Lake City, Utah 84114/538-3018

Project:
UDOT
HURRICANE
FACILITY
DFCM PROJECT NO.
07292900

Sheet Title:
SITE GRADING PLAN CONTINUED

Revisions:

PROJECT NUMBER: 28493
DATE: MARCH 5, 2009
DRAWN BY: T.S.
CHECKED BY:
APPROVED BY:
SHEET NUMBER:

C-107

PERFORMANCE STANDARDS:
THE GENERAL REQUIREMENTS FOR EROSION CONTROL WORK SHALL BE AS FOLLOWS:
1. ANY LAND DISTURBING ACTIVITY SHALL BE CONDUCTED IN SUCH A MANNER SO AS TO EFFECTIVELY REDUCE ACCELERATED SOIL EROSION AND RESULTING SEDIMENTATION.

2. STRUCTURAL EROSION CONTROL MEASURES INCLUDED IN THE APPROVED PLAN ARE TO BE INSTALLED PRIOR TO SOIL DISTURBANCE. INSTALLATION WILL MEET SPECIFICATIONS SHOWN ON THE DETAIL SHEET. CONTROL MEASURES NECESSARY FOR CONTINUING PHASES OF CONSTRUCTION SHALL BE INSTALLED AS DETAILED IN THE SUBMITTED CONSTRUCTION SCHEDULE OR AS NEEDED IN PROGRESSION TO THE FINAL EROSION CONTROL PLAN.

3. ALL LAND DISTURBING ACTIVITIES SHALL BE DESIGNED, CONSTRUCTED AND COMPLETED IN SUCH A MANNER THAT THE EXPOSURE TIME OF DISTURBED LAND SHALL BE LIMITED TO THE SHORTEST POSSIBLE PERIOD OF TIME.

4. SEDIMENT CAUSED BY ACCELERATED SOIL EROSION SHALL BE REMOVED FROM RUNOFF WATER BEFORE LEAVING THE SITE.

5. ANY TEMPORARY OR PERMANENT FACILITY DESIGNED AND CONSTRUCTED FOR THE CONVEYANCE OF WATER AROUND, THROUGH OR FROM THE LAND DISTURBING ACTIVITY SHALL BE DESIGNED TO LIMIT THE WATER FLOW TO A NON-EROSIVE VELOCITY.

6. TEMPORARY SOIL EROSION CONTROL FACILITIES SHALL BE REMOVED AND AREAS OF LAND DISTURBANCE GRADED AND STABILIZED WITH PERMANENT SOIL EROSION CONTROL MEASURES PURSUANT TO APPROVED PLANS AND SPECIFICATIONS.

7. THE PERMITEE IS RESPONSIBLE FOR MAINTENANCE OF ALL EROSION CONTROL STRUCTURES. THESE STRUCTURES ARE TO BE INSPECTED BY THE PERMITEE WEEKLY AND AFTER EVERY PRECIPITATION EVENT TO INSURE THEIR EFFICIENCY AND TO EVALUATE MAINTENANCE NEEDS OR PER LOCAL INSPECTION REQUIREMENTS. MAINTENANCE OF THESE STRUCTURES MAY BE DIRECTED AT ANY TIME BY A CITY OR STATE REPRESENTATIVE.

MANAGEMENT STRATEGIES:
1. THE STABILIZED CONSTRUCTION ENTRANCE AND SILT FENCE BARRIERS SHALL BE INSTALLED AS FIRST STEP IN THE GRADING PROCESS.

2. THE SILT FENCE SHOWN ON THE ENCLOSED EROSION CONTROL PLAN SHALL BE SECURED ACCORDING TO THE DETAILS CONTAINED ON THIS PLAN.

3. THE CONSTRUCTION SUPERINTENDENT SHALL HAVE OVERALL RESPONSIBILITY FOR PLAN IMPLEMENTATION. SUPERINTENDENT RESPONSIBLE FOR SEEING THAT APPROPRIATE CONSTRUCTION WORKERS AND SUBCONTRACTORS ARE AWARE OF ALL PROVISIONS OF THE PLAN.

4. CONTRACTOR SHALL ESTABLISH FINAL LANDSCAPING STABILIZATION PER THE LANDSCAPING PLANS AT THE COMPLETION OF THE PROJECT.

5. CLEAN-UP:

A. TRANSPORT TRASH AND DEBRIS, AND SURPLUS AND UNACCEPTABLE SOIL MATERIALS FROM PROJECT SITE AND LEGALLY DISPOSE OF THEM.

B. REMOVE ALL TEMPORARY SHORING, BRACING, EROSION CONTROL, AND OTHER PROTECTION DEVICES WHEN NO LONGER REQUIRED BY OWNER.

GENERAL NOTES:
1. AT ALL TIMES DURING CONSTRUCTION, THE CONTRACTOR SHALL BE RESPONSIBLE FOR PREVENTING AND CONTROLLING EROSION DUE TO WIND AND RUNOFF. THE CONTRACTOR SHALL ALSO BE RESPONSIBLE FOR MAINTAINING EROSION CONTROL FACILITIES SHOWN.

2. ADDITIONAL EROSION CONTROL MEASURES MAY BE REQUIRED DUE TO UNFORESEEN PROBLEMS OR IF THE PLAN DOES NOT FUNCTION AS INTENDED.

3. CONTRACTOR SHALL BE RESPONSIBLE FOR CLEANING DRAINAGE AND EROSION CONTROL FACILITIES AS REQUIRED. STREETS SHALL BE KEPT CLEAN OF DEBRIS FROM TRAFFIC FROM THIS SITE.

4. ALL AREAS DISTURBED DURING CONSTRUCTION SHALL BE PAVED, SEEDED WITH NATIVE VEGETATION, OR LANDSCAPED. REFER TO LANDSCAPE PLANS FOR PERMANENT SEED MIX AND PLANTING SPECIFICATIONS.

5. EROSION CONTROL STRUCTURES BELOW SODDED AREAS MAY BE REMOVED ONCE SOD AND FINAL LANDSCAPING IS IN PLACE. EROSION CONTROL STRUCTURES BELOW SEEDED AREAS MUST REMAIN IN PLACE UNTIL THE ENTIRE AREA HAS ESTABLISHED A MATURE COVERING OF HEALTHY VEGETATION. EROSION CONTROL IN PROPOSED PAVED AREAS SHALL REMAIN IN PLACE UNTIL PAVEMENT IS COMPLETE.

6. THIS PLAN IS ONLY TO BE USED FOR INSTALLATION OF EROSION CONTROL FACILITIES. DO NOT USE THIS PLAN FOR GRADING OR STORM SEWER CONSTRUCTION.

7. CONTRACTOR SHALL USE A STABILIZED CONSTRUCTION ENTRANCE AT ALL LOCATIONS WHERE VEHICLE WILL ENTER OR EXIT THE SITE. CONTROL FACILITIES WILL BE MAINTAINED WHILE CONSTRUCTION IS IN PROGRESS, MOVED WHEN NECESSARY, AND REMOVED WHEN THE SITE IS PAVED.

MAINTENANCE:
IN GENERAL, ALL EROSION AND SEDIMENT CONTROL MEASURES WILL BE CHECKED WEEKLY AND AFTER EACH SIGNIFICANT RAINFALL. THE FOLLOWING ITEMS WILL BE CHECKED IN PARTICULAR:

1. THE CONSTRUCTION ENTRANCE SHALL BE MAINTAINED IN A CONDITION WHICH WILL PREVENT TRACKING AND FLOW OF MUD ONTO PUBLIC RIGHTS-OF-WAY. THIS MAY REQUIRE PERIODIC TOP DRESSING WITH STONE AS CONDITIONS DEMAND. ALL MATERIALS SPILLED, DROPPED, WASHED, OR TRACKED FROM VEHICLE OR SITE ONTO ROADWAY MUST BE REMOVED IMMEDIATELY.

2. THE PERIMETER SILT FENCE BARRIERS WILL BE CHECKED REGULARLY FOR UNDERMINING.

3. GRAVEL FILTERS AND GRAVEL SOCKS WILL BE CHECKED REGULARLY FOR SEDIMENTATION BUILDUP AND CLEANED AS REQUIRED.

EROSION CONTROL STANDARD NOTES
1. THIS EROSION AND SEDIMENTATION CONTROL PLAN HAS BEEN PLACED IN THE CITY OR STATES FILE FOR THIS PROJECT AND APPEARS TO FULFILL THE CITY AND STATES EROSION CONTROL CRITERIA AND REQUIREMENTS. IT IS UNDERSTOOD THAT ADDITIONAL EROSION CONTROL MEASURES MAY BE REQUIRED OF THE OWNER DUE TO UNFORESEEN EROSION PROBLEMS OR IF THE SUBMITTED PLAN DOES NOT FUNCTION AS INTENDED. IF UNFORESEEN EROSION PROBLEMS DO OCCUR OR IF THE PLAN DOES NOT FUNCTION AS INTENDED, THE CITY OR STATE INSPECTOR MAY REQUIRE MODIFICATIONS, ADDITIONS, OR REPAIRS AT THE TIME OF INSPECTION.

2, THESE REQUIREMENTS SHALL BE THE OBLIGATION OF THE OWNER, SITE DEVELOPER, CONTRACTOR, AND/OR THEIR AUTHORIZED AGENTS, UNTIL SUCH TIME AS THE PLAN IS CERTIFIED AS PROPERLY COMPLETED, OR UNTIL SUCH TIME AS OTHERWISE ALLOWED BY THE CITY OR STATE TO BE VOIDED, MODIFIED, OR REPLACED.

3. THIS PLAN SHALL BE KEPT ON SITE AT ALL TIMES AND MODIFIED AS NECESSARY. THE MODIFIED (LIVING MAP) SHALL BE ACCESSIBLE TO INSPECTORS DURING WORKING HOURS. A COPY OF THE STATE SWPPP PERMIT ALONG WITH ALL INSPECTION REPORTS SHALL BE KEPT IN A BINDER AVAILABLE TO INSPECTORS DURING WORKING HOURS.

4. ANY DISCREPANCY BETWEEN THIS PLAN AND AN APPROVED STORM WATER MANAGEMENT PLAN FOR THIS SITE SHALL REQUIRE COMPLIANCE WITH THE MORE RESTRICTIVE PLAN.

5. THE OWNER, SITE DEVELOPER, CONTRACTOR AND/OR THEIR AUTHORIZED AGENTS SHALL REMOVE ALL SEDIMENT, MUD, AND CONSTRUCTION DEBRIS THAT MAY ACCUMULATE IN THE FLOW LINES, PRIVATE PROPERTY, AND PUBLIC RIGHTS OF WAYS OF THE CITY AS A RESULT OF THIS CONSTRUCTION PROJECT. REMOVAL SHALL BE CONDUCTED WITHIN 48 HOURS.

6, THE OWNER, SITE DEVELOPER, CONTRACTOR AND/OR THEIR AUTHORIZED AGENTS SHALL PREVENT SEDIMENT, DEBRIS, AND ALL OTHER POLLUTANTS FROM ENTERING THE STORM SEWER SYSTEM DURING ALL DEMOLITION, EXCAVATION, TRENCHING, BORING, GRADING OR OTHER CONSTRUCTION OPERATIONS THAT ARE PART OF THIS PROJECT. THE OWNER, SITE DEVELOPER, CONTRACTOR, AND/OR THEIR AUTHORIZED AGENTS SHALL BE RESPONSIBLE FOR REMEDIATION OF ANY ADVERSE IMPACTS TO ADJACENT WATERWAYS, WETLANDS, OTHER PROPERTIES, ETC., RESULTING FROM WORK DONE AS PART OF THIS PROJECT.

7. ROUGH-CUT STREETS SHALL BE MULCHED OR SIMILARLY PROTECTED WITHIN THE 30-DAY PERIOD AFTER COMPLETION OF OVERALL GRADING.

8. THE OWNER, SITE DEVELOPER, CONTRACTOR AND/OR THEIR AUTHORIZED AGENTS SHALL PREVENT LOSS OF CUT AND FILL MATERIAL BEING TRANSPORTED TO AND FROM THE SITE BY TAKING APPROPRIATE MEASURES. ALL MUD AND SEDIMENT TRACKED ONTO PUBLIC STREETS SHALL BE CLEANED IMMEDIATELY BY OWNER, SITE DEVELOPER, CONTRACTOR, AND/OR THEIR AUTHORIZED AGENTS. STREET CLEANING INCLUDES SHOVELING AND SWEEPING ACTIVITIES. AT NO TIME SHALL SEDIMENTS BE WASHED DOWN UNPROTECTED INLETS INTO THE CITY STORM SEWER SYSTEM.

9 SOILS THAT WILL BE STOCKPILED FOR MORE THAN 30 DAYS SHALL BE MULCHED AND SEEDED WITH A TEMPORARY OR PERMANENT GRASS COVER WITHIN 14 DAYS OF STOCKPILE CONSTRUCTION.

10. IF STOCKPILES ARE LOCATED WITHIN 100 FEET OF A DRAINAGEWAY, ADDITIONAL SEDIMENT CONTROLS SUCH AS TEMPORARY DIKES OR SILT FENCE SHALL BE REQUIRED.

11. TOPSOIL SHALL BE SALVAGED AND NOT REMOVED FROM THE SITE EXCEPT AS SET FORTH IN THE APPROVED PLANS. TOPSOIL AND OVERBURDEN SHALL BE SEGREGATED AND STOCKPILED SEPARATELY. SUITABLE OVERBURDEN AND THEN TOPSOIL SHALL BE REDISTRIBUTED WITHIN THE GRADED AREA AFTER ROUGH GRADING TO PROVIDE A SUITABLE BASE FOR AREAS WHICH WILL BE VEGETATED. RUNOFF FROM STOCKPILE AREAS SHALL BE CONTROLLED TO PREVENT SEDIMENT ENTERING RECEIVING WATERS.

12. FINAL OR TEMPORARY SOIL STABILIZATION MEASURES SHALL BE APPLIED: (1) TO DISTURBED AREAS AND STOCKPILES WITHIN 14 DAYS AFTER FINAL GRADE IS REACHED, (2) WITHIN 14 DAYS TO DISTURBED AREAS WHICH MAY NOT BE AT FINAL GRADE BUT WILL REMAIN DORMANT FOR LONGER THAN 30 DAYS, AND (3) WITHIN 14 DAYS OF STOCKPILE CONSTRUCTION ON ANY STOCKPILE WHICH WILL REMAIN DORMANT FOR LONGER THAN 30 DAYS.
FINAL SOIL STABILIZATION SHALL BE THE FINAL GROUND COVER DEFINED BY THE SITE PLAN OR ASSOCIATED DOCUMENTS. TEMPORARY SOIL STABILIZATION SHALL INCLUDE GRASSES FROM SEED AND MULCHING AS DESCRIBED BELOW:

THE SEEDBED SHALL BE WELL SETTLED AND FIRM, BUT PLIABLE ENOUGH THAT SEED CAN BE PLACED AT THE SEEDING DEPTH SPECIFIED, THE SEEDBED SHALL BE REASONABLY FREE OF WEEDS, SOILS THAT HAVE BEEN OVER-COMPACTED BY TRAFFIC OR EQUIPMENT, ESPECIALLY WHEN WET SHALL BE TILLED TO BREAK-UP ROOTING RESTRICTIVE LAYERS AND THEN HARROWED, ROLLED OR PACKED TO PREPARE THE REQUIRED FIRM SEEDBED.

MULCH SHALL BE APPLIED AT A RATE OF 2 1/2 TONS PER ACRE AND SHALL BE ATTACHED BY AN APPROVED METHOD SUITABLE FOR THE TYPE OF MULCH USED. MULCH SHALL BE SPREAD UNIFORMLY, IN A CONTINUOUS BLANKET, AFTER SEEDING IS COMPLETE. MULCH SHALL BE CLEAN, WEED AND SEED FREE, LONG STEMMED GRASS OR HAY, LONG STEMMED STRAW OF OATS, WHEAT OR RYE. AT LEAST 50% OF MULCH, BY WEIGHT, SHALL BE 10 INCHES OR LONGER.
MULCH SHALL BE SPREAD BY HAND OR BLOWER-TYPE MULCH SPREADER. MULCHING SHALL BE STARTED ON THE WINDWARD SIDE OF RELATIVELY FLAT AREAS OR ON THE UPPER PART OF A STEEP SLOPE AND CONTINUED UNIFORMLY UNTIL THE AREA IS COVERED. THE MULCH SHALL NOT BE BUNCHED. IMMEDIATELY FOLLOWING SPREADING, THE MULCH SHALL BE ANCHORED TO THE SOIL BY A V-TYPE WHEEL LAND PACKER OR A SCALLOPED-DICK LAND PACKER DESIGN TO FORCE MULCH INTO THE SOIL SURFACE A MINIMUM OF 3 INCHES. ALL SEEDED AREAS SHALL BE MULCHED AFTER SEEDING ON THE SAME DAY AS THE SEEDING.

InSite Engineering, P.C.
Civil Engineers - Land Surveyors - Land Planners
1883 W. Royal Hunte Dr., Suite 200
Cedar City, Utah 84720
phone: (435) 867-4565
fax: (435) 867-4459

SARGENT DESIGN GROUP
ARCHITECTURE | PLANNING
36 NORTH 300 WEST, SUITE B
CEDAR CITY, UTAH 84720
OFFICE: (435) 586-8510
FAX: (435) 586-4873
jcoltons@email.com

State of Utah-Department of Administrative Services
DIVISION OF FACILITIES CONSTRUCTION AND MANAGEMENT
4110 State Office Building/Salt Lake City, Utah 84114/538-3018

Project:
UDOT
HURRICANE
FACILITY
DFCM PROJECT NO.
07292900

Sheet Title:
SWPP
PLAN
NOTES

Revisions:

PROJECT NUMBER: 28495
DATE: MARCH 5, 2009
DRAWN BY: T.S.
CHECKED BY:
APPROVED BY:
SHEET NUMBER:
C-500

CHECK DAMS

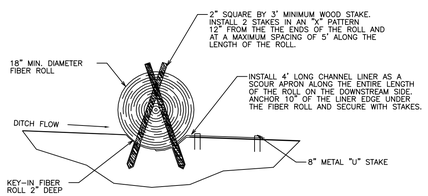

SECTION Y – Y

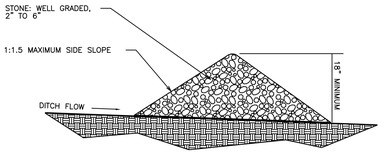

SECTION Z – Z

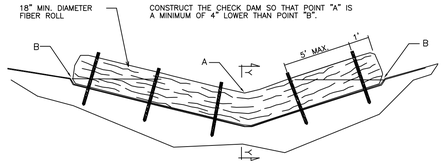

FIBER ROLL CHECK DAM

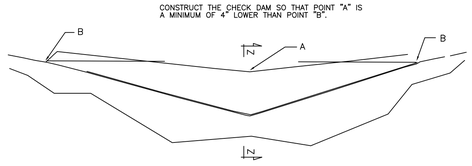

STONE CHECK DAM

MATERIAL QUANTITY CHART		
DITCH SIDE SLOPE	LENGTH OF FIBER ROLL REQUIRED FOR HALF OF DITCH	CUBIC YARDS OF STONE REQUIRED FOR HALF OF DITCH
2:1	4.5'	0.25
3:1	6'	0.35
4:1	8'	0.5
6:1	11.5'	0.7
8:1	15'	1.0
10:1	18.5'	1.2
12:1	22.5'	1.4

EXAMPLE: A CUT DITCH WITH A 6:1 FORE SLOPE AND A 2:1 BACK SLOPE WOULD REQUIRE A 16' MIN. FIBER ROLL OR 0.95 CUBIC YARDS MIN. OF STONE.

NOTES FOR CHECK DAMS:

1. PLACE A CHECK DAM AT EVERY TWO–FOOT DROP IN ELEVATION ALONG THE CUT DITCH.
2. A 9" TO 12" DIAMETER FIBER ROLL CAN BE USED IN PLACE OF THE 18" ROLL PROVIDED A ROLL IS INSTALLED AT EVERY ONE–FOOT DROP IN ELEVATION ALONG THE CUT DITCH.
3. PLACE CHECK DAMS PERPENDICULAR TO THE FLOW LINE OF THE DITCH.
4. DO NOT PLACE CHECK DAMS ACROSS NATURAL STREAM BEDS.
5. DO NOT USE STONE CHECK DAMS WITHIN CLEAR ZONES.
6. CONSTRUCT CHECK DAMS SO THAT WATER DOES NOT FLOW AROUND THE ENDS OF THE DAM.
7. REMOVE SEDIMENT AS IT ACCUMULATES AND PLACE IT IN A STABLE AREA APPROVED BY THE ENGINEER.
8. AFTER SURROUNDING AREAS HAVE BEEN SEEDED AND MULCHED, SPREAD ROCK FROM CHECK DAMS TO LINE THE CUT DITCH AND BREAK APART FIBER ROLLS AND SPREAD THE STRAW OVER SEEDED AREAS.

REVISIONS | NO. | DATE | APP'D | REMARKS

UTAH DEPARTMENT OF TRANSPORTATION
STANDARD DRAWINGS FOR ROAD AND BRIDGE CONSTRUCTION
SALT LAKE CITY, UTAH

RECOMMENDED FOR APPROVAL — JAN 01 2008 — DATE
CHAIRMAN STANDARDS COMMITTEE
APPROVED — JAN 01 2008 — DATE
DEPUTY DIRECTOR

STANDARD DRAWING TITLE: TEMPORARY EROSION CONTROL (CHECK DAMS)

STD DWG
EN 1

DROP INLET BARRIERS

FIBER ROLL DROP INLET BARRIER

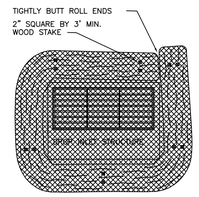

PLAN VIEW

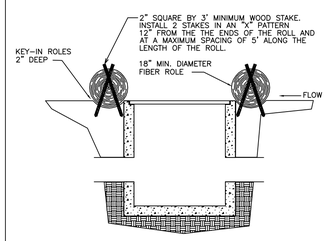

SECTION

NOTES:

1. KEY–IN FIBER ROLLS 2" DEEP AROUND THE PERIMETER OF THE DROP INLET STRUCTURE AND STAKE AS SHOWN.
2. OVERLAP THE ENDS OF THE FIBER ROLL AT LEAST 18".
3. IN MEDIAN AREAS, CONSTRUCT SO THAT THE TOPS OF THE ROLLS ARE NOT HIGHER THAN THE ADJACENT ROADWAY.
4. MAINTAIN A PROPERLY FUNCTIONING FIBER LOG BARRIER THROUGHOUT CONSTRUCTION OR UNTIL DISTURBED AREAS CONTRIBUTING TO THE INLET HAVE BEEN PAVED OR VEGETATED.
5. REMOVE SEDIMENT AS IT ACCUMULATES AND PLACE IT IN A STABLE AREA APPROVED BY THE ENGINEER.

SILT FENCE DROP INLET BARRIER

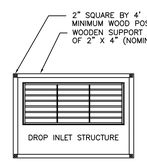

PLAN VIEW

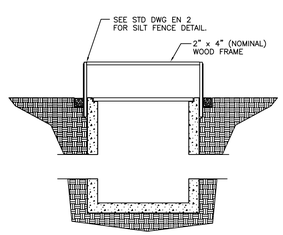

SECTION

NOTES:

1. ENTRENCH THE BOTTOM 18" OF SILT FENCE SECURELY IN THE GROUND AROUND THE PERIMETER OF THE DROP INLET.
2. DRIVE POSTS AT EACH CORNER OF THE INLET STRUCTURE. IF THE DISTANCE BETWEEN CORNER POSTS EXCEEDS 4', PLACE ANOTHER POST(S) BETWEEN THEM.
3. CROSS–BRACE THE TOPS OF ALL POSTS WITH A WOODEN FRAME MADE OF 2X4 STUDS. USE NAILS OR SCREWS FOR FASTENING.
4. IN MEDIAN AREAS, CONSTRUCT SO THAT THE TOP OF THE SILT FENCE IS NOT HIGHER THAN THE ADJACENT ROADWAY.
5. MAINTAIN A PROPERLY FUNCTIONING SILT FENCE BARRIER THROUGHOUT CONSTRUCTION OR UNTIL DISTURBED AREAS CONTRIBUTING TO THE INLET HAVE BEEN PAVED OR VEGETATED.
6. REMOVE SEDIMENT AS IT ACCUMULATES AND PLACE IT IN A STABLE AREA APPROVED BY THE ENGINEER.

STONE DROP INLET BARRIER

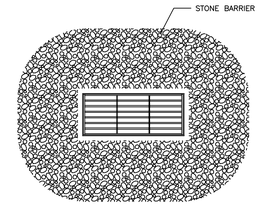

PLAN VIEW

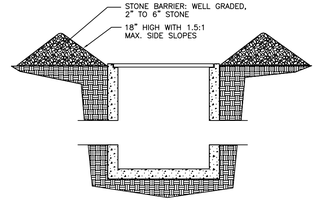

SECTION

NOTES:

1. PLACE STONE BARRIER AS SHOWN AROUND THE INLET OPENING.
2. DO NOT USE STONE BARRIERS WITHIN THE CLEAR ZONE. INSTEAD USE THE FIBER ROLL OR SILT FENCE BARRIER.
3. IN MEDIAN AREAS, CONSTRUCT SO THAT THE TOP OF THE STONE BARRIER IS NOT HIGHER THAN THE ADJACENT ROADWAY.
4. MAINTAIN A PROPERLY FUNCTIONING STONE BARRIER THROUGHOUT CONSTRUCTION OR UNTIL DISTURBED AREAS CONTRIBUTING TO THE INLET HAVE BEEN PAVED OR VEGETATED.
5. REMOVE SEDIMENT AS IT ACCUMULATES AND PLACE IT IN A STABLE AREA APPROVED BY THE ENGINEER.

REVISIONS | NO. | DATE | APP'D | REMARKS

UTAH DEPARTMENT OF TRANSPORTATION
STANDARD DRAWINGS FOR ROAD AND BRIDGE CONSTRUCTION
SALT LAKE CITY, UTAH

RECOMMENDED FOR APPROVAL — JAN 01 2008 — DATE
CHAIRMAN STANDARDS COMMITTEE
APPROVED — JAN 01 2008 — DATE
DEPUTY DIRECTOR

STANDARD DRAWING TITLE: TEMPORARY EROSION CONTROL (DROP INLET BARRIERS)

STD DWG
EN 4

SILT FENCE

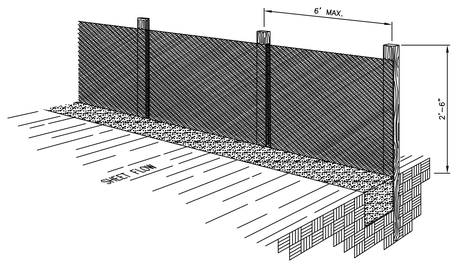

PERSPECTIVE VIEW

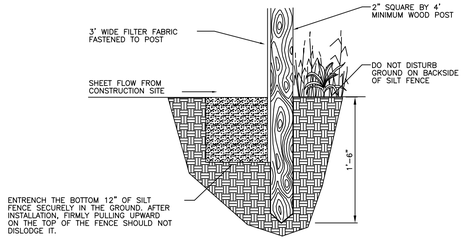

SECTION

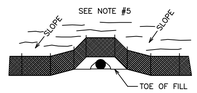

AROUND A PIPE OUTLET

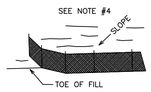

AT END OF SILT FENCE

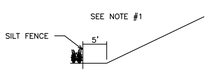

AT TOE OF FILL SLOPE

SPLICES (TOP VIEW)

SILT FENCE INSTALLATIONS

NOTES FOR SILT FENCE:

1. WHERE PERMITTED, POSITION THE SILT FENCE 5' BEYOND THE TOE OF SLOPE.
2. TO AVOID CREATING LOW POINTS ALONG THE SILT FENCE, ALIGN THE FENCE ALONG THE CONTOUR AS MUCH AS POSSIBLE. WHERE EXCESSIVE RUNOFF WILL ACCUMULATE AT A LOW POINT, PROVIDE AN OPENING IN THE FENCE AND INSTALL A SEDIMENT TRAP.
3. WHEN EXCAVATING THE TRENCH, USE MACHINERY THAT WILL MINIMIZE DISTURBANCE.
4. TO PREVENT RUNOFF FROM FLOWING AROUND THE ENDS OF THE SILT FENCE, RUN THE ENDS OF THE FENCE UP SLOPE.
5. DO NOT PLACE SILT FENCE ACROSS POTENTIAL CONCENTRATED FLOWS (e.g., PIPE OUTLETS, DRAINAGE CHANNELS, CUT DITCHES).
6. AVOID USING SPLICES ALONG THE FENCE AS MUCH AS POSSIBLE. IF A SPLICE IS NECESSARY, BEFORE POUNDING IN THE END POSTS, OVERLAP THE END POSTS AND TWIST 180 DEGREES.
7. MAINTAIN A PROPERLY FUNCTIONING SILT FENCE THROUGHOUT THE DURATION OF THE PROJECT OR UNTIL DISTURBED AREAS HAVE BEEN VEGETATED.
8. WHEN A STORM EVENT DEPOSITS SEDIMENT BEHIND THE FENCE, REMOVE THE SEDIMENT AND PLACE IT IN A STABLE AREA APPROVED BY THE ENGINEER.
9. IN AREAS THAT HAVE BEEN SEEDED AND MULCHED, REMOVE SILT FENCE UNLESS THEY ARE PROTECTING A WETLAND OR WATER BODY.

REVISIONS | NO. | DATE | APP'D | REMARKS

UTAH DEPARTMENT OF TRANSPORTATION
STANDARD DRAWINGS FOR ROAD AND BRIDGE CONSTRUCTION
SALT LAKE CITY, UTAH

RECOMMENDED FOR APPROVAL — JAN 01 2008 — DATE
CHAIRMAN STANDARDS COMMITTEE
APPROVED — JAN 01 2008 — DATE
DEPUTY DIRECTOR

STANDARD DRAWING TITLE: TEMPORARY EROSION CONTROL (SILT FENCE)

STD DWG
EN 2

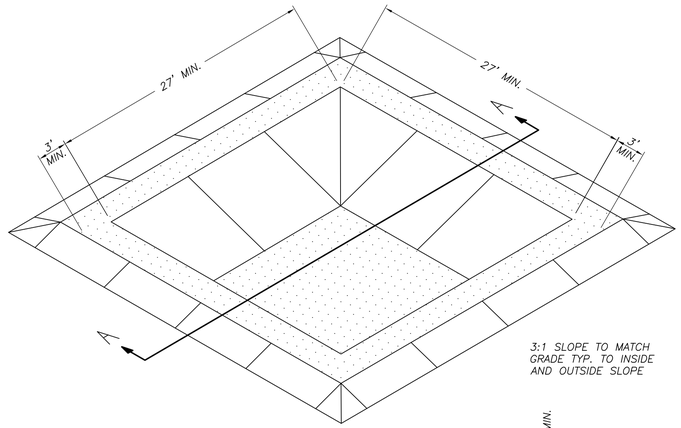

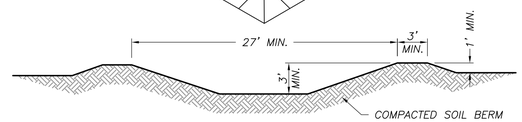

SECTION A-A
N.T.S.

PROPOSED CONCRETE WASHOUT CONTAINMENT DETAIL

InSite Engineering, P.C.
Civil Engineers - Land Surveyors - Land Planners
1883 W. Royal Hunte Dr., Suite 200
Cedar City, Utah 84720
phone: (435) 867-4565
fax: (435) 867-4459

SARGENT DESIGN GROUP
ARCHITECTURE | PLANNING
36 NORTH 300 WEST, SUITE B
CEDAR CITY, UTAH 84720
OFFICE: (435) 586-8510
FAX: (435) 586-4873
jcoltons@email.com

State of Utah-Department of Administrative Services
DIVISION OF FACILITIES CONSTRUCTION AND MANAGEMENT
4110 State Office Building/Salt Lake City, Utah 84114/538-3018

Project:
UDOT
HURRICANE
FACILITY
DFCM PROJECT NO.
07292900

Sheet Title:
SWPP
PLAN
DETAILS

Revisions:

PROJECT NUMBER: 28493
DATE: MARCH 5, 2009
DRAWN BY: T.S.
CHECKED BY:
APPROVED BY:
SHEET NUMBER:

C-501

PIPE INLET BARRIER

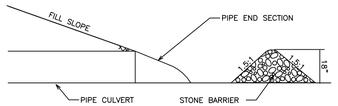

SECTION A–A

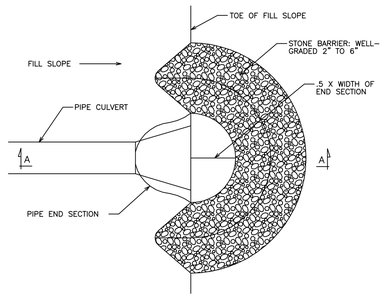

PLAN VIEW

NOTES FOR PIPE INLET BARRIER:

1. PLACE PIPE INLET BARRIERS AT LOCATIONS SHOWN ON THE PLANS OR AS DIRECTED BY THE ENGINEER.
2. MAINTAIN A PROPERLY FUNCTIONING SEDIMENT BARRIER THROUGHOUT CONSTRUCTION.
3. REMOVE SEDIMENT AS IT ACCUMULATES AND PLACE IT IN A STABLE AREA APPROVED BY THE ENGINEER.
4. WHEN SURROUNDING AREAS HAVE BEEN SEEDED AND MULCHED, REMOVE THE STONE BARRIER BY SPREADING THE STONE ALONG THE CUT DITCH.
5. AN 18" MINIMUM DIAMETER FIBER ROLL MAY BE USED AS A SUBSTITUTE FOR THE STONE BARRIER. STAKE AS SHOWN ON STD DRW EN 1.

CURB INLET BARRIER

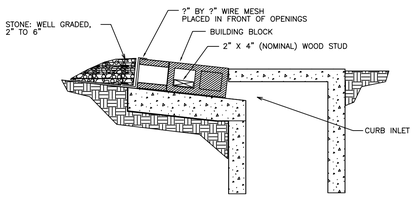

SECTION B–B

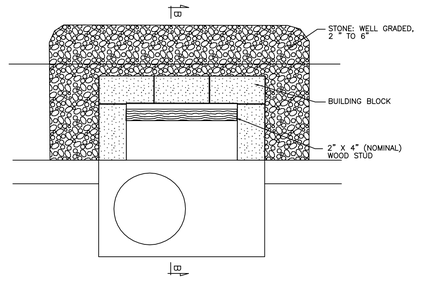

PLAN VIEW

NOTES FOR CURB INLET BARRIER:

1. PLACE BUILDING BLOCKS, WIRE MESH AND STONE AS SHOWN AROUND THE CURB INLETS.
2. MAINTAIN A PROPERLY FUNCTIONING STONE BARRIER THROUGHOUT CONSTRUCTION OR UNTIL DISTURBED AREAS CONTRIBUTING TO THE INLET HAVE BEEN PAVED OR VEGETATED.
3. REMOVE SEDIMENT AS IT ACCUMULATES AND PLACE IT IN A STABLE AREA APPROVED BY THE ENGINEER.

REVISIONS

NO	DATE	APPR	REMARKS

UTAH DEPARTMENT OF TRANSPORTATION
STANDARD DRAWINGS FOR ROAD AND BRIDGE CONSTRUCTION
SALT LAKE CITY, UTAH

RECOMMENDED FOR APPROVAL — JAN.01.2008 DATE
CHAIRMAN, STANDARDS COMMITTEE — JAN.01.2008 DATE
APPROVED
DEPUTY DIRECTOR

TEMPORARY EROSION CONTROL (PIPE INLET AND CURB INLET BARRIERS)
STANDARD DRAWING TITLE

STD DWG
EN 5

B5-48 B5-48 B5-48

STRAW BALE BARRIER

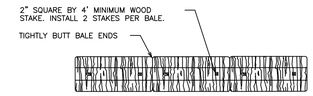

PLAN VIEW

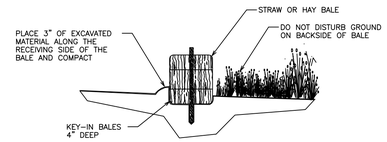

SECTION

NOTES FOR STRAW BALE BARRIER:

1. PLACE STRAW BALE BARRIERS BEFORE BEGINNING EARTH DISTURBING ACTIVITIES.
2. DO NOT PLACE STRAW BALE BARRIERS ACROSS NATURAL STREAM BEDS.
3. MAINTAIN A PROPERLY FUNCTIONING STRAW BALE BARRIER THROUGHOUT THE DURATION OF THE PROJECT OR UNTIL DISTURBED AREAS HAVE BEEN SEEDED AND MULCHED.
4. AFTER SURROUNDING AREAS HAVE BEEN STABILIZED, REMOVE BALES AND STAKES AND LEVEL AND SEED THE AREA. BALES MAY BE BUSTED APART AND SPREAD AS MULCH.

REVISIONS

NO	DATE	APPR	REMARKS

UTAH DEPARTMENT OF TRANSPORTATION
STANDARD DRAWINGS FOR ROAD AND BRIDGE CONSTRUCTION
SALT LAKE CITY, UTAH

RECOMMENDED FOR APPROVAL — JAN.01.2008 DATE
CHAIRMAN, STANDARDS COMMITTEE — JAN.01.2008 DATE
APPROVED
DEPUTY DIRECTOR

TEMPORARY EROSION CONTROL (STRAW BALE BARRIER)
STANDARD DRAWING TITLE

STD DWG
EN 7

B5-48 B5-48 B5-48

SEDIMENT TRAP

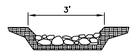

SECTION A–A

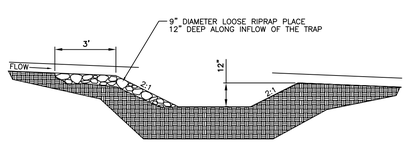

SECTION B–B

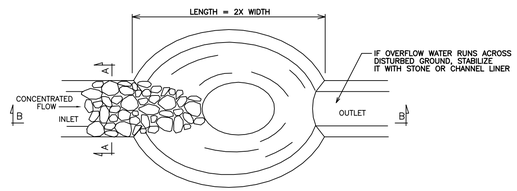

PLAN VIEW

NOTES FOR SEDIMENT TRAPS:

1. PLACE SEDIMENT TRAPS AT LOCATIONS SHOWN ON THE PLANS OR AS DIRECTED BY THE ENGINEER.
2. IDENTIFY THE STORAGE CAPACITY OF EACH SEDIMENT TRAP IN THE PROJECT PLAN SET.
3. CONSTRUCT TRAP LENGTH TWICE AS LONG AS THE WIDTH.
4. MAINTAIN A PROPERLY FUNCTIONING SEDIMENT TRAP THROUGHOUT CONSTRUCTION OR UNTIL DISTURBED AREAS CONTRIBUTING TO THE BASIN HAVE BEEN PAVED OR SEEDED AND MULCHED.
5. REMOVE SEDIMENT AS IT ACCUMULATES AND PLACE IT IN A STABLE AREA APPROVED BY THE ENGINEER.

STABILIZED CONSTRUCTION ENTRANCE

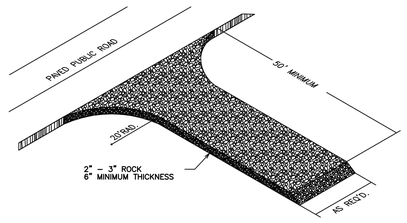

NOTES FOR STABILIZED CONSTRUCTION ENTRANCE:

1. PLACE STABILIZED CONSTRUCTION ENTRANCES AT LOCATIONS SHOWN ON THE PLANS OR AS DIRECTED BY THE ENGINEER.
2. MAINTAIN A PROPERLY FUNCTIONING CONSTRUCTION ENTRANCE THROUGHOUT CONSTRUCTION OR UNTIL DISTURBED AREAS HAVE BEEN PAVED.
3. DO NOT ALLOW VEHICLES LEAVING THE CONSTRUCTION SITE TO TRACK MUD ONTO PAVED ROADS.

REVISIONS

NO	DATE	APPR	REMARKS

UTAH DEPARTMENT OF TRANSPORTATION
STANDARD DRAWINGS FOR ROAD AND BRIDGE CONSTRUCTION
SALT LAKE CITY, UTAH

RECOMMENDED FOR APPROVAL — JAN.01.2008 DATE
CHAIRMAN, STANDARDS COMMITTEE — JAN.01.2008 DATE
APPROVED
DEPUTY DIRECTOR

TEMPORARY EROSION CONTROL (SEDIMENT TRAP AND STABILIZED CONSTRUCTION ENTRANCE)
STANDARD DRAWING TITLE

STD DWG
EN 6

B5-48 B5-48 B5-48

SARGENT DESIGN GROUP
ARCHITECTURE | PLANNING
36 NORTH 300 WEST, SUITE B
CEDAR CITY, UTAH 84720
OFFICE: (435) 586-8510
FAX: (435) 586-4873
jcoltons@email.com

State of Utah-Department of Administrative Services
DIVISION OF FACILITIES CONSTRUCTION AND MANAGEMENT
4110 State Office Building/Salt Lake City, Utah 84114/538-3018

Project:
UDOT HURRICANE FACILITY
DFCM PROJECT NO. 07292900

Sheet Title:
SWPP PLAN DETAILS CONTINUED

Revisions:

PROJECT NUMBER: 28493
DATE: MARCH 5, 2009
DRAWN BY: T.S.
CHECKED BY:
APPROVED BY:
SHEET NUMBER:
C-502

InSite Engineering, P.C.
Civil Engineers - Land Surveyors - Land Planners
1883 W. Royal Hunte Dr., Suite 200
Cedar City, Utah 84720
phone: (435) 867-4565
fax: (435) 867-4459

TYPE B1
CURB & GUTTER
AREA = 1.680 SQ.FT.

TYPE B2
CURB & GUTTER
AREA = 1.765 SQ.FT.

TYPE M1
CURB & GUTTER
AREA = 1.700 SQ.FT.

TYPE B3
CURB
AREA = 0.580 SQ.FT.

TYPE B4
CURB
AREA = 1.033 SQ.FT.

TYPE M2
CURB
AREA = 0.484 SQ.FT.

TYPE B5
RAISED MEDIAN CURB
(RMC)
AREA = 0.490 SQ.FT.

NOTES:

1. DRAINAGE CURBS: TYPE B1, B2 & M1
2. MOUNTABLE CURBS: TYPES M1 & M2 FOR APPLICATION REFER TO THE AASHTO POLICY ON GEOMETRIC DESIGN OF HIGHWAYS AND STREETS.
3. CURBS TYPES B1, B2, B3, B4 & B5 USED WITH DESIGN SPEED UP TO 40 MPH EXCEPT IN PREDOMINATELY URBAN OR RAPIDLY DEVELOPING RURAL AREAS WHERE CURB MAY BE USED WITH DESIGN SPEEDS UP TO 50 MPH.
4. DOWELS: ?" DEFORMED BARS ON 5' MAX.CENTERS.
5. PRECAST CURBS:
   A. MINIMUM OF 10' IN LENGTH.
   B. DOWELS AT A MINIMUM OF 3 PER 10' LENGTH.
   C. INCLUDE ADEQUATE REINFORCING STEEL TO WITH STAND HANDLING STRESSES.
6. CONCRETE CLASS AA "AE"
7. USE TYPE B4 ONLY AS BORDER CURB.
8. CURB HEIGHT IS MEASURED VERTICALLY FROM THE FLOW LINE OF THE GUTTER TO TOP BACK OF CURB.
9. REFER TO ROADWAY PLANS FOR UNTREATED BASE COURSE SIZE.
10. ADJUST CURB FACE TO 4" MAXIMUM HEIGHT WHEN USED IN CONJUNCTION WITH GUARDRAIL BARRIER.
11. REFER TO STD DWG GW 3 FOR CURB AND GUTTER AT ADA RAMPS.

REVISIONS | NO. | DATE | APPR | REMARKS

UTAH DEPARTMENT OF TRANSPORTATION
STANDARD DRAWINGS FOR ROAD AND BRIDGE CONSTRUCTION
SALT LAKE CITY, UTAH
RECOMMENDED FOR APPROVAL — JAN.01,2008 DATE
CHAIRMAN STANDARDS COMMITTEE APPROVED — JAN.01,2008 DATE
DEPUTY DIRECTOR

CONCRETE CURB AND GUTTER
STANDARD DRAWING TITLE
STD DWG GW 2

OPEN CONCRETE DRIVEWAY

FLARED DRIVEWAY

SECTION A–A

DRIVEWAY RADIUS AND FLARE AREA CHART			
OPEN CONCRETE DRIVEWAY	ft ^{2}	FLARED DRIVEWAY	
6' RADIUS	44.13	DISTANCE FROM BACK OF CURB TO SIDEWALK	FLARE AREA
NOTE:			
ft 2QUANTITY = BOTH SIDES OF		4'	49 ft ^{2}
DRIVEWAY ROUNDED TO THE		6'	61 ft ^{2}
NEAREST 0.5 ft ^{2}		8'	89 ft ^{2}
		10'	105 ft ^{2}
		ADD (DL)(DW) FOR TOTAL QUANTITY	

SECTION B–B

EXPANSION–CONTRACTION JOINT DETAIL

NOTES:

1. DRIVEWAY DIMENSIONS (MAX.& MIN.) ARE LOCATED IN UDOT ADMINISTRATIVE RULE R930–6 ACCOMMODATION OF UTILITIES AND THE CONTROL AND PROTECTION OF STATE HIGHWAY RIGHTS OF WAY" CURRENT EDITION.
2. MAXIMUM DISTANCE BETWEEN TOOLED OR CONSTRUCTION JOINTS 10' LATERALLY AND LONGITUDINALLY SPACED EQUALLY.
3. PROVIDE EXPANSION JOINTS WHERE CONCRETE SIDEWALK BUTTS AGAINST CONCRETE DRIVEWAYS AND IN CONCRETE SIDEWALK AT 30 FEET INTERVALS.
4. SIDEWALK INSIDE THE DRIVEWAY LIMITS IS PAID AS PART OF DRIVEWAY, NOT AS PART OF SIDEWALK.
5. OPEN CONCRETE DRIVEWAY – FLARED DRIVEWAY
   A: RESIDENTIAL = 6 inch THICK, COMMERCIAL = 7 inch THICK USE THESE THICKNESSES FOR APRON, SIDEWALK, APPROACH, FLARE, AND RADII.
   B: EXTEND DRIVEWAY APPROACH TO R/W – PROPERTY LINE OR 25' WHICHEVER IS LESS.
   C: IF THE GRADES SHOWN ON THE SLOPE DETAIL CANNOT BE MET, DEPRESS THE LONGITUDINAL SLOPE OF THE SIDEWALK AT A MAXIMUM RATE OF 5 PERCENT TO MEET THE APRON – APPROACH ELEVATION.
6. USE CLASS AA(AE) CONCRETE FOR SIDEWALK AND DRIVEWAYS
7. USE UNTREATED BASE COURSE UNDER ALL SIDEWALKS AND DRIVEWAYS.
8. 10:1 = 10% SLOPE.
9. QUANTITIES FOR DRIVEWAYS INCLUDE RADIUS AND FLARES TO LIP OF GUTTER.

REVISIONS | NO. | DATE | APPR | REMARKS

UTAH DEPARTMENT OF TRANSPORTATION
STANDARD DRAWINGS FOR ROAD AND BRIDGE CONSTRUCTION
SALT LAKE CITY, UTAH
RECOMMENDED FOR APPROVAL — JAN.01,2008 DATE
CHAIRMAN STANDARDS COMMITTEE APPROVED — JAN.01,2008 DATE
DEPUTY DIRECTOR

CONCRETE DRIVEWAYS AND SIDEWALKS
STANDARD DRAWING TITLE
STD DWG GW 4

TYPE B1–A
CURB & GUTTER
GUTTER PAN SLOPE REDUCED FOR ADA RAMP
AREA = 1.680 SQ FT

TYPE B2–A
CURB & GUTTER
GUTTER PAN SLOPE REDUCED FOR ADA RAMP
AREA = 1.765 SQ FT

TYPE M1–A
CURB & GUTTER
GUTTER PAN SLOPE REDUCED FOR ADA RAMP
AREA = 1.700 SQ FT

TYPICAL
CURB & GUTTER
END DETAIL

TYPICAL
CURB END DETAIL

CURB & GUTTER
TRANSITION DETAIL

NOTE:

1. AT ADA RAMP LOCATIONS, FLATTEN GUTTERS AS SHOWN. WHERE MORE THAN ONE RAMP WILL BE CONSTRUCTED AT A CORNER, FLATTEN GUTTER BETWEEN RAMPS AS WELL AS AT CURB RAMPS.

REVISIONS | NO. | DATE | APPR | REMARKS

UTAH DEPARTMENT OF TRANSPORTATION
STANDARD DRAWINGS FOR ROAD AND BRIDGE CONSTRUCTION
SALT LAKE CITY, UTAH
RECOMMENDED FOR APPROVAL — JAN.01,2008 DATE
CHAIRMAN STANDARDS COMMITTEE APPROVED — JAN.01,2008 DATE
DEPUTY DIRECTOR

CONCRETE CURB AND GUTTER DETAILS
STANDARD DRAWING TITLE
STD DWG GW 3

NOTES:

1. POSTS: SCHEDULE 40 PIPE. TRIPLE COATED HIGH TENSILE STEEL PIPE OR ROLL–FORMED C–SECTION OF THE SIZE SHOWN IN THE CHART AND AS DEFINED IN THE STANDARD SPECIFICATION. WEIGHT IN lb/ft WITH TOLERANCE OF 5 PERCENT. OTHER TYPES OF POSTS WITH EQUAL OR GREATER SECTION MODULUS MAY BE USED IF APPROVED, IN ADVANCE, BY THE ENGINEER.
2. FABRIC HEIGHTS LESS THAN 5': TRUSS RODS AND BRACES NOT REQUIRED.

HEIGHT	GATE OPENING	GATE POST	GATE FRAME
UNDER 6'	SINGLE TO 6' OR DOUBLE TO 12'	2"	1"
	SINGLE OVER 6' TO 8' OR DOUBLE OVER 12' TO 16'	2?"	1?"
	SINGLE OVER 8' TO 12' OR DOUBLE 16' TO 24'	3?"	
6' AND OVER *	SINGLE TO 6' OR DOUBLE TO 12'	2?"	1?"
	SINGLE OVER 6' TO 13' OR DOUBLE OVER 12' TO 24'	3?"	
	SINGLE OVER 13' TO 18' OR DOUBLE OVER 24' TO 36'	6"	
	SINGLE OVER 18' OR DOUBLE OVER 36'	8"	

* GATES OVER 6' IN HEIGHT AND WIDER THAN 12' WILL REQUIRE 3 INDUSTRIAL PRESSED STEEL HINGES.

HEIGHT OF FABRIC	DEPTH OF POSTS	LENGTH OF END CORNER OR PULL POSTS	LENGTH OF LINE POSTS	SIZE OF POSTS: END, CORNER & PULL POSTS — NOM. SIZE	OUTSIDE DIA.	PIPE WEIGHT ASTM A 120	PIPE WEIGHT TRIPLE COAT	LINE POST MIN.SIZE — NOM. SIZE	OUTSIDE DIA.	PIPE WEIGHT ASTM A 120	PIPE WEIGHT TRIPLE COAT	OUTSIDE DIMENSIONS C–SECTION	WT/FT
7'	3'	10'	9'–8"	2?"	2.875"	5.79	4.64	2"	2.375"	3.65	3.11	1.875 x 1.625	2.28
6'	3'	9'	8'–8"	2"	2.375"	3.65	3.11	1?"	1.900"	2.72	2.23	1.875 x 1.625	1.85
5'	3'	8'	7'–8"	2"	2.375"	3.65	3.11	1?"	1.900"	2.72	2.23	1.875 x 1.625	1.85
4'	2'	6'	5'–8"	2"	2.375"	3.65	3.11	1?"	1.900"	2.72	2.23	1.875 x 1.625	1.85
3'	2'	5'	4'–8"	2"	2.375"	3.65	3.11	1?"	1.900"	2.72	2.23	1.875 x 1.625	1.85

REVISIONS | NO. | DATE | APPR. | REMARKS

UTAH DEPARTMENT OF TRANSPORTATION
STANDARD DRAWINGS FOR ROAD AND BRIDGE CONSTRUCTION
SALT LAKE CITY, UTAH
RECOMMENDED FOR APPROVAL — JAN.01,2008 DATE
CHAIRMAN STANDARDS COMMITTEE APPROVED — JAN.01,2008 DATE
DEPUTY DIRECTOR

CHAIN LINK FENCE
STANDARD DRAWING TITLE
STD DWG FG 6

SARGENT DESIGN GROUP
ARCHITECTURE | PLANNING
36 NORTH 300 WEST, SUITE B
CEDAR CITY, UTAH 84720
OFFICE: (435) 586-8510
FAX: (435) 586-4873
jcoltons@email.com

State of Utah–Department of Administrative Services
DIVISION OF FACILITIES CONSTRUCTION AND MANAGEMENT
4110 State Office Building/Salt Lake City, Utah 84114/538–3018

Project:
UDOT
HURRICANE
FACILITY
DFCM PROJECT NO.
07292900

Sheet Title:
UDOT
DETAILS

Revisions:

PROJECT NUMBER: 28493
DATE: MARCH 5, 2009
DRAWN BY: T.S.
CHECKED BY:
APPROVED BY:
SHEET NUMBER:

C-503

HURRICANE REGION STANDARD
GREASE/SAND INTERCEPTOR

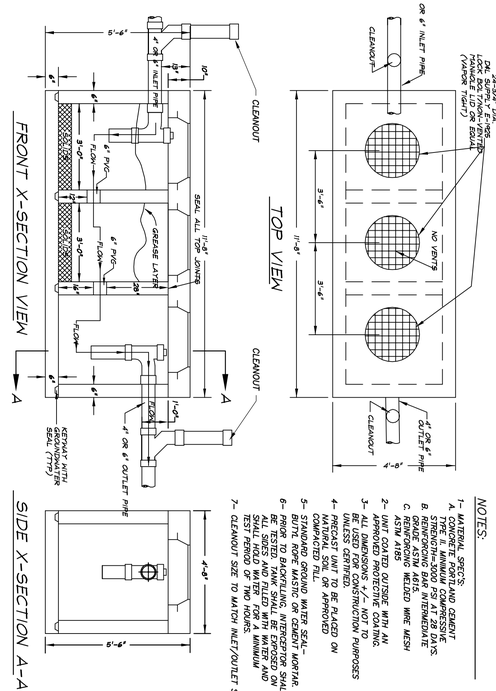

NOTES:

1- MATERIAL SPECS.
   A. CONCRETE, PORTLAND CEMENT TYPE II, MINIMUM COMPRESSIVE STRENGTH 4000 PSI AT 28 DAYS.
   B. REINFORCING BAR INTERMEDIATE GRADE, ASTM A615.
   C. GRADE ASTM WELDED WIRE MESH ASTM A185
2- UNIT COATED OUTSIDE WITH AN APPROVED BITUMINOUS PROTECTIVE COATING.
3- SAND SHALL BE CLEAN NATURAL SOIL OR APPROVED MATERIAL FREE OF ORGANICS AND DEBRIS. SAND SHALL NOT BE USED FOR CONSTRUCTION PURPOSES UNLESS CERTIFIED.
4- SAND SHALL BE PLACED ON COMPACTED FILL.
5- STRUCTURE SHALL BE WATER TIGHT. ALL MORTAR JOINTS SHALL BE TOOLED AND PARGED WITH CEMENT MORTAR. PRIOR TO BACKFILLING, INTERCEPTOR SHALL BE TESTED. TANK SHALL BE EXPOSED ON ALL SIDES AND FILLED WITH WATER AND SHALL HOLD WATER FOR A MINIMUM TEST PERIOD OF TWO HOURS.
6- CLEANOUT SIZE TO MATCH INLET/OUTLET SIZE.

TOWN OF HURRICANE

REVISIONS			GREASE/SAND INTERCEPTOR DETAILS	STANDARD DWG. NO.	
DATE	DESCRIPTION	BY		234	1 OF 1
				APPROVED:	
				DATE:	BY: LBB

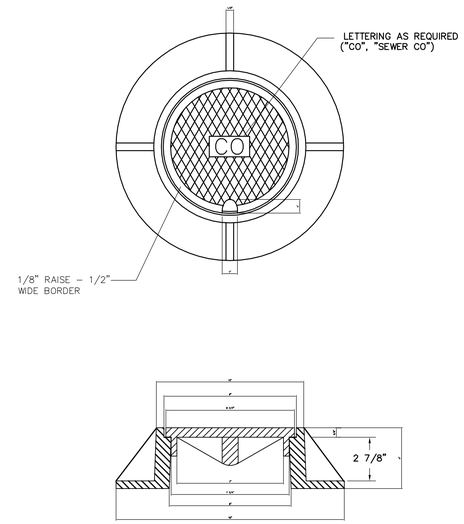

NOTES:

1- MATERIAL SHALL BE CAST IRON ASTM A48, CL30
2- H-20 RATING

TOWN OF HURRICANE

REVISIONS			(OPTIONAL) SEWER CLEANOUT COVER DETAIL	STANDARD DWG. NO.	
DATE	DESCRIPTION	BY		233	1 OF 1
				APPROVED:	
				DATE:	BY: LBB

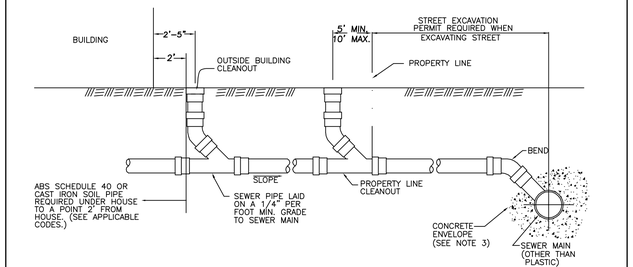

NOTES:

1- PROPERTY LINE AND OUTSIDE BUILDING CLEANOUTS ARE REQUIRED AS SHOWN.
2- CLEANOUT REQUIRED AT 100' MAX. SPACING (STRAIGHT RUNS) AND FOR EACH AGGREGATE CHANGE IN DIRECTION, WHERE TOTAL AGGREGATE CHANGE EXCEEDS 135 DEGREES.
3- ALL LATERALS CUT INTO EXISTING MAINS SHALL BE ADAPTED WITH SADDLES, WHERE SADDLES ARE NOT WATER TIGHT, A CONCRETE ENVELOPE SHALL BE REQUIRED. LATERALS SHALL NOT PROTRUDE INTO SEWER MAINS.
4- ALL CLEANOUTS LOCATED IN DRIVEWAYS, WALKWAYS OR OTHER AREAS SUBJECT TO VEHICLE OR PEDESTRIAN TRAFFIC SHALL HAVE A CAST IRON RING AND COVER OR OTHER APPROVED PROTECTIVE DEVICE WITH CONCRETE COLLAR.
5- FOR COMMERCIAL APPLICATION CONTACT WASTE WATER DIVISION.
6- NO BRASS CLEAN-OUT CAPS ALLOWED OUTSIDE.

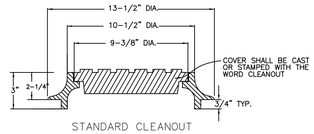

STANDARD CLEANOUT RING & LID (H-20 RATING)

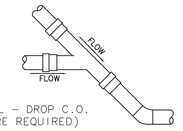

DETAIL - DROP C.O. (WHERE REQUIRED)

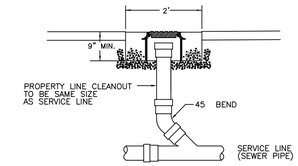

CLEANOUT DETAIL B

CITY OF HURRICANE ENGINEERING DEPARTMENT

REVISIONS			TYPICAL SEWER CONNECTION DETAILS	STANDARD DWG. NO.	
DATE	DESCRIPTION	BY		230	1 OF 1
7-2004	ADDED NOTE 6	LBB		APPROVED:	
				DATE:	BY: LBB

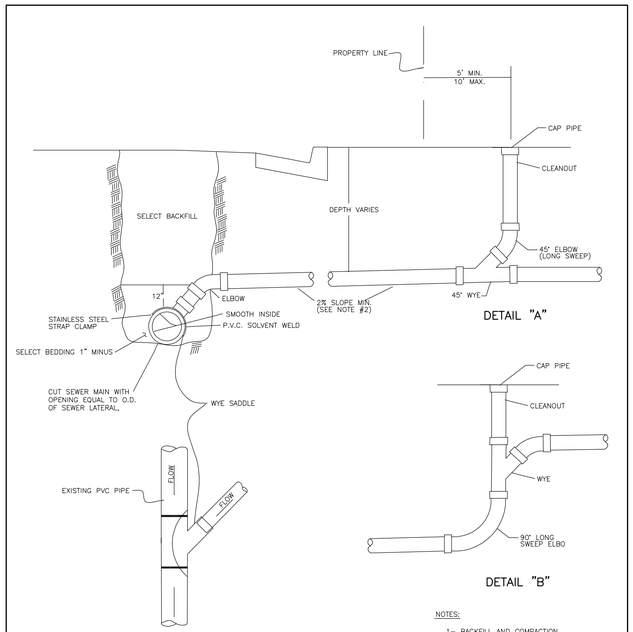

NOTES:

1- BACKFILL AND COMPACTION REQUIREMENTS SHALL CONFORM TO CITY STANDARD SPECIFICATIONS. SPECIFICATIONS.
2- 4" DIAMETER-2% MINIMUM. 6" DIAMETER- 1% MINIMUM.
3- CLEANOUT DIAMETER TO BE SAME SIZE AS LATERAL.
4- INSTALL WYE SADDLE PER MANUFACTURER'S RECOMMENDATIONS.
5- PIPE LAID WITH BELL OR COLLARD ENDS UP-GRADE.

CITY OF HURRICANE ENGINEERING DEPARTMENT

REVISIONS			P.V.C. SERVICE CONNECTION EXISTING P.V.C. SEWER MAINS	STANDARD DWG. NO.	
DATE	DESCRIPTION	BY		231	1 OF 1
7-2004	ADDED NOTE 5/DETAIL "B"	LBB		APPROVED:	
				DATE:	BY: LBB

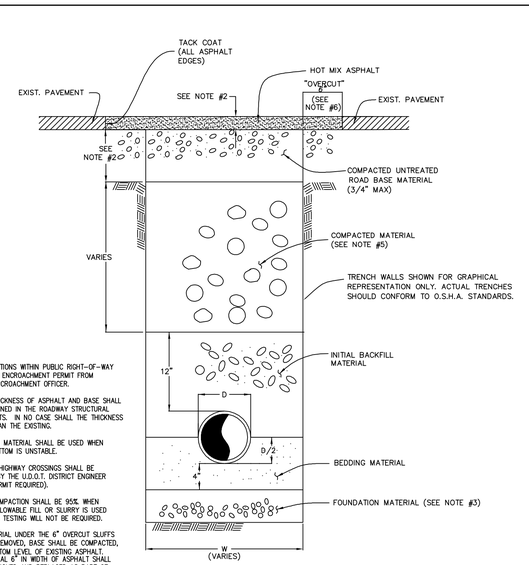

NOTES:

1- ALL EXCAVATIONS WITHIN PUBLIC RIGHT-OF-WAY REQUIRE AN ENCROACHMENT PERMIT FROM THE CITY ENCROACHMENT OFFICER.
2- MINIMUM THICKNESS OF ASPHALT AND BASE SHALL BE AS OUTLINED IN THE ROADWAY STRUCTURAL REQUIREMENTS. IN NO CASE SHALL THE THICKNESS BE LESS THAN THE EXISTING.
3- FOUNDATION MATERIAL SHALL BE USED WHEN TRENCH BOTTOM IS UNSTABLE.
4- ALL STATE HIGHWAY CROSSINGS SHALL BE APPROVED BY THE U.D.O.T. DISTRICT ENGINEER (U.D.O.T. PERMIT REQUIRED).
5- MINIMUM COMPACTION SHALL BE 95% WHEN APPROVED FLOWABLE FILL OR SLURRY IS USED COMPACTION TESTING WILL NOT BE REQUIRED.
6- WHEN MATERIAL UNDER THE 6" OVERCUT SLUFFS OFF OR IS REMOVED, BASE SHALL BE COMPACTED, TO THE BOTTOM LEVEL OF EXISTING ASPHALT, AN ADDITIONAL 6" IN WIDTH OF ASPHALT SHALL BE CUT, REMOVED AND REPLACED AS PART OF THE OVERALL PATCH.
7- WHERE ROAD SECTION HAS A DESIGNED GRANULAR SUB-BASE, IT SHALL BE REPLACED IN KIND OR WITH ROAD BASE GRAVEL.
8- IN GENERAL, STREET SURFACES LESS THAN 24 MONTHS OLD WILL NOT BE CUT ! IF A CUT MUST BE MADE, ADDITIONAL, STRICTER REQUIREMENTS MAY BE INVOKED. SEE ENCROACHMENT OFFICER.
9- 24 HOUR NOTICE REQUIRED ON ALL INSPECTIONS.
10- ALL TRENCH BACKFILL SHALL MEET MIN. COMPACTION REQUIREMENTS.
11- EXCLUDING EMERGENCY CLOSURES ALL ROAD CLOSURES AND DETOURS REQUIRE 48 HOURS PRIOR NOTICE.

CITY OF HURRICANE

REVISIONS			TRENCH BACKFILL AND REPAIR DETAIL	STANDARD DWG. NO.	
DATE	DESCRIPTION	BY		170	1 OF 1
				APPROVED:	
				DATE:	BY: LBB

SARGENT DESIGN GROUP
ARCHITECTURE | PLANNING
36 NORTH 300 WEST, SUITE B
CEDAR CITY, UTAH 84720
OFFICE: (435) 586-8510
FAX: (435) 586-4873
jcoltons@email.com

State of Utah-Department of Administrative Services
DIVISION OF FACILITIES CONSTRUCTION AND MANAGEMENT
4110 State Office Building/Salt Lake City, Utah 84114/538-3018

Project:
UDOT HURRICANE FACILITY
DFCM PROJECT NO. 07292900

Sheet Title:
HURRICANE DETAILS A

Revisions:

PROJECT NUMBER: 28493
DATE: MARCH 5, 2009
DRAWN BY: T.S.
CHECKED BY:
APPROVED BY:
SHEET NUMBER:

C-504

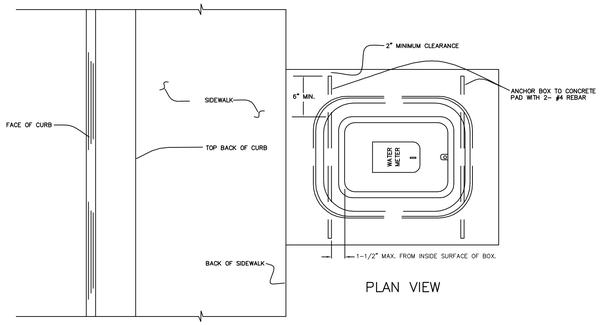

PLAN VIEW

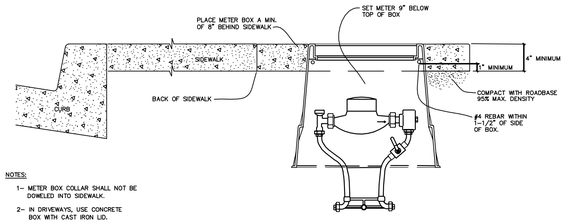

NOTES:

1- METER BOX COLLAR SHALL NOT BE DOWELED INTO SIDEWALK.

2- IN DRIVEWAYS, USE CONCRETE BOX WITH CAST IRON LID.

SECTION

TOWN OF HURRICANE			
REVISIONS			STANDARD DWG. NO.
DATE	DESCRIPTION	BY	300 1 OF 1
			APPROVED:
WATER METER BOX DETAILS			DATE: BY: LBB

THRUST BLOCK BEARING AREA IN SQUARE FEET								
PIPE SIZE	CONDITION							
	I	II	III	IV	V	VI	VII	VIII
4"	2.6	3.3	2.6	1.3	1.3	2.0	3.3	2.6
6"	4.6	6.5	3.9	2.0	2.6	3.3	6.5	4.6
8"	7.8	11.0	5.9	3.3	3.9	5.9	11.0	7.8
10"	12.4	17.5	9.8	5.2	6.5	9.1	17.5	12.4
12"	17.5	24.8	13.6	7.8	9.1	12.3	24.8	17.5
14"	24.0	33.8	18.2	9.7	12.3	16.9	33.8	24.0
16"	31.1	44.0	23.6	12.7	15.5	23.2	44.0	31.1

1. CALCULATED ON 225 LB. TEST PRESSURE & ALLOWABLE BEARING PRESSURE OF 2000 LBS. PER SQUARE FOOT.
2. IN POOR SOILS SPECIAL DESIGN IS REQUIRED.
3. CONCRETE SHALL BE CLASS "C" OR BETTER.
4. ALL THRUST BLOCK BEARING FACES SHALL BE POURED AGAINST UNDISTURBED SOIL OR APPROVED COMPACTED BACKFILL.
5. PRIOR APPROVAL FROM THE WATER DEPARTMENT REQUIRED FOR USE OF CONCRETE THRUST BLOCKS.

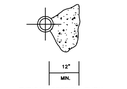

TYPICAL SECTION THRU THRUST BLOCKS

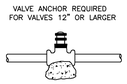

VALVE ANCHOR REQUIRED FOR VALVES 12" OR LARGER

THRUST BLOCKING

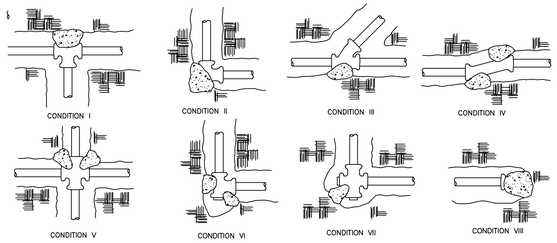

CITY OF HURRICANE			
REVISIONS			STANDARD DWG. NO.
DATE	DESCRIPTION	BY	306 1 OF 1
			APPROVED:
WATER LINE THRUST BLOCK DETAILS			DATE: BY: LBB

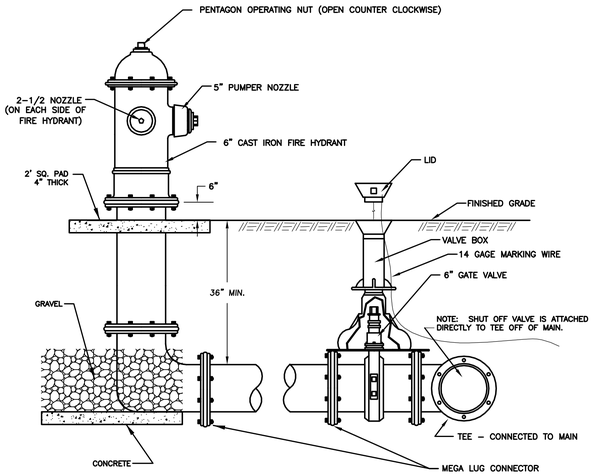

NOTES:

1- IN GENERAL, HYDRANTS SHALL BE PLACED A MINIMUM OF 1' BEHIND SIDEWALK. WHERE A PLANTER STRIP IS USED, HYDRANT MAY BE PLACED IN CENTER PROVIDED WIDTH OF PLANTER IS 4' OR GREATER.

HURRICANE CITY			
REVISIONS			STANDARD DWG. NO.
DATE	DESCRIPTION	BY	302 1 OF 1
			APPROVED:
STANDARD FIRE HYDRANT DETAILS			DATE: BY: LBB

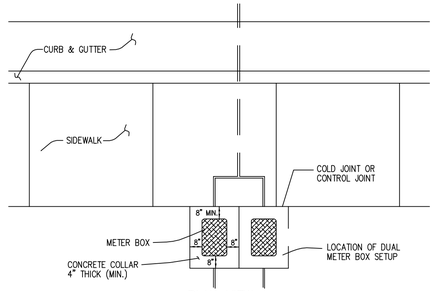

PLAN VIEW W/SIDEWALK

NOTES:

1- DO NOT DOWEL METER BOX COLLAR INTO SIDEWALK.

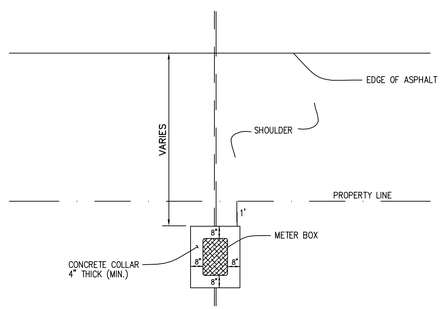

PLAN VIEW NO SIDEWALK

TOWN OF HURRICANE			
REVISIONS			STANDARD DWG. NO.
DATE	DESCRIPTION	BY	301 1 OF 1
			APPROVED:
WATER METER BOX LOCATION DETAILS			DATE: BY: LBB

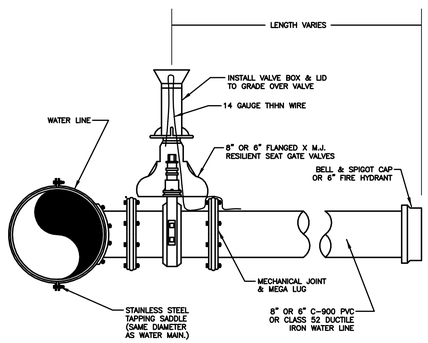

CITY OF HURRICANE			
REVISIONS			STANDARD DWG. NO.
DATE	DESCRIPTION	BY	304 1 OF 1
			APPROVED:
8" OR 6" WATER LATERAL (CONNECTION TO EXISTING LINE)			DATE: BY: LBB

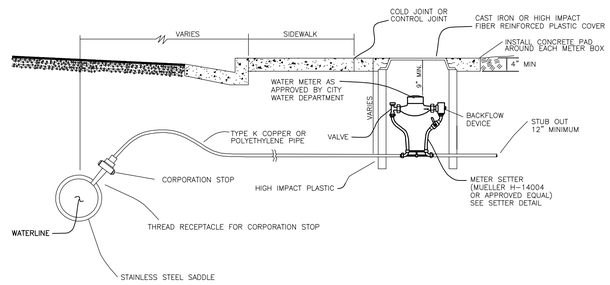

NOTES:
1- ALL TRENCH EXCAVATION AND COMPACTION SHALL BE IN ACCORDANCE WITH STANDARD SPECIFICATIONS.

CITY OF HURRICANE			
REVISIONS			STANDARD DWG. NO.
DATE	DESCRIPTION	BY	305 1 OF 1
			APPROVED:
3/4" WATER SERVICE CONNECTION & METER			DATE: BY: LBB

SARGENT DESIGN GROUP
ARCHITECTURE | PLANNING
36 NORTH 300 WEST, SUITE B
CEDAR CITY, UTAH 84720
OFFICE: (435) 586-8510
FAX: (435) 586-4873
jcoltons@email.com

State of Utah-Department of Administrative Services
DIVISION OF FACILITIES CONSTRUCTION AND MANAGEMENT
4110 State Office Building/Salt Lake City, Utah 84114/538-3018

Project:
UDOT HURRICANE FACILITY
DFCM PROJECT NO. 07292900

Sheet Title:
HURRICANE DETAILS B

Revisions:

PROJECT NUMBER: 28493
DATE: MARCH 5, 2009
DRAWN BY: T.S.
CHECKED BY:
APPROVED BY:
SHEET NUMBER:

C-505

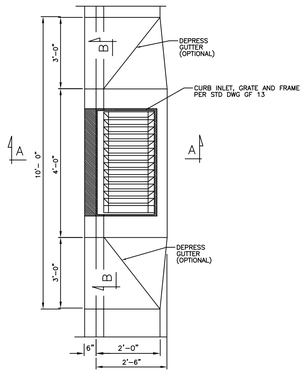

PLAN

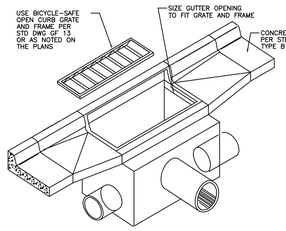

ISOMETRIC VIEW

NOTES:

1. USE COATED DEFORMED REINFORCING STEEL BARS CONFORMING TO AASHTO M 284 OR M 111 AND M 31 GRADE 60 RESPECTIVELY.
2. FIELD CUT AND BEND REINFORCING STEEL AS NECESSARY TO CLEAR PIPES AND MAINTAIN 2" COVER. REPAIR ANY DAMAGE OR CUTS TO THE EPOXY COATING ON REINFORCING BARS.
3. USE CLASS AA (AE) CONCRETE.
4. USE TYPE II CEMENT (LOW ALKALI).
5. PROVIDE 2" CONCRETE COVER TO REINFORCING STEEL.
6. FOR NUMBER, LOCATION, AND SIZE OF PIPE SEE ROADWAY PLANS.
7. SEE PLANS FOR DEPRESSION DIMENSIONS.
8. PROVIDE 1/2" CHAMFER ON ALL EXPOSED CONCRETE CORNERS.
9. FOR GRATE AND FRAME SEE STD DWG GF 13.

DESIGN DATA

HS 20 STANDARD SPECIFICATION FOR HIGHWAY BRIDGES 17 TH EDITION.

STRUCTURAL STEEL F_y = 36,000 psi

STRUCTURAL CONCRETE f'_c = 4,000 psi
F_y = 60,000 psi
n = 8

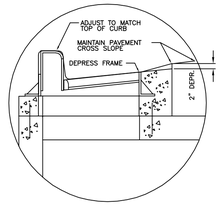

CURB DEPRESSION DETAIL

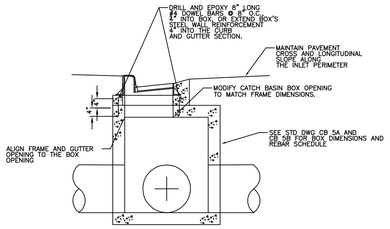

SECTION A–A

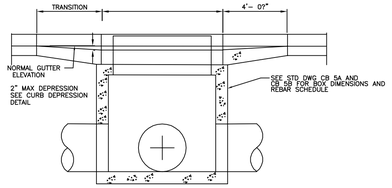

SECTION B–B

REVISIONS

NO	DATE	REMARKS
		APPR

UTAH DEPARTMENT OF TRANSPORTATION
STANDARD DRAWINGS FOR ROAD AND BRIDGE CONSTRUCTION
SALT LAKE CITY, UTAH

RECOMMENDED FOR APPROVAL — JAN 31 2006 DATE
CHAIRMAN STANDARDS COMMITTEE — JAN 31 2006 DATE
APPROVED
DEPUTY DIRECTOR

OPEN CURB INLET

STD DWG
CB 2

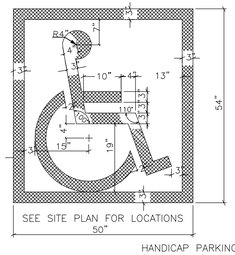

SEE SITE PLAN FOR LOCATIONS

50"

12" X 18" HANDICAP PARKING

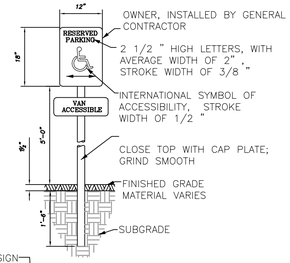

OWNER, INSTALLED BY GENERAL CONTRACTOR

2 1/2 " HIGH LETTERS, WITH AVERAGE WIDTH OF 2" , STROKE WIDTH OF 3/8 "

INTERNATIONAL SYMBOL OF ACCESSIBILITY, STROKE WIDTH OF 1/2 "

CLOSE TOP WITH CAP PLATE; GRIND SMOOTH

FINISHED GRADE MATERIAL VARIES

SUBGRADE

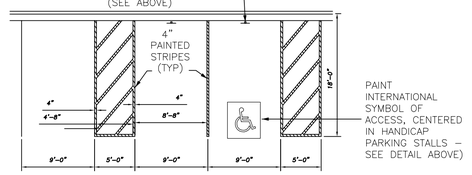

PAINT INTERNATIONAL SYMBOL OF ACCESS, CENTERED IN HANDICAP PARKING STALLS – SEE DETAIL ABOVE)

TYPICAL HANDICAP STALLS

N.T.S.

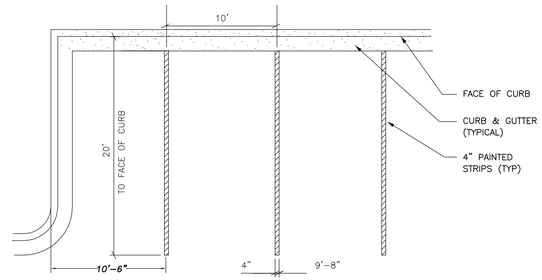

PARKING STALLS

N.T.S.

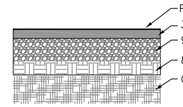

NOTE:
SEE SOILS REPORT RECOMMENDATIONS FOR ALL SITE WORK.

TYPICAL APSHALT SECTION

N.T.S.

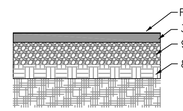

NOTE:
SEE CIVIL SPECIFICATIONS FOR ZERO VOID ASPHALT DESIGN.

ZERO VOID APSHALT SECTION

N.T.S.

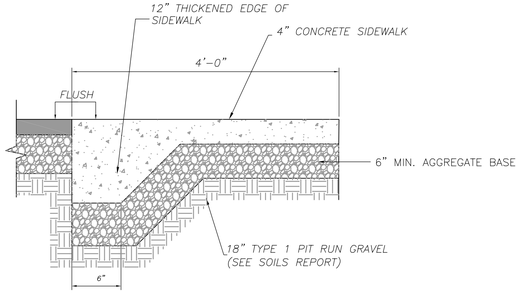

SIDEWALK SECTION

N.T.S.

NOTES:
1. 1/2" EXPANSION JOINT AT 40' INTERVALS, AT COLD JOINTS AND AT BEGINNING & END OF CURVE RETURN.
2. WEAKENED PLANE JOINT AT 5' INTERVALS.
3. SIDEWALK TO SLOPE UP 1/4" PER FOOT = 2% FROM BACK OF CURB.

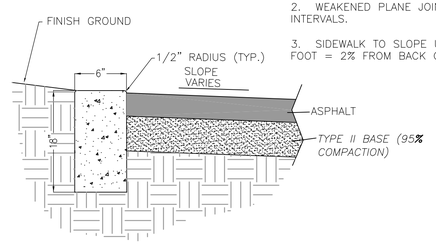

6" CURB DETAIL

N.T.S.

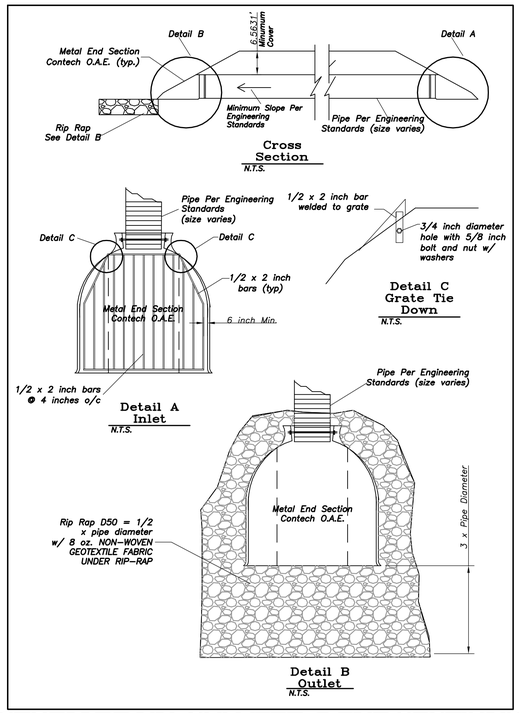

STORM DRAIN, CULVERT, & END SECTIONS

N.T.S.

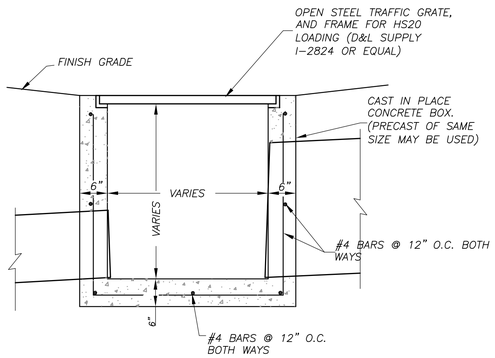

CONCRETE STORM DRAIN BOX

N.T.S.

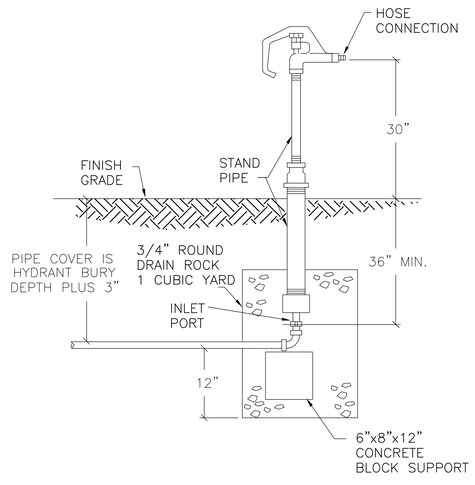

FROST-PROOF HYDRANT

N.T.S.

InSite Engineering, P.C.
Civil Engineers - Land Surveyors - Land Planners
1883 W. Royal Hunte Dr., Suite 200
Cedar City, Utah 84720
phone: (435) 867-4565
fax: (435) 867-4459

SARGENT DESIGN GROUP
ARCHITECTURE | PLANNING
36 NORTH 300 WEST, SUITE B
CEDAR CITY, UTAH 84720
OFFICE: (435) 586-8510
FAX: (435) 586-4873
jcoltons@email.com

State of Utah-Department of Administrative Services
DIVISION OF FACILITIES CONSTRUCTION AND MANAGEMENT
4110 State Office Building/Salt Lake City, Utah 84114/538-3018

Project:
UDOT
HURRICANE
FACILITY
DFCM PROJECT NO.
07292900

Sheet Title:
CIVIL DETAILS

Revisions:

PROJECT NUMBER: 28495
DATE: MARCH 5, 2009
DRAWN BY: T.S.
CHECKED BY:
APPROVED BY:
SHEET NUMBER:

C-506

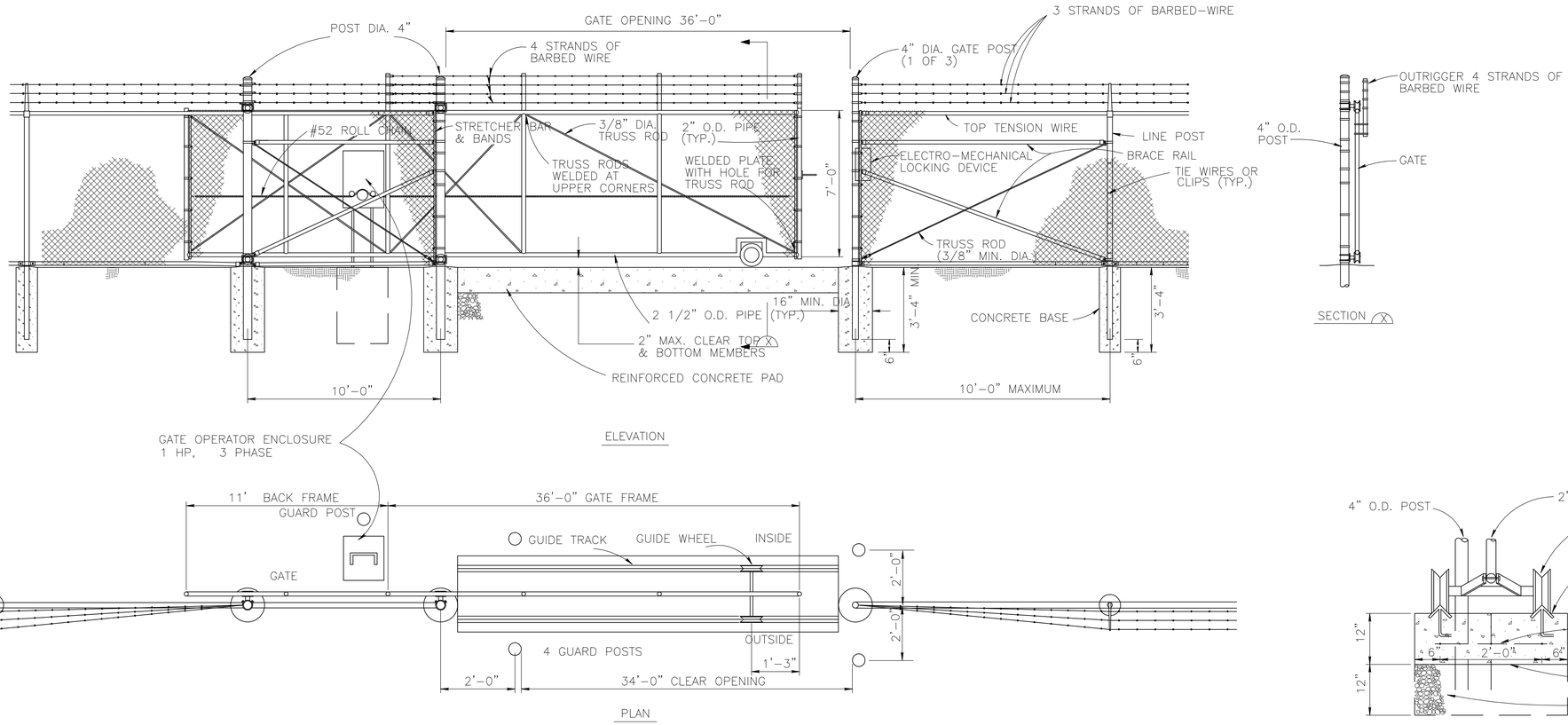

SLIDING GATE DETAILS

N.T.S.

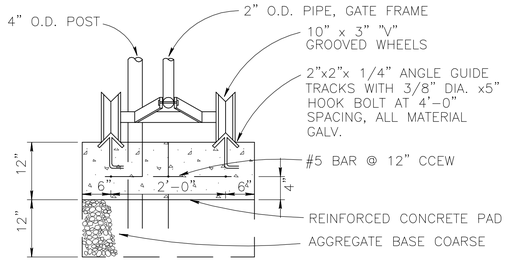

SLIDE GATE DETAIL

N.T.S.

InSite Engineering, P.C.
Civil Engineers - Land Surveyors - Land Planners
1883 W. Royal Hunte Dr., Suite 200
Cedar City, Utah 84720
phone: (435) 867-4565
fax: (435) 867-4459

SARGENT DESIGN GROUP
ARCHITECTURE | PLANNING
36 NORTH 300 WEST, SUITE B
CEDAR CITY, UTAH 84720
OFFICE: (435) 586-8510
FAX: (435) 586-4873
jcoltons@email.com

State of Utah-Department of Administrative Services
DIVISION OF FACILITIES CONSTRUCTION AND MANAGEMENT
4110 State Office Building/Salt Lake City, Utah 84114/538-3018

Project:
UDOT
HURRICANE
FACILITY
DFCM PROJECT NO.
07292900

Sheet Title:

FENCING DETAILS

Revisions:

PROJECT NUMBER: 28493
DATE: MARCH 5, 2009
DRAWN BY: T.S.
CHECKED BY:
APPROVED BY:
SHEET NUMBER:

C-507

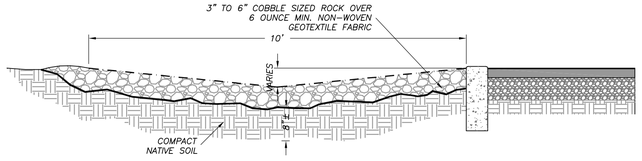

TYPICAL CROSS SECTION OF DRAINAGE SWALE

N.T.S.

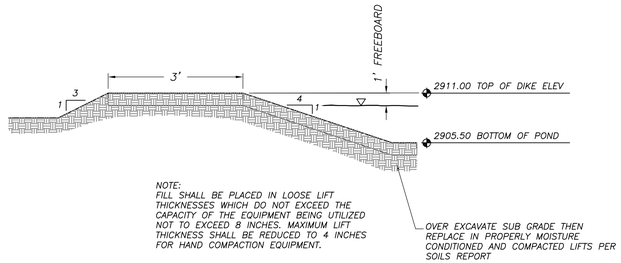

DETENTION POND SECTION

N.T.S.

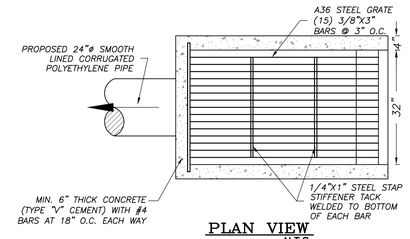

PLAN VIEW
N.T.S.

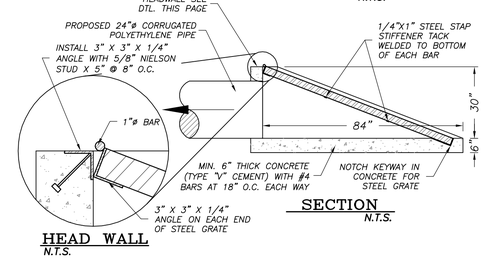

SECTION
N.T.S.

HEAD WALL
N.T.S.

CONCRETE POND OUTLET DETAIL

N.T.S.

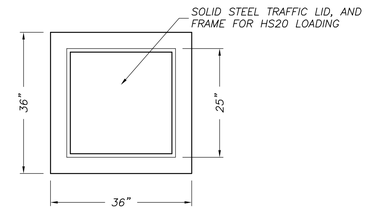

PLAN VIEW

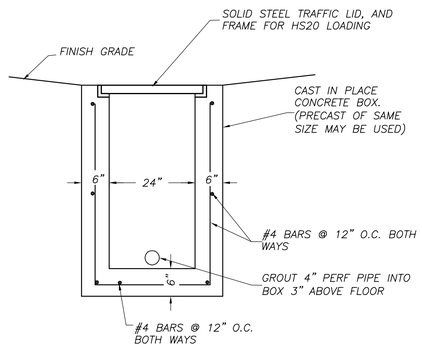

MONITORING JUNCTION BOX

N.T.S.

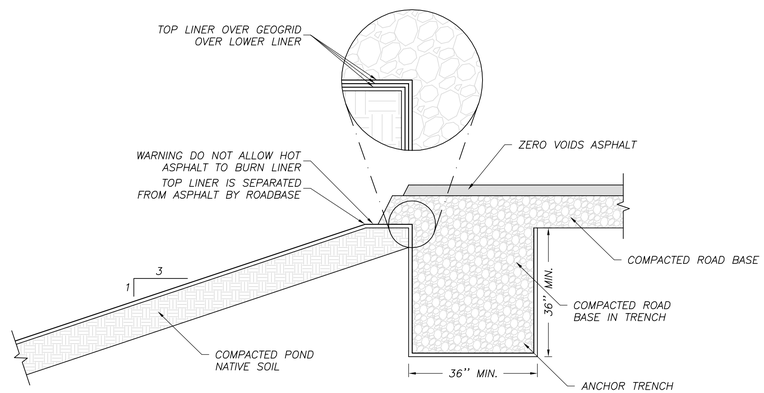

RETENTION POND ANCHOR / PAVING DETAIL

N.T.S.

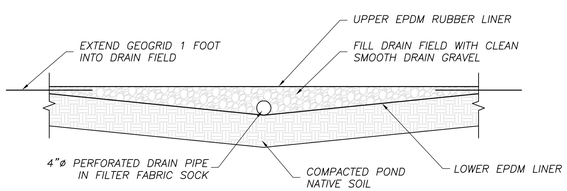

LINER FERFORATED DRAIN FIELD DETAIL

N.T.S.

SARGENT DESIGN GROUP
ARCHITECTURE | PLANNING
36 NORTH 300 WEST, SUITE B
CEDAR CITY, UTAH 84720
OFFICE: (435) 586-8510
FAX: (435) 586-4873
jcoltons@email.com

State of Utah-Department of Administrative Services
DIVISION OF FACILITIES CONSTRUCTION AND MANAGEMENT
4110 State Office Building/Salt Lake City, Utah 84114/538-3018

Project:
UDOT
HURRICANE
FACILITY
DFCM PROJECT NO.
07292900

Sheet Title:

POND
DETAILS

Revisions:

PROJECT NUMBER: 28495
DATE: MARCH 5, 2009
DRAWN BY: T.S.
CHECKED BY:
APPROVED BY:
SHEET NUMBER:

C-508

InSite
Engineering, P.C.
Civil Engineers - Land Surveyors - Land Planners
1883 W. Royal Hunte Dr., Suite 200
Cedar City, Utah 84720
phone: (435) 867-4565
fax: (435) 867-4459

KEYNOTES

03053.A0 CONCRETE WATER PROOFING ADMIXTURE
03054.A0 OLIOPHOBIC TOPICAL SEALER
03300.A0 CONCRETE SLAB ON GRADE
03300.D0 CONCRETE PAD
03300.H1 CONCRETE PIER – SEE STRUCTURAL
03300.G0 CONCRETE OVER METAL DECK – RE:STRUCTURAL
03300.N0 CONCRETE CURB
03300.S1 SPLASH BLOCK

05120.D1 TUBE STEEL COLUMN – RE: STRUCTURAL
05500.J1 PIPE BOLLARD (DIAMETER) GALVANIZED & PAINTED
05510.H0 CONCRETE FILLED METAL PAN STAIR – GALVANIZED

06105.R3 PROTECTION BOARD (THICKNESS)
06402.C1 PAIT GRADE WOOD CAP (THICK)
06402.H1 ADJUSTABLE SHELVES (FINISH)
06402.P2 COUNTERTOP – P. LAM. ON 3/4" PLYWOOD
06402.X0 WORKBENCH (DEPTH)

08360.A0 OVERHEAD SECTIONAL DOOR

10100.C0 MARKER BOARD (L X H)
10425.A0 ROOM SIGNAGE
10425.A1 OL SIGNAGE
10425.B1 WELDING SIGNAGE
10425.C1 ACCESSIBLE SIGNAGE
10425.D1 ACCESSIBLE/UNISEX RESTROOM SIGNAGE
10500.A0 METAL LOCKERS (WIDTH)
10500.B0 METAL STORAGE CABINETS
10522.A0 FIRE EXTINGUISHER
10800.B1 SEMI-RECESSED PAPER TOWEL DIPENSER & WASTE RECEPTACLE
10800.D0 MOP RACK

11151.A0 MOBILE LIFT – NIC – OWNER FURNISHED

12511.A0 HORIZONTAL LOUVER BLINDS

13125.C2 DOWNSPOUT
13125.L4 STEEL COLUMN – PRIMED AND PAINTED

14620.A0 TROLLEY HOIST (SIZE) RE: STRUCTURAL

15410.C0 UTILITY SINK
15410.D1 FLOOR SINK
15410.E0 TRENCH DRAIN
15412.A0 EMERGENCY SHOWER & EYE WASH
15452.A1 DRINKING FOUNTAIN

15491.A0 AIR COMPRESSOR
15491.C0 OVERHEAD HOSE REELS
15887.A1 LOUVER W/BIRD SCREEN

GENERAL NOTES

1. FIELD VERIFY ALL EXISTING CONDITIONS AND THEIR COMPATIBILITY WITH NEW CONSTRUCTION PRIOR TO THE COMMENCEMENT OF WORK. COORDINATE DISCREPANCIES WITH ARCHITECT.

2. DO NOT SCALE DRAWINGS.

3. SEE CIVIL, STRUCTURAL, MECHANICAL AND ELECTRICAL DRAWINGS OR MORE INFORMATION.

4. PROVIDE BACKING BEHIND ALL SURFACE MOUNTED EQUIPMENT AND/OR FIXTURES PER DETAIL C3/AE401

5. SEE SHEET A1/AE501 FOR WALL TYPES.

6. TWO BOLLARDS REQUIRED PER SECTIONAL DOOR JAMB. ALIGN WITH DOOR JAMB, SEE DETAILS A5 & B5/AE31.

7. SEE SHEET AE602 FOR WINDOW FRAME TYPES & DETAILS.

8. SEE STRUCTURAL DRAWINGS FOR CONSTRUCTION/CONTROL JOINT LOCATIONS IN CONCRETE SLABS.

9. ALL DIMENSIONS ARE TO FACE OF WALL, UNLESS NOTED OTHERWISE.

10. COORDINATE LOCATION & SIZE OF CONCRETE PIER WITH THE STRUCTURAL ENGINEER AND THE METAL BUILDING ANUFACTURER TO MEET ALL ADA REQUIREMENTS.

11. COLUMNS SHOWN ON PLAN ARE SCHEMATIC ONLY. CONTRACTOR TO GET EXACT SIZES AND LOCATIONS FROM APPROVED METAL BUILDING SHOP DRAWINGS.

12. PROVIDE 03053.A0 AT ALL CONCRETE CURBS, PIERS, SLABS, STEM WALL ETC. N.O.

13. PROVIDE 03054.A0 OVER ENTIRE FLOOR SLAB AT ROOMS 101, 102, 103 & CONCRETE MEZZANINE.

SARGENT DESIGN GROUP
ARCHITECTURE | PLANNING
36 NORTH 300 WEST, SUITE B
CEDAR CITY, UTAH 84720
OFFICE: (435) 586-8510
FAX: (435) 586-8873
jcoltons@email.com

State of Utah- Department of Administrative Services
DIVISION OF FACILITIES CONSTRUCTION AND MANAGEMENT
4110 State Office Building/Salt Lake City, Utah 84414/538-3018

Project:
UDOT HURRICANE FACILITY
DFCM PROJECT NO. 07292900

Sheet Title:
FLOOR PLAN

Revisions:

PROJECT NUMBER:	08527
DATE:	09.17.08
DRAWN BY:	J.C.S.
CHECKED BY:	J.C.S.
APPROVED BY:	J.C.S.

AE1.01

SHEET NUMBER:
Sheet of

A1 FLOOR PLAN
AE101 REF. SCALE: 1/8" = 1'-0"

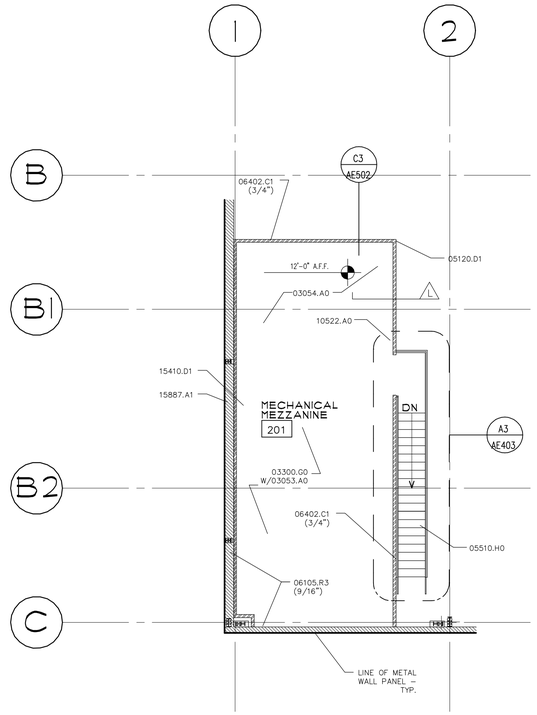

A2 FLOOR PLAN – MEZZANINE WEST

AE101 REF. SCALE: 1/8" = 1'-0"

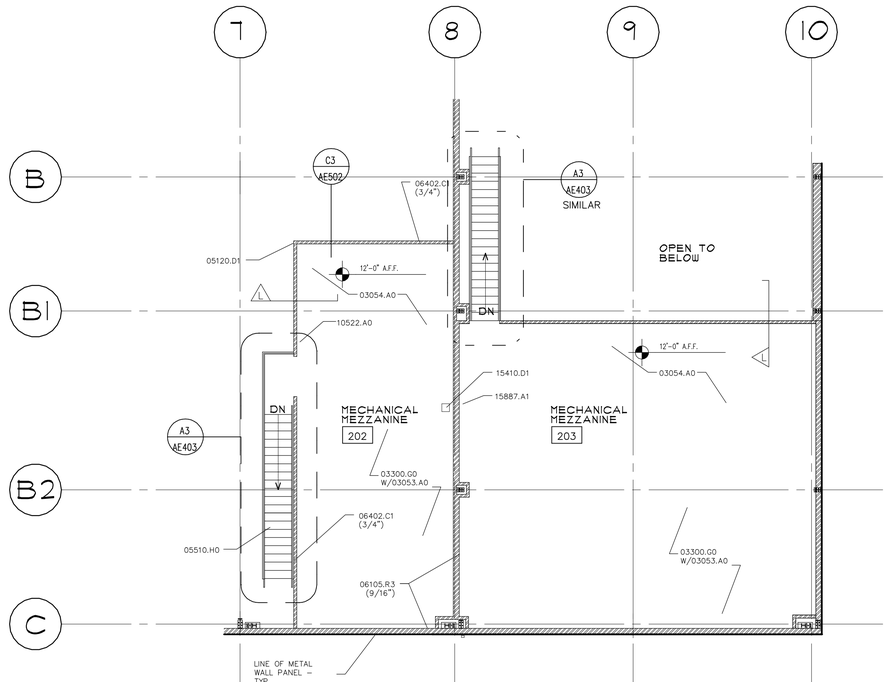

A3 FLOOR PLAN – MEZZANINE EAST

AE101 REF. SCALE: 1/8" = 1'-0"

KEYNOTES

03053.A0 CONCRETE WATER PROOFING ADMIXTURE
03054.A0 OLIOPHOBIC TOPICAL SEALER
03300.A0 CONCRETE SLAB ON GRADE
03300.D0 CONCRETE PAD
03300.H1 CONCRETE PIER – SEE STRUCTURAL
03300.G0 CONCRETE OVER METAL DECK – RE:STRUCTURAL
03300.N0 CONCETE CURB
03300.S1 SPLASH BLOCK

05120.D1 TUBE STEEL COLUMN – RE: STRUCTURAL
05500.J1 PIPE BOLLARD (DIAMETER) GALVANIZED & PAINTED
05510.H0 CONCRETE FILLED METAL PAN STAIR – GALVANIZED

06105.R3 PROTECTION BOARD (THICKNESS)
06402.C1 PAIT GRADE WOOD CAP (THICK)
06402.H1 ADJUSTABLE SHELVES (FINISH)
06402.P2 COUNTERTOP – P. LAM. ON 3/4" PLYWOOD
06402.W0 WORKBENCH (DEPTH)

08360.A0 OVERHEAD SECTIONAL DOOR

10100.C0 MARKER BOARD (L X H)
10425.A0 ROOM SIGNAGE
10425.A1 OL SIGNAGE
10425.B1 WELDING SIGNAGE
10425.C1 ACCESSIBLE SIGNAGE
10425.D1 ACCESSIBLE/UNISEX RESTROOM SIGNAGE
10500.A0 METAL LOCKERS (WIDTH)
10500.B0 METAL STORAGE CABINETS
10522.A0 FIRE EXTINGUISHER
10800.B1 SEMI-RECESSED PAPER TOWEL DIPENSER & WASTE RECEPTACLE
10800.D0 MOP RACK

11151.A0 MOBILE LIFT – NIC – OWNER FURNISHED

12511.A0 HORIZONTAL LOUVER BLINDS

13125.C2 DOWNSPOUT
13125.L4 STEEL COLUMN – PRIMED AND PAINTED

14620.A0 TROLLEY HOIST (SIZE) RE: STRUCTURAL

15410.C0 UTILITY SINK
15410.D1 FLOOR SINK
15410.E0 TRENCH DRAIN
15412.A0 EMERGENCY SHOWER & EYE WASH
15452.A1 DRINKING FOUNTAIN

15491.A0 AIR COMPRESSOR
15491.C0 OVERHEAD HOSE REELS
15887.A1 LOUVER W/BIRD SCREEN

GENERAL NOTES

1. FIELD VERIFY ALL EXISTING CONDITIONS AND THEIR COMPATIBILITY WITH NEW CONSTRUCTION PRIOR TO THE COMMENCEMENT OF WORK. COORDINATE DISCREPANCIES WITH ARCHITECT.

2. DO NOT SCALE DRAWINGS.

3. SEE CIVIL, STRUCTURAL, MECHANICAL AND ELECTRICAL DRAWINGS OR MORE INFORMATION.

4. PROVIDE BACKING BEHIND ALL SURFACE MOUNTED EQUIPMENT AND/OR FIXTURES PER DETAIL C3/AE401

5. SEE SHEET A1/AE501 FOR WALL TYPES.

6. TWO BOLLARDS REQUIRED PER SECTIONAL DOOR JAMB. ALIGN WITH DOOR JAMB, SEE DETAILS A5 & B5/AE31.

7. SEE SHEET AE602 FOR WINDOW FRAME TYPES & DETAILS.

8. SEE STRUCTURAL DRAWINGS FOR CONSTRUCTION/CONTROL JOINT LOCATIONS IN CONCRETE SLAB.

9. ALL DIMENSIONS ARE TO FACE OF WALL, UNLESS NOTED OTHERWISE.

10. COORDINATE LOCATION & SIZE OF CONCRETE PIER WITH THE STRUCTURAL ENGINEER AND THE METAL BUILDING ANUFACTURER TO MEET ALL ADA REQUIREMENTS.

11. COLUMNS SHOWN ON PLAN ARE SCHEMATIC ONLY. CONTRACTOR TO GET EXACT SIZES AND LOCATIONS FROM APPROVED METAL BUILDING SHOP DRAWINGS.

12. PROVIDE 03053.A0 AT ALL CONCRETE CURBS, PIERS, SLABS, STEM WALL ETC. N.O.

13. PROVIDE 03054.A0 OVER ENTIRE FLOOR SLAB AT ROOMS 101, 102, 103 & CONCRETE MEZZANINE.

SARGENT DESIGN GROUP
ARCHITECTURE | PLANNING
36 NORTH 300 WEST, SUITE B
CEDAR CITY, UTAH 84720
OFFICE: (435) 586-8510
FAX: (435) 586-4873
jcoltons@email.com

State of Utah- Department of Administrative Services
DIVISION OF FACILITIES CONSTRUCTION AND MANAGEMENT
4110 State Office Building/Salt Lake City, Utah 84114/538-3018

Project:
UDOT HURRICANE FACILITY
DFCM PROJECT NO.
07292900

Sheet Title:
MEZZANINE FLOOR PLAN

Revisions:

PROJECT NUMBER: 08527
DATE: 09.17.08
DRAWN BY: J.C.S.
CHECKED BY: J.C.S.
APPROVED BY: J.C.S.

AE1.02

SHEET NUMBER:
Sheet of

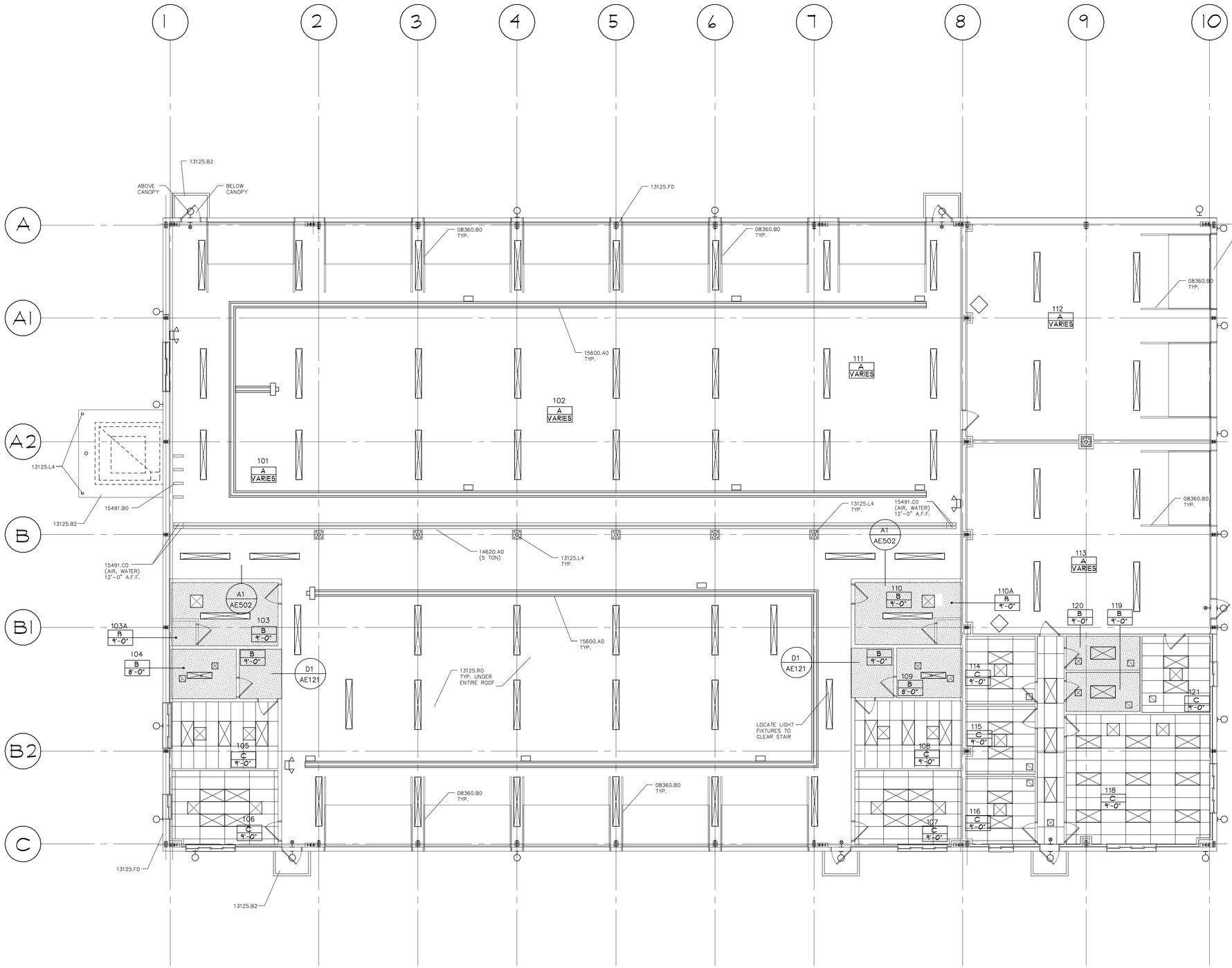

A1 REFLECTED CEILING PLAN

AE101 | REF. | SCALE: 1/8" = 1'-0"

8' 6' 4' 2' 0' 4' 8' 16'

REFLECTED CEILING PLAN LEGEND

ROOM # 131
TYPE E
ELEVATION A.F.F. VARIES

TYPE A	EXPOSED STRUCTURE – PAINTED
TYPE B	5/8" GYPSUM BOARD ON METAL SUSPENSION SYSTEM – PAINTED
TYPE C	SUSPENDED ACOUSTICAL CEILING

GENERAL NOTES

1. SEE MECHANICAL AND ELECTRICAL DRAWINGS FOR ADDITIONAL LIGHTING AND DIFFUSER INFORMATION.
2. CEILING HEIGHT SHOWN IN ROOM TAG INDICATES HEIGHT OF DOMINANT CEILING FINISH. SEE NOTES FOR ADDITIONAL CEILING FINISH INFORMATION.
3. SEE DETAIL B1/AE502 OR SEISMIC BRACING DETAIL.
4. ROOF STRUCTURE NOT SHOWN FOR CLARITY.
5. COORDINATE LOCATION OF OVERHEAD DOOR TRACKS WITH LIGHTING FIXTURES TO INSURE PROPER OPERATION OF OVERHEAD DOORS.

KEYNOTES

03300.G0 CONCRETE OVER METAL DECK – RE: STRUCTURAL
03053.A0 CONCRETE WATER PROOFING ADMIXTURE
03054.A0 OLIOPHOBIC TOPICAL SEALER

05310.A1 METAL DECK – SEE STRUCTURAL

08360.B0 3" HEAVY DUTY OVERHEAD SECTIONAL DOOR TRACK

09255.A1 GYPSUM BOAD (THICKNESS)
09255.H0 METAL STUD
09255.H1 METAL STUD (SIZE, SPACING)
09255.M2 METAL CORNER BEAD (TYP)

09678.E1 RUBBER BASE (SIZE)

13125.B2 STANDING SEAM METAL CANOPY
13125.F0 METAL WALL PANEL
13125.L4 STEEL COLUMN – PRIMED AND PAINTED P13125.R0 INSULATION & VAPOR BARRIER (R-VALUE)

14620.A0 TROLLEY HOIST (SIZE) SEE STRUCTURAL

15491.B0 OVERHEAD LUBE REELS
15491.C0 OVERHEAD HOSE REELS
15600.A0 NATURAL GAS RADIANT HEATING SYSTEM
15887.A1 LOUVER WITH BIRD SCREEN

CEILING SYMBOLS

- PAINTED GYP. BD. CEILING
- 2' x 4' FLUORESCENT LIGHT FIXTURE, SEE ELECT. DRAWINGS FOR TYPE.
- 1' x 4' FLUORESCENT LIGHT FIXTURE
- 1' x 4' FLUORESCENT LIGHT FIXTURE EMERGENCY LIGHT FIXTURE RE: ELECT.
- 1' x 8' FLUORESCENT LIGHT FIXTURE
- 1' x 8' FLUORESCENT LIGHT FIXTURE EMERGENCY LIGHT FIXTURE RE: ELECT.
- RETURN AIR GRILLE – HORIZONTAL (SEE MECH. DRAWINGS)
- SUPPLY AIR GRILLE – HORIZONTAL (SEE MECH. DRAWINGS)
- RADIANT HEAT SYSTEM (SEE MECH. DRAWINGS)
- EXHAUST FAN (SEE MECH. DRAWINGS)
- EXIT SIGN
- UNIT HEATER (SEE MECH. DRAWINGS)
- EMERGENCY FLOOD LIGHTS
- EXTERIOR WALL MOUNTED LIGHTS

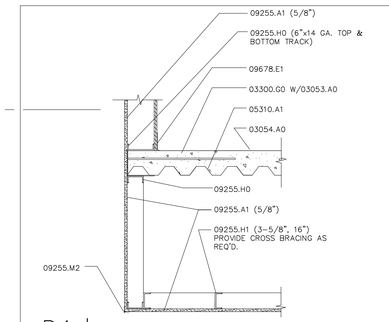

D1 CEILING DETAIL

AE121 | REF. AE121 | SCALE: 3/4" = 1'-0"

12" 8" 4" 0 4" 1' 2' 3'

SARGENT DESIGN GROUP
ARCHITECTURE | PLANNING
36 NORTH 300 WEST, SUITE B
CEDAR CITY, UTAH 84720
OFFICE: (435) 586-8510
FAX: (435) 586-4873
jcoltons@email.com

State of Utah–Department of Administrative Services
DIVISION OF FACILITIES CONSTRUCTION AND MANAGEMENT
4110 State Office Building/Salt Lake City, Utah 84114/538-3018

Project: UDOT HURRICANE FACILITY
DFCM PROJECT NO. 07292900

Sheet Title: REFLECTED CEILING PLAN

Revisions:

PROJECT NUMBER:	08527
DATE:	09.17.08
DRAWN BY:	J.C.S.
CHECKED BY:	J.C.S.
APPROVED BY:	J.C.S.

AE1.21

SHEET NUMBER:
Sheet of

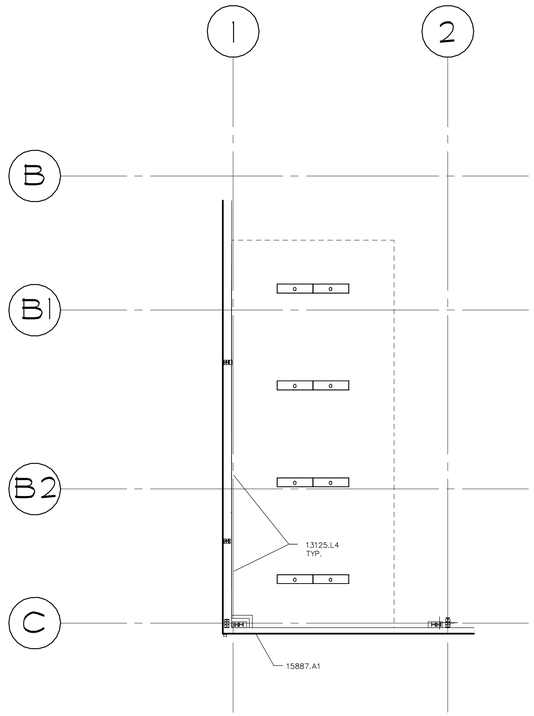

A2 REFLECTED CEILING PLAN – MEZZANINE WEST

AE101 REF.

SCALE: 1/8" = 1'-0"

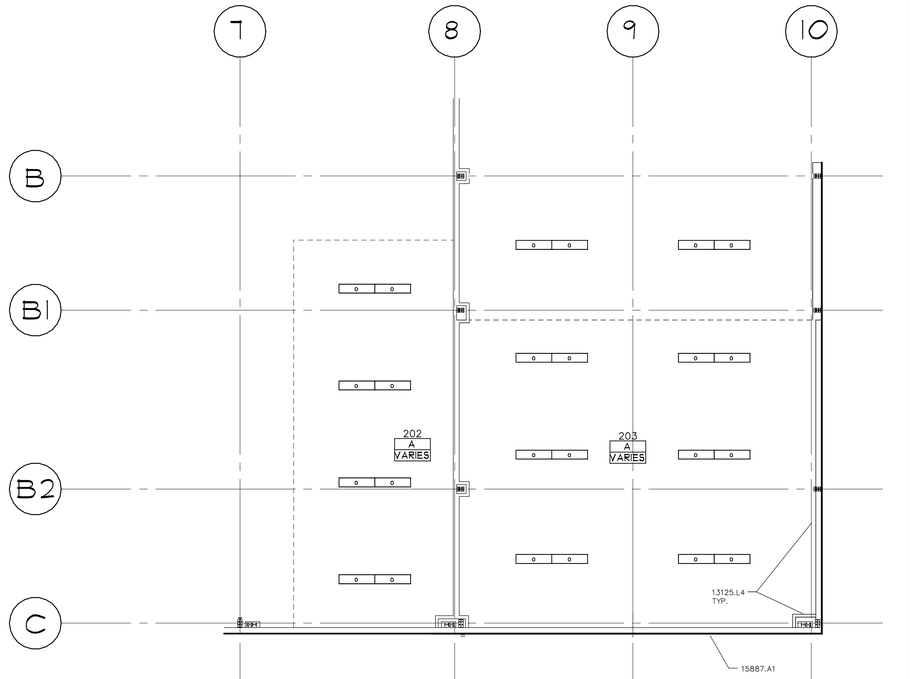

A3 REFLECTED CEILING PLAN – MEZZANINE EAST

AE101 REF.

SCALE: 1/8" = 1'-0"

REFLECTED CEILING PLAN LEGEND

ROOM # 131
TYPE E
ELEVATION VARIES
A.F.F.

TYPE A	EXPOSED STRUCTURE – PAINTED
TYPE B	5/8" GYPSUM BOARD ON METAL SUSPENSION SYSTEM – PAINTED
TYPE C	SUSPENDED ACOUSTICAL CEILING

GENERAL NOTES

1. SEE MECHANICAL AND ELECTRICAL DRAWINGS FOR ADDITIONAL LIGHTING AND DIFFUSER INFORMATION.

2. CEILING HEIGHT SHOWN IN ROOM TAG INDICATES HEIGHT OF DOMINANT CEILING FINISH. SEE NOTES FOR ADDITIONAL CEILING FINISH INFORMATION.

3. SEE DETAIL B1/AE502 OR SEISMIC BRACING DETAIL.

4. ROOF STRUCTURE NOT SHOWN FOR CLARITY.

5. COORDINATE LOCATION OF OVERHEAD DOOR TRACKS WITH LIGHTING FIXTURES TO INSURE PROPER OPERATION OF OVERHEAD DOORS.

KEYNOTES

03300.G0 CONCRETE OVER METAL DECK – RE: STRUCTURAL
03053.A0 CONCRETE WATER PROOFING ADMIXTURE
03054.A0 OLIOPHOBIC TOPICAL SEALER

05310.A1 METAL DECK – SEE STRUCTURAL

08360.B0 3" HEAVY DUTY OVERHEAD SECTIONAL DOOR TRACK

09255.A1 GYPSUM BOAD (THICKNESS)
09255.H0 METAL STUD
09255.H1 METAL STUD (SIZE, SPACING)
09255.M2 METAL CORNER BEAD (TYP)

09678.E1 RUBBER BASE (SIZE)

13125.B2 STANDING SEAM METAL CANOPY
13125.F0 METAL WALL PANEL
13125.L4 STEEL COLUMN – PRIMED AND PAINTED P13125.R0 INSULATION & VAPOR BARRIER (R-VALUE)

14620.A0 TROLLEY HOIST (SIZE) SEE STRUCTURAL

15491.B0 OVERHEAD LUBE REELS
15491.C0 OVERHEAD HOSE REELS
15600.A0 NATURAL GAS RADIANT HEATING SYSTEM
15887.A1 LOUVER WITH BIRD SCREEN

CEILING SYMBOLS

- PAINTED GYP. BD. CEILING
- 2' x 4' FLUORESCENT LIGHT FIXTURE, SEE ELECT. DRAWINGS FOR TYPE.
- 1' x 4' FLUORESCENT LIGHT FIXTURE
- 1' x 4' FLUORESCENT LIGHT FIXTURE EMERGENCY LIGHT FIXTURE RE: ELECT.
- 1' x 8' FLUORESCENT LIGHT FIXTURE
- 1' x 8' FLUORESCENT LIGHT FIXTURE EMERGENCY LIGHT FIXTURE RE: ELECT.
- RETURN AIR GRILLE – HORIZONTAL (SEE MECH. DRAWINGS)
- SUPPLY AIR GRILLE – HORIZONTAL (SEE MECH. DRAWINGS)
- RADIANT HEAT SYSTEM (SEE MECH. DRAWINGS)
- EXHAUST FAN (SEE MECH. DRAWINGS)
- EXIT SIGN
- UNIT HEATER (SEE MECH. DRAWINGS)
- EMERGENCY FLOOD LIGHTS
- EXTERIOR WALL MOUNTED LIGHTS

SARGENT DESIGN GROUP
ARCHITECTURE | PLANNING
36 NORTH 300 WEST, SUITE B
CEDAR CITY, UTAH 84720
OFFICE: (435) 586-8510
FAX: (435) 586-4873
jcoltons@email.com

State of Utah–Department of Administrative Services
DIVISION OF FACILITIES CONSTRUCTION AND MANAGEMENT
4110 State Office Building/Salt Lake City, Utah 84114/538-3018

Project:
UDOT HURRICANE FACILITY
DFCM PROJECT NO. 07292900

Sheet Title:
REFLECTED CEILING PLAN - MEZZANINE

Revisions:

PROJECT NUMBER:	08527
DATE:	09.17.08
DRAWN BY:	J.C.S.
CHECKED BY:	J.C.S.
APPROVED BY:	J.C.S.

AE1.22

SHEET NUMBER:
Sheet of

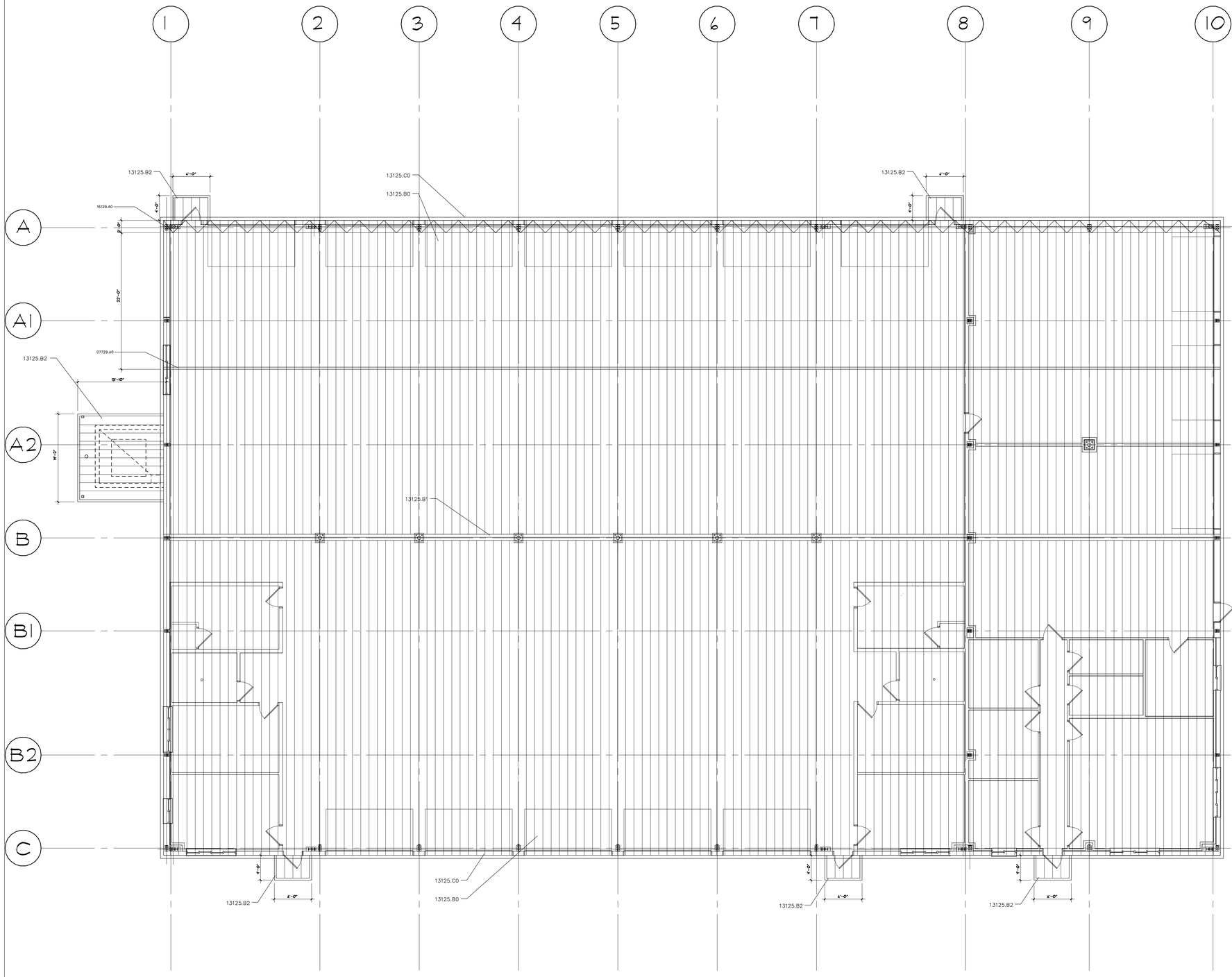

A2 ROOF PLAN

AE141 REF. SCALE: 1/8" = 1'-0"

8' 6' 4' 2' 0' 4' 8' 16'

KEYNOTES

07720.A0 STANDING SEAM METAL ROOF 2 PIPE SNOWGUARD SYSTEM

13125.B0 STANDING SEAM METAL ROOF (SLOPE 1:12)
13125.B1 STANDING SEAM METAL ROOF RIDGE
13125.B2 STANDING SEAM METAL CANOPY
13125.C0 METAL RAIN GUTTER W/DOWNSPOUTS
13125.C1 METAL RAIN GUTTER
13125.C2 DOWNSPOUT
13125.C3 GUTTER STRAP, INSTAL AT EVERY OTHER PANEL RIB
13125.D1 METAL DRIP FLASHING
13125.D5 RIDGE FLASHING, TO MATCH ROOF PANELS
13125.E3 RAKE TRIM
13125.E4 RAKE SLIDE
13125.E7 METAL OUTSIDE CLOSURE
13125.F0 METAL WALL PANEL
13125.F3 POP RIVET
13125.H2 HIGH RAKESUPPORT ANGLE
13125.H4 4" X 4" CONTINUOUS ANGLE
13125.H5 BACKUP PLATE ANGLE
13125.H6 EAVE SUPPORT ANGLE
13125.H7 EAVE STRUT
13125.J2 ROOF PURLIN – PAINTED
13125.K1 LOW PANEL CLIP
13125.N2 FASTENER (SPACING)
13125.P1 DOUBLE BEAD TAPE SEALERP13125.P2 SEALANT
13125.Q0 METAL VENT
13125.Q1 VENT MATERIAL

16129.A0 CONTINUOUS HEAT TAPE IN DOWNSPOUTS AND GUTTER

GENERAL NOTES

1. FIELD VERIFY ALL EXISTING CONDITIONS AND THEIR COMPATIBILITY WITH NEW CONSTRUCTION PRIOR TO THE COMMENCEMENT OF WORK. COORDINATE DISCREPANCIES WITH ARCHITECT.

2. DO NOT SCALE DRAWINGS.

3. SEE CIVIL, STRUCTURAL, MECHANICAL AND ELECTRICAL DRAWINGS OR MORE INFORMATION.

4. SEE SHEET AE201 FOR EXTERIOR FINISH COLORS.

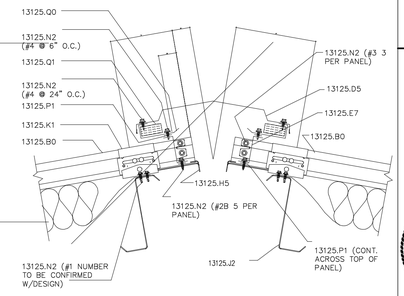

C1 RIDGE VENT DETAIL

AE141 REF. AE301 SCALE: 1 1/2" = 1'-0"

8" 6" 4" 2" 0 4" 8" 1'-4"

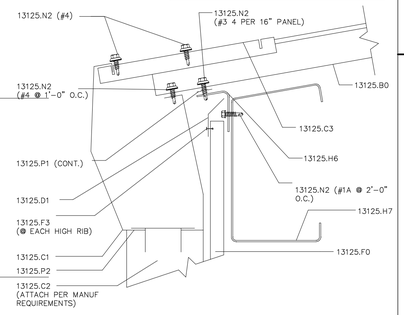

B1 GUTTER DETAIL

AE141 REF. AE311 SCALE: 3" = 1'-0"

4" 3" 2" 1" 0 2" 4" 8"

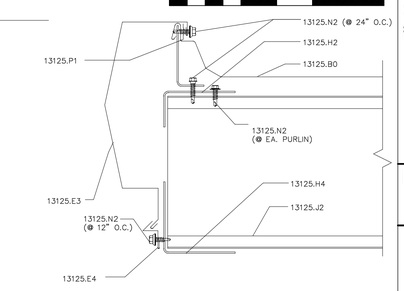

A1 STARTING RAKE DETAIL

AE141 REF. AE311 SCALE: 3" = 1'-0"

4" 3" 2" 1" 0 2" 4" 8"

SARGENT DESIGN GROUP
ARCHITECTURE | PLANNING
36 NORTH 300 WEST, SUITE B
CEDAR CITY, UTAH 84720
OFFICE: (435) 586-8510
FAX: (435) 586-4873
jcoltons@email.com

State of Utah–Department of Administrative Services
DIVISION OF FACILITIES CONSTRUCTION AND MANAGEMENT
4110 State Office Building/Salt Lake City, Utah 84114/538-3018

Project:
UDOT HURRICANE FACILITY
DFCM PROJECT NO. 07292900

Sheet Title:
ROOF PLAN

Revisions:

PROJECT NUMBER:	08521
DATE:	09.17.08
DRAWN BY:	J.C.S.
CHECKED BY:	J.C.S.
APPROVED BY:	J.C.S.

AE1.41

SHEET NUMBER:
Sheet of

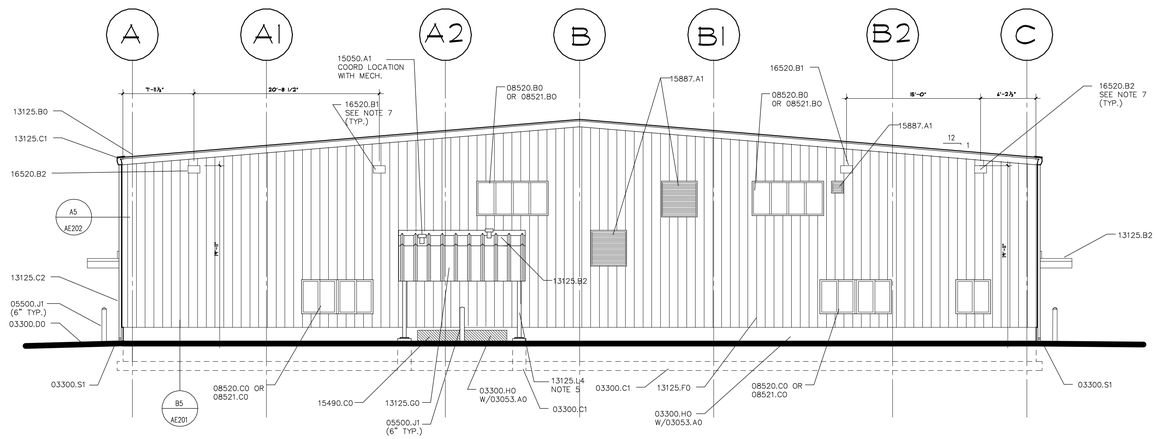

C1 | EXTERIOR ELEVATION – WEST

AE201 | REF. AE101 | SCALE: 1/8" = 1'-0"

8' 6' 4' 2' 0' 4' 8' 16'

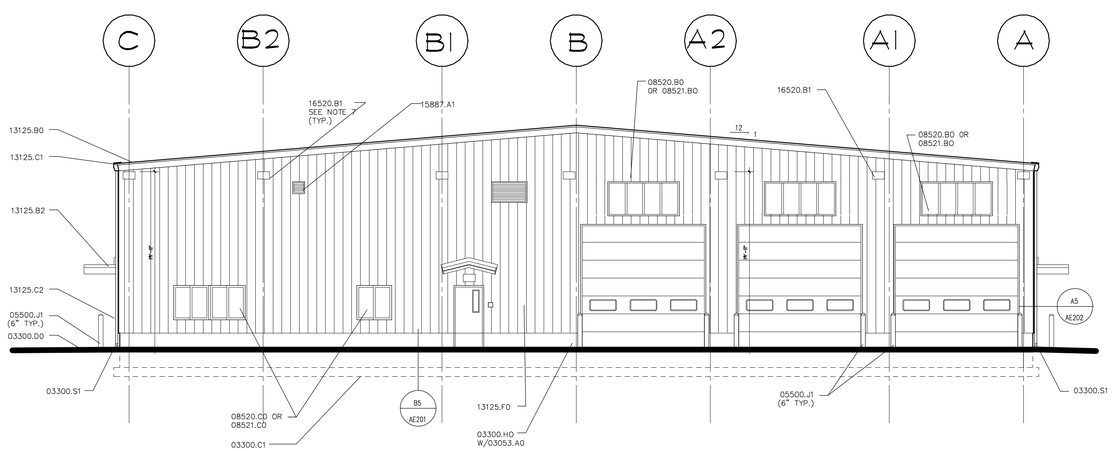

A1 | EXTERIOR ELEVATION – EAST

AE201 | REF. AE101 | SCALE: 1/8" = 1'-0"

8' 6' 4' 2' 0' 4' 8' 16'

EXTERIOR ELEVATION KEYNOTES

03053.A0 CONCRETE WATER PROOFING ADMIXTURE
03054.A0 OLIOPHOBIC TOPICAL SEALER
03300.C1 FOOTING – SEE STRUCTURAL
03300.D0 CONCRETE PAD
03300.H0 FOUNDATION WALL – SEE STRUCTURAL
03300.S1 SPLASH BLOCK

05500.J1 PIPE BOLLARD (DIAMETER) GALV AND PAINTED

06105.R3 PROTECTION BOARD (THICKNESS)

07901.A0 CONT. SEALANT

08111.B0 HOLLOW METAL DOOR
08360.A0 OVERHEAD SECTIONAL DOOR
08520.B0 FIXED ALUM. WINDOW
08520.C0 ALUM. WINDOW W/SLIDING GLASS PANEL
08521.B0 FIXED VINYLWINDOW
08521.C0 VINYL WINDOW W/SLIDING GLASS PANEL

10425.C1 ACCESSIBLE SIGNAGE – SEE DETAIL D3/AE502

13125.B0 STANDING SEAM METAL ROOF
13125.B2 STANDING SEAM METAL CANOPY
13125.C1 METAL RAIN GUTTER
13125.C2 DOWNSPOUT
13125.D1 META DRIP FLASHING
13125.E2 PANEL TRIM
13125.E6 WALL CLOSURE
13125.E8 CORNER TRIM
13125.F0 METAL WALL PANEL
13125.F1 METAL WALL FASTENER
13125.F2 BLIND RIVET
13125.G0 METAL FACIA
13125.H1 METAL ANGLE
13125.L4 STEEL COLUMN – PRIMED AN PAINTED
13125.N1 ANCHOR
13125.P3 THERMAL BREAK
13125.R0 INSULATION & VAPOR BARRIER (R-VALUE)

15050.A1 MECH. PENETRATIONS
15490.C0 WASTE OIL PIT
15887.A1 LOUVER W/ BIRD SCREEN

16520.B1 EXTERIOR WALL MOUNTED LIGHTS
16520.B2 EXTERIOR WALL MOUNTED FLOOD LIGHTS

GENERAL NOTES

1. FIELD VERIFY ALL EXISTING CONDITIONS AND THEIR COMPATIBILITY WITH NEW CONSTRUCTION PRIOR TO THE COMMENCEMENT OF WORK. COORDINATE DISCREPANCIES WITH ARCHITECT.

2. DO NOT SCALE DRAWINGS.

3. SEE SHEET AE602 FOR WINDOW TYPES AND DETAILS.

4. SEE CIIL, STRUCTURAL, MECHANICAL AND ELECTRICAL DRAWINGS FOR MORE INFORMATION.

5. PAINT ALL EXPOSED, EXTERIOR STEEL AT OIL PIT CANOPY – COLOR TO MATCH WALL PANELS.

6. EXTERIOR ELEVATION KEYNOTES ARE FOR ALL EXTERIOR ELEVATIONS, THEREFOR NOT ALL KEYNOTES MY BE USED ON EACH SHEET.

7. EXTERIOR LIGHTS MUST BE SUPPORTED BY SUITABLE STRUCTURAL BRACING TO BE PROVIDED BY THE METAL BUILDING MANUFACTURER.

EXTERIOR COLOR SCHEDULE

(13125.B0) METAL ROOF: GALVALUME METAL ROOF
(13125.G0) METAL FASCIA: SILICONIZED POLYESTER FINISH – COLOR "A" BY ARCHITECT.
(13125.C1 & E3) GUTTERS & RAKE TRIM: SILICONIZED POLYESTER FINISH – COLOR "B" BY ARCHITECT
(13125.F0) METAL WALL PAEL: SILICONIZED POLYESTER FINISH – COLOR "A" BY ARCHITECT
(13125.C2) DOWN SPOUTS: PRE FINISHED TO MATCH METAL WALL PANEL @ GRID 3.
(13125.C2) DOWN SPOUTS: PRE FINISHED TO MATCH CORNER TRIM @ GRIDS 1 & 5.
(08111.A0, B0 & 08360.A0) DOORS & FRAMES: YNAR 500 "BONE WHITE" OR EQUAL

(05500.J1) BOLLARDS: OSHA SAFETY YELLOW
(08520.B0) WINDOW FRAMES: KYNAR 500 "BONE WHITE" OR EQUAL
(15490.C0) WASTE OIL PIT: OSHA SAFETY RED

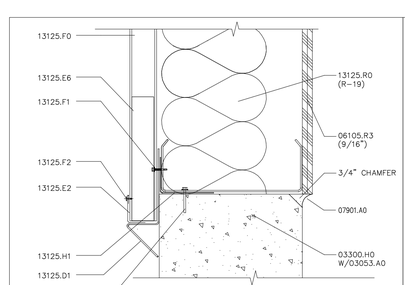

A5 | WALL PANEL @ STEM WALL

AE201 | REF. AE202 & AE301 | SCALE: 3" = 1'-0"

4" 3" 2" 1" 0 2" 4" 8"

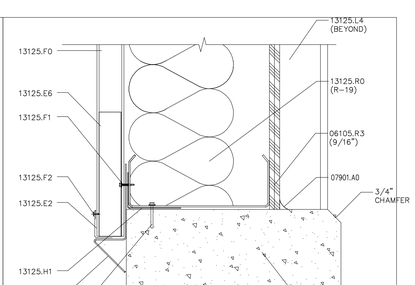

B5 | WALL PANEL @ STEM WALL

AE201 | REF. AE201 & AE301 | SCALE: 3" = 1'-0"

4" 3" 2" 1" 0 2" 4" 8"

SARGENT DESIGN GROUP
ARCHITECTURE | PLANNING
36 NORTH 300 WEST, SUITE B
CEDAR CITY, UTAH 84720
OFFICE: (435) 586-8510
FAX: (435) 586-4873
jcoltons@email.com

State of Utah–Department of Administrative Services
DIVISION OF FACILITIES CONSTRUCTION AND MANAGEMENT
4110 State Office Building/Salt Lake City, Utah 84114/538-3018

Project:
UDOT HURRICANE FACILITY
DFCM PROJECT NO. 07292900

Sheet Title:
ELEVATIONS AND DETAILS

Revisions:

PROJECT NUMBER:	08527
DATE:	09.11.08
DRAWN BY:	J.C.S.
CHECKED BY:	J.C.S.
APPROVED BY:	J.C.S.

AE2.01

SHEET NUMBER:
Sheet of

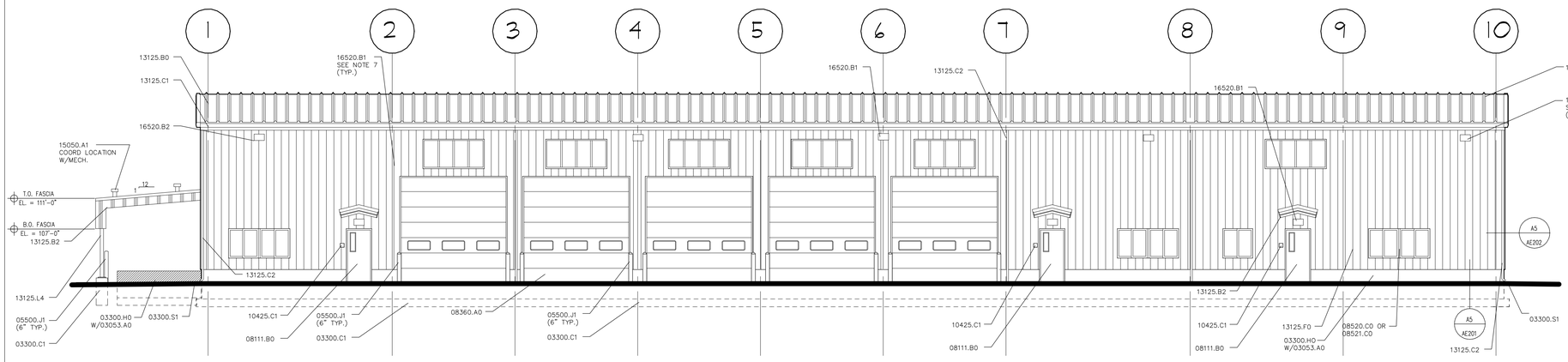

C1 | EXTERIOR ELEVATION – SOUTH

AE202 | REF. AE101 | SCALE: 1/8" = 1'-0"

8' 6' 4' 2' 0' 4' 8' 16'

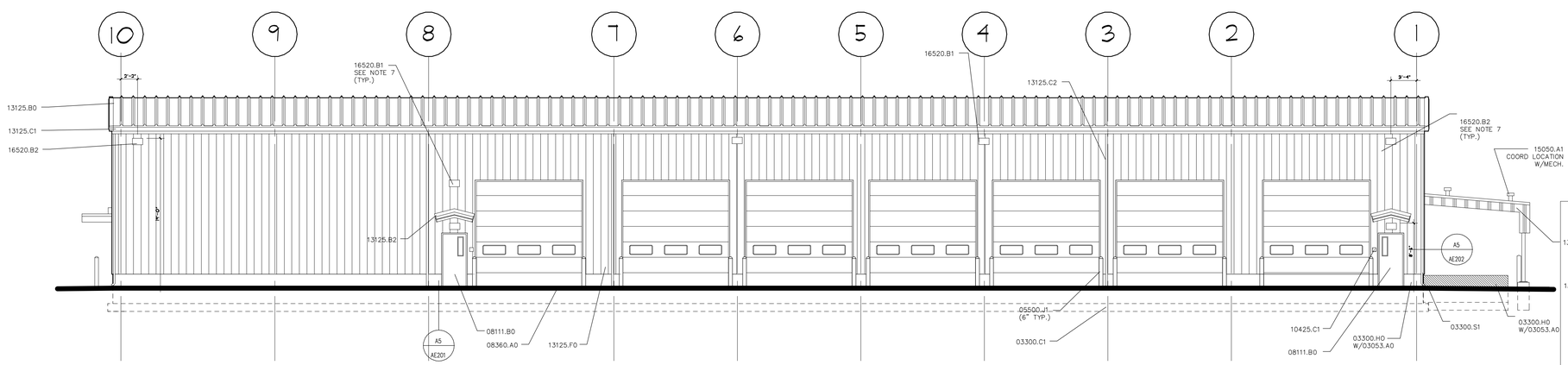

A1 | EXTERIOR ELEVATION – NORTH

AE202 | REF. AE101 | SCALE: 1/8" = 1'-0"

8' 6' 4' 2' 0' 4' 8' 16'

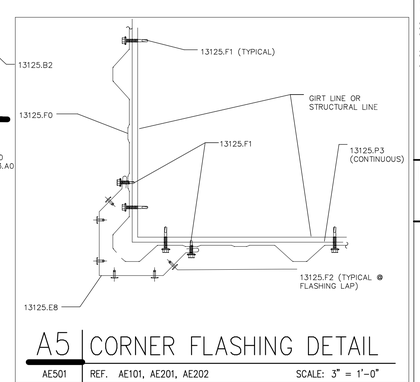

A5 | CORNER FLASHING DETAIL

AE501 | REF. AE101, AE201, AE202 | SCALE: 3" = 1'-0"

4" 3" 2" 1" 0 2" 4" 8"

EXTERIOR ELEVATION KEYNOTES

03053.A0 CONCRETE WATER PROOFING ADMIXTURE
03054.A0 OLIOPHOBIC TOPICAL SEALER
03300.C1 FOOTING – SEE STRUCTURAL
03300.D0 CONCRETE PAD
03300.H0 FOUNDATION WALL – SEE STRUCTURAL
03300.S1 SPLASH BLOCK

05500.J1 PIPE BOLLARD (DIAMETER) GALV AND PAINTED

06105.R3 PROTECTION BOARD (THICKNESS)

07901.A0 CONT. SEALANT

08111.B0 HOLLOW METAL DOOR
08360.A0 OVERHEAD SECTIONAL DOOR
08520.B0 FIXED ALUM. WINDOW
08520.C0 ALUM. WINDOW W/SLIDING GLASS PANEL
08521.B0 FIXED VINYLWINDOW
08521.C0 VINYL WINDOW W/SLIDING GLASS PANEL

10425.C1 ACCESSIBLE SIGNAGE – SEE DETAIL D3/AE502

13125.B0 STANDING SEAM METAL ROOF
13125.B2 STANDING SEAM METAL CANOPY
13125.C1 METAL RAIN GUTTER
13125.C2 DOWNSPOUT
13125.D1 META DRIP FLASHING
13125.E2 PANEL TRIM
13125.E6 WALL CLOSURE
13125.E8 CORNER TRIM
13125.F0 METAL WALL PANEL
13125.F1 METAL WALL FASTENER
13125.F2 BLIND RIVET
13125.G0 METAL FACIA
13125.H1 METAL ANGLE
13125.L4 STEEL COLUMN – PRIMED AN PAINTED
13125.N1 ANCHOR
13125.P3 THERMAL BREAK
13125.R0 INSULATION & VAPOR BARRIER (R-VALUE)

15050.A1 MECH. PENETRATIONS
15490.C0 WASTE OIL PIT
15887.A1 LOUVER W/ BIRD SCREEN

16520.B1 EXTERIOR WALL MOUNTED LIGHTS
16520.B2 EXTERIOR WALL MOUNTED FLOOD LIGHTS

GENERAL NOTES

1. FIELD VERIFY ALL EXISTING CONDITIONS AND THEIR COMPATIBILITY WITH NEW CONSTRUCTION PRIOR TO THE COMMENCEMENT OF WORK. COORDINATE DISCREPANCIES WITH ARCHITECT.

2. DO NOT SCALE DRAWINGS.

3. SEE SHEET AE602 FOR WINDOW TYPES AND DETAILS.

4. SEE CIIL, STRUCTURAL, MECHANICAL AND ELECTRICAL DRAWNGS FOR MORE INFORMATION.

5. PAINT ALL EXPOSED, EXTERIOR STEEL AT OIL PIT CANOPY – COLOR TO MATCH WALL PANELS.

6. EXTERIOR ELEVATION KEYNOTES ARE FOR ALL EXTERIOR ELEVATIONS, THEREFOR NOT ALL KEYNOTES MY BE USED ON EACH SHEET.

7. EXTERIOR LIGHTS MUST BE SUPPORTED BY SUITABLE STRUCTURAL BRACING TO BE PROVIDED BY THE METAL BUILDING MANUFACTURER.

EXTERIOR COLOR SCHEDULE

(13125.B0) METAL ROOF: GALVALUME METAL ROOF
(13125.G0) METAL FASCIA: SILICONIZED POLYESTER FINISH – COLOR "A" BY ARCHITECT.
(13125.C1 & E3) GUTTERS & RAKE TRIM: SILICONIZED POLYESTER FINISH – COLOR "B" BY ARCHITECT
(13125.F0) METAL WALL PAEL: SILICONIZED POLYESTER FINISH – COLOR "A" BY ARCHITECT
(13125.C2) DOWN SPOUTS: PRE FINISHED TO MATCH METAL WALL PANEL @ GRID 3.
(13125.C2) DOWN SPOUTS: PRE FINISHED TO MATCH CORNER TRIM @ GRIDS 1 & 5.
(08111.A0, B0 & 08360.A0) DOORS & FRAMES: YNAR 500 "BONE WHITE" OR EQUAL

(05500.J1) BOLLARDS: OSHA SAFETY YELLOW
(08520.B0) WNDOW FRAMES: KYNAR 500 "BONE WHITE" OR EQUAL
(15490.C0) WASTE OIL PIT: OSHA SAFETY RED

SARGENT DESIGN GROUP
ARCHITECTURE | PLANNING
36 NORTH 300 WEST, SUITE B
CEDAR CITY, UTAH 84720
OFFICE: (435) 586-8510
FAX: (435) 586-4873
jcoltons@email.com

State of Utah–Department of Administrative Services
DIVISION OF FACILITIES CONSTRUCTION AND MANAGEMENT
4110 State Office Building/Salt Lake City, Utah 84114/538-3018

Project:
UDOT HURRICANE FACILITY
DFCM PROJECT NO. 07292900

Sheet Title:
ELEVATIONS AND DETAILS

Revisions:

PROJECT NUMBER:	08521
DATE:	09.17.08
DRAWN BY:	J.C.S.
CHECKED BY:	J.C.S.
APPROVED BY:	J.C.S.

AE2.02

SHEET NUMBER:
Sheet of

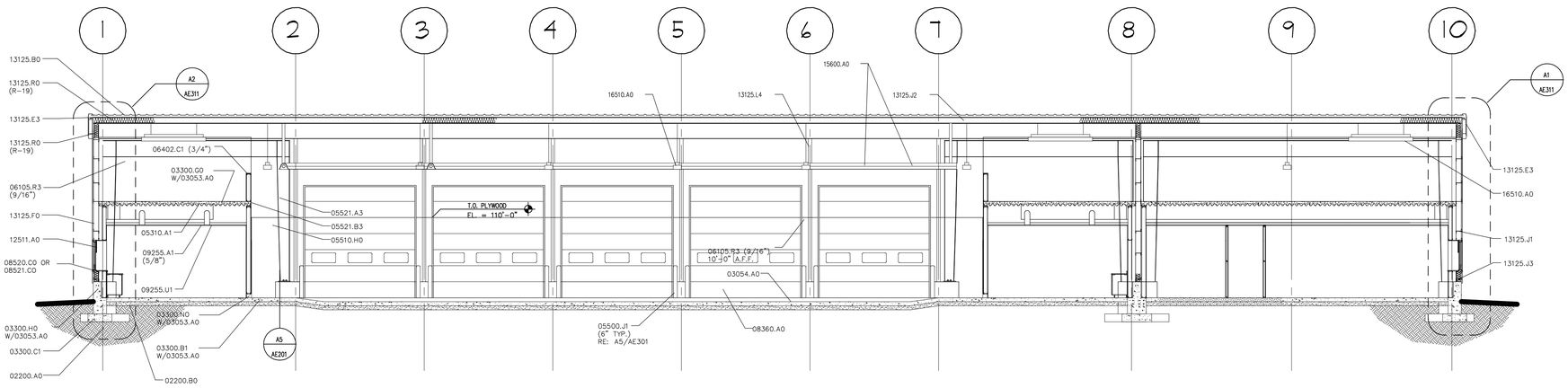

C1 BUILDING SECTION

AE301 | REF. AE101 | SCALE: 1/8" = 1'-0"

8' 6' 4' 2' 0' 4' 8' 16'

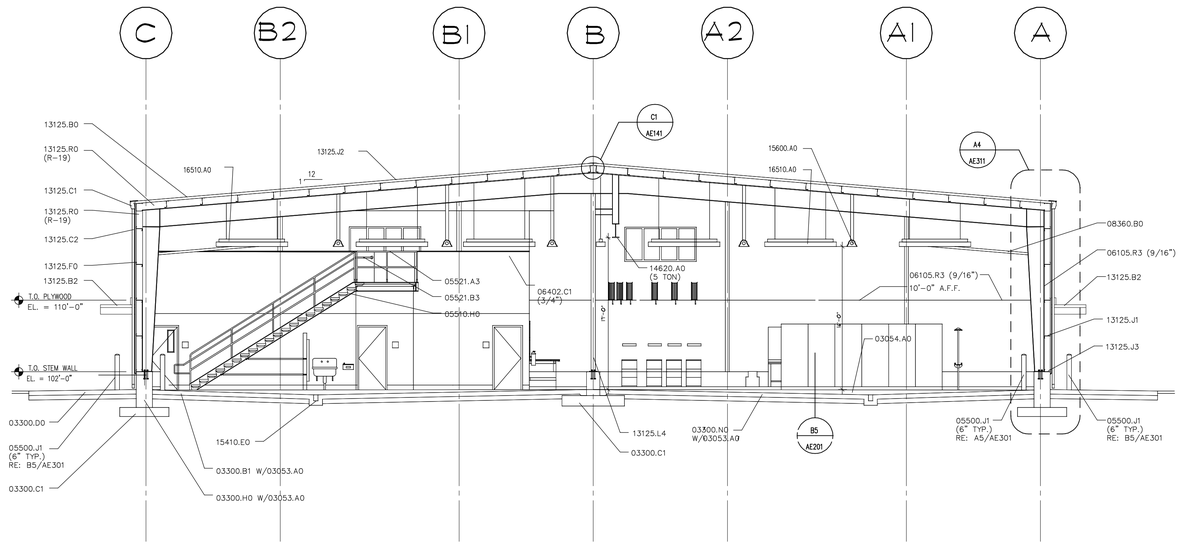

A1 BUILDING SECTION

AE301 | REF. AE101 | SCALE: 1/8" = 1'-0"

8' 6' 4' 2' 0' 4' 8' 16'

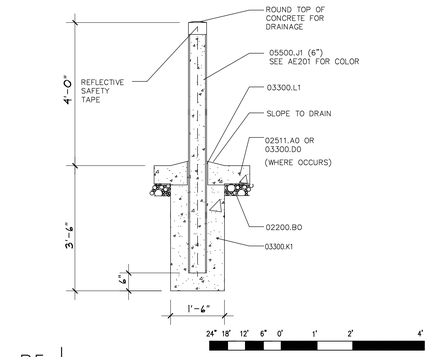

24" 18" 12" 6" 0" 1' 2' 4'

B5 EXT. PIPE BOLLARD DTL.

AE301 | REF. AE101 & AE301 | SCALE: 1/2" = 1'-0"

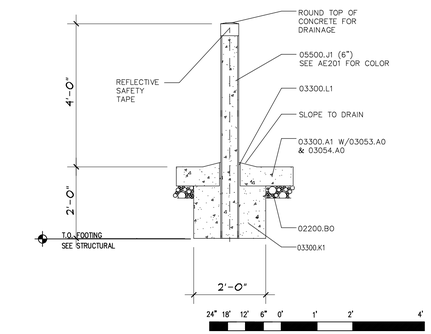

24" 18" 12" 6" 0" 1' 2' 4'

A5 INT. PIPE BOLLARD DTL.

AE301 | REF. AE101 & AE301 | SCALE: 1/2" = 1'-0"

BUILDING SECTION KEYNOTES

02200.A0 COMPACTED FILL
02200.B0 GRAVEL BASE
02511.A0 ZERO VOIDS ASPHALT PAVING (THICKNESS)

03053.A0 CONCRETE WATER PROOFING ADMIXTURE
03054.A0 OLIOPHOBIC TOPICAL SEALER
03300.A1 CONCRETE SLAB-ON-GRADE – SEE STRUCTURAL
03300.B1 CONCREE SLAB – SEE STRUCTURAL
03300.C1 FOOTING – SEE STRUCTURAL
03300.D0 CONCRETE PAD
03300.G0 CONCRETE OVER METAL DECK – RE: STRUCTURAL
03300.H0 FOUNDATION WALL – SEE STRUCTURAL
03300.K1 CONCRETE PIPE BASE
03300.L1 30# FELT
03300.N0 CONCRET CURB

05310.A1 METAL DECK – SEE STRUCTURAL
05500.J1 PIPE BOLLARD (DIAMETER) GALV. AND PAINTED
05510.H0 CONC. FILLED METAL PAN STAIR – GALVANIZED
05521.A3 1 1/2" O.D. PIPE GARDRAIL – GALVANIZED
05521.B3 1 1/2" O.D. HANDRAIL – GALVANIZED

06105.R3 PROTECTION BOARD (THICKNESS)
06402.C1 PAINT GRADE WOOD CAP (THICK.)

08360.A0 OVERHEAD SECTIONA DOOR
08360.B0 3" HEAVY DUTY OVERHEAD SECTIONAL DOOR TRACK
08520.C0 ALUM. WINDOW W/SLIDING GLASS PANEL
08521.C0 VINYL WINDOW W/SLIDING GLASS PANEL

09255.A1 GYPSUM BOARD (THICKNESS)
09255.U1 SUSPENDED CEILING SYSTEM

12511.A0 HORIZONTA LOUVER BLINDS

13125.B0 STANDING SEAM METAL ROOF
13125.B2 STANDING SEAM METAL CANOPY
13125.C1 METAL RAIN GUTTER
13125.C2 DOWNSPOUT
13125.E3 RAKE TRIM
13125.F0 METAL WALL PANEL
13125.J1 STRUCTURAL GIRT – PAINTED
13125.J2 ROOF PURLI – PAINTED
13125.J3 STRUCTURAL GIRT
13125.L4 STEEL COLUMN – PRIMED & PAINTED
13125.R0 INSULATION & VAPOR BARRIER (R-VALUE)

14620.A0 TROLLEY HOIST (SIZE) – SEE STRUCTURAL

15410.E0 TRENCH DRAIN
15600.A0 NATURAL GAS RADIANT HEATING SYSTEMP
16510.A0 INTERIOR LIGHTS

GENERAL NOTES

1. FIELD VERIFY ALL EXISTING CONDITIONS AND THEIR COMPATIBILITY WITH NEW CONSTRUCTION PRIOR TO THE COMMENCEMENT OF WORK. COORDINATE DISCREPANCIES WITH ARCHITECT.

2. DO NOT SCALE DRAWINGS.

3. SEE SHEET AE602 FOR WINDOW TYPES AND DETAILS.

4. SEE CIIL, STRUCTURAL, MECHANICAL AND ELECTRICAL DRAWNGS FOR MORE INFORMATION.

5. PROVIDE 03053.A0 AT ALL CONCRETE CURBS, PIERS, SLABS, STEM WALL ETC. U.N.O.

6. PROVIDE 03054.A0 OVER ENTIRE FLOOR SLAB IN ROOMS 101, 102, 103 AND CONCRETE MEZZANINE.

7. PINT ALL EQUIPMENT MOUNTING BARS TO MATCH PLYWOOD COLOR.

SARGENT DESIGN GROUP
ARCHITECTURE | PLANNING
36 NORTH 300 WEST, SUITE B
CEDAR CITY, UTAH 84720
OFFICE: (435) 586-8510
FAX: (435) 586-4873
jcoltons@email.com

State of Utah-Department of Administrative Services
DIVISION OF FACILITIES CONSTRUCTION AND MANAGEMENT
4110 State Office Building/Salt Lake City, Utah 84414/538-3018

Project:
UDOT HURRICANE FACILITY
DFCM PROJECT NO. 07292900

Sheet Title:
BUILDING SECTIONS AND DETAILS

Revisions:

PROJECT NUMBER:	0852
DATE:	09.17.08
DRAWN BY:	J.C.S.
CHECKED BY:	J.C.S.
APPROVED BY:	J.C.S.

AE3.01

SHEET NUMBER:
Sheet of

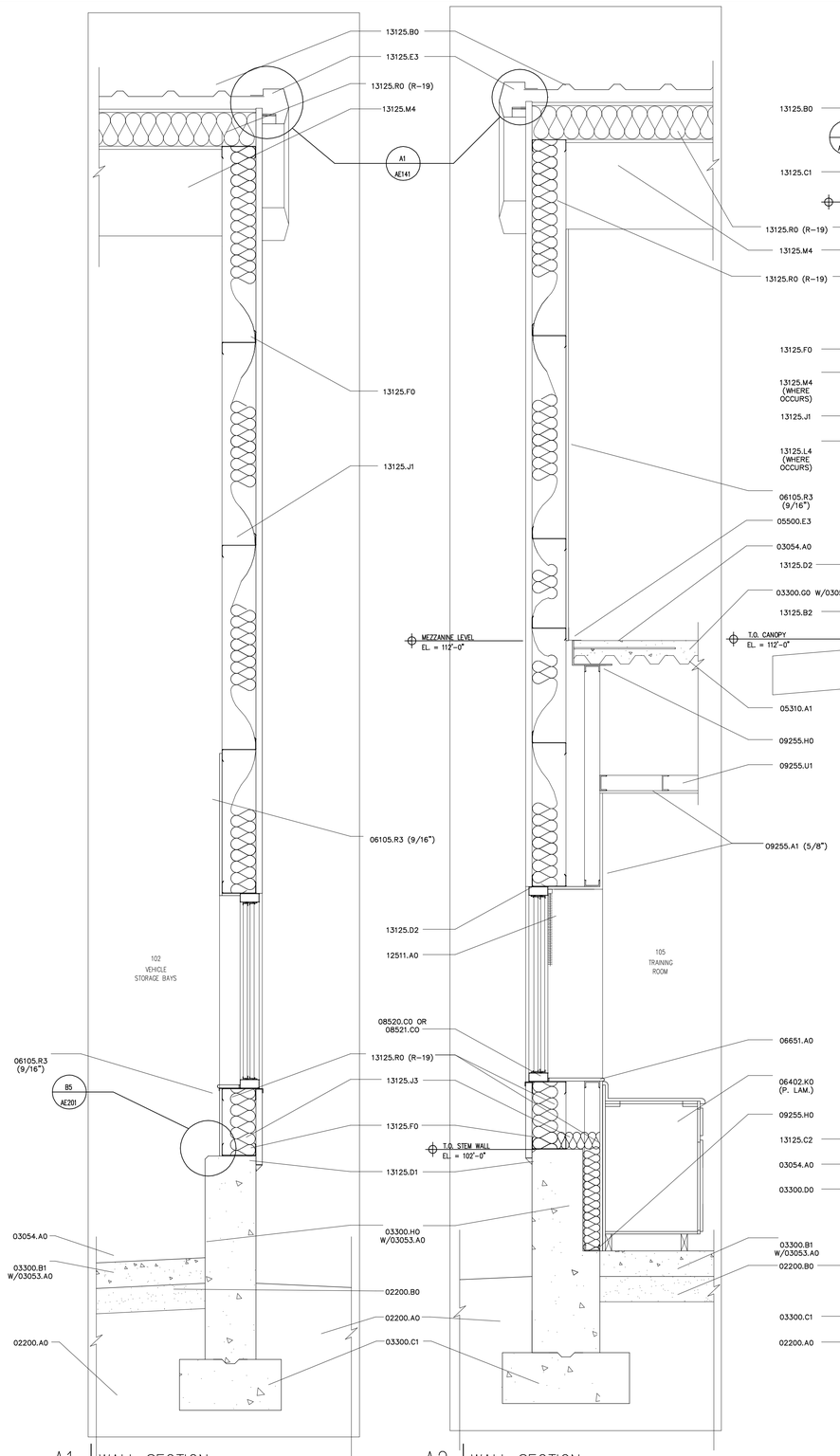

A1 | WALL SECTION

AE311 | REF. AE101, AE301 | SCALE: 3/4" = 1'-0"

12" 8" 4" 0 6" 1' 2' 3'

A2 | WALL SECTION

AE311 | REF. AE101, AE301 | SCALE: 3/4" = 1'-0"

12" 8" 4" 0 6" 1' 2' 3'

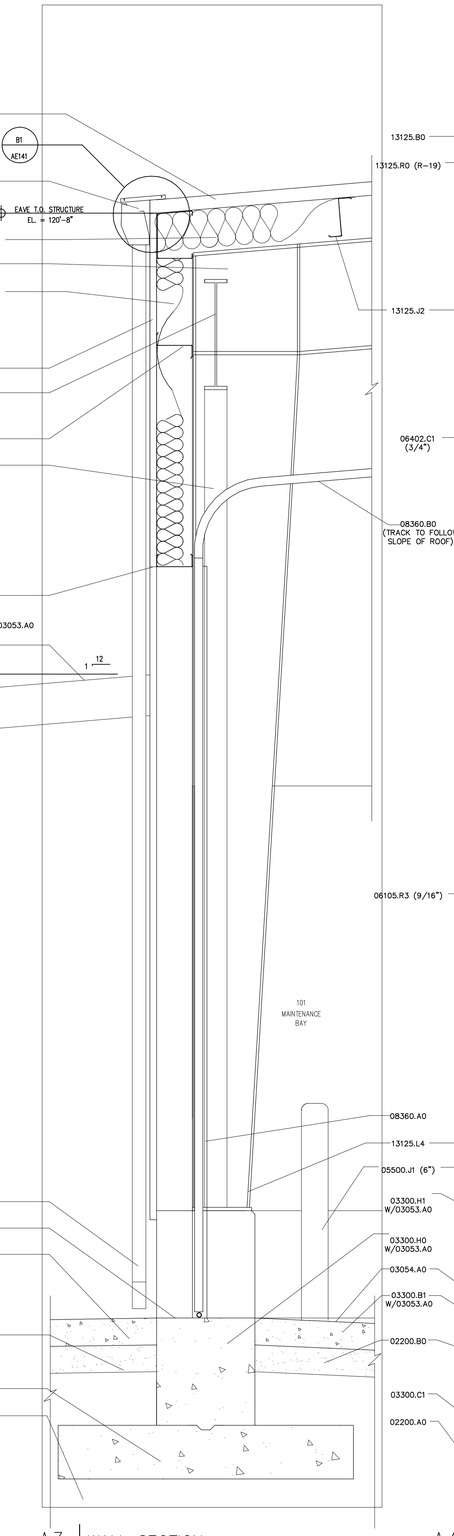

A3 | WALL SECTION

AE311 | REF. AE101, AE301 | SCALE: 3/4" = 1'-0"

12" 8" 4" 0 6" 1' 2' 3'

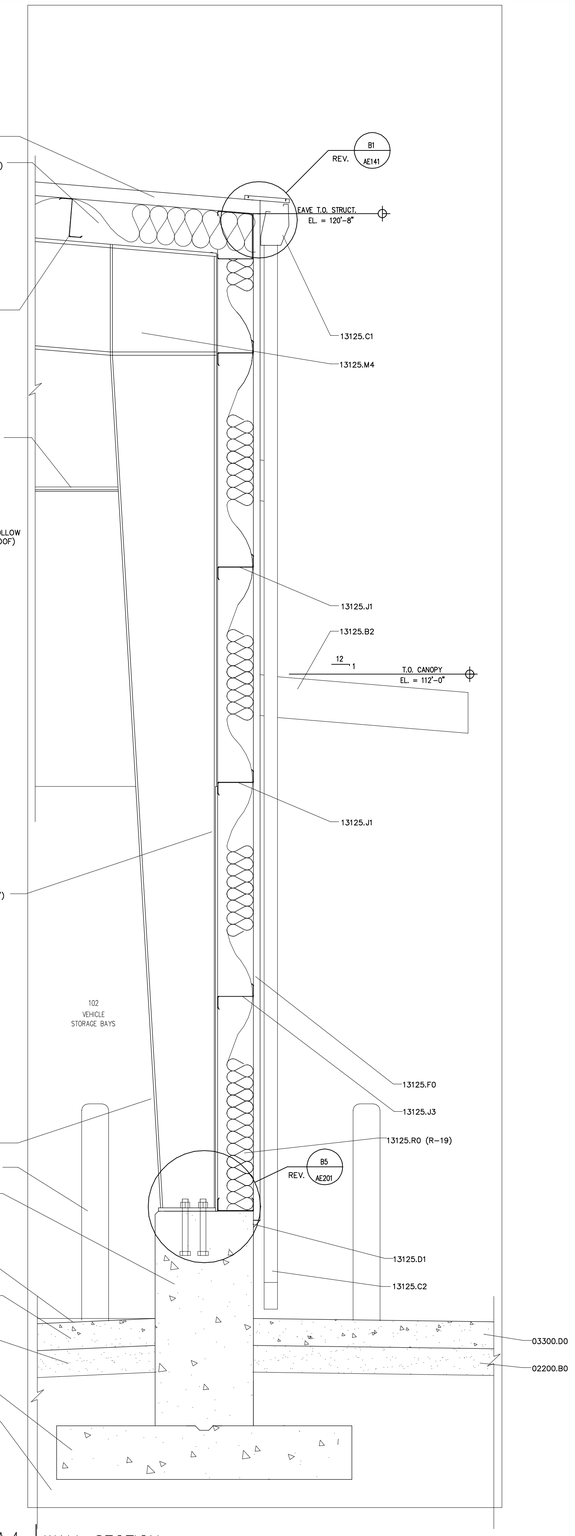

A4 | WALL SECTION

AE311 | REF. AE101, AE301 | SCALE: 3/4" = 1'-0"

12" 8" 4" 0 6" 1' 2' 3'

KEYNOTES

02200.A0 COMPACTED FILL
02200.B0 GRAVEL BASE

03053.A0 CONCRETE WATER PROOFING ADMIXTURE
03054.A0 OLIOPHOBIC TOPICAL SEALER
03300.B1 CONCRETE SLAB – RE: STRUCTURAL
03300.C1 FOOTING – SEE STRUCTURAL
03300.D0 CONCRETE PAD
03300.G0 CONCETE OVER METAL DECK – RE:STRUCTURAL
03300.H0 FOUNDATION WALL – SEE STRUCTURAL
03300.H1 CONCRETE PIER – SEE STRUCTURAL

05310.A1 METAL DECK – SEE STRUCTURAL
05500.E3 BENT PLATE – SEE STRUCTURAL
05500.J1 PIPE BOLLARD (DIAMETER) GALV. AND PAITED

06105.R3 PROTECTION BOARD (THICKNESS)
06402.C1 PAINT GRADE WOOD CAP (THICK.)
06402.K0 BASE UNIT (FINISH)
06651.A0 1/2" WHITE SOLID SURFACE WINDOW SILL

08360.A0 OVERHEAD SECTIONAL DOOR
08360.B0 3" HEAVY DUTY OVERHEAD SECTIONAL DOR TRACK
08520.C0 ALUM. WINDOW W/SLIDING GLASS PANEL
08521.C0 VINYL WINDOW W/SLIDING GLASS PANEL

09255.A1 GYPSUM BOARD (THICKNESS)
09255.H0 METAL STUD
09255.U1 SUSPENDED CEILING SYSTEM

12511.A0 HORIZONTAL LOUVER BLINDS

13125.B0 STNDING SEAM METAL ROOF
13125.B2 STANDING SEAM METAL CANOPY
13125.C1 METAL RAIN GUTTER
13125.C2 DOWNSPOUT
13125.D1 METAL DRIP FLASHING
13125.D2 METAL HEAD FLASHING
13125.E3 RAKE TRIM
13125.F0 METAL WALL PANEL
13125.J1 STRUCTURAL GIRT – PAINTED
13125.J2 ROOF PURLIN – PAINTED
13125.J3 STRUCTURAL GIRT
13125.L4 STEEL COLUMN – PRIMED & PAINTED
13125.M4 STEEL BEAM – PRIMED & PAINTED
13125.R0 INSULATION & VAPOR BARRIER (R-VALUE)

GENERAL NOTES

1. FIELD VERIFY ALL EXISTING CONDITIONS AND THEIR COMPATIBILITY WITH NEW CONSTRUCTION PRIOR TO THE COMMENCEMENT OF WORK. COORDINATE DISCREPANCIES WITH ARCHITECT.

2. DO NOT SCALE DRAWINGS.

3. SEE CIVIL, STRUCTURAL, MECHANICAL AND ELECTRICAL DRAWINGS OR MORE INFORMATION.

SARGENT DESIGN GROUP
ARCHITECTURE | PLANNING
36 NORTH 300 WEST, SUITE B
CEDAR CITY, UTAH 84720
OFFICE: (435) 586-4510
FAX: (435) 586-4573
jcshton@gmail.com

State of Utah-Department of Administrative Services
DIVISION OF FACILITIES CONSTRUCTION
AND MANAGEMENT
4110 State Office Building/Salt Lake City, Utah 84114/538-3018

Project:
UDOT
HURRICANE
FACILITY
DFCM PROJECT NO.
07292900

Sheet Title:
WALL
SECTIONS

Revisions:

PROJECT NUMBER: 08527
DATE: 09.17.08
DRAWN BY: J.C.S.
CHECKED BY: J.C.S.
APPROVED BY: J.C.S.

AE3.11

SHEET NUMBER:
Sheet of

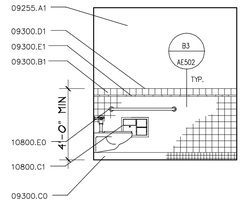

NOTE: COORDINATE GRAB BAR HEIGHT AND ACCESS TO TOILET TISSUE DISPENSER

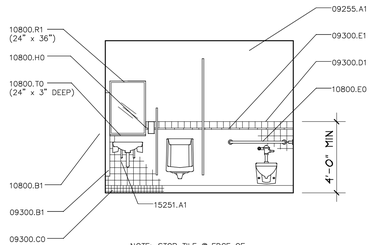

NOTE: STOP TILE @ EDGE OF MIRROR TO ALLOW MIRROR TO SIT FLUSH ON GYPSUM BOARD.

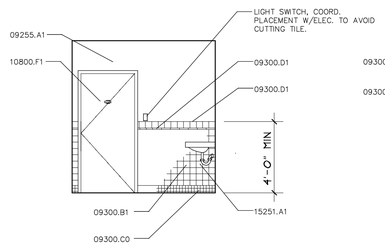

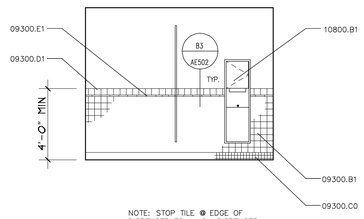

NOTE: STOP TILE @ EDGE OF DISPENSER TO ALLOW DISPENSER TO SIT FLUSH ON GYPSUM BOARD.

D1 RESTROOM ELEVATION

AE401 REF. AE401 SCALE: 1/4" = 1'-0"

4' 3' 2' 1' 0' 2' 4' 8'

D2 RESTROOM ELEVATION

AE401 REF. AE401 SCALE: 1/4" = 1'-0"

4' 3' 2' 1' 0' 2' 4' 8'

D3 RESTROOM ELEVATION

AE401 REF. AE401 SCALE: 1/4" = 1'-0"

4' 3' 2' 1' 0' 2' 4' 8'

D4 RESTROOM ELEVATION

AE401 REF. AE401 SCALE: 1/4" = 1'-0"

4' 3' 2' 1' 0' 2' 4' 8'

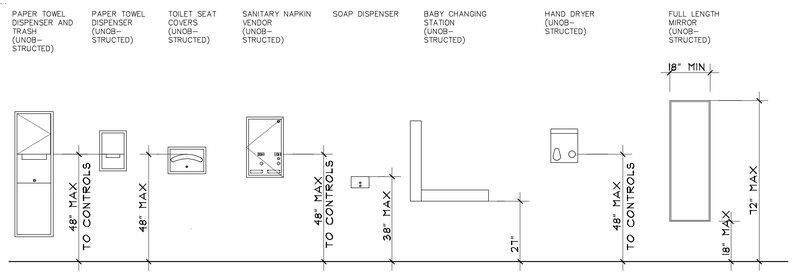

C1 RESTROOM MOUNTING HEIGHTS DETAIL

AE401 REF. AE401 SCALE: 3/8" = 1'-0"

12" 6" 0 1' 2' 4'

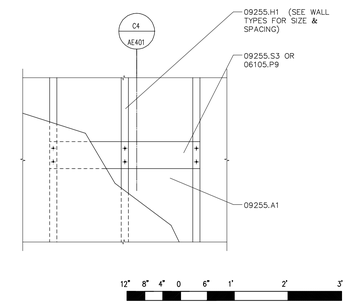

12" 8" 4" 0 6" 1' 2' 3'

C3 MOUNTING PLATE ELEV.

AE401 REF. AE401 SCALE: 3/4" = 1'-0"

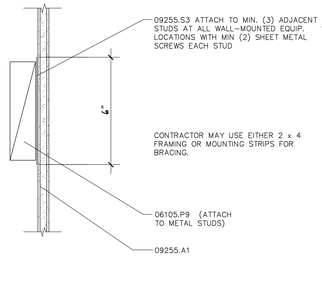

C4 MOUNTING PLATE SECTION

AE401 REF. AE401 SCALE: 3" = 1'-0"

4" 3" 2" 1" 0 2" 4" 8"

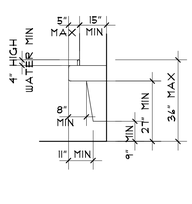

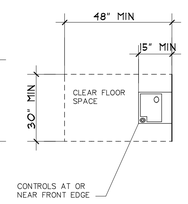

B1 DRINKING FOUNTAIN DETAIL

AE401 REF. AE401 SCALE: 3/8" = 1'-0"

12" 6" 0 1' 2' 4'

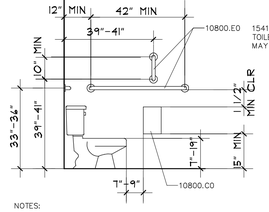

NOTES:
(1) ALL GRAB BARS MUST SUPPORT A LOAD OF 250 POUNDS MIN.
(2) MOUNT GRAB BARS TO MAINTAIN 1 1/2" CLEAR SPACE FROM WALL.

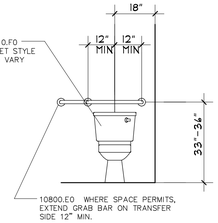

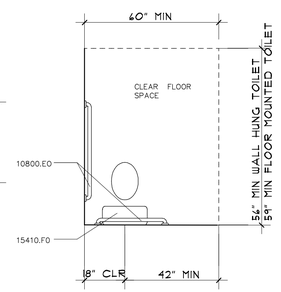

B2 ACCESSIBLE TOILET DETAIL

AE401 REF. AE401 SCALE: 3/8" = 1'-0"

12" 6" 0 1' 2' 4'

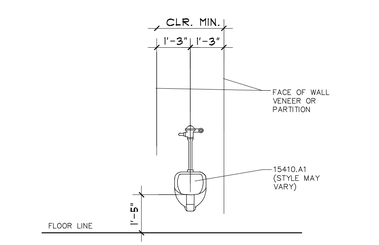

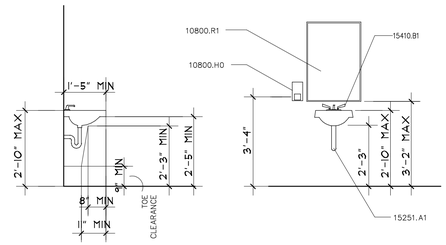

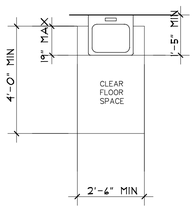

A1 ACCESSIBLE URINAL DETAIL

AE401 REF. AE401 SCALE: 3/8" = 1'-0"

12" 6" 0 1' 2' 4'

A2 ACCESSIBLE SINK DETAIL

AE401 REF. AE401 SCALE: 3/8" = 1'-0"

12" 6" 0 1' 2' 4'

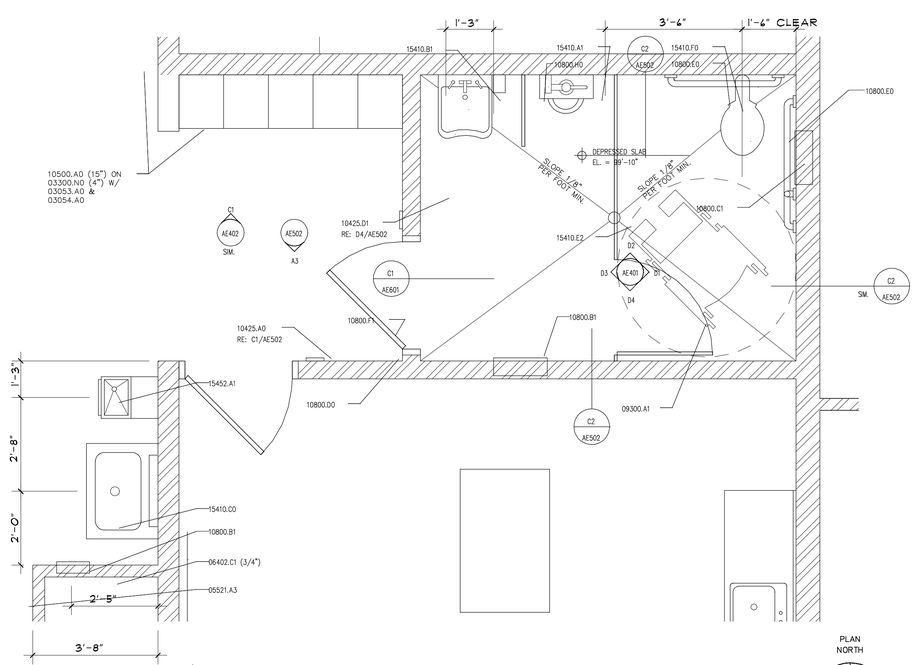

A4 ENLARGED RESTROOM PLAN

AE401 REF. AE101 SCALE: 1/2" = 1'-0"

24" 18" 12" 6" 0" 1' 2' 4'

PLAN NORTH

KEYNOTES

03053.A0 CONCRETE WATER PROOFING ADMIXTURE
03054.A0 OLIOPHOBIC TOPICAL SEALER
03300.N0 CONCRETE CURB

05521.A3 1 1/2" O.D. PIPE GUARDRAIL – GALVANIZED

06105.P9 2 x FRAMING, FIRE TREATED
06402.C1 PAINT GRADE WOOD CAP (THICK)

09255.A1 GYPSUM BOARD
09255.H1 METAL STUDS (SIZE, SPACING)
09255.S3 18 GA. METAL MOUNTING STRIPS
09300.A1 FLOOR TILE – SEE FINISH SCHED.
09300.B1 WALL TILE – SEE FINISH SCHED.
09300.C TILE BASE
09300.DI BULLNOSE TILE
09300.E1 1/2" x 6" TILE TRIM PIECE – SEE FINISH SCHED.

10425.A0 ROOM SIGNAGE
10425.D1 ACCESSIBLE/UNISEX RESTROOM SIGNAGE
10500.A0 METAL LOCKERS (WIDTH)
10800.B1 SEMI-RECESSED PAPER TOWEL DISPENSER & WASTE RECEPTACLE
10800.C0 TOILET TISSUE DISPENSER
10800.C1 RECESSED TOILET TISSUE DISPENSER/SAN. NAP. DISPOSAL
10800.D0 MOP RACK
10800.E0 GRAB BAR
10800.F1 DOUBLE PRONG ROE HOOK
10800.H0 SOAP DISPENSER
10800.R1 FRAMED MIRROR (SIZE)
10800.T0 METAL SHELF (SIZE)

15251.A1 PIPE INSULATION AT ALL EXPOSED PIPE
15410.A1 URINAL, ACCESSIBLE
15410.B1 SINK FAUCET W/ADA LEVER HANDLES
15410.C0 UTILITY SINK
15410.E2 FLOOR DRAIN
15410.F0 TOILET
15452.A1 DRINKING FOUNTAIN

GENERAL NOTES

1. FIELD VERIFY ALL EXISTING CONDITIONS AND THEIR COMPATIBILITY WITH NEW CONSTRUCTION PRIOR TO THE COMMENCEMENT OF WORK. COORDINATE DISCREPANCIES WITH ARCHITECT.

2. DO NOT SCALE DRAWINGS.

3. SEE CIVIL, STRUCTURAL, MECHANICAL AND ELECTRICAL DRAWINGS OR MORE INFORMATION.

4. PROVIDE BACKING BEHIND ALL SURFACE MOUNTED EQUIPMENT AND/OR FIXTURES PER DETAIL C3/AE401

5. SEE C1/AE401 FOR TYPICAL FIXTURE MOUNTING HEIGHTS.

6. SEE DETAILS A1, A2, B1 & B2/AE401 FOR ADA TYPICAL DETAILS

SARGENT DESIGN GROUP
ARCHITECTURE | PLANNING
36 NORTH 300 WEST, SUITE B
CEDAR CITY, UTAH 84720
OFFICE: (435) 586-8510
FAX: (435) 586-4873
jcoltons@email.com

State of Utah- Department of Administrative Services
DIVISION OF FACILITIES CONSTRUCTION AND MANAGEMENT
4110 State Office Building/Salt Lake City, Utah 84114/538-3018

Project:
UDOT HURRICANE FACILITY
DFCM PROJECT NO. 07292900

Sheet Title:
ENLARGED RESTROOM PLANS, INTERIOR ELEVATIONS AND DETAILS

Revisions:

PROJECT NUMBER:	08527
DATE:	09.17.08
DRAWN BY:	J.C.S.
CHECKED BY:	J.C.S.
APPROVED BY:	J.C.S.

AE4.01

SHEET NUMBER:
Sheet of

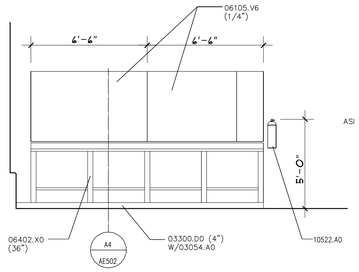

D1 | INTERIOR ELEVATION

AE402 REF. AE402 SCALE: 1/4" = 1'-0"

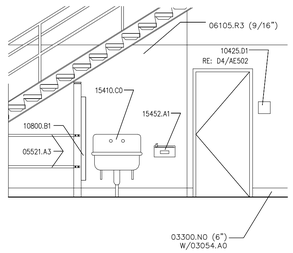

D2 | INTERIOR ELEVATION

AE402 REF. AE101 SCALE: 1/4" = 1'-0"

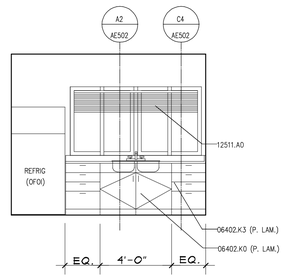

D3 | INTERIOR ELEVATION

AE402 REF. AE101 SCALE: 1/4" = 1'-0"

C1 | LOCKER ELEVATION

AE402 REF. AE101 SCALE: 1/4" = 1'-0"

C2 | TYP. SHELVING ELEVATION

AE402 REF. AE101 SCALE: 1/4" = 1'-0"

KEYNOTES	
03053.A0	CONCRETE WATER PROOFING ADMIXTURE
03054.A0	OLIOPHOBIC TOPICAL SEALER
03300.A1	CONCRETE SLAB-ON-GRADE - RE: STRUCTURAL
03300.B1	CONCRETE SLAB - RE: STRUCTURAL
03300.D0	CONCRETE PAD (SIZE)
03300.H0	FOUNDATION WALL - RE: STRUCTURAL
03300.H1	CONCRETE PIER - RE: STRUCTURAL
03300.N0	CONCRETE CURB (HEIGHT)
05500.J1	PIPE BOLLARD (DIAMETER) - GALV. & PAINTED
05521.A3	1 1/2" O.D. PIPE GUARDRAIL - GALVANIZED
06105.R3	PROTECTION BOARD (THICKNESS)
06105.V6	PEGBOAR (THICKNESS)
06402.H1	ADJUSTABLE SHELVES (FINISH)
06402.K0	BASE UNIT (FINISH)
06402.K3	BASE UNIT WITH DRAWERS (FINISH)
06402.X0	WORKBENCH (DEPTH)
08111.B0	HOLLOW METAL DOOR
08360.A0	OVERHEAD SECTIONAL DOOR
10425.A0	ROOM SIGNAG
10425.A1	OIL SIGNAGE
10425.B1	WELDING SIGNAGE
10425.D1	ACCESSIBLE/UNISEX RESTROOM SIGNAGE
10500.A0	METAL LOCKERS (WIDTH)
10500.B0	METAL STORAGE CABINETS
10522.A0	FIRE EXTINGUISHER
10800.B1	SEMI-RECESSED PAPER TOWEL DISPENSER & WSTE RECEPTACLE
11151.A0	MOBILE LIFT - N/C - OWNER FURNISHED
12511.A0	HORIZONTAL LOUVER BLINDS
13125.L4	STEEL COLUMN - PRIMED & PAINTED
14620.A0	TROLLEY HOIST (SIZE) - RE: STRUCTURAL

KEYNOTES - CONT.	
15410.C0	UTILITY SINK
15410.E0	TRENCH DRAIN
15412.A0	EMERGENCY SHOWER & EYE WASH
15452.A1	DRINKING FOUNTAIN
15490.A0	WASTE OIL PUMP
15490.C0	WASTE OIL PIT
15490.D0	600 GAL. WASTE OIL TANK - O.F.C.I.
15491.A0	AIR COMPESSOR
15491.B0	OVERHEAD LUBE REELS
15491.C0	OVERHEAD HOSE REELS
15600.A0	NATURAL GAS RADIANT HEATING SYSTEM
16510.A0	INTERIOR LIGHTS

GENERAL NOTES

1. FIELD VERIFY ALL EXISTING CONDITIONS AND THEIR COMPATIBILITY WITH NEW CONSTRUCTION PRIOR TO THE COMMENCEMENT OF WORK. COORDINATE DISCREPANCIES WITH ARCHITECT.

2. DO NOT SCALE DRAWINGS.

3. SEE CIVIL, STRUCTURAL, MECHANICAL AND ELECTRICAL DRAWINGS OR MORE INFORMATION.

4. PROVIDE QUANTITY OF ADJUSTABLE SHELVING AS SHOWN IN ELEVATION.

5. SEE SHEET AE602 FOR PLASTIC LAMINATE COLORS.

6. PAINT ALL EQUIPTMENT MOUNTING BARS TO MATCH PLYWOOD COLOR

7. PROVIDE 03053.A0 AT ALL CONCRETE CURBS, PERS, SLABS, STEM WALL ETC. U.N.O.

8. PROVIDE 03054.A0 OVER ENTIRE FLOOR SLAB AT ROOMS 101, 102, 103 & CONCRETE MEZZANINE.

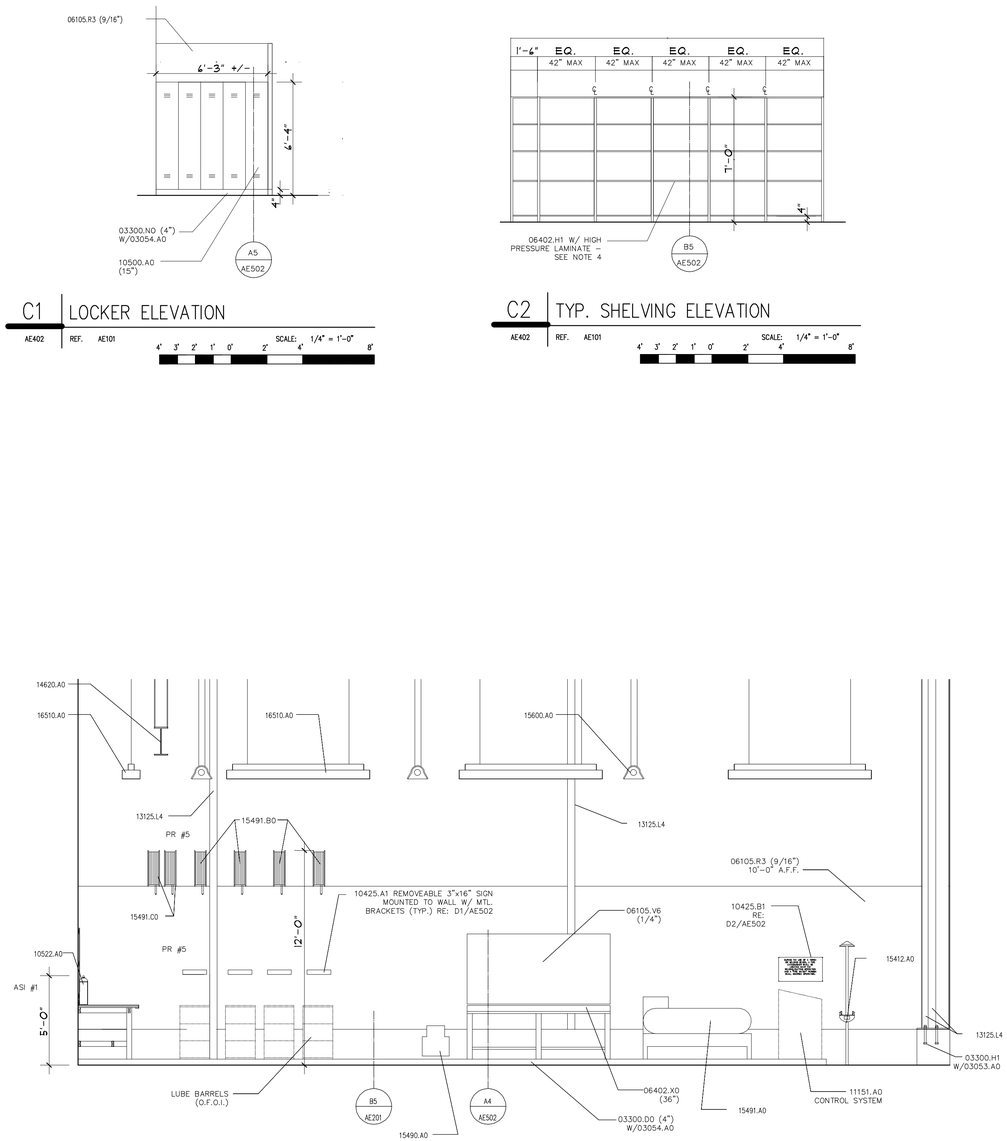

A1 | INTERIOR ELEVATION

AE402 REF. AE402 SCALE: 1/4" = 1'-0"

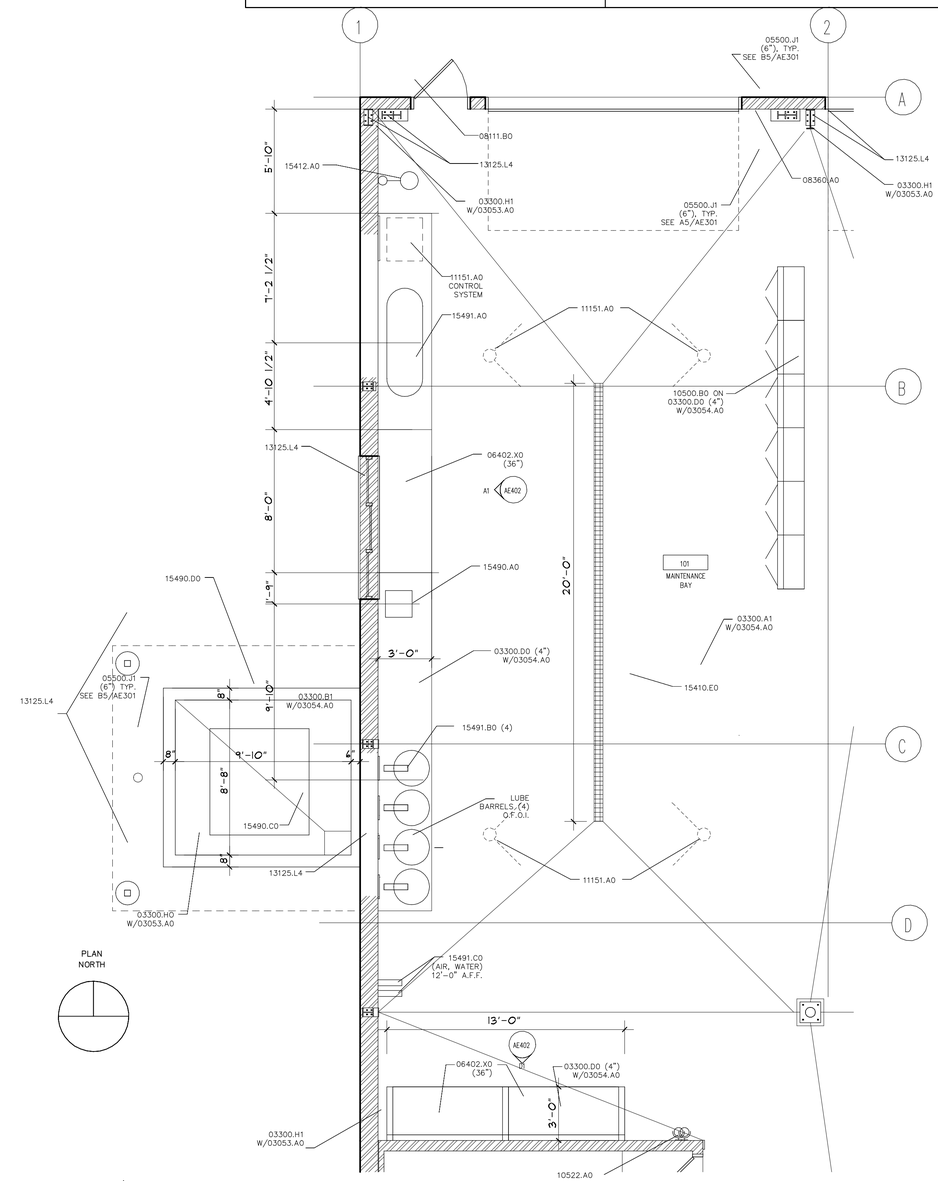

A3 | ENLARGED MAINTENANCE BAY

AE402 REF. AE101 SCALE: 1/4" = 1'-0"

SARGENT DESIGN GROUP
ARCHITECTURE | PLANNING
36 NORTH 300 WEST, SUITE B
CEDAR CITY, UTAH 84720
OFFICE: (435) 586-8510
FAX: (435) 586-4873
jcoltons@email.com

State of Utah-Department of Administrative Services
DIVISION OF FACILITIES CONSTRUCTION AND MANAGEMENT
4110 State Office Building/Salt Lake City, Utah 84114/538-3018

Project:
UDOT
HURRICANE
FACILITY
DFCM PROJECT NO.
07292900

Sheet Title:
ENLARGED MAINTENANCE BAY AND INTERIOR ELEVATIONS

Revisions:

PROJECT NUMBER:	08527
DATE:	09.17.08
DRAWN BY:	J.C.S.
CHECKED BY:	J.C.S.
APPROVED BY:	J.C.S.

AE4.02

SHEET NUMBER:
Sheet of

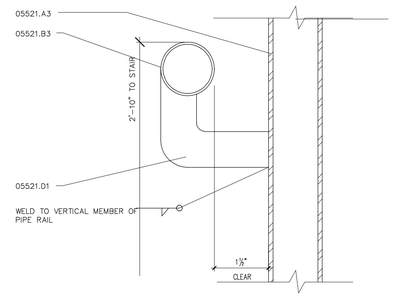

D1 HANDRAIL ATTACHMENT DTL.

AE403 REF. AE403 SCALE: 6" = 1'-0"

2" 1" 0 1" 2" 4"

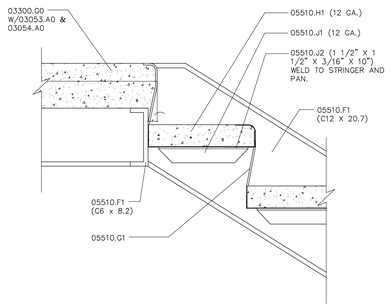

C1 STAIR LANDING DETAIL

AE403 REF. AE403 SCALE: 1 1/2" = 1'-0"

8" 6" 4" 2" 0 4" 8" 1'-4"

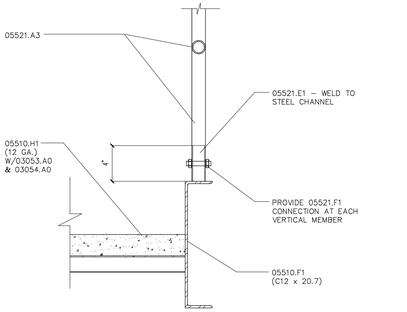

B1 GUARDRAIL ATTACH. DETAIL

AE403 REF. AE403 SCALE: 1 1/2" = 1'-0"

8" 6" 4" 2" 0 4" 8" 16"

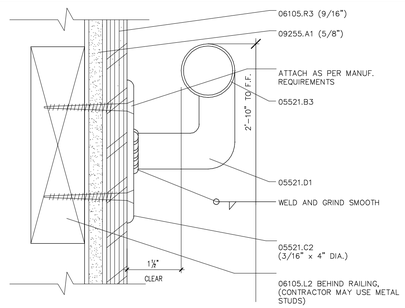

D2 HANDRAIL ATTACHMENT DTL.

AE403 REF. AE403 SCALE: 6" = 1'-0"

2" 1" 0 1" 2" 4"

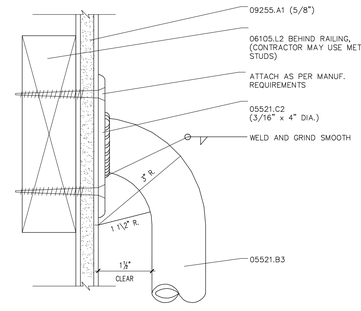

C2 HANDRAIL ATTACHMENT DTL.

AE403 REF. AE403 SCALE: 6" = 1'-0"

2" 1" 0 1" 2" 4"

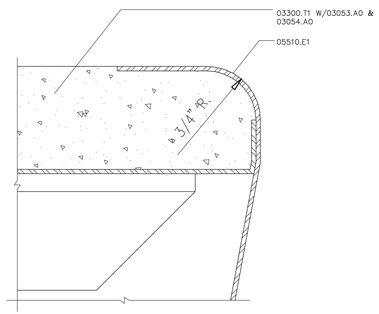

B2 STAIR NOSING DETAIL

AE403 REF. AE403 SCALE: NONE

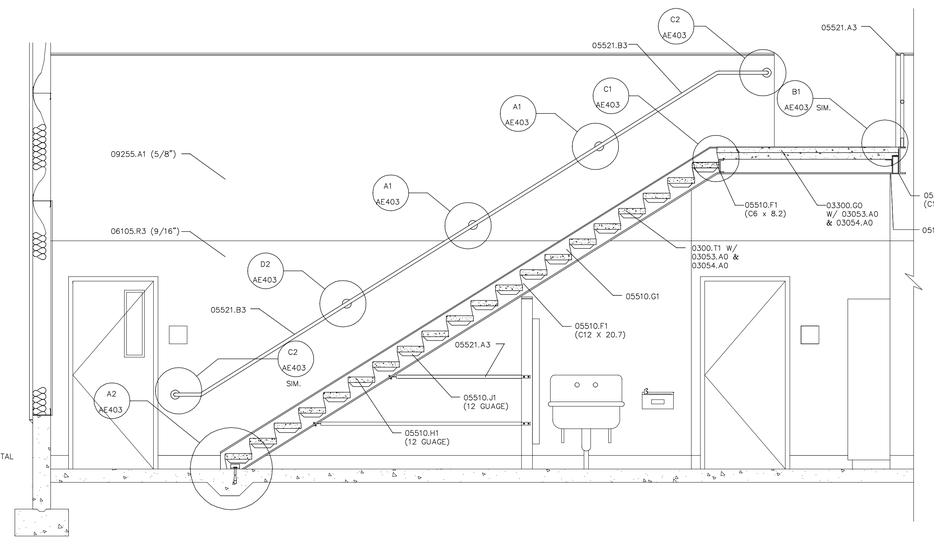

C3 STAIR SECTION/HANDRAIL ELEVATION

AE403 REF. AE403 SCALE: 3/8" = 1'-0"

12" 6" 0 1' 2' 4'

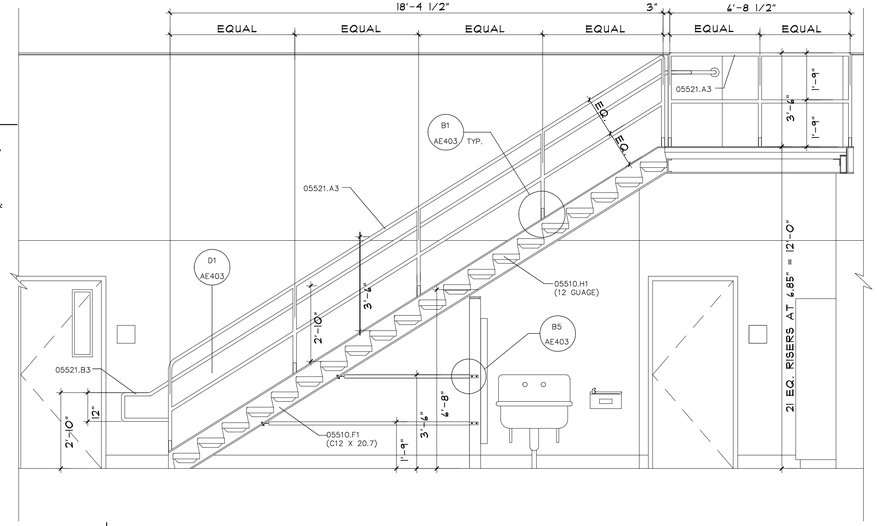

B3 STAIR ELEVATION

AE403 REF. AE403 SCALE: 3/8" = 1'-0"

12" 6" 0 1' 2' 4'

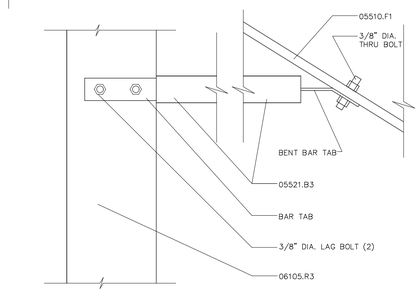

B5 RAIL ATTACHMENT DETAIL

AE403 REF. AE403 SCALE: 3" = 1'-0"

4" 3" 2" 1" 0 2" 4" 8"

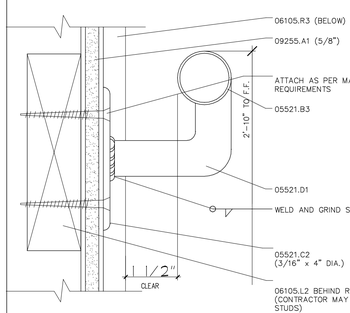

A1 HANDRAIL ATTACHMENT DTL.

AE403 REF. AE403 SCALE: 6" = 1'-0"

2" 1" 0 1" 2" 4"

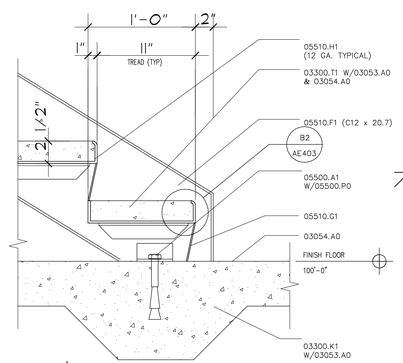

A2 STAIR BASE DETAIL

AE403 REF. AE403 SCALE: 1 1/2" = 1'-0"

8" 6" 4" 2" 0 4" 8" 1'-4"

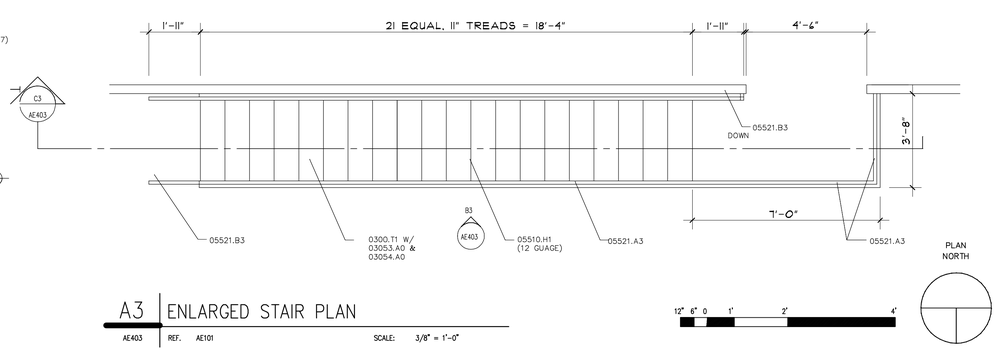

A3 ENLARGED STAIR PLAN

AE403 REF. AE101 SCALE: 3/8" = 1'-0"

12" 6" 0 1' 2' 4'

PLAN NORTH

KEYNOTES

03053.A0 CONCRETE WATER PROOFING ADMIXTURE
03054.A0 OLIOPHOBIC TOPICAL SEALER
03300.G0 CONCRETE OVER METAL DECK – SEE STRUCTURAL
03300.K1 THICKENED SLAB – SEE STRUCTURAL
03300.T1 CONCRETE AT STAIR TREAD

05120.C1 TUBE STEEL BEAM – SEE STRUTURAL – GALVANIZED

05500.A1 ANGLE – SEE STRUCTURAL
05500.P0 ANCHOR BOLT(S)
05510.E1 NON SKID SURFACE @ NOSING
05510.F1 STEEL STRINGER – (SIZE) – GALVANIZED
05510.G1 3/16" STEEL CLOSURE PLATE – GALVANIZED
05510.H1 PRE-FORMED, CONC. FILLED METL PAN STAIR TREAD – (SIZE) – GALV.
05510.J1 METAL PAN STAIR SUPPORT – (SIZE) – GALVANIZED
05510.J2 PAN ANCHORAGE – (SIZE) – GALVANIZED
05521.A3 1 1/2" O.D. PIPE GUARDRAIL – GALVANIZED
05521.B3 1 1/2" O.D. PIPE HANDRAIL – GALVANIZED
05521.C2 ESCUTHEON WITH EASED EDGES (SIZE)
05521.D1 PIPE RAIL SUPPORT – GALVANIZED
05521.E1 1" DIA. PIPE RAILING ANCHOR – GALVANIZED
05521.F1 1/2" DIA. THRU BOLT

06105.L2 BLOCKING AS REQUIRED
06105.R3 PROTECTION BOARD (THICKNESS)

09255.A1 GYPSUM BOAD (THICKNESS)

GENERAL NOTES

1. FIELD VERIFY ALL EXISTING CONDITIONS AND THEIR COMPATIBILITY WITH NEW CONSTRUCTION PRIOR TO THE COMMENCEMENT OF WORK. COORDINATE DISCREPANCIES WITH ARCHITECT.
2. DO NOT SCALE DRAWINGS.
3. SEE STRUCTURAL DRAWINGS FOR MORE INFORMATION.

SARGENT DESIGN GROUP
ARCHITECTURE | PLANNING
36 NORTH 300 WEST, SUITE B
CEDAR CITY, UTAH 84720
OFFICE: (435) 586-8510
FAX: (435) 586-4873
jcoltons@email.com

State of Utah–Department of Administrative Services
DIVISION OF FACILITIES CONSTRUCTION AND MANAGEMENT
4110 State Office Building/Salt Lake City, Utah 84114/538-3018

Project:
UDOT HURRICANE FACILITY
DFCM PROJECT NO. 07292900

Sheet Title:
STAIR PLANS, SECTION, ELEVATIONS AND DETAILS ELEVATIONS

Revisions:

PROJECT NUMBER:	08527
DATE:	09.17.08
DRAWN BY:	J.C.S.
CHECKED BY:	J.C.S.
APPROVED BY:	J.C.S.

AE4.03

SHEET NUMBER:
Sheet of

KEYNOTES

03053.A0 CONCRETE WATER PROOFING ADMIXTURE
03054.A0 OLIOPHOBIC TOPICAL SEALER
03300.G0 CONCRETE OVER METAL DECK – RE:STRUCTURAL
03300.H0 FOUNDATION WALL – SEE STRUCTURAL
03300.N0 CONCRETE CURB

06105.R3 PROTECTION BOARD (THICKNESS)
06402.C1 PAINT GRADE WOOD CAP (THICK)

07901.A0 CONT. SEALANT

09255.A1 GYPSUM BOARD (THICKNESS)
09255.B2 TYPE 'X' GYPSUM BOARD (THICKNESS)
9255.H1 METAL STUDS (SIZE, SPACING)

13125.B0 STANDING SEAM METAL ROOF
13125.C1 METAL RAIN GUTTER
13125.E3 RAKE TRIM
13125.F0 METAL WALL PANEL
13125.J0 STRUCTURAL MEMBER – PRIMED AND PAINTED
13125.J1 SRUCTURAL GIRT – PAINTED
13125.J2 ROOF PURLIN – PAINTED
13125.J3 STRUCTURAL GIRT
13125.R0 INSULATION & VAPOR BARRIER (R-VALUE)

GENERAL NOTES

1. FIELD VERIFY ALL EXISTING CONDITIONS AND THEIR COMPATIBILITY WITH NEW CONSTRUCTION PRIOR TO THE COMMENCEMENT OF WORK. COORDINATE DISCREPANCIES WITH ARCHITECT.

2. DO NOT SCALE DRAWINGS.

3. SEE CIVIL, STRUCTURAL, MECHANICAL AND ELECTRICAL DRAWINGS OR MORE INFORMATION.

4. CONTRACTOR TO ENSURE THAT METAL BUILDING MANUF. PROVIDES STRUCTURAL GIRTS IN SUFFICIENT QUANTITY TO SUPPORT INTERIOR FINISHES.

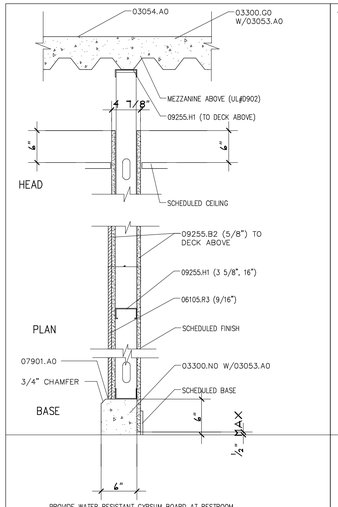

TYPE	OVERALL THICKNESS	STUD / BLOCK SIZE	FIRE RATING	U.L. LISTING	S.T.C. RATING
G	AS NOTED	3 5/8"	N.R.	---	---

COMMENT

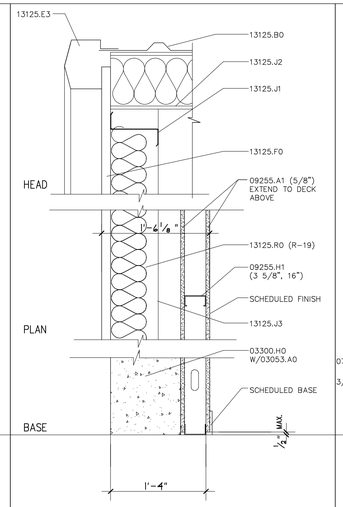

TYPE	OVERALL THICKNESS	STUD / BLOCK SIZE	FIRE RATING	U.L. LISTING	S.T.C. RATING
H	AS NOTED	3-5/8"	1 HR.	UL419	---

COMMENT

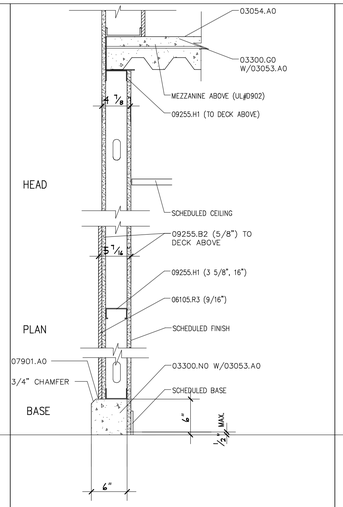

TYPE	OVERALL THICKNESS	STUD / BLOCK SIZE	FIRE RATING	U.L. LISTING	S.T.C. RATING
J	AS NOTED	3-5/8"	1 HR.	UL419	---

COMMENT

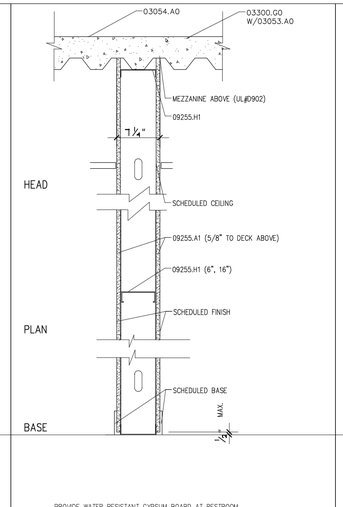

TYPE	OVERALL THICKNESS	STUD / BLOCK SIZE	FIRE RATING	U.L. LISTING	S.T.C. RATING
K	AS NOTED	3 5/8"	1 HR.	UL419	---

COMMENT

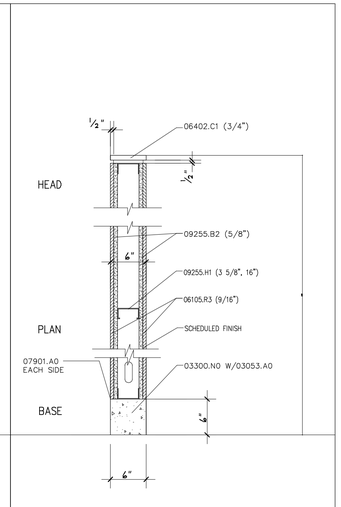

TYPE	OVERALL THICKNESS	STUD / BLOCK SIZE	FIRE RATING	U.L. LISTING	S.T.C. RATING
L	AS NOTED	3 5/8"	N.R.	---	---

COMMENT

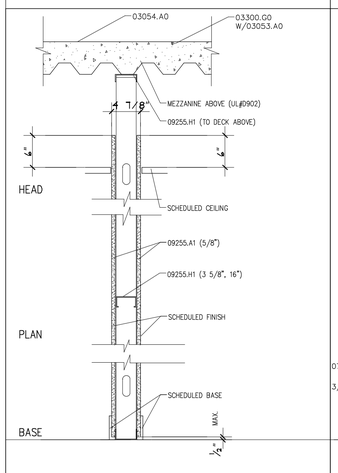

TYPE	OVERALL THICKNESS	STUD / BLOCK SIZE	FIRE RATING	U.L. LISTING	S.T.C. RATING
A	AS NOTED	3 5/8"	N.R.	---	---

COMMENT

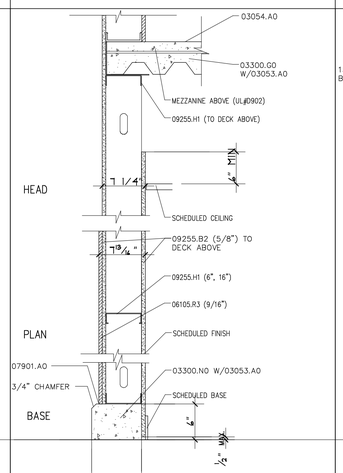

TYPE	OVERALL THICKNESS	STUD / BLOCK SIZE	FIRE RATING	U.L. LISTING	S.T.C. RATING
B	AS NOTED	3-5/8"	N.R.	---	---

COMMENT

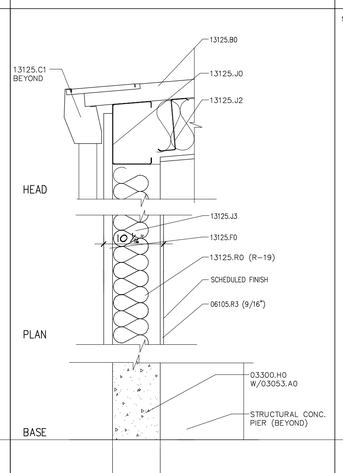

TYPE	OVERALL THICKNESS	STUD / BLOCK SIZE	FIRE RATING	U.L. LISTING	S.T.C. RATING
C	AS NOTED	–	N.R.	---	---

COMMENT

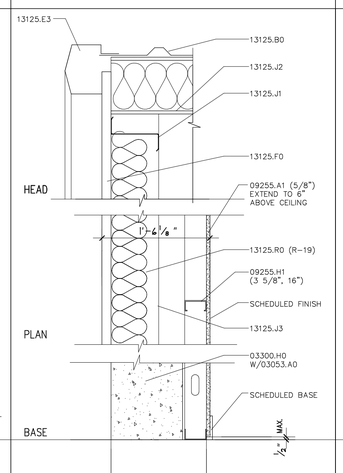

TYPE	OVERALL THICKNESS	STUD / BLOCK SIZE	FIRE RATING	U.L. LISTING	S.T.C. RATING
D	AS NOTED	3-5/8"	N.R.	---	---

COMMENT

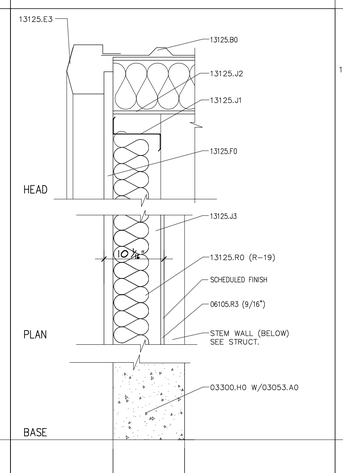

TYPE	OVERALL THICKNESS	STUD / BLOCK SIZE	FIRE RATING	U.L. LISTING	S.T.C. RATING
E	AS NOTED	–	N.R.	---	---

COMMENT

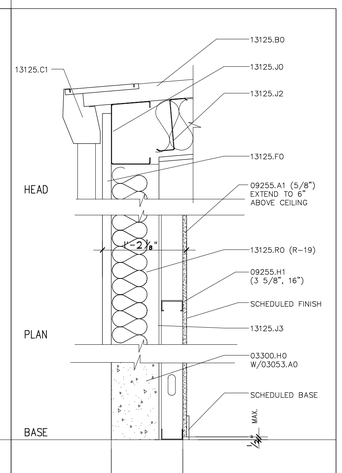

TYPE	OVERALL THICKNESS	STUD / BLOCK SIZE	FIRE RATING	U.L. LISTING	S.T.C. RATING
F	AS NOTED	3-5/8"	N.R.	---	---

COMMENT

A1 WALL TYPES

AE501 REF. AE101 SCALE: 1" = 1'-0"

SARGENT DESIGN GROUP
ARCHITECTURE | PLANNING
36 NORTH 300 WEST, SUITE B
CEDAR CITY, UTAH 84720
OFFICE: (435) 586-8510
FAX: (435) 586-4873
jcoltons@email.com

State of Utah–Department of Administrative Services
DIVISION OF FACILITIES CONSTRUCTION AND MANAGEMENT
4110 State Office Building/Salt Lake City, Utah 84114/538-3018

Project: UDOT HURRICANE FACILITY
DFCM PROJECT NO. 07292900

Sheet Title: WALL TYPES

Revisions:

PROJECT NUMBER: 08527
DATE: 09.17.08
DRAWN BY: J.C.S.
CHECKED BY: J.C.S.
APPROVED BY: J.C.S.

AE5.01
SHEET NUMBER:
Sheet of

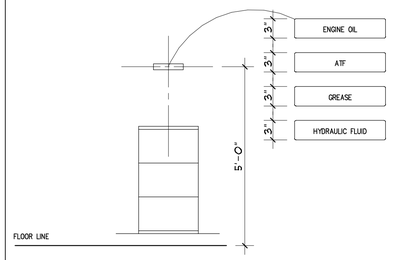

RE: SPECIFICATION – 10425 FOR MORE INFORMATION

D1 SIGNAGE "A"

AE502 REF. AE101 SCALE: NO SCALE

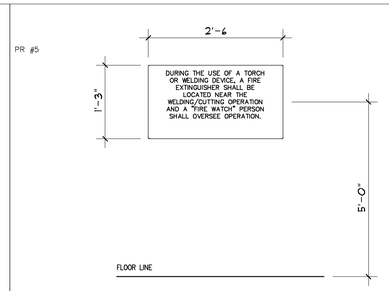

RE: SPECIFICATION – 10425 FOR MORE INFORMATION

D2 SIGNAGE "B"

AE502 REF. AE101 SCALE: NO SCALE

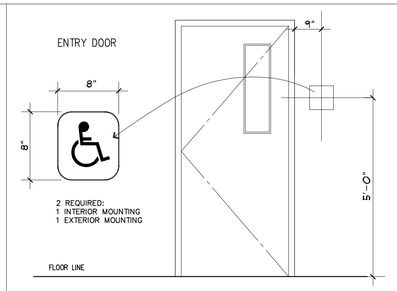

RE: SPECIFICATION – 10425 FOR INFO.

D3 SIGNAGE "C"

AE502 REF. AE101 SCALE: NO SCALE

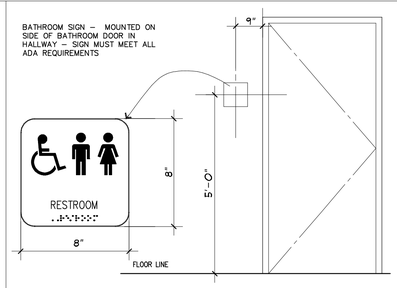

RE: SPECIFICATION – 10425 FOR INFO.

D4 SIGNAGE "D"

AE502 REF. AE101 SCALE: NO SCALE

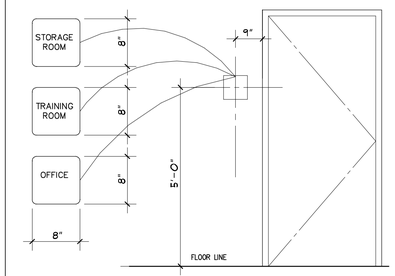

RE: SPECIFICATION – 10425 FOR MORE INFORMATION

C1 SIGNAGE "E"

AE502 REF. AE101 SCALE: NO SCALE

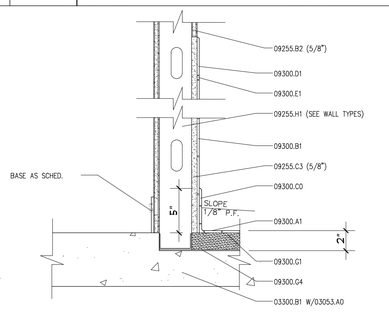

C2 TILE/TILE BASE DETAIL

AE502 REF. AE401 SCALE: 1 1/2" = 1'-0"

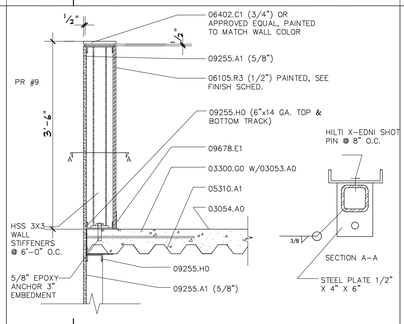

C3 LOW PARTITION WALL DTL.

AE502 REF. AE101 SCALE: 3/4" = 1'-0"

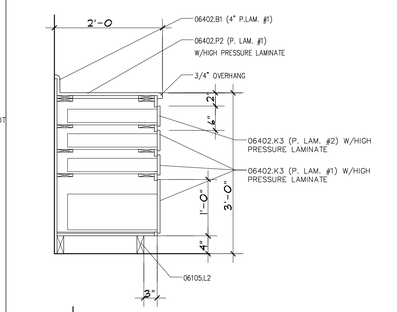

C4 BASE CABINET SECTION

AE502 REF. AE402 SCALE: 3/4" = 1'-0"

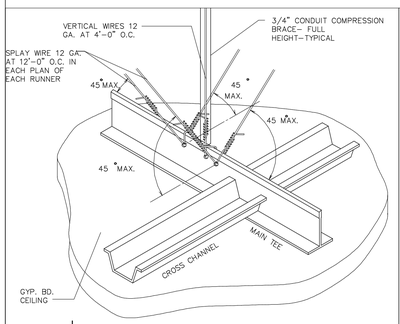

B1 SEISMIC BRACING DETAIL

AE502 REF. AE121 SCALE: NONE

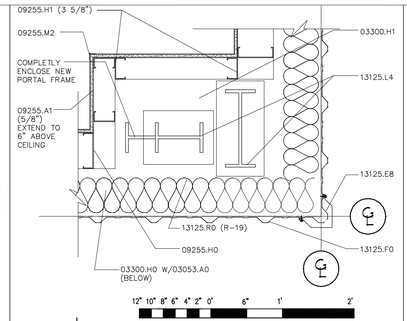

B2 COLUMN DETAIL

AE502 REF. AE101 SCALE: 1" = 1'-0"

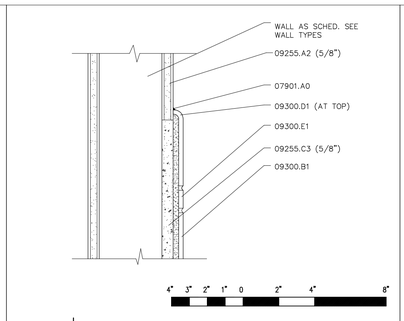

B3 BULLNOSE TILE DETAIL

AE502 REF. AE401 SCALE: 3" = 1'-0"

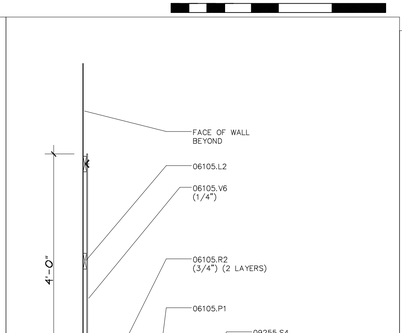

NOTE: ALL ROUGH WOOD MEMBERS SHALL BE PAINTED, SEE FINISH SCHEDULE.

B4 WORK BENCH SECTION

AE502 REF. AE402 SCALE: 3/4" = 1'-0"

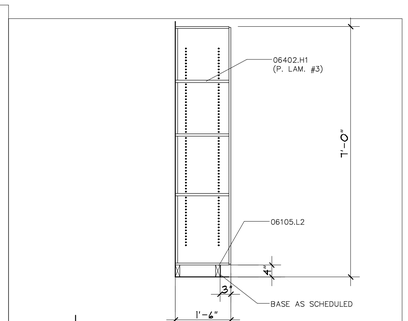

B5 SHELVING SECTION

AE502 REF. AE502 SCALE: 1/2" = 1'-0"

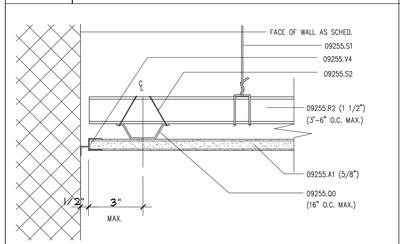

A1 CEILING DETAIL

AE502 REF. AE502 SCALE: 1/2" = 1'-0"

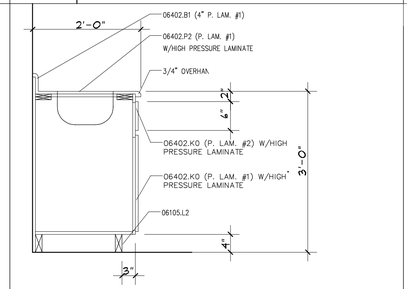

A2 BASE CABINET SECTION

AE502 REF. AE402 SCALE: 3/4" = 1'-0"

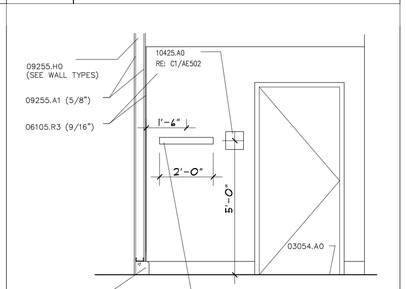

A3 MOP RACK DETAIL

AE502 REF. AE401 SCALE: 3/8" = 1'-0"

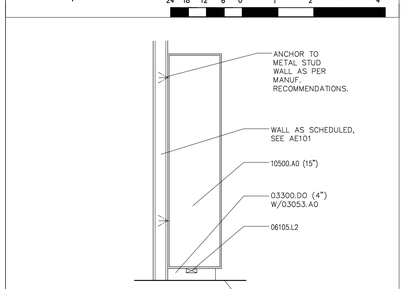

A5 LOCKER SECTION

AE502 REF. AE402 SCALE: 1/2" = 1'-0"

KEYNOTES

03053.A0 CONCRETE WATER PROOFING ADMIXTURE
03054.A0 OLIOPHOBIC TOPICAL SEALER
03300.A1 CONCRETE SLAB-ON-GRADE – SEE STRUCTURAL
03300.B1 CONCRETE SLAB – SEE STRUCTURAL
03300.D0 CONCRETE PAD (SIZE)
03300.G0 CONCRETE OVER METAL DECK – SEE STRCTURAL
03300.H0 FOUNDATION WALL – SEE STRUCTURAL
03300.H1 CONCRETE PIER – SEE STRUCTURAL
03300.N0 CONCRETE CURB (HEIGHT)

05310.A1 METAL DECK – SEE STRUCTURAL

06105.L2 BLOCKING AS REQUIRED
06105.P1 2 x 4
06105.P6 4 x 4
06105.R2 SEATHING – PLYWOOD (THICKNESS) GRADE (SIZE)
06105.V6 PEGBOARD (THICKNESS)
06105.R3 PROTECTION BOARD (THICKNESS)
06402.B1 PLASTIC LAMINATE BACKSPLASH (HEIGHT)
06402.C1 PAINT GRADE WOOD CAP (THICK.)
06402.H1 ADJUSTABLE SHELVES (FINISH)
06402.0 BASE UNIT (FINISH)
06402.K3 BASE UNIT WITH DRAWERS (FINISH)
06402.P2 COUNTERTOP (FINISH)– P. LAM. ON 3/4" PLYWOOD

07901.A0 CONT. SEALANT

09255.A1 GYPSUM BOARD (THICKNESS)
09255.A2 WATER RESISTANT GYPSUM BOARD (THICKNESS)
09255.B2 TYE "X" GYPSUM BOARD (THICKNESS)
09255.C3 CEMENT BOARD (THICKNESS)
09255.H0 METAL STUD
09255.H1 METAL STUDS, (SIZE, SPACING)
09255.M2 METAL CORNER BEAD (TYP.)
09255.Q0 7/8" METAL FURRING CHANNEL
09255.R2 CHANNEL (SIZE, SPACING)
09255.S1 GA. WIRE HANGERS
09255.S2 18 GA. WIRE TIES
09255.S4 14 GA. STAINLESS STEEL COUNTER TOP (FINISH)
09255.V4 VINYL TRIM
09300.A1 FLOOR TILE – SEE FINISH SCHEDULE
09300.B1 WALL TILE – SEE FINISH SCHEDULE
09300.C0 TILE BASE
09300.D1 BULLNOE TRIM UNIT
09300.E1 1/2" X 6" TILE TRIM PIECE – SEE FINISH SCHEDULE
09300.G1 MORTAR BED
09300.G4 WATERPROOF MEMBRANE
09678.E1 RUBBER BASE (SIZE)

10425.A0 ROOMM SIGNAGE
10500.A0 METAL LOCKERS (WIDTH)
10800.D0 MOP RACK

13125.E8 CORNE TRIM
13125.F0 METAL WALL PANEL
13125.L4 STEEL COLUMN – PRIMED AND PAINTED
13125.R0 INSULATION AND VAPOR BARRIER (R-VALUE)

GENERAL NOTES

1. FIELD VERIFY ALL EXISTING CONDITIONS AND THEIR COMPATIBILITY WITH NEW CONSTRUCTION PRIOR TO THE COMMENCEMENT OF WORK. COORDINATE DISCREPANCIES WITH ARCHITECT.

2. DO NOT SCALE DRAWINGS.

3. SEE CIVIL, STRUCTURAL, MECHANICAL AND ELECTRICAL DRAWINGS OR MORE INFORMATION.

SARGENT DESIGN GROUP
ARCHITECTURE | PLANNING
36 NORTH 300 WEST, SUITE B
CEDAR CITY, UTAH 84720
OFFICE: (435) 586-8510
FAX: (435) 586-8873
jcolton@email.com

State of Utah–Department of Administrative Services
DIVISION OF FACILITIES CONSTRUCTION AND MANAGEMENT
4110 State Office Building/Salt Lake City, Utah 8414/5538-3018

Project:
UDOT HURRICANE FACILITY
DFCM PROJECT NO. 07292900

Sheet Title:
SIGNAGE AND MISCELLANEOUS DETAILS

Revisions:

PROJECT NUMBER:	08527
DATE:	09.17.08
DRAWN BY:	J.C.S.
CHECKED BY:	J.C.S.
APPROVED BY:	J.C.S.

AE5.02

SHEET NUMBER:
Sheet of

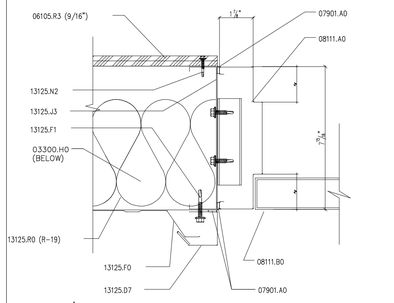

D1 DOOR JAMB DETAIL

AE601 REF. AE601 SCALE: 3" = 1'-0"

4" 3" 2" 1" 0 2" 4" 8"

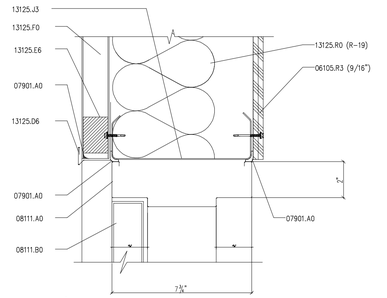

D2 DOOR HEAD DETAIL

AE601 REF. AE601 SCALE: 3" = 1'-0"

4" 3" 2" 1" 0 2" 4" 8"

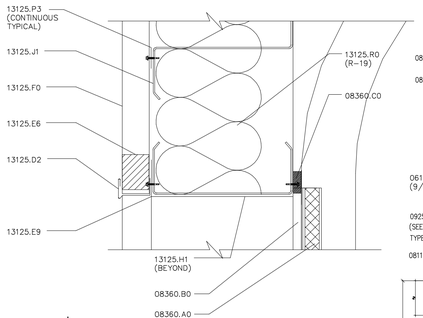

D3 SECTIONAL DOOR HEAD DTL.

AE601 REF. AE601 SCALE: 3" = 1'-0"

4" 3" 2" 1" 0 2" 4" 8"

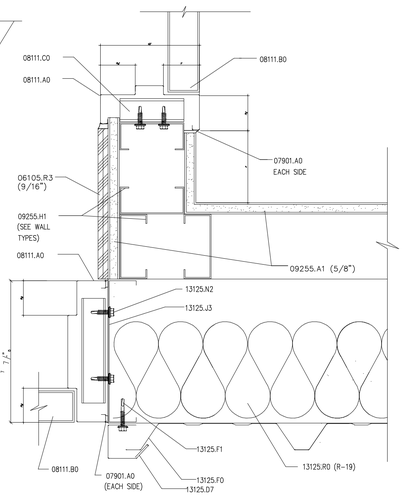

C4 DOOR JAMB DETAIL

AE601 REF. AE601 SCALE: 3" = 1'-0"

4" 3" 2" 1" 0 2" 4" 8"

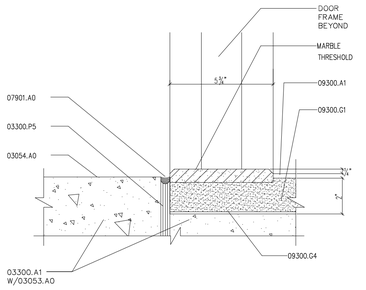

C1 MARBLE THRESHOLD DETAIL

AE601 REF. AE601 SCALE: 3" = 1'-0"

4" 3" 2" 1" 0 2" 4" 8"

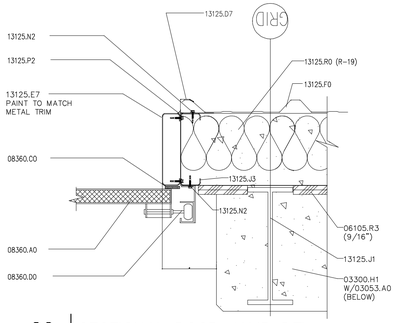

C2 SECTIONAL DOOR JAMB DTL.

AE601 REF. AE601 SCALE: 1 1/2" = 1'-0"

8" 6" 4" 2" 0 4" 8" 1'-4"

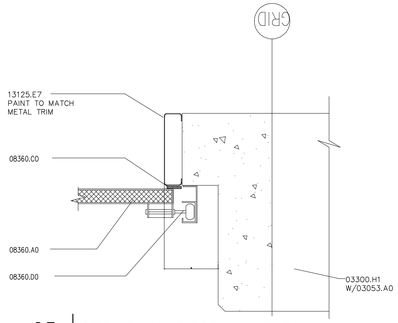

C3 SECTIONAL DOOR JAMB DTL.

AE601 REF. AE601 SCALE: 1 1/2" = 1'-0"

8" 6" 4" 2" 0 4" 8" 1'-4"

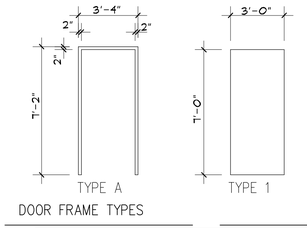

DOOR FRAME TYPES

DOOR TYPES

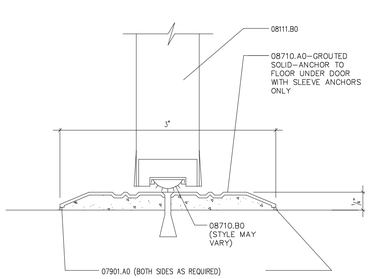

B1 THRESHOLD DETAIL

AE601 REF. AE601 SCALE: NONE

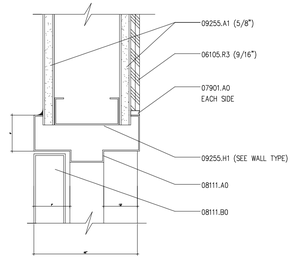

B2 DOOR HEAD DETAIL

AE601 REF. AE601 SCALE: 3" = 1'-0"

4" 3" 2" 1" 0 2" 4" 8"

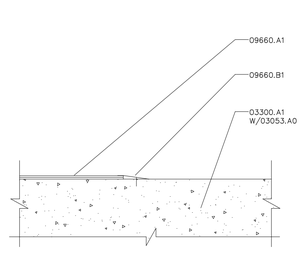

B3 VCT-CONCRETE TRANSITION

AE601 REF. AE601 SCALE: 3" = 1'-0"

4" 3" 2" 1" 0 2" 4" 8"

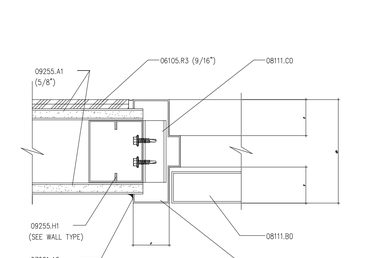

A1 DOOR JAMB DETAIL

AE601 REF. AE601 SCALE: 3" = 1'-0"

4" 3" 2" 1" 0 2" 4" 8"

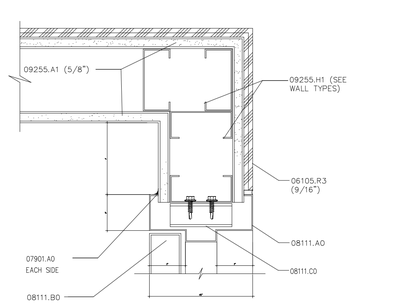

A2 DOOR JAMB DETAIL

AE601 REF. AE601 SCALE: 3" = 1'-0"

4" 3" 2" 1" 0 2" 4" 8"

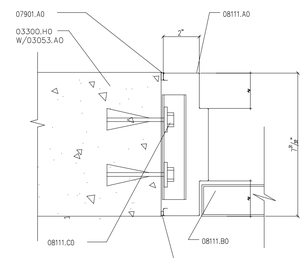

A3 DOOR JAMB DETAIL

AE601 REF. AE601 SCALE: 3" = 1'-0"

4" 3" 2" 1" 0 2" 4" 8"

KEYNOTES

03053.A0 CONCRETE WATER PROOFING ADMIXTURE
03054.A0 OLIOPHOBIC TOPICAL SEALER
03300.A1 CONCRETE SLAB ON GRADE – SEE STRUCTURAL
03300.H0 FOUNDATION WALL – SEE STRUCTURAL
03300.H1 CONCRETE PEIR – SEE STRUCTURAL
03300.P5 ISOLATION JOINT

0605.R3 PROTECTION BOARD (THICKNESS)

07901.A0 CONT. SEALANT

08111.A0 PRESSED METAL FRAME
08111.B0 HOLLOW METAL DOOR
08111.C0 JAMB ANCHOR
08360.A0 OVERHEAD SECTIONAL DOOR
08360.B0 3" HEAVY DUTY OVERHEAD SECTIONAL DOOR TRACK
08360.C0 WEATHERSTRIPPING
08360.D0 DOOR GUIDE
08710.A0 THRESHOLD
08710.B0 DOOR SWEEP

09255.A1 GYPSUM BOARD (THICKNESS)
09255.H1 METAL STUDS (SIZE)
09300.A1 FLOOR TILE – SEE FINISH SCHEDULE
09300.G1 MORTAR BED
09300.G4 WATERPROOF MEMBRANE
09660.A1 VINYL COMPOSITION TILE
09660.B1 VINYL TRANSITION STRIP

13125.D2 METAL HEAD FLASHING
13125.D6 DOOR HEAD FLASHING
13125.D7 JAMB FLASHING
13125.E6 WALL CLOSURE
13125.E7 METAL OUTSIDE CLOSURE
13125.E9 FRAMED OPENING HEADER
1125.F0 METAL WALL PANEL
13125.F1 METAL WALL FASTENER
13125.H1 METAL ANGLE
13125.J1 STRUCTURAL GIRT – PAINTED
13125.J3 STRUCTURAL GIRT
13125.N2 FASTENER (SPACING)
13125.P2 SEALANT
13125.P3 THERMAL BREAK
13125.R0 INSULATION & VAPOR ARRIER (R-VALUE)

GENERAL NOTES

1. FIELD VERIFY ALL EXISTING CONDITIONS AND THEIR COMPATIBILITY WITH NEW CONSTRUCTION PRIOR TO THE COMMENCEMENT OF WORK. COORDINATE DISCREPANCIES WITH ARCHITECT

2. DO NOT SCALE DRAWINGS.

3. SEE SPECIFICATIONS FOR GLAZING SCHEDULE.

4. SEE SPECIFICTIONS FOR DOOR HARDWARE GROUPS

DOOR SCHEDULE

		DOORS							FRAMES			DETAILS				
DOOR #	ROOM #	TYPE	WIDTH	HEIGHT	THICK.	MATERIAL	FINISH	GLASS	TYPE	MATERIAL	FINISH	HEAD	JAMB	THRESH.	LABEL	REMARKS
D101A	101	3	3'-0"	7'-0"	1 3/4"	HM	PT	T	A	HM	PT	D2/AE601	D1 & A3/AE601	B1/AE601	–	INSULATED
D101B	101	4	14'-0"	14'-0"	–	ST	–	T	–	ST	PT	D3/AE601	C2 & C3/AE601	–	–	SECTIONAL INSULATED DOOR
D102A	102	3	3'-0"	7'-0"	1 3/4"	HM	PT	T	A	HM	PT	D2/AE601	C4, A3 & D1/AE601	B1/AE601	–	INSULATED
D102B	102	4	14'-0"	14'-0"	–	ST	–	T	–	ST	PT	D3/AE601	C2 & C3/AE601	–	–	SECTIONAL INSULATED DOOR
D102C	102	4	14'-0"	14'-0"	–	ST	–	T	–	ST	PT	D3/AE601	C2 & C3/AE601	–	–	SECTIONAL INSULATED DOOR
D102D	102	4	14'-0"	14'-0"	–	ST	–	T	–	ST	PT	D3/AE601	C2 & C3/AE601	–	–	SECTIONAL INSULATED DOOR
D102E	102	4	14'-0"	14'-0"	–	ST	–	T	–	ST	PT	D3/AE601	C2 & C3/AE601	–	–	SECTIONAL INSULATED DOOR
D102F	102	4	14'-0"	14'-0"	–	ST	–	T	–	ST	PT	D3/AE601	C2 & C3/AE601	–	–	SECTIONAL INSULATED DOOR
D102G	102	3	3'-0"	7'-0"	1 3/4"	HM	PT	T	A	HM	PT	D3/AE601	D1 & A3/AE601	B1/AE601	–	INSULATED
D102H	102	4	14'-0"	14'-0"	–	ST	–	T	–	ST	PT	D3/AE601	C2 & C3/AE601	–	–	SECTIONAL INSULATED DOOR
D102J	102	4	14'-0"	14'-0"	–	ST	–	T	–	ST	PT	D3/AE601	C2 & C3/AE601	–	–	SECTIONAL INSULATED DOOR
D102K	102	4	14'-0"	14'-0"	–	ST	–	T	–	ST	PT	D3/AE601	C2 & C3/AE601	–	–	SECTIONAL INSULATED DOOR
D102L	102	4	14'-0"	14'-0"	–	ST	–	T	–	ST	PT	D3/AE601	C2 & C3/AE601	–	–	SECTIONAL INSULATED DOOR
D102M	102	4	14'-0"	14'-0"	–	ST	–	T	–	ST	PT	D3/AE601	C2 & C3/AE601	–	–	SECTIONAL INSULATED DOOR
D103A	103	1	3'-0"	7'-0"	1 3/4"	HM	PT	–	A	HM	PT	B2/AE601	A2 & A1/AE601	–	45 MIN.	
D103AA	103A	1	3'-0"	7'-0"	1 3/4"	HM	PT	–	A	HM	PT	B2/AE601	A2 & A1/AE601	–	–	FIRE RISER ROOM
D104A	104	1	3'-0"	7'-0"	1 3/4"	HM	PT	–	A	HM	PT	B2/AE601	A2 & A1/AE601	C1/AE601	–	
D105A	105	2	3'-0"	7'-0"	1 3/4"	HM	PT	–	A	HM	PT	B2/AE601	A2 & A1/AE601	B3/AE601	–	
D106A	106	3	3'-0"	7'-0"	1 3/4"	HM	PT	T	A	HM	PT	B2/AE601	C4 & A1/AE601	B3/AE601	–	
D107A	107	3	3'-0"	7'-0"	1 3/4"	HM	PT	T	A	HM	PT	B2/AE601	C4 & A1/AE601	B3/AE601	–	
D108A	108	2	3'-0"	7'-0"	1 3/4"	HM	PT	–	A	HM	PT	B2/AE601	A2 & A1/AE601	B3/AE601	–	
D109A	109	1	3'-0"	7'-0"	1 3/4"	HM	PT	–	A	HM	PT	B2/AE601	A2 & A1/AE601	C1/AE601	–	
D110A	110	1	3'-0"	7'-0"	1 3/4"	HM	PT	–	A	HM	PT	B2/AE601	A2 & A1/AE601	–	45 MIN.	
D111A	111	4	14'-0"	14'-0"	–	ST	–	T	–	ST	PT	D3/AE601	C2 & C3/AE601	–	–	SECTIONAL INSULATED DOOR
D111B	111	3	3'-0"	7'-0"	1 3/4"	HM	PT	T	A	HM	PT	D2/AE601	D1 & A3/AE601	B1/AE601	–	INSULATED
D111C	111	3	3'-0"	7'-0"	1 3/4"	HM	PT	T	A	HM	PT	D2/AE601	D1 & A3/AE601	B1/AE601	–	INSULATED
D112A	112	4	14'-0"	14'-0"	–	ST	–	T	–	ST	PT	D3/AE601	C2 & C3/AE601	–	–	SECTIONAL INSULATED DOOR
D112B	112	4	14'-0"	14'-0"	–	ST	–	T	–	ST	PT	D3/AE601	C2 & C3/AE601	–	–	SECTIONAL INSULATED DOOR
D113A	113	4	14'-0"	14'-0"	–	ST	–	T	–	ST	PT	D3/AE601	C2 & C3/AE601	–	–	SECTIONAL INSULATED DOOR
D113B	113	3	3'-0"	7'-0"	1 3/4"	HM	PT	T	A	HM	PT	D2/AE601	D1 & A3/AE601	B1/AE601	–	INSULATED
D114A	114	3	3'-0"	7'-0"	1 3/4"	HM	PT	T	A	HM	PT	B2/AE601	C4 & A1/AE601	B3/AE601	–	
D115A	115	3	3'-0"	7'-0"	1 3/4"	HM	PT	T	A	HM	PT	B2/AE601	C4 & A1/AE601	B3/AE601	–	
D116A	116	3	3'-0"	7'-0"	1 3/4"	HM	PT	T	A	HM	PT	B2/AE601	C4 & A1/AE601	B3/AE601	–	
D117A	117	3	3'-0"	7'-0"	1 3/4"	HM	PT	T	A	HM	PT	D2/AE601	C4, A3 & D1/AE601	B1/AE601	–	INSULATED
D117B	117	3	3'-0"	7'-0"	1 3/4"	HM	PT	T	A	HM	PT	D2/AE601	C4, A3 & D1/AE601	B1/AE601	–	INSULATED
D118A	118	3	3'-0"	7'-0"	1 3/4"	HM	PT	T	A	HM	PT	B2/AE601	C4 & A1/AE601	B3/AE601	–	
D119A	119	1	3'-0"	7'-0"	1 3/4"	HM	PT	–	A	HM	PT	B2/AE601	A2 & A1/AE601	C1/AE601	–	
D120A	120	1	3'-0"	7'-0"	1 3/4"	HM	PT	–	A	HM	PT	B2/AE601	A2 & A1/AE601	–	45 MIN.	
D121A	121	3	3'-0"	7'-0"	1 3/4"	HM	PT	T	A	HM	PT	B2/AE601	C4 & A1/AE601	B3/AE601	–	INSULATED

SARGENT DESIGN GROUP
ARCHITECTURE | PLANNING
36 NORTH 300 WEST, SUITE B
CEDAR CITY, UTAH 84720
OFFICE: (435) 586-8510
FAX: (435) 586-4873
jcoltons@email.com

State of Utah-Department of Administrative Services
DIVISION OF FACILITIES CONSTRUCTION AND MANAGEMENT
4110 State Office Building/Salt Lake City, Utah 84114/538-3018

Project: UDOT HURRICANE FACILITY
DFCM PROJECT NO. 07292900

Sheet Title: DOORS AND WINDOWS SCHEDULES, TYPES AND DETAILS

Revisions:

PROJECT NUMBER: 08527
DATE: 09.17.08
DRAWN BY: J.C.S.
CHECKED BY: J.C.S.
APPROVED BY: J.C.S.

AE6.01
SHEET NUMBER:
Sheet of

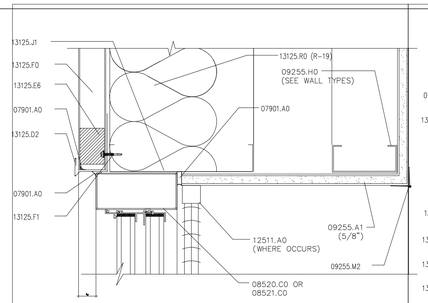

D1 WINDOW HEAD DETAIL

AE602 REF. AE602 SCALE: 3" = 1'-0"

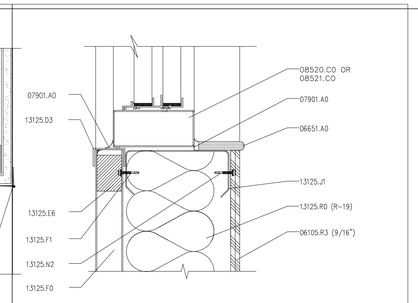

D2 WINDOW SILL DETAIL

AE602 REF. AE602 SCALE: 3" = 1'-0"

4" 3" 2" 1" 0 2" 4" 8"

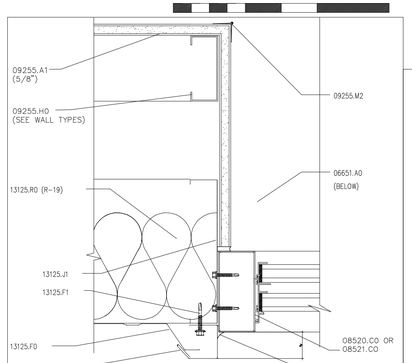

C1 WINDOW JAMB DETAIL

AE602 REF. AE602 SCALE: 3" = 1'-0"

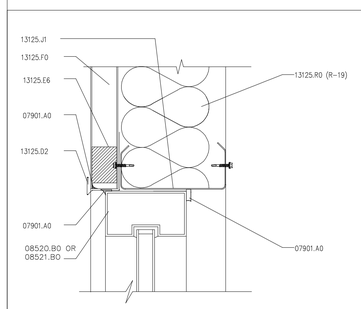

C2 WINDOW HEAD DETAIL

AE602 REF. AE602 SCALE: 3" = 1'-0"

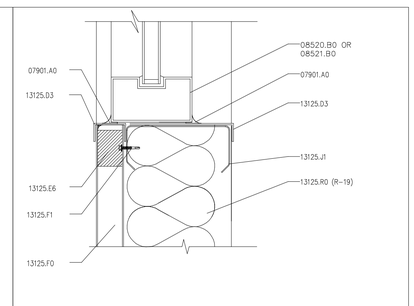

C3 WINDOW SILL DETAIL

AE602 REF. AE602 SCALE: 3" = 1'-0"

4" 3" 2" 1" 0 2" 4" 8"

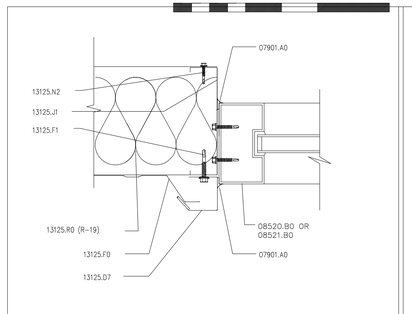

B1 WINDOW JAMB DETAIL

AE602 REF. AE602 SCALE: 3" = 1'-0"

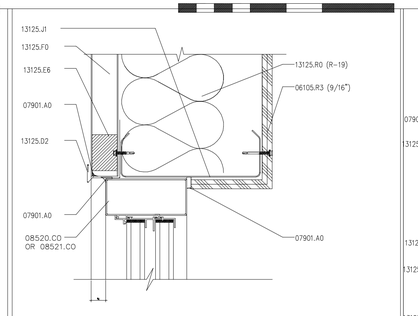

B2 WINDOW HEAD DETAIL

AE602 REF. AE602 SCALE: 3" = 1'-0"

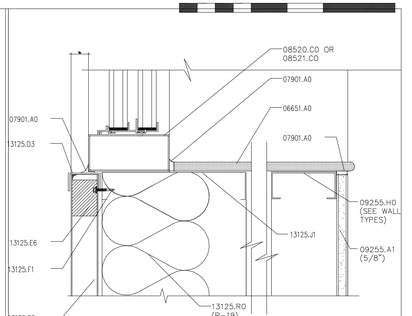

B3 WINDOW SILL DETAIL

AE602 REF. AE602 SCALE: 3" = 1'-0"

4" 3" 2" 1" 0 2" 4" 8"

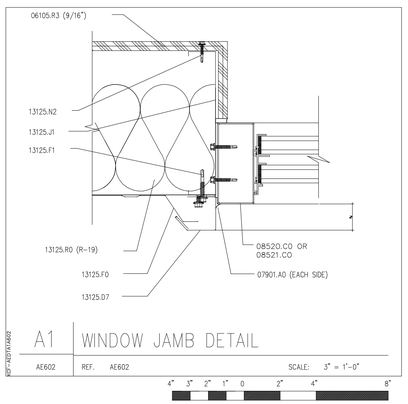

A1 WINDOW JAMB DETAIL

AE602 REF. AE602 SCALE: 3" = 1'-0"

4" 3" 2" 1" 0 2" 4" 8"

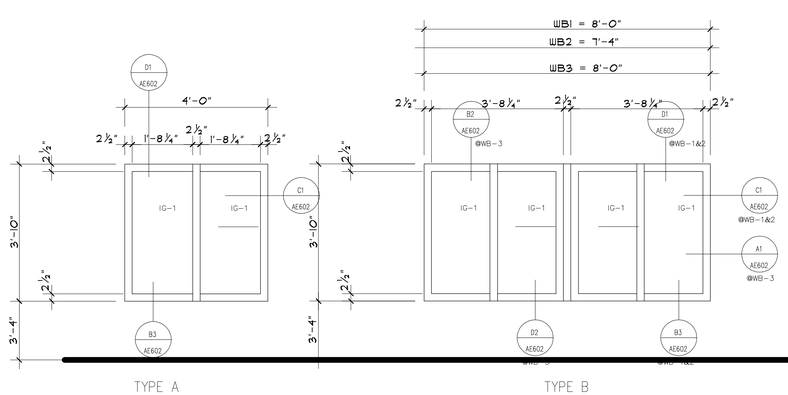

TYPE A TYPE B

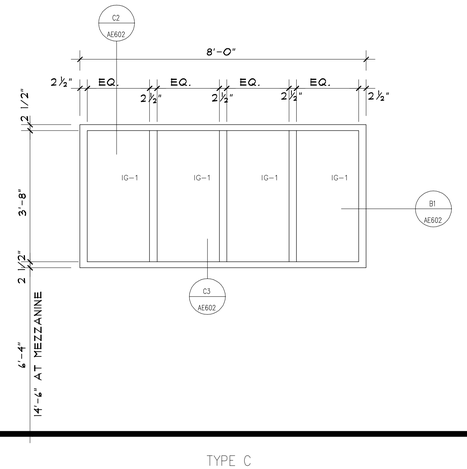

TYPE C

ROOM FINISH SCHEDULE

ROOM NAME & NUMBER		FLOOR	BASE	WALLS				DOOR/FRAMES	P. LAM.	CEILING	REMARKS
				WEST	EAST	NORTH	SOUTH				
101	MAINTENANCE BAY	1	–	1 & 5	–	1 & 5	1 & 5	1	–	3	PAINT ALL EXPOSED WOOD @ WORKBENCH FEATHER GRAY OR EQUAL
102	VEHICLE GARAGE	1	–	1, 3 & 5	1, 3 & 5	1 & 5	1, 3 & 5	1	–	3	–
103	STORAGE	1	2	3	3	3	3	1	3	2	–
103A	RISER	1	2	3	3	3	3	1	3	2	–
104	RESTROOM	3	3	2 & 4	2 & 4	2 & 4	2 & 4	2	–	1	USE BULLNOSE AT TOP OF WAINSCOT
105	TRAINING ROOM	2	1	2	2	2	2	2	1 & 2	4	–
106	OFFICE	2	1	2	2	2	2	2	–	4	–
107	OFFICE	2	1	2	2	2	2	2	–	4	–
108	TRAINING ROOM	2	1	2	2	2	2	2	1 & 2	4	–
109	RESTROOM	3	3	2 & 4	2 & 4	2 & 4	2 & 4	2	–	1	USE BULLNOSE AT TOP OF WAINSCOT
110	STORAGE	1	2	3	3	3	3	1	3	2	–
111	WASH BAY	1	–	–	1 & 5	1 & 5	1 & 5	1	–	3	PAINT ALL EXPOSED WOOD @ WORKBENCH FEATHER GRAY OR EQUAL
112	STORAGE	1	–	1 & 5	1 & 5	1 & 5	1 & 5	1	–	3	–
113	SIGNALS	1	–	1 & 5	1 & 5	1 & 5	1 & 5	1	–	3	–
114	OFFICE	4	1	2	2	2	2	2	–	4	–
115	OFFICE	4	1	2	2	2	2	2	–	4	–
116	OFFICE	4	1	2	2	2	2	2	–	4	–
117	HALLWAY	4	1	2	2	2	2	2	–	4	–
118	CONFERENCE	4	1	2	2	2	2	2	–	4	–
119	RESTROOM	3	3	2 & 4	2 & 4	2 & 4	2 & 4	2	–	1	USE BULLNOSE AT TOP OF WAINSCOT
120	STORAGE	1	2	3	3	3	3	1	3	2	–
121	OFFICE	4	1	2	2	2	2	2	–	4	–
201	MEZZANINE	1	2	1 & 5	1	1	1 & 5	–	–	3	PAINT LOW WALL, CAP & DECK ANGLE TO MATCH DOOR COLOR #1
202	MEZZANINE	1	2	1	1 & 5	1	1 & 5	–	–	3	PAINT LOW WALL, CAP & DECK ANGLE TO MATCH DOOR COLOR #1
203	MEZZANINE	1	2	1 & 5	1 & 5	1	1 & 5	–	–	3	PAINT LOW WALL, CAP & DECK ANGLE TO MATCH DOOR COLOR #1

ROOM FINISH LEGEND

FLOOR	BASE	WALL	DOOR & FRAMES	PLASTIC LAMINATE	CEILING
1. CONCRETE FLOOR, WITH OLIOPHOBIC TOPICAL SEALER. 2. 12" x 12" VINYL COMPOSITION TILE – ARMSTRONG STANDARD EXCELON IMPERIAL TEXTURE #51858–SANDRIFT WHITE OR EQUAL 3. 2" x 2" CERAMIC TILE – DALTILE, KEYSTONES, MEXICAN SAND SPECKLE W/MAPEI GROUT #05 – CHAMOIS OR EQUAL 4. 24"X24" CARPET TILE	1. 4" RUBBER BASE – JOHNSONITE #49 – BEIGE OR EQUAL 2. 4" RUBBER BASE – JOHNSONITE #38 – PEWTER OR EQUAL 3. 2" x 2" COVED TILE BUILT UP BASE – DALTILE, #M85B – KEYSTONES, MEXICAN SAND SPECKLE OR EQUAL	1. PROTECTION BOARD: C–C GRADE PLYWOOD – PAINTED BENJAMIN MOORE #2127–60 – FEATHER GRAY OR EQUAL. 2. GYPSUM BOARD – PAINTED BENJAMIN MOORE – NAVAJO WHITE OR EQUAL 3. GYPSUM BOARD – PAINTED BENJAMIN MOORE #2127–60 – FEATHER GRAY OR EQUAL 4. 4 14" x 4 1/4" CERAMIC WALL TILE – DALTILE #X735 – ALMOND – MATTE FINISH W/1/2" x 6" FLAT TOP LINER – DALTILE #K174 – MEXICAN SAND – SEMI–GLOSS FINISH OR EQUAL W/MAPEI GROUT #39 – IVORY OR EQUAL 5. METAL BUILDING EXPOSED STRUCTURE – PAINTED BENJAMIN MOOR – NAVAJO WHITE OR EQUAL.	1. PAINTED – BENJAMIN MOORE #2124–30 DEEP SILVER OR EQUAL 2. PAINTED – ICI #427 – DEERFIELD OR EQUAL	1. COUNTER TOP/CABINET FACE – WILSONART #4781–60 SUNSTONE OR EQUAL 2. CABINET FACE – WILSONART #4794–60 WINDSWEPT BRONZE OR EQUAL 3. SHELVING – WILSONART #073–60 PEWTER OR EQUAL	1. GYPSUM BOARD – PAINTED BENJAMIN MOORE – NAVAJO WHITE OR EQUAL 2. GYPSUM BOARD – PAINTED BENJAMIN MOORE #2127–60 – FEATHER GRAY OR EQUAL 3. METAL BUILDING EXPOSED STRUCTURE – PAINTED BENJAMIN MOORE – NAVAJO WHITE OR EQUAL. 4. 2X4 ACOUSTICAL CEILING WITH GRID

KEYNOTES

06105.R3 PROTECTION BOARD (THICKNESS)
06651.A0 1/2" WHITE SOLID SURFACE WINDOW SILL

07901.A0 CONT. SEALANT

08520.B0 FIXED ALUM. WINDOW
08520.C0 ALUM. WINDOW W/SLIDING GLASS PANEL
08521.B0 FIXED VINYL WINDOW
08521.C0 VINYL WINDOW WSLIDING GLASS PANEL

09255.A1 GYPSUM BOARD (THICKNESS)
09255.H0 METAL STUD
09255.M2 METAL CORNER BEAD (TYP)

12511.A0 HORIZONTAL LOUVER BLINDS

13125.D2 METAL HEAD FLASHING
13125.D3 METAL SILL FLASHING
13125.D7 JAMB FLASHING
1312.E6 WALL CLOSURE
13125.F0 METAL WALL PANEL
13125.F1 METAL WALL FASTENER
13125.J1 STRUCTURAL GIRT – PAINTED
13125.N2 FASTENER (SPACING)
13125.R0 INSULATION & VAPOR BARRIER (R–VALUE)

GENERAL NOTES

1. FIELD VERIFY ALL EXISTING CONDITIONS AND THEIR COMPATIBILITY WITH NEW CONSTRUCTION PRIOR TO THE COMMENCEMENT OF WORK. COORDINATE DISCREPANCIES WITH ARCHITECT.

2. DO NOT SCALE DRAWINGS

3. ALL FLASHING TO BE PAINTED TO MATCH WINDOW FRAMES

4. SE SPECIFICATIONS FOR ALL GLAZING TYPES.

5. ALL INTERIOR WALL AND CEILING FINISHES SHALL BE CLASS C: FLAME SPREAD 76–200; SMOKE–DEVELOPED 0–450. EXCEPTION: MATERIALS, OTHER THAN TEXTILES, TESTED IN ACCORDANCE WITH SECTION 803.2.

SARGENT DESIGN GROUP
ARCHITECTURE | PLANNING
36 NORTH 300 WEST, SUITE B
CEDAR CITY, UTAH 84720
OFFICE: (435) 586-8510
FAX: (435) 586-4873
jcoltons@email.com

State of Utah–Department of Administrative Services
DIVISION OF FACILITIES CONSTRUCTION AND MANAGEMENT
4110 State Office Building/Salt Lake City, Utah 84114/538-3018

Project:
UDOT HURRICANE FACILITY
DFCM PROJECT NO. 07292900

Sheet Title:
DOORS AND WINDOWS SCHEDULES, TYPES AND DETAILS

Revisions:

PROJECT NUMBER:	08527
DATE:	09.17.08
DRAWN BY:	J.C.S.
CHECKED BY:	J.C.S.
APPROVED BY:	J.C.S.

AE6.02

SHEET NUMBER:
Sheet of

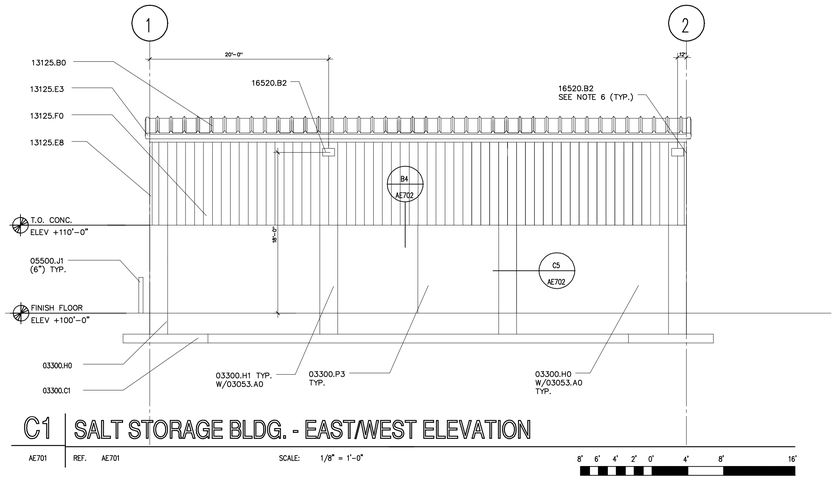

C1 SALT STORAGE BLDG. - EAST/WEST ELEVATION

AE701 REF. AE701 SCALE: 1/8" = 1'-0"

8' 6' 4' 2' 0' 4' 8' 16'

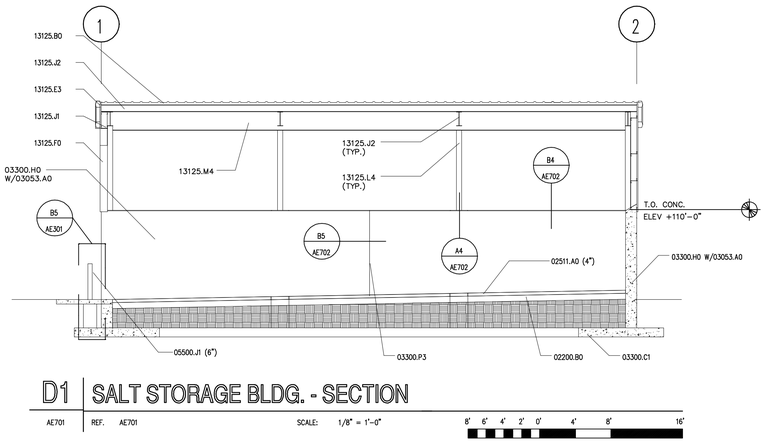

D1 SALT STORAGE BLDG. - SECTION

AE701 REF. AE701 SCALE: 1/8" = 1'-0"

8' 6' 4' 2' 0' 4' 8' 16'

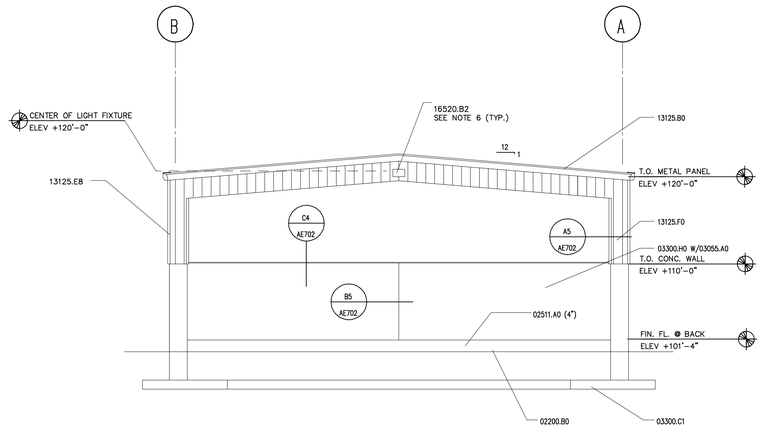

B4 SALT STORAGE BLDG. - SOUTH ELEVATION

AE701 REF. AE701 SCALE: 1/8" = 1'-0"

8' 6' 4' 2' 0' 4' 8' 16'

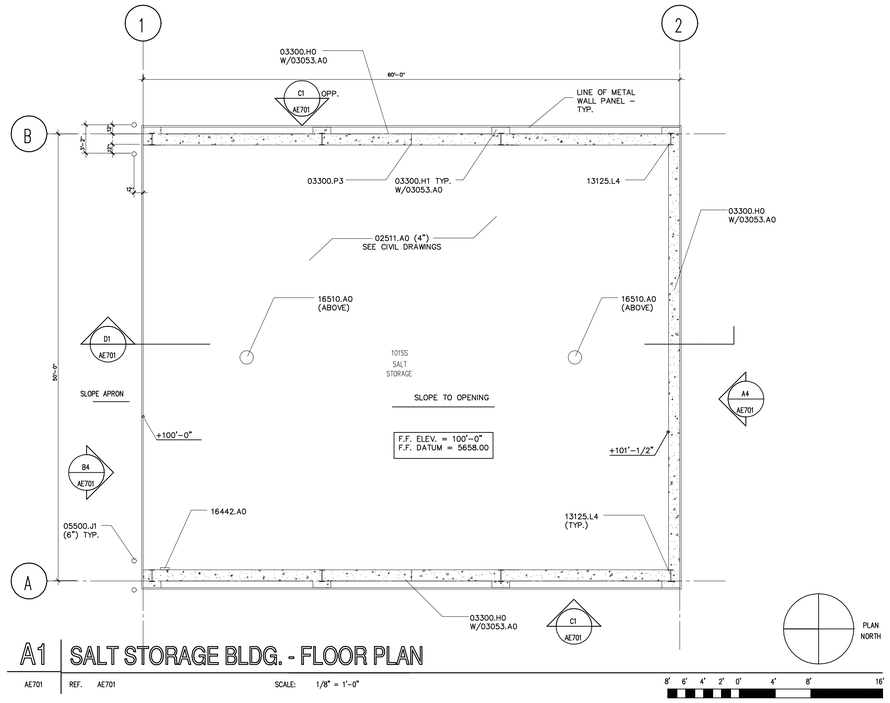

A1 SALT STORAGE BLDG. - FLOOR PLAN

AE701 REF. AE701 SCALE: 1/8" = 1'-0"

8' 6' 4' 2' 0' 4' 8' 16'

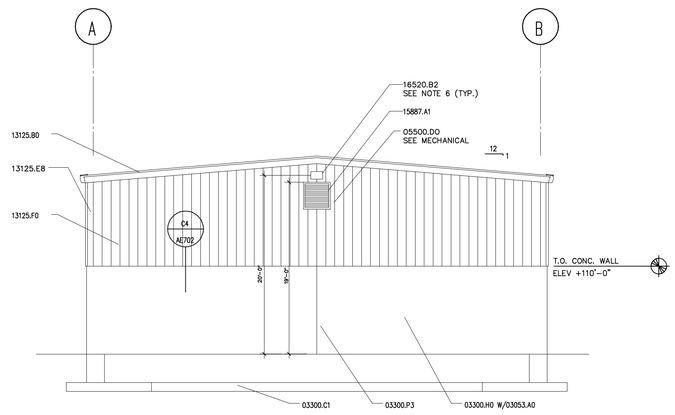

A4 SALT STORAGE BLDG. - NORTH ELEVATION

AE701 REF. AE701 SCALE: 1/8" = 1'-0"

8' 6' 4' 2' 0' 4' 8' 16'

KEYNOTES

02200.B0 GRAVEL BASE
02511.A0 ZERO VOIDS ASPHALTIC PAVING (THICKNESS)

03053.A0 CONCRETE WATER PROOFING ADMIXTURE
03300.C1 FOOTING RE: STRUCTURAL
03300.H0 FOUNDATION WALL - SEE STRUCTURAL
03300.H1 CONCRETE PIER - SEE STRUCTURAL
03300.P3 CONTROL JOINT - SEE STRUCTURAL DETAIL B2/SS03

05500.D0 CHANNEL (SIZE)
05500.J1 PIPE BOLLARD (DIAMETER) GALVANIZED & PAINTED

13125.B0 STANDING SEAM METAL ROOF
13125.E3 RAKE TRIM
13125.E8 CORNER TRIM
13125.F0 METAL WALL PANEL
13125.1 STRUCTURAL GRT - PAINTED
13125.J2 ROOF PURLIN - PAINTED
13125.L4 STEEL COLUMN - PRIMED AND PAINTED
13125.M4 STEEL BEAM - PRIMED AND PAINTED

15887.A1 LOUVER WITH BIRD SCREEN (36" x 36" RUSHKIN #ELF-3750)

16442.A0 ELECTRICAL PANEL
6510.A0 INTERIOR LIGHTS
16520.B2 EXTERIOR WALL MOUNTED FLOOD LIGHTS

GENERAL NOTES

1. FIELD VERIFY ALL EXISTING CONDITIONS AND THEIR COMPATIBILITY WITH NEW CONSTRUCTION PRIOR TO THE COMMENCEMENT OF WORK. COORDINATE DISCREPANCIES WITH ARCHITECT.

2. DO NOT SCALE DRAWINGS.

3. SEE CIVIL, STRUCTURAL, AND ELECTRICAL DRAWINGS FOR MORE INFORMATION.

4. ALL EXPOSED STEEL IN SALT STORAGE BUILDING TO BE EPOXY COATED. RE: STRUCTURAL DRAWINGS.

5. PROVIDE 3/4" CHAMFER AT ALL OUTSIDE CORNERS.

6. EXTERIOR LIGHTS MUST BE SUPPORTED BY SUITABLE STRUCTURAL BRACING TO BE PROVIDED BY THE METAL BILDING MANUFACTURERER.

EXTERIOR COLOR SCHEDULE

(13125.B0) METAL ROOF: GALVALUME METAL ROOF

(13125.E3 & E8) RAKE TRIM & CORNER TRIM: SILICONIZED POLYESTER FINISH - COLOR "B" BY ARCHITECT

(13125.F0) METAL WALL PANEL: SILICONIZED POLYESTER FINISH - COLOR "A" BY ARCHITECT

(08111.A0, B0 & 08360.A0 DOORS & FRAMES: KYNAR 500 "BONE WHITE" OR EQUAL

(05500.J1) BOLLARDS: OSHA SAFETY YELLOW

SARGENT DESIGN GROUP
ARCHITECTURE | PLANNING
36 NORTH 300 WEST, SUITE B
CEDAR CITY, UTAH 84720
OFFICE: (435) 586-8510
FAX: (435) 586-4873
jcoltons@email.com

State of Utah-Department of Administrative Services
DIVISION OF FACILITIES CONSTRUCTION AND MANAGEMENT
4110 State Office Building/Salt Lake City, Utah 84114/538-3018

Project:
UDOT HURRICANE FACILITY
DFCM PROJECT NO. 07292900

Sheet Title:
SALT STORAGE PLAN, SECTION AND ELEVATIONS

Revisions:

PROJECT NUMBER:	08527
DATE:	09.17.08
DRAWN BY:	J.C.S.
CHECKED BY:	J.C.S.
APPROVED BY:	J.C.S.

AE1.01

SHEET NUMBER:
Sheet of

KEYNOTES

03053.A0	CONCRETE WATER PROOFING ADMIXTURE
03300.F0	CAST-IN-PLACE REINFORCED CONCRETE
03300.H0	FOUNDATION WALL - SEE STRUCTURAL
03300.H1	CONCRETE PIER - SEE STRUCTURAL
07901.H1	5/8" BEAD OF DE NEFF SWELLSEAL WA MASTIC
07901.H2	CONCENTRATEDDRY PAC
07901.H3	CONCENTRATED SLURRY COAT
13125.D1	METAL DRIP FLASHING
13125.D8	CONTINUOUS PRE-FINISHED SHEET METAL CLOSURE
13125.E2	PANEL TRIM
13125.E6	WALL CLOSURE
13125.E8	CORNER TRIM
13125.F0	METAL WALL PANEL
13125.F1	METAL WLL FASTENER
13125.F2	BLIND RIVET
13125.H1	METAL ANGLE
13125.J1	STRUCTURAL GIRT - PAINTED
13125.L4	STEEL COLUMN - PRIMED AND PAINTED
13125.N1	ANCHOR

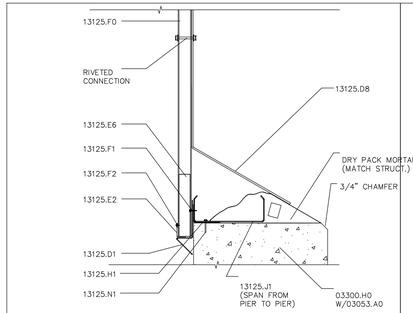

C4 PANEL @ CONCRETE WALL

AE702 REF. AE701 SCALE: 1 1/2" = 1'-0"

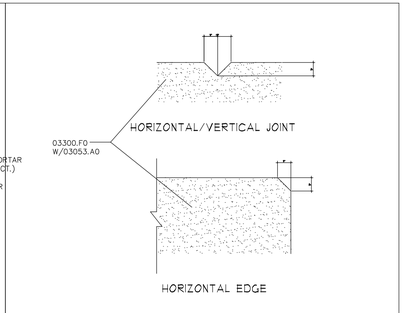

C5 CHAMFER DETAIL

AE702 REF. AE701 SCALE: 3" = 1'-0"

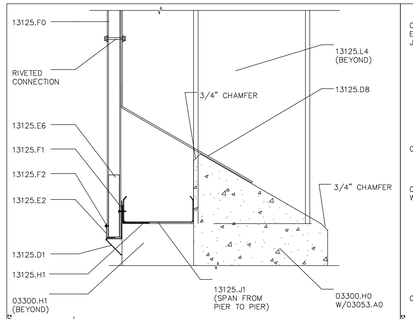

B4 PANEL @ CONCRETE WALL

AE702 REF. AE701 SCALE: 1 1/2" = 1'-0"

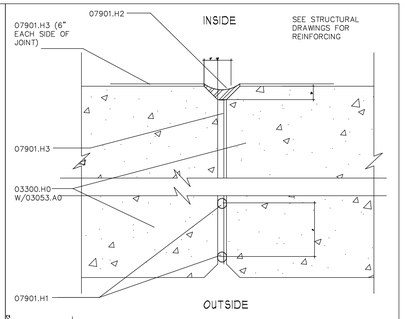

B5 JOINT DETAIL

AE702 REF. AE701 SCALE: 3" = 1'-0"

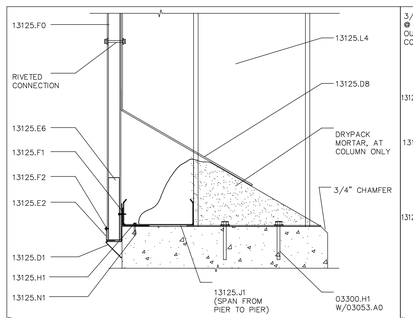

A4 PANEL @ CONCRETE PIER

AE702 REF. AE701 SCALE: 1 1/2" = 1'-0"

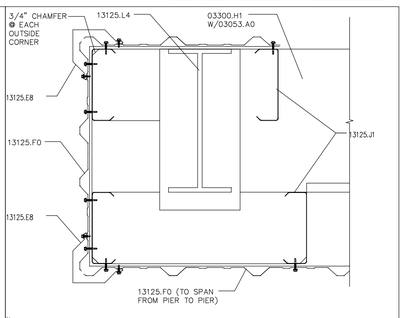

A5 COLUMN DETAIL

AE702 REF. AE701 SCALE: 1 1/2" = 1'-0"

SARGENT DESIGN GROUP
ARCHITECTURE | PLANNING

36 NORTH 300 WEST, SUITE B
CEDAR CITY, UTAH 84720
OFFICE: (435) 586-8510
FAX: (435) 586-4873
jcoltons@email.com

State of Utah-Department of Administrative Services
DIVISION OF FACILITIES CONSTRUCTION AND MANAGEMENT
4110 State Office Building/Salt Lake City, Utah 84114/538-3018

Project:
UDOT HURRICANE FACILITY
DFCM PROJECT NO. 07292900

Sheet Title:
SALT STORAGE DETAILS

Revisions:

PROJECT NUMBER:	08521
DATE:	09.17.08
DRAWN BY:	J.C.S.
CHECKED BY:	J.C.S.
APPROVED BY:	J.C.S.

AE1.02

SHEET NUMBER:
Sheet of

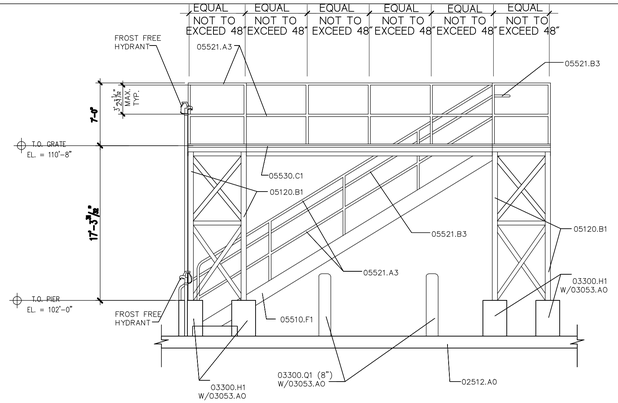

A2 | WASH RACK ELEVATION

AE703 REF. AE703 SCALE: 1/4" = 1'-0"

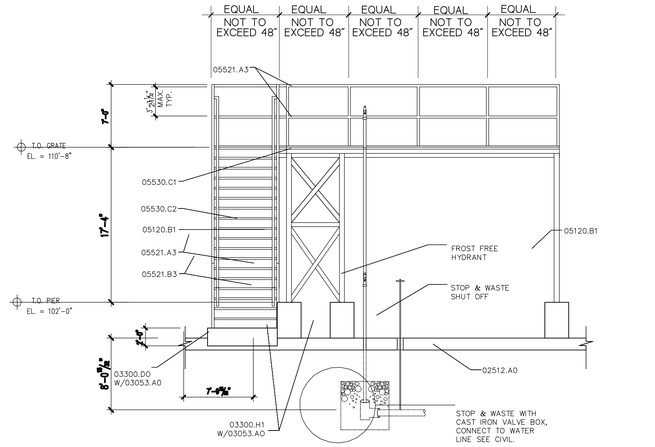

B2 | WASH RACK ELEVATION

AE703 REF. AE703 SCALE: 1/4" = 1'-0"

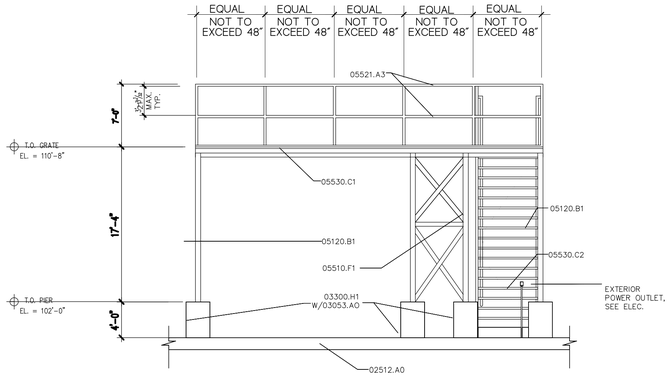

B1 | WASH RACK ELEVATION

AE703 REF. AE703 SCALE: 1/4" = 1'-0"

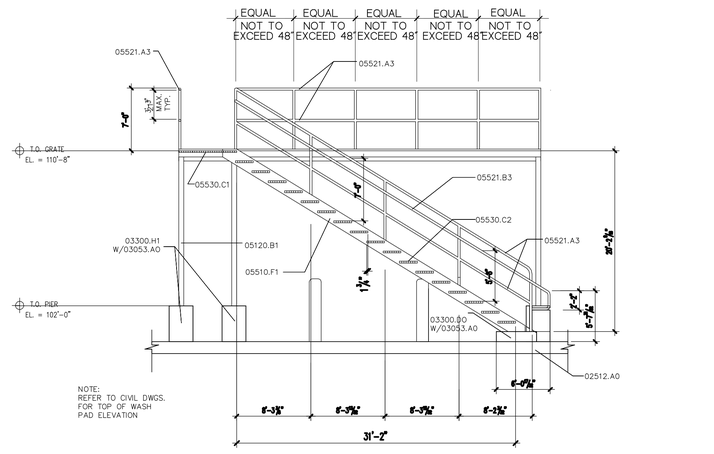

A1 | WASH RACK SECTION

AE703 REF. AE703 SCALE: 1/4" = 1'-0"

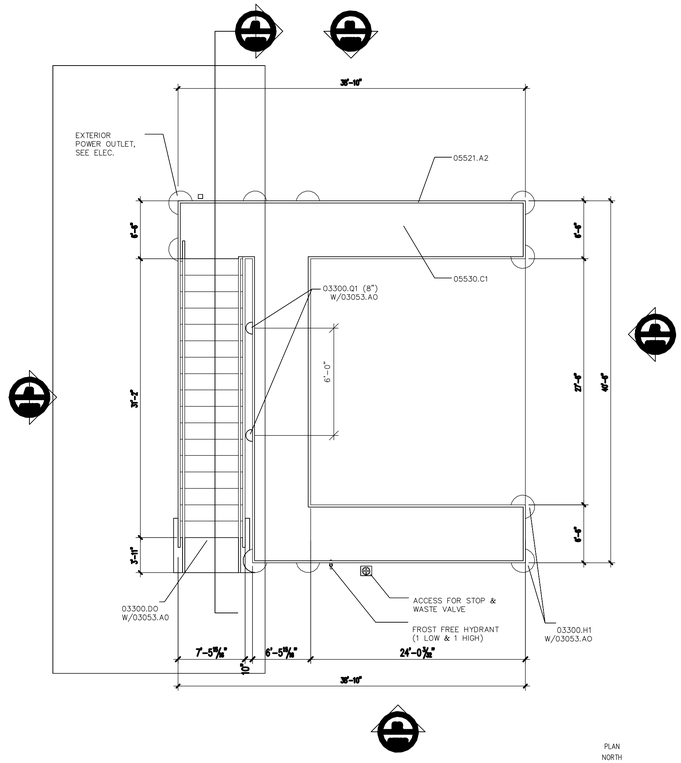

A3 | WASH RACK PLAN

AE703 REF. SCALE: 1/4" = 1'-0"

PLAN NORTH

KEYNOTES

02512.A0 ZERO VOIDS ASPHALT PAVING – SEE CIVIL

03053.A0 CONCRETE WATER PROOFING ADMIXTURE
03300.D0 CONCRETE PAD
03300.H1 CONCRETE PIER – SEE STRUCTURAL
03300.Q1 CONCRETE BOLLARD – PAINTED SEE STRUCTURAL (DIA)

05120.B1 COLUMN – SEE STRUCTRAL – GALVANIZED
05510.F1 STEEL STRINGER – GALVANIZED
05521.A3 1 1/2" O.D. PIPE GUARDRAIL – GALVANIZED
05521.B3 1 1/2" O.D. PIPE HANDRAIL – GALVANIZED
05530.C1 METAL GRATE PANEL – GALV.
05530.C2 METAL GRATE TREAD – GALV.

GENERAL NOTES

1. FIELD VERIFY ALL EXISTING CONDITIONS AND THEIR COMPATIBILITY WITH NEW CONSTRUCTION PRIOR TO THE COMMENCEMENT OF WORK. COORDINATE DISCREPANCIES WITH ARCHITECT.

2. DO NOT SCALE DRAWINGS.

3. SEE CIVIL, STRUCTURAL, MECHANICAL AND ELECTRICAL DRAWINGS OR MORE INFORMATION.

SARGENT DESIGN GROUP
ARCHITECTURE | PLANNING
36 NORTH 300 WEST, SUITE B
CEDAR CITY, UTAH 84720
OFFICE: (435) 586-8510
FAX: (435) 586-4873
jcoltons@email.com

State of Utah–Department of Administrative Services
DIVISION OF FACILITIES CONSTRUCTION AND MANAGEMENT
4110 State Office Building/Salt Lake City, Utah 84114/538-3018

Project:
UDOT HURRICANE FACILITY
DFCM PROJECT NO. 07292900

Sheet Title:
WASH RACK PLAN, SECTION AND ELEVATIONS

Revisions:

PROJECT NUMBER:	08527
DATE:	09.17.08
DRAWN BY:	J.C.S.
CHECKED BY:	J.C.S.
APPROVED BY:	J.C.S.

AE7.03

SHEET NUMBER:
Sheet of

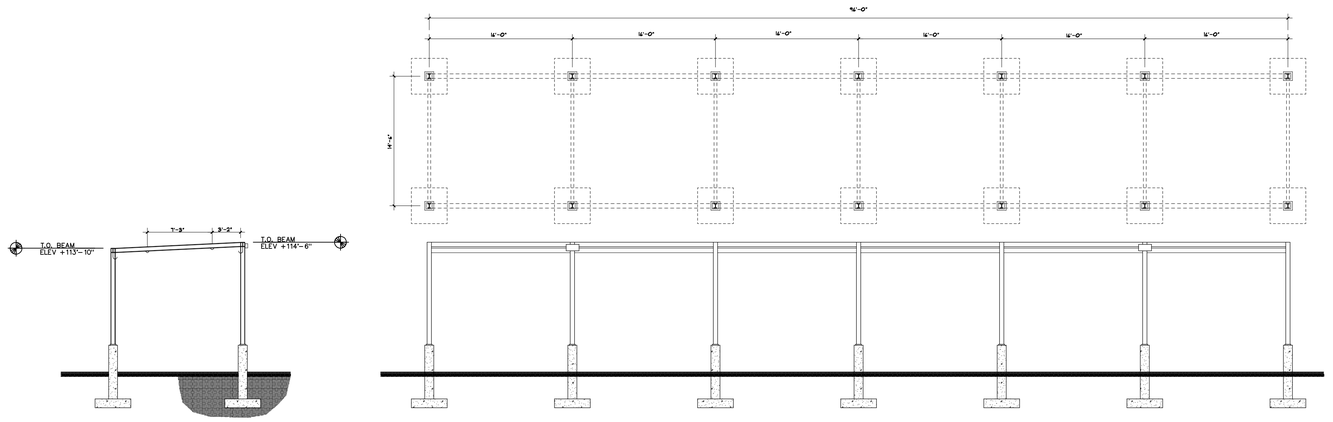

A1 SALT STORAGE BLDG. - FLOOR PLAN

AE701 | REF. AE701 | SCALE: 1/8" = 1'-0"

8' 6' 4' 2' 0' 4' 8' 16'

KEYNOTES

02512.A0 ZERO VOIDS ASPHALT PAVING – SEE CIVIL

03053.A0 CONCRETE WATER PROOFING ADMIXTURE
03300.D0 CONCRETE PAD
03300.H1 CONCRETE PIER – SEE STRUCTURAL
03300.Q1 CONCRETE BOLLARD – PAINTED SEE STRUCTURAL (DIA)

05120.B1 COLUMN – SEE STRUCTRAL – GALVANIZED
05510.F1 STEEL STRINGER – GALVANIZED
05521.A3 1 1/2" O.D. PIPE GUARDRAIL – GALVANIZED
05521.B3 1 1/2" O.D. PIPE HANDRAIL – GALVANIZED
05530.C1 METAL GRATE PANEL – GALV.
05530.C2 METAL GRATE TREAD – GALV.

GENERAL NOTES

1. FIELD VERIFY ALL EXISTING CONDITIONS AND THEIR COMPATIBILITY WITH NEW CONSTRUCTION PRIOR TO THE COMMENCEMENT OF WORK. COORDINATE DISCREPANCIES WITH ARCHITECT.

2. DO NOT SCALE DRAWINGS.

3. SEE CIVIL, STRUCTURAL, MECHANICAL AND ELECTRICAL DRAWINGS OR MORE INFORMATION.

SARGENT DESIGN GROUP
ARCHITECTURE | PLANNING
36 NORTH 300 WEST, SUITE B
CEDAR CITY, UTAH 84720
OFFICE: (435) 586-8510
FAX: (435) 586-4873
jcoltons@email.com

State of Utah–Department of Administrative Services
DIVISION OF FACILITIES CONSTRUCTION AND MANAGEMENT
4110 State Office Building/Salt Lake City, Utah 84114/538-3018

Project:
UDOT HURRICANE FACILITY
DFCM PROJECT NO. 07292900

Sheet Title:
SANDER RACK PLAN, SECTION AND ELEVATIONS

Revisions:

PROJECT NUMBER:	08527
DATE:	09.17.08
DRAWN BY:	J.C.S.
CHECKED BY:	J.C.S.
APPROVED BY:	J.C.S.

AE1.04

SHEET NUMBER:
Sheet of

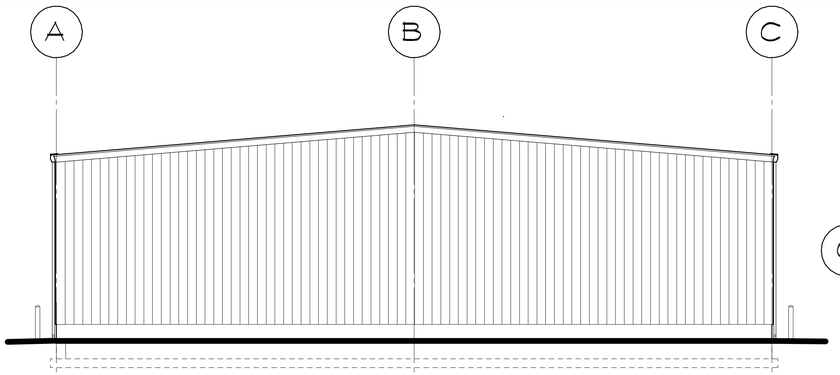

B1 OPEN STORAGE BUILDING - ELEVATION (SIMILAR BOTH SIDES)

AE705 REF. AE705 SCALE: 1/8"=1'-0" 8' 6' 4' 2' 0' 4' 8' 16'

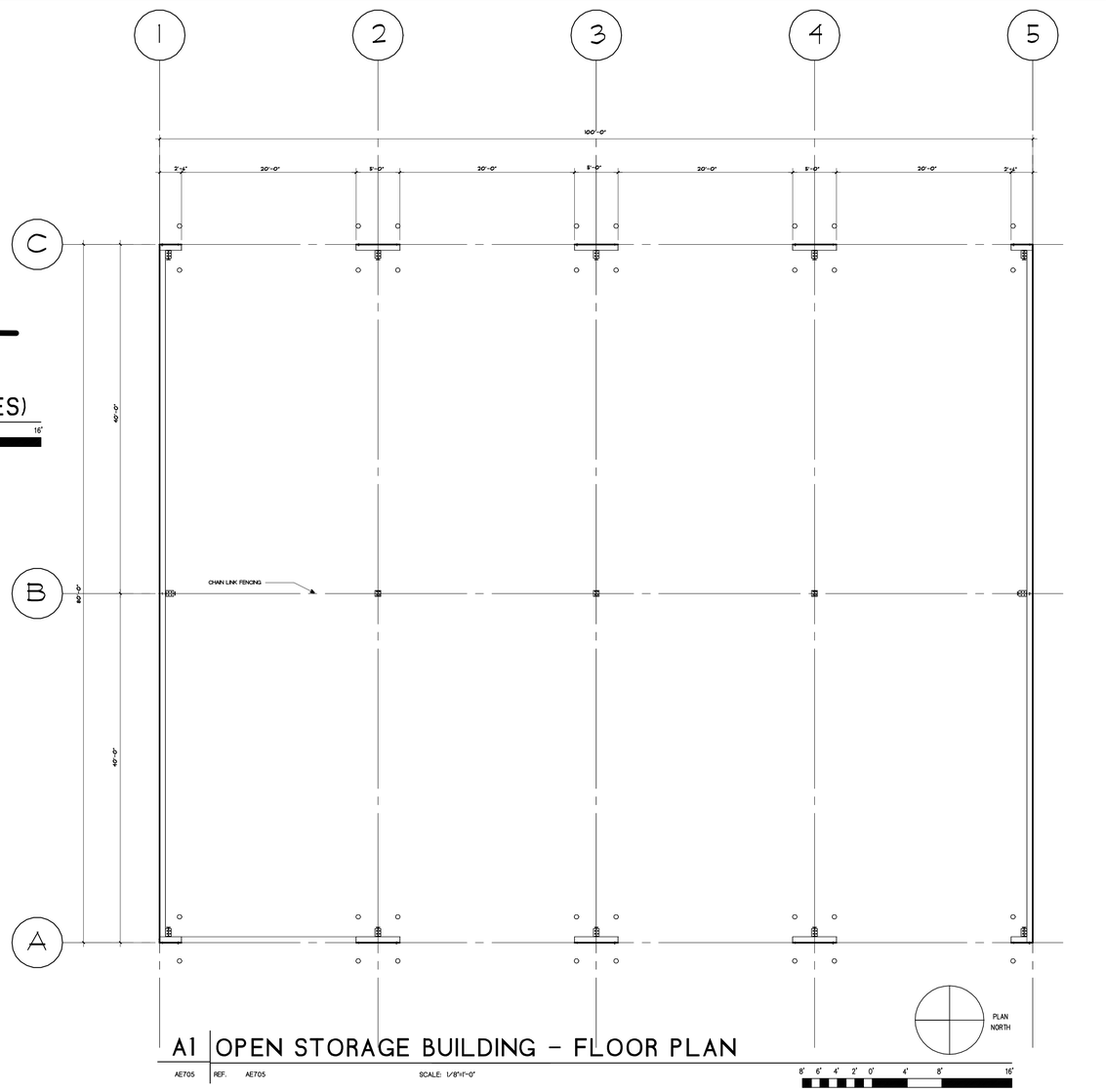

A1 OPEN STORAGE BUILDING - FLOOR PLAN

AE705 REF. AE705 SCALE: 1/8"=1'-0" 8' 6' 4' 2' 0' 4' 8' 16'

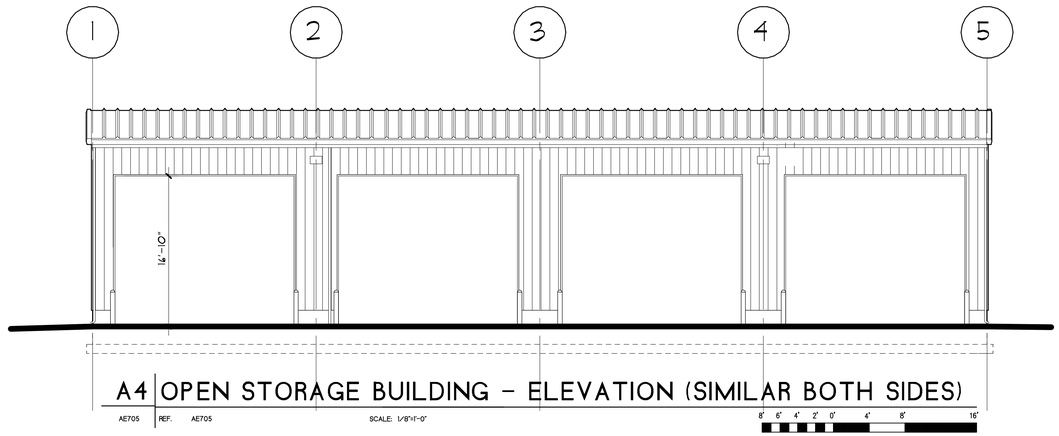

A4 OPEN STORAGE BUILDING - ELEVATION (SIMILAR BOTH SIDES)

AE705 REF. AE705 SCALE: 1/8"=1'-0" 8' 6' 4' 2' 0' 4' 8' 16'

SARGENT DESIGN GROUP
ARCHITECTURE | PLANNING

36 NORTH 300 WEST, SUITE B
CEDAR CITY, UTAH 84720
OFFICE: (435) 586-8510
FAX: (435) 586-4873
jcoltons@email.com

State of Utah-Department of Administrative Services
DIVISION OF FACILITIES CONSTRUCTION AND MANAGEMENT
4110 State Office Building/Salt Lake City, Utah 84114/538-3018

Project:
UDOT HURRICANE FACILITY
DFCM PROJECT NO. 07292900

Sheet Title:
STORAGE BUILDING PLAN AND ELEVATIONS

Revisions:

PROJECT NUMBER:	08527
DATE:	09.17.08
DRAWN BY:	J.C.S.
CHECKED BY:	J.C.S.
APPROVED BY:	J.C.S.

AE1.05

SHEET NUMBER:
Sheet of

GENERAL

1. THE PROJECT SPECIFICATIONS ARE NOT SUPERSEDED BY THESE GENERAL STRUCTURAL NOTES BUT ARE INTENDED TO BE COMPLIMENTARY TO THEM. CONSULT THE SPECIFICATIONS FOR ADDITIONAL REQUIREMENTS IN EACH SECTION. NOTES AND DETAILS ON THE DRAWINGS SHALL TAKE PRECEDENCE OVER GENERAL NOTES, TYPICAL DETAILS AND SPECIFICATIONS.
2. CONTRACTOR SHALL COMPARE ALL DIMENSIONS AND CONDITIONS ON DRAWINGS AND AT SITE. ALL OMISSIONS OR CONFLICTS BETWEEN THE VARIOUS ELEMENTS OF THE WORKING DRAWINGS AND/OR SPECIFICATIONS SHALL BE BROUGHT TO THE ATTENTION OF THE ARCHITECT AND OR STRUCTURAL ENGINEER BEFORE PROCEEDING WITH ANY WORK INVOLVED. IN CASE OF CONFLICT, FOLLOW THE MOST STRINGENT REQUIREMENT AS DIRECTED BY THE ARCHITECT WITHOUT ADDITIONAL COST TO THE OWNER.
3. ALL DETAILS, SECTIONS, AND NOTES SHOWN ON THE DRAWINGS ARE INTENDED TO BE TYPICAL AND SHALL APPLY TO SIMILAR SITUATIONS ELSEWHERE UNLESS NOTED OR SHOWN OTHERWISE.
4. SHORING AND BRACING REQUIREMENTS:
   A. FLOOR AND ROOF STRUCTURES – THE GENERAL CONTRACTOR IS RESPONSIBLE FOR THE METHOD AND SEQUENCE OF ALL STRUCTURAL ERECTION. HE SHALL PROVIDE TEMPORARY SHORING AND BRACING AS HIS METHOD OF ERECTION REQUIRES TO PROVIDE ADEQUATE VERTICAL AND LATERAL SUPPORT. SHORING AND BRACING SHALL REMAIN IN PLACE AS THE CHOSEN METHOD REQUIRES UNTIL ALL PERMANENT MEMBERS ARE IN PLACE AND ALL FINAL CONNECTIONS ARE COMPLETED, INCLUDING ALL ROOF AND FLOOR ATTACHMENTS. THE BUILDING SHALL NOT BE CONSIDERED STABLE UNTIL ALL CONNECTIONS ARE COMPLETE.
   B. FOUNDATION WALLS MUST BE BRACED UNTIL THE COMPLETE FLOOR OR ROOF SYSTEMS IS COMPLETED. DO NOT BACK FILL UNTIL FLOOR OR ROOF SYSTEMS ARE IN PLACE.
   C. WALLS ABOVE GRADE SHALL BE BRACED UNTIL THE STRUCTURAL SYSTEM IS COMPLETE. WALLS ARE NOT SELF SUPPORTING.
5. IT SHALL BE THE RESPONSIBILITY OF THE GENERAL CONTRACTOR TO COORDINATE WITH ALL TRADES ANY AND ALL ITEMS THAT ARE TO BE INTEGRATED INTO THE STRUCTURAL SYSTEM. OPENINGS OR PENETRATIONS THROUGH, OR ATTACHMENTS TO THE STRUCTURAL SYSTEM THAT ARE NOT INDICATED ON THESE DRAWINGS SHALL BE THE RESPONSIBILITY OF THE GENERAL CONTRACTOR AND SHALL BE COORDINATED WITH THE ARCHITECT/ENGINEER. THE ORDER OF CONSTRUCTION IS THE RESPONSIBILITY OF THE GENERAL CONTRACTOR. IT IS THE CONTRACTOR'S OBLIGATION TO PROVIDE ITEMS NECESSARY FOR HIS CHOSEN PROCEDURE.
6. OBSERVATION VISITS TO THE SITE BY THE STRUCTURAL ENGINEER SHALL NOT BE CONSTRUED AS INSPECTION NOR APPROVAL ON CONSTRUCTION.
7. ALL CONSTRUCTION AND INSPECTION SHALL BE IN ACCORDANCE WITH THE LATEST EDITION OF THE INTERNATIONAL BUILDING CODE. THE CONTRACTOR SHALL COORDINATE ALL REQUIRED INSPECTIONS AND SHALL NOT PROCEED WITH THE WORK INVOLVED UNTIL THE INSPECTIONS HAVE BEEN DONE.
8. ALL WORKMANSHIP AND MATERIALS SHALL CONFORM TO THE REQUIREMENTS OF THE LATEST EDITION OF THE INTERNATIONAL BUILDING CODE.
9. THE CONTRACTOR MUST SUBMIT A WRITTEN REQUEST FOR, AND OBTAIN THE ARCHITECT'S AND /OR THE STRUCTURAL ENGINEER'S WRITTEN PRIOR APPROVAL FOR ALL CHANGES, MODIFICATIONS, AND/OR SUBSTITUTIONS.
10. THE CONTRACTOR SHALL COORDINATE AND VERIFY ALL DIMENSIONS AND ELEVATIONS SHOWN ON STRUCTURAL DRAWINGS WITH THE ARCHITECTURAL DRAWINGS.
11. SEE THE ARCHITECTURAL DRAWINGS FOR DIMENSIONS, DOORS, WINDOWS, NONBEARING INTERIOR AND EXTERIOR WALLS, ELEVATIONS, SLOPES, STAIRS, CURBS, DRAINS, RECESSES, DEPRESSIONS, RAILING, WATERPROOFING, FINISHES, CHAMFERS, KERFS, ETC.
12. SAFETY IS THE SOLE RESPONSIBILITY OF THE CONTRACTOR. THE ENGINEER IS NOT A GUARANTOR OF THE CONTRACTOR'S WORK, RESPONSIBLE FOR SAFETY IN, ON, OR ABOUT THE JOB SITE, IN CONTROL OF THE SAFETY OR ADEQUACY OF ANY CONSTRUCTION EQUIPMENT, BUILDING COMPONENT, SCAFFOLDING, FORMS, OR OTHER WORK AIDS OR FOR SUPERINTENDING THE WORK.
13. CONTRACTOR MUST FIELD VERIFY ALL EXISTING CONDITIONS TO MATCH DETAILS SHOWN ON DRAWINGS. IF ANY CONFLICTING CONDITIONS ARISE DURING CONSTRUCTION, CONTRACTOR MUST NOTIFY STRUCTURAL ENGINEER BEFORE PROCEEDING WITH FABRICATION OR CONSTRUCTION.
14. THERMAL OR MOISTURE PROTECTION, FURNISHINGS, DOORS, WINDOWS, EQUIPMENT, MECHANICAL, ELECTRICAL, FINISHES, SIDING, PANELING, VENEERS ARE NOT PART OF THE RESPONSIBILITY OF THE STRUCTURAL ENGINEER.
15. IT SHALL BE THE CONTRACTORS RESPONSIBILITY TO LOCATE ALL EXISTING UTILITIES WHETHER SHOWN HERON OR NOT, AND TO PROTECT THEM FROM DAMAGE. THE CONTRACTOR SHALL BEAR ALL EXPENSE OF REPAIR OR REPLACEMENT IN CONJUNCTION WITH THE REQUIRED WORK.
16. ONLY AN AUTHOROIZED REPRESENATATIVE OF INSITE ENGINEERING, P.C. MAY MAKE CHANGES TO THESE CONTRACT DRAWINGS. INSITE ENGINEERING, P.C. SHALL NOT BE RESPONSIBLE OR LIABLE FOR ANY CLAIMS ARISING DIRECTLY OR INDIRECTLY FROM CHANGES MADE WITHOUT WRITTEN AUTHORIZATION BY AN AUTHORIZED REPRESENTATIVE OF INSITE EINGEERING, P.C.

CONCRETE

1. MINIMUM COMPRESSIVE STRENGTH OF CONCRETE IN 28 DAYS AS FOLLOWS:
   A. FOOTINGS/FOUNDATION ..... 4000 PSI WITH W/C < 0.5 WITH TYPE "V" CEMENT
   B. SLABS ON GRADE .... 4000 PSI WITH W/C < 0.5 WITH TYPE "V" CEMENT
2. CONCRETE DENSITY:
   A. NORMAL WEIGHT CONCRETE SHALL BE APPROXIMATELY 145 PCF.
3. MILD STEEL REINFORCING: DEFORMED BARS, ASTM A–615, GRADE 60 WITH MINIMUM YIELD STRENGTH 60 KSI.
4. REINFORCEMENT PROTECTION:
   A. CONCRETE PLACED AGAINST THE EARTH...3"
   B. CONCRETE PLACED IN FORMS BUT EXPOSED TO EARTH OR WEATHER...........1–1/2"
   C. COLUMNS, BEAMS..........1–1/2"
   D. SLABS OR WALLS NOT EXPOSED TO EARTH OR WEATHER...........3/4"
5. ADMIXTURES:
   A. AIR–ENTRAINING ADMIXTURES (WHEN USED), COMPLY WITH ASTM C260.
   B. CALCIUM CHLORIDE SHALL NOT BE ADDED TO CONCRETE MIX.
6. CONSTRUCTION JOINTS AND CONTROL JOINTS:
   A. PROVIDE A CONTINUOUS TOOL ROUGHENED SURFACE TOP OF ALL WALL FOOTINGS, UNLESS NOTED OTHERWISE.
   B. ALL HORIZONTAL AND VERTICAL CONSTRUCTION JOINTS SHALL HAVE A CONTINUOUS 2" X 4" KEYWAY ALONG THE JOINT, UNLESS NOTED OTHERWISE, SEE DETAILS.
   C. PROVIDE REINFORCING DOWELS TO MATCH THE MEMBER REINFORCING AT THE JOINT, UNLESS NOTED OTHERWISE.
   D. SLABS AND BEAMS SHALL NOT HAVE JOINTS IN HORIZONTAL PLANE.
   E. SLABS–ON–GRADE SHALL HAVE CONSTRUCTION OR CONTROL JOINTS PLACED IN LENGTHS NOT TO EXCEED 36 TIMES THE SLAB THICKNESS IN ANY DIRECTION. CONSTRUCTION JOINTS SHALL NOT EXCEED A DISTANCE OF 125' 0" O.C. IN ANY DIRECTION.
   F. ALL CONSTRUCTION AND CONTROL JOINTS AS DETAILED OR AS APPROVED BY STRUCTURAL ENGINEER.
   G. CONTROL JOINTS SHALL BE COMPLETE WITHIN 12 HOURS OF CONCRETE PLACEMENT.
7. PROVIDE ACCESSORIES RECOMMENDED BY THE CRSI NECESSARY TO PROPERLY SUPPORT REINFORCING AT POSITIONS SHOWN ON PLANS.
8. DETAIL BARS IN ACCORDANCE WITH ACI 315 "MANUAL OF STANDARD PRACTICE FOR DETAILING REINFORCING CONCRETE STRUCTURES". CONCRETE REINFORCING STEEL INSTITUTE (CRSI) RECOMMENDATIONS, AND "BUILDING CODE REQUIREMENTS FOR REINFORCED CONCRETE", ACI 318.
9. PLACE (2)– #5 WITH 2'–0" PROJECTION AROUND OPENINGS IN CONCRETE.
10. ALL VERTICAL REINFORCING SHALL BE DOWELED TO FOOTINGS, OR THE STRUCTURE BELOW. DOWELS SHALL BE THE SAME SIZE AND AT THE SAME SPACING AS THE VERTICAL WALL REINFORCING SCHEDULED FOR THE WALL ABOVE. LAP LENGTHS SHALL COMPLY AS NOTED ABOVE OR AS SHOWN IN THE DRAWINGS. DOWELS EXTENDING INTO FOOTINGS SHALL TERMINATE WITH A 90 DEGREE STANDARD ACI HOOK AND SHALL EXTEND TO WITHIN 4" OF THE BOTTOM OF THE FOOTING.
11. HORIZONTAL WALL REINFORCING SHALL TERMINATE AT ENDS OF WALLS, CORNERS AND OPENINGS INTO THE FAR END OF THE JAMB COLUMN WITH A 90 DEGREE HOOK + 6 BAR DIAMETER EXTENSION, UNLESS SHOWN OTHERWISE. LAP HORIZONTAL BAR SPLICES AS NOTED ABOVE OR AS SHOWN ON THE DRAWINGS. HORIZONTAL WALL REINFORCING SHALL BE CONTINUOS THROUGH CONSTRUCTION AND CONTROL JOINTS. SPLICES IN HORIZONTAL REINFORCEMENT SHALL BE STAGGERED. SPLICES IN TWO CURTAINS WHERE USED SHALL NOT OCCUR IN THE SAME LOCATION.
12. NO WELDING OF REINFORCEMENT SHALL BE PERMITTED UNLESS APPROVED BY STRUCTURAL ENGINEER.
13. ALL FORMWORK SHALL COMPLY WITH REQUIREMENTS OF ACI STANDARD PUBLICATION NO 347. THE CONTRACTOR SHALL BE RESPONSIBLE FOR THE DESIGN, CARE, DETAILING, PLACEMENT AND REMOVAL OF ALL FORMWORK AND SHORING.
14. CONTRACTOR SHALL COORDINATE PLACEMENT OF ALL OPENINGS, CURBS, DOWELS SLEEVES, CONDUITS, BOLTS AND INSERTS PRIOR TO CONCRETE PLACEMENT. NO ALUMINUM CONDUIT OR PRODUCT CONTAINING ALUMINUM OR ANY OTHER MATERIAL INJURIOUS TO CONCRETE SHALL BE EMBEDDED IN CONCRETE.
15. THE SAMPLES FOR TESTS OF EACH STRENGTH OF CONCRETE SHALL BE TAKEN NOT LESS THAN ONCE A DAY, NOR LESS THAN ONCE FOR EACH 150 CUBIC YARD OF CONCRETE, NOR LESS THAN ONCE FOR EACH 5000 SQUARE FT. OF SURFACE AREA FOR SLABS OR WALLS, NOR LESS THAN FIVE TIMES THROUGHOUT THE PROJECT.
16. PLACEMENT AND CURING OF CONCRETE SHALL CONFORM W/ ALL RECOMMENDATIONS PER THE LATEST ACI 306 "COLD WEATHER CONCRETE."

SHOP DRAWINGS SUBMITTALS

1. CONTRACTOR SHALL REVIEW AND VERIFY ALL SHOP DRAWINGS TO ASSURE THEY COMPLY WITH REQUIREMENTS OF THE CONTRACT DOCUMENTS. ENGINEER WILL REVIEW THE SHOP DRAWINGS FOR GENERAL CONFORMANCE WITH DESIGN CONCEPT. THIS REVIEW BY THE ENGINEER SHALL NOT BE CONSTRUED AS APPROVAL.
2. DETAILING AND SHOP DRAWING PRODUCTION FOR STRUCTURAL ELEMENTS WILL REQUIRE INFORMATION (INLCLUDING DIMENSIONS) CONTAINED IN THE ARCHITECTURAL, STRUCTURAL AND/OR OTHER CONSTULTANTS' DRAWINGS. THE STRUCTURAL DRAWINS SHALL BE USED IN CONJUNCTION WITH TEH ARCHITECTURAL AND OTHER CONSULTAN'S DRAWINGS. SOME DIMENSIONS AND ELEMENTS SUCH AS ELEVATIONS, DEPRESSIONS, SLOPES, MECHANICAL HOUSEKEEPING PADS, ETC. ARE NOT SHOWN IN THE STRUCTURAL DRAWINGS. ALL DIMENSIONS SHOWN ON STRUCTURAL DRAWINGS SHALL BE VERIFIED BY CONTRACTOR WITH ARCHITECTURAL, MECHANICAL AND ELECTRICAL DRAWINGS.
3. PROVIDE 4 SETS OF SHOP DRAWINGS TO ENGINEER FOR REVIEW FOR THE FOLLOWING BUT NOT LIMITED TO FOUNDATION & MASONRY WALL REINFORCEMENT, CONCRETE MIX DESIGN, STRUCTURAL MASONRY ELEMENTS, STRUCTURAL STEEL, AND STEEL JOIST & DECK. REFER TO ARCHITECTURAL DRAWINGS FOR SHOP DRAWING SUBMITTAL REQUIRED FOR NON–STRUCTURAL ELEMENTS.

DRILL & EPOXY ANCHORS

1. ALL DRILL & EPOXY ANCHORS SHALL BE SPECIAL INSPECTED PER IBC 1704 & 1707.
2. USE HILTI HIT–RE 500–SD OR SIMPSON SET–XP ADHESIVE SYSTEM OR EQUIVALENT FOR CONCRETE CONNECTIONS.
3. 10% OF ALL ANCHORS PLACED SHALL BE RANDOMLY TESTED TO 110% OF MANUFACTURER SPECIFIED ALLOWABLE LOAD. IF ANY ANCHOR FAILS IT SHALL BE REPLACED AND RETESTED AT NO ADDITIONAL COST TO THE OWNER. IF AN ANCHOR FAILS, 100 % OF ALL ANCHORS INSTALLED BY THE SAME CREW SHALL BE TESTED AT NO ADDITIONAL COST TO THE OWNER.

WOOD

1. ALL INTERIOR WOOD ROOF & FLOOR DIAPHRAGMS AND SHEAR WALLS SHALL BE APA RATED STRUCTURAL SHEATHING WITH A SPAN INDEX RATING AND THICKNESS AS NOTED ON DRAWINGS. EDGE SUPPORT, IF REQUIRED BY SPAN RATING OR THE SHEATHING AND JOIST SPACING, SHALL CONSIST OF LUMBER BLOCKING, PANEL EDGE CLIPS, OR TONGUE AND GROOVE SHEATHING EDGES.
2. ALL MEMBERS FRAMING INTO THE SIDE OF HEADERS OR STUD WALLS SHALL BE ATTACHED USING METAL JOIST HANGERS.
3. ALL BOLTS FOR CONNECTIONS SHALL HAVE WASHERS PLACED UNDER NUTS AND HEADS. BOLT HOLES TO BE DRILLED 1/16" LARGER THAN BOLT DIAMETER.
4. MATERIALS:
   A. GLU LAM TIMBER: DOUGLAS FIR COMBINATION SYMBOL 24F–V4 FOR BEAMS (SIMPLE SPANS); 24F–V8 FOR CONTINUOUS OR CANTILEVER CONDITIONS. FB=2400 PSI, E=1,800,000 PSI.
   B. FRAMING LUMBER: NUMBER 2 DOUGLAS FIR–LARCH OR BETTER OR AS NOTED OTHERWISE; MIN. FB=1035 PSI FOR REPETITIVE USE.
   C. SHEATHING SHALL BE INTERIOR GRADE WITH EXTERIOR GLUE, SPAN INDEX RATIO:
      48/24 (3/4") FLOORS
      24/16 (7/16") WALLS
5. NAILS:
   STANDARD COMMON. MINIMUM NAILING REQUIREMENTS (SEE DRAWINGS FOR AREAS WITH GREATER REQUIREMENTS):
   A. FLOOR: NAIL ALL SHEATHING PANEL EDGES WITH 10d COMMON NAILS AT 6" O.C. AT ALL PANEL EDGES AND AT 12" O.C. AT ALL INTERMEDIATE SUPPORTS.
   B. WALLS: NAIL ALL SHEATHING PANEL EDGES WITH 8d COMMON NAILS AT 6" O.C. AND 12" O.C. AT ALL INTERMEDIATE SUPPORTS. SOLID BLOCK ALL PANEL EDGES. PROVIDE 3" X 1/4" X 3" PLATE WASHERS TYPICAL @ ALL SILL PLATE ANCHOR BOLTS U.N.O.
   C. GENERAL FRAMING AND CARPENTRY: CONNECT ALL ITEMS AS PER I.B.C. CHAPTER 23, AND TABLE 2304.9.1 UNLESS NOTED OTHERWISE.
   D. FRAMING CONNECTIONS: USE SIMPSON STRONG–TIE CONNECTORS OR APPROVED EQUIVALENT.
      1. JOIST AND RAFTERS: "U" OR "F" HANGERS AS REQUIRED.
      2. BEAMS: EG HANGERS AND HGLB BEAMS SEATS
      3. HINGE CONNECTORS: HC 3T
      4. COLUMNS: CC CAPS AND CB COLUMN BASES
      5. HOLD DOWN ANCHORS: HD AND FTA
      6. BLOCKING, BRIDGING, AND BRACING
      PROVIDE SOLID BLOCKING AT LEAST 2 IN. NOMINAL THICK AND FULL DEPTH OF JOIST AT ENDS AND AT EACH SUPPORT OF JOIST. PROVIDE APPROVED BRIDGING AT A MAXIMUM OF 8'–0" O.C. BETWEEN ROOF JOIST SUPPORTS. SOLID BLOCKING BETWEEN JOISTS SHALL BE ATTACHED TO THE WOOD PLATE AT THE TOP OF THE WALL PER STRUCTURAL DETAILS.
6. LAMINATED BUILT–UP BEAMS OF 2X MEMBER 10 IN. OR LESS IN DEPTH SHALL BE SPIKED TOGETHER WITH NOT LESS THAN 16d COMMON NAILS AT TWELVE–INCH (12 IN.) CENTERS, STAGGERED UNLESS SO SPIKED, OR IF THE DEPTH OF BEAM IS MORE THAN TEN INCHES (10 IN.), THE LAMINATIONS SHALL BE CONNECTED TOGETHER WITH 1/2 IN. BOLTS AT 18 IN. O.C. STAGGERED. BOLTS SHALL BE PLACED 1/4 THE DEPTH OF THE MEMBER FROM THE TOP AND BOTTOM OF THE MEMBER.
7. ALL WOOD FRAMING IN CONTACT WITH CONCRETE OR CONCRETE TYPE MATERIALS SHALL CONSIST OF PRESERVATIVE TREATED WOOD PER IBC 2304.11.2.4. FASTENERS FOR PRESERVATIVE–TREATED AND FIRE–RETARDANT–TREATED WOOD SHALL MEET THE REQUIREMENTS OF IBC 2304.9.5 AND SHALL BE OF HOT DIPPED ZINC–COATED GALVANIZED STEEL, STAINLESS STEEL, SILICON BRONZE OR COPPER. THE COATING WEIGHTS FOR ZINC–COATED FASTENERS SHALL BE IN ACCORDANCE WITH ASTM A153.

REINFORCED CONCRETE SPECIAL INSPECTION

PER IBC TABLE 1704.4

	AGGREGATE TESTS
X	REINFORCING TESTS
X	MIX DESIGNS
X	REINFORCING PLACEMENT
X	BATCH PLANT INSPECTION
X	INSPECT PLACING
X	CAST SAMPLES
X	COMPRESSION TESTS
X	ANCHOR BOLT PLACEMENT
X	ONSITE SLUMP, AIR, TEMPERATURE OF CONCRETE TESTS
X	ACI 305 HOT WEATHER & ACI 306 COLD WEATHER PROTECTION

STRUCTURAL STEEL/WELDING SPECIAL INSPECTION

PER IBC TABLE 1704.3

	TITLE	SHOP	FIELD
X	SHOP MATERIAL IDENTIFICATION		X
X	WELDING INSPECTION	X	X
	ULTRASOUND INSPECTION		
X	REINFORCING STEEL WELDING INSPECTION	X	X
X	METAL STUD WELDING INSPECTION		X
X	CONCRETE INSERT WELDING INSPECTION	X	X

CONCRETE & METAL DECK FLOOR

1. 5–1/2" TOTAL THICK (TOTAL THICKNESS) NORMAL WEIGHT CONCRETE SLAB SHALL BE POURED OVER THE STEEL DECK. REINFORCE SLAB WITH 6"X6" – W2.1/W2.1 WELDED WIRE FABRIC MINIMUM, UNLESS NOTED OTHERWISE. WELDED WIRE FABRIC SHALL BE PLACED 1" TO 1–1/2" BELOW THE TOP OF THE SLAB.
   A. AT CONTRACTOR'S OPTION, THE WELDED WIRE FABRIC MAY BE SUBSTITUTED WITH 100% VIRGIN POLYPROPYLENE SYNTHETIC FIBER CONTAINING NO REPROCESSED OLEFIN MATERIALS AND SPECIFICALLY MANUFACTURED TO AN OPTIMUM GRADATION FOR USE AS CONCRETE SECONDARY REINFORCEMENT. APPLICATION SHALL BE 3.6 lb/yd^3 OR 24 BAGS/ 10 yd^3.
2. STEEL DECK SHALL COMPLY WITH THE LATEST REQUIREMENTS OF THE STEEL DECK INSTITUTE.
3. ALL DECK SHALL BE 3–SPAN CONTINUOUS MINIMUM. IN AREAS WHERE 3–SPAN CONDITIONS ARE NOT POSSIBLE, THE CONTRACTOR SHALL PROVIDE HEAVIER GAUGE DECK AS REQUIRED TO PROVIDE THE EQUIVALENT LOADING OF THE DECK UNDER A THREE SPAN CONDITION.
4. ALL DECK SUPPORTING MEMBERS SHALL BE DRY BEFORE WELDING.
5. CRIMP SEAMS BEFORE BUTTON PUNCHING OR WELDING INTERLOCKING SEAMS.
6. WHERE DECK IS TO RECEIVE SPRAYED–ON FIRE PROOFING, DECK SHALL BE COATED, AS REQUIRED, WITH SPECIAL PAINT THAT WILL ALLOW THE SPRAYED–ON FIRE PROOFING TO ADHERE TO THE DECK.

STEEL FLOOR DECK

A. STEEL FLOOR DECK SHALL BE 2" DEEP X 20 GAUGE MINIMUM NON–COMPOSITE FORMLOCK DECK WITH WITH INTERLOCKING SIDE SEAMS AND #10 SCREWS AT 8" O.C. WITH THE FOLLOWING PROPERTIES:

20 GAUGE

MINIMUM S (IN^3/FT) = 0.361

MINIMUM 1 (IN^4/FT) = 0.423

B. STEEL DECK WITH 5–1/2" THICK (OVERALL THICKNESS) NORMAL WEIGHT CONCRETE SLAB SHALL HAVE A MINIMUM DIAPHRAGM SHEAR CAPACITY OF 450 LBS/FT. FOR A 1 DECK SPAN.

C. DECK ATTACHMENT:
   i. FRAME FASTENING: #12 STS @ 36/4 PATTERN.
   ii. STITCH FASTENING: (1) #10 STS PER PLAN.

D. ATTACH INTERLOCKING SEAMS WITH $\frac{3}{16}$" ø BUTTON PUNCH AT 18" O.C., OR WITH $2\frac{2}{3}$" TOP SEAM WELD AT 36" O.C. OR WITH VERCO PUNCHLOK SYSTEM AT 36" O.C. OR WITH ASC DELTAGRIP SYSTEM AT 36" O.C.. CLOSER SPACINGS MAY BE USED TO DEVELOP MINIMUM SHEAR REQUIREMENTS.

E. PROVIDE A 2–INCH MINIMUM BEARING AT SUPPORTS.

F. DECK SPANS GREATER THAN 8'–6" SHALL HAVE TEMPORARY SHORING PLACED DURING THE FLOOR POUR.

PREFABRICATED METAL BUILDING

1. THE DESIGN, FABRICATION AND ERECTION OF ALL PREFABRICATED ELEMENTS AND ASSOCIATED HARDWARE SHALL COMPLY WITH THE LATEST REQUIREMENTS OF THE IBC, AISC, SDI AND AISI.
2. PRIOR TO FABRICATION AND INSTALLATION OF FOOTING, FOUNDATION, & ANCHOR BOLTS, THE METAL BUILDING SUPPLIER SHALL SUBMIT COMPLETE SHOP DRAWINGS AND CALCULATIONS INCLUDING REACTIONS BEARING THE STAMP OF A REGISTERED DESIGN PROFESSIONAL LICENSED IN THE STATE OF UTAH. COMPLETE CALCULATIONS SHALL BE SUBMITTED WITH THE SHOP DRAWINGS.
3. DO NOT MODIFY ANY STRUCTURAL ELEMENT OF THE PREFABRICATED METAL BUILDING WITHOUT THE WRITTEN CONSENT AND DIRECTION FROM THE MANUFACTURER. SEND COPIES OF THE CONSENT AND MODIFICATIONS TO THE ARCHITECT AND ENGINEER.
4. THE DESIGN OF THE PRE–MANUFACTURED STRUCTURAL ROOF SYSTEM INCLUDING THE STEEL DECK, JOISTS, GIRDERS, COLUMNS, AND THE LATERAL FORCE RESISTING SYSTEM (INCLUDING RIGID FRAMES) IS THE RESPONSIBILITY OF THE PRE–MANUFACTURED METAL BUILDING SUPPLIER. REFER TO THE PREFABRICATED STRUCTURAL ROOF SYSTEM SUPPLIER'S DRAWINGS AND CALCULATIONS FOR THE EXACT GRAVITY ROOF LOAD VALUES AND FOR THE DESIGN OF THE ROOF AND LATERAL SYSTEMS.

COLD–FORMED STEEL

1. ALL COLD–FORMED STEEL SHALL MEET THE REQUIREMENTS OF "SPECIFICATIONS FOR THE DESIGN OF COLD–FORMED STEEL STRUCTURAL MEMBERS" BY AMERICAN IRON AND STEEL INSTITUTE (AISI).
2. LIGHT GAUGE STEEL FRAMING:
   A. GALVANIZED STEEL MUST MEET THE MINIMUM REQUIREMENTS OF ASTM A446 GRADE D (Fy=50 ksi) FOR 12, 14 AND 16–GAUGE AND ASTM 1446 GRADE A (Fy=33 ksi) FOR 18–GAUGE AND LIGHTER. GALVANIZED COATINGS MUST MEET THE ASTM A525 SPECIFICATION.
   B. FOLLOW ALL MANUFACTURERS' RECOMMENDATIONS FOR THE USE OF THESE PRODUCTS.
   C. UNLESS NOTED OTHERWISE, ALL WELDED CONNECTIONS SHALL BE DONE ACCORDING TO AWS STANDARDS.
   D. ALL INTERIOR NON–BEARING STEEL–STUD WALLS TAHT EXTEND ABOVE THE CEILING BUT DO NOT ATTACH TO THE STRUCTURE ABOVE SHALL BE BRACED WITH DIAGONAL METAL STUDS BRACES (45 DEGREES). THE kl/r RATIO OF THE BRACE SHALL NOT EXCEED 200 AND SHALL NOT BE SPACED FURTHER APART THAN 10'–0" O.C. CONNECT DIAGONAL BRACES TO THE TOP OF THE STEEL STUD WALLS AND TO THE TOP FLANGE OF THE STEEL BEAMS WITH TWO #10 TEK SCREWS MINIMUM. WHERE A CONCRETE DECK OCCURS ABOVE, USE TWO POWDER DRIVEN FASTENERS PER DIAGONAL BRACE. OTHER APPROVED METHODS MAY BE USE.
3. PREFABRICATED SYSTEMS: SUBMIT COMPLETE SHOP DRAWINGS AND CALCULATIONS OF ALL ELEMENTS FOR REVIEW. SHOP DRAWINGS SHALL BEAR THE STAMP OF A PROFESSIONAL ENGINEER REGISTERED IN THE STATE OF UTAH.

STRUCTURAL STEEL

1. MINIMUM YIELD STRENGTH 46 KSI (ASTM 500, GRADE B) FOR TUBES. A992 FOR ALL "W" SHAPES, 36 KSI ALL ELSE U.N.O.
2. FABRICATION AND CONSTRUCTION SHALL COMPLY WITH THE LATEST EDITION OF THE FOLLOWING CODES AND STANDARDS:
   A. AMERICAN INSTITUTE OF STEEL CONSTRUCTION (AISC). "SPECIFICATIONS FOR THE DESIGN, FABRICATION AND ERECTION OF STRUCTURAL STEEL FOR BUILDINGS" WITH "COMMENTARY".
   B. AISC "CODE OF STANDARD PRACTICE" EXCLUDING THE FOLLOWING: SECTION 1.5.1, SECTION 3.3 (FIRST SENTENCE), SECTION 4.2, SECTION 4.2.1, SECTION 4.2.2, SECTION 7.5.4, SECTION 7.11.5.
   C. AISC "SPECIFICATIONS FOR STRUCTURAL JOINTS USING ASTM A325 OR A490 BOLTS"
   D. AMERICAN WELDING SOCIETY (AWS), STRUCTURAL WELDING CODE (SPECIFIC ITEMS DO NOT APPLY WHEN THEY CONFLICT WITH THE AISC REQUIREMENTS).
3. WELDING:
   A. CERTIFICATION OF WELDERS: ALL SHOP AND FIELD WELDING SHALL BE EXECUTED BY AWS CERTIFIED WELDERS, CERTIFICATION SHALL BE CONSIDERED CURRENT IF DATED WITHIN THE PAST 12 MONTHS. WELDERS WILL BE CONSIDERED CERTIFIED IF THEY HAVE BEEN CERTIFIED BY AWS AND THEIR WORK RECORDS ARE CURRENT WITHIN EVERY SIX MONTH PERIOD THEREAFTER AS REQUIRED BY AWS. CERTIFICATION AND RECORDS MUST COMPLY WITH AWS STANDARDS, CERTIFICATIONS AND APPROPRIATE RECORDS MUST BE PROVIDED TO THE ARCHITECT PRIOR TO BEGINNING WORK.
   B. ELECTRODES: E–70 XX OR AS NOTED OTHERWISE.
   C. MINIMUM WELDS: ALL INTERSECTING STEEL SHAPES WHICH ARE NOT BOLTED SHALL BE CONNECTED BY FILLET WELD ALL AROUND, UNLESS NOTED OTHERWISE. FILLET WELD SIZES THAT ARE NOT SHOWN SHALL BE 1/16" LESS THAN THE THINNEST OF THE CONNECTED PARTS FOR THICKNESS' 1/4" SHALL BE OF THE SAME SIZE AS THE THINNEST OF THE CONNECTED PART.
   D. STUD WELDING AND DEFORMED BAR ANCHOR WELDING SHALL CONFORM TO MANUFACTURER'S SPECIFICATIONS. WELDING SHALL BE TESTED TO COMPLY WITH AWS D1.1 SECTION 7.6 THROUGH 7.8 AND APPENDIX "K".
4. BOLTED CONNECTIONS:
   A. USE ASTM A325N BOLTS FOR ALL STEEL TO STEEL CONNECTION, UNLESS NOTED OTHERWISE. TIGHTEN BOLTS BY THE TURN OF THE NUT, CALIBRATED WRENCH, OR DIRECT TENSION INDICATOR METHOD. ALTERNATE FASTENER DESIGNS AS DEFINED BY AISC SHALL BE SUBMITTED TO THE ENGINEER FOR REVIEW PRIOR TO INSTALLATION. PROVIDE HARDENED WASHERS BENEATH TURNED ELEMENT. BOLTS WILL BE TESTED AS REQUIRED BY IBC SECTION 1704.3.3.
   B. WHERE A STEEL TO STEEL BEAM CONNECTION IS NOT DETAILED ON DRAWINGS PROVIDE STANDARD FRAMED BEAM CONNECTIONS MEETING REQUIREMENTS OF "MANUAL OF STEEL CONSTRUCTION", AISC 1989, WITH 3/4" MINIMUM DIAMETER BOLTS (OR WELDED EQUIVALENT) UNLESS OTHERWISE NOTED. FOR BEAMS WITHOUT DESIGNATED LOADS ON DRAWINGS, SELECT CONNECTIONS TO SUPPORT 60% OF TOTAL UNIFORM LOAD CAPACITY IN BENDING FOR EACH GIVEN BEAM AND SPAN, PLUS THE REACTION DUE TO ANY CONCENTRATED LOADS. MINIMUM OF TWO (2) BOLTS PER CONNECTION.
   C. BOLTS, NUTS AND WASHERS SHALL NOT BE REUSED.

SPECIAL INSPECTION & NONDESTRUCTIVE TESTING REQUIREMENTS.

1. SPECIAL INSPECTION AND NONDESTRUCTIVE TESTING SHALL BE PERFORMED BY AN INDEPENDENT TESTING AGENCY AND SHALL BE PAID FOR BY THE OWNER.
2. WHERE RESULTS OF INSPECTIONS OR TESTS DO NOT INDICATE COMPLIANCE WITH CONTRACT DOCUMENTS, RE–TESTS MAY BE REQUIRED PER ENGINEER'S DISCRETION.
3. FOUNDATIONS/SOILS
   REQUIRED DURING EARTHWORK EXCAVATIONS AND COMPACTION OPERATIONS FOR COMPLIANCE WITH REQUIREMENTS GIVEN IN SOILS REPORT.
4. CONCRETE
   A. REQUIRED DURING THE TAKING OF SPECIMENS AND PLACEMENT OF REINFORCING STEEL AND CONCRETE, AS PER IBC, SECTION 1704.4
   B. BOLTS PLACED IN CONCRETE REQUIRE INSPECTION PER IBC, SECTION 1704.4
5. WELDING
   A. AS A MINIMUM, THE TESTING PROGRAM FOR FIELD WELDS SHALL INCLUDE THE FOLLOWING:
      1. ALL COMPLETE PENETRATION GROOVE WELDS PERFORMED IN THE FIELD SHALL BE TESTED 100% EITHER BY ULTRASONIC TESTING OR BY RADIOGRAPHY.
      2. 50% OF PARTIAL PENETRATION GROOVE WELDS PERFORMED IN THE FIELD SHALL BE TESTED BY ULTRASONIC TESTING OR RADIOGRAPHY.
      3. PERIODIC INSPECTION OF MISCELLANEOUS SINGLE PASS FILLET WELDS IS REQUIRED PER IBC, SECTION 1704.3.1
   B. 1. ALL STRUCTURAL WELDING PERFORMED IN SHOP SHALL BE INSPECTED UNLESS FABRICATORS SHOP IS APPROVED BY THE BUILDING DEPARTMENT AS PER IBC, SECTION 1704.2.2
      2. WRITTEN VERIFICATION OF APPROVAL TO BE PROVIDED TO THE ARCHITECT AND STRUCTURAL ENGINEER PRIOR TO FABRICATION. THIS EXCEPTION DOES NOT APPLY TO DUCTILE MOMENT RESISTING FRAMES.
   C. ANY MATERIAL DISCONTINUITIES SHALL BE ACCEPTED OR REJECTED ON THE BASIS OF THE DEFECT RATING IN ACCORDANCE WITH THE IBC STANDARDS AS IT REFERS TO THE TESTING IN A.W.S.D1.1–2004 CHAPTER 6, EXCLUDING SECTIONS 6.1 THROUGH AND INCLUDING 6.6. ALL DEFICIENT WELDS SHALL BE CORRECTED AT NO ADDITIONAL COST TO THE OWNER.
   D. WELDER CERTIFICATION MAY BE CONSIDERED CURRENT IF WELDER HAS CERTIFICATION WITHIN THE LAST YEAR OR THE WELDER IS CERTIFIED AND THE WELDER'S JOB RECORDS ARE CURRENT. CERTIFICATION AND RECORDS MUST COMPLY WITH A.W.S. STANDARDS. WELDERS WILL BE CONSIDERED CERTIFIED IF THEY HAVE BEEN CERTIFIED BY A.W.S. AND THEIR WORK AND RECORDS ARE CURRENT WITHIN EVERY SIX MONTH PERIOD THEREAFTER AS REQUIRED BY A.W.S. CERTIFICATION AND RECORDS MUST COMPLY WITH A.W.S. CERTIFICATION AND APPROPRIATE RECORDS MUST BE PROVIDED TO THE ARCHITECT/ENGINEER.
6. EPOXY ANCHORS: CONTINUOUS INSPECTION SHALL BE PERFORMED DURING INSTALLATION.
7. PERIODIC SPECIAL INSPECTION IS REQUIRED PER IBC 1704.4 OF METAL STUD WALLS.
8. A COPY OF ALL SPECIAL INSPECTION/TESTING REPORTS SHALL BE PROVIDED TO THE BUILDING DEPARTMENT, ARCHITECT AND STRUCTURAL ENGINEER.
9. ALL THE APPROPRIATE RECORDS, CERTIFICATIONS, AND PERTINENT CREDENTIALS FOR EACH INSPECTOR, MUST BE SUBMITTED TO THE ARCHITECT/ENGINEER FOR APPROVAL PRIOR TO COMMENCING WITH THE WORK.

DESIGN CRITERIA

1. GOVERNING BUILDING CODE: 2006 INTERNATIONAL BUILDING CODE (IBC)
2. GRAVITY LIVE LOADS USED IN DESIGN:
   A. ROOF..............30 PSF I_S = 1.0
   B. LIGHT STORAGE AREAS .... 125 PSF
3. SEISMIC LOADING;
   A. SEISMIC USE GROUP I
   B. SEISMIC DESIGN CATEGORY D
   C. S_{DS} = 0.518 S_{D1} = 0.254
   D. SITE CLASS = D I_E = 1.0
   E. R = 4.0 FOR MEZZANINE AREA
4. WIND LOADING:
   A. VELOCITY V3S = 90 MPH VFM = 75 MPH
   B. EXPOSURE CATEGORY.......C
   C. I_W = 1.0
5. FOUNDATIONS
   A. SOIL BEARING PRESSURE....2000 PSF
   B. FOUNDATION DESIGN WAS OBTAINED FROM THE ORIGINAL SOILS REPORT PREPARED BY GEM ENGINEERING INC. DATED OCTOBER 28, 2008 REPORT NUMBER RG0903. ALL EXCAVATION, FILL, COMPACTION, AND PLACEMENT PERFORMED, SHALL COMPLY WITH RECOMMENDATIONS OUTLINED IN THE ABOVE REFERENCED REPORT.

NOTE:
REFER TO 2006 I.B.C. CHAPTER 17 FOR ADDITIONAL INFORMATION AND ARCHITECTURAL DRAWINGS & GEOTECHNICAL REPORT FOR ADDITIONAL INSPECTION REQUIREMENTS FOR NON–STRUCTURAL ITEMS.

METAL BUILDING DESIGN OF:
MAIN BUILDING
OPEN STORAGE
SALT STOARAGE
PROVIDED BY OTHERS

INSITE ENGINEERING PROVIDED FOUNDATION DESIGN FOR THESE BUILDINGS

InSite Engineering, P.C.
Civil Engineers - Land Surveyors - Land Planners
1883 W. Royal Hunte Dr., Suite 200
Cedar City, Utah 84720
phone: (435) 867–4565
fax: (435) 867–4459

SARGENT DESIGN GROUP
ARCHITECTURE | PLANNING
36 NORTH 300 WEST, SUITE B
CEDAR CITY, UTAH 84720
OFFICE: (435) 586-8510
FAX: (435) 586-4873
jcoltons@email.com

State of Utah–Department of Administrative Services
DIVISION OF FACILITIES CONSTRUCTION AND MANAGEMENT
4110 State Office Building/Salt Lake City, Utah 84114/538–3018

Project:
UDOT
HURRICANE
FACILITY
DFCM PROJECT NO.
Ø7292900

Sheet Title:

GENERAL STRUCTURAL NOTES

Revisions:

PROJECT NUMBER: 28493
DATE: MARCH 2, 2009
DRAWN BY: BD
CHECKED BY:
APPROVED BY:
SHEET NUMBER:

SØØ1

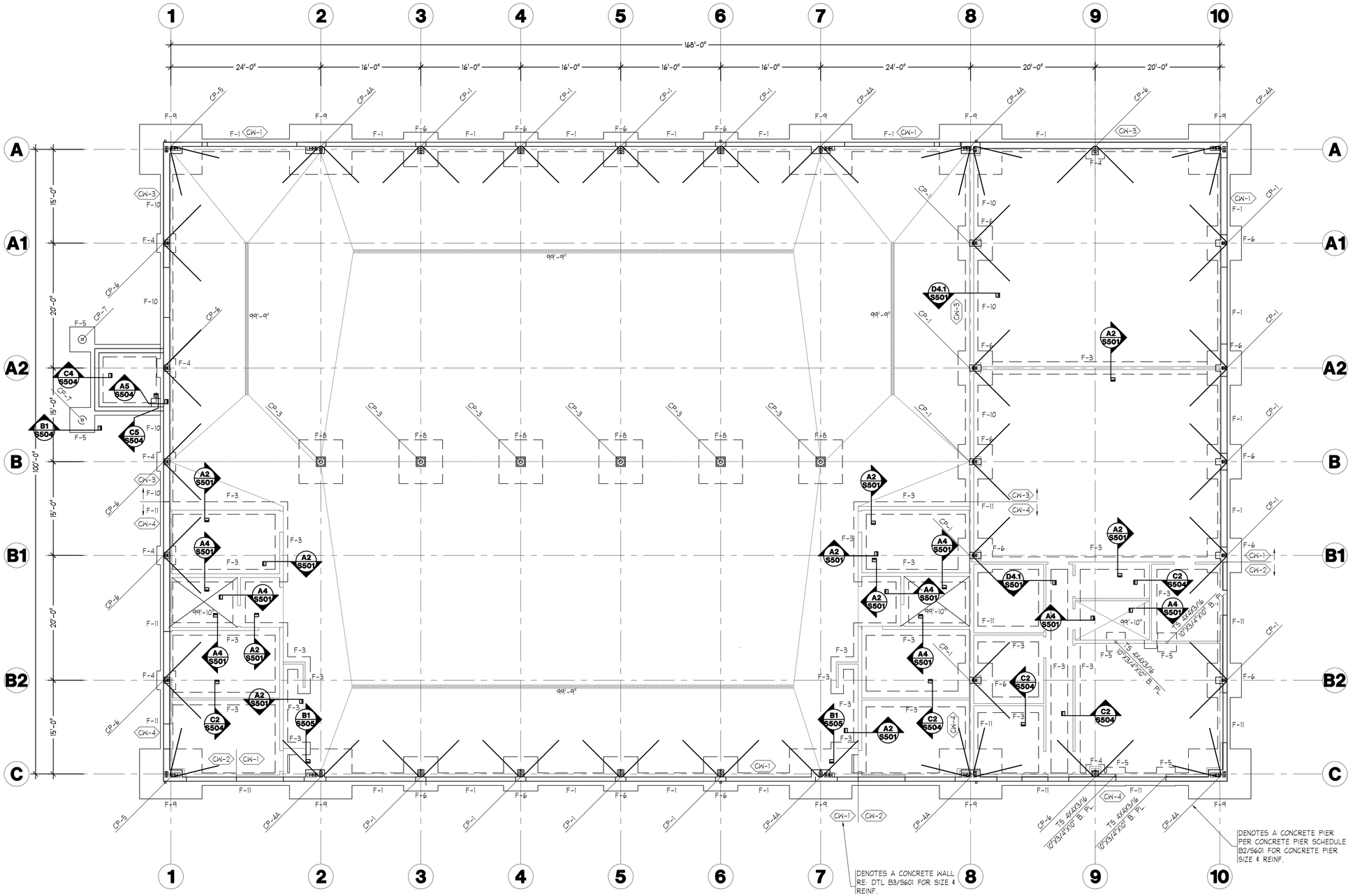

FOOTING SCHEDULE

MARK	ANCHOR BOLT EMBEDMENT	FOOTING W	FOOTING t	FOOTING L	REINF. LENGTH WISE	REINF. CROSS WISE	HAIRPINS	DETAIL
F-1	–	2'-0"	1'-0"	CONT.	(3)-#4	–	–	B4/S501
F-2	NOT USED	–	–	–	–	–	–	–
F-3	7"	2'-0"	1'-0"	CONT.	(3)-#4	–	–	RE: PLAN
F-4	9"	4'-0"	1'-0"	4'-0"	(4)-#5	(4)-#5	(2)-#4	A1/S501
F-5	9"	4'-0"	1'-0"	4'-0"	(4)-#5	(4)-#5	–	C5/S501
F-6	9"	5'-6"	1'-0"	5'-6"	(5)-#5	(5)-#5	(2)-#4	A1/S501
F-7	10"	6'-6"	1'-2"	6'-6"	(7)-#5	(7)-#5	–	B2/S504
F-8	10"	7'-6"	1'-2"	7'-6"	(7)-#6	(7)-#6	–	B2/S504
F-9	12"	8'-0"	1'-4"	10'-0"	(8)-#5	(9)-#4	(4)-#4	A1/S501
F-10	–	2'-6"	1'-0"	CONT.	(4)-#4	–	–	B4/S501
F-11	–	2'-6"	1'-0"	CONT.	(4)-#4	–	–	A5/S501

NOTES:
1. PROVIDE 24'-0" TOTAL LENGTH HAIR PIN BARS TYPICAL @ ±45 DEG. TO EXTERIOR GRID LINE
2. PROVIDE ANCHOR BOLT SIZE PER STEEL BUILDING MANUFACTURER
3. NOTE ALL FOOTING REINFORCEMENT PROVIDE EACH DIRECTION & TOP & BOTTOM OF FOOTING EXCEPT FTGS F-1, F-2, F-3, & F-5.
4. CENTER SPOT FTG'S ON METAL BUILDING COLUMNS

FOUNDATION PLAN

SCALE: 1/8" = 1'-0"

FOUNDATION NOTES
1. TOP OF SLAB ELEVATION = 100'-0" UNLESS NOTES THUS: EL.= XX'-XX" SLOPE UNIFORMLY TO FLOOR DRAINS.
2. STEPS IN SLAB SHOWN THUS: ON PLAN, REFER TO DETAIL C4/S503 FOR TYPICAL STEP IN SLAB. REFER TO ARCHITECTURAL PLANS FOR EXACT LOCATION OF STEPS.
3. SLAB ON GRADE SHALL BE 6" CONCRETE OVER 6" FREE DRAINING GRAVEL. REINFORCE SLAB WITH #4 @ 18" O.C. EACH DIRECTION, UNLESS NOTED OTHERWISE ON PLAN.
4. PLACE CONTROL JOINTS AND CONSTRUCTION JOINTS IN SLAB PER GENERAL NOTES. REFER TO DETAIL C4/S501.
5. FOOTING TYPES NOTES THUS: "F-X". REFER TO SCHEDULE FOR SIZE AND REINFORCEMENT. REFER TO SECTIONS FOR TOP OF FOOTING ELEVATIONS.
6. CENTER FOOTINGS ON WALLS AND COLUMNS UNLESS DIMENSIONED OTHERWISE ON PLANS. ALL FOOTINGS SHALL BEAR ON ENGINEERED COMPACTED FILL.
7. REFER TO SECTIONS FOR TOP OF FOUNDATION WALL ELEVATIONS.
8. STEEL COLUMNS AND BASE PLATES SIZES DENOTED ON PLAN. REFER TO DETAIL C5/S501 FOR TYPICAL DETAIL.
9. REFER TO DETAIL C5/S503 FOR TYPICAL CONCRETE WALL REINFORCEMENT DETAILS.
10. FOUNDATION DESIGN INFORMATION WAS OBTAINED FROM THE SOILS REPORT PREPARED BY GEM ENGINEERING. ALL SITE PREPARATION, EXCAVATION, FILL, COMPACTION AND PLACEMENT WORK PERFORMED SHALL COMPLY WITH RECOMMENDATIONS OUTLINED IN THE ABOVE REFERENCED REPORT.
11. REFER TO ARCHITECTURAL/SITE DRAWINGS FOR INFORMATION AND LOCATION OF SITE WALLS, STEPS, PLANTERS, RAMPS, ETC.
12. REFER TO GENERAL NOTES ON SHEET S001 FOR ADDITIONAL INFORMATION.

FOOTING AND FOUNDATION PLAN NOTES

1. COORDINATE LOCATION OF DEPRESSED SLABS, SLOPED SLABS, AND FLOOR DRAINS WITH ARCHITECTURAL AND MECHANICAL DRAWINGS.
2. SEE ARCHITECTURAL AND CIVIL DRAWINGS FOR EXTERIOR CONCRETE WORK AT DOORS, SIDEWALKS, ETC.
4. ALL SPOT FOOTINGS SHALL BE CENTERED UNDER COLUMNS (UNO).
5. SEE DETAILS C1/S503 AND C2/S503 FOR CONDITION WHERE BURIED PIPES RUN PARALLEL AND PERPENDICULAR TO FOOTINGS.
6. SEE DETAIL C4/S501 AND C4/S503 FOR TYPICAL CONTROL/CONSTRUCTION JOINTS IN CONCRETE SLAB ON GRADE AND AT SLAB DEPRESSIONS.
7. SEE DETAIL C3/S503 FOR SLAB REINFORCING WHERE CONTROL JOINTS ARE DISCONTINUOUS.
8. SEE DETAIL B1/S503 FOR ADDITIONAL REINFORCING AT MISCELLANEOUS OPENINGS IN CONCRETE WALLS.
9. SEE ARCHITECTURAL DRAWINGS FOR DIMENSIONS TO ALL STEEL COLUMNS.
10. FOOTING AND CONCRETE PIER SIZES SHOWN ARE AN ESTIMATE OF ACTUAL SIZES. ACTUAL SIZES WILL BE PROVIDED AFTER PREFABRICATED METAL BUILDER IS SELECTED. ALL BIDDERS SHALL PROVIDE UNIT PRICES FOR ADDING OR SUBTRACTING VOLUME OF CONCRETE, WEIGHT OF REINFORCING STEEL AND VOLUME OF EARTHWORK.

InSite Engineering, P.C.
Civil Engineers - Land Surveyors - Land Planners
1883 W. Royal Hunte Dr., Suite 200
Cedar City, Utah 84720
phone: (435) 867-4565
fax: (435) 867-4459

SARGENT DESIGN GROUP
ARCHITECTURE | PLANNING
36 NORTH 300 WEST, SUITE B
CEDAR CITY, UTAH 84720
OFFICE: (435) 586-8510
FAX: (435) 586-4873
jcoltons@email.com

State of Utah-Department of Administrative Services
DIVISION OF FACILITIES CONSTRUCTION AND MANAGEMENT
4110 State Office Building/Salt Lake City, Utah 84114/538-3018

Project:
UDOT HURRICANE FACILITY
DFCM PROJECT NO. 07292300

Sheet Title:
FOOTING & FOUNDATION PLAN

Revisions:

PROJECT NUMBER: 28493
DATE: MARCH 2, 2009
DRAWN BY: BD
CHECKED BY:
APPROVED BY:
SHEET NUMBER:

S101

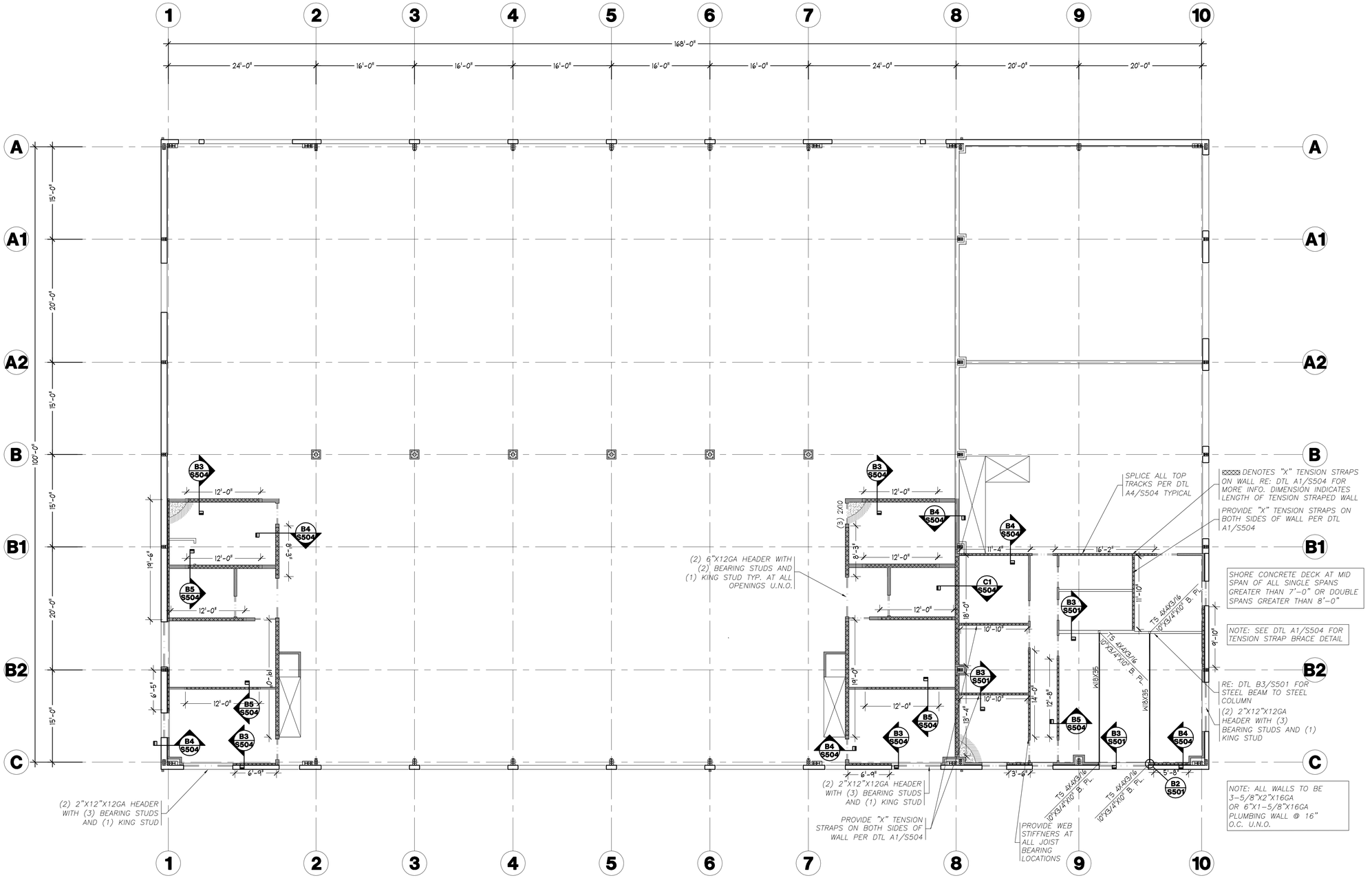

MEZZANINE FLOOR FRAMING PLAN

SCALE: 1/8" = 1'-0"

FLOOR DESIGN CRITERIA
DL = 65 PSF
RL = 125 PSF
TL = 190 PSF

FLOOR FRAMING NOTES:

1. FINISH FLOOR ELEVATION = 112'-0" U.N.O. ON PLAN THUS: EL.= XXX'-XX".
2. BEAMS ARE 50 KSI A992 STEEL.
3. REFER TO DETAIL B3/S501 FOR TYPICAL BEAM TO COLUMN CONNECTION.
4. REFER TO GENERAL STRUCTURAL NOTES ON SHEET S001 FOR ADDITIONAL INFORMATION.

InSite Engineering, P.C.
Civil Engineers - Land Surveyors - Land Planners
1883 W. Royal Hunte Dr., Suite 200
Cedar City, Utah 84720
phone: (435) 867-4565
fax: (435) 867-4459

SARGENT DESIGN GROUP
ARCHITECTURE | PLANNING
36 NORTH 300 WEST, SUITE B
CEDAR CITY, UTAH 84720
OFFICE: (435) 586-8510
FAX: (435) 586-4873
jcoltons@email.com

State of Utah-Department of Administrative Services
DIVISION OF FACILITIES CONSTRUCTION AND MANAGEMENT
4110 State Office Building/Salt Lake City, Utah 84114/538-3018

Project:
UDOT HURRICANE FACILITY
DFCM PROJECT NO. 07232900

Sheet Title:
MEZZANINE FLOOR FRAMING PLAN

Revisions:

PROJECT NUMBER: 2843S
DATE: MARCH 2, 2009
DRAWN BY: BD
CHECKED BY:
APPROVED BY:
SHEET NUMBER:

S102

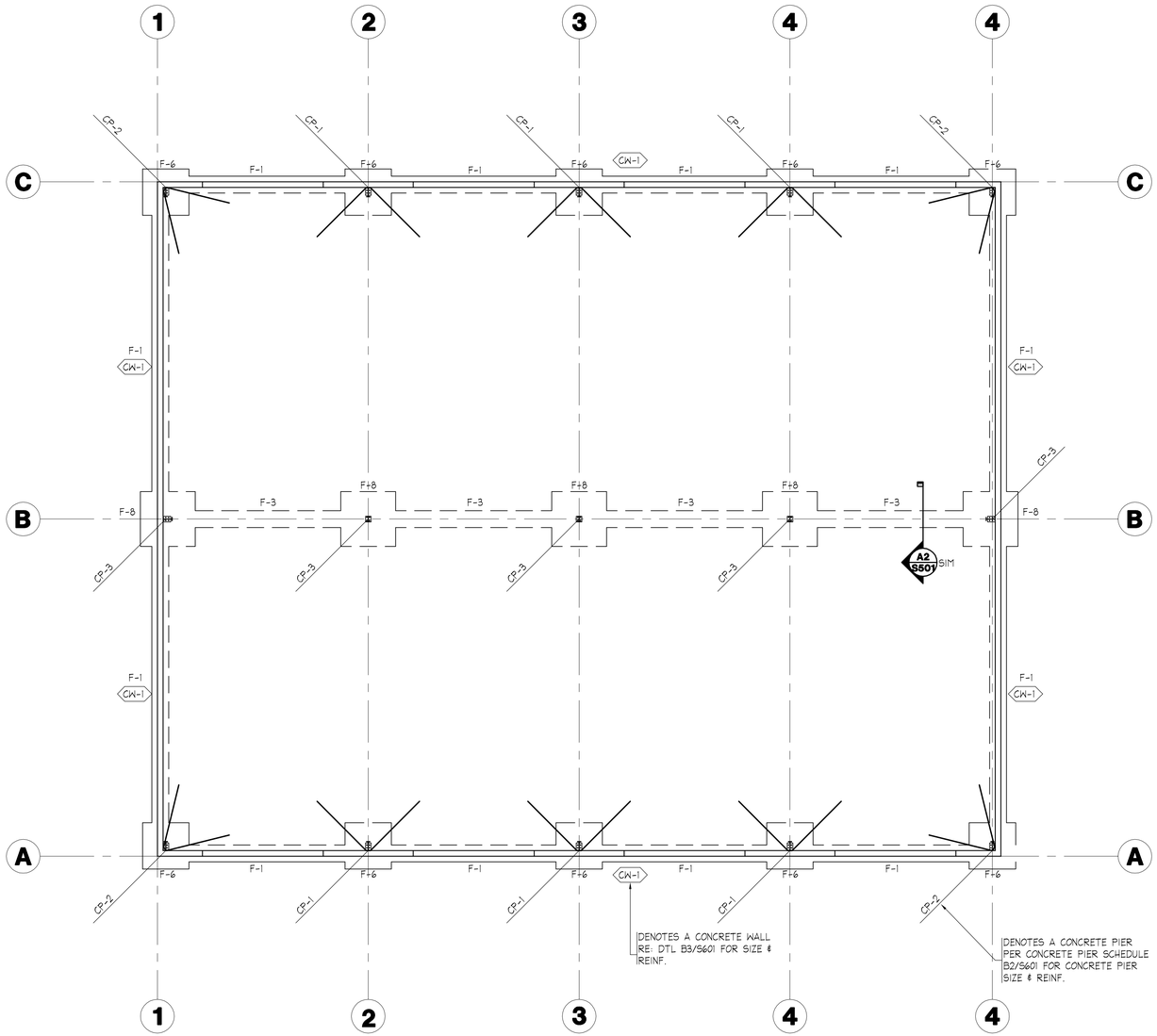

FOUNDATION PLAN

SCALE: 1/8" = 1'-0"

FOOTING SCHEDULE

MARK	ANCHOR BOLT EMBEDMENT	FOOTING			REINF.		HAIRPINS	DETAIL
		W	t	L	LENGTH WISE	CROSS WISE		
F-1	–	2'-0"	1'-0"	CONT.	(3)-#4	–	–	B4/S501
F-2	NOT USED	–	–	–	–	–	–	–
F-3	7"	2'-0"	1'-0"	CONT.	(3)-#4	–	–	RE: PLAN
F-4	9"	4'-0"	1'-0"	4'-0"	(4)-#5	(4)-#5	(2)-#4	A1/S501
F-5	9"	4'-0"	1'-0"	4'-0"	(4)-#5	(4)-#5	–	C5/S501
F-6	9"	5'-6"	1'-0"	5'-6"	(5)-#5	(5)-#5	(2)-#4	A1/S501
F-7	10"	6'-6"	1'-2"	6'-6"	(7)-#5	(7)-#5	–	B2/S501
F-8	10"	7'-6"	1'-2"	7'-6"	(7)-#6	(7)-#6	–	B2/S501
F-9	12"	8'-0"	1'-4"	10'-0"	(8)-#5	(9)-#4	(4)-#4	A1/S501
F-10	–	2'-6"	1'-0"	CONT.	(4)-#4	–	–	B4/S501
F-11	–	2'-6"	1'-0"	CONT.	(4)-#4	–	–	A5/S501

NOTES:
1. PROVIDE 24'-0" TOTAL LENGTH HAIR PIN BARS TYPICAL @ ±45 DEG. TO EXTERIOR GRID LINE
2. PROVIDE ANCHOR BOLTS PER STEEL BUILDING MANUFACTURER
3. NOTE ALL FOOTING REINFORCEMENT PROVIDE EACH DIRECTION & TOP & BOTTOM OF FOOTING EXCEPT FTGS F-1, F-2, F-3, & F-5.
4. AT F-3 SIMILAR WALL IN DETAIL D4.1/S501 IS A METAL STUD WALL PER ARCH.
5. CENTER SPOT FTG'S ON METAL BUILDING COLUMNS

FOUNDATION NOTES
1. TOP OF SLAB ELEVATION = 100'-0" UNLESS NOTES THUS: EL.= XX'-XX" SLOPE UNIFORMLY TO FLOOR DRAINS.
2. STEPS IN SLAB SHOWN THUS: ON PLAN, REFER TO DETAIL C4/S503 FOR TYPICAL STEP IN SLAB. REFER TO ARCHITECTURAL PLANS FOR EXACT LOCATION OF STEPS.
3. SLAB ON GRADE SHALL BE 6" CONCRETE OVER 6" FREE DRAINING GRAVEL. REINFORCE SLAB WITH #4 @ 18" O.C. EACH DIRECTION, UNLESS NOTED OTHERWISE ON PLAN.
4. PLACE CONTROL JOINTS AND CONSTRUCTION JOINTS IN SLAB PER GENERAL NOTES. REFER TO DETAIL C4/S501.
5. FOOTING TYPES NOTES THUS: "F-X". REFER TO SCHEDULE FOR SIZE AND REINFORCEMENT. REFER TO SECTIONS FOR TOP OF FOOTING ELEVATIONS.
6. CENTER FOOTINGS ON WALLS AND COLUMNS UNLESS DIMENSIONED OTHERWISE ON PLANS. ALL FOOTINGS SHALL BEAR ON ENGINEERED COMPACTED FILL.
7. REFER TO SECTIONS FOR TOP OF FOUNDATION WALL ELEVATIONS.
8. STEEL COLUMNS AND BASE PLATES SIZES DENOTED ON PLAN. REFER TO DETAIL C5/S501 FOR TYPICAL DETAIL.
9. REFER TO DETAIL C5/S503 FOR TYPICAL CONCRETE WALL REINFORCEMENT DETAILS.
10. FOUNDATION DESIGN INFORMATION WAS OBTAINED FROM THE SOILS REPORT PREPARED BY GEM ENGINEERING. ALL SITE PREPARATION, EXCAVATION, FILL, COMPACTION AND PLACEMENT WORK PERFORMED SHALL COMPLY WITH RECOMMENDATIONS OUTLINED IN THE ABOVE REFERENCED REPORT.
11. REFER TO ARCHITECTURAL/SITE DRAWINGS FOR INFORMATION AND LOCATION OF SITE WALLS, STEPS, PLANTERS, RAMPS, ETC.
12. REFER TO GENERAL NOTES ON SHEET S001 FOR ADDITIONAL INFORMATION.

FOOTING AND FOUNDATION PLAN NOTES

1. COORDINATE LOCATION OF DEPRESSED SLABS, SLOPED SLABS, AND FLOOR DRAINS WITH ARCHITECTURAL AND MECHANICAL DRAWINGS.
2. SEE ARCHITECTURAL AND CIVIL DRAWINGS FOR EXTERIOR CONCRETE WORK AT DOORS, SIDEWALKS, ETC.
4. ALL SPOT FOOTINGS SHALL BE CENTERED UNDER COLUMNS (UNO).
5. SEE DETAILS C1/S503 AND C2/S503 FOR CONDITION WHERE BURIED PIPES RUN PARALLEL AND PERPENDICULAR TO FOOTINGS.
6. SEE DETAIL C4/S501 AND C4/S503 FOR TYPICAL CONTROL/CONSTRUCTION JOINTS IN CONCRETE SLAB ON GRADE AND AT SLAB DEPRESSIONS.
7. SEE DETAIL C3/S503 FOR SLAB REINFORCING WHERE CONTROL JOINTS ARE DISCONTINUOUS.
8. SEE DETAIL B1/S503 FOR ADDITIONAL REINFORCING AT MISCELLANEOUS OPENINGS IN CONCRETE WALLS.
9. SEE ARCHITECTURAL DRAWINGS FOR DIMENSIONS TO ALL STEEL COLUMNS.
10. FOOTING AND CONCRETE PIER SIZES SHOWN ARE AN ESTIMATE OF ACTUAL SIZES. ACTUAL SIZES WILL BE PROVIDED AFTER PREFABRICATED METAL BUILDER IS SELECTED. ALL BIDDERS SHALL PROVIDE UNIT PRICES FOR ADDING OR SUBTRACTING VOLUME OF CONCRETE, WEIGHT OF REINFORCING STEEL AND VOLUME OF EARTHWORK.

InSite Engineering, P.C.
Civil Engineers - Land Surveyors - Land Planners
1883 W. Royal Hunte Dr., Suite 200
Cedar City, Utah 84720
phone: (435) 867-4565
fax: (435) 867-4459

SARGENT DESIGN GROUP
ARCHITECTURE | PLANNING
36 NORTH 300 WEST, SUITE B
CEDAR CITY, UTAH 84720
OFFICE: (435) 586-8510
FAX: (435) 586-4873
jcoltons@email.com

State of Utah-Department of Administrative Services
DIVISION OF FACILITIES CONSTRUCTION AND MANAGEMENT
4110 State Office Building/Salt Lake City, Utah 84114/538-3018

Project:
UDOT HURRICANE FACILITY
DFCM PROJECT NO. 07232900

Sheet Title:
OPEN STORAGE FOOTING & FOUNDATION PLAN

Revisions:

PROJECT NUMBER: 2849S
DATE: MARCH 2, 2009
DRAWN BY: BD
CHECKED BY:
APPROVED BY:
SHEET NUMBER:
S103

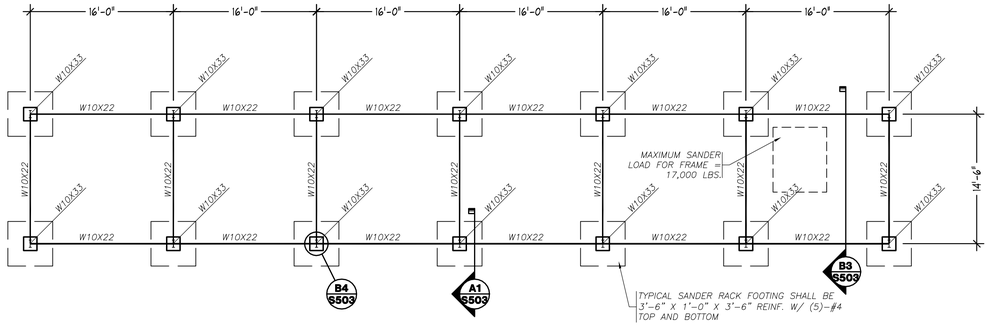

SANDER RACK PLAN

SCALE: 1/8" = 1'-0"

(PROVIDE (2) - PER SITE PLAN C102)

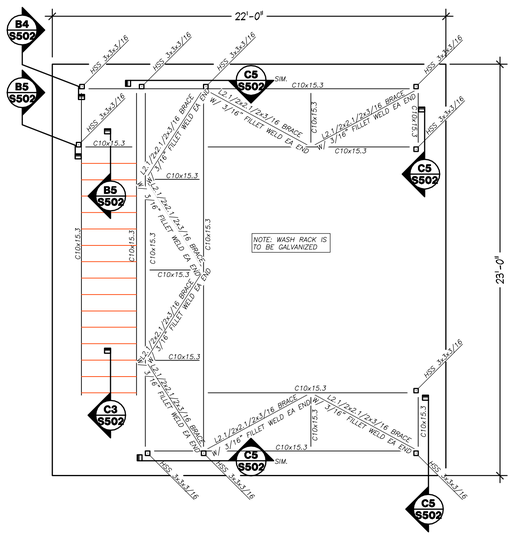

WASH RACK PLAN

SCALE: 1/4" = 1'-0"

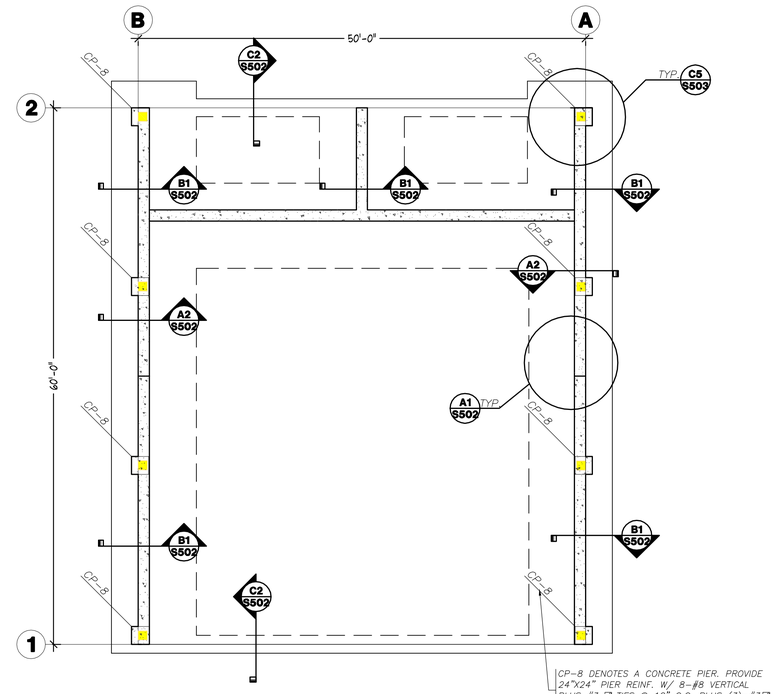

SALT STORAGE FOOTING & FOUNDATION PLAN

SCALE: 1/8" = 1'-0"

FOUNDATION NOTES

1. CENTER FOOTINGS ON WALLS AND COLUMNS UNLESS DIMENSIONED OTHERWISE ON PLANS. ALL FOOTINGS SHALL BEAR ON ENGINEERED COMPACTED FILL.
2. REFER TO SECTIONS FOR TOP OF FOUNDATION WALL ELEVATIONS.
3. STEEL COLUMNS AND BASE PLATES SIZES DENOTED ON PLAN. REFER TO DETAIL D5/S501 FOR TYPICAL DETAIL.
4. REFER TO DETAIL C5/S503 FOR TYPICAL CONCRETE WALL REINFORCEMENT DETAILS.
5. FOUNDATION DESIGN INFORMATION WAS OBTAINED FROM THE SOILS REPORT PREPARED BY GEM ENGINEERING. ALL SITE PREPARATION, EXCAVATION, FILL, COMPACTION AND PLACEMENT WORK PERFORMED SHALL COMPLY WITH RECOMMENDATIONS OUTLINED IN THE ABOVE REFERENCED REPORT.
6. REFER TO ARCHITECTURAL/SITE DRAWINGS FOR INFORMATION AND LOCATION OF SITE WALLS, STEPS, PLANTERS, RAMPS, ETC.
7. REFER TO GENERAL NOTES ON SHEET S001 FOR ADDITIONAL INFORMATION.

FOOTING AND FOUNDATION PLAN NOTES

1. SEE ARCHITECTURAL AND CIVIL DRAWINGS FOR EXTERIOR CONCRETE WORK AT DOORS, SIDEWALKS, ETC.
2. ALL SPOT FOOTINGS SHALL BE CENTERED UNDER COLUMNS (UNO).
3. SEE DETAILS C1/S503 AND C2/S503 FOR CONDITION WHERE BURIED PIPES RUN PARALLEL AND PERPENDICULAR TO FOOTINGS.
4. SEE DETAIL B1/S503 FOR ADDITIONAL REINFORCING AT MISCELLANEOUS OPENINGS IN CONCRETE WALLS.
5. SEE ARCHITECTURAL DRAWINGS FOR DIMENSIONS TO ALL STEEL COLUMNS.
6. FOOTING AND CONCRETE PIER SIZES SHOWN ARE AN ESTIMATE OF ACTUAL SIZES. ACTUAL SIZES WILL BE PROVIDED AFTER PREFABRICATED METAL BUILDER IS SELECTED. ALL BIDDERS SHALL PROVIDE UNIT PRICES FOR ADDING OR SUBTRACTING VOLUME OF CONCRETE, WEIGHT OF REINFORCING STEEL AND VOLUME OF EARTHWORK.

InSite Engineering, P.C.
Civil Engineers - Land Surveyors - Land Planners
1883 W. Royal Hunte Dr., Suite 200
Cedar City, Utah 84720
phone: (435) 867-4565
fax: (435) 867-4459

SARGENT DESIGN GROUP
ARCHITECTURE | PLANNING
36 NORTH 300 WEST, SUITE B
CEDAR CITY, UTAH 84720
OFFICE: (435) 586-8510
FAX: (435) 586-4873
jcoltons@email.com

State of Utah-Department of Administrative Services
DIVISION OF FACILITIES CONSTRUCTION AND MANAGEMENT
4110 State Office Building/Salt Lake City, Utah 84114/538-3018

Project:
UDOT HURRICANE FACILITY
DFCM PROJECT NO. 07292300

Sheet Title:
OUT BUILDING PLANS

Revisions:

PROJECT NUMBER: 28499
DATE: MARCH 2, 2009
DRAWN BY: BD
CHECKED BY:
APPROVED BY:
SHEET NUMBER:
S104

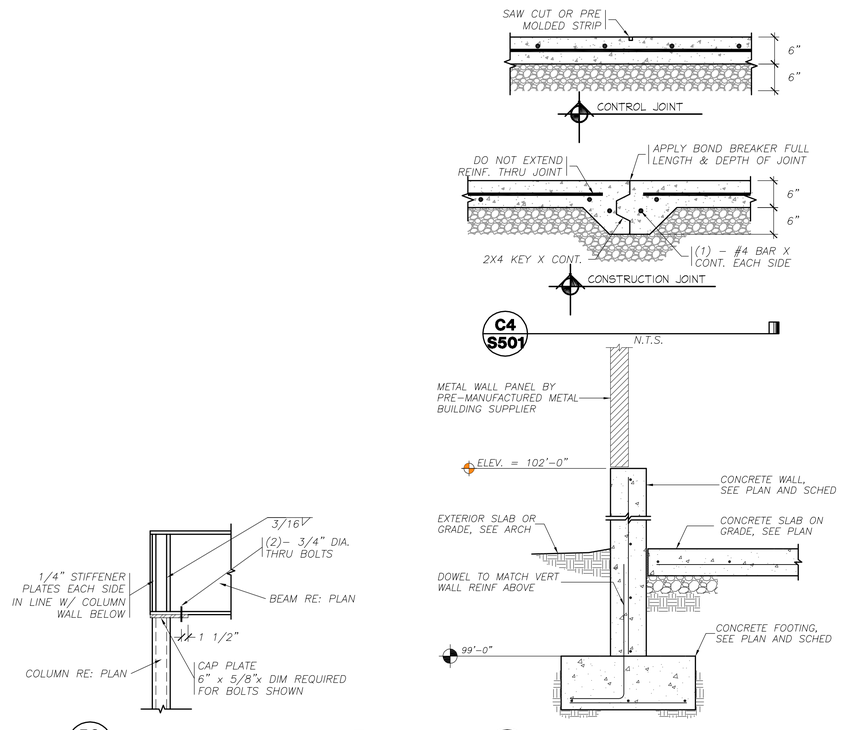

C4 S501 N.T.S.

B4 S501 FOUNDATION WALL DETAIL N.T.S.

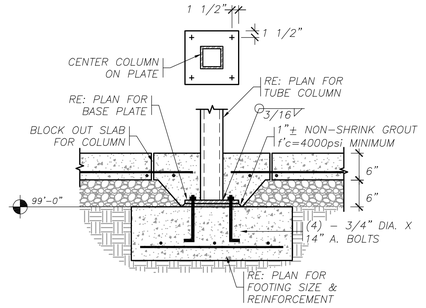

C5 S501 N.T.S.

B3 S501 N.T.S.

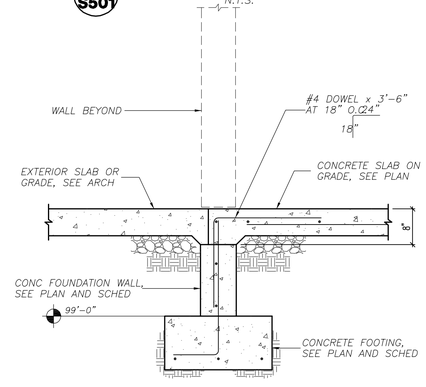

AT OPENING IN WALL

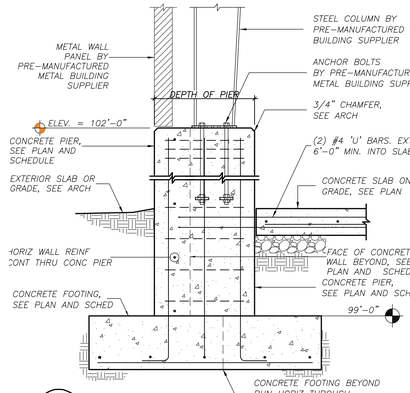

A1 S501 STEEL COLUMN BEARING AT CONCRETE PIER/FOOTING N.T.S.

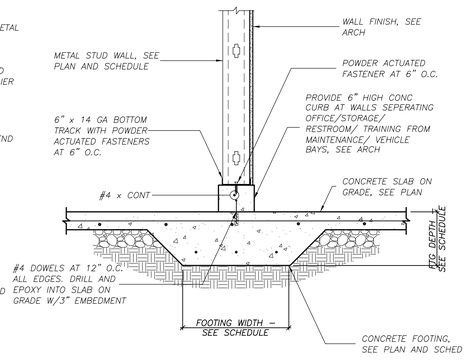

A2 S501 THICKENED SLAB FOOTING AT INTERIOR STUD WALL N.T.S.

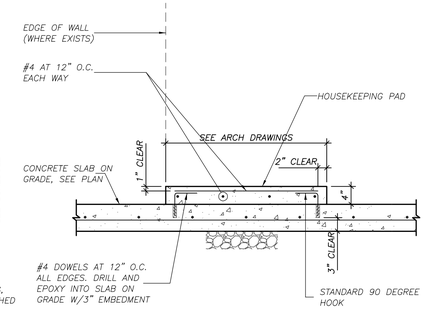

A3 S501 TYPICAL HOUSEKEEPING PAD N.T.S.

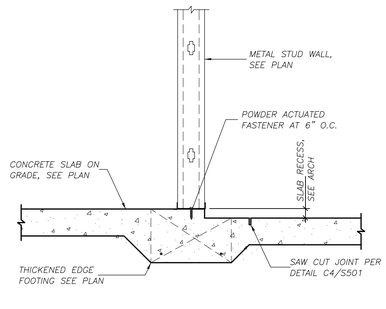

A4 S501 RECESSED SLAB AT FTS1.5 N.T.S.

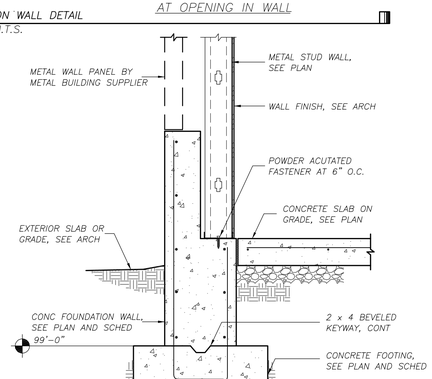

A5 S501 METAL STUD WALL AT FOOTING N.T.S.

SARGENT DESIGN GROUP
ARCHITECTURE | PLANNING
36 NORTH 300 WEST, SUITE B
CEDAR CITY, UTAH 84720
OFFICE: (435) 586-8510
FAX: (435) 586-4873
jcoltons@email.com

State of Utah–Department of Administrative Services
DIVISION OF FACILITIES CONSTRUCTION AND MANAGEMENT
4110 State Office Building/Salt Lake City, Utah 84114/538-3018

Project:
UDOT HURRICANE FACILITY
DFCM PROJECT NO. 07292900

Sheet Title:
DETAILS

Revisions:

PROJECT NUMBER: 28498
DATE: MARCH 2, 2009
DRAWN BY: BD
CHECKED BY:
APPROVED BY:
SHEET NUMBER:
S501

InSite Engineering, P.C.
Civil Engineers - Land Surveyors - Land Planners
1883 W. Royal Hunte Dr., Suite 200
Cedar City, Utah 84720
phone: (435) 867-4565
fax: (435) 867-4459

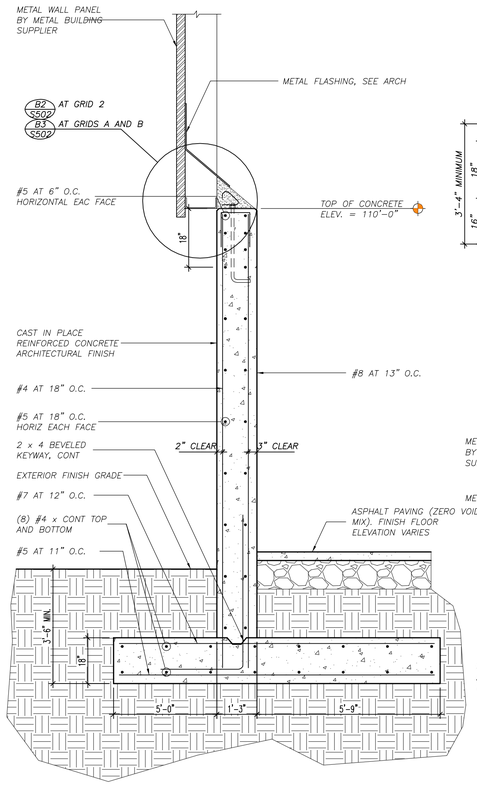

B1 S502 WALL AND FOOTING DETAIL–SALT STORAGE
N.T.S.

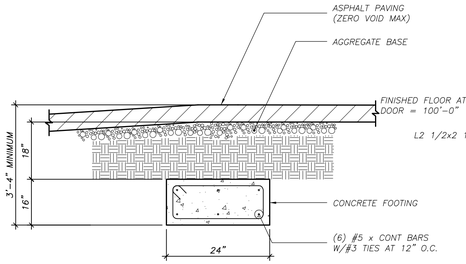

C2 S502 FOOTING DETAIL – SALT STORAGE
N.T.S.

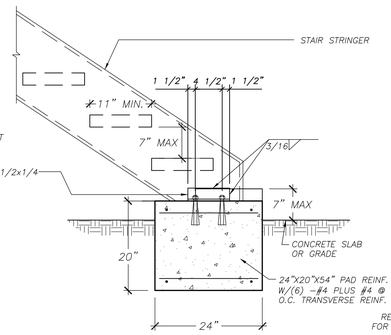

C3 S502 STRINGER ANCHORAGE DETAIL – WASH RACK
N.T.S.

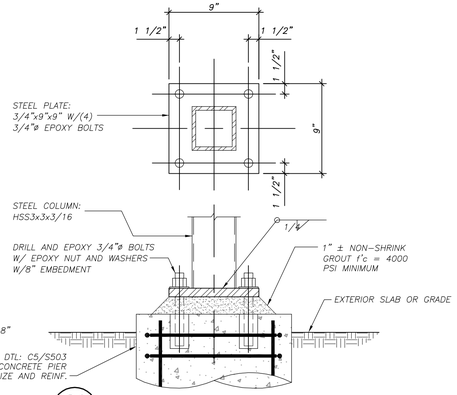

C4 S502 STEEL COLUMN BASE – WASH RACK
N.T.S.

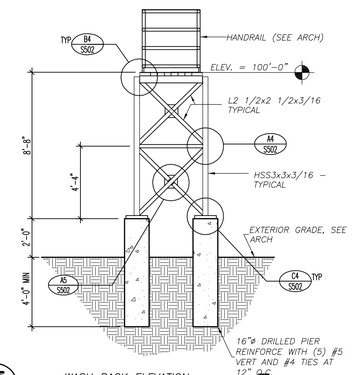

C5 S502 WASH RACK ELEVATION
N.T.S.

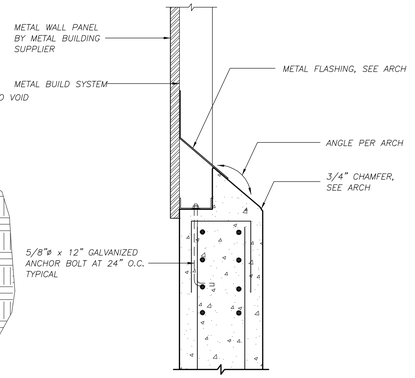

B2 S502 WALL SECTION AT GRID 2–SALT STORAGE
N.T.S.

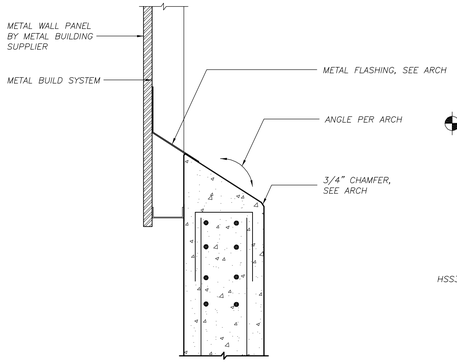

B3 S502 WALL SECTION AT GRIDS A & B – SALT STORAGE
N.T.S.

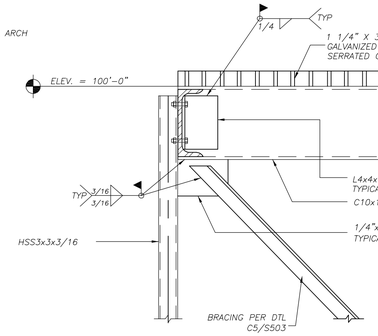

B4 S502 TYPICAL BRACE DETAIL – WASH RACK
N.T.S.

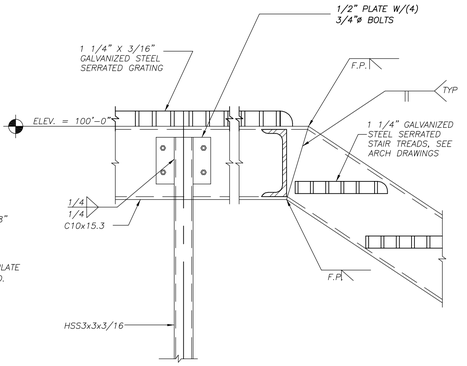

B5 S502 STAIR SUPPORT DETAIL – WASH RACK
N.T.S.

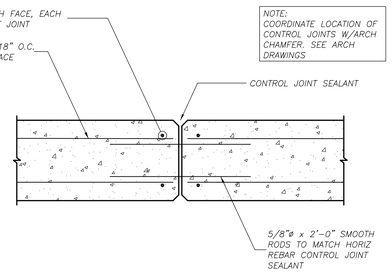

A1 S502 JOINT DETAIL – SALT STORAGE
N.T.S.

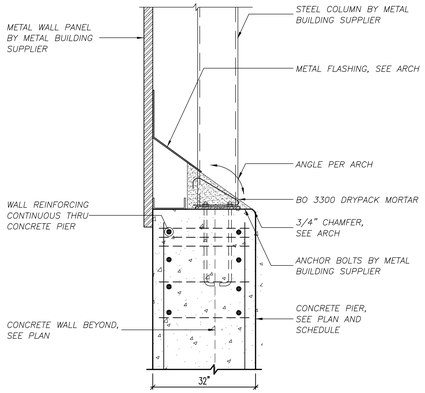

A2 S502 WALL SECTION AT COLUMNS AT GRIDS A AND B – SALT STORAGE
N.T.S.

NOT USED

A3 S502
N.T.S.

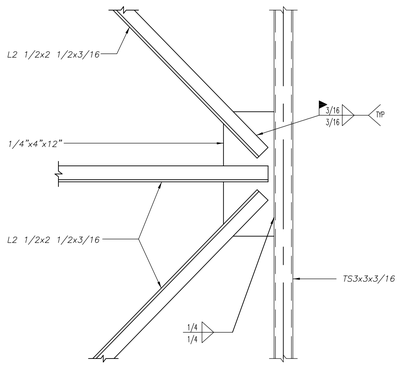

A4 S502 BRACE DETAIL – WASH RACK
N.T.S.

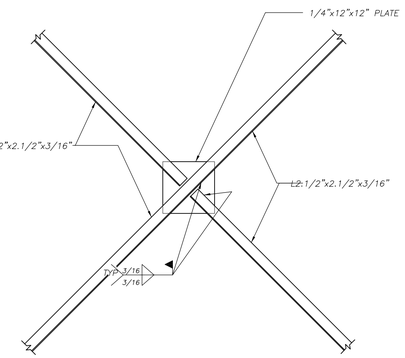

A5 S502
N.T.S.

SARGENT DESIGN GROUP
ARCHITECTURE | PLANNING
36 NORTH 300 WEST, SUITE B
CEDAR CITY, UTAH 84720
OFFICE: (435) 586-8510
FAX: (435) 586-4873
jcolons@email.com

State of Utah–Department of Administrative Services
DIVISION OF FACILITIES CONSTRUCTION AND MANAGEMENT
4110 State Office Building/Salt Lake City, Utah 84114/538-3018

Project:
UDOT
HURRICANE
FACILITY
DFCM PROJECT NO.
07292900

Sheet Title:

DETAILS

Revisions:

PROJECT NUMBER: 28499
DATE: MARCH 2, 2009
DRAWN BY: BD
CHECKED BY:
APPROVED BY:
SHEET NUMBER:

S502

InSite Engineering, P.C.
Civil Engineers - Land Surveyors - Land Planners
1883 W. Royal Hunte Dr., Suite 200
Cedar City, Utah 84720
phone: (435) 867-4565
fax: (435) 867-4459

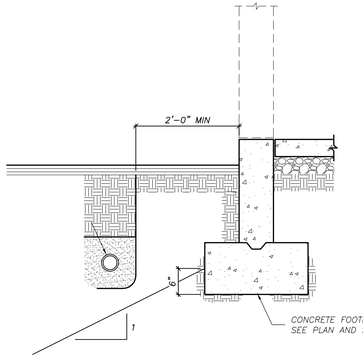

C1 S503 — CONDITION AT PIPE PARALLEL TO CONCRETE FOOTING
N.T.S.

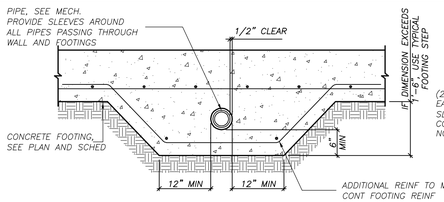

C2 S503 — CONDITIONS AT PIPE PERPENDICULAR TO FOOTING
N.T.S.

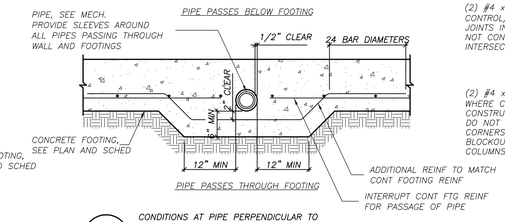

C3 S503 — LOCATIONS REQUIRING ADDITIONAL SLAB REINFORCING [PLAN VIEW]
N.T.S.

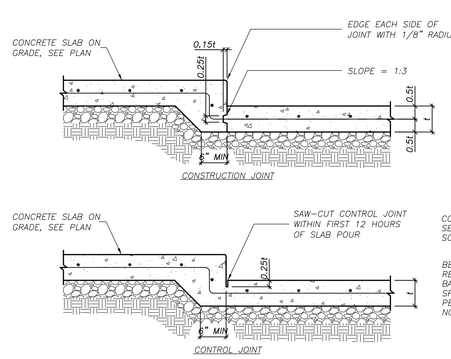

C4 S503 — JOINT DETAILS AT SLAB DEPRESSIONS
N.T.S.

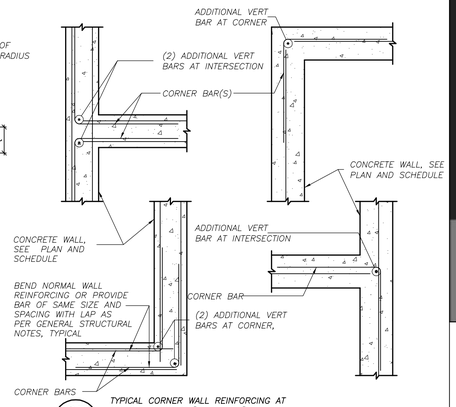

C5 S503 — TYPICAL CORNER WALL REINFORCING AT CONCRETE WALLS [PLAN VIEW]
N.T.S.

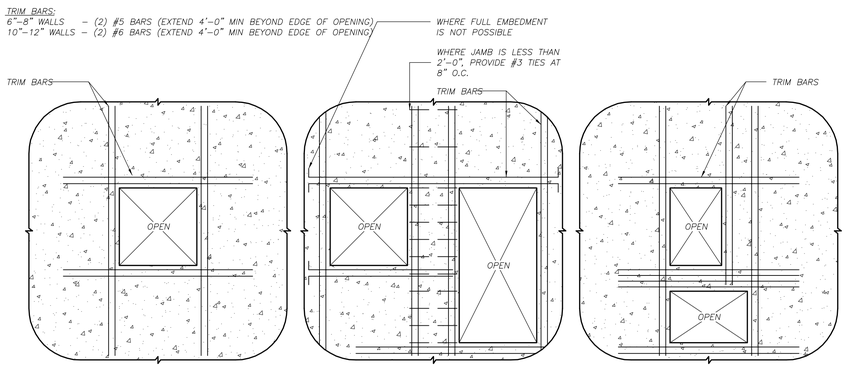

B1 S503 — TYPICAL REINFORCING FOR MISCELLANEOUS OPENINGS LESS THAN 3'-0" IN CONCRETE WALLS
WHERE MISCELLANEOUS OPENING WIDTH IS GREATER THAN 3'-0" WIDE, CONTACT STRUCTURAL ENGINEER.
N.T.S.

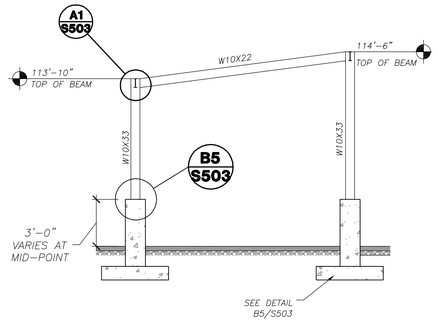

B3 S503 — SECTION AT SANDER RACK
N.T.S.

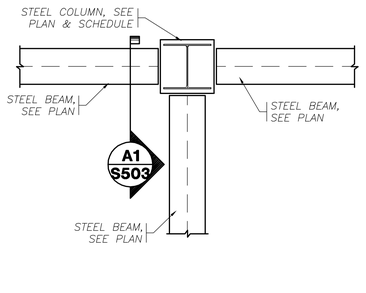

B4 S503
N.T.S.

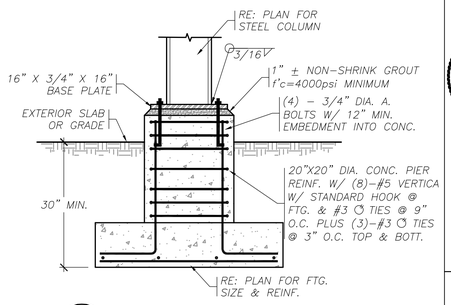

B5 S503
N.T.S.

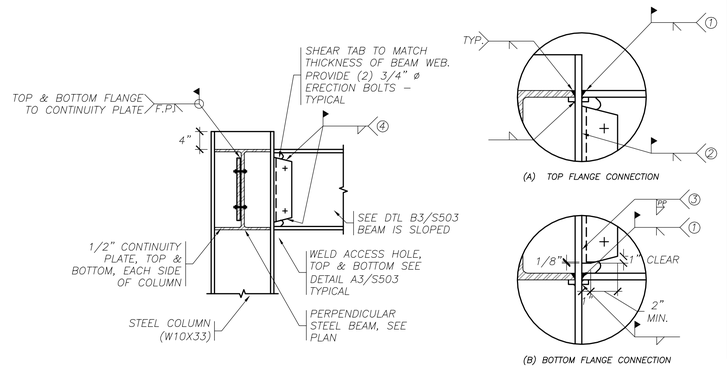

NOTES:
1. CJP GROOVE WELD AT TOP AND BOTTOM FLANGES. AT TOP FLANGE, EITHER (1) REMOVE WELD BACKING, BACKGOUGE, AND ADD 5/16" MIN. FILLET WELD, OR (2) LEAVE BACKING IN PLACE AND ADD 5/16" FILLET UNDER BACKING. AT BOTTOM FLANGE, REMOVE WELD BACKING, BACKGOUGE, AND ADD 5/16" MIN. FILLET WELD.
2. CJP GROOVE WELD FULL LENGTH OF WEB BETWEEN WELD ACCESS HOLES. PROVIDE NON-FUSIBLE WELD TABS, REMOVE WELD TABS AFTER WELDING AND GRIND END OF WELD SMOOTH AT WELD ACCESS HOLE.
3. FULL DEPTH PARTIAL PENETRATION FROM FAR SIDE.
4. FILLET WELD SHEAR TAB TO BEAM WEB. WELD SHEAR TAB MINUS 1/16". WELD SHALL EXTEND OVER THE TOP AND BOTTOM ONE-THIRD OF THE SHEAR TAB HEIGHT AND ACROSS THE TOP AND BOTTOM.

A1 S503
N.T.S.

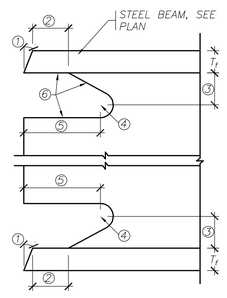

NOTES:
1. BEVEL AS REQUIRED BY AWS D1.1 FOR SELECTED GROOVE WELD PROCEDURE.
A. TOLERANCES SHALL NOT ACCUMULATE TO THE EXTENT THAT THE ANGLE OF THE ACCESS HOLE CUT OT THE FLANGE SURFACE EXCEEDS 25°.
2. LARGER OF T_1 OR 1/2".
3. 3/4" T_1 TO T_1 3/4" MIN.
4. 3/8" MIN. RADIUS.
5. 3 T_1.
6. SEE FEMA-353, RECOMMENDED SPECIFICATIONS & QUALITY ASSURANCE GUILDELINES FOR STEEL MOMENT-FRAME CONSTRUCTION FOR SEISMIC APPLICATION, FOR FABRICAITON DETAILS INCLUDING CUTTING METHODS AND SMOOTHNESS REQUIREMENTS.

A3 S503 — SECTION AT SANDER RACK
N.T.S.

SARGENT DESIGN GROUP
ARCHITECTURE | PLANNING
36 NORTH 300 WEST, SUITE B
CEDAR CITY, UTAH 84720
OFFICE: (435) 586-8510
FAX: (435) 586-4873
jcoltons@email.com

State of Utah–Department of Administrative Services
DIVISION OF FACILITIES CONSTRUCTION AND MANAGEMENT
4110 State Office Building/Salt Lake City, Utah 84114/538-3018

Project:
UDOT
HURRICANE
FACILITY
DFCM PROJECT NO.
07292900

Sheet Title:
DETAILS

Revisions:

PROJECT NUMBER: 28498
DATE: MARCH 2, 2009
DRAWN BY: BD
CHECKED BY:
APPROVED BY:
SHEET NUMBER:
S503

InSite Engineering, P.C.
Civil Engineers - Land Surveyors - Land Planners
1883 W. Royal Hunte Dr., Suite 200
Cedar City, Utah 84720
phone: (435) 867-4565
fax: (435) 867-4459

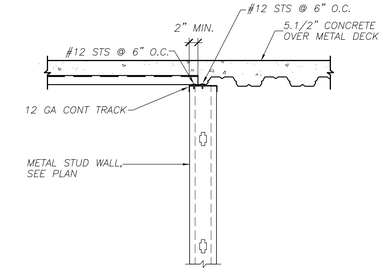

C1 S504 NOT USED

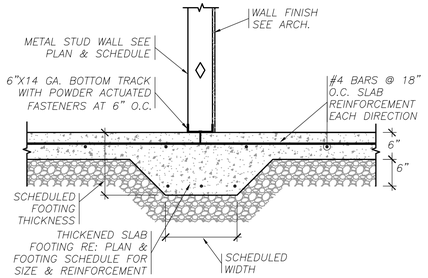

C2 S504 THICKENED SLAB FOOTING AT INTERIOR STUD WALL
N.T.S.

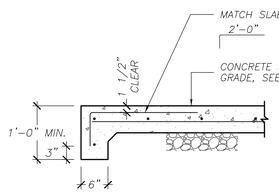

C3 S504 SLAB TURNDOWN DETAILS
N.T.S.

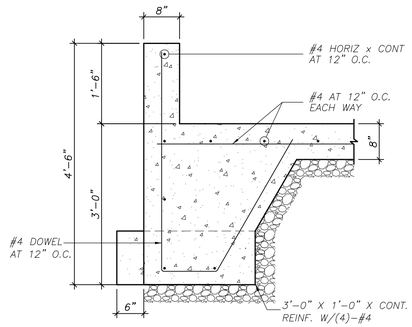

C4 S504 WASTE OIL SLAB DETAIL
N.T.S.

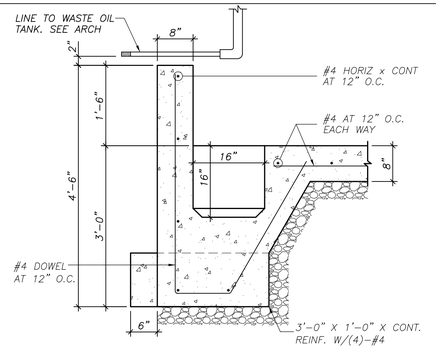

C5 S504 WASTE OIL SLAB DETAIL
N.T.S.

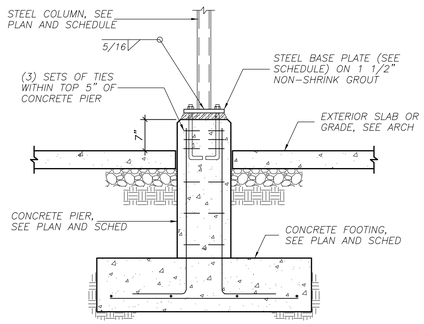

B1 S504 EXTERIOR STEEL COLUMN BEARING ON CONCRETE PIER
N.T.S.

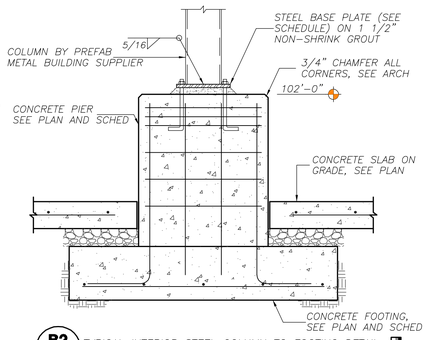

B2 S504 TYPICAL INTERIOR STEEL COLUMN TO FOOTING DETAIL
N.T.S.

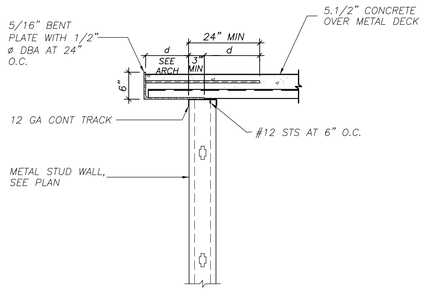

B3 S504 STEEL DECK EDGE DETAIL PERPENDICULAR TO WALL
N.T.S.

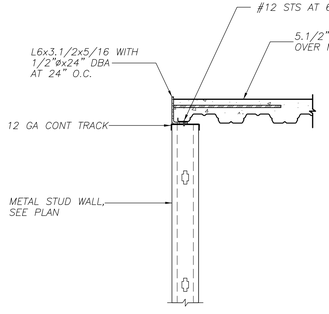

B4 S504 STEEL DECK EDGE DETAIL PERPENDICULAR TO WALL
N.T.S.

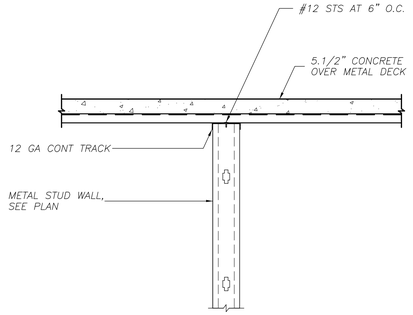

B5 S504 STEEL DECK ON INTERIOR BEARING WALL
N.T.S.

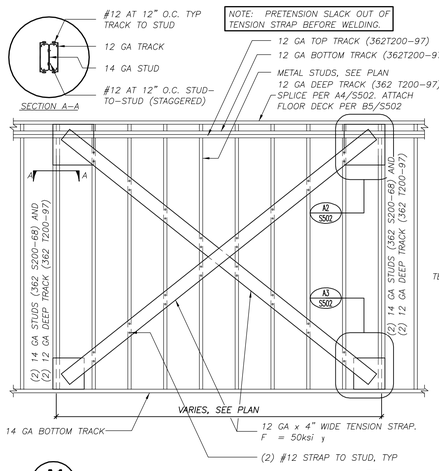

A1 S504 TENSION STRAP BRACE
N.T.S.

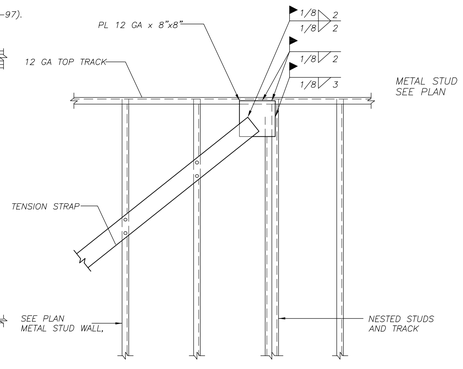

A2 S504 TENSION STRAP BRACE
N.T.S.

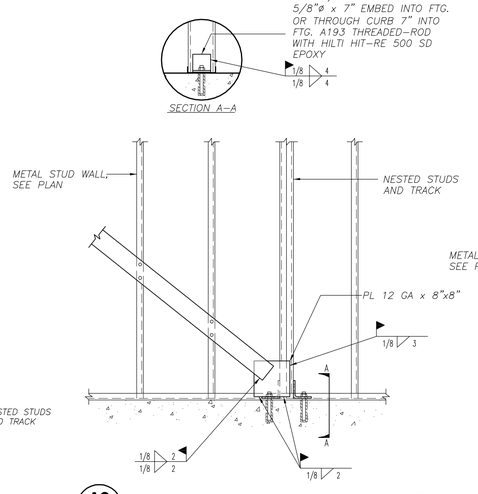

A3 S504 TENSION STRAP BRACE
N.T.S.

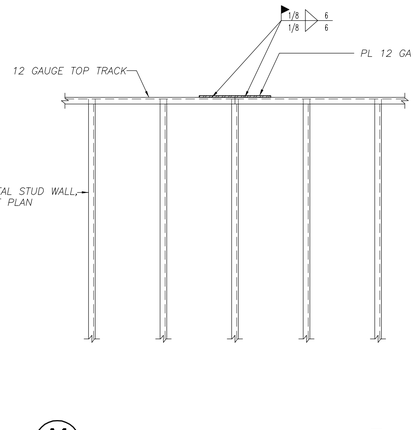

A4 S504 TOP TRACK SPLICE DETAIL
N.T.S.

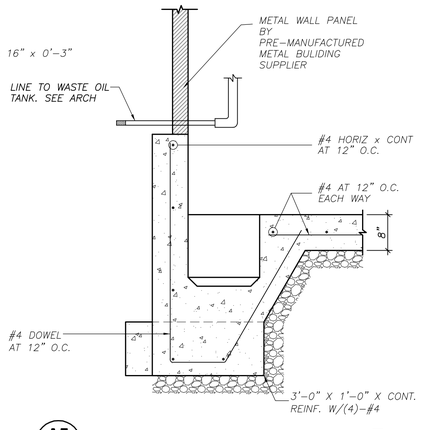

A5 S504 WASTE OIL SLAB DETAIL
N.T.S.

SARGENT DESIGN GROUP
ARCHITECTURE | PLANNING
36 NORTH 300 WEST, SUITE B
CEDAR CITY, UTAH 84720
OFFICE: (435) 586-8510
FAX: (435) 586-4873
jcolons@email.com

State of Utah—Department of Administrative Services
DIVISION OF FACILITIES CONSTRUCTION AND MANAGEMENT
4110 State Office Building/Salt Lake City, Utah 84114/538-3018

Project:
UDOT HURRICANE FACILITY
DFCM PROJECT NO. 07292900

Sheet Title:
DETAILS

Revisions:

PROJECT NUMBER: 28499
DATE: MARCH 2, 2009
DRAWN BY: BD
CHECKED BY:
APPROVED BY:
SHEET NUMBER:
S504

InSite Engineering, P.C.
Civil Engineers - Land Surveyors - Land Planners
1883 W. Royal Hunte Dr., Suite 200
Cedar City, Utah 84720
phone: (435) 867-4565
fax: (435) 867-4459

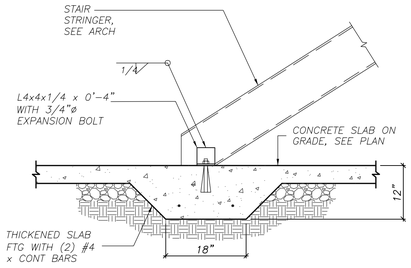

B1 S505 TYPICAL STAIR STRINGER BEARING DETAIL

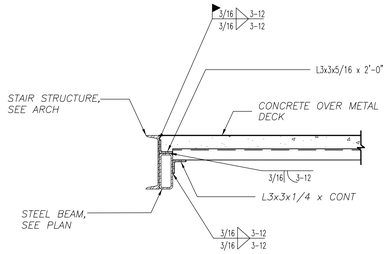

B2 S505 STAIR LANDING DETAIL N.T.S.

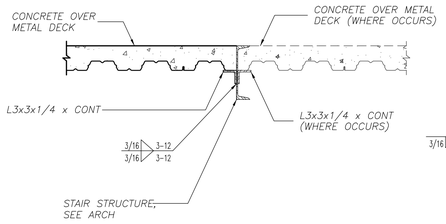

B3 S505 STAIR LANDING DETAIL N.T.S.

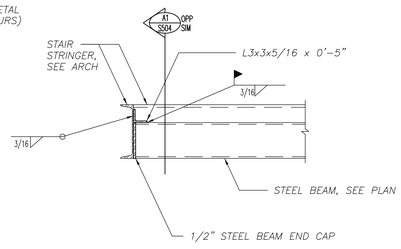

B4 S505 STAIR LANDING DETAIL N.T.S.

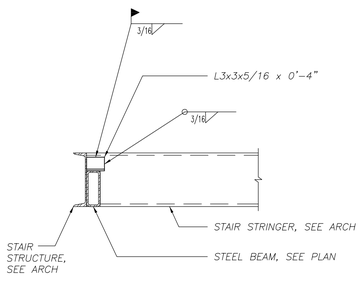

A1 S505 STAIR STRINGER CONNECTION N.T.S.

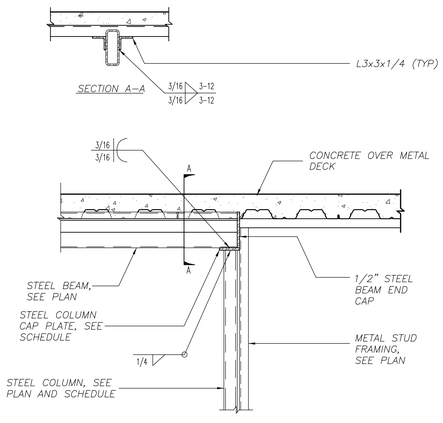

A2 S505 N.T.S.

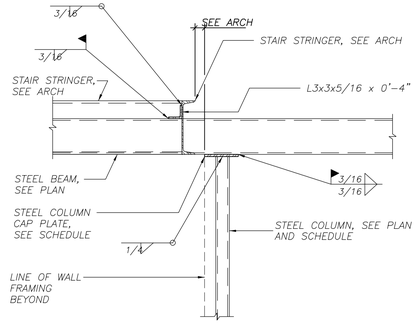

A3 S505 STRINGER TO BEAM AND BEAM TO COLUMN CONNECTION N.T.S.

SARGENT DESIGN GROUP
ARCHITECTURE | PLANNING
36 NORTH 300 WEST, SUITE B
CEDAR CITY, UTAH 84720
OFFICE: (435) 586-8510
FAX: (435) 586-4873
jcolton@email.com

State of Utah–Department of Administrative Services
DIVISION OF FACILITIES CONSTRUCTION AND MANAGEMENT
4110 State Office Building/Salt Lake City, Utah 84114/538-3018

Project:
UDOT HURRICANE FACILITY
DFCM PROJECT NO. 07292900

Sheet Title:
DETAILS

Revisions:

PROJECT NUMBER: 28498
DATE: MARCH 2, 2009
DRAWN BY: BD
CHECKED BY:
APPROVED BY:
SHEET NUMBER:
S505

InSite Engineering, P.C.
Civil Engineers - Land Surveyors - Land Planners
1883 W. Royal Hunte Dr., Suite 200
Cedar City, Utah 84720
phone: (435) 867-4565
fax: (435) 867-4459

CONCRETE PIER SCHEDULE

MARK	PIER SIZE	REINFORCING		TYPE	COMMENTS
		VERTICAL	TIES		
CP-1	12" x 22"	(10) #5 BARS	(3) #3 AT 8" O.C.	A	
CP-2	18" x 12"	(10) #5 BARS	(3) #3 AT 8" O.C.	D	
CP-3	18" x 18"	(12) #5 BARS	(3) #3 AT 8" O.C.	B	
CP-4	22" x 32"	(20) #5 BARS	(3) #3 AT 8" O.C.	G	
CP-4A	22" x 36"	(20) #5 BARS	(3) #3 AT 8" O.C.	H	
CP-5	20" x 34"	(20) #5 BARS	(3) #3 AT 8" O.C.	D	
CP-6	12" x 12"	(8) #5 BARS	(3) #3 AT 8" O.C.	C	
CP-7	16"ø	(4) #5 BARS	#3 AT 8" O.C.	E	
CP-8	23" x 24"	(16) #6 BARS	(3) #3 AT 8" O.C.	F	
CP-9	23" x 24"	(16) #6	(3) #3 AT 8" O.C.	G	

CONCRETE PIER NOTES:
1. INSTALL (3) SETS OF TIES AT 3" O.C. AT TOP OF ALL PIERS (UNO).
2. RUN HORIZONTAL CONCRETE WALL REINFORCING CONTINUOUS THROUGH PIER WHEN PIER IS POURED MONOLITHICALLY WITH CONCRETE WALL.
3. SEE GENERAL STRUCTURAL NOTES FOR ADDITIONAL REQUIREMENTS.

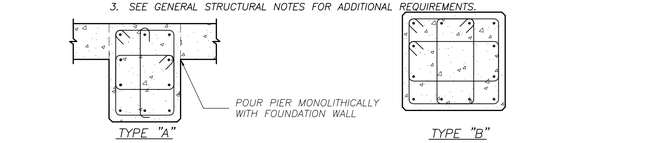

B2 S601 CONCRETE PIER SCHEDULE

EPOXY DOWEL EMBED SCHEDULE

DOWEL SIZE	MINIMUM EMBEDMENT INTO EXISTING CONCRETE
#4	6 1/2"
#5	7 1/2"
#6	10"
#7	1'-1"
#8	1'-4"

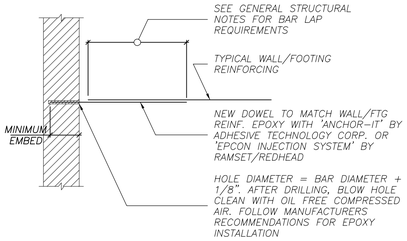

C3 S601 EPOXY DOWEL EMBED SCHEDULE

CONCRETE WALL SCHEDULE

MARK	THICKNESS	REINFORCING			WALL TYPE	COMMENTS
		VERTICAL	HORIZONTAL	TOP AND BOTTOM		
CW-1	8"	#4 AT 18" O.C.	#4 AT 12" O.C.	(1) #4	A	-
CW-2	8"	#4 AT 18" O.C.	#4 AT 12" O.C.	(1) #4	A	ABV. ELEV. 100'-0"
	16"	#4 AT 18" O.C. E.F.	#4 AT 12" O.C. E.F.	(2) #4	C	BELOW ELEV. 100'-0"
CW-3	12"	#4 AT 18" O.C. E.F.	#4 AT 12" O.C. E.F.	(2) #4	C	
CW-4	12"	#4 AT 18" O.C. E.F.	#4 AT 12" O.C. E.F.	(1) #4	A	ABV. ELEV. 100'-0"
	16"	#4 AT 18" O.C. E.F.	#4 AT 12" O.C. E.F.	(2) #4	C	BELOW ELEV. 100'-0"

CONCRETE FOUNDATION WALL NOTES:
1. SEE GENERAL STRUCTURAL NOTES FOR ADDITIONAL REQUIREMENTS.
2. CONCRETE FOUNDATION WALLS NOT DESIGNATED ON PLANS SHALL BE REINFORCED AS FOLLOWS:

THICKNESS	VERTICAL REINFORCING	HORIZONTAL REINFORCING
6"	#4 BARS AT 18" O.C.	#4 BARS AT 16" O.C.
8"	#4 BARS AT 18" O.C.	#4 BARS AT 12" O.C.
10"	#4 BARS AT 16" O.C.	#5 BARS AT 15" O.C.
12"	#4 BARS AT 18" O.C. E.F.	#4 BARS AT 16" O.C. E.F.

ABBREVIATIONS:
E.F. EACH FACE
I.F. INSIDE FACE
O.F. OUTSIDE FACE

WALL REINFORCING PLACEMENT TYPES:

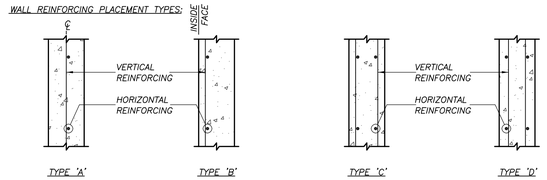

B3 S601 CONCRETE WALL SCHEDULE

CONCRETE REINFORCING BAR LAP SPLICE SCHEDULE

BAR SIZE	f'c = 3000psi				f'c = 4000psi				f'c = 5000psi				f'c = 6000psi			
	REGULAR CLASS		TOP CLASS		REGULAR CLASS		TOP CLASS		REGULAR CLASS		TOP CLASS		REGULAR CLASS		TOP CLASS	
	A	B	A	B	A	B	A	B	A	B	A	B	A	B	A	B
#3	13"	17"	17"	21"	12"	16"	16"	21"	12"	16"	16"	21"	12"	16"	16"	21"
#4	17"	22"	22"	28"	15"	19"	19"	25"	13"	17"	17"	22"	12"	16"	16"	21"
#5	21"	27"	27"	35"	18"	24"	24"	31"	16"	21"	21"	27"	15"	19"	19"	25"
#6	27"	36"	36"	46"	24"	31"	31"	40"	21"	28"	28"	36"	20"	25"	25"	33"
#7	37"	48"	48"	63"	32"	42"	42"	54"	29"	38"	38"	49"	27"	34"	34"	44"
#8	49"	64"	64"	82"	42"	55"	55"	71"	38"	49"	49"	64"	35"	45"	45"	58"
#9	62"	80"	80"	104"	54"	70"	70"	90"	48"	62"	62"	81"	44"	57"	57"	74"
#10	78"	102"	102"	132"	68"	88"	88"	115"	61"	79"	79"	102"	56"	72"	72"	94"
#11	96"	125"	125"	162"	83"	108"	108"	141"	76"	97"	97"	126"	68"	88"	88"	115"

CONCRETE REINFORCING BAR LAP SPLICE NOTES:
1. THIS SCHEDULE SHALL BE USED FOR ALL BAR SPLICES IN CONCRETE WALLS, UNLESS NOTED OTHERWISE.
2. CLASS 'A' SPLICES MAY BE USED ONLY IN CASES WHERE 50% OR LESS OF THE BARS ARE SPLICED WITHIN THE LAP SPLICE LENGTH.
3. CLASS 'B' SPLICES SHALL BE USED FOR ALL SPLICES UNLESS THE REQUIREMENTS OF NOTE No. 2 ABOVE ARE MET.
4. TIES AND STIRRUPS SHALL NOT BE SPLICED.
5. SPLICES FOR BUNDLED BARS:
   a. FOR BUNDLED BARS OF THREE OR LESS, LAP SPLICE LENGTHS SHALL BE MULTIPLIED BY 1.2.
   b. FOR BUNDLED BARS OF FOUR OR MORE, LAP SPLICE LENGTHS SHALL BE MULTIPLIED BY 1.33.
   c. INDIVIDUAL BAR SPLICES WITHIN A BUNDLE SHALL NOT OVERLAP.
   d. ENTIRE BUNDLES SHALL NOT BE LAP SPLICED.
6. FOR ALL LIGHTWEIGHT CONCRETE, LAP LENGTHS SHALL BE MULTIPLIED BY 1.3.
7. FOR ALL EPOXY COATED BARS, LAP LENGTHS SHALL BE MULTIPLIED BY 1.3 FOR TOP BARS AND 1.5 FOR REGULAR BARS.
8. TOP BARS ARE CLASSIFIED AS HORIZONTAL BARS WHERE 12", OR MORE, OF FRESH CONCRETE IS CAST BELOW THE REINFORCING BAR.
9. SEE GENERAL STRUCTURAL NOTES FOR ADDITIONAL REQUIREMENTS.

A2 S601 CONCRETE REINFORCING BAR LAP SPLICE SCHEDULE

InSite Engineering, P.C.
Civil Engineers - Land Surveyors - Land Planners
1883 W. Royal Hunte Dr., Suite 200
Cedar City, Utah 84720
phone: (435) 867-4565
fax: (435) 867-4459

SARGENT DESIGN GROUP
ARCHITECTURE | PLANNING
36 NORTH 300 WEST, SUITE B
CEDAR CITY, UTAH 84720
OFFICE: (435) 586-8510
FAX: (435) 586-4873
jcolton@email.com

State of Utah-Department of Administrative Services
DIVISION OF FACILITIES CONSTRUCTION AND MANAGEMENT
4110 State Office Building/Salt Lake City, Utah 84114/538-3018

Project:
UDOT HURRICANE FACILITY
DFCM PROJECT NO. 07292900

Sheet Title:
STRUCTURAL SCHEDULES

Revisions:

PROJECT NUMBER: 28498
DATE: MARCH 2, 2009
DRAWN BY: BD
CHECKED BY:
APPROVED BY:
SHEET NUMBER:
S601

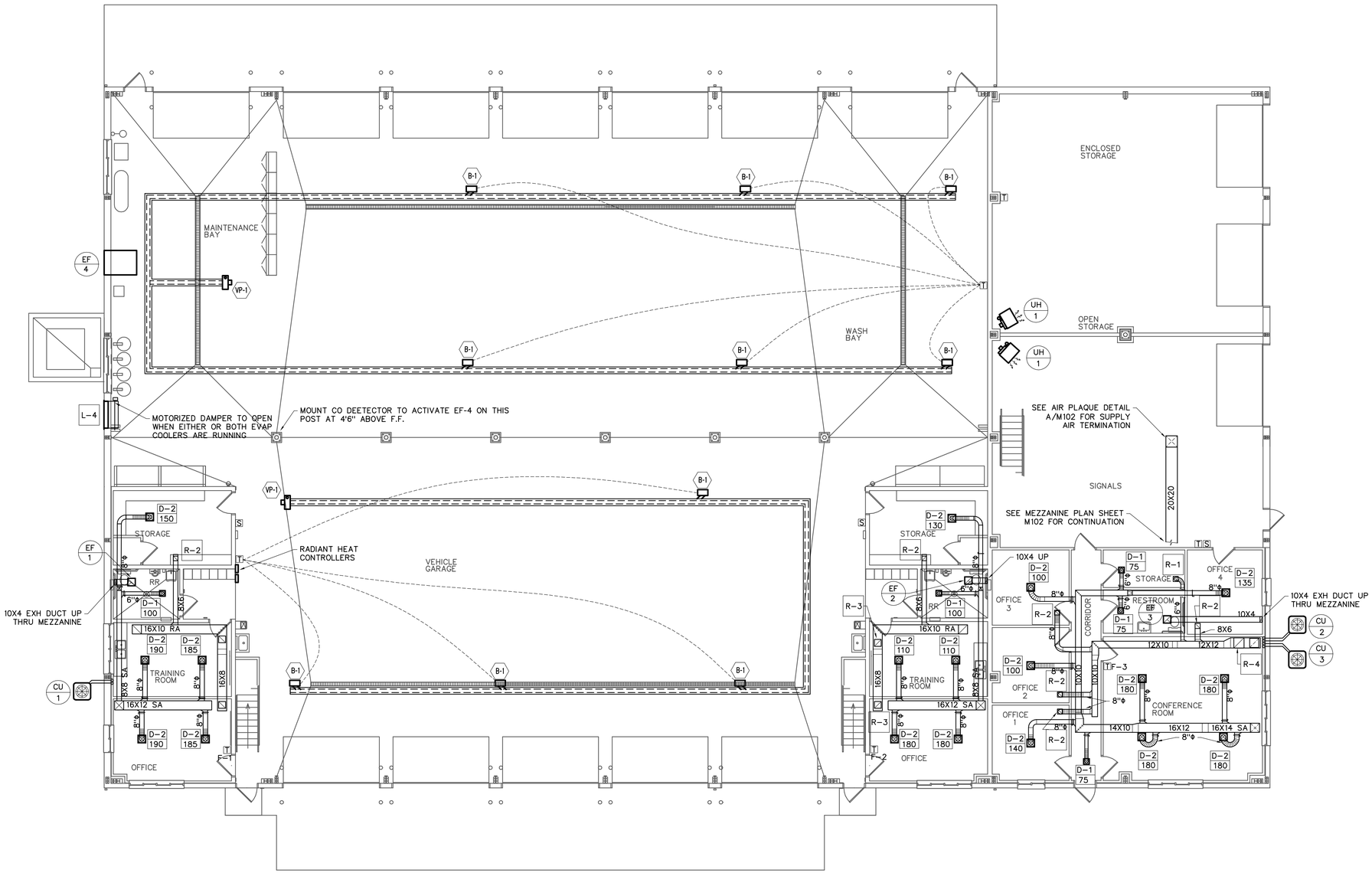

DESIGN CONDITIONS	OUTSIDE	INSIDE
WINTER	20°F	70°F
SUMMER	101 °F db, 59°F wb	74°F db, 57°F wb

SARGENT DESIGN GROUP
ARCHITECTURE | PLANNING
2390 WEST HIGHWAY 56
SUITE 4A
CEDAR CITY, UTAH 84720
OFFICE: (435) 586-8510
FAX: (435) 586-4873

State of Utah-Department of Administrative Services
DIVISION OF FACILITIES CONSTRUCTION AND MANAGEMENT
4110 State Office Building/Salt Lake City, Utah 84114/538-3018

Project:
UDOT HURRICANE FACLITY
DECM PROJECT NO. 07292900

Sheet Title:
MECHANICAL FLOOR PLAN

Revisions:

PROJECT NUMBER:
DATE: 6 FEB 2009
DRAWN BY: RMR
CHECKED BY: RJR
APPROVED BY: RJR

M101

SHEET NUMBER:
Sheet of

REGISTERED PROFESSIONAL ENGINEER
No. 166273
RANDY JAY ROBINSON
STATE OF UTAH
EXPIRES 3/31/09

R J Robinson Engineering, P.C.
Mechanical Consulting
JOB # R08054
P.O. Box 5519, Glendale, AZ 85312-5519
8504 N. 59th AVE., Glendale, AZ. Phone: (623) 930-1770
Utah Office: 1135 North Main, Bldg. B, Cedar City, UT. 84720 Phone: (435) 867-1702

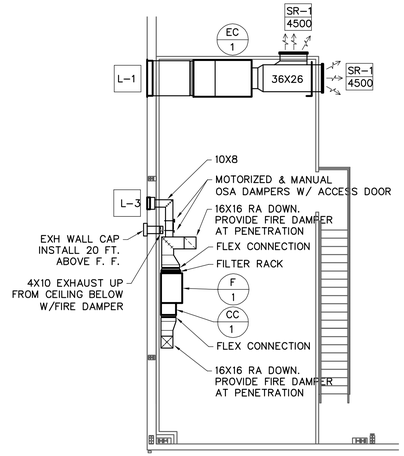

WEST MEZZANINE MECHANICAL PLAN

SCALE: 1/8" = 1'-0"

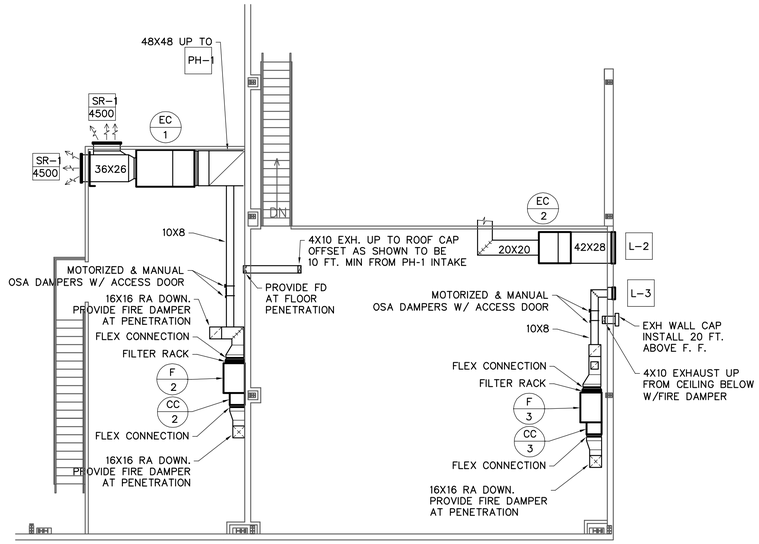

EAST MEZZANINE MECHANICAL PLAN

SCALE: 1/8" = 1'-0"

L E G E N D	
SYMBOL	DESCRIPTION
	SUPPLY AND RETURN AIR DUCT TAKE-OFF
	SINGLE THICKNESS TURNING VANES
	DUCT TRANSITION
	OPPOSED BLADE VOLUME DAMPER WITH DAMPER REGULATOR.
S	EVAP COOLER SWITCH
T	THERMOSTAT
R.A.	RETURN AIR
S.A.	SUPPLY AIR
O.A.	OUTSIDE AIR
FD	FIRE DAMPER

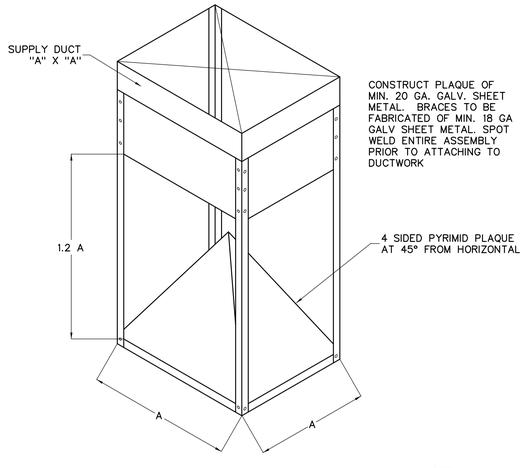

SUPPLY AIR PLAQUE DETAIL

SCALE: NONE

A
M102

SARGENT DESIGN GROUP
ARCHITECTURE | PLANNING
2390 WEST HIGHWAY 56
SUITE 4A
CEDAR CITY, UTAH 84720
OFFICE: (435) 586-8510
FAX: (435) 586-4873

State of Utah-Department of Administrative Services
DIVISION OF FACILITIES CONSTRUCTION AND MANAGEMENT
4110 State Office Building/Salt Lake City, Utah 84114/538-3018

Project:
UDOT HURRICANE FACLITY
DECM PROJECT NO. 07292900

Sheet Title:
MECHANICAL MEZZANINE PLANS

Revisions:

PROJECT NUMBER:
DATE: 6 FEB 2009
DRAWN BY: RMR
CHECKED BY: RJR
APPROVED BY: RJR

M102

SHEET NUMBER:
Sheet of

REGISTERED PROFESSIONAL ENGINEER
NO. 166273
RANDY JAY ROBINSON
STATE OF UTAH
EXPIRES 3/31/09

R J Robinson Engineering, P.C.
Mechanical Consulting
JOB # R08054
P.O. Box 5519, Glendale, AZ 85312-5519
8504 N. 59th AVE., Glendale, AZ. Phone: (623) 930-1770
Utah Office: 1135 North Main, Bldg. B, Cedar City, UT. 84720 Phone: (435) 867-1702

GAS-FIRED RADIANT HEATERS

SYMBOL	LOCATION	INPUT BTU	WEIGHT	CONFIG	MOTOR				FLUE SIZE	MAKE AND MODEL NUMBER	COMMENTS
					AMPS	VOLTS	PH	CYCLES			
B-1	AS SHOWN	100,000	35	SEE PLANS	1.0 RUN	120	1	60	4"ϕ	ROBERTS GORDON CO-RAY-VAC #B-10	①②③
VP-1	AS SHOWN	N/A	35	SEE PLANS	3/4 HP	120	1	60	4"ϕ	ROBERTS GORDON #EP-200 VACUUM PUMP	

① PROVIDE FRESH AIR INTAKE FILTER ② 7-DAY PROGRAMMABLE THERMOSTAT
③ HEAT TREATED ALUMIZED STEEL TUBE AND POLISHED ALUMINUM REFLECTOR

REGISTER, LOUVER & GRILLE SCHEDULE

MARK	TYPE	SERVICE	CFM RANGE ①	NOMINAL SIZE	REMARKS ③
R-1	CEILING ②④	RA	40-110	6X6	
R-2	CEILING ②④	RA	115-200	8X8	
R-3	CEILING ②④	RA	340-410	12X12	
R-4	CEILING ②④	RA	700-830	18X18	
SR-1	SUPPLY REGISTER ③	EVAPORATIVE COOLER SUPPLY	4000-4500	36X24	
L-1	OSA LOUVER ⑤⑥	INTAKE AIR	8.2 FT2 FREE AREA	48X48	
L-2	OSA LOUVER ⑤⑥	INTAKE AIR	3.8 FT2 FREE AREA	42X28	
L-3	OSA LOUVER ⑤⑥	INTAKE AIR	0.6 FT2 FREE AIR	16X16	
L-4	RELIEF AIR LOUVER ⑤⑥	EVAP COOLER AIR RELIEF	8.2 FT2 FREE AREA	48X48	PROVIDE MOTORIZED DAMPER TO OPEN WHEN EVAP. COOLERS ARE RUNNING AND CLOSE WHEN COOLERS SHUT-DOWN
PH-1	OSA PENTHOUSE ⑤⑥	INTAKE AIR	MAX 650 FPM FACE VEL.	THROAT SIZE 48X48	PROVIDE THE NUMBER OF LOUVER TIERS REQ.'D TO PROVIDE 8.2 FT2 FREE AREA

① MAXIMUM NC=25 @ MAXIMUM CFM NOTED.
② SHALL BE TITUS 355RL OR EQUAL BY OTHER APPROVED MANUFACTURERS. (SEE SPECIFICATIONS)
③ TITUS MODEL 301 FS OR APPROVE EQUAL ALUMINUM
④ FINISH SHALL BE OFF-WHITE BAKED ENAMEL.
⑤ BAKED ENAMEL FINISH TO MATCH BUILDING COLOR OR COLOR AS DIRECTED BY ARCHITECT.
⑥ PROVIDE ALUMINUM BIRD SCREENS.

DIFFUSER SCHEDULE ②③

MARK	C.F.M. RANGE ①	DIFFUSER SIZE	NECK. CONN.	BLOW	PATTERN	AIR DIST./SIDE A (%)	AIR DIST./SIDE B(%)
D-1	50 - 100	6X6	6"|	4 WAY		25	25
D-2	100-225	9X9	8"|	4 WAY		25	25
D-3	230-280	12X12	8"|	4 WAY		25	25

① MAXIMUM NC=25 @ MAXIMUM CFM NOTED.
② SHALL BE TITUS TDC TYPE 6 OR EQUAL BY OTHER APPROVED MANUFACTURERS. (SEE SPECIFICATIONS)
③ FINISH SHALL BE OFF-WHITE BAKED ENAMEL.

MECHANICAL EQUIPMENT SCHEDULE

MARK	DESCRIPTION
UH 1	UNIT HEATER, MODINE MODEL PV50. SINGLE MOTOR PROPELLER FAN WITH 360 DEG. SAFETY FAN GUARD. POWERED EXHAUSTER. 50 MBTU NATURAL GAS INPUT, 40 MBTU OUTPUT (SEA LEVEL RATING). FAN MOTOR TO BE 1/4 HP RATED AT 5.4 AMPS. CONTROLS TO BE: SINGLE-STAGE, IMTERMITTENT PILOT INGNITION AND 100% SHUT-OFF WITH CONTINUOUS RETRY.
EC 1	EVAPORATIVE COOLER: SINGLE INLET MASTER COOL MODEL MS524. 9050 CFM BLOWER CAPACITY, SIDE DISCHARGE WITH 12 " MEDIA PAD. AND BLEED-OFF KIT. SINGLE SPEED BLOWER MOTOR. ELECTRICAL: BLOWER 3 HP, 208/3/60. WATER DISTRIBUTION PUMP 115 VOLTS, 80 WATTS.
EC 2	EVAPORATIVE COOLER: SINGLE INLET MASTER COOL MODEL EC440K. 4200 CFM INDUSTRY STANDARD RATING, SIDE DISCHARGE, WITH 8" CELDEK EVAPORATIVE MEDIA PAD AND BLEED-OFF KIT. TWO SPEED BLOWER MOTOR. ELECTRICAL: BLOWER 1/2 HP, 115/1/60.

FURNACE SCHEDULE ②④

MARK	NO. REQ'D	MIN. REQ'D INPUT ① BTU/HR	MIN. REQ'D OUTPUT ① BTU/HR	MINIMUM S.C.F.M	OUTSIDE AIR CFM	EXT. S.P. IN W.G.	MOTOR MIN. H.P.	MOTOR ϕ	MOTOR HERTZ	MOTOR VOLTS ⑤	MOTOR SPEED	③ REMARKS
F 1	1	60,000	56,000	1000	256	0.5	1/3	1	60	115		
F 2	1	60,000	56,000	800	256	0.5	1/5	1	60	115		
F 3	1	80,000	75,000	1400	312	0.5	1/2	1	60	115		

① SEA LEVEL RATING
② FURNACE MARKS CORRESPOND WITH CONDENSING UNIT AND COOLING COIL MARKS.
③ SEE SPECIFICATIONS FOR APPROVED MANUFACTURERS.
④ CAPACITIES SHOWN ARE FOR INDIVIDUAL FURNACES AND NOT FOR TANDEM TOTALS.
⑤ MAY VARY ACCORDING TO MANUFACTURER.

AIR COOLED CONDENSING UNIT SCHEDULE ①③⑤

MARK	NO. REQ'D	AREA SERVED	MANUFACTURER MODEL NUMBER	MIN.② SIZE (TONS)	MIN CIRCUIT AMPS	COMPRESSOR MOTOR NO.	COMPRESSOR MOTOR ϕ	COMPRESSOR MOTOR RLA	COMPRESSOR MOTOR LRA	OFM FLA	REMARKS ④
CU 1	1	WEST OFFIECES	CZB	2.5	18.6	1	1	14.2	75.0	0.8	
CU 2			CZB	2	14.4	1	1	10.7	56.0	1.0	
CU 3			CZB	3.5	27.0	1	1	20.5	115.0	1.4	

① REFRIGERANT R-410A
② AT DESIGN CONDITIONS AND 110°F ENTERING
③ CONDENSING UNIT MARKS CORRESPOND WITH
④ MANUFACTURER FOR MODEL LISTED IS YORK, SEE SPECIFICATIONS FOR APPROVED MANUFACTURERS.
⑤ VOLTAGE IS 208
⑥ COMBINED FURNACE, COIL AND CONDENSING UNIT WITH CONNECTED REFRIGERANT PIPING MUST MEET THE CAPACITIES LISTED ON COOLING COIL SCHEDULE. SELECT AT 50°F SATURATED SUCTION TEMPERATURE.

DX COOLING COIL SCHEDULE ①

MARK	NO. REQ'D	MIN. REQ'D CAP. TOT. MBH	MIN. REQ'D CAP. SEN. MBH	COND. ENT. EVAP. DB °F	COND. ENT. EVAP. WB °F	S.C.F.M.	MAX. PR. DR. IN W.G.	② REMARKS
CC 1	1	25.0	25.0	81.6	61.4	1000		
CC 2	1	19.3	19.3	83.9	61.8	800		
CC 3	1	36.6	36.6	80.5	65.1.	1400		

① COMPLETE WITH FACTORY COIL BOX AND COIL
② SEE SPECIFICATIONS FOR APPROVED MANUFACTURERS.
③ COMBINED FURNACE, COIL AND CONDENSING UNIT WITH CONNECTED REFRIGERANT PIPING MUST MEET THE CAPACITIES LISTED ON THIS SCHEDULE. SELECT AT 55°F SATURATED SUCTION TEMPERATURE.

EXHAUST FAN SCHEDULE

MARK	SERVES ROOM	MODEL ①	MIN. C.F.M.	STATIC PRESSURE IN W.G.	MIN WATTS	REMARKS
EF 1	WEST RESTROOM	VCDB015	150	.125	110	②③⑤
EF 2	MIDDLE RESTROOM	VCDB015	150	.125	110	②④⑤
EF 3	EAST RESTROOM	VCDB 010	75	.250	60	②③⑤
EF 4	GENERAL EXHAUST	LABA-T2	15,000	.125	1-1/2 HP 208 V/1 PH	⑥⑦⑧⑨

① MANUFACTURER FOR MODEL SPECIFIED IS CARNES
② CONTROL BY DIVISION 16.
③ PROVIDE WALL CAP AT EXTERIOR WALL AS SHOWN
④ PROVIDE ROOF CAP
⑤ VOLTAGE IS 115/1/60
⑥ PROPELLER TYPE, 36" DIAMETER BELT DRIVEN
⑦ PROVIDE WALL BOX W/ GUARD SCREEN
⑧ PROVIDE MOTORIZED BACKDRAFT DAMPER AT WALL, INTERLOCK WITH FAN MOTOR
⑨ CONTROL WITH CARBON MONOXIDE DETECTOR THROUGH ON/AUTO SWITCH

REGISTERED PROFESSIONAL ENGINEER
NO. 166273
RANDY JAY ROBINSON
STATE OF UTAH
EXPIRES 3/31/09

R J Robinson Engineering, P.C.
Mechanical Consulting
JOB # R08054
P.O. Box 5519, Glendale, AZ 85312-5519
8504 N. 59th AVE., Glendale, AZ. Phone: (623) 930-1770
Utah Office: 1135 North Main, Bldg. B, Cedar City, UT. 84720 Phone: (435) 867-1702

SARGENT DESIGN GROUP
ARCHITECTURE | PLANNING
2390 WEST HIGHWAY 56
SUITE 4A
CEDAR CITY, UTAH 84720
OFFICE: (435) 586-8510
FAX: (435) 586-4873

State of Utah-Department of Administrative Services
DIVISION OF FACILITIES CONSTRUCTION AND MANAGEMENT
4110 State Office Building/Salt Lake City, Utah 84114/538-3018

Project:
UDOT HURRICANE FACLITY
DECM PROJECT NO. 07292900

Sheet Title:
MECHANICAL SCHEDULES

Revisions:

PROJECT NUMBER:
DATE: 6 FEB 2009
DRAWN BY: RMR
CHECKED BY: RJR
APPROVED BY: RJR

M201

SHEET NUMBER:
Sheet of

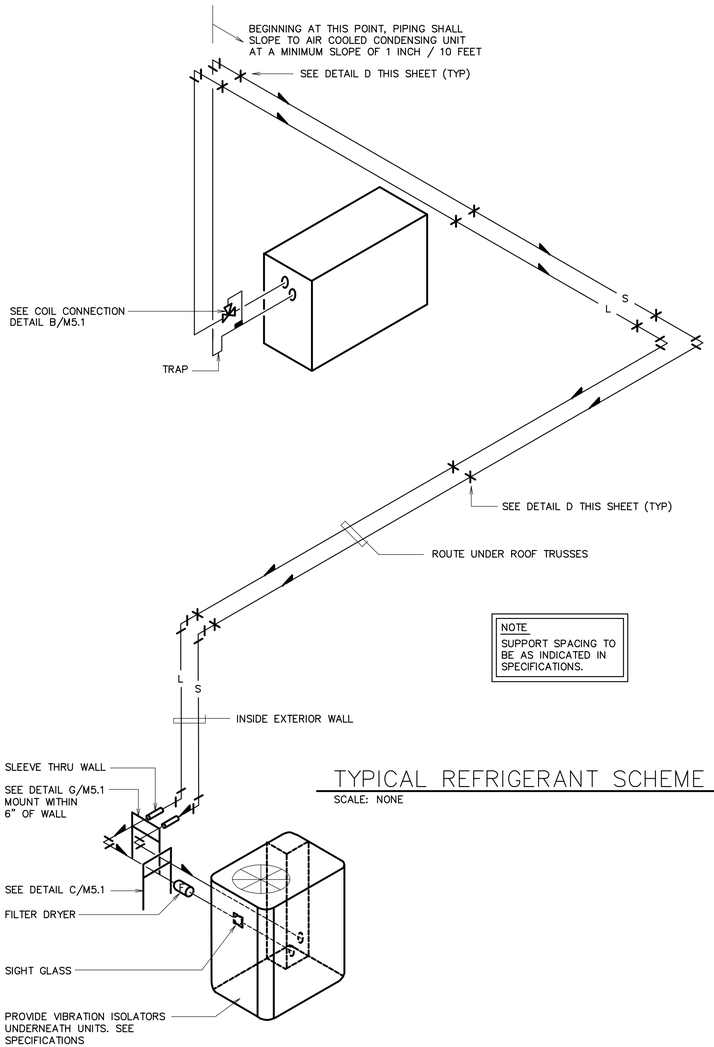

TYPICAL REFRIGERANT SCHEME (A)

SCALE: NONE

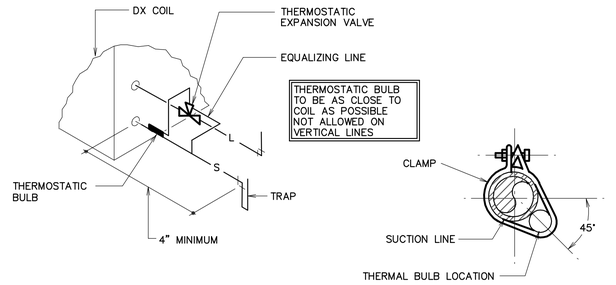

REFRIGERANT COIL CONNECTION DETAIL (B)

SCALE: NONE

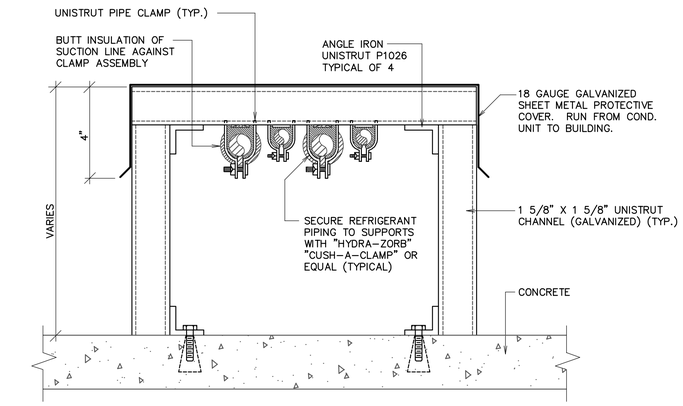

EXTERIOR REFRIGERANT PIPE SUPPORT DETAIL (C)

SCALE: NONE

REFRIGERANT PIPING LEGEND	
SYMBOL	DESCRIPTION
	EXPANSION VALVE. SEE DETAIL (B M5.1)
	MOISTURE INDICATING SIGHT GLASS
	FLEXIBLE CONNECTION
F	FILTER DRIER
	PIPE SUPPORT. SEE DETAILS (D M5.1) (G M5.1)
	EXTERIOR PIPE SUPPORT. SEE DETAIL (C M5.1)
	TRAP. ONE PIECE FACTORY FABRICATED
	DIRECTION OF SLOPE DOWN
S	SUCTION LINE
L	LIQUID LINE

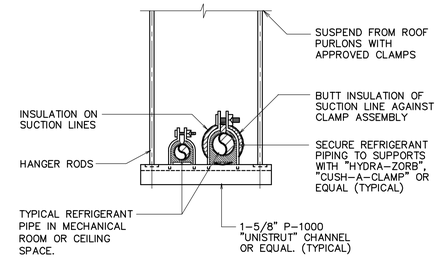

SUSPENDED REFRIGERANT PIPE SUPPORT AT CEILING (D)

SCALE: NONE

REFRIGERANT PIPE SUPPORT AT WALL (G)

SCALE: NONE

SARGENT DESIGN GROUP
ARCHITECTURE | PLANNING
2390 WEST HIGHWAY 56
SUITE 4A
CEDAR CITY, UTAH 84720
OFFICE: (435) 586-8510
FAX: (435) 586-4873

State of Utah–Department of Administrative Services
DIVISION OF FACILITIES CONSTRUCTION AND MANAGEMENT
4110 State Office Building/Salt Lake City, Utah 84114/538-3018

Project:
UDOT HURRICANE FACILITY
DECM PROJECT NO. 07292900

Sheet Title:
REFRIGERANT PIPING DETAILS

Revisions:

PROJECT NUMBER:
DATE: 6 FEB 2009
DRAWN BY: RMR
CHECKED BY: RJR
APPROVED BY: RJR

M301

SHEET NUMBER:
Sheet of

REGISTERED PROFESSIONAL ENGINEER
NO. 166273
RANDY JAY ROBINSON
STATE OF UTAH
EXPIRES 3/31/09

R J Robinson Engineering, P.C.
Mechanical Consulting
JOB # R08054
P.O. Box 5519, Glendale, AZ 85312-5519
8504 N. 59th AVE., Glendale, AZ.
Phone: (623) 930-1770
Utah Office: 1135 North Main, Bldg. B, Cedar City, UT. 84720
Phone: (435) 867-1702

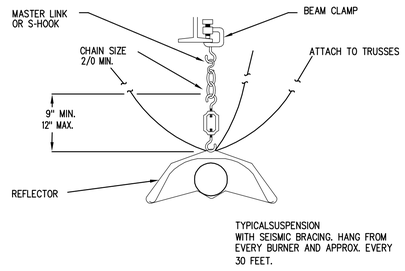

RADIANT HEATING SEISMIC DETAIL (A)

SCALE: NONE

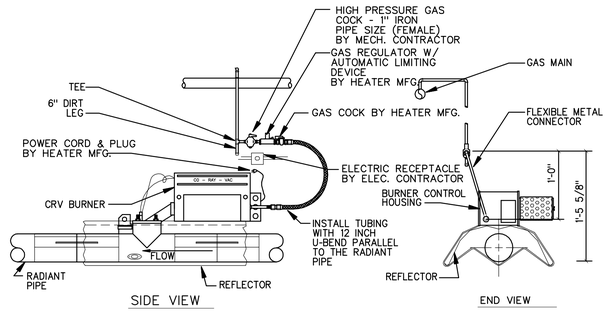

GAS CONNECTION AT CRV PURNER DETAIL (B)

SCALE: NONE

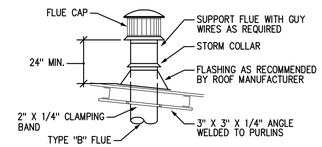

FLUE CAP DETAIL (C)

SCALE: NONE

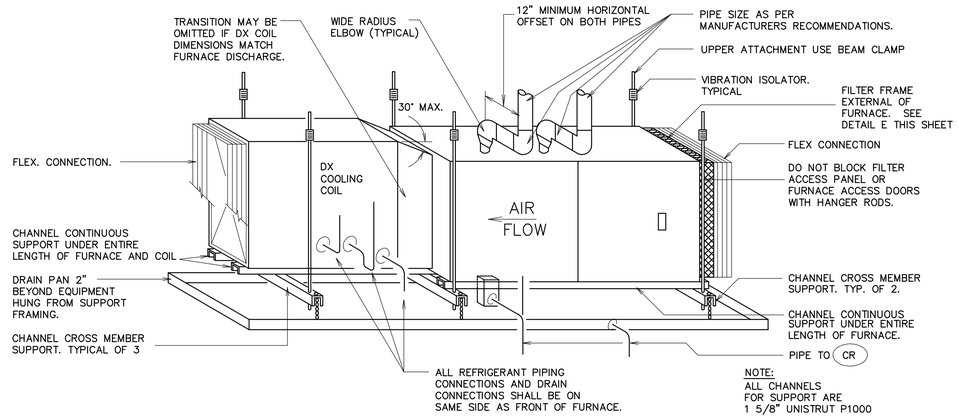

FURNACE SUPPORT DETAIL (D)

SCALE: NONE

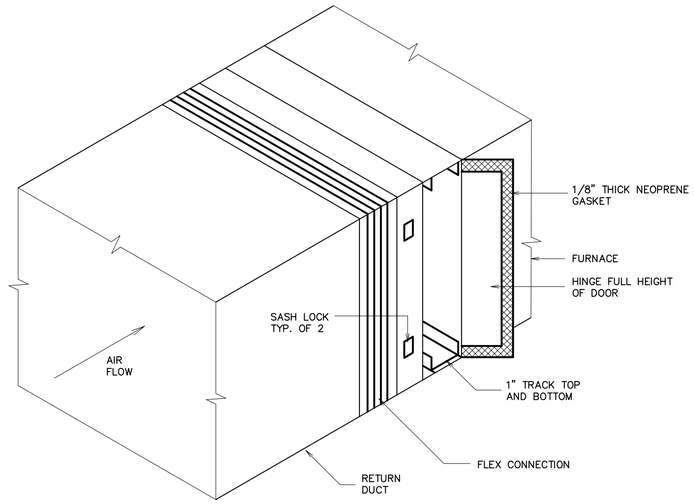

EXTERNAL FILTER SECTION DETAIL (E)

SCALE: NONE

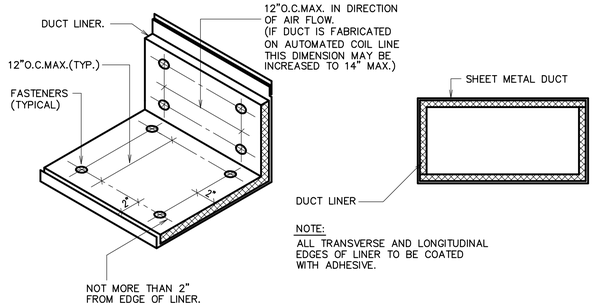

DUCT LINER DETAIL (F)

SCALE: NONE

DIMENSION OF LONGEST SIDE, INCHES	SHEET METAL GAGE (ALL FOUR SIDES)	TRANSVERSE REINFORCING (1)					
		MINIMUM REINFORCING ANGLE SIZE AND MAXIMUM LONGITUDINAL SPACING BETWEEN TRANSVERSE JOINTS &/OR INTERMEDIATE REINFORCING	AT JOINTS				
			MIN. H. IN.	DRIVE SLIP / PLAIN S SLIP	HEMMED S SLIP	ALTER'NT BAR SLIP	REIN-FORCED BAR SLIP
				RECOM-MENDED GAGE	RECOM-MENDED GAGE	RECOM-MENDED GAGE	RECOM-MENDED GAGE
UP THRU 12	26	NONE REQUIRED	1	26	26	24	24
13 – 18	24	NONE REQUIRED	1	24	24	24	24
19 – 30	24	1"X1"X1/8" @ 60 IN	1	–	24	24	24
31 – 36	22	1"X1"X1/8" @ 60 IN	1	–	–	22	22

(1) TRANSVERSE REINFORCING SIZE IS DETERMINED BY DIMENSION OF SIDE TO WHICH ANGLE IS APPLIED.

(2) LONGITUDINAL JOINTS TO BE PITTSBURG OR SNAP LOCK TYPE.

DUCT CONSTRUCTION DETAIL (G)

SCALE: NONE

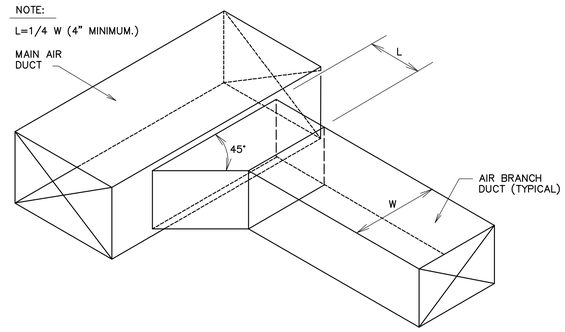

SUPPLY OR RETURN AIR DUCT BRANCH CONNECTION DETAIL (H)

SCALE: NONE

SARGENT DESIGN GROUP
ARCHITECTURE | PLANNING
2390 WEST HIGHWAY 56
SUITE 4A
CEDAR CITY, UTAH 84720
OFFICE: (435) 586-8510
FAX: (435) 586-4873

State of Utah–Department of Administrative Services
DIVISION OF FACILITIES CONSTRUCTION AND MANAGEMENT
4110 State Office Building/Salt Lake City, Utah 84114/538-3018

Project:
UDOT HURRICANE FACLITY
DECM PROJECT NO. 07292900

Sheet Title:
MECHANICAL DETAILS

Revisions:

PROJECT NUMBER:
DATE: 6 FEB 2009
DRAWN BY: RMR
CHECKED BY: RJR
APPROVED BY: RJR

M302

SHEET NUMBER:
Sheet of

LICENSED PROFESSIONAL ENGINEER
NO. 166273
RANDY JAY ROBINSON
STATE OF UTAH
EXPIRES 3/31/09

R J Robinson Engineering, P.C.
Mechanical Consulting
JOB # R08054
P.O. Box 5519, Glendale, AZ 85312-5519
8504 N. 59th AVE., Glendale, AZ. Phone: (623) 930-1770
Utah Office: 1135 North Main, Bldg. B, Cedar City, UT. 84720 Phone: (435) 867-1702

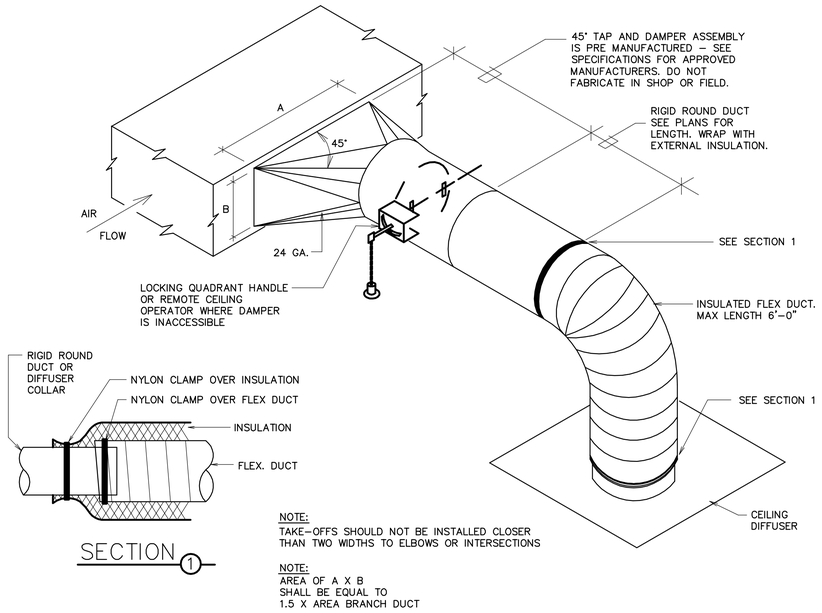

SQUARE TO ROUND TAKE-OFF DETAIL A

SCALE: NONE

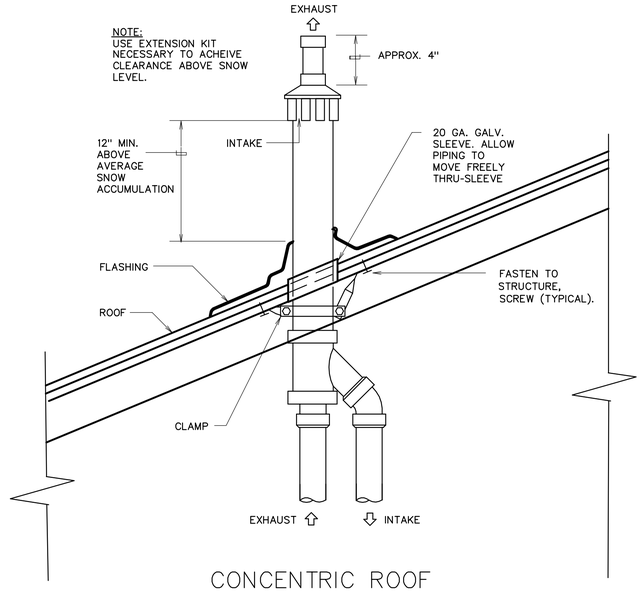

CONCENTRIC ROOF TERMINATION DETAIL B

SCALE: NONE

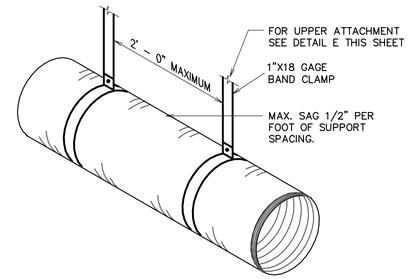

FLEXIBLE DUCT SUPPORT DETAIL C

SCALE: NONE

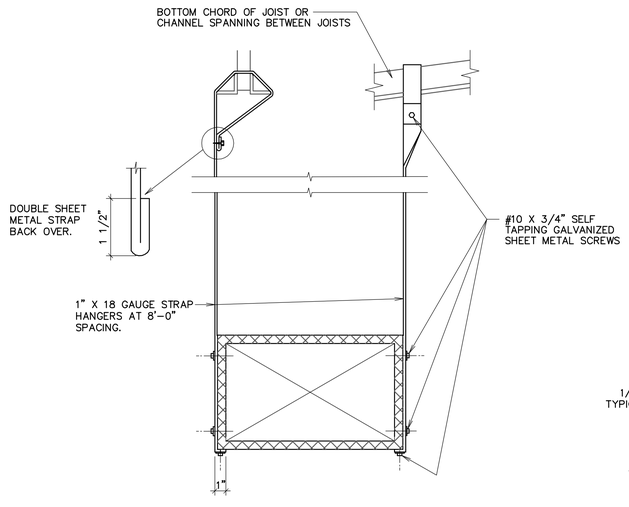

DUCT STRAP HANGER DETAIL D

SCALE: NONE

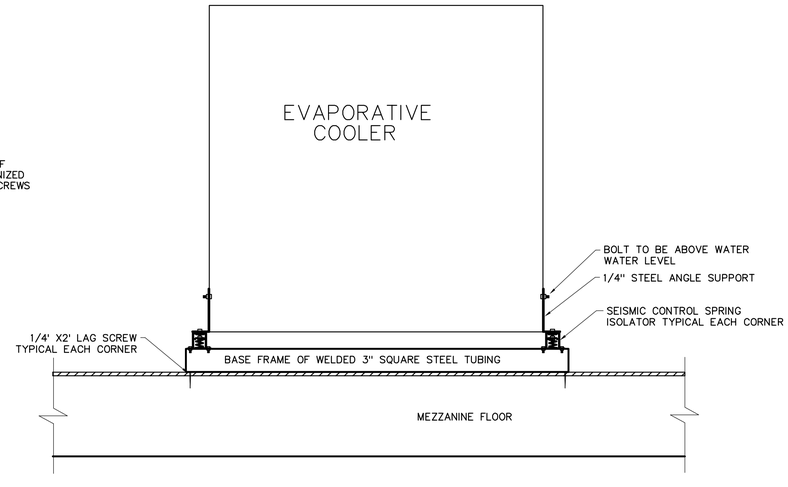

EVAP COOLER MOUNTING DETAIL E

SCALE: NONE

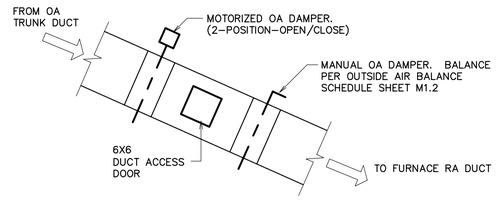

TYPICAL OUTSIDE AIR DUCT DETAIL F

SCALE: NONE

SARGENT DESIGN GROUP
ARCHITECTURE | PLANNING
2390 WEST HIGHWAY 56
SUITE 4A
CEDAR CITY, UTAH 84720
OFFICE: (435) 586-8510
FAX: (435) 586-4873

State of Utah-Department of Administrative Services
DIVISION OF FACILITIES CONSTRUCTION AND MANAGEMENT
4110 State Office Building/Salt Lake City, Utah 84114/538-3018

Project: UDOT HURRICANE FACLITY DECM PROJECT NO. 07292900

Sheet Title:

MECHANICAL DETAILS

Revisions:

PROJECT NUMBER:
DATE: 6 FEB 2009
DRAWN BY: RMR
CHECKED BY: RJR
APPROVED BY: RJR

M303

SHEET NUMBER:
Sheet of

REGISTERED PROFESSIONAL ENGINEER
NO. 166273
RANDY JAY ROBINSON
STATE OF UTAH

EXPIRES 3/31/09

R J Robinson Engineering, P.C.
Mechanical Consulting
JOB # R08054
P.O. Box 5519, Glendale, AZ 85312-5519
8504 N. 59th AVE., Glendale, AZ. Phone: (623) 930-1770
Utah Office: 1135 North Main, Bldg. B, Cedar City, UT. 84720 Phone: (435) 867-1702

LEGEND			
MEANING	SYMBOL OR ABBREVIATION	MEANING	SYMBOL OR ABBREVIATION
HOT WATER LINE	HW	WALL CLEANOUT	WCO
HOT WATER RETURN	HW	VENT THRU ROOF	VTR
COLD WATER LINE	CW	CLEANOUT	CO
SOFTENED COLD WATER	CWS	CLEANOUT TO GRADE	COTG
VENT LINE		BALL VALVE	
WASTE LINE		UNION	
GAS	GAS	TRAP PRIMER	TP
CONDENSATE DRAIN OR EVAP COOLER BLEED OFF	CD	SHOCK ABSORBER	SA
AIR PIPING	A		

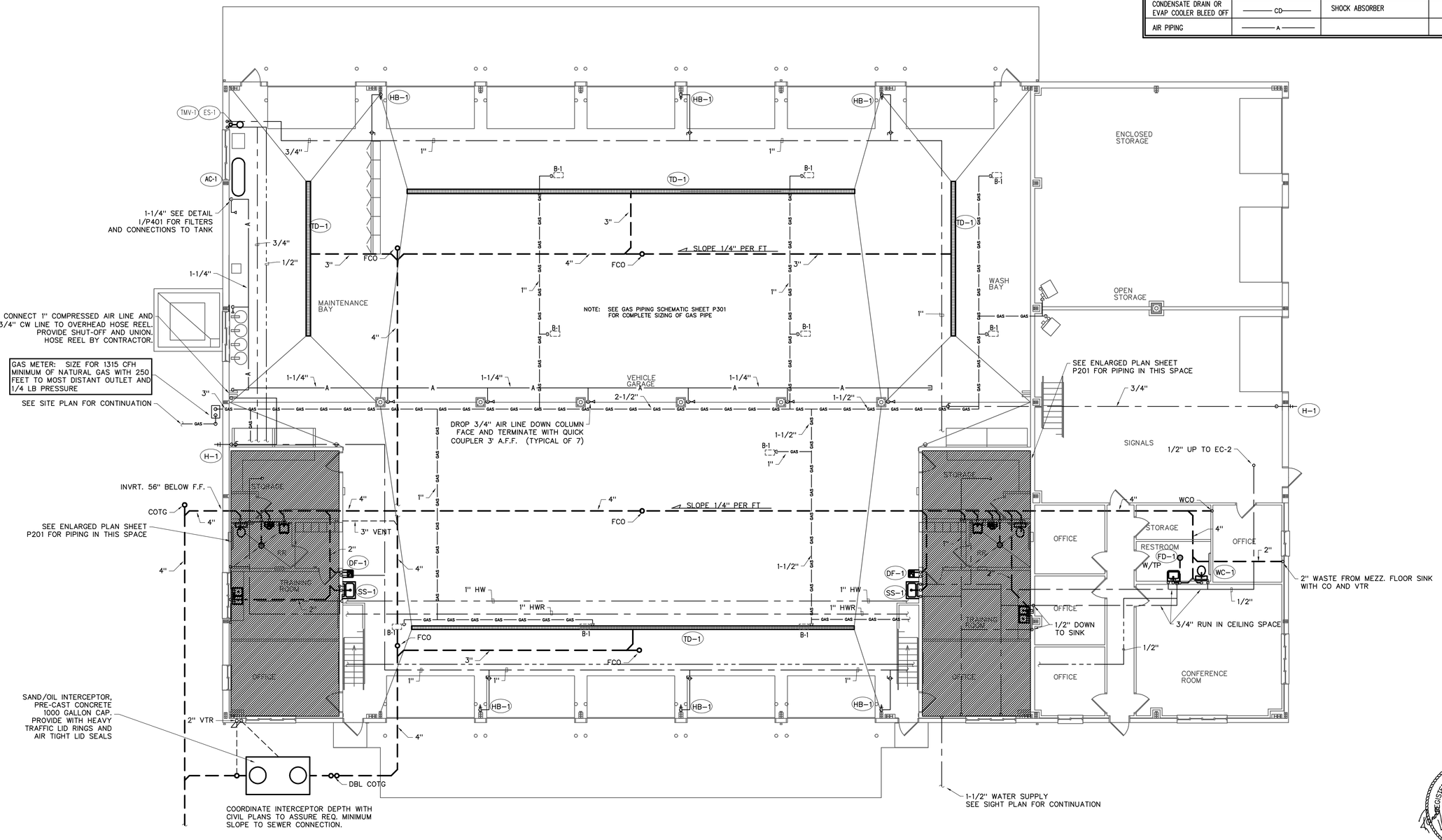

OVERALL PIPING FLOOR PLAN

SCALE: 1/8" = 1'-0"

N

SARGENT DESIGN GROUP
ARCHITECTURE | PLANNING
2390 WEST HIGHWAY 56
SUITE 4A
CEDAR CITY, UTAH 84720
OFFICE: (435) 586-8510
FAX: (435) 586-4873

State of Utah-Department of Administrative Services
DIVISION OF FACILITIES CONSTRUCTION AND MANAGEMENT
4110 State Office Building/Salt Lake City, Utah 84114/538-3018

Project:
UDOT HURRICANE FACILITY
DECM PROJECT NO. 07292900

Sheet Title:
OVERALL PIPING PLAN

Revisions:

REGISTERED PROFESSIONAL ENGINEER
NO. 166273
RANDY JAY ROBINSON
STATE OF UTAH
EXPIRES 3/31/09

R J Robinson Engineering, P.C.
Mechanical Consulting
JOB # R08054
P.O. Box 5519, Glendale, AZ 85312-5519
8504 N. 59th AVE., Glendale, AZ. Phone: (623) 930-1770
Utah Office: 1135 North Main, Bldg. B, Cedar City, UT. 84720 Phone: (435) 867-1702

PROJECT NUMBER:
DATE: 26 FEB 2009
DRAWN BY: RMR
CHECKED BY: RJR
APPROVED BY: RJR

P101

SHEET NUMBER:
Sheet of

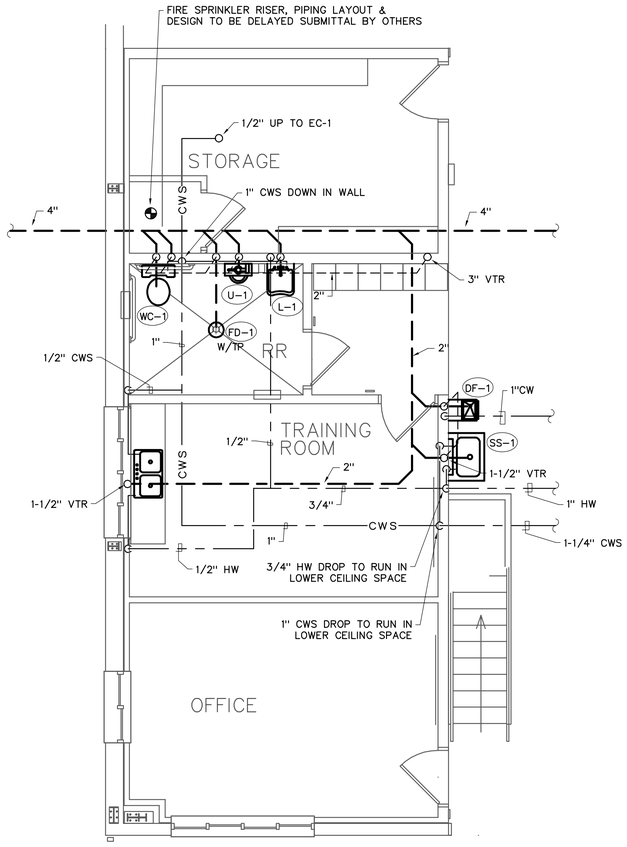

ENLARGED PARTIAL FLOOR PLAN

SCALE: 1/4" = 1'-0"

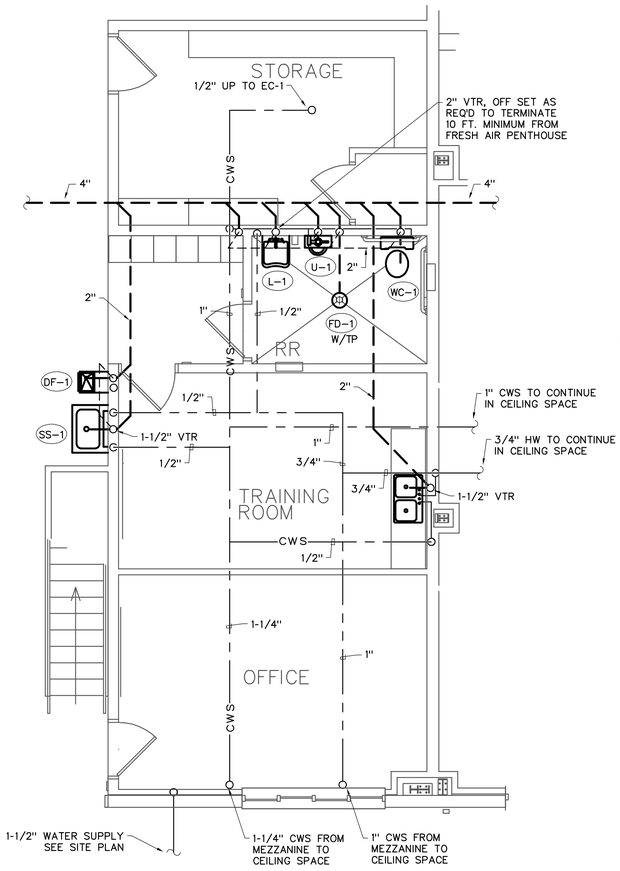

ENLARGED PARTIAL FLOOR PLAN

SCALE: 1/4" = 1'-0"

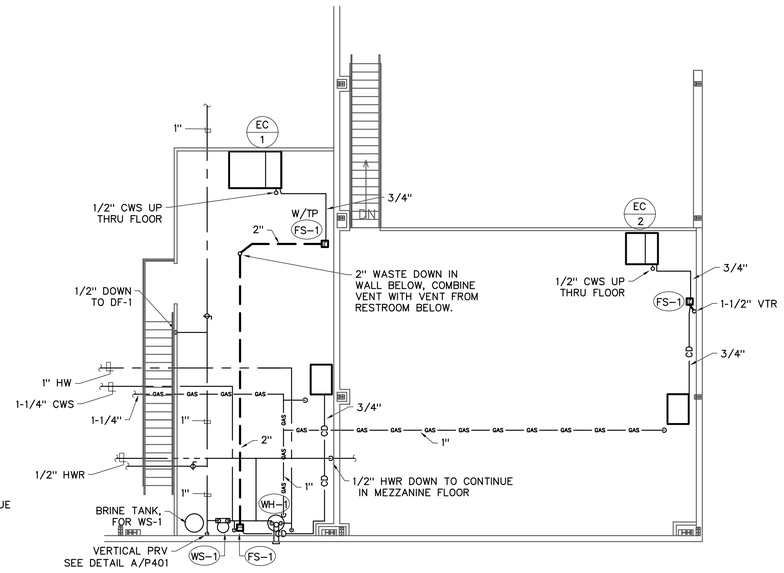

WEST MEZZANINE PIPING PLAN

SCALE: 1/8" = 1'-0"

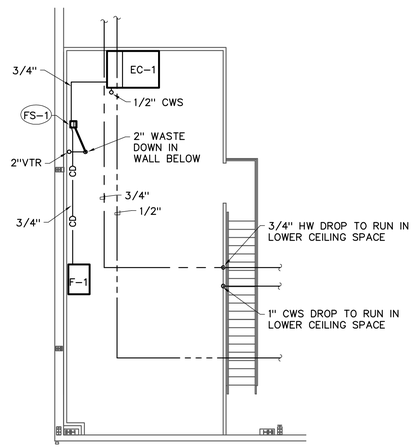

EAST MEZZANINE PIPING PLAN

SCALE: 1/8" = 1'-0"

REGISTERED PROFESSIONAL ENGINEER
STATE OF UTAH
NO. 166273
RANDY JAY ROBINSON
EXPIRES 3/31/09

R J Robinson Engineering, P.C.
Mechanical Consulting
JOB # R08054
P.O. Box 5519, Glendale, AZ 85312-5519
8504 N. 59th AVE., Glendale, AZ.
Phone: (623) 930-1770
Utah Office: 1135 North Main, Bldg. B, Cedar City, UT. 84720
Phone: (435) 867-1702

SARGENT DESIGN GROUP
ARCHITECTURE | PLANNING
2390 WEST HIGHWAY 56
SUITE 4A
CEDAR CITY, UTAH 84720
OFFICE: (435) 586-8510
FAX: (435) 586-4873

State of Utah-Department of Administrative Services
DIVISION OF FACILITIES CONSTRUCTION AND MANAGEMENT
4110 State Office Building/Salt Lake City, Utah 84114/538-3018

Project:
UDOT HURRICANE FACLITY
DECM PROJECT NO. 07292900

Sheet Title:
ENLARGED PIPING PLANS

Revisions:

PROJECT NUMBER:
DATE: 26 FEB 2009
DRAWN BY: RMR
CHECKED BY: RJR
APPROVED BY: RJR

P201

SHEET NUMBER:
Sheet of

AIR COMPRESSOR						
PLAN CODE	DUTY	ACFM @ 175 PSI	RECEIVER CAP. (GAL)	ELECTRICAL		MANUFACTURER & MODEL NO
				VOLT/PH	HP	
AC-1	SHOP AIR	24	80	208/3	7.5	SPEEDAIRE WW GRAINGER #5F565

* START/STOP, WITH PROVISION FOR NO LOAD START. INCLUDE MAGNETIC STARTER

CIRCULATION PUMP SCHEDULE								
PLAN CODE	DUTY	GPM	FEET OF HEAD	PUMP RPM	MOTOR		MANUFACTURER & MODEL NO.	COMMENTS
					H.P.	VOLTAGE & PHASE		
CP-1	DOMESTIC HOT WATER RECIRCULATION	1	4	3250	1/40	115	TACO #003PNP	SEE HOT WATER HEATER DETAIL FOR INSTALLATION REQ.

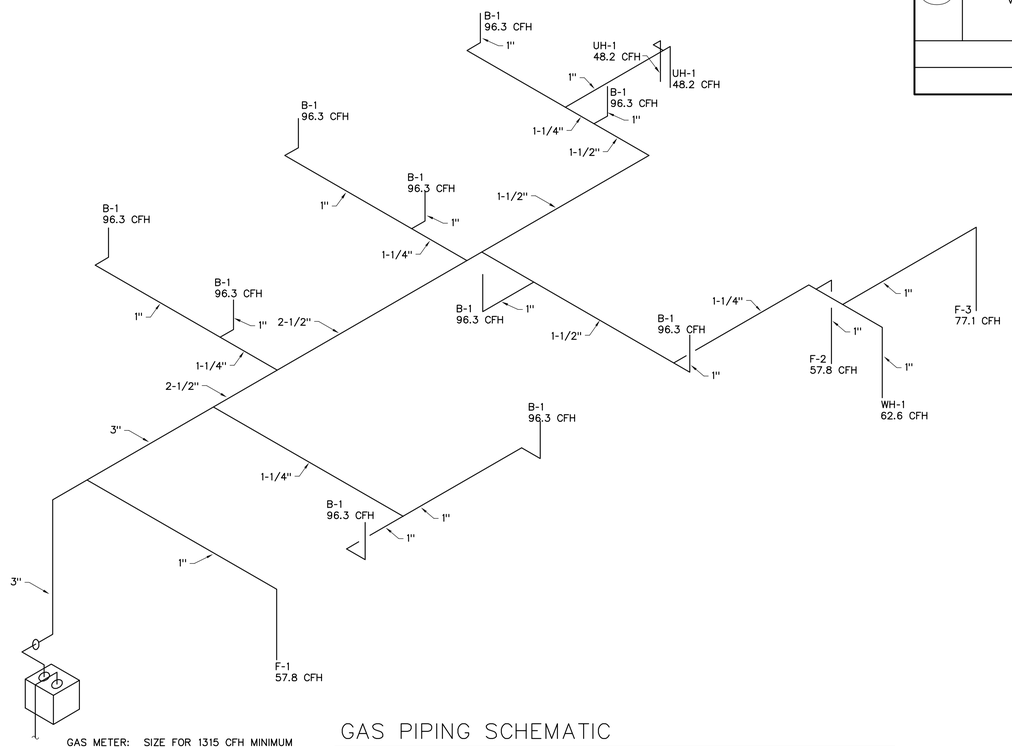

GAS METER: SIZE FOR 1315 CFH MINIMUM OF NATURAL GAS WITH 250 FEET TO MOST DISTANT OUTLET AND 1/4 LB PRESSURE

GAS PIPING SCHEMATIC

SCALE: NOT TO SCALE

P L U M B I N G F I X T U R E S C H E D U L E

MARK	FIXTURE	PIPE SIZE					REMARKS	QUAN	WASTE F.U. EACH	COLD WATER F.U. EACH	HOT WATER F.U. EACH	COMB. WATER F.U. EACH	WASTE F.U. TOTAL	COLD WATER F.U. TOTAL	HOT WATER F.U. TOTAL	COMB. WATER F.U. TOTAL
		TRAP	WASTE	VENT	C.W.	H.W.										
WC-1	WATER CLOSET	INT.	4"	2"	1/2"	-	FLUSH TANK, 18" RIM HEIGHT (ADA, MAX 1.5 GPF)	3	6	5	0	5	18	15	0	15
U-1	URINAL	INT.	3"	2"	3/4"	-	FLUSH VALVE, WALL HUNG, MAY 1.0 GPF	2	3	5	0	5	6	10	0	10
L-1	LAVATORY	1-1/4"	1-1/4"	1-1/2"	1/2"	1/2"	SELF SUPPORTING, MAX, 0.5 GPM FLOW RESTRICTOR	3	1	1.5	1.5	2	3	4.5000	4.5000	6
SS-1	SERVICE SINK	2"	2"	2"	1/2"	1/2"	WALL HUNG	2	3	2.25	2.25	3	6	4.5000	4.5000	6
S-1	TRAINING ROOM SINK	1-1/2"	1-1/2"	1-1/2"	1/2"	1/2"	TWO COMPARTMENT	2	6	3	3	4	12	6	6	8
FD-1	FLOOR DRAIN	2"	2"	2"	-	-	WITH DEEP SEAL P-TRAP	6	2	0	0	0	12	0	0	0
FS-1	FLOOR SINK	2"	2"	2"	-	-	FLOOR SINK - 8-1/2" SQUARE WITH 1/2 GRATE	4	2	0	0	0	8	0	0	0
DF-1	DRINKING FOUNTAIN	1-1/2"	1-1/2"	1-1/2"	1/2"	-	ELECTRIC (ADA APPROVED) SEE ARCHITECTURAL PLANS FOR MOUNTING HEIGHT	2	1	0.25	0	0.25	2	0.5000	0	0.5000
HB-1	HOSE BIBB	-	-	-	3/4"	-	WALL MOUNTED HOSE BIBB W/ ANTI SYPHON VAC. BREAKER	6	0	3	0	3	0	18	0	18
H-1	HYDRANT	-	-	-	3/4"	-	USE NON-FREEZE TYPE, LOOSE KEY W/ ANTI SYPHON VAC. BREAKER	2	0	3	0	3	0	6	0	6
WH-1	WATER HEATER	-	-	-	3/4"	3/4"	GAS FIRED 65,000 BTU/HR. POWER VENTED, 50 GAL. TANK. BRADFORD WHITE MODEL TW-50T-65-3N PROVIDE MANUFACTURERS 3" METAL VENT KIT # 239-39089-00A	1	0	0	0	0	0	0	0	0
TD-1	TRENCH DRAIN	3"	3"	2"	-	-	TRENCH DRAIN J.R. SMITH #9931, COMPLETE WITH HEAVY DUTY FRAME, LOAD CLASS C CAST IRON SLOTTED GRATE, FULLY SLOPED CHANNELS.	4	5	0	0	0	20	0	0	0
WS-1	WATER SOFTNER						WATER SOFTENER - CULLIGAN GOLD SERIES 9" SINGLE/WATER METER/DEMAND WITH TANK REGENERATION EACH 1137 GALS OF TREATED WATER. DESIGN FLOW OF 9.0 GPM @13 PSI LOSS. SEE SPECIFICATIONS FOR FULL DESIGN PARAMETERS.	1	0	0	0	0	0	0	0	0
ES-1	EMERGENCY EYEWASH AND SHOWER				1 1/4"		BRADLEY S19-310SBFW, FLOOR MOUNTED SAFETY STATION COMBINATION EYEWASH AND EMERGENCY SHOWER. ALUMINUM FLOOR FLANGE AND GALVANIZED INTERMEDIATE PIPE AND FITTINGS, TWO SOFT STREAM OUTLET HEADS, STAINLESS STEEL BOWL AND STAY OPEN TYPE VALVE ON EYEWASH, ORANGE CYCOLAC PLASTIC SHOWER HEAD WITH STAY OPEN VALVE (OPERATED BY PULL ROD AND HANDLE), 1-1/4" IPS FEMALE INLET AND OUTLET.	1								
TMV-1	TEMPERATURE MIXING VALVE				1/2"	1/2"	EMERGENCY FIXTURE THERMOSTATIC MIXING VALVE. BRADLEY #S19-2100 COMPLETE WITH CHROME PLATED FINISH, STAINLESS STEEL SURFACE MOUNTED BOX, INTEGRAL STRAINER CHECK STOPS ON INLET BUILT IN COLD WATER BYPASS, HOT WATER SHUT OFF WHEN COLD SUPPLY IS LOST, OUTLET TEMPERATURE GAUGE. 25 GPM @ 15 PSI PRESSURE DROP. SET TEMPERATURE TO 85°.	1								
												TOTAL (F.U.)	67	64.5000	15.0000	69.5000
												GPM		33	17.5	35

WATER CALCULATIONS

PRESSURE AVAILABLE AT PRV	55.0 PSI
LOSS THROUGH PRV	2.35 PSI
PRESSURE AVAILABLE FOR BUILDING SUPPLY	52.65 PSI
PIPING LENGTH PRV TO LAST FIXTURE	220 FT
MIN. PRESSURE REQUIRED AT FIXTURE	15.0 PSI
ALLOWABLE PRESSURE DROP THROUGH PIPING	37.65 PSI

PIPE FRICTION LOSS ALLOWABLE = $\frac{\text{ALLOW PRESSURE DROP}}{\text{LENGTH TO MOST DIST FIXTURE}}$ X 100 FT

$\frac{37.65 \text{ PSI}}{220 \text{ FT}}$ X 100 FT = 17.1 PSI PER 100 FT.

USE 6.44 PSI PER 100 FT AS DESIGN

PIPE SIZING TABLE		
	SIZE	GPM
PIPE SIZING TABLE FROM IPC FIG. E103.3 (3) AT 8 PSI PER 100 FT. WITH COPPER PIPE AND SMOOTH FLOW FITINGS	1/2"	3
	3/4"	7.5
	1"	19
	1-1/4"	29
	1-1/2"	50
	2"	100

SARGENT DESIGN GROUP
ARCHITECTURE | PLANNING
2390 WEST HIGHWAY 56
SUITE 4A
CEDAR CITY, UTAH 84720
OFFICE: (435) 586-8510
FAX: (435) 586-4873

State of Utah-Department of Administrative Services
DIVISION OF FACILITIES CONSTRUCTION AND MANAGEMENT
4110 State Office Building/Salt Lake City, Utah 84114/538-3018

Project:
UDOT HURRICANE FACLITY
DECM PROJECT NO. 07292900

Sheet Title:
PLUMBING SCHEDULES PLAN

Revisions:

PROJECT NUMBER:
DATE: 26 FEB 2009
DRAWN BY: RMR
CHECKED BY: RJR
APPROVED BY: RJR

P301

SHEET NUMBER:
Sheet of

REGISTERED PROFESSIONAL ENGINEER
No. 166273
RANDY JAY ROBINSON
STATE OF UTAH
EXPIRES 3/31/09
R J Robinson Engineering, P.C.
Mechanical Consulting
JOB # R08054
P.O. Box 5519, Glendale, AZ 85312-5519
8504 N. 59th AVE., Glendale, AZ. Phone: (623) 930-1770
Utah Office: 1135 North Main, Bldg. B, Cedar City, UT. 84720 Phone: (435) 867-1702

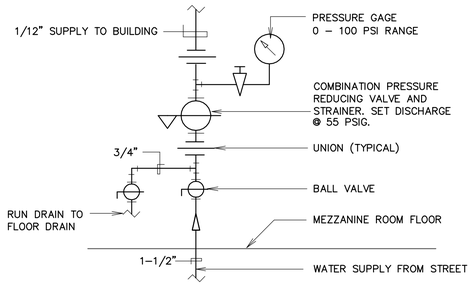

VERTICAL WATER PRESSURE REDUCING STATION DETAIL (A)

SCALE: NONE

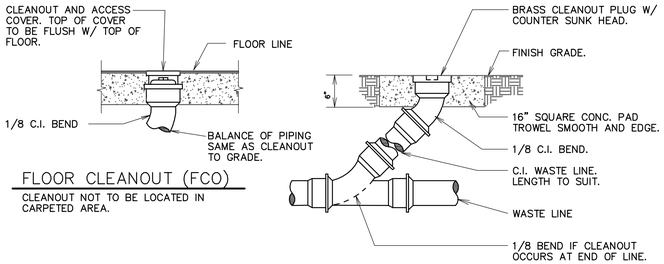

FLOOR CLEANOUT (FCO)

CLEANOUT NOT TO BE LOCATED IN CARPETED AREA.

CLEANOUT TO GRADE (COTG)

CLEANOUT DETAILS (B)

SCALE: NONE

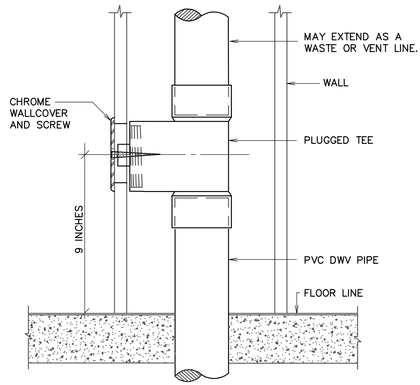

WALL CLEANOUT DETAIL (C)

SCALE: NONE

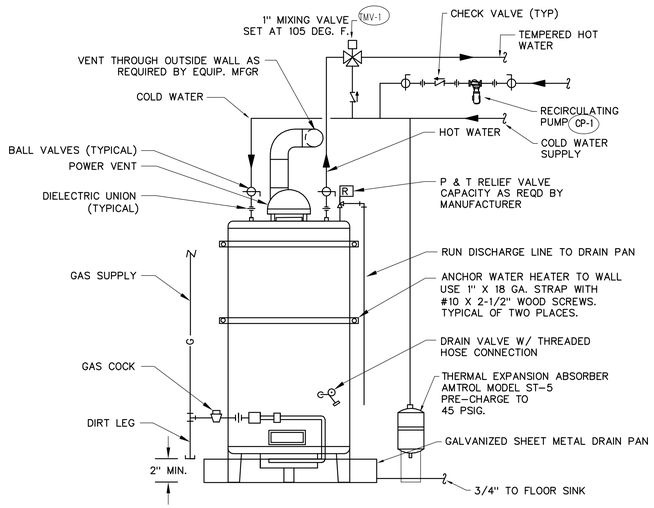

STANDARD GAS WATER HEATER DETAIL (D)

SCALE: NONE

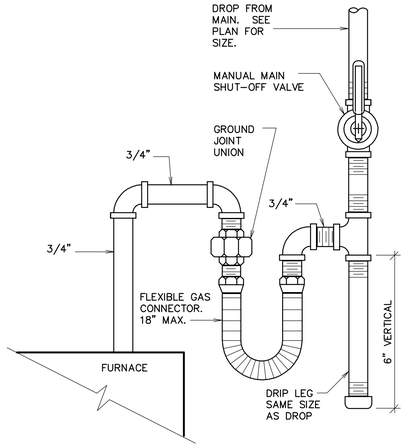

GAS LINE CONNECTION DETAIL (E)

SCALE: NONE

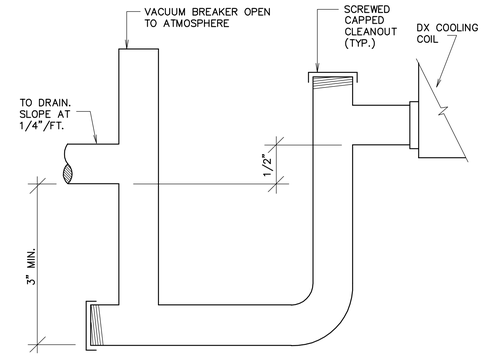

COOLING COIL CONDENSATE DRAIN DETAIL (F)

SCALE: NONE

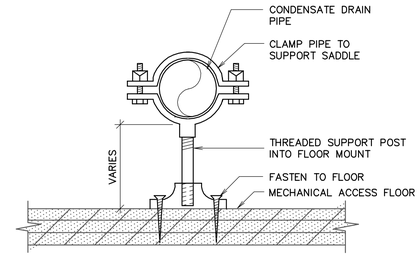

SUPPORT MAY BE MADE FROM ANGLE IRON OR CHANNELS FASTENED SECURELY TO FLOOR. PIPE MUST BE CLAMPED SECURELY TO SADDLE OR CROSS MEMBER OF PIPE SUPPORT.

CONDENSATE DRAIN PIPE SUPPORT DETAIL (G)

SCALE: NONE

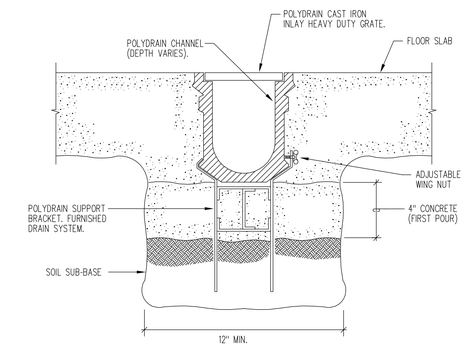

TRENCH DRAIN INSTALLATION

NOTE:
REFER TO ARCHITECTURAL DRAWINGS FOR WEATHERPROOF REQUIREMENTS.

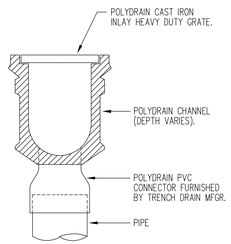

TRENCH DRAIN PIPING

TYPICAL TRENCH DRAIN DETAIL (H)

SCALE: NONE

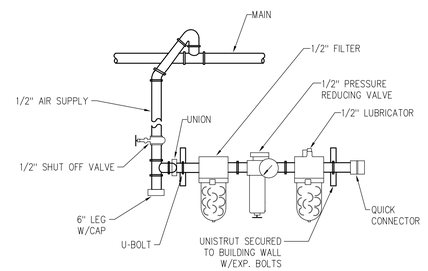

COMPRESSED AIR OUTLET CONNECTION (I)

SCALE: NONE

SARGENT DESIGN GROUP
ARCHITECTURE | PLANNING
2390 WEST HIGHWAY 56
SUITE 4A
CEDAR CITY, UTAH 84720
OFFICE: (435) 586-8510
FAX: (435) 586-4873

State of Utah–Department of Administrative Services
DIVISION OF FACILITIES CONSTRUCTION AND MANAGEMENT
4110 State Office Building/Salt Lake City, Utah 84114/538-3018

Project:
UDOT HURRICANE FACILITY
DECM PROJECT NO. 07292900

Sheet Title:
PLUMBING DETAILS

Revisions:

PROJECT NUMBER:
DATE: 26 FEB 2009
DRAWN BY: RMR
CHECKED BY: RJR
APPROVED BY: RJR

P401

SHEET NUMBER:
Sheet of

REGISTERED PROFESSIONAL ENGINEER
CERTIFICATE NO. 186273
RANDY JAY ROBINSON
STATE OF UTAH
EXPIRES 3/31/09

R J Robinson Engineering, P.C.
Mechanical Consulting
JOB # R08054
P.O. Box 5519, Glendale, AZ 85312-5519
Phone: (623) 930-1770
8504 N. 59th AVE., Glendale, AZ.
Utah Office: 1135 North Main, Bldg. B, Cedar City, UT. 84720
Phone: (435) 867-1702

KEYED NOTES:

① C.I. PIPE SAME SIZE AS INLET PIPE.

② (2) 2" VENTS MAY BE CONNECTED TOGETHER +42" AFG WITH COMMON SEPERATE 2" VENT EXTEND TO 3" VTR AS REQUIRED BY BLDG DEPT.

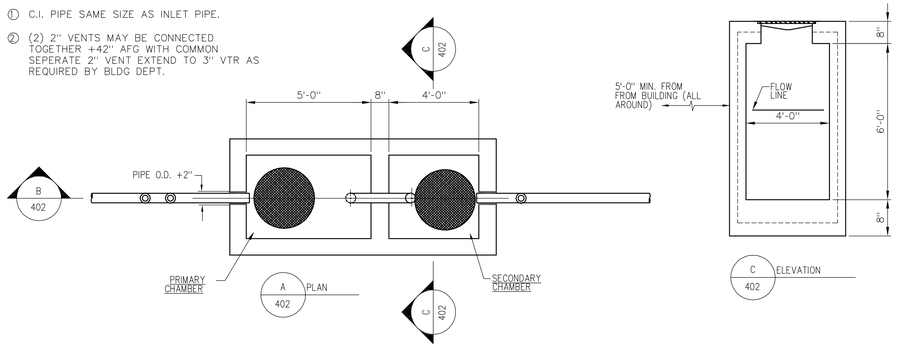

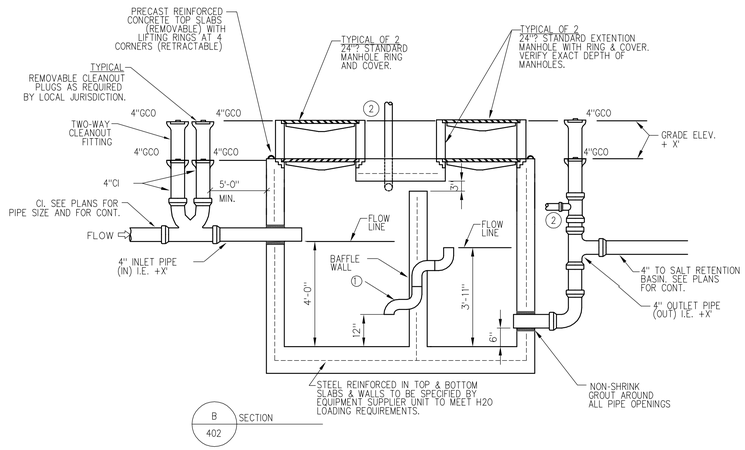

1000 GALLON GREASE INTERCEPTOR DETAIL-2 COMPARTMENT (A)

SCALE: NOT TO SCALE

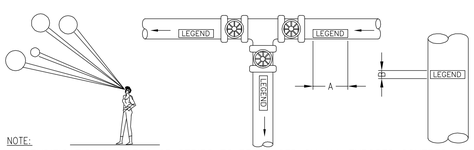

NOTE:
IDENDIFICATION MARKERS OR STRIPS TO BE PLACED ON ALL EXPOSED COVERED AND UNCOVERED PIPES AT 50'-0" INTERVALS AND AT ALL VALVES, BRANCHES, CHANGE IN DIRECTION OF FLOW AND ON BOTH SIDES OF WALLS WHERE PIPES PASS THROUGH SAME. ARROWS OF SAME COLOR AS IDENTIFICATION MARKERS SHALL ALSO BE PLACED ON PIPES POINTING AWAY FROM MARKER INDICATION DIRECTION OF FLOW.

OUTSIDE DIAMETER OF PIPE OR COVERING		LENGTH OF COLOR FIELD A		SIZE OF LETTERS B	
INCHES	MM	INCHES	MM	INCHES	MM
3/4" TO 1-1/4"	19 TO 32	8"	200	1/2"	13
1-1/2" TO 2"	38 TO 51	8"	200	3/4"	19
2-1/2" TO 6"	64 TO 150	12"	300	1-1/4"	32
8" TO 10"	200 TO 250	24"	600	2-1/2"	64
OVER 10"	OVER 250	32"	800	3-1/2"	89

SERVICE	BACKGROUND OR COLOR BAND	IDENTIFICATION MARKER
DOMESTIC COLD WATER	GREEN	WHITE ON GREEN
DOMESTIC HOT WATER	YELLOW	BLACK ON YELLOW
DOMESTIC HOT WATER RETURN	YELLOW	BLACK ON YELLOW
FIRE PROTECTION (SPRINKLER)	RED	WHITE ON RED
NATURAL GAS	YELLOW	BLACK ON YELLOW
SANITARY DRAIN	GREEN	WHITE ON GREEN
STORM WATER	GREEN	WHITE ON GREEN

PIPE IDENTIFICATION DETAIL (F)

SCALE: NOT TO SCALE

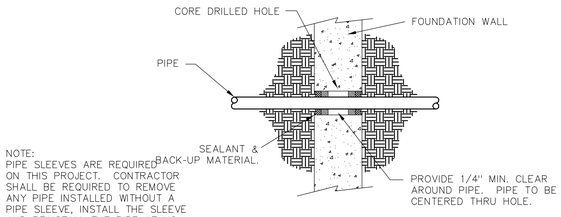

NOTE:
PIPE SLEEVES ARE REQUIRED ON THIS PROJECT. CONTRACTOR SHALL BE REQUIRED TO REMOVE ANY PIPE INSTALLED WITHOUT A PIPE SLEEVE, INSTALL THE SLEEVE AND REINSTALL THE PIPE AT NO ADDITIONAL COST TO THE OWNER.

PIPE THRU WALL - BELOW GRADE (B)

SCALE: NOT TO SCALE

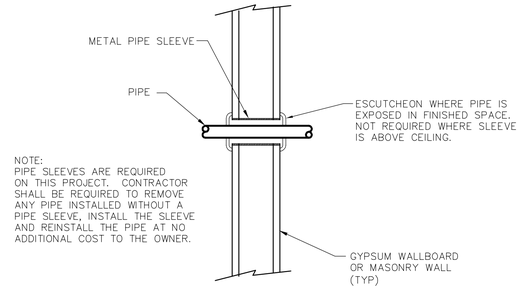

NOTE:
PIPE SLEEVES ARE REQUIRED ON THIS PROJECT. CONTRACTOR SHALL BE REQUIRED TO REMOVE ANY PIPE INSTALLED WITHOUT A PIPE SLEEVE, INSTALL THE SLEEVE AND REINSTALL THE PIPE AT NO ADDITIONAL COST TO THE OWNER.

PIPING THRU GYPSUM WALL (C)

SCALE: NOT TO SCALE

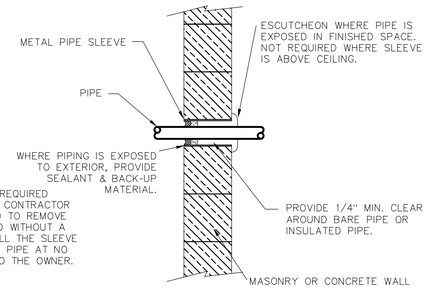

NOTE:
PIPE SLEEVES ARE REQUIRED ON THIS PROJECT. CONTRACTOR SHALL BE REQUIRED TO REMOVE ANY PIPE INSTALLED WITHOUT A PIPE SLEEVE, INSTALL THE SLEEVE AND REINSTALL THE PIPE AT NO ADDITIONAL COST TO THE OWNER.

PIPE THRU WALL ABOVE GRADE (D)

SCALE: NOT TO SCALE

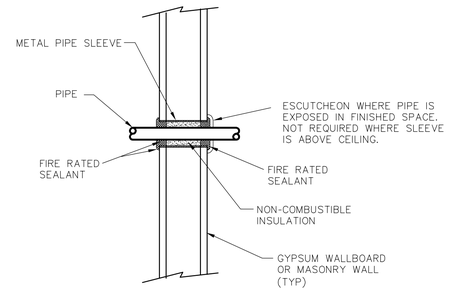

PIPING THRU FIRE-RATED WALL (E)

SCALE: NOT TO SCALE

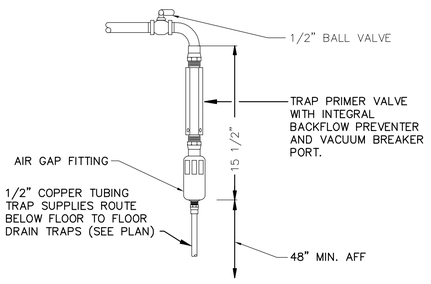

TRAP PRIMER DETAIL (G)

SCALE: NOT TO SCALE

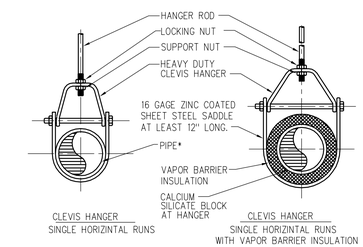

NOTE:

*INSTALL 20 MIL THICK PVC ISOLATION TAPE BETWEEN PIPE AND HANGER FOR DISSIMILAR MATERIAL. WRAP TAPE AROUND PIPE (DUCT TAPE OR ELECTRICIAN TAPE IS NOT ACCEPTABLE)

*PLUMBER'S TAPE IS NOT AN ACCEPTABLE METHOD TO HANG PIPE.

PIPE HANGERS DETAIL (H)

SCALE: NOT TO SCALE

SARGENT DESIGN GROUP
ARCHITECTURE | PLANNING
2390 WEST HIGHWAY 56
SUITE 4A
CEDAR CITY, UTAH 84720
OFFICE: (435) 586-8510
FAX: (435) 586-4873

State of Utah-Department of Administrative Services
DIVISION OF FACILITIES CONSTRUCTION AND MANAGEMENT
410 State Office Building/Salt Lake City, Utah 84114/538-3018

Project:
UDOT HURRICANE FACLITY
DECM PROJECT NO. 07292900

Sheet Title:
PLUMBING DETAILS

Revisions:

PROJECT NUMBER:
DATE: 26 FEB 2009
DRAWN BY: RMR
CHECKED BY: RJR
APPROVED BY: RJR

P402

SHEET NUMBER:
Sheet of

REGISTERED PROFESSIONAL ENGINEER
NO. 186273
RANDY JAY ROBINSON
STATE OF UTAH
EXPIRES 3/31/09

R J Robinson Engineering, P.C.
Mechanical Consulting
JOB # R08054
P.O. Box 5519, Glendale, AZ 85312-5519
8504 N. 59th AVE., Glendale, AZ. Phone: (623) 930-1770
Utah Office: 1135 North Main, Bldg. B, Cedar City, UT. 84720 Phone: (435) 867-1702

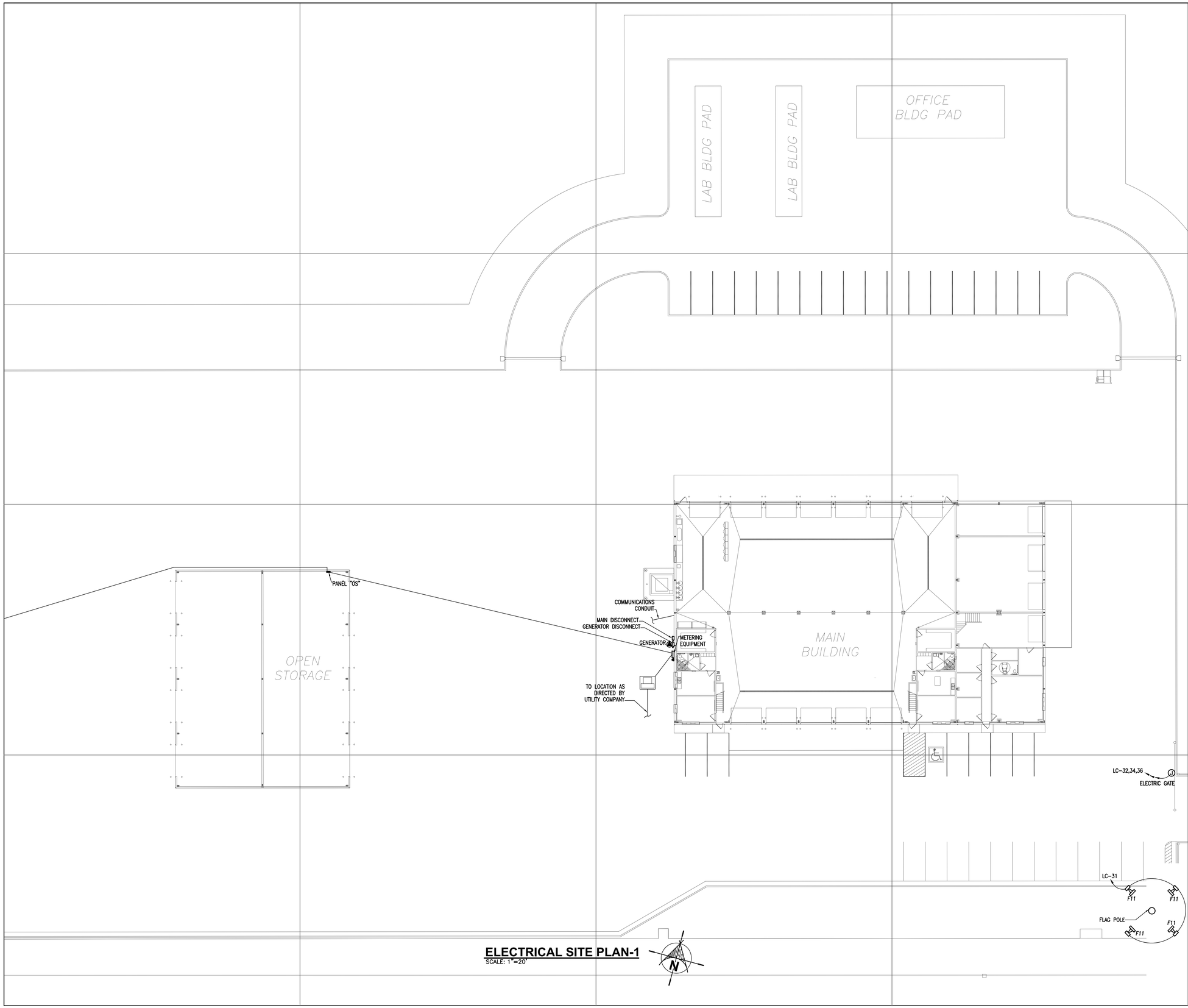

ELECTRICAL SITE PLAN-1
SCALE: 1"=20'

SARGENT DESIGN GROUP
ARCHITECTURE | PLANNING
2390 WEST HIGHWAY 56
SUITE 4A
CEDAR CITY, UTAH 84720
OFFICE: (435) 586-8510
FAX: (435) 586-4873

REGISTERED PROFESSIONAL ENGINEER
187104
STEVEN R. GRIFFITHS
STATE OF UTAH

State of Utah–Department of Administrative Services
DIVISION OF FACILITIES CONSTRUCTION AND MANAGEMENT
4110 State Office Building/Salt Lake City, Utah 84114/538-3018

Project:
UDOT HURRICANE MAINTENANCE FACILITY

Sheet Title:
ELECTRICAL SITE PLAN-1

Revisions:

ROYAL ENGINEERING
ELECTRICAL
2335 SOUTH STATE SUITE 225
PHONE: 801.375.2228
MECHANICAL
PROVO, UTAH 84606
FAX: 801.375.2676

COPYRIGHT©

JOB# J08327

THESE DOCUMENTS ARE INSTRUMENTS OF PROFESSIONAL SERVICE AND THE INFORMATION CONTAINED HEREIN IS INCOMPLETE UNLESS IN CONJUNCTION WITH ROYAL ENGINEERING'S INTERPRETATIONS, DECISIONS, OBSERVATIONS AND ADMINISTRATIONS. USE OR REPRODUCTION OF THESE DOCUMENTS IN WHOLE OR IN PART WITHOUT ROYAL ENGINEERING'S CONSENT IS IN VIOLATION OF COMMON LAW, COPYRIGHTS, STATUTORY AND OTHER RESERVED RIGHTS. REFER TO ACT 17 U.S.C. PAR. 511 (1991), WHICH PREEMPTS STATE AND LOCAL PUBLIC RECORD ACTS. REFER TO ACT 17 U.S.C. PAR. 301 (1991).

PROJECT NUMBER:	J08327
DATE:	FEB. 2009
DRAWN BY:	DAP
CHECKED BY:	SRG
APPROVED BY:	SRG

SHEET NUMBER: E0.1
Sheet 1 of 10

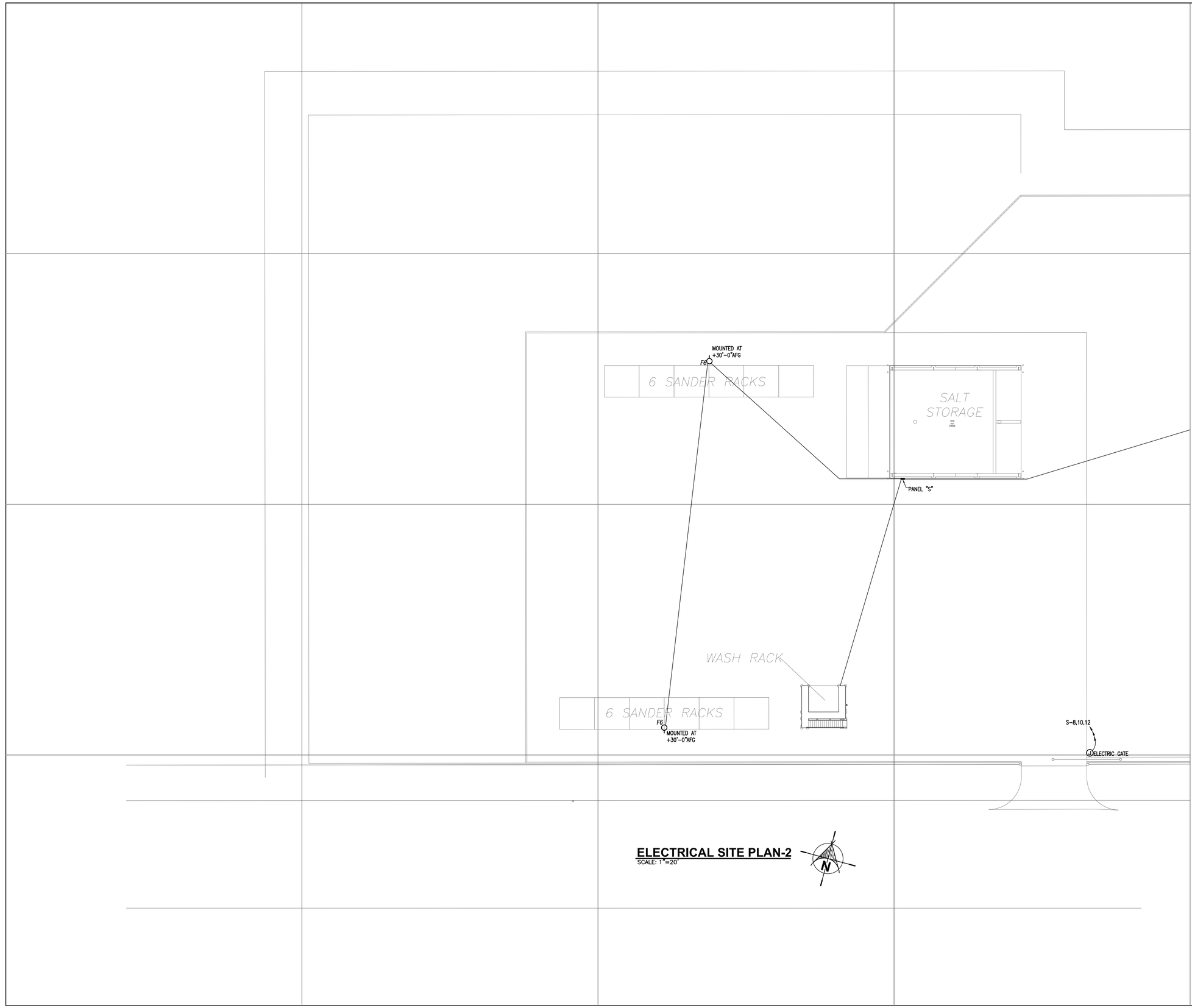

ELECTRICAL SITE PLAN-2
SCALE: 1"=20'

SARGENT DESIGN GROUP
ARCHITECTURE | PLANNING
2390 WEST HIGHWAY 56
SUITE 4A
CEDAR CITY, UTAH 84720
OFFICE: (435) 586-8510
FAX: (435) 586-4873

REGISTERED PROFESSIONAL ENGINEER
187104
STEVEN R. GRIFFITHS
STATE OF UTAH

State of Utah--Department of Administrative Services
DIVISION OF FACILITIES CONSTRUCTION AND MANAGEMENT
4110 State Office Building/Salt Lake City, Utah 84114/538-3018

Project:
UDOT HURRICANE MAINTENANCE FACILITY

Sheet Title:
ELECTRICAL SITE PLAN-2

Revisions:

ROYAL ENGINEERING
ELECTRICAL
2335 SOUTH STATE SUITE 225
PHONE: 801.375.2228
MECHANICAL
PROVO, UTAH 84606
FAX: 801.375.2676

COPYRIGHT©
JOB# J08327
THESE DOCUMENTS ARE INSTRUMENTS OF PROFESSIONAL SERVICE AND THE INFORMATION CONTAINED HEREIN IS INCOMPLETE UNLESS IN CONJUNCTION WITH ROYAL ENGINEERING'S INTERPRETATIONS, DECISIONS, OBSERVATIONS AND ADMINISTRATIONS. USE OR REPRODUCTION OF THESE DOCUMENTS IN WHOLE OR IN PART WITHOUT WRITTEN AUTHORIZATION OF ROYAL ENGINEERING IS PROHIBITED. COPYRIGHTS, STATUTORY AND OTHER RESERVED RIGHTS, REFER TO ACT 17 U.S.C. PAR. 511 (1991). WHICH PREEMPTS STATE AND LOCAL PUBLIC RECORD ACTS. REFER TO ACT 17 U.S.C. PAR. 301 (1991).

PROJECT NUMBER:	J08327
DATE:	FEB. 2009
DRAWN BY:	DAP
CHECKED BY:	SRG
APPROVED BY:	SRG

SHEET NUMBER: E0.2
Sheet 2 of 10

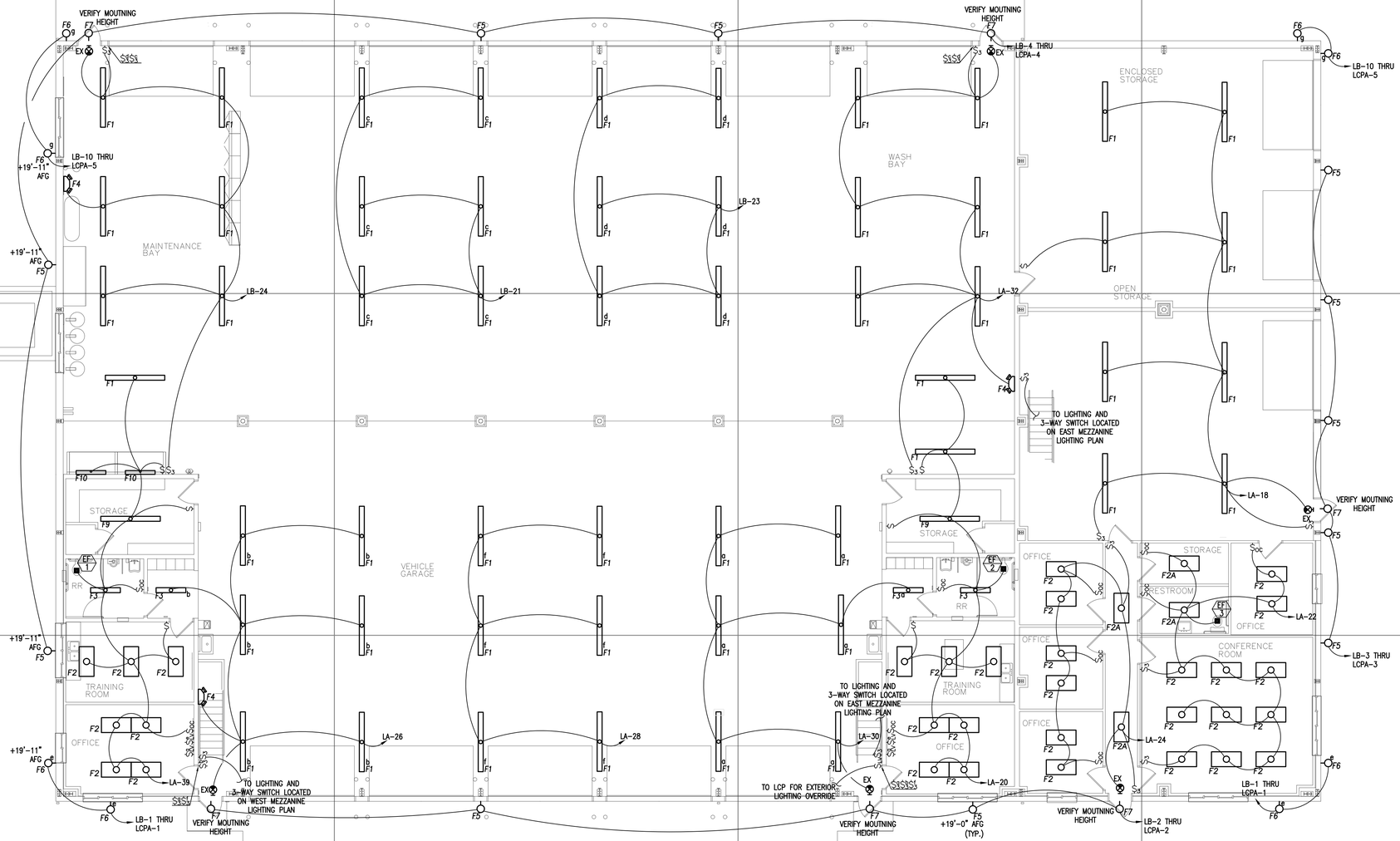

MAIN FLOOR LIGHTING PLAN

SCALE: 1/8" = 1'-0"

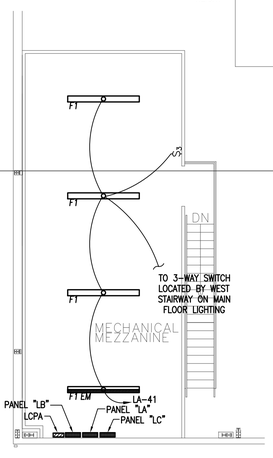

WEST MEZZANINE LIGHTING PLAN

SCALE: 1/8" = 1'-0"

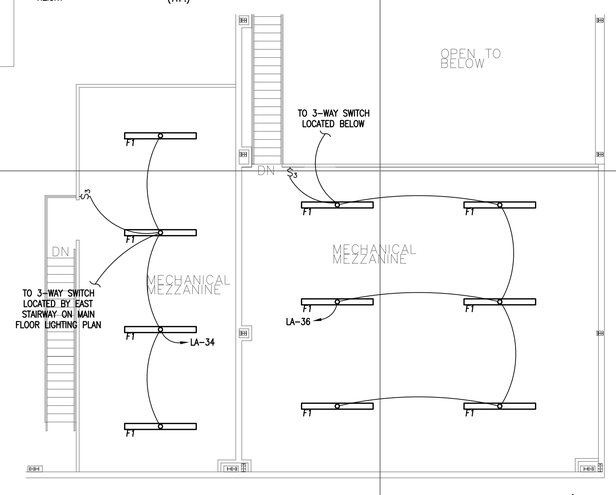

EAST MEZZANINE LIGHTING PLAN

SCALE: 1/8" = 1'-0"

SARGENT DESIGN GROUP
ARCHITECTURE | PLANNING
2390 WEST HIGHWAY 56
SUITE 4A
CEDAR CITY, UTAH 84720
OFFICE: (435) 586-8510
FAX: (435) 586-4873

187104 STEVEN R. GRIFFITHS — REGISTERED PROFESSIONAL ENGINEER — STATE OF UTAH

State of Utah–Department of Administrative Services
DIVISION OF FACILITIES CONSTRUCTION AND MANAGEMENT
4110 State Office Building/Salt Lake City, Utah 84114/538-3018

Project: UDOT HURRICANE MAINTENANCE FACILITY

Sheet Title: LIGHTING PLAN

Revisions:

ROYAL ENGINEERING
ELECTRICAL
2335 SOUTH STATE SUITE 225
PHONE: 801.375.2228
MECHANICAL
PROVO, UTAH 84606
FAX: 801.375.2676

COPYRIGHT©

JOB# J08327

THESE DOCUMENTS ARE INSTRUMENTS OF PROFESSIONAL SERVICE AND THE INFORMATION CONTAINED HEREIN IS INCOMPLETE UNLESS IN CONJUNCTION WITH ROYAL ENGINEERING'S INTERPRETATIONS. COPYRIGHTS, STATUTORY AND OTHER RESERVED RIGHTS. REFER TO REPRODUCTION OF THESE DOCUMENTS IN WHOLE OR IN PART WITHOUT ROYAL ENGINEERING'S CONSENT IS IN VIOLATION OF COMMON LAW. COPYRIGHTS, STATUTORY AND OTHER RESERVED RIGHTS. REFER TO ACT 17 U.S.C. PAR. 511 (1991), WHICH PREEMPTS STATE AND LOCAL PUBLIC RECORD ACTS. REFER TO ACT 17 U.S.C. PAR. 301 (1991).

PROJECT NUMBER:	J08327
DATE:	FEB. 2009
DRAWN BY:	DAP
CHECKED BY:	SRG
APPROVED BY:	SRG

SHEET NUMBER: E1.1
Sheet 3 of 10

ELEC. KEYED NOTES

1. (3)1"CONDUITS LOCATED ON ROOF FOR FUTURE SOLAR PANEL INSTALLATION. SPACING SHALL BE 6' FROM SOUTH EAVE AND 18" BETWEEN EACH CONDUIT.
2. (3)1"CONDUITS ROUTED TO ROOF FOR FUTURE SOLAR PANEL INSTALLATION. SEE KEYED NOTE 1 FOR SPACING.
3. TO LOCATION AS DIRECTED BY TELEPHONE COMPANY.
4. PROVIDE AND INSTALL ICE-MELT CABLE IN ALL NORTH GUTTERS AND DOWNSPOUTS. PROVIDE 4 POLE CONTACTOR AND MOISTURE SENSORS. LOCATE CONTACTOR AND CONTROL SWITCH IN WEST MEZZANINE.

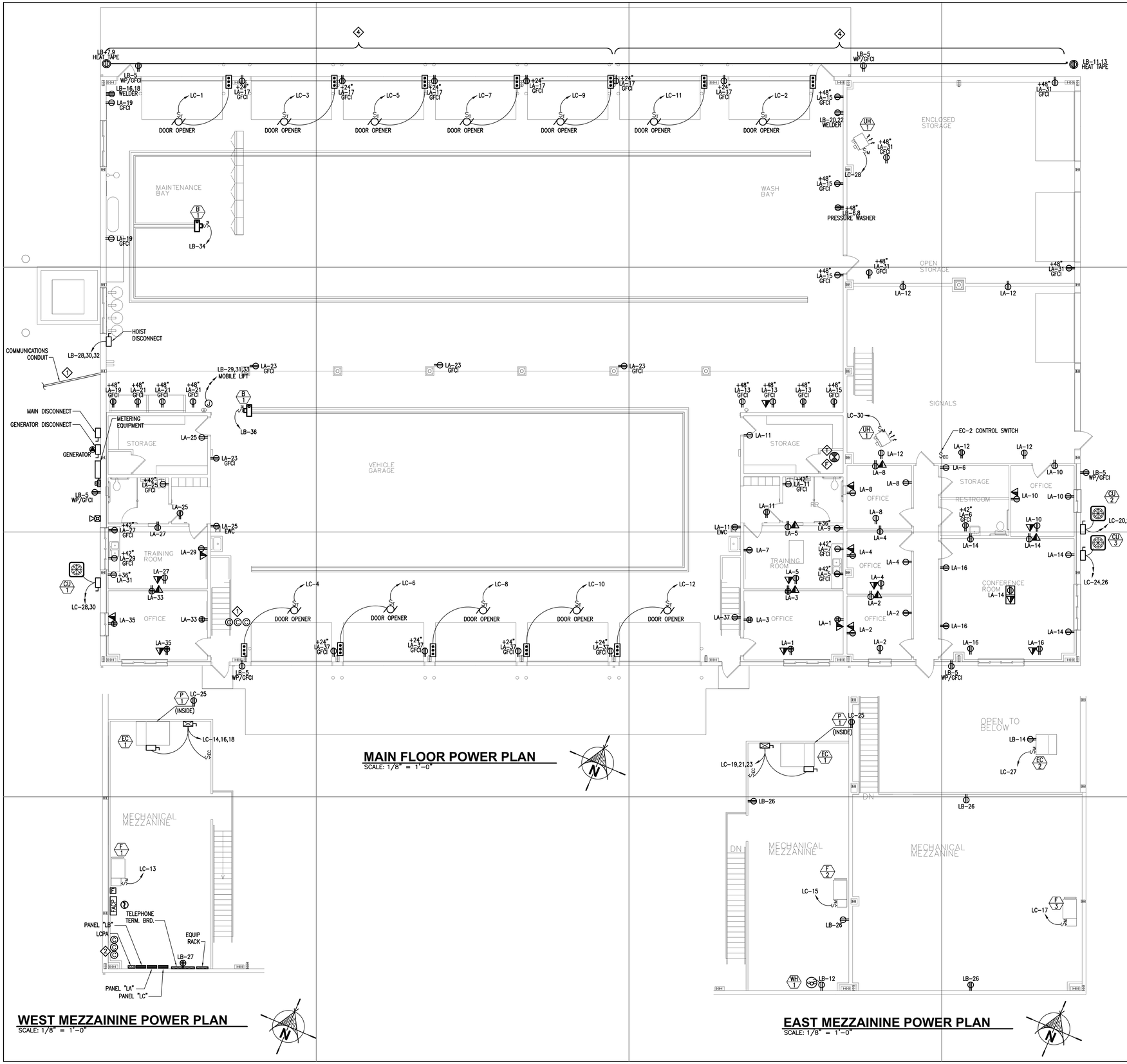

SARGENT DESIGN GROUP
ARCHITECTURE | PLANNING
2390 WEST HIGHWAY 56
SUITE 4A
CEDAR CITY, UTAH 84720
OFFICE: (435) 586-8510
FAX: (435) 586-4873

REGISTERED PROFESSIONAL ENGINEER
187104
STEVEN R. GRIFFITHS
STATE OF UTAH

State of Utah-Department of Administrative Services
DIVISION OF FACILITIES CONSTRUCTION AND MANAGEMENT
4110 State Office Building/Salt Lake City, Utah 84114/538-3018

Project:
UDOT HURRICANE MAINTENANCE FACILITY

Sheet Title:
POWER PLAN

Revisions:

ROYAL ENGINEERING
ELECTRICAL
2335 SOUTH STATE SUITE 225
PHONE: 801.375.2228
MECHANICAL
PROVO, UTAH 84606
FAX: 801.375.2676

COPYRIGHT©
THESE DOCUMENTS ARE INSTRUMENTS OF PROFESSIONAL SERVICE AND SHALL NOT BE USED IN WHOLE OR IN PART UNLESS IN CONJUNCTION WITH ROYAL ENGINEERINGS INTERPRETATIONS, DECISIONS, OBSERVATIONS AND ADMINISTRATIONS. USE OR REPRODUCTION OF THESE DOCUMENTS IN WHOLE OR IN PART WITHOUT ROYAL ENGINEERING'S CONSENT IS IN VIOLATION OF COMMON LAW, COPYRIGHTS, STATUTORY AND OTHER RESERVED RIGHTS. REFER TO COPYRIGHTS, STATUTORY AND OTHER RESERVED RIGHTS, REFER TO PUBLIC RECORD ACTS: REFER TO ACT 17 U.S.C. PAR. 301 (1991).

JOB# J08327

PROJECT NUMBER:	J08327
DATE:	FEB. 2009
DRAWN BY:	DAP
CHECKED BY:	SRG
APPROVED BY:	SRG

SHEET NUMBER: E1.2
Sheet 4 of 10

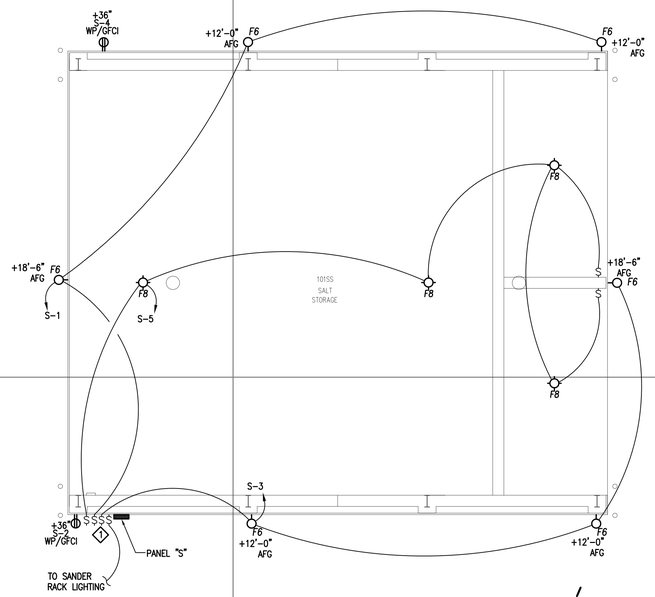

SALT STORAGE ELECTRICAL PLAN

SCALE: 1/8" = 1'-0"

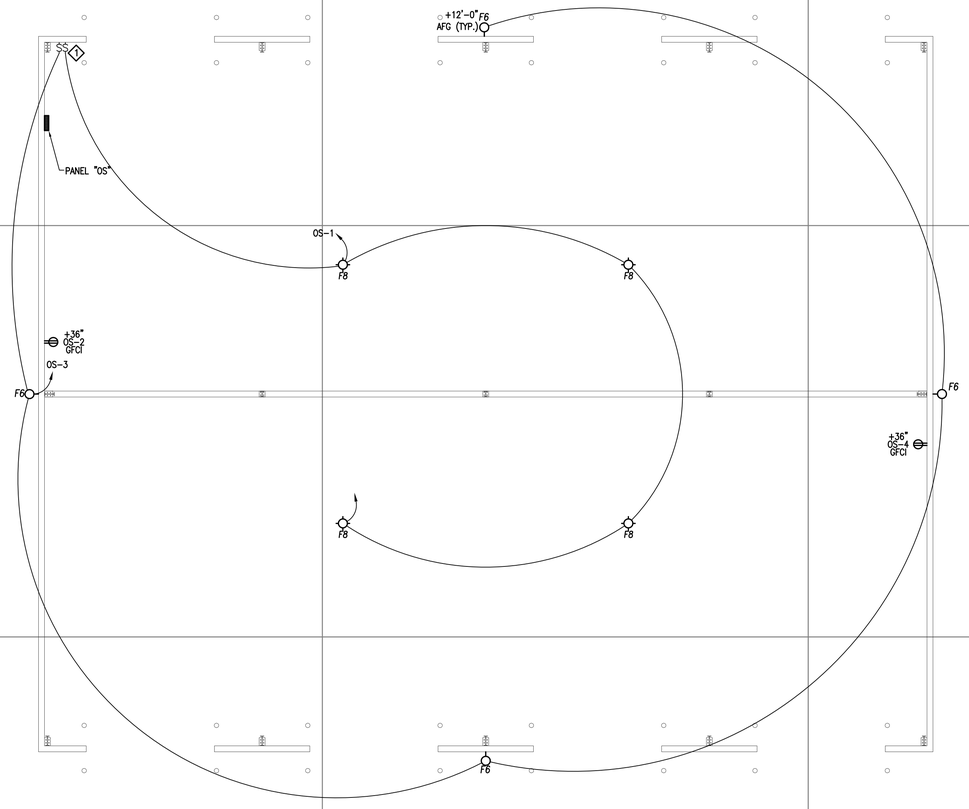

OPEN STORAGE ELECTRICAL PLAN

SCALE: 1/8" = 1'-0"

ELEC. KEYED NOTES

1. PROVIDE WEATHERPROOF COVER FOR SWITCHES.

SARGENT DESIGN GROUP
ARCHITECTURE | PLANNING
2390 WEST HIGHWAY 56
SUITE 4A
CEDAR CITY, UTAH 84720
OFFICE: (435) 586-8510
FAX: (435) 586-4873

REGISTERED PROFESSIONAL ENGINEER
187104
STEVEN R. GRIFFITHS
STATE OF UTAH

State of Utah-Department of Administrative Services
DIVISION OF FACILITIES CONSTRUCTION AND MANAGEMENT
4110 State Office Building/Salt Lake City, Utah 84114/538-3018

Project:
UDOT HURRICANE MAINTENANCE FACILITY

Sheet Title:

AUXILARY BUILDING ELECTRICAL PLAN

Revisions:

ROYAL ENGINEERING
ELECTRICAL
2335 SOUTH STATE SUITE 225
PHONE: 801.375.2228
MECHANICAL
PROVO, UTAH 84606
FAX: 801.375.2676

COPYRIGHT©

JOB# J08327

THESE DOCUMENTS ARE INSTRUMENTS OF PROFESSIONAL SERVICE AND THE INFORMATION CONTAINED HEREIN IS INCOMPLETE UNLESS IN CONJUNCTION WITH ROYAL ENGINEERING'S INTERPRETATIONS, DECISIONS, OBSERVATIONS AND ADMINISTRATIONS. USE OR REPRODUCTION OF THESE DOCUMENTS IN WHOLE OR IN PART WITHOUT ROYAL ENGINEERING'S CONSENT IS IN VIOLATION OF COMMON LAW, COPYRIGHTS, STATUTORY AND OTHER RESERVED RIGHTS. REFER TO ACT 17 U.S.C. PAR. 511 (1991). WHICH PREEMPTS STATE AND LOCAL PUBLIC RECORD ACTS. REFER TO ACT 17 U.S.C. PAR. 301 (1991).

PROJECT NUMBER:	J08327
DATE:	FEB. 2009
DRAWN BY:	DAP
CHECKED BY:	SRG
APPROVED BY:	SRG

SHEET NUMBER: E1.3

Sheet 5 of 10

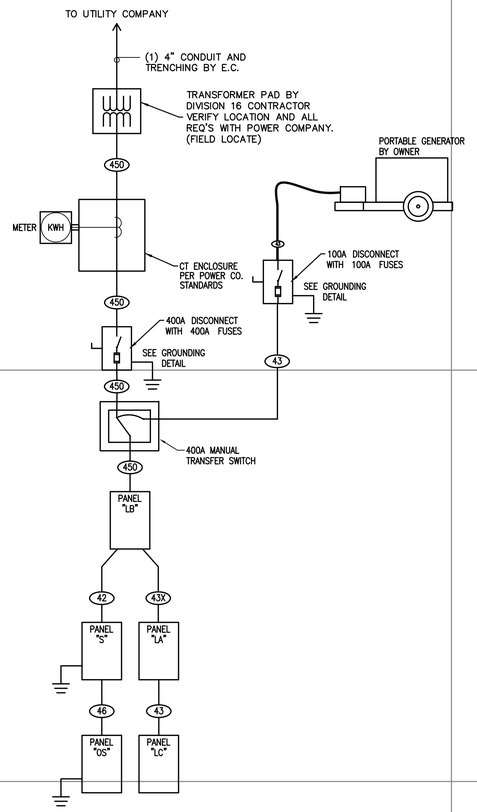

POWER ONE-LINE DIAGRAM

SCALE: NONE

COPPER FEEDER SCHEDULE

TYPE	CONDUIT SIZE PVC	CONDUIT SIZE EMT	CONDUCTORS QUAN.	CONDUCTORS SIZE	70°C AMP RATING
(212)	3/4"	3/4"	2	#12	
(312)	3/4"	3/4"	3	#12	25
(412)	3/4"	3/4"	4	#12	
(20)	3/4"	3/4"	2	#10	
(30)	3/4"	3/4"	3	#10	35
(40)	3/4"	3/4"	4	#10	
(28)	3/4"	3/4"	2	#8	
(38)	3/4"	3/4"	3	#8	50
(48)	3/4"	3/4"	4	#8	
(26)	3/4"	3/4"	2	#6	
(36)	3/4"	3/4"	3	#6	65
(46)	1"	1"	4	#6	
(24)	3/4"	3/4"	2	#4	
(34)	1"	1"	3	#4	85
(44)	1-1/4"	1-1/4"	4	#4	
(23)	1"	1"	2	#3	
(33)	1"	1"	3	#3	100
(43)	1-1/4"	1-1/4"	4	#3	
(22)	1"	1"	2	#2	
(32)	1-1/4"	1-1/4"	3	#2	115
(42)	1-1/4"	1-1/4"	4	#2	

TYPE	CONDUIT SIZE PVC	CONDUIT SIZE EMT	CONDUCTORS QUAN.	CONDUCTORS SIZE	70°C AMP RATING
(21)	1-1/4"	1-1/4"	2	#1	
(31)	1-1/4"	1-1/4"	3	#1	130
(41)	1-1/2"	1-1/2"	4	#1	
(21X)	1-1/4"	1-1/4"	2	1/0	
(31X)	1-1/2"	1-1/2"	3	1/0	150
(41X)	1-1/2"	1-1/2"	4	1/0	
(22X)	1-1/4"	1-1/4"	2	2/0	
(32X)	1-1/2"	1-1/2"	3	2/0	175
(42X)	2"	2"	4	2/0	
(23X)	1-1/2"	1-1/4"	2	3/0	
(33X)	2"	2"	3	3/0	200
(43X)	2"	2"	4	3/0	
(24X)	1-1/2"	1-1/2"	2	4/0	
(34X)	2"	2"	3	4/0	230
(44X)	2-1/2"	2-1/2"	4	4/0	
(225)	2"	2"	2	250 KCMIL	
(325)	2"	2"	3	250 KCMIL	255
(425)	3"	2-1/2"	4	250 KCMIL	
(230)	2"	2"	2	300 KCMIL	
(330)	2-1/2"	2-1/2"	3	300 KCMIL	285
(430)	3"	2-1/2"	4	300 KCMIL	

TYPE	CONDUIT SIZE PVC	CONDUIT SIZE EMT	CONDUCTORS QUAN.	CONDUCTORS SIZE	70°C AMP RATING
(235)	2"	2"	2	350 KCMIL	
(335)	2-1/2"	2-1/2"	3	350 KCMIL	310
(435)	3"	2-1/2"	4	350 KCMIL	
(240)	2"	2"	2	400 KCMIL	
(340)	2-1/2"	2-1/2"	3	400 KCMIL	335
(440)	3"	3"	4	400 KCMIL	
(250)	2-1/2"	2-1/2"	2	500 KCMIL	
(350)	3"	2-1/2"	3	500 KCMIL	380
(450)	3-1/2"	3"	4	500 KCMIL	
(260)	2-1/2"	2-1/2"	2	600 KCMIL	
(360)	3"	3"	3	600 KCMIL	420
(460)	3-1/2"	3-1/2"	4	600 KCMIL	

NOTE:
1. SEE EQUIPMENT GROUND CONDUCTOR SCHEDULES OR SERVICE GROUNDING DETIAL FOR GROUND CONDUCTORS RATING.
2. ALL INSULATION SHALL BE THHN UNLESS NOTED OTHERWISE.
3. PVC CONDUIT SIZE IS BASED ON SCHEDULE 40 PVC. PVC IS APPROVED FOR UNDERGROUND FEEDERS ONLY.

EQUIPMENT GROUNDING CONDUCTORS SCHEDULE

OVERCURRENT DEVICE	COPPER
15	14
20	12
30	10
40	10
60	10
100	8
200	6
300	4
400	3
500	2
600	1
800	1/0

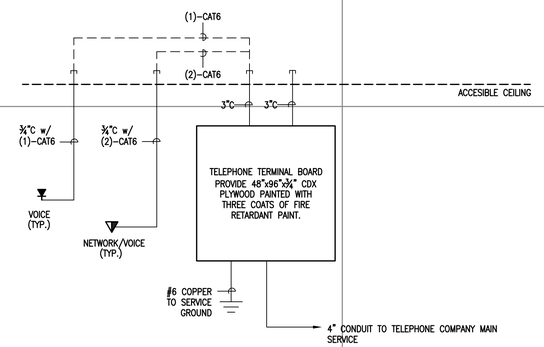

COMMUNICATIONS RISER DIAGRAM

SCALE: NONE

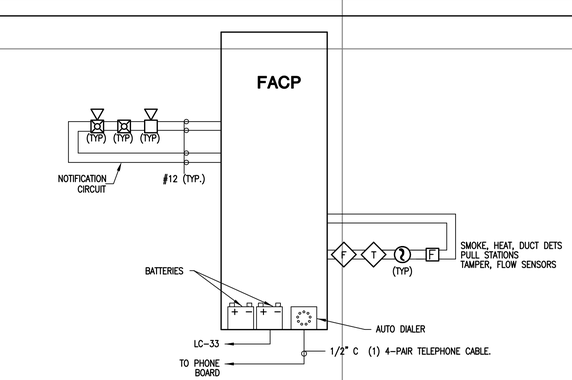

FIRE ALARM RISER DIAGRAM

SCALE: NONE

ELECTRICAL SYMBOLS

NOTE: ALL SYMBOLS MAY NOT BE USED — DOTTED SYMBOLS INDICATE EXISTING FIXTURE, EQUIPMENT, ETC.

SYMBOL	EXPLANATION
	BRANCH CIRCUIT CONCEALED IN CEILING OR WALL
	BRANCH CIRCUIT CONCEALED IN GROUND OR FLOOR
A–1,3	BRANCH CIRCUIT HOMERUNS TO PANEL
	LIGHTING AND POWER PANELBOARD
CH 1	MECHANICAL EQUIPMENT SYMBOL
1	KEYED NOTE REFERENCE
J	JUNCTION BOX
	DUPLEX RECEPTACLE OUTLET
	WP — MODIFIER; A–3 — PANEL SPACE ASSIGNMENT; REF — EQUIPMENT DESIGNATION
WP	WEATHERPROOF COVER
GFCI	PROTECTED BY FAULT CIRCUIT INTERRUPTER
+44	MOUNTING HEIGHT ABOVE FLOOR OR GRADE GIVEN IN INCHES.
REF	REFRIGERATOR
DW	DISHWASHER
DISP	DISPOSAL
WASH	WASHING MACHINE
EWC	ELECTRIC WATER COOLER
	QUAD RECEPTACLE OUTLET
	SPLIT WIRED DUPLEX RECEPTACLE OUTLET
WP GFCI	DUPLEX RECEPTACLE WEATHERPROOF AND GFCI
GFCI	DUPLEX RECEPTACLE OUTLET WITH GROUND FAULT CIRCUIT INTERRUPTION PROTECTION
EWC	RECEPTACLE ELECTRIC WATER COOLER (EWC)
	220V RECEPTACLE OUTLET
	ISOLATED GROUND RECEPTACLE
	RECEPTACLE FLOOR MOUNTED
	RECEPTACLE CEILING MOUNTED
	SPECIAL RECEPTACLE
	DISCONNECT SWITCH
	MOTOR STARTER
	FLUORESCENT FIXTURE (TYPICAL)
EM	EMERGENCY LIGHTING UNIT
	SURFACE OR PENDANT MOUNTED FIXTURE
	RECESSED FIXTURE
	WALL MOUNTED FIXTURE
	WALL PACK
	FLUORESCENT STRIP
	TRACK LIGHTING
	EMERGENCY LIGHTING UNIT
F1	FIXTURE TYPE SYMBOL
135	ROOM NUMBER
©	CONDUIT STUB
TP FLOW	TAMPER AND FLOW

SYMBOL	EXPLANATION
$	SINGLE POLE SWITCH (SUBSCRIPT AS INDICATED BELOW)
2	TWO POLE SWITCH
3	3-WAY SWITCH
4	4-WAY SWITCH
D	DIMMER SWITCH
K	KEYED SWITCH
T	TIMER SWITCH
M	MANUAL STARTER WITH THERMAL OVERLOAD
F	PADDLE FAN 3 SPEED CONTROL
OC	OCCUPANCY SENSOR SWITCH
EC	EVAPORATIVE COOLER 2 SPEED 5 POSITION CONTROL SWITCH
ab	CONTROLLING SWITCH (LETTER INDICATES CONTROL CIRCUIT)
$$	DOUBLE GANG SWITCH
(S)	OCCUPANCY SENSOR SWITCH (CELLING MOUNTED)
	MOTOR OUTLET
T	THERMOSTAT OUTLET
S	REMOTE SENSOR OUTLET
	EXHAUST FAN
B	BELL
	PUSHBUTTON
V	VOLUME CONTROL
	SPEAKER
	TELEPHONE OUTLET
	COMPUTER DATA OUTLET
	NETWORK AND VOICE OUTLET
TV	TELEVISION OUTLET
P	PHOTOCELL
F	FIRE ALARM PULL STATION
F	FIRE ALARM HORN/STROBE
F	FIRE ALARM STROBE
S	SMOKE DETECTOR (SUBSCIPT AS INDICATED BELOW)
A	SMOKE ALARM
B	SMOKE ALARM BATTERY-BACKED
D	DUCT SMOKE DETECTOR
R	SMOKE DETECTOR WITH ELEVATOR RECALL MODULE
I	HEAT DETECTOR
	WALL MOUNTED EXIT LIGHT (SINGLE FACE)
	WALL MOUNTED EXIT LIGHT (DOUBLE FACE)
	CEILING MOUNTED EXIT LIGHT
	CEILING MOUNTED EXIT LIGHT (DOUBLE FACE)
42X	FEEDER TAG (SEE FEEDER SCHEDULE)
D/H	DOOR HOLDER
F/S	FIRE/SMOKE DAMPER
	SECURITY CAMERA
	GARAGE DOOR OPENER

KEYED NOTES:

1. THE MINIMUM HEADROOM OF WORKING SPACE SHALL BE 6½ FT.
2. THE WIDTH OF THE WORKING SPACE SHALL BE THE WIDTH OF THE EQUIPMENT OR 30 IN., WHICHEVER IS GREATER. THE PANEL DOOR SHALL OPEN AT LEAST 90 DEGREES.
3. ALL CIRCUIT BREAKERS, WHEN IN THIER HIGHEST POSITION, SHALL BE NOT MORE THAN 6 FT 7 IN. ABOVE THE FLOOR.
4. 3 FT CLEARANCE IF 0–150V TO GROUND
5. 3.5FT CLEARANCE IF 151–600V TO GROUND. 4FT IF EXPOSED LIVE PARTS ON BOTH SIDES OF THE WORKING SPACE.

GENERAL NOTE:

1. ALL WORKING SPACE CLEARANCE FROM FACE OF PANEL.

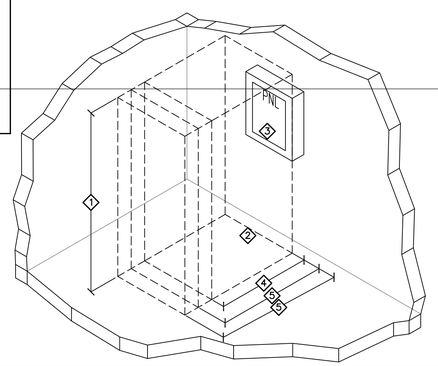

ELECTRICAL EQUIPMENT WORK SPACE CLEARANCES

SCALE: NONE

SARGENT DESIGN GROUP
ARCHITECTURE | PLANNING
2390 WEST HIGHWAY 56
SUITE 4A
CEDAR CITY, UTAH 84720
OFFICE: (435) 586-8510
FAX: (435) 586-4873

REGISTERED PROFESSIONAL ENGINEER
187104
STEVEN R. GRIFFITHS
STATE OF UTAH

State of Utah–Department of Administrative Services
DIVISION OF FACILITIES CONSTRUCTION AND MANAGEMENT
4110 State Office Building/Salt Lake City, Utah 84114/538-3018

Project:
UDOT HURRICANE MAINTENANCE FACILITY

Sheet Title:
DETAILS SHEET 1

Revisions:

ROYAL ENGINEERING
ELECTRICAL
2335 SOUTH STATE SUITE 225
PHONE: 801.375.2228
MECHANICAL
PROVO, UTAH 84606
FAX: 801.375.2676

COPYRIGHT©
JOB# J08327
THESE DOCUMENTS ARE INSTRUMENTS OF PROFESSIONAL SERVICE AND THE INFORMATION CONTAINED HEREIN IS INCOMPLETE UNLESS IN CONJUNCTION WITH ROYAL ENGINEERING'S INTERPRETATIONS, DECISIONS, OBSERVATIONS AND ADMINISTRATIONS. USE OR REPRODUCTION OF THESE DOCUMENTS IN WHOLE OR IN PART WITHOUT ROYAL ENGINEERING'S CONSENT IS IN VIOLATION OF COMMON LAW COPYRIGHTS, STATUTORY AND OTHER RESERVED RIGHTS, REFER TO ACT 17 U.S.C. PAR. 511 (1991), WHICH PREEMPTS STATE AND LOCAL PUBLIC RECORD ACTS. REFER TO ACT 17 U.S.C. PAR. 301 (1991).

PROJECT NUMBER:	J08327
DATE:	FEB. 2009
DRAWN BY:	DAP
CHECKED BY:	SRG
APPROVED BY:	SRG

SHEET NUMBER: E2.1
Sheet 6 of 10

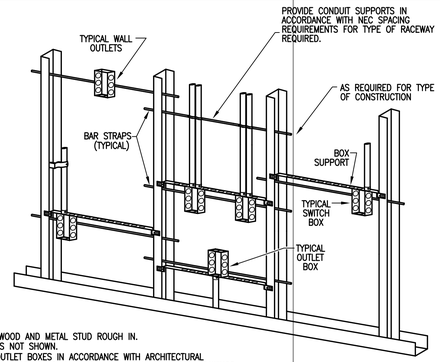

NOTES:

1. TYPICAL FOR WOOD AND METAL STUD ROUGH IN.
2. PLASTER RINGS NOT SHOWN.
3. LOCATE ALL OUTLET BOXES IN ACCORDANCE WITH ARCHITECTURAL AND MECHANICAL DRAWINGS, AND WITH ALL APPLICABLE SHOP DRAWINGS.
4. IN ACCORDANCE WITH 2006 IBC OUTLETS ON OPPOSITE SIDES OF WALLS OR PARTITIONS IN THE SAME STUD SPACE MUST BE SEPARATED BY A MINIMUM OF 24" HORIZONTAL DISTANCE.

TYPICAL ROUGH-IN REQUIREMENTS DETAIL

SCALE: NONE

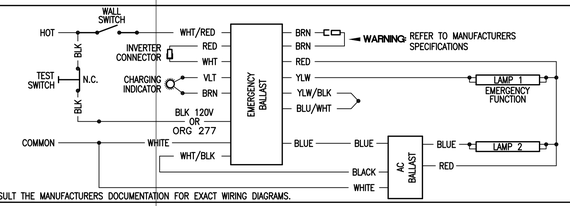

NOTE: CONSULT THE MANUFACTURERS DOCUMENTATION FOR EXACT WIRING DIAGRAMS.

EMERGENCY BALLAST WIRING DIAGRAM

SCALE: NONE

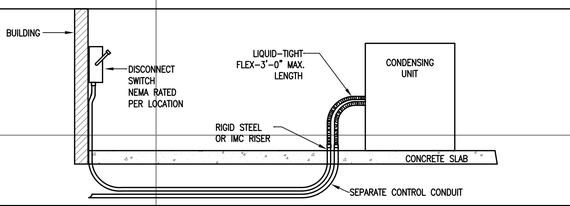

CONDENSING UNIT CONDUIT INSTALLATION DETAIL

SCALE: NONE

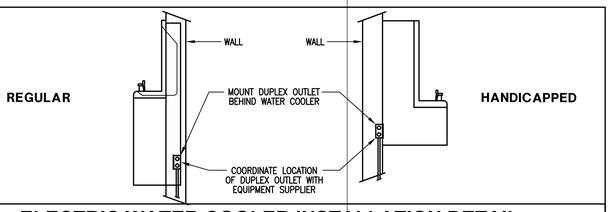

ELECTRIC WATER COOLER INSTALLATION DETAIL

SCALE: NONE

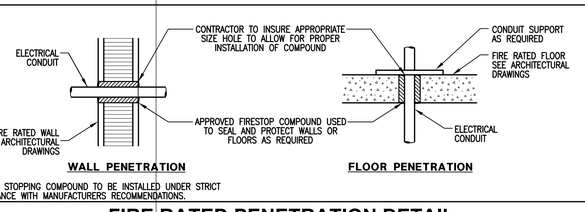

NOTE:

1. ALL FIRE STOPPING COMPOUND TO BE INSTALLED UNDER STRICT ACCORDANCE WITH MANUFACTURERS RECOMMENDATIONS.

FIRE RATED PENETRATION DETAIL

SCALE: NONE

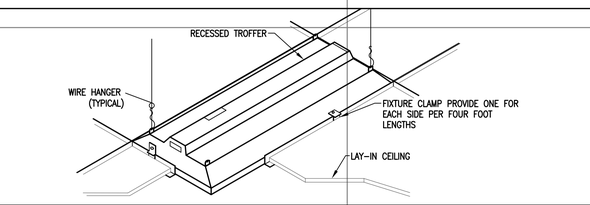

TYPICAL RECESSED FIXTURE MOUNTING DETAIL

SCALE: NONE

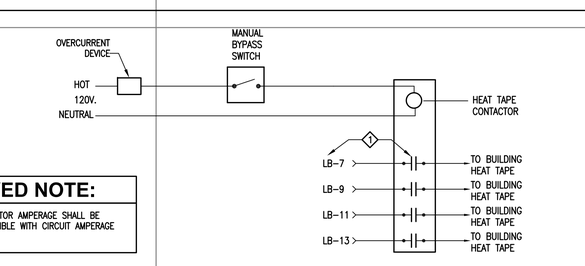

KEYED NOTE:

1. CONTACTOR AMPERAGE SHALL BE COMPATIBLE WITH CIRCUIT AMPERAGE

HEAT TAPE CONTROL PANEL WIRING DIAGRAM

SCALE: NONE

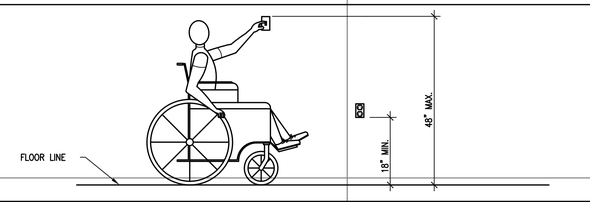

MOUNTING HEIGHTS DETAIL

SCALE: NONE

SARGENT DESIGN GROUP
ARCHITECTURE | PLANNING
2390 WEST HIGHWAY 56
SUITE 4A
CEDAR CITY, UTAH 84720
OFFICE: (435) 586-8510
FAX: (435) 586-4873

REGISTERED PROFESSIONAL ENGINEER
187104
STEVEN R. GRIFFITHS
STATE OF UTAH

State of Utah—Department of Administrative Services
DIVISION OF FACILITIES CONSTRUCTION AND MANAGEMENT
4110 State Office Building/Salt Lake City, Utah 84114/538-3018

Project:
UDOT HURRICANE MAINTENANCE FACILITY

Sheet Title:
DETAILS SHEET 2

Revisions:

ROYAL ENGINEERING
ELECTRICAL
2335 SOUTH STATE SUITE 225
PHONE: 801.375.2228
MECHANICAL
PROVO, UTAH 84606
FAX: 801.375.2676

COPYRIGHT©
JOB# J08327
THESE DOCUMENTS ARE INSTRUMENTS OF PROFESSIONAL SERVICE PREPARED BY ROYAL ENGINEERING AND MAY NOT BE USED IN WHOLE OR IN PART EXCEPT AS AUTHORIZED IN WRITING BY ROYAL ENGINEERING. THE DATA CONTAINED HEREIN IS PROPRIETARY AND SHALL NOT BE DISCLOSED OUTSIDE OF THE OWNER'S ORGANIZATION EXCEPT IN CONJUNCTION WITH ROYAL ENGINEERING'S INTERPRETATIONS, DECISIONS, OBSERVATIONS AND ADMINISTRATIONS. USE OR REPRODUCTION OF THESE DOCUMENTS IN WHOLE OR IN PART WITHOUT ROYAL ENGINEERING'S CONSENT IS IN VIOLATION OF COMMON LAW, STATUTORY AND OTHER RESERVED RIGHTS, INCLUDING THE COPYRIGHT ACT 17 U.S.C. PAR. 5.1 1 (1991). WHICH PREEMPTS STATE AND LOCAL PUBLIC RECORD ACTS. REFER TO ACT 17 U.S.C. PAR. 301 (1991).

PROJECT NUMBER: J08327
DATE: FEB. 2009
DRAWN BY: DAP
CHECKED BY: SRG
APPROVED BY: SRG

SHEET NUMBER: E2.2
Sheet 7 of 10

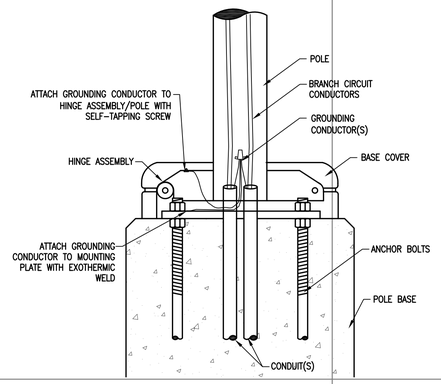

POLE LIGHT GROUNDING DETAIL

SCALE: NONE

KEYED NOTES:

1. POLE BASE DEPTH BELOW GRADE SHALL BE 10% OF POLE HEIGHT PLUS 2 FEET (APPROX. 5 FT)

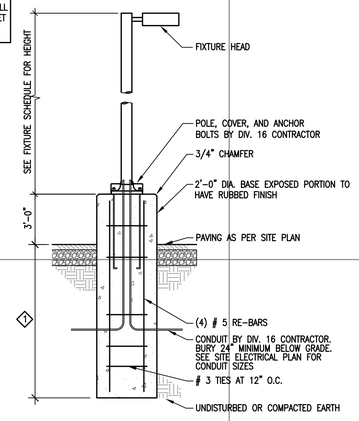

POLE BASE DETAIL

SCALE: NONE

NOTE:

1. WHEN AVAILABLE CONTRACTOR SHALL PROVIDE ALL GROUNDING MEANS INDICATED. CONTRACTOR SHALL REFER TO ELECTRICAL ONE-LINE DIAGRAM AND GROUNDING ELECTRODE CONDUCTOR SCHEDULE (THIS DETAIL) FOR GROUNDING ELECTRODE CONDUCTOR SIZE. CONTRACTOR SHALL REFER TO ELECTRICAL SPECIFICATIONS FOR SPECIFICS OF GROUNDING SYSTEM INSTALLATION AND MATERIALS.
2. GROUNDING ROD SHALL BE MIN. 9FT. AWAY FROM IRRICATION CONTROLLER.

KEYED NOTE:

1. T&B 3900 BU GROUND CLAMP WITH 3/4" CONDUIT HUB AND CABLE CLAMP
2. FULL SIZE GROUNDING ELECTRODE CONDUCTOR IN GRC.
3. EXOTHERMICALLY WELDED (TYPICAL)
4. DRIVEN GROUND RODS ⅝"x8' COPPER/SHEET ON BUILDING EXTERIOR
5. TABLE TAKEN FROM NEC 250.66. UNGROUNDED PHASE CONDUCTOR REFERS TO THE SIZE OF THE LARGEST UNGROUNDED SERVICE-ENTRANCE CONDUCTOR OR EQUIVALENT AREA FOR PARALLEL CONDUCTORS. SEE NEC 250.66.

GROUNDING ELECTRODE CONDUCTOR 5

UNGROUNDED PHASE CONDUCTOR (COPPER)	GRND WIRE SIZE (CU)
#2 OR SMALLER	#8
1 OR 1/0	#6
2/0 OR 3/0	#4
>3/0 THRU 350 KCMIL	#2
>350 KCMIL THRU 600 KCMIL	1/0
>600 KCMIL THRU 1100 KCMIL	2/0
>1100 KCMIL	3/0

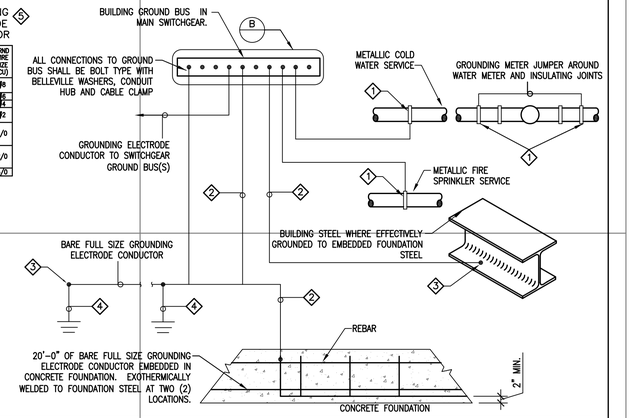

SERVICE GROUNDING DETAIL

SCALE: NONE

SARGENT DESIGN GROUP
ARCHITECTURE | PLANNING
2390 WEST HIGHWAY 56
SUITE 4A
CEDAR CITY, UTAH 84720
OFFICE: (435) 586-8510
FAX: (435) 586-4873

REGISTERED PROFESSIONAL ENGINEER
187104
STEVEN R. GRIFFITHS
STATE OF UTAH

State of Utah--Department of Administrative Services
DIVISION OF FACILITIES CONSTRUCTION AND MANAGEMENT
4110 State Office Building/Salt Lake City, Utah 84114/538-3018

Project:
UDOT HURRICANE MAINTENANCE FACILITY

Sheet Title:
DETAILS SHEET 3

Revisions:

ROYAL ENGINEERING
ELECTRICAL
2335 SOUTH STATE SUITE 225
PHONE: 801.375.2228
MECHANICAL
PROVO, UTAH 84606
FAX: 801.375.2676

COPYRIGHT©
JOB# J08327
THESE DOCUMENTS ARE INSTRUMENTS OF PROFESSIONAL SERVICE AND THE INFORMATION CONTAINED HEREIN IS INCOMPLETE UNLESS IN CONJUNCTION WITH ROYAL ENGINEERING'S INTERPRETATIONS, DECISIONS, OBSERVATIONS AND ADMINISTRATIONS. USE OR REPRODUCTION OF THESE DOCUMENTS IN WHOLE OR IN PART WITHOUT ROYAL ENGINEERING'S CONSENT IS IN VIOLATION OF COMMON LAW COPYRIGHTS, STATUTORY AND OTHER RESERVED RIGHTS. REFER TO ACT 17 U.S.C. PAR. 511 (1991), WHICH PREEMPTS STATE AND LOCAL PUBLIC RECORD ACTS. REFER TO ACT 17 U.S.C. PAR. 301 (1991).

PROJECT NUMBER:	J08327
DATE:	FEB. 2009
DRAWN BY:	DAP
CHECKED BY:	SRG
APPROVED BY:	SRG

SHEET NUMBER: E2.3
Sheet 8 of 10

PANEL SCHEDULE "S"

VOLTAGE: 208 Y/ 120 VOLTS — MOUNTING: SURFACE — ENCLOSURE: NEMA 3R — PHASE: 3 — WIRE: 4
BUS RATING (AMPS): 100 — MAIN CIRCUIT BREAKER: 60 — MINIMUM EQUIPMENT RATING: 10,000 AMPS (RMS-SYM) — REMARKS:

BREAKER No.	AMPS	POLE	CIRCUIT NAME	FEEDER C	WIRE	GRD	CKT. LOAD DEMAND FACTOR	WATTS	LOAD/PHASE (VA) ØA	ØB	ØC	CKT. LOAD WATTS	DEMAND FACTOR	FEEDER GRD	WIRE	C	CIRCUIT NAME	BREAKER POLE	AMPS	No.
1	20	1	LIGHTING	¾"	#12	#12	1.00	1,400	1,900			500	1.00	#12	#12	¾"	RECPT	1	20	2
3	20	1	LIGHTING	¾"	#12	#12	1.00	1,400		1,900		500	1.00	#12	#12	¾"	RECPT	1	20	4
5	20	1	LIGHTING	¾"	#12	#12	1.00	900			1,400	500	1.00	#12	#12	¾"	WASH RACK	1	20	6
7	20	1	SANDING RACK	¾"	#12	#12	1.00	300	1,356			1,056	1.00	#12	#12	¾"	ELECTRIC GATE	3	20	8
9	20		SPARE				1.00			1,056		1,056	1.00	–	#12	–	–	–	–	10
11	20		SPARE				1.00				1,056	1,056	1.00	–	#12	–	–	–	–	12

	ØA	ØB	ØC	TOTALS
CONNECTED LOAD (VA)	3,256	2,956	2,456	8,668
CONNECTED LOAD (A)				24
DEMAND FACTOR ADJUSTMENTS (VA)	0	0	0	0
TOTAL LOAD (VA)	3,256	2,956	2,456	8,668
TOTAL LOAD (A)				24
PHASE BALANCE	38%	34%	28%	

NOTES :
1. ALL INSULATION ON CONDUCTORS TO BE THHN UNLESS NOTED OTHERWISE. INSULATION ON ALL UNDERGROUND EXTERIOR CONDUCTORS SHALL BE THHW. INSULATION ON ALL UNDERGROUND EXTERIOR CONDUCTORS SHALL BE THHW.
2. LOAD DEMANDS CALCULATED AS PER SECTIONS 210 & 220 OF THE NATIONAL ELECTRICAL CODE.
3. PANEL COVER SHALL BE FIELD MARKED FOR FLASH PROTECTION WITH A PERMANENT LABEL AS REQUIRED BY THE NATIONAL ELECTRICAL CODE SECTION 110. LABEL SHALL READ AS FOLLOWS: "DANGER: POTENTIAL ARC FLASH HAZARD"
4. ABBREVIATIONS: CO-CONVENIENCE OUTLET, RR-RESTROOM, (N)ORTH, (S)OUTH, (E)AST (W)EST

PANEL SCHEDULE "OS"

VOLTAGE: 208 Y/ 120 VOLTS — MOUNTING: SURFACE — ENCLOSURE: NEMA 3R — PHASE: 3 — WIRE: 4
BUS RATING (AMPS): 100 — MAIN CIRCUIT BREAKER: 60 — MINIMUM EQUIPMENT RATING: 22,000 AMPS (RMS-SYM) — REMARKS:

BREAKER No.	AMPS	POLE	CIRCUIT NAME	FEEDER C	WIRE	GRD	CKT. LOAD DEMAND FACTOR	WATTS	LOAD/PHASE (VA) ØA	ØB	ØC	CKT. LOAD WATTS	DEMAND FACTOR	FEEDER GRD	WIRE	C	CIRCUIT NAME	BREAKER POLE	AMPS	No.
1	20	1	LIGHTING	¾"	#12	#12	1.00	1,100	1,280			180	1.00	#12	#12	¾"	RECEPTACLE	1	20	2
3	20	1	LIGHTING	¾"	#12	#12	1.00	1,840		2,020		180	1.00	#12	#12	¾"	RECEPTACLE	1	20	4
5	60	3	PANEL "S"	1"	#6	#10	1.00	2,200			2,200		1.00				SPACE			6
7	–	–	–	–	#6	–	1.00	1,900	1,900				1.00				SPACE			8
9	–	–	–	–	#6	–	1.00	1,400		1,400			1.00				SPACE			10
11			SPACE				1.00				0		1.00				SPACE			12

	ØA	ØB	ØC	TOTALS
CONNECTED LOAD (VA)	3,180	3,420	2,200	8,800
CONNECTED LOAD (A)				24
DEMAND FACTOR ADJUSTMENTS (VA)	0	0	0	0
TOTAL LOAD (VA)	3,180	3,420	2,200	8,800
TOTAL LOAD (A)				24
PHASE BALANCE	36%	39%	25%	

NOTES :
1. ALL INSULATION ON CONDUCTORS TO BE THHN UNLESS NOTED OTHERWISE. INSULATION ON ALL UNDERGROUND EXTERIOR CONDUCTORS SHALL BE THHW. INSULATION ON ALL UNDERGROUND EXTERIOR CONDUCTORS SHALL BE THHW.
2. LOAD DEMANDS CALCULATED AS PER SECTIONS 210 & 220 OF THE NATIONAL ELECTRICAL CODE.
3. PANEL COVER SHALL BE FIELD MARKED FOR FLASH PROTECTION WITH A PERMANENT LABEL AS REQUIRED BY THE NATIONAL ELECTRICAL CODE SECTION 110. LABEL SHALL READ AS FOLLOWS: "DANGER: POTENTIAL ARC FLASH HAZARD"
4. ABBREVIATIONS: CO-CONVENIENCE OUTLET, RR-RESTROOM, (N)ORTH, (S)OUTH, (E)AST (W)EST

EQUIPMENT SCHEDULE

SYMBOL	DESCRIPTION	SERVICE VOLTS	PHASE	DISCONNECT SIZE	FUSE	STARTER	LOAD HP	VA	AMPS	REMARKS
F 1	FURNACE FAN	120 V	1Ø	MANUAL STARTER	–	–	⅓ HP	864	7.2 A	
F 2	FURNACE FAN	120 V	1Ø	MANUAL STARTER	–	–	⅙ HP	528	4.4 A	
F 3	FURNACE FAN	120 V	1Ø	MANUAL STARTER	–	–	½ HP	1,176	9.8 A	
F 4	FURNACE FAN	120 V	1Ø	MANUAL STARTER	–	–	¾ HP	1,656	13.8 A	
EF 1	EXHAUST FAN	120 V	1Ø	TOGGLE SWITCH	–	–	FRAC	240	2.0 A	
EF 2	EXHAUST FAN	120 V	1Ø	TOGGLE SWITCH	–	–	FRAC	240	2.0 A	
EF 3	EXHAUST FAN	120 V	1Ø	TOGGLE SWITCH	–	–	FRAC	240	2.0 A	
WH 1	WATER HEATER	120 V	1Ø	PLUG	–	–	–	1,500	12.5 A	
UH 1	UNIT HEATER	120 V	1Ø	TOGGLE SWITCH	–	–	–	648	5.4 A	
EC 1	EVAP. COOLER	208 V	3Ø	30A NEMA 3R	–	NEMA 00	3 HP	3,963	11.0 A	
EC 2	EVAP. COOLER	120 V	1Ø	MANUAL STARTER	–	–	½ HP	1,176	9.8 A	
B 1	RADIANT HEATER	120 V	1Ø	MANUAL STARTER	–	–	–	120	1.0 A	
CU 1	AIR COOLED CONDENSING UNIT	208 V	1Ø	30A NEMA 3R	–	INTEGRAL	–	3,869	18.6 A	
CU 2	AIR COOLED CONDENSING UNIT	208 V	1Ø	30A NEMA 3R	–	INTEGRAL	–	2,226	10.7 A	
CU 3	AIR COOLED CONDENSING UNIT	208 V	1Ø	30A NEMA 3R	–	INTEGRAL	–	4,264	20.5 A	

NOTES:
1. VERIFY ALL EQUIPMENT LOCATIONS AND CONNECTION REQUIREMENTS (i.e. VOLTAGE, PHASE, FLA, ETC.) WITH MECHANICAL DRAWINGS/SUBMITTALS BEFORE BEGINNING ROUGH IN.
2. ALL FUSES SHALL BE DUAL ELEMENT TIME DELAY. FINAL BREAKER/FUSE & DISCONNECT SIZE SHALL BE DETERMINED BY MANUFACTURER'S RECOMMENDATION FOR ACTUAL EQUIPMENT INSTALLED.
3. MAXIMUM VALUES INDICATED.

PANEL SCHEDULE "LA"

VOLTAGE: 208 Y/ 120 VOLTS — MOUNTING: SURFACE — ENCLOSURE: NEMA 1 — PHASE: 3 — WIRE: 4
BUS RATING (AMPS): 225 — MAIN CIRCUIT BREAKER: 225 — MINIMUM EQUIPMENT RATING: 22,000 AMPS (RMS-SYM) — REMARKS:

BREAKER No.	AMPS	POLE	CIRCUIT NAME	FEEDER C	WIRE	GRD	CKT. LOAD DEMAND FACTOR	WATTS	LOAD/PHASE (VA) ØA	ØB	ØC	CKT. LOAD WATTS	DEMAND FACTOR	FEEDER GRD	WIRE	C	CIRCUIT NAME	BREAKER POLE	AMPS	No.
1	20	1	OFFICE RECPT	¾"	#12	#12	1.00	720	1,440			720	1.00	#12	#12	¾"	OFFICE RECPT	1	20	2
3	20	1	OFFICE RECPT	¾"	#12	#12	1.00	720		1,440		720	1.00	#12	#12	¾"	OFFICE RECPT	1	20	4
5	20	1	TRAINING RM RECPT	¾"	#12	#12	1.00	540			900	360	1.00	#12	#12	¾"	RR RECPT	1	20	6
7	20	1	SMALL AP 1	¾"	#12	#12	1.00	1,500	2,220			720	1.00	#12	#12	¾"	OFFICE RECPT	1	20	8
9	20	1	TRAINING RM RECPT	¾"	#12	#12	1.00	360		1,080		720	1.00	#12	#12	¾"	OFFICE RECPT	1	20	10
11	20	1	RR / EWC RECPT	¾"	#12	#12	1.00	1,040			1,940	900	1.00	#12	#12	¾"	SIGNALS RECPT	1	20	12
13	20	1	SHOP RECPT	¾"	#12	#12	1.00	720	1,440			720	1.00	#12	#12	¾"	CONFERNCE RM RECPT	1	20	14
15	20	1	SHOP RECPT	¾"	#12	#12	1.00	540		1,260		720	1.00	#12	#12	¾"	CONFERNCE RM RECPT	1	20	16
17	20	1	SHOP RECPT	¾"	#12	#12	1.00	1,080			2,840	1,760	1.25	#12	#12	¾"	STORAGE/SIGNAL LTG	1	20	18
19	20	1	SHOP RECPT	¾"	#12	#12	1.00	720	1,809			1,089	1.25	#12	#12	¾"	GEN LTG	1	20	20
21	20	1	SHOP RECPT	¾"	#12	#12	1.00	540		2,223		1,683	1.25	#12	#12	¾"	GEN LTG	1	20	22
23	20	1	SHOP RECPT	¾"	#12	#12	1.00	720			1,611	891	1.25	#12	#12	¾"	GEN LTG	1	20	24
25	20	1	RR / EWC RECPT	¾"	#12	#12	1.00	1,040	2,360			1,320	1.25	#12	#12	¾"	SHOP LTG	1	20	26
27	20	1	TRAINING RM RECPT	¾"	#12	#12	1.00	540		1,860		1,320	1.25	#12	#12	¾"	SHOP LTG	1	20	28
29	20	1	SMALL AP 1	¾"	#12	#12	1.00	1,500			2,820	1,320	1.25	#12	#12	¾"	SHOP LTG	1	20	30
31	20	1	TRAINING RM RECPT	¾"	#12	#12	1.00	360	1,680			1,320	1.25	#12	#12	¾"	SHOP LTG	1	20	32
33	20	1	OFFICE RECPT	¾"	#12	#12	1.00	720		1,600		880	1.25	#12	#12	¾"	EAST MEZZANINE LTG	1	20	34
35	20	1	OFFICE RECPT	¾"	#12	#12	1.00	720			2,480	1,760	1.25	#12	#12	¾"	EAST MEZZANINE LTG	1	20	36
37	20	1	SHOP RECPT	¾"	#12	#12	1.00	900	4,900			4,000	1.00	#8	#3	1¼"	LC	3	100	38
39	20	1	GEN LTG	¾"	#12	#12	1.25	1,089		5,089		4,000	1.00	–	#3	–	–	–	–	40
41	20	1	WEST MEZZANINE LTG	¾"	#12	#12	1.25	880			4,880	4,000	1.00	–	#3	–	–	–	–	42

	ØA	ØB	ØC	TOTALS
CONNECTED LOAD (VA)	15,849	14,552	17,471	47,872
CONNECTED LOAD (A)				133
DEMAND FACTOR ADJUSTMENTS (VA)	932	1,243	1,653	3,828
TOTAL LOAD (VA)	16,781	15,795	19,124	51,700
TOTAL LOAD (A)				144
PHASE BALANCE	32%	31%	37%	

NOTES :
1. ALL INSULATION ON CONDUCTORS TO BE THHN UNLESS NOTED OTHERWISE. INSULATION ON ALL UNDERGROUND EXTERIOR CONDUCTORS SHALL BE THHW. INSULATION ON ALL UNDERGROUND EXTERIOR CONDUCTORS SHALL BE THHW.
2. LOAD DEMANDS CALCULATED AS PER SECTIONS 210 & 220 OF THE NATIONAL ELECTRICAL CODE.
3. PANEL COVER SHALL BE FIELD MARKED FOR FLASH PROTECTION WITH A PERMANENT LABEL AS REQUIRED BY THE NATIONAL ELECTRICAL CODE SECTION 110. LABEL SHALL READ AS FOLLOWS: "DANGER: POTENTIAL ARC FLASH HAZARD"
4. ABBREVIATIONS: CO-CONVENIENCE OUTLET, RR-RESTROOM, (N)ORTH, (S)OUTH, (E)AST (W)EST

PANEL SCHEDULE "LB"

VOLTAGE: 208 Y/ 120 VOLTS — MOUNTING: SURFACE — ENCLOSURE: NEMA 1 — PHASE: 3 — WIRE: 4
BUS RATING (AMPS): 400 — MAIN LUGS ONLY — MINIMUM EQUIPMENT RATING: 22,000 AMPS (RMS-SYM) — REMARKS: *-30mA GFI BREAKER

BREAKER No.	AMPS	POLE	CIRCUIT NAME	FEEDER C	WIRE	GRD	CKT. LOAD DEMAND FACTOR	WATTS	LOAD/PHASE (VA) ØA	ØB	ØC	CKT. LOAD WATTS	DEMAND FACTOR	FEEDER GRD	WIRE	C	CIRCUIT NAME	BREAKER POLE	AMPS	No.
1	20	1	LCPA-1	¾"	#12	#12	1.00	1,840	2,850			1,010	1.00	#12	#12	¾"	LCPA-2	1	20	2
3	20	1	LCPA-3	¾"	#12	#12	1.00	1,835		3,155		1,320	1.00	#12	#12	¾"	LCPA-4	1	20	4
5	20	1	EXTERIOR RECPT	¾"	#12	#12	1.00	900			2,400	1,500	1.00	#12	#12	¾"	PRESSURE WASHER	2	20	6
7	20	2	HEAT TAPE*	¾"	#12	#12	1.00	1,000	2,500			1,500	1.00	–	#12	–	–	–	–	8
9	–	–	–	–	#12	–	1.00	1,000		2,380		1,380	1.00	#12	#12	¾"	LCPA-5	1	20	10
11	20	2	HEAT TAPE*	¾"	#12	#12	1.00	1,000			2,500	1,500	1.00	#12	#12	¾"	WH-1	1	20	12
13	–	–	–	–	#12	–	1.00	1,000	1,180			180	1.00	#12	#12	¾"	CONVENIENCE RECPT	1	20	14
15	20		SPARE				1.00			2,000		2,000	1.00	#10	#10	¾"	WELDER	2	30	16
17	20		SPARE				1.00				2,000	2,000	1.00	–	#10	–	–	–	–	18
19	20		SPARE				1.00		2,000			2,000	1.00	#10	#10	¾"	WELDER	2	30	20
21	20	1	SHOP LTG	¾"	#12	#12	1.25	880		2,880		2,000	1.00	–	#10	–	–	–	–	22
23	20	1	SHOP LTG	¾"	#12	#12	1.25	880			2,200	1,320	1.25	#12	#12	¾"	MECHANICAL BAY LTG	1	20	24
25	20	1	SHOP LTG	¾"	#12	#12	1.25	880	1,240			360	1.00	#12	#12	¾"	EAST MEZZANINE RECPT	1	20	26
27	20	1	TELEPHONE TERM. BRD.	¾"	#12	#12	1.00	1,000		3,900		2,900	1.00	#10	#8	¾"	HOIST	3	40	28
29	40	3	MOBILE LIFT	¾"	#8	#10	1.00	2,900			5,800	2,900	1.00	–	#8	–	–	–	–	30
31	–	–	–	–	#8	–	1.00	2,900	5,800			2,900	1.00	–	#8	–	–	–	–	32
33	–	–	–	–	#8	–	1.00	2,900		4,400		1,500	1.00	#12	#12	¾"	HEATERS	1	20	34
35			SPACE				1.00				1,500	1,500	1.00	#12	#12	¾"	HEATERS	1	20	36
37	200	3	PANEL "LA"	1½"	3/0	#6	1.00	16,781	20,181			3,400	1.00	#6	#2	1¼"	PANEL "S"	3	100	38
39	–	–	–	–	3/0	–	1.00	15,435		18,835		3,400	1.00	–	#2	–	–	–	–	40
41	–	–	–	–	3/0	–	1.00	19,124			21,524	2,400	1.00	–	#2	–	–	–	–	42

	ØA	ØB	ØC	TOTALS
CONNECTED LOAD (VA)	35,751	37,550	37,924	111,225
CONNECTED LOAD (A)				309
DEMAND FACTOR ADJUSTMENTS (VA)	220	220	550	990
TOTAL LOAD (VA)	35,971	37,770	38,474	112,215
TOTAL LOAD (A)				311
PHASE BALANCE	32%	34%	34%	

NOTES :
1. ALL INSULATION ON CONDUCTORS TO BE THHN UNLESS NOTED OTHERWISE. INSULATION ON ALL UNDERGROUND EXTERIOR CONDUCTORS SHALL BE THHW. INSULATION ON ALL UNDERGROUND EXTERIOR CONDUCTORS SHALL BE THHW.
2. LOAD DEMANDS CALCULATED AS PER SECTIONS 210 & 220 OF THE NATIONAL ELECTRICAL CODE.
3. PANEL COVER SHALL BE FIELD MARKED FOR FLASH PROTECTION WITH A PERMANENT LABEL AS REQUIRED BY THE NATIONAL ELECTRICAL CODE SECTION 110. LABEL SHALL READ AS FOLLOWS: "DANGER: POTENTIAL ARC FLASH HAZARD"
4. ABBREVIATIONS: CO-CONVENIENCE OUTLET, RR-RESTROOM, (N)ORTH, (S)OUTH, (E)AST (W)EST

PANEL SCHEDULE "LC"

VOLTAGE: 208 Y/ 120 VOLTS — MOUNTING: SURFACE — ENCLOSURE: NEMA 1 — PHASE: 3 — WIRE: 4
BUS RATING (AMPS): 100 — MAIN CIRCUIT BREAKER: 100 — MINIMUM EQUIPMENT RATING: 22,000 AMPS (RMS-SYM) — REMARKS:

BREAKER No.	AMPS	POLE	CIRCUIT NAME	FEEDER C	WIRE	GRD	CKT. LOAD DEMAND FACTOR	WATTS	LOAD/PHASE (VA) ØA	ØB	ØC	CKT. LOAD WATTS	DEMAND FACTOR	FEEDER GRD	WIRE	C	CIRCUIT NAME	BREAKER POLE	AMPS	No.
1	20	1	NORTH DOOR 1	¾"	#12	#12	1.00	1,000	2,000			1,000	1.00	#12	#12	¾"	NORTH DOOR 7	1	20	2
3	20	1	NORTH DOOR 2	¾"	#12	#12	1.00	1,000		2,000		1,000	1.00	#12	#12	¾"	SOUTH DOOR 1	1	20	4
5	20	1	NORTH DOOR 3	¾"	#12	#12	1.00	1,000			2,000	1,000	1.00	#12	#12	¾"	SOUTH DOOR 2	1	20	6
7	20	1	NORTH DOOR 4	¾"	#12	#12	1.00	1,000	2,000			1,000	1.00	#12	#12	¾"	SOUTH DOOR 3	1	20	8
9	20	1	NORTH DOOR 5	¾"	#12	#12	1.00	1,000		2,000		1,000	1.00	#12	#12	¾"	SOUTH DOOR 4	1	20	10
11	20	1	NORTH DOOR 6	¾"	#12	#12	1.00	1,000			2,000	1,000	1.00	#12	#12	¾"	SOUTH DOOR 5	1	20	12
13	20	1	F-1	¾"	#12	#12	1.00	864	2,185			1,321	1.00	#12	#12	¾"	EC-1	3	20	14
15	20	1	F-2	¾"	#12	#12	1.00	528		1,849		1,321	1.00	–	#12	–	–	–	–	16
17	20	1	F-3	¾"	#12	#12	1.00	1,176			2,497	1,321	1.00	–	#12	–	–	–	–	18
19	20	3	EC-1	¾"	#12	#12	1.00	1,321	2,434			1,113	1.00	#12	#12	¾"	CU-2	2	20	20
21	–	–	–	–	#12	–	1.00	1,321		2,434		1,113	1.00	–	#12	–	–	–	–	22
23	–	–	–	–	#12	–	1.00	1,321			3,453	2,132	1.00	#10	#10	¾"	CU-3	2	30	24
25	20	1	P-1	¾"	#12	#12	1.00	100	2,232			2,132	1.00	–	#10	–	–	–	–	26
27	20	1	EC-2	¾"	#12	#12	1.00	1,176		1,824		648	1.00	#12	#12	¾"	UH-1	1	20	28
29	20	1	P-1	¾"	#12	#12	1.00	100			748	648	1.00	#12	#12	¾"	UH-1	1	20	30
31	20	2	LCP-6	¾"	#12	#12	1.00	1,163	2,219			1,056	1.00	#12	#12	¾"	ELECTRIC GATE	3	20	32
33	20	1	FACP	¾"	#12	#12	1.00	1,000		2,056		1,056	1.00	–	#12	–	–	–	–	34
35			SPACE				1.00				1,056	1,056	1.00	–	#12	–	–	–	–	36
37			SPACE				1.00		0				1.00				SPACE			38
39			SPACE				1.00			0			1.00				SPACE			40
41			SPACE				1.00				0		1.00				SPACE			42

	ØA	ØB	ØC	TOTALS
CONNECTED LOAD (VA)	8,619	8,283	9,950	26,852
CONNECTED LOAD (A)				75
DEMAND FACTOR ADJUSTMENTS (VA)	0	0	0	0
TOTAL LOAD (VA)	8,619	8,283	9,950	26,852
TOTAL LOAD (A)				75
PHASE BALANCE	32%	31%	37%	

NOTES :
1. ALL INSULATION ON CONDUCTORS TO BE THHN UNLESS NOTED OTHERWISE. INSULATION ON ALL UNDERGROUND EXTERIOR CONDUCTORS SHALL BE THHW. INSULATION ON ALL UNDERGROUND EXTERIOR CONDUCTORS SHALL BE THHW.
2. LOAD DEMANDS CALCULATED AS PER SECTIONS 210 & 220 OF THE NATIONAL ELECTRICAL CODE.
3. PANEL COVER SHALL BE FIELD MARKED FOR FLASH PROTECTION WITH A PERMANENT LABEL AS REQUIRED BY THE NATIONAL ELECTRICAL CODE SECTION 110. LABEL SHALL READ AS FOLLOWS: "DANGER: POTENTIAL ARC FLASH HAZARD"
4. ABBREVIATIONS: CO-CONVENIENCE OUTLET, RR-RESTROOM, (N)ORTH, (S)OUTH, (E)AST (W)EST

SARGENT DESIGN GROUP
ARCHITECTURE | PLANNING
2390 WEST HIGHWAY 56
SUITE 4A
CEDAR CITY, UTAH 84720
OFFICE: (435) 586-8510
FAX: (435) 586-4873

REGISTERED PROFESSIONAL ENGINEER
187104
STEVEN R. GRIFFITHS
STATE OF UTAH

THE GREAT SEAL OF THE STATE OF UTAH 1896
State of Utah–Department of Administrative Services
DIVISION OF FACILITIES CONSTRUCTION AND MANAGEMENT
4110 State Office Building/Salt Lake City, Utah 84114/538-3018

Project:
UDOT HURRICANE MAINTENANCE FACILITY

Sheet Title:
ELEC. PANEL SCHEDULES

Revisions:

ROYAL ENGINEERING
ELECTRICAL MECHANICAL
2335 SOUTH STATE SUITE 225 PROVO, UTAH 84606
PHONE: 801.375.2228 FAX: 801.375.2676

COPYRIGHT© JOB# J08327
THESE DOCUMENTS ARE INSTRUMENTS OF PROFESSIONAL SERVICE AND THE INFORMATION CONTAINED HEREIN IS INCOMPLETE UNLESS IN CONJUNCTION WITH ROYAL ENGINEERING'S INTERPRETATIONS, DECISIONS, OBSERVATIONS AND ADMINISTRATIONS. USE OR REPRODUCTION OF THESE DOCUMENTS IN WHOLE OR IN PART WITHOUT ROYAL ENGINEERING'S CONSENT IS IN VIOLATION OF COMMON LAW, COPYRIGHTS, STATUTORY AND OTHER RESERVED RIGHTS. REFER TO ACT 17 U.S.C. PAR. 511 (1991). WHICH PREEMPTS STATE AND LOCAL PUBLIC RECORD ACTS. REFER TO ACT 17 U.S.C. PAR. 301 (1991).

PROJECT NUMBER: J08327
DATE: FEB. 2009
DRAWN BY: DAP
CHECKED BY: SRG
APPROVED BY: SRG

SHEET NUMBER: E2.4

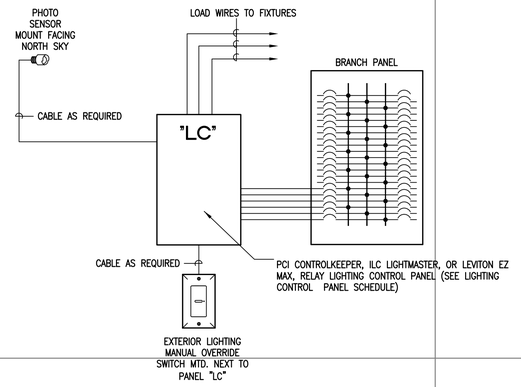

LIGHTING CONTROL PANEL WIRING DIAGRAM

SCALE: NONE

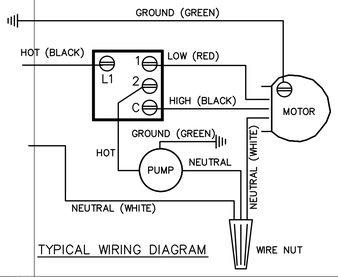

TYPICAL WIRING DIAGRAM

6-POSITION WALL SWITCH		
SWITCH POSITION	BLOWER OPERATION	PUMP OPERATION
OFF	OFF	OFF
PUMP ONLY	OFF	ON
HIGH COOL	ON–HIGH SPEED	ON
LOW COOL	ON–LOW SPEED	ON
HIGH VENT	ON–HIGH SPEED	OFF
LOW VENT	ON–LOW SPEED	OFF

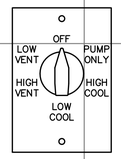

2 SPEED

NOTES:

1– MECHANICAL CONTRACTOR SHALL PROVIDE 6–POSITION WALL SWITCH AS INDICATED. (120 VOLT)

2– ELECTRICAL CONTRACTOR SHALL PROVIDE AND INSTALL ALL LINE VOLTAGE CIRCUIT CONDUIT, BACK–BOX, AND MAKE CONNECTION.

3– DESIGN STANDARD: DIAL MANUFACTURING 7100 SERIES. (RSK–2) VERIFY PLATE COLOR WITH ARCHITECTURAL PLANS.

4– EVAPORATIVE COOLER WITH PADS, 2–SPEED 120 VOLT COOLER MOTOR & 120 VOLT WATER PUMP BY MECHANICAL CONTRACTOR.

LINE VOLTAGE EVAPORATIVE COOLER CONTROL SWITCH

SCALE: NONE

LIGHT FIXTURE SCHEDULE

FIXTURE NUMBER	FIXTURE MANUFACTURER	FIXTURE CATALOG #	LAMPS TYPE	LAMPS QTY.	FIXTURE VOLTS	FIXTURE WATTS	FIXTURE MOUNTING	REMARKS
F1	DAY–BRITE	T5F254HO–PPS–120	54WT5HO	4	120	220	SURFACE / CHAIN	PROVIDE WITH ELECTRONIC BALLAST
F2	METALUX	2FCB–332A–120V EB81	F32T8 SP35	3	120	99	RECESSED	PROVIDE WITH ELECTRONIC BALLAST
F2A	METALUX	2FCB–232A–120V EB81	F32T8 SP35	1	120	66	RECESSED	PROVIDE WITH ELECTRONIC BALLAST
F3	METALUX	WS232A–120V EB81	F32T8 SP35	2	120	66	SURFACE	PROVIDE WITH ELECTRONIC BALLAST
F4	SURELITES	CC7NCSD–SM	C/W UNIT	2	120	32	SURFACE WALL	
F5	LUMARK	MPWL250–120V	250W MH	1	120	275	SURFACE	
F6	McGRAW EDISON	AMF–Y–400MP–MT–75–BK	400W MH	1	120	460	SURFACE WALL	
F7	LUMARK	MPWL70–120V–VS/WL	70W MH	1	120	85	SURFACE WALL	
F8	LUMARK	MPCL250–120V	250W MH	1	120	275	SURFACE	
F9	LITHONIA METALUX DAYBRITE LIGHTOLIER LSI COLUMBIA	C 2 96T8 GEB SS–296T8–EB81 T259–1/2EB SW8S2159SL–SO S–259–SSO10–UE CS8–259–EU	F96T8/SP35 ECO	2	120	132	SURFACE/CHAIN	PROVIDE WITH ELECTRONIC BALLAST
F10	LITHONIA LA. LIGHTING DAYBRITE METALUX LSI COLUMBIA	WS 2 32 A12 GEB BAN100–2–4RH–PA–2EBI CD 232W–1/2–EB BE–232–EB81 BR–232–SSO10–UE SA4–232–EU	F32T8/SP35 ECO	2	120	66	SURFACE WALL	PROVIDE WITH ELECTRONIC BALLAST
F11	GARDCO	DF5–ST–NSP–50MH–120–CBA	50W MH	1	120	72	GROUND	PROVIDE WITH ELECTRONIC BALLAST
EM	BODINE LITHONIA IOTA EXITRONIX DUAL–LITE	B50 PS1100 I–80 XEB–14 UFO–6W	----	----	120	----	----	EMERGENCY BALLAST (1)–4 FOOT T8 LAMP, 1100 LUMENS MIN. VERIFY COMPATIBILITY BEFORE ORDERING
EX	LITHONIA MCPHILBEN LIGHTOLIER DUAL–LITE EXITRONIX	LQM S W 3 G EL N CXOL–3–GW LDS–N–U–G–W CV3GEW GVEX–U–BP–WB–WH	INCLUDED	2	120	1.5	UNIVERSAL	NICKEL/CADMIUM BATTERY SINGLE FACE EXIT

NOTES:
ALL LUMINAIRES THAT UTILIZE DOUBLE ENDED FLUORESCENT LAMPS AND CONTAIN BALLASTS THAT CAN BE SERVICED IN PLACE SHALL HAVE A DISCONNECTING MEANS AS REQUIRED BY 2005 NEC 410.73(G) OR 2008 NEC 410.130 (G)

NOTES:

1– CONTROLS FOR THE EVAPORATIVE COOLER SHALL BE CAPABLE OF FAN ONLY OPERATION, PUMP ONLY OPERATION, AND SIMULTANEOUS FAN AND PUMP OPERATION.

2– ELECTRICAL CONTRACTOR SHALL PROVIDE AND INSTALL THE STARTER, DISCONNECTS, A NEMA 5–15 RECEPTACLE INSIDE THE COOLER CABINET FOR PUMP CONNECTION, CIRCUIT CONDUIT FOR BOTH THE COOLER MOTOR AND THE 120 VOLT PUMP. (VERIFY PHASE AND HORSEPOWER OF COOLER MOTOR WITH MECHANICAL SUBMITTALS)

3– ELECTRICAL CONTRACTOR SHALL PROVIDE AND INSTALL TWO 1–POLE SWITCHES FOR EVAPORATIVE COOLER CONTROL. ONE SWITCH TO CONTROL COOLER MOTOR (VIA STARTER). ONE SWITCH (WITH PILOT LIGHT) TO CONTROL COOLER PUMP RECEPTACLE INSIDE OF COOLER CABINET. FINAL SWITCH LOCATION TO BE APPROVED BY OWNER'S REPRESENTATIVE.

4– ELECTRICAL CONTRACTOR SHALL PROVIDE PERMANENT LABELS ON SWITCH COVER PLATE AS INDICATED.

5– EVAPORATIVE COOLER WITH PADS, 1–SPEED 208 VOLT 3–PHASE OR 208 VOLT 1–PHASE COOLER MOTOR & 120 VOLT WATER PUMP BY MECHANICAL CONTRACTOR.

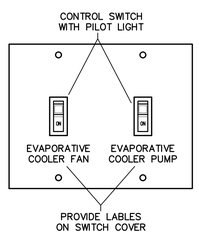

EVAPORATIVE COOLER CONTROL

SCALE: NONE

LIGHTING CONTROL PANEL

NAME: LCP
LOCATION: WEST MEZZANINE
MOUNTING: SURFACE/FLOOR/CEILING

RELAY NUMBER	RELAY AMP	RELAY POLE	SUPPLY	AREA SERVED	LV SWITCH*	AUTOMATION SCHEDULE A	B	C	D	E
1	20	1	LB–1	SOUTH EXTERIOR FLOOD LTG	X					
2	20	1	LB–2	SOUTH EXTERIOR LTG	X				X	
3	20	1	LB–3	EAST EXTERIOR LTG	X				X	
4	20	1	LB–4	NORTH EXTERIOR LTG	X				X	
5	20	1	LB–10	NORTH EXTERIOR FLOOD LTG	X					
6	20	1	LC–31	FLAG POLE LTG				X		
7	20	1								
9	20	1								
10	20	1								

Automation Schedules:
(A) Auto ON / Auto OFF
(B) Manual ON / Auto OFF
(C) Dusk – Dawn
(D) Dusk – Auto OFF
(E) Daylight Sensor

* SEE PLAN FOR LOCATION OF LOW VOLTAGE SWITCH
NOTE: ELECTRICAL CONTRACTOR TO PROVIDE SPACE IN THIS PANEL FOR FUTURE EXPANSION

SARGENT DESIGN GROUP
ARCHITECTURE | PLANNING
2390 WEST HIGHWAY 56
SUITE 4A
CEDAR CITY, UTAH 84720
OFFICE: (435) 586-8510
FAX: (435) 586-4873

REGISTERED PROFESSIONAL ENGINEER
187104
STEVEN R. GRIFFITHS
STATE OF UTAH

State of Utah–Department of Administrative Services
DIVISION OF FACILITIES CONSTRUCTION AND MANAGEMENT
4110 State Office Building/Salt Lake City, Utah 84114/538–3018

Project: UDOT HURRICANE MAINTENANCE FACILITY

Sheet Title: ELEC. PANEL SCHEDULES

Revisions:

ROYAL ENGINEERING
ELECTRICAL
2335 SOUTH STATE SUITE 225
PHONE: 801.375.2228
MECHANICAL
PROVO, UTAH 84606
FAX: 801.375.2676

COPYRIGHT©
JOB# J08327
THESE DOCUMENTS ARE INSTRUMENTS OF PROFESSIONAL SERVICE AND THE INFORMATION CONTAINED HEREIN IS INCOMPLETE UNLESS IN CONJUNCTION WITH ROYAL ENGINEERING'S INTERPRETATIONS. COPYRIGHTS, STATUTORY AND OTHER RESERVED RIGHTS, REFER TO ACT 17 U.S.C. PAR. 511 (1991), WHICH PREEMPTS STATE AND LOCAL PUBLIC RECORD ACTS. REFER TO ACT 17 U.S.C. PAR. 301 (1991).

PROJECT NUMBER: J08327
DATE: FEB. 2009
DRAWN BY: DAP
CHECKED BY: SRG
APPROVED BY: SRG

SHEET NUMBER: E2.5
Sheet 10 of 10