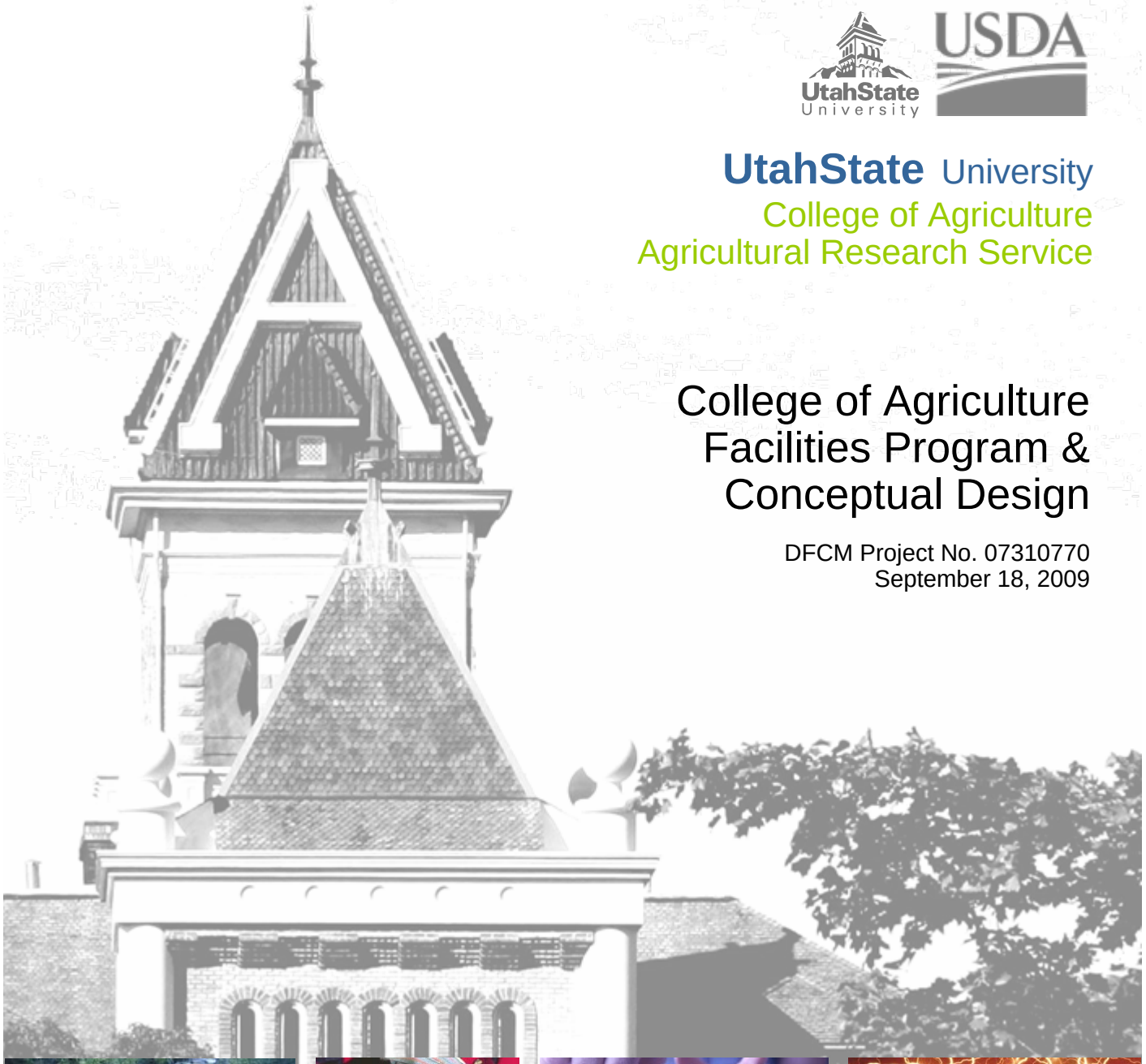

UtahState University
College of Agriculture
Agricultural Research Service

College of Agriculture Facilities Program & Conceptual Design

DFCM Project No. 07310770
September 18, 2009

UtahState University
College of Agriculture
Agricultural Research Service
Logan, Utah

BLANK

APPROVALS

July 2009

APPROVAL SIGNATURES

Stan L. Albrecht, President	Date
Darrell E. Hart, Director of Facilities	Date
Noelle Cockett, Vice President/Dean	Date
Dave McKay, DFCM Project Manager	Date

BLANK

ACKNOWLEDGEMENTS

CORE TEAM

The programming team would like to thank the Utah State University College of Agriculture Executive Committee and Working Group for their valuable input and direction, without which it would not have been possible to prepare this facilities program. These groups made themselves available throughout the process as often as needed to provide answers and feedback. They were essential to making the difficult decisions necessary to prepare a realistic and relevant planning document that will be the basis for the design of the new College of Agriculture building.

These groups included the following members:

Executive Committee

Stan L. Albrecht	President
Darrell E. Hart	Associate Vice President for Facilities
Noelle Cockett	Vice President/Dean
Tom C. Peterson	COA Project Manager
John Fitch	USU Project Manager
David McKay	DFCM Project Coordinator
Ben Barrett	Director, Planning, Design & Construction
Stanley Kane	Director, Operations

Working Group

Scott Boyer	Director of Marketing
David Anderson	UBC Director
DeeVon Bailey	Associate VP Research
Don E. Albrecht	WRDC Director
Phil Rasmussen	Western SARE Director
Kevin Kesler	4H Director
Ken White	ADVS Director
Teryl Roper	PSC Department Head
Paul Jakus	APEC Department Head
Richard Culter	Math & Stats Department Head
Mary Hubbard	Dean, College of Science
Tom Graham	Planning, Design & Construction
Jordy Guth	Planning, Design & Construction

COMPREHENSIVE LIST OF PARTICIPANTS

Programming this new facility required input from a broad range of individuals in addition to the members of the two groups listed above. Such involvement ranged from attending meetings to working with programmers one-on-one to describe and review specific space requirements. The following list includes those who made a critical contribution to the programming and conceptual design process.

College of Agriculture, Centers and Division Staff

Miriam Cajal	Former Assistant to the Vice President
Tammy Firth	Assistant to the Vice President
Mike Whitesides	Marketing Manager
Dora Brunson	IRC Program Coordinator
Betsy Newman	WRDC Writer/Editor/Designer
Kristy Jensen	Western SARE Contracts Mgr.
Debra Jones	4H Youth Specialists
Jean Edwards	ADVS Sr. Staff Assistant
Keren Williams	PSC Sr. Staff Assistant
John Carmen	PSC, Lab Committee
Jenny Norton	PSC, Lab Committee
Lee Rickords	ADVS, Lab Committee
Chris Davies	ADVS, Lab Committee
Ben Session	ADVS, Lab Committee
Tracy Hatfield	ADVS, Lab Committee
Jung Su Eun	ADVS, Lab Committee
Francis Bhushan	ADVS, Lab Committee

Programming and Conceptual Design Team

Jim Nielson	Managing Principal, CRSA
Kathy Wheadon	Principal Programmer, CRSA
Kevin DeKold	Project Manager, CRSA
Michael Smyser	Managing Principal, HDR/CUH2A
Steve Smith	Project Manager, HDR/CUH2A
Brian Kowalchuk	Principal Designer, HDR/CUH2A
Brian Norkus	Senior Project Designer, HDR/CUH2A
Jim Wermes	Mechanical Consultant, HDR/CUH2A
Kelly Hartshorn	Electrical Consultant, HDR/CUH2A
Martin Farach	Sr. Laboratory Consultant, HDR/CUH2A
Lance Anderson	Civil Engineer, Cache Landmark
Ronald Dunn	Structural Engineer, Dunn Associates
Jim Gramoll	Construction Consultant, Gramoll Const.
J.R. Anzer	Cost Estimator, Parametrix

TABLE OF CONTENTS – **COLLEGE OF AGRICULTURE PROGRAM**

Approval Signatures
Acknowledgements
Table of Contents

Section 1 INTRODUCTION
- 1.1 Project Scope and Background
- 1.2 Program Objectives and Guidelines
- 1.3 Client Team
  - . Division of Facilities Design and Construction
  - . Utah State University
  - . College of Agriculture
  - . Agricultural Research Service

Section 2 EXECUTIVE SUMMARY
- 2.1 Introduction
- 2.2 Project Philosophy
- 2.3 Program Summary
- 2.4 Project Implementation: Cost and Schedule
- 2.5 Sustainability

Section 3 MISSION STATEMENT
- 3.1 USU Mission Statement
- 3.2 College of Agriculture
- 3.3 Programming & Design Team Charge

Section 4 BUILDING
- 4.1 Existing Facilities Analysis
- 4.2 USU and Peer Institution Lessons
  - 4.2.1 The University of Missouri
  - 4.2.2 Washington State University
  - 4.2.3 University of Idaho
- 4.3 College of Agriculture Building Concept
  - 4.3.1 The Vision Session
  - 4.3.2 Planning Diagram
  - 4.3.3 Building Diagram
- 4.4 Building Design
  - 4.4.1 Ground Floor Concept
  - 4.4.2 The Laboratory Floor
  - 4.4.3 Block & Stack
  - 4.4.4 West Elevation
  - 4.4.5 South Elevation
  - 4.4.6 East Elevation
  - 4.4.7 North Elevation
- 4.5 Growth and Expansion
  - 4.5.1 COA Future Expansion
  - 4.5.2 Block & Stack Section

Section 5 SPACE SUMMARY
5.1 Summary
5.2 Room and Space Listing
5.3 Building Organization

Section 6 INDIVIDUAL SPACE OUTLINES
6.1 Executive Administration
. Office of the Vice President/Dean
. Cooperative Extension Administration
. COA – Ag Experiment Station/Advising
. Development
. Business Manager
. Administration Support Area
6.2 Marketing
. Staff
. Marketing Support Area
6.3 Centers
. Utah Botanical Center
. International Research Programs
. Western Rural Development Center
. Western SARE
. 4H
. Manufacturing Extension Program
. Center Support Area
6.4 Animal Dairy and Veterinary Sciences (ADVS)
. Administration
. Faculty
. Technical Staff/Students
. Research Laboratories
. Research Lab Support
. Support Areas
6.5 Plants, Soils and Climate (PSC)
. Administration
. Faculty
. Technical Staff/Students
. Research Laboratories
. Research Lab Support
. Class Labs
. Support Areas
6.6 Applied Economics
. Administration
. Faculty
. Students
. Support Area
6.7 Math & Statistics, College of Science
. Administration
. Faculty
. Students

. Support Space
. Advising
6.8 University Resources
. Academic Classrooms
6.9 Amenity Space
6.10 Building Support

Section 7 FURNISHINGS, FIXTURES AND EQUIPMENT

Section 8 COST ESTIMATE - COA
8.1 Construction Cost
8.2 Total Project Cost
8.3 Detailed Programmatic Construction Cost Estimate
8.4 Summary of Programmatic Construction Cost Estimate

BLANK

SECTION 1

INTRODUCTION

1.1 Project Scope and Background

In September 2008 the Division of Facilities Construction and Management solicited for programming and early design services from six firms holding Indefinite Delivery Indefinite Quantity (IDIQ) contracts with the Agricultural Research Services (ARS). The project included both the College of Agriculture, a State funded project, and an ARS project which would be USDA/Federally funded.

The State of Utah and the USDA Agricultural Research Services had funding in place to allow the programming and early conceptual design of these facilities on a prominent site at the east end of the historic quad on the Utah State University campus. The programming and early conceptual design was to be contracted in two separate contracts for each project. Full design and construction funding was not yet realized. Based on the funding schedule and the performance of the selected programming/early design team, the State of Utah reserved the right to conduct separate design selections and choose appropriate delivery methods for the State funded portion of the work. The State of Utah may also authorize the selected programming firm to perform a portion or all of the design/construction work.

The State funded College of Agriculture (COA) intended to combine or integrate with the federally funded ARS to the mutual benefit of the two agencies. The relationship of the functions represented by these two funding sources is a central issue in this solicitation for programming and early design services. To potentially allow the selection of one programming/early design firm for both elements, the Division of Facilities Construction and Management (DFCM) has chosen to accept the first stage of the Federal selection.

The COA element was considered at this early stage to be comprised primarily of teaching/academic facilities such as lecture halls, classrooms, study, office, and learning resource spaces.

The ARS element was considered at this early stage to be comprised of laboratories, offices, and related research support spaces adjacent to the COA building. The greenhouse and headhouse elements will be located on a yet to be determined site on the north end of the university campus.

1.2 Project Objectives and Guidelines

The new College of Agriculture (COA) Agricultural Research Service (ARS) Building will become a notable milestone in the Utah State University's (USU) ambitious and forward-thinking program to create enhanced agricultural education and research programs. By consolidating the currently dispersed curriculum, the project will become a wholly idealized representation of the COA program and a catalyst for the University's continued physical growth. The new facility will fulfill highly specific program needs and

be woven into the fabric of the campus to enhance the University's image and academic identity.

The COA ARS Building will also provide a model for proper and efficient stewardship of natural resources through its employing tenets of sustainability in the design and construction process as well as in energy-efficient operations. The programming and conceptual design team's nationally recognized Sustainable Solutions Group participated throughout the design and construction process to assure that sustainability is at the forefront of the design.

The programming team understood the importance placed on achieving high-performance facilities for learning through assuring program functionality, technical performance, holistic design synergies and integration into the physical context. Through a collaborative approach, the team developed a clear understanding of the University's vision and employed a proven rigorous process to achieve a well-defined document. A multi-disciplinary organizational structure, which included DFCM, COA, College Science - Math & Stats, Centers, and other advisors, provided a platform from which the team reconciled the functional with the aesthetic, through the integration of architecture and engineering within the financial parameters of the project.

The programming and conceptual design team welcomes the opportunity to collaborate with the University and ARS to provide a facility which meets the University's goals and fosters synergistic opportunities among educators, students, researchers and the greater science community.

Building Program: Two Distinct Users

Challenges of co-locating dual programs for the USU School of Agriculture and ARS in a cohesive facility also present opportunities for designing shared spaces to foster connectivity. The challenge is to maintain separation where required while also providing space that encourages congregation among students, faculty and researchers.

Collaborative research, support and community building areas will be woven into the design along natural paths of circulation, and equipped with amenities to encourage their use. It will be critical to find design solutions that tie the programs together, while still satisfying each user's specific and discrete requirements.

A highly-collaborative multi-disciplinary facility provides opportunities for serendipitous interaction; interaction that can lead to unforeseen synergies for the University and ARS, as well as added value to the State and Federal Government through savings derived from less redundancy. The design will maintain separation where required, while providing shared amenities and a coherent and appropriate image and academic identity.

1.3 Client Team

The DFCM served as the program director for the project. The College of Agriculture programming team utilized the DFCM to establish overall project budget, both hard and

soft costs, which were checked by the programming team's cost estimators. In addition, the program director has acted as a sounding board, voice of reason, and devil's advocate to make sure the delivered project is just, accurate and sustainable.

Utah State University was represented during the programming process by the Facilities organization which brought to bear the resources representing planning, design and construction. In addition, staff representing operations and maintenance participated in all aspects of the programming process. Facilities were represented on a day-to-day basis by a project manager, and at a administrative level by the Associate Vice President, Director of Operations and Director of Planning, Design and Construction.

The College of Agriculture was represented during the programming and conceptual design process by the Vice President/Dean, COA Project Manager and department heads. The College has brought to bear all resources to provide the programming team access to faculty, staff and students. In addition, they have facilitated access to representatives for Centers and the College of Science, Math & Stats. As needed during the programming process, smaller working groups were established to work on distinct or unique elements of the program.

At the production of the final program document the participation of the Agriculture Research Service staff has been limited to interaction at a series of on-campus workshops. The programming and conceptual design team is looking forward to further interaction and coordination between user groups as the ARS programming work kicks off in August 2009.

BLANK

SECTION 2

EXECUTIVE SUMMARY

2.1 Introduction

In early 2009, the programming/concept design team began a study of USU's College of Agriculture (COA). This study included site evaluation, space needs analysis, and recommended concepts for design. Significant time was spent planning a building that would fit into the campus, respond to its prominent site, and respond to the needs for a new, connected Agriculture Research Service (ARS) building.

The programming team, comprised of HDR/CUH2A in association with Cooper Roberts Simonsen Associates (CRSA), met regularly with members of the COA Executive Committee, Working Group, individual planning groups, faculty, staff, students, and University stakeholders. Through the spring and early summer or 2009 the project team:

- Conducted a series of meetings and workshops to address the vision and goals for the project;
- Quantified and mapped existing plans displaying the current uses and organization of the COA;
- Identified proposed space needed through an extensive series of programming interviews and summarized the results in program diagrams;
- Explored and evaluated options for re-organizing COA activities from both a functional and cost standpoint;
- Reviewed the systems and infrastructure of the existing facilities and identified design strategies;
- Outlined the connection to campus circulation and systems;
- Reviewed the current status of technology and outlined a plan for future technology utilization;
- Incorporated reviews and recommendations by expert lab planning consultants;
- Developed cost models to determine priorities and meet the overall project budget;
- Created room data sheets to document specific space requirements; Developed preliminary conceptual designs, blocking/stacking models, and building massing models;
- Addressed issues related to future planning; and
- Reviewed and finalized recommended concept plans.

A key topic addressed during the planning, programming and early conceptual design work was to recommend spaces that could be housed within the limits of the proposed site plan and proposed campus circulation routes. Issues of departmental growth, the needs of new program components, and future planning had to be addressed within the available area through defining planning priorities and creating planning efficiencies.

2.2 Project Philosophy

The vision for the new College of Agriculture Building is to recognize the role of the new building as a hub for both student, and research and community outreach activity on the USU campus. The COA will serve as a home for a community of learners and researchers, a collaborative and vibrant environment for faculty, staff, and members of the greater community, and as an outreach mechanism for the College and University. With this vision in mind, the following purposes and goals were established:

Planning

- Create a visually open facility through which users may easily navigate.
- Utilize the main level as the food service, classroom and social hub from which one easily finds other services and activities.
- Arrange departments in a way that facilitates synergy among functions.
- Maximize gathering, lounge and study spaces within the footprint to support collaboration.
- Locate service points and gather most needed functions in an intuitive pattern.
- Eliminate barriers (real and perceived) to disabled persons.
- Enhance users' connection to outdoor spaces, including the quad.

Building Environments

- Respond to the desire for a food service component.
- Provide group meeting and study rooms and lounges.
- Consolidate advising services into a single, accessible service point.
- Create spaces to exhibit research posters.
- Craft collaborative neighborhoods for faculty, while providing accessibility to students.
- Provide natural light and upgraded finishes as the budget allows.
- Create collaborative environments for staff, students and users.

Technology

- Provide locations for technology-rich learning environments.
- Create hubs of wireless connectivity for users on the go.
- Ensure that the facility is as hospitable to technology as can be afforded.
- Anticipate future technological development and plan for the flexibility to accommodate that development.

Teaching Environments

- Provide for flexible use rooms to support a collaborative teaching style.
- Support the development of A/V systems and their evolution.
- Respond to needs of acoustical control.

Laboratory Environments

- Plan for a flexible and adaptable lab environments.
- Support specialized lab support requirements.
- Centralize services to reduce first costs.
- Craft visual connections between labs and collaboration zones.

Infrastructure

- Create a flexible facility that responds to current and future functional needs.
- Provide the infrastructure necessary to service technology-rich environments.
- Address fire protection and life safety needs.
- Address structural and seismic issues.
- Address accessibility (ADA) requirements.
- Take advantage of opportunities to increase comfort and energy conservation opportunities.

2.3 Program Summary

Mission

The new building is intended to assist the College of Agriculture fulfill its basic mission. This new home will become an essential part of the campus quad and a welcoming gateway to the campus core. As such, it must facilitate research, collaboration and community building.

The COA Building will be an attractive, modern building that will utilize a visually appealing and functional structure, linked to the ARS Building. A core of public services offered on the first level of the COA will play a vital role in creating a stimulating new image for USU. Services will include a Computer Lab and Group Study Rooms, a Café, University-scheduled classrooms and a 114-seat lecture hall. The ground-floor open access zone will feature lounge and café seating. The building will unfold with services on a total of four, possibly five, levels offering access to Departments, COA Administration, Centers' Suite and the Research Core.

Context

The new COA Building should fit within the context of the USU main campus, specifically as a new prominent element on the historic central campus quad. It should be a good neighbor to the buildings and campus around it, yet remain distinctive. A suitable site has been selected on the former Library site, due west of the Business Building and directly across the quad from Old Main. Landscaping should seek to reduce water usage but blend with adjacent campus landscape forms.

Energy, Environment and Resource Conservation

A key planning idea in the programming and concept design process has been sustainability. The intent is to incorporate high-performance design what will provide maintenance efficiency and low operation costs. By doing so, the OA will provide USU with an opportunity not only to benefit from a high-performance building, but also to promote and showcase the benefits of sustainable design.

Building

The COA Building will provide USU the opportunity to enhance their outreach mission. The COA continues the ongoing outreach initiative by planning for spaces that represent:

- Socially rich, blending teaching, outreach and research with the social atmosphere of well-respected collegiate research facilities;
- Diverse technological resources with integrated research areas; and
- Varied types of learning environments that support the multiple needs of undergraduate and graduate students.

To facilitate the role of the COA as a leader in teaching and research, the building must have well-conceived floor plans. Section 5 of this document outlines the building's functional relationship and addresses the planning goals to create efficient, flexible and engaging environments.

Space Summary List

Section 5 of this document outlines the types and space needs of each room/area within the COA building. The COA building will occupy an estimated 110,000 gross square feet on four levels. The resulting net assignable area will be approximately 65,000 square feet (60% of the total). Consequently, approximately 45,000 square feet (40%) are attributed to non-assignable areas—public circulation, such as public lobbies and lounges, mechanical and electrical shafts and rooms, restrooms, wall thicknesses, and other non-assignable uses.

The program contains ten primary divisions as identified in Section 5 "Space Summary," consisting of:

Division	Net Area
Executive Administration	4,902 NSF
Marketing	1,556 NSF
Centers (4H, UBC, WSARE, WRDC, IRP)	4,622 NSF
Animal, Dairy and Veterinary Sciences (ADVS)	
Non Lab	4,190 NSF
Lab	8,220 NSF
Plant, Soils and Climate (PSC)	
Non Lab	4,958 NSF
Lab	12,750 NSF
Applied Economics	3,038 NSF
Math and Statistics	
Non Lab	3,474 NSF
Lab	3,474 NSF
University Resources	5,944 NSF
Amenity Spaces	5,260 NSF
Building Support	1,908 NSF
TOTAL	64,269 NSF

The program for the COA Building includes laboratory research space for existing departments. Planning for future laboratory and classroom growth has been accommodated by agreement. In the future, when Department of Math and Statistics moves to a new College of Science facility, vacated open space within the lab area will be built out as COA labs and the area within the administrative area will be built out as

future classrooms and offices. This planning strategy has allowed the COA very limited built-in unoccupied growth space. A small percentage of COA lab spaces will be housed within the ARS building and are listed in section 5.8 of the Space Summary. While these cohort labs are still being discussed, it is understood that the ARS building will accommodate at least nine labs and supporting office and lab support space primarily for faculty from PSC.

Distributed throughout the building are amenity spaces, including areas that support collaborative interaction and group study, lounge areas and a quiet study room.

In order to respond to uncertainties of our current construction market conditions and the project schedule in relationship to ARS funding, the space summary presents a series of program solutions to align the budget by adjusting square footages in the most flexible program areas.

Section 5.2 contains a summary of the net area assigned to each of these preliminary programmatic divisions. Section 5.2 contains Individual Space Outlines—detailed summaries of the specific requirements of each individual space or room. These individual space outlines, or room data sheets and graphics, represent the heart of the program. Finally, Section 5.3 gives a verbal description of the primary spaces and outlines the proposed basic building organization.

At the end of programming there were two anomalies to the space summary that were the result of minor room modifications to two Class Lab (5.6.1 and 5.6.2) and the deletion of lab support spaces (5.6.3 – Griding/Drying/Prep and 5.6.4 Classroom Supply/Chemical Storage) equal 37 nsf. The total space listed in the Executive Summary and Cost Estimate is thus 37 square feet less than indicated in the Space Summary within Section 5. This minor amount was considered to be low enough to be covered by project contingency.

Additional Criteria

The remaining sections of the program document include descriptions of concepts and criteria that will be important to the continued development of the concept design. These include specific requirements and standards related to building and life-safety codes, structural, civil, mechanical, electrical, technology, lab planning, and acoustical requirements.

The program also includes a discussion of possible design and construction phasing, a detailed project schedule, and a conceptual cost estimate along with appendices containing recommended zoning and stacking diagrams, an overview of the programming process, a detailed code analysis, the USU Master Plan, and preliminary visualization graphics used while developing the program.

2.4 Project Implementation: Cost and Schedule

Draft Design and Construction Schedule

Two schedules are included in the program. One is based on a design/bid/build delivery method and one is based upon a CM/GC delivery method

Funding for the COA Building was established in the 2008 Legislative session with the approval of a bond of $43,118,000 scheduled to be released to coincide with federal funding of the USDA ARS component. Selection of the A/E team is scheduled to be completed by fall 2009. Using a Design/Bid/Build delivery, the design and construction process would then be completed in October 2012 (see attached Design/Bid/Build schedule).

Design and construction schedules could be accelerated from this schedule through fast-track delivery methods, using multiple bid packages. This fast-tracking can be accomplished with either design-build or CM/GC methods (see attached CM/GC schedule). Getting contractors, subcontractors, and suppliers under contract sooner and completing the project faster would lessen overall escalation costs. To provide meaningful benefit in terms of the university's academic calendar, the project would have to be available for occupancy by the beginning of fall semester 2012, which begins in August.

Cost Summary

The program includes a programmatic estimate of construction costs and total project costs, summarized as follows:

Construction Costs:

	Estimated Cost
Total Project Cost	**$ 43,118,000**
Soft Cost Allowance (20% of Total Construction Budget)	$ 8,623,600
Site Development Cost	$ 3,147,762
College of Agriculture Building Budget Target	$ 31,346,638
College of Agriculture Building Estimated Cost (110,000 GSF)	**$ 34,080,745**
Over / (Under) Budget	$ 2,734,107

The program includes detailed backup for this programmatic estimate and strategies for budget alignment. Please see Section 8.

Act ID	Description	Orig Dur	Early Start	Early Finish
College of Agriculture				
Design				
1000	Design	450	01SEP09	27NOV10
1010	Review/Approval	45	28NOV10	13JAN11
1020	Advertise/Bid	45	14JAN11	27FEB11
Construction				
1030	Construction	545	28FEB11	29AUG12
1070	Substantial Completion	0		29AUG12
Closeout				
1040	Commissioning	30	30AUG12	28SEP12
1050	LEED Building Flush	20	29SEP12	18OCT12
1060	Occupancy	0		18OCT12

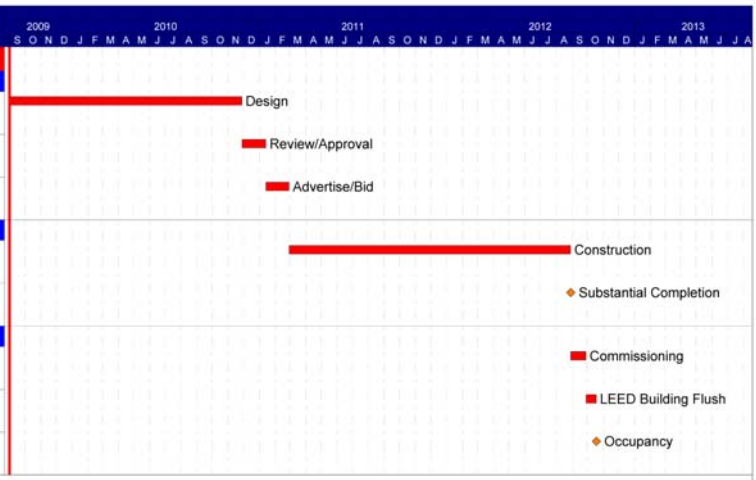

Start date	01SEP09
Finish date	18OCT12
Data date	01SEP09
Run date	26MAY09
Page number	1A

© Primavera Systems, Inc.

Utah State University
College of Agriculture
Design/Bid/Build

Early bar
Progress bar
Critical bar
Start milestone point
Finish milestone point

Act ID	Description	Orig Dur	Early Start	Early Finish
College of Agriculture				
Design				
1070	Design	450	01SEP09	27NOV10
Bid Package 1				
1090	BP-1 Design Complete (Sitework & Structure)	0		23AUG10 *
1100	BP-1 Review/Approval/Bid	60	24AUG10	22OCT10
1110	Sitework/Footings	120	23OCT10	21FEB11
Bid Package 2				
1080	BP-2 Review/Approval/Bid	90	28NOV10	27FEB11
1120	Construction	490	28FEB11	05JUL12
1160	Substanital Completion	0		05JUL12
Closeout				
1130	Commissioning	30	06JUL12	04AUG12
1140	LEED Building Flush	20	05AUG12	24AUG12
1150	Occupancy	0		24AUG12

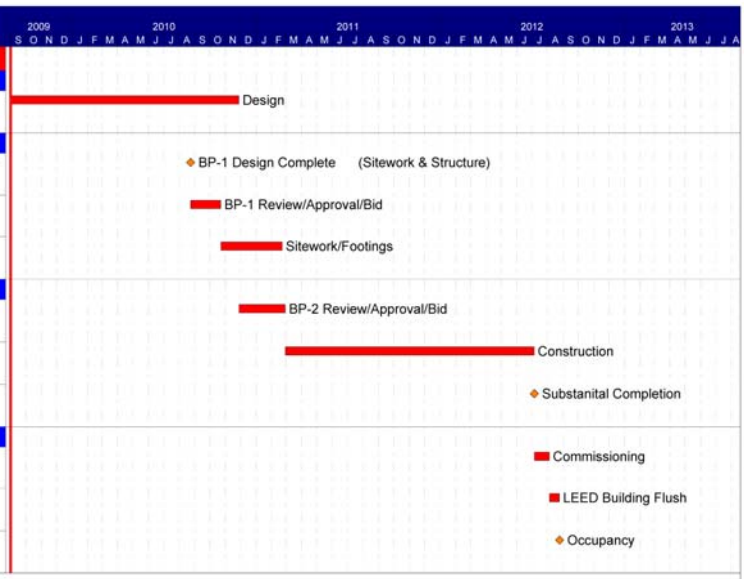

Start date	01SEP09
Finish date	24AUG12
Data date	01SEP09
Run date	26MAY09
Page number	1A

© Primavera Systems, Inc.

Utah State University
College of Agriculture
CM/GC

Early bar
Progress bar
Critical bar
Start milestone point
Finish milestone point

2.5 Sustainability

As of May 2009, the Utah State Division of Facilities Design and Construction and the Utah State Building Board have approved of the use of USGBC LEED® Silver Certification as the new criteria for design and construction of most State-owned buildings. For the College of Agriculture building, planning sustainability strategies during programming allows the team to make key decisions and set a course. As LEED® Silver is a broad classification, Section 3 of the COA/ARS Context, Systems and Sustainability volume highlights USU goals, existing conditions and local factors, and defines a recommended strategy to achieve LEED® Silver.

BLANK

SECTION 3

MISSION STATEMENT

3.1 USU Mission Statement

The mission of Utah State University is to be one of the nation's premier student-centered land-grant and space-grant universities by fostering the principle that academics come first; by cultivating diversity of thought and culture; and by serving the public through learning, discovery, and engagement.

Utah State University fulfills a unique role in the Utah System of Higher Education as the state's land-grant and space-grant university. The land-grant designation makes Utah State responsible for programs in agriculture, business, education, engineering, natural resources, sciences, and the traditional core of liberal learning: humanities, arts, and social sciences. The University gives particular emphasis to programs involving the interaction of land, people, and the environment.

As a space-grant institution, Utah State University plays a preeminent role in the development of the sciences and engineering associated with research and teaching about outer space. This includes the mission of the Space Dynamics Laboratory and its related components on the Innovation Campus.

Taken together, these designations as a land-grant and space-grant university also mean that Utah State University has a leading role in economic development of the state and the region. These goals are realized through the effective transfer of research from the laboratory to commercial enterprises. To that end, Utah State University has an aggressive position in the identification of intellectual property, the commercialization of new technologies, and the development of research programs that will be of benefit to the state. USU also brings government, business, and education together on its Innovation Campus with the goal of stimulating economic development.

3.2 College of Agriculture

Utah State Agricultural College was established by an act of the Utah Territorial Legislature in March of 1888. The legislature selected Logan, in Cache County as the site. Jeremiah Sanborn from Missouri served as the first Director of the Experiment Station. Sanborn's duties expanded to include the presidency of the college. As Utah's land-grant institution, the college assumed the responsibilities outlined in the 1862 Morrill Land Grant Act; agriculture and mechanical arts comprised the original curriculum.

The school grew steadily and went through numerous name and mission changes to become know in 1957 as Utah State University (USU). As state- and federal-sponsored programs developed, USU assumed a primary position throughout the rural Intermountain West. Due to commitments to the experiment station, extension division, and outreach programs, the college attracted thousands of students from rural Utah and

surrounding states. The "AC," as it was labeled, literally fulfilled its mission by claiming "the state is our campus."

While agriculture involves the daily production, processing, and distribution of products that sustain our lives, the College of Agriculture is focused on the science of life. Earth conservation, biotechnology, disease cures, and community are now at the center of College interests and successes. The College considers agriculture the science of life, and their programs are the proof.

Utah State's agricultural curriculum teaches students how to link knowledge of soil, water, plants, and animals to human health and safety with hands-on experience and a close connection to research faculty. Their students are learning to clone animals, create new snack foods, deal in futures markets, understand the technology that ensures a safe and productive food supply, and how to become the leaders in the political process. All facets of the curriculum are sensitive to enhancing the critical balance among environmental well-being, social justice, community development and economic viability.

The new College of Agriculture building must embody the values of a diverse research, teaching and extension based program. It must craft spaces to foster collaboration, in depth research and study, and the social aspects of an academic institution.

Memorial Integration

A large bronze memorial sculpture will find a new home within the new College of Agriculture. It was crafted to honor the eight students and one instructor from the College of Agriculture whose lives ended suddenly in a tragic accident in fall 2005. The space it occupies most respond to the contemplative nature of visitor and family.

The sculpture is composed of black granite, bronze and steel in nine panels, 3-feet-by-3-feet, representing an agricultural interest of each of the nine men who passed away. Two half-circles, above and below the panels, include the men's names. At the lower left of the installation is a bronze rubbing element that allows visitors to make a paper rubbing as a personal memento of the memorial.

3.3 Programming and Design Team Charge

The design team will be charged with the responsibility of working with the DFCM and USU to design a facility that supports and enables the critical mission of USU and the College of Agriculture as outlined above. This program document describes and analyzes the components that must be included and the basic requirements that must be met, in order to satisfy this responsibility.

The formalized programming and conceptual design process allowed the team to better understand the design intent of the project through a course of proposals and reviews. The conceptual floor plans contained within the program were an effective starting point for design, and will continue to be informed by input from the program and direct client interaction. While the conceptual design has been approved by the Executive Committee as approved, it is intended to inform the design team as the design develops. Any significant comments for the client team have been noted below and shall be referred to a Design Directive. The hope is that these comments will bring to the design team's attention areas that are critical to the client's mission, outreach, research and instruction efforts, and space utilization.

Conceptual Floor Plan Design Directive
First Floor:
A. Lab Classrooms (5.6.1, 5.6.2)
    1. Aggregate square footage on plan inadequate
        i. Aggregate program space = 2,400sf
        ii. Schematic plan space ± 1,600sf
    2. Access concern
        i. Require easy access for bringing in and removing dirty plant and soils samples. Do not want dirty samples moving through primary corridors.
    3. Ownership clarification
        i. Lab classrooms are dedicated to COA, not university resources. Should locate with exterior access or adjacent to loading area with direct access. These labs have long hours, access to daylighting may be preferred.
B. Centers (3.0)
    1. Configuration
        i. Centers are composed of a number of smaller program areas in an enclosed suite of space. Required adjacencies are reflected on affinity diagrams, changes to which must be approved by Center users and Executive Committee.
        ii. A single gatekeeper receptionist is planned of the suite, but must also serve as a support staff to many Centers. An autonomous receptionist sitting outside of a Center's suite is a concern to Center directors. Placing this individual where they may end up serving as the building information services is not desired and should be reviewed with Center staff.
C. Classrooms (8.1)
    1. Configuration
        i. 8.1.1 is now a 114-seat classroom. Assessable entry to both from and back of room is mandated.

ii. 8.1.2 Increase to (2) 34-seat classrooms
iii. 8.1.2 Deleted – Future growth space in the areas occupied day one by Math and Stats must accommodate the configuration of classrooms noted in the space summary.
(2) 46-seat classrooms.
iv. 8.1.4 has been increased to a 56-Station Computer Lab (1800 sf)
v. Plan for adequate queuing areas within corridors and at entrances to all classrooms, class labs and computer lab.

D. Cafe (9.1.4, 9.1.5, 9.1.6)
1. Configuration
i. Address concerned about queuing for café service counter adjacent to primary building entrance.
ii. Interested in placing café at perimeter of building to heighten visibility.

E. Loading Dock (10.1.1)
1. Configuration
i. Confirm 10.1.2 is adjacent to loading dock.
ii. Overhead doors at loading dock are not required by program. Accommodate oversize double doors.
iii. There are support spaces adjacent to exterior loading dock pad which are being confirmed for size (cylinder storage, chemical storage).

Second Floor:

A. ADVS Lab Bays
1. Individual bay square footage on plan appears inadequate
i. Program space per bay = 300sf
ii. Schematic plan space per bay ± 230sf
2. Total number of lab bays appears excessive
i. Total ADVS lab bays in program = 16
ii. Total lab bays on schematic plan ± 21
3. Lab bay to support space ratio appears inadequate
i. Program ratio = 60% lab, 40% support
ii. Schematic plan ratio ± 70% lab, 30% support
4. Lab bay to support space adjacency concern
i. Lab bays on schematic plan North wall appear short on support spaces
5. Access concern
i. Service elevator adjacent to future lab rather than current lab. Waste autoclave in basement – direct conflict for daily access through Math/Stats office area. May want to flip Math/Stats and ADVS locations on floor to avoid conflict.

B. ADVS Offices / techs
1. Total closed offices appears inadequate
i. Programmed private offices = 16
ii. Schematic plan private office ± 14
2. No front door / reception for ADVS group
i. Consider location of ADVS administrative suite. The suite will be the first point of service off of stair or elevator.

ii. Administrative Suite must be an enclosed area and include Dept Head, Staff Assistant, open work stations, Copy/Mail/Work Room, and Conference Room.

3. Security for open workstations
   i. No door indicated to secure office workstations from the rest of the floor. Staff Assistants (4.1.4) who are on floor with faculty must have the security of a suite environment or spaces should be changed from low systems furniture to full height glazed partitions.
   ii. Secure post doc/grad/tech workstations (4.3.1-4.3.3) from the rest of the floor.
   iii. Department level client communicated that open workstations on an open circulation system is their last choice. They confirmed layout of grad student suites (adjacent to labs) must contain noise, create collaborative work area, and secure equipment.
4. Number & size for post doc/grad/tech workstations appears inadequate
   i. Programmed workstations = 20@ 25sf, 10@ 48sf, 10@ 60sf
   ii. Schematic plan workstations = 34 @ ± 25sf
5. Acoustic concern
   i. Little or no acoustic separation between workstations and atrium
6. Copy/Mail/Workrooms referred to a “Pantry/Meeting Room”
   i. Please do not refer to these spaces as Pantry. They are not a public resource, for faculty and staff only.
   ii. Please do not combine meeting space with department Copy/Mail/Workroom.
   iii. Department conference rooms must be within Department Administrative Suites.

C. Future Lab Space
1. Future lab footprint size and configuration may be inadequate
   i. Programmed lab growth of 8 to 12 bays and support = ± 4,500sf
   ii. Schematic plan footprint ± 7 bays and support using typical layout

Third Floor:

A. PSC Lab Bays
1. Individual bay square footage on plan appears inadequate
   i. Program space per bay = 300sf
   ii. Schematic plan space per bay ± 230sf
2. Total number of lab bays appears excessive
   i. Total PSC lab bays in program = 23
   ii. Total lab bays on schematic plan ± 27
3. Lab bay to support space adjacency concern
   i. Lab bays on schematic plan North wall appear short on support spaces

B. PSC Offices / techs
1. Total closed offices appears inadequate
   i. Programmed private offices = 21
   ii. Schematic plan private office ± 14
2. No front door / reception for PSC group
   i. Consider location of PSC Administrative Suite. Suite should be the first point of service off of stair/elevator.

ii. Administrative Suite must be an enclosed area and include Dept Head, Staff Assistant, open work stations, Copy/Mail/Work Room, and Conference Room.

3. Security for open workstations
   ii. Secure post doc/grad/tech workstations (4.3.1-4.3.3) from the rest of the floor.
   iii. Department level client communicated that open workstations on an open circulation system is their last choice. They confirmed layout of grad student suites (adjacent to labs) must contain noise, create collaborative work area, and secure equipment.
4. Acoustic concern
   i. Little or no acoustic separation between workstations and atrium
5. Copy/Mail/Workrooms
   i. Please do not refer to these spaces as Pantry. They are not a public resource for faculty and staff only.
   ii. Departmental Conference Room (5.7.2) must be enclosed space within Departmental Suite with staff access from corridor outside Administrative Suite. Department Copy/Mail/Workroom (5.7.1) cannot be combined with Conference Room or serve as an anteroom.
   iii. Department conference rooms must be within Department Administrative Suites.

General Notes:

A. Security
   1. Access to each Department's Suite must be unique.
   2. Access to Department staff offices, Department Suites, Graduate Study Rooms in the office bar must have a secure access point.
   3. Departments must not have to enter their Suite through another Department Suite.

B. Office Bar
   1. Width of bar currently limits grouping spaces that were planned as grouped. In addition, future plans calling for classroom space must be accommodated within the width of the wing.

C. Atrium
   1. Atrium preferred to extend to roof for entire N/S dimension to maximize daylighting.

D. Site Development
   1. Site needs to be extended on SE to include replacement of parking lot which will be a construction access point.
   2. Extend site to NE corner of ARS and main sidewalk.

E. Historic Tanner Family Furniture
   1. The College of Agriculture owns three pieces of historical furniture, a large conference table and two side boards. These pieces of furniture must be housed within a space, preferably a conference room in the new College of Agriculture. This furniture is currently housed in Tom Peterson's office in the Family Life Building on campus. As the furniture has significant historic value, a secure location is preferred. Planning for moving this oversized furniture must be planned for.

4.1 Existing Facility Analysis

The College of Agriculture is currently housed in multiple facilities on and off the main campus of Utah State University. Departments, divisions, and centers housed in the following buildings were surveyed for this program:

Agricultural Science Building (AgSci), which houses COA Administration, Extension, Agriculture Experiment Station Administration, Marketing, Utah Botanical Center Administration, 4H, Western SARE, the Animal, Dairy & Veterinary Sciences Department, and the Plant, Soils and Climate Department

Center for Integrated BioSystems (CIB), which houses research components from the Animal, Dairy & Veterinary Sciences Department and the Plant, Soils and Climate Department

Skaggs Lab, which houses a research component of the Animal, Dairy & Veterinary Sciences Department

Business Building, which houses the Applied Economics Department

Lund Hall, which houses the Math & Statistics Department

Armory Building, which houses International Research Programs

The Mitchell house, which houses the Western Rural Development Program.

Three additional buildings/spaces (Veterinary Sciences, Dr. Columbe's lab/office space within Geology, and LARC) were documented, although the new College of Agriculture Building will not be housing these programs in the near future. Thus, they are not included in the Space Summary. In total over 139,000 square feet of space was assessed, 78 users interviews conducted, and over 1,000 photographs taken. A compiled history of the programming process will be made available to DFCM at program acceptance.

As the College of Agriculture, along with associated groups, will make the transition to a new building as early as fall 2011. As campus planning must make accommodation for this move, but as well for road construction, sidewalk closures, utility connections and future building demolition activities this section is meant to highlight spaces that are currently occupied by the COA and associated groups, the amount of space to be vacated and the potential for continued use or re-use by another group of currently occupied space. This perspective capture's the intent of the COA, among others, but does not include input from others outside the programming group, i.e. there may be others already engaged in planning the use of future "freed" space without the knowledge of the programming team.

Currently the groups who were interviewed as potential future College of Agriculture building occupants are currently housed within thirteen different buildings. The single biggest current use falls within the Agriculture Sciences (AGSCI) building where approximately 39,530 nsf area being occupied. Users include the Office of the Vice President, marketing, development, Cooperative Extension, 4-H, Utah Botanical Center,

Western SARE, the Department of Animal Dairy and Veterinary Sciences, the Department of Plants, Soils and Climate, among others. All of the uses of this facility will either be housed within the new COA building or renovated space within Skaggs Lab on the north end of campus. It is understood that ADSCI will be demolished once vacated.

A number of other facilities may or will be vacated by COA and/or occupants of associated programs. They include:

- 39,530 nsf will be vacated in AGSCI by the COA and others,
- 660 nsf of space may be vacated in the GNSHED by International Research Programs,
- 11,900 nsf in CIB/BTEC will not be vacated by COA ADVS and COA PSC researchers, labs and lab support space, but is planned to be backfilled by COA,
- 1,350 nsf in BUS will be vacated by Applied Economics,
- 935 nsf in the Mitchell House by the Western Rural Development Center,
- 1,890 nsf in SKAGGS will be vacated by COA ADVS researchers, labs and lab, support space, but is planned to be back filled by the COA soils prep and analytical lab,
- 5,280 nsf in LUND will be vacated by the COS Department of Math and Statistics,
- 220 nsf in EC may be vacated by Manufacturing Extension Partnership,
- 1,443 nsf in MS may be vacated by International Research Programs.

Four facilities were looked at in depth, but current COA programs will remain in these buildings:

- 3,029 nsf to remain in ANSC (COA ADVS faculty, staff, labs, and lab support),
- 11,926 nsf to remain in VSB (COA ADVS faculty, staff, labs, lab support and classrooms),
- 130 nsf to remain in RGH (COA greenhouse manager),
- 930 nsf to remain in JQL (occupied by Utah Climate Center).

The College of Agriculture is comprised of a diverse set of faculty, staff and students. The organization engages the public, academia, student organizations, research institutions, media outlets, and colleagues on and off campus. The review of currently used spaces included discussions regarding each building's functional utilization, social organization, and service characteristics. While discussions were based on spaces the client currently utilized, each discussion soon evolved into a planning process centered on organizational structure, desires for outreach and collaboration, and variables such as space size, function, and affinity to others. These forward-thinking concepts were tested and later incorporated into early planning graphics, room data sheets and affinity diagrams.

From programming investigations, three functional issues emerged that were concerns common to all the user groups, and are reviewed below.

Circulation: Existing Buildings

The majority of buildings reviewed seem to provide a negative experience for the users within a central circulation route. Many buildings‘ internal and external circulation systems include straight, but long, uninterrupted hallways; limited lounge space; and very poor wayfinding tools; making most of them difficult to navigate and unwelcome places for lingering. Diligent planning will be important regarding these primary circulation features:

- Distinct primary vs. secondary entrances;
- Internal circulation routes that are user-friendly in width and length;
- Logical and consistent locations of help points (departmental and suite administrative staff);
- Wayfinding that clearly indicates where vertical circulation is located;
- Consistent signage in a legible format, placed in primary paths of travel; and
- Daylight penetrating deep into the building

Service: Existing Buildings

Users had made a concerted effort to utilize every square foot within each existing facility. In order to make space available to the primary functions of housing faculty and staff and running research operations, building users made do without spaces dedicated to public functions by using their limited staff and cramped buildings to fill multiple functions. In many cases, offices and open work areas are inefficient in size and configuration. Conference rooms are in short supply. Storage is cramped, with limited space in administrative office suites to run efficient operations. Some of the best-used space include suites with open offices, central support spaces, and access to larger meeting/conference spaces.

Primary services include administrative office and conference room space, teaching classrooms and labs, research labs and lab support spaces, offices, storage, and building support space. Buildings lack amenity space such as joint-use resources like computer labs, lounges, group study rooms; hoteling areas for temporary or visiting staff; food service points; areas to display art/research/college history; or queuing space adjacent to centralized academic classrooms. In most cases research labs and lab support spaces are well used, but the spaces and their infrastructure are dated, inefficiently configured, and cloistered.

Planning efficient and effective space has required that attention be paid to the issues of right-sizing space, allowing for "Day 1" affinities to be supported, planning for flexibility, using consistent sizes and configurations of space to allow for swapping multiple users/uses, considering efficient building systems to support spaces that may significantly change utility and occupant loads over time, and viewing amenities as a resource, rather than as a lost opportunity for more raw square footage.

Function: Existing Buildings

Existing building design and configuration to date has emphasized the efficient housing of personnel, classroom space, and the use of existing inflexible research laboratories rather than user-centered areas. In order to achieve cohesive circulation routes, primary service points, such as administrative and departmental offices, should have consistent locations, visual presence, and suitable signage.

Faculty, many of whom will spend several decades working on campus, are currently located in spaces that are distributed along a central corridor system. If faculty members want to appear accessible, they may leave their door ajar, turn on their office light, or use another method to indicate that they are available. In many buildings, private offices have door closers, no glazed doors, transoms or sidelights, and lack neighborhood affinity to their colleagues within their department or area of specialization. In addition, there are no joint services (administrative support staff, smaller meeting spaces, copy/coffee/team areas) within easy access. Therefore, even the most gregarious building users tend to feel a sense of isolation. Planning for the new building must include well-thought-out suites of space that support faculty interaction, an open door policy, and student access.

Laboratories and lab support spaces are either dispersed throughout a facility or centralized within a facility. The pros and cons are evident in both types of layouts. In the Agriculture Sciences, building labs and lab support spaces are distributed on each floor. There spaces are behind closed doors, and are rarely adjacent to lab techs and lab support needs. In this case, flexibility is extremely limited and collaboration discouraged. In the CIB, open lab bays and lab support spaces have no separation. Lab support is centralized into an open area in the middle of each floor, and the primary circulation route is directly through middle of the workspace. These two ends of the spectrum illustrate the compromise that the COA lab planning committee has made in finding an appropriate balance of open lab bays, accessible lab support, adjacent lab staff (graduate students, post docs, lab technicians), and locations and sizes of amenity spaces.

4.2 USU and Peer Institution Lessons

Peer institutions were visited in May 2009. The purpose of the peer visits was to review design features and programming issues relative to those unique to a COA and ARS Laboratory facility. There were two full days of visits with travel the evening before the first day, and back late the second day. The traveling group included representatives from USU Facilities, USU COA (including Dean Cockett), and the programming/concept team of CRSA and HDR/CUH2A.

4.2.1 The University of Missouri, Columbia, MO
Bond Life Sciences Building

The Bond Life Sciences Building (BLSB) was visited on the first day and MU was well represented by their emeritus professor/consultant, their facilities group, the BLSB

facility manager, a COA department associate dean, and the BLSB director. The USU team was given a power point presentation of the project's history, meetings with the different representatives, and a comprehensive tour of the facility.

The building is currently a 234,396sf, 57% efficient, and was completed in 2004. It houses half dozen different colleges and is designed to have a future ARS addition at one end. In general the building is spacious and has a medium-high level of finishes and amenities. The main amenities were a ground level café located on axis with the core campus, a full height atrium that included open stairs and sky bridges throughout, and meeting spaces/rooms that rimmed the atrium with additional views/balconies to the outside. For receiving there is a separate services building connected to the main building by an underground tunnel that enters into a basement on the back of the building, and on the front of the building the basement level transitions to a garden level with its main entrance opening onto a front lawn. The BLSB was designed with the ARS in mind, and the future connection will be seamless utilizing a glass curtain wall at the connection. Swipe cards will be utilized at all ARS building entries in which ARS personnel can travel both directions, but COA personnel will be limited to travel within the BLSB. The building had an auditorium and other spaces in its basement level, laboratories on its upper levels, a mixed use of space (including teaching labs) on its main level, and greenhouses on its penthouse level. Lab sizes were 3 bays each separated with walls with doors between left open for collaboration.

Lessons learned and observations:

- 10' x 30' lab module, including hood/desktop/coat area.
- Mostly federally funded and supplemented with significant private donations with the auditorium, atrium, atrium sculpture, and outdoor patio recognized by some of the various donors.

- Users wished they had circulated RO water throughout with purification polishers in each lab.
- Even though the building had a healthy budget, floor drains were not utilized at eye washes and showers.
- One eyewashes in lab (every 3 bays), and 2 showers in halls for every 9 bays.
- Conference rooms in heavy demand and scheduled by campus scheduling dept.
- The high profile of the building has been very successful in obtaining donations for the BLSB and other projects.
- Utilizing the basement for certain support functions such as plant growth, building facilities and freezers is important.
- Natural gas and vacuum installed in all labs.

4.2.2 Washington State University, Pullman, WA
Vogel Plant Sciences Building

The Vogel Plant Sciences Building (VPSB) was visited the morning of the second day and was hosted by the associate dean for the college of agriculture. The USU team met with the assoc dean before and after a tour of the building given by the assoc dean.

The VPSB is approximately 93,000sf, approximately 60% efficient, and was completed in 2004. It houses ARS adjacent to many different university “science” programs, and is not limited to a particular department or college. The building is not as spacious as the Bond Building, has a nicely day-lit seating area along its main floor gathering space that seemed underutilized, and had a poorly developed entry area that may turn out differently once a future addition is built. In general the finishes were medium-high quality and aesthetically very pleasing. The building had laboratories/support with some break areas on the upper levels, a mixture of teaching labs and casual meeting spaces were located on the main level, and a partial basement housing tissue culture and cold rooms in the basement. Lab sizes varied and were separated with walls with doors that had been removed for collaboration. Swipe cards are utilized to get into all upper and basement levels, and for the University they are programmed remotely by each college department with ARS having access throughout.

Lessons learned and observations;

- 10' x 26' lab module, with additional 10' x 10' support/hood/desktop/coat area.
- Eye washes and showers similar to Bond Building.
- Floor drains were not utilized at eye washes and showers.
- Window sills that act as ledges for plants and dust are not desired.
- WSU regrets not having a full basement, and newer science buildings will have bull basements.
- Walls between labs important to protect experiments and regulate experiment temperature needs.
- There were some fume hoods located within the lab (in addition to others in alcoves to the sides) that were across from low counters that became desks. It is assumed that this adjacency creates unwanted turbulence around the hoods that is not desirable.

4.2.3 University of Idaho, Moscow, ID
Agricultural Biotechnology Laboratory

The Agricultural Biotechnology Laboratory (ABL) was visited the afternoon of the second day and was hosted by a researcher for the college of agriculture and the director of university facilities. The researcher and director led the USU team on a building tour first, and then met with the director afterwards.

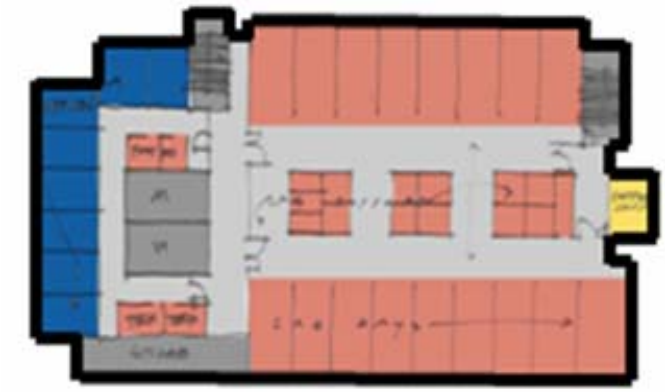

The VPSB is approximately 60,000sf, was completed in 2001. Idaho has a very small population (only 500,000 tax returns), and operations on a fraction of the budget as the other institutions visited. There were no staff to build program around, and efficiencies/ratios drove design. This building was a very good example of "stretching" project funds as far as can ever be hoped. All levels house laboratories with an associated administration area stacked at one end. There was very little (if any) wasted space in the building, and even though the ratios were not provided we would expect the efficiency to be much higher than the other institutions. In general the finishes were medium quality, and certain materials such as wheat board for public ceiling tiles were donated. Floors in public circulation spaces were sealed concrete in another effort to save funds. Labs were all "open" designed for maximum efficiency and flexibility. Support space was in the center of the building with lab on both sides.

Lessons learned and observations;

- 11' x 28' lab module.
- Funded 1/3 each, federal, state, private donations.

- Access to waste disposal is through public space and not desirable.
- Floor drains were not utilized at eye washes and showers.
- Countertops and sinks were located at the end of bays and were desirable. Counters in these locations should be capable of supporting heavier equipment.
- Hoods located within bays take up valuable space.
- Hoods desired over autoclaves for odor control.
- An attempt was made to “stick frame” certain cold rooms to save funds. Condensation/HVAC/Mold issues caused them to not be used as originally intended.
- EPA certified wood furnaces generate campus steam, and the wood fuel is obtained from lumber mills in the area.
- Low levels of lighting levels in labs with task lighting intended to supplement countertops.

4.3 College of Agriculture Building Concept

- Nature
- Connection
- Hard work
- Vibrancy + Movement
- Mentor
- Safety
- Strength
- Diversity
- Flexibility

4.3.1 The Vision Session

The Vision workshop was held on February 5, 2009. The workshop was used to establish a vision for the College of Agriculture and the Agricultural Research Service.

The Vision Session facilitators engaged the leadership team in a forum to discuss the goals and values of the collective group.

A series of image boards were chosen to convey graphically and encapsulate COA/ ARS values. The images and their inherent qualities and attributes were openly deliberated; the responses that emerged are embodied in this report.

Images	Ideas	Site & Facilities Response
	• Sustainability • Directional thinking • Connections • Forward movement • Introspective • Nature + Science • Serene • Scale pleasing to the eye	• Clear circulation and way finding • Place to explore • Use of natural light • Environmentally friendly • Engage the quad
	• Discovery • Multiple centers • Connectivity • Enthusiasm • High energy • Footsteps of great scientists • Flashes of brilliance	• Technology everywhere • Gathering places • Diversity of interaction zones (informal and formal) • Use of natural color • Accessibility of faculty offices • Proximity of collaboration areas and laboratories + classrooms

The images that were chosen evoked different ideas to different individuals but all describe the general feelings that the group wanted to convey about the new College of Agriculture building.

Images	Ideas	Site & Facilities Response
	• Hard work • Strength • Being Prepared • Working the soil • Farming • Teaching • Safety • Listening	• Branding and Display • Security between USDA and USU facilities • Visual connection between labs and collaboration zones • Open environment • "See teaching, learning, research" • Facilities as the "Beacon on the hill"
	• Continuous loop • Outreach • Mentoring • Diversity • Connection • Learning/teaching • Working together • New configuration, new possibilities	• Hierarchy of collaboration • Team areas • Apply New Ways of Learning issues in classroom and entire facility • Mentoring and Reverse mentoring opportunities

4.3.2 Planning Diagram

The diagram for the new COA Design is broken down into two massing elements that have specific relationships to the site. The first is the lab block to the north and the second is the office bar to the south.

The lab block is a 3 story structure that responds to the northern campus scale and aesthetics. The exterior materials of the the lab block will relate to the surrounding buildings in color and texture. The design will respect the existing campus fabric while transitioning to the high-tech office bar to the South.

The Office bar becomes a counterpoint to Old Main Tower while providing a new image for the College of Agriculture.

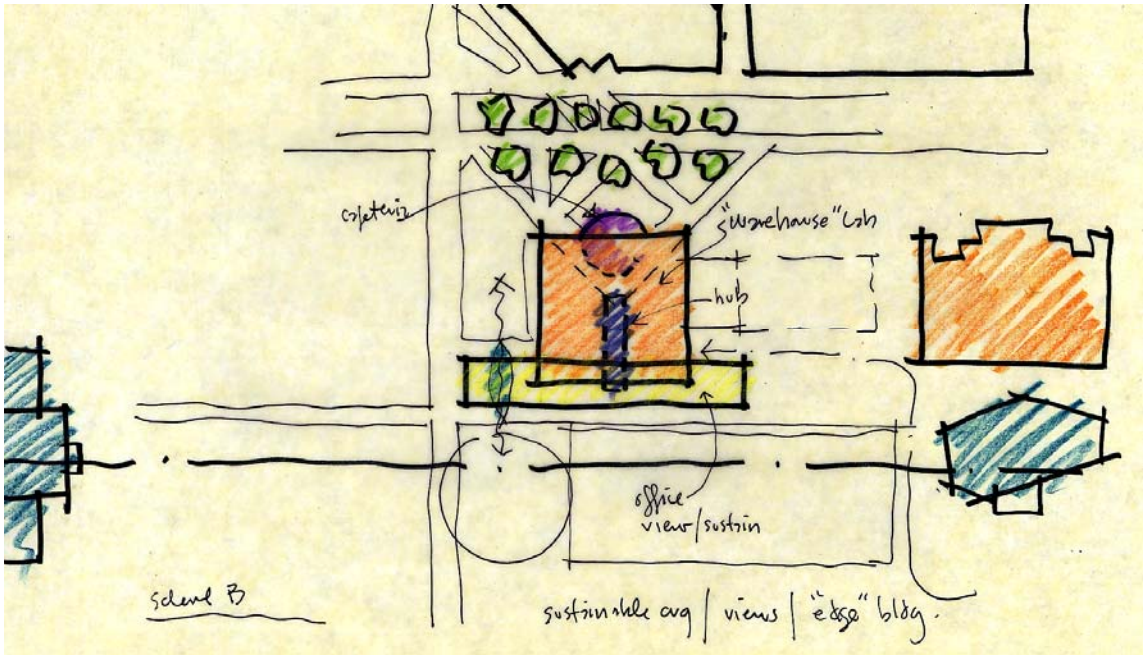

4.3.3 Building Diagram

In order to engage the quad, campus and pedestrian circulation, the building footprint is situated such that its long office bar to the south is on axis with the tower of Old Main while the north and west edges of the lab/ classroom box are parallel to the main circulation paths. The two distinct shapes creating the overall building juxtapose one another in that the long compact office bar allows for the surrounding landscape to penetrate through, while the broad box draws people in.

4.4 Building Design

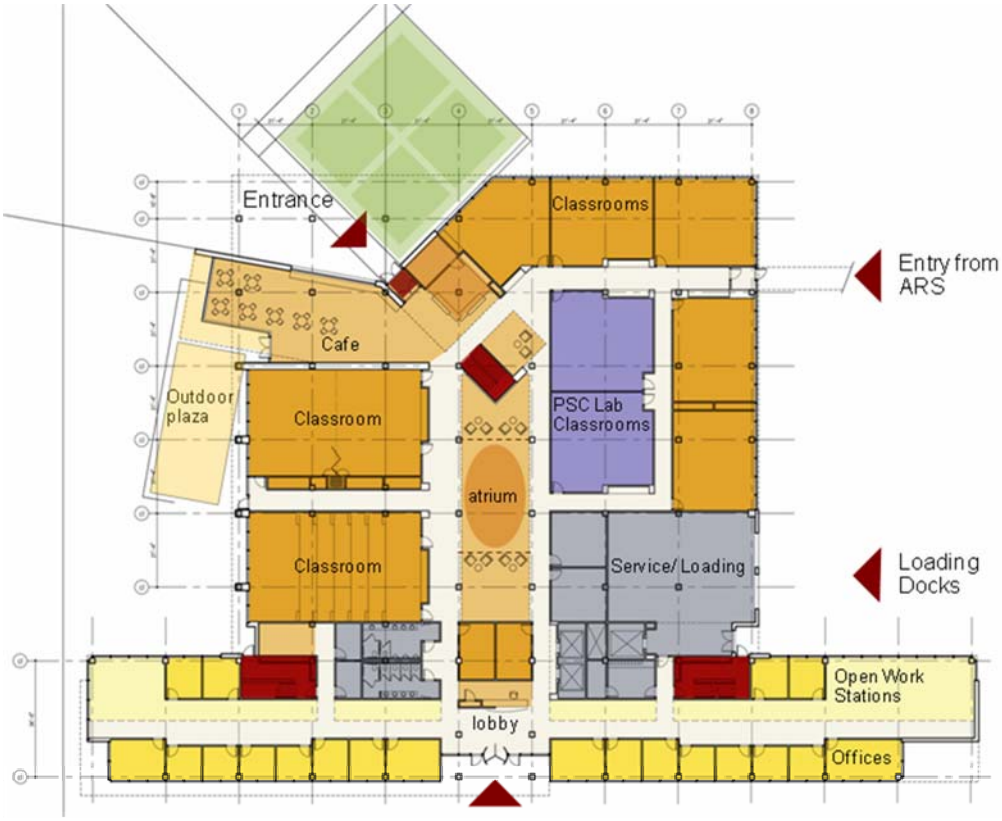

4.4.1 Ground Floor Concept

Amenities such as a café are located on the ground floor that anchors the northwest corner of the site, engaging the quad, campus and pedestrian circulation. This location provides a clear identifiable entry and communicates an inviting environment for all students approaching the building.

University Resources which are made up of multi-sized classrooms become accessible to the campus for scheduled use. The centralized atrium will provide ample breakout space during scheduled events. The atrium also acts as an identifiable icon, making this the heart of the facility.

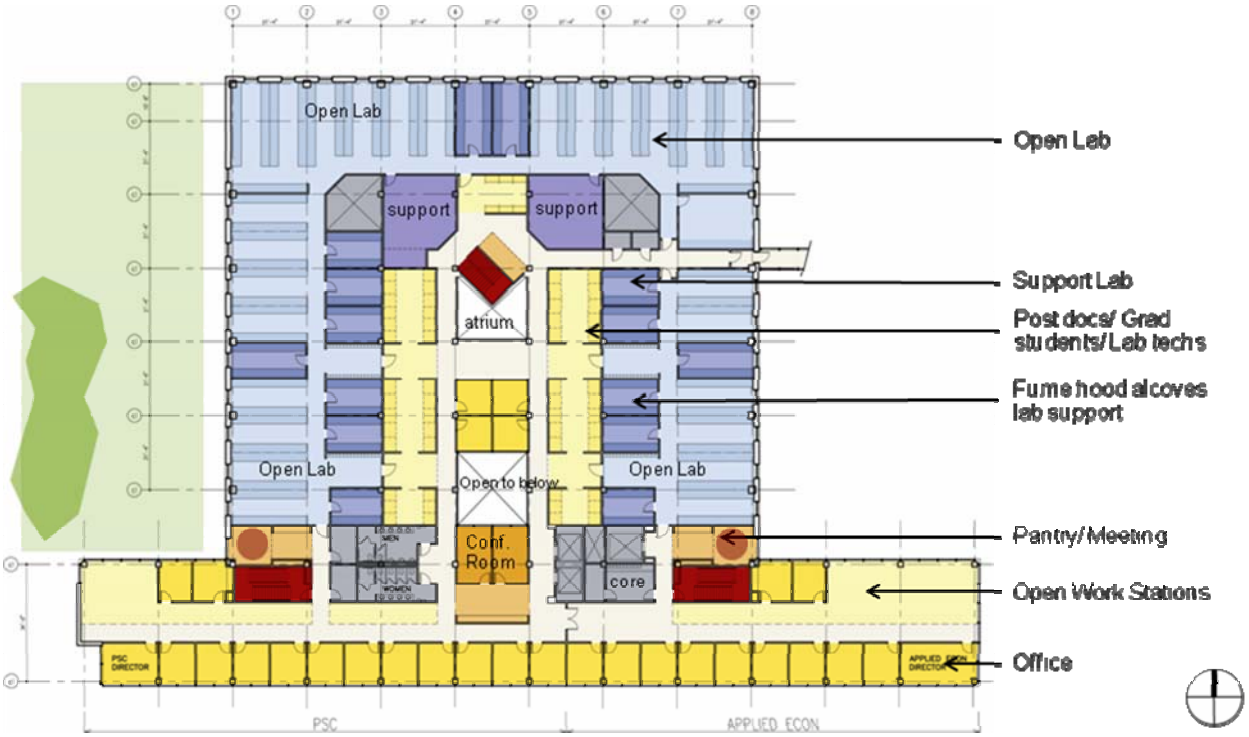

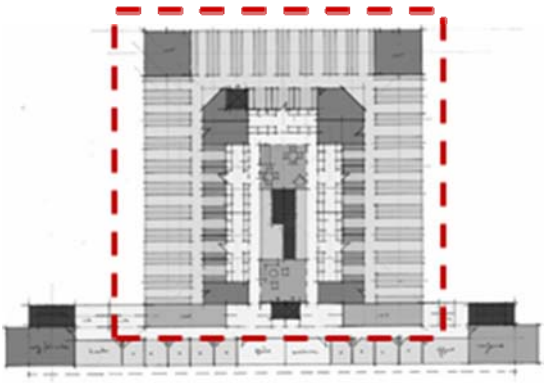

4.4.2 The Laboratory Floor

The Lab block efficiency maximizes the amount of program that can fit on a floor while minimizing the height of the structure.

Upon conclusion of the Peer Institution visits (*Refer to Section 4.2*), a great deal of attention was paid to the adjacencies of grad student workstations to lab spaces and the quantity of break and collaborative areas within the building. The diagram above suggests a layering of lab, support, and grad student workstations, all adjacent to the centralized atrium. The atrium provides not only an anchor point for above mentioned spaces but also allows for natural light to penetrate through and give the building occupants a sense of vertical layering of the structure.

4.4.3 Block & Stack

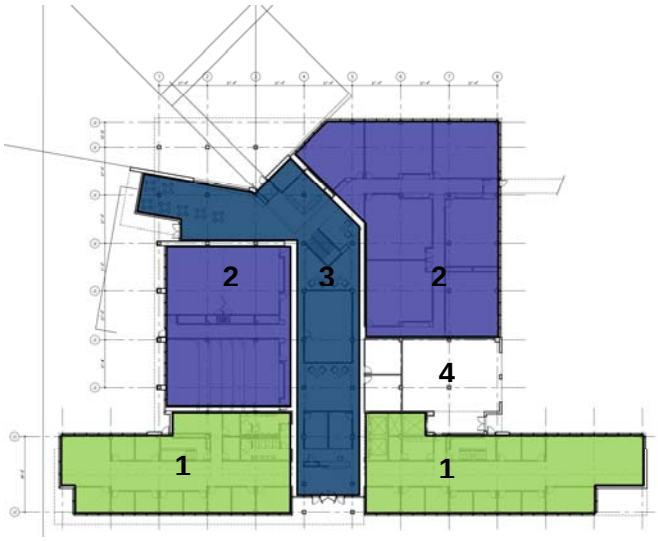

Ground Floor Plan

1. Centers
2. University Amenities
3. Amenities
4. Service/ Loading

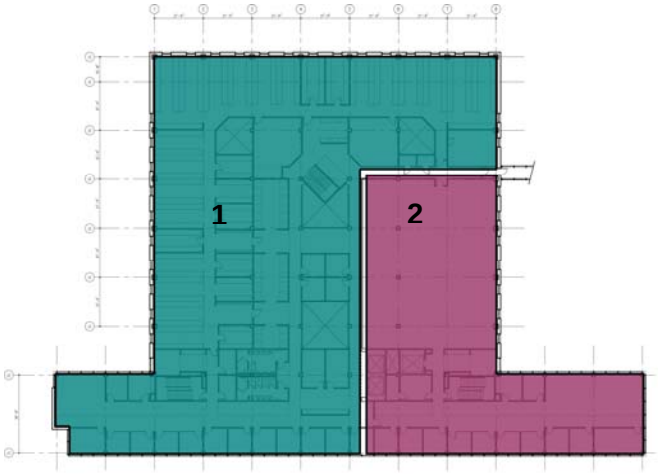

Second Floor Plan

1. ADVS
2. Math & Statistics/ Future COA Lab, Office

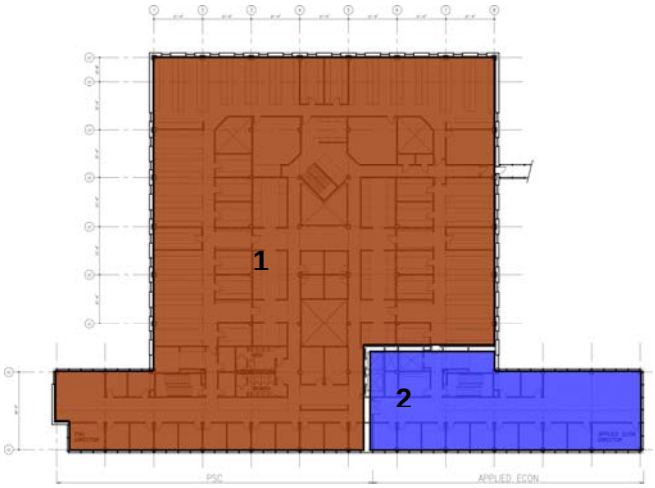

Third Floor Plan

1. PSC
2. Applied Economics

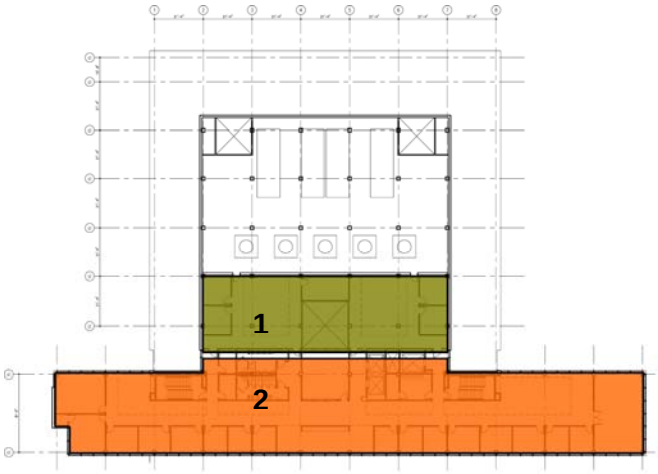

Fourth Floor Plan

1. Marketing
2. Executive Administration

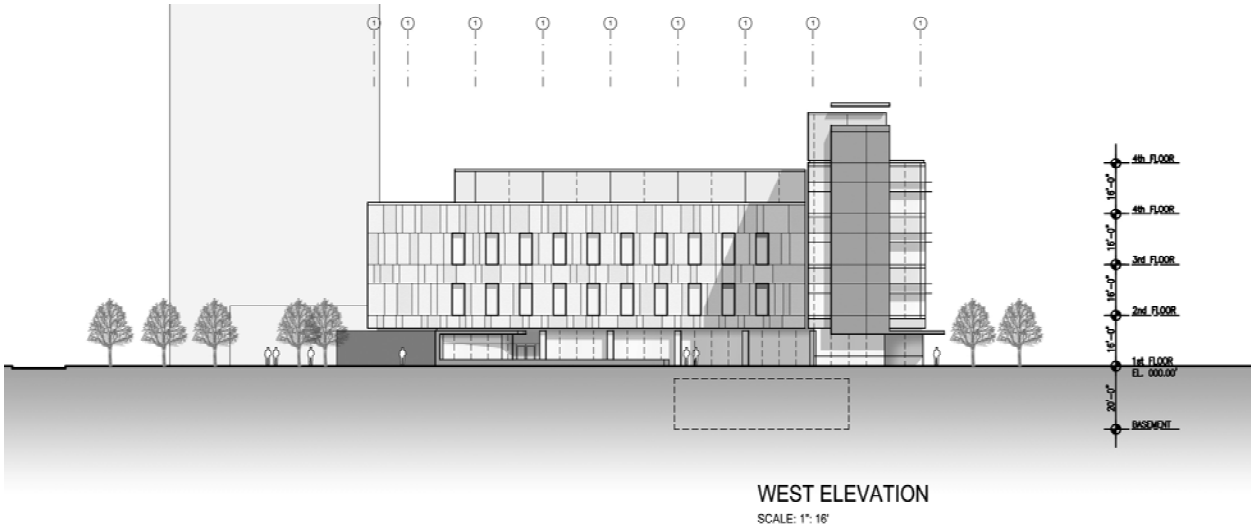

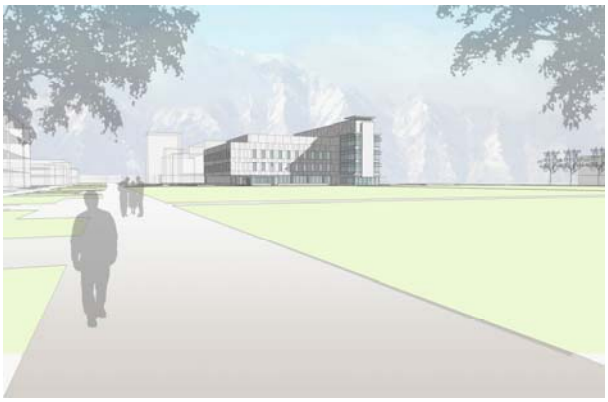

4.4.4 West Elevation:

The western façade of the new College of Agriculture Building addresses the quad with 2 distinct features.

The Office Bar has an east west axis that fronts the quad with a narrow face. The tower-like proportion responds as a counterpoint to the Old Main tower.

The massing of the lab box takes cues from the adjacent 3 and 4 story structures on the campus. The masonry cladding and the window proportions reflect a contextual response to old main along with the existing campus vernacular. The new café will have a prominent location along Champ drive and an engaging view to the quad.

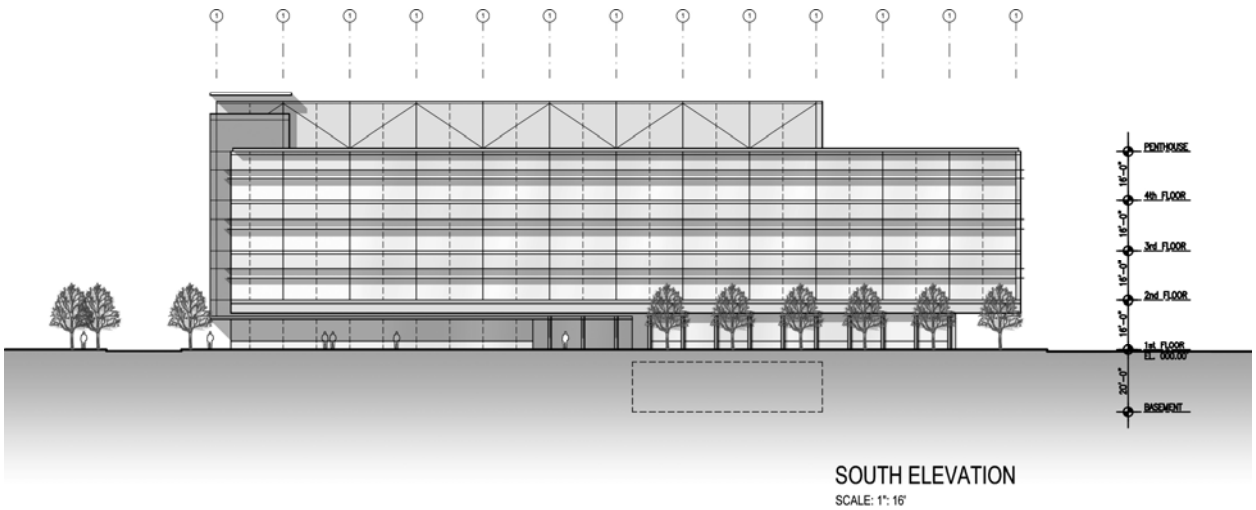

4.4.5 South Elevation:

The southern façade of the new College of Agriculture Building capitalizes on the spectacular views to the south.

The elevation and massing is a simple glass bar that becomes a beacon on the hill. The transparent qualities of the structure maximize the natural day lighting opportunities while mitigating heat gain with continuous sunshade devices.

The glass office structure creates a strong front to the campus while engaging the majestic mountains beyond.

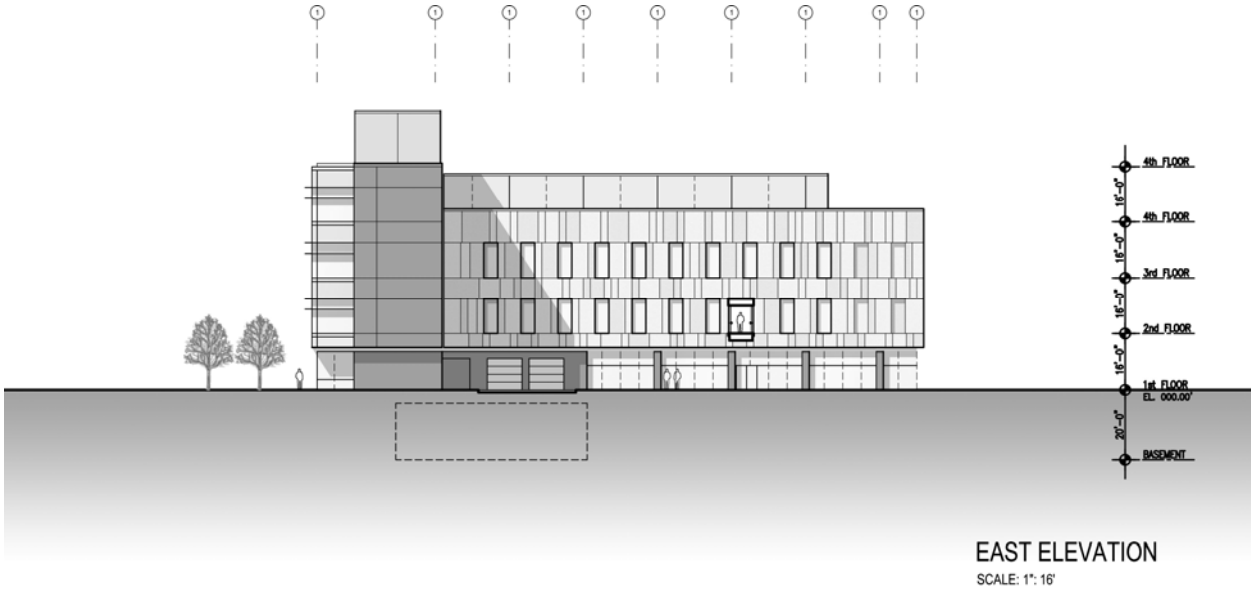

4.4.6 East Elevation:

The eastern façade of the new College of Agriculture Building address its adjacent buildings with two distinct features: the office bar and the lab/ classroom box.

The office bar's narrow face is in line with Lund Hall and mimics its scale in width while the massing of the lab box takes cues from the adjacent 3 and 4 story structures.

The future USDA/ ARS structure to the east will connect at multiple levels with a grade wall and an enclosed bridge. The future development of the USDA/ ARS structure will define how many levels the COA should engage.

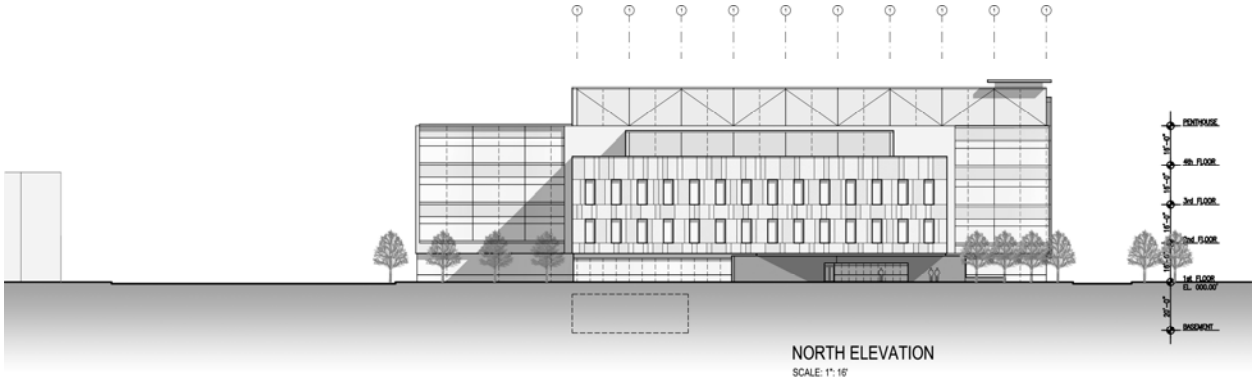

4.4.7 North Elevation:

The northern façade of the new College of Agriculture Building relates to its surrounding buildings in color and texture. The office bar in the back acts as a backdrop.

The 3-story northern elevation consists of punched windows, responding to the northern campus' scale and aesthetics.

4.5 Growth and Expansion

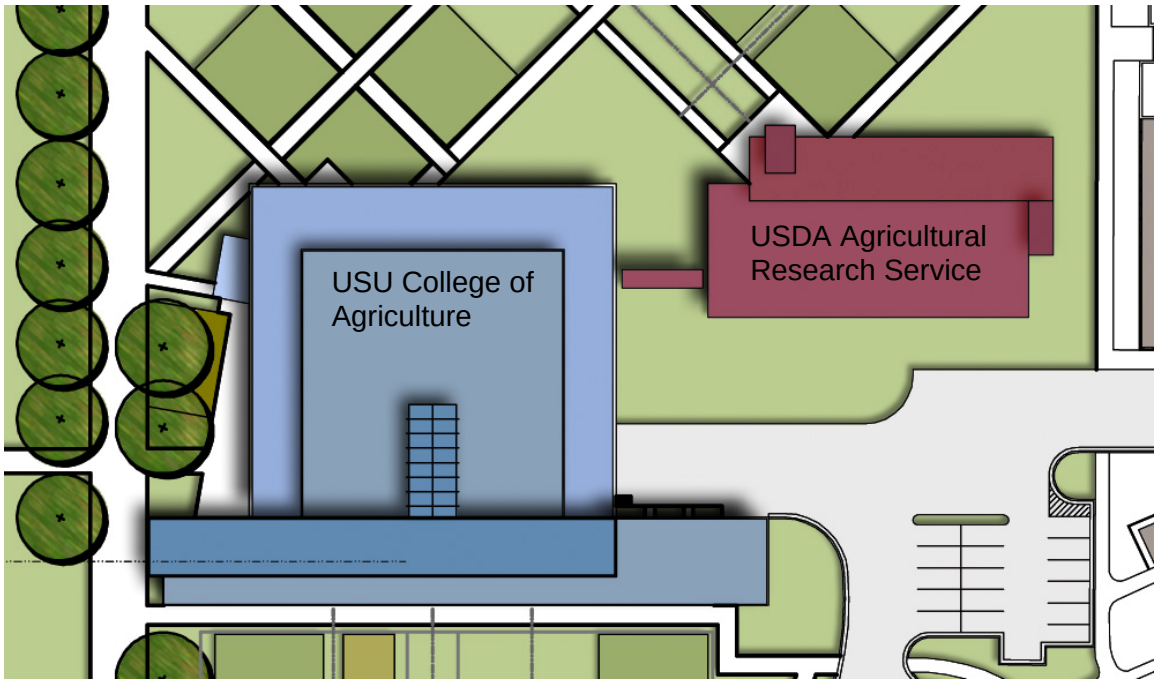

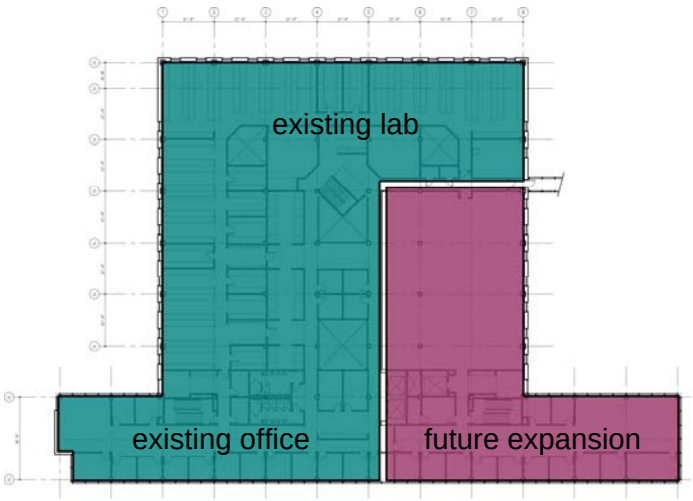

4.5.1 COA Future Expansion

The College of Agriculture future expansion will be addressed on the second floor as indicated on the block & stack diagram above.

Math and Statistics has been located within the south-east corner of the lab block. When this department is relocated, it will provide the COA with an additional 8 lab bays and additional lab support within the lab box.

The floor containing Math and Statistics, along with the ARS connection, will also provide space for future office and conferencing within the office bar.

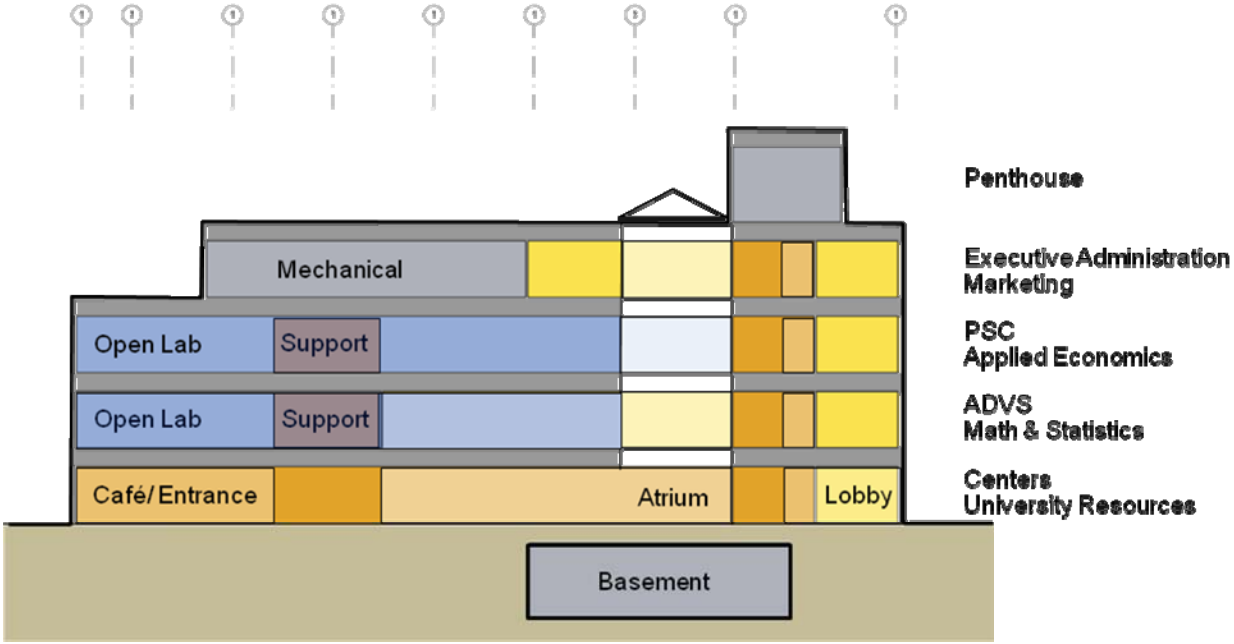

4.5.2 Block & Stack Section

SECTION 5

SPACE SUMMARY

5.1 Summary

The following table summarizes the square footage allocation included in the program. After an initial budget review, the programming team decided to base the core of the programming work on an 110,000 GSF building. Additionally, in order to account for the uncertainties of today's construction market, we will continue to work with DFCM/USU to develop alternate schemes, build-out options, etc. to allow the project some flexibility to remain within budget. These alternates will illustrate general priorities for which spaces to incorporate in the COA Building and can be used as a basis for fine-tuning what is ultimately included in the project. Determination as to what is included in the design documents will depend on:

- Execution of final funding for the COA Building,
- Whether the State funding of the COA Building remains coupled with the ARS project and thus,
- The timeline for USDA/Federal funding of the ARS component of the project,
- Real cost escalation that occurs between the date of this document and the time the design contract is awarded and work gets started in earnest, and
- Updated estimates of expected additional construction cost inflation over the intervening period between the onset of design work and the project bid date.

5.2 Room and Space Listing

The following table includes all the rooms and spaces programmed for the College of Agriculture Building. As with the summary, the space list is based on an approximately 110,000 GSF building.

AREA	DESCRIPTION	SPACES	NASF	TOTAL SF	NOTES
1	**EXECUTIVE ADMINISTRATION**			**4,902**	
1.1	Vice President / Dean			388	
1.1.1	Vice President and Dean	1	220	220	Noelle Cockett
1.1.2	VP Restroom	1	68	68	Immediately Adjacent to 1.1.1
1.1.3	Assistant to the Vice President	1	100	100	Tammy Firth - Adjacent to 1.1.1
1.2	Cooperative Extension Administration			512	
1.2.1	Associate Vice President/Associate Directo	1	160	160	Charles W. Gay
1.2.2	Staff Assistant - open workstation	2	80	160	Dorcee Winward - Near 1.2.1, Anita Kingdon
1.2.3	Student Staff - open workstation	2	36	72	Megan Openshaw, Shaun Cornwall
1.2.4	Regional Dir./Prgm Leaders/Specialists Ho	1	120	120	
1.3	College of Agriculture - Ag Experiment Station/Advising			1,204	
1.3.1	Assoc. Dean - Research, Dir. Ag Experime	1	160	160	H. Paul Rasmussen - Adjacent to 1.1.1
1.3.2	Staff Assistant - open workstation	1	80	80	Dorcus Kleinschuster
1.3.3	Associate Dean - Academic Programs	1	160	160	Janet Anderson
1.3.4	Academic Advising				
1.3.4.1	Academic Programs Advisor	1	100	100	Lisa Allen - Near 1.3.3
1.3.4.2	Advisor	3	100	300	Tami Spackman, Kathy Myers-Roche
1.3.4.3	Student Workstation / Reception	1	140	140	2 student employees, 4 guest seats
1.3.4.4	Peer to Peer Hoteling	1	120	120	
1.3.4.5	Staff Assistant - open workstation	1	80	80	
1.3.5	Program Leader - open workstation	1	64	64	Dallas Holmes
1.4	Development Director			240	
1.4.1	Development Director	1	160	160	Mary Lynne Clark - Near 1.1.1
1.4.2	Staff Assistant - open workstation	1	80	80	Shayna Anderson - Near 1.4.1
1.5	Business Manager			400	
1.5.1	Business Manager - COA	1	120	120	Steven Broadbent
1.5.2	Business Manager - Extension	1	120	120	Beth Smith
1.5.3	Staff Assistant - open workstation	2	80	160	Cheryl Swenson - Near 1.5.1, 1.5.2, Bryan Arnell
1.6	Administration Support Area			2,158	
1.6.1	Reception	1	180	180	
1.6.2	Copy/Mail/Workroom/Storage	1	250	250	
1.6.3	Kitchen / Breakroom	1	100	100	
1.6.4	Catering Prep	1	80	80	Adjacent to 1.6.7
1.6.5	Conference Room	1	420	420	
1.6.6	Conference Room, Large	1	768	768	
1.6.7	Exec. Council Conference Room	1	360	360	(15-20 seats) Sideboard for food
2	**MARKETING**			**1,556**	
2.1	Staff			856	
2.1.1	Director of Marketing	1	160	160	Scott Boyer
2.1.2	Marketing Manager	1	120	120	Mike Whitesides
2.1.3	Editors & Writers - open workstation	4	64	256	Dennis Hinkamp, Julene Reese, Donna Flakenborg, Lynette Harris
2.1.4	Graphic Designers - open workstation	2	64	128	
2.1.5	Media Video - open workstation	2	64	128	Student interns
2.1.6	Webmaster - open workstation	1	64	64	Chelsi Johnston
2.2	Marketing Support Area			700	
2.2.1	Marketing/Video/Multiuse Studio	1	360	360	
2.2.2	Webcast/Production/Photo Studio	1	220	220	
2.2.3	Multimedia / Mixing Room	1	120	120	

3	**CENTERS**			**4,622**	
3.1	Utah Botanical Center			536	
3.1.1	UBC Botanical Center - Director	1	160	160	David Anderson
3.1.2	UBC Staff	1	120	120	Mark Larese-Casanova
3.1.3	Open Workstations	4	64	256	
3.2	International Research Programs			656	
3.2.1	Associate VP Research (PL Agriculture)	1	160	160	DeeVon Bailey
3.2.2	Future Position	1	120	120	(Future position)
3.2.3	Program Coordinator	1	120	120	Dora Brunson
3.2.4	Open Workstations	4	64	256	
3.3	Western Rural Development Center			656	
3.3.1	Director	1	160	160	Don E. Albrecht
3.3.2	Senior Program Officer	1	120	120	Jim Goodwin
3.3.3	Write/Editor/Designer	1	120	120	Betsy Newman
3.3.4	Open Workstations	4	64	256	Trish Kingsford, Whitney Mortensen, plus 2
3.4	Western SARE			656	
3.4.1	Director	1	160	160	Phil Rasmussen
3.4.2	Deputy Coordinator	1	120	120	Robert Newhall
3.4.3	Office - Contracts Manager	1	120	120	Kristy Jensen
3.4.4	Open Workstation	4	64	256	Whitney Watts, Tammy Nielson, Kaden Canfield, plus 2
3.5	4-H			1,328	
3.5.1	Director	1	160	160	Kevin Kesler
3.5.2	Youth Specialist / Vol. Development	1	120	120	Debra Jones - Faculty
3.5.3	Leadership / Citizenship & Ambassadors	1	120	120	J.P. Murphy - Faculty
3.5.4	SET Curriculum and Program Coordinator	1	100	100	Kendra Ellis - Faculty
3.5.5	4H State Activities Coordinator	1	100	100	Lauralee Lyons
3.5.6	YFP Mentoring	1	100	100	Craig Dart
3.5.7	Accountant	1	100	100	Carol Downs
3.5.8	Support Staff				
3.5.8.1	Admin Assistant - open workstation	1	64	64	Lorry Reed - Adjacent to 3.5.1
3.5.8.2	Staff II - open workstation	1	64	64	Monica Schruhl
3.5.8.3	Web Site Developer - open workstation	1	64	64	Tonia Dattage
3.5.8.4	Open Workstations / Layout space	8	42	336	Collegiate 4H/Aggie Adventures/ATV Safety/Interns/Etc.
3.6	Manufacturing Extension Program			160	
3.6.1	Director	1	160	160	
3.7	Center Support Area			790	
3.7.1	Reception	1	180	180	
3.7.2	Copy/Mail/Workroom/Storage	1	250	250	
3.7.3	Conference Room, Small	2	180	360	Adjacent, Divisible

4	**COA - ANIMAL, DAIRY & VETERINARY SCIENCES**			**12,410**	
4.1	ADVS Administration			620	
4.1.1	Director/Dept. Head - Research	1	160	160	Ken White
4.1.2	ADVS Business Manager	1	120	120	Art Lamont
4.1.3	Sr. Staff Assistant	1	100	100	Jean Edwards
4.1.4	Staff Assistant - open workstation	3	80	240	Juanita Hunting, Laurel Hancey, Nancy Daines
4.2	ADVS Faculty			1,560	
4.2.1	Faculty Office - Prof. & Department Head	1	-	-	Ken White - Office in ADVS Admin 4.1.1
4.2.2	Faculty Office - Prof. & Assoc. Dept Head	1	120	120	Tom Bunch
4.2.3	Faculty Office - Prof. Beef Extension Speci	1	120	120	Dale ZoBell
4.2.4	Faculty Office - Research Prof. & Assoc. Di	1	120	120	Justin Jensen
4.2.5	Faculty Office - Lecturer, NLF Manager	1	120	120	Brett Bowman
4.2.6	Faculty Office - Asst. Prof.	1	120	120	Jong-Su Eun
4.2.7	Faculty Office - Asst. Prof. Equine Speciali	1	120	120	Patricia Evans
4.2.8	Faculty Office - Professor	1	120	120	Lyle McNeal
4.2.9	Faculty Office - Research Prof.	1	120	120	open
4.2.10	Faculty Office - Assoc. Prof.	1	120	120	Lee Rickords
4.2.11	Faculty Office - Research Assoc. Prof.	1	120	120	Chris Davies
4.2.12	Faculty Office - Assoc. Prof. Dairy Specialis	1	120	120	Allen Young
4.2.13	Faculty Office - Asst. Prof. Microbiologist	1	120	120	Kerry Rood
4.2.14	Faculty Office - Assoc. Prof.	1	120	120	open
4.3	ADVS Technical Staff / Students			1,580	
4.3.1	Lab Tech - Shared Office	10	48	480	(2 Techs / 120sf Office) - adjacent to labs
4.3.2	Post Doc - Shared Office	10	60	600	(2 Post docs / 120sf Office) - adjacent to labs
4.3.3	Graduate Student Suite	20	25	500	(4) Students per office - adjacent to labs - In lab
4.4	ADVS Research Laboratories			4,480	
4.4.1	Animal Molecular Biology Lab Cluster				
4.4.1.1	Animal Genetics	2	280	560	Noelle Cockett - Tracy Hadfield
4.4.1.2	Reproduction & Development	2	280	560	Ken White - Ben Sessions
4.4.1.3	Developmental Biology	2	280	560	Lee Rickords - Marcy Labrum
4.4.1.4	Reproductive Immunology & Immunogene	2	280	560	Chris Davies - Amanda Wilhelm
4.4.1.5	Gene Regulation / Animal Models	2	280	560	Future
4.4.1.6	Epigenetics / Epigenomics	2	280	560	Future
4.4.2	Animal Nutrition Lab Cluster				
4.4.2.1	Animal Nutrition	2	280	560	Jung Su Eun - Francis Bhushan
4.4.2.2	Animal Nutritional Physiology	2	280	560	Future

4.5	ADVS Research Lab Support			3,430	
4.5.1	Animal Molecular Biology Lab Support				
4.5.1.1	Autoclave Room	1	120	120	
4.5.1.2	Tissue Collection Lab	1	110	110	
4.5.1.3	Cell Culture Lab	1	110	110	Adjacent To 4.4.1.1
4.5.1.4	Micromanipulation Lab	1	150	150	Temperature Controlled - passthrough to 4.5.1.2
4.5.1.5	Cell Culture Lab	1	120	120	
4.5.1.6	Flow Cytometry Lab	1	140	140	
4.5.1.7	Dark Room	1	110	110	Enclosed room - can be completely darkened
4.5.1.8	Cold Lab / Walk-in Cold Storage	1	150	150	
4.5.1.9	Refrigerator/Freezer room	2	120	240	Infrequent access
4.5.1.10	BSL2 Lab	1	300	300	
4.5.1.11	Genomics / Proteomics Lab	1	600	600	
4.5.1.12	Analytical Equipment Room	1	180	180	Scintellation counters, etc.
4.5.1.13	Microscopy Lab	1	110	110	Enclosed room - can be completely darkened
4.5.1.14	Shared Fume Hood Alcove	3	110	330	Fume hood alcoves - (1) fume hood per three lab bays
4.5.2	Animal Nutrition Lab Support				
4.5.2.1	Fermentation Suite	1	300	300	
4.5.2.2	Balance Room & Dry Chemical Storage	1	110	110	
4.5.2.3	Oven Room	1	110	110	
4.5.2.4	Grinding / Drying / Prep room	1	140	140	Near dock or basement, smelly - Animal Nutrition
4.6	ADVS Support Area			740	
4.6.1	Copy/Mail/Workroom/Storage	1	250	250	
4.6.2	Small Conference Room	1	180	180	
4.6.3	Lab Storage	2	100	200	Flasks, Pitri dishes, etc. Shelving required - basement OK
4.6.4	Waste Autoclave	1	110	110	In Basement - Shared for building

5	**COA - PLANTS, SOILS & CLIMATE**			**17,718**	
5.1	PSC Administration			620	
5.1.1	Dept. Head	1	160	160	Teryl Roper
5.1.2	PSC Admin Office	1	120	120	
5.1.3	Sr. Staff Assistant	1	100	100	Keren Williams
5.1.4	Staff Assistant - open workstation	3	80	240	Sally Maxwell, Lori Johnson, Student helper
5.2	PSC Faculty			2,160	
5.2.1	Faculty Office - Professor & Head	1	-	-	Teryl Roper - Office in PSC Admin 5.1.1
5.2.2	Faculty Office - Director, Utah Botanical Ce	1	-	-	William (Bill) Varga - Office in Centers 3.1.1
5.2.3	Faculty Office - Prof. Soil Management	1	-	-	Phil Rasmussen - Office in Centers 3.4.1
5.2.4	Faculty Office - Asst. Prof. Soil Physics	1	120	120	Scott B. Jones
5.2.5	Faculty Office - Prof. of Pedology	1	120	120	Janis Boettinger
5.2.6	Faculty Office - Asst. Prof.	1	120	120	Astrid Jacobson
5.2.7	Faculty Office - Assoc. Prof. Biogeochemis	1	120	120	Paul Grossl
5.2.8	Faculty Office - Assoc. Prof. Ext. Soils Spe	1	120	120	Grant Cardon
5.2.9	Faculty Office - Prof. Soil Microbiology	1	120	120	Jeanette M. Norton
5.2.10	Faculty Office - Assoc. Prof. Plant Physiolo	1	120	120	Jennifer MacAdam
5.2.11	Faculty Office - Asst. Prof. Organic & Susta	1	120	120	Jennifer Reeve
5.2.12	Faculty Office - Prof. of Plant Breeding/Ger	1	120	120	David Hole
5.2.13	Faculty Office - Extension Fruit Specialist	1	120	120	Brent Black
5.2.14	Faculty Office - Prof. Plant Genetics	1	120	120	John Carman
5.2.15	Faculty Office - Asst. Prof.	1	120	120	Yajun Wu
5.2.16	Faculty Office - Prof. Interim Dept Head	1	120	120	Roger Kjelgren
5.2.17	Faculty Office - Prof. of Horticulture	1	120	120	Dan Drost
5.2.18	Faculty Office - Professor & PL	1	120	120	Larry Rupp
5.2.19	Faculty Office - Asst. Prof. Ornimental Hort	1	120	120	Heidi Kratsch
5.2.20	Faculty Office - Professor	1	120	120	Lawrence Hipps
5.2.21	Faculty Office - Senior Lecturer	1	120	120	Craig Aston
5.3	PSC Technical Staff / Students			1,748	
5.3.1	Lab Tech - Shared Office	6	48	288	John Lawley, Joby Carlisle, Chod Stephens, Graham Hunter,
5.3.2	Post Doc - Shared Office	4	60	240	Tian Hu, Ping Li, Hiruy Abdu, Fan Jun
5.3.3	Graduate Student Suite	32	25	800	16 in lab, 16 in office
5.3.4	Collaborative Grad Student Support	2	210	420	Adj to grad student suite
5.4	PSC Research Laboratories			6,500	
5.4.1	Wet Labs				
5.4.1.1	Soils Microbiology Lab	2	280	560	Norton
5.4.1.2	Soils Chemistry Lab	4	280	1,120	Jacobson, Grossl, Cardon - Lawley
5.4.1.3	Soils Physics Lab	2	280	560	Jones, Boettinger - Carlisle, Kienast
5.4.1.4	Crop Physiology Lab	2	280	560	MacAdam, Reeve, Black, D. Hole - Maughn
5.4.1.5	Crop Molecular Biology Lab	4	280	1,120	Carman, Wu
5.4.1.6	Plant Field Lab - Horticulture	6	280	1,680	Kjelgren, Drost, Rupp, Black, Kratsch - Hunter, Frisby
5.4.2	Dry Labs				
5.4.2.1	PSC Research Dry Lab	3	300	900	Hipps, Jin, Boettinger - Computer labs

5.5	PSC Research Lab Support			2,810	
5.5.1	Autoclave Room	1	110	110	
5.5.2	Cold Lab / Walk-in Cold Storage	1	150	150	@5 degree celcius
5.5.3	Microscopy Lab	1	200	200	Enclosed room
5.5.4	Tissue Culture Transfer Lab	1	180	180	(2) Laminar flow hoods, lab gas, bench work space
5.5.5	Tissue Culture Growth Room	2	80	160	1@72F, 1@85-90F Light racks & external ballasts
5.5.6	Plant Growth Room	1	80	80	1@72F Plant racks w/flourescent lights
5.5.7	Microbe Transfer Room	1	110	110	
5.5.8	Incubation / Calibration Room	1	110	110	Constant @25F, humidity control, cabinets, benches
5.5.9	Grinding / Drying / Prep Room	2	100	200	1 for soils, 1 for plants
5.5.10	Oven Room	1	110	110	
5.5.11	Refrigerator/Freezer room	2	120	240	Infrequent access
5.5.12	Shared Perchloric Hood Alcove	1	110	110	
5.5.13	Analytical Equipment Room	1	200	200	Shared analytical equipment
5.5.14	Shop	1	300	300	Sawdust collection, basement OK
5.5.15	Shared Fume Hood Alcove	3	110	330	(1) fume hood per three lab bays
5.5.16	Glassware Wash Alcove	2	110	220	
5.6	PSC Class Labs			2,400	
5.6.1	PSC General Class Lab	1	1,200	1,200	
5.6.2	PSC Advanced Class Lab	1	1,200	1,200	
5.7	PSC Support Area			1,480	
5.7.1	Copy/Mail/Workroom/Storage	1	250	250	
5.7.2	Small Conference Room	1	180	180	8-12 people
5.7.3	Lab Storage	3	200	600	PSC/EXT/UCIA storage - basement OK
5.7.4	PSC Growth Chamber room	1	300	300	6-8 reach-in growth chambers, bench work space, basement
5.7.5	Freezer Storage room	1	150	150	Chest freezers, basement OK
5.8	Moving to ARS			5,160	
5.8.1	Faculty Office - Assoc. Prof.	1	120	120	Paul Johnson
5.8.2	Faculty Office - Weed Scientist	1	120	120	Corey Ransom
5.8.3	Faculty Office - Prof. Extension Weed Spec	1	120	120	Ralph Whitesides
5.8.4	Faculty Office - Prof. Extension Weed Spec	1	120	120	Steve Dewey
5.8.5	Faculty Office - Assoc. Prof. Water & Turfgr	1	120	120	Kelly Kopp
5.8.6	Faculty Office - Research Prof. Seed Cert.	1	120	120	Stan Young
5.8.7	Lab Tech - Shared Office	4	60	240	Adam VanDyke, Michael Bouck, Kim Edvarchuk, Bill Mace
5.8.8	Crop Physiology Lab	2	300	600	Johnson - VanDyke
5.8.9	Plant Field Lab - Weeds & Agronomy	5	300	1,500	Ransom, Whitesides, Dewey - Mace, Edvarchuk
5.8.10	Plant Field Lab - Horticulture	2	300	600	Kopp
5.8.11	PSC Lab Support	1	1,500	1,500	
6	**DEPARTMENT OF APPLIED ECONOMICS**			**3,038**	
6.1	APEC Administration			608	
6.1.1	Department Head	1	160	160	Paul Jakus
6.1.2	APEC Administration Office	1	120	120	Don Snyder
6.1.3	Staff Assistant	1	100	100	
6.1.4	SA/Extension Educator	1	64	64	Sarah Drollette
6.1.5	Accountant	1	100	100	Morgan Russell
6.1.6	Staff Assistant - open workstations	1	64	64	
6.2	APEC Faculty			1,080	
6.2.1	Faculty Office	1	120	120	Ken Lyon
6.2.2	Faculty Office	1	120	120	Arthur Caplan
6.2.3	Faculty Office	1	120	120	
6.2.4	Faculty Office	1	120	120	Marion Bentley
6.2.5	Faculty Office	1	120	120	Reza Oladi
6.2.6	Faculty Office	1	120	120	Dillon Fuez
6.2.7	Faculty Office	1	120	120	Ruby Ward
6.2.8	Faculty Office	2	120	240	
6.3	APEC Students			920	
6.3.1	Graduate Student Suite	20	25	500	
6.3.2	Collaborative Grad Student Support	2	210	420	Adj to Grad Suite
6.4	APEC Support Area			430	
6.4.1	Copy/Mail/Workroom/Storage	1	250	250	
6.4.2	Small Conference Room	1	180	180	8-12 people
7	**DEPARTMENT OF MATH & STATISTICS**			**6,948**	
7.1	Math/Stats Administration			708	
7.1.1	Department Head	1	160	160	Richard Cutler
7.1.2	Assistant Department Head	1	120	120	Eric Rowley
7.1.3	Sr. Staff Assistant	3	100	300	Erika Perkins, Linda Skabelund, Nancy Smart
7.1.4	Staff Assistant - open workstation	2	64	128	Christie Higbee, Dixie King

7.2	Faculty			3,840	
7.2.1	Faculty Office	1	120	120	Ian M. Anderson
7.2.2	Faculty Office	1	120	120	LeRoy B. Beasley
7.2.3	Faculty Office	1	120	120	James S. Cangelosi
7.2.4	Faculty Office	1	120	120	Larry Cannon
7.2.5	Faculty Office	1	120	120	Adele Cutler
7.2.6	Faculty Office	1	120	120	Robert Heal
7.2.7	Faculty Office	1	120	120	Piotr Kokoszka
7.2.8	Faculty Office	1	120	120	Lance Littlejohn
7.2.9	Faculty Office	1	120	120	James Powell
7.2.10	Faculty Office	1	120	120	Russell Thompson
7.2.11	Faculty Office	1	120	120	Zhi Qiang Wang
7.2.12	Faculty Office	1	120	120	Stanley C. Williams
7.2.13	Faculty Office	1	120	120	Christopher Corcoran
7.2.14	Faculty Office	1	120	120	Danile C. Coster
7.2.15	Faculty Office	1	120	120	Mark Fels
7.2.16	Faculty Office	1	120	120	Joseph V. Koebbe
7.2.17	Faculty Office	1	120	120	Michael Minnotte
7.2.18	Faculty Office	1	120	120	Xiaofeng Ren
7.2.19	Faculty Office	1	120	120	Jurgen Symanzik
7.2.20	Faculty Office	1	120	120	Kathryn Turner
7.2.21	Faculty Office	1	120	120	Dariusz M. Wilczynski
7.2.22	Faculty Office	1	120	120	David Brown
7.2.23	Faculty Office	1	120	120	Nathan Geer
7.2.24	Faculty Office	1	120	120	Mevin Hooten
7.2.25	Faculty Office	1	120	120	Peg Howland
7.2.26	Faculty Office	1	120	120	Brynja Kohler
7.2.27	Faculty Office	1	120	120	An Le
7.2.28	Faculty Office	1	120	120	Nghiem Nguyen
7.2.29	Faculty Office	1	120	120	Kady Schneiter
7.2.30	Faculty Office	1	120	120	John R. Stevens
7.2.31	Faculty Office	1	120	120	David Bregenzer
7.2.32	Faculty Office	1	120	120	Bryan Bornholdt
7.3	Staff / Students			1,730	
7.3.1	Graduate Student Suite	44	25	1,100	
7.3.2	Collaborative Grad Student Support	3	210	630	Adj to Grad Suite
7.4	Math & Stats Support Area			430	
7.4.1	Conference Room, Small	1	180	180	
7.4.2	Copy/Mail/Workroom/Storage	1	250	250	
7.5	Advising			240	
7.5.1	Advisor	1	100	100	
7.5.2	General Advising	1	140	140	
8	**UNIVERSITY RESOURCES**			**5,944**	
8.1	Classrooms			5,944	
8.1.1	114-seat Classroom	1	2,144	2,144	Tiered floor, table & chairs
8.1.2	34-seat Classroom (tables & chairs)	2	800	1,600	
8.1.3	56-station Computer Classroom	1	1,800	1,800	Divisible configuration desired
8.1.4	Table and Chair Storage	1	400	400	
8.2	Future Classrooms			3,200	
8.2.1	34-seat Classroom (tables & chairs)	2	800	1,600	future backfill in Math & Stats area
8.2.2	46-seat Classroom (tablet arm chairs)	2	800	1,600	future backfill in Math & Stats area
9	**AMENITY SPACES**			**5,260**	
9.1				5,260	
9.1.1	Lobby	1	2,000	2,000	
9.1.2	Quiet Study Room	1	500	500	
9.1.3	Small Meeting Rooms A	8	120	960	10 with doors, 6 without doors
9.1.3.1	Small Meeting Rooms B	6	120	720	
9.1.4	Café Servery	1	600	600	
9.1.5	Café Storage	1	180	180	
9.1.6	Café Seating	1	300	300	
10	**BUILDING SUPPORT**			**1,908**	
10.1				1,908	
10.1.1	Loading Dock / Service	1	396	396	
10.1.2	COA Remote Storage/Workroom	1	1,512	1,512	Building-wide resource near outside access

5.3 Building Organization

The following is a narrative description of the context and rational for the building organization as it is outlined in the space summary.

Entry Level Features

The entry level will provide a distinctive new entrance to the new College of Agriculture, a building organized to accommodate collaborative work and community building. With a centralized four-story atrium, a voluminous space which will perform several additional functions: it will function as a lantern at the northwest corner of the building at night, assist in wayfinding through the building and act as an organizing element for the building during the day; it would also bring natural light deep into the building while providing users visual access to the floors of academic and research space above. An open entry volume will also serve as the locus for orienting visitors to the building from several directions and to the open internal circulation of the atrium and elevator bays beyond.

Circulation
The primary entry and public service functions of level one are focused to the northwest at the intersection of two main campus walkways. Main public services are located in relationship with this entry and the first floor lobby. A secondary access has been developed to the south with relation to a significant automobile circulation route which serves as an access point into the south side of campus. This route is utilized by USU transit and as a drop off point for individuals arriving by private vehicle, in addition it will serve as access to a small parking lot to the east of the new College of Agriculture, as such some building users and visitors may come from the south off of Highway 89. To support this external campus traffic pattern the south entry has been developed and coincides with the location of the public outreach functions of the Centers.

A main open stair, located in the atrium area, will serve all levels of the building. Enclosed internal circulation is housed within the office bar of the building and consists of two stair towers and a bank of public elevators. The service corridor and freight elevator originate at the loading dock on level one and provide deliver access and service to all other levels. This back of house service spine is a critical lab service component and thus connects to an internal lab circulation route.

Services
Level one public services include a Café that will be managed by USU Dining Services. It is a full service access point designed for delivery of both pre-prepared and made on site foods in a manner similar to the Quad Café at the USU Library. An open servery and supporting storage area are currently site adjacent to the main northwest entry and the gracious first floor lobby. A small interior seating area will be supplemented by out door seating on a west facing patio. This food service venue differs from the Library in that it is not planned to stand alone when the building is closed, nor is there a dedicated exterior entrance planned. As the plans are developed continue discussion of the focus of this food service point will surely return to the original goal of reflecting the College of

Agriculture, the slow food movement and buying local. In addition, planning for a sales point highlighting local foods, plants and crafts will be work defining more.

Amenity Space
While amenity spaces are planned throughout the new College of Agriculture building, they are most highly concentrated on the Level One and consist of small meeting rooms, open lounge and informal seating areas within the Lobby, and the potential for service points. These small meeting rooms are sized for group study, small conferences, and peer tutoring or TA work sessions. Fourteen are planned for the building with four to six to be located on level one as both more-open and informal lounge-like spaces and fully-enclosed conference room set ups. In addition, the conceptual plan references outdoor seating and display garden areas to the north, west and south of the building which will serve to draw building visitors out-of-doors. A rich and active research, extension and teaching program may want to be highlighted through the use of large scale display cases and graphic signage. Other public amenities include informal seating adjacent to classrooms and class labs, quick search computer stations, chair/table storage and restrooms.

A component piece of planning the lobby area will be consideration for placement of the 2005 Memorial, which is currently housed within the student union. The wall mounted memorial is over fifteen feet in length and consists of a collection of cast bronze plaques with a granite and steel back. Due to the nature of many visitors to the memorial, planning an area for contemplative and reflective thought may require the plaque to be located in an area out of the active lobby zone. Seating, lighting and security must also be addressed. Coordination with the memorial planning committee as the project moves though design would be most appropriate.

Classrooms/Class Labs
Classrooms are a university resource planned on Level One and consist of a 114-seat lecture hall, two 34-seat classrooms and a 56-seat computer lab/classroom. Through collaborative input from the USU Registrar’s office and campus IT these spaces have been designed to suit day one needs and be adaptable to long range technology developments. Classrooms will be centrally scheduled and serve to replace four lecture halls in the old Ag Science Building. The 34-seat classrooms will be adjacent to one another and accessible through an operable panel partition, to serve the requirements of the College of Agriculture’s residential landscape design program.

Class Labs were developed in cooperation with the Plant, Soils and Climate Department and have amenities to service the Department of Animal, Dairy and Veterinary Sciences. They include fixed lab-like student benches, fume and laminar flow hoods, a small growth chamber and lab utilities. To make the spaces more flexible, extensive storage was planned to house both on-going student projects and resource/research equipment, such as microscopes. Adjacent to both Class Labs are two spaces which will support classroom preparation and materials storage.

Service Core
Lab and administrative buildings function best with well planned and organized back-of-house support areas. In the case of the College of Agriculture access to the service core meant planning for external access and delivery, short-term vehicle parking, and access

to refuse collection. The loading dock is located at the joint between the office bar and lab bar of the conceptual design scheme. It is serviced by a loading area and lift, oversized double doors and access to a short term receiving storage room and cylinder storage room. The service elevator is located adjacent to the service corridor with direct access to the dock. No overhead doors are planned, but oversized doors must lead from the dock to the service elevator, to and through the floors to allow for later equipment delivery and service.

A Central Workroom/Storage has been planned adjacent to the Loading Dock area. It will serve as both a long term storage area for unique divisions with the College of Agriculture and a work area for preparation of events and outreach tools. Chain link fence enclosures will house flexible storage (shelves and lateral files). Integrated within this area is a generous work area, including copy services, layout space, equipment and supply storage and the potential for a large scale plotter and computer access. The work area is not assigned to any one department or division, but rather is a joint resource for all building users with the hope that many items currently stored in offices or department administrative suites and used for outreach will be better housed near the loading area.

Wayfinding and Amenity Spaces
As a facility with significant public and student access components (classrooms, class labs, conference spaces, student advising, department suites and a café) internal wayfinding was a strong driver of the conceptual plan. In addition to the ease of wayfinding planned through the multi-story atrium and ease of access to vertical circulation routes, good wayfinding tools are planned. They include both static signage and directories and digital signage. Above the first level the main atrium stair landing for floor lobbies housing informal lounge areas adjacent to small collaborative meeting rooms. Just beyond are centrally located department suites which serve as a destination for both internal and external campus visitors, and act as the hub of their department.

Center's Suite

The Center's Suite has been developed as a tool to enhance the collaborative work and public outreach of its occupants: the Utah Botanical Center, International Research Programs, Western Rural Development Center, Western SARE, 4-H, and the Manufacturing Extension Program. The programs have historically been housed in disparate locations and each has varied and unique program goals, but each recognized the benefit of a suite of open and enclosed work and support areas. A centralized reception/waiting area and support spaces (copy/mail/work room and conference rooms) will serve as the hub of and gate keeper for the suite. Advertising the Center occupants through large graphic illustrations and/or display materials would both highlight and educate building users.

Flexible open office configuration adjacent to private offices are the primary area of focus for the suite. The amenity diagram, included in Section 6.3, illustrates the desire to accommodate a continuum of noise and activity through the suite. For example, 4-H has a large external outreach mechanism with encourages student volunteers to use their areas, while at the other end of the suite the International Research Program has limited visitors, but when they do they tend to be high level campus visitors who may value a more quiet suite environment. Support services to include both a copy/mail/workroom

and two small conference rooms that can be joined by way of an operable, acoustical panel partition.

Departmental Suites

Housed within the new College of Agriculture are four distinct departments, three which fall under the auspices of the College of Agriculture and one under the auspices of the College of Science. Together these departments will occupy the second and third levels of the building as illustrated in Section 4.4. While each department is unique, they all consist of very similar components: Departmental Administrative Suites which include support spaces such as copy/mail/workrooms and conference rooms, faculty offices, staff and student work areas, and two departments utilize laboratories, and laboratory support spaces.

The departments, and their supporting areas, are as follow:

Animal, Dairy and Veterinary Sciences (ADVS)

- Departmental Suite: Consisting of offices for the Department Head, Business Manager and Staff Assistant. Support spaces include a copy/mail/workroom and conference rooms. As the suite defines the ownership of the floor and serves as a one stop shop for both first time and repeat visitors, the Departmental Suite must be located within visual proximity to the public circulation routes and be configured as to act as a gatekeeper of the enclosed department beyond. After hours access to the copy/mail/workroom and conference rooms need to be planned in such a manner that they do not require access through the departmental suite solely.
- Faculty, Staff and Student Offices: Offices and staff workstations are illustrated in the affinity diagram within Section 6.4. All faculty offices and open work stations must be accessed through a dedicated, secure entry point. Enclosed graduate student suites and post doc/lab tech offices will be located outside of, but immediately adjacent to the labs.
- Laboratories: A detailed affinity diagram for laboratory layouts is included in Section 6.4. Required and requested adjacencies are noted on room data sheets. As College of Agriculture labs are well used, they shall be placed adjacent to an outside wall to allow for natural light. If at all possible, planning for borrowed natural light into adjacent lab support spaces is desired,
- Lab support: Areas needed to support the functions of labs are referred to as lab support. These areas are in many cases unique and serve distinct functional requirements. Their location in relationship to the labs is critical, thus a well defined affinity diagram and references on rooms data sheets note required or requested spatial relationships.

Applied Economics (APEC)

- Departmental Suite: Consisting of offices for the Department Head, Assistant Director, Accountant and Staff Assistant, the suite will include two open staff workstations which informally serve as reception for the suite. Support spaces include a copy/mail/workroom and conference rooms. As the suite defines the ownership of the floor and serves as a one stop shop for both first time and repeat visitors, the Departmental Suite must be located within visual proximity to the public circulation routes and be configured as to act as a gatekeeper of the

enclosed department beyond. After hours access to the copy/mail/workroom and conference rooms need to be planned in such a manner that they do not require access through the departmental suite solely.

- Faculty, Staff and Student Offices: Offices and staff workstations are illustrated in the affinity diagram within Section 6.6. All faculty offices and open work stations must be accessed through a dedicated, secure entry point. Enclosed graduate student suites and post doc/lab tech offices will be located outside of, but immediately adjacent to the labs.

Plants, Soils and Climate (PSC)

- Departmental Suite: Consisting of offices for the Department Head and PSC Administrator, the suite will include four open staff workstations which informally serve as reception for the suite. Support spaces include a copy/mail/workroom and conference rooms. As the suite defines the ownership of the floor and serves as a one stop shop for both first time and repeat visitors, the Departmental Suite must be located within visual proximity to the public circulation routes and be configured as to act as a gatekeeper of the enclosed department beyond. After hours access to the copy/mail/workroom and conference rooms need to be planned in such a manner that they do not require access through the departmental suite solely.
- Faculty, Staff and Student Offices: Offices, staff workstations, graduate student suites and post doc/lab tech offices are illustrated in the affinity diagram within Section 6.5. All faculty offices and open work stations must be accessed through a dedicated, secure entry point. Some enclosed graduate student suites will be located adjacent to faculty offices in the office bar of the building. The remainder of the enclosed graduate student suites and post doc/lab tech offices will be located outside of, but immediately adjacent to the labs.
- Laboratories: A detailed affinity diagram for laboratory layouts is included in Section 6.5. Required and requested adjacencies are noted on room data sheets. As College of Agriculture labs are well used, they shall be placed adjacent to an outside wall to allow for natural light. If at all possible, planning for borrowed natural light into adjacent lab support spaces is desired,
- Lab support: Areas needed to support the functions of labs are referred to as lab support. These areas are in many cases unique and serve distinct functional requirements. Their location in relationship to the labs is critical, thus a well defined affinity diagram and references on rooms data sheets note required or requested spatial relationships.

Math and Statistics

- Departmental Suite: Consisting of offices for the Department Head, Assistant Department Head and Staff Assistant, the suite will include five open staff /student workstations which informally serve as reception for the suite. Support spaces include a copy/mail/workroom and conference rooms. As the suite defines the ownership of the floor and serves as a one stop shop for both first time and repeat visitors, the Departmental Suite must be located within visual proximity to the public circulation routes and be configured as to act as a gatekeeper of the enclosed department beyond. After hours access to the copy/mail/workroom and conference rooms need to be planned in such a manner that they do not require access through the departmental suite solely.

- Faculty, Staff and Student Offices: Offices and staff workstations are illustrated in the affinity diagram within Section 6.4. All faculty offices and open work stations must be accessed through a dedicated, secure entry point. Enclosed graduate student suites and post doc/lab tech offices will be located outside of, but immediately adjacent to the labs.
- Advising: The Advising Suite for the department must be located in close proximity to the Math & Stats Departmental Suite. It will consist of a private office for the advisor and a general work area for student staff. In addition, the Math and Staff advisors will utilize the classroom component of the Computer Lab for testing and instruction.

Laboratories and Laboratory Support Spaces

A laboratory planning group helped set direction for the development, affinities, and spatial requirements of laboratories, lab spaces, support staff, services and building support requirements. In mid-May the group came to a consensus and forwarded the following recommendations to the Executive Committee for their review and approval.

Recommendations:

- PSC can reduce PSC grad students to 32 grads – half of these should be adjacent to office and half adjacent to labs. Graduate students should be housed in enclosed suites, as illustrated in the room data sheets.
- All 20 ADVS grad students to be located in enclosed suites adjacent to labs.
- Users have selected enclosed work areas (large for graduate students and smaller for post docs and lab techs) outside of but immediately adjacent to lab.
- Soil microbiology lab needs walls around it.
- Animal nutrition lab needs walls around it.
- No dishwashers in general labs. Dishwashers will be provided in glassware cleaning alcoves for PSC and in Autoclave room for ADVS.
- Jones' "shop", incubation/growth chambers, and calibration to be located in basement.
- ADVS users do not like "cup sinks," but small single basin sinks are OK.
- No building distribution for carbon dioxide, nitrogen, or lab gas.
- Central RO water desired throughout (1 per lab bay) with ultrapure one location each level adjacent to autoclave. A "T" should be placed at one location in each lab for a possible future polisher to be added.
- Glassware cleaning will be distributed to the labs. Provide (1) large deep sink (ADVS) or (1) large double basin sink (PSC) with adjacent drying racks for each lab type.
- Hoods will be placed in alcoves immediately adjacent to labs. (1) Fume hood per 3 lab bays.
- The bulk of dedicated lab storage space should go to the basement. Cabinet and shelving storage in the labs should be maximized to accommodate regularly accessed items.
- A semi-open configuration is preferred for both lab support and lab space. Full walls should exist only where necessary to separate sensitive functions.
- Portable vacuum pumps produce oil/odors, and not preferred. Central compressed and vacuum air preferred with 2 per bay (1 per bench).

- Natural gas will be distributed to the labs, 2 per bay (1 per bench)
- No specialty gases plumbed. All will be by cylinder.
- Both biological waste and chemical waste are collected and stored by the individual users for periodic disposal. No waste goes into the drains. Future process will be similar. A pH neutralization system and/or check point for lab drainage will be provided.
- The building will not require a walk-in freezer. Square footage is required for chest freezers, but no walk in freezer required.
- Walk-in cold rooms should be combined with cold lab work areas and located one per floor.
- The building will require (1) cleaning autoclave on each floor – autoclave location should also be floor's source of ultrapure water.
- The building will require (1) waste autoclave in the basement.
- Solid phenolic cabinet doors/faces were a nice installation at WSU, wood is also nice, metal is vulnerable to corrosion. The building will use wood casework.
- Bench tops will be epoxy except at grinding locations (stainless steel) and in dry labs (plastic laminate).
- Vibration control will be handled by equipment specific isolation tables/bases. The equipment requiring isolation will appear on room data sheets.
- On peer travel, an eye or hose wash was observed every 2-3 bays, and a shower observed every 3 bays. The university does not have any specific lab design requirements or policies. Points for eyewash will occur every other bay with emergency showers every 3 bays.
- Floor drains are not desired where not required due to cost and fume/bacteria concerns.
- Lab equipment w/microelectronics and HVAC controls should be on individual UPS as they are now, and nothing on life safety generator that could be interrupted by periodic testing of generator.
- Central HVAC equipment will be on emergency power as noted in Section 4.
- The lab users have requested ample 110v and 220v circuits to accommodate flexible future changes in equipment and configuration within the labs.

Emergency and Standby Power (observed at University of Idaho is minimum): UPS only used for charcoal filter hoods to avoid shutoff during 10sec transfer to emergency generator power. Emergency and Life Safety Generator is used for emergency lighting, and -80/-20 freezers only. The generator is started weekly, and a power transfer is performed monthly to emergency and life safety circuits only. Equipment that is powered by normal power is not affected since that power remains on during the monthly tests. COA to consider possibility of adding new -80/-20 freezers in the future, and provide power that is likely needed.

Marketing

The marketing department is a collaborative group of writers, editors and production staff. To allow for the synergy resultant from staff working in close proximity and adjacent to support space, a suite of open offices and collaborative work areas are

planned and will be located next to enclosed offices and work rooms. Where work functions have limitations related to acoustics, lighting or security they have been accommodated in a private office or work room.

The marketing suite has an informal relationship with the Executive Administration Suite and thus has not been provided with similar department support spaces (copy, mail, workroom and storage). If this suite is at a distance from the Executive Administration Suite it is highly recommended that the collaborative work area is expanded to housed these functions. Secure suite access is important due to the value of equipment and supplies. As the Executive Administrative Suite serves as reception and drop in visitors scarce, a secure entry is required.

Administrative Suite

The Executive Administration area of the College of Agriculture is composed of five distinct components which work together in close proximity. Proximity adds to the collaborative and congenial nature of the department. The first group of individuals consists of support staff and student employees who support the overall operation of the executive suite. They include the primary reception area, staff assistants and student employees and must be located adjacent to the primary suite entrance, as they are the formal gate keepers. In addition, proximity to the copy/mail/workroom and conference rooms is desired.

The second area consists of the Vice President/Dean, Associate Deans, their support staff and the Executive Council Conference Room. These areas can best be defined as a suite with the Executive Administration Suite which requires close proximity, access to resources of the entire suite, but also allows a bit of removal from direct proximity to the main suite entry. As this area serves a primary public outreach and internal administration function it will require a higher level of finish.

The third area consists of support staff, such as the Business Managers and Development Director. These individuals need close proximity, as illustrated in the affinity diagram in Section 6.1, to their support staff and good access to the VP/Dean and Associate Deans.

The fourth area consists of support spaces, including conference rooms, catering prep area, staff break room, and copy/mail/workroom. These areas support the overall organizational efficiency and need to be reviewed closely during design by the Assistant to the Vice President. As conference room's primary public outreach and internal administration function it will require a higher level of finish.

The fifth area consists of the Academic Advising area, which should be configured as an adjacent and semi-autonomous suite. As it serves a primary student service function it needs an identity distinctly more low key than the entry to the Executive Administration suite. This area consists of a reception/student work area which depends on overflow seating in the adjacent floor lobby and corridor for early semester registration. It is backed up by four advisor offices and a peer to peer hoteling suite. This area would benefit by an adjacency to the small meetings rooms on the fourth level as there is a pressing need for larger conference/meeting space.

SECTION 6

INDIVIDAUL SPACE OUTLINES

6.0 Introduction

The following space outlines describe the requirements of assignable spaces to be contained within the College of Agriculture Building, including the size, use, characteristics, technology, mechanical and electrical components, and equipment and furnishings. The graphic illustration presents one of many options for laying out spaces, but gave the team the opportunity to define a single acceptable layout. From the following space outlines, the programming team is able affix a value of Furniture, Fixtures and Equipment (FF&E). All spaces are quantified and summarized within Section 7 – Furniture, Fixture and Equipment. The space outlines do not include the non-assignable areas of the building, such as common areas: restrooms, circulation, and other supporting spaces. The individual space outlines define the requirements of spaces, not rooms per say. To determine the total square footage for multiple items, such as workstations, refer to the Space Summary in Section 5.

BLANK

SECTION 6

SPACE SUMMARY

1	**EXECUTIVE ADMINISTRATION**			**4,718**
1.1	Vice President / Dean			388
1.1.1	Vice President and Dean	1	220	220
1.1.2	VP Restroom	1	68	68
1.1.3	Assistant to the Vice President	1	100	100
1.2	Cooperative Extension Admin.			568
1.2.1	Associate Vice President/Associate Director	1	160	160
1.2.2	Staff Assistant - open workstation	2	80	160
1.2.3	Student Staff - open workstation	2	64	128
1.2.4	Regional Dir./Prgm Leaders/Specialists Hoteling Suite	1	120	120
1.3	College of Agriculture - Assoc. Admin			964
1.3.1	Assoc. Dean - Research, Dir. Ag Experiment Station	1	160	160
1.3.2	Staff Assistant - open workstation	1	80	80
1.3.3	Associate Dean - Academic Programs	1	160	160
1.3.4	Academic Advising			
1.3.4.1	Academic Programs Advisor	1	100	100
1.3.4.2	Advisor	3	100	300
1.3.5	Staff Assistant Workstation / Reception	1	100	100
1.3.6	Program Leader - open workstation	1	64	64
1.4	Development Director			240
1.4.1	Development Director	1	160	160
1.4.2	Staff Assistant - open workstation	1	80	80
1.5	Business Manager			400
1.5.1	Business Manager - COA	1	120	120
1.5.2	Business Manager - Extension	1	120	120
1.5.3	Staff Assistant - open workstation	2	80	160
1.6	Admin Support Area			2,158
1.6.1	Reception	1	180	180
1.6.2	Copy/Mail/Workroom/Storage	1	250	250
1.6.3	Kitchen / Breakroom	1	100	100
1.6.4	Catering Prep	1	80	80
1.6.5	Conference Room	1	420	420
1.6.6	Conference Room, Large	1	768	768
1.6.7	Exec. Council Conference Room	1	360	360

BLANK

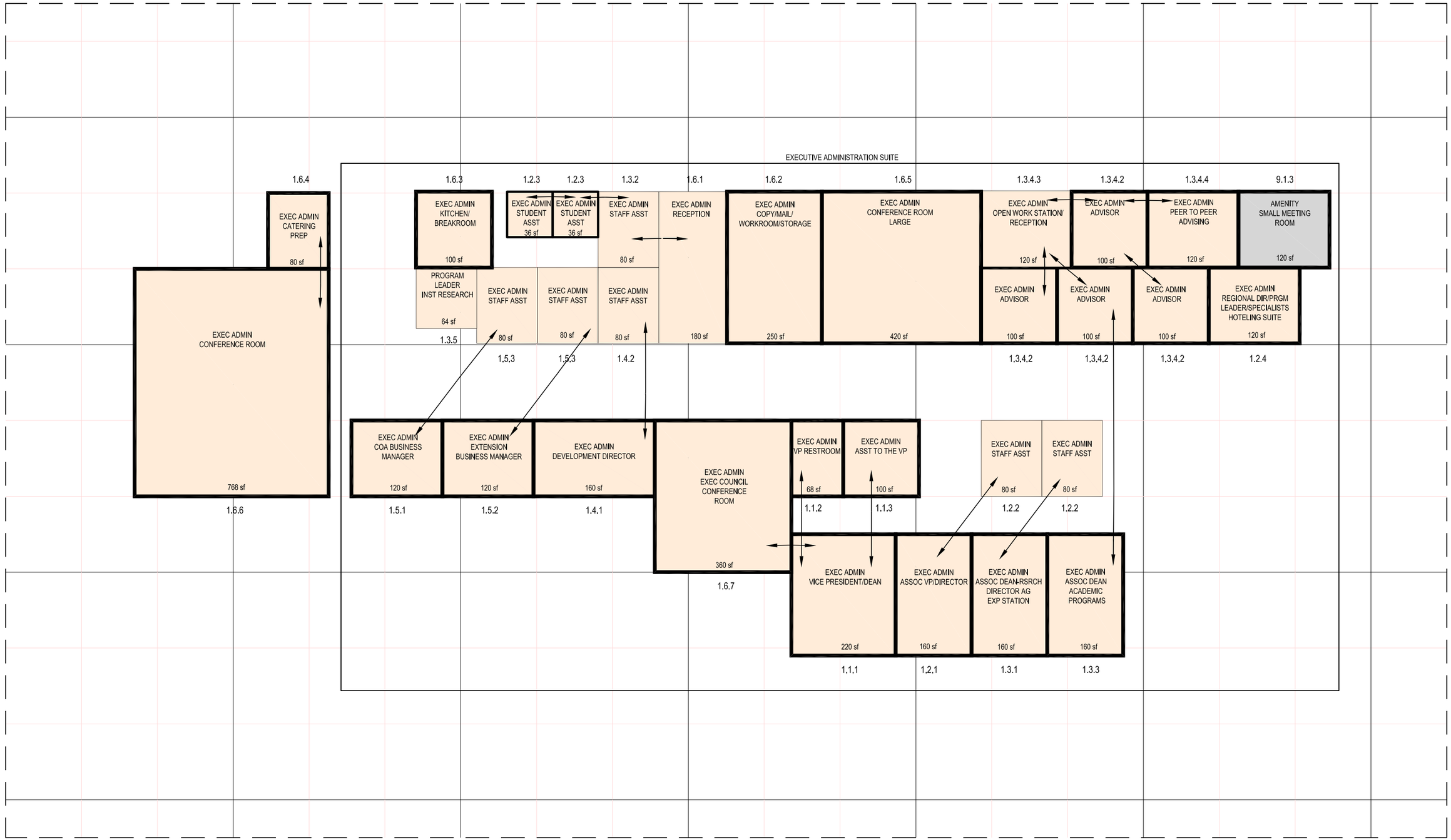

USU COA/ARS PROGRAM - EXEC ADMIN AFFINITY MATRIX

BLANK

BLANK

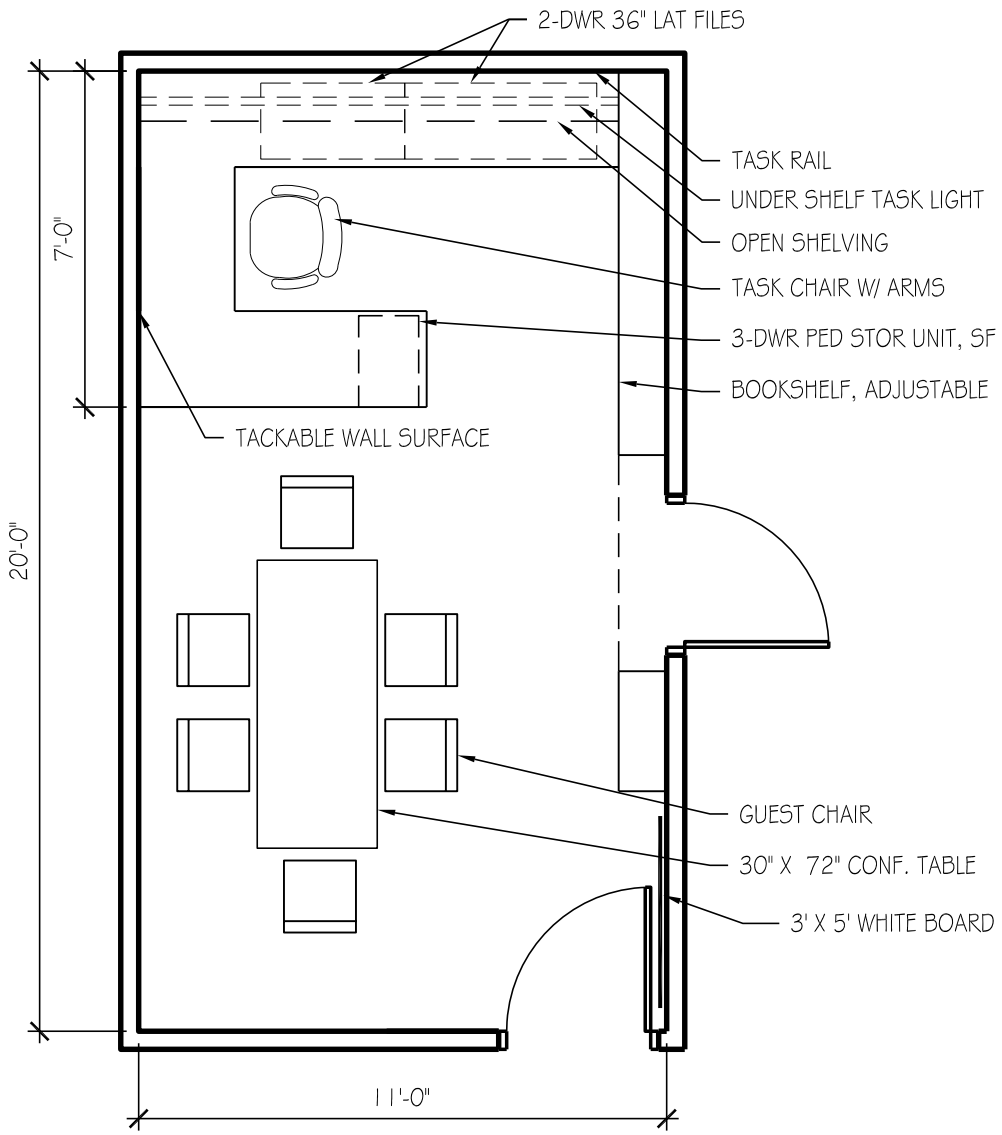

OFFICE - 220 SF

USU Agriculture Building

ROOM DATA SHEET DETAIL **Executive Administration**

Vice President/Dean

1.1.1 Vice President and Dean -

SPACE INFORMATION

Room Function: General office and meeting work

Adjacencies:
Assistant to the Vice President (1.1.3)
VP Restroom (1.1.2)
Near Associate VP (1.2.1)
Near Associate Dean-Research (1.3.1)
Near Associate Dean-Academic Programs (1.3.3)

Special Requirements:
Private VP restroom (1.1.2), upgraded finishes, conference phone at conference table

Access: Public

Room Utilization: 5 days a week, 8:00 AM to 5:00 PM

General Notes: None

ROOM SIZE AND CAPACITY

Proposed Area:	220 NSF	**Room/Space Quantity:**	1	**Total Area:**	220
Assigned Capacity:	1 Occupant(s)	**Unassigned Capacity:**	38 Guest(s)	**Total Capacity:**	39

FINISHES, DOORS, AND WINDOWS

Floor Finish: Carpet-tile

Wall Finish: Gypsum board (painted)

Base Finish: Integral Coved

Doors:

Type:	Single	**Height:**	84"
Width:	None	**Vision Panel:**	N/A

Ceiling Treatment: Gypsum board and acoustical lay-in tiles

Ceiling Height: 8' minimum

Acoustic Treatment: Acoustic seperation from adjacent spaces

Windows:

Natural Lighting: Required (provide shades for control)

Room Skylight: None

MECHANICAL/ELECTRICAL

HVAC: Standard, space temperature control

Plumbing: None

Fire Protection: Sprinkler

Security: Keyed lock at entrance doors

Electrical: 120V wall outlets

AV Requirements: None

Wire Management: Wall outlets

Data Management: Wireless network access

Artificial Lighting: Direct/indirect fluorescent and task lighting

Telephone: Telephone outlets per occupant

EQUIPMENT AND FURNISHINGS

Equipment

(1) Computer system (provided by owner)
(1) Printer (provided by owner)

Furniture

(1) 30" x 72" executive desk
(1) 22 LF Work surface, system furniture
(1) Task chair
(4) Guest chair
(2) 2 Drawer 36" lateral file, system furniture
(1) 3 Drawer PED file
(1) Task slatwall accessories package, system furniture
(1) Shelf organizer package, system furniture
(1) 12-1/2" Deep open shelving
(1) 68 LF Book Shelf 15.5" deep
(1) 11 LF Under shelf task light, s.f.
(1) Desk task light
(1) Door mounted coat rack
(1) Waste receptacle
(1) 6 LF task slatwall

COPYRIGHT © 2009 CRSA

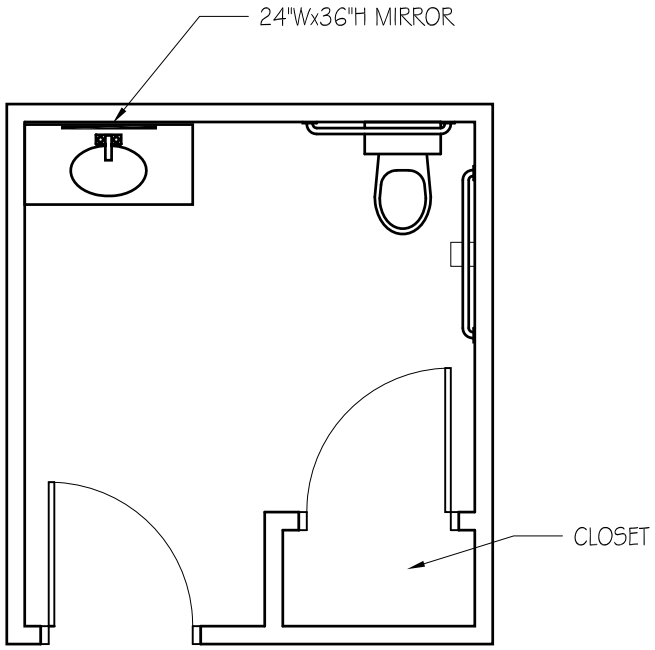

VP RESTROOM
68 SF

USU Agriculture Building

ROOM DATA SHEET DETAIL **Executive Administration**

Vice President/Dean

1.1.2 VP Restroom -

SPACE INFORMATION

Room Function: Restroom

Adjacencies: Vice President and Dean (1.1.1)

Special Requirements: None

Access: Public

Room Utilization: 5 days a week, 8:00 AM to 5:00 PM

General Notes: None

ROOM SIZE AND CAPACITY

Proposed Area:	68 NSF	**Room/Space Quantity:**	1	**Total Area:**	68
Assigned Capacity:	1 Occupant(s)	**Unassigned Capacity:**	0 Guest(s)	**Total Capacity:**	1

FINISHES, DOORS, AND WINDOWS

Floor Finish: Ceramic tile

Wall Finish: 4' tile wainscot with gypsum (painted)

Base Finish: Ceramic Tile

Doors:

Type:	Single	**Height:**	84"
Width:	36"	**Vision Panel:**	N/A

Ceiling Treatment: Gypsum board (painted)

Ceiling Height: 8' minimum

Acoustic Treatment: Acoustic seperation from adjacent spaces

Windows:

Natural Lighting:	n/a
Room Skylight:	N/A

MECHANICAL/ELECTRICAL

HVAC:	Standard, direct vent	**AV Requirements:**	None
Plumbing:	Sink (standard) with hot/cold water, watercloset,	**Wire Management:**	Wall outlets
Fire Protection:	Sprinkler	**Data Management:**	None
Security:	Keyed lock at entrance doors	**Artificial Lighting:**	Direct/indirect fluorescent
Electrical:	120V wall outlets	**Telephone:**	None

EQUIPMENT AND FURNISHINGS

Equipment

Furniture

COPYRIGHT © 2009 CRSA

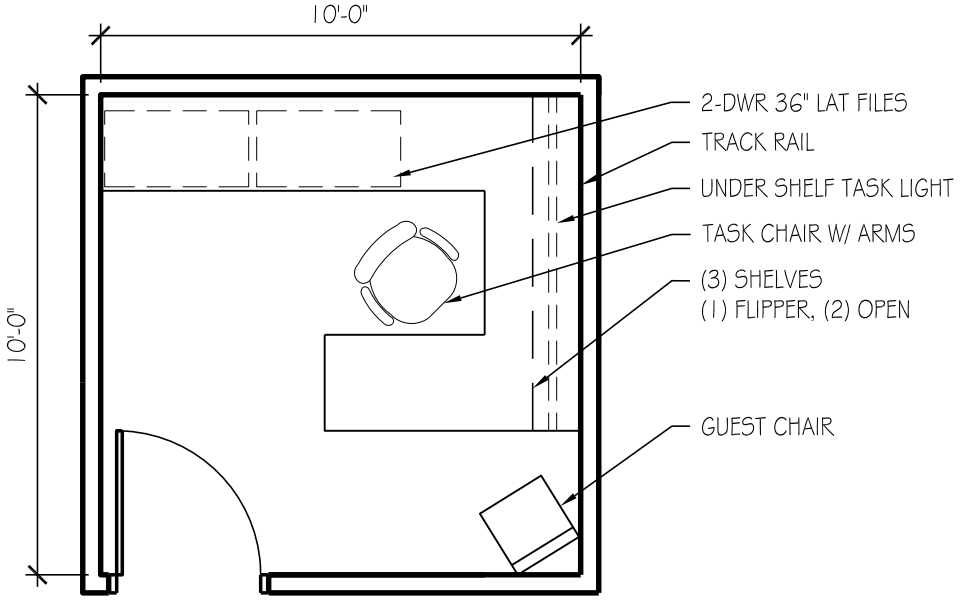

1.1.3
WORKSTATION
100 SF

USU Agriculture Building

ROOM DATA SHEET DETAIL **Executive Administration**

Vice President/Dean

1.1.3 Assistant to the Vice President -

SPACE INFORMATION

Room Function: General office and meeting work

Adjacencies: Vice President and Dean (1.1.1)

Special Requirements: None

Access: Public

Room Utilization: 5 days a week, 8:00 AM to 5:00 PM

General Notes: None

ROOM SIZE AND CAPACITY

Proposed Area:	100 NSF	**Room/Space Quantity:**	1	**Total Area:**	100
Assigned Capacity:	1 Occupant(s)	**Unassigned Capacity:**	1 Guest(s)	**Total Capacity:**	2

FINISHES, DOORS, AND WINDOWS

Floor Finish: Carpet-tile

Wall Finish: Gypsum board (painted)

Base Finish: Integral Coved

Doors:

Type:	Single	**Height:**	84"
Width:	36"	**Vision Panel:**	Frosted

Ceiling Treatment: Gypsum board and acoustical lay-in tiles

Ceiling Height: 8' minimum

Acoustic Treatment: Acoustic seperation from adjacent spaces

Windows:

Natural Lighting:	Required
Room Skylight:	Frosted Panel

MECHANICAL/ELECTRICAL

HVAC: Standard, space temperature control

Plumbing: None

Fire Protection: Sprinkler

Security: Keyed lock at entrance doors

Electrical: 120V wall outlets

AV Requirements: None

Wire Management: Wall outlets

Data Management: Tele/data port at each workstation

Artificial Lighting: Direct/indirect fluorescent and task lighting

Telephone: Telephone outlets per occupant

EQUIPMENT AND FURNISHINGS

Equipment

(1) Computer system (provided by owner)
(1) Printer (provided by owner)

Furniture

(1) 18 LF Work surface
(1) Task chair
(1) Guest chair
(2) 2 Drawer 36" lateral file
(1) 7 LF task slatwall
(1) Task slatwall accessories package
(1) 14 LF 15-1/2" Deep open shelving, system furniture
(1) 7 LF 15-1/2" Deep enclosed shelving with flipper door, s.f.
(1) Under shelf task light
(1) Door mounted coat rack
(1) Waste receptacle

COPYRIGHT © 2009 CRSA

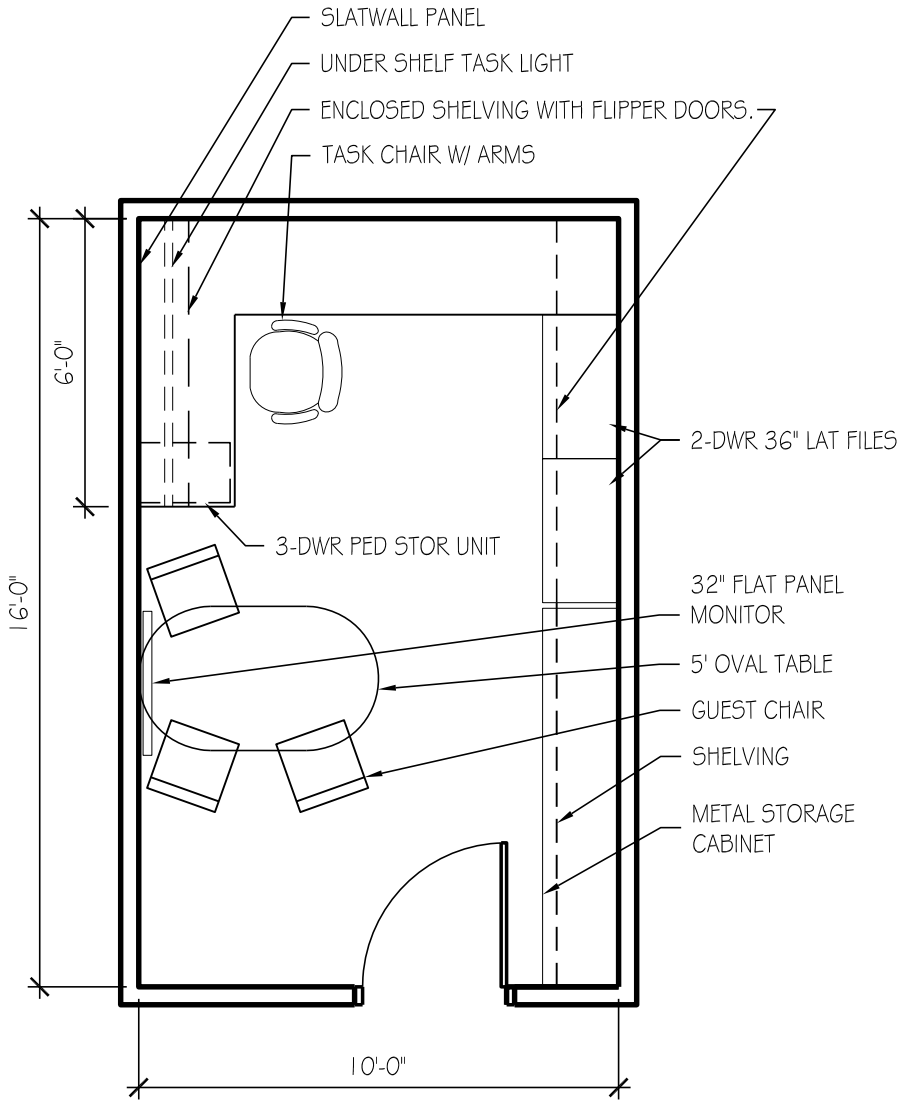

OFFICE - 160 SF

USU Agriculture Building

ROOM DATA SHEET DETAIL **Executive Administration**

Cooperative Extension Administration

1.2.1 Associate Vice President/Associate Director -

SPACE INFORMATION

Room Function: General office work

Adjacencies: Near Vice President and Dean (1.1.1)

Special Requirements: None

Access: Public

Room Utilization: 5 days a week, 8:00 AM to 5:00 PM

General Notes: None

ROOM SIZE AND CAPACITY

Proposed Area:	160 NSF	**Room/Space Quantity:**	1	**Total Area:**	160
Assigned Capacity:	1 Occupant(s)	**Unassigned Capacity:**	3 Guest(s)	**Total Capacity:**	4

FINISHES, DOORS, AND WINDOWS

Floor Finish: Carpet-tile

Wall Finish: Gypsum board (painted)

Base Finish: Integral Coved

Doors:

Type:	Single	**Height:**	84"
Width:	36"	**Vision Panel:**	Frosted

Ceiling Treatment: Suspended acoustical lay-in tiles

Ceiling Height: 8' minimum

Acoustic Treatment: Acoustic seperation from adjacent spaces

Windows:

Natural Lighting: Required (provide shades for control)

Room Skylight: Frosted Panel

MECHANICAL/ELECTRICAL

HVAC: Standard, space temperature control

Plumbing: None

Fire Protection: Sprinkler

Security: Keyed lock at entrance doors

Electrical: 120V wall outlets

AV Requirements: None

Wire Management: Wall outlets

Data Management: Tele/data outlet(s)

Artificial Lighting: Direct/indirect fluorescent and task lighting

Telephone: Telephone outlets per occupant

EQUIPMENT AND FURNISHINGS

Equipment

(1) Computer system (provided by owner)
(1) Printer (provided by owner)
(1) 32" Flat panel monitor

Furniture

(1) 16 LF Work surface, system furniture
(1) 5' Oval conference table on casters
(1) Task chair
(3) Guest chair
(1) 3 Drawer PED file
(2) 2 Drawer 36" lateral file, s.f.
(1) 48 LF Adjustable height shelving
(1) 24 LF 12-1/2" Deep open shelving with flipper doors, s.f.
(1) Under shelf task light
(1) 8 LF task slatwall
(1) Task slatwall accessories package
(1) Door mounted coat rack
(1) Waste receptacle
(1) Desk task light
(1) 8 LF metal base cabinet

COPYRIGHT © 2009 CRSA

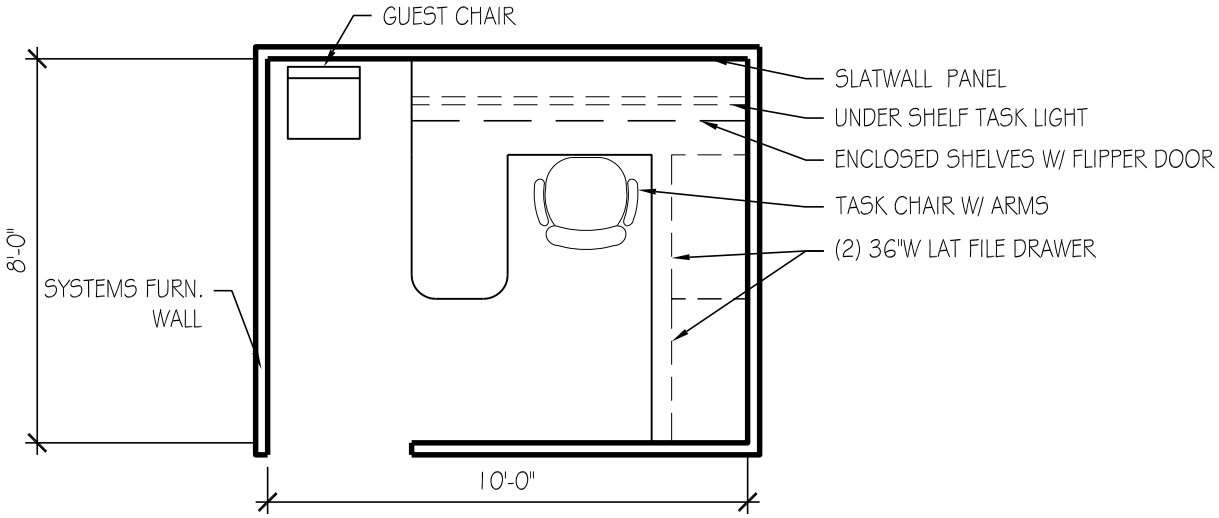

A

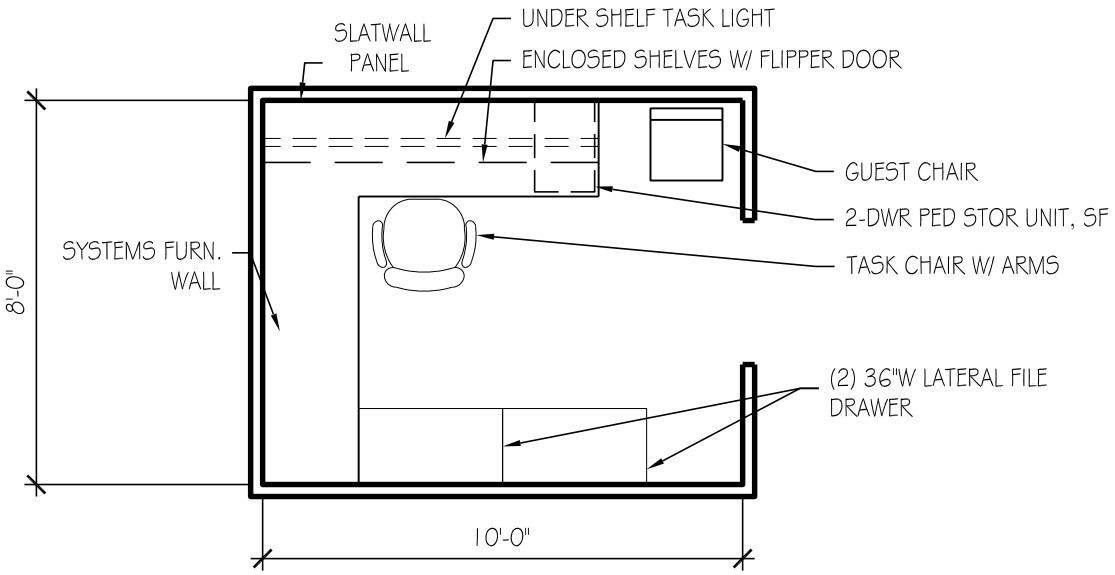

B

OPEN WORKSTATION

80 SF

USU Agriculture Building

ROOM DATA SHEET DETAIL **Executive Administration**

Cooperative Extension Administration

1.2.2 Staff Assistant - Open Workstation -

SPACE INFORMATION

Room Function: General office work

Adjacencies: Near Associate VP (1.2.1)

Special Requirements: None

Access: Public

Room Utilization: 5 days a week, 8:00 AM to 5:00 PM

General Notes: None

ROOM SIZE AND CAPACITY

Proposed Area:	80 NSF	**Room/Space Quantity:**	2	**Total Area:**	160
Assigned Capacity:	2 Occupant(s)	**Unassigned Capacity:**	1 Guest(s)	**Total Capacity:**	3

FINISHES, DOORS, AND WINDOWS

Floor Finish: Carpet-tile

Wall Finish: Systems furniture

Base Finish: Systems Furniture

Doors:

- **Type:** N/A
- **Height:** None
- **Width:** None
- **Vision Panel:** N/A

Ceiling Treatment: Suspended acoustical lay-in tiles

Ceiling Height: 8' minimum

Acoustic Treatment: Systems Furniture

Windows:

- **Natural Lighting:** Not required
- **Room Skylight:** N/A

MECHANICAL/ELECTRICAL

HVAC: Standard

Plumbing: None

Fire Protection: Sprinkler

Security: Keyed lock on all securable storage devices

Electrical: 120V floor outlet(s)

AV Requirements: None

Wire Management: Wall outlets

Data Management: Tele/data outlet(s)

Artificial Lighting: Direct/indirect fluorescent and task lighting

Telephone: Telephone outlets per occupant

EQUIPMENT AND FURNISHINGS

Equipment

(1) Computer system (provided by owner)

Furniture

(1) 15 LF Work surface
(2) 2 Drawer 36" lateral file
(1) 14 LF 15-1/2" Deep enclosed shelf with flipper door, s.f.
(1) 7 LF Task light
(1) 7 LF task slatwall
(1) Task slatwall accessories package
(1) Task chair
(1) Guest chair
(1) Waste receptacle
(1) 34 LF systems furniture panels

COPYRIGHT © 2009 CRSA

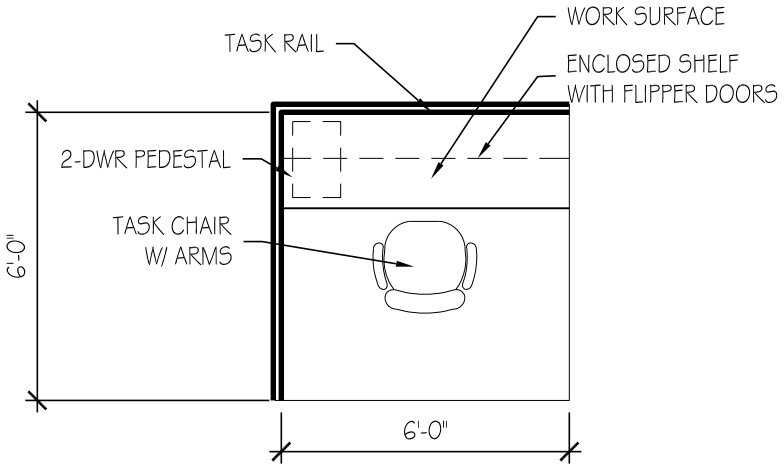

OPEN WORKSTATION

36 SF

USU Agriculture Building

ROOM DATA SHEET DETAIL **Executive Administration**

Cooperative Extension Administration

1.2.3 Student Staff - Open Workstation **-**

SPACE INFORMATION

Room Function: General office work

Adjacencies:

Special Requirements:
None

Access: Public

Room Utilization: 5 days a week, 8:00 AM to 5:00 PM

General Notes: None

ROOM SIZE AND CAPACITY

Proposed Area:	36 NSF	**Room/Space Quantity:**	2	**Total Area:**	72
Assigned Capacity:	1 Occupant(s)	**Unassigned Capacity:**	29 Guest(s)	**Total Capacity:**	30

FINISHES, DOORS, AND WINDOWS

Floor Finish: Carpet-tile

Wall Finish: Systems furniture

Base Finish: Systems Furniture

Doors:

Type:	N/A	**Height:**	None
Width:	None	**Vision Panel:**	N/A

Ceiling Treatment: Suspended acoustical lay-in tiles

Ceiling Height: 8' minimum

Acoustic Treatment: Systems Furniture

Windows:

Natural Lighting:	Not required
Room Skylight:	N/A

MECHANICAL/ELECTRICAL

HVAC:	Standard	**AV Requirements:**	None
Plumbing:	None	**Wire Management:**	Wall outlets
Fire Protection:	Sprinkler	**Data Management:**	Tele/data outlet(s)
Security:	Keyed lock on all securable storage devices	**Artificial Lighting:**	Direct/indirect fluorescent and task lighting
Electrical:	120V floor outlet(s)	**Telephone:**	Telephone outlets per occupant

EQUIPMENT AND FURNISHINGS

Equipment

(1) Computer system (provided by owner)

Furniture

(1) 6 LF work surface
(1) 12 LF system furniture panels
(1) 3 Drawer PED file
(1) Task chair
(1) 6 LF task slatwall
(1) 6 LF enclosed shelving with flipper doors, s.f.
(1) Under shelf task light
(1) Task slatwall accessories package
(1) Waste receptacle

COPYRIGHT © 2009 CRSA

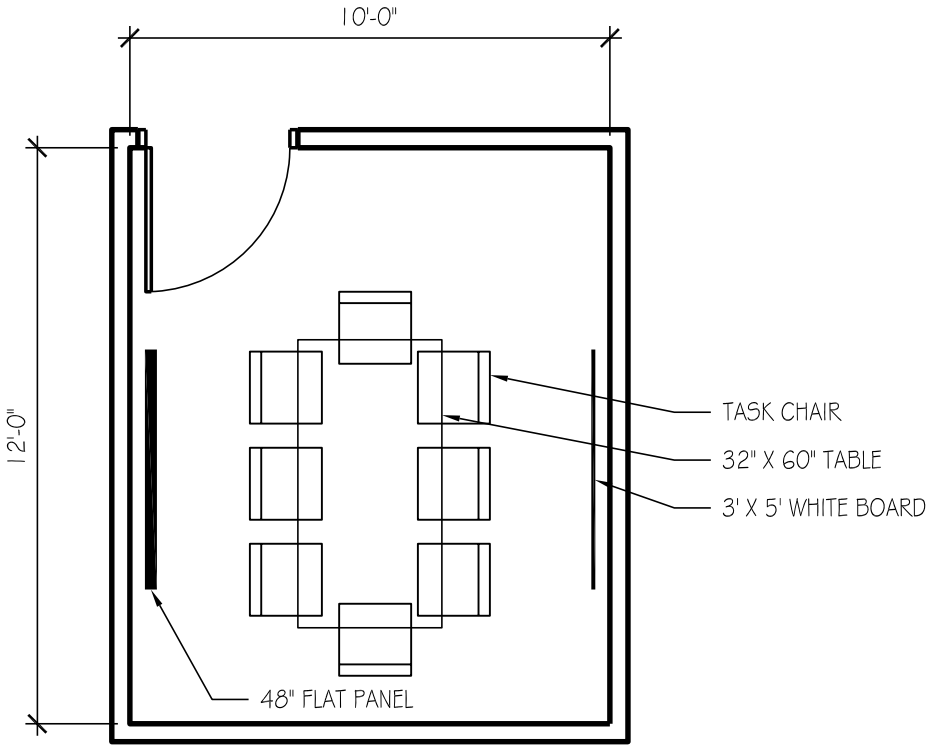

HOTELING SPACE - 120 SF

USU Agriculture Building

ROOM DATA SHEET DETAIL **Executive Administration**

Cooperative Extension Administration

1.2.4 Regional Director/Program Leaders/Spec. Hoteling -

SPACE INFORMATION

Room Function: General office work

Adjacencies:

Special Requirements:
None

Access: Public

Room Utilization: 5 days a week, 8:00 AM to 5:00 PM

General Notes: None

ROOM SIZE AND CAPACITY

Proposed Area:	120 NSF	**Room/Space Quantity:**	1	**Total Area:**	120
Assigned Capacity:	1 Occupant(s)	**Unassigned Capacity:**	8 Guest(s)	**Total Capacity:**	9

FINISHES, DOORS, AND WINDOWS

Floor Finish: Carpet-tile

Wall Finish: Gypsum board (painted)

Base Finish: Integral Coved

Doors:

Type:	Single	**Height:**	84"
Width:	36"	**Vision Panel:**	Clear

Ceiling Treatment: Suspended acoustical lay-in tiles

Ceiling Height: 8' minimum

Acoustic Treatment: Acoustic seperation from adjacent spaces

Windows:

Natural Lighting:	Not required
Room Skylight:	Vision Panel

MECHANICAL/ELECTRICAL

HVAC:	Standard, space temperature control	**AV Requirements:**	None
Plumbing:	None	**Wire Management:**	Wall outlets
Fire Protection:	Sprinkler	**Data Management:**	Tele/data outlet(s)
Security:	Keyed lock at entrance doors	**Artificial Lighting:**	Direct/indirect fluorescent and task lighting
Electrical:	120V floor outlet(s)	**Telephone:**	Telephone outlets per occupant

EQUIPMENT AND FURNISHINGS

Equipment

(1) 48" Flat panel monitor
(1) conference telephone

Furniture

(1) 30" x 60" Table
(8) Task chair
(1) 3' x 5' White board
(1) Waste receptacle

COPYRIGHT © 2009 CRSA

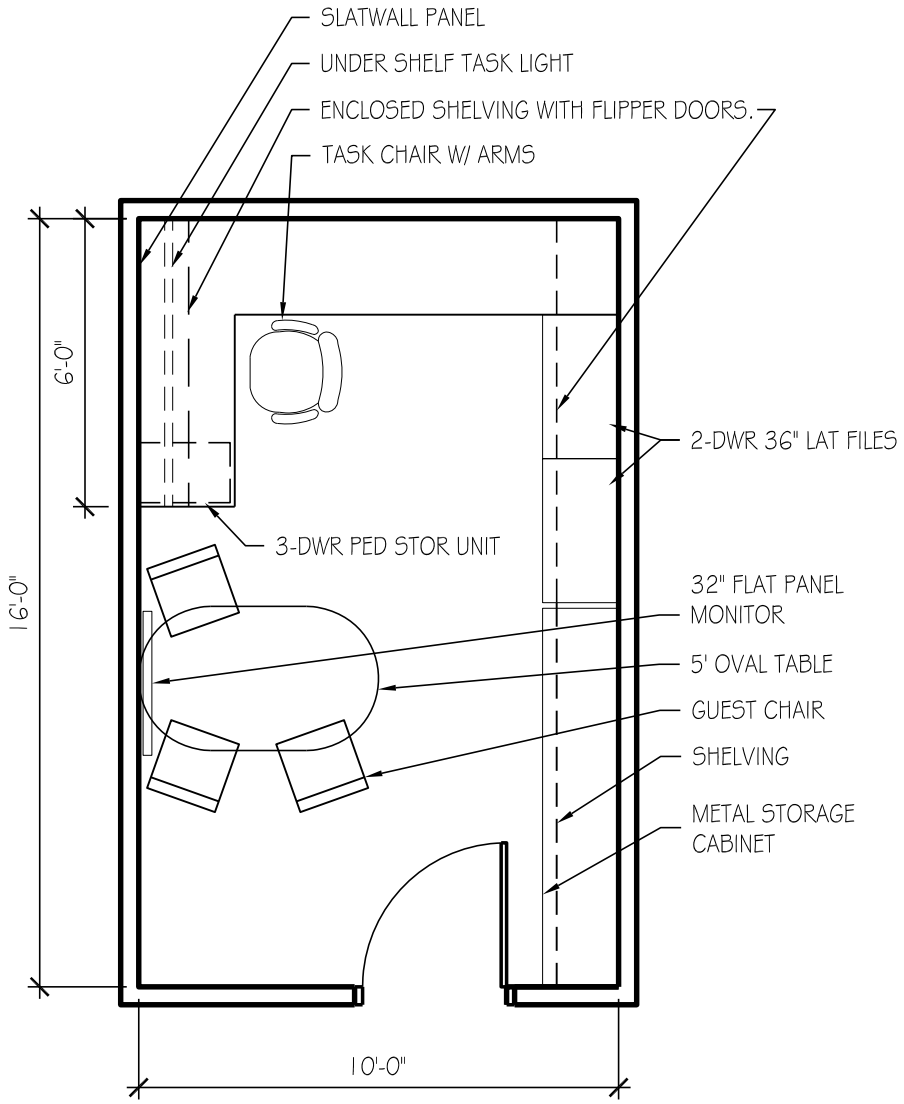

OFFICE - 160 SF

USU Agriculture Building

ROOM DATA SHEET DETAIL **Executive Administration**

Cooperative Extension Administration

1.3.1 Associate Vice President/Associate Director -

SPACE INFORMATION

Room Function: General office work

Adjacencies: Vice President and Dean (1.1.1)

Special Requirements: None

Access: Public

Room Utilization: 5 days a week, 8:00 AM to 5:00 PM

General Notes: None

ROOM SIZE AND CAPACITY

Proposed Area:	160 NSF	**Room/Space Quantity:**	1	**Total Area:**	160
Assigned Capacity:	1 Occupant(s)	**Unassigned Capacity:**	3 Guest(s)	**Total Capacity:**	4

FINISHES, DOORS, AND WINDOWS

Floor Finish: Carpet-tile

Wall Finish: Gypsum board (painted)

Base Finish: Integral Coved

Doors:

Type:	Single	**Height:**	84"
Width:	36"	**Vision Panel:**	Frosted

Ceiling Treatment: Suspended acoustical lay-in tiles

Ceiling Height: 8' minimum

Acoustic Treatment: Acoustic seperation from adjacent spaces

Windows:

Natural Lighting: Required (provide shades for control)

Room Skylight: Frosted Panel

MECHANICAL/ELECTRICAL

HVAC: Standard, space temperature control

Plumbing: None

Fire Protection: Sprinkler

Security: Keyed lock at entrance doors

Electrical: 120V wall outlets

AV Requirements: None

Wire Management: Wall outlets

Data Management: Tele/data outlet(s)

Artificial Lighting: Direct/indirect fluorescent and task lighting

Telephone: Telephone outlets per occupant

EQUIPMENT AND FURNISHINGS

Equipment

(1) Computer system (provided by owner)
(1) Printer (provided by owner)
(1) 32" Flat panel monitor

Furniture

(1) 16 LF Work surface, system furniture
(1) 5' Oval conference table on casters
(1) Task chair
(3) Guest chair
(1) 3 Drawer PED file
(2) 2 Drawer 36" lateral file, s.f.
(1) 48 LF Adjustable height shelving
(1) 24 LF 12-1/2" Deep open shelving with flipper doors, s.f.
(1) Under shelf task light
(1) 8 LF task slatwall
(1) Task slatwall accessories package
(1) Door mounted coat rack
(1) Waste receptacle
(1) Desk task light
(1) 8 LF metal base cabinet

COPYRIGHT © 2009 CRSA

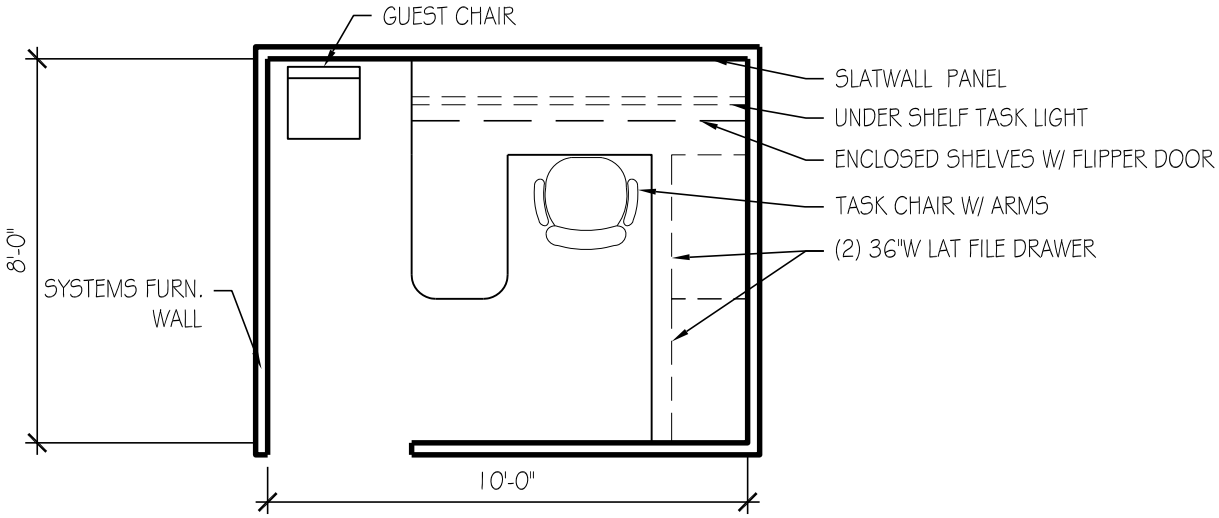

A

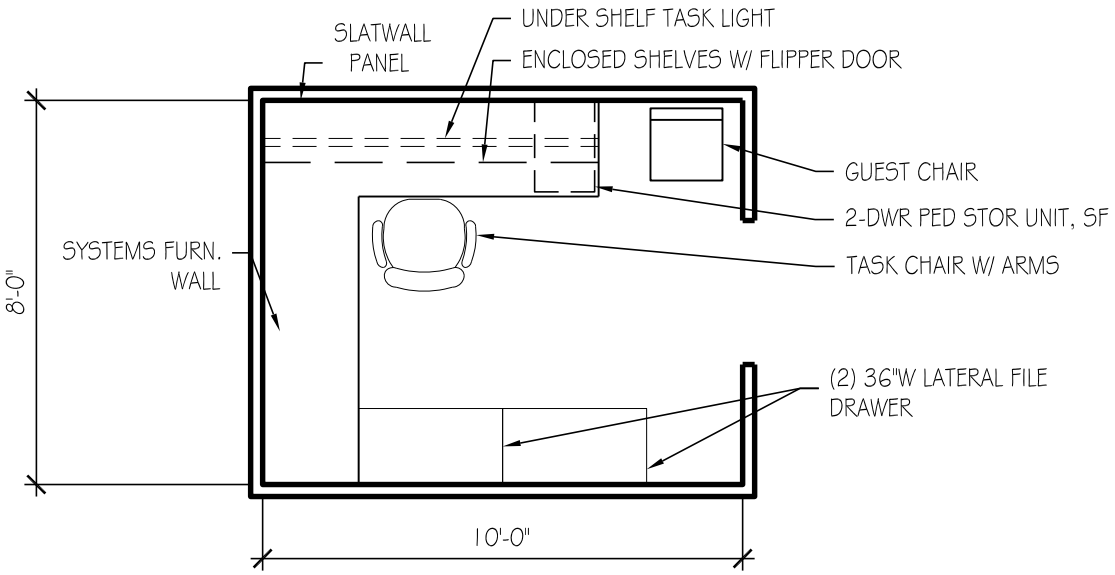

B

OPEN WORKSTATION

80 SF

USU Agriculture Building

ROOM DATA SHEET DETAIL **Executive Administration**

COA Associate Administration

1.3.2 Staff Assistant - Open Workstation -

SPACE INFORMATION

Room Function: General office work

Adjacencies:

Special Requirements:
None

Access: Public

Room Utilization: 5 days a week, 8:00 AM to 5:00 PM

General Notes: None

ROOM SIZE AND CAPACITY

Proposed Area:	80 NSF	**Room/Space Quantity:**	1	**Total Area:**	80
Assigned Capacity:	1 Occupant(s)	**Unassigned Capacity:**	1 Guest(s)	**Total Capacity:**	2

FINISHES, DOORS, AND WINDOWS

Floor Finish: Carpet-tile

Wall Finish: Systems furniture

Base Finish: Systems Furniture

Doors:

Type:	N/A	**Height:**	None
Width:	None	**Vision Panel:**	N/A

Ceiling Treatment: Suspended acoustical lay-in tiles

Ceiling Height: 8' minimum

Acoustic Treatment: Systems Furniture

Windows:

Natural Lighting:	Not required
Room Skylight:	N/A

MECHANICAL/ELECTRICAL

HVAC: Standard

Plumbing: None

Fire Protection: Sprinkler

Security: None

Electrical: 120V wall outlets

AV Requirements: None

Wire Management: Wall outlets

Data Management: Tele/data outlet(s)

Artificial Lighting: Direct/indirect fluorescent and task lighting

Telephone: Telephone outlets per occupant

EQUIPMENT AND FURNISHINGS

Equipment

(1) Computer system (provided by owner)

Furniture

(1) 15 LF Work surface
(2) 2 Drawer 36" lateral file
(1) 14 LF 15-1/2" Deep enclosed shelf with flipper door, s.f.
(1) 7 LF Task light
(1) 7 LF task slatwall
(1) Task slatwall accessories package
(1) Task chair
(1) Guest chair
(1) Waste receptacle
(1) 34 LF systems furniture panels

COPYRIGHT © 2009 CRSA

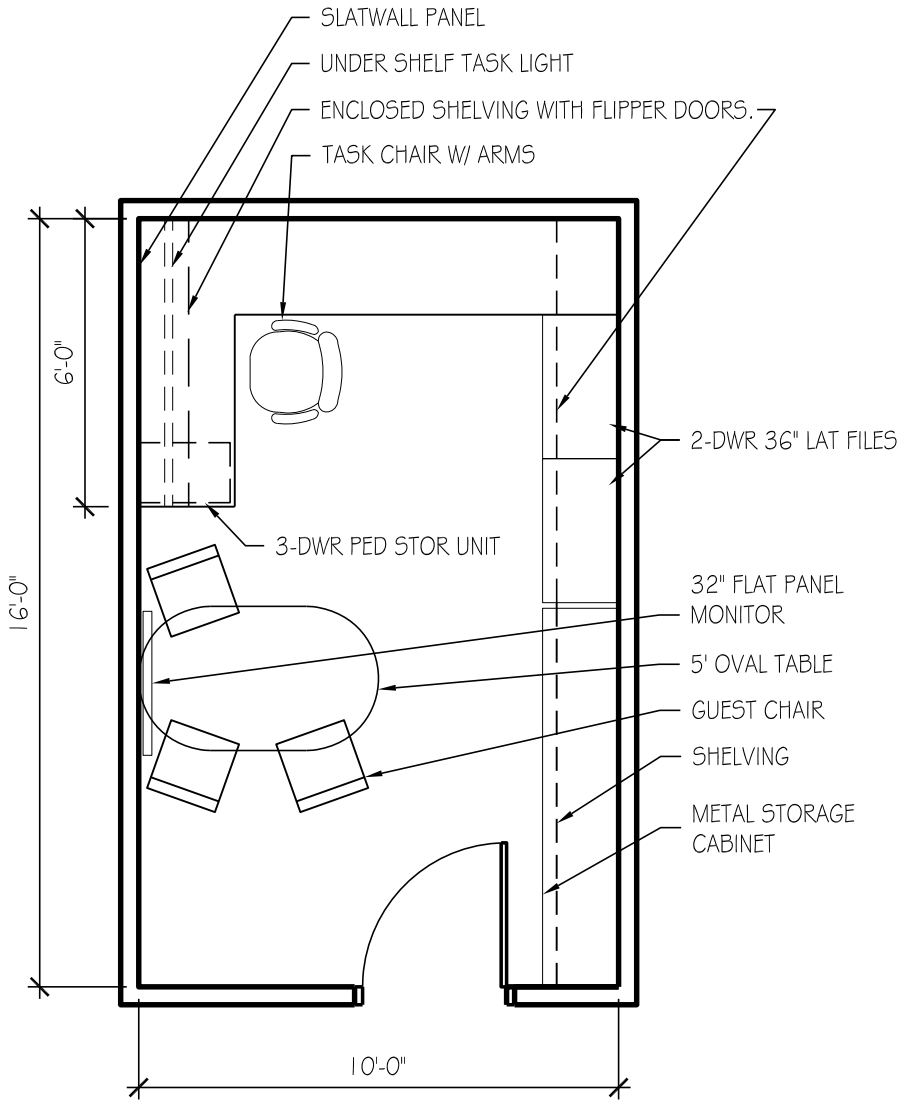

OFFICE - 160 SF

USU Agriculture Building

ROOM DATA SHEET DETAIL **Executive Administration**

COA Associate Administration

1.3.3 Associate Dean - Academic Programs -

SPACE INFORMATION

Room Function: General office work

Adjacencies: Vice President and Dean (1.1.1)

Special Requirements: None

Access: Public

Room Utilization: 5 days a week, 8:00 AM to 5:00 PM

General Notes: None

ROOM SIZE AND CAPACITY

Proposed Area:	160 NSF	**Room/Space Quantity:**	1	**Total Area:**	160
Assigned Capacity:	1 Occupant(s)	**Unassigned Capacity:**	3 Guest(s)	**Total Capacity:**	4

FINISHES, DOORS, AND WINDOWS

Floor Finish: Carpet-tile

Wall Finish: Gypsum board (painted)

Base Finish: Integral Coved

Doors:

Type:	Single	**Height:**	84"
Width:	36"	**Vision Panel:**	Frosted

Ceiling Treatment: Suspended acoustical lay-in tiles

Ceiling Height: 8' minimum

Acoustic Treatment: Acoustic seperation from adjacent spaces

Windows:

Natural Lighting: Required (provide shades for control)

Room Skylight: Frosted Panel

MECHANICAL/ELECTRICAL

HVAC: Standard, space temperature control

Plumbing: None

Fire Protection: Sprinkler

Security: Keyed lock at entrance doors

Electrical: 120V wall outlets

AV Requirements: None

Wire Management: Wall outlets

Data Management: Tele/data outlet(s)

Artificial Lighting: Direct/indirect fluorescent and task lighting

Telephone: Telephone outlets per occupant

EQUIPMENT AND FURNISHINGS

Equipment

(1) Computer system (provided by owner)
(1) Printer (provided by owner)
(1) 32" Flat panel monitor

Furniture

(1) 16 LF Work surface, system furniture
(1) 5' Oval conference table on casters
(1) Task chair
(3) Guest chair
(1) 3 Drawer PED file
(2) 2 Drawer 36" lateral file, s.f.
(1) 48 LF Adjustable height shelving
(1) 24 LF 12-1/2" Deep open shelving with flipper doors, s.f.
(1) Under shelf task light
(1) 8 LF task slatwall
(1) Task slatwall accessories package
(1) Door mounted coat rack
(1) Waste receptacle
(1) Desk task light
(1) 8 LF metal base cabinet

COPYRIGHT © 2009 CRSA

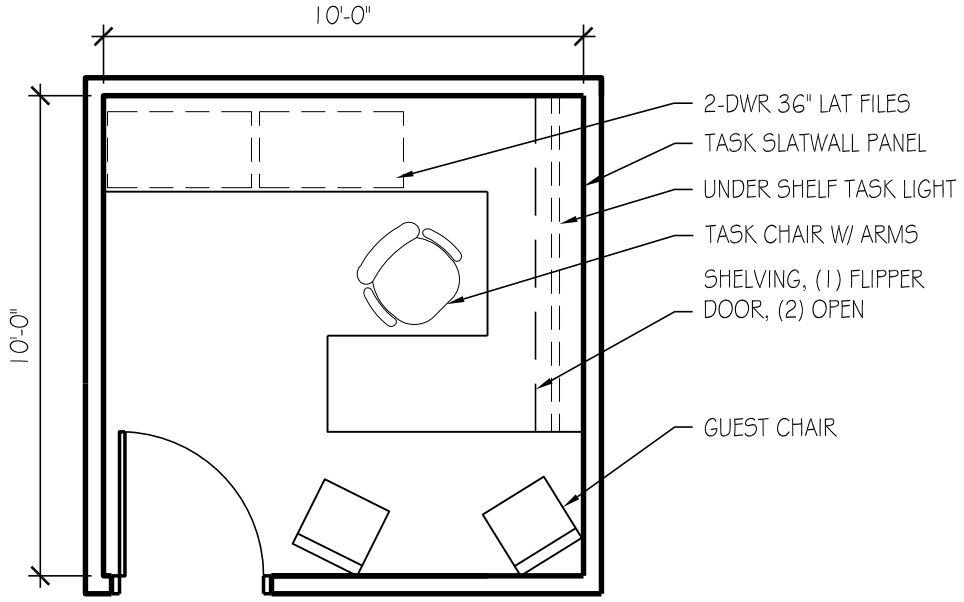

WORKSTATION

100 SF

USU Agriculture Building

ROOM DATA SHEET DETAIL **Executive Administration**

COA Associate Administration

1.3.4.1 Academic Programs Advisor -

SPACE INFORMATION

Room Function: General office work, advising

Adjacencies: Near Associate Dean - Research (1.3.1)

Special Requirements: None

Access: Public

Room Utilization: 5 days a week, 8:00 AM to 5:00 PM

General Notes: None

ROOM SIZE AND CAPACITY

Proposed Area:	100 NSF	**Room/Space Quantity:**	1	**Total Area:**	100
Assigned Capacity:	1 Occupant(s)	**Unassigned Capacity:**	1 Guest(s)	**Total Capacity:**	2

FINISHES, DOORS, AND WINDOWS

Floor Finish: Carpet-tile

Wall Finish: Gypsum board (painted)

Base Finish: Integral Coved

Doors:

Type:	Single	**Height:**	84"
Width:	36"	**Vision Panel:**	Frosted

Ceiling Treatment: Suspended acoustical lay-in tiles

Ceiling Height: 8' minimum

Acoustic Treatment: Acoustic seperation from adjacent spaces

Windows:

Natural Lighting:	Desired, but not required
Room Skylight:	Vision Panel

MECHANICAL/ELECTRICAL

HVAC:	Standard, space temperature control	**AV Requirements:**	None
Plumbing:	None	**Wire Management:**	Wall outlets
Fire Protection:	Sprinkler	**Data Management:**	Tele/data outlet(s)
Security:	Keyed lock at entrance doors	**Artificial Lighting:**	Direct/indirect fluorescent and task lighting
Electrical:	120V wall outlets	**Telephone:**	Telephone outlets per occupant

EQUIPMENT AND FURNISHINGS

Equipment

(1) Computer system (provided by owner)
(1) Printer (provided by owner)

Furniture

(1) 18 LF Work surface
(1) Task chair
(2) Guest chair
(2) 2 Drawer 36" lateral file
(1) 7 LF task slatwall
(1) Task slatwall accessories package
(1) 14 LF 12-1/2" Deep open shelving, s.f.
(1) 7 LF 15-1/2" Deep enclosed shelving with flipper door, s.f.
(1) Under shelf task light
(1) Door mounted coat rack
(1) Waste receptacle

COPYRIGHT © 2009 CRSA

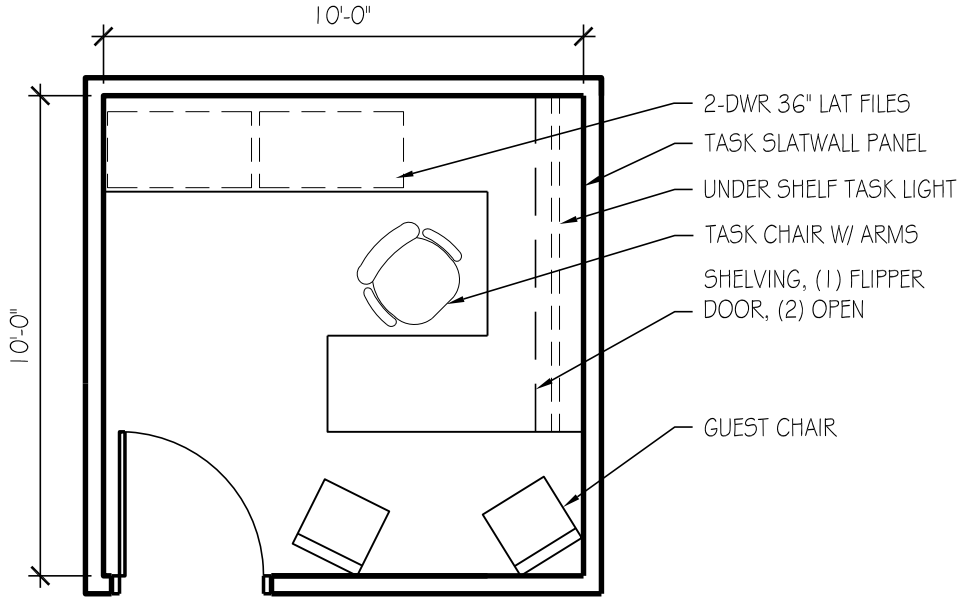

WORKSTATION

100 SF

USU Agriculture Building

ROOM DATA SHEET DETAIL **Executive Administration**

COA Associate Administration

1.3.4.2 Advisor -

SPACE INFORMATION

Room Function: General office work, advising

Adjacencies: Near Staff Assistant Workstation/Reception (1.3.5)

Special Requirements: None

Access: Public

Room Utilization: 5 days a week, 8:00 AM to 5:00 PM

General Notes: None

ROOM SIZE AND CAPACITY

Proposed Area:	100 NSF	**Room/Space Quantity:**	3	**Total Area:**	300
Assigned Capacity:	1 Occupant(s)	**Unassigned Capacity:**	1 Guest(s)	**Total Capacity:**	2

FINISHES, DOORS, AND WINDOWS

Floor Finish: Carpet-tile

Wall Finish: Gypsum board (painted)

Base Finish: Integral Coved

Doors:

Type:	Single	**Height:**	84"
Width:	36"	**Vision Panel:**	Frosted

Ceiling Treatment: Suspended acoustical lay-in tiles

Ceiling Height: 8' minimum

Acoustic Treatment: Acoustic seperation from adjacent spaces

Windows:

Natural Lighting:	Desired, but not required
Room Skylight:	Vision Panel

MECHANICAL/ELECTRICAL

HVAC:	Standard, space temperature control	**AV Requirements:**	None
Plumbing:	None	**Wire Management:**	Wall outlets
Fire Protection:	Sprinkler	**Data Management:**	Tele/data outlet(s)
Security:	Keyed lock at entrance doors	**Artificial Lighting:**	Direct/indirect fluorescent
Electrical:	120V wall outlets	**Telephone:**	Telephone outlets per occupant

EQUIPMENT AND FURNISHINGS

Equipment

(1) Computer system (provided by owner)
(1) Printer (provided by owner)

Furniture

(1) 18 LF Work surface
(1) Task chair
(2) Guest chair
(2) 2 Drawer 36" lateral file
(1) 7 LF task slatwall
(1) Task slatwall accessories package
(1) 14 LF 12-1/2" Deep open shelving, s.f.
(1) 7 LF 15-1/2" Deep enclosed shelving with flipper door, s.f.
(1) Under shelf task light
(1) Door mounted coat rack
(1) Waste receptacle

COPYRIGHT © 2009 CRSA

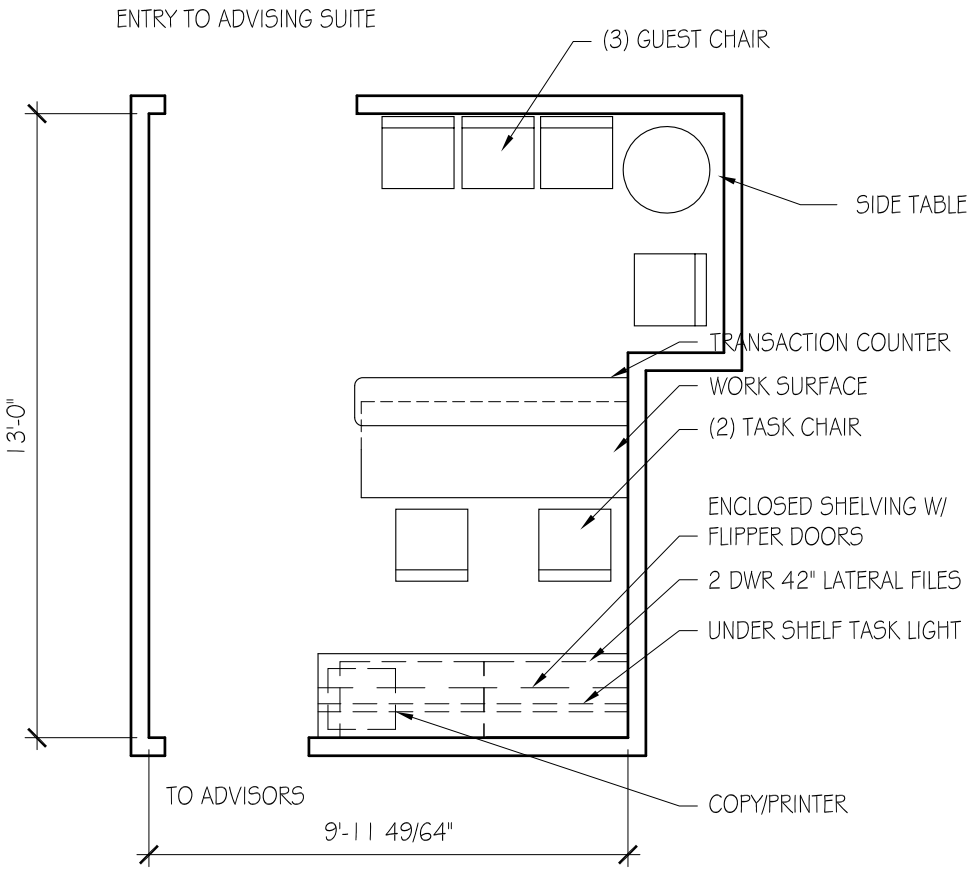

1.3.4.3 WORK STATION / RECEPTION - 140 SF.

USU Agriculture Building

ROOM DATA SHEET DETAIL **Executive Administration**

COA Associate Administration

1.3.4.3 Staff Assistant Workstation/Reception -

SPACE INFORMATION

Room Function: General office work

Adjacencies: Near Advisor (1.3.4.2)

Special Requirements: None

Access: Public

Room Utilization: 5 days a week, 8:00 AM to 5:00 PM

General Notes: None

ROOM SIZE AND CAPACITY

Proposed Area:	120 NSF	**Room/Space Quantity:**	1	**Total Area:**	120
Assigned Capacity:	3 Occupant(s)	**Unassigned Capacity:**	4 Guest(s)	**Total Capacity:**	7

FINISHES, DOORS, AND WINDOWS

Floor Finish: Carpet-tile

Wall Finish: Gypsum board (painted) and glazed side lite

Base Finish: Integral Coved

Doors:

Type:	N/A	**Height:**	None
Width:	None	**Vision Panel:**	N/A

Ceiling Treatment: Suspended acoustical lay-in tiles

Ceiling Height: 8' minimum

Acoustic Treatment: Acoustic seperation from adjacent spaces

Windows:

Natural Lighting:	Not required
Room Skylight:	N/A

MECHANICAL/ELECTRICAL

HVAC:	Standard, space temperature control	**AV Requirements:**	None
Plumbing:	None	**Wire Management:**	Wall outlets
Fire Protection:	Smoke detector, sprinkler, and visual alarm	**Data Management:**	Tele/data outlet(s)
Security:	None	**Artificial Lighting:**	Direct/indirect fluorescent and task lighting
Electrical:	120V wall outlets	**Telephone:**	Telephone outlets per occupant

EQUIPMENT AND FURNISHINGS

Equipment

(3) Computer system (provided by owner)

Furniture

(1) 8 LF work surface
(1) 8 LF transaction counter
(2) Task chair
(4) guest chair
(1) Side table
(2) 42" 2 drawer later file
(1) 8 LF Task slatwall
(1) Task slatwall accessories package
(1) 8 LF 15-1/2" deep enclosed shelving with flipper doors, s.f.
(1) Under shelf task light
(1) Waste receptacle
(1) wall mounted literature rack

COPYRIGHT © 2009 CRSA

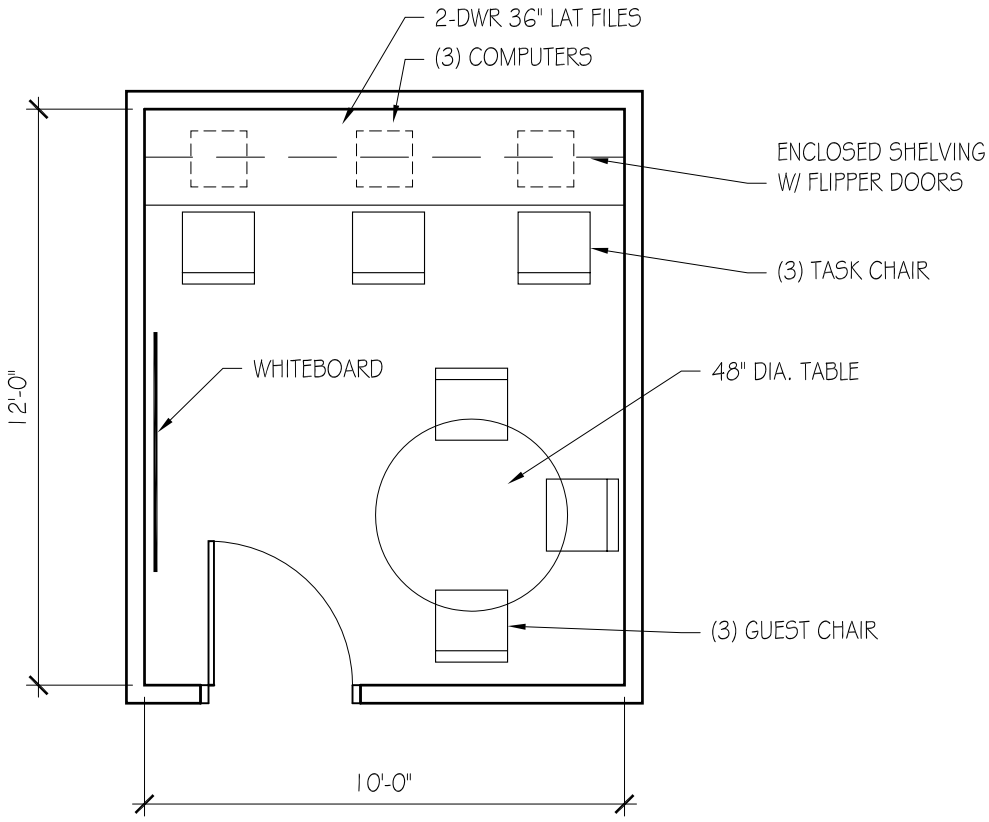

PEER TO PEER ADVISING
120 SF

USU Agriculture Building

ROOM DATA SHEET DETAIL **Executive Administration**

COA Associate Administration

1.3.4.4 Peer to Peer Advising -

SPACE INFORMATION

Room Function: Collaboration, meetings

Adjacencies: None

Special Requirements: None

Access: Public

Room Utilization: 5 days a week, 8:00 AM to 5:00 PM

General Notes: None

ROOM SIZE AND CAPACITY

Proposed Area:	120 NSF	**Room/Space Quantity:**	1	**Total Area:**	120
Assigned Capacity:	1 Occupant(s)	**Unassigned Capacity:**	6 Guest(s)	**Total Capacity:**	7

FINISHES, DOORS, AND WINDOWS

Floor Finish: Carpet-tile

Wall Finish: Gypsum board (painted)

Base Finish: Integral Coved

Doors:

Type:	Single	**Height:**	84"
Width:	36"	**Vision Panel:**	Clear

Ceiling Treatment: Suspended acoustical lay-in tiles

Ceiling Height: 8' minimum

Acoustic Treatment: Acoustic seperation from adjacent spaces

Windows:

Natural Lighting:	Not required
Room Skylight:	Vision Panel

MECHANICAL/ELECTRICAL

HVAC:	Standard, space temperature control	**AV Requirements:**	None
Plumbing:	None	**Wire Management:**	Wall outlets
Fire Protection:	Sprinkler	**Data Management:**	Tele/data outlet(s)
Security:	Keyed lock at entrance doors	**Artificial Lighting:**	Direct/indirect fluorescent
Electrical:	120V wall outlets	**Telephone:**	Telephone outlets per occupant

EQUIPMENT AND FURNISHINGS

Equipment

Furniture

(3) Guest chair
(3) Task chair
(1) 10 LF work surface
(1) 10 LF enclosed shelving with flipper doors, s.f.
(1) Under shelf task light
(1) 10 LF task slatwall
(3) Task slatwall accessories package
(1) 48" Round table
(1) 3' x 5' white board

COPYRIGHT © 2009 CRSA

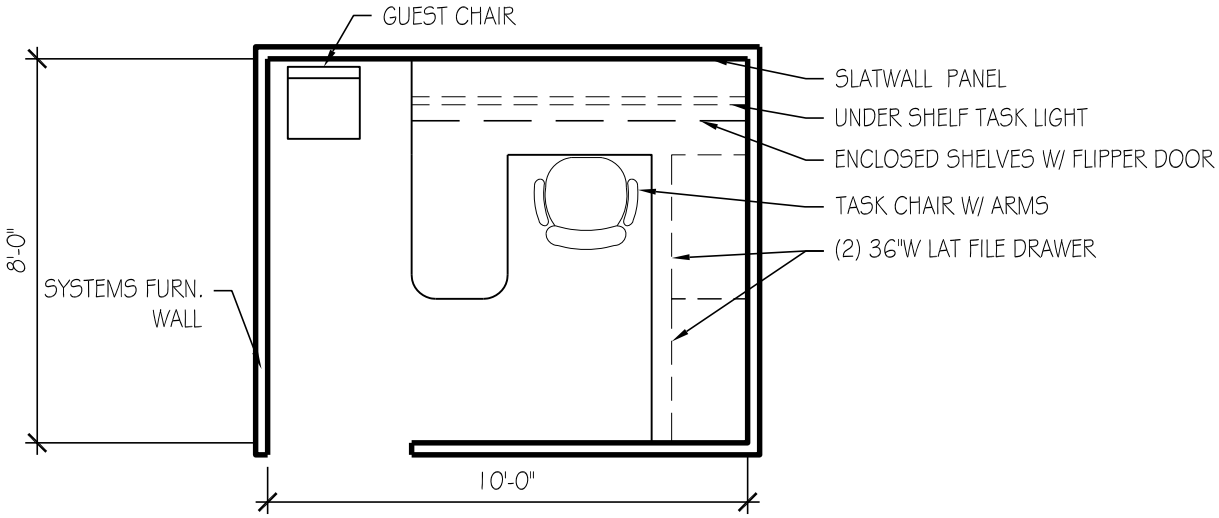

A

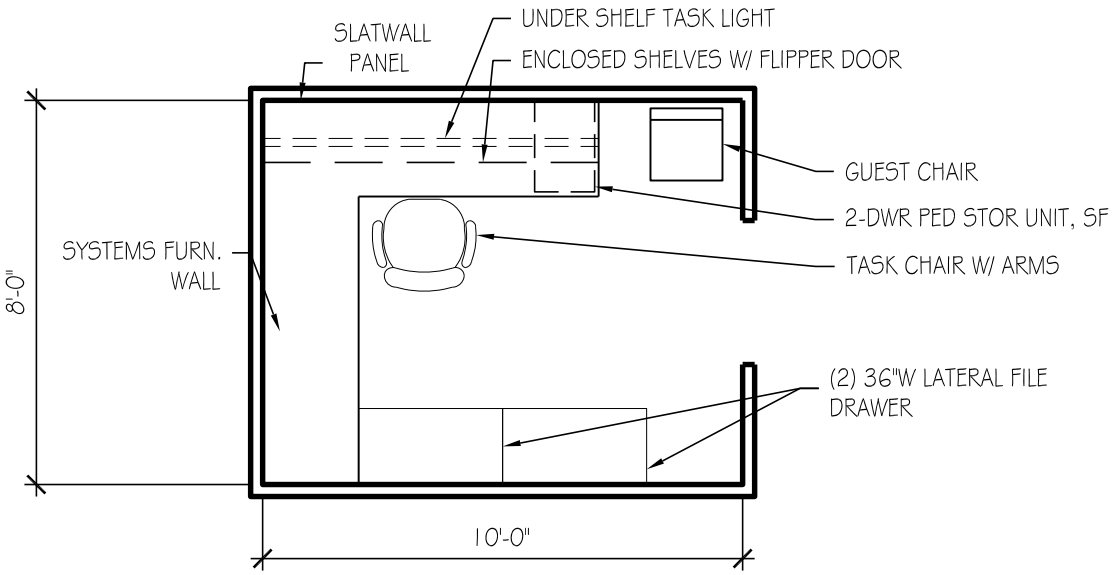

B

OPEN WORKSTATION

80 SF

USU Agriculture Building

ROOM DATA SHEET DETAIL **Executive Administration**

COA Asociate Administration

1.3.4.5 Staff Assistant - Advising Open Workstation -

SPACE INFORMATION

Room Function: General office work

Adjacencies: 1.3.4.2

Special Requirements: None

Access: Public

Room Utilization: 5 days a week, 8:00 AM to 5:00 PM

General Notes: None

ROOM SIZE AND CAPACITY

Proposed Area:	80 NSF	**Room/Space Quantity:**	1	**Total Area:**	80
Assigned Capacity:	1 Occupant(s)	**Unassigned Capacity:**	1 Guest(s)	**Total Capacity:**	2

FINISHES, DOORS, AND WINDOWS

Floor Finish: Carpet-tile

Wall Finish: Gypsum board (painted)

Base Finish: Systems Furniture

Doors:

Type:	N/A	**Height:**	None
Width:	None	**Vision Panel:**	N/A

Ceiling Treatment: Suspended acoustical lay-in tiles

Ceiling Height: 8' minimum

Acoustic Treatment: Systems Furniture

Windows:

Natural Lighting:	Not required
Room Skylight:	N/A

MECHANICAL/ELECTRICAL

HVAC: Standard, space temperature control

Plumbing: None

Fire Protection: Sprinkler

Security: Keyed lock at entrance doors

Electrical: 120V wall outlets

AV Requirements: None

Wire Management: Wall outlets

Data Management: Tele/data outlet(s)

Artificial Lighting: Direct/indirect fluorescent and task lighting

Telephone: Telephone outlets per occupant

EQUIPMENT AND FURNISHINGS

Equipment

(1) Computer system (provided by owner)

Furniture

(1) 15 LF Work surface
(2) 2 Drawer 36" lateral file
(1) 14 LF 15-1/2" Deep enclosed shelf with flipper door, s.f.
(1) 7 LF Task light
(1) 7 LF task slatwall
(1) Task slatwall accessories package
(1) Task chair
(1) Guest chair
(1) Waste receptacle
(1) 34 LF systems furniture panels

COPYRIGHT © 2009 CRSA

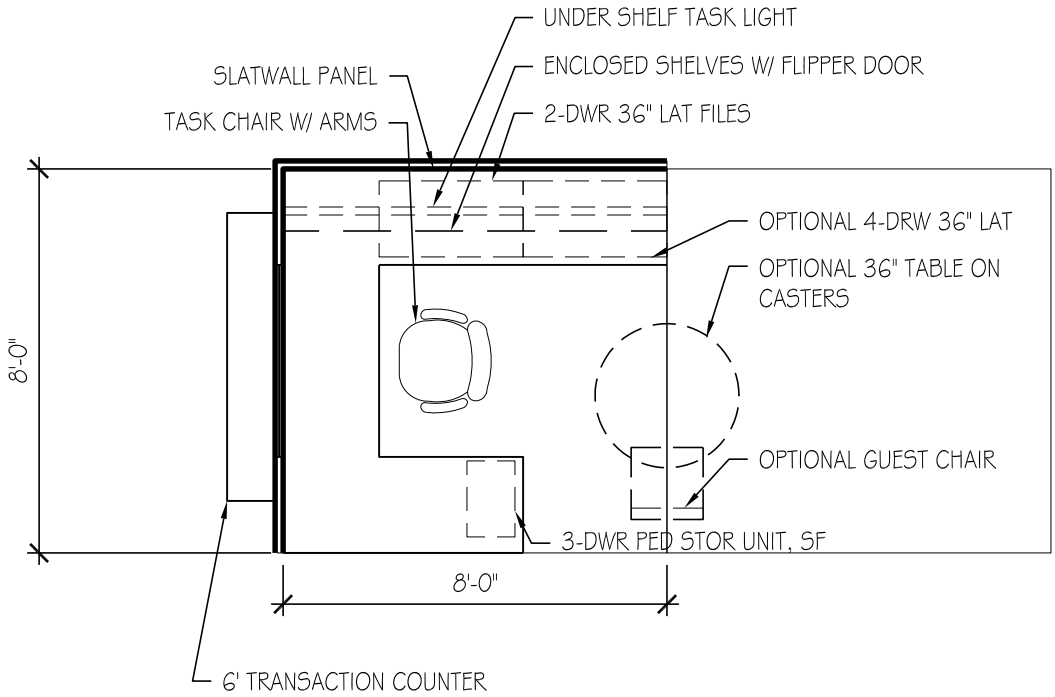

OPEN WORKSTATION

64 SF

USU Agriculture Building

ROOM DATA SHEET DETAIL **Executive Administration**

COA Associate Administration

1.3.6 Program Leader - Open Workstation -

SPACE INFORMATION

Room Function: General office work

Adjacencies:

Special Requirements:
None

Access: Public

Room Utilization: 5 days a week, 8:00 AM to 5:00 PM

General Notes: None

ROOM SIZE AND CAPACITY

Proposed Area:	64 NSF	**Room/Space Quantity:**	1	**Total Area:**	64
Assigned Capacity:	1 Occupant(s)	**Unassigned Capacity:**	29 Guest(s)	**Total Capacity:**	30

FINISHES, DOORS, AND WINDOWS

Floor Finish:	Carpet-tile	**Ceiling Treatment:**	Suspended acoustical lay-in tiles
Wall Finish:	Systems furniture	**Ceiling Height:**	8' minimum
Base Finish:	Systems Furniture	**Acoustic Treatment:**	Systems Furniture
Doors:		**Windows:**	

Type:	N/A	**Height:**	None	**Natural Lighting:**	Not required
Width:	None	**Vision Panel:**	N/A	**Room Skylight:**	N/A

MECHANICAL/ELECTRICAL

HVAC:	Standard	**AV Requirements:**	None
Plumbing:	None	**Wire Management:**	Wall outlets
Fire Protection:	Sprinkler	**Data Management:**	Tele/data outlet(s)
Security:	Keyed lock on all securable storage devices	**Artificial Lighting:**	Direct/indirect fluorescent and task lighting
Electrical:	120V wall outlets	**Telephone:**	Telephone outlets per occupant

EQUIPMENT AND FURNISHINGS

Equipment

(1) Computer system (provided by owner)

Furniture

(1) 13 LF work surface
(1) 3 Drawer PED file
(1) Task chair
(2) 36" 2 drawer lateral file
(1) 8 LF 15-1/2" deep enclosed shelving with flipper door, s.f.
(1) Under shelf task light, s.f.
(1) 8 LF task slatwall
(1) Task slatwall accessories package
(1) Waste receptacle
(1) Optional guest chair
(1) Optional 36" table on casters
(1) Optional 36" 4 drawer lateral file
(1) Optional 6 LF transaction counter

COPYRIGHT © 2009 CRSA

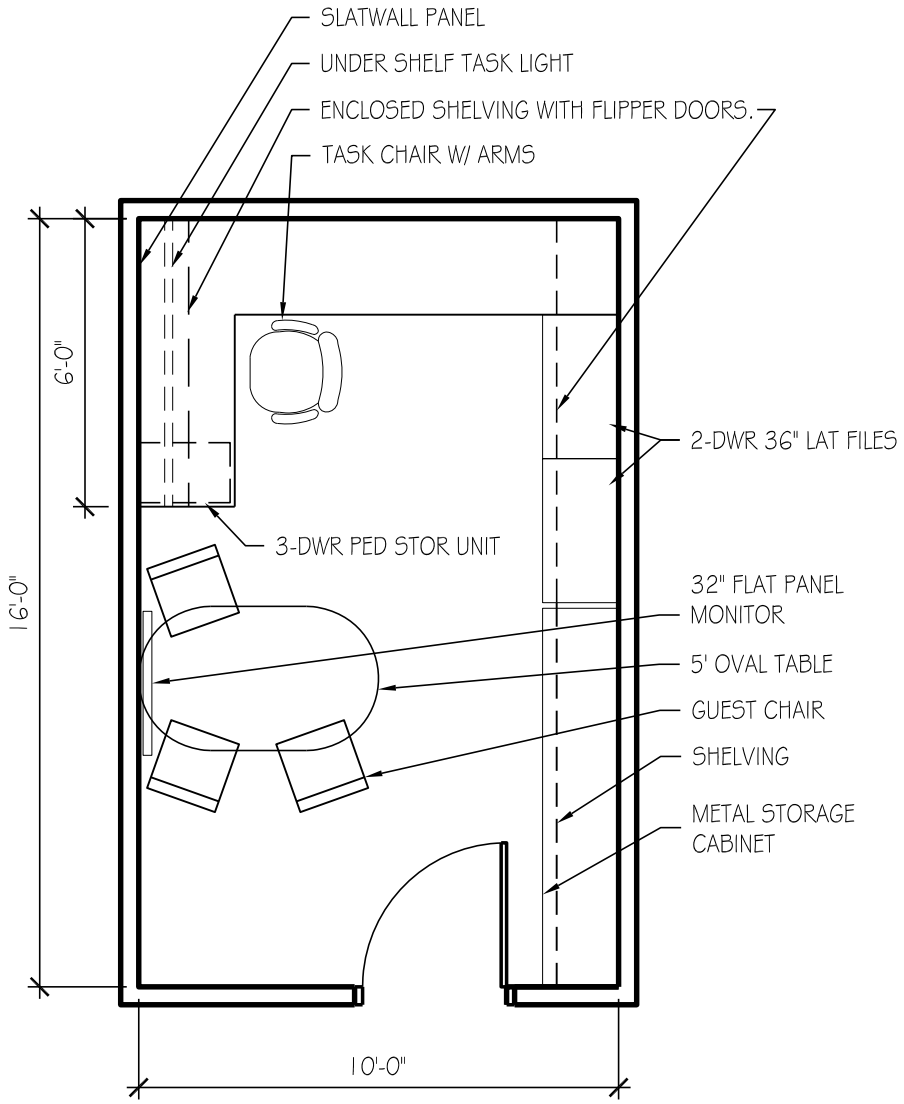

OFFICE - 160 SF

USU Agriculture Building

ROOM DATA SHEET DETAIL **Executive Administration**

Development Director

1.4.1 Development Director -

SPACE INFORMATION

Room Function: General office work

Adjacencies:

Special Requirements:

None

Access: Public

Room Utilization: 5 days a week, 8:00 AM to 5:00 PM

General Notes: None

ROOM SIZE AND CAPACITY

Proposed Area:	160 NSF	**Room/Space Quantity:**	1	**Total Area:**	160
Assigned Capacity:	1 Occupant(s)	**Unassigned Capacity:**	3 Guest(s)	**Total Capacity:**	4

FINISHES, DOORS, AND WINDOWS

Floor Finish: Carpet-tile

Wall Finish: Gypsum board (painted)

Base Finish: Integral Coved

Doors:

Type:	Single	**Height:**	84"
Width:	36"	**Vision Panel:**	Frosted

Ceiling Treatment: Suspended acoustical lay-in tiles

Ceiling Height: 8' minimum

Acoustic Treatment: Acoustic seperation from adjacent spaces

Windows:

Natural Lighting: Preferred, glare and brightness control

Room Skylight: Frosted Panel

MECHANICAL/ELECTRICAL

HVAC: Standard, space temperature control

Plumbing: None

Fire Protection: Sprinkler

Security: Keyed lock at entrance doors

Electrical: 120V wall outlets

AV Requirements: None

Wire Management: Wall outlets

Data Management: Tele/data outlet(s)

Artificial Lighting: Direct/indirect fluorescent and task lighting

Telephone: Telephone outlets per occupant

EQUIPMENT AND FURNISHINGS

Equipment

(1) Computer system (provided by owner)
(1) Printer (provided by owner)
(1) 32" Flat panel monitor

Furniture

(1) 16 LF Work surface, system furniture
(1) 5' Oval conference table on casters
(1) Task chair
(3) Guest chair
(1) 3 Drawer PED file
(2) 2 Drawer 36" lateral file, s.f.
(1) 48 LF Adjustable height shelving
(1) 24 LF 12-1/2" Deep open shelving with flipper doors, s.f.
(1) Under shelf task light
(1) 8 LF task slatwall
(1) Task slatwall accessories package
(1) Door mounted coat rack
(1) Waste receptacle
(1) Desk task light
(1) 8 LF metal base cabinet

COPYRIGHT © 2009 CRSA

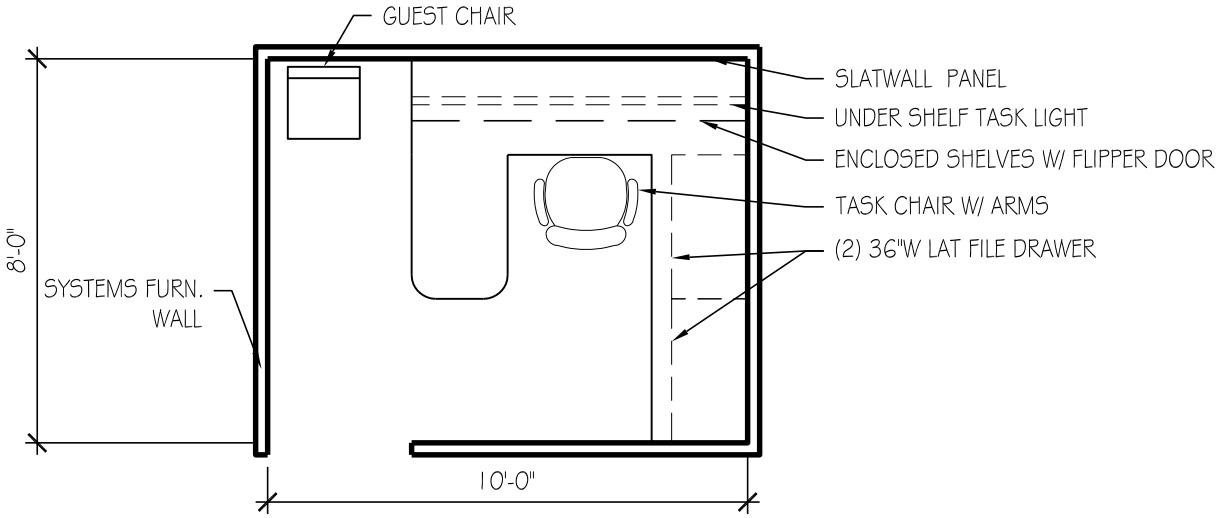

A

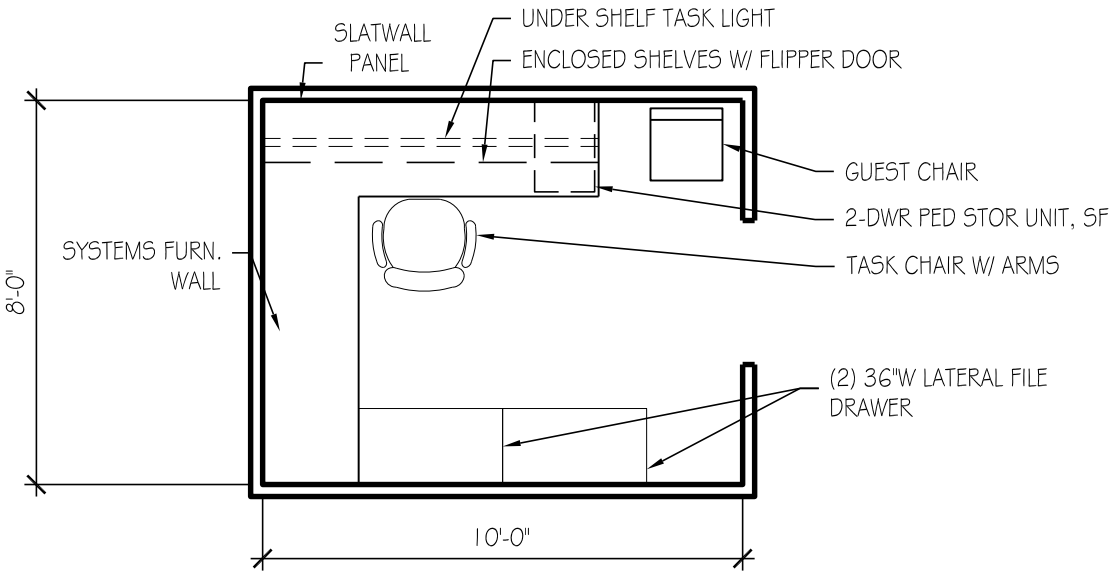

B

OPEN WORKSTATION

80 SF

USU Agriculture Building

ROOM DATA SHEET DETAIL **Executive Administration**

Development Director

1.4.2 Staff Assistant - Open Workstation -

SPACE INFORMATION

Room Function: General office work

Adjacencies:

Special Requirements:
None

Access: Public

Room Utilization: 5 days a week, 8:00 AM to 5:00 PM

General Notes: None

ROOM SIZE AND CAPACITY

Proposed Area:	80 NSF	**Room/Space Quantity:**	1	**Total Area:**	80
Assigned Capacity:	1 Occupant(s)	**Unassigned Capacity:**	1 Guest(s)	**Total Capacity:**	2

FINISHES, DOORS, AND WINDOWS

Floor Finish: Carpet-tile

Wall Finish: Systems furniture

Base Finish: Systems Furniture

Doors:

Type:	N/A	**Height:**	None
Width:	None	**Vision Panel:**	N/A

Ceiling Treatment: Suspended acoustical lay-in tiles

Ceiling Height: 8' minimum

Acoustic Treatment: Systems Furniture

Windows:

Natural Lighting:	Not required
Room Skylight:	N/A

MECHANICAL/ELECTRICAL

HVAC: Standard

Plumbing: None

Fire Protection: Sprinkler

Security: Keyed lock on all securable storage devices

Electrical: 120V wall outlets

AV Requirements: None

Wire Management: Wall outlets

Data Management: Tele/data outlet(s)

Artificial Lighting: Direct/indirect fluorescent

Telephone: Telephone outlets per occupant

EQUIPMENT AND FURNISHINGS

Equipment

(1) Computer system (provided by owner)

Furniture

(1) 15 LF Work surface
(2) 2 Drawer 36" lateral file
(1) 14 LF 15-1/2" Deep enclosed shelf with flipper door, s.f.
(1) 7 LF Task light
(1) 7 LF task slatwall
(1) Task slatwall accessories package
(1) Task chair
(1) Guest chair
(1) Waste receptacle
(1) 34 LF systems furniture panels

COPYRIGHT © 2009 CRSA

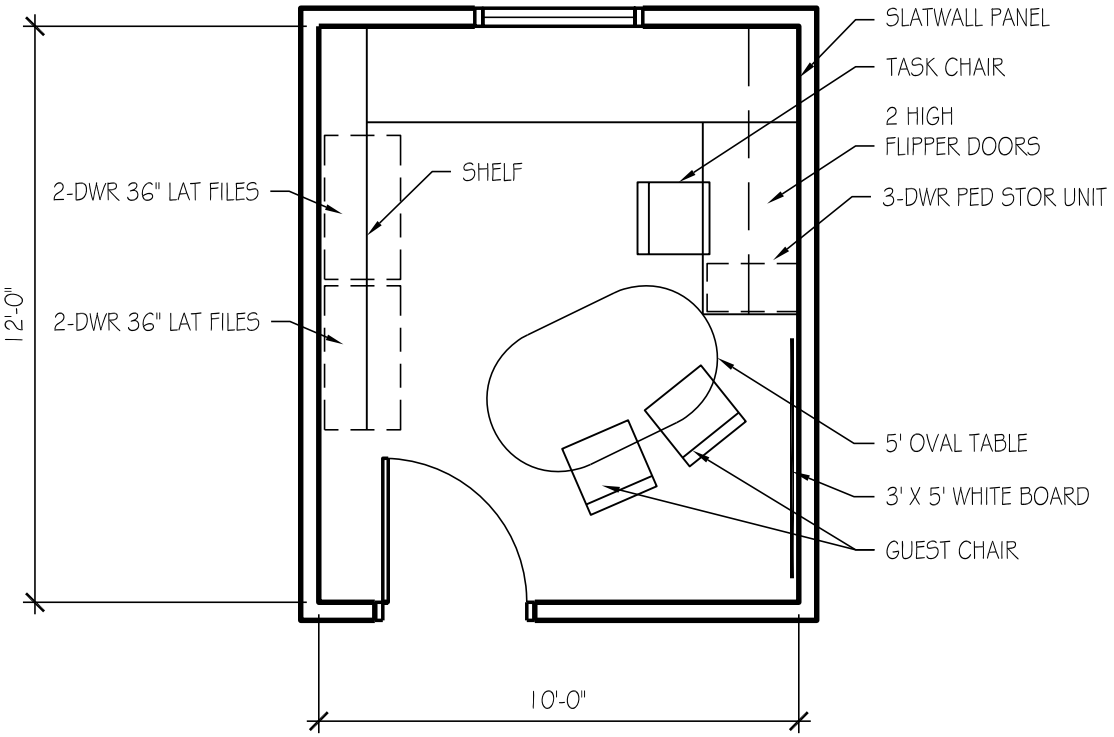

OFFICE A - 120 SF

USU Agriculture Building

ROOM DATA SHEET DETAIL **Executive Administration**

Business Manager

1.5.1 Business Manager - COA -

SPACE INFORMATION

Room Function: General office work

Adjacencies: None

Special Requirements: None

Access: Public

Room Utilization: 5 days a week, 8:00 AM to 5:00 PM

General Notes: None

ROOM SIZE AND CAPACITY

Proposed Area:	120 NSF	**Room/Space Quantity:**	1	**Total Area:**	120
Assigned Capacity:	1 Occupant(s)	**Unassigned Capacity:**	2 Guest(s)	**Total Capacity:**	3

FINISHES, DOORS, AND WINDOWS

Floor Finish: Carpet-tile

Wall Finish: Gypsum board (painted)

Base Finish: Integral Coved

Doors:

Type:	Single	**Height:**	84"
Width:	36"	**Vision Panel:**	Frosted

Ceiling Treatment: Suspended acoustical lay-in tiles

Ceiling Height: 8' minimum

Acoustic Treatment: Acoustic seperation from adjacent spaces

Windows:

Natural Lighting:	Required (provide shades for control)
Room Skylight:	Vision Panel

MECHANICAL/ELECTRICAL

HVAC:	Standard, space temperature control	**AV Requirements:**	None
Plumbing:	None	**Wire Management:**	Wall outlets
Fire Protection:	Sprinkler	**Data Management:**	Tele/data outlet(s)
Security:	Keyed lock at entrance doors	**Artificial Lighting:**	Direct/indirect fluorescent and task lighting
Electrical:	120V wall outlets	**Telephone:**	Telephone outlets per occupant

EQUIPMENT AND FURNISHINGS

Equipment

(1) Computer system (provided by owner)
(1) Printer (provided by owner)

Furniture

(1) 13 LF of work surface
(2) 36" 2 drawer lateral file
(1) 3 drawer PED file
(1) 5' Oval on casters
(1) Task chair
(2) Guest chairs
(2) 6 LF 15-1/2" deep enclosed shelving with flipper doors, s.f.
(1) 8 LF open shelving
(1) Whiteboard
(1) Wall mounted coat rack
(1) Waste receptacle
(1) 6 LF task slatwall
(1) Task slatwall accessories package

COPYRIGHT © 2009 CRSA

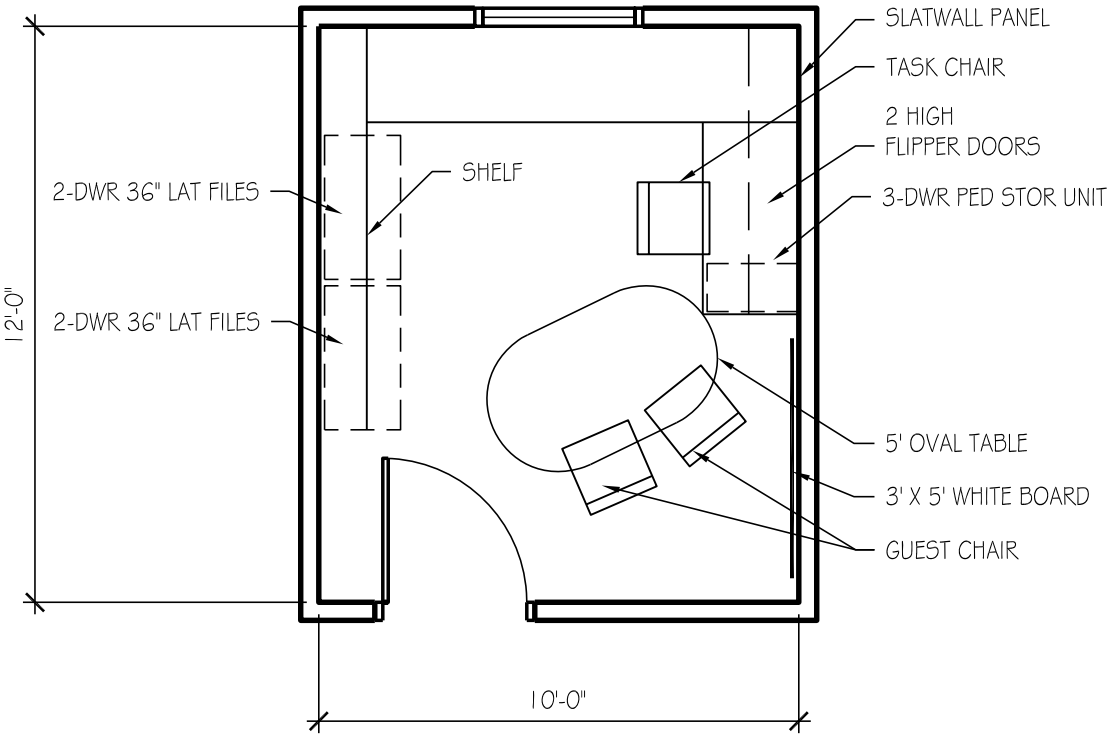

OFFICE A - 120 SF

USU Agriculture Building

ROOM DATA SHEET DETAIL **Executive Administration**

Business Manager

1.5.2 Business Manager - Extension -

SPACE INFORMATION

Room Function: General office work

Adjacencies: None

Special Requirements: None

Access: Public

Room Utilization: 5 days a week, 8:00 AM to 5:00 PM

General Notes: None

ROOM SIZE AND CAPACITY

Proposed Area:	120 NSF	**Room/Space Quantity:**	1	**Total Area:**	120
Assigned Capacity:	1 Occupant(s)	**Unassigned Capacity:**	2 Guest(s)	**Total Capacity:**	3

FINISHES, DOORS, AND WINDOWS

Floor Finish: Carpet-tile

Wall Finish: Gypsum board (painted)

Base Finish: Integral Coved

Doors:

Type:	Single	**Height:**	84"
Width:	36"	**Vision Panel:**	Frosted

Ceiling Treatment: Suspended acoustical lay-in tiles

Ceiling Height: 8' minimum

Acoustic Treatment: Acoustic seperation from adjacent spaces

Windows:

Natural Lighting:	Preferred, glare and brightness control
Room Skylight:	Vision Panel

MECHANICAL/ELECTRICAL

HVAC:	Standard, space temperature control	**AV Requirements:**	None
Plumbing:	None	**Wire Management:**	Wall outlets
Fire Protection:	Sprinkler	**Data Management:**	Tele/data outlet(s)
Security:	Keyed lock at entrance doors	**Artificial Lighting:**	Direct/indirect fluorescent and task lighting
Electrical:	120V wall outlets	**Telephone:**	Telephone outlets per occupant

EQUIPMENT AND FURNISHINGS

Equipment

(1) Computer system (provided by owner)
(1) Printer (provided by owner)

Furniture

(1) 13 LF of work surface
(2) 36" 2 drawer lateral file
(1) 3 drawer PED file
(1) 5' Oval on casters
(1) Task chair
(2) Guest chairs
(2) 6 LF 15-1/2" deep enclosed shelving with flipper doors, s.f.
(1) 8 LF open shelving
(1) Whiteboard
(1) Wall mounted coat rack
(1) Waste receptacle
(1) 6 LF task slatwall
(1) Task slatwall accessories package

COPYRIGHT © 2009 CRSA

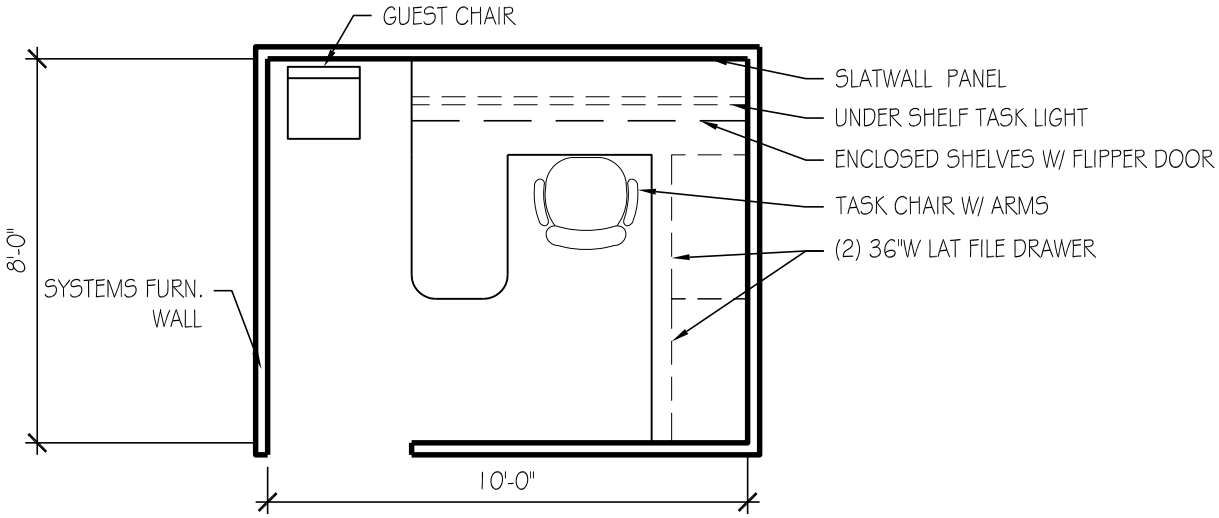

A

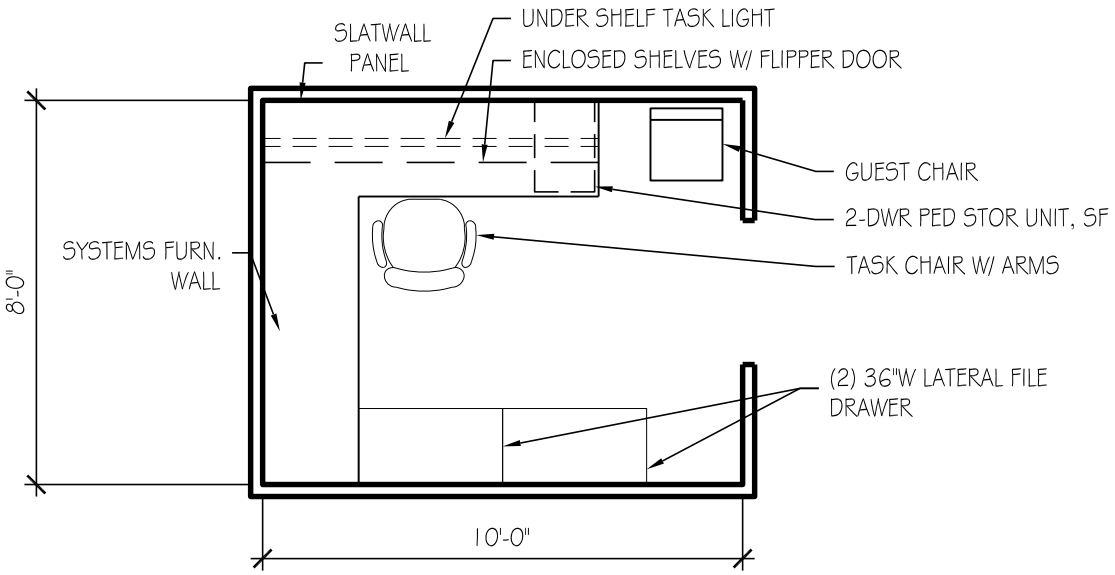

B

OPEN WORKSTATION

80 SF

USU Agriculture Building

ROOM DATA SHEET DETAIL **Executive Administration**

Business Manager

1.5.3 Staff Assistant - Open Workstation -

SPACE INFORMATION

Room Function: General office work

Adjacencies: Near 1.5.1, Near 1.5.2

Special Requirements: None

Access: Public

Room Utilization: 5 days a week, 8:00 AM to 5:00 PM

General Notes: None

ROOM SIZE AND CAPACITY

Proposed Area:	80 NSF	**Room/Space Quantity:**	2	**Total Area:**	160
Assigned Capacity:	1 Occupant(s)	**Unassigned Capacity:**	1 Guest(s)	**Total Capacity:**	2

FINISHES, DOORS, AND WINDOWS

Floor Finish: Carpet-tile

Wall Finish: Systems furniture

Base Finish: Systems Furniture

Doors:

Type:	N/A	**Height:**	None
Width:	None	**Vision Panel:**	N/A

Ceiling Treatment: Suspended acoustical lay-in tiles

Ceiling Height: 8' minimum

Acoustic Treatment: Systems Furniture

Windows:

Natural Lighting:	Not required
Room Skylight:	N/A

MECHANICAL/ELECTRICAL

HVAC: Standard

Plumbing: None

Fire Protection: Sprinkler

Security: Keyed lock on all securable storage devices

Electrical: 120V wall outlets

AV Requirements: None

Wire Management: Wall outlets

Data Management: Tele/data outlet(s)

Artificial Lighting: Direct/indirect fluorescent and task lighting

Telephone: Telephone outlets per occupant

EQUIPMENT AND FURNISHINGS

Equipment

(1) Computer system (provided by owner)
(1) Printer (provided by owner)

Furniture

(1) 15 LF Work surface
(2) 2 Drawer 36" lateral file
(1) 14 LF 15-1/2" Deep enclosed shelf with flipper door, s.f.
(1) 7 LF Task light
(1) 7 LF task slatwall
(1) Task slatwall accessories package
(1) Task chair
(1) Guest chair
(1) Waste receptacle
(1) 34 LF systems furniture panels

COPYRIGHT © 2009 CRSA

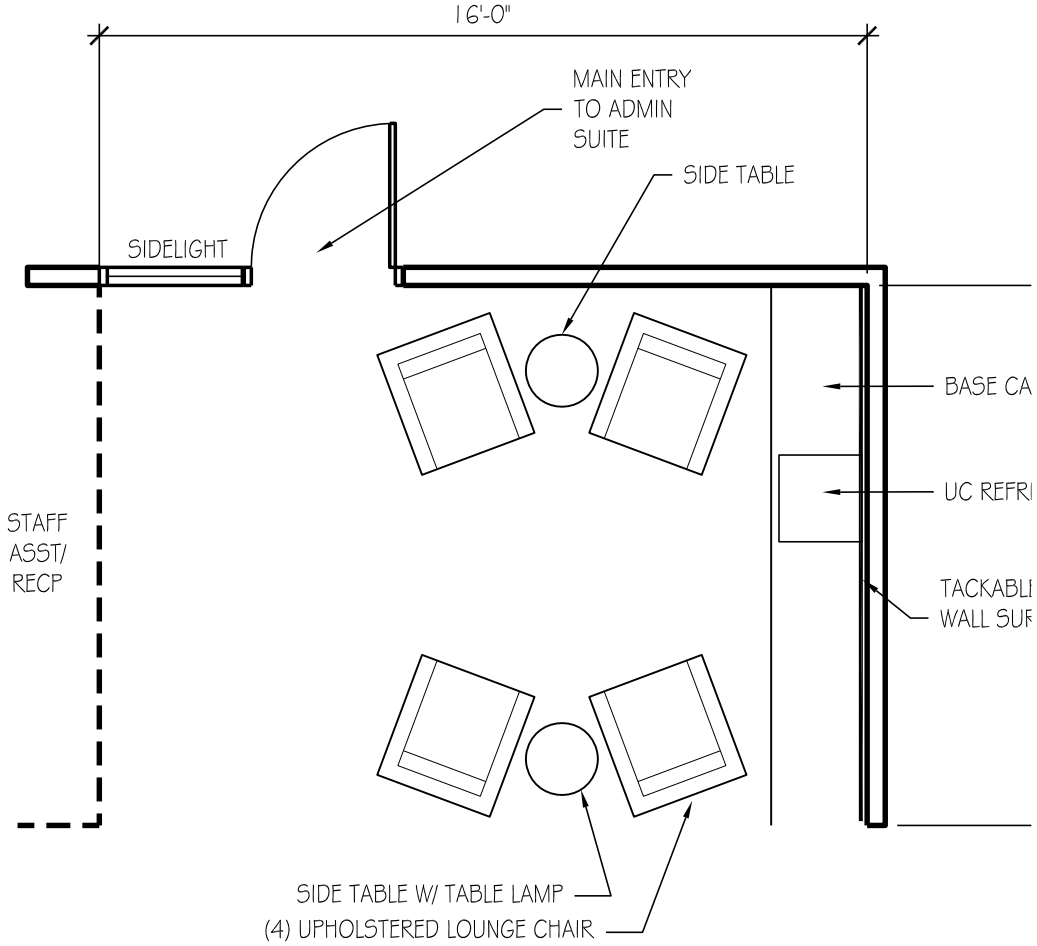

1.6.1 RECEPTION- 180 SF

USU Agriculture Building

ROOM DATA SHEET DETAIL **Executive Administration**

Administration Support Area

1.6.1 Reception -

SPACE INFORMATION

Room Function: General office work

Adjacencies:

Special Requirements:

None

Access: Public

Room Utilization: 5 days a week, 8:00 AM to 5:00 PM

General Notes: None

ROOM SIZE AND CAPACITY

Proposed Area:	180 NSF	**Room/Space Quantity:**	1	**Total Area:**	180
Assigned Capacity:	1 Occupant(s)	**Unassigned Capacity:**	1 Guest(s)	**Total Capacity:**	2

FINISHES, DOORS, AND WINDOWS

Floor Finish: Carpet-tile

Wall Finish: Gypsum board (painted)

Base Finish: Integral Coved

Doors:

Type:	Single	**Height:**	84"
Width:	36"	**Vision Panel:**	Clear

Ceiling Treatment: Suspended acoustical lay-in tiles

Ceiling Height: 8' minimum

Acoustic Treatment: Acoustic seperation from adjacent spaces

Windows:

Natural Lighting:	Not required
Room Skylight:	Vision Panel

MECHANICAL/ELECTRICAL

HVAC:	Standard	**AV Requirements:**	None
Plumbing:	None	**Wire Management:**	Wall outlets
Fire Protection:	Smoke detector, sprinkler, and visual alarm	**Data Management:**	Tele/data outlet(s)
Security:	Keyed lock at entrance doors	**Artificial Lighting:**	Direct/indirect fluorescent and task lighting
Electrical:	120V wall outlets	**Telephone:**	Telephone outlets per occupant

EQUIPMENT AND FURNISHINGS

Equipment

Furniture

(1) 11 LF Base cabinet
(2) Side tables
(4) Upholstered lounge chair
(2) Table lamp
(1) 11 LF Tackable wall surface

COPYRIGHT © 2009 CRSA

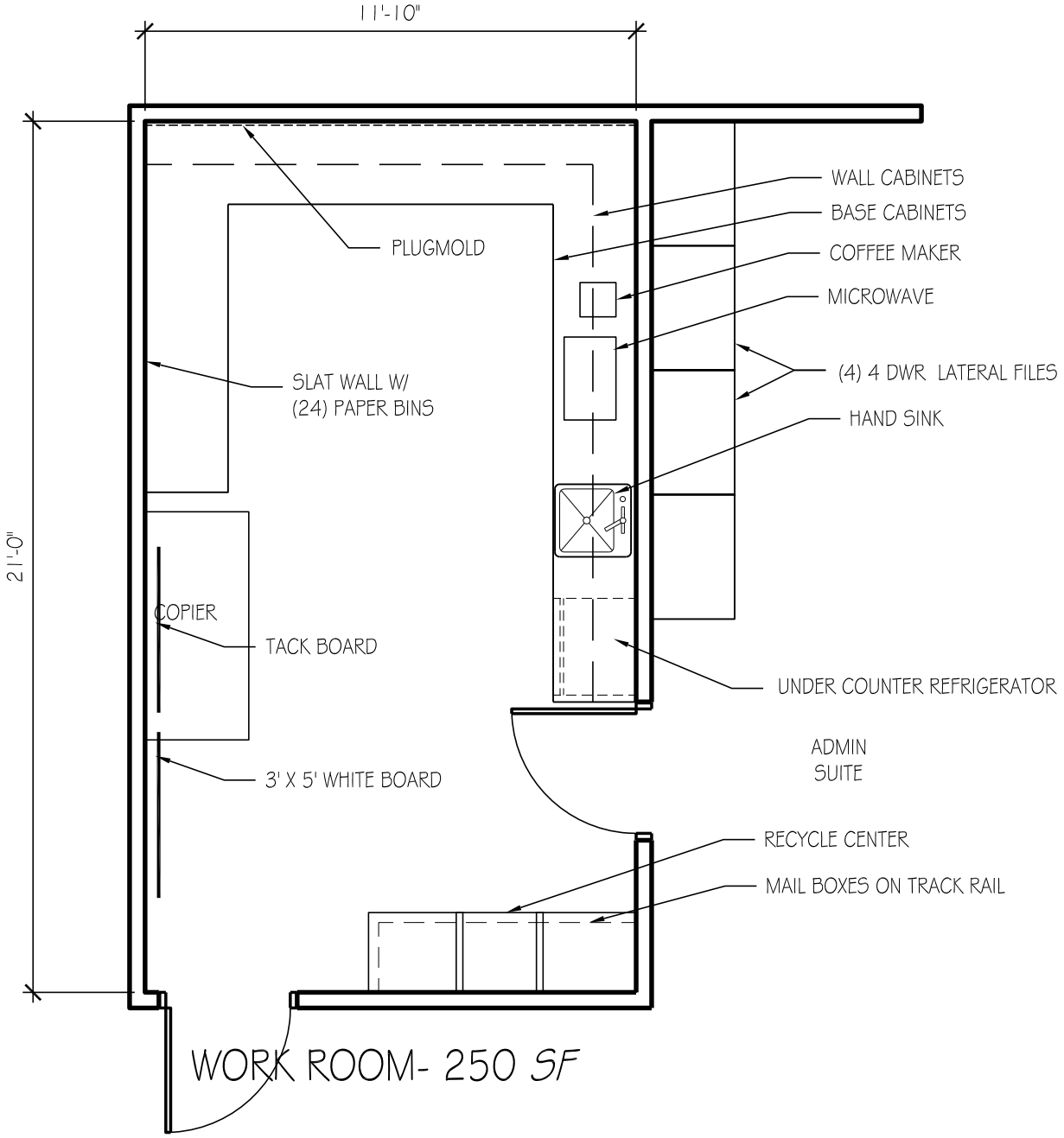

WORK ROOM- 250 SF

USU Agriculture Building

ROOM DATA SHEET DETAIL **Executive Administration**

Administration Support Area

1.6.2 Copy/Mail/Workroom/Storage -

SPACE INFORMATION

Room Function: General office work

Adjacencies:

Special Requirements:
4' Opening, extra outlet for shredder

Access: Public

Room Utilization: 5 days a week, 8:00 AM to 5:00 PM

General Notes: None

ROOM SIZE AND CAPACITY

Proposed Area:	250 NSF	**Room/Space Quantity:**	1	**Total Area:**	250
Assigned Capacity:	1 Occupant(s)	**Unassigned Capacity:**	1 Guest(s)	**Total Capacity:**	2

FINISHES, DOORS, AND WINDOWS

Floor Finish: Carpet-tile

Wall Finish: Gypsum board (painted)

Base Finish: Integral Coved

Doors:

Type:	Single	**Height:**	84"
Width:	36"	**Vision Panel:**	N/A

Ceiling Treatment: Suspended acoustical lay-in tiles

Ceiling Height: 8' minimum

Acoustic Treatment: Acoustic seperation from adjacent spaces

Windows:

Natural Lighting:	Not required
Room Skylight:	None

MECHANICAL/ELECTRICAL

HVAC:	Standard, space temperature control	**AV Requirements:**	None
Plumbing:	Sink (standard) with hot/cold water/ disposal	**Wire Management:**	Wall outlets
Fire Protection:	Smoke detector, sprinkler, and visual alarm	**Data Management:**	Tele/data outlet(s)
Security:	None	**Artificial Lighting:**	Direct/indirect fluorescent
Electrical:	120V wall (grounded) outlet	**Telephone:**	Wall mounted telephone jack

EQUIPMENT AND FURNISHINGS

Equipment

(1) Copier (provided by owner)
(1) Refrigerator
(1) Microwave
(1) Coffee maker

Furniture

(1) 10 LF task slatwall
(1) 26 LF base cabinets
(1) 20 LF wall cabinets - lockable
(45) Mail slots
(1) 4'x4' Tack board
(1) 4'x4' White board
(4) 4 Drawer lateral file
(1) Ten gallon waste receptacle
(1) 3 Compartment recycling bin
(1) 10 LF task slatwall
(24) Paper trays

COPYRIGHT © 2009 CRSA

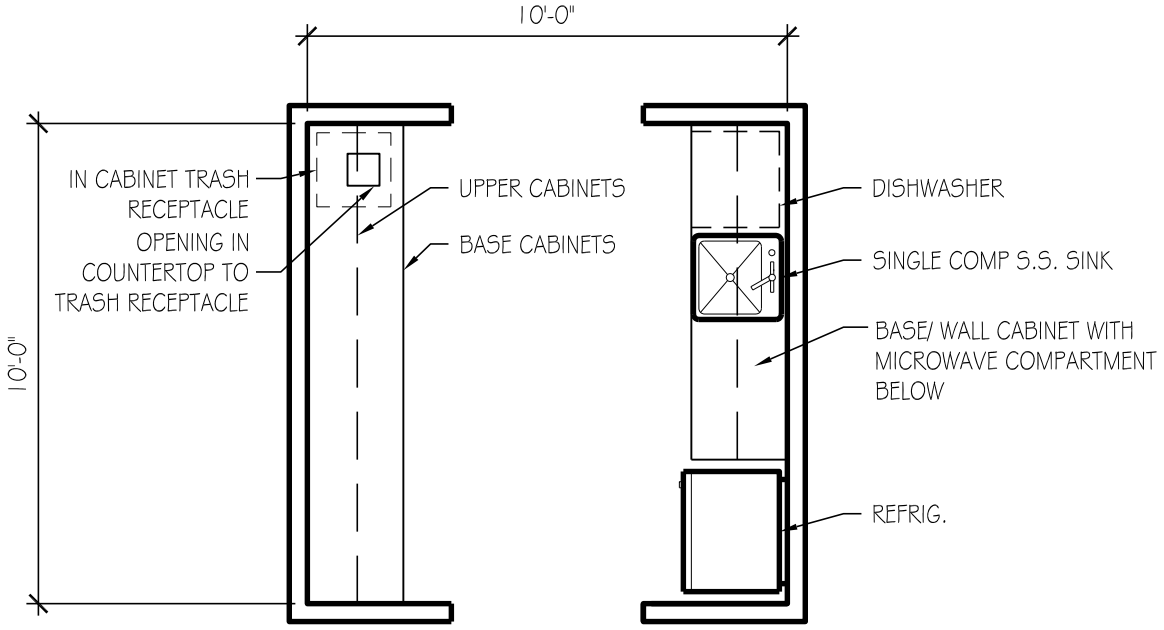

STAFF BREAK
AREA - 100 SF

USU Agriculture Building

ROOM DATA SHEET DETAIL **Executive Administration**

Administration Support Area

1.6.3 Kitchen/Breakroom -

SPACE INFORMATION

Room Function: Store and heat food, beverages, eat

Adjacencies:

Special Requirements:
None

Access: Public

Room Utilization: 5 days a week, 8:00 AM to 5:00 PM

General Notes: None

ROOM SIZE AND CAPACITY

Proposed Area:	100 NSF	**Room/Space Quantity:**	1	**Total Area:**	100
Assigned Capacity:	4 Occupant(s)	**Unassigned Capacity:**	1 Guest(s)	**Total Capacity:**	5

FINISHES, DOORS, AND WINDOWS

Floor Finish: Linoleum

Wall Finish: Gypsum board (painted)

Base Finish: Rubber

Doors:

Type:	N/A	**Height:**	None
Width:	None	**Vision Panel:**	N/A

Ceiling Treatment: Suspended acoustical lay-in tiles

Ceiling Height: 8' minimum

Acoustic Treatment: Acoustic seperation from adjacent spaces

Windows:

Natural Lighting:	Not required
Room Skylight:	N/A

MECHANICAL/ELECTRICAL

HVAC:	Standard, direct vent	**AV Requirements:**	None
Plumbing:	Sink (standard) with hot/cold water/ disposal	**Wire Management:**	Wall outlets
Fire Protection:	Smoke detector, sprinkler, and visual alarm	**Data Management:**	None
Security:	None	**Artificial Lighting:**	Direct/indirect fluorescent
Electrical:	120V wall (grounded) outlet	**Telephone:**	Wall mounted telephone jack

EQUIPMENT AND FURNISHINGS

Equipment

(1) Refrigerator
(1) Microwave oven
(1) Coffee maker
(1) Apartment size dishwasher

Furniture

(1) 17 LF Base cabinet, locking
(1) 17 LF Wall cabinet, locking
(1) In cabinet waste receptacle

COPYRIGHT © 2009 CRSA

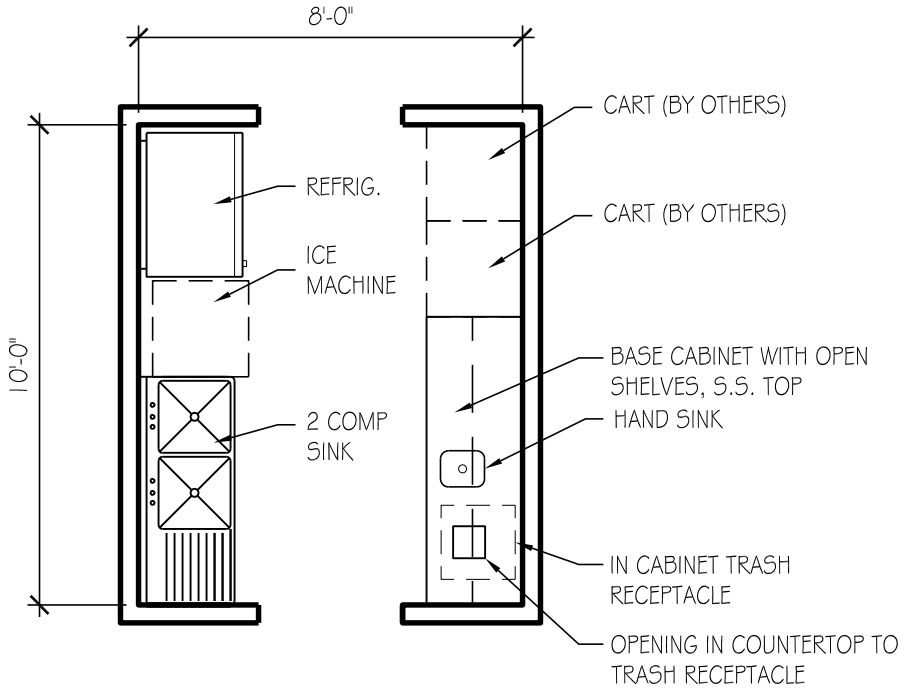

CATERING PREP - 80 SF

USU Agriculture Building

ROOM DATA SHEET DETAIL **Executive Administration**

Administration Support Area

1.6.4 Catering Prep -

SPACE INFORMATION

Room Function: Store and heat food, beverages

Adjacencies: Executive Council Conference Room (1.6.7)

Special Requirements: Two sinks, hand sink

Access: Public

Room Utilization: 5 days a week, 8:00 AM to 5:00 PM

General Notes: None

ROOM SIZE AND CAPACITY

Proposed Area:	80 NSF	**Room/Space Quantity:**	1	**Total Area:**	80
Assigned Capacity:	1 Occupant(s)	**Unassigned Capacity:**	1 Guest(s)	**Total Capacity:**	2

FINISHES, DOORS, AND WINDOWS

Floor Finish: Linoleum

Wall Finish: Gypsum board (painted)

Base Finish: Rubber

Doors:

Type:	N/A	**Height:**	None
Width:	None	**Vision Panel:**	N/A

Ceiling Treatment: Suspended acoustical lay-in tiles

Ceiling Height: 8' minimum

Acoustic Treatment: Acoustic seperation from adjacent spaces

Windows:

Natural Lighting:	Not required
Room Skylight:	N/A

MECHANICAL/ELECTRICAL

HVAC:	Standard	**AV Requirements:**	None
Plumbing:	Sink (standard) with hot/cold water/ disposal	**Wire Management:**	Wall outlets
Fire Protection:	Smoke detector, sprinkler, and visual alarm	**Data Management:**	None
Security:	None	**Artificial Lighting:**	Direct/indirect fluorescent
Electrical:	120V wall (grounded) outlet	**Telephone:**	Wall mounted telephone jack

EQUIPMENT AND FURNISHINGS

Equipment

(2) Carts (by other)
(1) Refrigerator
(1) Ice maker

Furniture

(1) 6 LF Open shelving, system furniture
(1) 10 LF Base cabinet
(1) 10 gallon waste receptacle

COPYRIGHT © 2009 CRSA

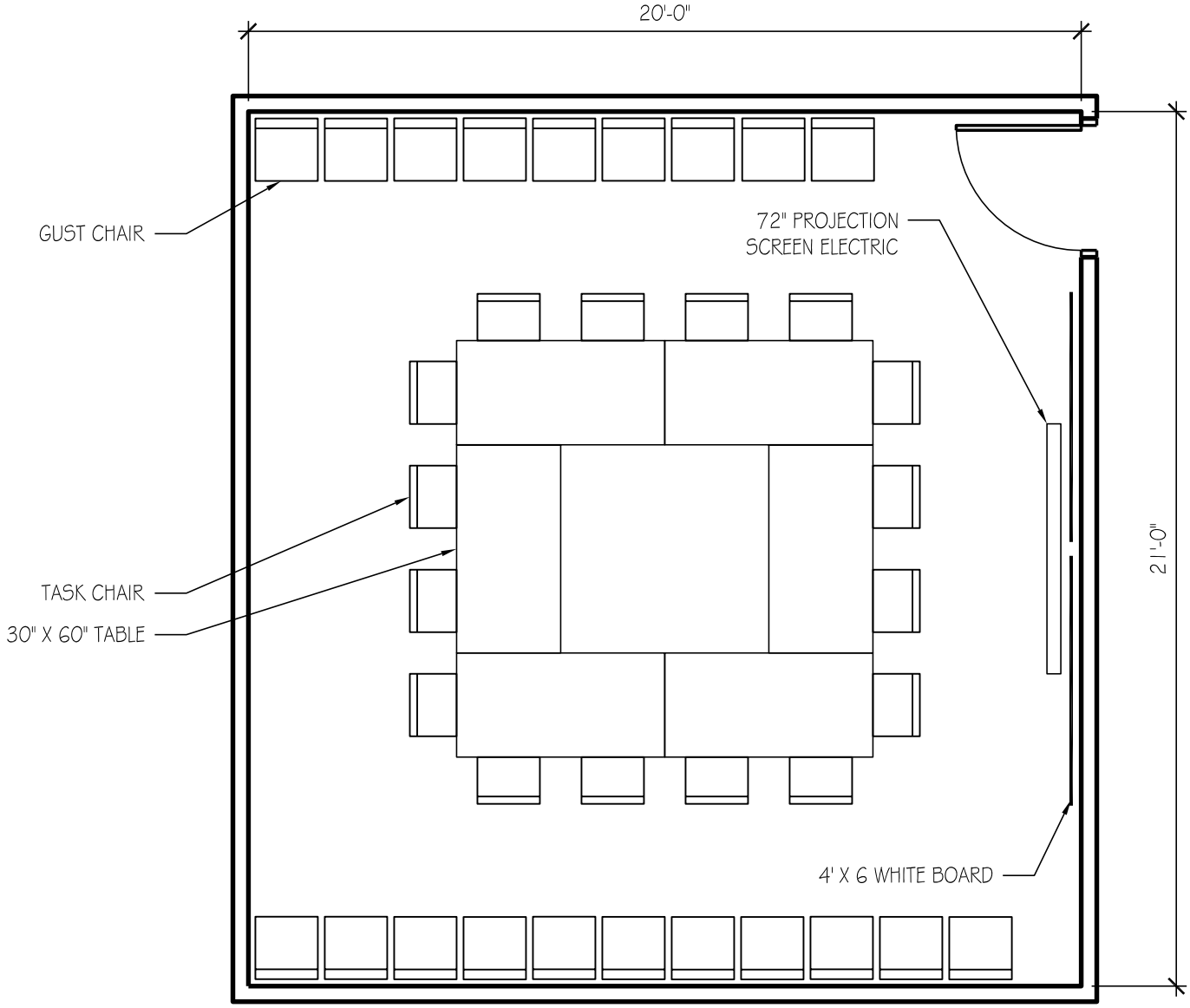

CONFERENCE ROOM - 420 SF

USU Agriculture Building

ROOM DATA SHEET DETAIL **Executive Administration**

Administration Support Area

1.6.5 Conference Room -

SPACE INFORMATION

Room Function: Group meetings, presentations

Adjacencies:

Special Requirements:
Chair rail around perimeter

Access: Public

Room Utilization: 5 days a week, 8:00 AM to 5:00 PM

General Notes: None

ROOM SIZE AND CAPACITY

Proposed Area:	420 NSF	**Room/Space Quantity:**	1	**Total Area:**	420
Assigned Capacity:	12 Occupant(s)	**Unassigned Capacity:**	Guest(s)	**Total Capacity:**	

FINISHES, DOORS, AND WINDOWS

Floor Finish: Carpet-tile

Wall Finish: Gypsum board (painted)

Base Finish: Integral Coved

Doors:

Type:	Single	**Height:**	84"
Width:	36"	**Vision Panel:**	N/A

Ceiling Treatment: Suspended acoustical lay-in tiles

Ceiling Height: 8' minimum

Acoustic Treatment: Acoustic seperation from adjacent spaces

Windows:

Natural Lighting:	Preferred, glare and brightness control
Room Skylight:	Frosted Panel

MECHANICAL/ELECTRICAL

HVAC:	Standard, space temperature control	**AV Requirements:**	As needed
Plumbing:	None	**Wire Management:**	Wall outlets
Fire Protection:	Smoke detector, sprinkler, and visual alarm	**Data Management:**	Tele/data outlet(s)
Security:	Keyed lock at entrance doors	**Artificial Lighting:**	Direct/indirect fluorescent
Electrical:	120V wall outlets	**Telephone:**	Telephone outlets per occupant

EQUIPMENT AND FURNISHINGS

Equipment

(1) Conference telephone
(1) 72" Projection screen, electric
(1) Projector

Furniture

(6) 30" x 60" Table
(20) Task chair
(14) Guest chair
(2) 4' x 6' White board

COPYRIGHT © 2009 CRSA

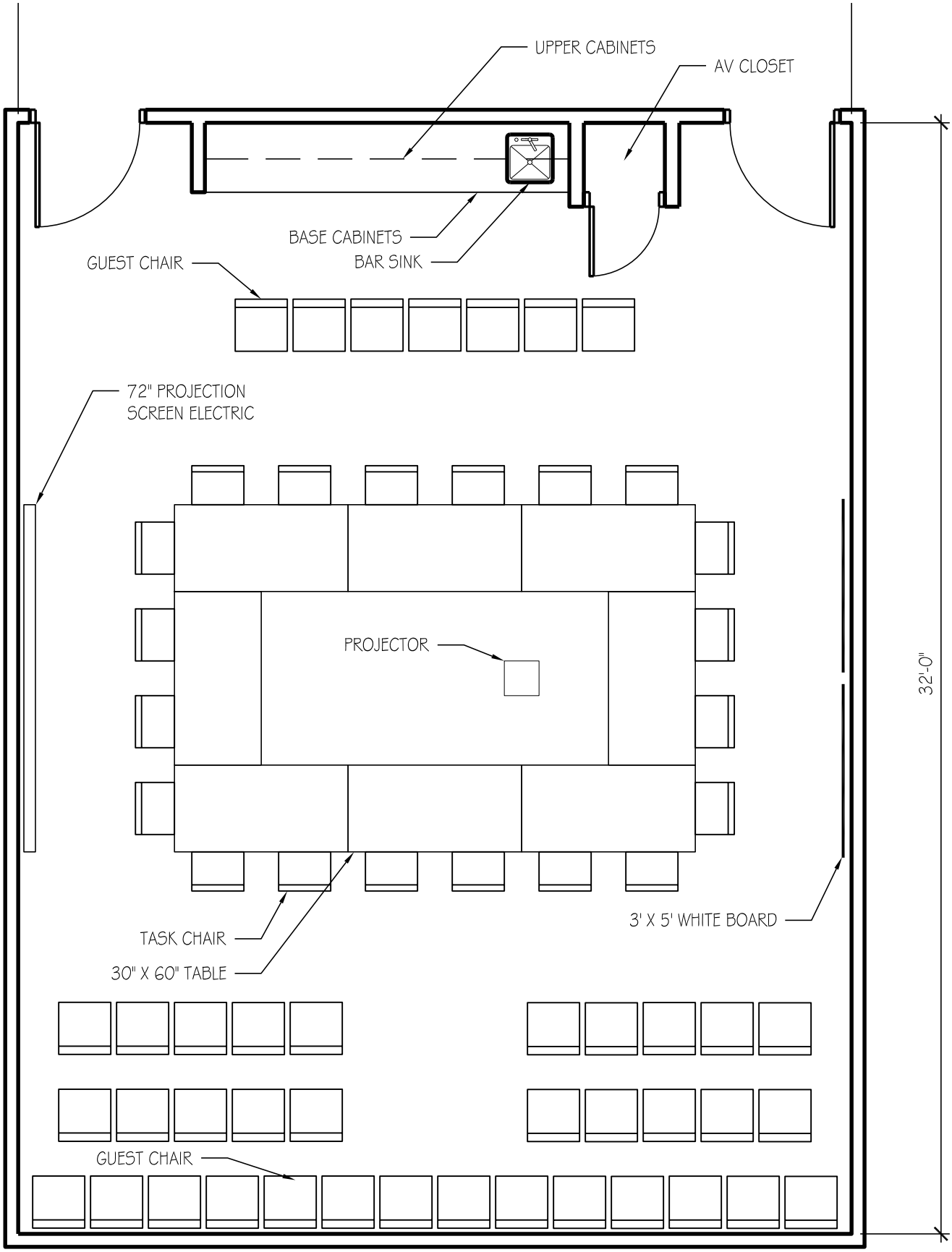

CONFERENCE ROOM - 768 SF

USU Agriculture Building

ROOM DATA SHEET DETAIL **Executive Administration**

Administration Support Area

1.6.6 Large Conference Room -

SPACE INFORMATION

Room Function: Group meetings, presentations

Adjacencies:

Special Requirements:
Chair rail around perimeter

Access: Public

Room Utilization: 5 days a week, 8:00 AM to 5:00 PM

General Notes: None

ROOM SIZE AND CAPACITY

Proposed Area:	768 NSF	**Room/Space Quantity:**	1	**Total Area:**	768
Assigned Capacity:	1 Occupant(s)	**Unassigned Capacity:**	37 Guest(s)	**Total Capacity:**	38

FINISHES, DOORS, AND WINDOWS

Floor Finish: Carpet-tile

Wall Finish: Gypsum board (painted)

Base Finish: Integral Coved

Doors:

Type:	Single	**Height:**	84"
Width:	36"	**Vision Panel:**	N/A

Ceiling Treatment: Suspended acoustical lay-in tiles

Ceiling Height: 8' minimum

Acoustic Treatment: Acoustic seperation from adjacent spaces

Windows:

Natural Lighting: Preferred, glare and brightness control

Room Skylight: Frosted Panel

MECHANICAL/ELECTRICAL

HVAC: Standard, space temperature control

Plumbing: Sink (bar) with hot/cold water

Fire Protection: Smoke detector, sprinkler, and visual alarm

Security: Keyed lock at entrance doors

Electrical: 120V wall outlets

AV Requirements: As needed

Wire Management: Wall outlets

Data Management: Tele/data outlet(s)

Artificial Lighting: Direct/indirect fluorescent

Telephone: Wall mounted telephone jack

EQUIPMENT AND FURNISHINGS

Equipment

(1) Conference telephone
(1) 72" Projection screen, electric
(1) Projector

Furniture

(8) 30" x 60" Table
(1) 11 LF Base and wall cabinets
(20) Task chair on casters
(41) Guest chair - stackable
(2) 3' x 5' White board

COPYRIGHT © 2009 CRSA

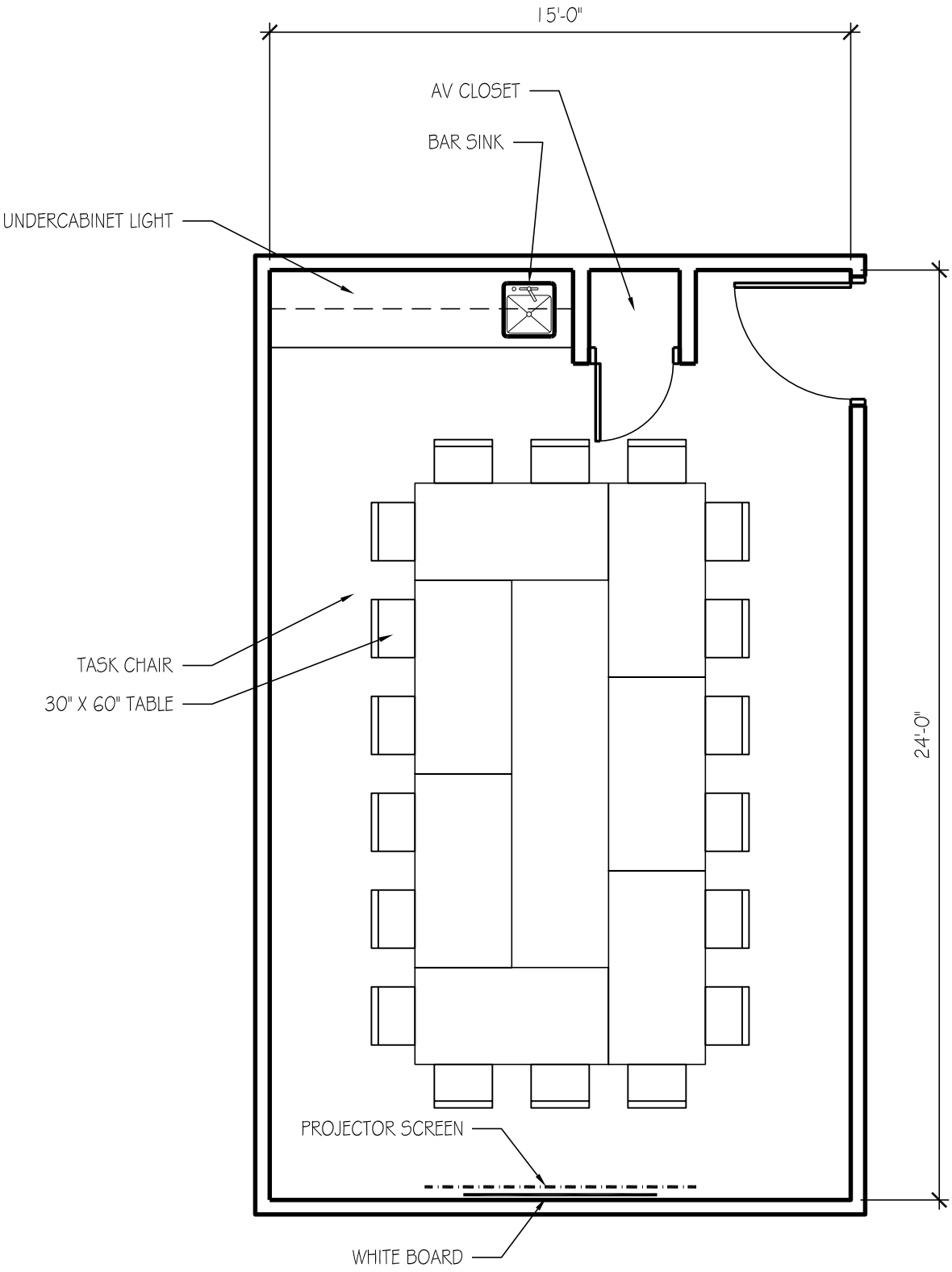

CONFERENCE ROOM - 360 SF

USU Agriculture Building

ROOM DATA SHEET DETAIL **Executive Administration**

Administration Support Area

1.6.7 Executive Council Conference Room -

SPACE INFORMATION

Room Function: Group meetings, presentations

Adjacencies: Catering Prep (1.6.4)

Special Requirements: Chair rail around perimeter

Access: Public

Room Utilization: 5 days a week, 8:00 AM to 5:00 PM

General Notes: None

ROOM SIZE AND CAPACITY

Proposed Area:	360 NSF	**Room/Space Quantity:**	1	**Total Area:**	360
Assigned Capacity:	1 Occupant(s)	**Unassigned Capacity:**	18 Guest(s)	**Total Capacity:**	19

FINISHES, DOORS, AND WINDOWS

Floor Finish: Carpet-tile

Wall Finish: Gypsum board (painted)

Base Finish: Integral Coved

Doors:

Type:	Single	**Height:**	84"
Width:	36"	**Vision Panel:**	Frosted

Ceiling Treatment: Suspended acoustical lay-in tiles

Ceiling Height: 8' minimum

Acoustic Treatment: Acoustic seperation from adjacent spaces

Windows:

Natural Lighting:	Preferred, glare and brightness control
Room Skylight:	Frosted Panel

MECHANICAL/ELECTRICAL

HVAC:	Standard, space temperature control	**AV Requirements:**	None
Plumbing:	Sink (bar) with hot/cold water	**Wire Management:**	Wall outlets
Fire Protection:	Smoke detector, sprinkler, and visual alarm	**Data Management:**	Tele/data outlet(s)
Security:	Keyed lock at entrance doors	**Artificial Lighting:**	Direct/indirect fluorescent
Electrical:	120V wall outlets	**Telephone:**	Wall mounted telephone jack

EQUIPMENT AND FURNISHINGS

Equipment

(1) Conference telephone
(1) 72" Projection screen, electric
(1) Projector

Furniture

(7) 30" x 60" Table
(18) Task chair
(1) 3' x 5' White board
(1) under cabinet lighting
(1) 8 LF base cabinet, locking
(1) 8 LF wall cabinet, locking

COPYRIGHT © 2009 CRSA

BLANK

SECTION 6

SPACE SUMMARY

2	**MARKETING**			**1,656**
2.1	Staff			856
2.1.1	Director of Marketing	1	160	160
2.1.2	Marketing Manager	1	120	120
2.1.3	Editors & Writers - open workstation	4	64	256
2.1.4	Graphic Designers - open workstation	2	64	128
2.1.5	Media Video - open workstation	2	64	128
2.1.6	Webmaster - open workstation	1	64	64
2.2	Marketing Support Area			800
2.2.1	Marketing/Video/Multiuse Studio	1	400	400
2.2.2	Webcast/Production/Photo Studio	1	180	180
2.2.3	Multimedia / Mixing Room	1	120	120
2.2.4	Storage	1	100	100

BLANK

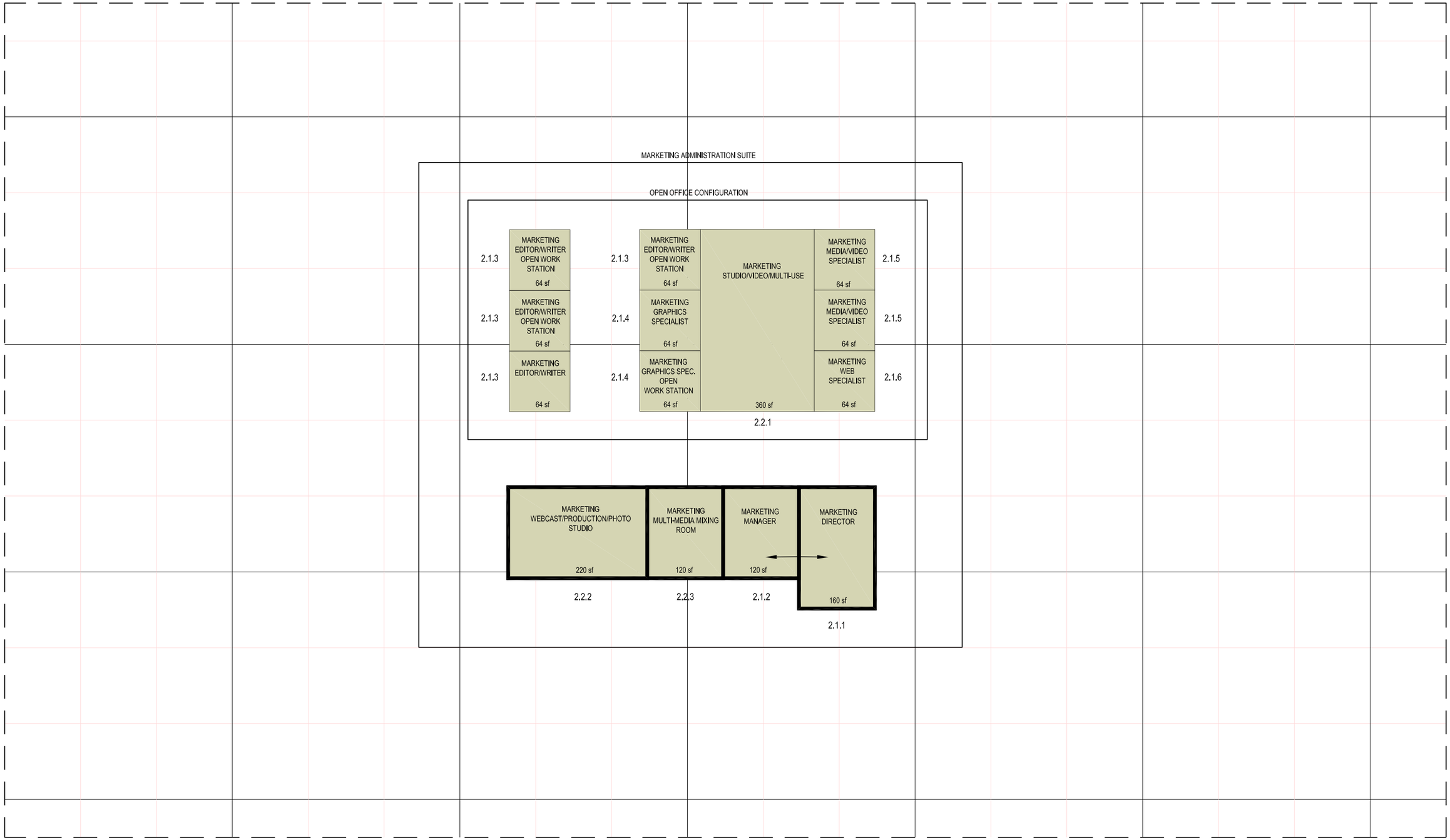

USU COA/ARS PROGRAM - MARKETING AFFINITY MATRIX

BLANK

BLANK

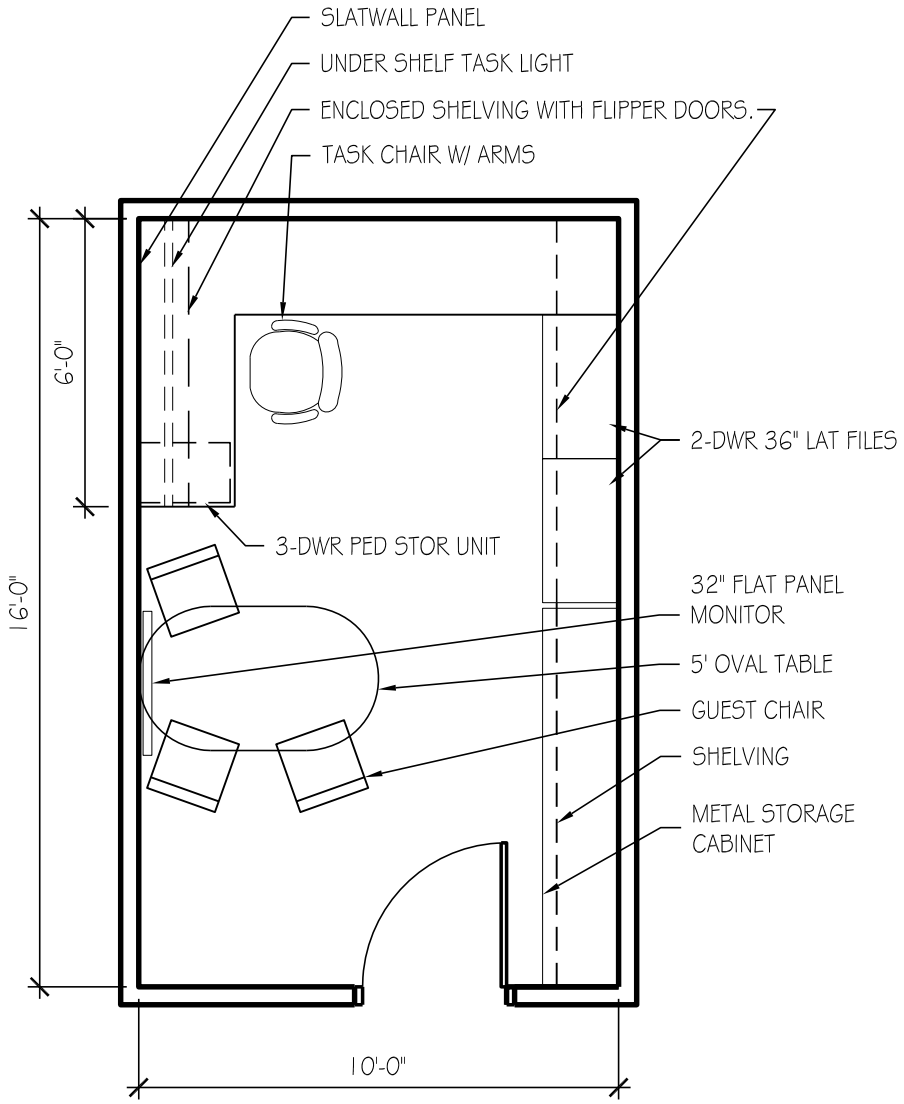

OFFICE - 160 SF

USU Agriculture Building

ROOM DATA SHEET DETAIL **Marketing**

Staff

2.1.1 Director of Marketing -

SPACE INFORMATION

Room Function: General office work

Adjacencies:

Special Requirements:
None

Access: Public

Room Utilization: 5 days a week, 8:00 AM to 5:00 PM

General Notes: None

ROOM SIZE AND CAPACITY

Proposed Area:	160 NSF	**Room/Space Quantity:**	1	**Total Area:**	160
Assigned Capacity:	1 Occupant(s)	**Unassigned Capacity:**	3 Guest(s)	**Total Capacity:**	4

FINISHES, DOORS, AND WINDOWS

Floor Finish: Carpet-tile

Wall Finish: Gypsum board (painted)

Base Finish: Integral Coved

Doors:

Type:	Single	**Height:**	84"
Width:	36"	**Vision Panel:**	Frosted

Ceiling Treatment: Suspended acoustical lay-in tiles

Ceiling Height: 8' minimum

Acoustic Treatment: Acoustic seperation from adjacent spaces

Windows:

Natural Lighting: Required (provide shades for control)

Room Skylight: Frosted Panel

MECHANICAL/ELECTRICAL

HVAC: Standard, space temperature control

Plumbing: None

Fire Protection: Sprinkler

Security: Keyed lock at entrance doors

Electrical: 120V wall (grounded) outlet

AV Requirements: None

Wire Management: Wall outlets

Data Management: Tele/data outlet(s)

Artificial Lighting: Direct/indirect fluorescent and task lighting

Telephone: Telephone outlets per occupant

EQUIPMENT AND FURNISHINGS

Equipment

(1) Computer system (provided by owner)
(1) Printer (provided by owner)
(1) 32" Flat panel monitor

Furniture

(1) 16 LF Work surface, system furniture
(1) 5' Oval conference table on casters
(1) Task chair
(3) Guest chair
(1) 3 Drawer PED file
(2) 2 Drawer 36" lateral file, s.f.
(1) 48 LF Adjustable height shelving
(1) 24 LF 12-1/2" Deep open shelving with flipper doors, s.f.
(1) Under shelf task light
(1) 8 LF task slatwall
(1) Task slatwall accessories package
(1) Door mounted coat rack
(1) Waste receptacle
(1) Desk task light
(1) 8 LF metal base cabinet

COPYRIGHT © 2009 CRSA

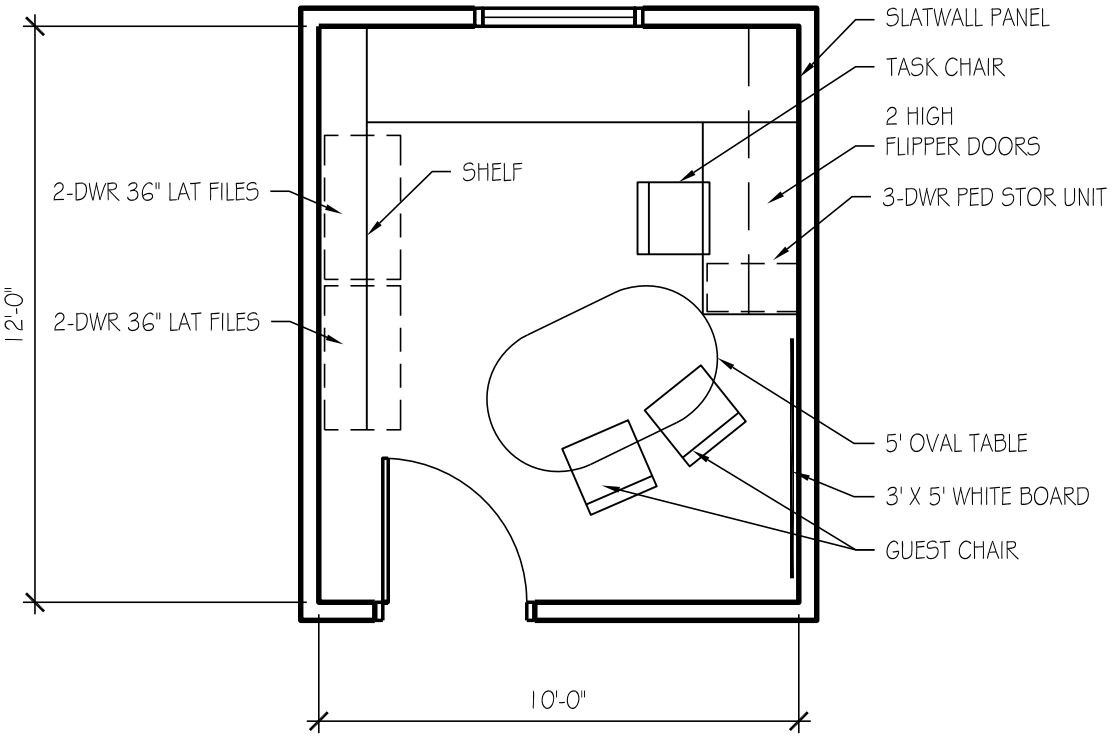

OFFICE A - 120 SF

USU Agriculture Building

ROOM DATA SHEET DETAIL **Marketing**

Staff

2.1.2 Marketing Manager -

SPACE INFORMATION

Room Function: General office work

Adjacencies:

Special Requirements:

None

Access: Public

Room Utilization: 5 days a week, 8:00 AM to 5:00 PM

General Notes: None

ROOM SIZE AND CAPACITY

Proposed Area:	120 NSF	**Room/Space Quantity:**	1	**Total Area:**	120
Assigned Capacity:	1 Occupant(s)	**Unassigned Capacity:**	2 Guest(s)	**Total Capacity:**	3

FINISHES, DOORS, AND WINDOWS

Floor Finish: Carpet-tile

Wall Finish: Gypsum board (painted)

Base Finish: Integral Coved

Doors:

Type:	Single	**Height:**	84"
Width:	36"	**Vision Panel:**	Frosted

Ceiling Treatment: Suspended acoustical lay-in tiles

Ceiling Height: 8' minimum

Acoustic Treatment: Acoustic seperation from adjacent spaces

Windows:

Natural Lighting:	Preferred, glare and brightness control
Room Skylight:	Vision Panel

MECHANICAL/ELECTRICAL

HVAC:	Standard, space temperature control	**AV Requirements:**	None
Plumbing:	None	**Wire Management:**	Wall outlets
Fire Protection:	Sprinkler	**Data Management:**	Tele/data outlet(s)
Security:	Keyed lock at entrance doors	**Artificial Lighting:**	Direct/indirect fluorescent and task lighting
Electrical:	120V wall (grounded) outlet	**Telephone:**	Telephone outlets per occupant

EQUIPMENT AND FURNISHINGS

Equipment

(1) Computer system (provided by owner)
(1) Printer (provided by owner)

Furniture

(1) 13 LF of work surface
(2) 36" 2 drawer lateral file
(1) 3 drawer PED file
(1) 5' Oval on casters
(1) Task chair
(2) Guest chairs
(2) 6 LF 15-1/2" deep enclosed shelving with flipper doors, s.f.
(1) 8 LF open shelving
(1) Whiteboard
(1) Wall mounted coat rack
(1) Waste receptacle
(1) 6 LF task slatwall
(1) Task slatwall accessories package

COPYRIGHT © 2009 CRSA

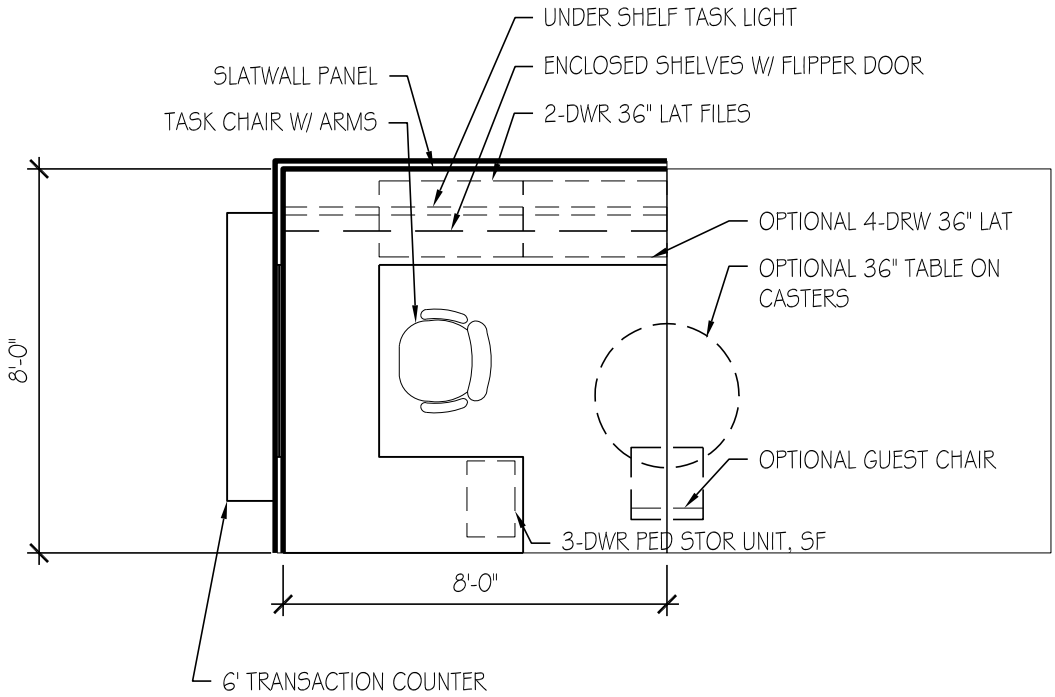

OPEN WORKSTATION

64 SF

USU Agriculture Building

ROOM DATA SHEET DETAIL **Marketing**

Staff

2.1.3 Editors and Writers - Open Workstation -

SPACE INFORMATION

Room Function: General office work

Adjacencies:

Special Requirements:
None

Access: Public

Room Utilization: 5 days a week, 8:00 AM to 5:00 PM

General Notes: None

ROOM SIZE AND CAPACITY

Proposed Area:	64 NSF	**Room/Space Quantity:**	2	**Total Area:**	128
Assigned Capacity:	1 Occupant(s)	**Unassigned Capacity:**	29 Guest(s)	**Total Capacity:**	30

FINISHES, DOORS, AND WINDOWS

Floor Finish: Carpet-tile

Wall Finish: Systems furniture

Base Finish: Systems Furniture

Doors:

Type:	N/A	**Height:**	None
Width:	None	**Vision Panel:**	N/A

Ceiling Treatment: Suspended acoustical lay-in tiles

Ceiling Height: 8' minimum

Acoustic Treatment: Systems Furniture

Windows:

Natural Lighting:	Not required
Room Skylight:	N/A

MECHANICAL/ELECTRICAL

HVAC:	Standard	**AV Requirements:**	None
Plumbing:	None	**Wire Management:**	Wall outlets
Fire Protection:	Sprinkler	**Data Management:**	Tele/data outlet(s)
Security:	Keyed lock on all securable storage devices	**Artificial Lighting:**	Direct/indirect fluorescent and task lighting
Electrical:	120V wall (grounded) outlet	**Telephone:**	Telephone outlets per occupant

EQUIPMENT AND FURNISHINGS

Equipment

(1) Computer system (provided by owner)

Furniture

(1) 13 LF work surface
(1) 3 Drawer PED file
(1) Task chair
(2) 36" 2 drawer lateral file
(1) 8 LF 15-1/2" deep enclosed shelving with flipper door, s.f.
(1) Under shelf task light, s.f.
(1) 8 LF task slatwall
(1) Task slatwall accessories package
(1) Waste receptacle
(1) Optional guest chair
(1) Optional 36" table on casters
(1) Optional 36" 4 drawer lateral file
(1) Optional 6 LF transaction counter

COPYRIGHT © 2009 CRSA

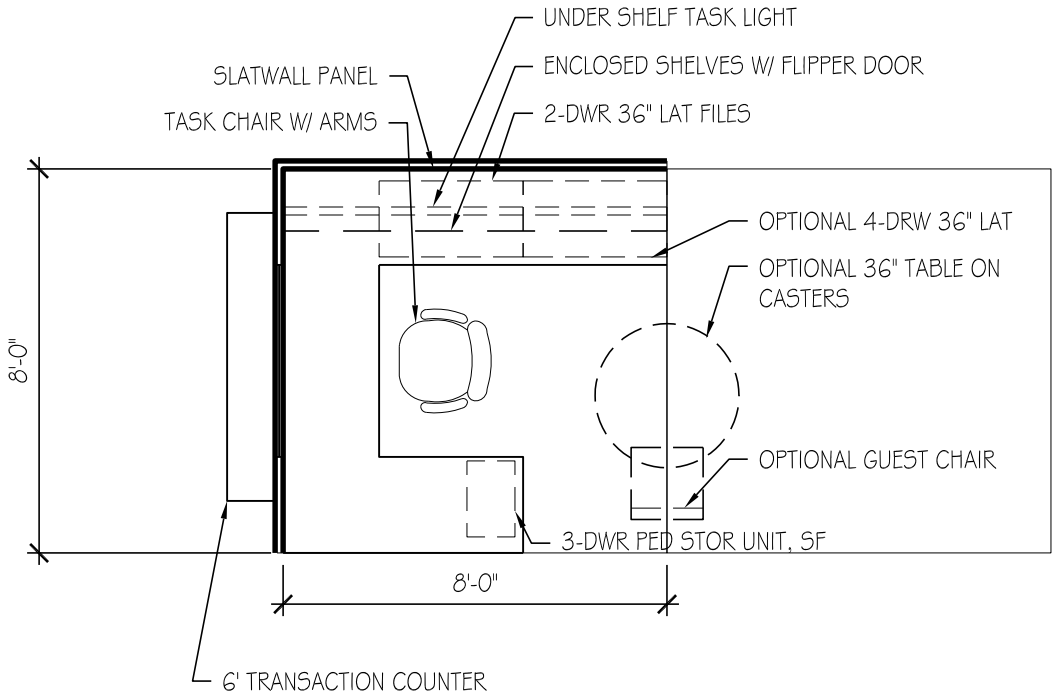

OPEN WORKSTATION

64 SF

USU Agriculture Building

ROOM DATA SHEET DETAIL **Marketing**

Staff

2.1.4 Graphic Designers - Open Workstation -

SPACE INFORMATION

Room Function: General office work

Adjacencies:

Special Requirements:
None

Access: Public

Room Utilization: 5 days a week, 8:00 AM to 5:00 PM

General Notes: None

ROOM SIZE AND CAPACITY

Proposed Area:	64 NSF	**Room/Space Quantity:**	2	**Total Area:**	128
Assigned Capacity:	1 Occupant(s)	**Unassigned Capacity:**	29 Guest(s)	**Total Capacity:**	30

FINISHES, DOORS, AND WINDOWS

Floor Finish: Carpet-tile

Wall Finish: Systems furniture

Base Finish: Systems Furniture

Doors:

Type:	N/A	**Height:**	None
Width:	None	**Vision Panel:**	N/A

Ceiling Treatment: Suspended acoustical lay-in tiles

Ceiling Height: 8' minimum

Acoustic Treatment: Systems Furniture

Windows:

Natural Lighting:	Not required
Room Skylight:	Vision Panel

MECHANICAL/ELECTRICAL

HVAC:	Standard	**AV Requirements:**	None
Plumbing:	None	**Wire Management:**	Wall outlets
Fire Protection:	Sprinkler	**Data Management:**	Tele/data outlet(s)
Security:	Keyed lock on all securable storage devices	**Artificial Lighting:**	Direct/indirect fluorescent and task lighting
Electrical:	120V wall (grounded) outlet	**Telephone:**	Telephone outlets per occupant

EQUIPMENT AND FURNISHINGS

Equipment

(1) Computer system (provided by owner)

Furniture

(1) 13 LF work surface
(1) 3 Drawer PED file
(1) Task chair
(2) 36" 2 drawer lateral file
(1) 8 LF 15-1/2" deep enclosed shelving with flipper door, s.f.
(1) Under shelf task light, s.f.
(1) 8 LF task slatwall
(1) Task slatwall accessories package
(1) Waste receptacle
(1) Optional guest chair
(1) Optional 36" table on casters
(1) Optional 36" 4 drawer lateral file
(1) Optional 6 LF transaction counter

COPYRIGHT © 2009 CRSA

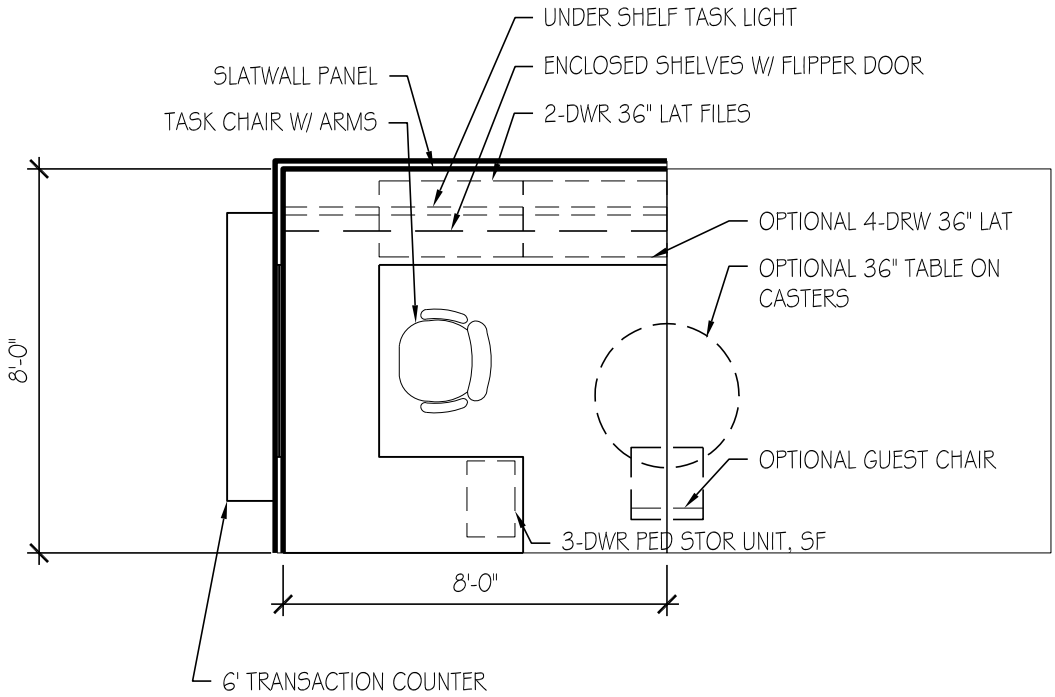

OPEN WORKSTATION

64 SF

USU Agriculture Building

ROOM DATA SHEET DETAIL **Marketing**

Staff

2.1.5 Media Video - Open Workstation -

SPACE INFORMATION

Room Function: General office work

Adjacencies:

Special Requirements:
None

Access: Public

Room Utilization: 5 days a week, 8:00 AM to 5:00 PM

General Notes: None

ROOM SIZE AND CAPACITY

Proposed Area:	64 NSF	**Room/Space Quantity:**	2	**Total Area:**	128
Assigned Capacity:	1 Occupant(s)	**Unassigned Capacity:**	29 Guest(s)	**Total Capacity:**	30

FINISHES, DOORS, AND WINDOWS

Floor Finish:	Carpet-tile	**Ceiling Treatment:**	Suspended acoustical lay-in tiles
Wall Finish:	Systems furniture	**Ceiling Height:**	8' minimum
Base Finish:	Systems Furniture	**Acoustic Treatment:**	Systems Furniture
Doors:		**Windows:**	

Type:	N/A	**Height:**	None	**Natural Lighting:**	Not required
Width:	None	**Vision Panel:**	N/A	**Room Skylight:**	N/A

MECHANICAL/ELECTRICAL

HVAC:	Standard	**AV Requirements:**	None
Plumbing:	None	**Wire Management:**	Wall outlets
Fire Protection:	Sprinkler	**Data Management:**	Tele/data outlet(s)
Security:	Keyed lock on all securable storage devices	**Artificial Lighting:**	Direct/indirect fluorescent and task lighting
Electrical:	120V wall (grounded) outlet	**Telephone:**	Telephone outlets per occupant

EQUIPMENT AND FURNISHINGS

Equipment

(1) Computer system (provided by owner)

Furniture

(1) 13 LF work surface
(1) 3 Drawer PED file
(1) Task chair
(2) 36" 2 drawer lateral file
(1) 8 LF 15-1/2" deep enclosed shelving with flipper door, s.f.
(1) Under shelf task light, s.f.
(1) 8 LF task slatwall
(1) Task slatwall accessories package
(1) Waste receptacle
(1) Optional guest chair
(1) Optional 36" table on casters
(1) Optional 36" 4 drawer lateral file
(1) Optional 6 LF transaction counter

COPYRIGHT © 2009 CRSA

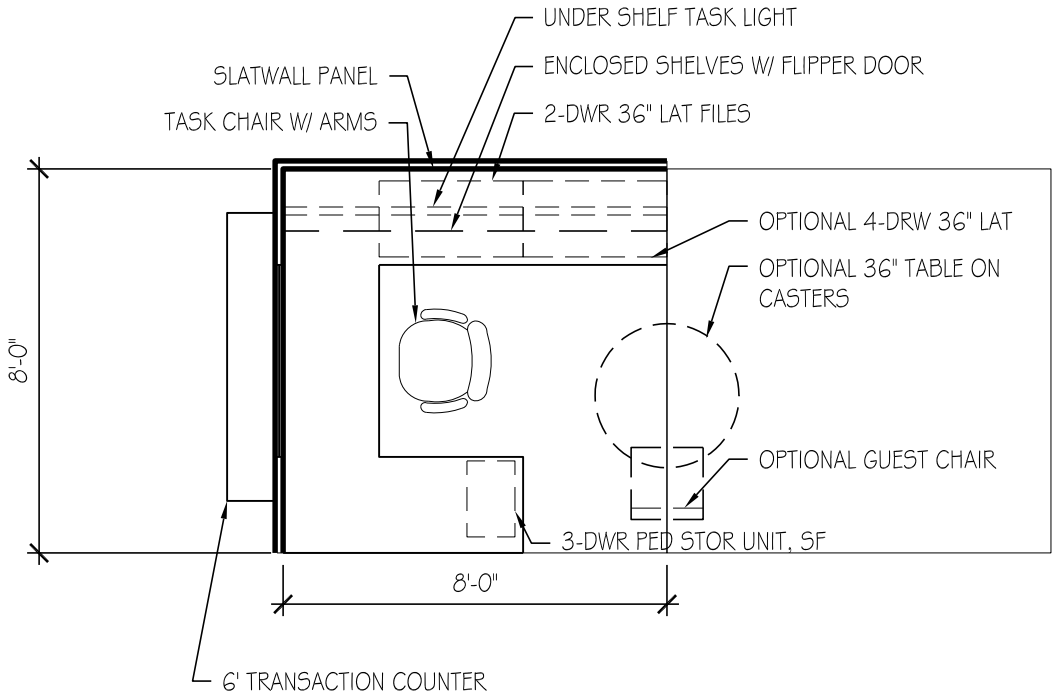

OPEN WORKSTATION

64 SF

USU Agriculture Building

ROOM DATA SHEET DETAIL **Marketing**

Staff

2.1.6 Webmaster - Open Workstation -

SPACE INFORMATION

Room Function: General office work

Adjacencies:

Special Requirements:
None

Access: Public

Room Utilization: 5 days a week, 8:00 AM to 5:00 PM

General Notes: None

ROOM SIZE AND CAPACITY

Proposed Area:	64 NSF	**Room/Space Quantity:**	2	**Total Area:**	128
Assigned Capacity:	1 Occupant(s)	**Unassigned Capacity:**	1 Guest(s)	**Total Capacity:**	2

FINISHES, DOORS, AND WINDOWS

Floor Finish: Carpet-tile

Wall Finish: Systems furniture

Base Finish: Systems Furniture

Doors:

Type:	N/A	**Height:**	None
Width:	None	**Vision Panel:**	N/A

Ceiling Treatment: Suspended acoustical lay-in tiles

Ceiling Height: 8' minimum

Acoustic Treatment: Systems Furniture

Windows:

Natural Lighting:	Not required
Room Skylight:	N/A

MECHANICAL/ELECTRICAL

HVAC:	Standard	**AV Requirements:**	None
Plumbing:	None	**Wire Management:**	Wall outlets
Fire Protection:	Sprinkler	**Data Management:**	Tele/data outlet(s)
Security:	Keyed lock on all securable storage devices	**Artificial Lighting:**	Direct/indirect fluorescent and task lighting
Electrical:	120V wall (grounded) outlet	**Telephone:**	Telephone outlets per occupant

EQUIPMENT AND FURNISHINGS

Equipment

(1) Computer system (provided by owner)

Furniture

(1) 13 LF work surface
(1) 3 Drawer PED file
(1) Task chair
(2) 36" 2 drawer lateral file
(1) 8 LF 15-1/2" deep enclosed shelving with flipper door, s.f.
(1) Under shelf task light, s.f.
(1) 8 LF task slatwall
(1) Task slatwall accessories package
(1) Waste receptacle
(1) Optional guest chair
(1) Optional 36" table on casters
(1) Optional 36" 4 drawer lateral file
(1) Optional 6 LF transaction counter

COPYRIGHT © 2009 CRSA

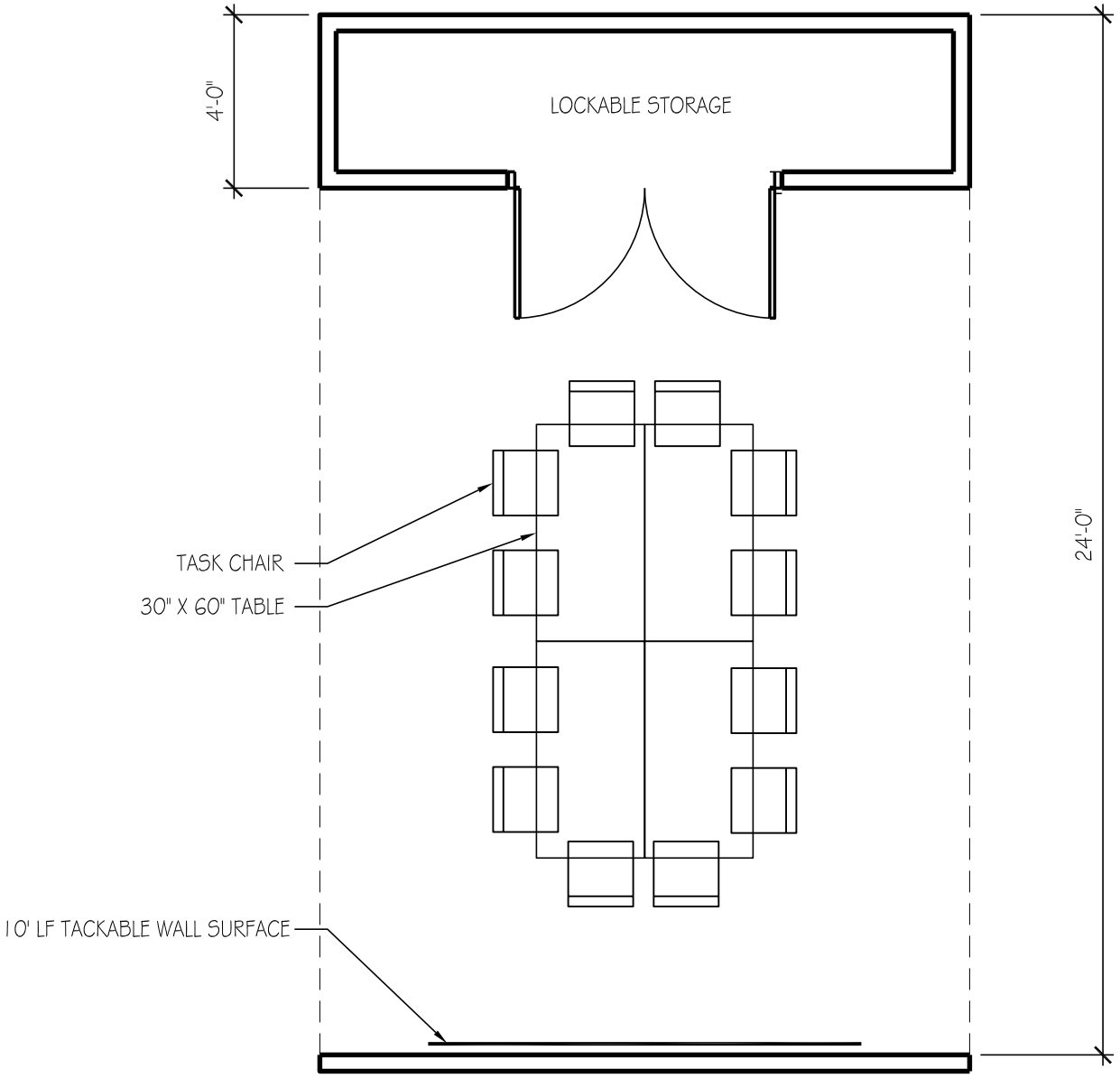

MARKETING / VIDEO / MULTI-USE STUDIO - 360 SF

USU Agriculture Building

ROOM DATA SHEET DETAIL **Marketing**

Marketing Support Area

2.2.1 Marketing/Video/Multi-Use Studio -

SPACE INFORMATION

Room Function: Layout, collaboration, work

Adjacencies:

Access: Public

Room Utilization: 5 days a week, 8:00 AM to 5:00 PM

General Notes: None

Special Requirements:

At least a 10' ceiling, moveable overhead lights, over-size door, dedicated 110 outlets for lights, gigabit internet port, lockable storage, long cork board, sound dampening ceiling and walls, WiFi, 20% more 110V outlets

ROOM SIZE AND CAPACITY

Proposed Area:	360 NSF	**Room/Space Quantity:**	1	**Total Area:**	360
Assigned Capacity:	1 Occupant(s)	**Unassigned Capacity:**	1 Guest(s)	**Total Capacity:**	2

FINISHES, DOORS, AND WINDOWS

Floor Finish: Carpet-tile

Wall Finish: Gypsum board (painted)

Base Finish: Integral Coved

Doors:

Type:	N/A	**Height:**	None
Width:	None	**Vision Panel:**	N/A

Ceiling Treatment: Suspended acoustical lay-in tiles

Ceiling Height: 10' minimum

Acoustic Treatment: Acoustic seperation from adjacent spaces

Windows:

Natural Lighting:	Not required
Room Skylight:	N/A

MECHANICAL/ELECTRICAL

HVAC:	Standard, space temperature control	**AV Requirements:**	As needed
Plumbing:	None	**Wire Management:**	Wall outlets
Fire Protection:	Sprinkler	**Data Management:**	Tele/data outlet(s)
Security:	Keyed lock at entrance doors	**Artificial Lighting:**	Direct/indirect fluorescent
Electrical:	120V wall (grounded) outlet	**Telephone:**	None

EQUIPMENT AND FURNISHINGS

Equipment

(4) 50" Flat screen Televisions
Moveable lights
(2) 8' x 10' Roll up backdrop frames
(3) HD pan and tilt HD conferencing cameras

Furniture

(4) 30" x 60" Table on casters
(12) Stackable chair on casters
(1) 10 LF tack board
(1) 4' x 10', 48" Deep, Lockable storage

COPYRIGHT © 2009 CRSA

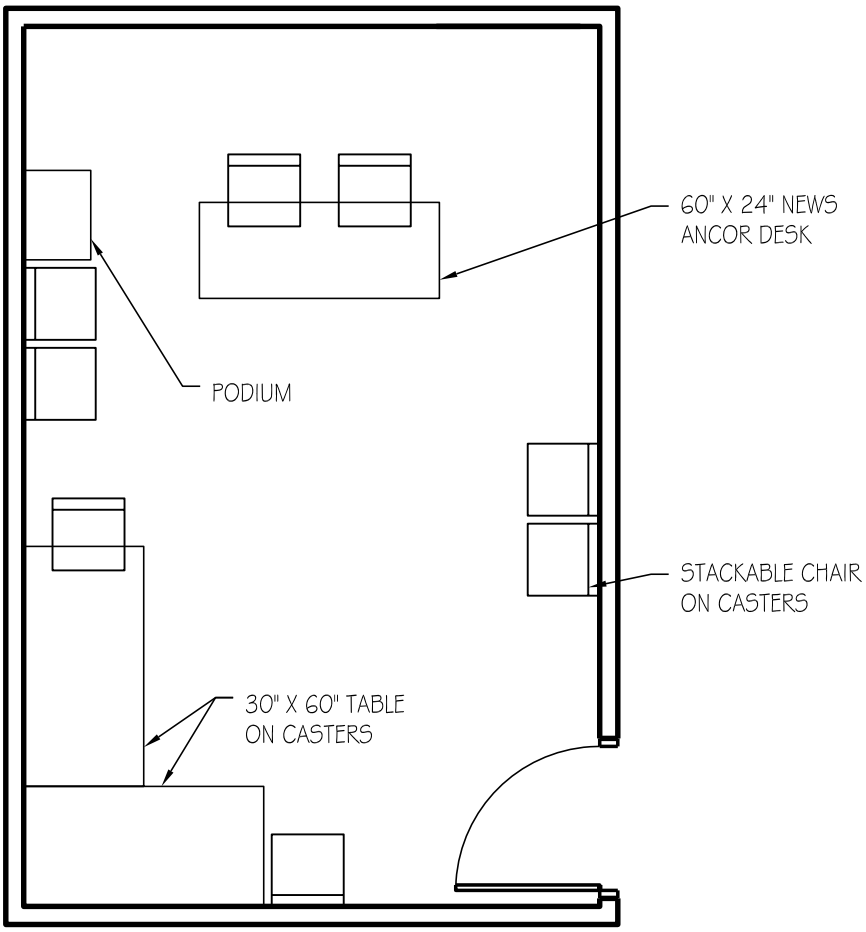

WEBCAST PRODUCTION /
PHOTO STUDIO - 220 SF

USU Agriculture Building

ROOM DATA SHEET DETAIL **Marketing**

Marketing Support Area

2.2.2 Webcast/Production/Photo Studio -

SPACE INFORMATION

Room Function: Webcast, photography, production

Adjacencies:

Access: Public

Room Utilization: 5 days a week, 8:00 AM to 5:00 PM

General Notes: None

Special Requirements:

High ceilings, sound proof room, moveable overhead lights, dedicated 110 outlets for lights, over-size door, restricted access, high speed internet (Ethernet hard wire) 20% additional 110V outlets

ROOM SIZE AND CAPACITY

Proposed Area:	220 NSF	**Room/Space Quantity:**	1	**Total Area:**	220
Assigned Capacity:	1 Occupant(s)	**Unassigned Capacity:**	1 Guest(s)	**Total Capacity:**	2

FINISHES, DOORS, AND WINDOWS

Floor Finish: Carpet-tile

Wall Finish: Gypsum board (painted)

Base Finish: Integral Coved

Doors:

Type:	Single	**Height:**	84"
Width:	36"	**Vision Panel:**	Clear

Ceiling Treatment: Suspended acoustical lay-in tiles

Ceiling Height: 10' minimum

Acoustic Treatment: Acoustic seperation from adjacent spaces

Windows:

Natural Lighting: Not required

Room Skylight: Vision Panel

MECHANICAL/ELECTRICAL

HVAC: Standard, space temperature control

Plumbing: None

Fire Protection: Sprinkler

Security: Keyed lock at entrance doors

Electrical: 120V wall outlets

AV Requirements: None

Wire Management: Wall outlets

Data Management: Tele/data outlet(s)

Artificial Lighting: Direct/indirect fluorescent and task lighting

Telephone: None

EQUIPMENT AND FURNISHINGS

Equipment

(2) 50" Flat screen Televisions
Floor base lights
(2) Roll up backdrop frames

Furniture

(2) 30" x 60" Table on casters
(8) Stackable chair on casters
(1) 5 LF Work surface
(1) Task chair
(1) 26.75" x 16.75" Adjustable podium
(1) 60" x 24" Deep news anchor desk

COPYRIGHT © 2009 CRSA

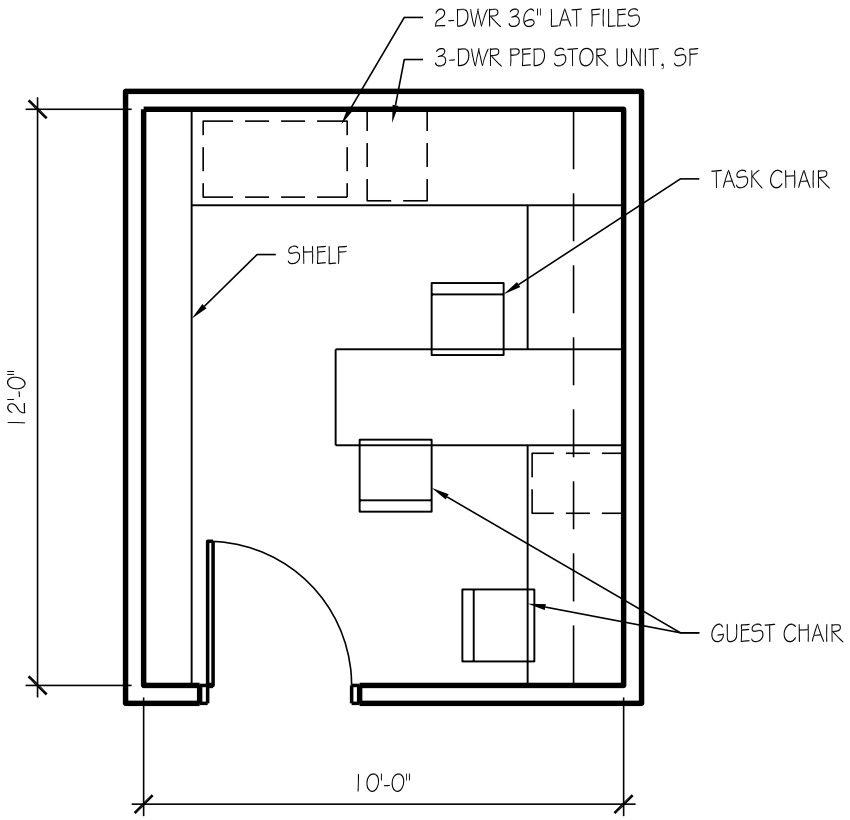

MUITI-MEDIA MIXING
ROOM - 120 SF

USU Agriculture Building

ROOM DATA SHEET DETAIL **Marketing**

Marketing Support Area

2.2.3 Multimedia/Mixing Rom -

SPACE INFORMATION

Room Function: Recording and mixing

Adjacencies:

Access: Public

Room Utilization: 5 days a week, 8:00 AM to 5:00 PM

General Notes: None

Special Requirements:

This room will require additional power outlets, at least 50% more than a normal office.

ROOM SIZE AND CAPACITY

Proposed Area:	120 NSF	**Room/Space Quantity:**	1	**Total Area:**	120
Assigned Capacity:	1 Occupant(s)	**Unassigned Capacity:**	3 Guest(s)	**Total Capacity:**	4

FINISHES, DOORS, AND WINDOWS

Floor Finish: Carpet-tile

Wall Finish: Gypsum board (painted)

Base Finish: Integral Coved

Doors:

Type:	Single	**Height:**	84"
Width:	36"	**Vision Panel:**	Clear

Ceiling Treatment: Suspended acoustical lay-in tiles

Ceiling Height: 8' minimum

Acoustic Treatment: Acoustic seperation from adjacent spaces

Windows:

Natural Lighting:	Not required
Room Skylight:	Vision Panel

MECHANICAL/ELECTRICAL

HVAC:	Standard, space temperature control	**AV Requirements:**	None
Plumbing:	None	**Wire Management:**	Wall outlets
Fire Protection:	Sprinkler	**Data Management:**	Tele/data outlet(s)
Security:	Keyed lock at entrance doors	**Artificial Lighting:**	Direct/indirect fluorescent
Electrical:	120V wall (grounded) outlet	**Telephone:**	Telephone outlets per occupant

EQUIPMENT AND FURNISHINGS

Equipment

(1) Computer system (provided by owner)
Microphones (provided by owner)
Field recording gear
Hard Drives

Furniture

(1) 21 LF of work surface
(1) 36" 2 drawer lateral file
(1) 3 drawer PED file
(1) Task chair
(2) Guest chairs
(1) 22 LF of bookshelves
(1) Bookshelves above desk
(1) Waste receptacle

COPYRIGHT © 2009 CRSA

BLANK

SECTION 6

SPACE SUMMARY

3	**CENTERS**			**4,742**
3.1	Utah Botanical Center			656
3.1.1	UBC Botanical Center - Director	1	160	160
3.1.2	Utah Botanical Center - Future Position	1	120	120
3.1.3	UBC Staff	1	120	120
3.1.4	Open Workstations	4	64	256
3.2	International Research Programs			656
3.2.1	Associate VP Research (PL Agriculture)	1	160	160
3.2.2	Future Position	1	120	120
3.2.3	Program Coordinator	1	120	120
3.2.4	Open Workstations	4	64	256
3.3	Western Rural Development Center			656
3.3.1	Director	1	160	160
3.3.2	Senior Program Officer	1	120	120
3.3.3	Write/Editor/Designer	1	120	120
3.3.4	Open Workstations	4	64	256
3.4	Western SARE			656
3.4.1	Director	1	160	160
3.4.2	Deputy Coordinator	1	120	120
3.4.3	Office - Contracts Manager	1	120	120
3.4.4	Open Workstation	4	64	256
3.5	4-H			1,328
3.5.1	Director	1	160	160
3.5.2	Youth Specialist / Vol. Development	1	120	120
3.5.3	Leadership / Citizenship & Ambassadors	1	120	120
3.5.4	SET Curriculum and Program Coordinator	1	100	100
3.5.5	4H State Activities Coordinator	1	100	100
3.5.6	YFP Mentoring	1	100	100
3.5.7	Accountant	1	100	100
3.5.8	Support Staff			
3.5.8.1	Admin Assistant - open workstation	1	64	64
3.5.8.2	Staff II - open workstation	1	64	64
3.5.8.3	Web Site Developer - open workstation	1	64	64
3.5.8.4	Open Workstations / Layout space	8	42	336
3.6	Center Support Area			790
3.6.1	Reception	1	180	180
3.6.2	Copy/Mail/Workroom/Storage	1	250	250
3.6.3	Conference Room, Small	2	180	360

BLANK

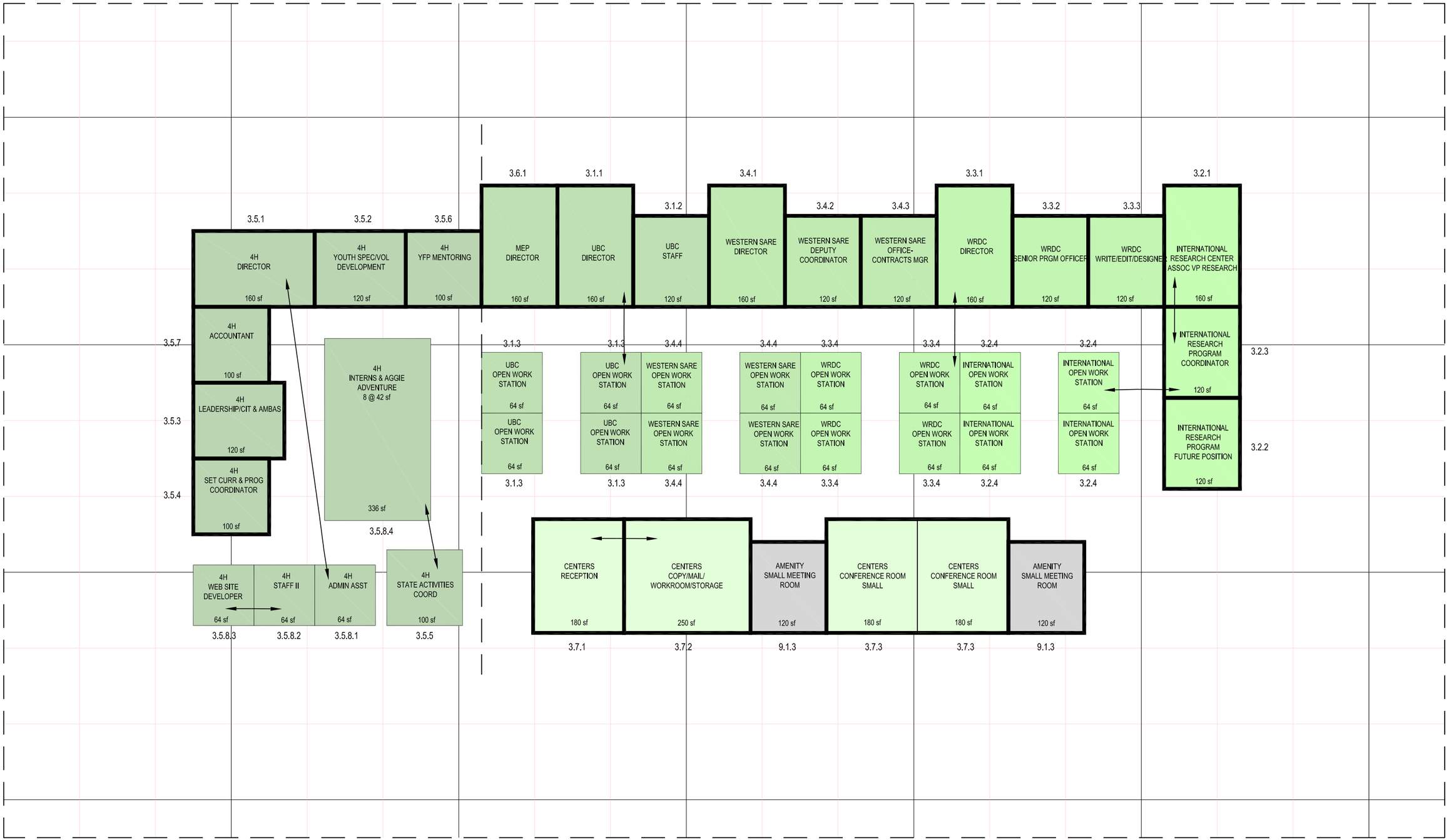

USU COA/ARS PROGRAM - CENTERS AFFINITY MATRIX

BLANK

BLANK

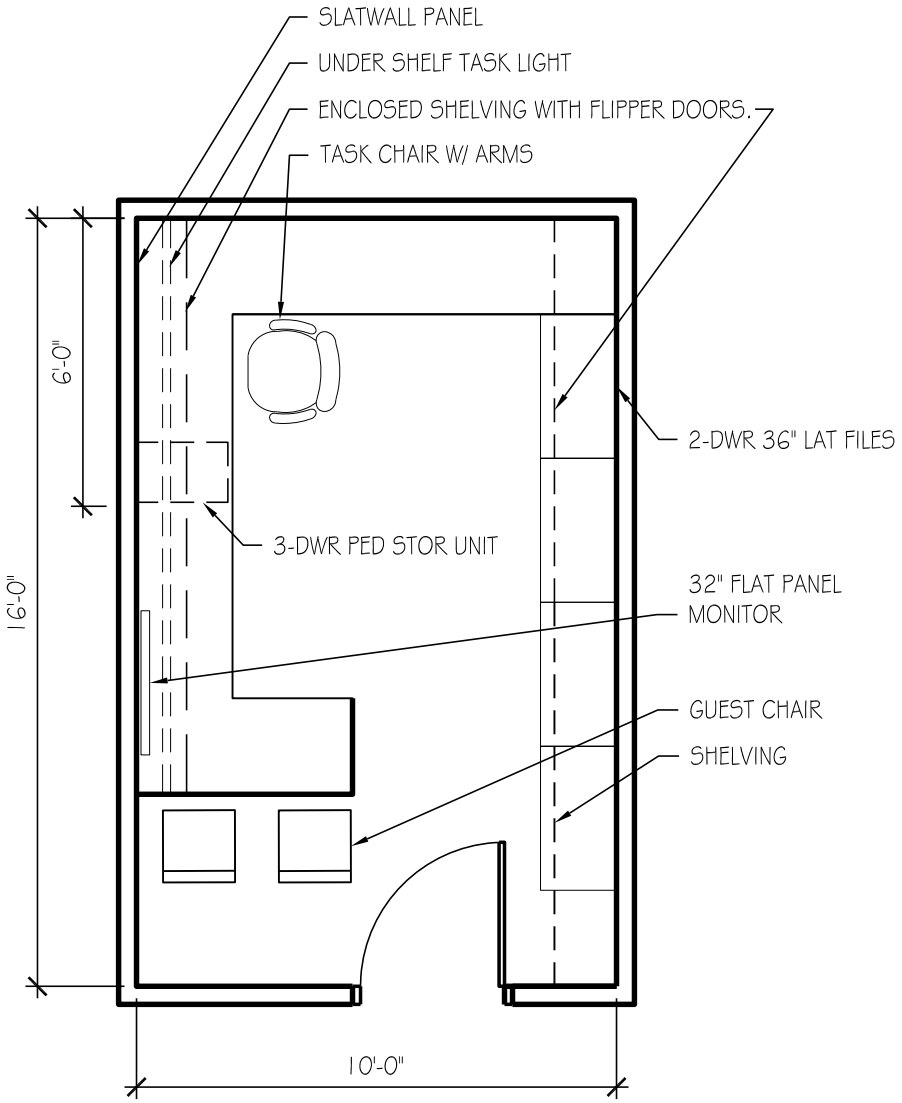

3.1.1 OFFICE - 160 SF

USU Agriculture Building

ROOM DATA SHEET DETAIL **Centers**

Utah Botanical Center

3.1.1 Director **-**

SPACE INFORMATION

Room Function: General office work

Adjacencies:

Special Requirements:
None

Access: Public

Room Utilization: 5 days a week, 8:00 AM to 5:00 PM

General Notes: None

ROOM SIZE AND CAPACITY

Proposed Area:	160 NSF	**Room/Space Quantity:**	1	**Total Area:**	160
Assigned Capacity:	1 Occupant(s)	**Unassigned Capacity:**	3 Guest(s)	**Total Capacity:**	4

FINISHES, DOORS, AND WINDOWS

Floor Finish: Carpet-tile

Wall Finish: Gypsum board (painted)

Base Finish: Integral Coved

Doors:

Type:	Single	**Height:**	84"
Width:	36"	**Vision Panel:**	Frosted

Ceiling Treatment: Suspended acoustical lay-in tiles

Ceiling Height: 8' minimum

Acoustic Treatment: Acoustic seperation from adjacent spaces

Windows:

Natural Lighting: Required (provide shades for control)

Room Skylight: Frosted Panel

MECHANICAL/ELECTRICAL

HVAC: Standard, space temperature control

Plumbing: None

Fire Protection: Sprinkler

Security: Keyed lock at entrance doors

Electrical: 120V wall outlets

AV Requirements: None

Wire Management: Wall outlets

Data Management: Tele/data outlet(s)

Artificial Lighting: Direct/indirect fluorescent and task lighting

Telephone: Telephone outlets per occupant

EQUIPMENT AND FURNISHINGS

Equipment

(1) Computer system (provided by owner)
(1) Printer (provided by owner)
(1) 32" flat panel monitor

Furniture

(1) 23 LF Work surface, system furniture
(1) Task chair
(2) Guest chair
(1) 3 Drawer PED file
() 2 Drawer 36" lateral file, s.f.
(1) 48 LF Adjustable height shelving
(1) 24 LF 12-1/2" Deep open shelving with flipper doors, s.f.
(1) Under shelf task light
(1) 12 LF task slatwall
(1) Task slatwall accessories package
(1) Door mounted coat rack
(1) Waste receptacle
(1) Desk task light
(2) 42" Metal storage cabinets

COPYRIGHT © 2009 CRSA

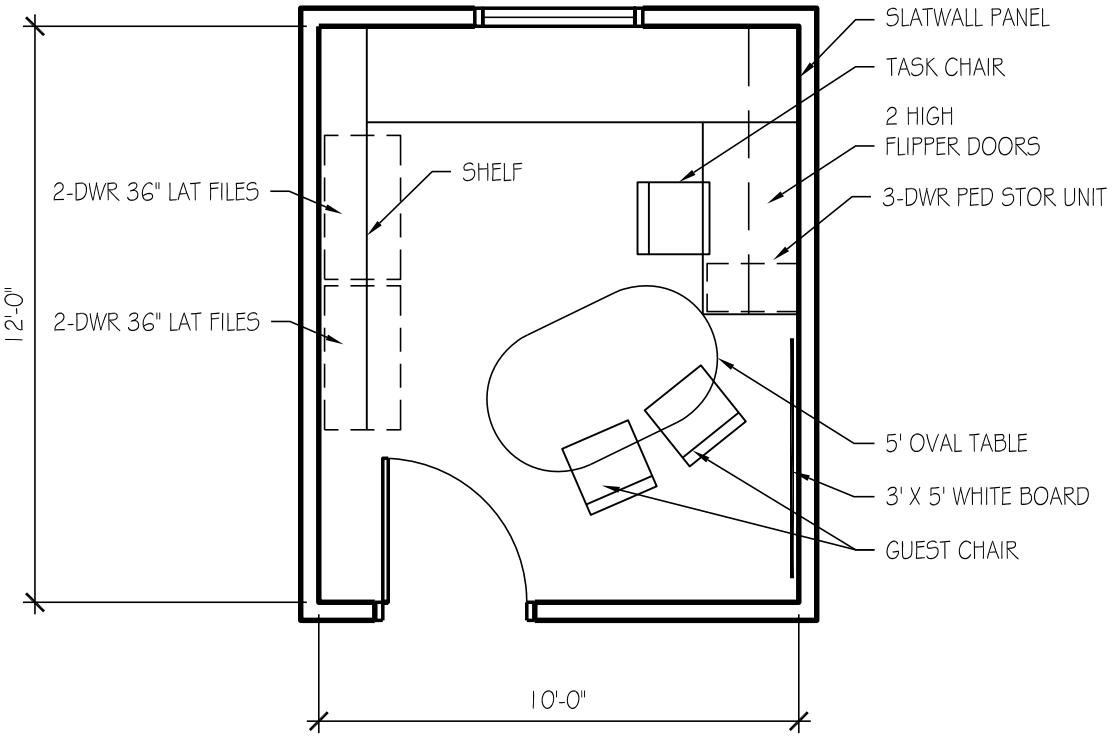

OFFICE A - 120 SF

USU Agriculture Building

ROOM DATA SHEET DETAIL **Centers**

Utah Botanical Center

3.1.2 Staff -

SPACE INFORMATION

Room Function: General office work

Adjacencies:

Special Requirements:

None

Access: Public

Room Utilization: 5 days a week, 8:00 AM to 5:00 PM

General Notes: None

ROOM SIZE AND CAPACITY

Proposed Area:	120 NSF	**Room/Space Quantity:**	1	**Total Area:**	120
Assigned Capacity:	1 Occupant(s)	**Unassigned Capacity:**	2 Guest(s)	**Total Capacity:**	3

FINISHES, DOORS, AND WINDOWS

Floor Finish: Carpet-tile

Wall Finish: Gypsum board (painted)

Base Finish: Integral Coved

Doors:

Type:	Single	**Height:**	84"
Width:	36"	**Vision Panel:**	Frosted

Ceiling Treatment: Suspended acoustical lay-in tiles

Ceiling Height: 8' minimum

Acoustic Treatment: Acoustic seperation from adjacent spaces

Windows:

Natural Lighting: Preferred, glare and brightness control

Room Skylight: Vision Panel

MECHANICAL/ELECTRICAL

HVAC: Standard, space temperature control

Plumbing: None

Fire Protection: Sprinkler

Security: Keyed lock at entrance doors

Electrical: 120V wall outlets

AV Requirements: None

Wire Management: Wall outlets

Data Management: Tele/data outlet(s)

Artificial Lighting: Direct/indirect fluorescent and task lighting

Telephone: Telephone outlets per occupant

EQUIPMENT AND FURNISHINGS

Equipment

(1) Computer system (provided by owner)
(1) Printer (provided by owner)
(1) Drafting table (provided by owner)

Furniture

(1) 13 LF of work surface
(2) 36" 2 drawer lateral file
(1) 3 drawer PED file
(1) Task chair
(2) Guest chairs
(2) 6 LF 15-1/2" deep enclosed shelving with flipper doors, s.f.
(1) 8 LF open shelving
(1) Whiteboard
(1) Wall mounted coat rack
(1) Waste receptacle
(1) 6 LF task slatwall
(1) Task slatwall accessories package

COPYRIGHT © 2009 CRSA

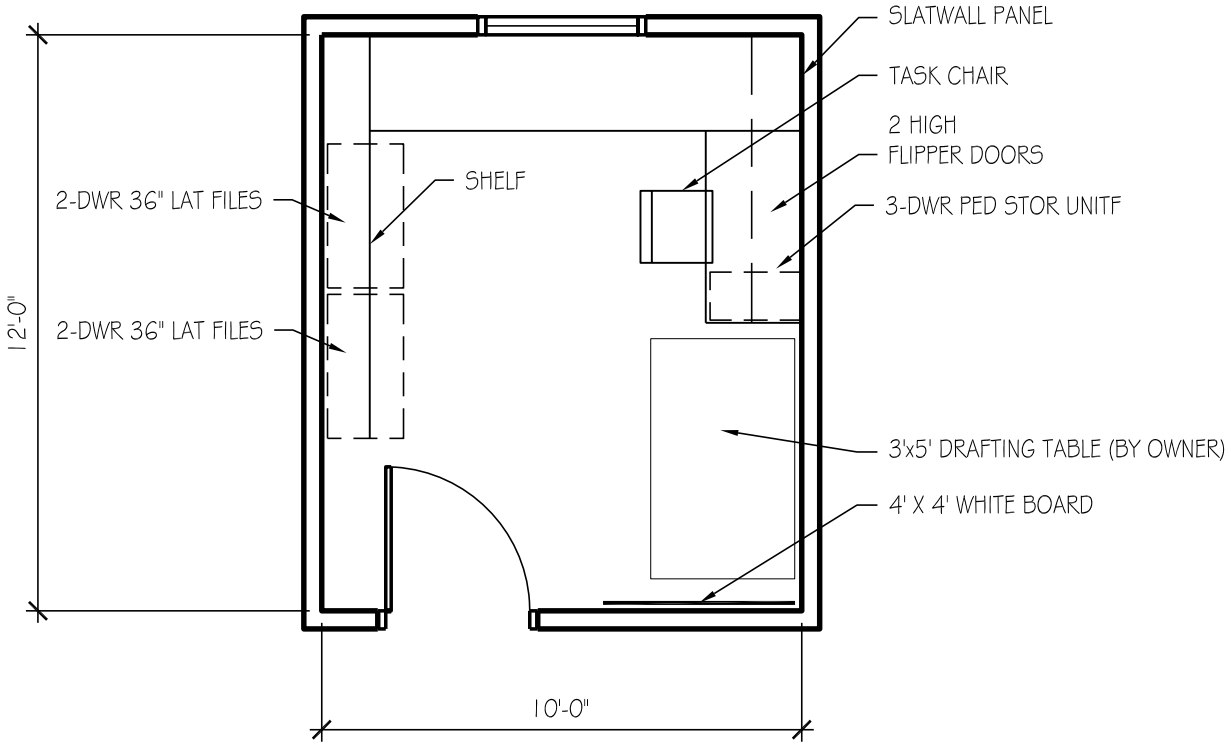

3.1.3 OFFICE A - 120 SF

USU Agriculture Building

ROOM DATA SHEET DETAIL **Centers**

Utah Botanical Center

3.1.3 Open Workstation **-**

SPACE INFORMATION

Room Function: General office work

Adjacencies:

Special Requirements:
None

Access: Public

Room Utilization: 5 days a week, 8:00 AM to 5:00 PM

General Notes: None

ROOM SIZE AND CAPACITY

Proposed Area:	64 NSF	**Room/Space Quantity:**	2	**Total Area:**	128
Assigned Capacity:	1 Occupant(s)	**Unassigned Capacity:**	1 Guest(s)	**Total Capacity:**	2

FINISHES, DOORS, AND WINDOWS

Floor Finish: Carpet-tile

Wall Finish: Systems furniture

Base Finish: Systems Furniture

Doors:

Type:	N/A	**Height:**	None
Width:	None	**Vision Panel:**	N/A

Ceiling Treatment: Suspended acoustical lay-in tiles

Ceiling Height: 8' minimum

Acoustic Treatment: Systems Furniture

Windows:

Natural Lighting:	Not required
Room Skylight:	N/A

MECHANICAL/ELECTRICAL

HVAC: Standard

Plumbing: None

Fire Protection: Sprinkler

Security: Keyed lock on all securable storage devices

Electrical: 120V wall outlets

AV Requirements: None

Wire Management: Wall outlets

Data Management: Tele/data outlet(s)

Artificial Lighting: Direct/indirect fluorescent and task lighting

Telephone: Telephone outlets per occupant

EQUIPMENT AND FURNISHINGS

Equipment

(1) Computer system (provided by owner)

Furniture

(1) 13 LF work surface
(1) 3 Drawer PED file
(1) Task chair
(2) 36" 2 drawer lateral file
(1) 8 LF 15-1/2" deep enclosed shelving with flipper door, s.f.
(1) Under shelf task light, s.f.
(1) 8 LF task slatwall
(1) Task slatwall accessories package
(1) Waste receptacle
(1) Optional guest chair
(1) Optional 36" table on casters
(1) Optional 36" 4 drawer lateral file
(1) Optional 6 LF transaction counter

COPYRIGHT © 2009 CRSA

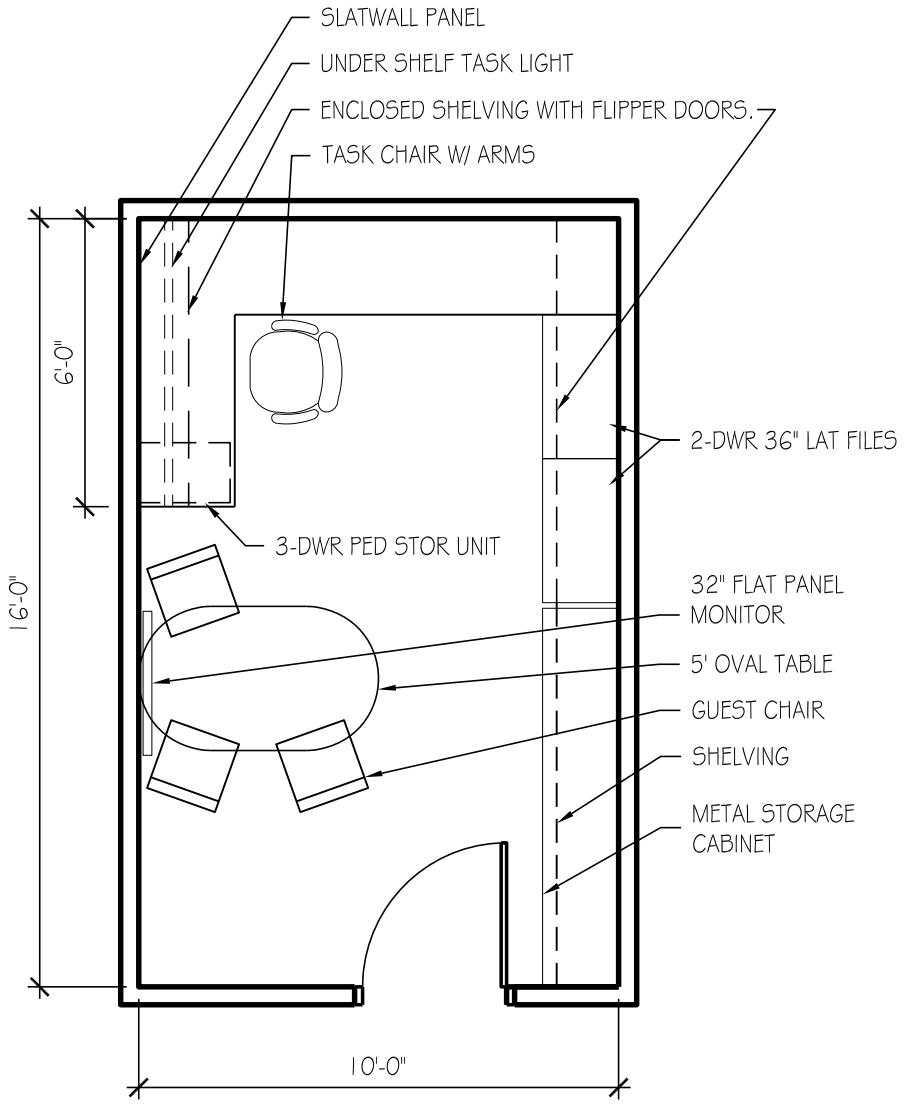

OFFICE - 160 SF

USU Agriculture Building

ROOM DATA SHEET DETAIL **Centers**

International Research Programs

3.2.1 Associate VP Research -

SPACE INFORMATION

Room Function: General office work

Adjacencies:

Special Requirements:
None

Access: Public

Room Utilization: 5 days a week, 8:00 AM to 5:00 PM

General Notes: None

ROOM SIZE AND CAPACITY

Proposed Area:	160 NSF	**Room/Space Quantity:**	1	**Total Area:**	160
Assigned Capacity:	1 Occupant(s)	**Unassigned Capacity:**	3 Guest(s)	**Total Capacity:**	4

FINISHES, DOORS, AND WINDOWS

Floor Finish: Carpet-tile

Wall Finish: Gypsum board (painted)

Base Finish: Integral Coved

Doors:

Type:	Single	**Height:**	84"
Width:	36"	**Vision Panel:**	Frosted

Ceiling Treatment: Suspended acoustical lay-in tiles

Ceiling Height: 8' minimum

Acoustic Treatment: Acoustic seperation from adjacent spaces

Windows:

Natural Lighting: Required (provide shades for control)

Room Skylight: Frosted Panel

MECHANICAL/ELECTRICAL

HVAC: Standard, space temperature control

Plumbing: None

Fire Protection: Sprinkler

Security: Keyed lock at entrance doors

Electrical: 120V wall outlets

AV Requirements: None

Wire Management: Wall outlets

Data Management: Tele/data outlet(s)

Artificial Lighting: Direct/indirect fluorescent and task lighting

Telephone: Telephone outlets per occupant

EQUIPMENT AND FURNISHINGS

Equipment

(1) Computer system (provided by owner)
(1) Printer (provided by owner)
(1) 32" Flat panel monitor

Furniture

(1) 16 LF Work surface, system furniture
(1) 5' Oval conference table on casters
(1) Task chair
(3) Guest chair
(1) 3 Drawer PED file
(2) 2 Drawer 36" lateral file, s.f.
(1) 48 LF Adjustable height shelving
(1) 24 LF 12-1/2" Deep open shelving with flipper doors, s.f.
(1) Under shelf task light
(1) 8 LF task slatwall
(1) Task slatwall accessories package
(1) Door mounted coat rack
(1) Waste receptacle
(1) Desk task light
(1) 8 LF metal base cabinet

COPYRIGHT © 2009 CRSA

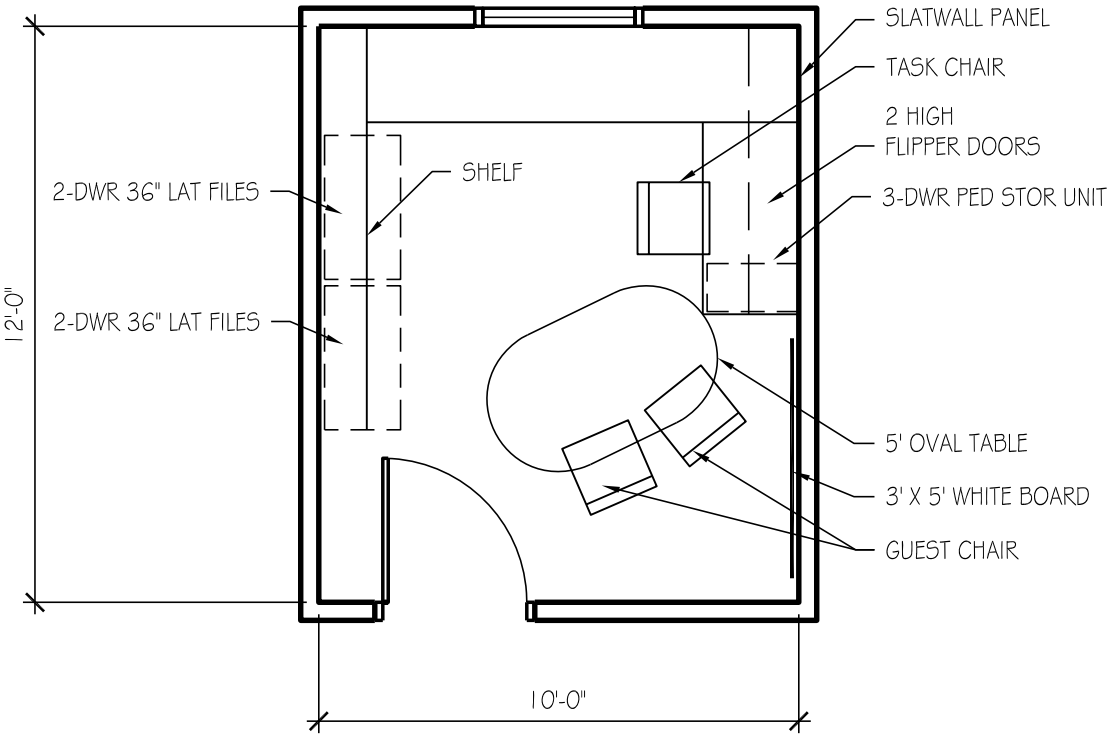

OFFICE A - 120 SF

USU Agriculture Building

ROOM DATA SHEET DETAIL **Centers**

International Research Programs

3.2.2 Future Position -

SPACE INFORMATION

Room Function: General office work

Adjacencies:

Special Requirements:

None

Access: Public

Room Utilization: 5 days a week, 8:00 AM to 5:00 PM

General Notes: None

ROOM SIZE AND CAPACITY

Proposed Area:	120 NSF	**Room/Space Quantity:**	1	**Total Area:**	120
Assigned Capacity:	1 Occupant(s)	**Unassigned Capacity:**	2 Guest(s)	**Total Capacity:**	3

FINISHES, DOORS, AND WINDOWS

Floor Finish: Carpet-tile

Wall Finish: Gypsum board (painted)

Base Finish: Integral Coved

Doors:

Type:	Single	**Height:**	84"
Width:	36"	**Vision Panel:**	Frosted

Ceiling Treatment: Suspended acoustical lay-in tiles

Ceiling Height: 8' minimum

Acoustic Treatment: Acoustic seperation from adjacent spaces

Windows:

Natural Lighting:	Preferred, glare and brightness control
Room Skylight:	Vision Panel

MECHANICAL/ELECTRICAL

HVAC:	Standard, space temperature control	**AV Requirements:**	None
Plumbing:	None	**Wire Management:**	Wall outlets
Fire Protection:	Sprinkler	**Data Management:**	Tele/data outlet(s)
Security:	Keyed lock at entrance doors	**Artificial Lighting:**	Direct/indirect fluorescent and task lighting
Electrical:	120V wall outlets	**Telephone:**	Telephone outlets per occupant

EQUIPMENT AND FURNISHINGS

Equipment

(1) Computer system (provided by owner)
(1) Printer (provided by owner)

Furniture

(1) 13 LF of work surface
(2) 36" 2 drawer lateral file
(1) 3 drawer PED file
(1) 5' Oval on casters
(1) Task chair
(2) Guest chairs
(2) 6 LF 15-1/2" deep enclosed shelving with flipper doors, s.f.
(1) 8 LF open shelving
(1) Whiteboard
(1) Wall mounted coat rack
(1) Waste receptacle
(1) 6 LF task slatwall
(1) Task slatwall accessories package

COPYRIGHT © 2009 CRSA

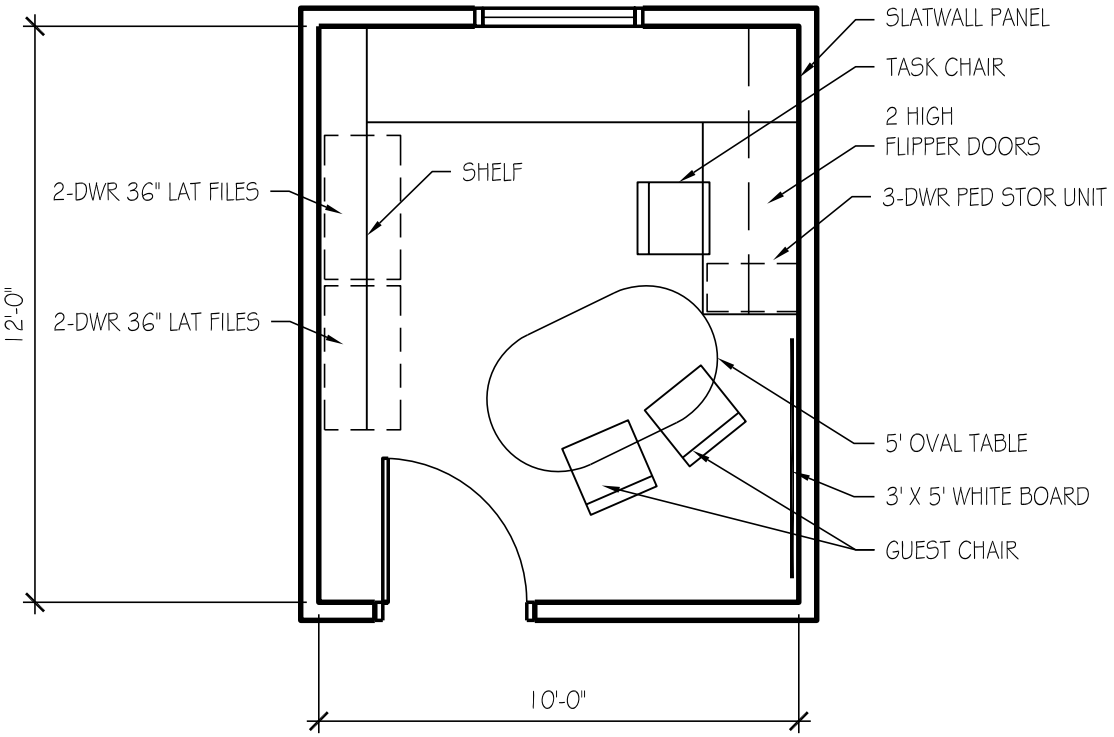

OFFICE A - 120 SF

USU Agriculture Building

ROOM DATA SHEET DETAIL **Centers**

International Research Programs

3.2.3 Program Coordinator **-**

SPACE INFORMATION

Room Function: General office work

Adjacencies:

Special Requirements:

None

Access: Public

Room Utilization: 5 days a week, 8:00 AM to 5:00 PM

General Notes: None

ROOM SIZE AND CAPACITY

Proposed Area:	120 NSF	**Room/Space Quantity:**	1	**Total Area:**	120
Assigned Capacity:	1 Occupant(s)	**Unassigned Capacity:**	2 Guest(s)	**Total Capacity:**	3

FINISHES, DOORS, AND WINDOWS

Floor Finish: Carpet-tile

Wall Finish: Gypsum board (painted)

Base Finish: Integral Coved

Doors:

Type:	Single	**Height:**	84"
Width:	36"	**Vision Panel:**	Frosted

Ceiling Treatment: Suspended acoustical lay-in tiles

Ceiling Height: 8' minimum

Acoustic Treatment: Acoustic seperation from adjacent spaces

Windows:

Natural Lighting:	Preferred, glare and brightness control
Room Skylight:	Vision Panel

MECHANICAL/ELECTRICAL

HVAC:	Standard, space temperature control	**AV Requirements:**	None
Plumbing:	None	**Wire Management:**	Wall outlets
Fire Protection:	Sprinkler	**Data Management:**	Tele/data outlet(s)
Security:	Keyed lock at entrance doors	**Artificial Lighting:**	Direct/indirect fluorescent and task lighting
Electrical:	120V wall outlets	**Telephone:**	Telephone outlets per occupant

EQUIPMENT AND FURNISHINGS

Equipment

(1) Computer system (provided by owner)
(1) Printer (provided by owner)

Furniture

(1) 13 LF of work surface
(2) 36" 2 drawer lateral file
(1) 3 drawer PED file
(1) 5' Oval on casters
(1) Task chair
(2) Guest chairs
(2) 6 LF 15-1/2" deep enclosed shelving with flipper doors, s.f.
(1) 8 LF open shelving
(1) Whiteboard
(1) Wall mounted coat rack
(1) Waste receptacle
(1) 6 LF task slatwall
(1) Task slatwall accessories package

COPYRIGHT © 2009 CRSA

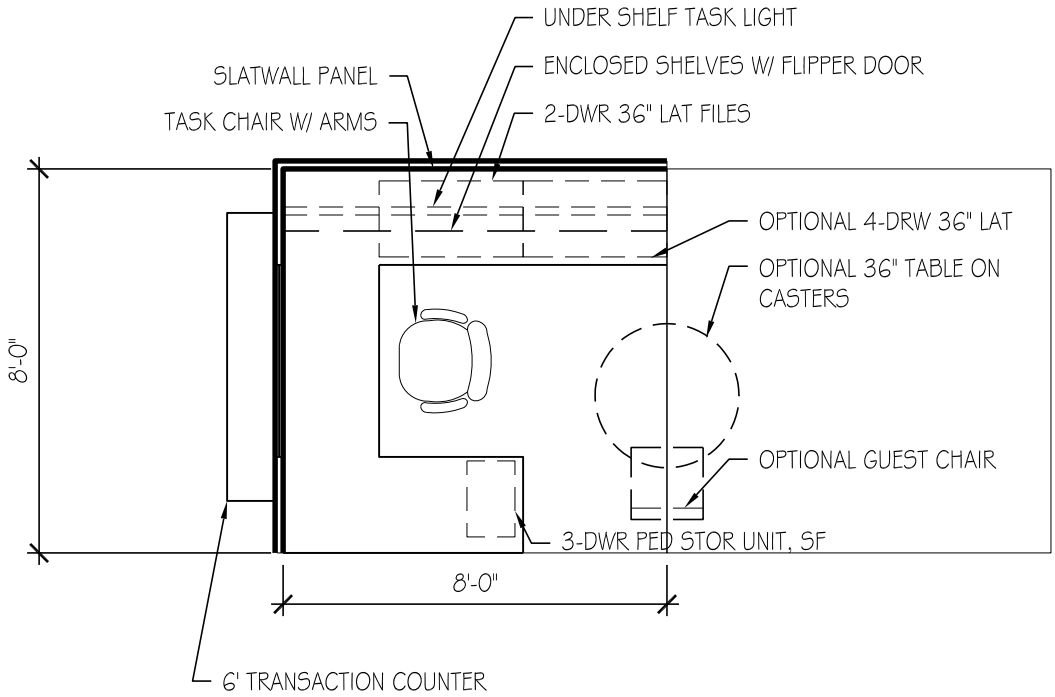

OPEN WORKSTATION

64 SF

USU Agriculture Building

ROOM DATA SHEET DETAIL **Centers**

International Research Center

3.2.4 Open Workstation **-**

SPACE INFORMATION

Room Function: General office work

Adjacencies:

Special Requirements:

None

Access: Public

Room Utilization: 5 days a week, 8:00 AM to 5:00 PM

General Notes: None

ROOM SIZE AND CAPACITY

Proposed Area:	64 NSF	**Room/Space Quantity:**	2	**Total Area:**	128
Assigned Capacity:	1 Occupant(s)	**Unassigned Capacity:**	1 Guest(s)	**Total Capacity:**	2

FINISHES, DOORS, AND WINDOWS

Floor Finish: Carpet-tile

Wall Finish: Systems furniture

Base Finish: Systems Furniture

Doors:

Type:	N/A	**Height:**	None
Width:	None	**Vision Panel:**	N/A

Ceiling Treatment: Suspended acoustical lay-in tiles

Ceiling Height: 8' minimum

Acoustic Treatment: Systems Furniture

Windows:

Natural Lighting:	Not required
Room Skylight:	N/A

MECHANICAL/ELECTRICAL

HVAC: Standard

Plumbing: None

Fire Protection: Sprinkler

Security: Keyed lock on all securable storage devices

Electrical: 120V wall outlets

AV Requirements: None

Wire Management: Wall outlets

Data Management: Tele/data outlet(s)

Artificial Lighting: Direct/indirect fluorescent and task lighting

Telephone: Telephone outlets per occupant

EQUIPMENT AND FURNISHINGS

Equipment

(1) Computer system (provided by owner)

Furniture

(1) 13 LF work surface
(1) 3 Drawer PED file
(1) Task chair
(2) 36" 2 drawer lateral file
(1) 8 LF 15-1/2" deep enclosed shelving with flipper door, s.f.
(1) Under shelf task light, s.f.
(1) 8 LF task slatwall
(1) Task slatwall accessories package
(1) Waste receptacle
(1) Optional guest chair
(1) Optional 36" table on casters
(1) Optional 36" 4 drawer lateral file
(1) Optional 6 LF transaction counter

COPYRIGHT © 2009 CRSA

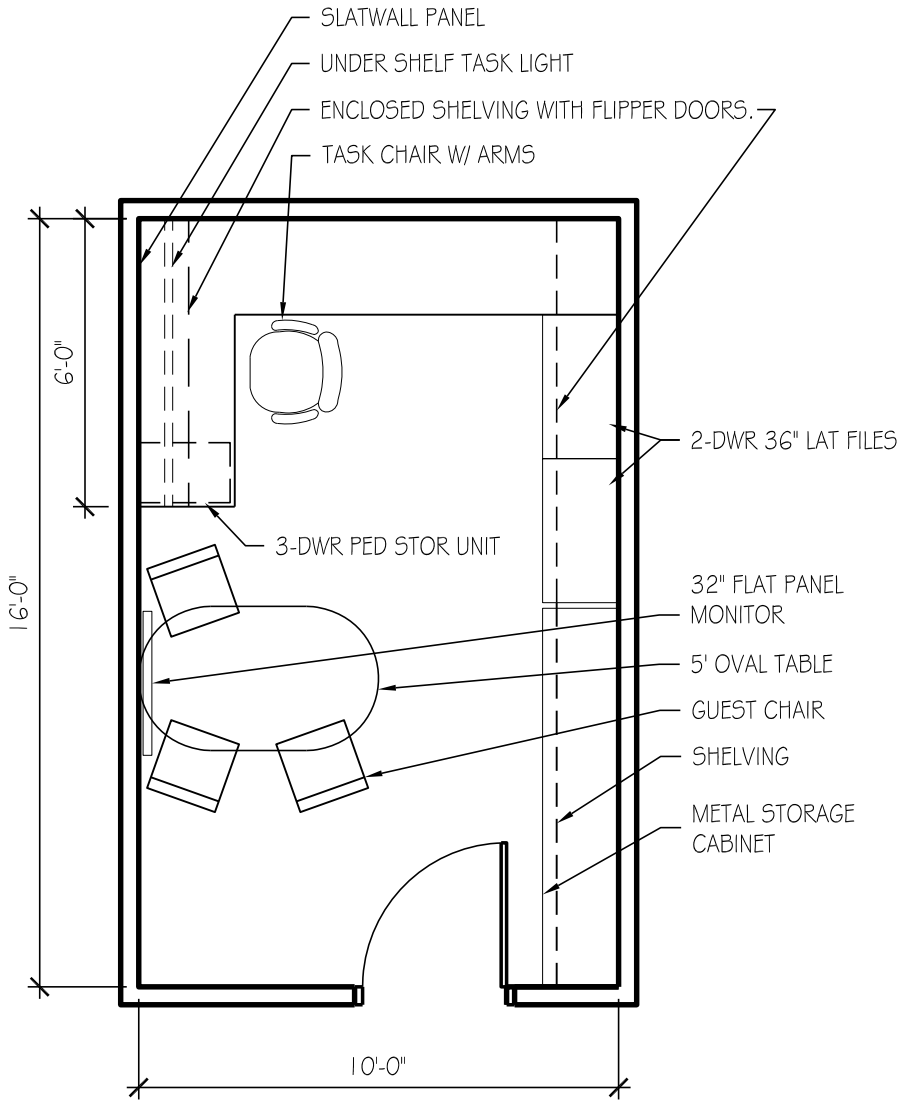

OFFICE - 160 SF

USU Agriculture Building

ROOM DATA SHEET DETAIL **Centers**

Western Rural Development Center

3.3.1 Director **-**

SPACE INFORMATION

Room Function: General office work

Adjacencies:

Special Requirements:

None

Access: Public

Room Utilization: 5 days a week, 8:00 AM to 5:00 PM

General Notes: None

ROOM SIZE AND CAPACITY

Proposed Area:	160 NSF	**Room/Space Quantity:**	1	**Total Area:**	160
Assigned Capacity:	1 Occupant(s)	**Unassigned Capacity:**	3 Guest(s)	**Total Capacity:**	4

FINISHES, DOORS, AND WINDOWS

Floor Finish: Carpet-tile

Wall Finish: Gypsum board (painted)

Base Finish: Integral Coved

Doors:

Type:	Single	**Height:**	84"
Width:	36"	**Vision Panel:**	Frosted

Ceiling Treatment: Suspended acoustical lay-in tiles

Ceiling Height: 8' minimum

Acoustic Treatment: Acoustic seperation from adjacent spaces

Windows:

Natural Lighting: Required (provide shades for control)

Room Skylight: Frosted Panel

MECHANICAL/ELECTRICAL

HVAC: Standard, space temperature control

Plumbing: None

Fire Protection: Sprinkler

Security: Keyed lock at entrance doors

Electrical: 120V wall outlets

AV Requirements: None

Wire Management: Wall outlets

Data Management: Tele/data outlet(s)

Artificial Lighting: Direct/indirect fluorescent and task lighting

Telephone: Telephone outlets per occupant

EQUIPMENT AND FURNISHINGS

Equipment

(1) Computer system (provided by owner)
(1) Printer (provided by owner)
(1) 32" Flat panel monitor

Furniture

(1) 16 LF Work surface, system furniture
(1) 5' Oval conference table on casters
(1) Task chair
(3) Guest chair
(1) 3 Drawer PED file
(2) 2 Drawer 36" lateral file, s.f.
(1) 48 LF Adjustable height shelving
(1) 24 LF 12-1/2" Deep open shelving with flipper doors, s.f.
(1) Under shelf task light
(1) 8 LF task slatwall
(1) Task slatwall accessories package
(1) Door mounted coat rack
(1) Waste receptacle
(1) Desk task light
(1) 8 LF metal base cabinet

COPYRIGHT © 2009 CRSA

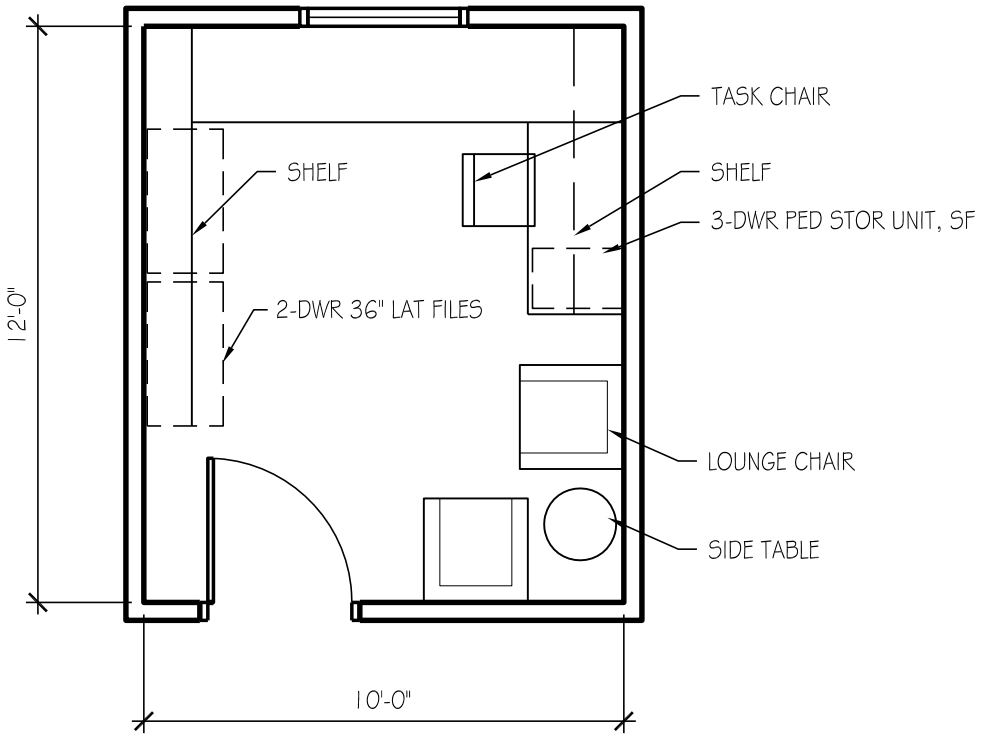

OFFICE B - 120 SF

USU Agriculture Building

ROOM DATA SHEET DETAIL **Centers**

Western Rural Development Center

3.3.2 Senior Program Officer **-**

SPACE INFORMATION

Room Function: General office work

Adjacencies:

Special Requirements:

None

Access: Public

Room Utilization: 5 days a week, 8:00 AM to 5:00 PM

General Notes: None

ROOM SIZE AND CAPACITY

Proposed Area:	120 NSF	**Room/Space Quantity:**	1	**Total Area:**	120
Assigned Capacity:	1 Occupant(s)	**Unassigned Capacity:**	2 Guest(s)	**Total Capacity:**	3

FINISHES, DOORS, AND WINDOWS

Floor Finish: Carpet-tile

Wall Finish: Gypsum board (painted)

Base Finish: Integral Coved

Doors:

Type:	Single	**Height:**	84"
Width:	36"	**Vision Panel:**	Frosted

Ceiling Treatment: Suspended acoustical lay-in tiles

Ceiling Height: 8' minimum

Acoustic Treatment: Acoustic seperation from adjacent spaces

Windows:

Natural Lighting:	Preferred, glare and brightness control
Room Skylight:	Frosted Panel

MECHANICAL/ELECTRICAL

HVAC:	Standard, space temperature control	**AV Requirements:**	None
Plumbing:	None	**Wire Management:**	Wall outlets
Fire Protection:	Sprinkler	**Data Management:**	Tele/data outlet(s)
Security:	Keyed lock at entrance doors	**Artificial Lighting:**	Direct/indirect fluorescent and task lighting
Electrical:	120V wall outlets	**Telephone:**	Telephone outlets per occupant

EQUIPMENT AND FURNISHINGS

Equipment

(1) Computer system (provided by owner)
(1) Printer (provided by owner)

Furniture

(1) 13 LF of work surface
(1) 36" 2 drawer lateral file
(1) 3 drawer PED file
(1) Task chair
(2) Upholstered lounge chair
(1) 8 LF open shelving
(1) 12 LF enclosed shelving with flipper doors, s.f.
(1) 6 LF task slatwall
(1) Task slatwall accessories package
(1) Whiteboard
(1) Wall mounted coat rack
(1) Waste receptacle
(1) Under shelf task light, s.f.

COPYRIGHT © 2009 CRSA

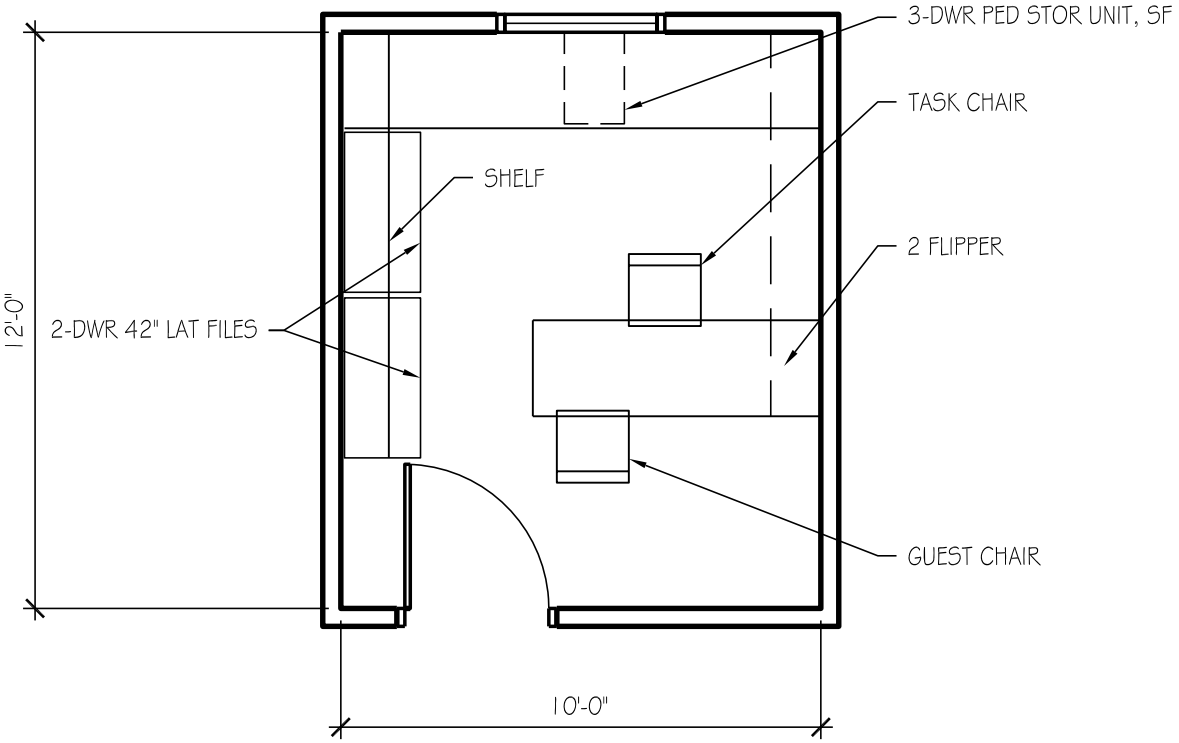

OFFICE C - 120 SF

USU Agriculture Building

ROOM DATA SHEET DETAIL **Centers**

Western Rural Development Center

3.3.3 Write/Editor/Designer -

SPACE INFORMATION

Room Function: General office work

Adjacencies:

Special Requirements:
None

Access: Public

Room Utilization: 5 days a week, 8:00 AM to 5:00 PM

General Notes: None

ROOM SIZE AND CAPACITY

Proposed Area:	120 NSF	**Room/Space Quantity:**	1	**Total Area:**	120
Assigned Capacity:	1 Occupant(s)	**Unassigned Capacity:**	2 Guest(s)	**Total Capacity:**	3

FINISHES, DOORS, AND WINDOWS

Floor Finish: Carpet-tile

Wall Finish: Gypsum board (painted)

Base Finish: Integral Coved

Doors:

Type:	Single	**Height:**	84"
Width:	36"	**Vision Panel:**	Frosted

Ceiling Treatment: Suspended acoustical lay-in tiles

Ceiling Height: 8' minimum

Acoustic Treatment: Acoustic seperation from adjacent spaces

Windows:

Natural Lighting: Preferred, glare and brightness control

Room Skylight: Frosted Panel

MECHANICAL/ELECTRICAL

HVAC: Standard, space temperature control

Plumbing: None

Fire Protection: Sprinkler

Security: Keyed lock at entrance doors

Electrical: 120V wall outlets

AV Requirements: None

Wire Management: Wall outlets

Data Management: Tele/data outlet(s)

Artificial Lighting: Direct/indirect fluorescent and task lighting

Telephone: Telephone outlets per occupant

EQUIPMENT AND FURNISHINGS

Equipment

(1) Computer system (provided by owner)
(1) Printer (provided by owner)

Furniture

(1) 11 LF of work surface
(2) 36" 2 drawer lateral file
(1) 3 drawer PED file
(1) Task chair
(1) Guest chairs
(1) 8 LF Bookshelves
(1) 16 LF enclosed shelving with flipper doors, s.f.
(1) 6 LF task slatwall
(1) Task slatwall accessories package
(1) Door mounted coat rack
(1) Waste receptacle
(1) Under shelf task light, s.f.

COPYRIGHT © 2009 CRSA

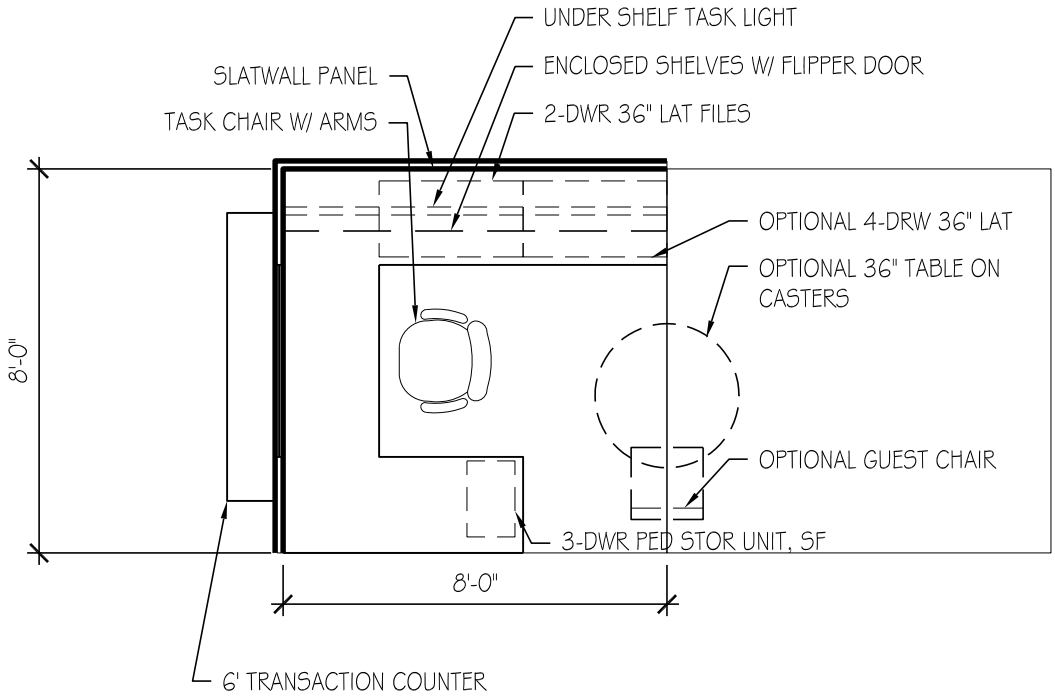

OPEN WORKSTATION

64 SF

USU Agriculture Building

ROOM DATA SHEET DETAIL **Centers**

Western Rural Development Center

3.3.4 Open Workstation **-**

SPACE INFORMATION

Room Function: General office work

Adjacencies:

Special Requirements:
None

Access: Public

Room Utilization: 5 days a week, 8:00 AM to 5:00 PM

General Notes: None

ROOM SIZE AND CAPACITY

Proposed Area:	64 NSF	**Room/Space Quantity:**	2	**Total Area:**	128
Assigned Capacity:	1 Occupant(s)	**Unassigned Capacity:**	1 Guest(s)	**Total Capacity:**	2

FINISHES, DOORS, AND WINDOWS

Floor Finish: Carpet-tile

Wall Finish: Systems furniture

Base Finish: Systems Furniture

Doors:

Type:	N/A	**Height:**	None
Width:	None	**Vision Panel:**	N/A

Ceiling Treatment: Suspended acoustical lay-in tiles

Ceiling Height: 8' minimum

Acoustic Treatment: Systems Furniture

Windows:

Natural Lighting:	Not required
Room Skylight:	N/A

MECHANICAL/ELECTRICAL

HVAC: Standard

Plumbing: None

Fire Protection: Sprinkler

Security: Keyed lock on all securable storage devices

Electrical: 120V wall outlets

AV Requirements: None

Wire Management: Wall outlets

Data Management: Tele/data outlet(s)

Artificial Lighting: Direct/indirect fluorescent and task lighting

Telephone: Telephone outlets per occupant

EQUIPMENT AND FURNISHINGS

Equipment

(1) Computer system (provided by owner)

Furniture

(1) 13 LF work surface
(1) 3 Drawer PED file
(1) Task chair
(2) 36" 2 drawer lateral file
(1) 8 LF 15-1/2" deep enclosed shelving with flipper door, s.f.
(1) Under shelf task light, s.f.
(1) 8 LF task slatwall
(1) Task slatwall accessories package
(1) Waste receptacle
(1) Optional guest chair
(1) Optional 36" table on casters
(1) Optional 36" 4 drawer lateral file
(1) Optional 6 LF transaction counter

COPYRIGHT © 2009 CRSA

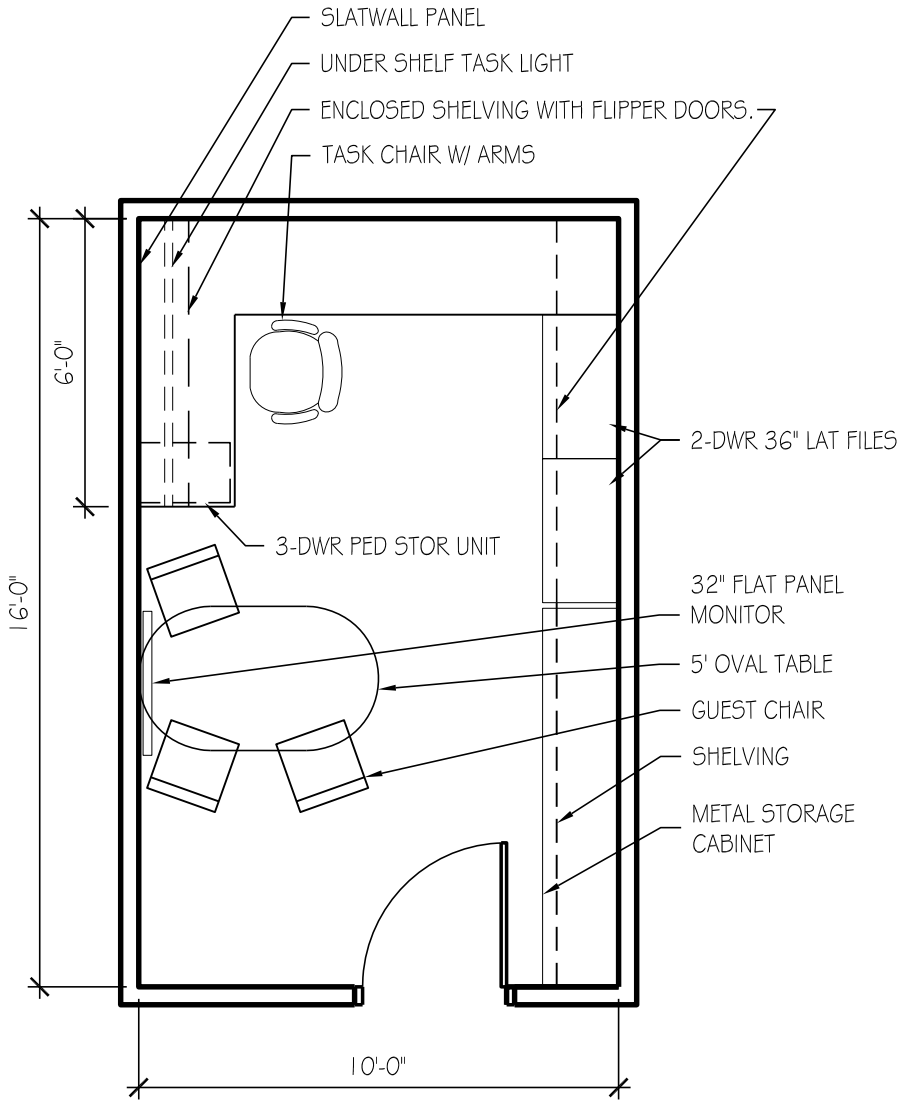

OFFICE - 160 SF

USU Agriculture Building

ROOM DATA SHEET DETAIL **Centers**

Western SARE

3.4.1 Director -

SPACE INFORMATION

Room Function: General office work

Adjacencies:

Special Requirements:
None

Access: Public

Room Utilization: 5 days a week, 8:00 AM to 5:00 PM

General Notes: None

ROOM SIZE AND CAPACITY

Proposed Area:	160 NSF	**Room/Space Quantity:**	1	**Total Area:**	160
Assigned Capacity:	1 Occupant(s)	**Unassigned Capacity:**	3 Guest(s)	**Total Capacity:**	4

FINISHES, DOORS, AND WINDOWS

Floor Finish: Carpet-tile

Wall Finish: Gypsum board (painted)

Base Finish: Integral Coved

Doors:

Type:	Single	**Height:**	84"
Width:	36"	**Vision Panel:**	Frosted

Ceiling Treatment: Suspended acoustical lay-in tiles

Ceiling Height: 8' minimum

Acoustic Treatment: Acoustic seperation from adjacent spaces

Windows:

Natural Lighting: Required (provide shades for control)

Room Skylight: Frosted Panel

MECHANICAL/ELECTRICAL

HVAC: Standard, space temperature control

Plumbing: None

Fire Protection: Sprinkler

Security: Keyed lock at entrance doors

Electrical: 120V wall outlets

AV Requirements: None

Wire Management: Wall outlets

Data Management: Tele/data outlet(s)

Artificial Lighting: Direct/indirect fluorescent and task lighting

Telephone: Telephone outlets per occupant

EQUIPMENT AND FURNISHINGS

Equipment

(1) Computer system (provided by owner)
(1) Printer (provided by owner)
(1) 32" Flat panel monitor

Furniture

(1) 16 LF Work surface, system furniture
(1) 5' Oval conference table on casters
(1) Task chair
(3) Guest chair
(1) 3 Drawer PED file
(2) 2 Drawer 36" lateral file, s.f.
(1) 48 LF Adjustable height shelving
(1) 24 LF 12-1/2" Deep open shelving with flipper doors, s.f.
(1) Under shelf task light
(1) 8 LF task slatwall
(1) Task slatwall accessories package
(1) Door mounted coat rack
(1) Waste receptacle
(1) Desk task light
(1) 8 LF metal base cabinet

COPYRIGHT © 2009 CRSA

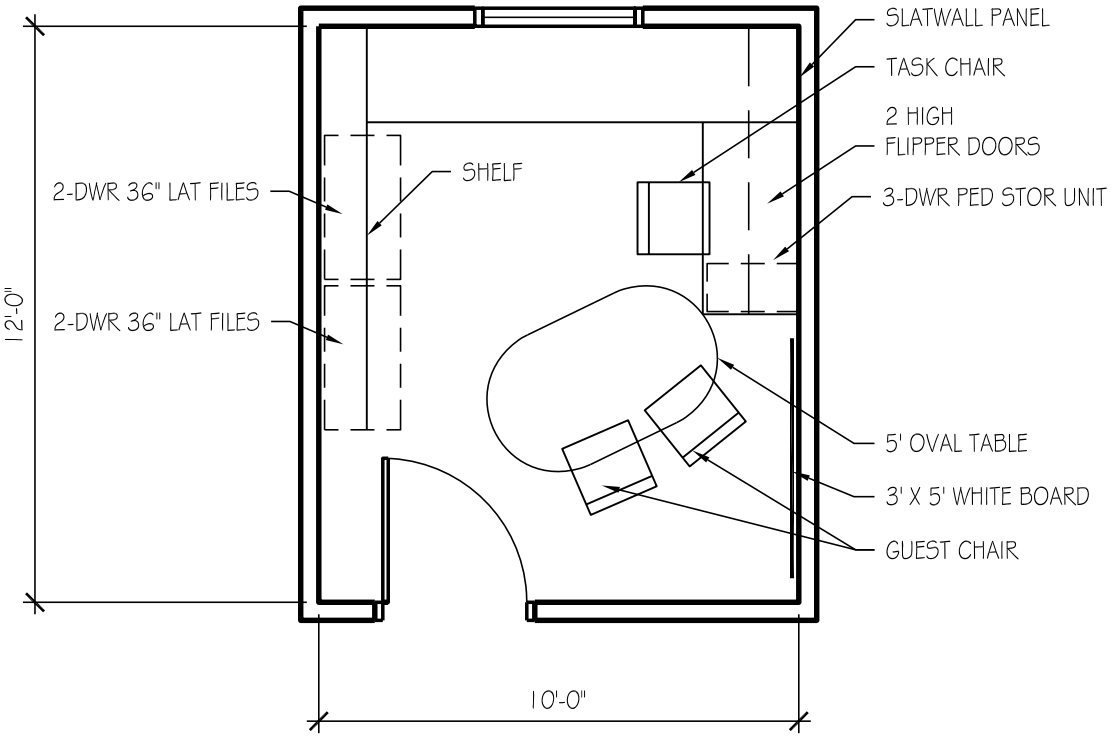

OFFICE A - 120 SF

USU Agriculture Building

ROOM DATA SHEET DETAIL **Centers**

Western SARE

3.4.2 Deputy Coordinator -

SPACE INFORMATION

Room Function: General office work

Adjacencies:

Special Requirements:

None

Access: Public

Room Utilization: 5 days a week, 8:00 AM to 5:00 PM

General Notes: None

ROOM SIZE AND CAPACITY

Proposed Area:	120 NSF	**Room/Space Quantity:**	1	**Total Area:**	120
Assigned Capacity:	1 Occupant(s)	**Unassigned Capacity:**	2 Guest(s)	**Total Capacity:**	3

FINISHES, DOORS, AND WINDOWS

Floor Finish: Carpet-tile

Wall Finish: Gypsum board (painted)

Base Finish: Integral Coved

Doors:

Type:	Single	**Height:**	84"
Width:	36"	**Vision Panel:**	Frosted

Ceiling Treatment: Suspended acoustical lay-in tiles

Ceiling Height: 8' minimum

Acoustic Treatment: Acoustic seperation from adjacent spaces

Windows:

Natural Lighting: Required (provide shades for control)

Room Skylight: Frosted Panel

MECHANICAL/ELECTRICAL

HVAC: Standard, space temperature control

Plumbing: None

Fire Protection: Sprinkler

Security: Keyed lock at entrance doors

Electrical: 120V wall outlets

AV Requirements: None

Wire Management: Wall outlets

Data Management: Tele/data outlet(s)

Artificial Lighting: Direct/indirect fluorescent and task lighting

Telephone: Telephone outlets per occupant

EQUIPMENT AND FURNISHINGS

Equipment

(1) Computer system (provided by owner)
(1) Printer (provided by owner)

Furniture

(1) 13 LF of work surface
(2) 36" 2 drawer lateral file
(1) 3 drawer PED file
(1) 5' Oval on casters
(1) Task chair
(2) Guest chairs
(2) 6 LF 15-1/2" deep enclosed shelving with flipper doors, s.f.
(1) 8 LF open shelving
(1) Whiteboard
(1) Wall mounted coat rack
(1) Waste receptacle
(1) 6 LF task slatwall
(1) Task slatwall accessories package

COPYRIGHT © 2009 CRSA

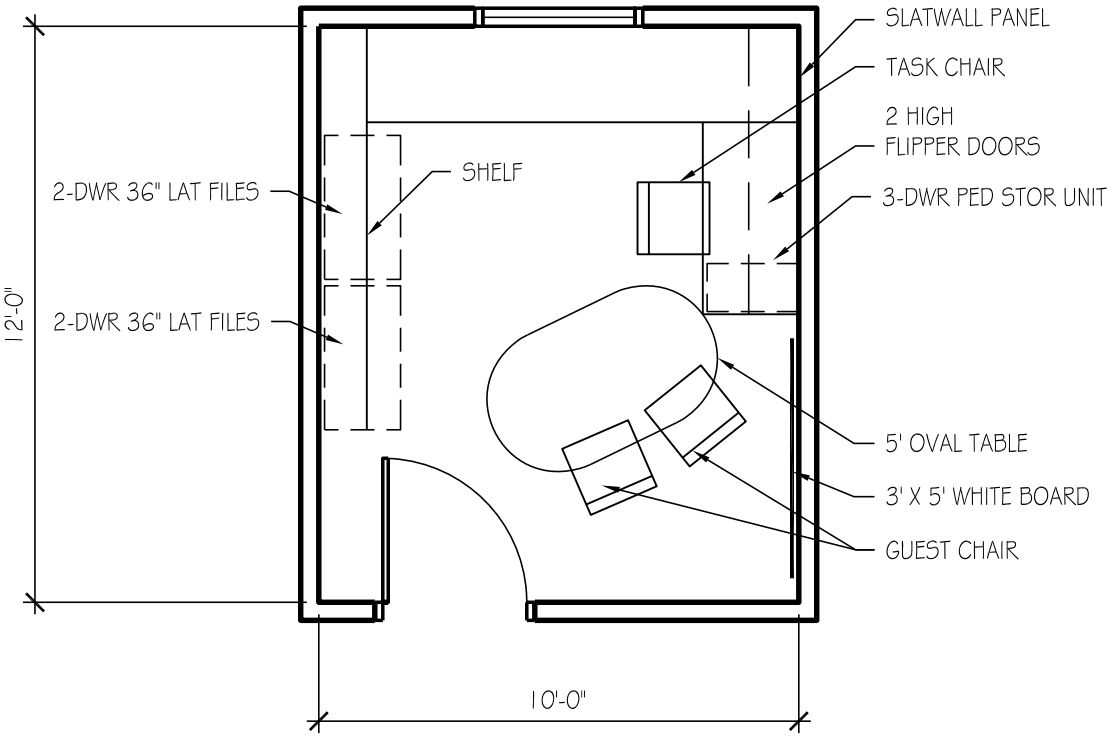

OFFICE A - 120 SF

USU Agriculture Building

ROOM DATA SHEET DETAIL **Centers**

Western SARE

3.4.3 Office-Contracts Manager -

SPACE INFORMATION

Room Function: General office work

Adjacencies:

Special Requirements:

None

Access: Public

Room Utilization: 5 days a week, 8:00 AM to 5:00 PM

General Notes: None

ROOM SIZE AND CAPACITY

Proposed Area:	120 NSF	**Room/Space Quantity:**	1	**Total Area:**	120
Assigned Capacity:	1 Occupant(s)	**Unassigned Capacity:**	2 Guest(s)	**Total Capacity:**	3

FINISHES, DOORS, AND WINDOWS

Floor Finish: Carpet-tile

Wall Finish: Gypsum board (painted)

Base Finish: Integral Coved

Doors:

Type:	Single	**Height:**	84"
Width:	36"	**Vision Panel:**	Frosted

Ceiling Treatment: Suspended acoustical lay-in tiles

Ceiling Height: 8' minimum

Acoustic Treatment: Acoustic seperation from adjacent spaces

Windows:

Natural Lighting:	Preferred, glare and brightness control
Room Skylight:	Frosted Panel

MECHANICAL/ELECTRICAL

HVAC:	Standard, space temperature control	**AV Requirements:**	None
Plumbing:	None	**Wire Management:**	Wall outlets
Fire Protection:	Sprinkler	**Data Management:**	Tele/data outlet(s)
Security:	Keyed lock at entrance doors	**Artificial Lighting:**	Direct/indirect fluorescent and task lighting
Electrical:	120V wall outlets	**Telephone:**	Telephone outlets per occupant

EQUIPMENT AND FURNISHINGS

Equipment

(1) Computer system (provided by owner)
(1) Printer (provided by owner)

Furniture

(1) 13 LF of work surface
(2) 36" 2 drawer lateral file
(1) 3 drawer PED file
(1) 5' Oval on casters
(1) Task chair
(2) Guest chairs
(2) 6 LF 15-1/2" deep enclosed shelving with flipper doors, s.f.
(1) 8 LF open shelving
(1) Whiteboard
(1) Wall mounted coat rack
(1) Waste receptacle
(1) 6 LF task slatwall
(1) Task slatwall accessories package

COPYRIGHT © 2009 CRSA

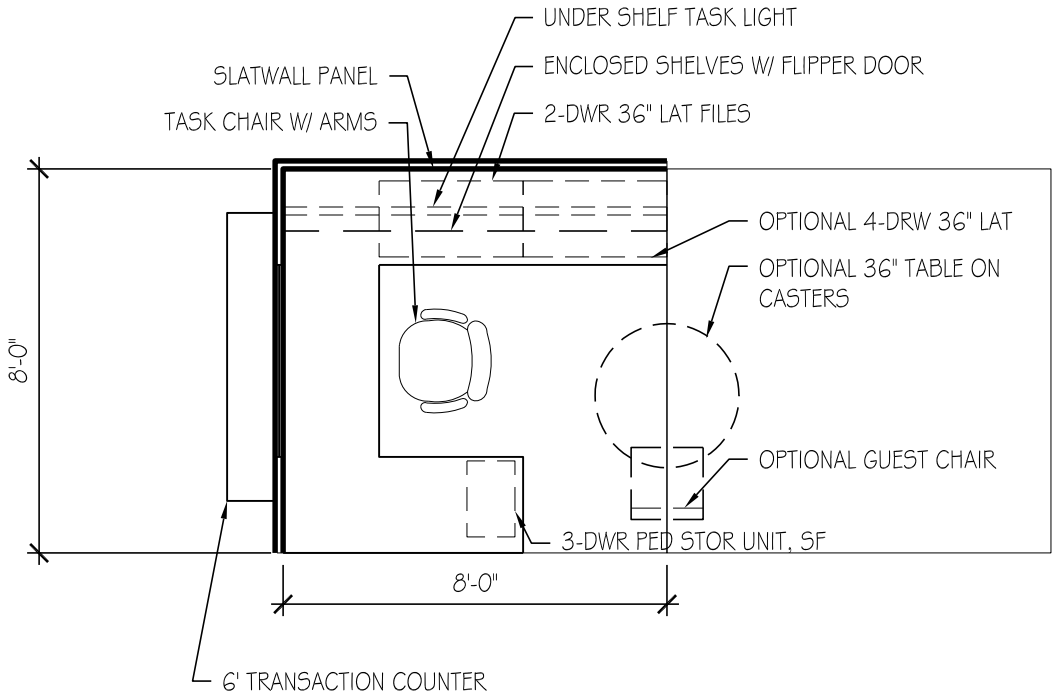

OPEN WORKSTATION

64 SF

USU Agriculture Building

ROOM DATA SHEET DETAIL **Centers**

Western SARE

3.4.4 Open Workstation -

SPACE INFORMATION

Room Function: General office work

Adjacencies:

Special Requirements:
None

Access: Public

Room Utilization: 5 days a week, 8:00 AM to 5:00 PM

General Notes: None

ROOM SIZE AND CAPACITY

Proposed Area:	64 NSF	**Room/Space Quantity:**	2	**Total Area:**	128
Assigned Capacity:	1 Occupant(s)	**Unassigned Capacity:**	29 Guest(s)	**Total Capacity:**	30

FINISHES, DOORS, AND WINDOWS

Floor Finish:	Carpet-tile	**Ceiling Treatment:**	Suspended acoustical lay-in tiles
Wall Finish:	Systems furniture	**Ceiling Height:**	8' minimum
Base Finish:	Systems Furniture	**Acoustic Treatment:**	Systems Furniture
Doors:		**Windows:**	

Type:	N/A	**Height:**	None	**Natural Lighting:**	Not required
Width:	None	**Vision Panel:**	N/A	**Room Skylight:**	N/A

MECHANICAL/ELECTRICAL

HVAC:	Standard	**AV Requirements:**	None
Plumbing:	None	**Wire Management:**	Wall outlets
Fire Protection:	Sprinkler	**Data Management:**	Tele/data outlet(s)
Security:	Keyed lock on all securable storage devices	**Artificial Lighting:**	Direct/indirect fluorescent and task lighting
Electrical:	120V wall outlets	**Telephone:**	Telephone outlets per occupant

EQUIPMENT AND FURNISHINGS

Equipment

(1) Computer system (provided by owner)

Furniture

(1) 13 LF work surface
(1) 3 Drawer PED file
(1) Task chair
(2) 36" 2 drawer lateral file
(1) 8 LF 15-1/2" deep enclosed shelving with flipper door, s.f.
(1) Under shelf task light, s.f.
(1) 8 LF task slatwall
(1) Task slatwall accessories package
(1) Waste receptacle
(1) Optional guest chair
(1) Optional 36" table on casters
(1) Optional 36" 4 drawer lateral file
(1) Optional 6 LF transaction counter

COPYRIGHT © 2009 CRSA

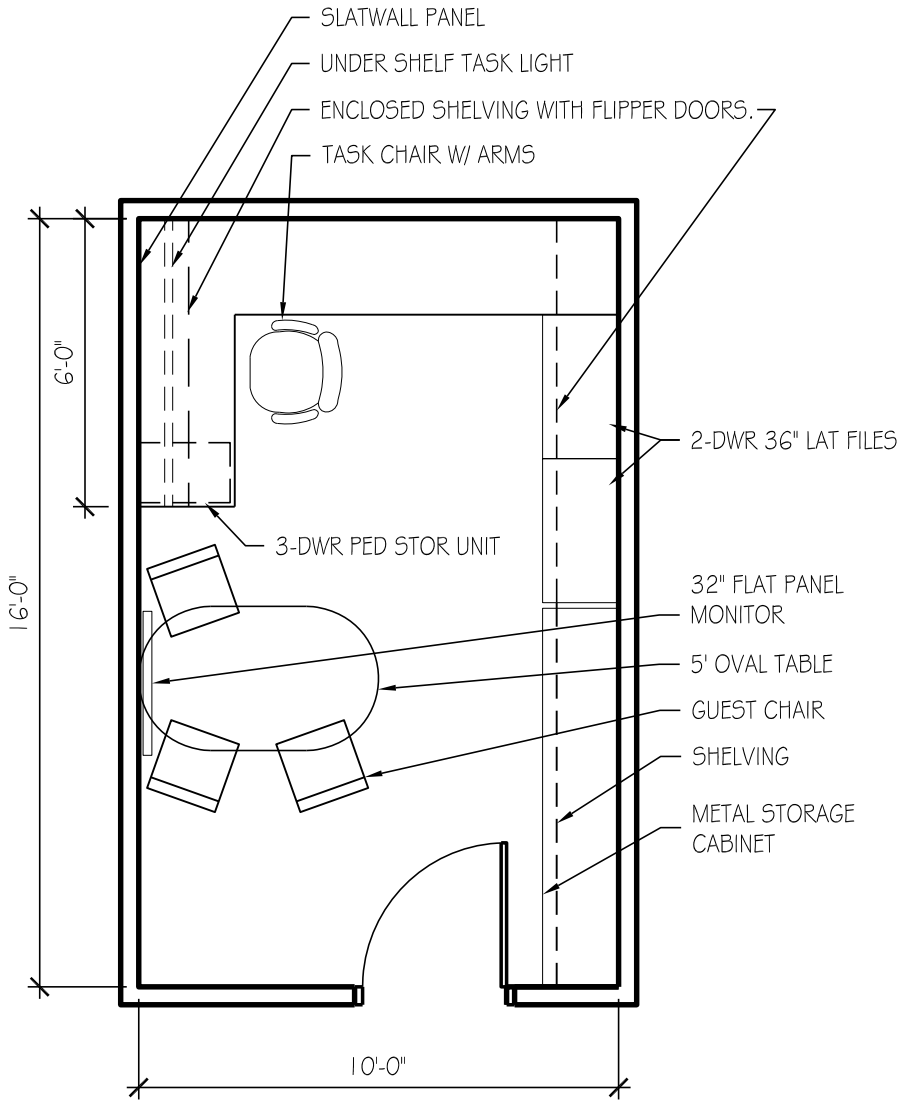

OFFICE - 160 SF

USU Agriculture Building

ROOM DATA SHEET DETAIL **Centers**

4-H

3.5.1 Director **-**

SPACE INFORMATION

Room Function: General office work

Adjacencies:

Special Requirements:
None

Access: Public

Room Utilization: 5 days a week, 8:00 AM to 5:00 PM

General Notes: None

ROOM SIZE AND CAPACITY

Proposed Area:	160 NSF	**Room/Space Quantity:**	1	**Total Area:**	160
Assigned Capacity:	1 Occupant(s)	**Unassigned Capacity:**	3 Guest(s)	**Total Capacity:**	4

FINISHES, DOORS, AND WINDOWS

Floor Finish: Carpet-tile

Wall Finish: Gypsum board (painted)

Base Finish: Integral Coved

Doors:

Type:	Single	**Height:**	84"
Width:	36"	**Vision Panel:**	Frosted

Ceiling Treatment: Suspended acoustical lay-in tiles

Ceiling Height: 8' minimum

Acoustic Treatment: Acoustic seperation from adjacent spaces

Windows:

Natural Lighting:	Required (provide shades for control)
Room Skylight:	Frosted Panel

MECHANICAL/ELECTRICAL

HVAC:	Standard, space temperature control	**AV Requirements:**	None
Plumbing:	None	**Wire Management:**	Wall outlets
Fire Protection:	Sprinkler	**Data Management:**	Tele/data outlet(s)
Security:	Keyed lock at entrance doors	**Artificial Lighting:**	Direct/indirect fluorescent and task lighting
Electrical:	120V wall outlets	**Telephone:**	Telephone outlets per occupant

EQUIPMENT AND FURNISHINGS

Equipment

(1) Computer system (provided by owner)
(1) Printer (provided by owner)
(1) 32" Flat panel monitor

Furniture

(1) 16 LF Work surface, system furniture
(1) 5' Oval conference table on casters
(1) Task chair
(3) Guest chair
(1) 3 Drawer PED file
(2) 2 Drawer 36" lateral file, s.f.
(1) 48 LF Adjustable height shelving
(1) 24 LF 12-1/2" Deep open shelving with flipper doors, s.f.
(1) Under shelf task light
(1) 8 LF task slatwall
(1) Task slatwall accessories package
(1) Door mounted coat rack
(1) Waste receptacle
(1) Desk task light
(1) 8 LF metal base cabinet

COPYRIGHT © 2009 CRSA

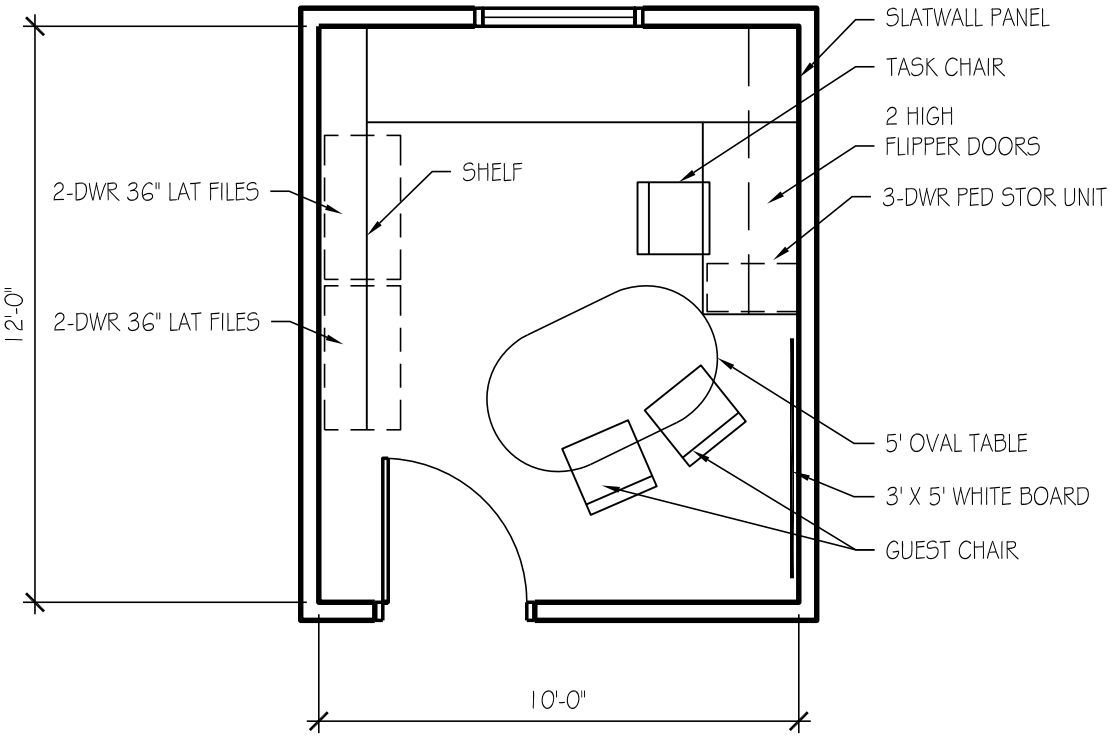

OFFICE A - 120 SF

USU Agriculture Building

ROOM DATA SHEET DETAIL **Centers**

4-H

3.5.2 Youth Specialist/Vol. Development **-**

SPACE INFORMATION

Room Function: General office work

Adjacencies:

Special Requirements:

None

Access: Public

Room Utilization: 5 days a week, 8:00 AM to 5:00 PM

General Notes: None

ROOM SIZE AND CAPACITY

Proposed Area:	120 NSF	**Room/Space Quantity:**	1	**Total Area:**	120
Assigned Capacity:	1 Occupant(s)	**Unassigned Capacity:**	2 Guest(s)	**Total Capacity:**	3

FINISHES, DOORS, AND WINDOWS

Floor Finish: Carpet-tile

Wall Finish: Gypsum board (painted)

Base Finish: Integral Coved

Doors:

Type:	Single	**Height:**	84"
Width:	36"	**Vision Panel:**	Frosted

Ceiling Treatment: Suspended acoustical lay-in tiles

Ceiling Height: 8' minimum

Acoustic Treatment: Acoustic seperation from adjacent spaces

Windows:

Natural Lighting:	Preferred, glare and brightness control
Room Skylight:	Frosted Panel

MECHANICAL/ELECTRICAL

HVAC:	Standard, space temperature control	**AV Requirements:**	None
Plumbing:	None	**Wire Management:**	Wall outlets
Fire Protection:	Sprinkler	**Data Management:**	Tele/data outlet(s)
Security:	Keyed lock at entrance doors	**Artificial Lighting:**	Direct/indirect fluorescent and task lighting
Electrical:	120V wall outlets	**Telephone:**	Telephone outlets per occupant

EQUIPMENT AND FURNISHINGS

Equipment

(1) Computer system (provided by owner)
(1) Printer (provided by owner)

Furniture

(1) 13 LF of work surface
(2) 36" 2 drawer lateral file
(1) 3 drawer PED file
(1) 5' Oval on casters
(1) Task chair
(2) Guest chairs
(2) 6 LF 15-1/2" deep enclosed shelving with flipper doors, s.f.
(1) 8 LF open shelving
(1) Whiteboard
(1) Wall mounted coat rack
(1) Waste receptacle
(1) 6 LF task slatwall
(1) Task slatwall accessories package

COPYRIGHT © 2009 CRSA

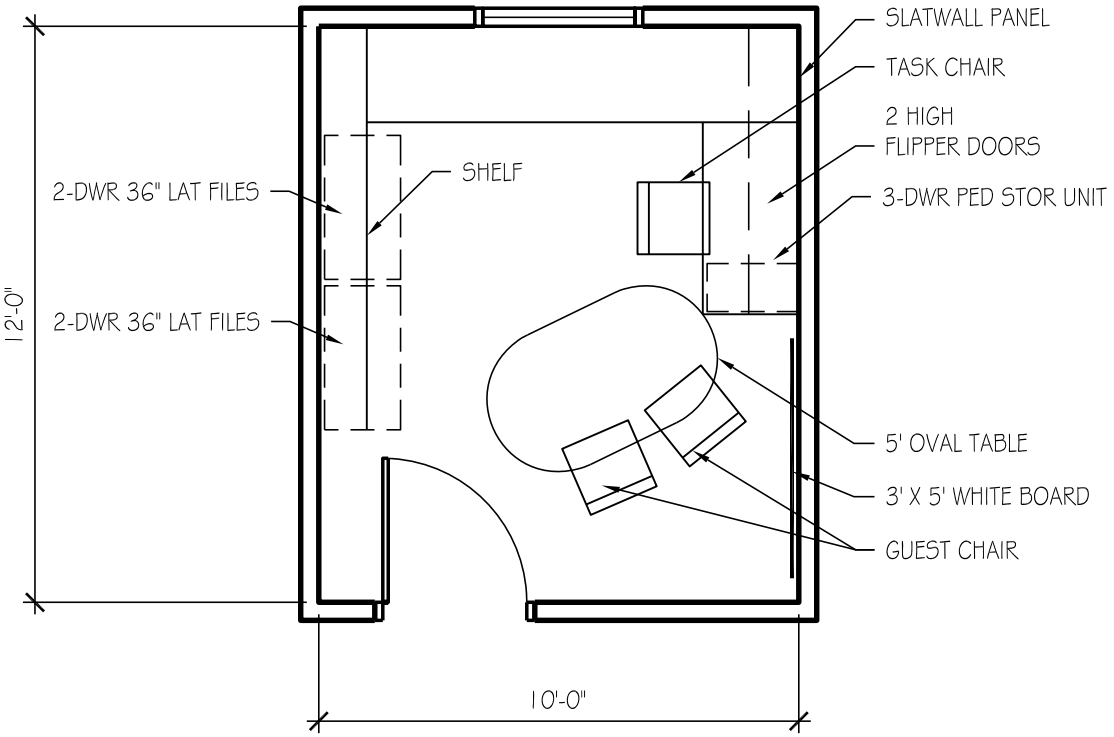

OFFICE A - 120 SF

USU Agriculture Building

ROOM DATA SHEET DETAIL **Centers**

4-H

3.5.3 Leadership/Citizenship and Ambassadors -

SPACE INFORMATION

Room Function: General office work

Adjacencies:

Special Requirements:

None

Access: Public

Room Utilization: 5 days a week, 8:00 AM to 5:00 PM

General Notes: None

ROOM SIZE AND CAPACITY

Proposed Area:	120 NSF	**Room/Space Quantity:**	1	**Total Area:**	120
Assigned Capacity:	1 Occupant(s)	**Unassigned Capacity:**	2 Guest(s)	**Total Capacity:**	3

FINISHES, DOORS, AND WINDOWS

Floor Finish: Carpet-tile

Wall Finish: Gypsum board (painted)

Base Finish: Integral Coved

Doors:

Type:	Single	**Height:**	84"
Width:	36"	**Vision Panel:**	Frosted

Ceiling Treatment: Suspended acoustical lay-in tiles

Ceiling Height: 8' minimum

Acoustic Treatment: Acoustic seperation from adjacent spaces

Windows:

Natural Lighting: Preferred, glare and brightness control

Room Skylight: Frosted Panel

MECHANICAL/ELECTRICAL

HVAC: Standard, space temperature control

Plumbing: None

Fire Protection: Sprinkler

Security: Keyed lock at entrance doors

Electrical: 120V wall outlets

AV Requirements: None

Wire Management: Wall outlets

Data Management: Tele/data outlet(s)

Artificial Lighting: Direct/indirect fluorescent and task lighting

Telephone: Telephone outlets per occupant

EQUIPMENT AND FURNISHINGS

Equipment

(1) Computer system (provided by owner)
(1) Printer (provided by owner)

Furniture

(1) 13 LF of work surface
(2) 36" 2 drawer lateral file
(1) 3 drawer PED file
(1) 5' Oval on casters
(1) Task chair
(2) Guest chairs
(2) 6 LF 15-1/2" deep enclosed shelving with flipper doors, s.f.
(1) 8 LF open shelving
(1) Whiteboard
(1) Wall mounted coat rack
(1) Waste receptacle
(1) 6 LF task slatwall
(1) Task slatwall accessories package

COPYRIGHT © 2009 CRSA

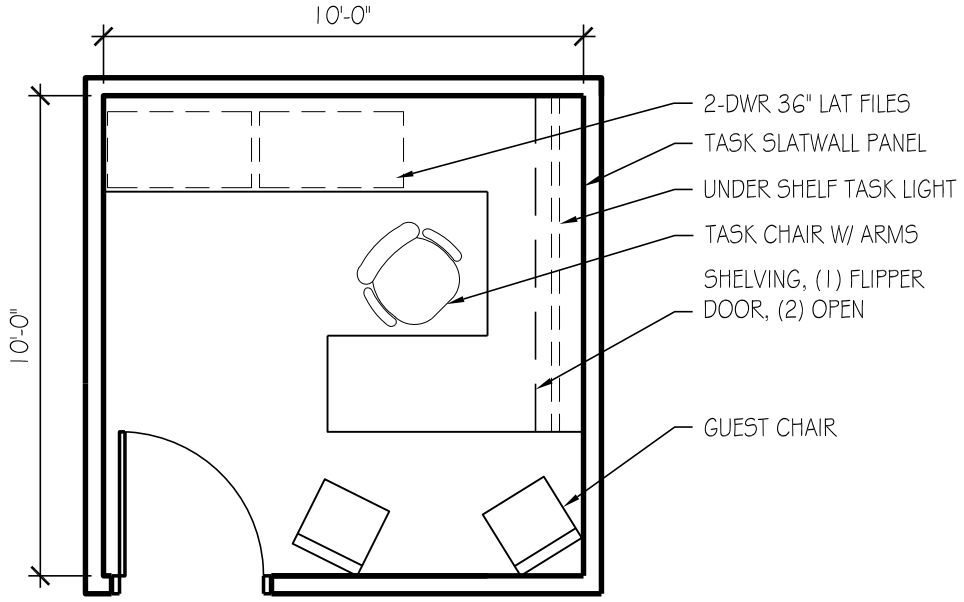

WORKSTATION

100 SF

USU Agriculture Building

ROOM DATA SHEET DETAIL **Centers**

4-H

3.5.4 SET Curriculum and Program Coordinator -

SPACE INFORMATION

Room Function: General office work

Adjacencies:

Special Requirements:
None

Access: Public

Room Utilization: 5 days a week, 8:00 AM to 5:00 PM

General Notes: None

ROOM SIZE AND CAPACITY

Proposed Area:	100 NSF	**Room/Space Quantity:**	1	**Total Area:**	100
Assigned Capacity:	1 Occupant(s)	**Unassigned Capacity:**	1 Guest(s)	**Total Capacity:**	2

FINISHES, DOORS, AND WINDOWS

Floor Finish: Carpet-tile

Wall Finish: Gypsum board (painted)

Base Finish: Integral Coved

Doors:

Type:	Single	**Height:**	84"
Width:	36"	**Vision Panel:**	Frosted

Ceiling Treatment: Suspended acoustical lay-in tiles

Ceiling Height: 8' minimum

Acoustic Treatment: Acoustic seperation from adjacent spaces

Windows:

Natural Lighting:	Desired, but not required
Room Skylight:	Vision Panel

MECHANICAL/ELECTRICAL

HVAC:	Standard, space temperature control	**AV Requirements:**	None
Plumbing:	None	**Wire Management:**	Wall outlets
Fire Protection:	Sprinkler	**Data Management:**	Tele/data outlet(s)
Security:	Keyed lock at entrance doors	**Artificial Lighting:**	Direct/indirect fluorescent and task lighting
Electrical:	120V wall outlets	**Telephone:**	Telephone outlets per occupant

EQUIPMENT AND FURNISHINGS

Equipment

(1) Computer system (provided by owner)
(1) Printer (provided by owner)

Furniture

(1) 18 LF Work surface
(1) Task chair
(2) Guest chair
(2) 2 Drawer 36" lateral file
(1) 7 LF task slatwall
(1) Task slatwall accessories package
(1) 14 LF 12-1/2" Deep open shelving, s.f.
(1) 7 LF 15-1/2" Deep enclosed shelving with flipper door, s.f.
(1) Under shelf task light
(1) Door mounted coat rack
(1) Waste receptacle

COPYRIGHT © 2009 CRSA

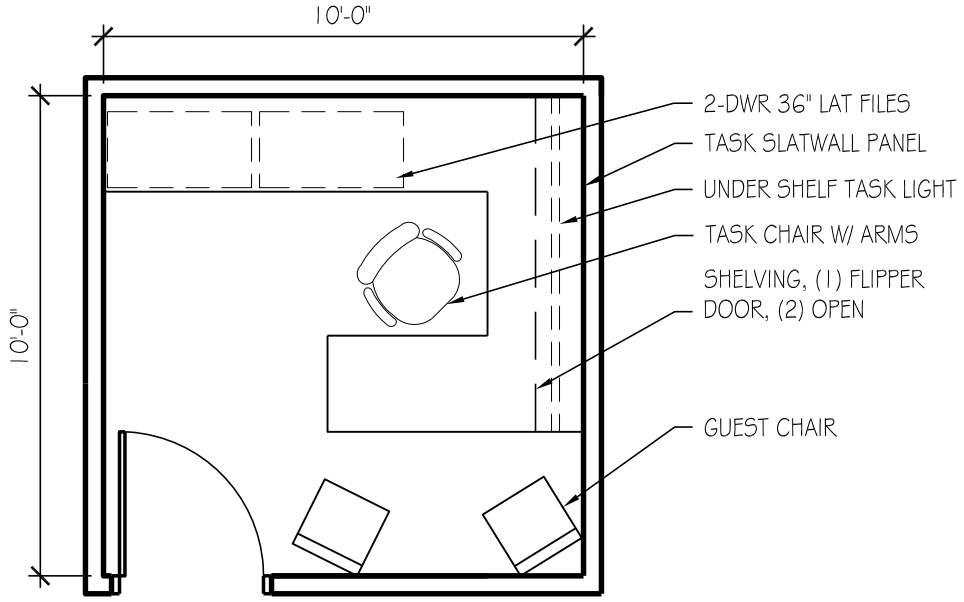

WORKSTATION

100 SF

USU Agriculture Building

ROOM DATA SHEET DETAIL **Centers**

4-H

3.5.5 State Activities Coordinator **-**

SPACE INFORMATION

Room Function: General office work

Adjacencies:

Special Requirements:

None

Access: Public

Room Utilization: 5 days a week, 8:00 AM to 5:00 PM

General Notes: None

ROOM SIZE AND CAPACITY

Proposed Area:	100 NSF	**Room/Space Quantity:**	1	**Total Area:**	100
Assigned Capacity:	1 Occupant(s)	**Unassigned Capacity:**	1 Guest(s)	**Total Capacity:**	2

FINISHES, DOORS, AND WINDOWS

Floor Finish: Carpet-tile

Wall Finish: Gypsum board (painted)

Base Finish: Integral Coved

Doors:

Type:	Single	**Height:**	84"
Width:	36"	**Vision Panel:**	Frosted

Ceiling Treatment: Suspended acoustical lay-in tiles

Ceiling Height: 8' minimum

Acoustic Treatment: Acoustic seperation from adjacent spaces

Windows:

Natural Lighting:	Desired, but not required
Room Skylight:	Vision Panel

MECHANICAL/ELECTRICAL

HVAC:	Standard, space temperature control	**AV Requirements:**	None
Plumbing:	None	**Wire Management:**	Wall outlets
Fire Protection:	Sprinkler	**Data Management:**	Tele/data outlet(s)
Security:	Keyed lock at entrance doors	**Artificial Lighting:**	Direct/indirect fluorescent and task lighting
Electrical:	120V wall outlets	**Telephone:**	Telephone outlets per occupant

EQUIPMENT AND FURNISHINGS

Equipment

(1) Computer system (provided by owner)
(1) Printer (provided by owner)

Furniture

(1) 18 LF Work surface
(1) Task chair
(2) Guest chair
(2) 2 Drawer 36" lateral file
(1) 7 LF task slatwall
(1) Task slatwall accessories package
(1) 14 LF 12-1/2" Deep open shelving, s.f.
(1) 7 LF 15-1/2" Deep enclosed shelving with flipper door, s.f.
(1) Under shelf task light
(1) Door mounted coat rack
(1) Waste receptacle

COPYRIGHT © 2009 CRSA

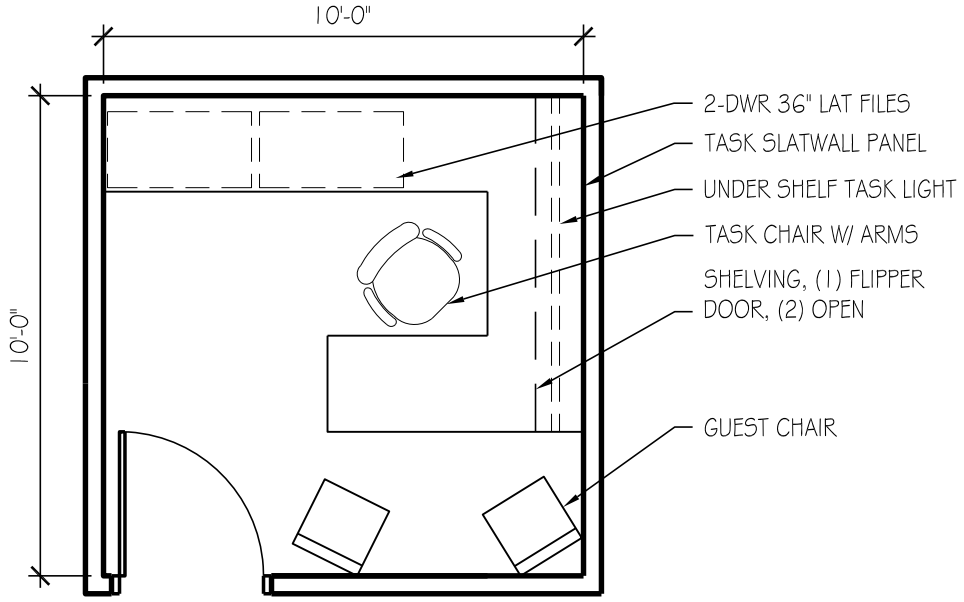

WORKSTATION

100 SF

USU Agriculture Building

ROOM DATA SHEET DETAIL **Centers**

4-H

3.5.6 YFP Mentoring **-**

SPACE INFORMATION

Room Function: General office work

Adjacencies:

Special Requirements:

None

Access: Public

Room Utilization: 5 days a week, 8:00 AM to 5:00 PM

General Notes: None

ROOM SIZE AND CAPACITY

Proposed Area:	100 NSF	**Room/Space Quantity:**	1	**Total Area:**	100
Assigned Capacity:	1 Occupant(s)	**Unassigned Capacity:**	1 Guest(s)	**Total Capacity:**	2

FINISHES, DOORS, AND WINDOWS

Floor Finish: Carpet-tile

Wall Finish: Gypsum board (painted)

Base Finish: Integral Coved

Doors:

Type:	Single	**Height:**	84"
Width:	36"	**Vision Panel:**	Frosted

Ceiling Treatment: Suspended acoustical lay-in tiles

Ceiling Height: 8' minimum

Acoustic Treatment: Acoustic seperation from adjacent spaces

Windows:

Natural Lighting:	Desired, but not required
Room Skylight:	Vision Panel

MECHANICAL/ELECTRICAL

HVAC:	Standard, space temperature control	**AV Requirements:**	None
Plumbing:	None	**Wire Management:**	Wall outlets
Fire Protection:	Sprinkler	**Data Management:**	Tele/data outlet(s)
Security:	Keyed lock at entrance doors	**Artificial Lighting:**	Direct/indirect fluorescent and task lighting
Electrical:	120V wall outlets	**Telephone:**	Telephone outlets per occupant

EQUIPMENT AND FURNISHINGS

Equipment

(1) Computer system (provided by owner)
(1) Printer (provided by owner)

Furniture

(1) 18 LF Work surface
(1) Task chair
(2) Guest chair
(2) 2 Drawer 36" lateral file
(1) 7 LF task slatwall
(1) Task slatwall accessories package
(1) 14 LF 12-1/2" Deep open shelving, s.f.
(1) 7 LF 15-1/2" Deep enclosed shelving with flipper door, s.f.
(1) Under shelf task light
(1) Door mounted coat rack
(1) Waste receptacle

COPYRIGHT © 2009 CRSA

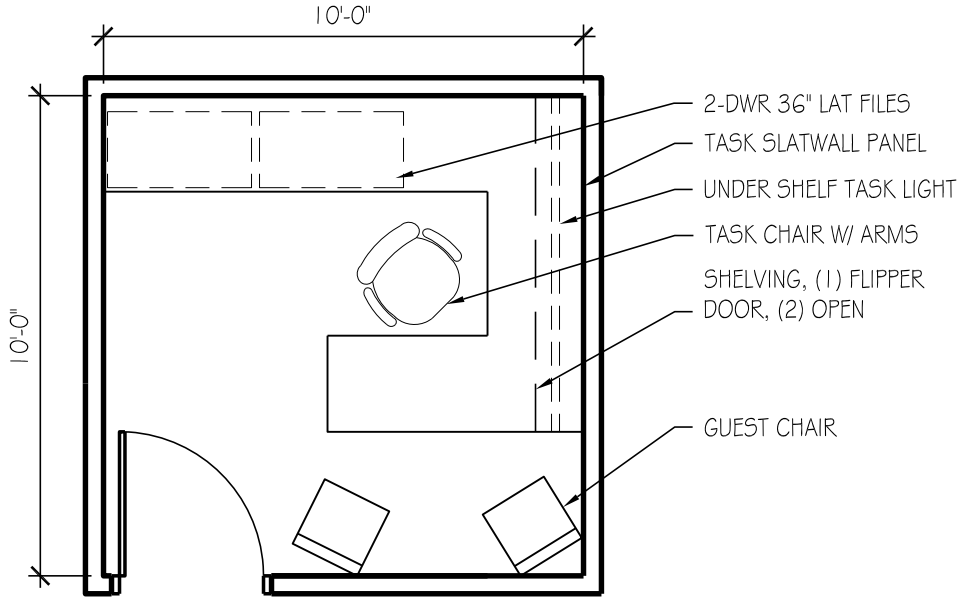

WORKSTATION

100 SF

USU Agriculture Building

ROOM DATA SHEET DETAIL **Centers**

4-H

3.5.7 Accountant **-**

SPACE INFORMATION

Room Function: General office work

Adjacencies:

Special Requirements:

None

Access: Public

Room Utilization: 5 days a week, 8:00 AM to 5:00 PM

General Notes: None

ROOM SIZE AND CAPACITY

Proposed Area:	100 NSF	**Room/Space Quantity:**	1	**Total Area:**	100
Assigned Capacity:	1 Occupant(s)	**Unassigned Capacity:**	1 Guest(s)	**Total Capacity:**	2

FINISHES, DOORS, AND WINDOWS

Floor Finish: Carpet-tile

Wall Finish: Gypsum board (painted)

Base Finish: Integral Coved

Doors:

Type:	Single	**Height:**	84"
Width:	36"	**Vision Panel:**	Frosted

Ceiling Treatment: Suspended acoustical lay-in tiles

Ceiling Height: 8' minimum

Acoustic Treatment: Acoustic seperation from adjacent spaces

Windows:

Natural Lighting:	Desired, but not required
Room Skylight:	Vision Panel

MECHANICAL/ELECTRICAL

HVAC:	Standard, space temperature control	**AV Requirements:**	None
Plumbing:	None	**Wire Management:**	Wall outlets
Fire Protection:	Sprinkler	**Data Management:**	Tele/data outlet(s)
Security:	Keyed lock at entrance doors	**Artificial Lighting:**	Direct/indirect fluorescent and task lighting
Electrical:	120V wall outlets	**Telephone:**	Telephone outlets per occupant

EQUIPMENT AND FURNISHINGS

Equipment

(1) Computer system (provided by owner)
(1) Printer (provided by owner)

Furniture

(1) 18 LF Work surface
(1) Task chair
(2) Guest chair
(2) 2 Drawer 36" lateral file
(1) 7 LF task slatwall
(1) Task slatwall accessories package
(1) 14 LF 12-1/2" Deep open shelving, s.f.
(1) 7 LF 15-1/2" Deep enclosed shelving with flipper door, s.f.
(1) Under shelf task light
(1) Door mounted coat rack
(1) Waste receptacle

COPYRIGHT © 2009 CRSA

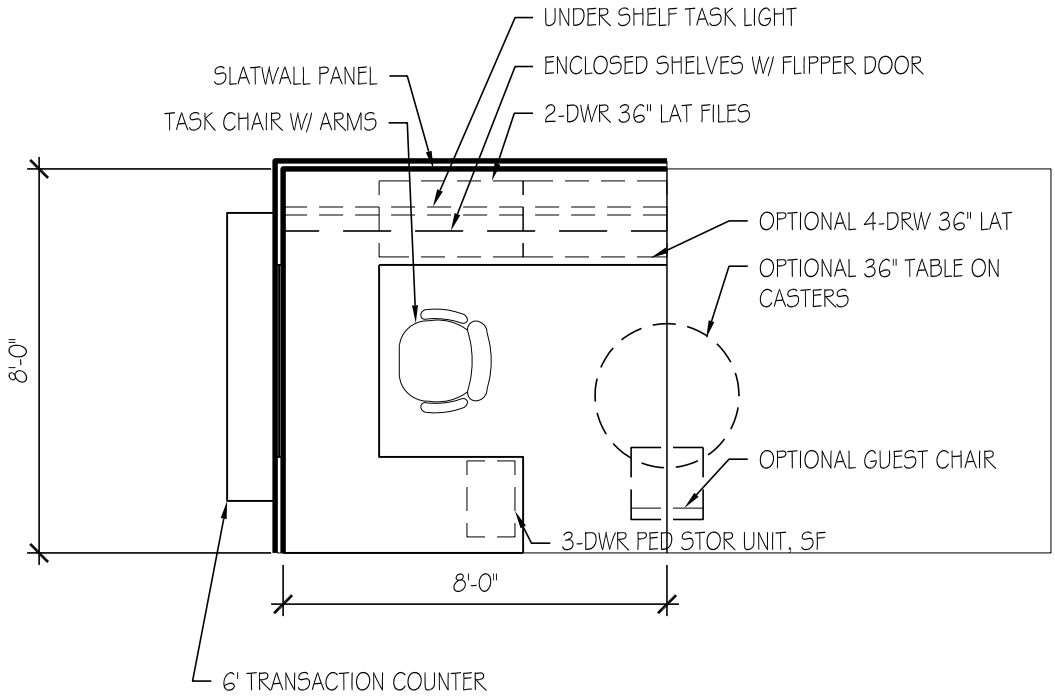

OPEN WORKSTATION

64 SF

USU Agriculture Building

ROOM DATA SHEET DETAIL **Centers**

4-H

3.5.8.1 Admin Assistant - Open Workstation -

SPACE INFORMATION

Room Function: General office work

Adjacencies: Director (3.5.1)

Special Requirements: None

Access: Public

Room Utilization: 5 days a week, 8:00 AM to 5:00 PM

General Notes: None

ROOM SIZE AND CAPACITY

Proposed Area:	64 NSF	**Room/Space Quantity:**	2	**Total Area:**	128
Assigned Capacity:	1 Occupant(s)	**Unassigned Capacity:**	29 Guest(s)	**Total Capacity:**	30

FINISHES, DOORS, AND WINDOWS

Floor Finish: Carpet-tile

Wall Finish: Systems furniture

Base Finish: Systems Furniture

Doors:

- **Type:** N/A
- **Height:** None
- **Width:** None
- **Vision Panel:** N/A

Ceiling Treatment: Suspended acoustical lay-in tiles

Ceiling Height: 8' minimum

Acoustic Treatment: Systems Furniture

Windows:

- **Natural Lighting:** Not required
- **Room Skylight:** N/A

MECHANICAL/ELECTRICAL

HVAC: Standard

Plumbing: None

Fire Protection: Sprinkler

Security: Keyed lock on all securable storage devices

Electrical: 120V wall outlets

AV Requirements: None

Wire Management: Wall outlets

Data Management: Tele/data outlet(s)

Artificial Lighting: Direct/indirect fluorescent and task lighting

Telephone: Telephone outlets per occupant

EQUIPMENT AND FURNISHINGS

Equipment

(1) Computer system (provided by owner)
(1) Printer (provided by owner)

Furniture

(1) 13 LF work surface
(1) 3 Drawer PED file
(1) Task chair
(2) 36" 2 drawer lateral file
(1) 8 LF 15-1/2" deep enclosed shelving with flipper door, s.f.
(1) Under shelf task light, s.f.
(1) 8 LF task slatwall
(1) Task slatwall accessories package
(1) Waste receptacle
(1) Optional guest chair
(1) Optional 36" table on casters
(1) Optional 36" 4 drawer lateral file
(1) Optional 6 LF transaction counter

COPYRIGHT © 2009 CRSA

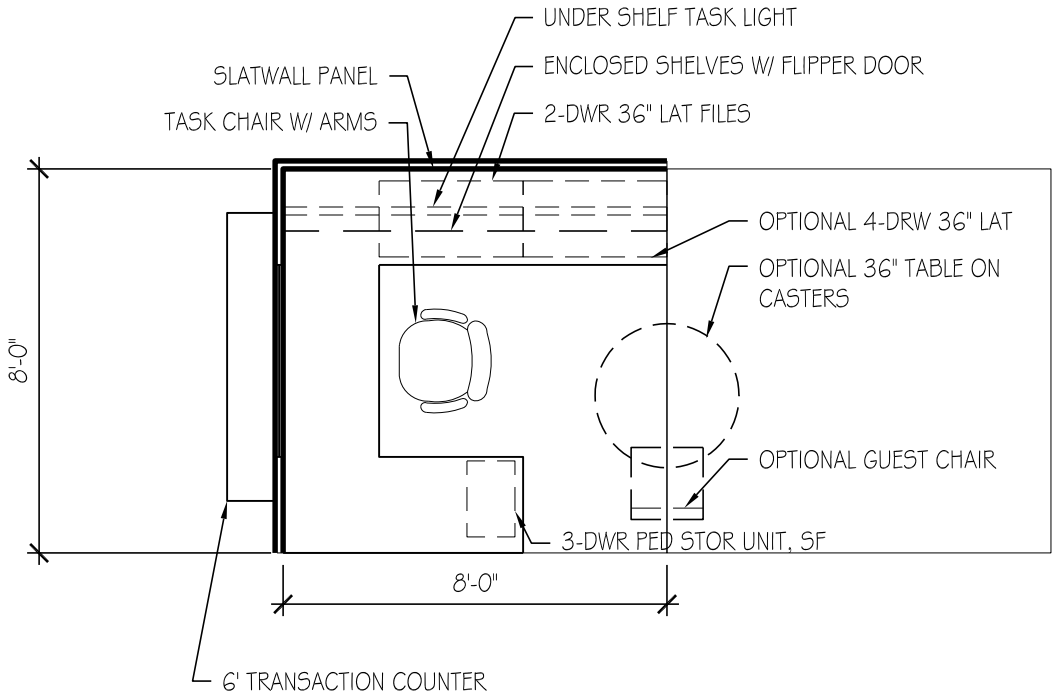

OPEN WORKSTATION

64 SF

USU Agriculture Building

ROOM DATA SHEET DETAIL **Centers**

4-H

3.5.8.2 Staff II - Open Workstation **-**

SPACE INFORMATION

Room Function: General office work

Adjacencies:

Special Requirements:
None

Access: Public

Room Utilization: 5 days a week, 8:00 AM to 5:00 PM

General Notes: None

ROOM SIZE AND CAPACITY

Proposed Area:	64 NSF	**Room/Space Quantity:**	2	**Total Area:**	128
Assigned Capacity:	1 Occupant(s)	**Unassigned Capacity:**	29 Guest(s)	**Total Capacity:**	30

FINISHES, DOORS, AND WINDOWS

Floor Finish: Carpet-tile

Wall Finish: Systems furniture

Base Finish: Systems Furniture

Doors:

Type:	N/A	**Height:**	None
Width:	None	**Vision Panel:**	N/A

Ceiling Treatment: Suspended acoustical lay-in tiles

Ceiling Height: 8' minimum

Acoustic Treatment: Systems Furniture

Windows:

Natural Lighting:	Not required
Room Skylight:	N/A

MECHANICAL/ELECTRICAL

HVAC: Standard

Plumbing: None

Fire Protection: Sprinkler

Security: Keyed lock on all securable storage devices

Electrical: 120V wall outlets

AV Requirements: None

Wire Management: Wall outlets

Data Management: Tele/data outlet(s)

Artificial Lighting: Direct/indirect fluorescent and task lighting

Telephone: Telephone outlets per occupant

EQUIPMENT AND FURNISHINGS

Equipment

(1) Computer system (provided by owner)

Furniture

(1) 13 LF work surface
(1) 3 Drawer PED file
(1) Task chair
(2) 36" 2 drawer lateral file
(1) 8 LF 15-1/2" deep enclosed shelving with flipper door, s.f.
(1) Under shelf task light, s.f.
(1) 8 LF task slatwall
(1) Task slatwall accessories package
(1) Waste receptacle
(1) Optional guest chair
(1) Optional 36" table on casters
(1) Optional 36" 4 drawer lateral file
(1) Optional 6 LF transaction counter

COPYRIGHT © 2009 CRSA

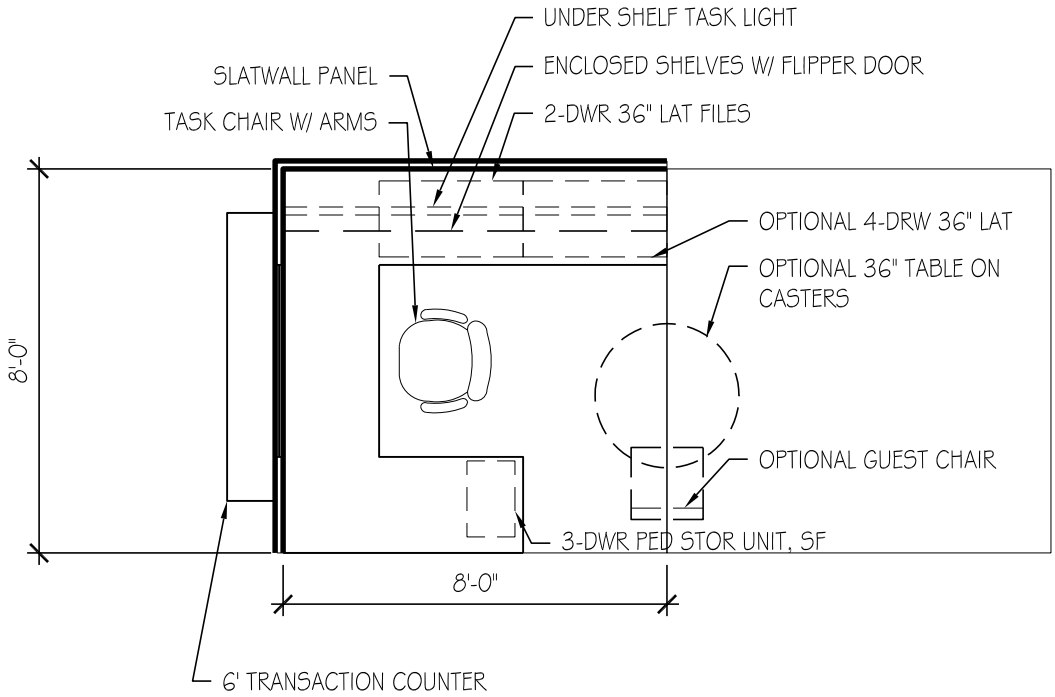

OPEN WORKSTATION

64 SF

USU Agriculture Building

ROOM DATA SHEET DETAIL **Centers**

4-H

3.5.8.3 Web Site Developer - Open Workstation -

SPACE INFORMATION

Room Function: General office work

Adjacencies:

Special Requirements:
None

Access: Public

Room Utilization: 5 days a week, 8:00 AM to 5:00 PM

General Notes: None

ROOM SIZE AND CAPACITY

Proposed Area:	64 NSF	**Room/Space Quantity:**	2	**Total Area:**	128
Assigned Capacity:	1 Occupant(s)	**Unassigned Capacity:**	29 Guest(s)	**Total Capacity:**	30

FINISHES, DOORS, AND WINDOWS

Floor Finish:	Carpet-tile	**Ceiling Treatment:**	Suspended acoustical lay-in tiles
Wall Finish:	Systems furniture	**Ceiling Height:**	8' minimum
Base Finish:	Systems Furniture	**Acoustic Treatment:**	Systems Furniture
Doors:		**Windows:**	

Type:	N/A	**Height:**	None	**Natural Lighting:**	Not required
Width:	None	**Vision Panel:**	N/A	**Room Skylight:**	N/A

MECHANICAL/ELECTRICAL

HVAC:	Standard	**AV Requirements:**	None
Plumbing:	None	**Wire Management:**	Wall outlets
Fire Protection:	Sprinkler	**Data Management:**	Tele/data outlet(s)
Security:	Keyed lock on all securable storage devices	**Artificial Lighting:**	Direct/indirect fluorescent and task lighting
Electrical:	120V wall outlets	**Telephone:**	Telephone outlets per occupant

EQUIPMENT AND FURNISHINGS

Equipment

(1) Computer system (provided by owner)

Furniture

(1) 13 LF work surface
(1) 3 Drawer PED file
(1) Task chair
(2) 36" 2 drawer lateral file
(1) 8 LF 15-1/2" deep enclosed shelving with flipper door, s.f.
(1) Under shelf task light, s.f.
(1) 8 LF task slatwall
(1) Task slatwall accessories package
(1) Waste receptacle
(1) Optional guest chair
(1) Optional 36" table on casters
(1) Optional 36" 4 drawer lateral file
(1) Optional 6 LF transaction counter

COPYRIGHT © 2009 CRSA

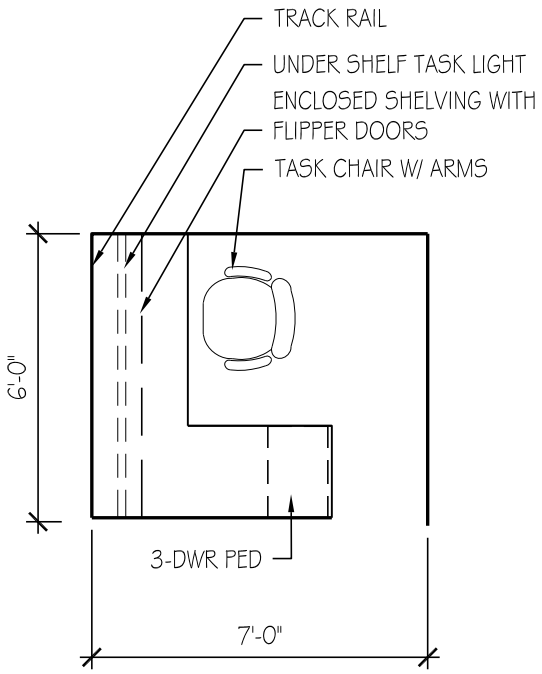

OPEN WORKSTATION

42 SF

USU Agriculture Building

ROOM DATA SHEET DETAIL **Centers**

4-H

3.5.8.4 Open Workstation **-**

SPACE INFORMATION

Room Function: General office work

Adjacencies:

Access: Public

Room Utilization: 5 days a week, 8:00 AM to 5:00 PM

General Notes: None

Special Requirements:

All system furniture is panel hung.
Locks on all securable storage devices.

ROOM SIZE AND CAPACITY

Proposed Area:	42 NSF	**Room/Space Quantity:**	8	**Total Area:**	336
Assigned Capacity:	1 Occupant(s)	**Unassigned Capacity:**	1 Guest(s)	**Total Capacity:**	2

FINISHES, DOORS, AND WINDOWS

Floor Finish: Carpet-tile

Wall Finish: Gypsum board (painted)

Base Finish: Integral Coved

Doors:

Type: N/A **Height:** None

Width: None **Vision Panel:** N/A

Ceiling Treatment: Suspended acoustical lay-in tiles

Ceiling Height: 8' minimum

Acoustic Treatment: Systems Furniture

Windows:

Natural Lighting: Not required

Room Skylight: N/A

MECHANICAL/ELECTRICAL

HVAC: Standard

Plumbing: None

Fire Protection: Sprinkler

Security: Keyed lock on all securable storage devices

Electrical: 120V wall outlets

AV Requirements: None

Wire Management: Wall outlets

Data Management: Tele/data outlet(s)

Artificial Lighting: Direct/indirect fluorescent and task lighting

Telephone: Telephone outlets per occupant

EQUIPMENT AND FURNISHINGS

Equipment

(1) Computer system (provided by owner)

Furniture

(1) 9 LF work surface
(1) Task chair
(1) 3 Drawer PED file
(1) 6 LF enclosed shelving with flipper doors, s.f.
(1) Under shelf task light, s.f.
(1) 6 LF task slatwall
(1) Task slatwall accessories package
(1) Waste receptacle
(1) 24 LF systems furniture panel

COPYRIGHT © 2009 CRSA

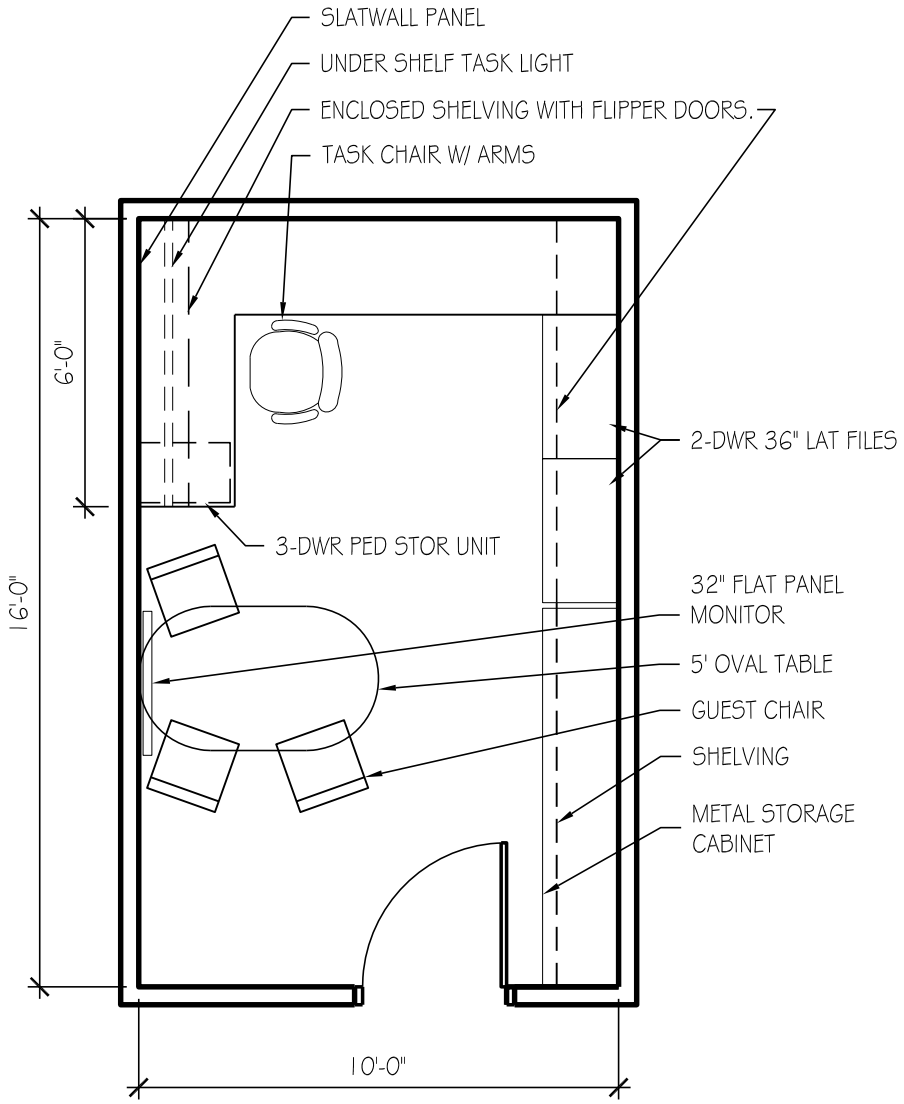

OFFICE - 160 SF

USU Agriculture Building

ROOM DATA SHEET DETAIL **Centers**

Manufacturing Extension Program

3.6.1 Director **-**

SPACE INFORMATION

Room Function: General office work

Adjacencies: None

Special Requirements: None

Access: Public

Room Utilization: 5 days a week, 8:00 AM to 5:00 PM

General Notes: None

ROOM SIZE AND CAPACITY

Proposed Area:	160 NSF	**Room/Space Quantity:**	1	**Total Area:**	160
Assigned Capacity:	1 Occupant(s)	**Unassigned Capacity:**	0 Guest(s)	**Total Capacity:**	1

FINISHES, DOORS, AND WINDOWS

Floor Finish: Carpet-tile

Wall Finish: Gypsum board (painted)

Base Finish: Integral Coved

Doors:

Type:	Single	**Height:**	84"
Width:	36"	**Vision Panel:**	Frosted

Ceiling Treatment: Suspended acoustical lay-in tiles

Ceiling Height: 8' minimum

Acoustic Treatment: Acoustic seperation from adjacent spaces

Windows:

Natural Lighting: Required (provide shades for control)

Room Skylight: Frosted Panel

MECHANICAL/ELECTRICAL

HVAC: Standard, space temperature control

Plumbing: None

Fire Protection: Sprinkler

Security: Keyed lock at entrance doors

Electrical: 120V wall outlets

AV Requirements: None

Wire Management: Wall outlets

Data Management: Tele/data outlet(s)

Artificial Lighting: Direct/indirect fluorescent and task lighting

Telephone: Wall mounted telephone jack

EQUIPMENT AND FURNISHINGS

Equipment

(1) Computer system (provided by owner)
(1) Printer (provided by owner)
(1) 32" Flat panel monitor

Furniture

(1) 16 LF Work surface, system furniture
(1) 5' Oval conference table on casters
(1) Task chair
(3) Guest chair
(1) 3 Drawer PED file
(2) 2 Drawer 36" lateral file, s.f.
(1) 48 LF Adjustable height shelving
(1) 24 LF 12-1/2" Deep open shelving with flipper doors, s.f.
(1) Under shelf task light
(1) 8 LF task slatwall
(1) Task slatwall accessories package
(1) Door mounted coat rack
(1) Waste receptacle
(1) Desk task light
(1) 8 LF metal base cabinet

COPYRIGHT © 2009 CRSA

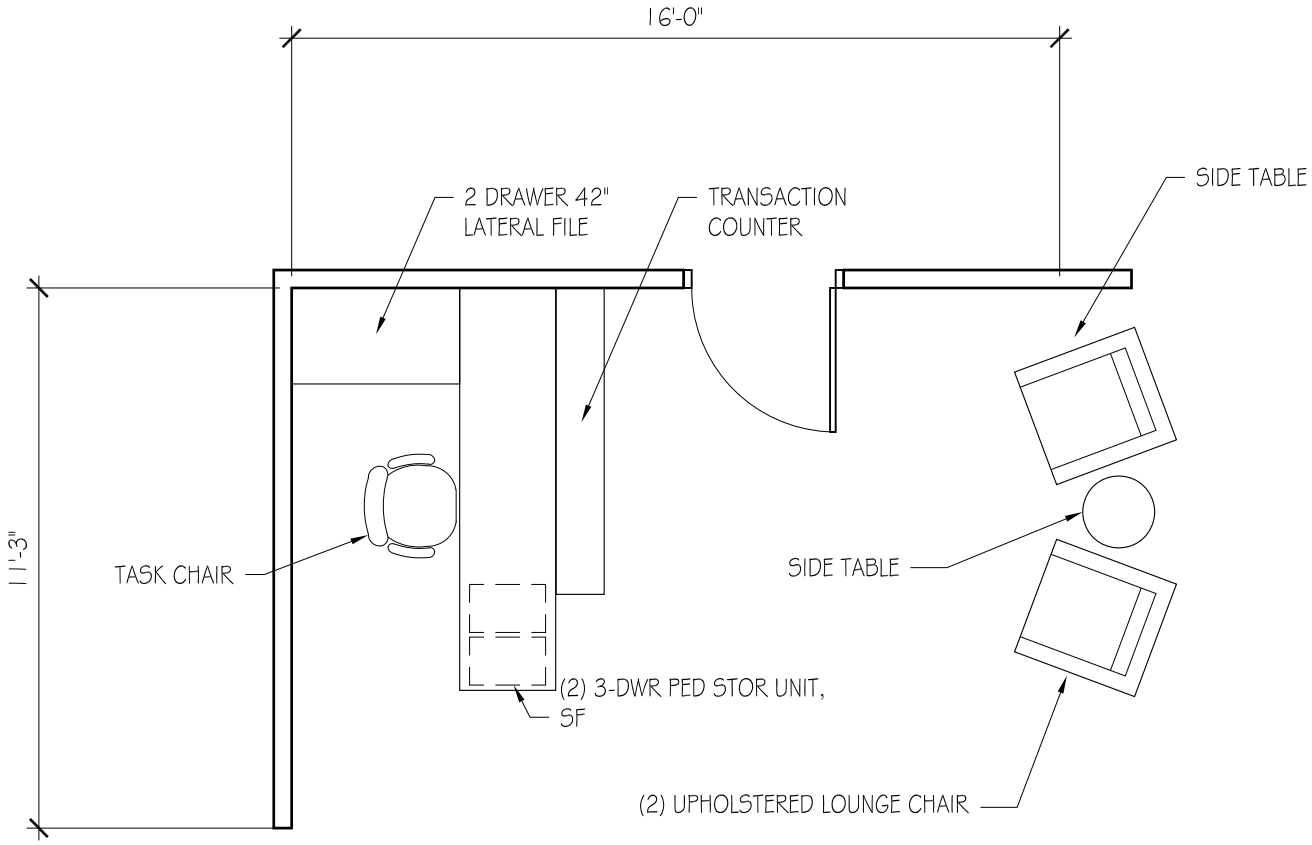

3.7.1 RECEPTION- 180 SF

USU Agriculture Building

ROOM DATA SHEET DETAIL **Centers**

Center Support Area

3.7.1 Reception **-**

SPACE INFORMATION

Room Function: General office work, reception

Adjacencies:

Special Requirements:

None

Access: Public

Room Utilization: 5 days a week, 8:00 AM to 5:00 PM

General Notes: None

ROOM SIZE AND CAPACITY

Proposed Area:	180 NSF	**Room/Space Quantity:**	1	**Total Area:**	180
Assigned Capacity:	1 Occupant(s)	**Unassigned Capacity:**	4 Guest(s)	**Total Capacity:**	5

FINISHES, DOORS, AND WINDOWS

Floor Finish: Carpet-tile

Wall Finish: Gypsum board (painted)

Base Finish: Integral Coved

Doors:

Type:	Single	**Height:**	84"
Width:	36"	**Vision Panel:**	Frosted

Ceiling Treatment: Suspended acoustical lay-in tiles

Ceiling Height: 8' minimum

Acoustic Treatment: Acoustic seperation from adjacent spaces

Windows:

Natural Lighting:	Not required
Room Skylight:	Vision Panel

MECHANICAL/ELECTRICAL

HVAC:	Standard	**AV Requirements:**	None
Plumbing:	None	**Wire Management:**	Wall outlets
Fire Protection:	Sprinkler	**Data Management:**	Tele/data outlet(s)
Security:	None	**Artificial Lighting:**	Direct/indirect fluorescent and task lighting
Electrical:	120V wall outlets	**Telephone:**	Telephone outlets per occupant

EQUIPMENT AND FURNISHINGS

Equipment

(1) Computer system (provided by owner)
(1) Printer (provided by owner)

Furniture

(1) 11 LF of work space
(1) Side table
(2) Upholstered chair
(1) Table lamp
(2) 3 drawer PED file
(1) 42" 2 drawer lateral file
(1) Waste receptacle
(1) 8 LF transaction counter

COPYRIGHT © 2009 CRSA

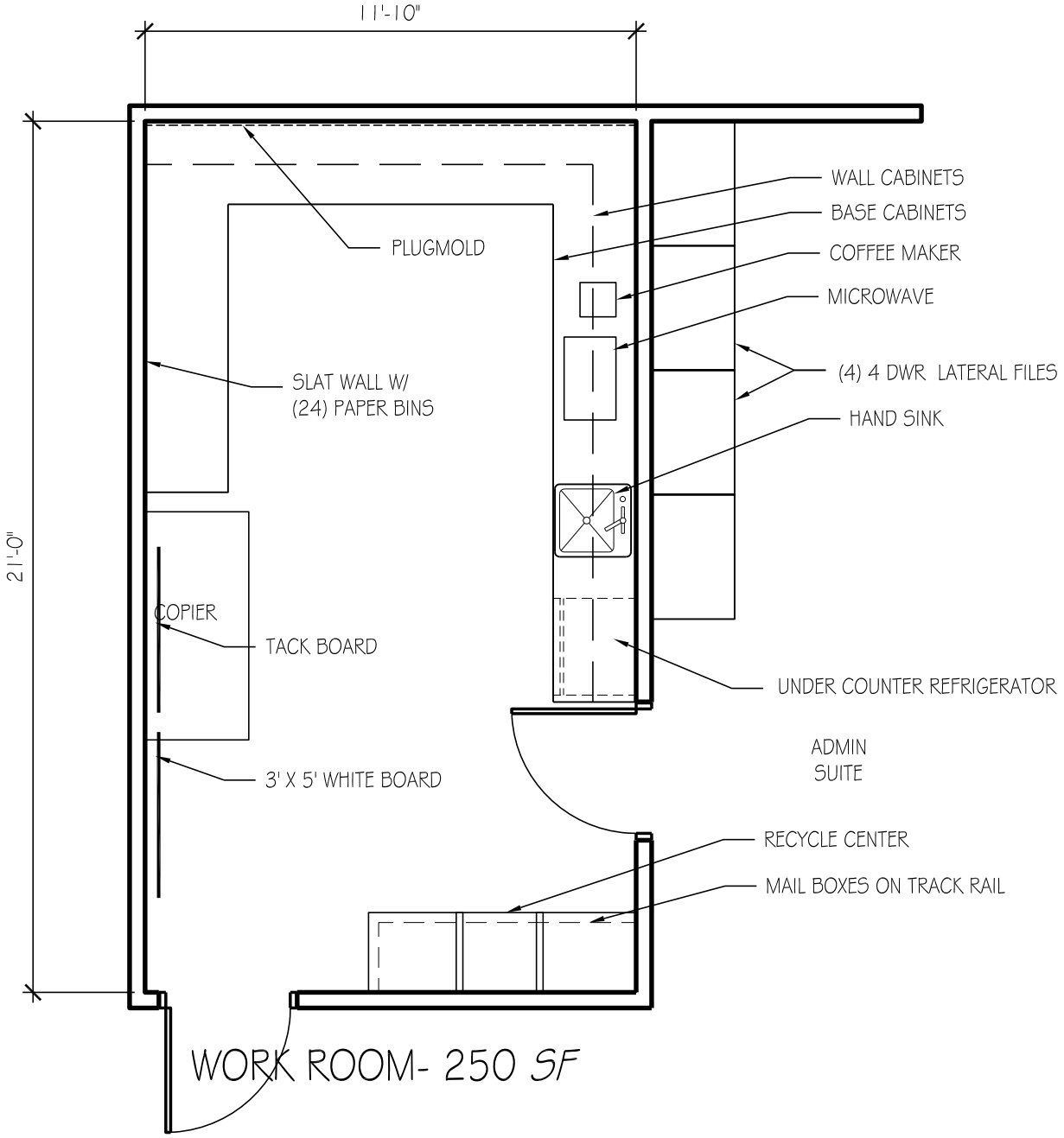

WORK ROOM- 250 SF

USU Agriculture Building

ROOM DATA SHEET DETAIL **Centers**

Center Support Area

3.7.2 Copy/Mail/Workroom/Storage -

SPACE INFORMATION

Room Function: Copy, work, prep

Adjacencies:

Special Requirements:
None

Access: Public

Room Utilization: 5 days a week, 8:00 AM to 5:00 PM

General Notes: None

ROOM SIZE AND CAPACITY

Proposed Area:	250 NSF	**Room/Space Quantity:**	1	**Total Area:**	250
Assigned Capacity:	1 Occupant(s)	**Unassigned Capacity:**	1 Guest(s)	**Total Capacity:**	2

FINISHES, DOORS, AND WINDOWS

Floor Finish: Carpet-tile

Wall Finish: Gypsum board (painted)

Base Finish: Integral Coved

Doors:

Type:	Single	**Height:**	84"
Width:	36"	**Vision Panel:**	N/A

Ceiling Treatment: Suspended acoustical lay-in tiles

Ceiling Height: 8' minimum

Acoustic Treatment: Acoustic seperation from adjacent spaces

Windows:

Natural Lighting:	Not required
Room Skylight:	None

MECHANICAL/ELECTRICAL

HVAC:	Standard	**AV Requirements:**	None
Plumbing:	None	**Wire Management:**	Wall outlets
Fire Protection:	Sprinkler	**Data Management:**	Tele/data outlet(s)
Security:	Keyed lock at entrance doors	**Artificial Lighting:**	Direct/indirect fluorescent and task lighting
Electrical:	120V wall outlets	**Telephone:**	Telephone outlets per occupant

EQUIPMENT AND FURNISHINGS

Equipment

(1) Copier (provided by owner)
(1) Refrigerator
(1) Microwave
(1) Coffee maker

Furniture

(1) 10 LF task slatwall
(1) 26 LF base cabinets
(1) 20 LF wall cabinets - lockable
(45) Mail slots
(1) 4'x4' Tack board
(1) 4'x4' White board
(4) 4 Drawer lateral file
(1) Ten gallon waste receptacle
(1) 3 Compartment recycling bin
(1) 10 LF task slatwall
(24) Paper trays

COPYRIGHT © 2009 CRSA

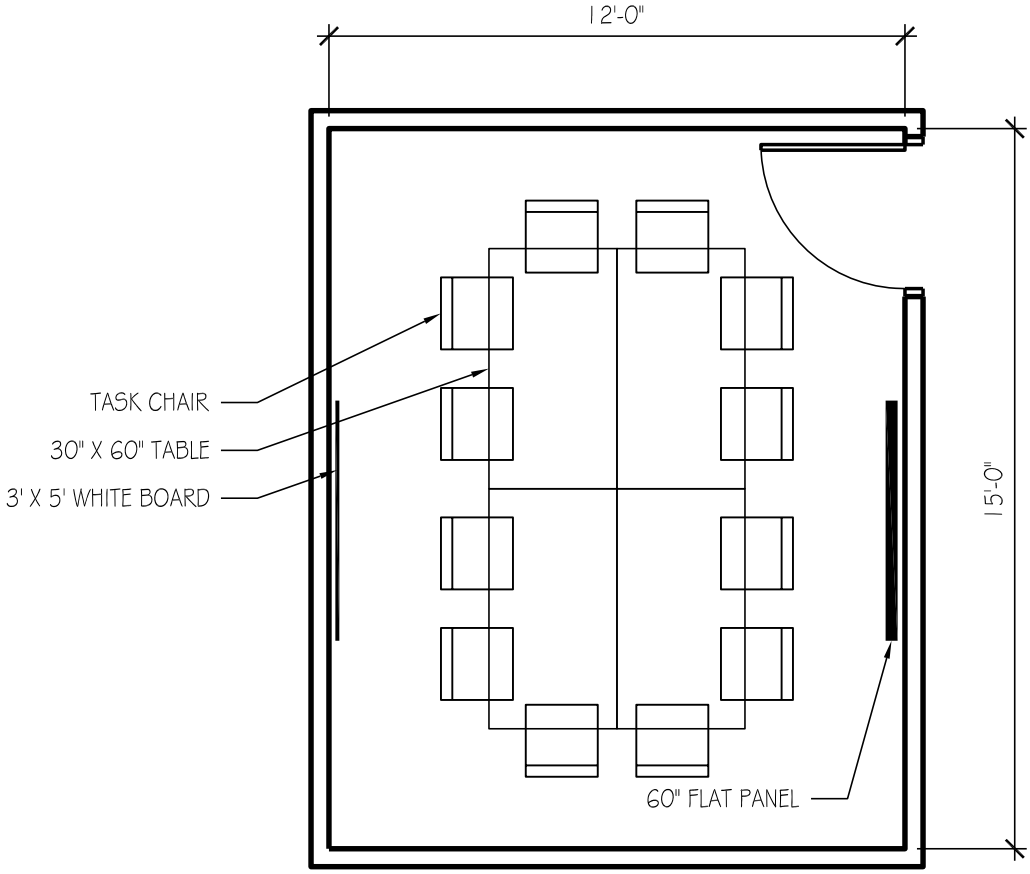

CONFERENCE ROOM - 180 SF

USU Agriculture Building

ROOM DATA SHEET DETAIL **Centers**

Center Support Area

3.7.3 Small Conference Room -

SPACE INFORMATION

Room Function: Group meetings, presentations

Adjacencies:

Special Requirements:
Chair rail around perimeter

Access: Public

Room Utilization: 5 days a week, 8:00 AM to 5:00 PM

General Notes: None

ROOM SIZE AND CAPACITY

Proposed Area:	180 NSF	**Room/Space Quantity:**	2	**Total Area:**	360
Assigned Capacity:	1 Occupant(s)	**Unassigned Capacity:**	12 Guest(s)	**Total Capacity:**	13

FINISHES, DOORS, AND WINDOWS

Floor Finish: Carpet-tile

Wall Finish: Gypsum board (painted)

Base Finish: Integral Coved

Doors:

Type:	Single	**Height:**	84"
Width:	36"	**Vision Panel:**	Frosted

Ceiling Treatment: Suspended acoustical lay-in tiles

Ceiling Height: 8' minimum

Acoustic Treatment: Acoustic seperation from adjacent spaces

Windows:

Natural Lighting:	Not required
Room Skylight:	Vision Panel

MECHANICAL/ELECTRICAL

HVAC:	Standard, space temperature control	**AV Requirements:**	As needed
Plumbing:	None	**Wire Management:**	Wall outlets
Fire Protection:	Smoke detector, sprinkler, and visual alarm	**Data Management:**	Tele/data outlet(s)
Security:	Keyed lock at entrance doors	**Artificial Lighting:**	Direct/indirect fluorescent
Electrical:	120V wall outlets	**Telephone:**	Wall mounted telephone jack

EQUIPMENT AND FURNISHINGS

Equipment

(1) Conference telephone (provided by owner)
(1) 60" Flat panel TV

Furniture

(4) 30" x 60" Table
(12) Task chair
(1) 3' x 5' White board

COPYRIGHT © 2009 CRSA

BLANK

SECTION 6

SPACE SUMMARY

4	**COA - ANIMAL, DAIRY & VETERINARY SCIENCES**			**12,420**
4.1	ADVS Administration			620
4.1.1	Director/Dept. Head - Research	1	160	160
4.1.2	ADVS Business Manager	1	120	120
4.1.3	Sr. Staff Assistant	1	100	100
4.1.4	Staff Assistant - open workstation	3	80	240
4.2	ADVS Faculty			1,560
4.2.2	Faculty Office - Prof. & Assoc. Dept Head	8	120	960
4.2.3	Faculty Office - Prof. Beef Extension Specialist	2	120	240
4.2.4	Faculty Office - Research Prof. & Assoc. Director	2	120	240
4.2.5	Faculty Office - Lecturer, NLF Manager	1	120	120
4.3	ADVS Technical Staff / Students			1,580
4.3.1	Lab Tech - Shared Office	10	48	480
4.3.2	Post Doc - Shared Office	10	60	600
4.3.3	Graduate Student Suite	20	25	500
4.4	ADVS Research Laboratories			4,800
4.4.1	Animal Molecular Biology Lab Cluster			
4.4.1.1	Animal Genetics	2	300	600
4.4.1.2	Reproduction & Development	2	300	600
4.4.1.3	Developmental Biology	2	300	600
4.4.1.4	Reproductive Immunology & Immunogenetics	2	300	600
4.4.1.5	Gene Regulation / Animal Models	2	300	600
4.4.1.6	Epigenetics / Epigenomics	2	300	600
4.4.2	Animal Nutrition Lab Cluster			
4.4.2.1	Animal Nutrition	2	300	600
4.4.2.2	Animal Nutritional Physiology	2	300	600

4.5	ADVS Research Lab Support			3,130
4.5.1	Animal Molecular Biology Lab Support			
4.5.1.1	Glassware / Autoclave Room	2	90	180
4.5.1.2	Tissue Collection Lab	1	80	80
4.5.1.3	Cell Culture Lab	1	80	80
4.5.1.4	Micromanipulation Lab	1	150	150
4.5.1.5	Cell Culture / Microscopy Lab	1	200	200
4.5.1.6	Flow Cytometry Lab	1	140	140
4.5.1.7	Dark Room	1	100	100
4.5.1.8	Cold Lab / Walk-in Cold Storage	2	120	240
4.5.1.9	Refrigerator/Freezer room	2	120	240
4.5.1.10	BSL2 Lab	1	300	300
4.5.1.11	Genomics / Proteomics Lab	1	600	600
4.5.1.12	Analytical Equipment Room	1	180	180
4.5.2	Animal Nutrition Lab Support			
4.5.2.1	Fermentation Suite	1	300	300
4.5.2.2	Balance Room & Dry Chemical Storage	1	100	100
4.5.2.3	Oven Room	1	100	100
4.5.2.4	Grinding / Drying / Prep room	1	140	140
4.6	ADVS Support Area			730
4.6.1	Copy/Mail/Workroom/Storage	1	250	250
4.6.2	Small Conference Room	1	180	180
4.6.3	Lab Storage	2	100	200
4.6.4	Waste Autoclave	1	100	100

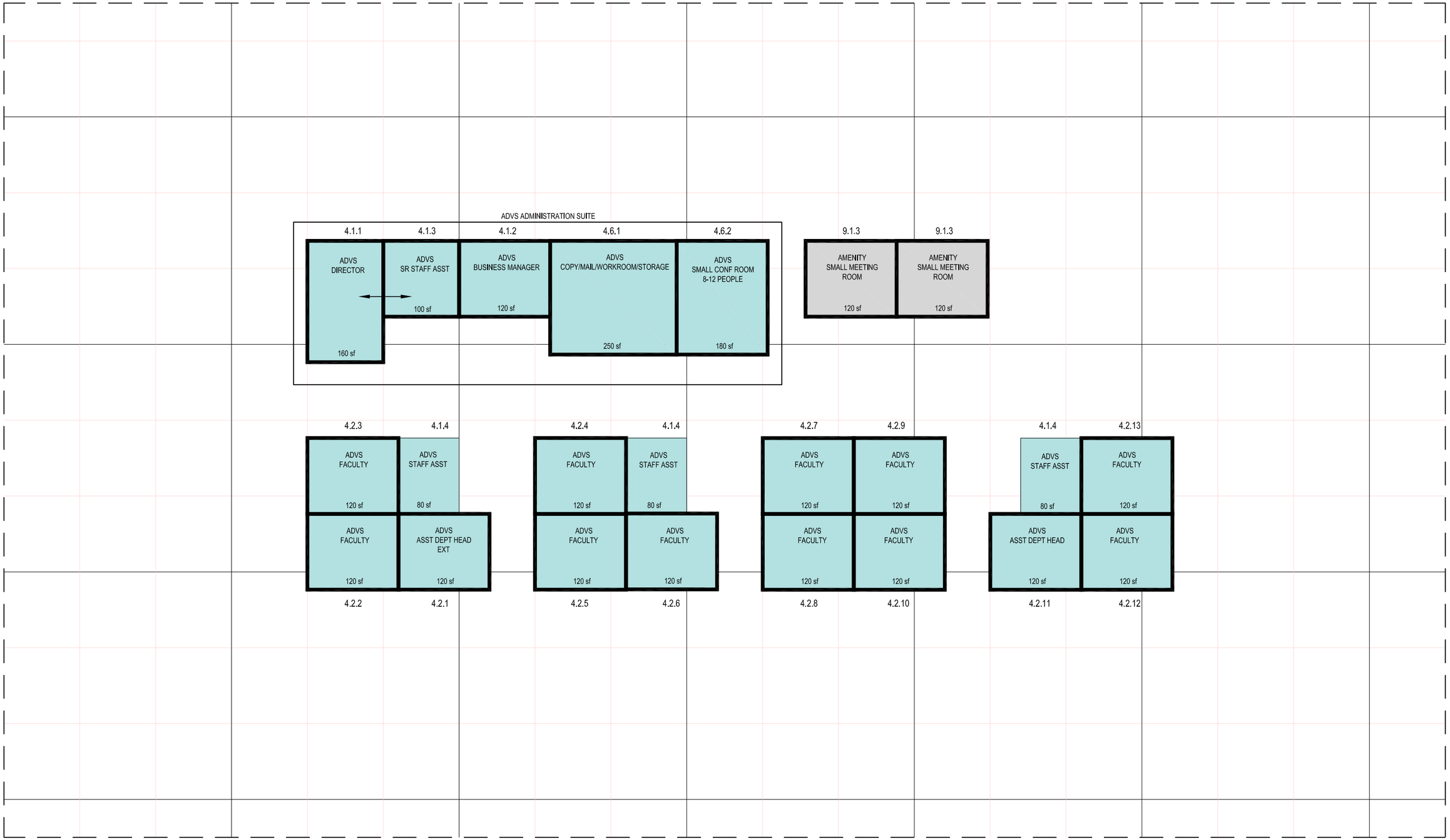

USU COA/ARS PROGRAM - ADVS AFFINITY MATRIX

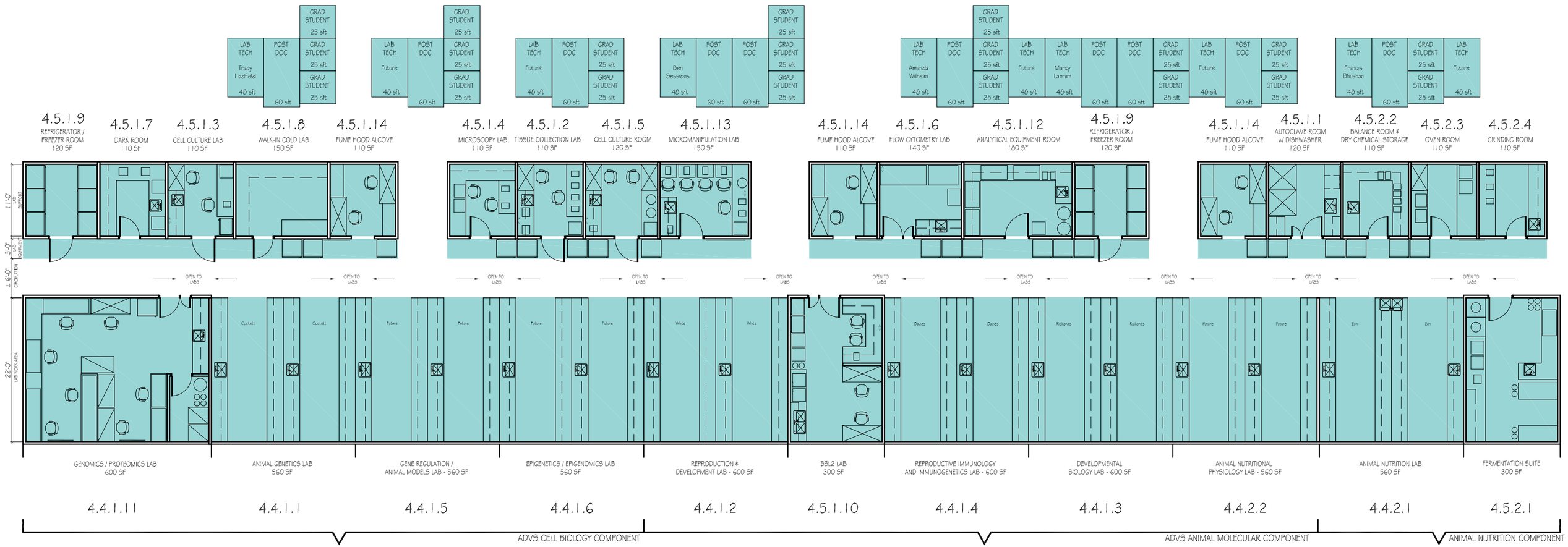

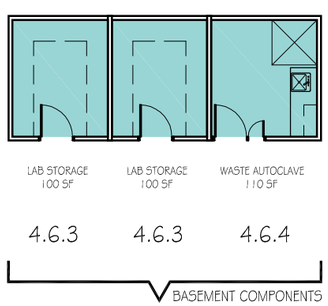

USU COA/ARS PROGRAM - ADVS LAB AFFINITY MATRIX

BLANK

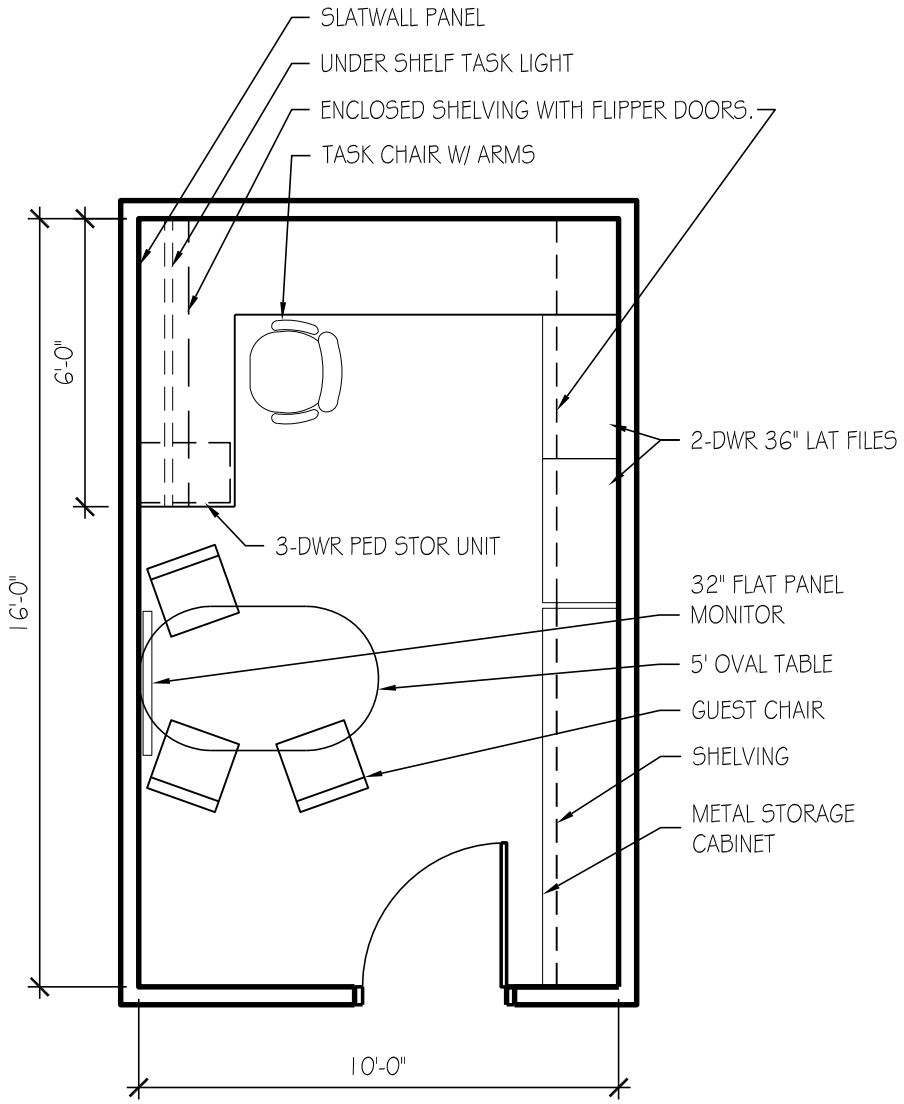

OFFICE - 160 SF

USU Agriculture Building

ROOM DATA SHEET DETAIL **COA - Animal, Dairy and Veterinary Sciences**

ADVS Administration

4.1.1 Director/Department Head - Research **-**

SPACE INFORMATION

Room Function: General office work

Adjacencies: Near Sr. Staff Assistant (4.1.3)

Special Requirements: None

Access: Public

Room Utilization: 5 days a week, 8:00 AM to 5:00 PM

General Notes: None

ROOM SIZE AND CAPACITY

Proposed Area:	160 NSF	**Room/Space Quantity:**	1	**Total Area:**	160
Assigned Capacity:	1 Occupant(s)	**Unassigned Capacity:**	3 Guest(s)	**Total Capacity:**	4

FINISHES, DOORS, AND WINDOWS

Floor Finish: Carpet-tile

Wall Finish: Gypsum board (painted)

Base Finish: Integral Coved

Doors:

Type:	Single	**Height:**	84"
Width:	36"	**Vision Panel:**	Frosted

Ceiling Treatment: Suspended acoustical lay-in tiles

Ceiling Height: 8' minimum

Acoustic Treatment: Acoustic seperation from adjacent spaces

Windows:

Natural Lighting:	Required (provide shades for control)
Room Skylight:	Frosted Panel

MECHANICAL/ELECTRICAL

HVAC:	Standard, space temperature control	**AV Requirements:**	None
Plumbing:	None	**Wire Management:**	Wall outlets
Fire Protection:	Sprinkler	**Data Management:**	Tele/data outlet(s)
Security:	Keyed lock at entrance doors	**Artificial Lighting:**	Direct/indirect fluorescent and task lighting
Electrical:	120V wall outlets	**Telephone:**	Telephone outlets per occupant

EQUIPMENT AND FURNISHINGS

Equipment

(1) Computer system (provided by owner)
(1) Printer (provided by owner)
(1) 32" Flat panel monitor

Furniture

(1) 16 LF Work surface, system furniture
(1) 5' Oval conference table on casters
(1) Task chair
(3) Guest chair
(1) 3 Drawer PED file
(2) 2 Drawer 36" lateral file, s.f.
(1) 48 LF Adjustable height shelving
(1) 24 LF 12-1/2" Deep open shelving with flipper doors, s.f.
(1) Under shelf task light
(1) 8 LF task slatwall
(1) Task slatwall accessories package
(1) Door mounted coat rack
(1) Waste receptacle
(1) Desk task light
(1) 8 LF metal base cabinet

COPYRIGHT © 2009 CRSA

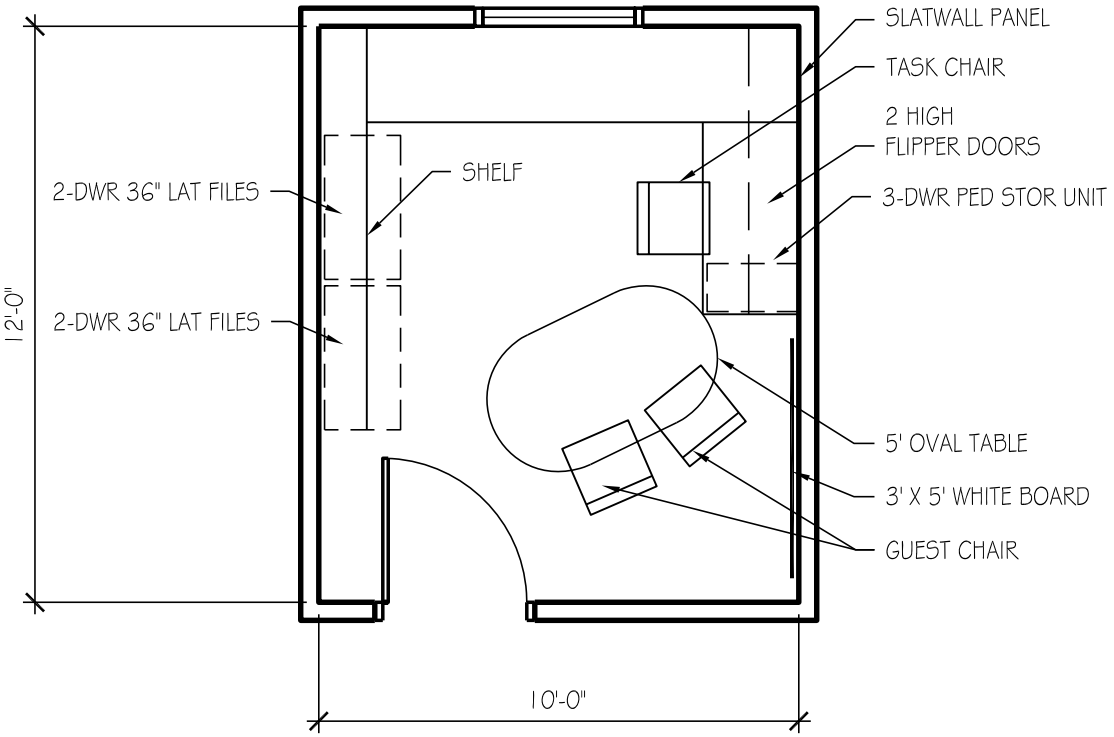

OFFICE A - 120 SF

USU Agriculture Building

ROOM DATA SHEET DETAIL **COA - Animal, Dairy and Veterinary Sciences**

ADVS Administration

4.1.2 Business Manager **-**

SPACE INFORMATION

Room Function: General office work

Adjacencies:

Special Requirements:
None

Access: Public

Room Utilization: 5 days a week, 8:00 AM to 5:00 PM

General Notes: None

ROOM SIZE AND CAPACITY

Proposed Area:	120 NSF	**Room/Space Quantity:**	1	**Total Area:**	120
Assigned Capacity:	1 Occupant(s)	**Unassigned Capacity:**	2 Guest(s)	**Total Capacity:**	3

FINISHES, DOORS, AND WINDOWS

Floor Finish: Carpet-tile

Wall Finish: Gypsum board (painted)

Base Finish: Integral Coved

Doors:

Type:	Single	**Height:**	84"
Width:	36"	**Vision Panel:**	Frosted

Ceiling Treatment: Suspended acoustical lay-in tiles

Ceiling Height: 8' minimum

Acoustic Treatment: Acoustic seperation from adjacent spaces

Windows:

Natural Lighting:	Preferred, glare and brightness control
Room Skylight:	Vision Panel

MECHANICAL/ELECTRICAL

HVAC:	Standard, space temperature control	**AV Requirements:**	None
Plumbing:	None	**Wire Management:**	Wall outlets
Fire Protection:	Sprinkler	**Data Management:**	Tele/data outlet(s)
Security:	Keyed lock at entrance doors	**Artificial Lighting:**	Direct/indirect fluorescent and task lighting
Electrical:	120V wall outlets	**Telephone:**	Telephone outlets per occupant

EQUIPMENT AND FURNISHINGS

Equipment

(1) Computer system (provided by owner)
(1) Printer (provided by owner)

Furniture

(1) 13 LF of work surface
(2) 36" 2 drawer lateral file
(1) 3 drawer PED file
(1) 5' Oval on casters
(1) Task chair
(2) Guest chairs
(2) 6 LF 15-1/2" deep enclosed shelving with flipper doors, s.f.
(1) 8 LF open shelving
(1) Whiteboard
(1) Wall mounted coat rack
(1) Waste receptacle
(1) 6 LF task slatwall
(1) Task slatwall accessories package

COPYRIGHT © 2009 CRSA

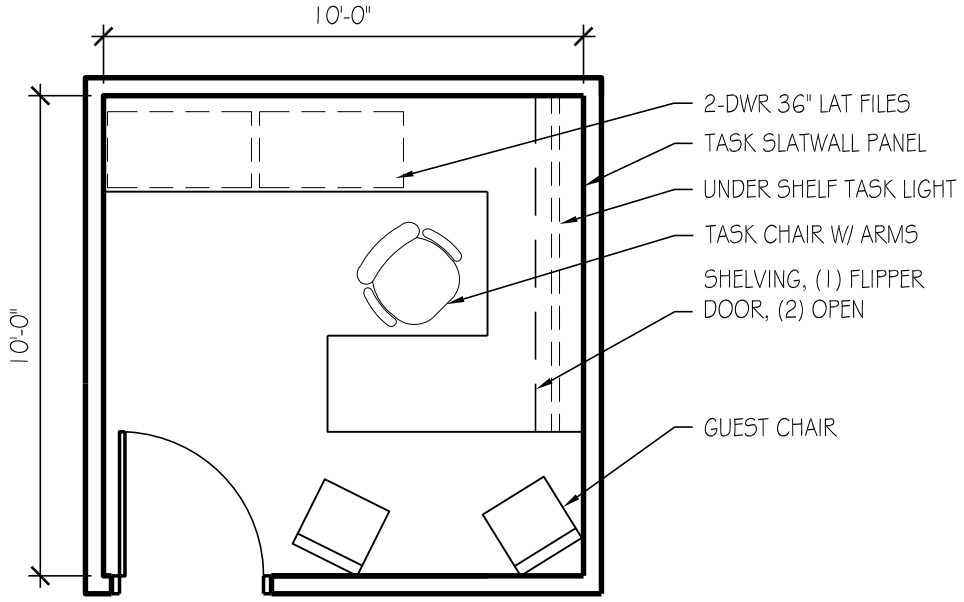

WORKSTATION

100 SF

USU Agriculture Building

ROOM DATA SHEET DETAIL **COA - Animal, Dairy and Veterinary Sciences**

ADVS Administration

4.1.3 Sr. Staff Assistant **-**

SPACE INFORMATION

Room Function: General office work

Adjacencies: Near Director/Department Head (4.1.1)

Special Requirements: None

Access: Public

Room Utilization: 5 days a week, 8:00 AM to 5:00 PM

General Notes: None

ROOM SIZE AND CAPACITY

Proposed Area:	100 NSF	**Room/Space Quantity:**	1	**Total Area:**	100
Assigned Capacity:	1 Occupant(s)	**Unassigned Capacity:**	1 Guest(s)	**Total Capacity:**	2

FINISHES, DOORS, AND WINDOWS

Floor Finish: Carpet-tile

Wall Finish: Gypsum board (painted)

Base Finish: Integral Coved

Doors:

Type:	Single	**Height:**	84"
Width:	36"	**Vision Panel:**	Frosted

Ceiling Treatment: Suspended acoustical lay-in tiles

Ceiling Height: 8' minimum

Acoustic Treatment: Acoustic seperation from adjacent spaces

Windows:

Natural Lighting:	Desired, but not required
Room Skylight:	Vision Panel

MECHANICAL/ELECTRICAL

HVAC:	Standard, space temperature control	**AV Requirements:**	None
Plumbing:	None	**Wire Management:**	Wall outlets
Fire Protection:	Sprinkler	**Data Management:**	Tele/data outlet(s)
Security:	Keyed lock at entrance doors	**Artificial Lighting:**	Direct/indirect fluorescent and task lighting
Electrical:	120V wall outlets	**Telephone:**	Telephone outlets per occupant

EQUIPMENT AND FURNISHINGS

Equipment

(1) Computer system (provided by owner)
(1) Printer (provided by owner)

Furniture

(1) 18 LF Work surface
(1) Task chair
(2) Guest chair
(2) 2 Drawer 36" lateral file
(1) 7 LF task slatwall
(1) Task slatwall accessories package
(1) 14 LF 12-1/2" Deep open shelving, s.f.
(1) 7 LF 15-1/2" Deep enclosed shelving with flipper door, s.f.
(1) Under shelf task light
(1) Door mounted coat rack
(1) Waste receptacle

COPYRIGHT © 2009 CRSA

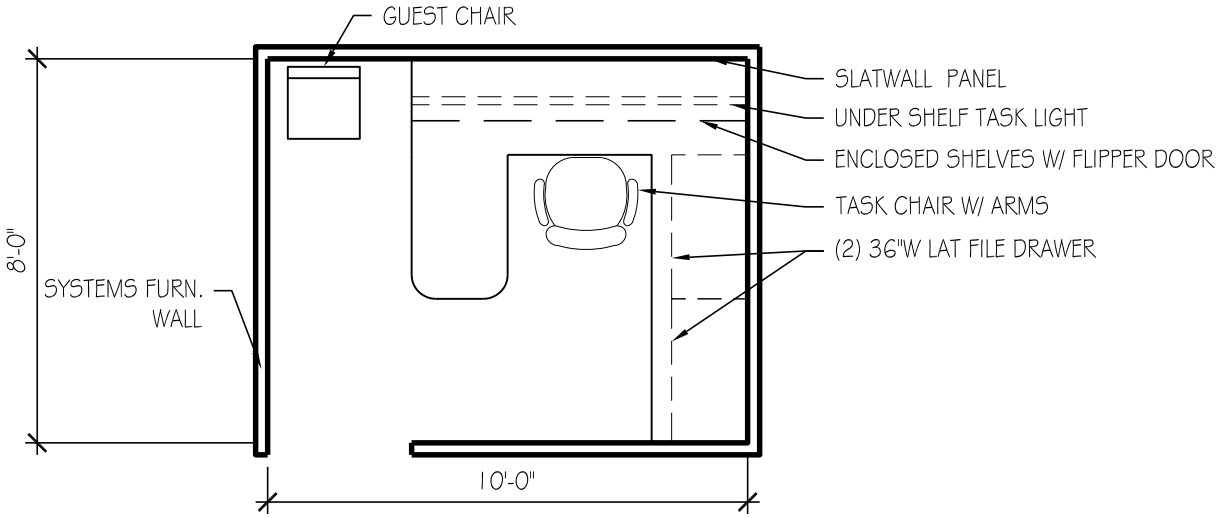

A

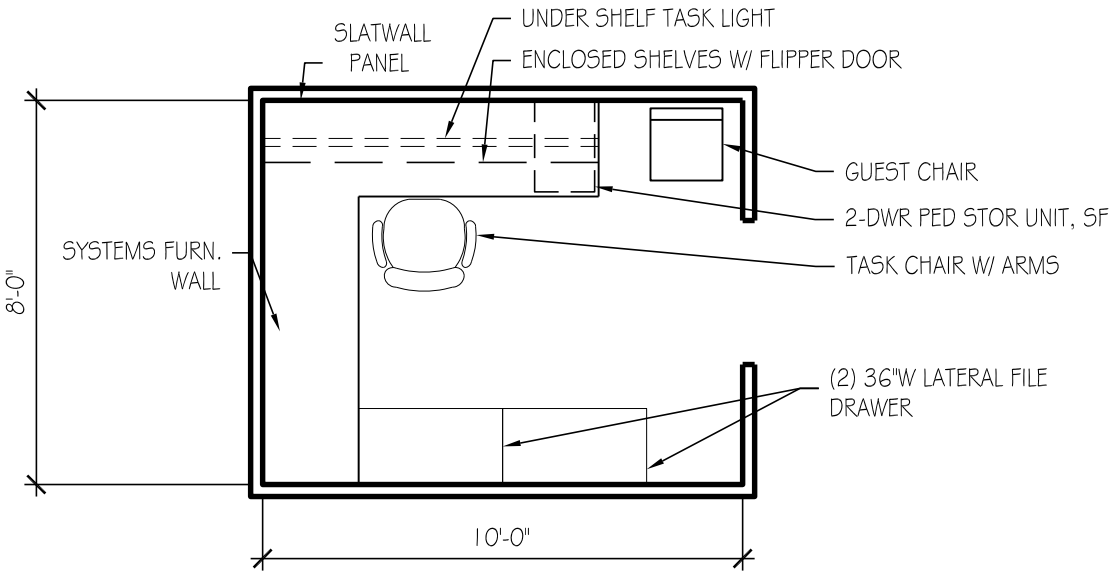

B

OPEN WORKSTATION

80 SF

USU Agriculture Building

ROOM DATA SHEET DETAIL **COA - Animal, Dairy and Veterinary Sciences**

ADVS Administration

4.1.4 Staff Assistant - Open Workstation -

SPACE INFORMATION

Room Function: General office work

Adjacencies:

Special Requirements:
None

Access: Public

Room Utilization: 5 days a week, 8:00 AM to 5:00 PM

General Notes: None

ROOM SIZE AND CAPACITY

Proposed Area:	80 NSF	**Room/Space Quantity:**	3	**Total Area:**	240
Assigned Capacity:	1 Occupant(s)	**Unassigned Capacity:**	1 Guest(s)	**Total Capacity:**	2

FINISHES, DOORS, AND WINDOWS

Floor Finish: Carpet-tile

Wall Finish: Systems furniture

Base Finish: Systems Furniture

Doors:

Type:	N/A	**Height:**	None
Width:	None	**Vision Panel:**	N/A

Ceiling Treatment: Suspended acoustical lay-in tiles

Ceiling Height: 8' minimum

Acoustic Treatment: Systems Furniture

Windows:

Natural Lighting:	Not required
Room Skylight:	N/A

MECHANICAL/ELECTRICAL

HVAC: Standard

Plumbing: None

Fire Protection: Sprinkler

Security: Keyed lock on all securable storage devices

Electrical: 120V wall outlets

AV Requirements: None

Wire Management: Wall outlets

Data Management: Tele/data outlet(s)

Artificial Lighting: Direct/indirect fluorescent and task lighting

Telephone: Telephone outlets per occupant

EQUIPMENT AND FURNISHINGS

Equipment

(1) Computer system (provided by owner)
(1) Printer (provided by owner)

Furniture

(1) 15 LF Work surface
(2) 2 Drawer 36" lateral file
(1) 14 LF 15-1/2" Deep enclosed shelf with flipper door, s.f.
(1) 7 LF Task light
(1) 7 LF task slatwall
(1) Task slatwall accessories package
(1) Task chair
(1) Guest chair
(1) Waste receptacle
(1) 34 LF systems furniture panels

COPYRIGHT © 2009 CRSA

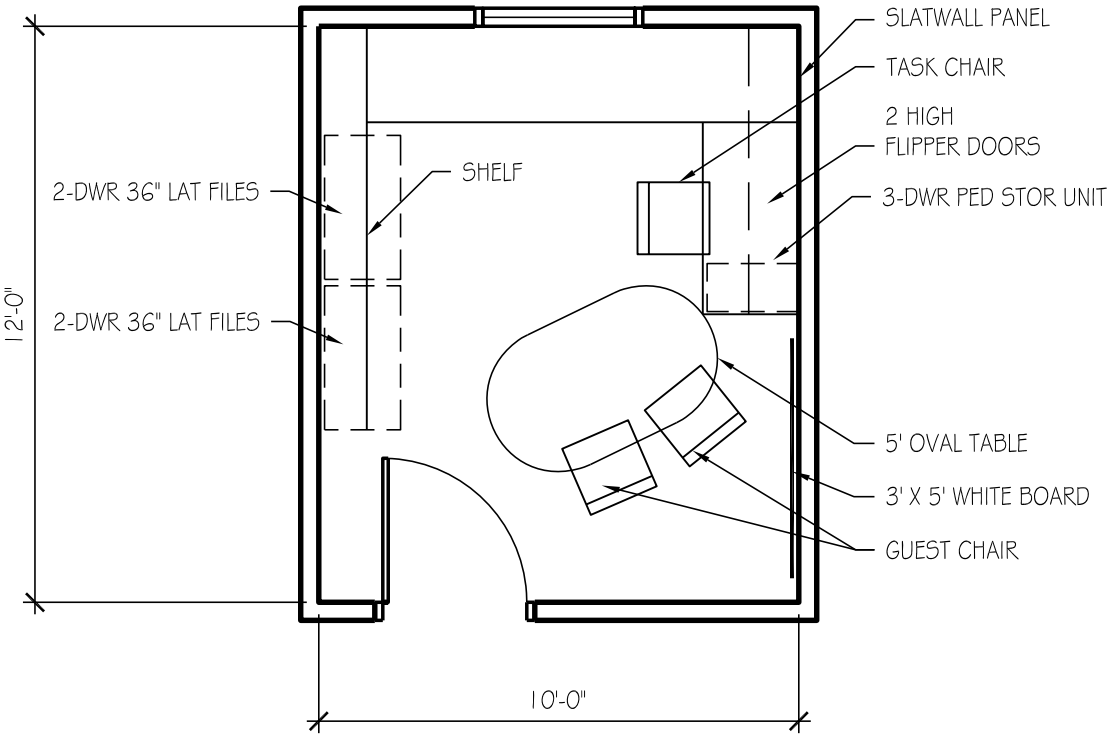

OFFICE A - 120 SF

USU Agriculture Building

ROOM DATA SHEET DETAIL **COA - Animal, Dairy and Veterinary Sciences**

ADVS Faculty

4.2.1 Faculty Office A -

SPACE INFORMATION

Room Function: General office work

Adjacencies:

Special Requirements:
None

Access: Public

Room Utilization: 5 days a week, 8:00 AM to 5:00 PM

General Notes: None

ROOM SIZE AND CAPACITY

Proposed Area:	120 NSF	**Room/Space Quantity:**	10	**Total Area:**	1200
Assigned Capacity:	1 Occupant(s)	**Unassigned Capacity:**	2 Guest(s)	**Total Capacity:**	3

FINISHES, DOORS, AND WINDOWS

Floor Finish: Carpet-tile

Wall Finish: Gypsum board (painted)

Base Finish: Integral Coved

Doors:

Type:	Single	**Height:**	84"
Width:	36"	**Vision Panel:**	Frosted

Ceiling Treatment: Suspended acoustical lay-in tiles

Ceiling Height: 8' minimum

Acoustic Treatment: Acoustic seperation from adjacent spaces

Windows:

Natural Lighting: Required (provide shades for control)

Room Skylight: Frosted Panel

MECHANICAL/ELECTRICAL

HVAC: Standard, space temperature control

Plumbing: None

Fire Protection: Sprinkler

Security: Keyed lock at entrance doors

Electrical: 120V wall outlets

AV Requirements: None

Wire Management: Wall outlets

Data Management: Tele/data outlet(s)

Artificial Lighting: Direct/indirect fluorescent and task lighting

Telephone: Telephone outlets per occupant

EQUIPMENT AND FURNISHINGS

Equipment

(10) Computer system (provided by owner)
(10) Printer (provided by owner)

Furniture

(1) 13 LF of work surface
(2) 36" 2 drawer lateral file
(1) 3 drawer PED file
(1) 5' Oval on casters
(1) Task chair
(2) Guest chairs
(2) 6 LF 15-1/2" deep enclosed shelving with flipper doors, s.f.
(1) 8 LF open shelving
(1) Whiteboard
(1) Wall mounted coat rack
(1) Waste receptacle
(1) 6 LF task slatwall
(1) Task slatwall accessories package

COPYRIGHT © 2009 CRSA

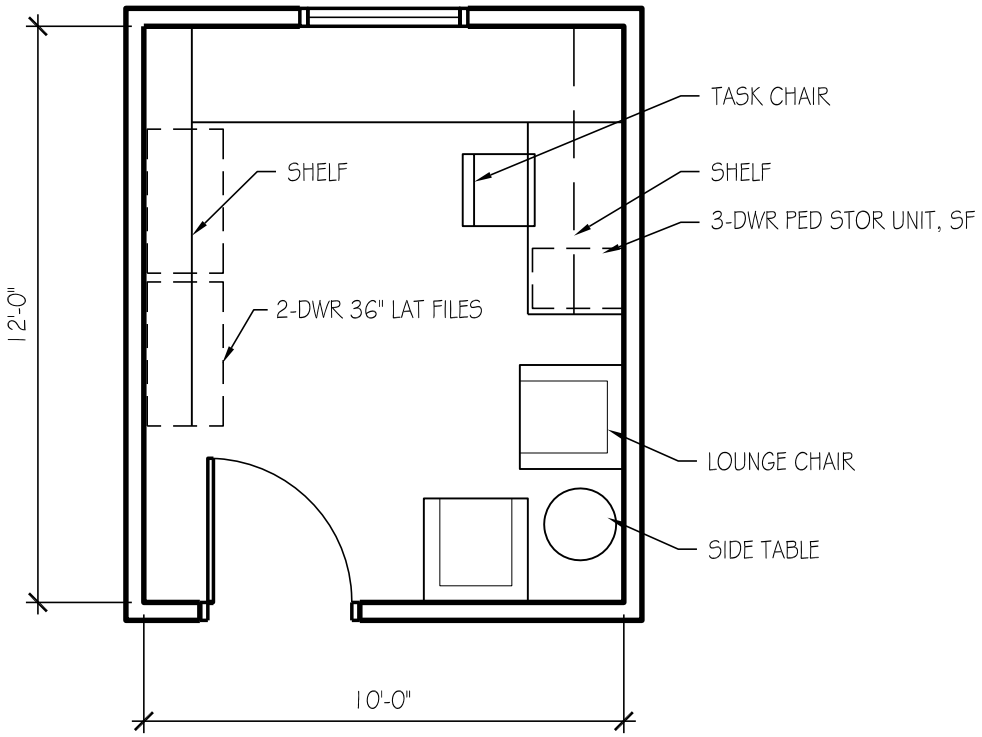

OFFICE B - 120 SF

USU Agriculture Building

ROOM DATA SHEET DETAIL **COA - Animal, Dairy and Veterinary Sciences**

ADVS Faculty

4.2.2 Faculty Office B -

SPACE INFORMATION

Room Function: General office work

Adjacencies:

Special Requirements:
None

Access: Public

Room Utilization: 5 days a week, 8:00 AM to 5:00 PM

General Notes: None

ROOM SIZE AND CAPACITY

Proposed Area:	120 NSF	**Room/Space Quantity:**	1	**Total Area:**	120
Assigned Capacity:	1 Occupant(s)	**Unassigned Capacity:**	2 Guest(s)	**Total Capacity:**	3

FINISHES, DOORS, AND WINDOWS

Floor Finish: Carpet-tile

Wall Finish: Gypsum board (painted)

Base Finish: Integral Coved

Doors:

Type:	Single	**Height:**	84"
Width:	36"	**Vision Panel:**	Frosted

Ceiling Treatment: Suspended acoustical lay-in tiles

Ceiling Height: 8' minimum

Acoustic Treatment: Acoustic seperation from adjacent spaces

Windows:

Natural Lighting:	Required (provide shades for control)
Room Skylight:	Frosted Panel

MECHANICAL/ELECTRICAL

HVAC:	Standard, space temperature control	**AV Requirements:**	None
Plumbing:	None	**Wire Management:**	Wall outlets
Fire Protection:	Sprinkler	**Data Management:**	Tele/data outlet(s)
Security:	Keyed lock at entrance doors	**Artificial Lighting:**	Direct/indirect fluorescent and task lighting
Electrical:	120V wall outlets	**Telephone:**	Telephone outlets per occupant

EQUIPMENT AND FURNISHINGS

Equipment

(1) Computer system (provided by owner)
(1) Printer (provided by owner)

Furniture

(1) 13 LF of work surface
(1) 36" 2 drawer lateral file
(1) 3 drawer PED file
(1) Task chair
(2) Upholstered lounge chair
(1) 8 LF open shelving
(1) 12 LF enclosed shelving with flipper doors, s.f.
(1) 6 LF task slatwall
(1) Task slatwall accessories package
(1) Whiteboard
(1) Wall mounted coat rack
(1) Waste receptacle
(1) Under shelf task light, s.f.

COPYRIGHT © 2009 CRSA

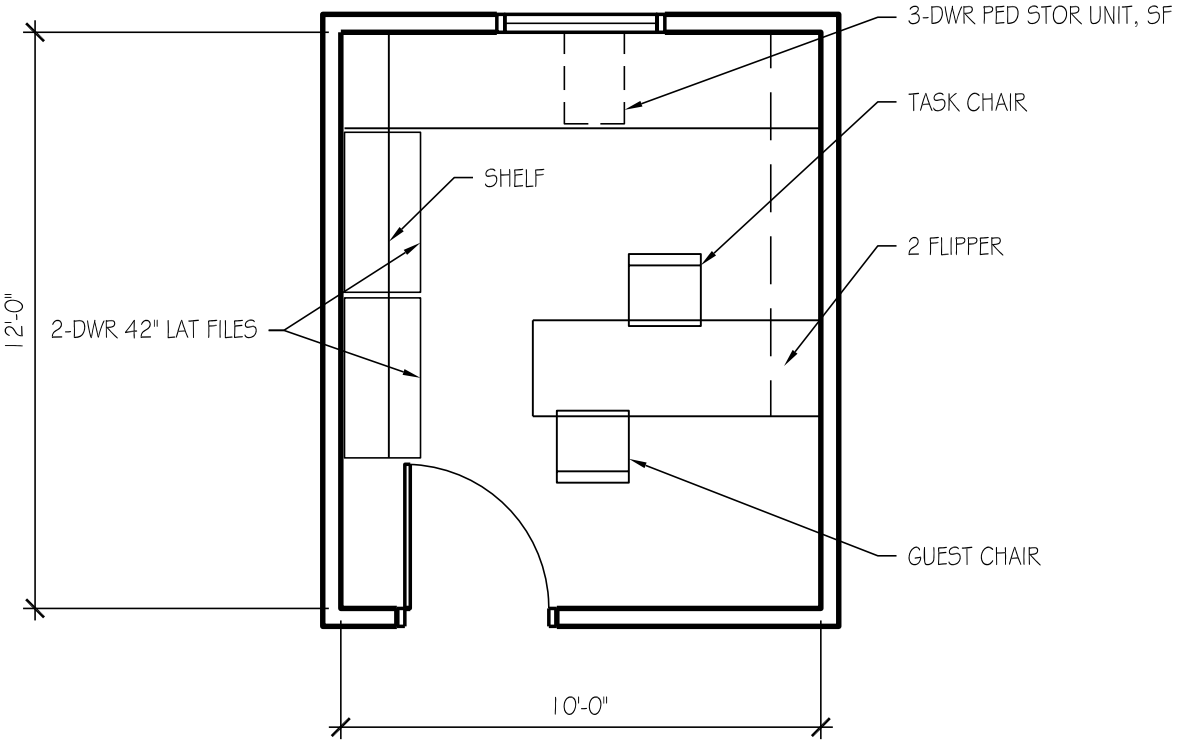

OFFICE C - 120 SF

USU Agriculture Building

ROOM DATA SHEET DETAIL **COA - Animal, Dairy and Veterinary Sciences**

ADVS Faculty

4.2.3 Faculty Office C -

SPACE INFORMATION

Room Function: General office work

Adjacencies:

Special Requirements:
None

Access: Public

Room Utilization: 5 days a week, 8:00 AM to 5:00 PM

General Notes: None

ROOM SIZE AND CAPACITY

Proposed Area:	120 NSF	**Room/Space Quantity:**	2	**Total Area:**	240
Assigned Capacity:	1 Occupant(s)	**Unassigned Capacity:**	1 Guest(s)	**Total Capacity:**	2

FINISHES, DOORS, AND WINDOWS

Floor Finish: Carpet-tile

Wall Finish: Gypsum board (painted)

Base Finish: Integral Coved

Doors:

Type:	Single	**Height:**	84"
Width:	36"	**Vision Panel:**	Frosted

Ceiling Treatment: Suspended acoustical lay-in tiles

Ceiling Height: 8' minimum

Acoustic Treatment: Acoustic seperation from adjacent spaces

Windows:

Natural Lighting: Required (provide shades for control)

Room Skylight: Frosted Panel

MECHANICAL/ELECTRICAL

HVAC: Standard, space temperature control

Plumbing: None

Fire Protection: Sprinkler

Security: Keyed lock at entrance doors

Electrical: 120V wall outlets

AV Requirements: None

Wire Management: Wall outlets

Data Management: Tele/data outlet(s)

Artificial Lighting: Direct/indirect fluorescent and task lighting

Telephone: Telephone outlets per occupant

EQUIPMENT AND FURNISHINGS

Equipment

(1) Computer system (provided by owner)
(1) Printer (provided by owner)

Furniture

(1) 11 LF of work surface
(2) 36" 2 drawer lateral file
(1) 3 drawer PED file
(1) Task chair
(1) Guest chairs
(1) 8 LF Bookshelves
(1) 16 LF enclosed shelving with flipper doors, s.f.
(1) 6 LF task slatwall
(1) Task slatwall accessories package
(1) Door mounted coat rack
(1) Waste receptacle
(1) Under shelf task light, s.f.

COPYRIGHT © 2009 CRSA

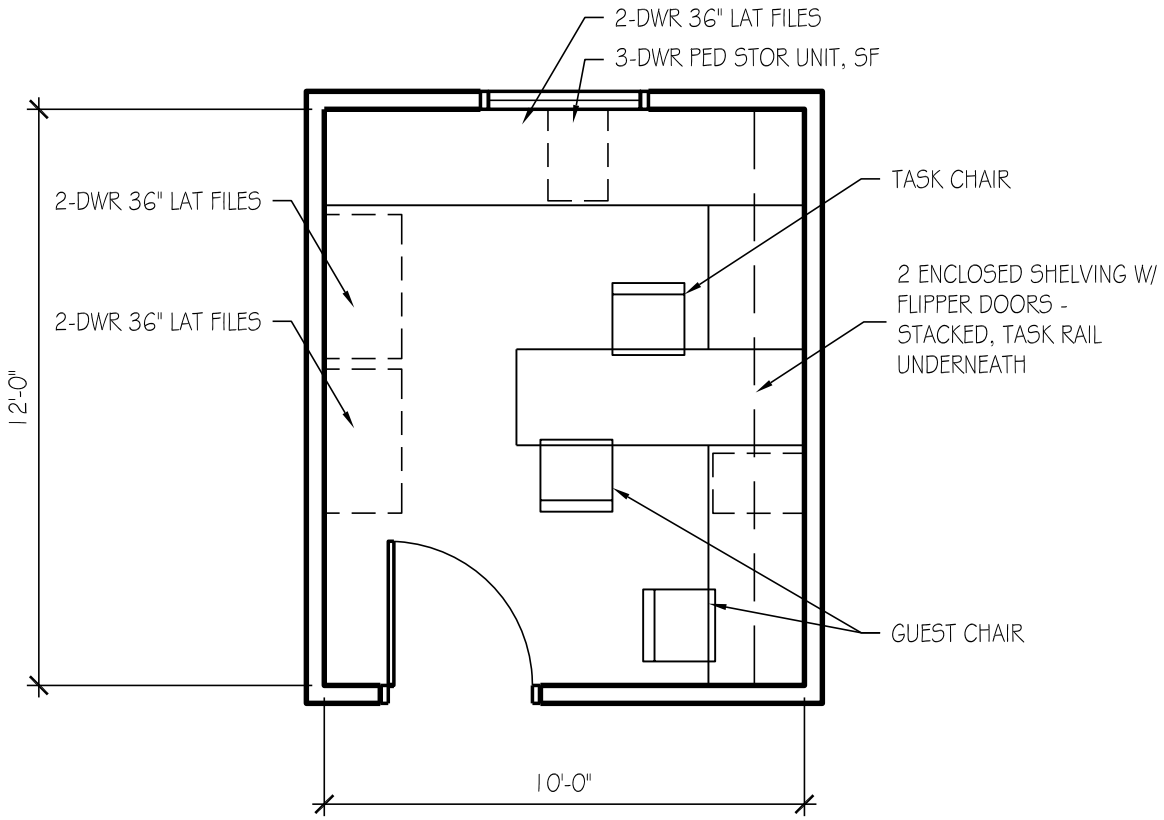

OFFICE D - 120 SF

USU Agriculture Building

ROOM DATA SHEET DETAIL — **COA - Animal, Dairy and Veterinary Sciences**

ADVS Faculty

4.2.4 Faculty Office D -

SPACE INFORMATION

Room Function: General office work

Adjacencies:

Special Requirements: None

Access: Public

Room Utilization: 5 days a week, 8:00 AM to 5:00 PM

General Notes: None

ROOM SIZE AND CAPACITY

Proposed Area:	120 NSF	**Room/Space Quantity:**	1	**Total Area:**	120
Assigned Capacity:	1 Occupant(s)	**Unassigned Capacity:**	1 Guest(s)	**Total Capacity:**	2

FINISHES, DOORS, AND WINDOWS

Floor Finish: Carpet-tile

Wall Finish: Gypsum board (painted)

Base Finish: Carpet

Doors:

Type:	Single	**Height:**	84"
Width:	36"	**Vision Panel:**	Frosted

Ceiling Treatment: Suspended acoustical lay-in tiles

Ceiling Height: 8' minimum

Acoustic Treatment: Acoustic seperation from adjacent spaces

Windows:

Natural Lighting:	Required (provide shades for control)
Room Skylight:	Frosted Panel

MECHANICAL/ELECTRICAL

HVAC:	Standard, space temperature control	**AV Requirements:**	None
Plumbing:	None	**Wire Management:**	Wall outlets
Fire Protection:	Sprinkler	**Data Management:**	Tele/data outlet(s)
Security:	Keyed lock at entrance doors	**Artificial Lighting:**	Direct/indirect fluorescent and task lighting
Electrical:	120V wall outlets	**Telephone:**	Telephone outlets per occupant

EQUIPMENT AND FURNISHINGS

Equipment

(1) Computer system (provided by owner)
(1) Printer (provided by owner)

Furniture

(1) 21 LF of work surface
(2) 36" 2 drawer lateral file
(1) 3 drawer PED file
(1) Task chair
(2) Guest chairs
(1) 8 LF of bookshelves
(1) 12 LF enclosed shelving with flipper doors, s.f.
(1) 6 LF task slatwall
(1) Task slatwall accessories package
(1) Under shelf task light
(1) Door mounted coat rack
(1) Waste receptacle

COPYRIGHT © 2009 CRSA

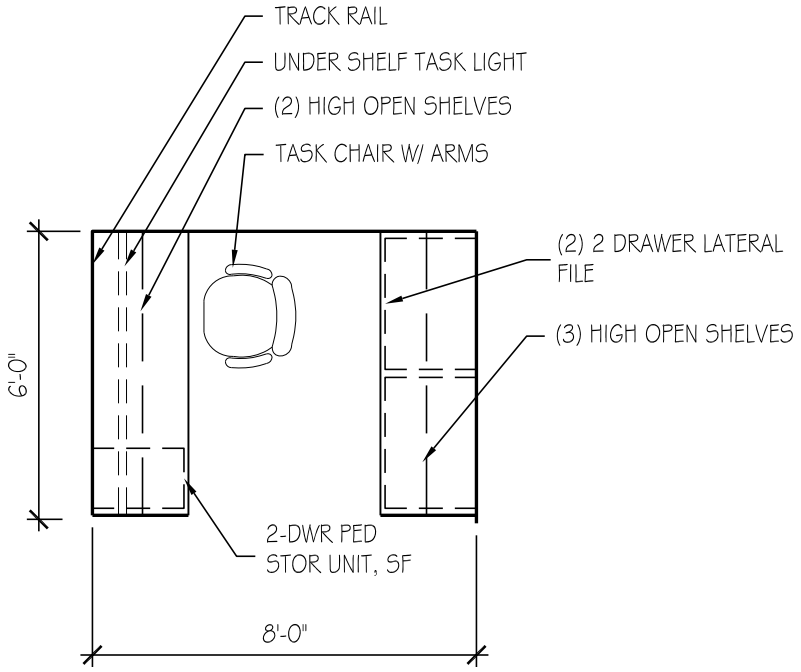

LAB TECH - *48 SF*

USU Agriculture Building

ROOM DATA SHEET DETAIL **COA - Animal, Dairy and Veterinary Sciences**

ADVS Technical Staff/Students

4.3.1 Lab Tech - Shared Office -

SPACE INFORMATION

Room Function: General office work

Adjacencies:

Special Requirements:
None

Access: Public

Room Utilization: 5 days a week, 8:00 AM to 5:00 PM

General Notes: None

ROOM SIZE AND CAPACITY

Proposed Area:	48 NSF	**Room/Space Quantity:**	10	**Total Area:**	480
Assigned Capacity:	1 Occupant(s)	**Unassigned Capacity:**	1 Guest(s)	**Total Capacity:**	2

FINISHES, DOORS, AND WINDOWS

Floor Finish: Carpet-tile

Wall Finish: Gypsum board (painted)

Base Finish: Systems Furniture

Doors:

Type:	N/A	**Height:**	None
Width:	None	**Vision Panel:**	N/A

Ceiling Treatment: Suspended acoustical lay-in tiles

Ceiling Height: 8' minimum

Acoustic Treatment: Systems Furniture

Windows:

Natural Lighting:	Not required
Room Skylight:	N/A

MECHANICAL/ELECTRICAL

HVAC: Standard, space temperature control

Plumbing: None

Fire Protection: Sprinkler

Security: Keyed lock at entrance doors

Electrical: 120V wall outlets

AV Requirements: None

Wire Management: Wall outlets

Data Management: Tele/data outlet(s)

Artificial Lighting: Direct/indirect fluorescent and task lighting

Telephone: Telephone outlets per occupant

EQUIPMENT AND FURNISHINGS

Equipment

(1) Computer system (provided by owner)
(1) Printer (provided by owner)

Furniture

(1) 12 LF work surface, s.f.
(1) Task chair
(2) 2 Drawer PED file, s.f.
(1) 6 LF task slatwall
(1) Task slatwall accessories package
(5) 6 LF open shelving
(2) 36" 2 drawer lateral file, s.f.
(1) Under shelf task light
(1) Waste receptacle
(1) 20 LF systems furniture panel

COPYRIGHT © 2009 CRSA

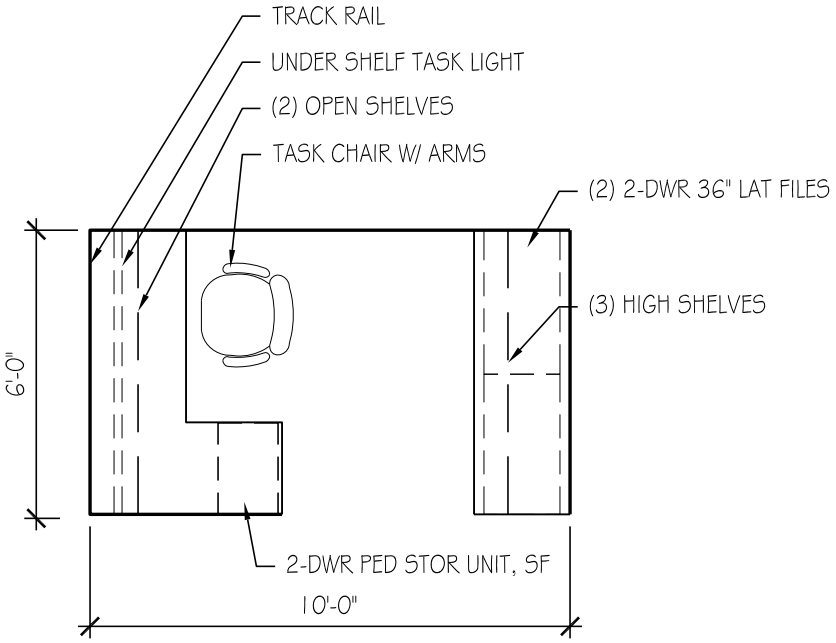

POST DOC SUITE (2)
WORKSTATION- *60 SF*

USU Agriculture Building

ROOM DATA SHEET DETAIL **COA - Animal, Dairy and Veterinary Sciences**

ADVS Technical Staff/Students

4.3.2 Post Doc - Shared Office -

SPACE INFORMATION

Room Function: General office work

Adjacencies:

Special Requirements:
None

Access: Public

Room Utilization: 5 days a week, 8:00 AM to 5:00 PM

General Notes: None

ROOM SIZE AND CAPACITY

Proposed Area:	60 NSF	**Room/Space Quantity:**	10	**Total Area:**	600
Assigned Capacity:	1 Occupant(s)	**Unassigned Capacity:**	1 Guest(s)	**Total Capacity:**	2

FINISHES, DOORS, AND WINDOWS

Floor Finish: Carpet-tile

Wall Finish: Gypsum board (painted)

Base Finish: Systems Furniture

Doors:

Type:	N/A	**Height:**	None
Width:	None	**Vision Panel:**	N/A

Ceiling Treatment: Suspended acoustical lay-in tiles

Ceiling Height: 8' minimum

Acoustic Treatment: Systems Furniture

Windows:

Natural Lighting:	Not required
Room Skylight:	N/A

MECHANICAL/ELECTRICAL

HVAC:	Standard, space temperature control	**AV Requirements:**	None
Plumbing:	None	**Wire Management:**	Wall outlets
Fire Protection:	Sprinkler	**Data Management:**	Tele/data outlet(s)
Security:	Keyed lock at entrance doors	**Artificial Lighting:**	Direct/indirect fluorescent and task lighting
Electrical:	120V wall outlets	**Telephone:**	Telephone outlets per occupant

EQUIPMENT AND FURNISHINGS

Equipment

(1) Computer system (provided by owner)
(1) Printer (provided by owner)

Furniture

(1) 14 LF work surface
(1) Task chair
(1) 2 drawer PED file, s.f.
(2) 36" 2 drawer lateral file, s.f.
(1) 6 LF task slatwall
(1) Task slatwall accessories package
(1) 30 LF open shelving
(1) Under shelf task light, s.f.
(1) Waste receptacle
(1) 26 LF systems furniture panels

COPYRIGHT © 2009 CRSA

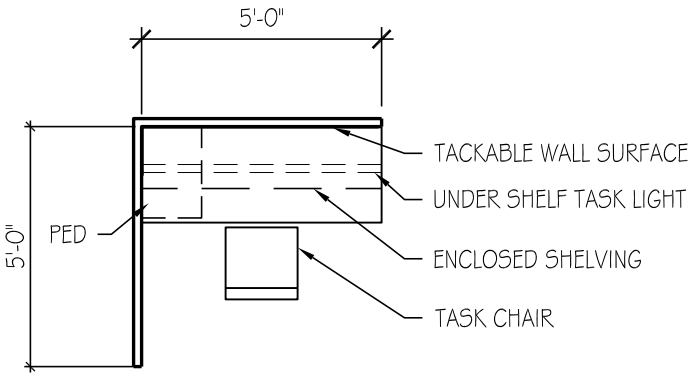

GRAD STUDENT OPEN
WORKSTATION- *25 SF*

USU Agriculture Building

ROOM DATA SHEET DETAIL **COA - Animal, Dairy and Veterinary Sciences**

ADVS Technical Staff/Students

4.3.3 Graduate Student Suite -

SPACE INFORMATION

Room Function: General office work

Adjacencies:

Access: Public

Room Utilization: 5 days a week, 8:00 AM to 5:00 PM

General Notes: None

Special Requirements:

All system furniture is panel hung.
Locks on all securable storage devices.

ROOM SIZE AND CAPACITY

Proposed Area:	25 NSF	**Room/Space Quantity:**	20	**Total Area:**	500
Assigned Capacity:	1 Occupant(s)	**Unassigned Capacity:**	1 Guest(s)	**Total Capacity:**	2

FINISHES, DOORS, AND WINDOWS

Floor Finish: Carpet-tile

Wall Finish: Gypsum board (painted)

Base Finish: Systems Furniture

Doors:

Type: N/A **Height:** None

Width: None **Vision Panel:** N/A

Ceiling Treatment: Suspended acoustical lay-in tiles

Ceiling Height: 8' minimum

Acoustic Treatment: Systems Furniture

Windows:

Natural Lighting: Not required

Room Skylight: N/A

MECHANICAL/ELECTRICAL

HVAC: Standard, space temperature control

Plumbing: None

Fire Protection: Sprinkler

Security: Keyed lock on all securable storage devices

Electrical: 120V wall outlets

AV Requirements: None

Wire Management: Wall outlets

Data Management: Tele/data outlet(s)

Artificial Lighting: Direct/indirect fluorescent and task lighting

Telephone: Telephone outlets per occupant

EQUIPMENT AND FURNISHINGS

Equipment

(1) Computer system (provided by owner)
(1) Printer (provided by owner)

Furniture

(1) 5 LF 24" Deep work surface, s.f.
(1) Task chairs
(1) 2 Drawer PED file, s.f.
(1) 5 LF 15-1/2" Deep enclosed shelving with flipper doors, s.f.
(1) Under shelf task light
(1) 5 LF task slatwall
(1) Task slatwall accessories package
(1) Waste receptacle
(1) 10 LF systems furniture panels

COPYRIGHT © 2009 CRSA

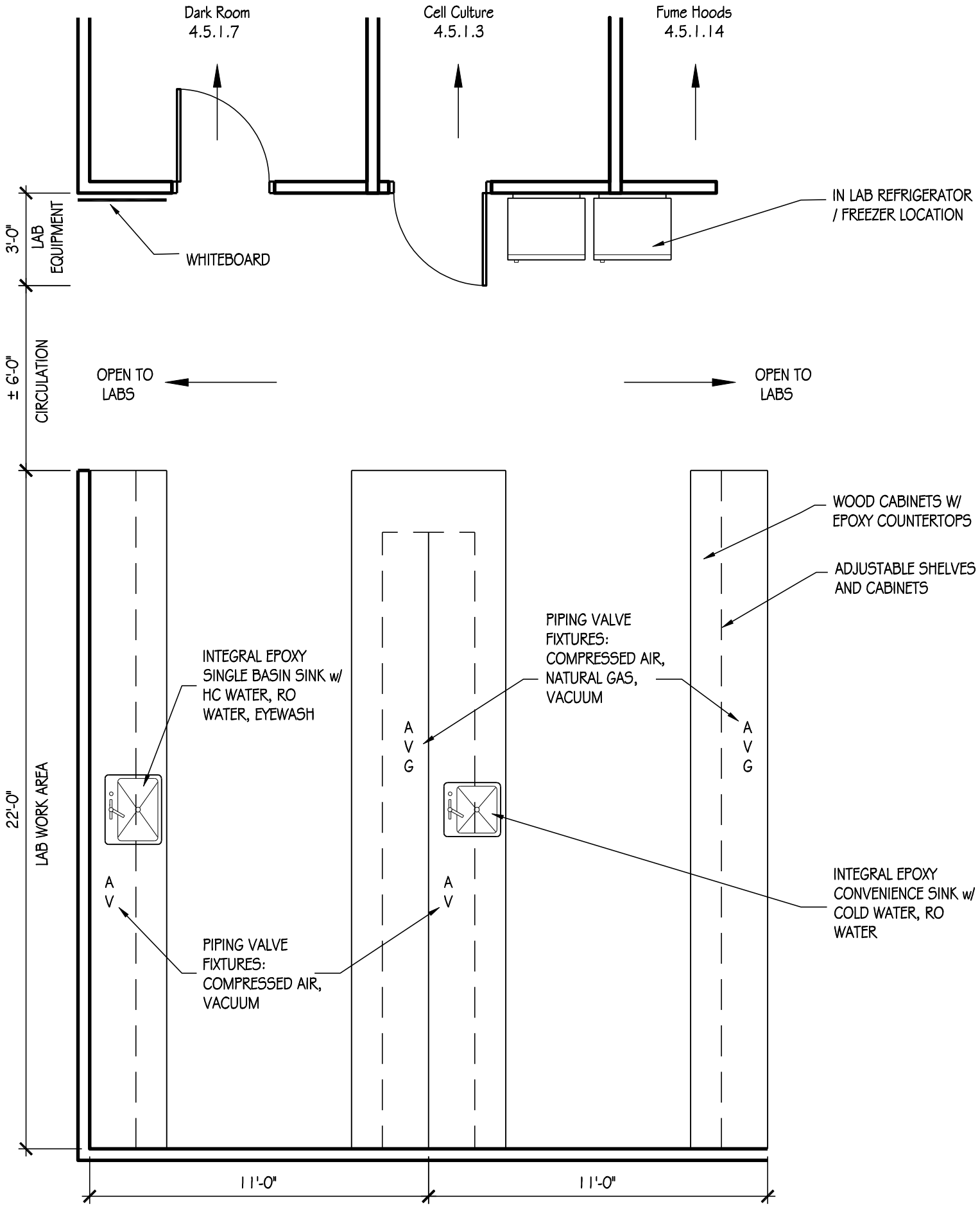

ANIMAL GENETICS LAB
560 SF

USU Agriculture Building

ROOM DATA SHEET DETAIL — **Animal Dairy & Veterinary Sciences**

ADVS Research Laboratories

4.4.1.1 Animal Genetics — **Second Level**

SPACE INFORMATION

Room Function:

Adjacencies: Cell Culture Lab (4.5.1.3), Dark Room (4.5.1.7), Cold Storage (4.5.1.8), Genomics Lab (4.5.1.11)

Special Requirements:

Access: Restricted - Staff & Students

Room Utilization: 7 days a week, 24 hours a day

General Notes: Noelle Cockett

ROOM SIZE AND CAPACITY

Proposed Area:	560 NSF	**Room/Space Quantity:**	1	**Total Area:**	560
Assigned Capacity:	0 Occupant(s)	**Unassigned Capacity:**	12 Guest(s)	**Total Capacity:**	12

FINISHES, DOORS, AND WINDOWS

Floor Finish:	Vinyl Composite Tile (VCT)	**Ceiling Treatment:**	Suspended vinyl-faced lay-in panels
Wall Finish:	Gypsum board (painted)	**Ceiling Height:**	10'
Base Finish:	Rubber	**Acoustic Treatment:**	As needed
Doors:		**Windows:**	
Type:	None	**Natural Lighting:**	Desired, but not required
Width:		**Room Skylight:**	Acceptable

Height:

Vision Panel: Required

CASEWORK / FURNISHINGS

Wall Cabinets:	Wood - Certified	**Shelving:**	Yes
Base Cabinets:	Wood - Certified	**Drawer Units:**	Yes
Bench Top:	Epoxy Resin	**White Boards:**	(1) 3'x4', (1) 4'x6'
Bench Height:	36"	**Tack Boards:**	No

PLUMBING / GASES

Sinks:	1 Large single basin & 1 Small convenience per lab	**Air:**	1 per bench
Pure Water:	RO - 1 per bay	**Lab Gas:**	1 per bay
HotCold Water:	Yes	**CO2:**	No
Floor Drain:	No	**Nitrogen:**	No
HoseBib:	No	**Vacuum:**	1 per bench
Waste:	None	**Other Gas:**	
Eyewash:	Yes	**Fire Protection:**	Lab Standard
Emerg Shower:	(1) every three lab bays		

COPYRIGHT © 2009 CRSA

USU Agriculture Building

ROOM DATA SHEET DETAIL **Animal Dairy & Veterinary Sciences**

ADVS Research Laboratories

4.4.1.1 Animal Genetics **Second Level**

HVAC / ELECTRICAL

Total Air Changes:	10 ACH	**Power:**	110v + 220v
Pressure:	Negative	**Lighting:**	Direct/indirect fluorescent
Temp Requirement:	Lab Standard	**Fixture Mount:**	Recessed
Relative Humidity:	Lab Standard	**Occ. Sensors:**	No
Local Exhaust:	Lab Standard	**Task Light:**	Yes
Air Filtration:	Lab Standard	**Em Power:**	On select outlets
CO2 Sensor:	Yes	**UPS:**	No
Other HVAC:			

COMMUNICATIONS / SPECIAL CONSIDERATIONS

Phone Outlets:	1 per lab	**Light Controls:**	Not Required
Data Outlets:	1 per bay	**Visual Control:**	Views Desirable
Network:	Yes	**Structural Control:**	Not Required
AV Requirements:	None	**Security:**	Proximity card lock
Clocks:	Yes	**Shielding:**	Not Required

EQUIPMENT AND FURNISHINGS

Equipment:

Cockett Lab - Owner provided equipment
(9) Thermal Cyclers
(4) Waterbaths
(6) Microgel Powerboxes
(5) Agarose gel Powerboxes
(1) EC Powerbox
(2) Tilt-table mixers
(1) Incubator shaker
(1) CO2 incubator
(1) Beckmans centrifuge
(1) Micro centrifuge
(1) UV Stratalinker
(1) PCR system
(2) Light boxes
(1) Light cabinet
(1) Primer Freezer
(1) Frigidare freezer
(1) Americana refrigerator
Storage cabinets for chemicals including flammables, acids and bases.

Furnishings:

New Built-in cabinetry
(88) lf Wood base w/epoxy countertop - 30" deep
(84) lf Wood upper w/adjustable shelves - 15" deep

COPYRIGHT © 2009 CRSA

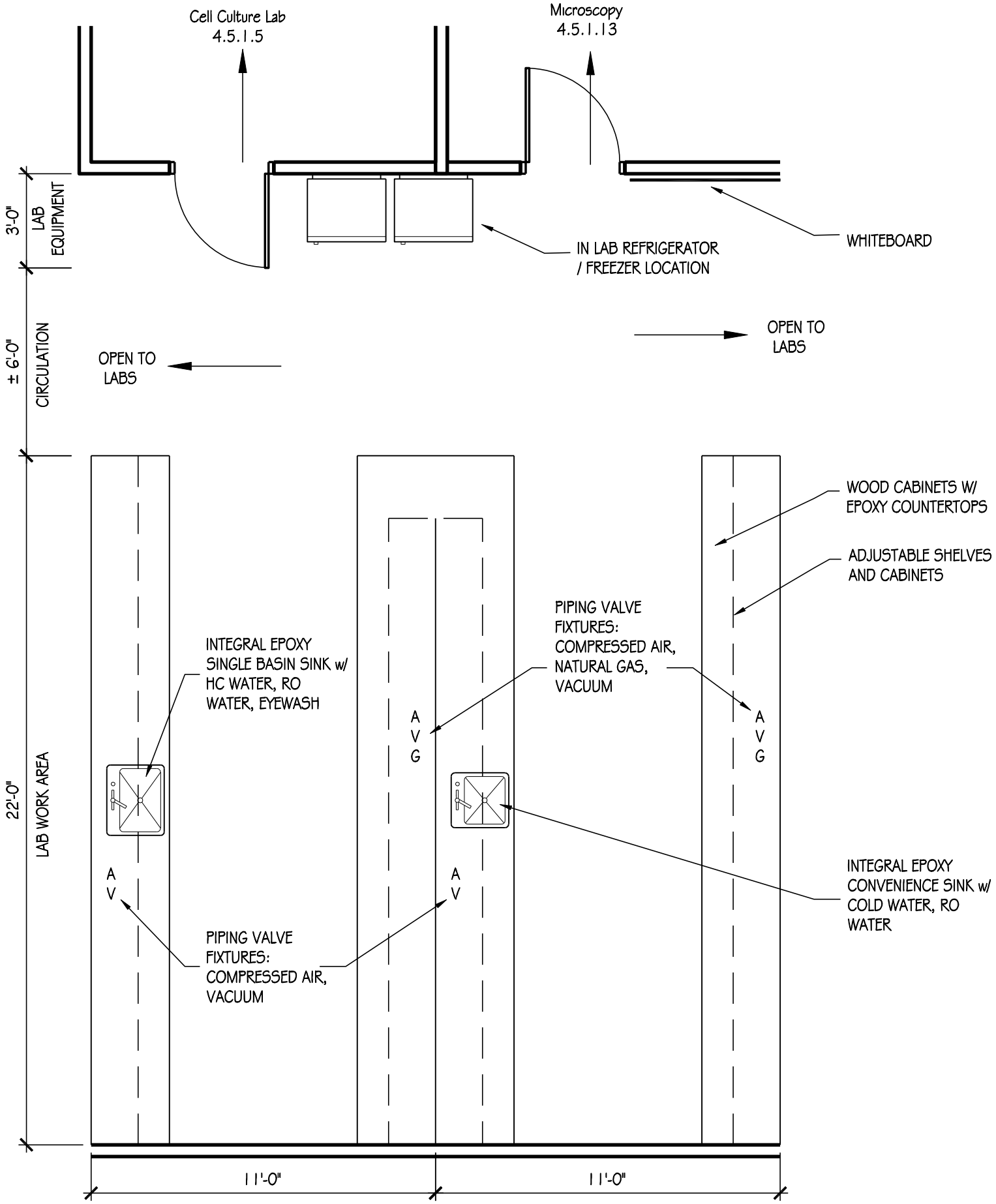

REPRODUCTION & DEVELOPMENT LAB - 560 SF

USU Agriculture Building

ROOM DATA SHEET DETAIL — **Animal Dairy & Veterinary Sciences**

ADVS Research Laboratories

4.4.1.2 Reproduction & Development — **Second Level**

SPACE INFORMATION

Room Function:

Adjacencies: Tissue Collection Lab (4.5.1.2), Cell Culture room (4.5.1.5), Microscopy Lab (4.5.1.13), Micromanipulation Lab (4.5.1.4)

Special Requirements:

Access: Restricted - Staff & Students

Room Utilization: 7 days a week, 24 hours a day

General Notes: Ken White

ROOM SIZE AND CAPACITY

Proposed Area:	560 NSF	**Room/Space Quantity:**	1	**Total Area:**	560
Assigned Capacity:	0 Occupant(s)	**Unassigned Capacity:**	12 Guest(s)	**Total Capacity:**	12

FINISHES, DOORS, AND WINDOWS

Floor Finish:	Vinyl Composite Tile (VCT)	**Ceiling Treatment:**	Suspended vinyl-faced lay-in panels
Wall Finish:	Gypsum board (painted)	**Ceiling Height:**	10'
Base Finish:	Rubber	**Acoustic Treatment:**	As needed
Doors:		**Windows:**	
Type:	None	**Natural Lighting:**	Desired, but not required
Width:		**Room Skylight:**	Acceptable

Height:

Vision Panel: Required

CASEWORK / FURNISHINGS

Wall Cabinets:	Wood - Certified	**Shelving:**	Yes
Base Cabinets:	Wood - Certified	**Drawer Units:**	Yes
Bench Top:	Epoxy Resin	**White Boards:**	(1) 4'-6'
Bench Height:	36"	**Tack Boards:**	No

PLUMBING / GASES

Sinks:	1 Large single basin & 1 Small convenience per lab	**Air:**	1 per bench
Pure Water:	RO - 1 per bay	**Lab Gas:**	1 per bay
HotCold Water:	Yes	**CO2:**	Cylinder
Floor Drain:	No	**Nitrogen:**	Cylinder
HoseBib:	No	**Vacuum:**	1 per bench
Waste:	None	**Other Gas:**	
Eyewash:	Yes	**Fire Protection:**	Lab Standard
Emerg Shower:	(1) every three lab bays		

COPYRIGHT © 2009 CRSA

HVAC / ELECTRICAL

Total Air Changes:	10 ACH	**Power:**	110v + 220v
Pressure:	Negative	**Lighting:**	Direct/indirect fluorescent
Temp Requirement:	Lab Standard	**Fixture Mount:**	Recessed
Relative Humidity:	Lab Standard	**Occ. Sensors:**	No
Local Exhaust:	Lab Standard	**Task Light:**	Yes
Air Filtration:	Lab Standard	**Em Power:**	On select outlets
CO2 Sensor:	Yes	**UPS:**	No
Other HVAC:			

COMMUNICATIONS / SPECIAL CONSIDERATIONS

Phone Outlets:	1 per lab	**Light Controls:**	Not Required
Data Outlets:	1 per bay	**Visual Control:**	Views Desirable
Network:	Yes	**Structural Control:**	Not Required
AV Requirements:	None	**Security:**	Proximity card lock
Clocks:	Yes	**Shielding:**	Not Required

EQUIPMENT AND FURNISHINGS

Equipment:

White Lab - Owner provided equipment
(1) Ultrasonic cleaner
(2) Dry-baths
(1) Thermomixer
(2) Water baths
(1) Osmometer
(2) Stirrer / hotplates
(1) pH/mV meter
(1) pH/Temp meter
(1) Portable light box
(1) Vortex mixer
(1) Transfer pipette stretcher
(1) s/p rotator
(2) Centrifuge
(1) Vertical pipette puller
(2) Holding pipette puller
(1) Micro forge
(1) Water purifier
(1) Transilluminator
(1) Thermal cycler
(1) Kenmore freezer
(1) Refrigerator
(2) Scales
(1) Vacuum
(1) Light box
Storage cabinets for chemicals including flammables, acids and bases.

Furnishings:

New Built-in cabinetry
(88) lf Wood base w/epoxy countertop - 30" deep
(84) lf Wood upper w/adjustable shelves - 15" deep

COPYRIGHT © 2009 CRSA

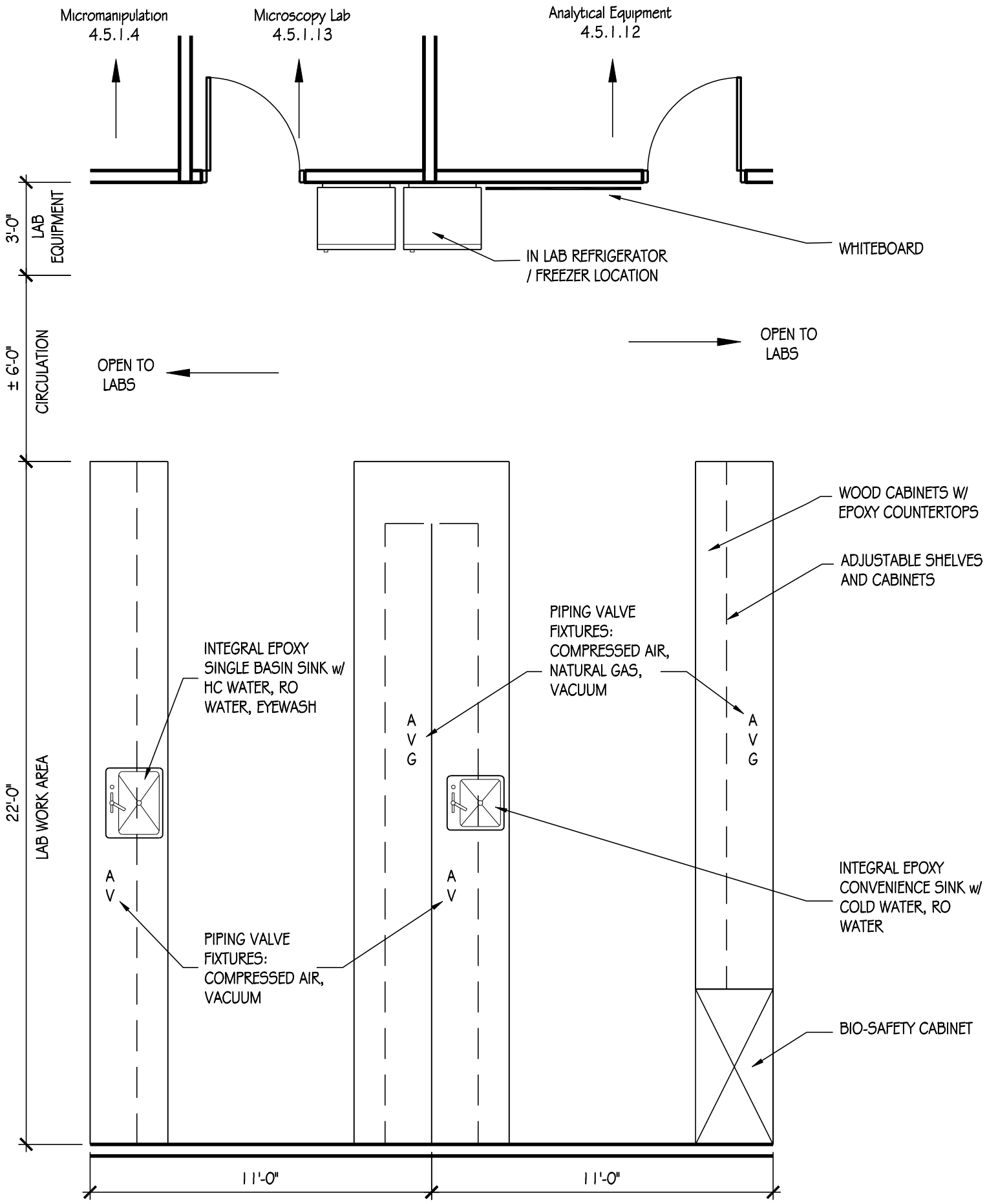

DEVELOPMENTAL BIOLOGY LAB - 560 SF

USU Agriculture Building

ROOM DATA SHEET DETAIL — **Animal Dairy & Veterinary Sciences**

ADVS Research Laboratories

4.4.1.3 Developmental Biology — **Second Level**

SPACE INFORMATION

Room Function:

Adjacencies: Cell Culture (4.5.1.5), Microscopy (4.5.1.13), Analytical Equipment room (4.5.1.12)

Special Requirements:

Access: Restricted - Staff & Students

Room Utilization: 7 days a week, 24 hours a day

General Notes: Lee Rickords

ROOM SIZE AND CAPACITY

Proposed Area:	560 NSF	**Room/Space Quantity:**	1	**Total Area:**	560
Assigned Capacity:	0 Occupant(s)	**Unassigned Capacity:**	12 Guest(s)	**Total Capacity:**	12

FINISHES, DOORS, AND WINDOWS

Floor Finish:	Vinyl Composite Tile (VCT)	**Ceiling Treatment:**	Suspended vinyl-faced lay-in panels
Wall Finish:	Gypsum board (painted)	**Ceiling Height:**	10'
Base Finish:	Rubber	**Acoustic Treatment:**	As needed
Doors:		**Windows:**	
Type:	None	**Natural Lighting:**	Desired, but not required
Width:		**Room Skylight:**	Acceptable

Height:

Vision Panel: Required

CASEWORK / FURNISHINGS

Wall Cabinets:	Wood - Certified	**Shelving:**	Yes
Base Cabinets:	Wood - Certified	**Drawer Units:**	Yes
Bench Top:	Epoxy Resin	**White Boards:**	(1) 4'-6'
Bench Height:	36"	**Tack Boards:**	No

PLUMBING / GASES

Sinks:	1 Large single basin & 1 Small convenience per lab	**Air:**	1 per bench
Pure Water:	RO - 1 per bay	**Lab Gas:**	1 per bay
HotCold Water:	Yes	**CO2:**	Cylinder
Floor Drain:	No	**Nitrogen:**	Cylinder
HoseBib:	No	**Vacuum:**	1 per bench
Waste:	None	**Other Gas:**	
Eyewash:	Yes	**Fire Protection:**	Lab Standard
Emerg Shower:	(1) every three lab bays		

COPYRIGHT © 2009 CRSA

HVAC / ELECTRICAL

Total Air Changes:	10 ACH	**Power:**	110v + 220v
Pressure:	Negative	**Lighting:**	Direct/indirect fluorescent
Temp Requirement:	Lab Standard	**Fixture Mount:**	Recessed
Relative Humidity:	Lab Standard	**Occ. Sensors:**	No
Local Exhaust:	Lab Standard	**Task Light:**	Yes
Air Filtration:	Lab Standard	**Em Power:**	On select outlets
CO2 Sensor:	Yes	**UPS:**	No
Other HVAC:			

COMMUNICATIONS / SPECIAL CONSIDERATIONS

Phone Outlets:	1 per lab	**Light Controls:**	Not Required
Data Outlets:	1 per bay	**Visual Control:**	Views Desirable
Network:	Yes	**Structural Control:**	Not Required
AV Requirements:	None	**Security:**	Proximity card lock
Clocks:	Yes	**Shielding:**	Not Required

EQUIPMENT AND FURNISHINGS

Equipment:

Rickords Lab - Owner provided equipment
(1) Bio-Rad thermocycler (1) MJ DNA thermocycler
(2) PE 9600 thermocyclers (2) Savant gel pumps
(1) 5 ft Class II a/B3 bio safety cabinet
(1) Vortex genie (1) Vortex genie 2
(1) Mixer vortex
(1) Labnet mini centrifuge (1) Eppendorf centrifuge
(1) Beckman GPR centrifuge
(1) Olympus dissecting microscope
(1) Leitz inverted microscope (1) Olympus inverted microscope
(1) Revco incubator (3) Electrophoresis power supplies
(1) GeneMate
(1) Bio-Rad Mini-Sub Cell GT (1) Bio-Rad Wide mini-Sub Cell
(1) Thermo Maxicell Primo Submarine
(1) Aquebogue machine shop gel box (1) Black gel box
(1) Bethesada research labs gel box (1) Hoefer
(1) Bio-Rad Mini-Protean 3 (1) Bio-Rad Criterion Cell
(1) Forma Scientific water bath/shaker (1) Fisher Isotemp water bath
(1) Precision water bath (1) Electronic balance
(1) UltraBASIC pH meter (2) Stir plates
(1) Stir/Hot plate (1) Refrigerator
(1) Dual action shaker (1) Trans-blot Semi-dry transfer cell
(1) Bio-Rad Protean IEF Cell (1) Microwave
(1) Bio-Rad slab dryer (1) Flammable cabinet
(1) Corrosive cabinet (1) Heat systems sonicator
Storage cabinets for chemicals including flammables, acids and bases.

Furnishings:

New Built-in cabinetry
(88) lf Wood base w/epoxy countertop - 30" deep
(84) lf Wood upper w/adjustable shelves - 15" deep

COPYRIGHT © 2009 CRSA

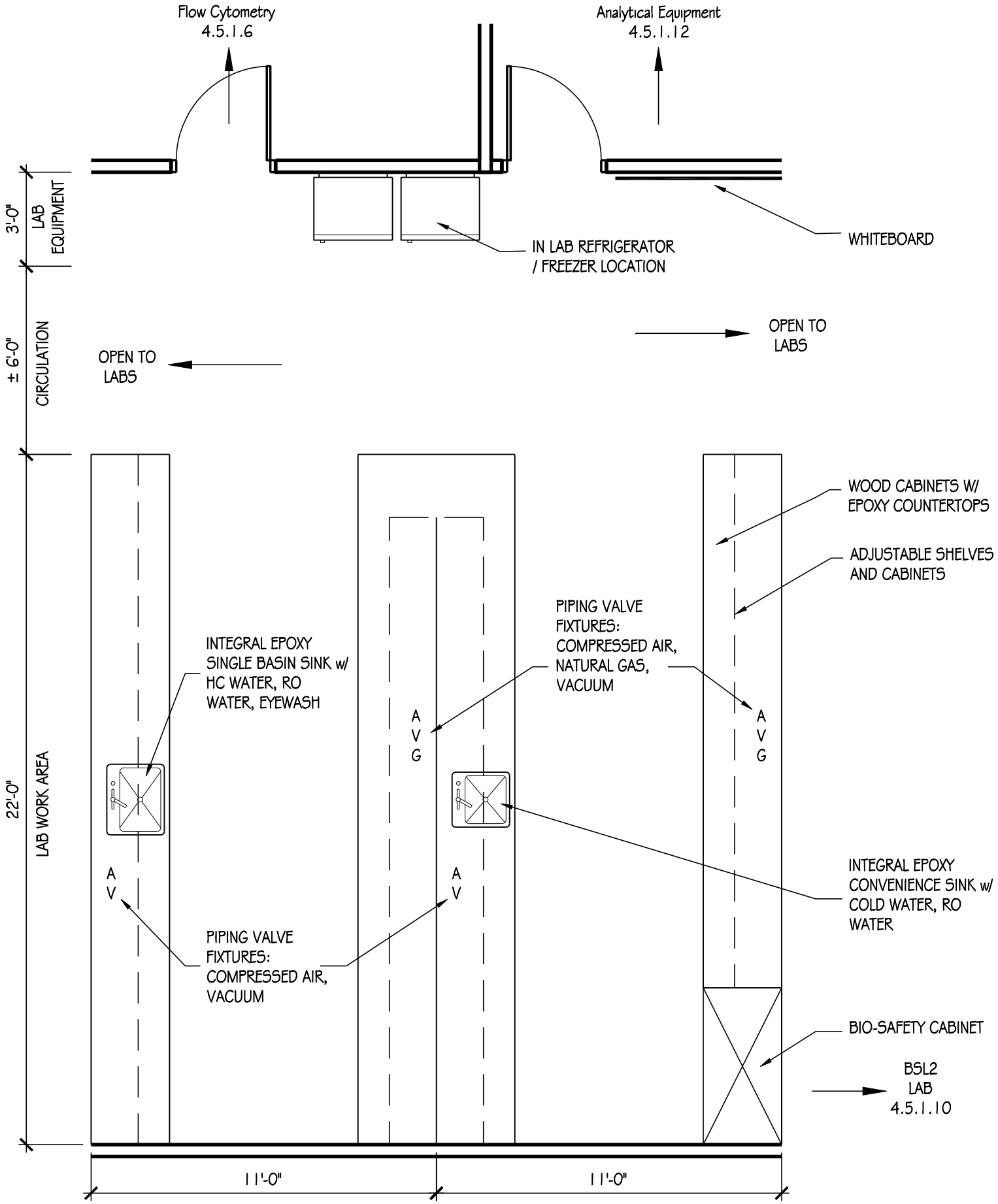

REPRODUCTIVE IMMUNOLOGY AND IMMUNOGENETICS LAB - 560 SF

USU Agriculture Building

ROOM DATA SHEET DETAIL — **Animal Dairy & Veterinary Sciences**

ADVS Research Laboratories

4.4.1.4 Reproductive Immunology & Immunogenetics — **Second Level**

SPACE INFORMATION

Room Function:

Adjacencies: Flow Cytometry Lab (4.5.1.6), BSL2 Lab (4.5.1.10)

Special Requirements:

Access: Restricted - Staff & Students

Room Utilization: 7 days a week, 24 hours a day

General Notes: Chris Davies

ROOM SIZE AND CAPACITY

Proposed Area:	560 NSF	**Room/Space Quantity:**	1	**Total Area:**	560
Assigned Capacity:	0 Occupant(s)	**Unassigned Capacity:**	12 Guest(s)	**Total Capacity:**	12

FINISHES, DOORS, AND WINDOWS

Floor Finish:	Vinyl Composite Tile (VCT)	**Ceiling Treatment:**	Suspended vinyl-faced lay-in panels
Wall Finish:	Gypsum board (painted)	**Ceiling Height:**	10'
Base Finish:	Rubber	**Acoustic Treatment:**	As needed
Doors:		**Windows:**	
Type:	None	**Natural Lighting:**	Desired, but not required
Width:		**Room Skylight:**	Acceptable

Height:

Vision Panel: Required

CASEWORK / FURNISHINGS

Wall Cabinets:	Wood - Certified	**Shelving:**	Yes
Base Cabinets:	Wood - Certified	**Drawer Units:**	Yes
Bench Top:	Epoxy Resin	**White Boards:**	(1) 4'-6'
Bench Height:	36"	**Tack Boards:**	No

PLUMBING / GASES

Sinks:	1 Large single basin & 1 Small convenience per lab	**Air:**	1 per bench
Pure Water:	RO - 1 per bay	**Lab Gas:**	1 per bay
HotCold Water:	Yes	**CO2:**	Cylinder
Floor Drain:	No	**Nitrogen:**	Cylinder
HoseBib:	No	**Vacuum:**	1 per bench
Waste:	None	**Other Gas:**	
Eyewash:	Yes	**Fire Protection:**	Lab Standard
Emerg Shower:	(1) every three lab bays		

COPYRIGHT © 2009 CRSA

USU Agriculture Building

ROOM DATA SHEET DETAIL **Animal Dairy & Veterinary Sciences**

ADVS Research Laboratories

4.4.1.4 Reproductive Immunology & Immunogenetics **Second Level**

HVAC / ELECTRICAL

Total Air Changes:	10 ACH	**Power:**	110v + 220v
Pressure:	Negative	**Lighting:**	Direct/indirect fluorescent
Temp Requirement:	Lab Standard	**Fixture Mount:**	Recessed
Relative Humidity:	Lab Standard	**Occ. Sensors:**	No
Local Exhaust:	Lab Standard	**Task Light:**	Yes
Air Filtration:	Lab Standard	**Em Power:**	On select outlets
CO2 Sensor:	Yes	**UPS:**	No
Other HVAC:			

COMMUNICATIONS / SPECIAL CONSIDERATIONS

Phone Outlets:	1 per lab	**Light Controls:**	Not Required
Data Outlets:	1 per bay	**Visual Control:**	Views Desirable
Network:	Yes	**Structural Control:**	Not Required
AV Requirements:	None	**Security:**	Proximity card lock
Clocks:	Yes	**Shielding:**	Not Required

EQUIPMENT AND FURNISHINGS

Equipment:

Davies Lab - Owner provided equipment
(1) 5 ft Class II Bio Safety Cabinet
(1) -20 Freezer
(1) Refrigerator
(2) Tissue cell incubators (stacked)
(1) Shaker incubator (bacterial incubator)
(2) PCR machines
(1) Refrigerated centrifuge
(1) Refrigerated microfuge
(1) Minifuge
(1) Slide minifuge
(2) Water baths
(1) Orbital shaker
(1) Inverted microscope
(1) Hot plate / stirrer
(1) pH meter
(1) Scale
(2) Stirrers
(1) Vortex
(1) Homogenizer
(1) Motorized pipet filler / disp
(2) Power supplies
(2) 4' PCR workstations
Storage cabinets for chemicals including flammables, acids and bases.

Furnishings:

New Built-in cabinetry
(88) lf Wood base w/epoxy countertop - 30" deep
(84) lf Wood upper w/adjustable shelves - 15" deep

COPYRIGHT © 2009 CRSA

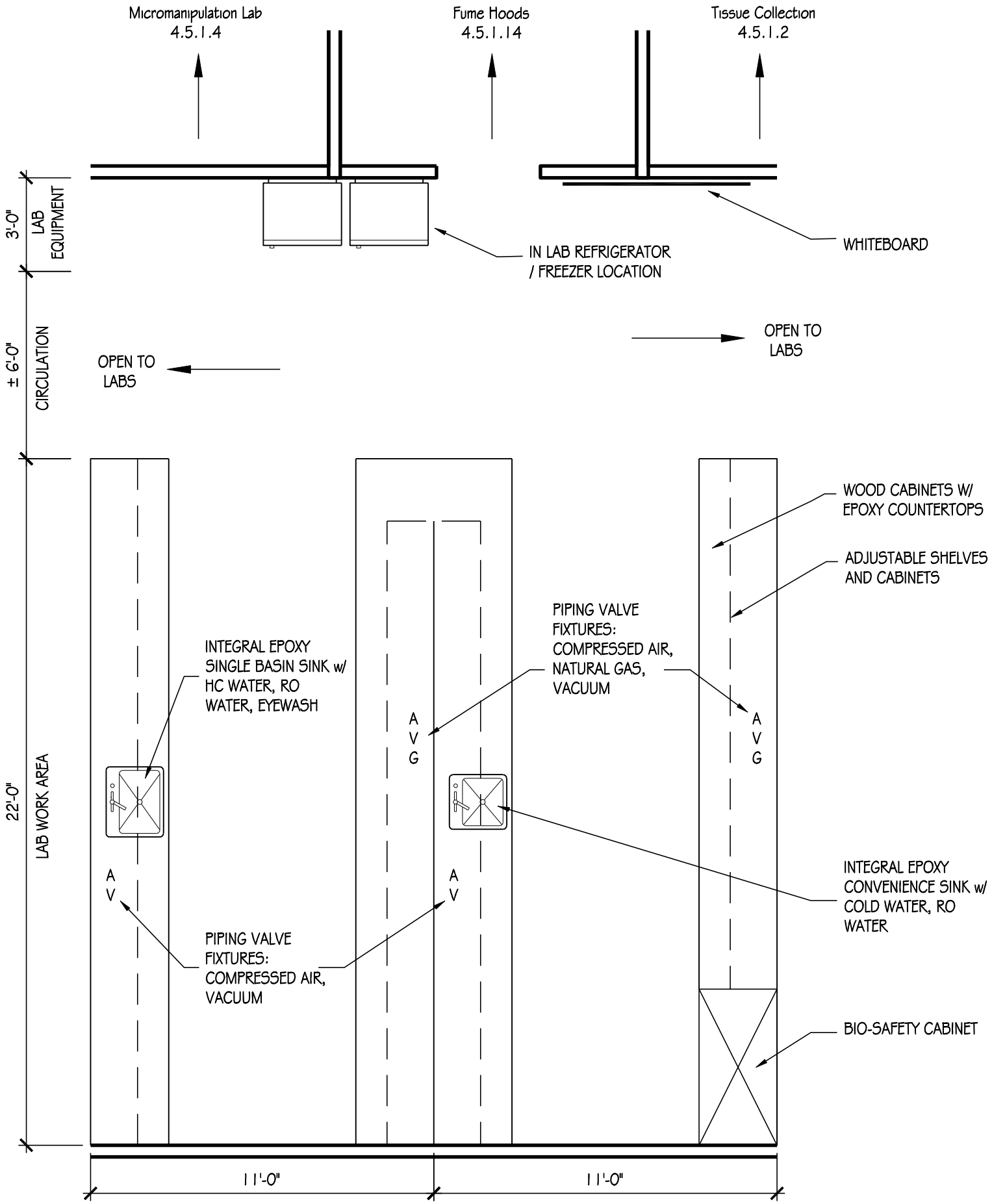

GENE REGULATION / ANIMAL MODELS LAB - 560 SF

USU Agriculture Building

ROOM DATA SHEET DETAIL — **Animal Dairy & Veterinary Sciences**

ADVS Research Laboratories

4.4.1.5 Gene Regulation / Animal Models — **Second Level**

SPACE INFORMATION

Room Function:

Adjacencies: Animal Genetics Lab (4.4.1.1)

Special Requirements:

Access: Restricted - Staff & Students

Room Utilization: 7 days a week, 24 hours a day

General Notes: New Hire 1 - Future growth area

ROOM SIZE AND CAPACITY

Proposed Area:	560 NSF	**Room/Space Quantity:**	1	**Total Area:**	560
Assigned Capacity:	0 Occupant(s)	**Unassigned Capacity:**	12 Guest(s)	**Total Capacity:**	12

FINISHES, DOORS, AND WINDOWS

Floor Finish:	Vinyl Composite Tile (VCT)	**Ceiling Treatment:**	Suspended vinyl-faced lay-in panels
Wall Finish:	Gypsum board (painted)	**Ceiling Height:**	10'
Base Finish:	Rubber	**Acoustic Treatment:**	As needed
Doors:		**Windows:**	
Type:	None	**Natural Lighting:**	Desired, but not required
Width:		**Room Skylight:**	Acceptable

Height:

Vision Panel: Required

CASEWORK / FURNISHINGS

Wall Cabinets:	Wood - Certified	**Shelving:**	Yes
Base Cabinets:	Wood - Certified	**Drawer Units:**	Yes
Bench Top:	Epoxy Resin	**White Boards:**	(1) 4'-6'
Bench Height:	36"	**Tack Boards:**	No

PLUMBING / GASES

Sinks:	1 Large single basin & 1 Small convenience per lab	**Air:**	1 per bench
Pure Water:	RO - 1 per bay	**Lab Gas:**	1 per bay
HotCold Water:	Yes	**CO2:**	Cylinder
Floor Drain:	No	**Nitrogen:**	Cylinder
HoseBib:	No	**Vacuum:**	1 per bench
Waste:	None	**Other Gas:**	
Eyewash:	Yes	**Fire Protection:**	Lab Standard
Emerg Shower:	(1) every three lab bays		

COPYRIGHT © 2009 CRSA

USU Agriculture Building

ROOM DATA SHEET DETAIL **Animal Dairy & Veterinary Sciences**

ADVS Research Laboratories

4.4.1.5 Gene Regulation / Animal Models **Second Level**

HVAC / ELECTRICAL

Total Air Changes:	10 ACH	**Power:**	110v + 220v
Pressure:	Negative	**Lighting:**	Direct/indirect fluorescent
Temp Requirement:	Lab Standard	**Fixture Mount:**	Recessed
Relative Humidity:	Lab Standard	**Occ. Sensors:**	No
Local Exhaust:	Lab Standard	**Task Light:**	Yes
Air Filtration:	Lab Standard	**Em Power:**	On select outlets
CO2 Sensor:	Yes	**UPS:**	No
Other HVAC:			

COMMUNICATIONS / SPECIAL CONSIDERATIONS

Phone Outlets:	1 per lab	**Light Controls:**	Not Required
Data Outlets:	1 per bay	**Visual Control:**	Views Desirable
Network:	Yes	**Structural Control:**	Not Required
AV Requirements:	None	**Security:**	Proximity card lock
Clocks:	Yes	**Shielding:**	Not Required

EQUIPMENT AND FURNISHINGS

Equipment:

Owner provided equipment
(1) Refrigerator
(1) -20 Freezer
(1) Centrifuge
(2) Thermal Cyclers
(1) Water Bath
(1) Incubator
(1)5' Class II Bio-Safety Cabinet
Storage cabinets for chemicals including flammables, acids and bases.

Furnishings:

New Built-in cabinetry
(88) lf Wood base w/epoxy countertop - 30" deep
(84) lf Wood upper w/adjustable shelves - 15" deep

COPYRIGHT © 2009 CRSA

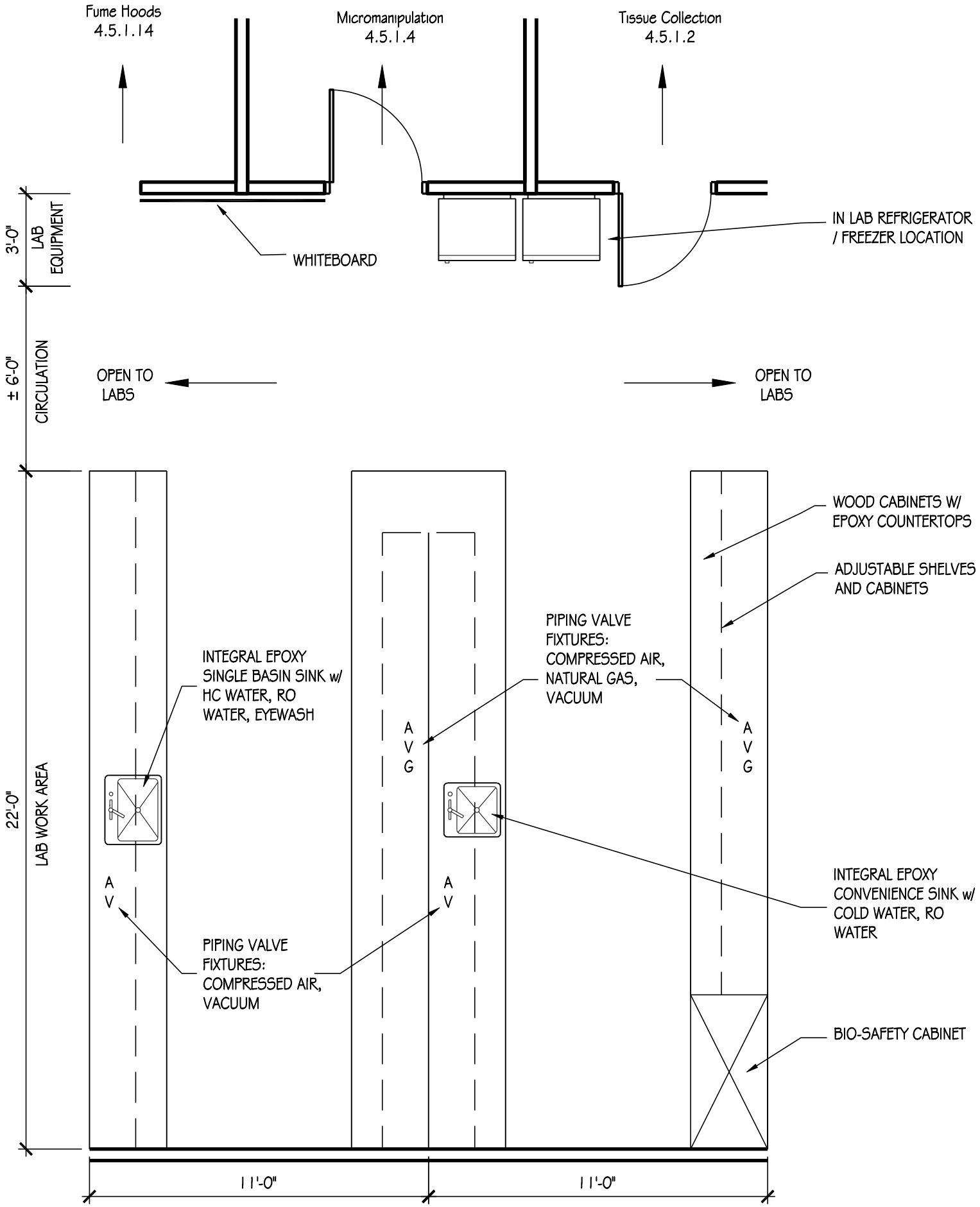

EPIGENETICS / EPIGENOMICS LAB
560 SF

USU Agriculture Building

ROOM DATA SHEET DETAIL — **Animal Dairy & Veterinary Sciences**

ADVS Research Laboratories

4.4.1.6 Epigenitics / Epigenomics — Second Level

SPACE INFORMATION

Room Function:

Adjacencies: Reproduction & Development Lab (4.4.1.2)

Special Requirements:

Access: Restricted - Staff & Students

Room Utilization: 7 days a week, 24 hours a day

General Notes: New Hire 2 - Future growth area

ROOM SIZE AND CAPACITY

Proposed Area:	560 NSF	**Room/Space Quantity:**	1	**Total Area:**	560
Assigned Capacity:	0 Occupant(s)	**Unassigned Capacity:**	12 Guest(s)	**Total Capacity:**	12

FINISHES, DOORS, AND WINDOWS

Floor Finish:	Vinyl Composite Tile (VCT)	**Ceiling Treatment:**	Suspended vinyl-faced lay-in panels
Wall Finish:	Gypsum board (painted)	**Ceiling Height:**	10'
Base Finish:	Rubber	**Acoustic Treatment:**	As needed
Doors:		**Windows:**	
Type:	None	**Natural Lighting:**	Desired, but not required
Width:		**Room Skylight:**	Acceptable

Height:

Vision Panel: Required

CASEWORK / FURNISHINGS

Wall Cabinets:	Wood - Certified	**Shelving:**	Yes
Base Cabinets:	Wood - Certified	**Drawer Units:**	Yes
Bench Top:	Epoxy Resin	**White Boards:**	(1) 4'-6'
Bench Height:	36"	**Tack Boards:**	No

PLUMBING / GASES

Sinks:	1 Large single basin & 1 Small convenience per lab	**Air:**	1 per bench
Pure Water:	RO - 1 per bay	**Lab Gas:**	1 per bay
HotCold Water:	Yes	**CO2:**	Cylinder
Floor Drain:	No	**Nitrogen:**	Cylinder
HoseBib:	No	**Vacuum:**	1 per bench
Waste:	None	**Other Gas:**	
Eyewash:	Yes	**Fire Protection:**	Lab Standard
Emerg Shower:	(1) every three lab bays		

COPYRIGHT © 2009 CRSA

USU Agriculture Building

ROOM DATA SHEET DETAIL **Animal Dairy & Veterinary Sciences**

ADVS Research Laboratories

4.4.1.6 Epigenitics / Epigenomics **Second Level**

HVAC / ELECTRICAL

Total Air Changes:	10 ACH	**Power:**	110v + 220v
Pressure:	Negative	**Lighting:**	Direct/indirect fluorescent
Temp Requirement:	Lab Standard	**Fixture Mount:**	Recessed
Relative Humidity:	Lab Standard	**Occ. Sensors:**	No
Local Exhaust:	Lab Standard	**Task Light:**	Yes
Air Filtration:	Lab Standard	**Em Power:**	On select outlets
CO2 Sensor:	Yes	**UPS:**	No
Other HVAC:			

COMMUNICATIONS / SPECIAL CONSIDERATIONS

Phone Outlets:	1 per lab	**Light Controls:**	Not Required
Data Outlets:	1 per bay	**Visual Control:**	Views Desirable
Network:	Yes	**Structural Control:**	Not Required
AV Requirements:	None	**Security:**	Proximity card lock
Clocks:	Yes	**Shielding:**	Not Required

EQUIPMENT AND FURNISHINGS

Equipment:

Owner provided equipment
(1) Refrigerator
(1) -20 Freezer
(1) Centrifuge
(2) Thermal Cyclers
(1) Water Bath
(1) Incubator
(1) 5' Class II Bio-Safety Cabinet
Storage cabinets for chemicals including flammables, acids and bases.

Furnishings:

New Built-in cabinetry
(88) lf Wood base w/epoxy countertop - 30" deep
(84) lf Wood upper w/adjustable shelves - 15" deep

COPYRIGHT © 2009 CRSA

BLANK

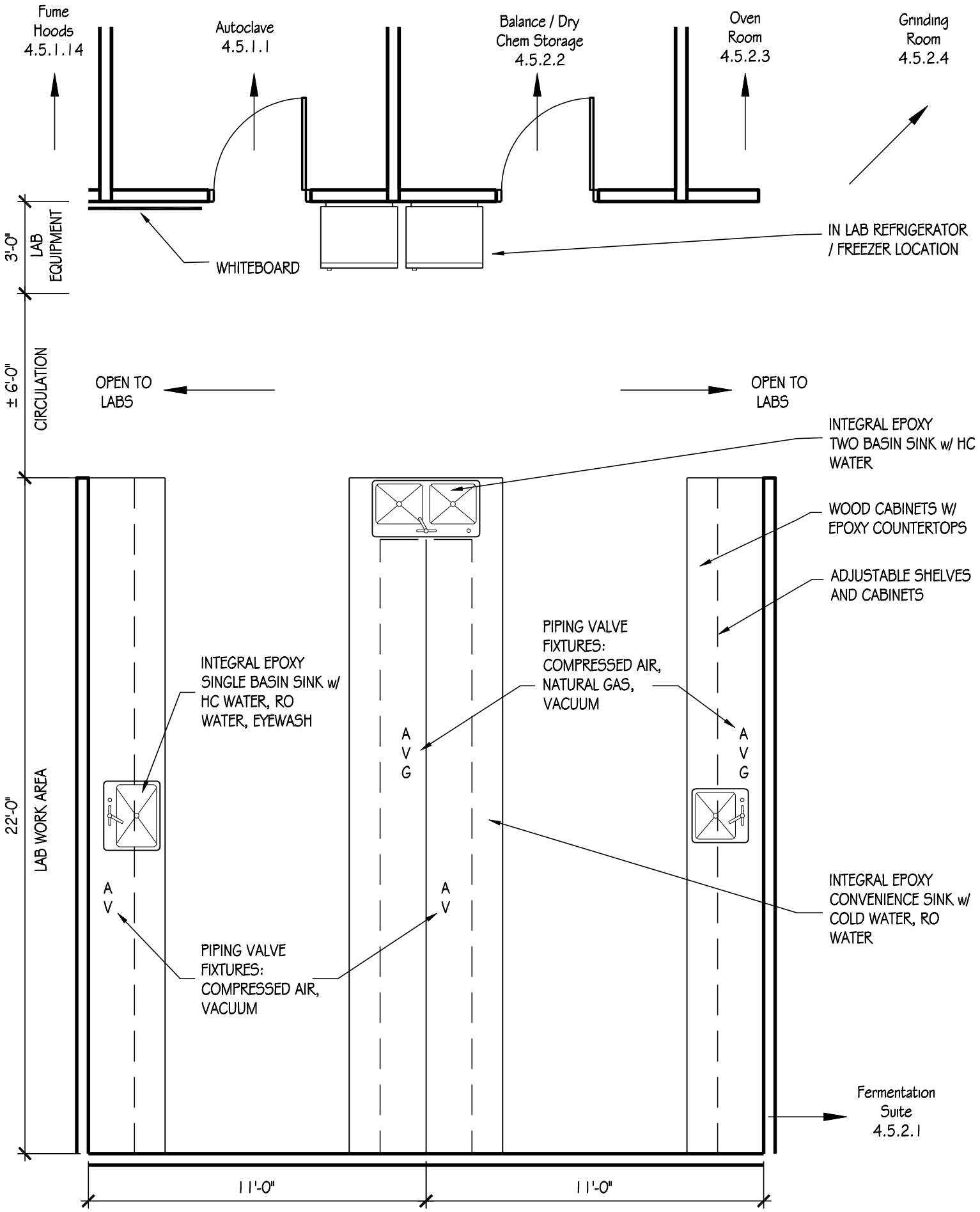

ANIMAL NUTRITION LAB
560 SF

USU Agriculture Building

ROOM DATA SHEET DETAIL — **Animal Dairy & Veterinary Sciences**

ADVS Research Laboratories

4.4.2.1 Animal Nutrition — **Second Level**

SPACE INFORMATION

Room Function:

Adjacencies: Fermentation Suite (4.5.2.1), Grinding Room (4.5.2.4), Balance Room (4.5.2.2), Oven Room (4.5.2.3)

Access: Restricted - Staff & Students

Room Utilization: 7 days a week, 24 hours a day

General Notes: Jung Su Eun

Special Requirements:

Separate from adjacent labs.
Near restroom with shower if possible.

ROOM SIZE AND CAPACITY

Proposed Area:	560 NSF	**Room/Space Quantity:**	1	**Total Area:**	560
Assigned Capacity:	0 Occupant(s)	**Unassigned Capacity:**	8 Guest(s)	**Total Capacity:**	8

FINISHES, DOORS, AND WINDOWS

Floor Finish:	Vinyl Composite Tile (VCT)	**Ceiling Treatment:**	Suspended vinyl-faced lay-in panels
Wall Finish:	Gypsum board (painted)	**Ceiling Height:**	10'
Base Finish:	Rubber	**Acoustic Treatment:**	As needed
Doors:		**Windows:**	
Type:	None	**Natural Lighting:**	Desired, but not required
Width:		**Room Skylight:**	Acceptable

Height:

Vision Panel: Required

CASEWORK / FURNISHINGS

Wall Cabinets:	Wood - Certified	**Shelving:**	Yes
Base Cabinets:	Wood - Certified	**Drawer Units:**	Yes
Bench Top:	Epoxy Resin	**White Boards:**	(1) 4'-6'
Bench Height:	36"	**Tack Boards:**	No

PLUMBING / GASES

Sinks:	1 Large two basin & 1 Small convenience per lab	**Air:**	1 per bench
Pure Water:	RO - 1 per bay	**Lab Gas:**	1 per bay
HotCold Water:	Yes	**CO2:**	Cylinder
Floor Drain:	No	**Nitrogen:**	Cylinder
HoseBib:	No	**Vacuum:**	1 per bench
Waste:	None	**Other Gas:**	
Eyewash:	Yes	**Fire Protection:**	Lab Standard
Emerg Shower:	(1) every three lab bays		

COPYRIGHT © 2009 CRSA

USU Agriculture Building

ROOM DATA SHEET DETAIL **Animal Dairy & Veterinary Sciences**

ADVS Research Laboratories

4.4.2.1 Animal Nutrition **Second Level**

HVAC / ELECTRICAL

Total Air Changes:	10 ACH	**Power:**	110v + 220v
Pressure:	Negative	**Lighting:**	Direct/indirect fluorescent
Temp Requirement:	Lab Standard	**Fixture Mount:**	Recessed
Relative Humidity:	Lab Standard	**Occ. Sensors:**	No
Local Exhaust:	Lab Standard	**Task Light:**	Yes
Air Filtration:	Lab Standard	**Em Power:**	On select outlets
CO2 Sensor:	Yes	**UPS:**	No
Other HVAC:			

COMMUNICATIONS / SPECIAL CONSIDERATIONS

Phone Outlets:	1 per lab	**Light Controls:**	Not Required
Data Outlets:	1 per bay	**Visual Control:**	Views Desirable
Network:	Yes	**Structural Control:**	Not Required
AV Requirements:	None	**Security:**	Proximity card lock
Clocks:	Yes	**Shielding:**	Not Required

EQUIPMENT AND FURNISHINGS

Equipment:

Eun Lab - Owner provided equipment
(1) Barnstead water purifier
(3) Waterbaths
(1) Beckman spectrophotometer
(1) Brinkman homogenizer
(1) Microfuge
(1) Chromotography refrigerator
(2) Mills
(1) -40 Freezer
(1) Incubator
(1) Leco N2 Analyzer
(2) Balances
(1) TSI line conditioner
(1) Calorimeter
(1) Multiunit extractor heater
(1) Incubator
(1) Freezone pump
(1) Freezone shelf dryer
(1) Freezone consol
(1) Freezer
(1) HP gas chromatograph system
(6) Gas cylinders for GC
(1) Microscope
(1) Dynex plate reader system
(1) Shaking water bath
(3) Fiber analyzers
(1) Fiber analyzer water heater
(1) Nitrogen evaporator - near hood
(1) Beckman HPLC autosampler - near hood
(1) Fat extraction system - near hood
Storage cabinets for chemicals including flammables, acids and bases.

Furnishings:

New Built-in cabinetry
(88) lf Wood base w/epoxy countertop - 30" deep
(84) lf Wood upper w/adjustable shelves - 15" deep

COPYRIGHT © 2009 CRSA

BLANK

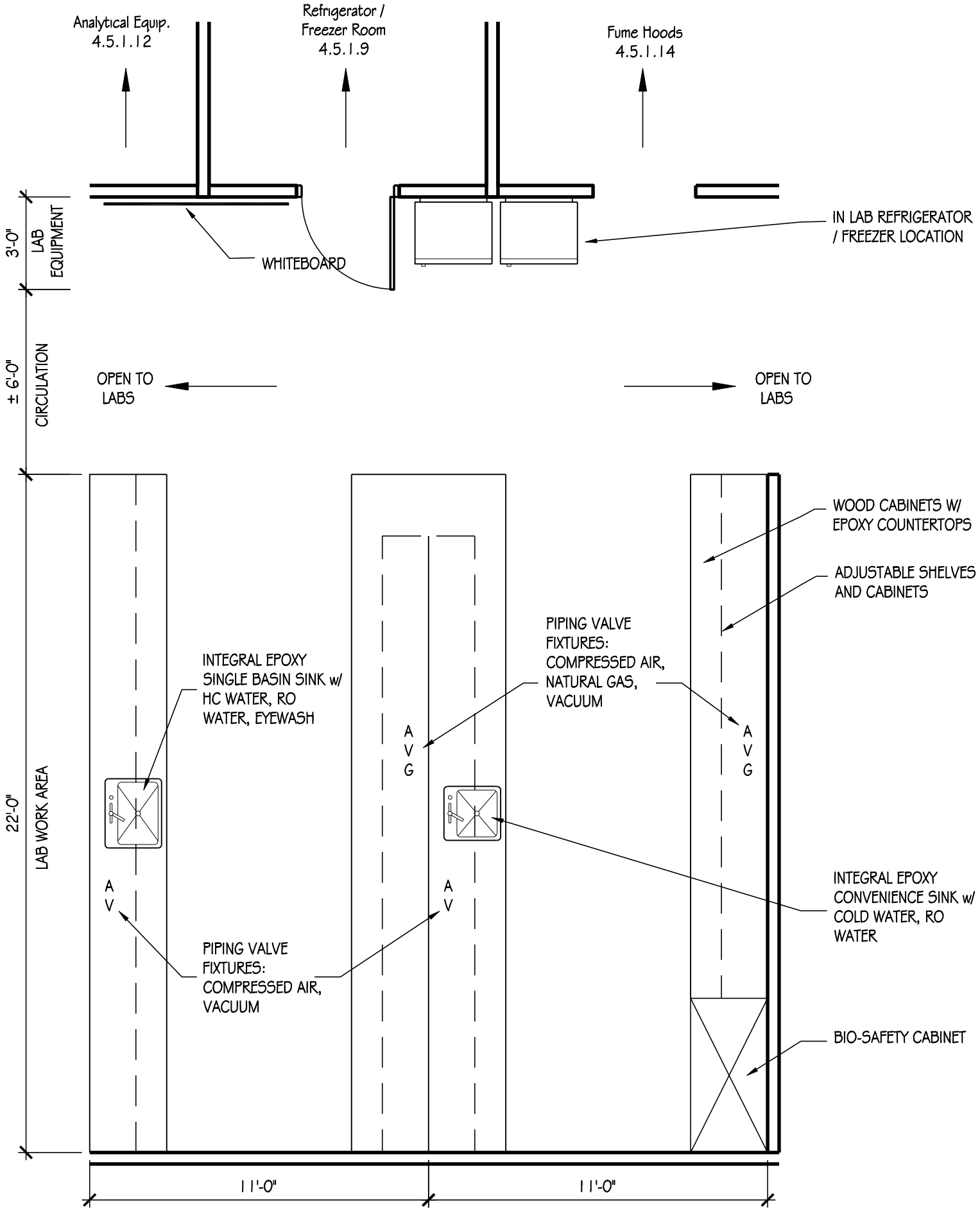

ANIMAL NUTRITIONAL PHYSIOLOGY LAB - 560 SF

USU Agriculture Building

ROOM DATA SHEET DETAIL — **Animal Dairy & Veterinary Sciences**

ADVS Research Laboratories

4.4.2.2 Nutritional Physiology — Second Level

SPACE INFORMATION

Room Function:

Adjacencies: Animal Nutrition Lab (4.4.2.1), Developmental Biology Lab (4.4.1.3)

Special Requirements:

Access: Restricted - Staff & Students

Room Utilization: 7 days a week, 24 hours a day

General Notes: New Hire - Future growth area

ROOM SIZE AND CAPACITY

Proposed Area:	560 NSF	**Room/Space Quantity:**	1	**Total Area:**	560
Assigned Capacity:	0 Occupant(s)	**Unassigned Capacity:**	8 Guest(s)	**Total Capacity:**	8

FINISHES, DOORS, AND WINDOWS

Floor Finish:	Vinyl Composite Tile (VCT)	**Ceiling Treatment:**	Suspended vinyl-faced lay-in panels
Wall Finish:	Gypsum board (painted)	**Ceiling Height:**	10'
Base Finish:	Rubber	**Acoustic Treatment:**	As needed
Doors:		**Windows:**	
Type:	None	**Natural Lighting:**	Desired, but not required
Height:		**Room Skylight:**	Acceptable
Width:		**Vision Panel:**	Required

CASEWORK / FURNISHINGS

Wall Cabinets:	Wood - Certified	**Shelving:**	Yes
Base Cabinets:	Wood - Certified	**Drawer Units:**	Yes
Bench Top:	Epoxy Resin	**White Boards:**	(1) 4'-6'
Bench Height:	36"	**Tack Boards:**	No

PLUMBING / GASES

Sinks:	1 Large single basin & 1 Small convenience per lab	**Air:**	1 per bench
Pure Water:	RO - 1 per bay	**Lab Gas:**	1 per bay
HotCold Water:	Yes	**CO2:**	Cylinder
Floor Drain:	No	**Nitrogen:**	Cylinder
HoseBib:	No	**Vacuum:**	1 per bench
Waste:	None	**Other Gas:**	
Eyewash:	Yes	**Fire Protection:**	Lab Standard
Emerg Shower:	(1) every three lab bays		

COPYRIGHT © 2009 CRSA

USU Agriculture Building

ROOM DATA SHEET DETAIL **Animal Dairy & Veterinary Sciences**

ADVS Research Laboratories

4.4.2.2 Nutritional Physiology **Second Level**

HVAC / ELECTRICAL

Total Air Changes:	10 ACH	**Power:**	110v + 220v
Pressure:	Negative	**Lighting:**	Direct/indirect fluorescent
Temp Requirement:	Lab Standard	**Fixture Mount:**	Recessed
Relative Humidity:	Lab Standard	**Occ. Sensors:**	No
Local Exhaust:	Lab Standard	**Task Light:**	Yes
Air Filtration:	Lab Standard	**Em Power:**	On select outlets
CO2 Sensor:	Yes	**UPS:**	No
Other HVAC:			

COMMUNICATIONS / SPECIAL CONSIDERATIONS

Phone Outlets:	1 per lab	**Light Controls:**	Not Required
Data Outlets:	1 per bay	**Visual Control:**	Views Desirable
Network:	Yes	**Structural Control:**	Not Required
AV Requirements:	None	**Security:**	Proximity card lock
Clocks:	Yes	**Shielding:**	Not Required

EQUIPMENT AND FURNISHINGS

Equipment:

Owner provided equipment
(1) Refrigerator
(1) -20 Freezer
(1) Centrifuge
(2) Thermal Cyclers
(1) Water Bath
(1) Incubator
(1) 5' Class II Bio-Safety Cabinet
Storage cabinets for chemicals including flammables, acids and bases.

Furnishings:

New Built-in cabinetry
(88) lf Wood base w/epoxy countertop - 30" deep
(84) lf Wood upper w/adjustable shelves - 15" deep

COPYRIGHT © 2009 CRSA

BLANK

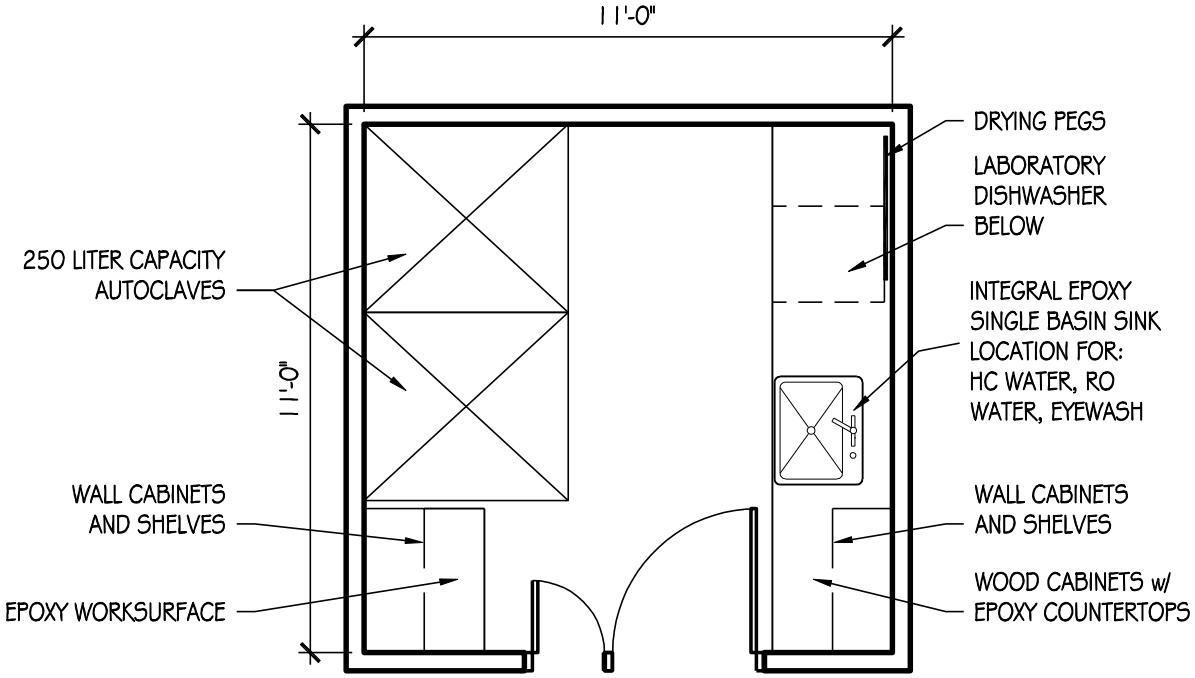

AUTOCLAVE ROOM
w/ DISHWASHER
120 SF

USU Agriculture Building

ROOM DATA SHEET DETAIL — **Animal Dairy & Veterinary Sciences**

ADVS Research Lab Support

4.5.1.1 Autoclave room — **Second Level**

SPACE INFORMATION

Room Function: Glassware cleaning and autoclaving

Adjacencies: Centralize for shared access by all ADVS lab users

Access: All lab users

Room Utilization: 7 days a week, 24 hours a day

General Notes:

Special Requirements:

Building steam for Autoclave
Canopy exhaust hood at Autoclave

ROOM SIZE AND CAPACITY

Proposed Area:	110 NSF	**Room/Space Quantity:**	1	**Total Area:**	110
Assigned Capacity:	0 Occupant(s)	**Unassigned Capacity:**	2 Guest(s)	**Total Capacity:**	2

FINISHES, DOORS, AND WINDOWS

Floor Finish:	Epoxy	**Ceiling Treatment:**	Gypsum board
Wall Finish:	Gypsum board w/ epoxy finish	**Ceiling Height:**	10'
Base Finish:	Coved	**Acoustic Treatment:**	Suppress equipment generated noise
Doors:		**Windows:**	
Type:	Single	**Natural Lighting:**	Not required
Width:	42"	**Room Skylight:**	Acceptable

Doors:

Height:	84"		
Vision Panel:	Not Required		

CASEWORK / FURNISHINGS

Wall Cabinets:	Wood - Certified	**Shelving:**	Drying Pegs
Base Cabinets:	Wood - Certified	**Drawer Units:**	Yes
Bench Top:	Epoxy Resin	**White Boards:**	No
Bench Height:	36"	**Tack Boards:**	No

PLUMBING / GASES

Sinks:	1 Large	**Air:**	No
Pure Water:	RO	**Lab Gas:**	No
HotCold Water:	Yes	**CO2:**	No
Floor Drain:	Yes	**Nitrogen:**	No
HoseBib:	No	**Vacuum:**	No
Waste:	None	**Other Gas:**	
Eyewash:	Yes	**Fire Protection:**	Lab Standard
Emerg Shower:	No		

COPYRIGHT © 2009 CRSA

USU Agriculture Building

ROOM DATA SHEET DETAIL **Animal Dairy & Veterinary Sciences**

ADVS Research Lab Support

4.5.1.1 Autoclave room **Second Level**

HVAC / ELECTRICAL

Total Air Changes:	10 ACH	**Power:**	110v + 220v
Pressure:		**Lighting:**	Direct/indirect fluorescent
Temp Requirement:	Lab Standard	**Fixture Mount:**	Recessed
Relative Humidity:	Lab Standard	**Occ. Sensors:**	Yes w/manual override
Local Exhaust:	Lab Standard	**Task Light:**	No
Air Filtration:	Lab Standard	**Em Power:**	No
CO2 Sensor:	Yes	**UPS:**	No
Other HVAC:			

COMMUNICATIONS / SPECIAL CONSIDERATIONS

Phone Outlets:	0	**Light Controls:**	Not Required
Data Outlets:	None	**Visual Control:**	Not Required
Network:	No	**Structural Control:**	Not Required
AV Requirements:	None	**Security:**	Not Required
Clocks:	No	**Shielding:**	Not Required

EQUIPMENT AND FURNISHINGS

Equipment:

New equipment
(2) Autoclaves - 250 Liter capacity
(1) Automatic Laboratory dishwasher
(1) Mega-pure water station for rinsing

Furnishings:

New Built-in cabinetry
(14) lf Wood base w/epoxy countertop - 30" deep
(6) lf Wood upper w/adjustable shelves - 15" deep
(1) 3'x4' Drying peg rack

COPYRIGHT © 2009 CRSA

BLANK

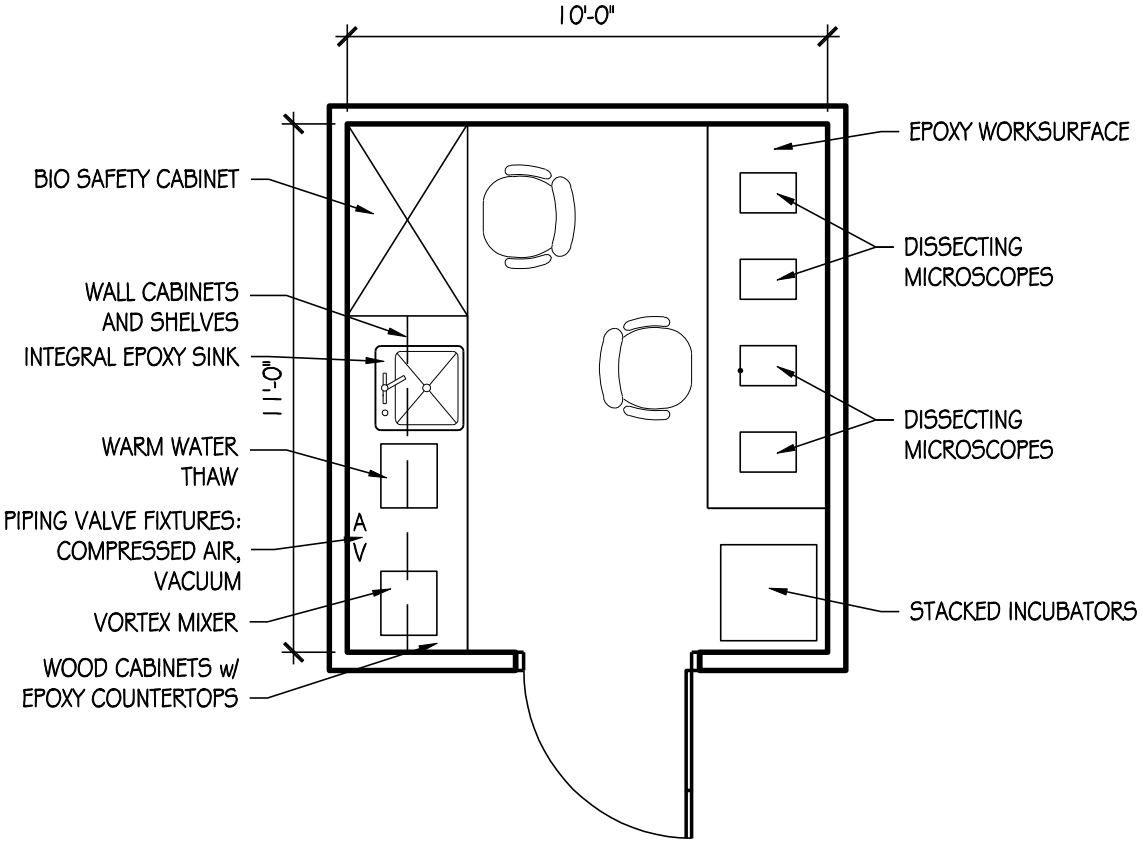

TISSUE COLLECTION LAB
110 SF

USU Agriculture Building

ROOM DATA SHEET DETAIL — **Animal Dairy & Veterinary Sciences**

ADVS Research Lab Support

4.5.1.2 Tissue Collection Lab — Second Level

SPACE INFORMATION

Room Function:

Adjacencies: Micromanipulation Lab (4.5.1.4), Microscopy Lab (4.5.1.13)

Special Requirements:

Access: Restricted - Staff & Students

Room Utilization: 7 days a week, 24 hours a day

General Notes:

ROOM SIZE AND CAPACITY

Proposed Area:	110 NSF	**Room/Space Quantity:**	1	**Total Area:**	110
Assigned Capacity:	0 Occupant(s)	**Unassigned Capacity:**	2 Guest(s)	**Total Capacity:**	2

FINISHES, DOORS, AND WINDOWS

Floor Finish:	Sheet Vinyl	**Ceiling Treatment:**	Gypsum board (painted)
Wall Finish:	Painted gypsum board w/extra insulation	**Ceiling Height:**	10'
Base Finish:	Integral Coved	**Acoustic Treatment:**	Not Required
Doors:		**Windows:**	
Type:	Single	**Natural Lighting:**	Not required
Width:	42"	**Room Skylight:**	Acceptable

Doors: Height: 84"; Vision Panel: Required

CASEWORK / FURNISHINGS

Wall Cabinets:	Wood - Certified	**Shelving:**	Yes
Base Cabinets:	Wood - Certified	**Drawer Units:**	Yes
Bench Top:	Epoxy Resin	**White Boards:**	No
Bench Height:	36"	**Tack Boards:**	No

PLUMBING / GASES

Sinks:	1 Small	**Air:**	1 per lab
Pure Water:	RO	**Lab Gas:**	@ BSC
HotCold Water:	Yes	**CO2:**	Cylinder
Floor Drain:	No	**Nitrogen:**	No
HoseBib:	No	**Vacuum:**	1 per lab
Waste:	None	**Other Gas:**	
Eyewash:	No	**Fire Protection:**	Lab Standard
Emerg Shower:	No		

COPYRIGHT © 2009 CRSA

USU Agriculture Building

ROOM DATA SHEET DETAIL **Animal Dairy & Veterinary Sciences**

ADVS Research Lab Support

4.5.1.2 Tissue Collection Lab **Second Level**

HVAC / ELECTRICAL

Total Air Changes:	10 ACH	**Power:**	110v + 220v
Pressure:	Positive	**Lighting:**	Direct/indirect fluorescent
Temp Requirement:	29°-31°C	**Fixture Mount:**	Recessed
Relative Humidity:	Lab Standard	**Occ. Sensors:**	No
Local Exhaust:	Lab Standard	**Task Light:**	Yes
Air Filtration:	Lab Standard	**Em Power:**	On select outlets
CO2 Sensor:	Yes	**UPS:**	No
Other HVAC:			

COMMUNICATIONS / SPECIAL CONSIDERATIONS

Phone Outlets:	0	**Light Controls:**	Not Required
Data Outlets:	1 per lab	**Visual Control:**	Not Required
Network:	Yes	**Structural Control:**	Not Required
AV Requirements:	None	**Security:**	Proximity card lock
Clocks:	No	**Shielding:**	Not Required

EQUIPMENT AND FURNISHINGS

Equipment:

Owner provided equipment
(1) Warm water thaw - White
(1) Vortex mixer - White
(2) Incubators (stacked) - White
(4) Dissecting microscopes - White
(5) Power supplies - White

New equipment
(1) 5' Class II Bio Safety Cabinet

Furnishings:

New Built-in cabinetry
(6) lf Wood base w/epoxy countertop - 30" deep
(6) lf Wood upper w/adjustable shelves - 15" deep
(8) lf Epoxy worksurface - 30" deep, open below

New furnishings
(2) Adjustable height lab stools w/ lumbar support

COPYRIGHT © 2009 CRSA

BLANK

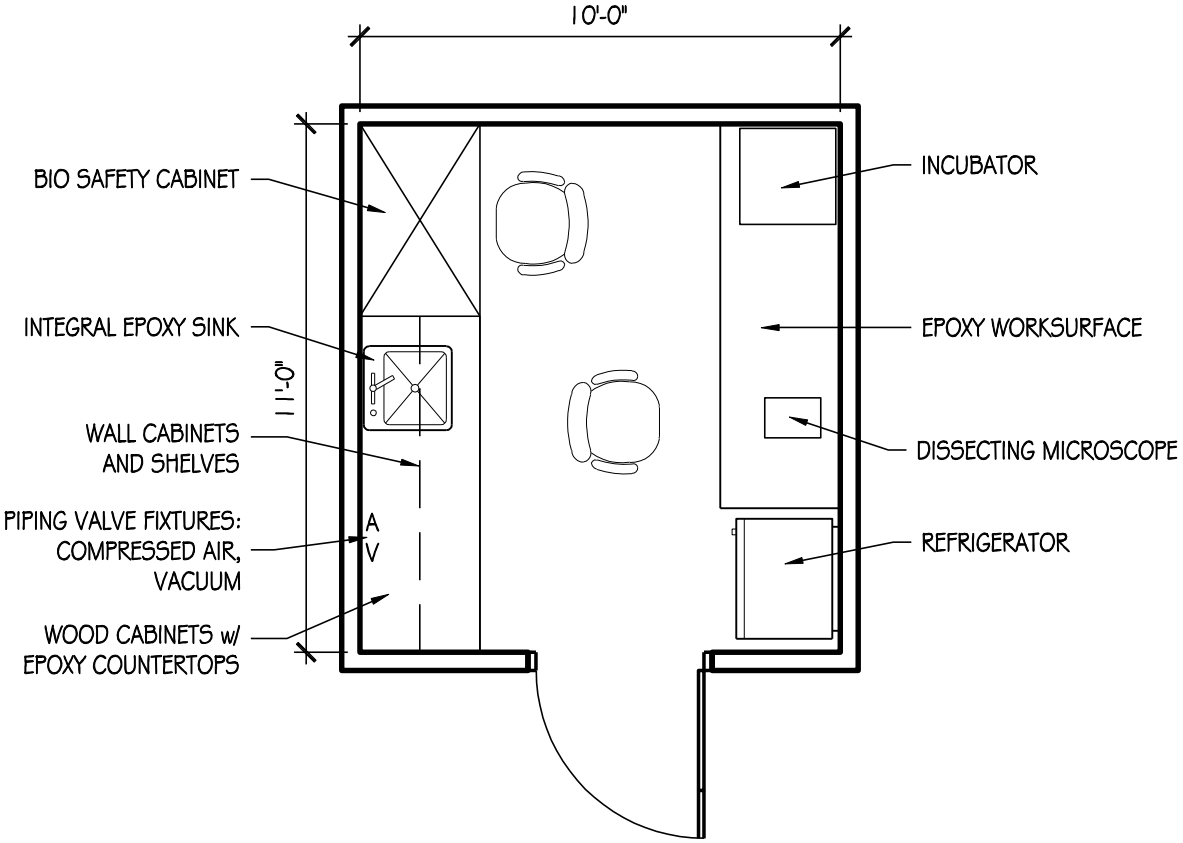

CELL CULTURE LAB
110 SF

USU Agriculture Building

ROOM DATA SHEET DETAIL — **Animal Dairy & Veterinary Sciences**

ADVS Research Lab Support

4.5.1.3 Cell Culture Lab — **Second Level**

SPACE INFORMATION

Room Function:

Adjacencies: Animal Genetics Lab (4.4.1.1)

Special Requirements:

Access: Restricted - Staff & Students

Room Utilization: 7 days a week, 24 hours a day

General Notes:

ROOM SIZE AND CAPACITY

Proposed Area:	110 NSF	**Room/Space Quantity:**	1	**Total Area:**	110
Assigned Capacity:	0 Occupant(s)	**Unassigned Capacity:**	1 Guest(s)	**Total Capacity:**	1

FINISHES, DOORS, AND WINDOWS

Floor Finish:	Sheet Vinyl	**Ceiling Treatment:**	Gypsum board (painted)
Wall Finish:	Painted gypsum board w/extra insulation	**Ceiling Height:**	10'
Base Finish:	Integral Coved	**Acoustic Treatment:**	Not Required
Doors:		**Windows:**	
Type:	Single	**Natural Lighting:**	Not required
Width:	42"	**Room Skylight:**	Acceptable

Doors: Height: 84"; Vision Panel: Required

CASEWORK / FURNISHINGS

Wall Cabinets:	Wood - Certified	**Shelving:**	Yes
Base Cabinets:	Wood - Certified	**Drawer Units:**	Yes
Bench Top:	Epoxy Resin	**White Boards:**	No
Bench Height:	36"	**Tack Boards:**	No

PLUMBING / GASES

Sinks:	1 Small	**Air:**	1 per lab
Pure Water:	RO	**Lab Gas:**	No
HotCold Water:	Yes	**CO2:**	Cylinder
Floor Drain:	No	**Nitrogen:**	No
HoseBib:	No	**Vacuum:**	1 per lab
Waste:	None	**Other Gas:**	
Eyewash:	No	**Fire Protection:**	Lab Standard
Emerg Shower:	No		

COPYRIGHT © 2009 CRSA

HVAC / ELECTRICAL

Total Air Changes:	10 ACH	**Power:**	110v + 220v
Pressure:	Positive	**Lighting:**	Direct/indirect fluorescent
Temp Requirement:	29°-31°C	**Fixture Mount:**	Recessed
Relative Humidity:	Lab Standard	**Occ. Sensors:**	No
Local Exhaust:	Lab Standard	**Task Light:**	Yes
Air Filtration:	Lab Standard	**Em Power:**	On select outlets
CO2 Sensor:	Yes	**UPS:**	No
Other HVAC:			

COMMUNICATIONS / SPECIAL CONSIDERATIONS

Phone Outlets:	0	**Light Controls:**	Not Required
Data Outlets:	1 per lab	**Visual Control:**	Not Required
Network:	Yes	**Structural Control:**	Not Required
AV Requirements:	None	**Security:**	Proximity card lock
Clocks:	No	**Shielding:**	Not Required

EQUIPMENT AND FURNISHINGS

Equipment:

Owner provided equipment
(1) Gravity convection incubator - Cockett
(1) Microscope - Cockett
(1) Kelvinator refrigerator - Cockett
(1) Incubator - Cockett

New equipment
(1) 5' Class II Bio Safety Cabinet

Furnishings:

New Built-in cabinetry
(6) lf Wood base w/epoxy countertop - 30" deep
(6) lf Wood upper w/adjustable shelves - 15" deep
(8) lf Epoxy worksurface - 30" deep, open below

New furnishings
(2) Adjustable height lab stools w/ lumbar support

COPYRIGHT © 2009 CRSA

BLANK

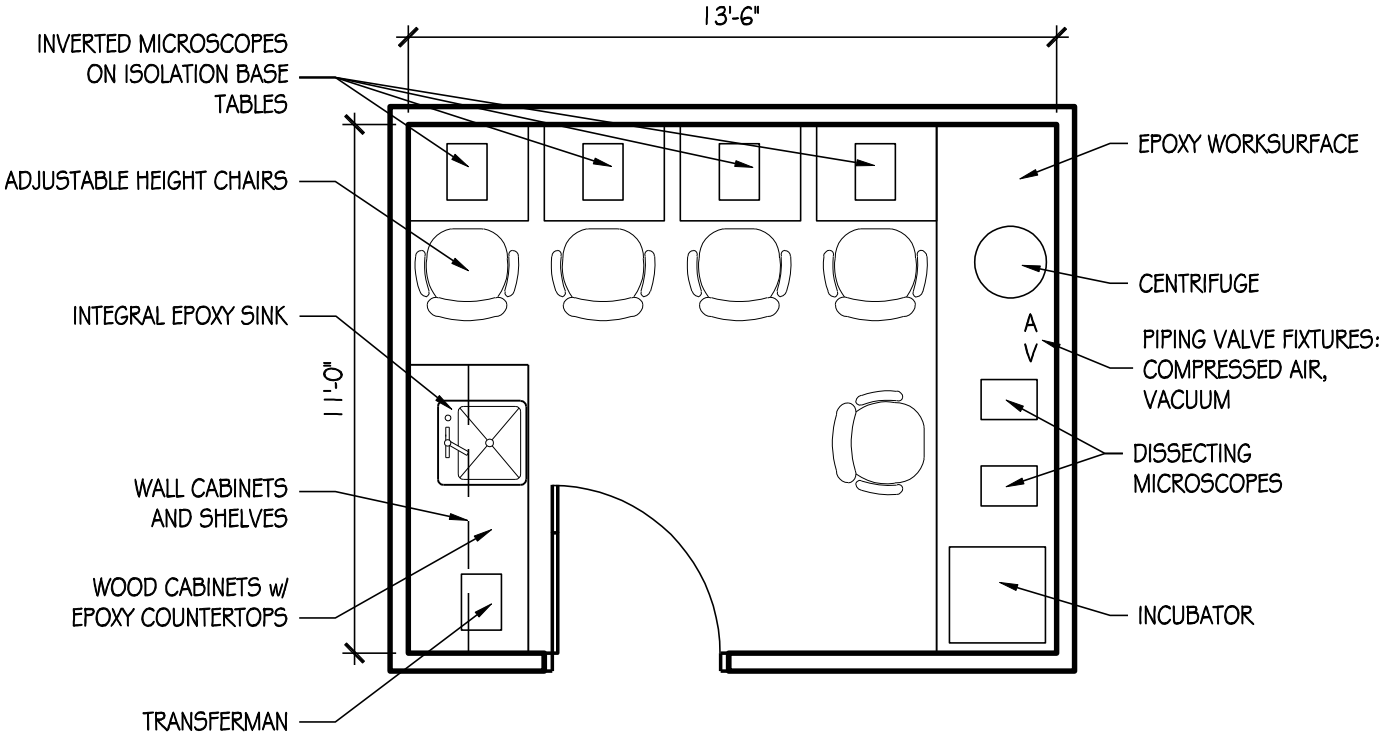

MICROMANIPULATION LAB
150 SF

USU Agriculture Building

ROOM DATA SHEET DETAIL — **Animal Dairy & Veterinary Sciences**

ADVS Research Lab Support

4.5.1.4 Micromanipulation Lab — Second Level

SPACE INFORMATION

Room Function:

Adjacencies: Tissue Collection Lab (4.5.1.2), Cell Culture Lab (4.5.1.5)

Special Requirements:

Access: Restricted - Staff & Students

Room Utilization: 7 days a week, 24 hours a day

General Notes:

ROOM SIZE AND CAPACITY

Proposed Area:	150 NSF	**Room/Space Quantity:**	1	**Total Area:**	150
Assigned Capacity:	0 Occupant(s)	**Unassigned Capacity:**	4 Guest(s)	**Total Capacity:**	4

FINISHES, DOORS, AND WINDOWS

Floor Finish:	Sheet Vinyl	**Ceiling Treatment:**	Gypsum board (painted)
Wall Finish:	Painted gypsum board w/extra insulation	**Ceiling Height:**	10'
Base Finish:	Integral Coved	**Acoustic Treatment:**	Not Required
Doors:		**Windows:**	
Type:	Single	**Natural Lighting:**	Not required
Width:	42"	**Room Skylight:**	Not Acceptable

Doors:

Height:	84"		
Vision Panel:	Required		

CASEWORK / FURNISHINGS

Wall Cabinets:	Wood - Certified	**Shelving:**	Yes
Base Cabinets:	Wood - Certified	**Drawer Units:**	Yes
Bench Top:	Epoxy Resin	**White Boards:**	No
Bench Height:	36"	**Tack Boards:**	No

PLUMBING / GASES

Sinks:	1 Small	**Air:**	1 per lab
Pure Water:	None	**Lab Gas:**	No
HotCold Water:	Yes	**CO2:**	No
Floor Drain:	No	**Nitrogen:**	No
HoseBib:	No	**Vacuum:**	1 per lab
Waste:	None	**Other Gas:**	
Eyewash:	No	**Fire Protection:**	Lab Standard
Emerg Shower:	No		

COPYRIGHT © 2009 CRSA

HVAC / ELECTRICAL

Total Air Changes:	10 ACH	**Power:**	110v + 220v
Pressure:	Negative	**Lighting:**	Direct/indirect fluorescent
Temp Requirement:	29°-31°C	**Fixture Mount:**	Recessed
Relative Humidity:	Lab Standard	**Occ. Sensors:**	No
Local Exhaust:	Lab Standard	**Task Light:**	Yes
Air Filtration:	Lab Standard	**Em Power:**	On select outlets
CO2 Sensor:	Yes	**UPS:**	No
Other HVAC:			

COMMUNICATIONS / SPECIAL CONSIDERATIONS

Phone Outlets:	0	**Light Controls:**	Not Required
Data Outlets:	1 per lab	**Visual Control:**	Not Required
Network:	Yes	**Structural Control:**	Isolation bases as required
AV Requirements:	None	**Security:**	Proximity card lock
Clocks:	No	**Shielding:**	Not Required

EQUIPMENT AND FURNISHINGS

Equipment:

Owner provided items
(1) Centrifuge - White
(1) Incubator - White
(1) Transferman - White
(2) Nikon Diaphot inverted Microscopes - White
Require isolation bases - by owner
(2) Nikon inverted microscopes - Rickords
Require isolation bases - by owner
(2) Stereomicroscopes - White

Furnishings:

New Built-in cabinetry
(6) lf Wood base w/epoxy countertop - 30" deep
(6) lf Wood upper w/adjustable shelves - 15" deep
(11) lf Epoxy worksurface - 30" deep, open below

New furnishings
(4) Adjustable height task chairs w/ lumbar support
(1) Adjustable height lab stools w/ lumbar support

COPYRIGHT © 2009 CRSA

BLANK

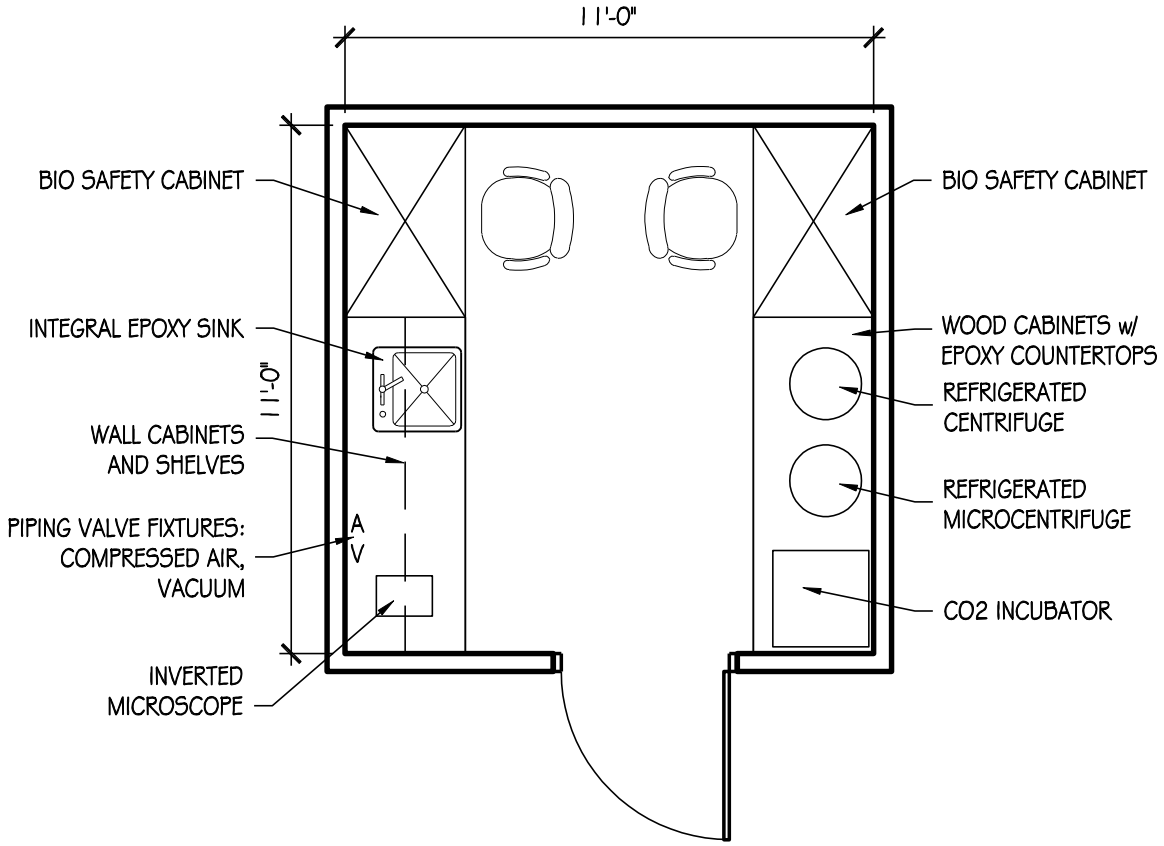

CELL CULTURE ROOM
120 SF

USU Agriculture Building

ROOM DATA SHEET DETAIL — **Animal Dairy & Veterinary Sciences**

ADVS Research Lab Support

4.5.1.5 Cell Culture Lab — **Second Level**

SPACE INFORMATION

Room Function:

Adjacencies: Microscopy Lab (4.5.1.13)

Special Requirements:

Access: Restricted - Staff & Students

Room Utilization: 7 days a week, 24 hours a day

General Notes:

ROOM SIZE AND CAPACITY

Proposed Area:	120 NSF	**Room/Space Quantity:**	1	**Total Area:**	120
Assigned Capacity:	0 Occupant(s)	**Unassigned Capacity:**	2 Guest(s)	**Total Capacity:**	2

FINISHES, DOORS, AND WINDOWS

Floor Finish:	Sheet Vinyl	**Ceiling Treatment:**	Gypsum board (painted)
Wall Finish:	Painted gypsum board w/extra insulation	**Ceiling Height:**	10'
Base Finish:	Integral Coved	**Acoustic Treatment:**	Not Required
Doors:		**Windows:**	
Type:	Single	**Natural Lighting:**	None
Width:	42"	**Room Skylight:**	Not Acceptable

Doors:

Height:	84"		
Vision Panel:	Not Required		

CASEWORK / FURNISHINGS

Wall Cabinets:	Wood - Certified	**Shelving:**	Yes
Base Cabinets:	Wood - Certified	**Drawer Units:**	Yes
Bench Top:	Epoxy Resin	**White Boards:**	No
Bench Height:	36"	**Tack Boards:**	No

PLUMBING / GASES

Sinks:	1 Small	**Air:**	1 per lab
Pure Water:	RO	**Lab Gas:**	@ BSC
HotCold Water:	Yes	**CO2:**	No
Floor Drain:	No	**Nitrogen:**	No
HoseBib:	No	**Vacuum:**	1 per lab
Waste:	None	**Other Gas:**	
Eyewash:	No	**Fire Protection:**	Lab Standard
Emerg Shower:	No		

COPYRIGHT © 2009 CRSA

USU Agriculture Building

ROOM DATA SHEET DETAIL **Animal Dairy & Veterinary Sciences**

ADVS Research Lab Support

4.5.1.5 Cell Culture Lab **Second Level**

HVAC / ELECTRICAL

Total Air Changes:	10 ACH	**Power:**	110v
Pressure:	Positive	**Lighting:**	Direct/indirect fluorescent
Temp Requirement:	29°-31°C	**Fixture Mount:**	Recessed
Relative Humidity:	Lab Standard	**Occ. Sensors:**	No
Local Exhaust:	Lab Standard	**Task Light:**	Yes
Air Filtration:	Lab Standard	**Em Power:**	On select outlets
CO2 Sensor:	No	**UPS:**	No
Other HVAC:			

COMMUNICATIONS / SPECIAL CONSIDERATIONS

Phone Outlets:	0	**Light Controls:**	Not Required
Data Outlets:	1 per lab	**Visual Control:**	Not Required
Network:	Yes	**Structural Control:**	Not Required
AV Requirements:	None	**Security:**	Proximity card lock
Clocks:	No	**Shielding:**	Not Required

EQUIPMENT AND FURNISHINGS

Equipment:

Owner provided items
(1) CO2 Incubator - Rickords
(1) Inverted Microscope
(1) Refrigerated Centrifuge
(1) Thermo microcentrifuge

New equipment
(2) 5' Class II A/B3 Bio Safety Cabinets

Furnishings:

New Built-in cabinetry
(12) lf Wood base w/epoxy countertop - 30" deep
(6) lf Wood upper w/adjustable shelves - 15" deep

New furnishings
(2) Adjustable height lab stools w/ lumbar support

COPYRIGHT © 2009 CRSA

BLANK

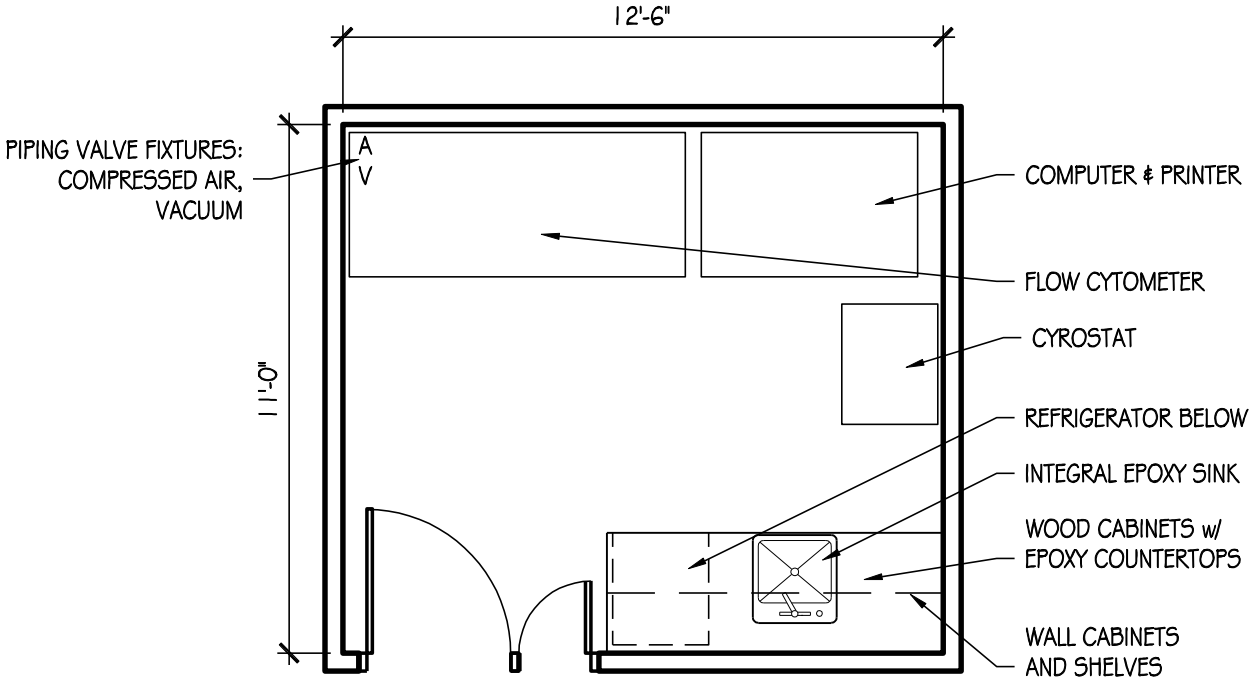

FLOW CYTOMETRY LAB
140 SF

USU Agriculture Building

ROOM DATA SHEET DETAIL — **Animal Dairy & Veterinary Sciences**

ADVS Research Lab Support

4.5.1.6 Flow Cytometry Lab — Second Level

SPACE INFORMATION

Room Function:

Adjacencies: Reproductive Immunology Lab (4.4.1.4)

Access: Restricted - Staff & Students

Room Utilization: 7 days a week, 24 hours a day

General Notes:

Special Requirements:

Clean (<5 ppm) compressed air @95psi. Max consumption of 0.52 m3/hr. Cytometer requires (2) 115v, 20 amp dedicated circuits.

ROOM SIZE AND CAPACITY

Proposed Area:	140 NSF	**Room/Space Quantity:**	1	**Total Area:**	140
Assigned Capacity:	0 Occupant(s)	**Unassigned Capacity:**	4 Guest(s)	**Total Capacity:**	4

FINISHES, DOORS, AND WINDOWS

Floor Finish:	Vinyl Composite Tile (VCT)	**Ceiling Treatment:**	Suspended vinyl-faced lay-in panels
Wall Finish:	Gypsum board (painted)	**Ceiling Height:**	10'
Base Finish:	Rubber	**Acoustic Treatment:**	Not Required
Doors:		**Windows:**	
Type:	Unequal	**Natural Lighting:**	Not required
Width:	36" + 18" Expan	**Room Skylight:**	Not Acceptable

Doors: Height: 84"; Vision Panel: Required

CASEWORK / FURNISHINGS

Wall Cabinets:	None	**Shelving:**	Yes
Base Cabinets:	None	**Drawer Units:**	No
Bench Top:	Epoxy Resin	**White Boards:**	No
Bench Height:	36"	**Tack Boards:**	No

PLUMBING / GASES

Sinks:	1 Large	**Air:**	1 per lab
Pure Water:	None	**Lab Gas:**	No
HotCold Water:	Yes	**CO2:**	No
Floor Drain:	No	**Nitrogen:**	No
HoseBib:	No	**Vacuum:**	1 per lab
Waste:	None	**Other Gas:**	
Eyewash:	No	**Fire Protection:**	No Water
Emerg Shower:	No		

COPYRIGHT © 2009 CRSA

USU Agriculture Building

ROOM DATA SHEET DETAIL **Animal Dairy & Veterinary Sciences**

ADVS Research Lab Support

4.5.1.6 Flow Cytometry Lab **Second Level**

HVAC / ELECTRICAL

Total Air Changes:	10 ACH	**Power:**	110v
Pressure:	Negative	**Lighting:**	Downlights-incandescent
Temp Requirement:	Lab Standard	**Fixture Mount:**	Recessed
Relative Humidity:	Lab Standard	**Occ. Sensors:**	No
Local Exhaust:	Lab Standard	**Task Light:**	No
Air Filtration:	Lab Standard	**Em Power:**	Yes
CO2 Sensor:	Yes	**UPS:**	No
Other HVAC:			

COMMUNICATIONS / SPECIAL CONSIDERATIONS

Phone Outlets:	0	**Light Controls:**	On Dimmer
Data Outlets:	1 per lab	**Visual Control:**	Not Required
Network:	Yes	**Structural Control:**	Not Required
AV Requirements:	None	**Security:**	Proximity card lock
Clocks:	No	**Shielding:**	Not Required

EQUIPMENT AND FURNISHINGS

Equipment:

Owner provided equipment
(1) BD Biosciences SORP FACSAria II Flow Cytometer
(1) Richard-Allen HM 550 Cyrostat
(1) Small Refrigerator - under bench
(1) Computer & printer

Furnishings:

New Built-in cabinetry
(6) lf Wood base w/epoxy countertop - 30" deep
(6) lf Wood upper w/adjustable shelves - 15" deep

COPYRIGHT © 2009 CRSA

BLANK

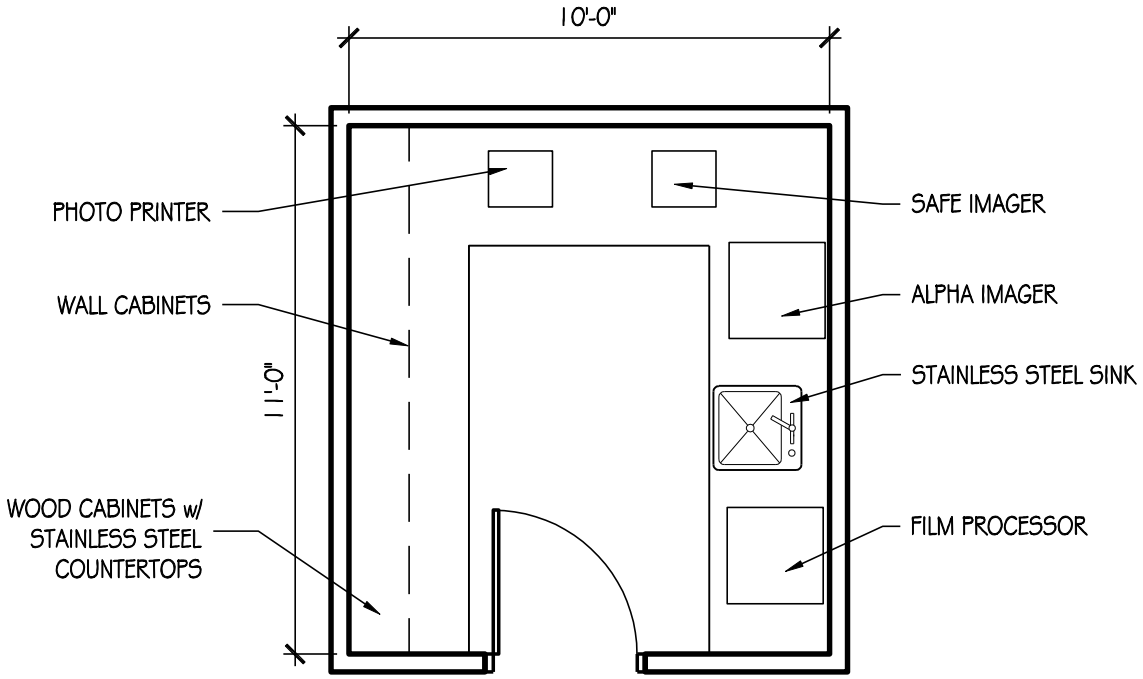

DARK ROOM
110 SF

USU Agriculture Building

ROOM DATA SHEET DETAIL — **Animal Dairy & Veterinary Sciences**

ADVS Research Lab Support

4.5.1.7 Dark room — **Second Level**

SPACE INFORMATION

Room Function: Developing film

Adjacencies: Animal Genetics Lab (4.5.1.7)

Access: All lab users

Room Utilization: 7 days a week, 24 hours a day

General Notes:

Special Requirements:

Can be completely darkened, red light in-use indicator outside door

ROOM SIZE AND CAPACITY

Proposed Area:	110 NSF	**Room/Space Quantity:**	1	**Total Area:**	110
Assigned Capacity:	0 Occupant(s)	**Unassigned Capacity:**	2 Guest(s)	**Total Capacity:**	2

FINISHES, DOORS, AND WINDOWS

Floor Finish: Vinyl Composite Tile (VCT)

Wall Finish: Gypsum board (painted)

Base Finish: Rubber

Doors:

Type:	Single	**Height:**	84"
Width:	36"	**Vision Panel:**	Not Required

Ceiling Treatment: Suspended vinyl-faced lay-in panels

Ceiling Height: 10'

Acoustic Treatment: Not Required

Windows:

Natural Lighting:	None
Room Skylight:	Not Acceptable

CASEWORK / FURNISHINGS

Wall Cabinets:	Wood - Certified	**Shelving:**	No
Base Cabinets:	Wood - Certified	**Drawer Units:**	Yes
Bench Top:	Stainless Steel	**White Boards:**	No
Bench Height:	36"	**Tack Boards:**	No

PLUMBING / GASES

Sinks:	1 Large	**Air:**	No
Pure Water:	None	**Lab Gas:**	No
HotCold Water:	Yes	**CO2:**	No
Floor Drain:	No	**Nitrogen:**	No
HoseBib:	No	**Vacuum:**	No
Waste:	None	**Other Gas:**	
Eyewash:	Yes	**Fire Protection:**	Lab Standard
Emerg Shower:	No		

COPYRIGHT © 2009 CRSA

USU Agriculture Building

ROOM DATA SHEET DETAIL **Animal Dairy & Veterinary Sciences**

ADVS Research Lab Support

4.5.1.7 Dark room **Second Level**

HVAC / ELECTRICAL

Total Air Changes:	10 ACH	**Power:**	110v
Pressure:		**Lighting:**	Direct/indirect fluorescent
Temp Requirement:	Lab Standard	**Fixture Mount:**	Recessed
Relative Humidity:	Lab Standard	**Occ. Sensors:**	No
Local Exhaust:	Lab Standard	**Task Light:**	Yes
Air Filtration:	Lab Standard	**Em Power:**	No
CO2 Sensor:	Yes	**UPS:**	No
Other HVAC:			

COMMUNICATIONS / SPECIAL CONSIDERATIONS

Phone Outlets:	0	**Light Controls:**	Can be completely darkened
Data Outlets:	1 per lab	**Visual Control:**	Not Required
Network:	No	**Structural Control:**	Not Required
AV Requirements:	None	**Security:**	Keyed lock at entrance doors
Clocks:	No	**Shielding:**	Not Required

EQUIPMENT AND FURNISHINGS

Equipment:

Owner provided equipment
(1) Photo printer - Cockett
(1) Film processor (developer) - Cockett
(1) Alpha imager - Cockett
(1) Invitrogen safe imager - Rickords

Furnishings:

New Built-in cabinetry
(26) lf Wood base w/epoxy countertop - 30" deep
(11) lf Wood upper w/adjustable shelves - 15" deep

COPYRIGHT © 2009 CRSA

BLANK

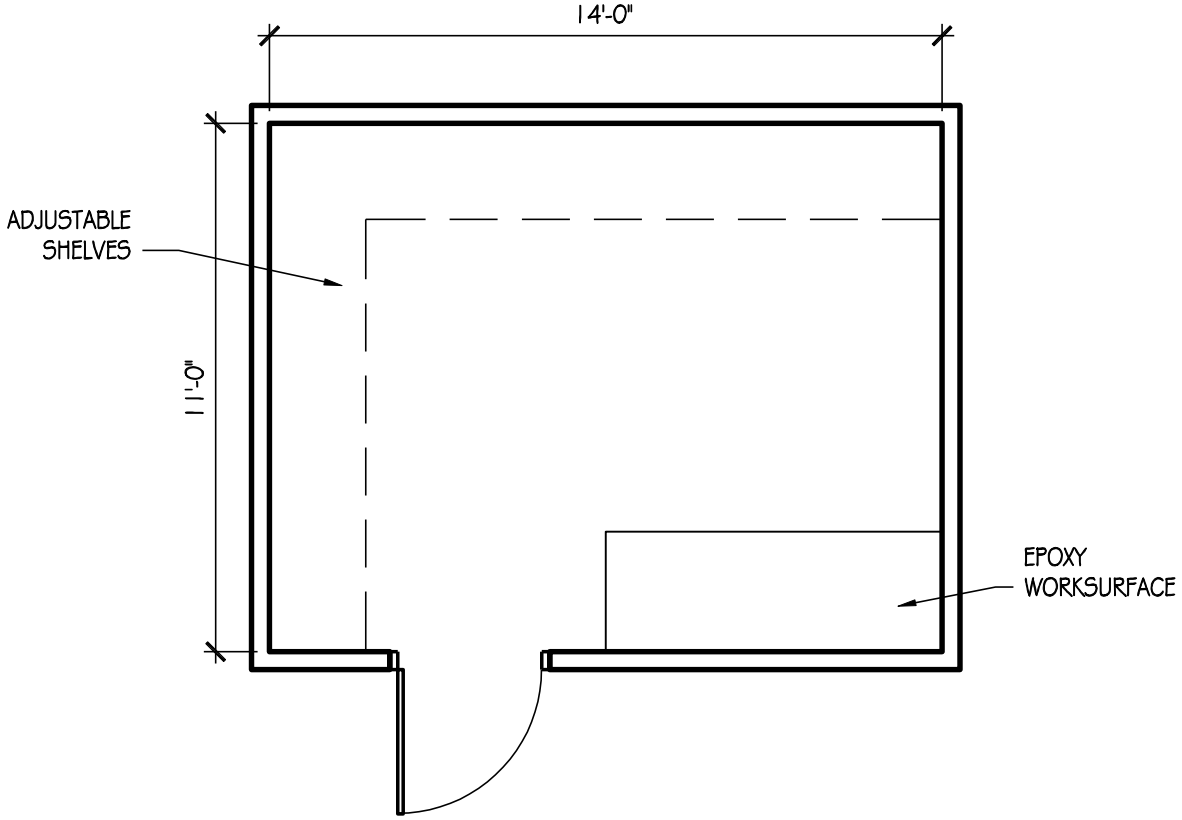

WALK-IN COLD LAB
150 SF

USU Agriculture Building

ROOM DATA SHEET DETAIL — **Animal Dairy & Veterinary Sciences**

ADVS Research Lab Support

4.5.1.8 Cold Lab / Walk-in Cold Storage — Second Level

SPACE INFORMATION

Room Function: Cold environment experiments, cold storage

Adjacencies: Centralize for shared access by all ADVS lab users

Special Requirements:

Access: All lab users

Room Utilization: 7 days a week, 24 hours a day

General Notes: May be a prefabricated unit to insert into the building

ROOM SIZE AND CAPACITY

Proposed Area:	150 NSF	**Room/Space Quantity:**	1	**Total Area:**	150
Assigned Capacity:	0 Occupant(s)	**Unassigned Capacity:**	6 Guest(s)	**Total Capacity:**	6

FINISHES, DOORS, AND WINDOWS

Floor Finish:		**Ceiling Treatment:**	Insulated aluminum panels
Wall Finish:	Insulated aluminum panels	**Ceiling Height:**	8' minimum
Base Finish:		**Acoustic Treatment:**	
Doors:		**Windows:**	
Type:	Single	**Natural Lighting:**	None
Height:	80"	**Room Skylight:**	Not Acceptable
Width:	36"	**Vision Panel:**	Not Required

CASEWORK / FURNISHINGS

Wall Cabinets:	None	**Shelving:**	Yes
Base Cabinets:	None	**Drawer Units:**	
Bench Top:	Epoxy Resin	**White Boards:**	No
Bench Height:	36"	**Tack Boards:**	No

PLUMBING / GASES

Sinks:	None	**Air:**	No
Pure Water:	None	**Lab Gas:**	No
HotCold Water:	No	**CO2:**	No
Floor Drain:	No	**Nitrogen:**	No
HoseBib:	No	**Vacuum:**	No
Waste:	None	**Other Gas:**	
Eyewash:	No	**Fire Protection:**	n/a
Emerg Shower:	No		

COPYRIGHT © 2009 CRSA

USU Agriculture Building

ROOM DATA SHEET DETAIL **Animal Dairy & Veterinary Sciences**

ADVS Research Lab Support

4.5.1.8 Cold Lab / Walk-in Cold Storage **Second Level**

HVAC / ELECTRICAL

Total Air Changes:	N/A	**Power:**	110v
Pressure:		**Lighting:**	Direct fluorescent
Temp Requirement:	5° C	**Fixture Mount:**	Surface
Relative Humidity:	Lab Standard	**Occ. Sensors:**	No
Local Exhaust:	Standard	**Task Light:**	No
Air Filtration:	Standard	**Em Power:**	Yes
CO2 Sensor:	No	**UPS:**	No
Other HVAC:			

COMMUNICATIONS / SPECIAL CONSIDERATIONS

Phone Outlets:	0	**Light Controls:**	Not Required
Data Outlets:	None	**Visual Control:**	Not Required
Network:	No	**Structural Control:**	Not Required
AV Requirements:	None	**Security:**	Keyed lock at entrance doors
Clocks:	No	**Shielding:**	Not Required

EQUIPMENT AND FURNISHINGS

Equipment:

Furnishings:

New Built-in cabinetry
(8) lf Epoxy worksurface - 30" deep, open below

(23) lf Adjustable shelves, full wall height - 24" deep

COPYRIGHT © 2009 CRSA

BLANK

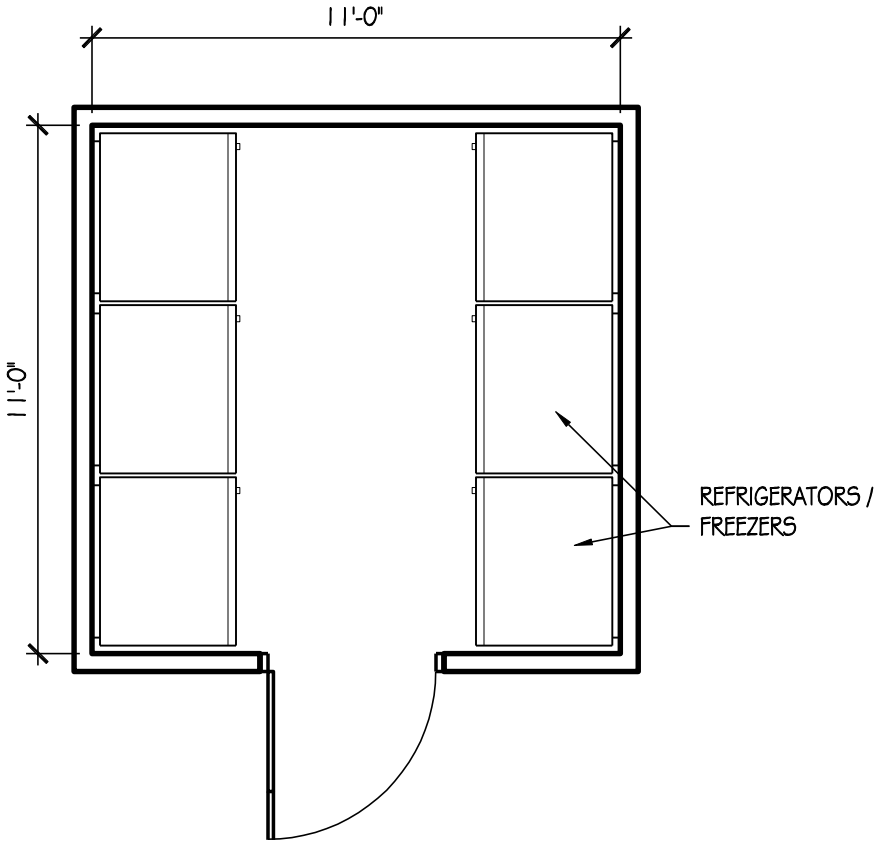

REFRIGERATOR /
FREEZER ROOM
120 SF

USU Agriculture Building

ROOM DATA SHEET DETAIL — **Animal Dairy & Veterinary Sciences**

ADVS Research Lab Support

4.5.1.9 Refrigerator / Freezer room — **Second Level**

SPACE INFORMATION

Room Function: Infrequent access specimen and sample storage

Adjacencies: Centralize for shared access by all ADVS lab users

Special Requirements:
Centralized monitoring
Heat exhaust

Access: All lab users

Room Utilization: 7 days a week, 24 hours a day

General Notes:

ROOM SIZE AND CAPACITY

Proposed Area:	120 NSF	**Room/Space Quantity:**	2	**Total Area:**	240
Assigned Capacity:	0 Occupant(s)	**Unassigned Capacity:**	2 Guest(s)	**Total Capacity:**	2

FINISHES, DOORS, AND WINDOWS

Floor Finish:	Vinyl Composite Tile (VCT)	**Ceiling Treatment:**	Suspended acoustical lay-in tiles
Wall Finish:	Gypsum board (painted)	**Ceiling Height:**	10'
Base Finish:	Rubber	**Acoustic Treatment:**	Suppress equipment generated noise
Doors:		**Windows:**	
Type:	Single	**Natural Lighting:**	None
Width:	42"	**Room Skylight:**	Acceptable

Height:	84"		
Vision Panel:	Not Required		

CASEWORK / FURNISHINGS

Wall Cabinets:	None	**Shelving:**	No
Base Cabinets:	None	**Drawer Units:**	No
Bench Top:	Plastic Laminate	**White Boards:**	No
Bench Height:	36"	**Tack Boards:**	No

PLUMBING / GASES

Sinks:	None	**Air:**	No
Pure Water:	None	**Lab Gas:**	No
HotCold Water:	No	**CO2:**	No
Floor Drain:	No	**Nitrogen:**	No
HoseBib:	No	**Vacuum:**	No
Waste:	None	**Other Gas:**	
Eyewash:	No	**Fire Protection:**	Lab Standard
Emerg Shower:	No		

COPYRIGHT © 2009 CRSA

USU Agriculture Building

ROOM DATA SHEET DETAIL **Animal Dairy & Veterinary Sciences**

ADVS Research Lab Support

4.5.1.9 Refrigerator / Freezer room **Second Level**

HVAC / ELECTRICAL

Total Air Changes:	10 ACH	**Power:**	110v + 220v
Pressure:		**Lighting:**	Direct/indirect fluorescent
Temp Requirement:	Standard	**Fixture Mount:**	Recessed
Relative Humidity:	Standard	**Occ. Sensors:**	Yes w/manual override
Local Exhaust:	Standard	**Task Light:**	No
Air Filtration:	Standard	**Em Power:**	Yes
CO2 Sensor:	No	**UPS:**	No
Other HVAC:			

COMMUNICATIONS / SPECIAL CONSIDERATIONS

Phone Outlets:	0	**Light Controls:**	Not Required
Data Outlets:	None	**Visual Control:**	Not Required
Network:	No	**Structural Control:**	Not Required
AV Requirements:	None	**Security:**	Not Required
Clocks:	No	**Shielding:**	Not Required

EQUIPMENT AND FURNISHINGS

Equipment:

Owner provided equipment
(3) Amana freezers - White
(1) Refrigerator - White
(1) -20 Freezer - Davies
(1) -80 Freezer - Davies
(1) Refrigerator - Rickords
(1) -80 Freezer - Rickords
(1) -20 Freezer - Rickords
(1) -80 Freezer - Cockett

Furnishings:

COPYRIGHT © 2009 CRSA

BLANK

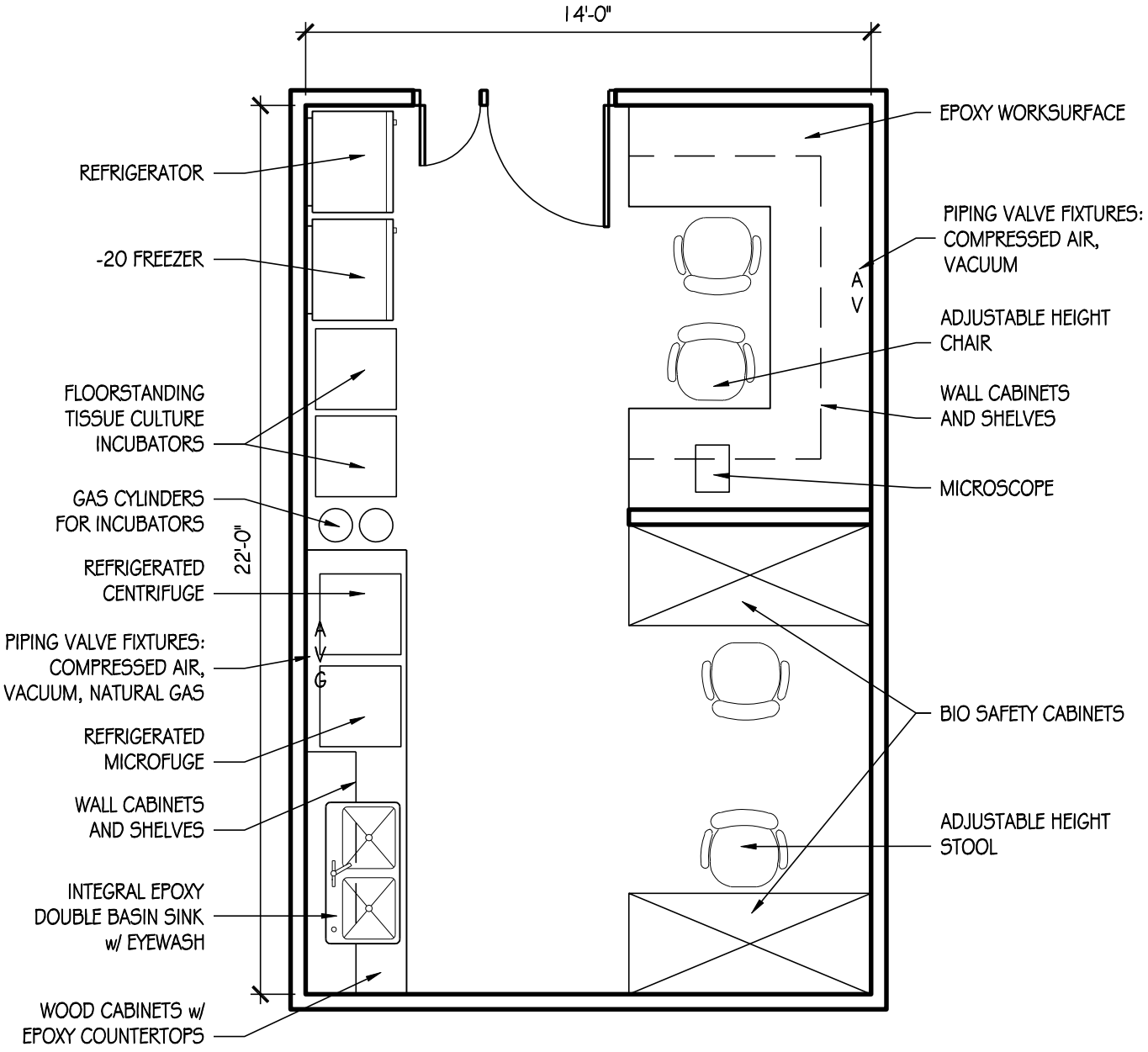

BSL2 LAB
300 SF

USU Agriculture Building

ROOM DATA SHEET DETAIL — **Animal Dairy & Veterinary Sciences**

ADVS Research Lab Support

4.5.1.10 BSL2 Lab — **Second Level**

SPACE INFORMATION

Room Function: Controlled biological experiments and manipulations

Adjacencies: Reproduction Lab (4.4.1.2), Reproductive Immunology Lab (4.4.1.4)

Special Requirements:

Access: All lab users

Room Utilization: 7 days a week, 24 hours a day

General Notes:

ROOM SIZE AND CAPACITY

Proposed Area:	300 NSF	**Room/Space Quantity:**	1	**Total Area:**	300
Assigned Capacity:	0 Occupant(s)	**Unassigned Capacity:**	6 Guest(s)	**Total Capacity:**	6

FINISHES, DOORS, AND WINDOWS

Floor Finish:	Vinyl Composite Tile (VCT)	**Ceiling Treatment:**	Suspended vinyl-faced lay-in panels
Wall Finish:	Gypsum board (painted)	**Ceiling Height:**	10'
Base Finish:	Rubber	**Acoustic Treatment:**	Not Required
Doors:		**Windows:**	
Type:	Unequal	**Natural Lighting:**	Not required
Width:	36" + 18" Expan	**Room Skylight:**	Not Acceptable

Height: 84"

Vision Panel: Required

CASEWORK / FURNISHINGS

Wall Cabinets:	Wood - Certified	**Shelving:**	Yes
Base Cabinets:	Wood - Certified	**Drawer Units:**	Yes
Bench Top:	Epoxy Resin	**White Boards:**	No
Bench Height:	36"	**Tack Boards:**	No

PLUMBING / GASES

Sinks:	1 Large two basin	**Air:**	1 per bench
Pure Water:	RO	**Lab Gas:**	1 per lab
HotCold Water:	Yes	**CO2:**	Cylinder
Floor Drain:	No	**Nitrogen:**	Cylinder
HoseBib:	No	**Vacuum:**	1 per bench
Waste:	None	**Other Gas:**	
Eyewash:	Yes	**Fire Protection:**	Lab Standard
Emerg Shower:	No		

COPYRIGHT © 2009 CRSA

USU Agriculture Building

ROOM DATA SHEET DETAIL **Animal Dairy & Veterinary Sciences**

ADVS Research Lab Support

4.5.1.10 BSL2 Lab **Second Level**

HVAC / ELECTRICAL

Total Air Changes:	10 ACH	**Power:**	110v + 220v
Pressure:	Negative	**Lighting:**	Direct/indirect fluorescent
Temp Requirement:	Lab Standard	**Fixture Mount:**	Recessed
Relative Humidity:	Lab Standard	**Occ. Sensors:**	No
Local Exhaust:	Lab Standard	**Task Light:**	Yes
Air Filtration:	Lab Standard	**Em Power:**	Yes
CO2 Sensor:	Yes	**UPS:**	No
Other HVAC:			

COMMUNICATIONS / SPECIAL CONSIDERATIONS

Phone Outlets:	1 per lab	**Light Controls:**	Not Required
Data Outlets:	1 per lab	**Visual Control:**	Not Required
Network:	Yes	**Structural Control:**	Isolation bases as required
AV Requirements:	None	**Security:**	Proximity card lock
Clocks:	Yes	**Shielding:**	Not Required

EQUIPMENT AND FURNISHINGS

Equipment:

Owner provided equipment
(2) Tissue culture incubators (two double chamber, stacked floor standing CO2 incubators)
(1) Refrigerated centrifuge (Eppendorf 5810R or equivalent)
(1) Refrigerated microfuge (Eppendorf 5415R or equivalent)
(1) Refrigerator
(1) -20 Freezer
(1) Inverted microscope (Olympus CKX41 or equivalent)

New equipment
(2) 6' Class II Bio Safety cabinets

Furnishings:

New Built-in cabinetry
(30) lf Wood base w/epoxy countertop - 30" deep
(6) lf Wood upper w/adjustable shelves - 15" deep

New furnishings
(4) Adjustable height labstools w/ lumbar support

COPYRIGHT © 2009 CRSA

BLANK

GENOMICS / PROTEOMICS LAB
600 SF

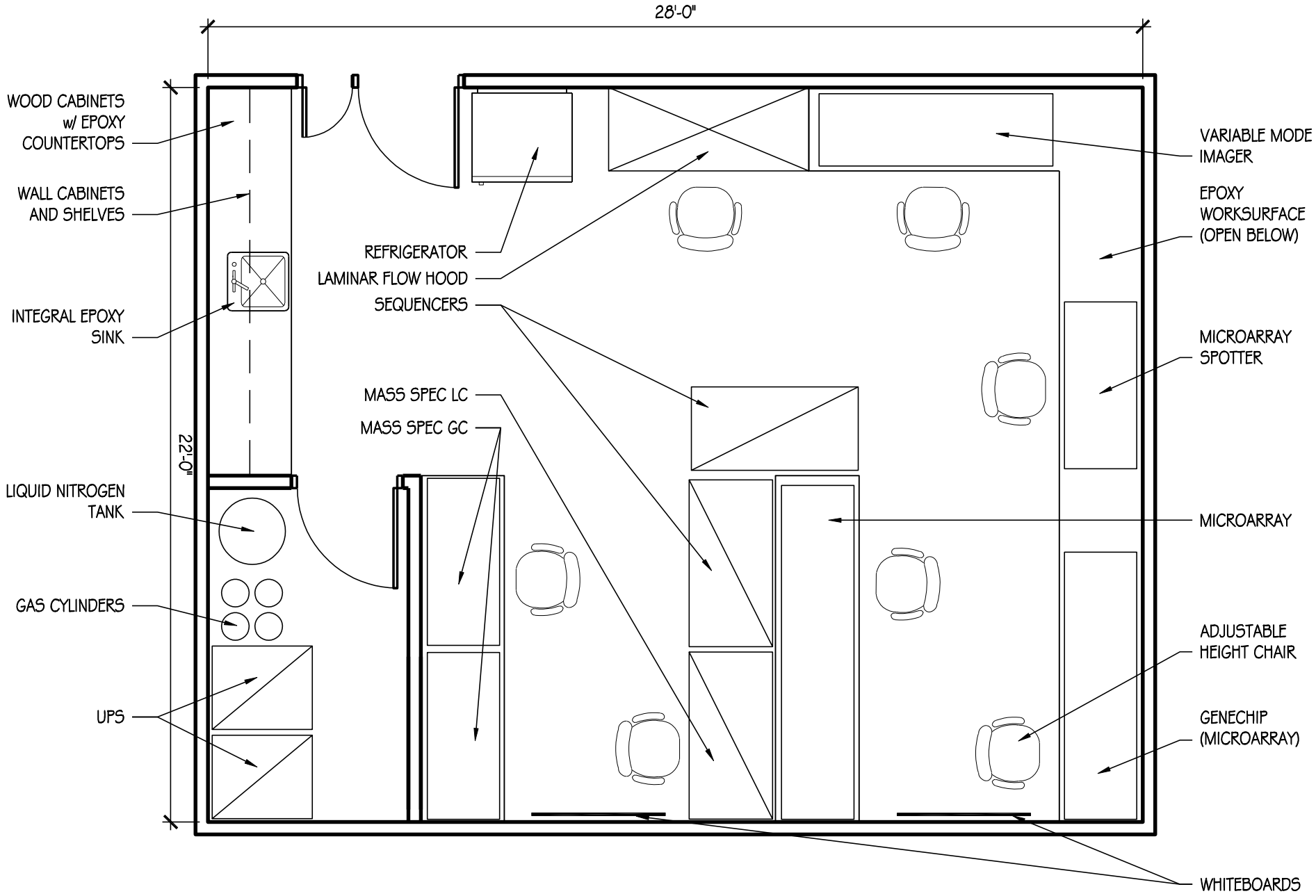

USU Agriculture Building

ROOM DATA SHEET DETAIL — **Animal Dairy & Veterinary Sciences**

ADVS Research Lab Support

4.5.1.11 Genomics / Proteomics Lab — **Second Level**

SPACE INFORMATION

Room Function:

Adjacencies: Animal Genetics Lab (4.4.1.1), Fume Hood alcove (4.5.1.14)

Special Requirements: Increased ventilation, multiple data ports

Access: Restricted - Staff & Students

Room Utilization: 7 days a week, 24 hours a day

General Notes:

ROOM SIZE AND CAPACITY

Proposed Area:	600 NSF	**Room/Space Quantity:**	1	**Total Area:**	600
Assigned Capacity:	0 Occupant(s)	**Unassigned Capacity:**	12 Guest(s)	**Total Capacity:**	12

FINISHES, DOORS, AND WINDOWS

Floor Finish:	Vinyl Composite Tile (VCT)	**Ceiling Treatment:**	Suspended vinyl-faced lay-in panels
Wall Finish:	Gypsum board (painted)	**Ceiling Height:**	10'
Base Finish:	Rubber	**Acoustic Treatment:**	Not Required
Doors:		**Windows:**	
Type:	Unequal	**Natural Lighting:**	Desired, but not required
Width:	36" + 18" Expan	**Room Skylight:**	Acceptable

Doors: **Height:** 84" **Vision Panel:** Not Required

CASEWORK / FURNISHINGS

Wall Cabinets:	Wood - Certified	**Shelving:**	Yes
Base Cabinets:	Wood - Certified	**Drawer Units:**	Yes
Bench Top:	Epoxy Resin	**White Boards:**	(1) 4'-6'
Bench Height:	36"	**Tack Boards:**	No

PLUMBING / GASES

Sinks:	1 Large per lab	**Air:**	2 per lab
Pure Water:	RO	**Lab Gas:**	2 per lab
HotCold Water:	Yes	**CO2:**	Cylinder
Floor Drain:	No	**Nitrogen:**	Cylinder
HoseBib:	No	**Vacuum:**	2 per lab
Waste:	None	**Other Gas:**	
Eyewash:	Yes	**Fire Protection:**	Lab Standard
Emerg Shower:	No		

COPYRIGHT © 2009 CRSA

USU Agriculture Building

ROOM DATA SHEET DETAIL **Animal Dairy & Veterinary Sciences**

ADVS Research Lab Support

4.5.1.11 Genomics / Proteomics Lab **Second Level**

HVAC / ELECTRICAL

Total Air Changes:	10 ACH	**Power:**	110v + 220v
Pressure:	Negative	**Lighting:**	Direct/indirect fluorescent
Temp Requirement:	Lab Standard	**Fixture Mount:**	Recessed
Relative Humidity:	Lab Standard	**Occ. Sensors:**	No
Local Exhaust:	Lab Standard	**Task Light:**	Yes
Air Filtration:	Lab Standard	**Em Power:**	On select outlets
CO2 Sensor:	Yes	**UPS:**	Yes
Other HVAC:			

COMMUNICATIONS / SPECIAL CONSIDERATIONS

Phone Outlets:	1 per lab	**Light Controls:**	Not Required
Data Outlets:	2 per bench	**Visual Control:**	Views Desirable
Network:	Yes	**Structural Control:**	Not Required
AV Requirements:	None	**Security:**	Proximity card lock
Clocks:	Yes	**Shielding:**	Not Required

EQUIPMENT AND FURNISHINGS

Equipment:

Owner provided equipment
(1) Mass Spec GC
(1) Mass Spec LC
(2) UPS
(1) Liquid Nitrogen Tank
Gas cylinders for Mass Spec
(2) Sequencers
(1) Microarray
(1) Genechip (microarray)
(1) Microarray spotter
(1) Variable mode imager
(1) Refrigerator

New equipment
(1) 5' Class II Laminar flow hood

Furnishings:

New Built-in cabinetry
(40) lf Wood base w/epoxy countertop - 30" deep
(12) lf Wood upper w/adjustable shelves - 15" deep

New furnishings
(2) Adjustable height task chairs w/ lumbar support
(5) Adjustable height lab stools w/ lumbar support

COPYRIGHT © 2009 CRSA

BLANK

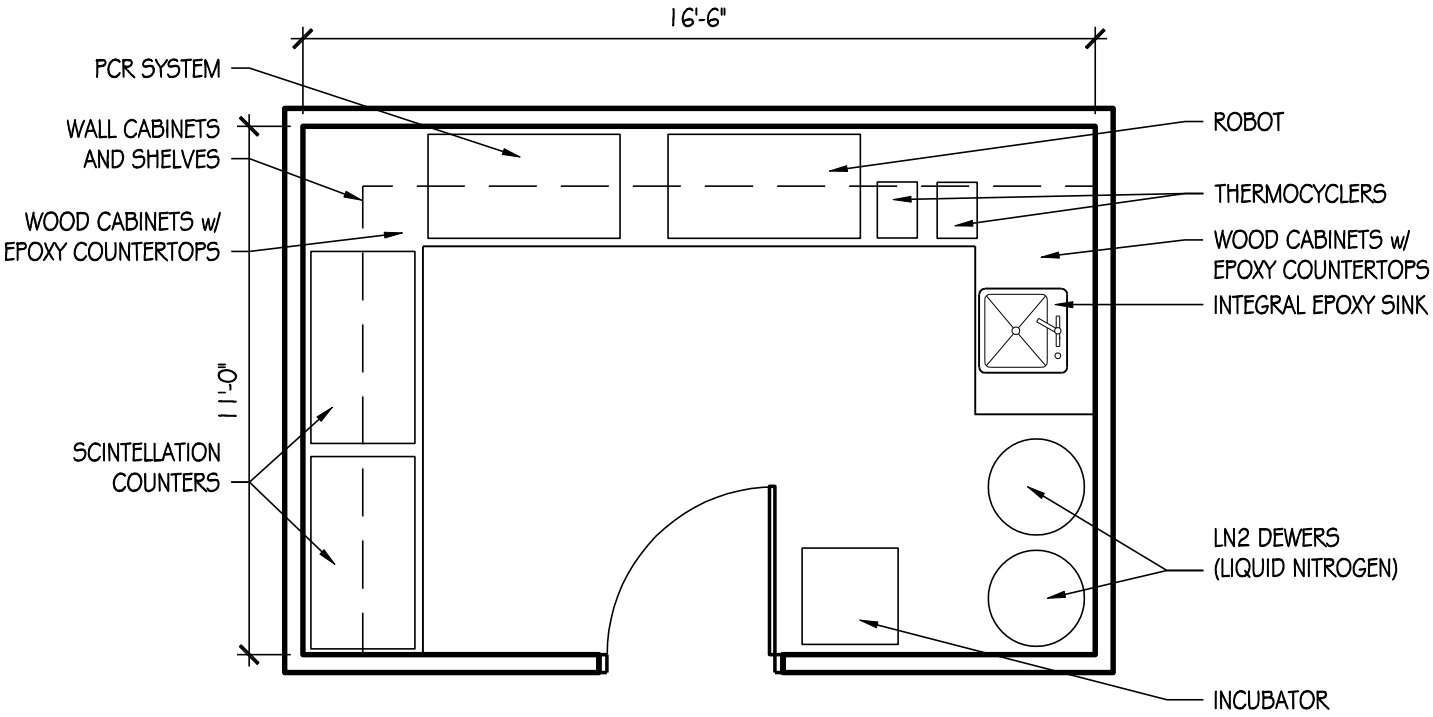

ANALYTICAL EQUIPMENT ROOM
180 SF

USU Agriculture Building

ROOM DATA SHEET DETAIL — **Animal Dairy & Veterinary Sciences**

ADVS Research Lab Support

4.5.1.12 Analytical Equipment Room — **Second Level**

SPACE INFORMATION

Room Function:

Adjacencies: Centralize for shared access by all ADVS lab users

Special Requirements: Heat exhaust

Access: Restricted - Staff & Students

Room Utilization: 7 days a week, 24 hours a day

General Notes:

ROOM SIZE AND CAPACITY

Proposed Area:	180 NSF	**Room/Space Quantity:**	1	**Total Area:**	180
Assigned Capacity:	0 Occupant(s)	**Unassigned Capacity:**	1 Guest(s)	**Total Capacity:**	1

FINISHES, DOORS, AND WINDOWS

Floor Finish:	Vinyl Composite Tile (VCT)	**Ceiling Treatment:**	Suspended acoustical lay-in tiles
Wall Finish:	Gypsum board (painted)	**Ceiling Height:**	10'
Base Finish:	Rubber	**Acoustic Treatment:**	Not Required
Doors:		**Windows:**	
Type:	Single	**Natural Lighting:**	Not required
Width:	42"	**Room Skylight:**	Not Acceptable

Doors: Height: 84"; Vision Panel: Not Required

CASEWORK / FURNISHINGS

Wall Cabinets:	Wood - Certified	**Shelving:**	Yes
Base Cabinets:	Wood - Certified	**Drawer Units:**	No
Bench Top:	Epoxy Resin	**White Boards:**	No
Bench Height:	36"	**Tack Boards:**	No

PLUMBING / GASES

Sinks:	1 Large	**Air:**	1 per lab
Pure Water:	RO	**Lab Gas:**	1 per lab
HotCold Water:	Yes	**CO2:**	Cylinder
Floor Drain:	No	**Nitrogen:**	Cylinder
HoseBib:	No	**Vacuum:**	1 per lab
Waste:	None	**Other Gas:**	
Eyewash:	No	**Fire Protection:**	Lab Standard
Emerg Shower:	No		

COPYRIGHT © 2009 CRSA

USU Agriculture Building

ROOM DATA SHEET DETAIL **Animal Dairy & Veterinary Sciences**

ADVS Research Lab Support

4.5.1.12 Analytical Equipment Room **Second Level**

HVAC / ELECTRICAL

Total Air Changes:	10 ACH	**Power:**	110v
Pressure:	Negative	**Lighting:**	Direct/indirect fluorescent
Temp Requirement:	Lab Standard	**Fixture Mount:**	Recessed
Relative Humidity:	Lab Standard	**Occ. Sensors:**	No
Local Exhaust:	Lab Standard	**Task Light:**	No
Air Filtration:	Lab Standard	**Em Power:**	On select outlets
CO2 Sensor:	Yes	**UPS:**	No
Other HVAC:			

COMMUNICATIONS / SPECIAL CONSIDERATIONS

Phone Outlets:	0	**Light Controls:**	Not Required
Data Outlets:	1 per bench	**Visual Control:**	Not Required
Network:	Yes	**Structural Control:**	Not Required
AV Requirements:	None	**Security:**	Proximity card lock
Clocks:	No	**Shielding:**	Not Required

EQUIPMENT AND FURNISHINGS

Equipment:

Owner provided equipment
(1) Lab-Line Incubator/shaker - Rickords
(2) LN2 Dewers - Rickords
(2) Scintellation counters
(2) Thermalcyclers
(1) Eppendorf epMotion robot - White/Davies
(1) Eppendorf PCR system - White/Davies

Furnishings:

New Built-in cabinetry
(24) lf Wood base w/epoxy countertop - 30" deep
(24) lf Wood upper w/adjustable shelves - 15" deep

COPYRIGHT © 2009 CRSA

BLANK

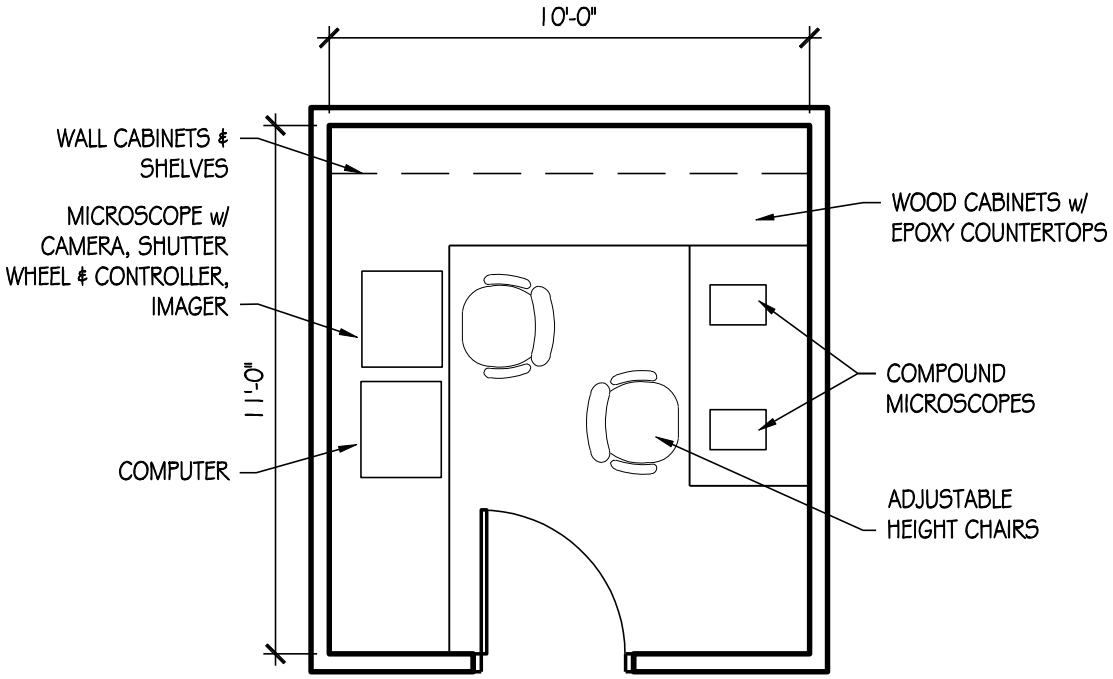

MICROSCOPY LAB
110 SF

USU Agriculture Building

ROOM DATA SHEET DETAIL — **Animal Dairy & Veterinary Sciences**

ADVS Research Lab Support

4.5.1.13 Microscopy Lab — **Second Level**

SPACE INFORMATION

Room Function:

Adjacencies: Cell Culture Lab (4.5.1.5)

Access: Restricted - Staff & Students

Room Utilization: 7 days a week, 24 hours a day

General Notes:

Special Requirements:

Can be completely darkened, red light in-use indicator outside door

ROOM SIZE AND CAPACITY

Proposed Area:	110 NSF	**Room/Space Quantity:**	1	**Total Area:**	110
Assigned Capacity:	0 Occupant(s)	**Unassigned Capacity:**	2 Guest(s)	**Total Capacity:**	2

FINISHES, DOORS, AND WINDOWS

Floor Finish:	Vinyl Composite Tile (VCT)	**Ceiling Treatment:**	Suspended vinyl-faced lay-in panels
Wall Finish:	Gypsum board (painted)	**Ceiling Height:**	10'
Base Finish:	Rubber	**Acoustic Treatment:**	Not Required
Doors:		**Windows:**	
Type:	Single	**Natural Lighting:**	None
Width:	36"	**Room Skylight:**	Not Acceptable

Doors:

Height:	84"		
Vision Panel:	Not Required		

CASEWORK / FURNISHINGS

Wall Cabinets:	Wood - Certified	**Shelving:**	Yes
Base Cabinets:	Wood - Certified	**Drawer Units:**	Yes
Bench Top:	Epoxy Resin	**White Boards:**	No
Bench Height:	36"	**Tack Boards:**	No

PLUMBING / GASES

Sinks:	None	**Air:**	No
Pure Water:	None	**Lab Gas:**	No
HotCold Water:	No	**CO2:**	No
Floor Drain:	No	**Nitrogen:**	No
HoseBib:	No	**Vacuum:**	No
Waste:		**Other Gas:**	
Eyewash:	No	**Fire Protection:**	No Water
Emerg Shower:	No		

COPYRIGHT © 2009 CRSA

USU Agriculture Building

ROOM DATA SHEET DETAIL **Animal Dairy & Veterinary Sciences**

ADVS Research Lab Support

4.5.1.13 Microscopy Lab **Second Level**

HVAC / ELECTRICAL

Total Air Changes:	10 ACH	**Power:**	110v
Pressure:	Positive	**Lighting:**	Direct/indirect fluorescent
Temp Requirement:	Lab Standard	**Fixture Mount:**	Recessed
Relative Humidity:	Lab Standard	**Occ. Sensors:**	No
Local Exhaust:	Lab Standard	**Task Light:**	Yes
Air Filtration:	Lab Standard	**Em Power:**	On select outlets
CO2 Sensor:	No	**UPS:**	No
Other HVAC:			

COMMUNICATIONS / SPECIAL CONSIDERATIONS

Phone Outlets:	0	**Light Controls:**	Can be completely darkened
Data Outlets:	1 per lab	**Visual Control:**	Not Required
Network:	Yes	**Structural Control:**	Not Required
AV Requirements:	None	**Security:**	Proximity card lock
Clocks:	No	**Shielding:**	Not Required

EQUIPMENT AND FURNISHINGS

Equipment:

Owner provided equipment
(1) Microscope - White
(1) Shutter Filter wheel & controller - White
(1) Imager & computer - White
(1) Camera - White
(1) Compound microscope - Davies
(1) Compound microscope - Rickords

Furnishings:

New Built-in cabinetry
(18) lf Wood base w/epoxy countertop - 30" deep
(10) lf Wood upper w/adjustable shelves - 15" deep
(5) lf Epoxy worksurface - 30" deep, open below

(2) Adjustable height lab stools w/ lumbar support

COPYRIGHT © 2009 CRSA

BLANK

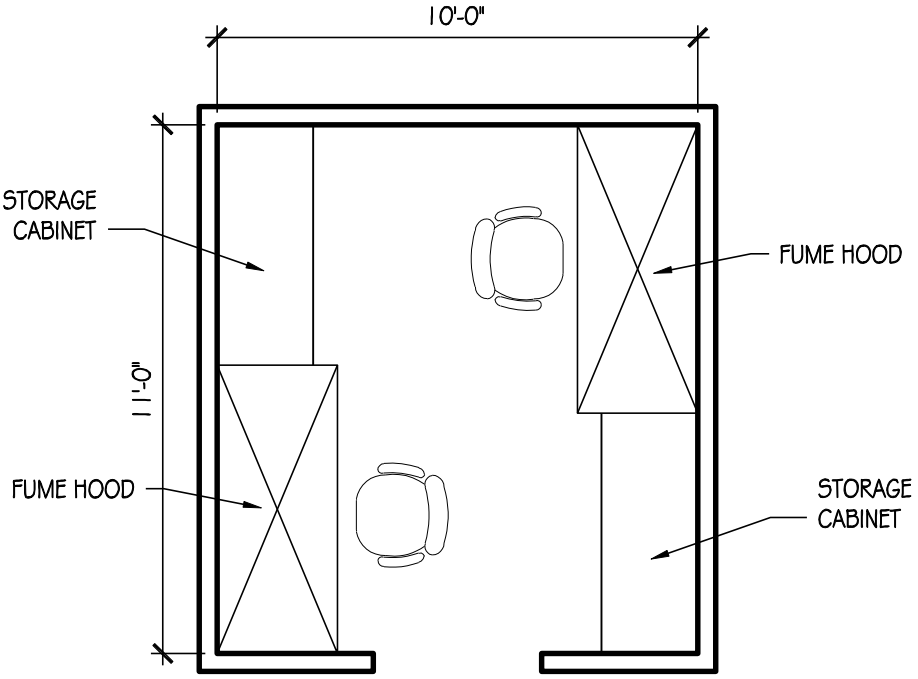

FUME HOOD ALCOVE
110 SF

USU Agriculture Building

ROOM DATA SHEET DETAIL — **Animal Dairy & Veterinary Sciences**

ADVS Research Lab Support

4.5.1.14 Fume Hood alcove — **Second Level**

SPACE INFORMATION

Room Function: Research activities requiring a fume hood

Adjacencies: Distribute to provide (1) Fume hood per (3) lab bays

Special Requirements:

Access: All lab users

Room Utilization: 7 days a week, 24 hours a day

General Notes:

ROOM SIZE AND CAPACITY

Proposed Area:	110 NSF	**Room/Space Quantity:**	3	**Total Area:**	330
Assigned Capacity:	0 Occupant(s)	**Unassigned Capacity:**	1 Guest(s)	**Total Capacity:**	1

FINISHES, DOORS, AND WINDOWS

Floor Finish:	Vinyl Composite Tile (VCT)	**Ceiling Treatment:**	Gypsum board (painted)
Wall Finish:	Gypsum board (painted)	**Ceiling Height:**	10'
Base Finish:	Rubber	**Acoustic Treatment:**	Not Required
Doors:		**Windows:**	
Type:	None	**Natural Lighting:**	Not required
Width:	42"	**Room Skylight:**	Not Acceptable

Height:	84"		
Vision Panel:	Not Required		

CASEWORK / FURNISHINGS

Wall Cabinets:	None	**Shelving:**	No
Base Cabinets:	None	**Drawer Units:**	No
Bench Top:	None	**White Boards:**	No
Bench Height:		**Tack Boards:**	No

PLUMBING / GASES

Sinks:	None	**Air:**	@ Fume hood(s)
Pure Water:	None	**Lab Gas:**	No
HotCold Water:	No	**CO2:**	No
Floor Drain:	No	**Nitrogen:**	No
HoseBib:	No	**Vacuum:**	@ Fume hood(s)
Waste:		**Other Gas:**	
Eyewash:	No	**Fire Protection:**	Lab Standard
Emerg Shower:	Yes		

COPYRIGHT © 2009 CRSA

USU Agriculture Building

ROOM DATA SHEET DETAIL **Animal Dairy & Veterinary Sciences**

ADVS Research Lab Support

4.5.1.14 Fume Hood alcove **Second Level**

HVAC / ELECTRICAL

Total Air Changes:	10 ACH	**Power:**	110v
Pressure:	Positive	**Lighting:**	Direct/indirect fluorescent
Temp Requirement:	Lab Standard	**Fixture Mount:**	Recessed
Relative Humidity:	Lab Standard	**Occ. Sensors:**	No
Local Exhaust:	Lab Standard	**Task Light:**	Yes
Air Filtration:	Lab Standard	**Em Power:**	No
CO2 Sensor:	Yes	**UPS:**	No
Other HVAC:			

COMMUNICATIONS / SPECIAL CONSIDERATIONS

Phone Outlets:	0	**Light Controls:**	Not Required
Data Outlets:	None	**Visual Control:**	Not Required
Network:	No	**Structural Control:**	Not Required
AV Requirements:	None	**Security:**	Not Required
Clocks:	No	**Shielding:**	Not Required

EQUIPMENT AND FURNISHINGS

Equipment:

New equipment
(2) 6' Particle/Fume hoods w/ chemical storage base stands

Furnishings:

New furnishings
(2) Adjustable height lab stools w/ lumbar support
(2) 60" x 24" x 84" Storage cabinets for chemicals

COPYRIGHT © 2009 CRSA

BLANK

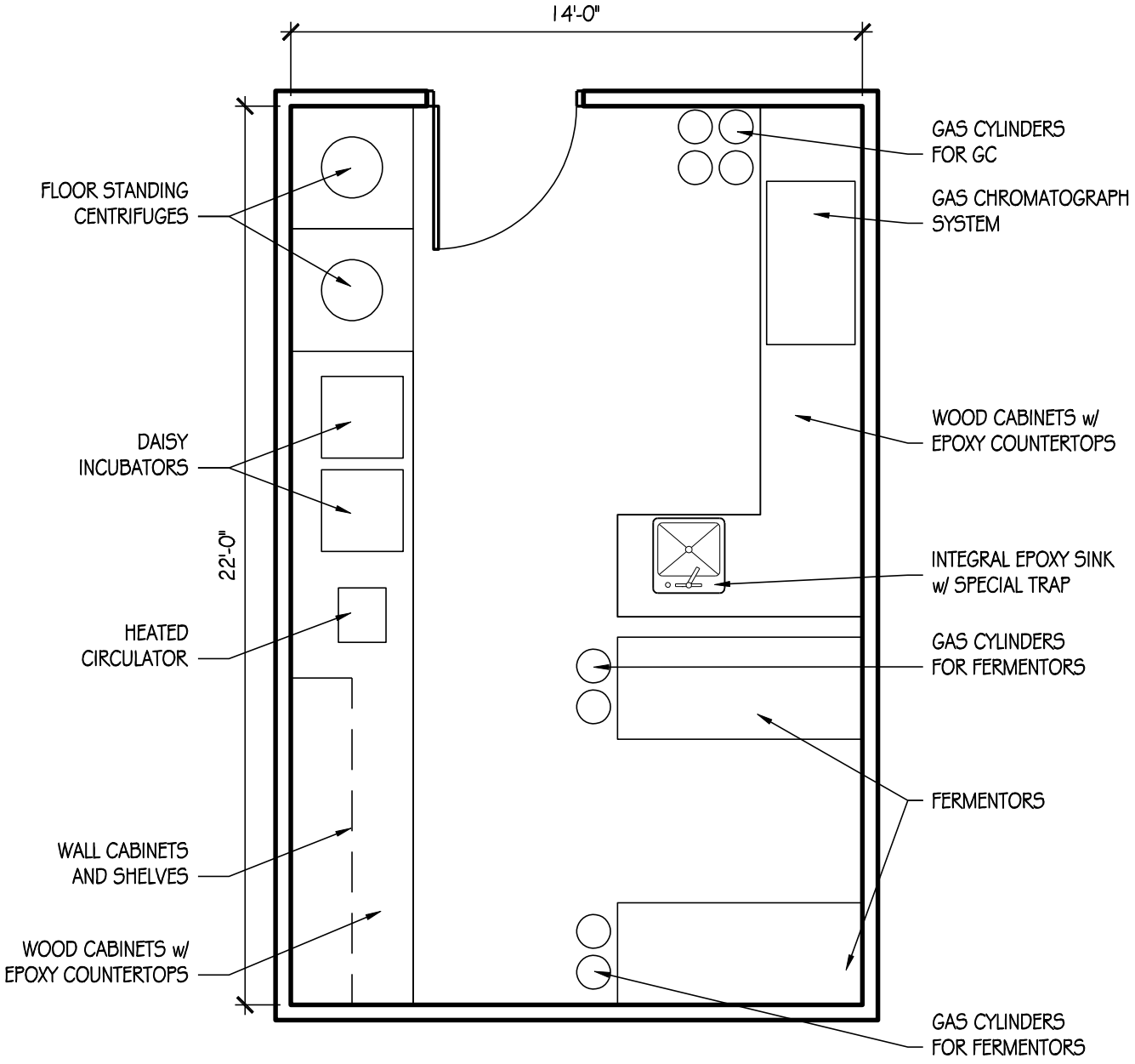

FERMENTATION SUITE
300 SF

USU Agriculture Building

ROOM DATA SHEET DETAIL | **Animal Dairy & Veterinary Sciences**

ADVS Research Lab Support

4.5.2.1 Fermentation Suite | **Second Level**

SPACE INFORMATION

Room Function:

Adjacencies: Animal Nutrition Lab (4.4.2.1), Grinding Room (4.5.2.4)

Special Requirements: Isolate from adjacent spaces. Increase ventilation to controll smell

Access: All lab users

Room Utilization: 7 days a week, 24 hours a day

General Notes:

ROOM SIZE AND CAPACITY

Proposed Area:	300 NSF	**Room/Space Quantity:**	1	**Total Area:**	300
Assigned Capacity:	0 Occupant(s)	**Unassigned Capacity:**	6 Guest(s)	**Total Capacity:**	6

FINISHES, DOORS, AND WINDOWS

Floor Finish:	Vinyl Composite Tile (VCT)	**Ceiling Treatment:**	Suspended vinyl-faced lay-in panels
Wall Finish:	Gypsum board (painted)	**Ceiling Height:**	10'
Base Finish:	Rubber	**Acoustic Treatment:**	Not Required
Doors:		**Windows:**	
Type:	Single	**Natural Lighting:**	Not required
Width:	42"	**Room Skylight:**	Acceptable

Height:	84"		
Vision Panel:	Required		

CASEWORK / FURNISHINGS

Wall Cabinets:	Wood - Certified	**Shelving:**	Yes
Base Cabinets:	Wood - Certified	**Drawer Units:**	Yes
Bench Top:	Epoxy Resin	**White Boards:**	No
Bench Height:	36"	**Tack Boards:**	No

PLUMBING / GASES

Sinks:	1 Large w/special trap	**Air:**	2 per lab
Pure Water:	RO	**Lab Gas:**	No
HotCold Water:	Yes	**CO2:**	Cylinder
Floor Drain:	Yes	**Nitrogen:**	Cylinder
HoseBib:	No	**Vacuum:**	2 per lab
Waste:	None	**Other Gas:**	
Eyewash:	Yes	**Fire Protection:**	Lab Standard
Emerg Shower:	No		

COPYRIGHT © 2009 CRSA

HVAC / ELECTRICAL

Total Air Changes:	10 ACH	**Power:**	110v + 220v
Pressure:	Negative	**Lighting:**	Direct/indirect fluorescent
Temp Requirement:	Lab Standard	**Fixture Mount:**	Recessed
Relative Humidity:	Lab Standard	**Occ. Sensors:**	No
Local Exhaust:	Lab Standard	**Task Light:**	Yes
Air Filtration:	Lab Standard	**Em Power:**	On select outlets
CO2 Sensor:	Yes	**UPS:**	No
Other HVAC:			

COMMUNICATIONS / SPECIAL CONSIDERATIONS

Phone Outlets:	0	**Light Controls:**	Not Required
Data Outlets:	1 per lab	**Visual Control:**	Not Required
Network:	Yes	**Structural Control:**	Not Required
AV Requirements:	None	**Security:**	Proximity card lock
Clocks:	No	**Shielding:**	Not Required

EQUIPMENT AND FURNISHINGS

Equipment:

Owner provided equipment
(1) Varian gas chromatograph system
(4) Gas cylinders for GC
(1) Heated circulator
(1) Watson-Marlow peristaltic pump
(2) Fermenter units (2 racks, (4) two liter vessels per rack)
(2) Gas cylinders for fermenters
(2) Floor standing centrifuges
(2) Daisy incubators

Furnishings:

New Built-in cabinetry
(30) lf Wood base w/epoxy countertop - 30" deep
(8) lf Wood upper w/adjustable shelves - 15" deep

COPYRIGHT © 2009 CRSA

BLANK

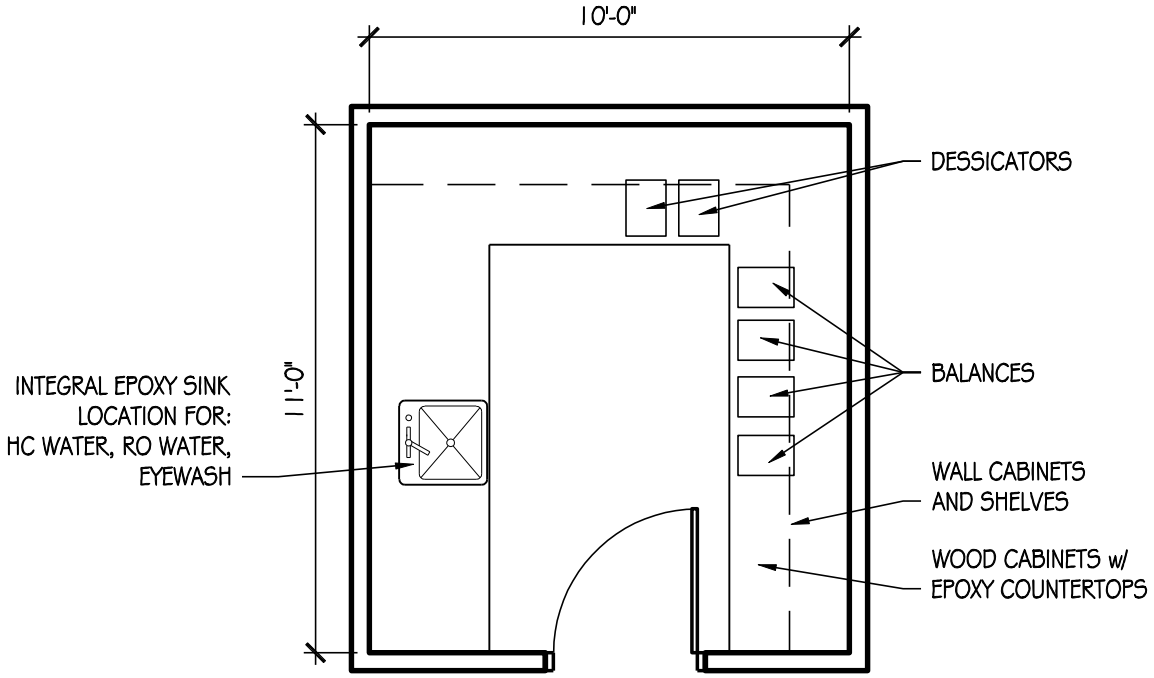

BALANCE ROOM &
DRY CHEMICAL STORAGE
110 SF

USU Agriculture Building

ROOM DATA SHEET DETAIL — **Animal Dairy & Veterinary Sciences**

ADVS Research Lab Support

4.5.2.2 Balance Room / Dry Chemical Storage — Second Level

SPACE INFORMATION

Room Function: Dry chemical storage, sample prep

Adjacencies: Animal Nutrition Lab (4.4.2.1)

Special Requirements:

Access: All lab users

Room Utilization: 7 days a week, 24 hours a day

General Notes:

ROOM SIZE AND CAPACITY

Proposed Area:	110 NSF	**Room/Space Quantity:**	1	**Total Area:**	110
Assigned Capacity:	0 Occupant(s)	**Unassigned Capacity:**	1 Guest(s)	**Total Capacity:**	1

FINISHES, DOORS, AND WINDOWS

Floor Finish:	Vinyl Composite Tile (VCT)	**Ceiling Treatment:**	Suspended vinyl-faced lay-in panels
Wall Finish:	Gypsum board (painted)	**Ceiling Height:**	10'
Base Finish:	Rubber	**Acoustic Treatment:**	Not Required
Doors:		**Windows:**	

Type:	Single	**Height:**	84"	**Natural Lighting:**	Not required
Width:	36"	**Vision Panel:**	Not Required	**Room Skylight:**	Acceptable

CASEWORK / FURNISHINGS

Wall Cabinets:	Wood - Certified	**Shelving:**	Yes
Base Cabinets:	Wood - Certified	**Drawer Units:**	Yes
Bench Top:	Epoxy Resin	**White Boards:**	No
Bench Height:	36"	**Tack Boards:**	No

PLUMBING / GASES

Sinks:	1 Small	**Air:**	No
Pure Water:	RO	**Lab Gas:**	No
HotCold Water:	Yes	**CO2:**	No
Floor Drain:	No	**Nitrogen:**	No
HoseBib:	No	**Vacuum:**	No
Waste:	None	**Other Gas:**	
Eyewash:	Yes	**Fire Protection:**	Lab Standard
Emerg Shower:	No		

COPYRIGHT © 2009 CRSA

HVAC / ELECTRICAL

Total Air Changes:	10 ACH	**Power:**	110v
Pressure:		**Lighting:**	Direct/indirect fluorescent
Temp Requirement:	Lab Standard	**Fixture Mount:**	Recessed
Relative Humidity:	Lab Standard	**Occ. Sensors:**	No
Local Exhaust:	Lab Standard	**Task Light:**	No
Air Filtration:	Lab Standard	**Em Power:**	No
CO2 Sensor:	No	**UPS:**	No
Other HVAC:			

COMMUNICATIONS / SPECIAL CONSIDERATIONS

Phone Outlets:	0	**Light Controls:**	Not Required
Data Outlets:	1 per lab	**Visual Control:**	Not Required
Network:	No	**Structural Control:**	Not Required
AV Requirements:	None	**Security:**	Not Required
Clocks:	No	**Shielding:**	Not Required

EQUIPMENT AND FURNISHINGS

Equipment:

Owner provided equipment
(4) Mettler balances
(2) Desiccators

Furnishings:

New Built-in cabinetry
(24) lf Wood base w/epoxy countertop - 30" deep
(20) lf Wood upper w/adjustable shelves - 15" deep

COPYRIGHT © 2009 CRSA

BLANK

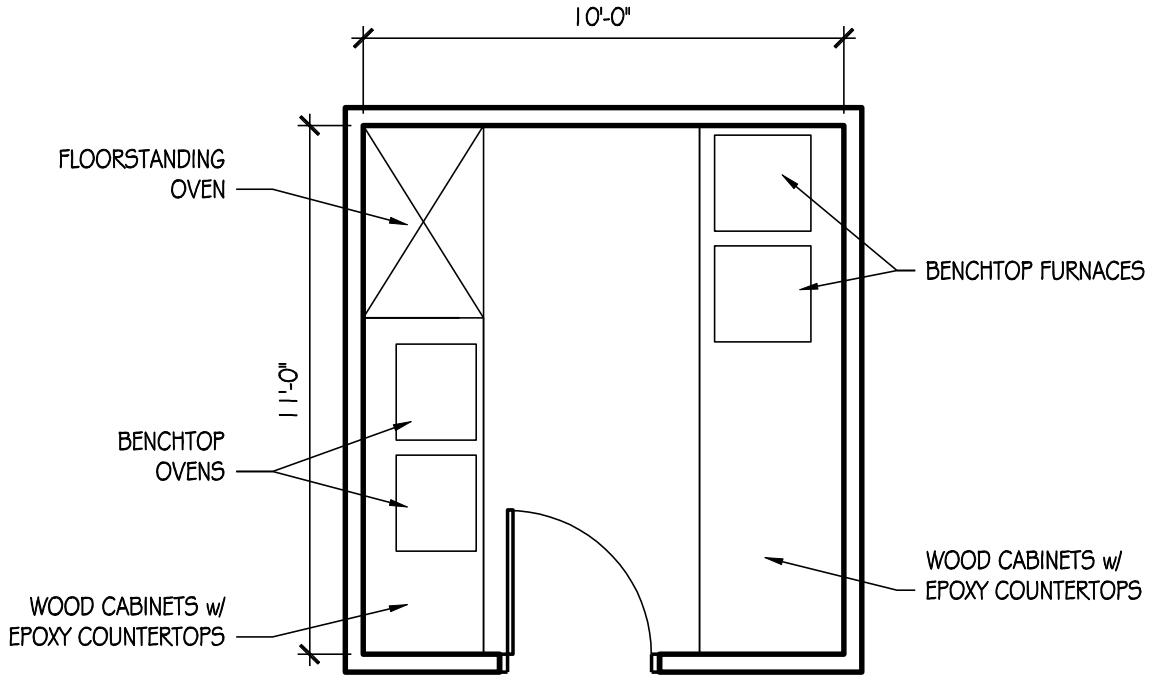

OVEN ROOM
110 SF

USU Agriculture Building

ROOM DATA SHEET DETAIL — **Animal Dairy & Veterinary Sciences**

ADVS Research Lab Support

4.5.2.3 Oven Room — **Second Level**

SPACE INFORMATION

Room Function: Incubation and drying

Adjacencies: Grinding Room (4.5.2.4)

Special Requirements: Special venting for furnaces

Access: All lab users

Room Utilization: 7 days a week, 24 hours a day

General Notes:

ROOM SIZE AND CAPACITY

Proposed Area:	110 NSF	**Room/Space Quantity:**	1	**Total Area:**	110
Assigned Capacity:	0 Occupant(s)	**Unassigned Capacity:**	1 Guest(s)	**Total Capacity:**	1

FINISHES, DOORS, AND WINDOWS

Floor Finish:	Vinyl Composite Tile (VCT)	**Ceiling Treatment:**	Suspended vinyl-faced lay-in panels
Wall Finish:	Gypsum board (painted)	**Ceiling Height:**	10'
Base Finish:	Rubber	**Acoustic Treatment:**	Not Required
Doors:		**Windows:**	

Type:	Single	**Height:**	84"	**Natural Lighting:**	Not required
Width:	36"	**Vision Panel:**	Not Required	**Room Skylight:**	Acceptable

CASEWORK / FURNISHINGS

Wall Cabinets:	Wood - Certified	**Shelving:**	Yes
Base Cabinets:	Wood - Certified	**Drawer Units:**	Yes
Bench Top:	Epoxy Resin	**White Boards:**	No
Bench Height:	36"	**Tack Boards:**	No

PLUMBING / GASES

Sinks:	None	**Air:**	No
Pure Water:	None	**Lab Gas:**	No
HotCold Water:	No	**CO2:**	No
Floor Drain:	No	**Nitrogen:**	No
HoseBib:	No	**Vacuum:**	No
Waste:	None	**Other Gas:**	
Eyewash:	No	**Fire Protection:**	Lab Standard
Emerg Shower:	No		

COPYRIGHT © 2009 CRSA

USU Agriculture Building

ROOM DATA SHEET DETAIL **Animal Dairy & Veterinary Sciences**

ADVS Research Lab Support

4.5.2.3 Oven Room **Second Level**

HVAC / ELECTRICAL

Total Air Changes:	10 ACH	**Power:**	110v + 220v
Pressure:	Negative	**Lighting:**	Direct/indirect fluorescent
Temp Requirement:	Standard	**Fixture Mount:**	Recessed
Relative Humidity:	Standard	**Occ. Sensors:**	No
Local Exhaust:	Standard	**Task Light:**	No
Air Filtration:	Standard	**Em Power:**	No
CO2 Sensor:	No	**UPS:**	No
Other HVAC:			

COMMUNICATIONS / SPECIAL CONSIDERATIONS

Phone Outlets:	0	**Light Controls:**	Not Required
Data Outlets:	1 per lab	**Visual Control:**	Not Required
Network:	No	**Structural Control:**	Not Required
AV Requirements:	None	**Security:**	Not Required
Clocks:	No	**Shielding:**	Not Required

EQUIPMENT AND FURNISHINGS

Equipment:

Owner provided equipment
(2) Furnaces - benchtop
(1) Lab-Line oven - benchtop
(1) Yamato oven - benchtop
(1) Large oven - floorstanding

Furnishings:

New Built-in cabinetry
(18) lf Wood base w/epoxy countertop - 30" deep

COPYRIGHT © 2009 CRSA

BLANK

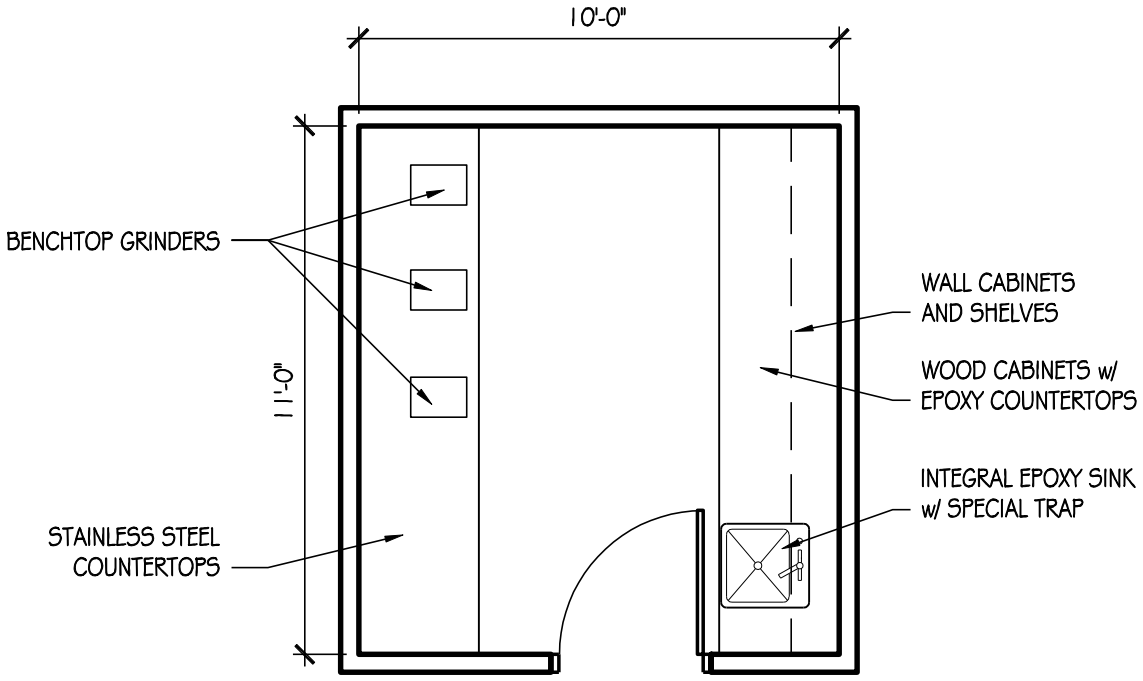

GRINDING ROOM
110 SF

USU Agriculture Building

ROOM DATA SHEET DETAIL — **Animal Dairy & Veterinary Sciences**

ADVS Research Lab Support

4.5.2.4 Grinding / Prep room — Second Level

SPACE INFORMATION

Room Function: Feed and fecal sample prep and storage

Adjacencies: Animal Nutrition Lab (4.4.2.1), Fermentation Suite (4.5.2.1), Oven Room (4.5.2.3)

Access: All lab users

Room Utilization: 7 days a week, 24 hours a day

General Notes:

Special Requirements:

100% exhaust for grinders / mills. Increased air changes with fresh air intake.

ROOM SIZE AND CAPACITY

Proposed Area:	140 NSF	**Room/Space Quantity:**	1	**Total Area:**	140
Assigned Capacity:	0 Occupant(s)	**Unassigned Capacity:**	2 Guest(s)	**Total Capacity:**	2

FINISHES, DOORS, AND WINDOWS

Floor Finish:	Concrete (sealed)	**Ceiling Treatment:**	Suspended acoustical lay-in tiles
Wall Finish:	Gypsum board (painted)	**Ceiling Height:**	10'
Base Finish:	Rubber	**Acoustic Treatment:**	Suppress equipment generated noise
Doors:		**Windows:**	
Type:	Single	**Natural Lighting:**	Not required
Width:	36"	**Room Skylight:**	Not Acceptable

Height:	84"		
Vision Panel:	Not Required		

CASEWORK / FURNISHINGS

Wall Cabinets:	Wood - Certified	**Shelving:**	Yes
Base Cabinets:	Wood - Certified	**Drawer Units:**	Yes
Bench Top:	Stainless Steel	**White Boards:**	No
Bench Height:	36"	**Tack Boards:**	No

PLUMBING / GASES

Sinks:	1 Large w/special trap	**Air:**	By Compressor
Pure Water:	None	**Lab Gas:**	No
HotCold Water:	Yes	**CO2:**	No
Floor Drain:	No	**Nitrogen:**	No
HoseBib:	Yes	**Vacuum:**	No
Waste:	None	**Other Gas:**	
Eyewash:	No	**Fire Protection:**	Standard
Emerg Shower:	No		

COPYRIGHT © 2009 CRSA

USU Agriculture Building

ROOM DATA SHEET DETAIL **Animal Dairy & Veterinary Sciences**

ADVS Research Lab Support

4.5.2.4 Grinding / Prep room **Second Level**

HVAC / ELECTRICAL

Total Air Changes:	10 ACH	**Power:**	110v
Pressure:	Negative	**Lighting:**	Direct/indirect fluorescent
Temp Requirement:	Standard	**Fixture Mount:**	Recessed
Relative Humidity:	Lab Standard	**Occ. Sensors:**	Yes w/manual override
Local Exhaust:	Lab Standard	**Task Light:**	No
Air Filtration:	Lab Standard	**Em Power:**	No
CO2 Sensor:	No	**UPS:**	No
Other HVAC:			

COMMUNICATIONS / SPECIAL CONSIDERATIONS

Phone Outlets:	0	**Light Controls:**	Not Required
Data Outlets:	None	**Visual Control:**	Not Required
Network:	No	**Structural Control:**	Not Required
AV Requirements:	None	**Security:**	Not Required
Clocks:	No	**Shielding:**	Not Required

EQUIPMENT AND FURNISHINGS

Equipment:

Owner provided equipment
(3) Sample grinders - benchtop
(1) Air compressor
(1) Vacuum pump

Furnishings:

New Built-in cabinetry
(11) lf Wood base w/epoxy countertop - 30" deep
(11) lf Wood upper w/adjustable shelves - 15" deep
(14) lf Wood base w/stainless countertop - 30" deep

COPYRIGHT © 2009 CRSA

BLANK

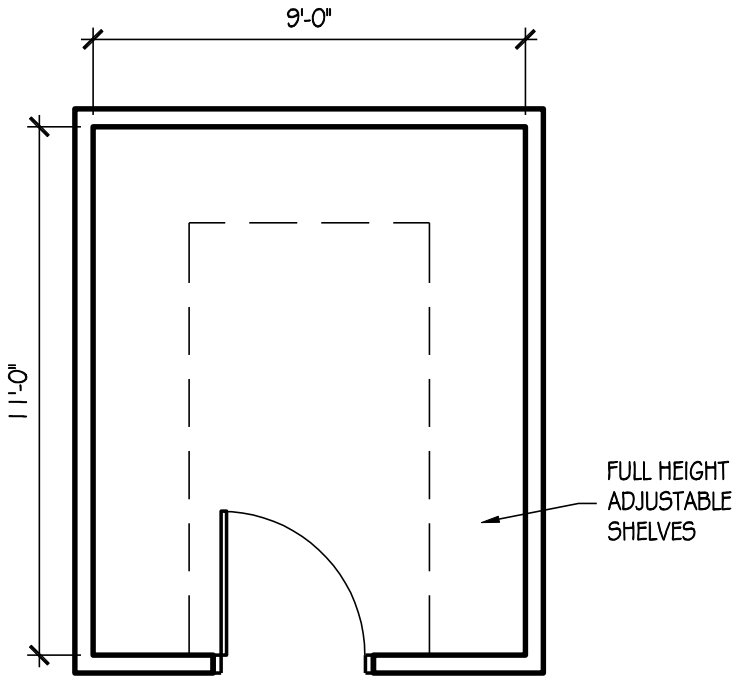

LAB STORAGE
100 SF

USU Agriculture Building

ROOM DATA SHEET DETAIL **Animal Dairy & Veterinary Sciences**

ADVS Research Lab Support

4.6.3 Lab Storage

SPACE INFORMATION

Room Function: Lab supply storage. Flasks, pitri dishes, etc.

Adjacencies:

Special Requirements:

Access: Staff only

Room Utilization: 7 days a week, 24 hours a day

General Notes:

ROOM SIZE AND CAPACITY

Proposed Area:	100 NSF	**Room/Space Quantity:**	2	**Total Area:**	200
Assigned Capacity:	0 Occupant(s)	**Unassigned Capacity:**	1 Guest(s)	**Total Capacity:**	1

FINISHES, DOORS, AND WINDOWS

Floor Finish:	Vinyl Composite Tile (VCT)	**Ceiling Treatment:**	Suspended acoustical lay-in tiles
Wall Finish:	Gypsum board (painted)	**Ceiling Height:**	10'
Base Finish:	Rubber	**Acoustic Treatment:**	Not Required
Doors:		**Windows:**	
Type:	Single	**Natural Lighting:**	Not required
Width:	36"	**Room Skylight:**	Not Acceptable

Doors:

Height:	84"		
Vision Panel:	Not Required		

CASEWORK / FURNISHINGS

Wall Cabinets:	None	**Shelving:**	Yes
Base Cabinets:	None	**Drawer Units:**	No
Bench Top:	None	**White Boards:**	No
Bench Height:		**Tack Boards:**	No

PLUMBING / GASES

Sinks:	None	**Air:**	No
Pure Water:	None	**Lab Gas:**	No
HotCold Water:	No	**CO2:**	No
Floor Drain:	No	**Nitrogen:**	No
HoseBib:	No	**Vacuum:**	No
Waste:	None	**Other Gas:**	
Eyewash:	No	**Fire Protection:**	Standard
Emerg Shower:	No		

COPYRIGHT © 2009 CRSA

USU Agriculture Building

ROOM DATA SHEET DETAIL **Animal Dairy & Veterinary Sciences**

ADVS Research Lab Support

4.6.3 Lab Storage

HVAC / ELECTRICAL

Total Air Changes:	6 ACH	**Power:**	110v
Pressure:		**Lighting:**	Direct fluorescent
Temp Requirement:	Standard	**Fixture Mount:**	Recessed
Relative Humidity:	Standard	**Occ. Sensors:**	Yes w/manual override
Local Exhaust:	Standard	**Task Light:**	No
Air Filtration:	Standard	**Em Power:**	No
CO2 Sensor:	No	**UPS:**	No
Other HVAC:			

COMMUNICATIONS / SPECIAL CONSIDERATIONS

Phone Outlets:	0	**Light Controls:**	Not Required
Data Outlets:	None	**Visual Control:**	Not Required
Network:	No	**Structural Control:**	Not Required
AV Requirements:	None	**Security:**	Keyed lock at entrance doors
Clocks:	No	**Shielding:**	Not Required

EQUIPMENT AND FURNISHINGS

Equipment:

Furnishings:

New Built-in cabinetry

(28) lf Adjustable shelves, full wall height - 24" deep

COPYRIGHT © 2009 CRSA

BLANK

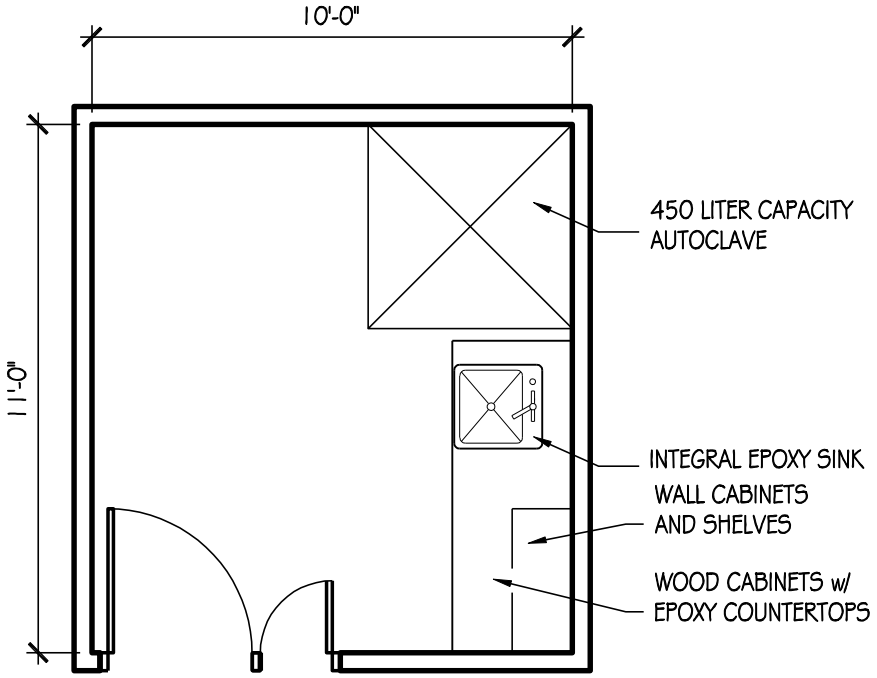

WASTE AUTOCLAVE
110 SF

USU Agriculture Building

ROOM DATA SHEET DETAIL — **Animal Dairy & Veterinary Sciences**

ADVS Research Lab Support

4.6.4 Waste Autoclave — Basement Level

SPACE INFORMATION

Room Function: Waste autoclaving

Adjacencies:

Access: All lab users

Room Utilization: 7 days a week, 24 hours a day

General Notes:

Special Requirements:

Building steam for Autoclave
Canopy exhaust hood

ROOM SIZE AND CAPACITY

Proposed Area:	110 NSF	**Room/Space Quantity:**	1	**Total Area:**	110
Assigned Capacity:	0 Occupant(s)	**Unassigned Capacity:**	1 Guest(s)	**Total Capacity:**	1

FINISHES, DOORS, AND WINDOWS

Floor Finish:	Epoxy	**Ceiling Treatment:**	Gypsum board (painted)
Wall Finish:	Gypsum board w/ epoxy finish	**Ceiling Height:**	10'
Base Finish:	Rubber	**Acoustic Treatment:**	Not Required
Doors:		**Windows:**	
Type:	Single	**Natural Lighting:**	None
Width:	36" + 18" Expan	**Room Skylight:**	Not Acceptable

Doors: Height: 84"; Vision Panel: Not Required

CASEWORK / FURNISHINGS

Wall Cabinets:	Wood - Certified	**Shelving:**	Yes
Base Cabinets:	Wood - Certified	**Drawer Units:**	No
Bench Top:	Epoxy Resin	**White Boards:**	No
Bench Height:		**Tack Boards:**	No

PLUMBING / GASES

Sinks:	1 Large	**Air:**	No
Pure Water:	None	**Lab Gas:**	No
HotCold Water:	Yes	**CO2:**	No
Floor Drain:	No	**Nitrogen:**	No
HoseBib:	No	**Vacuum:**	No
Waste:	None	**Other Gas:**	
Eyewash:	Yes	**Fire Protection:**	Lab Standard
Emerg Shower:	No		

COPYRIGHT © 2009 CRSA

USU Agriculture Building

ROOM DATA SHEET DETAIL **Animal Dairy & Veterinary Sciences**

ADVS Research Lab Support

4.6.4 Waste Autoclave **Basement Level**

HVAC / ELECTRICAL

Total Air Changes:	10 ACH	**Power:**	110v
Pressure:		**Lighting:**	Direct/indirect fluorescent
Temp Requirement:	Standard	**Fixture Mount:**	Recessed
Relative Humidity:	Standard	**Occ. Sensors:**	Yes w/manual override
Local Exhaust:	Standard	**Task Light:**	No
Air Filtration:	Standard	**Em Power:**	No
CO2 Sensor:	No	**UPS:**	No
Other HVAC:			

COMMUNICATIONS / SPECIAL CONSIDERATIONS

Phone Outlets:	0	**Light Controls:**	Not Required
Data Outlets:	None	**Visual Control:**	Not Required
Network:	No	**Structural Control:**	Not Required
AV Requirements:	None	**Security:**	Not Required
Clocks:	No	**Shielding:**	Not Required

EQUIPMENT AND FURNISHINGS

Equipment:

New equipment
(1) Autoclave - 450 Liter capacity

Furnishings:

New Built-in cabinetry
(18) lf Wood base w/epoxy countertop - 30" deep
(4) lf Wood upper w/adjustable shelves - 15" deep

COPYRIGHT © 2009 CRSA

BLANK

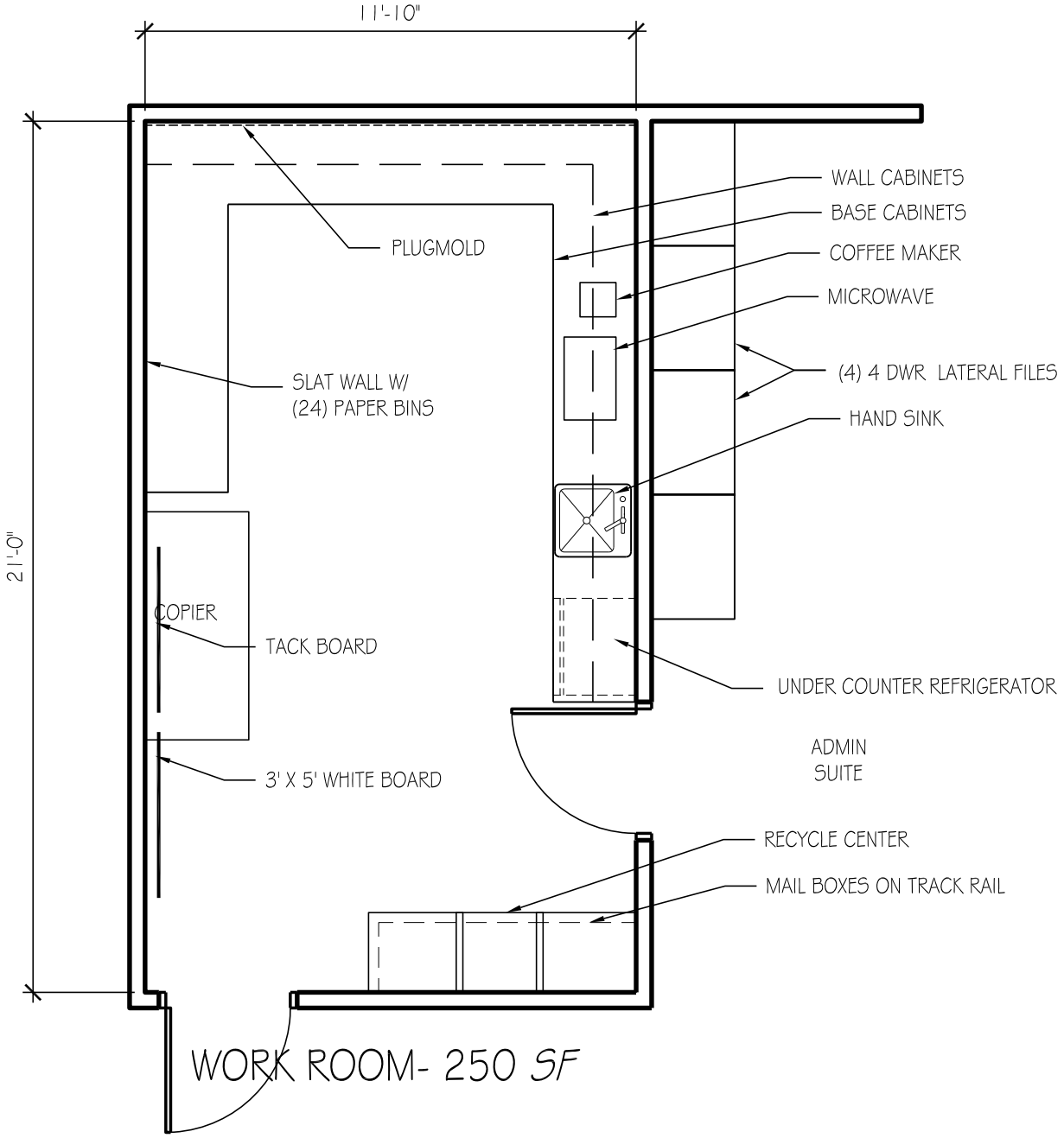

WORK ROOM- 250 SF

USU Agriculture Building

ROOM DATA SHEET DETAIL **COA - Animal, Dairy and Veterinary Sciences**

ADVS Support Area

4.6.1 Copy/Mail/Workroom/Storage -

SPACE INFORMATION

Room Function: Copy, work, prep, storage

Adjacencies:

Special Requirements:
None

Access: Public

Room Utilization: 5 days a week, 8:00 AM to 5:00 PM

General Notes: None

ROOM SIZE AND CAPACITY

Proposed Area:	250 NSF	**Room/Space Quantity:**	1	**Total Area:**	250
Assigned Capacity:	1 Occupant(s)	**Unassigned Capacity:**	1 Guest(s)	**Total Capacity:**	2

FINISHES, DOORS, AND WINDOWS

Floor Finish: Carpet-tile

Wall Finish: Gypsum board (painted)

Base Finish: Integral Coved

Doors:

Type:	Single	**Height:**	84"
Width:	36"	**Vision Panel:**	N/A

Ceiling Treatment: Suspended acoustical lay-in tiles

Ceiling Height: 8' minimum

Acoustic Treatment: Acoustic seperation from adjacent spaces

Windows:

Natural Lighting:	Not required
Room Skylight:	None

MECHANICAL/ELECTRICAL

HVAC: Standard

Plumbing: None

Fire Protection: Smoke detector, sprinkler, and visual alarm

Security: Keyed lock at entrance doors

Electrical: 120V wall outlets

AV Requirements: None

Wire Management: Wall outlets

Data Management: Tele/data outlet(s)

Artificial Lighting: Direct/indirect fluorescent

Telephone: Wall mounted telephone jack

EQUIPMENT AND FURNISHINGS

Equipment

(1) Copier (provided by owner)
(1) Refrigerator
(1) Microwave
(1) Coffee maker

Furniture

(1) 10 LF task slatwall
(1) 26 LF base cabinets
(1) 20 LF wall cabinets - lockable
(45) Mail slots
(1) 4'x4' Tack board
(1) 4'x4' White board
(4) 4 Drawer lateral file
(1) Ten gallon waste receptacle
(1) 3 Compartment recycling bin
(1) 10 LF task slatwall
(24) Paper trays

COPYRIGHT © 2009 CRSA

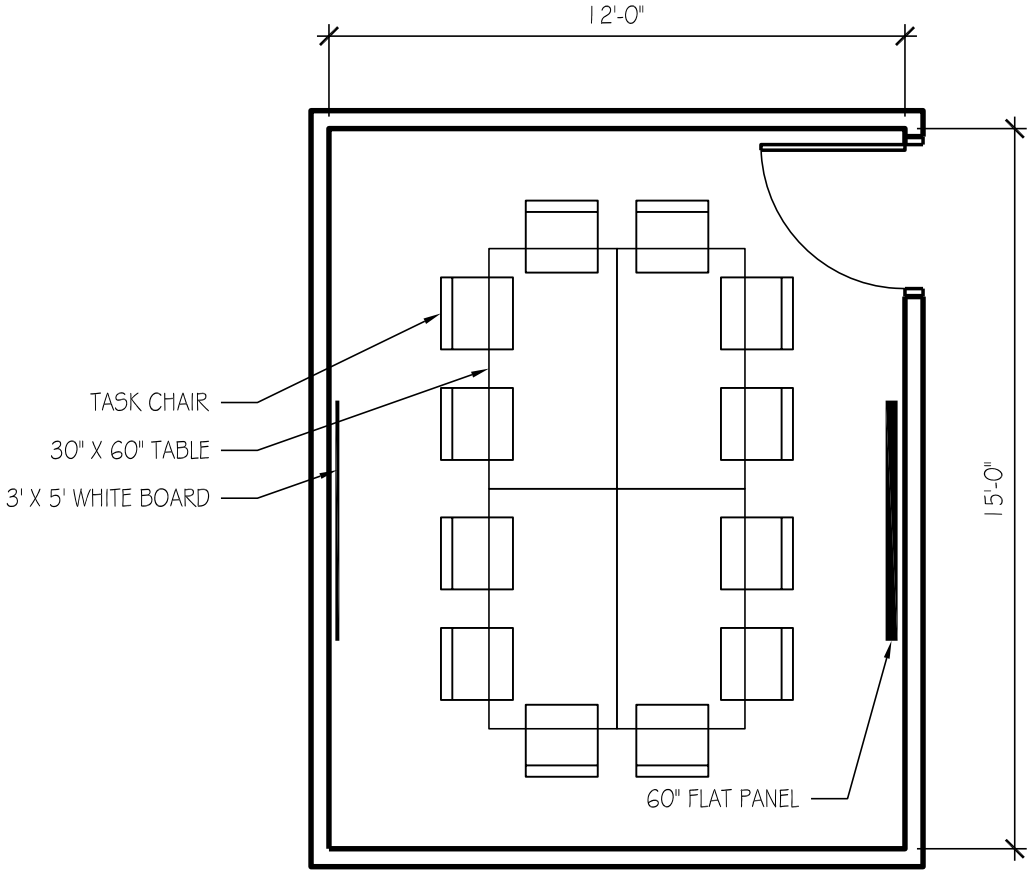

CONFERENCE ROOM - 180 SF

USU Agriculture Building

ROOM DATA SHEET DETAIL | **COA - Animal, Dairy and Veterinary Sciences**

ADVS Support Area

4.6.2 Small Conference Room -

SPACE INFORMATION

Room Function: Group meetings, presentations

Adjacencies:

Special Requirements:
Chair rail around perimeter

Access: Public

Room Utilization: 5 days a week, 8:00 AM to 5:00 PM

General Notes: None

ROOM SIZE AND CAPACITY

Proposed Area:	180 NSF	**Room/Space Quantity:**	1	**Total Area:**	180
Assigned Capacity:	12 Occupant(s)	**Unassigned Capacity:**	1 Guest(s)	**Total Capacity:**	13

FINISHES, DOORS, AND WINDOWS

Floor Finish: Carpet-tile

Wall Finish: Gypsum board (painted)

Base Finish: Integral Coved

Doors:

Type:	Single	**Height:**	84"
Width:	36"	**Vision Panel:**	Frosted

Ceiling Treatment: Suspended acoustical lay-in tiles

Ceiling Height: 8' minimum

Acoustic Treatment: Acoustic seperation from adjacent spaces

Windows:

Natural Lighting:	Not required
Room Skylight:	Vision Panel

MECHANICAL/ELECTRICAL

HVAC:	Standard, space temperature control	**AV Requirements:**	As needed
Plumbing:	None	**Wire Management:**	Wall outlets
Fire Protection:	Smoke detector, sprinkler, and visual alarm	**Data Management:**	Tele/data outlet(s)
Security:	Keyed lock at entrance doors	**Artificial Lighting:**	Direct/indirect fluorescent
Electrical:	120V wall outlets	**Telephone:**	Wall mounted telephone jack

EQUIPMENT AND FURNISHINGS

Equipment

(1) Conference telephone (provided by owner)
(1) 60" Flat panel TV

Furniture

(4) 30" x 60" Table
(12) Task chair
(1) 3' x 5' White board

COPYRIGHT © 2009 CRSA

BLANK

SECTION 6

SPACE SUMMARY

5	**COA - PLANTS, SOILS & CLIMATE**			**17,388**
5.1	PSC Administration			620
5.1.1	Dept. Head	1	160	160
5.1.2	PSC Admin Office	1	120	120
5.1.3	Sr. Staff Assistant	1	100	100
5.1.4	Staff Assistant - open workstation	3	80	240
5.2	PSC Faculty			2,160
5.2.1	Faculty Office	10	120	1,200
5.2.2	Faculty Office	3	120	360
5.2.3	Faculty Office	3	120	360
5.2.4	Faculty Office	2	120	240
5.3	PSC Technical Staff / Students			1,528
5.3.1	Lab Tech - Shared Office	6	48	288
5.3.2	Post Doc - Shared Office	4	60	240
5.3.3	Graduate Student Suite	32	25	800
5.3.4	Collaborative Grad Student Support	2	100	200
5.4	PSC Research Laboratories			6,900
5.4.1	Wet Labs			
5.4.1.1	Soils Microbiology Lab	2	300	600
5.4.1.2	Soils Chemistry Lab	4	300	1,200
5.4.1.3	Soils Physics Lab	3	300	900
5.4.1.4	Crop Physiology Lab	2	300	600
5.4.1.5	Crop Molecular Biology Lab	4	300	1,200
5.4.1.6	Plant Field Lab - Horticulture	6	300	1,800
5.4.2	Dry Labs			
5.4.2.1	PSC Research Dry Lab	2	300	600
5.5	PSC Research Lab Support			2,300
5.5.1	Glassware / Autoclave Room	2	80	160
5.5.2	Cold Lab / Walk-in Cold Storage	2	120	240
5.5.3	Microscopy Lab	1	200	200
5.5.4	Tissue Culture Transfer Lab	1	180	180
5.5.5	Tissue Culture Growith room	2	80	160
5.5.6	Plant Growth room	1	80	80
5.5.7	Microbe Transfer room	1	100	100
5.5.8	Incubation / Calibration room	1	100	100
5.5.9	Grinding / Drying / Prep room	1	140	140
5.5.10	Oven Room	1	100	100
5.5.11	Refrigerator/Freezer room	2	120	240
5.5.12	Shared Hoods	1	100	100
5.5.13	Analytical Equipment Room	1	200	200
5.5.14	Shop	1	300	300

5.6	PSC Class Labs			2,400
5.6.1	PSC Soils Class Lab	1	1,200	1,200
5.6.2	PSC Horticulture Class Lab	1	1,200	1,200
5.7	PSC Support Area			1,480
5.7.1	Copy/Mail/Workroom/Storage	1	250	250
5.7.2	Small Conference Room	1	180	180
5.7.3	Lab Storage	3	200	600
5.7.4	PSC Growth Chamber room	1	300	300
5.7.5	Freezer Storage room	1	150	150

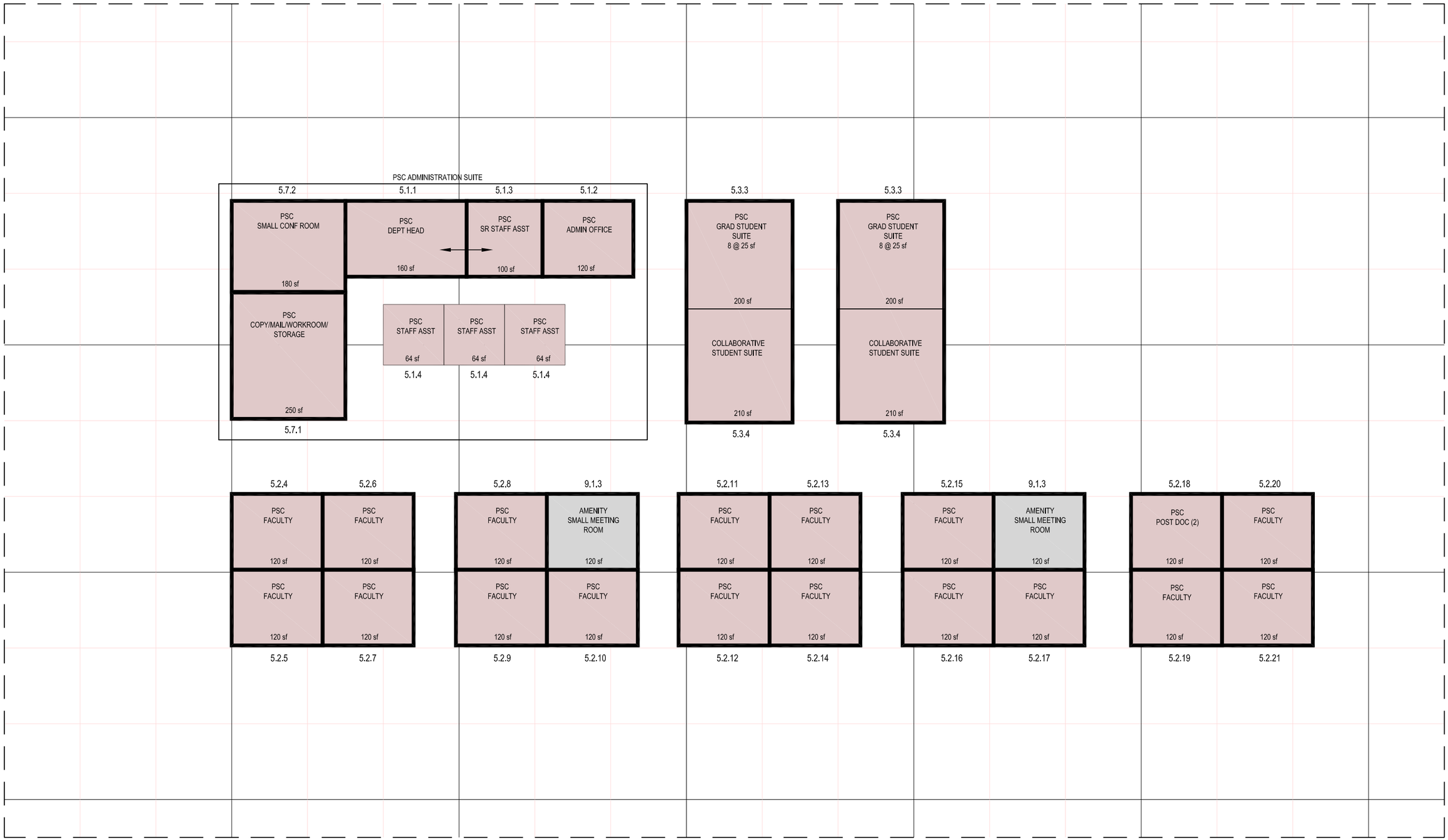

USU COA/ARS PROGRAM - PSC AFFINITY MATRIX

BLANK

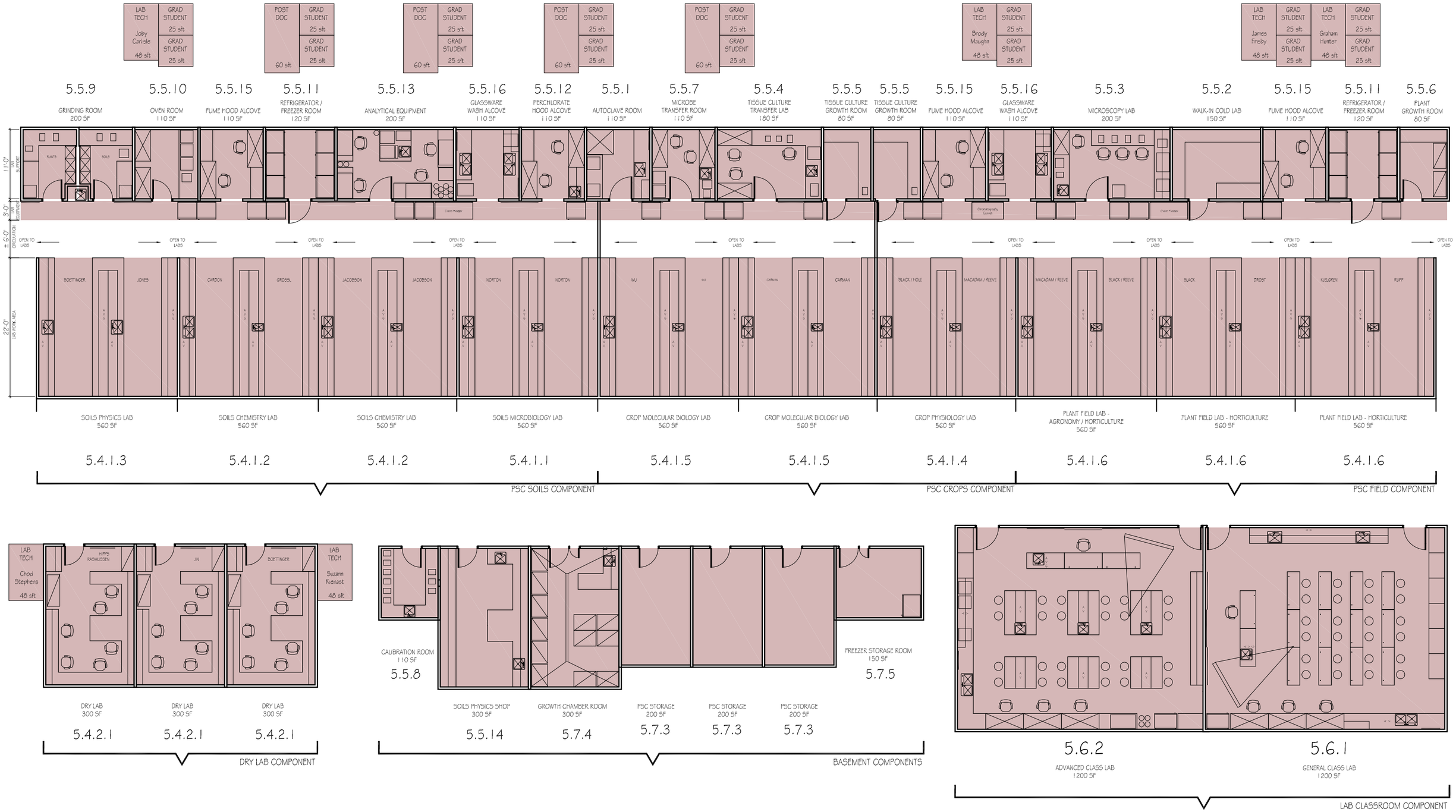

USU COA/ARS PROGRAM - PSC LAB AFFINITY MATRIX

HDR CUH2A CRSA

BLANK

BLANK

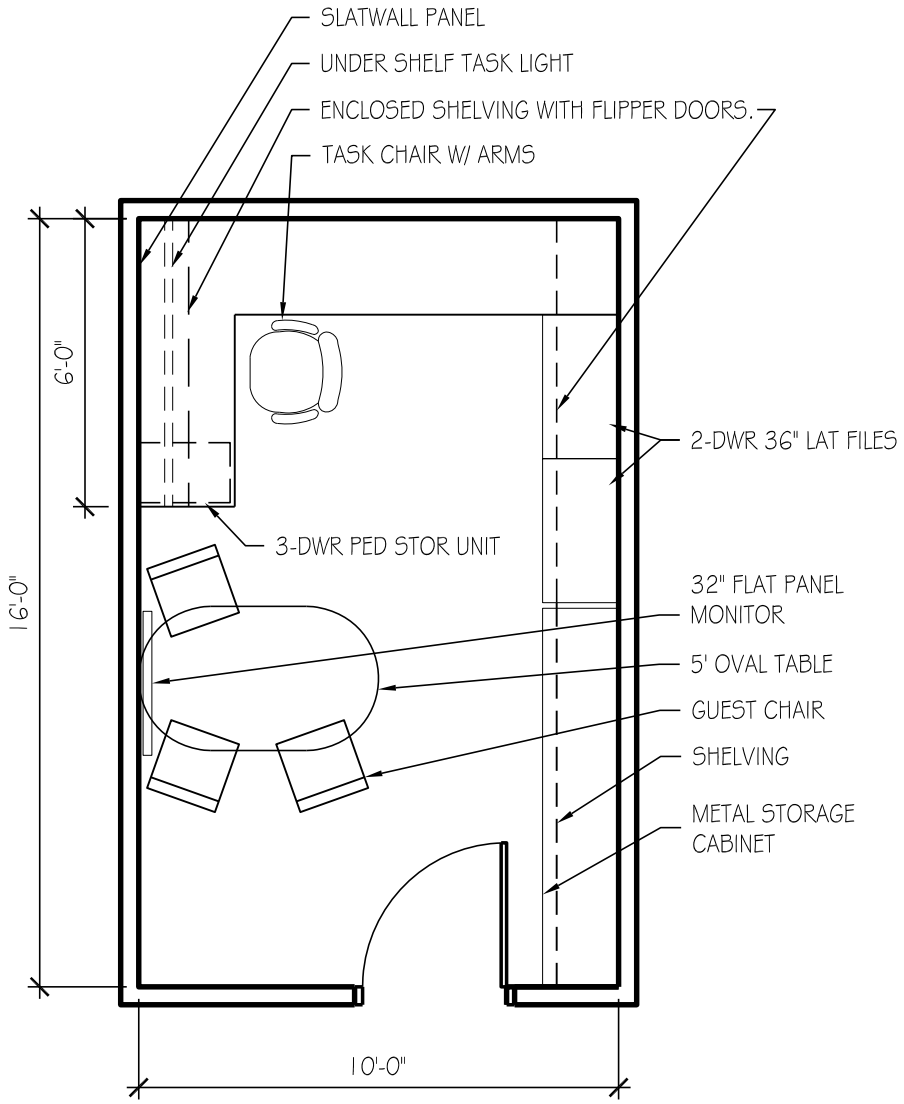

OFFICE - 160 SF

USU Agriculture Building

ROOM DATA SHEET DETAIL **COA - Plants, Soils and Climate**

PSC Administration

5.1.1 Department Head -

SPACE INFORMATION

Room Function: General office work

Adjacencies:

Special Requirements:
None

Access: Public

Room Utilization: 5 days a week, 8:00 AM to 5:00 PM

General Notes: None

ROOM SIZE AND CAPACITY

Proposed Area:	160 NSF	**Room/Space Quantity:**	1	**Total Area:**	160
Assigned Capacity:	1 Occupant(s)	**Unassigned Capacity:**	3 Guest(s)	**Total Capacity:**	4

FINISHES, DOORS, AND WINDOWS

Floor Finish: Carpet-tile

Wall Finish: Gypsum board (painted)

Base Finish: Integral Coved

Doors:

Type:	Single	**Height:**	84"
Width:	36"	**Vision Panel:**	Frosted

Ceiling Treatment: Suspended acoustical lay-in tiles

Ceiling Height: 8' minimum

Acoustic Treatment: Acoustic seperation from adjacent spaces

Windows:

Natural Lighting: Required (provide shades for control)

Room Skylight: Frosted Panel

MECHANICAL/ELECTRICAL

HVAC: Standard, space temperature control

Plumbing: None

Fire Protection: Sprinkler

Security: Keyed lock at entrance doors

Electrical: 120V wall outlets

AV Requirements: None

Wire Management: Wall outlets

Data Management: Tele/data outlet(s)

Artificial Lighting: Direct/indirect fluorescent and task lighting

Telephone: Telephone outlets per occupant

EQUIPMENT AND FURNISHINGS

Equipment

(1) Computer system (provided by owner)
(1) Printer (provided by owner)
(1) 32" Flat panel monitor

Furniture

(1) 16 LF Work surface, system furniture
(1) 5' Oval conference table on casters
(1) Task chair
(3) Guest chair
(1) 3 Drawer PED file
(2) 2 Drawer 36" lateral file, s.f.
(1) 48 LF Adjustable height shelving
(1) 24 LF 12-1/2" Deep open shelving with flipper doors, s.f.
(1) Under shelf task light
(1) 8 LF task slatwall
(1) Task slatwall accessories package
(1) Door mounted coat rack
(1) Waste receptacle
(1) Desk task light
(1) 8 LF metal base cabinet

COPYRIGHT © 2009 CRSA

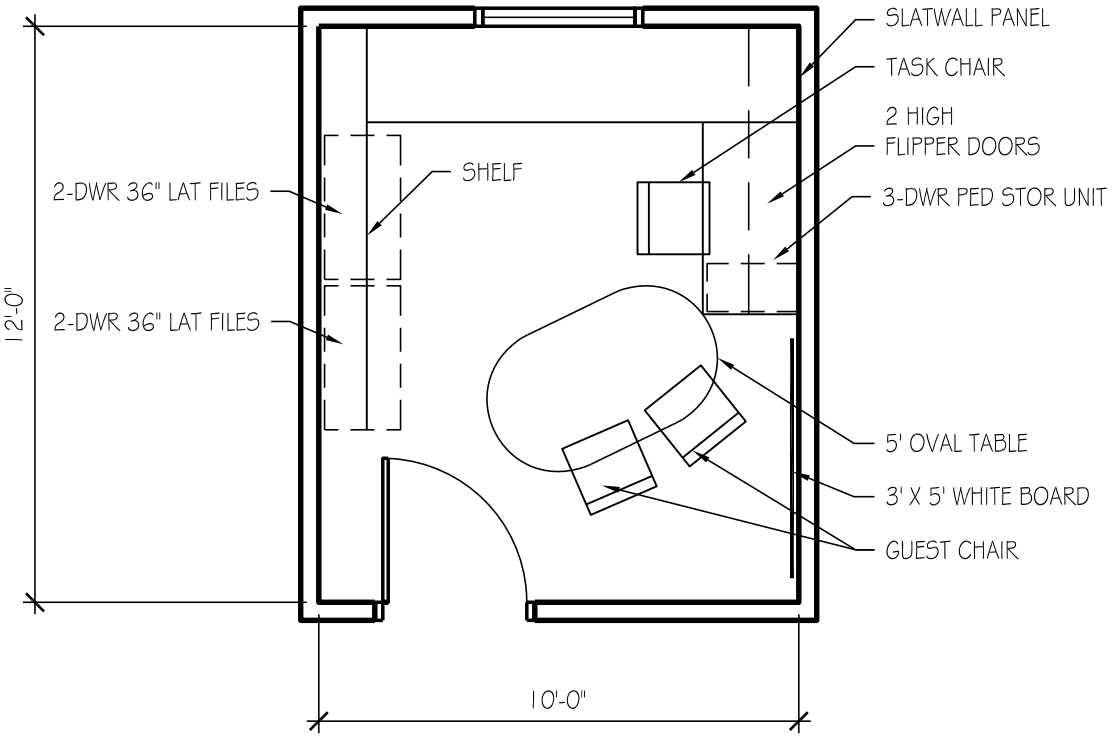

OFFICE A - 120 SF

USU Agriculture Building

ROOM DATA SHEET DETAIL **COA - Plants, Soils and Climate**

PSC Administration

5.1.2 Administration Office -

SPACE INFORMATION

Room Function: General office work

Adjacencies:

Special Requirements:
None

Access: Public

Room Utilization: 5 days a week, 8:00 AM to 5:00 PM

General Notes: None

ROOM SIZE AND CAPACITY

Proposed Area:	120 NSF	**Room/Space Quantity:**	1	**Total Area:**	120
Assigned Capacity:	1 Occupant(s)	**Unassigned Capacity:**	2 Guest(s)	**Total Capacity:**	3

FINISHES, DOORS, AND WINDOWS

Floor Finish: Carpet-tile

Wall Finish: Gypsum board (painted)

Base Finish: Integral Coved

Doors:

Type:	Single	**Height:**	84"
Width:	36"	**Vision Panel:**	Frosted

Ceiling Treatment: Suspended acoustical lay-in tiles

Ceiling Height: 8' minimum

Acoustic Treatment: Acoustic seperation from adjacent spaces

Windows:

Natural Lighting:	Desired, but not required
Room Skylight:	Vision Panel

MECHANICAL/ELECTRICAL

HVAC:	Standard, space temperature control	**AV Requirements:**	None
Plumbing:	None	**Wire Management:**	Wall outlets
Fire Protection:	Sprinkler	**Data Management:**	Tele/data outlet(s)
Security:	Keyed lock at entrance doors	**Artificial Lighting:**	Direct/indirect fluorescent and task lighting
Electrical:	120V wall outlets	**Telephone:**	Telephone outlets per occupant

EQUIPMENT AND FURNISHINGS

Equipment

(1) Computer system (provided by owner)
(1) Printer (provided by owner)

Furniture

(1) 13 LF of work surface
(2) 36" 2 drawer lateral file
(1) 3 drawer PED file
(1) 5' Oval on casters
(1) Task chair
(2) Guest chairs
(2) 6 LF 15-1/2" deep enclosed shelving with flipper doors, s.f.
(1) 8 LF open shelving
(1) Whiteboard
(1) Wall mounted coat rack
(1) Waste receptacle
(1) 6 LF task slatwall
(1) Task slatwall accessories package

COPYRIGHT © 2009 CRSA

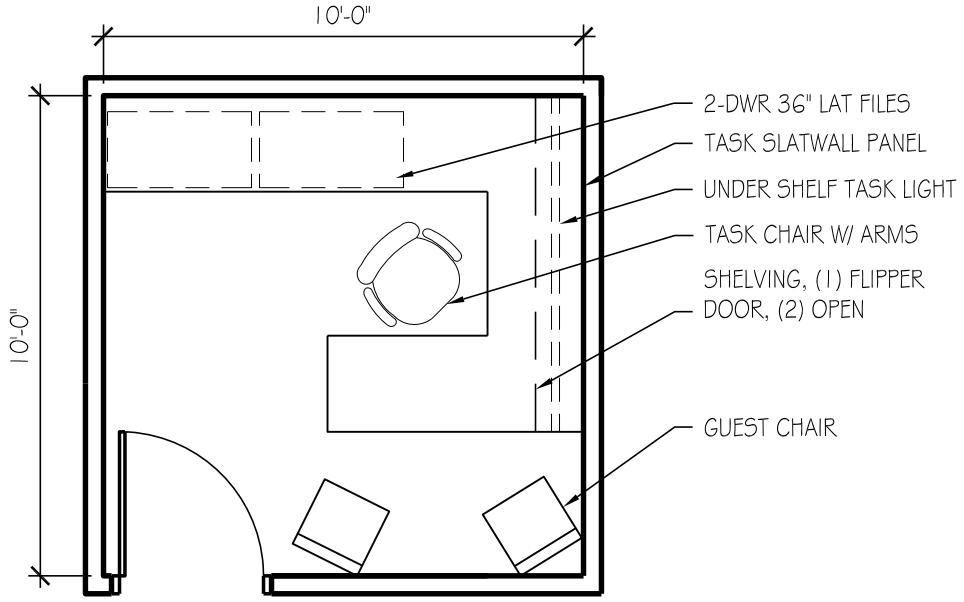

WORKSTATION

100 SF

USU Agriculture Building

ROOM DATA SHEET DETAIL **COA - Plants, Soils and Climate**

PSC Administration

5.1.3 Sr. Staff Assistant -

SPACE INFORMATION

Room Function: General office work

Adjacencies:

Special Requirements:
None

Access: Public

Room Utilization: 5 days a week, 8:00 AM to 5:00 PM

General Notes: None

ROOM SIZE AND CAPACITY

Proposed Area:	100 NSF	**Room/Space Quantity:**	1	**Total Area:**	100
Assigned Capacity:	1 Occupant(s)	**Unassigned Capacity:**	1 Guest(s)	**Total Capacity:**	2

FINISHES, DOORS, AND WINDOWS

Floor Finish: Carpet-tile

Wall Finish: Gypsum board (painted)

Base Finish: Integral Coved

Doors:

Type:	Single	**Height:**	84"
Width:	36"	**Vision Panel:**	Frosted

Ceiling Treatment: Suspended acoustical lay-in tiles

Ceiling Height: 8' minimum

Acoustic Treatment: Acoustic seperation from adjacent spaces

Windows:

Natural Lighting:	Desired, but not required
Room Skylight:	Vision Panel

MECHANICAL/ELECTRICAL

HVAC:	Standard, space temperature control	**AV Requirements:**	None
Plumbing:	None	**Wire Management:**	Wall outlets
Fire Protection:	Sprinkler	**Data Management:**	Tele/data outlet(s)
Security:	Keyed lock at entrance doors	**Artificial Lighting:**	Direct/indirect fluorescent and task lighting
Electrical:	120V wall outlets	**Telephone:**	Telephone outlets per occupant

EQUIPMENT AND FURNISHINGS

Equipment

(1) Computer system (provided by owner)
(1) Printer (provided by owner)

Furniture

(1) 18 LF Work surface
(1) Task chair
(2) Guest chair
(2) 2 Drawer 36" lateral file
(1) 7 LF task slatwall
(1) Task slatwall accessories package
(1) 14 LF 12-1/2" Deep open shelving, s.f.
(1) 7 LF 15-1/2" Deep enclosed shelving with flipper door, s.f.
(1) Under shelf task light
(1) Door mounted coat rack
(1) Waste receptacle

COPYRIGHT © 2009 CRSA

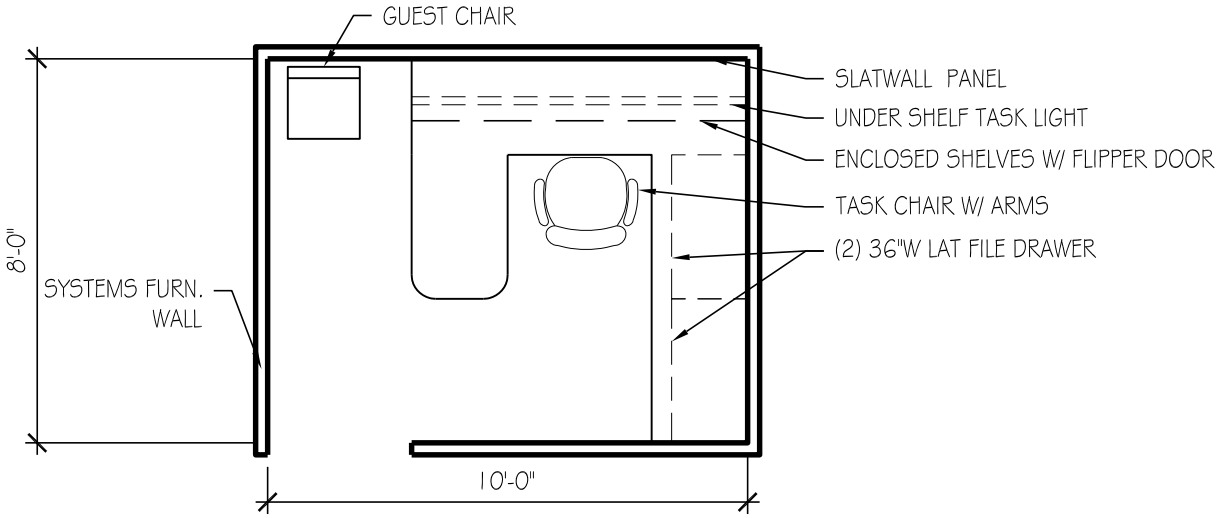

A

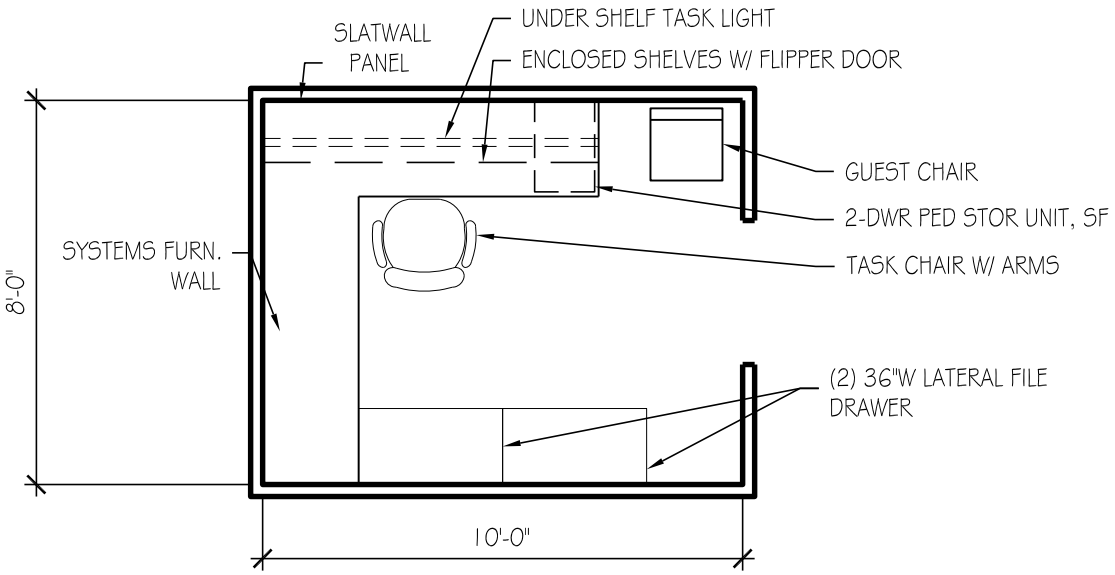

B

OPEN WORKSTATION

80 SF

USU Agriculture Building

ROOM DATA SHEET DETAIL **COA - Plants, Soils and Climate**

PSC Administration

5.1.4 Staff Assistant - Open Workstation -

SPACE INFORMATION

Room Function: General office work

Adjacencies:

Special Requirements:
None

Access: Public

Room Utilization: 5 days a week, 8:00 AM to 5:00 PM

General Notes: None

ROOM SIZE AND CAPACITY

Proposed Area:	80 NSF	**Room/Space Quantity:**	3	**Total Area:**	240
Assigned Capacity:	1 Occupant(s)	**Unassigned Capacity:**	1 Guest(s)	**Total Capacity:**	2

FINISHES, DOORS, AND WINDOWS

Floor Finish: Carpet-tile

Wall Finish: Systems furniture

Base Finish: Systems Furniture

Doors:

Type:	Single	**Height:**	None
Width:	None	**Vision Panel:**	N/A

Ceiling Treatment: Suspended acoustical lay-in tiles

Ceiling Height: 8' minimum

Acoustic Treatment: Systems Furniture

Windows:

Natural Lighting:	Not required
Room Skylight:	N/A

MECHANICAL/ELECTRICAL

HVAC: Standard

Plumbing: None

Fire Protection: Sprinkler

Security: Keyed lock on all securable storage devices

Electrical: 120V wall outlets

AV Requirements: None

Wire Management: Wall outlets

Data Management: Tele/data outlet(s)

Artificial Lighting: Direct/indirect fluorescent and task lighting

Telephone: Telephone outlets per occupant

EQUIPMENT AND FURNISHINGS

Equipment

(1) Computer system (provided by owner)
(1) Printer (provided by owner)

Furniture

(1) 15 LF Work surface
(2) 2 Drawer 36" lateral file
(1) 14 LF 15-1/2" Deep enclosed shelf with flipper door, s.f.
(1) 7 LF Task light
(1) 7 LF task slatwall
(1) Task slatwall accessories package
(1) Task chair
(1) Guest chair
(1) Waste receptacle
(1) 34 LF systems furniture panels

COPYRIGHT © 2009 CRSA

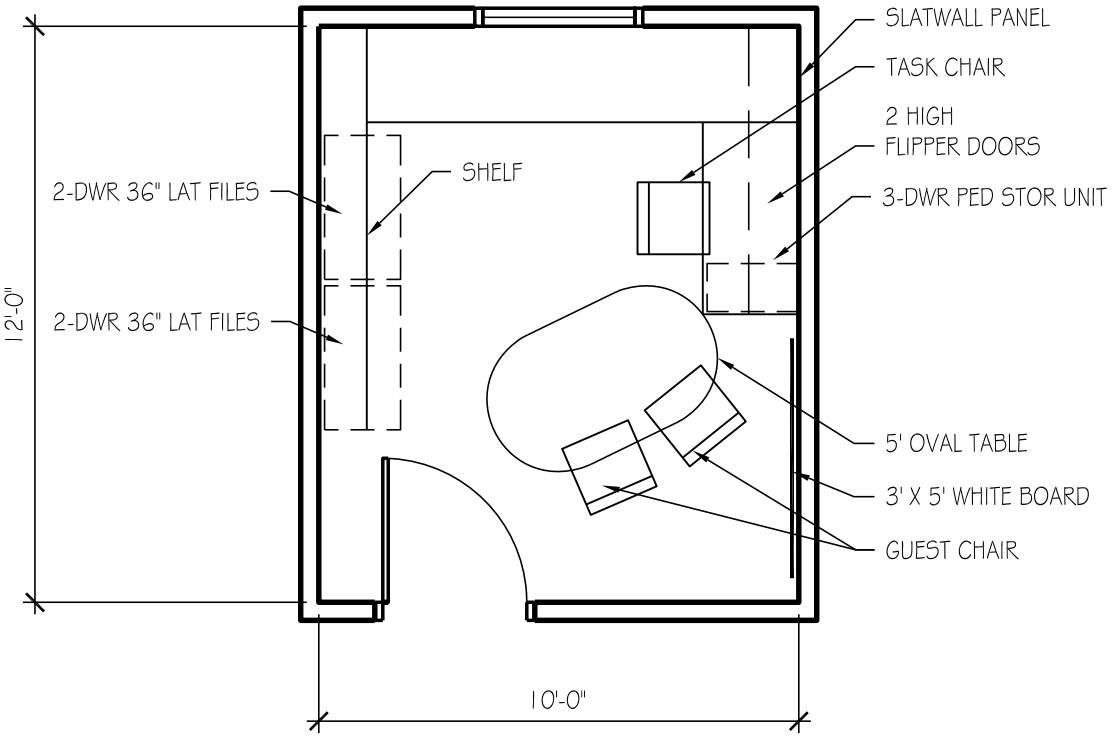

OFFICE A - 120 SF

USU Agriculture Building

ROOM DATA SHEET DETAIL **COA - Plants, Soils and Climate**

PSC Faculty

5.2.1 Faculty Office A -

SPACE INFORMATION

Room Function: General office work

Adjacencies:

Special Requirements:
None

Access: Public

Room Utilization: 5 days a week, 8:00 AM to 5:00 PM

General Notes: None

ROOM SIZE AND CAPACITY

Proposed Area:	120 NSF	**Room/Space Quantity:**	8	**Total Area:**	960
Assigned Capacity:	1 Occupant(s)	**Unassigned Capacity:**	1 Guest(s)	**Total Capacity:**	2

FINISHES, DOORS, AND WINDOWS

Floor Finish: Carpet-tile

Wall Finish: Gypsum board (painted)

Base Finish: Integral Coved

Doors:

Type:	Single	**Height:**	84"
Width:	36"	**Vision Panel:**	Frosted

Ceiling Treatment: Suspended acoustical lay-in tiles

Ceiling Height: 8' minimum

Acoustic Treatment: Acoustic seperation from adjacent spaces

Windows:

Natural Lighting: Required (provide shades for control)

Room Skylight: Frosted Panel

MECHANICAL/ELECTRICAL

HVAC: Standard, space temperature control

Plumbing: None

Fire Protection: Sprinkler

Security: Keyed lock at entrance doors

Electrical: 120V wall outlets

AV Requirements: None

Wire Management: Wall outlets

Data Management: Tele/data outlet(s)

Artificial Lighting: Direct/indirect fluorescent and task lighting

Telephone: Telephone outlets per occupant

EQUIPMENT AND FURNISHINGS

Equipment

(1) Computer system (provided by owner)
(1) Printer (provided by owner)

Furniture

(1) 13 LF of work surface
(2) 36" 2 drawer lateral file
(1) 3 drawer PED file
(1) 5' Oval on casters
(1) Task chair
(2) Guest chairs
(2) 6 LF 15-1/2" deep enclosed shelving with flipper doors, s.f.
(1) 8 LF open shelving
(1) Whiteboard
(1) Wall mounted coat rack
(1) Waste receptacle
(1) 6 LF task slatwall
(1) Task slatwall accessories package

COPYRIGHT © 2009 CRSA

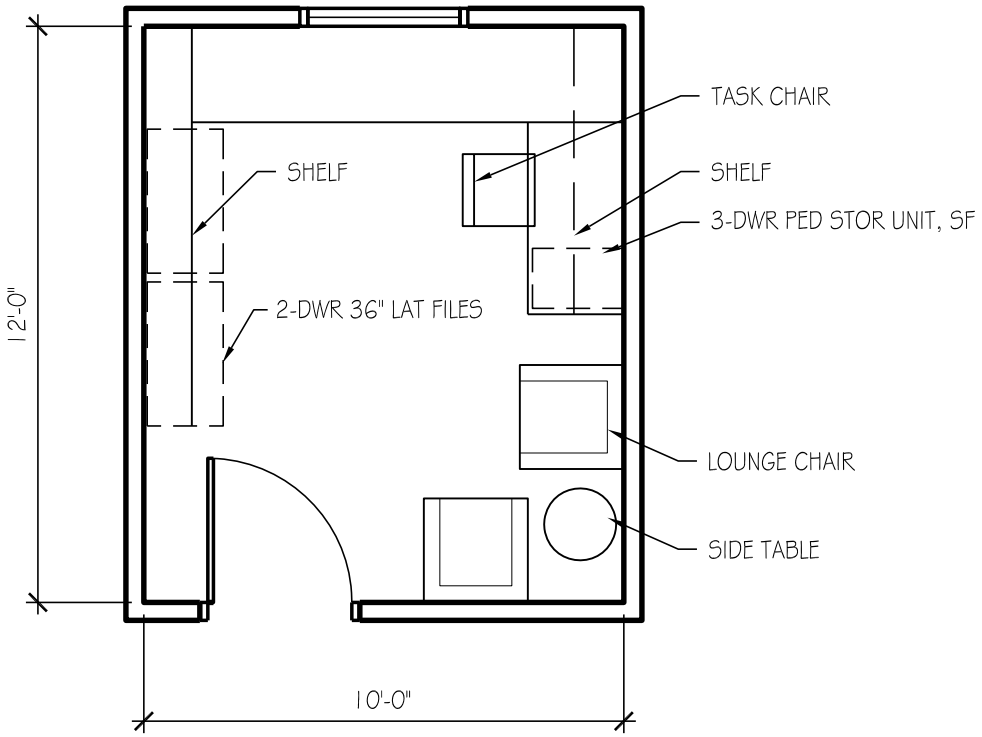

OFFICE B - 120 SF

USU Agriculture Building

ROOM DATA SHEET DETAIL **COA - Plants, Soils and Climate**

PSC Faculty

5.2.2 Faculty Office B **-**

SPACE INFORMATION

Room Function: General office work

Adjacencies:

Special Requirements:

None

Access: Public

Room Utilization: 5 days a week, 8:00 AM to 5:00 PM

General Notes: None

ROOM SIZE AND CAPACITY

Proposed Area:	120 NSF	**Room/Space Quantity:**	2	**Total Area:**	240
Assigned Capacity:	1 Occupant(s)	**Unassigned Capacity:**	1 Guest(s)	**Total Capacity:**	2

FINISHES, DOORS, AND WINDOWS

Floor Finish: Carpet-tile

Wall Finish: Gypsum board (painted)

Base Finish: Integral Coved

Doors:

Type:	Single	**Height:**	84"
Width:	36"	**Vision Panel:**	Frosted

Ceiling Treatment: Suspended acoustical lay-in tiles

Ceiling Height: 8' minimum

Acoustic Treatment: Acoustic seperation from adjacent spaces

Windows:

Natural Lighting:	Required (provide shades for control)
Room Skylight:	Frosted Panel

MECHANICAL/ELECTRICAL

HVAC:	Standard, space temperature control	**AV Requirements:**	None
Plumbing:	None	**Wire Management:**	Wall outlets
Fire Protection:	Sprinkler	**Data Management:**	Tele/data outlet(s)
Security:	Keyed lock at entrance doors	**Artificial Lighting:**	Direct/indirect fluorescent and task lighting
Electrical:	120V wall outlets	**Telephone:**	Telephone outlets per occupant

EQUIPMENT AND FURNISHINGS

Equipment

(1) Computer system (provided by owner)
(1) Printer (provided by owner)

Furniture

(1) 13 LF of work surface
(1) 36" 2 drawer lateral file
(1) 3 drawer PED file
(1) Task chair
(2) Upholstered lounge chair
(1) 8 LF open shelving
(1) 12 LF enclosed shelving with flipper doors, s.f.
(1) 6 LF task slatwall
(1) Task slatwall accessories package
(1) Whiteboard
(1) Wall mounted coat rack
(1) Waste receptacle
(1) Under shelf task light, s.f.

COPYRIGHT © 2009 CRSA

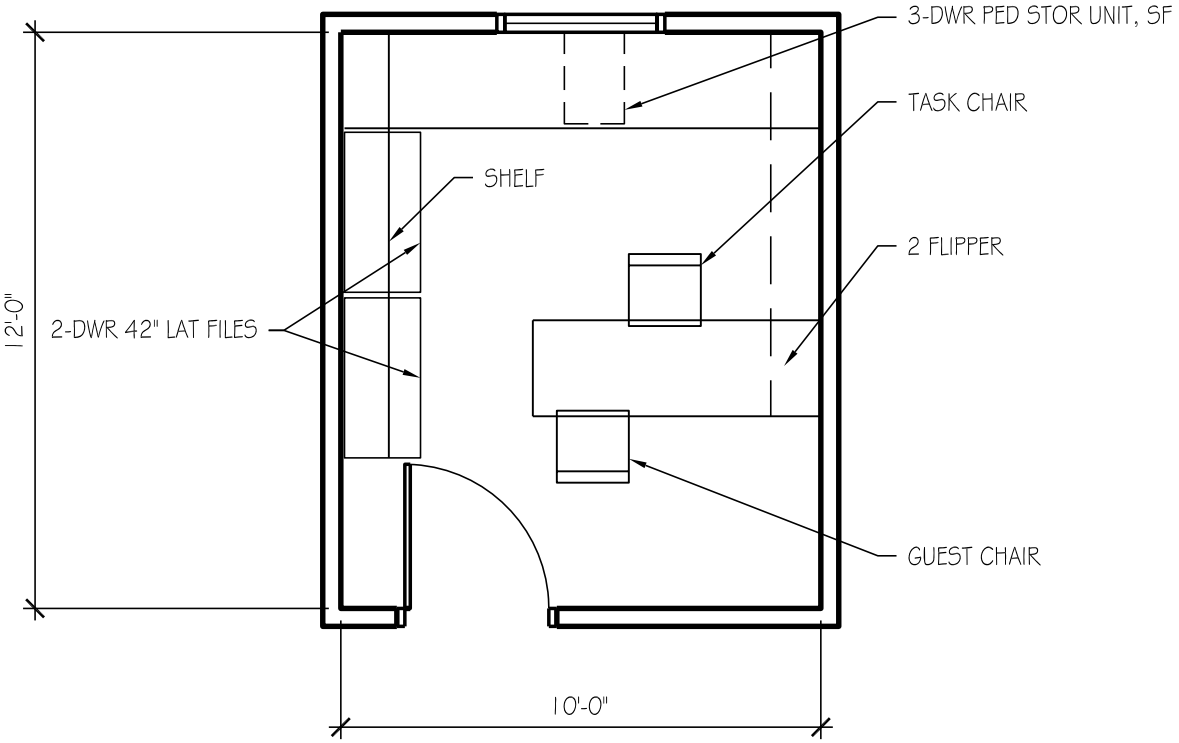

OFFICE C - 120 SF

USU Agriculture Building

ROOM DATA SHEET DETAIL **COA - Plants, Soils and Climate**

PSC Faculty

5.2.3 Faculty Office C -

SPACE INFORMATION

Room Function: General office work

Adjacencies:

Special Requirements:
None

Access: Public

Room Utilization: 5 days a week, 8:00 AM to 5:00 PM

General Notes: None

ROOM SIZE AND CAPACITY

Proposed Area:	120 NSF	**Room/Space Quantity:**	6	**Total Area:**	720
Assigned Capacity:	1 Occupant(s)	**Unassigned Capacity:**	1 Guest(s)	**Total Capacity:**	2

FINISHES, DOORS, AND WINDOWS

Floor Finish: Carpet-tile

Wall Finish: Gypsum board (painted)

Base Finish: Integral Coved

Doors:

Type:	Single	**Height:**	84"
Width:	36"	**Vision Panel:**	Frosted

Ceiling Treatment: Suspended acoustical lay-in tiles

Ceiling Height: 8' minimum

Acoustic Treatment: Acoustic seperation from adjacent spaces

Windows:

Natural Lighting: Required (provide shades for control)

Room Skylight: Frosted Panel

MECHANICAL/ELECTRICAL

HVAC: Standard, space temperature control

Plumbing: None

Fire Protection: Sprinkler

Security: Keyed lock at entrance doors

Electrical: 120V wall outlets

AV Requirements: None

Wire Management: Wall outlets

Data Management: Tele/data outlet(s)

Artificial Lighting: Direct/indirect fluorescent and task lighting

Telephone: Telephone outlets per occupant

EQUIPMENT AND FURNISHINGS

Equipment

(1) Computer system (provided by owner)
(1) Printer (provided by owner)

Furniture

(1) 11 LF of work surface
(2) 36" 2 drawer lateral file
(1) 3 drawer PED file
(1) Task chair
(1) Guest chairs
(1) 8 LF Bookshelves
(1) 16 LF enclosed shelving with flipper doors, s.f.
(1) 6 LF task slatwall
(1) Task slatwall accessories package
(1) Door mounted coat rack
(1) Waste receptacle
(1) Under shelf task light, s.f.

COPYRIGHT © 2009 CRSA

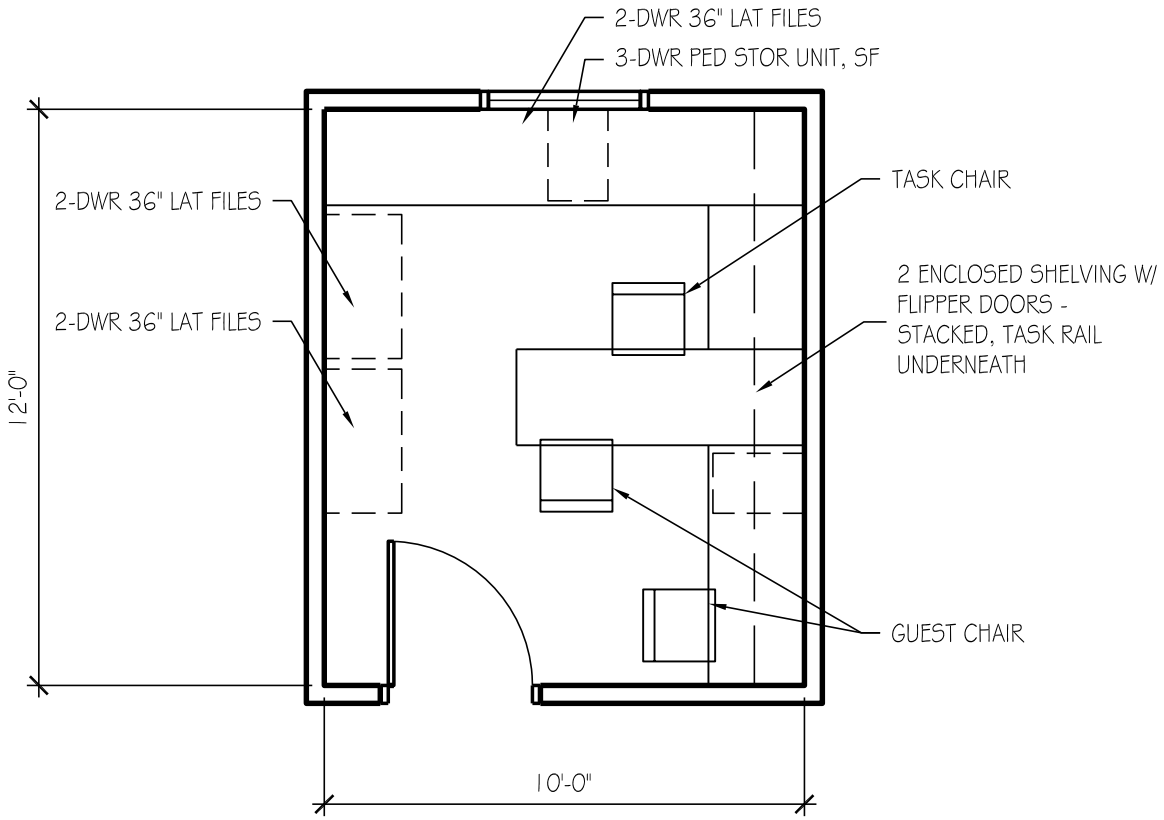

OFFICE D - 120 SF

USU Agriculture Building

ROOM DATA SHEET DETAIL — **COA - Plants, Soils and Climate**

PSC Faculty

5.2.4 Faculty Office D -

SPACE INFORMATION

Room Function: General office work

Adjacencies:

Special Requirements:
None

Access: Public

Room Utilization: 5 days a week, 8:00 AM to 5:00 PM

General Notes: None

ROOM SIZE AND CAPACITY

Proposed Area:	120 NSF	**Room/Space Quantity:**	2	**Total Area:**	240
Assigned Capacity:	1 Occupant(s)	**Unassigned Capacity:**	1 Guest(s)	**Total Capacity:**	2

FINISHES, DOORS, AND WINDOWS

Floor Finish: Carpet-tile

Wall Finish: Gypsum board (painted)

Base Finish: Carpet

Doors:

Type:	Single	**Height:**	84"
Width:	36"	**Vision Panel:**	Frosted

Ceiling Treatment: Suspended acoustical lay-in tiles

Ceiling Height: 8' minimum

Acoustic Treatment: Acoustic seperation from adjacent spaces

Windows:

Natural Lighting:	Required (provide shades for control)
Room Skylight:	Frosted Panel

MECHANICAL/ELECTRICAL

HVAC:	Standard, space temperature control	**AV Requirements:**	None
Plumbing:	None	**Wire Management:**	Wall outlets
Fire Protection:	Sprinkler	**Data Management:**	Tele/data outlet(s)
Security:	Keyed lock at entrance doors	**Artificial Lighting:**	Direct/indirect fluorescent and task lighting
Electrical:	120V wall outlets	**Telephone:**	Telephone outlets per occupant

EQUIPMENT AND FURNISHINGS

Equipment

(1) Computer system (provided by owner)
(1) Printer (provided by owner)

Furniture

(1) 21 LF of work surface
(2) 36" 2 drawer lateral file
(1) 3 drawer PED file
(1) Task chair
(2) Guest chairs
(1) 8 LF of bookshelves
(1) 12 LF enclosed shelving with flipper doors, s.f.
(1) 6 LF task slatwall
(1) Task slatwall accessories package
(1) Under shelf task light
(1) Door mounted coat rack
(1) Waste receptacle

COPYRIGHT © 2009 CRSA

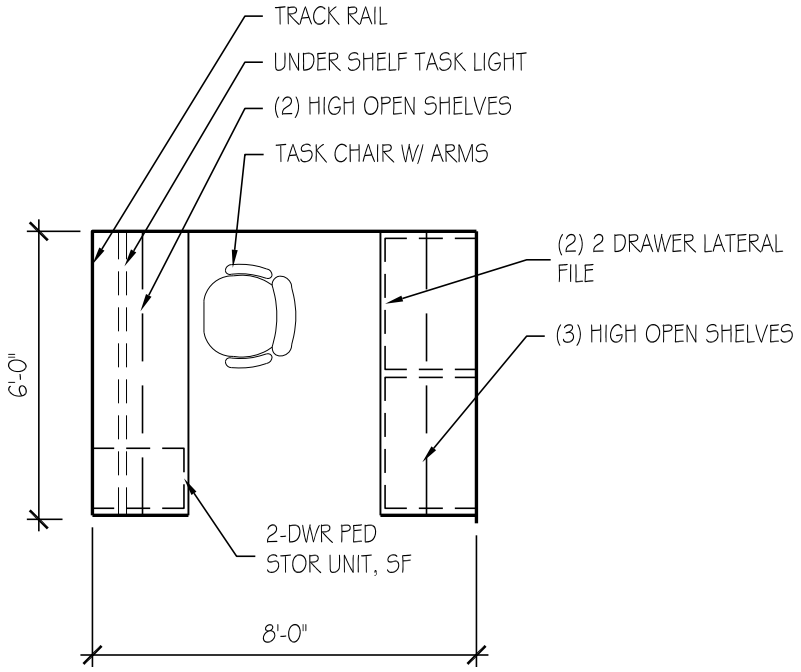

LAB TECH - *48 SF*

USU Agriculture Building

ROOM DATA SHEET DETAIL **COA - Plants, Soils and Climate**

PSC Technical Staff/Students

5.3.1 Lab Tech - Shared Office -

SPACE INFORMATION

Room Function: General office work

Adjacencies:

Special Requirements:
None

Access: Public

Room Utilization: 5 days a week, 8:00 AM to 5:00 PM

General Notes: None

ROOM SIZE AND CAPACITY

Proposed Area:	48 NSF	**Room/Space Quantity:**	6	**Total Area:**	288
Assigned Capacity:	1 Occupant(s)	**Unassigned Capacity:**	1 Guest(s)	**Total Capacity:**	2

FINISHES, DOORS, AND WINDOWS

Floor Finish: Carpet-tile

Wall Finish: Gypsum board (painted)

Base Finish: Systems Furniture

Doors:

Type:	N/A	**Height:**	None
Width:	None	**Vision Panel:**	N/A

Ceiling Treatment: Suspended acoustical lay-in tiles

Ceiling Height: 8' minimum

Acoustic Treatment: Systems Furniture

Windows:

Natural Lighting:	Not required
Room Skylight:	N/A

MECHANICAL/ELECTRICAL

HVAC: Standard, space temperature control

Plumbing: None

Fire Protection: Sprinkler

Security: Keyed lock at entrance doors

Electrical: 120V wall outlets

AV Requirements: None

Wire Management: Wall outlets

Data Management: Tele/data outlet(s)

Artificial Lighting: Direct/indirect fluorescent and task lighting

Telephone: Telephone outlets per occupant

EQUIPMENT AND FURNISHINGS

Equipment

(1) Computer system (provided by owner)
(1) Printer (provided by owner)

Furniture

(1) 12 LF work surface, s.f.
(1) Task chair
(2) 2 Drawer PED file, s.f.
(1) 6 LF task slatwall
(1) Task slatwall accessories package
(5) 6 LF open shelving
(2) 36" 2 drawer lateral file, s.f.
(1) Under shelf task light
(1) Waste receptacle
(1) 20 LF systems furniture panel

COPYRIGHT © 2009 CRSA

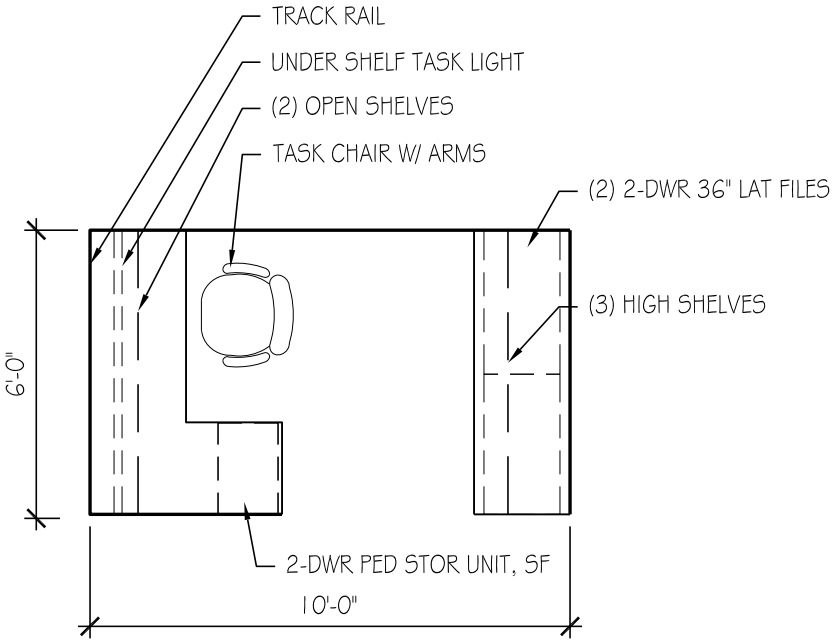

POST DOC SUITE (2)
WORKSTATION- *60 SF*

USU Agriculture Building

ROOM DATA SHEET DETAIL **COA - Plants, Soils and Climate**

PSC Administration

5.3.2 Post Doc - Shared Office -

SPACE INFORMATION

Room Function: General office work

Adjacencies:

Special Requirements:
None

Access: Public

Room Utilization: 5 days a week, 8:00 AM to 5:00 PM

General Notes: None

ROOM SIZE AND CAPACITY

Proposed Area:	60 NSF	**Room/Space Quantity:**	4	**Total Area:**	240
Assigned Capacity:	1 Occupant(s)	**Unassigned Capacity:**	1 Guest(s)	**Total Capacity:**	2

FINISHES, DOORS, AND WINDOWS

Floor Finish: Carpet-tile

Wall Finish: Gypsum board (painted)

Base Finish: Systems Furniture

Doors:

Type:	N/A	**Height:**	None
Width:	None	**Vision Panel:**	N/A

Ceiling Treatment: Suspended acoustical lay-in tiles

Ceiling Height: 8' minimum

Acoustic Treatment: Systems Furniture

Windows:

Natural Lighting:	Not required
Room Skylight:	N/A

MECHANICAL/ELECTRICAL

HVAC:	Standard, space temperature control	**AV Requirements:**	None
Plumbing:	None	**Wire Management:**	Wall outlets
Fire Protection:	Sprinkler	**Data Management:**	Tele/data outlet(s)
Security:	Keyed lock at entrance doors	**Artificial Lighting:**	Direct/indirect fluorescent and task lighting
Electrical:	120V wall outlets	**Telephone:**	Telephone outlets per occupant

EQUIPMENT AND FURNISHINGS

Equipment

(1) Computer system (provided by owner)
(1) Printer (provided by owner)

Furniture

(1) 14 LF work surface
(1) Task chair
(1) 2 drawer PED file, s.f.
(2) 36" 2 drawer lateral file, s.f.
(1) 6 LF task slatwall
(1) Task slatwall accessories package
(1) 30 LF open shelving
(1) Under shelf task light, s.f.
(1) Waste receptacle
(1) 26 LF systems furniture panels

COPYRIGHT © 2009 CRSA

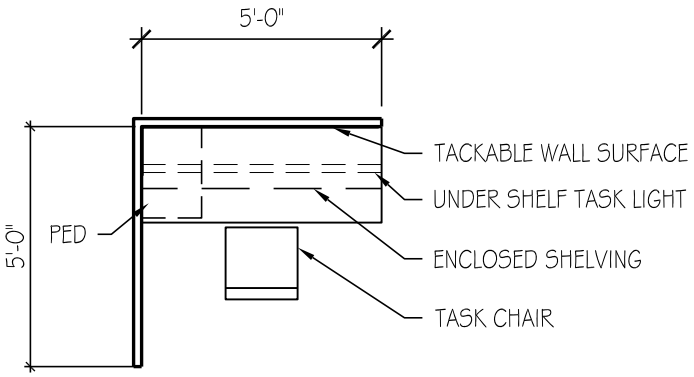

GRAD STUDENT OPEN
WORKSTATION- *25 SF*

USU Agriculture Building

ROOM DATA SHEET DETAIL **COA - Plants, Soils and Climate**

PSC Administration

5.3.3 Graduate Student Suite -

SPACE INFORMATION

Room Function: General office work

Adjacencies:

Access: Public

Room Utilization: 5 days a week, 8:00 AM to 5:00 PM

General Notes: None

Special Requirements:

All system furniture is panel hung.
Locks on all securable storage devices.

ROOM SIZE AND CAPACITY

Proposed Area:	25 NSF	**Room/Space Quantity:**	32	**Total Area:**	800
Assigned Capacity:	1 Occupant(s)	**Unassigned Capacity:**	1 Guest(s)	**Total Capacity:**	2

FINISHES, DOORS, AND WINDOWS

Floor Finish: Carpet-tile

Wall Finish: Gypsum board (painted)

Base Finish: Systems Furniture

Doors:

Type: N/A **Height:** None

Width: None **Vision Panel:** N/A

Ceiling Treatment: Suspended acoustical lay-in tiles

Ceiling Height: 8' minimum

Acoustic Treatment: Systems Furniture

Windows:

Natural Lighting: Not required

Room Skylight: N/A

MECHANICAL/ELECTRICAL

HVAC: Standard, space temperature control

Plumbing: None

Fire Protection: Sprinkler

Security: Keyed lock on all securable storage devices

Electrical: 120V wall outlets

AV Requirements: None

Wire Management: Wall outlets

Data Management: Tele/data outlet(s)

Artificial Lighting: Direct/indirect fluorescent and task lighting

Telephone: Telephone outlets per occupant

EQUIPMENT AND FURNISHINGS

Equipment

(1) Computer system (provided by owner)
(1) Printer (provided by owner)

Furniture

(1) 5 LF 24" Deep work surface, s.f.
(1) Task chairs
(1) 2 Drawer PED file, s.f.
(1) 5 LF 15-1/2" Deep enclosed shelving with flipper doors, s.f.
(1) Under shelf task light
(1) 5 LF task slatwall
(1) Task slatwall accessories package
(1) Waste receptacle
(1) 10 LF systems furniture panels

COPYRIGHT © 2009 CRSA

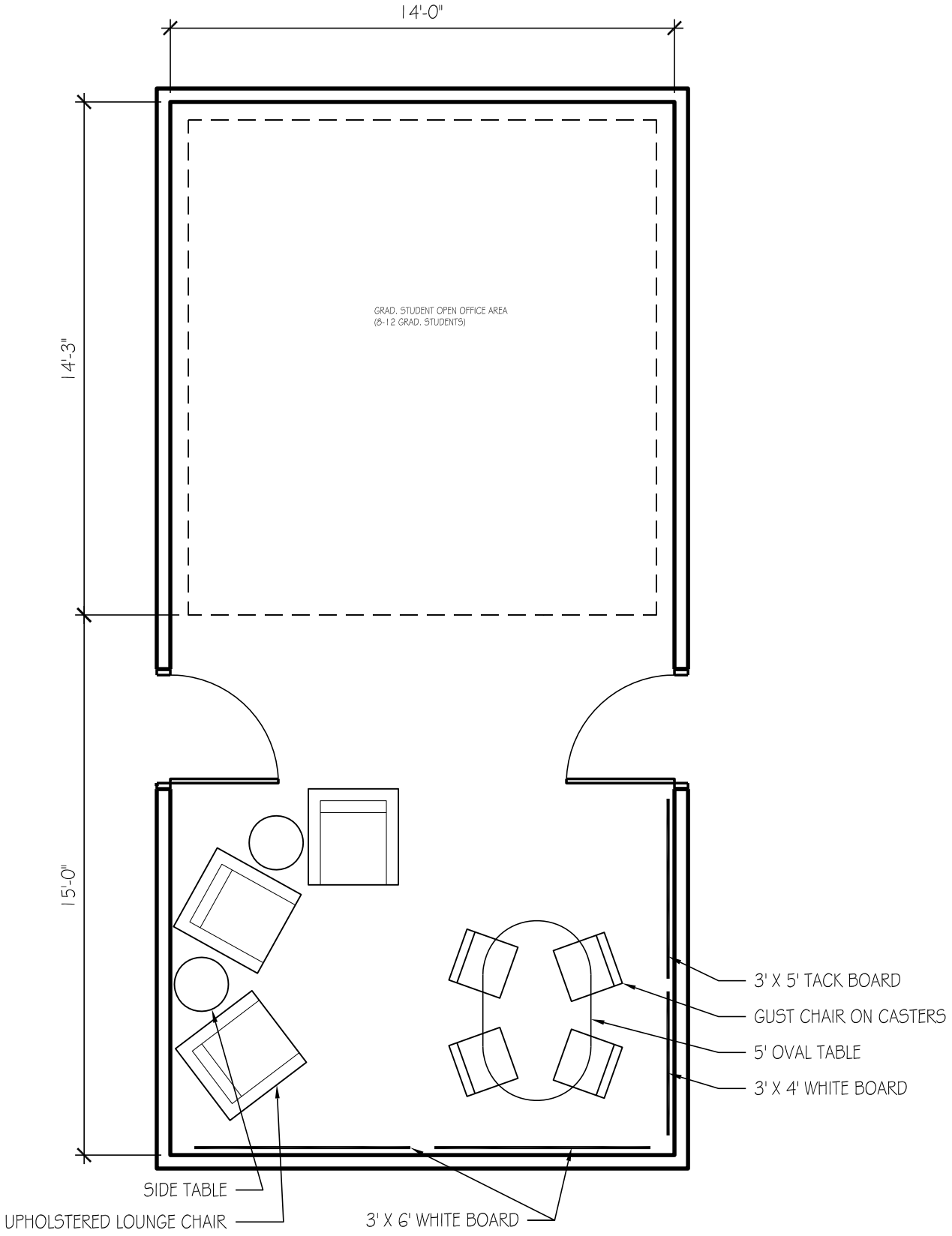

COLLABORATIVE GRAD STUDENT SUPPORT- 210 SF

USU Agriculture Building

ROOM DATA SHEET DETAIL **COA - Plants, Soils and Climate**

Technical Staff/Students

5.3.4 Collaborative Grad Student Support -

SPACE INFORMATION

Room Function: Group collaboration

Adjacencies: Grad Student Suite (5.3.3)

Special Requirements:

Access: Public

Room Utilization: 5 days a week, 8:00 AM to 5:00 PM

General Notes: None

ROOM SIZE AND CAPACITY

Proposed Area:	210 NSF	**Room/Space Quantity:**	2	**Total Area:**	420
Assigned Capacity:	1 Occupant(s)	**Unassigned Capacity:**	1 Guest(s)	**Total Capacity:**	2

FINISHES, DOORS, AND WINDOWS

Floor Finish: Carpet-tile

Wall Finish: Gypsum board (painted)

Base Finish: Integral Coved

Doors:

Type:	Single	**Height:**	84"
Width:	36"	**Vision Panel:**	Frosted

Ceiling Treatment: Suspended acoustical lay-in tiles

Ceiling Height: 8' minimum

Acoustic Treatment: Acoustic seperation from adjacent spaces

Windows:

Natural Lighting:	Not required
Room Skylight:	Vision Panel

MECHANICAL/ELECTRICAL

HVAC:	Standard	**AV Requirements:**	None
Plumbing:	None	**Wire Management:**	Wall outlets
Fire Protection:	Smoke detector, sprinkler, and visual alarm	**Data Management:**	None
Security:	Keyed lock at entrance doors	**Artificial Lighting:**	Direct/indirect fluorescent
Electrical:	120V wall (grounded) outlet	**Telephone:**	None

EQUIPMENT AND FURNISHINGS

Equipment

Furniture

(1) 5' Oval table
(3) Guest chair on casters
(3) Upholstered lounge chair
(2) Side table
(2) 3' x 6' Tack board
(1) 10 LF Tackable wall surface

COPYRIGHT © 2009 CRSA

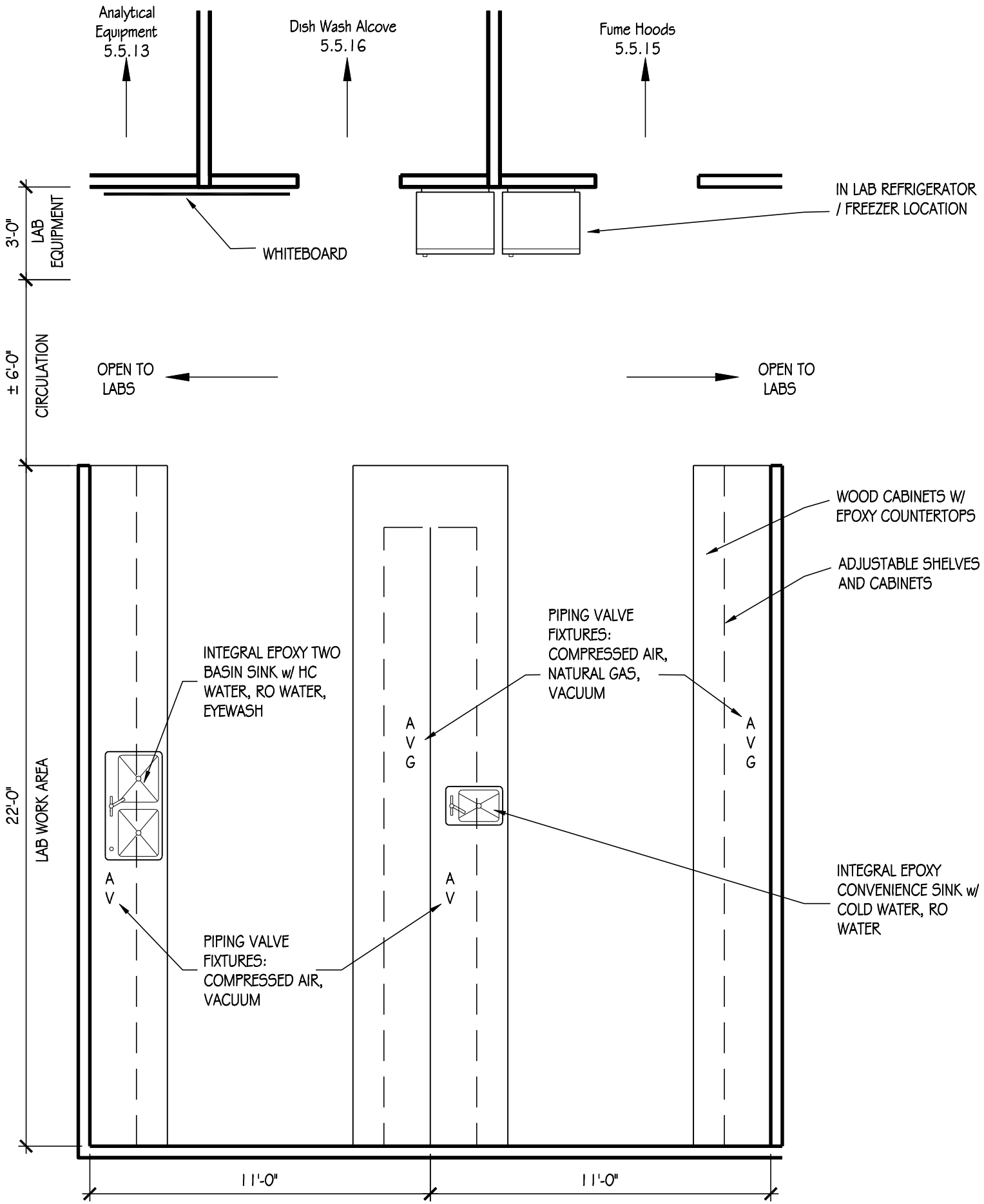

SOILS MICROBIOLOGY LAB
560 SF

USU Agriculture Building

ROOM DATA SHEET DETAIL — **Plants, Soils, & Climate**

PSC Research Laboratories

5.4.1.1 Soils Microbiology — Third Level

SPACE INFORMATION

Room Function: Soils testing

Adjacencies: Soils Chemistry (5.4.1.2), Analytical Equipment (5.5.13), Microbe Transfer Room (5.5.7), Glassware Wash alcove (5.5.16), Fume Hood alcove (5.5.15)

Special Requirements:

Access: Restricted - Staff & Students

Room Utilization: 7 days a week, 24 hours a day

General Notes: Norton

ROOM SIZE AND CAPACITY

Proposed Area:	600 NSF	**Room/Space Quantity:**	1	**Total Area:**	600
Assigned Capacity:	0 Occupant(s)	**Unassigned Capacity:**	8 Guest(s)	**Total Capacity:**	8

FINISHES, DOORS, AND WINDOWS

Floor Finish:	Vinyl Composite Tile (VCT)	**Ceiling Treatment:**	Suspended vinyl-faced lay-in panels
Wall Finish:	Gypsum board (painted)	**Ceiling Height:**	10'
Base Finish:	Rubber	**Acoustic Treatment:**	As needed
Doors:		**Windows:**	
Type:	None	**Natural Lighting:**	Desired, but not required
Height:		**Room Skylight:**	Acceptable
Width:		**Vision Panel:**	Required

CASEWORK / FURNISHINGS

Wall Cabinets:	Wood - Certified	**Shelving:**	Yes
Base Cabinets:	Wood - Certified	**Drawer Units:**	Yes
Bench Top:	Epoxy Resin	**White Boards:**	(1) 4'-6'
Bench Height:	36"	**Tack Boards:**	No

PLUMBING / GASES

Sinks:	1 Large two basin & 1 Small convenience per lab	**Air:**	1 per bench
Pure Water:	RO - 1 per bay	**Lab Gas:**	1 per bay
HotCold Water:	Yes	**CO2:**	Cylinder
Floor Drain:	No	**Nitrogen:**	Cylinder
HoseBib:	No	**Vacuum:**	1 per bench
Waste:	None	**Other Gas:**	
Eyewash:	Yes	**Fire Protection:**	Lab Standard
Emerg Shower:	(1) every three lab bays		

COPYRIGHT © 2009 CRSA

USU Agriculture Building

ROOM DATA SHEET DETAIL **Plants, Soils, & Climate**

PSC Research Laboratories

5.4.1.1 Soils Microbiology **Third Level**

HVAC / ELECTRICAL

Total Air Changes:	10 ACH	**Power:**	110v + 220v
Pressure:	Negative	**Lighting:**	Direct/indirect fluorescent
Temp Requirement:	Lab Standard	**Fixture Mount:**	Recessed
Relative Humidity:	Lab Standard	**Occ. Sensors:**	No
Local Exhaust:	Lab Standard	**Task Light:**	Yes
Air Filtration:	Lab Standard	**Em Power:**	On select outlets
CO2 Sensor:	Yes	**UPS:**	No
Other HVAC:			

COMMUNICATIONS / SPECIAL CONSIDERATIONS

Phone Outlets:	1 per lab	**Light Controls:**	Not Required
Data Outlets:	1 per bay	**Visual Control:**	Views Desirable
Network:	Yes	**Structural Control:**	Not Required
AV Requirements:	None	**Security:**	Proximity card lock
Clocks:	Yes	**Shielding:**	Not Required

EQUIPMENT AND FURNISHINGS

Equipment:

Norton Lab - Owner provided equipment
(2) Centrifuges
(1) Vacuum
(1) Bag sealer
(1) Water bath
(1) Fluorimeter
(1) Heat block
(2) Power supplies
(1) Hot plate (220v)
(3) Micro-centrifuges
(1) Spectrophotometer
(1) Master thermocycler
(1) Microwave
(1) US crosslinker
(1) Cell disrupter
(1) Oven
(2) Shakers
(1) Hybridization oven
(1) Water purifier
(1) Freezer
(1) Chromatography refrigerator
(1) Speed vac
(2) Scales
(1) Analytical balance
(1) Pipette charging station
(2) Mixers
(1) pH meter
(1) Stir plate
Storage cabinets for chemicals including flammables, acids and bases.

Furnishings:

New Built-in cabinetry
(88) lf Wood base w/epoxy countertop - 30" deep
(84) lf Wood upper w/adjustable shelves - 15" deep

COPYRIGHT © 2009 CRSA

BLANK

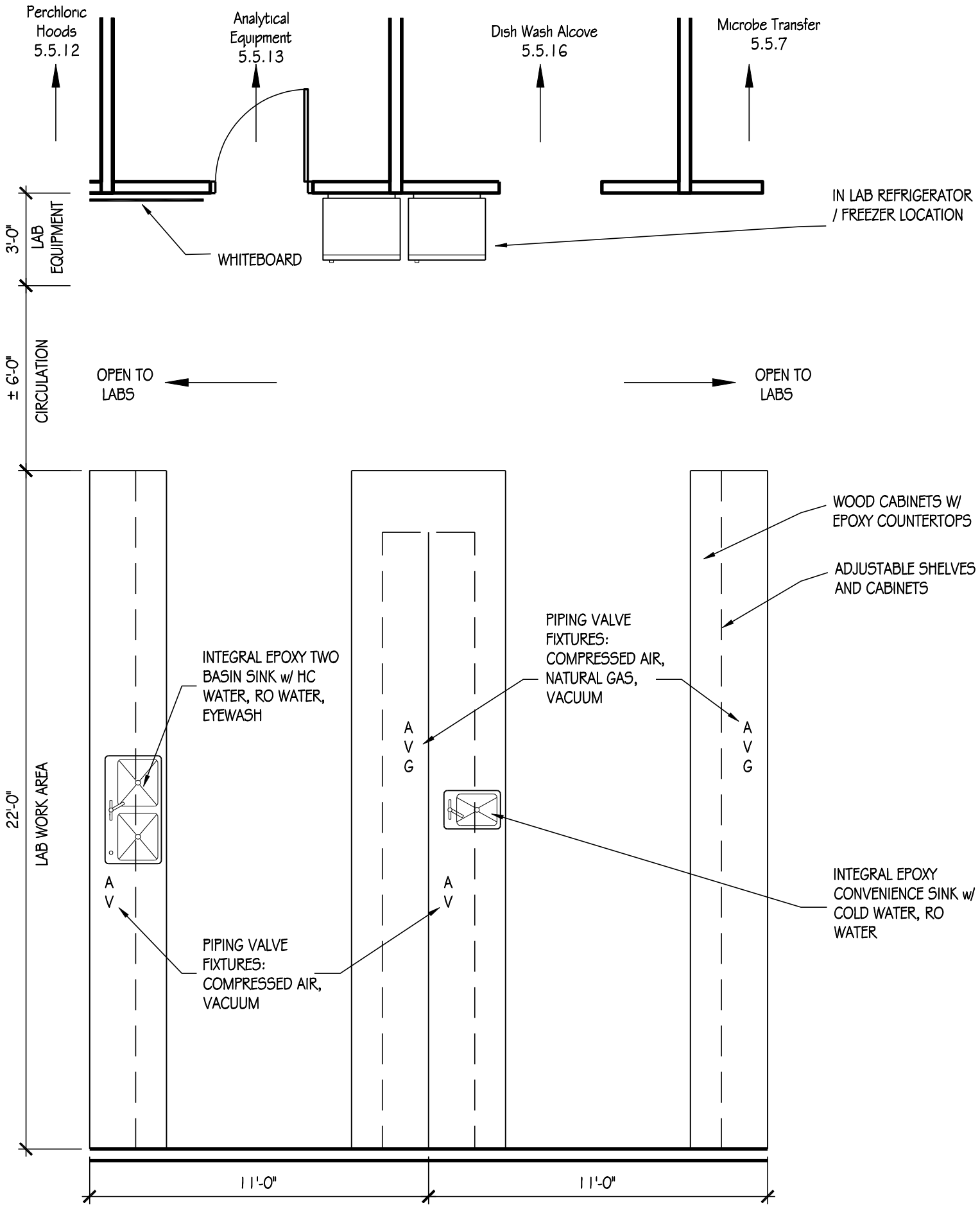

SOILS CHEMISTRY LAB
560 SF

USU Agriculture Building

ROOM DATA SHEET DETAIL — **Plants, Soils, & Climate**

PSC Research Laboratories

5.4.1.2 Soils Chemistry Lab — Third Level

SPACE INFORMATION

Room Function: Soils testing

Adjacencies: Soils Microbiology (5.4.1.1), Analytical Equipment (5.5.13), Microbe Transfer Room (5.5.7), Glassware Wash alcove (5.5.16), Fume Hood alcove (5.5.15)

Special Requirements: Need acid resistent flooring and surfaces

Access: Restricted - Staff & Students

Room Utilization: 7 days a week, 24 hours a day

General Notes: Jacobson, Grossl, Cardon

ROOM SIZE AND CAPACITY

Proposed Area:	600 NSF	**Room/Space Quantity:**	2	**Total Area:**	1200
Assigned Capacity:	0 Occupant(s)	**Unassigned Capacity:**	8 Guest(s)	**Total Capacity:**	8

FINISHES, DOORS, AND WINDOWS

Floor Finish:	Epoxy	**Ceiling Treatment:**	Suspended vinyl-faced lay-in panels
Wall Finish:	Gypsum board (painted)	**Ceiling Height:**	10'
Base Finish:	Coved	**Acoustic Treatment:**	As needed
Doors:		**Windows:**	
Type:	None	**Natural Lighting:**	Desired, but not required
Height:		**Room Skylight:**	Acceptable
Width:		**Vision Panel:**	Required

CASEWORK / FURNISHINGS

Wall Cabinets:	Wood - Certified	**Shelving:**	Yes
Base Cabinets:	Wood - Certified	**Drawer Units:**	Yes
Bench Top:	Epoxy Resin	**White Boards:**	(1) 4'-6'
Bench Height:	36"	**Tack Boards:**	No

PLUMBING / GASES

Sinks:	1 Large two basin & 1 Small convenience per lab	**Air:**	1 per bench
Pure Water:	RO - 1 per bay	**Lab Gas:**	1 per bay
HotCold Water:	Yes	**CO2:**	Cylinder
Floor Drain:	No	**Nitrogen:**	Cylinder
HoseBib:	No	**Vacuum:**	1 per bench
Waste:	None	**Other Gas:**	
Eyewash:	Yes	**Fire Protection:**	Lab Standard
Emerg Shower:	(1) every three lab bays		

COPYRIGHT © 2009 CRSA

USU Agriculture Building

ROOM DATA SHEET DETAIL **Plants, Soils, & Climate**

PSC Research Laboratories

5.4.1.2 Soils Chemistry Lab **Third Level**

HVAC / ELECTRICAL

Total Air Changes:	10 ACH	**Power:**	110v + 220v
Pressure:	Negative	**Lighting:**	Direct/indirect fluorescent
Temp Requirement:	Lab Standard	**Fixture Mount:**	Recessed
Relative Humidity:	Lab Standard	**Occ. Sensors:**	No
Local Exhaust:	Lab Standard	**Task Light:**	Yes
Air Filtration:	Lab Standard	**Em Power:**	On select outlets
CO2 Sensor:	Yes	**UPS:**	No
Other HVAC:			

COMMUNICATIONS / SPECIAL CONSIDERATIONS

Phone Outlets:	1 per lab	**Light Controls:**	Not Required
Data Outlets:	1 per bay	**Visual Control:**	Views Desirable
Network:	Yes	**Structural Control:**	Not Required
AV Requirements:	None	**Security:**	Proximity card lock
Clocks:	Yes	**Shielding:**	Not Required

EQUIPMENT AND FURNISHINGS

Equipment:

Grossl Lab - Owner provided equipment
(1) Drying oven
(2) Balances
(1) Power line conditioner
(1) Heavy-duty blender (220v)
(2) Titrators
(1) Conductivity bridge
(1) Vacuum pump
(1) pH meter (2) Stirrers
(1) Stirrer/heating plate (3) Pipettes
(1) Pump

Jacobson Lab - Owner provided equipment
(1) Plant grinder (1) Tissue digester
(1) Refrigerator (1) pH meter
(1) Stirrer (2) Balances
(1) Centrifuge (2) Shakers
(1) Drying oven (220v) (1) Water bath
(1) Processor (220v)

Cardon Lab - Owner provided equipment
(1) Table shaker (1) Power supply
(1) Sample extractor (1) Incubator
(2) Balances (1) Blender
(1) Water filtration system
(1) Block digester (1) pH meter
Storage cabinets for chemicals including flammables, acids and bases.

Furnishings:

New Built-in cabinetry
(88) lf Wood base w/epoxy countertop - 30" deep
(84) lf Wood upper w/adjustable shelves - 15" deep

COPYRIGHT © 2009 CRSA

BLANK

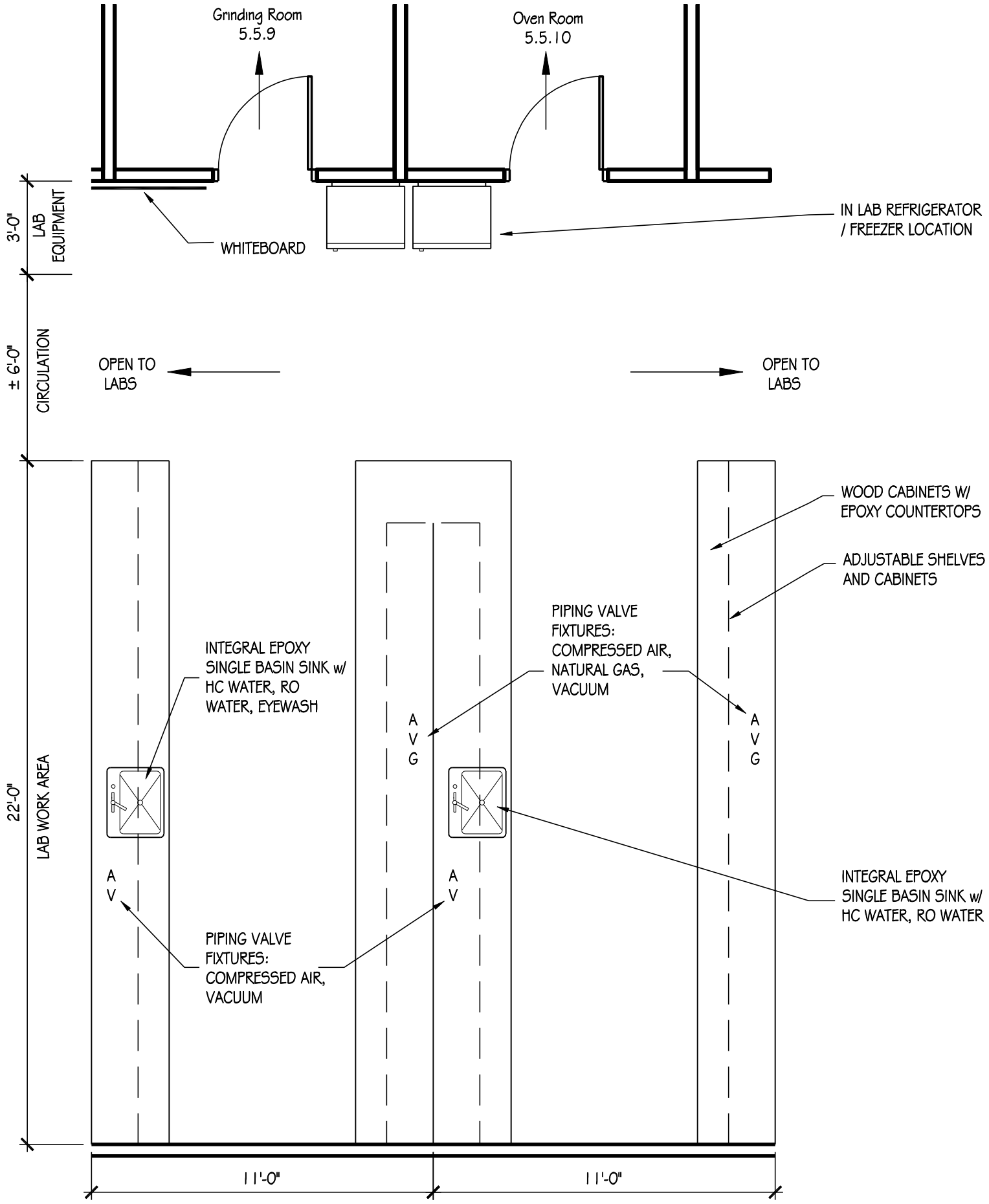

SOILS PHYSICS LAB
560 SF

USU Agriculture Building

ROOM DATA SHEET DETAIL — **Plants, Soils, & Climate**

PSC Research Laboratories

5.4.1.3 Soils Physics Lab — Third Level

SPACE INFORMATION

Room Function: Soils testing

Adjacencies: Grinding Room (5.5.9), Oven Room (5.5.10)

Special Requirements:

Access: Restricted - Staff & Students

Room Utilization: 7 days a week, 24 hours a day

General Notes: Jones, Boettinger

ROOM SIZE AND CAPACITY

Proposed Area:	600 NSF	**Room/Space Quantity:**	1	**Total Area:**	600
Assigned Capacity:	0 Occupant(s)	**Unassigned Capacity:**	8 Guest(s)	**Total Capacity:**	8

FINISHES, DOORS, AND WINDOWS

Floor Finish:	Vinyl Composite Tile (VCT)	**Ceiling Treatment:**	Suspended vinyl-faced lay-in panels
Wall Finish:	Gypsum board (painted)	**Ceiling Height:**	10'
Base Finish:	Rubber	**Acoustic Treatment:**	As needed
Doors:		**Windows:**	
Type:	None	**Natural Lighting:**	Desired, but not required
Width:		**Room Skylight:**	Acceptable

Height:

Vision Panel: Required

CASEWORK / FURNISHINGS

Wall Cabinets:	Wood - Certified	**Shelving:**	Yes
Base Cabinets:	Wood - Certified	**Drawer Units:**	Yes
Bench Top:	Epoxy Resin	**White Boards:**	(1) 4'-6'
Bench Height:	36"	**Tack Boards:**	No

PLUMBING / GASES

Sinks:	2 Large w/ special traps	**Air:**	1 per bench
Pure Water:	RO - 1 per bay	**Lab Gas:**	1 per bay
HotCold Water:	Yes	**CO2:**	Cylinder
Floor Drain:	No	**Nitrogen:**	Cylinder
HoseBib:	No	**Vacuum:**	1 per bench
Waste:	None	**Other Gas:**	
Eyewash:	Yes	**Fire Protection:**	Lab Standard
Emerg Shower:	(1) every three lab bays		

COPYRIGHT © 2009 CRSA

USU Agriculture Building

ROOM DATA SHEET DETAIL **Plants, Soils, & Climate**

PSC Research Laboratories

5.4.1.3 Soils Physics Lab **Third Level**

HVAC / ELECTRICAL

Total Air Changes:	10 ACH	**Power:**	110v + 220v
Pressure:	Negative	**Lighting:**	Direct/indirect fluorescent
Temp Requirement:	Lab Standard	**Fixture Mount:**	Recessed
Relative Humidity:	Lab Standard	**Occ. Sensors:**	No
Local Exhaust:	Lab Standard	**Task Light:**	Yes
Air Filtration:	Lab Standard	**Em Power:**	On select outlets
CO2 Sensor:	Yes	**UPS:**	No
Other HVAC:			

COMMUNICATIONS / SPECIAL CONSIDERATIONS

Phone Outlets:	1 per lab	**Light Controls:**	Not Required
Data Outlets:	1 per bay	**Visual Control:**	Views Desirable
Network:	Yes	**Structural Control:**	Not Required
AV Requirements:	None	**Security:**	Proximity card lock
Clocks:	Yes	**Shielding:**	Not Required

EQUIPMENT AND FURNISHINGS

Equipment:

Boettinger Lab - Owner provided equipment
(1) Thermo-analyst computer
(1) Plotter
(1) Scanning colorimeter
(1) High-temp cell adaptor
(1) Blender
(1) Microwave
(1) Shaker
(1) Hot plate
(2) pH meters
(1) Stir light
(1) Centrifuge
(1) Timer
(1) Water bath
(3) Balances
(1) Petrographic microscope
(1) Mixer
(1) Microscope
(1) Vacuum extractor
(1) Refrigerator / Freezer
(2) Air conditioners (220v)
Storage cabinets for chemicals including flammables, acids and bases.

Jones Lab - Owner provided equipment
(4) Scales
(1) Microwave
(1) Pump
(1) Drying oven
(2) Power supplies
(1) Halogen lamp
(1) CO2 Sensor

Furnishings:

New Built-in cabinetry
(88) lf Wood base w/epoxy countertop - 30" deep
(84) lf Wood upper w/adjustable shelves - 15" deep

COPYRIGHT © 2009 CRSA

BLANK

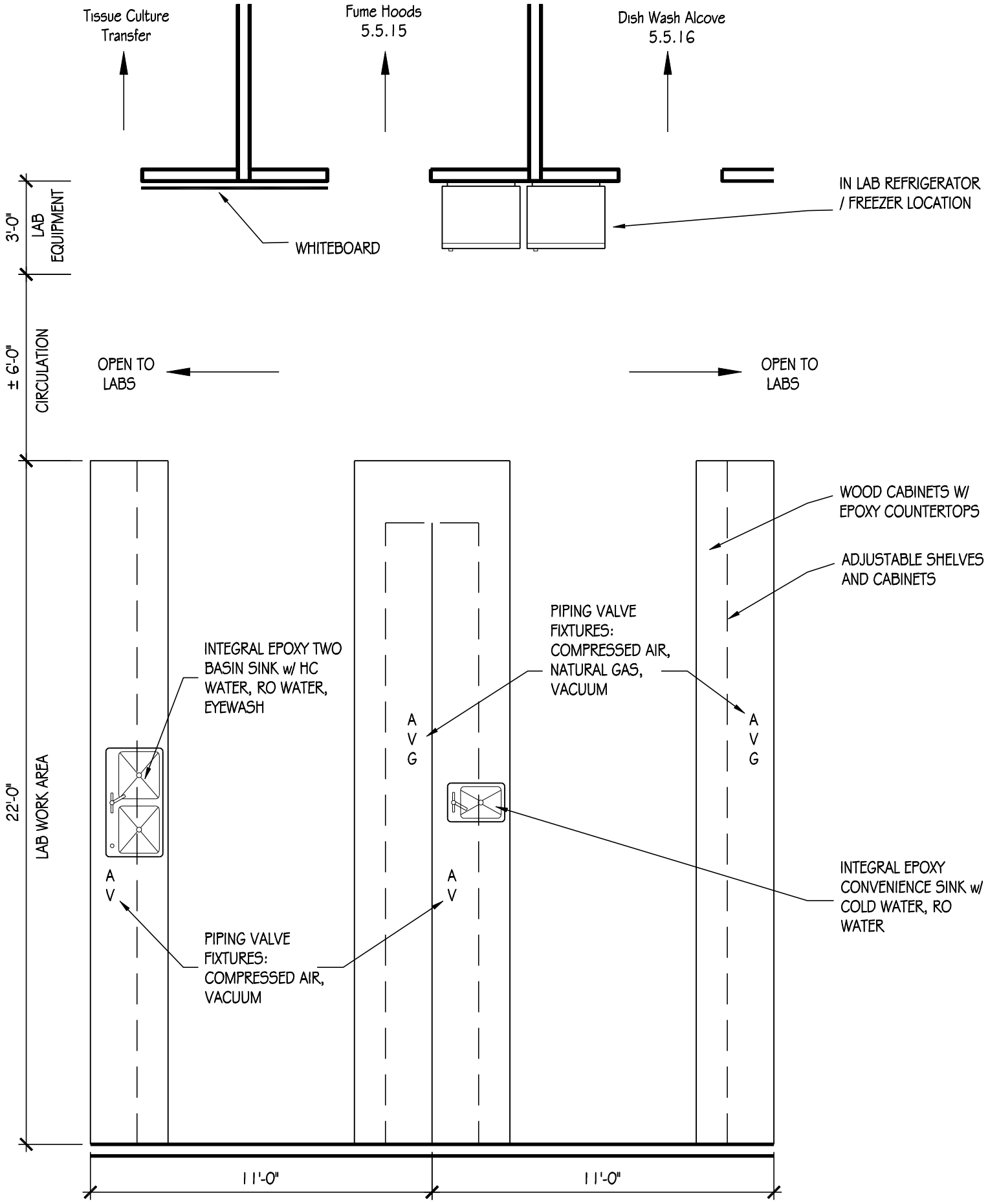

CROP PHYSIOLOGY LAB
560 SF

USU Agriculture Building

ROOM DATA SHEET DETAIL — **Plants, Soils, & Climate**

PSC Research Laboratories

5.4.1.4 Crop Physiology Lab — Third Level

SPACE INFORMATION

Room Function: Plant testing

Adjacencies: Crop Molecular Biology (5.4.1.5), Tissue Culture Transfer Lab (5.5.4), Tissue Culture Growth Room (5.5.5), Glassware Wash alcove (5.5.16)

Special Requirements:

Access: Restricted - Staff & Students

Room Utilization: 7 days a week, 24 hours a day

General Notes: MacAdam/Reeve, Black/Hole

ROOM SIZE AND CAPACITY

Proposed Area:	600 NSF	**Room/Space Quantity:**	1	**Total Area:**	600
Assigned Capacity:	0 Occupant(s)	**Unassigned Capacity:**	8 Guest(s)	**Total Capacity:**	8

FINISHES, DOORS, AND WINDOWS

Floor Finish:	Vinyl Composite Tile (VCT)	**Ceiling Treatment:**	Suspended vinyl-faced lay-in panels
Wall Finish:	Gypsum board (painted)	**Ceiling Height:**	10'
Base Finish:	Rubber	**Acoustic Treatment:**	As needed
Doors:		**Windows:**	
Type:	None	**Natural Lighting:**	Desired, but not required
Height:		**Room Skylight:**	Acceptable
Width:		**Vision Panel:**	Required

CASEWORK / FURNISHINGS

Wall Cabinets:	Wood - Certified	**Shelving:**	Yes
Base Cabinets:	Wood - Certified	**Drawer Units:**	Yes
Bench Top:	Epoxy Resin	**White Boards:**	(1) 4'-6'
Bench Height:	36"	**Tack Boards:**	No

PLUMBING / GASES

Sinks:	1 Large two basin & 1 Small convenience per lab	**Air:**	1 per bench
Pure Water:	RO - 1 per bay	**Lab Gas:**	1 per bay
HotCold Water:	Yes	**CO2:**	No
Floor Drain:	No	**Nitrogen:**	Cylinder
HoseBib:	No	**Vacuum:**	1 per bench
Waste:	None	**Other Gas:**	
Eyewash:	Yes	**Fire Protection:**	Lab Standard
Emerg Shower:	(1) every three lab bays		

COPYRIGHT © 2009 CRSA

USU Agriculture Building

ROOM DATA SHEET DETAIL **Plants, Soils, & Climate**

PSC Research Laboratories

5.4.1.4 Crop Physiology Lab **Third Level**

HVAC / ELECTRICAL

Total Air Changes:	10 ACH	**Power:**	110v + 220v
Pressure:	Negative	**Lighting:**	Direct/indirect fluorescent
Temp Requirement:	Lab Standard	**Fixture Mount:**	Recessed
Relative Humidity:	Lab Standard	**Occ. Sensors:**	No
Local Exhaust:	Lab Standard	**Task Light:**	Yes
Air Filtration:	Lab Standard	**Em Power:**	On select outlets
CO2 Sensor:	Yes	**UPS:**	No
Other HVAC:			

COMMUNICATIONS / SPECIAL CONSIDERATIONS

Phone Outlets:	1 per lab	**Light Controls:**	Not Required
Data Outlets:	1 per bay	**Visual Control:**	Views Desirable
Network:	Yes	**Structural Control:**	Not Required
AV Requirements:	None	**Security:**	Proximity card lock
Clocks:	Yes	**Shielding:**	Not Required

EQUIPMENT AND FURNISHINGS

Equipment:

MacAdam Lab - Owner provided equipment
(1) Hot plate oven (1) Portable vacuum
(1) Microscope (1) Mercury lamp
(1) Plant growth stand (1) Power source
(1) Electrophoresus apparatus
(1) Coolant reservoir & pump
(1) Spectrophotometer (1) Heat lamp
(1) Sample rotator (1) Refrigerator
(1) Pipette aid (1) Metabolic Shaker
(3) Hot plates (2) Pumps
(2) Balances (2) Blenders
(1) pH Meter (1) EC meter
(1) Magnetic stirrer (1) Vortex
Storage cabinets for chemicals including flammables, acids and bases.

D Hole Lab - Owner provided equipment
(1) Hybridization area (4) Balances
(1) Microwave (1) Stir plate
(1) Refrigerator (1) Scope
(1) Minus 80 freezer
(1) Water purification system (1) Dishwasher
(1) Reciprocal water bath shaker
(1) Gel vacuum system (1) Gel dryer
(1) Water chiller (1) Vacuum oven
(1) Platform shaker (1) Homogenizer
(1) Hybridization oven (1) Plate incubator
(1) pH meter (1) Vortexer
(1) Dry bath (1) Gel electrophoresis power supply
(1) Light box (1) Chemical refrigerator
(1) Portable hood (1) Imager
(1) Gel mixing pump (1) Short arc power supply
(1) Short arc power monitor (1) Dissecting scope
(1) Transilluminator (1) Gel power supply

Furnishings:

New Built-in cabinetry
(88) lf Wood base w/epoxy countertop - 30" deep
(84) lf Wood upper w/adjustable shelves - 15" deep

COPYRIGHT © 2009 CRSA

BLANK

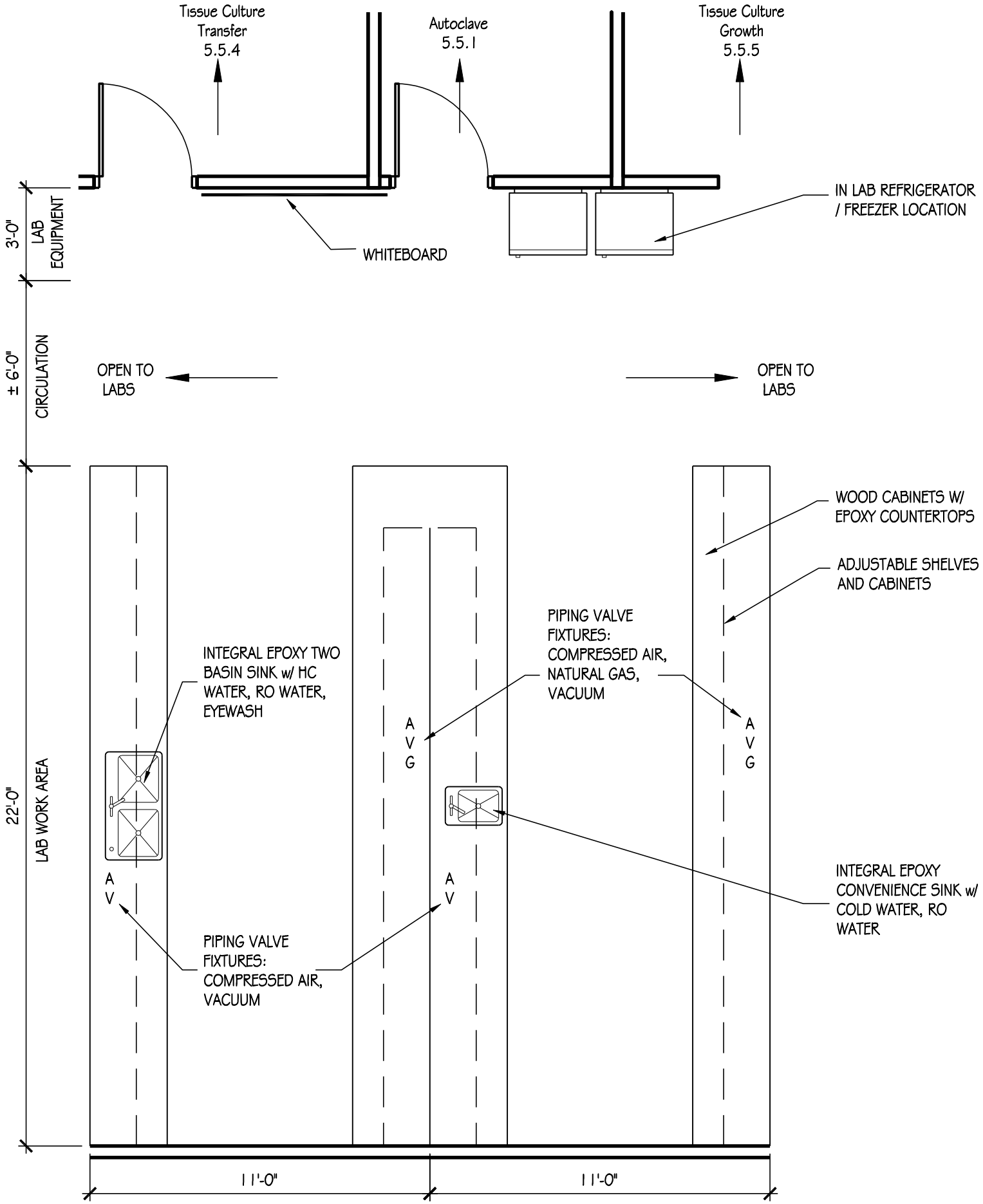

CROP MOLECULAR BIOLOGY LAB
560 SF

USU Agriculture Building

ROOM DATA SHEET DETAIL — **Plants, Soils, & Climate**

PSC Research Laboratories

5.4.1.5 Crop Molecular Biology Lab — Third Level

SPACE INFORMATION

Room Function: Plant testing

Adjacencies: Crop Physiology Lab (5.4.1.4), Tissue Culture Transfer Lab (5.5.4), Tissue Culture Growth room (5.5.5)

Special Requirements:

Access: Restricted - Staff & Students

Room Utilization: 7 days a week, 24 hours a day

General Notes: Carman, Wu

ROOM SIZE AND CAPACITY

Proposed Area:	600 NSF	**Room/Space Quantity:**	2	**Total Area:**	1200
Assigned Capacity:	0 Occupant(s)	**Unassigned Capacity:**	8 Guest(s)	**Total Capacity:**	8

FINISHES, DOORS, AND WINDOWS

Floor Finish:	Vinyl Composite Tile (VCT)	**Ceiling Treatment:**	Suspended vinyl-faced lay-in panels
Wall Finish:	Gypsum board (painted)	**Ceiling Height:**	10'
Base Finish:	Rubber	**Acoustic Treatment:**	As needed
Doors:		**Windows:**	
Type:	None	**Natural Lighting:**	Desired, but not required
Width:		**Room Skylight:**	Acceptable

Height:

Vision Panel: Required

CASEWORK / FURNISHINGS

Wall Cabinets:	Wood - Certified	**Shelving:**	Yes
Base Cabinets:	Wood - Certified	**Drawer Units:**	Yes
Bench Top:	Epoxy Resin	**White Boards:**	(1) 4'-6'
Bench Height:	36"	**Tack Boards:**	No

PLUMBING / GASES

Sinks:	1 Large two basin & 1 Small convenience per lab	**Air:**	1 per bench
Pure Water:	RO - 1 per bay	**Lab Gas:**	1 per bay
HotCold Water:	Yes	**CO2:**	Cylinder
Floor Drain:	No	**Nitrogen:**	Cylinder
HoseBib:	No	**Vacuum:**	1 per bench
Waste:	None	**Other Gas:**	
Eyewash:	Yes	**Fire Protection:**	Lab Standard
Emerg Shower:	(1) every three lab bays		

COPYRIGHT © 2009 CRSA

USU Agriculture Building

ROOM DATA SHEET DETAIL **Plants, Soils, & Climate**

PSC Research Laboratories

5.4.1.5 Crop Molecular Biology Lab **Third Level**

HVAC / ELECTRICAL

Total Air Changes:	10 ACH	**Power:**	110v + 220v
Pressure:	Negative	**Lighting:**	Direct/indirect fluorescent
Temp Requirement:	Lab Standard	**Fixture Mount:**	Recessed
Relative Humidity:	Lab Standard	**Occ. Sensors:**	No
Local Exhaust:	Lab Standard	**Task Light:**	Yes
Air Filtration:	Lab Standard	**Em Power:**	On select outlets
CO2 Sensor:	Yes	**UPS:**	No
Other HVAC:			

COMMUNICATIONS / SPECIAL CONSIDERATIONS

Phone Outlets:	1 per lab	**Light Controls:**	Not Required
Data Outlets:	1 per bay	**Visual Control:**	Views Desirable
Network:	Yes	**Structural Control:**	Not Required
AV Requirements:	None	**Security:**	Proximity card lock
Clocks:	Yes	**Shielding:**	Not Required

EQUIPMENT AND FURNISHINGS

Equipment:

Carman Lab - Owner provided equipment
(6) Speed vac (220v) (2) Incubators
(1) Microscope (1) Aspirator pump
(1) Plate reader (2) pH meters
(1) Vapor pressure osmometer
(2) Centrifuges (2) Heat/Stir plates
(1) Microcentrifuge (1) Mixer
(1) Water bath (1) Datalogger
(1) Oxygen meter (1) Microsensor
(1) Sonicator (1) Microwave
(1) Balance (1) DNA Engine Dyad Thermo. (220v)
(1) Homogenizer (1) Drill
(1) Power supply (1) Refrigerator
(1) Solenoid gas control sys.
(1) Air conditioner (220v) (2) Microscopes
Wu Lab - Owner provided equipment
(1) Microwave (1) Homogenizer
(1) Ice shredder (1) UV light box
(1) Water purifier (1) Mastercycler
(4) Centrifuges (1) Imager
(1) Protein transfer apparatus (2) Balances
(1) Refrigerator (1) Freezer
(1) Pressure pump (2) Vacuums
(1) Thermal rockers (3) Mixers
(2) Water baths (1) Automated lab workstation
(1) Oven (2) Heat blocks
(2) Power supplies (1) Incubator
(2) Chart recorders (1) Plate reader
(1) pH meter (1) Heat plate
(3) Mini-centrifuges (2) Micro centrifuges
(1) Pipette charger (1) Hybridization incubator
(1) Spectrophotometer (1) Dewpoint potentiometer

Furnishings:

New Built-in cabinetry
(88) lf Wood base w/epoxy countertop - 30" deep
(84) lf Wood upper w/adjustable shelves - 15" deep

COPYRIGHT © 2009 CRSA

BLANK

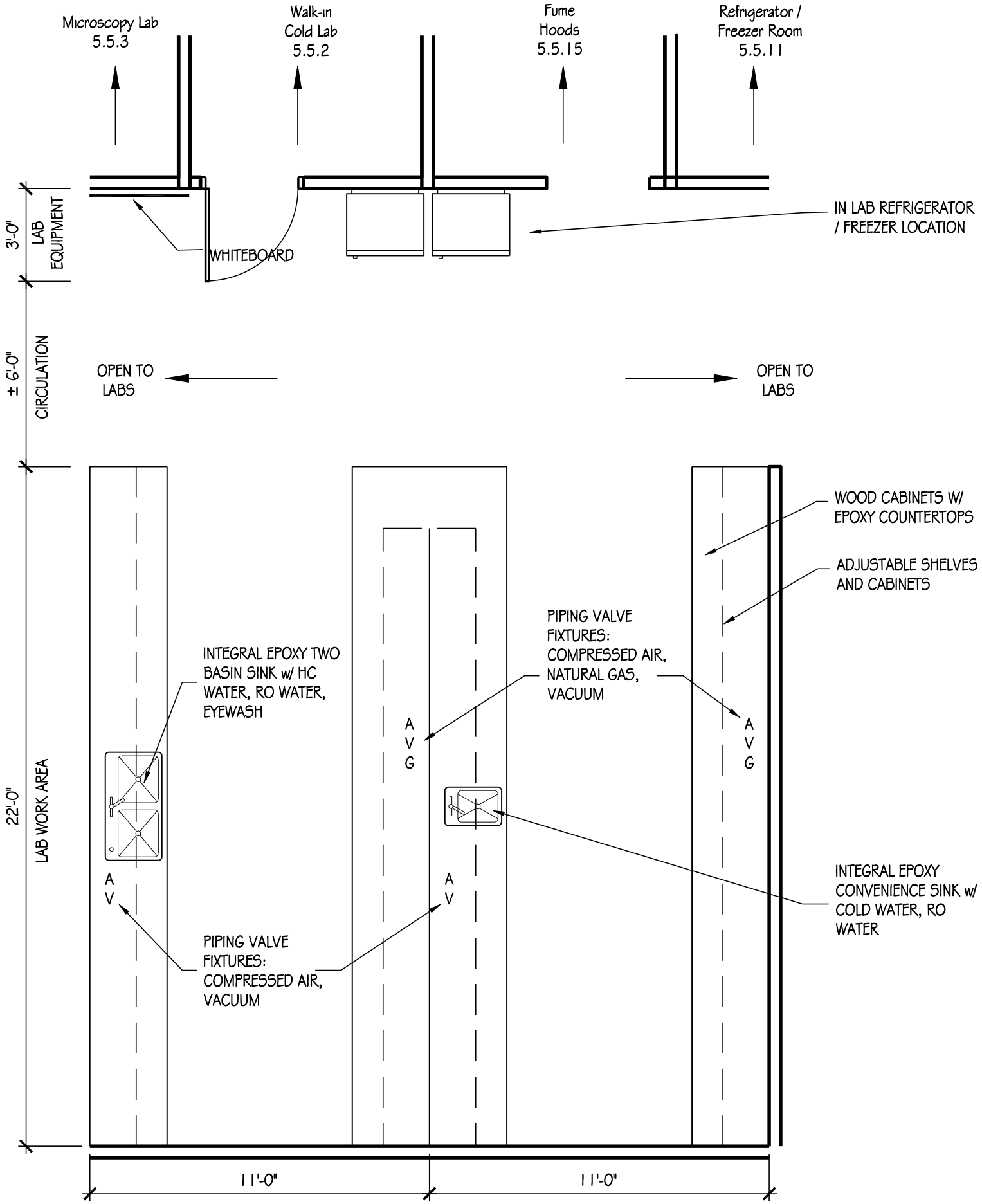

PLANT FIELD LAB - HORTICULTURE
560 SF

USU Agriculture Building

ROOM DATA SHEET DETAIL — **Plants, Soils, & Climate**

PSC Research Laboratories

5.4.1.6 Plant Field Lab - Horticulture — Third Level

SPACE INFORMATION

Room Function: Plant testing

Adjacencies: Crop Physiology Lab (5.4.1.4), Microscopy Lab (5.5.3), Fume Hood alcove (5.5.15)

Special Requirements:

Access: Restricted - Staff & Students

Room Utilization: 7 days a week, 24 hours a day

General Notes: Rupp, Kjelgren, Black, Drost, Reeve, MacAdam

ROOM SIZE AND CAPACITY

Proposed Area:	600 NSF	**Room/Space Quantity:**	3	**Total Area:**	1800
Assigned Capacity:	0 Occupant(s)	**Unassigned Capacity:**	8 Guest(s)	**Total Capacity:**	8

FINISHES, DOORS, AND WINDOWS

Floor Finish:	Vinyl Composite Tile (VCT)	**Ceiling Treatment:**	Suspended vinyl-faced lay-in panels
Wall Finish:	Gypsum board (painted)	**Ceiling Height:**	10'
Base Finish:	Rubber	**Acoustic Treatment:**	As needed
Doors:		**Windows:**	
Type:	None	**Natural Lighting:**	Desired, but not required
Width:		**Room Skylight:**	Acceptable

Height:

Vision Panel: Required

CASEWORK / FURNISHINGS

Wall Cabinets:	Wood - Certified	**Shelving:**	Yes
Base Cabinets:	Wood - Certified	**Drawer Units:**	Yes
Bench Top:	Epoxy Resin	**White Boards:**	(1) 4'-6'
Bench Height:	36"	**Tack Boards:**	No

PLUMBING / GASES

Sinks:	1 Large two basin & 1 Small convenience per lab	**Air:**	1 per bench
Pure Water:	RO - 1 per bay	**Lab Gas:**	1 per bay
HotCold Water:	Yes	**CO2:**	No
Floor Drain:	No	**Nitrogen:**	No
HoseBib:	No	**Vacuum:**	1 per bench
Waste:	None	**Other Gas:**	
Eyewash:	Yes	**Fire Protection:**	Lab Standard
Emerg Shower:	(1) every three lab bays		

COPYRIGHT © 2009 CRSA

USU Agriculture Building

ROOM DATA SHEET DETAIL **Plants, Soils, & Climate**

PSC Research Laboratories

5.4.1.6 Plant Field Lab - Horticulture **Third Level**

HVAC / ELECTRICAL

Total Air Changes:	10 ACH	**Power:**	110v + 220v
Pressure:	Negative	**Lighting:**	Direct/indirect fluorescent
Temp Requirement:	Lab Standard	**Fixture Mount:**	Recessed
Relative Humidity:	Lab Standard	**Occ. Sensors:**	No
Local Exhaust:	Lab Standard	**Task Light:**	Yes
Air Filtration:	Lab Standard	**Em Power:**	On select outlets
CO2 Sensor:	Yes	**UPS:**	No
Other HVAC:			

COMMUNICATIONS / SPECIAL CONSIDERATIONS

Phone Outlets:	1 per lab	**Light Controls:**	Glare control
Data Outlets:	1 per lab	**Visual Control:**	Views Desirable
Network:	Yes	**Structural Control:**	Not Required
AV Requirements:	None	**Security:**	Proximity card lock
Clocks:	Yes	**Shielding:**	Not Required

EQUIPMENT AND FURNISHINGS

Equipment:

Black Lab - Owner provided equipment
(1) Refrigerator (1) Minus 80 freezer
(1) Minus 20 freezer (1) Incubator
(1) Hot plate / stirrer (1) Refractometer
(1) pH meter (1) Freezer
(1) Water bath (2) Balances
(1) Chemical fume hood (1) Sonicating water bath
(1) Micro centrifuge (1) Rock tumbler
(1) Dehydrator (1) Distiller
Kjelgren / Drost Lab - Owner provided equipment
(1) Freezing chamber (1) Refrigerator
(4) Balances (2) Stirrers
(1) Drying oven (1) Centrifuge
(1) Shaker incubator (1) Micrographic system
(2) Microscopes (1) Light source
(2) Dataloggers (1) Scale
MacAdam / Reeve Lab - Owner provided equipment
(1) Refrigerator (1) Balance
(1) Leaf area meter (1) pH Meter
(1) Microscope (1) Block heater
(1) Microscope / video camera (1) Television
(1) Spectrophotometer (2) Incubators
(1) Oven (1) Micro-centrifuge
(1) Magnetic stirrer (1) Vortex mixer
(1) Hotplate stirrer (1) Stirrer
(1) EC meter (1) Ion analyzer
(1) Vacuum pump (1) Low pressure chromotography unit
(1) Dissecting scope & lightsource (1) Temperature control
(2) Coffee grinders (1) Hand vacuum
(1) Gel blow dryer (1) Chromatography cabinet
(1) Growth chamber (1) Wrist action shaker
(1) Photography light stand (1) Roto-vap

Furnishings:

New Built-in cabinetry
(88) lf Wood base w/epoxy countertop - 30" deep
(84) lf Wood upper w/adjustable shelves - 15" deep

COPYRIGHT © 2009 CRSA

BLANK

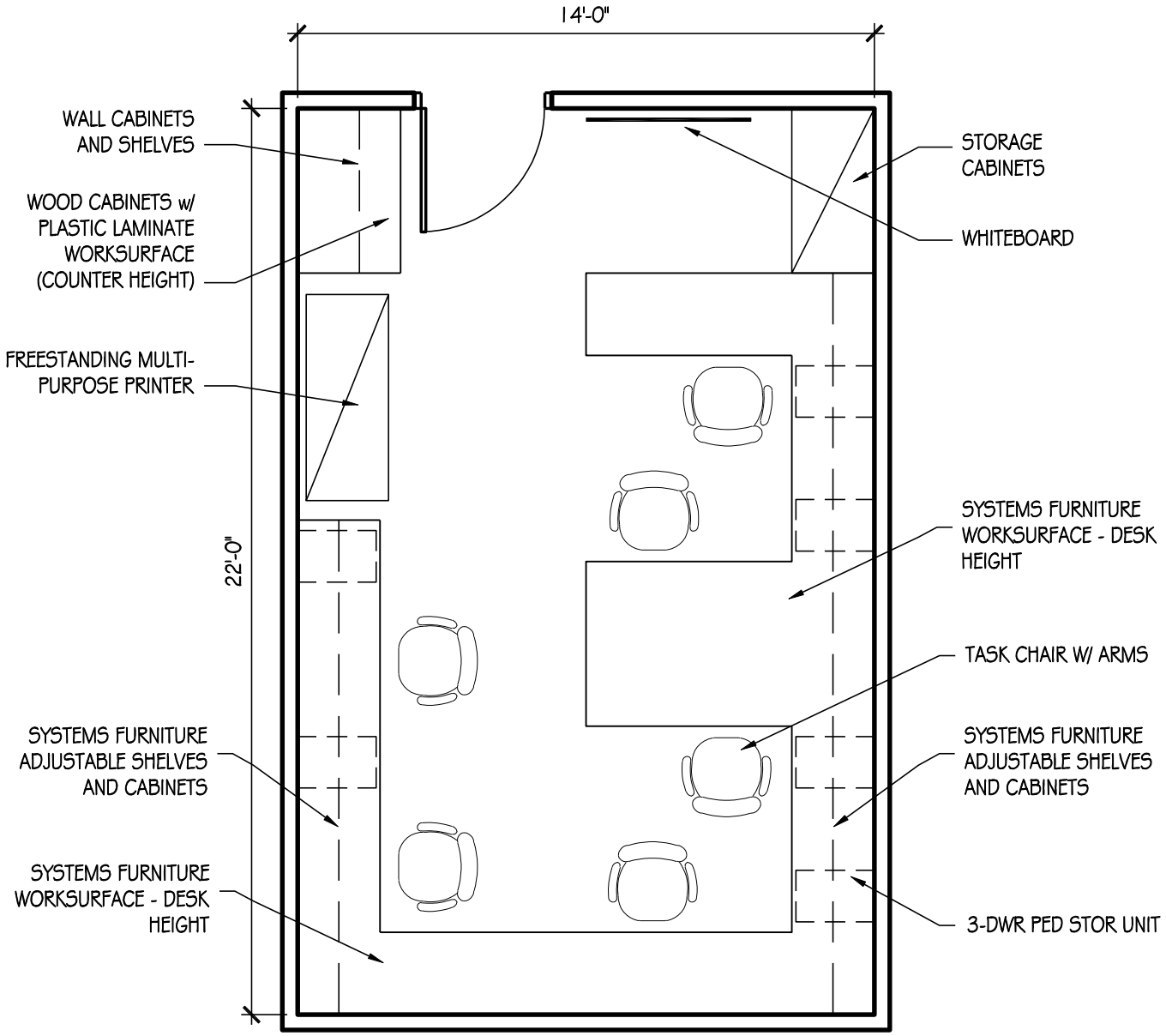

DRY LAB
300 SF

USU Agriculture Building

ROOM DATA SHEET DETAIL **Plants, Soils, & Climate**

PSC Research Laboratories

5.4.2.1 PSC Research Dry Lab

SPACE INFORMATION

Room Function: Computer research

Adjacencies: No adjacency requirements. Keep all dry labs together.

Special Requirements:

Access: Restricted - Staff & Students

Room Utilization: 7 days a week, 24 hours a day

General Notes: Jin, Boettinger, Hipps, Rasmussen

ROOM SIZE AND CAPACITY

Proposed Area:	300 NSF	**Room/Space Quantity:**	2	**Total Area:**	600
Assigned Capacity:	6 Occupant(s)	**Unassigned Capacity:**	2 Guest(s)	**Total Capacity:**	8

FINISHES, DOORS, AND WINDOWS

Floor Finish:	Vinyl Composite Tile (VCT)	**Ceiling Treatment:**	Suspended acoustical lay-in tiles
Wall Finish:	Gypsum board (painted)	**Ceiling Height:**	10'
Base Finish:	Rubber	**Acoustic Treatment:**	As needed
Doors:		**Windows:**	
Type:	Single	**Natural Lighting:**	Not required
Width:	36"	**Room Skylight:**	Acceptable

Doors:

Height:	84"		
Vision Panel:	Not Required		

CASEWORK / FURNISHINGS

Wall Cabinets:	Plastic Laminate	**Shelving:**	Yes
Base Cabinets:	None	**Drawer Units:**	Yes
Bench Top:	Plastic Laminate	**White Boards:**	(1) 4'-6'
Bench Height:	36"	**Tack Boards:**	Yes

PLUMBING / GASES

Sinks:	None	**Air:**	No
Pure Water:	None	**Lab Gas:**	No
HotCold Water:	No	**CO2:**	No
Floor Drain:	No	**Nitrogen:**	No
HoseBib:	No	**Vacuum:**	No
Waste:	None	**Other Gas:**	
Eyewash:	No	**Fire Protection:**	Dry System
Emerg Shower:	No		

COPYRIGHT © 2009 CRSA

5.4.2.1 PSC Research Dry Lab

HVAC / ELECTRICAL

Total Air Changes:	10 ACH	**Power:**	110v
Pressure:	Negative	**Lighting:**	Direct/indirect fluorescent
Temp Requirement:	Not Specified	**Fixture Mount:**	Recessed
Relative Humidity:	Not Specified	**Occ. Sensors:**	No
Local Exhaust:	Standard	**Task Light:**	Yes
Air Filtration:	Standard	**Em Power:**	On select outlets
CO2 Sensor:	No	**UPS:**	Yes
Other HVAC:			

COMMUNICATIONS / SPECIAL CONSIDERATIONS

Phone Outlets:	1 per desk	**Light Controls:**	Not Required
Data Outlets:	1 per desk	**Visual Control:**	Not Required
Network:	Yes	**Structural Control:**	Not Required
AV Requirements:	As needed	**Security:**	Proximity card lock
Clocks:	Yes	**Shielding:**	Not Required

EQUIPMENT AND FURNISHINGS

Equipment:

Hipps - Owner provided equipment
(1) Power supply
(2) Computer workstations
(2) Printers

Jin - Owner provided equipment
(6) Computer workstations

Boettinger - Owner provided equipment
(6) Computer workstations

Furnishings:

New Systems Furniture

(6) Workstations w/ 8 lineal feet worksurface & 5 lineal feet of upper shelves w/ flipper door cabinets "& 5 lineal feet of taskrail & componants
(6) 3-Drawer PEDs
(6) Task chairs - desk height
(1) 4'x2'x8' locking two door cabinet
(1) 4' Whiteboard

New Built-in cabinetry
4' Wood base w/plastic laminate countertop - 30" deep
4' Wood upper w/adjustable shelves - 15" deep

COPYRIGHT © 2009 CRSA

BLANK

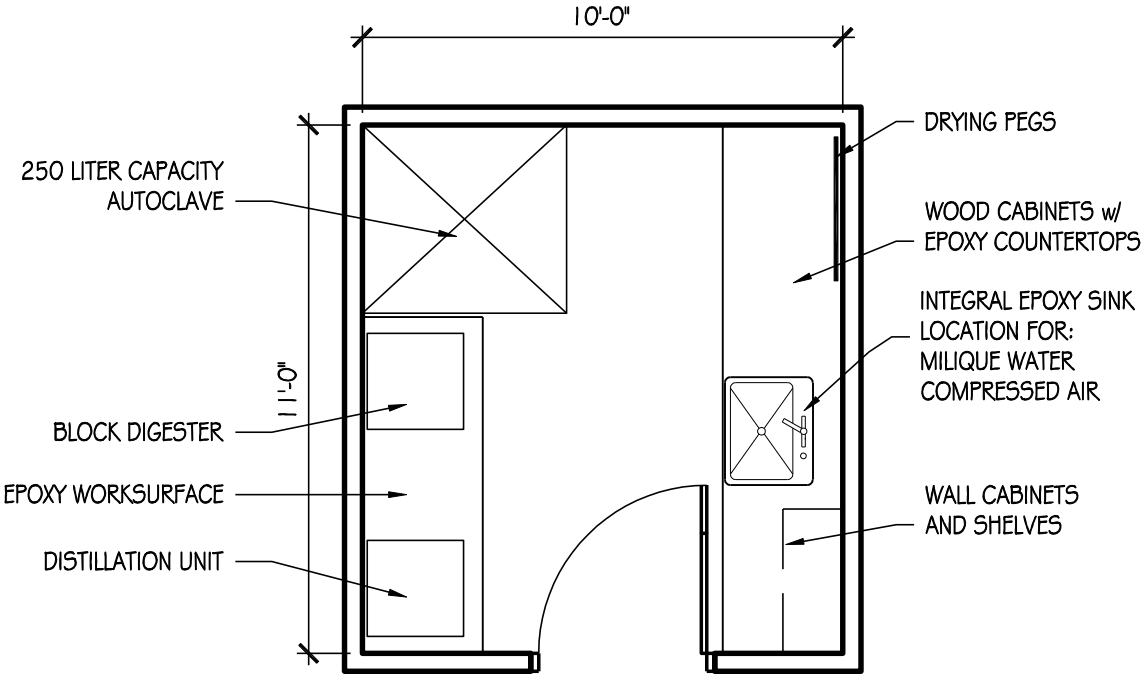

AUTOCLAVE ROOM
110 SF

USU Agriculture Building

ROOM DATA SHEET DETAIL **Plants, Soils, & Climate**

PSC Research Lab Support

5.5.1 Autoclave room **Third Level**

SPACE INFORMATION

Room Function: Cleaning autoclaving

Adjacencies: Centralize for shared access by all PSC lab users
Perchloric Hood alcove (5.5.12), Near Microbe Transfer Room (5.5.7), Near Tissue Culture Transfer Lab (5.5.4)

Special Requirements:
Building steam for autoclave
Canopy exhaust hood

Access: All lab users

Room Utilization: 7 days a week, 24 hours a day

General Notes:

ROOM SIZE AND CAPACITY

Proposed Area:	110 NSF	**Room/Space Quantity:**	1	**Total Area:**	110
Assigned Capacity:	0 Occupant(s)	**Unassigned Capacity:**	3 Guest(s)	**Total Capacity:**	3

FINISHES, DOORS, AND WINDOWS

Floor Finish:	Epoxy	**Ceiling Treatment:**	Gypsum board (painted)
Wall Finish:	Gypsum board (painted)	**Ceiling Height:**	10'
Base Finish:	Coved	**Acoustic Treatment:**	Suppress equipment generated noise
Doors:		**Windows:**	

Type:	Single	**Height:**	84"	**Natural Lighting:**	Not required
Width:	42"	**Vision Panel:**	Not Required	**Room Skylight:**	Acceptable

CASEWORK / FURNISHINGS

Wall Cabinets:	Wood - Certified	**Shelving:**	Drying Pegs
Base Cabinets:	Wood - Certified	**Drawer Units:**	Yes
Bench Top:	Epoxy Resin	**White Boards:**	No
Bench Height:	36"	**Tack Boards:**	No

PLUMBING / GASES

Sinks:	1 Large w/special trap	**Air:**	1 per lab
Pure Water:	MiliQue	**Lab Gas:**	No
HotCold Water:	Yes	**CO2:**	No
Floor Drain:	Yes	**Nitrogen:**	No
HoseBib:	No	**Vacuum:**	No
Waste:	None	**Other Gas:**	
Eyewash:	Yes	**Fire Protection:**	Standard
Emerg Shower:	No		

COPYRIGHT © 2009 CRSA

USU Agriculture Building

ROOM DATA SHEET DETAIL **Plants, Soils, & Climate**

PSC Research Lab Support

5.5.1 Autoclave room **Third Level**

HVAC / ELECTRICAL

Total Air Changes:	10 ACH	**Power:**	110v + 220v
Pressure:		**Lighting:**	Direct/indirect fluorescent
Temp Requirement:	Not Specified	**Fixture Mount:**	Recessed
Relative Humidity:	Not Specified	**Occ. Sensors:**	Yes w/manual override
Local Exhaust:	Lab Standard	**Task Light:**	No
Air Filtration:	Lab Standard	**Em Power:**	No
CO2 Sensor:	Yes	**UPS:**	No
Other HVAC:			

COMMUNICATIONS / SPECIAL CONSIDERATIONS

Phone Outlets:	0	**Light Controls:**	Not Required
Data Outlets:	None	**Visual Control:**	Not Required
Network:	No	**Structural Control:**	Not Required
AV Requirements:	None	**Security:**	Not Required
Clocks:	No	**Shielding:**	Not Required

EQUIPMENT AND FURNISHINGS

Equipment:

Owner provided equipment
(1) Block Digester 220v - Norton
(1) Distillation Unit 220v - Norton

New equipment
(1) Autoclave - 250 Liter capacity
(1) Mega-pure water station for rinsing

Furnishings:

New Built-in cabinetry
(18) lf Wood base w/epoxy countertop - 30" deep
(4) lf Wood upper w/adjustable shelves - 15" deep
(1) 3'x4' Drying peg rack

COPYRIGHT © 2009 CRSA

BLANK

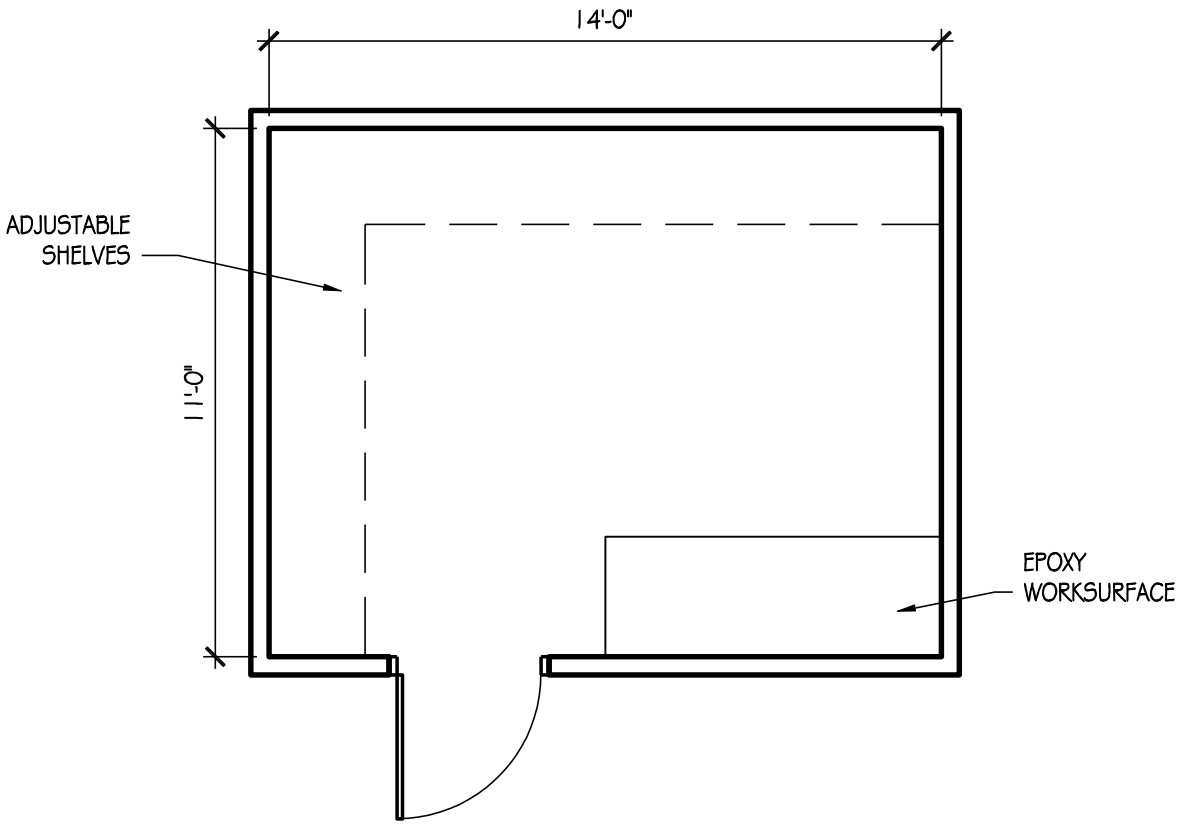

WALK-IN COLD LAB
150 SF

USU Agriculture Building

ROOM DATA SHEET DETAIL **Plants, Soils, & Climate**

PSC Research Lab Support

5.5.2 Cold Lab / Walk-in Cold Storage — Third Level

SPACE INFORMATION

Room Function: Cold environment experiments, cold storage

Adjacencies: Centralize for shared access by all PSC lab users

Special Requirements:

Access: All lab users

Room Utilization: 7 days a week, 24 hours a day

General Notes: May be a prefabricated unit to insert into the building

ROOM SIZE AND CAPACITY

Proposed Area:	150 NSF	**Room/Space Quantity:**	1	**Total Area:**	150
Assigned Capacity:	0 Occupant(s)	**Unassigned Capacity:**	2 Guest(s)	**Total Capacity:**	2

FINISHES, DOORS, AND WINDOWS

Floor Finish:

Wall Finish: Insulated aluminum panels

Base Finish:

Doors:

Type:	Single	**Height:**	80"
Width:	36"	**Vision Panel:**	Not Required

Ceiling Treatment: Insulated aluminum panels

Ceiling Height: 8' minimum

Acoustic Treatment: Not Required

Windows:

Natural Lighting:	None
Room Skylight:	Not Acceptable

CASEWORK / FURNISHINGS

Wall Cabinets:	None	**Shelving:**	Yes
Base Cabinets:	None	**Drawer Units:**	No
Bench Top:	Epoxy Resin	**White Boards:**	No
Bench Height:	36"	**Tack Boards:**	No

PLUMBING / GASES

Sinks:	None	**Air:**	No
Pure Water:	None	**Lab Gas:**	No
HotCold Water:	No	**CO2:**	No
Floor Drain:	No	**Nitrogen:**	No
HoseBib:	No	**Vacuum:**	No
Waste:	None	**Other Gas:**	
Eyewash:	No	**Fire Protection:**	n/a
Emerg Shower:	No		

COPYRIGHT © 2009 CRSA

USU Agriculture Building

ROOM DATA SHEET DETAIL **Plants, Soils, & Climate**

PSC Research Lab Support

5.5.2 Cold Lab / Walk-in Cold Storage **Third Level**

HVAC / ELECTRICAL

Total Air Changes:	Standard	**Power:**	110v
Pressure:		**Lighting:**	Direct/indirect fluorescent
Temp Requirement:	5° C	**Fixture Mount:**	Surface
Relative Humidity:	Lab Standard	**Occ. Sensors:**	No
Local Exhaust:	Lab Standard	**Task Light:**	Yes
Air Filtration:	Lab Standard	**Em Power:**	On select outlets
CO2 Sensor:	No	**UPS:**	No
Other HVAC:			

COMMUNICATIONS / SPECIAL CONSIDERATIONS

Phone Outlets:	0	**Light Controls:**	Not Required
Data Outlets:	None	**Visual Control:**	Not Required
Network:	No	**Structural Control:**	Not Required
AV Requirements:	None	**Security:**	Not Required
Clocks:	No	**Shielding:**	Not Required

EQUIPMENT AND FURNISHINGS

Equipment:

Owner provided equipment
(1) Power supply

Furnishings:

New Built-in cabinetry
(8) lf Epoxy worksurface - 30" deep, open below

(23) lf Adjustable shelves, full wall height - 24" deep

COPYRIGHT © 2009 CRSA

BLANK

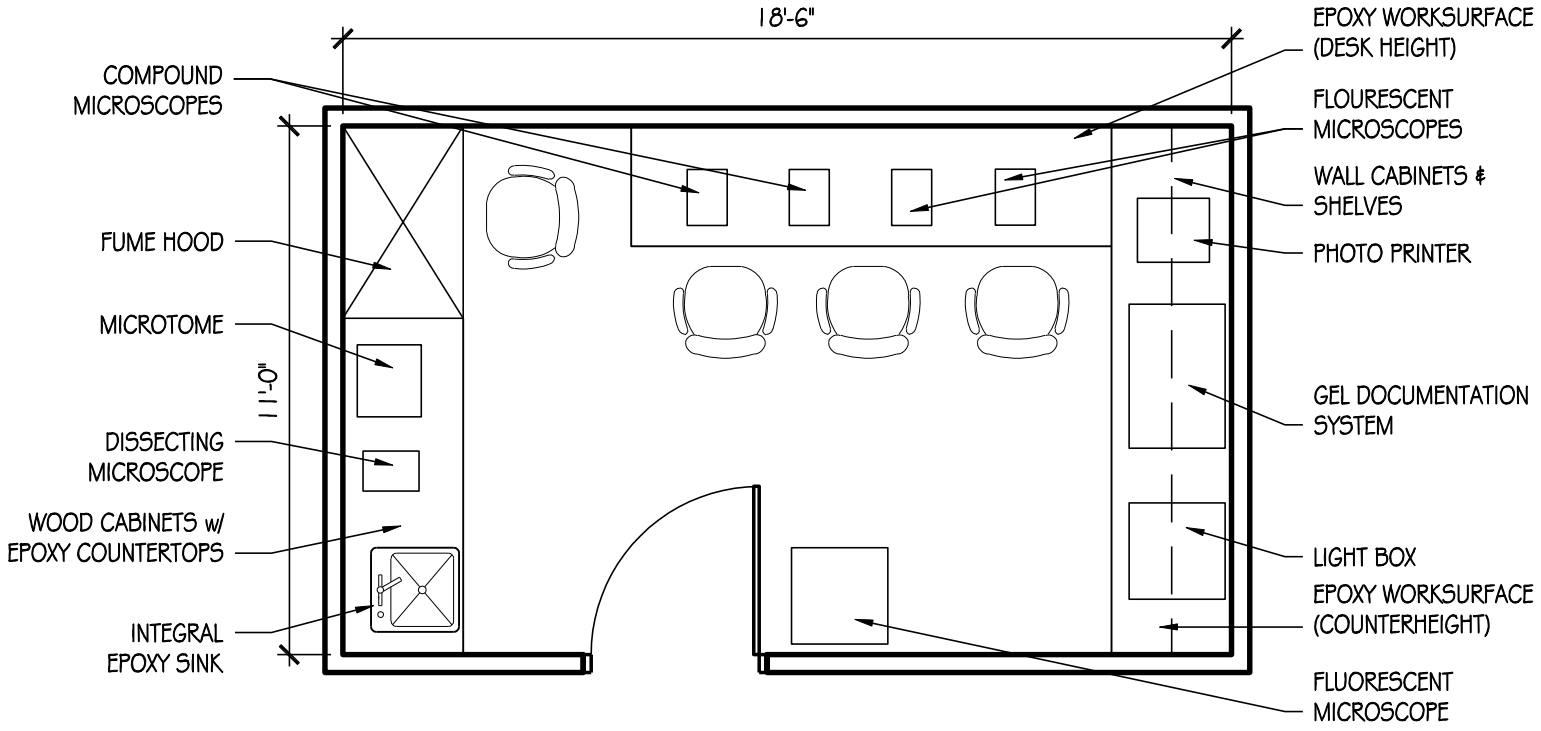

MICROSCOPY LAB
200 SF

USU Agriculture Building

ROOM DATA SHEET DETAIL **Plants, Soils, & Climate**

PSC Research Lab Support

5.5.3 Microscopy Lab **Third Level**

SPACE INFORMATION

Room Function: Microscopic research

Adjacencies: Plant Agronomy Lab (5.4.1.6), Crop Physiology Lab (5.4.1.4), Crop Molecular Biology Lab (5.4.1.5), Soils Microbiology Lab (5.4.1.1)

Special Requirements: Can be completely darkened, red light in-use indicator outside door

Access:

Room Utilization: 7 days a week, 24 hours a day

General Notes:

ROOM SIZE AND CAPACITY

Proposed Area:	200 NSF	**Room/Space Quantity:**	1	**Total Area:**	200
Assigned Capacity:	0 Occupant(s)	**Unassigned Capacity:**	4 Guest(s)	**Total Capacity:**	4

FINISHES, DOORS, AND WINDOWS

Floor Finish:	Vinyl Composite Tile (VCT)	**Ceiling Treatment:**	Suspended vinyl-faced lay-in panels
Wall Finish:	Gypsum board (painted)	**Ceiling Height:**	10'
Base Finish:	Rubber	**Acoustic Treatment:**	Not Required
Doors:		**Windows:**	

Type:	Single	**Height:**	84"	**Natural Lighting:**	None
Width:	42"	**Vision Panel:**	Not Required	**Room Skylight:**	Not Acceptable

CASEWORK / FURNISHINGS

Wall Cabinets:	Wood - Certified	**Shelving:**	Yes
Base Cabinets:	None	**Drawer Units:**	Yes
Bench Top:	Epoxy Resin	**White Boards:**	No
Bench Height:	36"	**Tack Boards:**	No

PLUMBING / GASES

Sinks:	1 Small	**Air:**	@ Fume hood(s)
Pure Water:	None	**Lab Gas:**	No
HotCold Water:	Cold only	**CO2:**	No
Floor Drain:	No	**Nitrogen:**	No
HoseBib:	No	**Vacuum:**	@ Fume hood(s)
Waste:	None	**Other Gas:**	
Eyewash:	No	**Fire Protection:**	Lab Standard
Emerg Shower:	No		

COPYRIGHT © 2009 CRSA

USU Agriculture Building

ROOM DATA SHEET DETAIL **Plants, Soils, & Climate**

PSC Research Lab Support

5.5.3 Microscopy Lab **Third Level**

HVAC / ELECTRICAL

Total Air Changes:	10 ACH	**Power:**	110v
Pressure:	Negative	**Lighting:**	Direct/indirect fluorescent
Temp Requirement:	Not Specified	**Fixture Mount:**	Recessed
Relative Humidity:	Lab Standard	**Occ. Sensors:**	No
Local Exhaust:	Lab Standard	**Task Light:**	Yes
Air Filtration:	Lab Standard	**Em Power:**	On select outlets
CO2 Sensor:	Yes	**UPS:**	No
Other HVAC:			

COMMUNICATIONS / SPECIAL CONSIDERATIONS

Phone Outlets:	0	**Light Controls:**	Can be completely darkened
Data Outlets:	1 per lab	**Visual Control:**	Not Required
Network:	Yes	**Structural Control:**	Not Required
AV Requirements:	None	**Security:**	Not Required
Clocks:	No	**Shielding:**	Not Required

EQUIPMENT AND FURNISHINGS

Equipment:

Owner provided equipment
(3) Microscopes - Carman/Wu
(1) Dissecting microscope - Wu
(1) Flourescent microscope - Norton
(1) Photo printer - Norton
(1) Gel documentation system - Norton
(1) Mercury power supply - Norton
(1) Light box - Norton
(1) Microtome - MacAdam
(1) Flourescent microscope - MacAdam

Furnishings:

New Built-in cabinetry
(7) lf Wood base w/epoxy countertop - 30" deep
(11) lf Wood upper w/adjustable shelves - 15" deep
(21) lf Epoxy worksurface - 30" deep, open below

New furnishings
(2) Adjustable height task chairs w/ lumbar support
(2) Adjustable height lab stools w/ lumbar support

COPYRIGHT © 2009 CRSA

BLANK

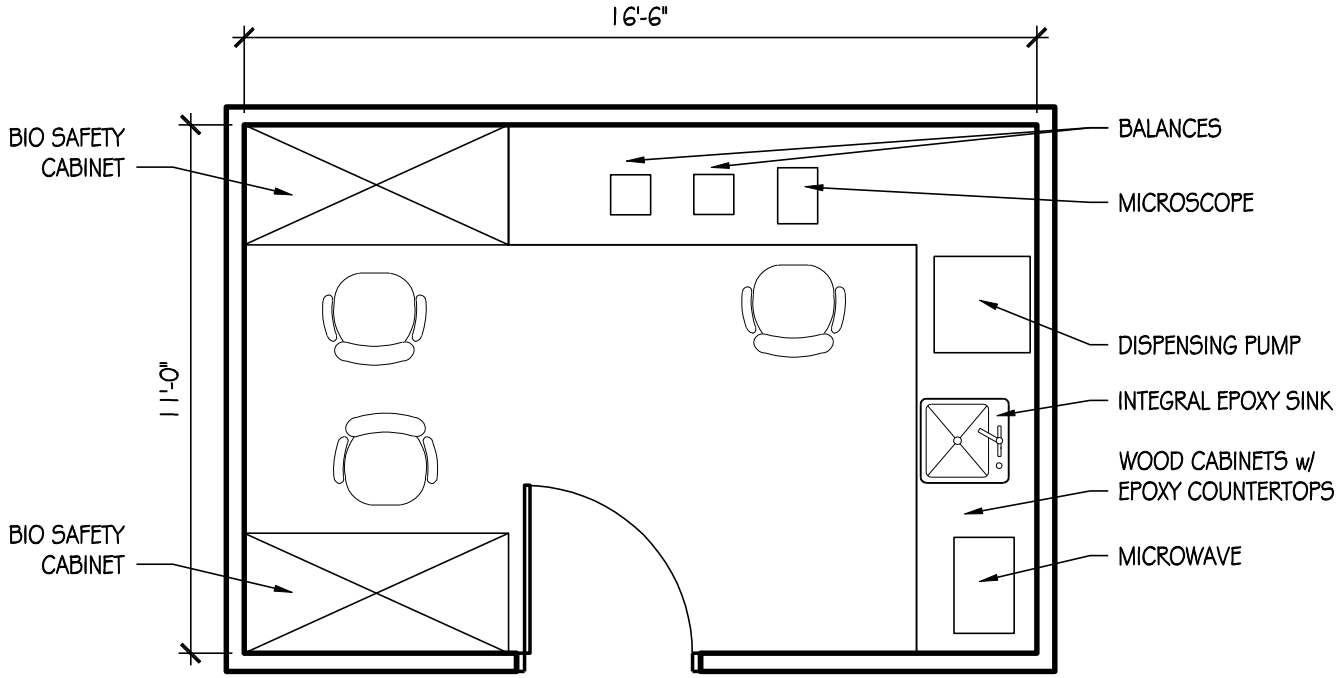

TISSUE CULTURE
TRANSFER LAB
180 SF

USU Agriculture Building

ROOM DATA SHEET DETAIL — **Plants, Soils, & Climate**

PSC Research Lab Support

5.5.4 Tissue Culture Transfer Lab — Third Level

SPACE INFORMATION

Room Function: Tissue culture collection

Adjacencies: Crop Molecular Biology Lab (5.4.1.5), Crop Physiology Lab (5.4.1.4), Tissue Culture Growth Room (5.5.5)

Special Requirements: Possible need for HEPA filtration

Access:

Room Utilization: 7 days a week, 24 hours a day

General Notes:

ROOM SIZE AND CAPACITY

Proposed Area:	180 NSF	**Room/Space Quantity:**	1	**Total Area:**	180
Assigned Capacity:	0 Occupant(s)	**Unassigned Capacity:**	2 Guest(s)	**Total Capacity:**	2

FINISHES, DOORS, AND WINDOWS

Floor Finish:	Sheet Vinyl	**Ceiling Treatment:**	Suspended insulated vinyl-faced lay-in panels
Wall Finish:	Insulated aluminum panels	**Ceiling Height:**	10'
Base Finish:	Integral Coved	**Acoustic Treatment:**	Not Required
Doors:		**Windows:**	
Type:	Single	**Natural Lighting:**	Not required
Width:	42"	**Room Skylight:**	Acceptable

Doors: Height: 84"; Vision Panel: Not Required

CASEWORK / FURNISHINGS

Wall Cabinets:	Wood - Certified	**Shelving:**	Yes
Base Cabinets:	Wood - Certified	**Drawer Units:**	Yes
Bench Top:	Epoxy Resin	**White Boards:**	No
Bench Height:	36"	**Tack Boards:**	No

PLUMBING / GASES

Sinks:	1 Small	**Air:**	1 per lab
Pure Water:	RO	**Lab Gas:**	@ BSC
HotCold Water:	Yes	**CO2:**	Cylinder
Floor Drain:	No	**Nitrogen:**	No
HoseBib:	No	**Vacuum:**	1 per lab
Waste:		**Other Gas:**	
Eyewash:	Yes	**Fire Protection:**	Lab Standard
Emerg Shower:	No		

COPYRIGHT © 2009 CRSA

5.5.4 Tissue Culture Transfer Lab — Third Level

HVAC / ELECTRICAL

Total Air Changes:	10 ACH	**Power:**	110v
Pressure:	Positive	**Lighting:**	Direct/indirect fluorescent
Temp Requirement:	72° F	**Fixture Mount:**	Recessed
Relative Humidity:	Lab Standard	**Occ. Sensors:**	No
Local Exhaust:	Lab Standard	**Task Light:**	Yes
Air Filtration:	Lab Standard	**Em Power:**	No
CO2 Sensor:	No	**UPS:**	No
Other HVAC:			

COMMUNICATIONS / SPECIAL CONSIDERATIONS

Phone Outlets:	0	**Light Controls:**	Not Required
Data Outlets:	1 per lab	**Visual Control:**	Not Required
Network:	No	**Structural Control:**	Not Required
AV Requirements:	None	**Security:**	Proximity card lock
Clocks:	No	**Shielding:**	Not Required

EQUIPMENT AND FURNISHINGS

Equipment:

Owner provided equipment
(1) Microscope
(1) Dispensing pump
(2) Balances
(1) Microwave

New equipment
(2) 5' Class II Laminar flow hoods

Furnishings:

New Built-in cabinetry
(11) lf Wood base w/epoxy countertop - 30" deep
(8) lf Epoxy worksurface - 30" deep, open below

New furnishings
(3) Adjustable height lab stools w/ lumbar support

COPYRIGHT © 2009 CRSA

BLANK

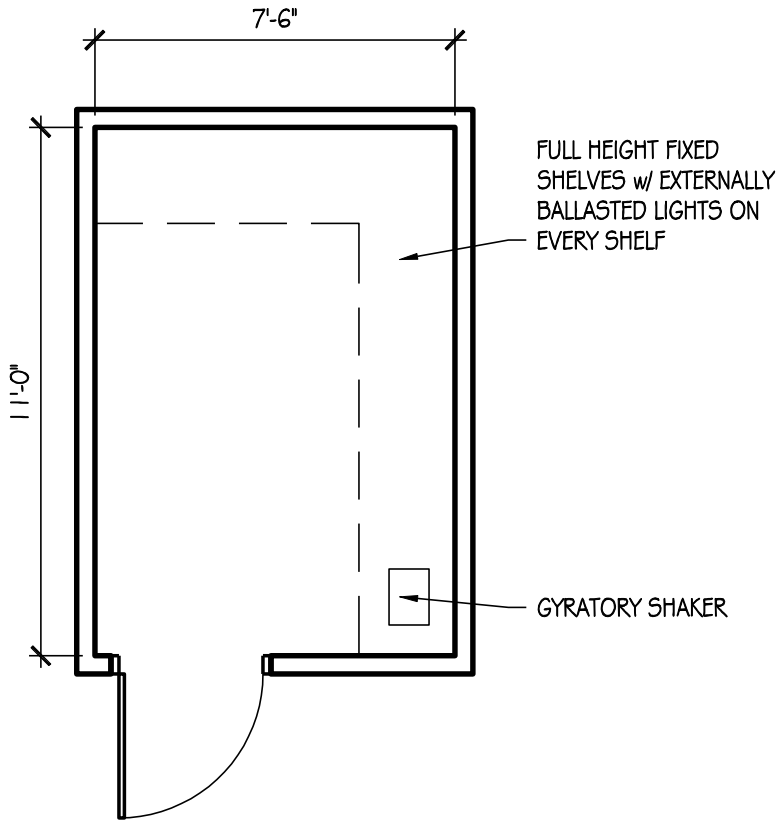

TISSUE CULTURE
GROWTH ROOM
80 SF

USU Agriculture Building

ROOM DATA SHEET DETAIL — **Plants, Soils, & Climate**

PSC Research Lab Support

5.5.5 Tissue Culture Growth room — Third Level

SPACE INFORMATION

Room Function: Tissue culture growth

Adjacencies: Tissue Culture Transfer Lab (5.5.4)

Special Requirements: HEPA filtration

Access:

Room Utilization: 7 days a week, 24 hours a day

General Notes: May be a prefabricated unit to insert into the building

ROOM SIZE AND CAPACITY

Proposed Area:	80 NSF	**Room/Space Quantity:**	2	**Total Area:**	160
Assigned Capacity:	0 Occupant(s)	**Unassigned Capacity:**	1 Guest(s)	**Total Capacity:**	1

FINISHES, DOORS, AND WINDOWS

Floor Finish:	Vinyl Composite Tile (VCT)	**Ceiling Treatment:**	Insulated aluminum panels
Wall Finish:	Insulated aluminum panels	**Ceiling Height:**	8' minimum
Base Finish:	As dictated by lab	**Acoustic Treatment:**	Not Required
Doors:		**Windows:**	

Type:	Single	**Height:**	84"	**Natural Lighting:**	None
Width:	36"	**Vision Panel:**	Not Required	**Room Skylight:**	Not Acceptable

CASEWORK / FURNISHINGS

Wall Cabinets:	None	**Shelving:**	Yes
Base Cabinets:	None	**Drawer Units:**	No
Bench Top:	None	**White Boards:**	No
Bench Height:		**Tack Boards:**	No

PLUMBING / GASES

Sinks:	None	**Air:**	No
Pure Water:	None	**Lab Gas:**	No
HotCold Water:	No	**CO2:**	No
Floor Drain:	No	**Nitrogen:**	No
HoseBib:	No	**Vacuum:**	No
Waste:		**Other Gas:**	
Eyewash:	No	**Fire Protection:**	Lab Standard
Emerg Shower:	No		

COPYRIGHT © 2009 CRSA

USU Agriculture Building

ROOM DATA SHEET DETAIL **Plants, Soils, & Climate**

PSC Research Lab Support

5.5.5 Tissue Culture Growth room **Third Level**

HVAC / ELECTRICAL

Total Air Changes:	10 ACH	**Power:**	110v
Pressure:	Positive	**Lighting:**	Direct/indirect fluorescent
Temp Requirement:	1@72°, 1@85-90°F	**Fixture Mount:**	Recessed
Relative Humidity:	Lab Standard	**Occ. Sensors:**	No
Local Exhaust:	Lab Standard	**Task Light:**	No
Air Filtration:	Lab Standard	**Em Power:**	No
CO2 Sensor:	No	**UPS:**	No
Other HVAC:			

COMMUNICATIONS / SPECIAL CONSIDERATIONS

Phone Outlets:	0	**Light Controls:**	Can be completely darkened
Data Outlets:	None	**Visual Control:**	Not Required
Network:	No	**Structural Control:**	Not Required
AV Requirements:	None	**Security:**	Not Required
Clocks:	No	**Shielding:**	Not Required

EQUIPMENT AND FURNISHINGS

Equipment:

Owner provided equipment
(1) Gyratory shaker

New equipment
Externally ballasted lights on every shelf

Furnishings:

COPYRIGHT © 2009 CRSA

BLANK

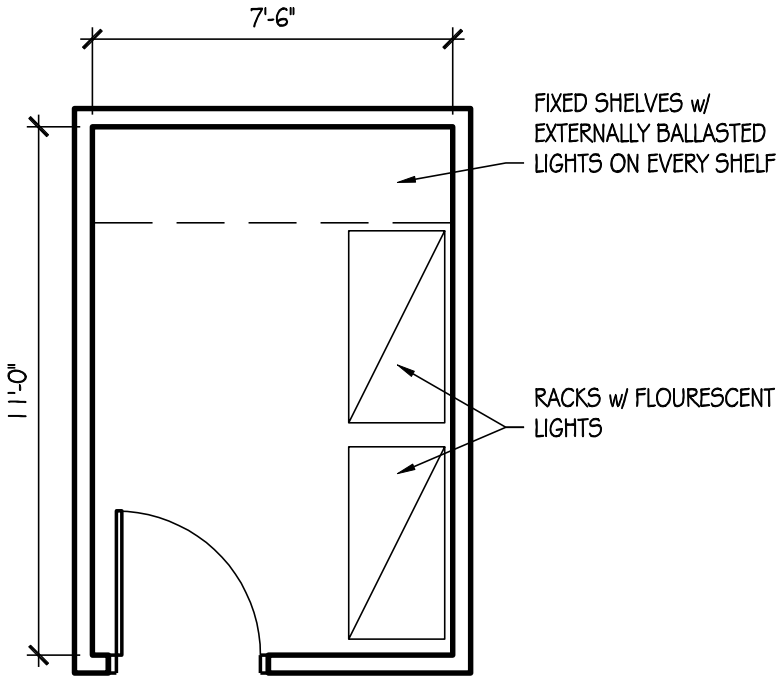

PLANT
GROWTH ROOM
80 SF

USU Agriculture Building

ROOM DATA SHEET DETAIL — **Plants, Soils, & Climate**

PSC Research Lab Support

5.5.6 Plant Growth room — Third Level

SPACE INFORMATION

Room Function: Plant sample growth

Adjacencies:

Special Requirements:

Access: All lab users

Room Utilization: 7 days a week, 24 hours a day

General Notes:

ROOM SIZE AND CAPACITY

Proposed Area:	80 NSF	**Room/Space Quantity:**	1	**Total Area:**	80
Assigned Capacity:	0 Occupant(s)	**Unassigned Capacity:**	1 Guest(s)	**Total Capacity:**	1

FINISHES, DOORS, AND WINDOWS

Floor Finish:	Vinyl Composite Tile (VCT)	**Ceiling Treatment:**	Suspended insulated vinyl-faced lay-in panels
Wall Finish:	Gypsum board (painted)	**Ceiling Height:**	10'
Base Finish:	Rubber	**Acoustic Treatment:**	Not Required
Doors:		**Windows:**	
Type:	Single	**Natural Lighting:**	Required
Width:	36"	**Room Skylight:**	Acceptable

Height: 84"

Vision Panel: Not Required

CASEWORK / FURNISHINGS

Wall Cabinets:	None	**Shelving:**	No
Base Cabinets:	None	**Drawer Units:**	No
Bench Top:	None	**White Boards:**	No
Bench Height:		**Tack Boards:**	No

PLUMBING / GASES

Sinks:	None	**Air:**	No
Pure Water:	None	**Lab Gas:**	No
HotCold Water:	No	**CO2:**	No
Floor Drain:	No	**Nitrogen:**	No
HoseBib:	No	**Vacuum:**	No
Waste:		**Other Gas:**	
Eyewash:	No	**Fire Protection:**	Standard
Emerg Shower:	No		

COPYRIGHT © 2009 CRSA

USU Agriculture Building

ROOM DATA SHEET DETAIL **Plants, Soils, & Climate**

PSC Research Lab Support

5.5.6 Plant Growth room **Third Level**

HVAC / ELECTRICAL

Total Air Changes:	10 ACH	**Power:**	110v
Pressure:	Negative	**Lighting:**	Direct/indirect fluorescent
Temp Requirement:	72° F	**Fixture Mount:**	Recessed
Relative Humidity:	Lab Standard	**Occ. Sensors:**	No
Local Exhaust:	Lab Standard	**Task Light:**	No
Air Filtration:	Lab Standard	**Em Power:**	No
CO2 Sensor:	No	**UPS:**	No
Other HVAC:			

COMMUNICATIONS / SPECIAL CONSIDERATIONS

Phone Outlets:	0	**Light Controls:**	Can be completely darkened
Data Outlets:	None	**Visual Control:**	Not Required
Network:	No	**Structural Control:**	Not Required
AV Requirements:	None	**Security:**	Proximity card lock
Clocks:	No	**Shielding:**	Not Required

EQUIPMENT AND FURNISHINGS

Equipment:

Owner provided equipment
(2) Light shelves - Wu

New equipment
Racks with flourescent lights

Furnishings:

COPYRIGHT © 2009 CRSA

BLANK

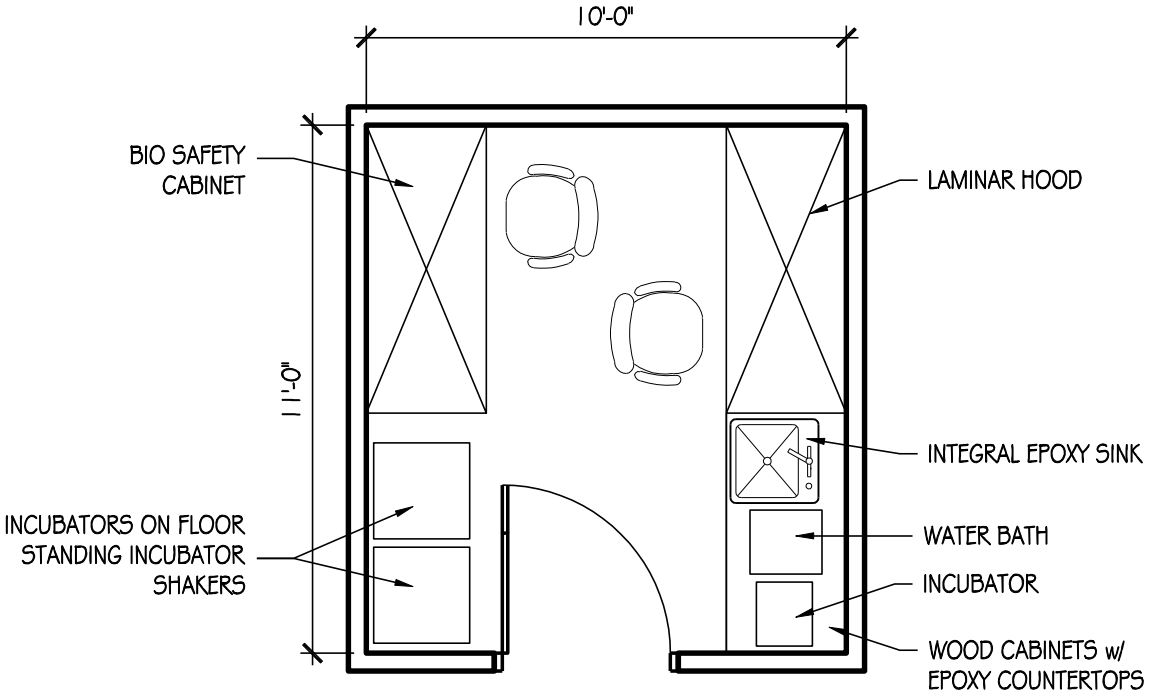

MICROBE TRANSFER ROOM
110 SF

USU Agriculture Building

ROOM DATA SHEET DETAIL **Plants, Soils, & Climate**

PSC Research Lab Support

5.5.7 Microbe Transfer room **Third Level**

SPACE INFORMATION

Room Function: Microbe transfer

Adjacencies: Soils Microbiology Lab (5.4.1.1), Soils Chemistry Lab (5.4.1.2)

Special Requirements:

Access:

Room Utilization: 7 days a week, 24 hours a day

General Notes:

ROOM SIZE AND CAPACITY

Proposed Area:	110 NSF	**Room/Space Quantity:**	1	**Total Area:**	110
Assigned Capacity:	0 Occupant(s)	**Unassigned Capacity:**	2 Guest(s)	**Total Capacity:**	2

FINISHES, DOORS, AND WINDOWS

Floor Finish:	Vinyl Composite Tile (VCT)	**Ceiling Treatment:**	Suspended vinyl-faced lay-in panels
Wall Finish:	Gypsum board (painted)	**Ceiling Height:**	10'
Base Finish:	Rubber	**Acoustic Treatment:**	Not Required
Doors:		**Windows:**	
Type:	Single	**Natural Lighting:**	Not required
Width:	42"	**Room Skylight:**	Acceptable

Height: 84"

Vision Panel: Required

CASEWORK / FURNISHINGS

Wall Cabinets:	Wood - Certified	**Shelving:**	No
Base Cabinets:	Wood - Certified	**Drawer Units:**	Yes
Bench Top:	Epoxy Resin	**White Boards:**	No
Bench Height:	36"	**Tack Boards:**	No

PLUMBING / GASES

Sinks:	1 Small	**Air:**	Yes
Pure Water:	None	**Lab Gas:**	@ BSC
HotCold Water:	Cold only	**CO2:**	No
Floor Drain:	No	**Nitrogen:**	No
HoseBib:	No	**Vacuum:**	@ Fume hood(s)
Waste:		**Other Gas:**	Liquid Nitrogen
Eyewash:	No	**Fire Protection:**	Lab Standard
Emerg Shower:	No		

COPYRIGHT © 2009 CRSA

USU Agriculture Building

ROOM DATA SHEET DETAIL **Plants, Soils, & Climate**

PSC Research Lab Support

5.5.7 Microbe Transfer room **Third Level**

HVAC / ELECTRICAL

Total Air Changes:	10 ACH	**Power:**	110v + 220v
Pressure:	Negative	**Lighting:**	Direct/indirect fluorescent
Temp Requirement:	Lab Standard	**Fixture Mount:**	Recessed
Relative Humidity:	Controlled	**Occ. Sensors:**	No
Local Exhaust:	Lab Standard	**Task Light:**	Yes
Air Filtration:	Lab Standard	**Em Power:**	On select outlets
CO2 Sensor:	Yes	**UPS:**	No
Other HVAC:			

COMMUNICATIONS / SPECIAL CONSIDERATIONS

Phone Outlets:	0	**Light Controls:**	Not Required
Data Outlets:	1 per lab	**Visual Control:**	Not Required
Network:	No	**Structural Control:**	Not Required
AV Requirements:	None	**Security:**	Not Required
Clocks:	No	**Shielding:**	Not Required

EQUIPMENT AND FURNISHINGS

Equipment:

Owner provided equipment

(3) Incubators - benchtop
(2) Controlled temperature incubator shakers - floor standing
(1) Water bath
Potentially one glove box

New equipment
(1) 5' Negative flow transfer hood (Bio safety cabinet)
(1) 5' Positive flow transfer hood (Laminar flow hood)

Furnishings:

New Built-in cabinetry
(5) lf Wood base w/epoxy countertop - 30" deep

New furnishings
(2) Adjustable height lab stools w/ lumbar support

COPYRIGHT © 2009 CRSA

BLANK

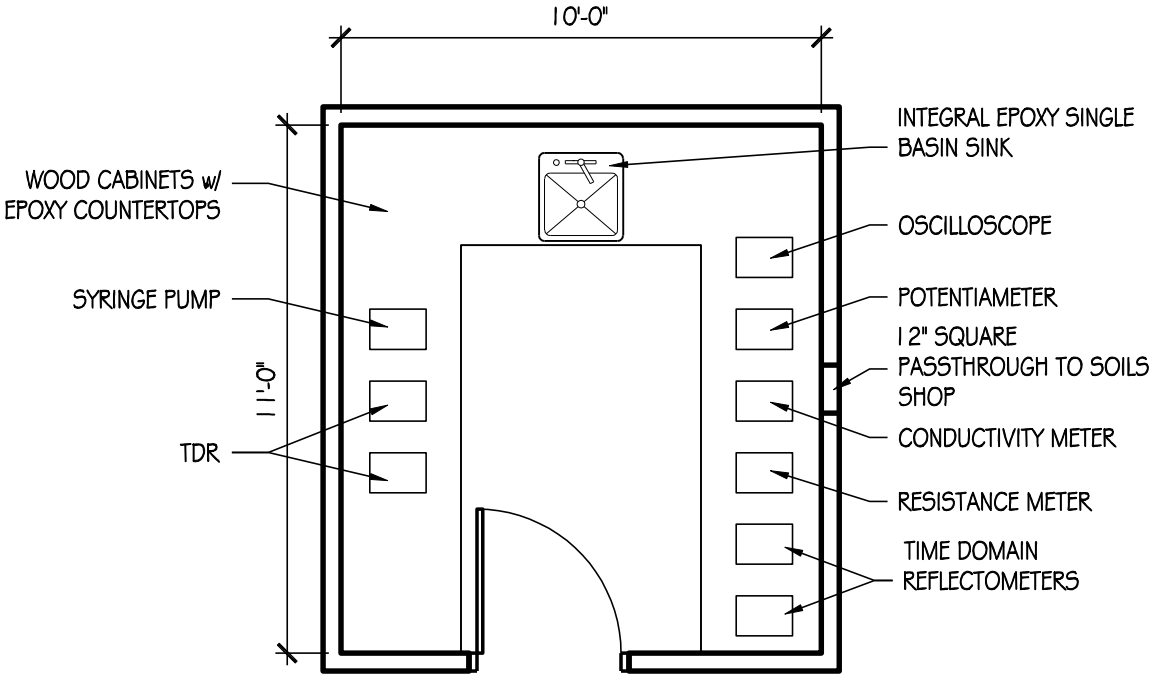

CALIBRATION ROOM
110 SF

USU Agriculture Building

ROOM DATA SHEET DETAIL — **Plants, Soils, & Climate**

PSC Research Lab Support

5.5.8 Incubation / Calibration room — Basement Level

SPACE INFORMATION

Room Function: Test equipment calibration

Adjacencies: Soils Shop (5.5.14)

Special Requirements:
12" square passthrough to soils shop (5.5.14)

Access:

Room Utilization: 7 days a week, 24 hours a day

General Notes:

ROOM SIZE AND CAPACITY

Proposed Area:	110 NSF	**Room/Space Quantity:**	1	**Total Area:**	110
Assigned Capacity:	0 Occupant(s)	**Unassigned Capacity:**	1 Guest(s)	**Total Capacity:**	1

FINISHES, DOORS, AND WINDOWS

Floor Finish:	Vinyl Composite Tile (VCT)	**Ceiling Treatment:**	Gypsum board (painted)
Wall Finish:	Gypsum board (painted)	**Ceiling Height:**	10'
Base Finish:	Rubber	**Acoustic Treatment:**	Not Required
Doors:		**Windows:**	
Type:	Single	**Natural Lighting:**	None
Width:	36"	**Room Skylight:**	Not Acceptable

Height:	84"		
Vision Panel:	Not Required		

CASEWORK / FURNISHINGS

Wall Cabinets:	Wood - Certified	**Shelving:**	Yes
Base Cabinets:	Wood - Certified	**Drawer Units:**	Yes
Bench Top:	Epoxy Resin	**White Boards:**	No
Bench Height:	36"	**Tack Boards:**	No

PLUMBING / GASES

Sinks:	1 Large w/special trap	**Air:**	1 per lab
Pure Water:	RO	**Lab Gas:**	No
HotCold Water:	Yes	**CO2:**	No
Floor Drain:	No	**Nitrogen:**	No
HoseBib:	No	**Vacuum:**	1 per lab
Waste:		**Other Gas:**	
Eyewash:	No	**Fire Protection:**	Standard
Emerg Shower:	No		

COPYRIGHT © 2009 CRSA

USU Agriculture Building

ROOM DATA SHEET DETAIL **Plants, Soils, & Climate**

PSC Research Lab Support

5.5.8 Incubation / Calibration room **Basement Level**

HVAC / ELECTRICAL

Total Air Changes:	8 ACH	**Power:**	110v
Pressure:		**Lighting:**	Direct/indirect fluorescent
Temp Requirement:	Constant 25° C	**Fixture Mount:**	Recessed
Relative Humidity:	Lab Standard	**Occ. Sensors:**	No
Local Exhaust:	Lab Standard	**Task Light:**	No
Air Filtration:	Lab Standard	**Em Power:**	On select outlets
CO2 Sensor:	Yes	**UPS:**	No
Other HVAC:			

COMMUNICATIONS / SPECIAL CONSIDERATIONS

Phone Outlets:	0	**Light Controls:**	Not Required
Data Outlets:	1 per lab	**Visual Control:**	Not Required
Network:	Yes	**Structural Control:**	Not Required
AV Requirements:	None	**Security:**	Proximity card lock
Clocks:	No	**Shielding:**	Not Required

EQUIPMENT AND FURNISHINGS

Equipment:

Owner provided equipment
(1) Oscilloscope
(1) Potentiameter
(1) Conductivity meter
(1) Electrical resistance meter
(2) Network analyzers
(2) TDR
(1) Syringe pump
(2) Time domain reflectometers
(2) UPS power supplies

Furnishings:

New Built-in cabinetry
(28) lf Wood base w/epoxy countertop - 30" deep

COPYRIGHT © 2009 CRSA

BLANK

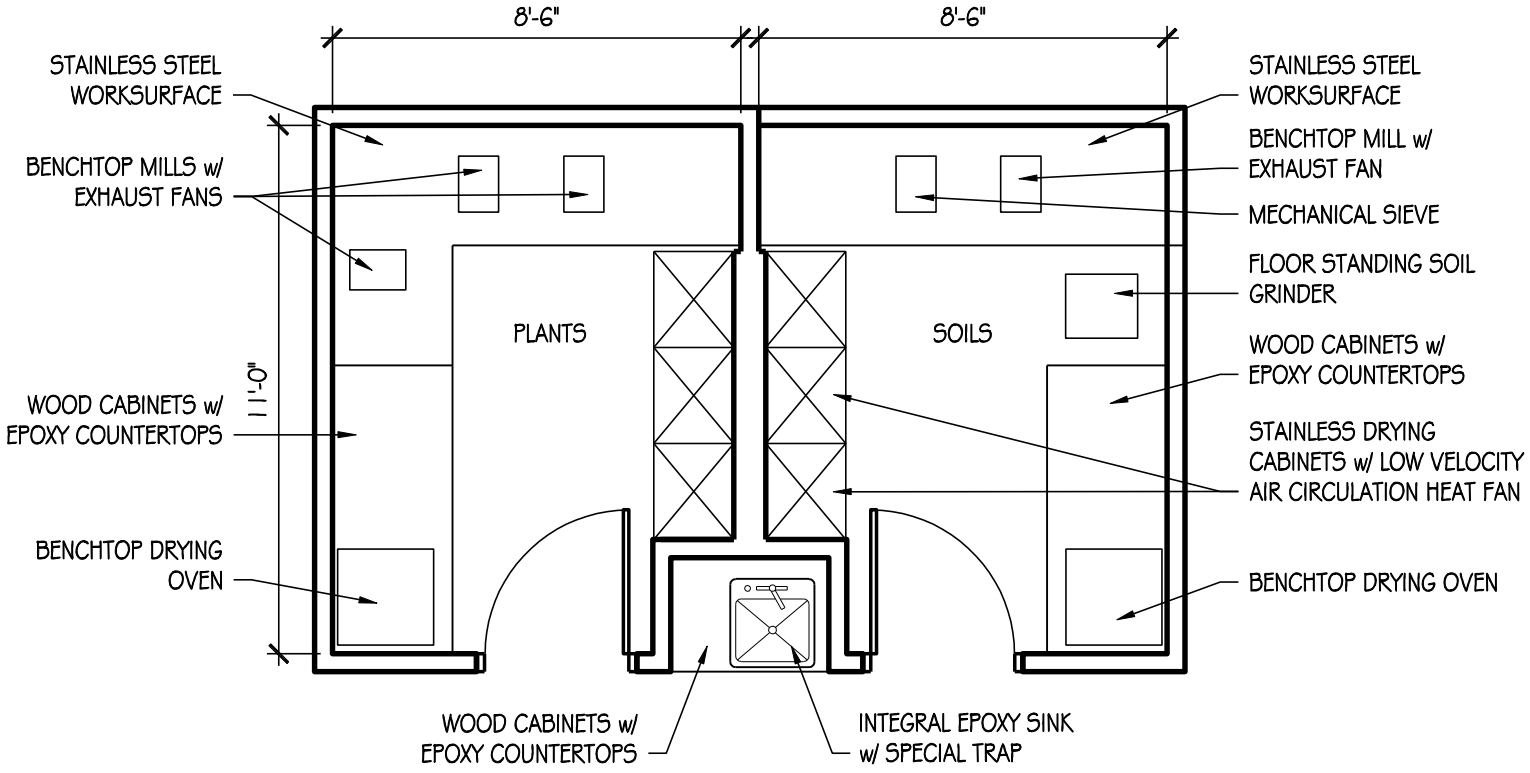

GRINDING ROOM
200 SF

USU Agriculture Building

ROOM DATA SHEET DETAIL **Plants, Soils, & Climate**

PSC Research Lab Support

5.5.9 Grinding / Drying / Prep room **Third Level**

SPACE INFORMATION

Room Function: Sample grinding and preparation

Adjacencies: Oven Room (5.5.10)

Access: All lab users

Room Utilization: 7 days a week, 24 hours a day

General Notes:

Special Requirements:

100% exhaust for grinders / mills. Increased air changes with fresh air intake.

ROOM SIZE AND CAPACITY

Proposed Area:	200 NSF	**Room/Space Quantity:**	1	**Total Area:**	200
Assigned Capacity:	0 Occupant(s)	**Unassigned Capacity:**	2 Guest(s)	**Total Capacity:**	2

FINISHES, DOORS, AND WINDOWS

Floor Finish:	Concrete (sealed)	**Ceiling Treatment:**	Suspended acoustical lay-in tiles
Wall Finish:	Gypsum board (painted)	**Ceiling Height:**	10'
Base Finish:	Rubber	**Acoustic Treatment:**	Suppress equipment generated noise
Doors:		**Windows:**	
Type:	Single	**Natural Lighting:**	Not required
Width:	36"	**Room Skylight:**	Not Acceptable

Height:	84"		
Vision Panel:	Not Required		

CASEWORK / FURNISHINGS

Wall Cabinets:	Wood - Certified	**Shelving:**	Yes
Base Cabinets:	Wood - Certified	**Drawer Units:**	Yes
Bench Top:	Stainless Steel	**White Boards:**	No
Bench Height:	36"	**Tack Boards:**	No

PLUMBING / GASES

Sinks:	1 Large w/special trap	**Air:**	By Compressor
Pure Water:	None	**Lab Gas:**	No
HotCold Water:	Yes	**CO2:**	No
Floor Drain:	No	**Nitrogen:**	No
HoseBib:	Yes	**Vacuum:**	No
Waste:	None	**Other Gas:**	
Eyewash:	No	**Fire Protection:**	Standard
Emerg Shower:	No		

COPYRIGHT © 2009 CRSA

USU Agriculture Building

ROOM DATA SHEET DETAIL **Plants, Soils, & Climate**

PSC Research Lab Support

5.5.9 Grinding / Drying / Prep room **Third Level**

HVAC / ELECTRICAL

Total Air Changes:	10 ACH	**Power:**	110v
Pressure:	Negative	**Lighting:**	Direct/indirect fluorescent
Temp Requirement:	Standard	**Fixture Mount:**	Recessed
Relative Humidity:	Lab Standard	**Occ. Sensors:**	Yes w/manual override
Local Exhaust:	Lab Standard	**Task Light:**	No
Air Filtration:	Lab Standard	**Em Power:**	No
CO2 Sensor:	No	**UPS:**	No
Other HVAC:			

COMMUNICATIONS / SPECIAL CONSIDERATIONS

Phone Outlets:	0	**Light Controls:**	Not Required
Data Outlets:	None	**Visual Control:**	Not Required
Network:	No	**Structural Control:**	Not Required
AV Requirements:	None	**Security:**	Not Required
Clocks:	No	**Shielding:**	Not Required

EQUIPMENT AND FURNISHINGS

Equipment:

Owner provided equipment
(2) Wiley Mills
(1) Mechanical Sieve
(1) Roller Mill
(1) Soil Grinder - floor standing
(2) Drying ovens - benchtop
(1) Roller miller - Cardon
(1) Cyclone Mill - MacAdam

Furnishings:

New Built-in cabinetry
(14) lf Wood base w/epoxy countertop - 30" deep
(20) lf Stainless worksurface - 30" deep, open below
(6) 2'x2'x8' Stainless drying shelves - cabinets with low velocity air circulation heat fan

COPYRIGHT © 2009 CRSA

BLANK

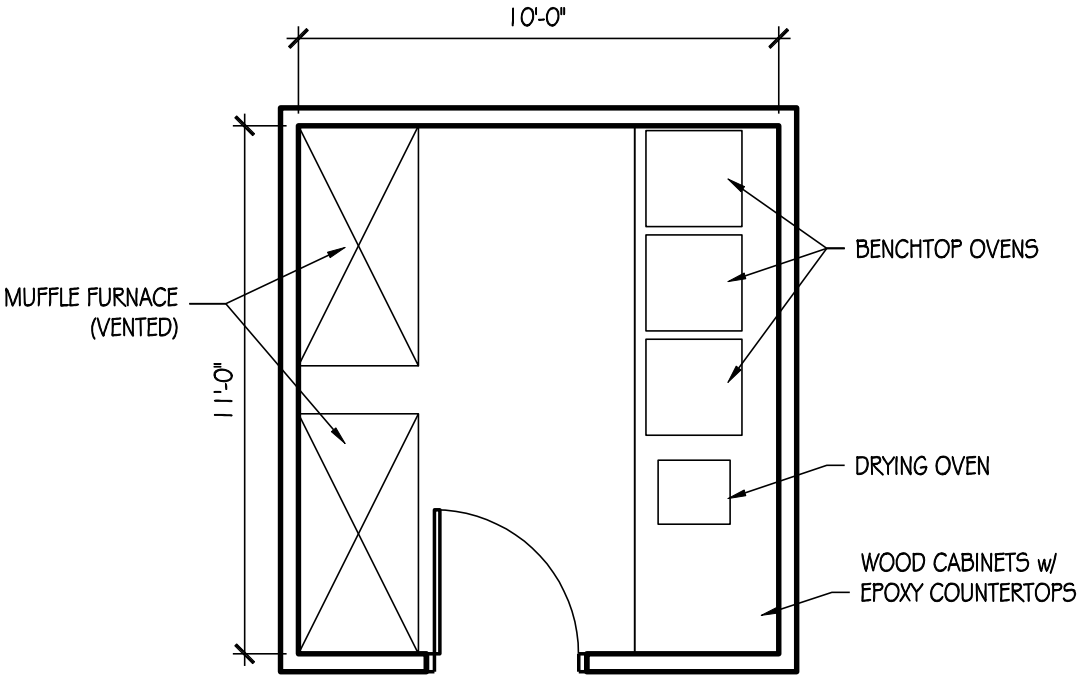

OVEN ROOM
110 SF

USU Agriculture Building

ROOM DATA SHEET DETAIL — **Plants, Soils, & Climate**

PSC Research Lab Support

5.5.10 Oven room — **Third Level**

SPACE INFORMATION

Room Function: Specimen drying

Adjacencies: Grinding Room (5.5.9)

Special Requirements:
Muffle furnaces require specialized venting.

Access: All lab users

Room Utilization: 7 days a week, 24 hours a day

General Notes:

ROOM SIZE AND CAPACITY

Proposed Area:	110 NSF	**Room/Space Quantity:**	1	**Total Area:**	110
Assigned Capacity:	0 Occupant(s)	**Unassigned Capacity:**	1 Guest(s)	**Total Capacity:**	1

FINISHES, DOORS, AND WINDOWS

Floor Finish:	Vinyl Composite Tile (VCT)	**Ceiling Treatment:**	Suspended acoustical lay-in tiles
Wall Finish:	Gypsum board (painted)	**Ceiling Height:**	10'
Base Finish:	Rubber	**Acoustic Treatment:**	Not Required
Doors:		**Windows:**	
Type:	Single	**Natural Lighting:**	None
Width:	36"	**Room Skylight:**	Not Acceptable

Doors: Height: 84"; Vision Panel: Not Required

CASEWORK / FURNISHINGS

Wall Cabinets:	None	**Shelving:**	No
Base Cabinets:	Wood - Certified	**Drawer Units:**	Yes
Bench Top:	Epoxy Resin	**White Boards:**	No
Bench Height:	36"	**Tack Boards:**	No

PLUMBING / GASES

Sinks:	None	**Air:**	No
Pure Water:	None	**Lab Gas:**	No
HotCold Water:	No	**CO2:**	No
Floor Drain:	No	**Nitrogen:**	No
HoseBib:	No	**Vacuum:**	No
Waste:		**Other Gas:**	
Eyewash:	No	**Fire Protection:**	Lab Standard
Emerg Shower:	No		

COPYRIGHT © 2009 CRSA

USU Agriculture Building

ROOM DATA SHEET DETAIL **Plants, Soils, & Climate**

PSC Research Lab Support

5.5.10 Oven room **Third Level**

HVAC / ELECTRICAL

Total Air Changes:	10 ACH	**Power:**	110v + 220v
Pressure:		**Lighting:**	Direct/indirect fluorescent
Temp Requirement:	Not Specified	**Fixture Mount:**	Recessed
Relative Humidity:	Not Specified	**Occ. Sensors:**	No
Local Exhaust:	Standard	**Task Light:**	No
Air Filtration:	Standard	**Em Power:**	Yes
CO2 Sensor:	Yes	**UPS:**	No
Other HVAC:			

COMMUNICATIONS / SPECIAL CONSIDERATIONS

Phone Outlets:	0	**Light Controls:**	Not Required
Data Outlets:	1 per lab	**Visual Control:**	Not Required
Network:	No	**Structural Control:**	Not Required
AV Requirements:	None	**Security:**	Not Required
Clocks:	No	**Shielding:**	Not Required

EQUIPMENT AND FURNISHINGS

Equipment:

Owner provided equipment
(1) Muffle furnace (220v) - Grossl
(1) Muffle furnace - Cardon
(1) Drying oven - Cardon
(2) Ovens - benchtop
(1) Oven (220v) - Boettinger

Furnishings:

New Built-in cabinetry
(11) lf Wood base w/epoxy countertop - 30" deep

COPYRIGHT © 2009 CRSA

BLANK

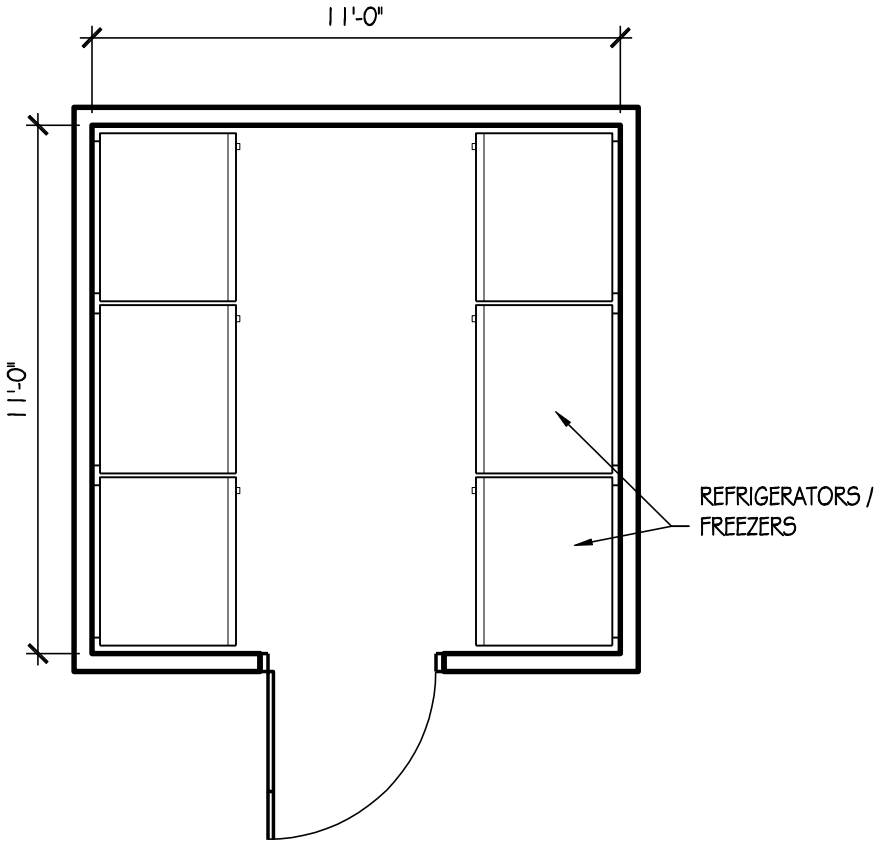

REFRIGERATOR /
FREEZER ROOM
120 SF

USU Agriculture Building

ROOM DATA SHEET DETAIL **Plants, Soils, & Climate**

PSC Research Lab Support

5.5.11 Refrigerator / Freezer room **Third Level**

SPACE INFORMATION

Room Function: Sample media refrigeration

Adjacencies: Centralize for shared access by all PSC lab users

Special Requirements: Heat exhaust

Access: All lab users

Room Utilization: 7 days a week, 24 hours a day

General Notes:

ROOM SIZE AND CAPACITY

Proposed Area:	120 NSF	**Room/Space Quantity:**	2	**Total Area:**	240
Assigned Capacity:	0 Occupant(s)	**Unassigned Capacity:**	2 Guest(s)	**Total Capacity:**	2

FINISHES, DOORS, AND WINDOWS

Floor Finish:	Vinyl Composite Tile (VCT)	**Ceiling Treatment:**	Suspended acoustical lay-in tiles
Wall Finish:	Gypsum board (painted)	**Ceiling Height:**	10'
Base Finish:	Rubber	**Acoustic Treatment:**	Suppress equipment generated noise
Doors:		**Windows:**	
Type:	Single	**Natural Lighting:**	None
Width:	42"	**Room Skylight:**	Not Acceptable

Height:	84"		
Vision Panel:	Not Required		

CASEWORK / FURNISHINGS

Wall Cabinets:	None	**Shelving:**	No
Base Cabinets:	None	**Drawer Units:**	No
Bench Top:	None	**White Boards:**	No
Bench Height:		**Tack Boards:**	No

PLUMBING / GASES

Sinks:	None	**Air:**	No
Pure Water:	None	**Lab Gas:**	No
HotCold Water:	No	**CO2:**	No
Floor Drain:	No	**Nitrogen:**	No
HoseBib:	No	**Vacuum:**	No
Waste:		**Other Gas:**	
Eyewash:	No	**Fire Protection:**	Lab Standard
Emerg Shower:	No		

COPYRIGHT © 2009 CRSA

USU Agriculture Building

ROOM DATA SHEET DETAIL **Plants, Soils, & Climate**

PSC Research Lab Support

5.5.11 Refrigerator / Freezer room **Third Level**

HVAC / ELECTRICAL

Total Air Changes:	10 ACH	**Power:**	110v + 220v
Pressure:		**Lighting:**	Direct/indirect fluorescent
Temp Requirement:	Not Specified	**Fixture Mount:**	Recessed
Relative Humidity:	Not Specified	**Occ. Sensors:**	Yes w/manual override
Local Exhaust:	Standard	**Task Light:**	No
Air Filtration:	Standard	**Em Power:**	Yes
CO2 Sensor:	No	**UPS:**	No
Other HVAC:			

COMMUNICATIONS / SPECIAL CONSIDERATIONS

Phone Outlets:	0	**Light Controls:**	Not Required
Data Outlets:	None	**Visual Control:**	Not Required
Network:	No	**Structural Control:**	Not Required
AV Requirements:	None	**Security:**	Not Required
Clocks:	No	**Shielding:**	Not Required

EQUIPMENT AND FURNISHINGS

Equipment:

Owner provided equipment
(1) Minus 80 freezer (220v) - Carman
(1) Minus 80 freezer - Wu
(1) Minus 20 freezer - MacAdam
(1) Freeze dryer - MacAdam
(1) Minus 80 freezer - Black
(1) Minus 20 freezer - Black
(1) Minus 80 freezer - Hole

Furnishings:

COPYRIGHT © 2009 CRSA

BLANK

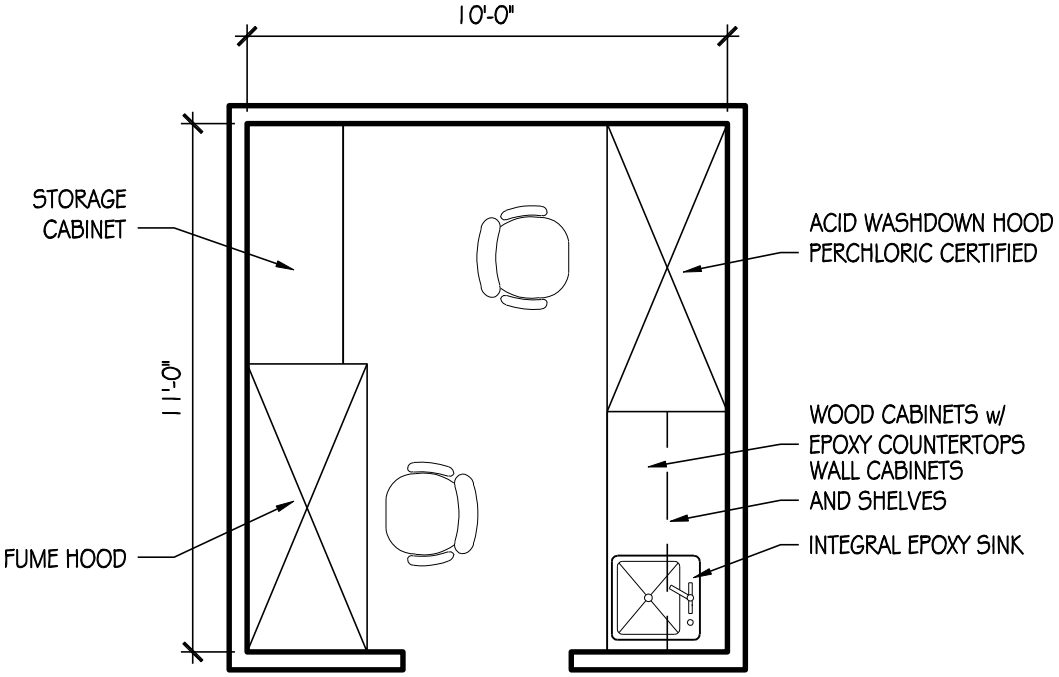

PERCHLORATE
HOOD ALCOVE
110 SF

USU Agriculture Building

ROOM DATA SHEET DETAIL **Plants, Soils, & Climate**

PSC Research Lab Support

5.5.12 Perchlorate Hood alcove **Third Level**

SPACE INFORMATION

Room Function: Research activities requiring a perchlorate hood

Adjacencies: Autoclave Room (5.5.1)

Special Requirements:

Access: All lab users

Room Utilization: 7 days a week, 24 hours a day

General Notes:

ROOM SIZE AND CAPACITY

Proposed Area:	110 NSF	**Room/Space Quantity:**	1	**Total Area:**	110
Assigned Capacity:	0 Occupant(s)	**Unassigned Capacity:**	1 Guest(s)	**Total Capacity:**	1

FINISHES, DOORS, AND WINDOWS

Floor Finish:	Epoxy	**Ceiling Treatment:**	Gypsum board (painted)
Wall Finish:	Gypsum board (painted)	**Ceiling Height:**	10'
Base Finish:	Coved	**Acoustic Treatment:**	Not Required
Doors:		**Windows:**	
Type:	None	**Natural Lighting:**	Not required
Width:	42"	**Room Skylight:**	Not Acceptable

Doors:

Height:	84"		
Vision Panel:	Not Required		

CASEWORK / FURNISHINGS

Wall Cabinets:	None	**Shelving:**	No
Base Cabinets:	Wood - Certified	**Drawer Units:**	Yes
Bench Top:	Epoxy Resin	**White Boards:**	No
Bench Height:	36"	**Tack Boards:**	No

PLUMBING / GASES

Sinks:	1 Small	**Air:**	@ Fume hood(s)
Pure Water:	RO	**Lab Gas:**	No
HotCold Water:	Yes	**CO2:**	No
Floor Drain:	No	**Nitrogen:**	No
HoseBib:	No	**Vacuum:**	@ Fume hood(s)
Waste:		**Other Gas:**	
Eyewash:	Yes	**Fire Protection:**	Lab Standard
Emerg Shower:	Yes		

COPYRIGHT © 2009 CRSA

USU Agriculture Building

ROOM DATA SHEET DETAIL **Plants, Soils, & Climate**

PSC Research Lab Support

5.5.12 Perchlorate Hood alcove **Third Level**

HVAC / ELECTRICAL

Total Air Changes:	10 ACH	**Power:**	110v
Pressure:	Positive	**Lighting:**	Direct/indirect fluorescent
Temp Requirement:	Lab Standard	**Fixture Mount:**	Recessed
Relative Humidity:	Lab Standard	**Occ. Sensors:**	No
Local Exhaust:	Lab Standard	**Task Light:**	Yes
Air Filtration:	Lab Standard	**Em Power:**	No
CO2 Sensor:	Yes	**UPS:**	No
Other HVAC:			

COMMUNICATIONS / SPECIAL CONSIDERATIONS

Phone Outlets:	0	**Light Controls:**	Not Required
Data Outlets:	None	**Visual Control:**	Not Required
Network:	No	**Structural Control:**	Not Required
AV Requirements:	None	**Security:**	Not Required
Clocks:	No	**Shielding:**	Not Required

EQUIPMENT AND FURNISHINGS

Equipment:

New equipment
(1) 6' Washdown hood - Perchloric certified
(1) 6' Particle/Fume hood w/ chemical storage base stands

Furnishings:

New Built-in cabinetry
(5) lf Wood base w/epoxy countertop - 30" deep
(5) lf Wood upper w/adjustable shelves - 15" deep

New furnishings
(2) Adjustable height lab stools w/ lumbar support
(1) 60" x 24" x 84" Storage cabinet for chemicals

COPYRIGHT © 2009 CRSA

BLANK

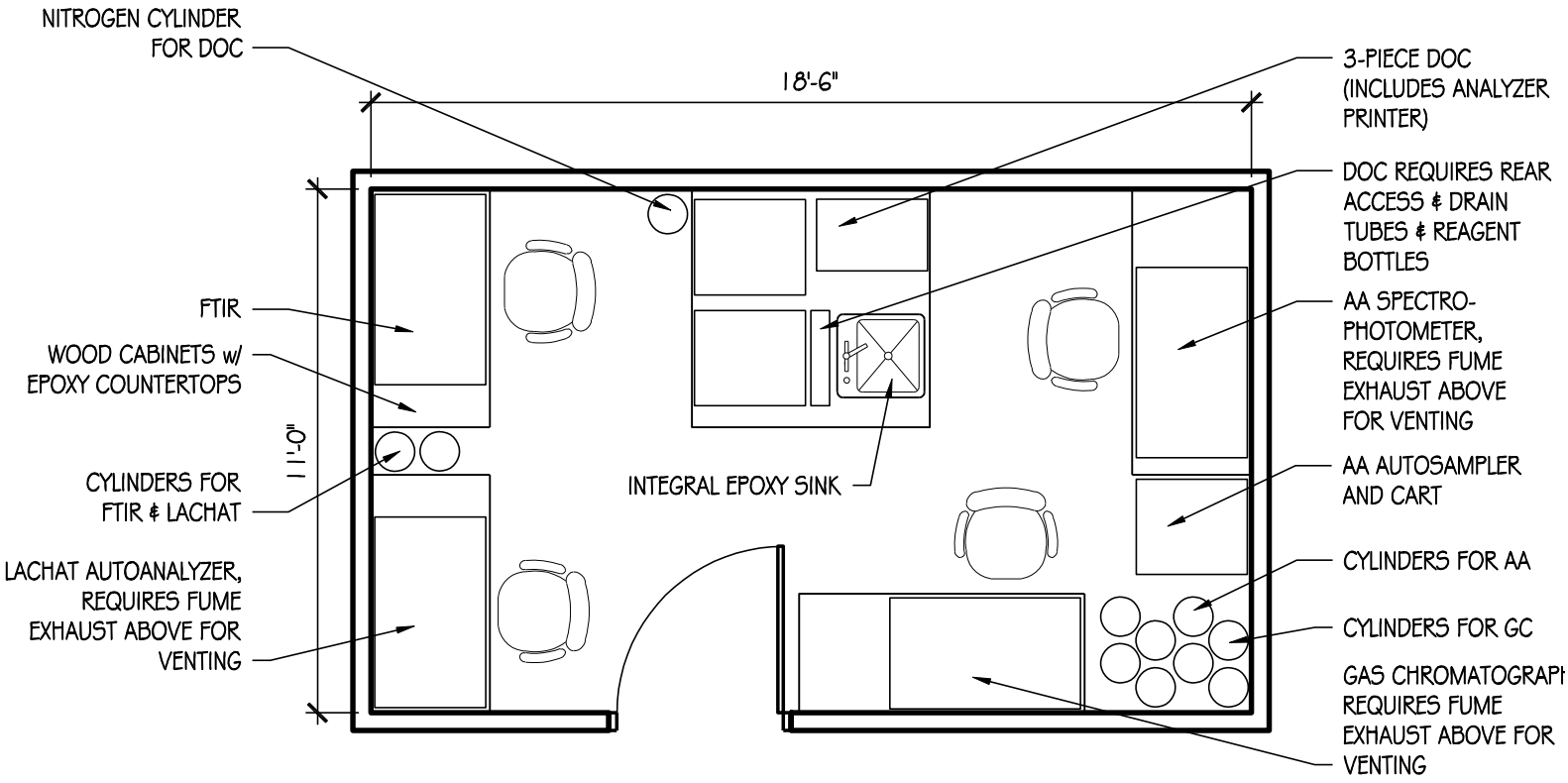

ANALYTICAL EQUIPMENT
200 SF

USU Agriculture Building

ROOM DATA SHEET DETAIL **Plants, Soils, & Climate**

PSC Research Lab Support

5.5.13 Analytical Equipment room **Third Level**

SPACE INFORMATION

Room Function: Specialized equipment research activities

Adjacencies: Soils Microbiology (5.4.1.1), Soils Chemistry Lab (5.4.1.2)

Special Requirements: Heat exhaust

Access: All lab users

Room Utilization: 7 days a week, 24 hours a day

General Notes:

ROOM SIZE AND CAPACITY

Proposed Area:	200 NSF	**Room/Space Quantity:**	1	**Total Area:**	200
Assigned Capacity:	0 Occupant(s)	**Unassigned Capacity:**	1 Guest(s)	**Total Capacity:**	1

FINISHES, DOORS, AND WINDOWS

Floor Finish:	Vinyl Composite Tile (VCT)	**Ceiling Treatment:**	Suspended vinyl-faced lay-in panels
Wall Finish:	Gypsum board (painted)	**Ceiling Height:**	10'
Base Finish:	Rubber	**Acoustic Treatment:**	Not Required
Doors:		**Windows:**	
Type:	Single	**Natural Lighting:**	Not required
Width:	42"	**Room Skylight:**	Acceptable

Doors:

Height:	84"		
Vision Panel:	Not Required		

CASEWORK / FURNISHINGS

Wall Cabinets:	Wood - Certified	**Shelving:**	No
Base Cabinets:	Wood - Certified	**Drawer Units:**	Yes
Bench Top:	Epoxy Resin	**White Boards:**	No
Bench Height:	36"	**Tack Boards:**	No

PLUMBING / GASES

Sinks:	1 Large w/special trap	**Air:**	2 per lab
Pure Water:	RO	**Lab Gas:**	No
HotCold Water:	Yes	**CO2:**	Cylinder
Floor Drain:	No	**Nitrogen:**	Cylinder
HoseBib:	No	**Vacuum:**	2 per lab
Waste:		**Other Gas:**	Cylinder
Eyewash:	Yes	**Fire Protection:**	Lab Standard
Emerg Shower:	No		

COPYRIGHT © 2009 CRSA

USU Agriculture Building

ROOM DATA SHEET DETAIL **Plants, Soils, & Climate**

PSC Research Lab Support

5.5.13 Analytical Equipment room **Third Level**

HVAC / ELECTRICAL

Total Air Changes:	10 ACH	**Power:**	110v + 220v
Pressure:	Negative	**Lighting:**	Direct/indirect fluorescent
Temp Requirement:	Lab Standard	**Fixture Mount:**	Recessed
Relative Humidity:	Lab Standard	**Occ. Sensors:**	No
Local Exhaust:	Lab Standard	**Task Light:**	No
Air Filtration:	Lab Standard	**Em Power:**	On select outlets
CO2 Sensor:	No	**UPS:**	No
Other HVAC:			

COMMUNICATIONS / SPECIAL CONSIDERATIONS

Phone Outlets:	1 per lab	**Light Controls:**	Not Required
Data Outlets:	2 per bench	**Visual Control:**	Not Required
Network:	Yes	**Structural Control:**	Not Required
AV Requirements:	None	**Security:**	Not Required
Clocks:	Yes	**Shielding:**	Not Required

EQUIPMENT AND FURNISHINGS

Equipment:

Owner provided equipment
(1) Lachat autoanalyzer - Norton
(1) 3-piece DOC measurer - Grossl
(1) FTIR (220v) - Grossl
(1) AA Spectrophotometer - Grossl
(1) Gas chromatograph - Norton

**Requested but not accomodated in space:

(1) UV spectrophotometer - Grossl
(1) HPLC (chromatography) - Jacobson
(1) Gas chromatograph - Black
(1) Scintillation counter - Wu
(1) Ultraspeed centrifuge (220v) - Wu
(1) Desktop spectrometer - Cardon
(1) Infrared analyzer - Cardon
(1) Fiber analyzer - Cardon

Furnishings:

New Built-in cabinetry
(32) lf Wood base w/epoxy countertop - 30" deep

New furnishings
(4) Adjustable height lab stools w/ lumbar support

COPYRIGHT © 2009 CRSA

BLANK

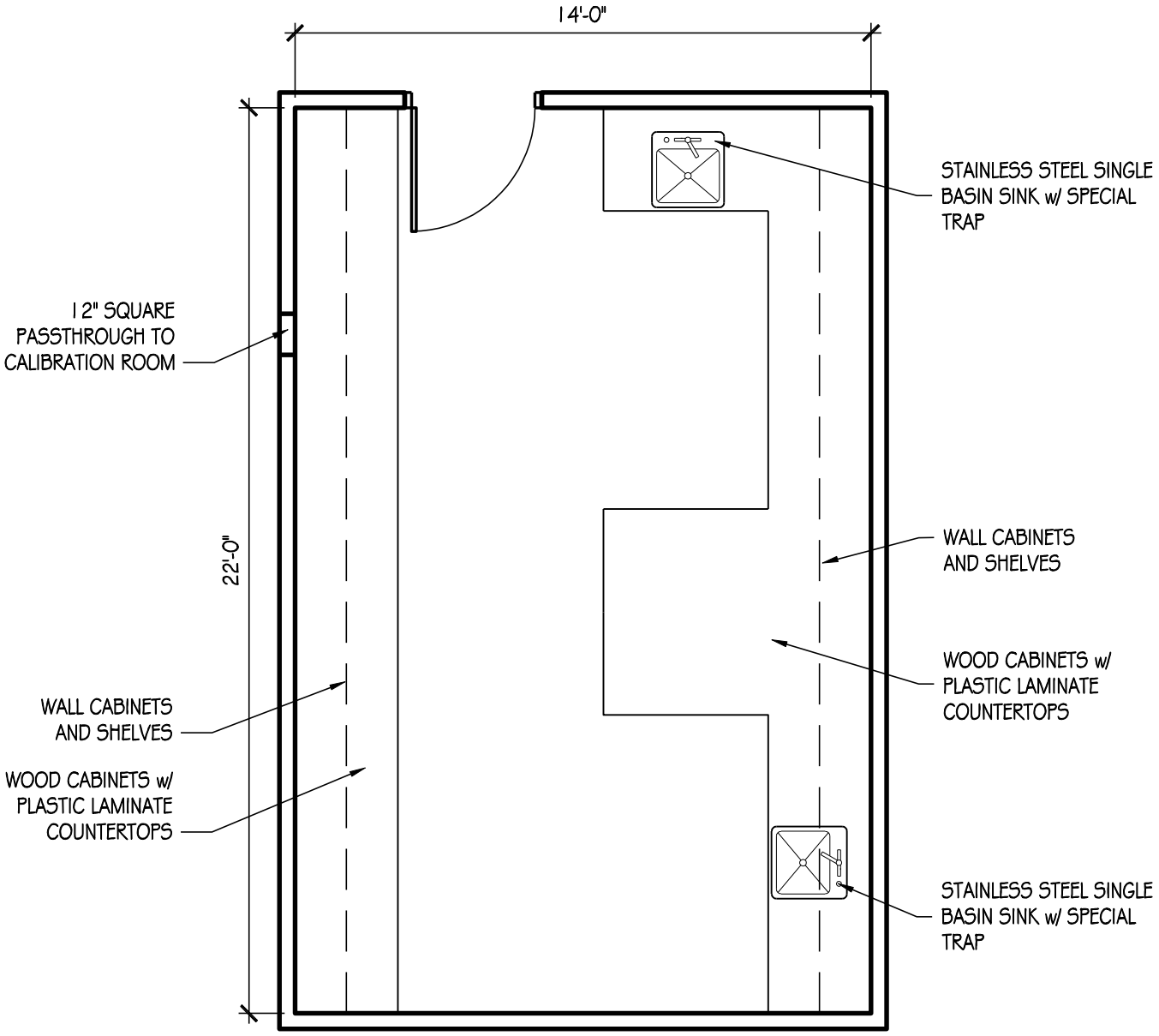

SOILS PHYSICS SHOP
300 SF

USU Agriculture Building

ROOM DATA SHEET DETAIL — **Plants, Soils, & Climate**

PSC Research Lab Support

5.5.14 Soils Physics Shop — Basement Level

SPACE INFORMATION

Room Function: Soils physics research

Adjacencies: Incubation/Calibration Room (5.5.8)

Access: Restricted - Staff & Students

Room Utilization: 7 days a week, 24 hours a day

General Notes: Jones

Special Requirements:

12" square passthrough to calibration room (5.5.8), 30 Amp breaker for water bath

ROOM SIZE AND CAPACITY

Proposed Area:	300 NSF	**Room/Space Quantity:**	1	**Total Area:**	300
Assigned Capacity:	0 Occupant(s)	**Unassigned Capacity:**	6 Guest(s)	**Total Capacity:**	6

FINISHES, DOORS, AND WINDOWS

Floor Finish: Concrete (sealed)

Wall Finish: Gypsum board (painted)

Base Finish: Rubber

Doors:

Type: Single — **Height:** 84"

Width: 36" — **Vision Panel:** Not Required

Ceiling Treatment: Suspended acoustical lay-in tiles

Ceiling Height: 10'

Acoustic Treatment: Provide absorbent surfaces as necessary

Windows:

Natural Lighting: Not required

Room Skylight: Acceptable

CASEWORK / FURNISHINGS

Wall Cabinets: Wood - Certified

Base Cabinets: Wood - Certified

Bench Top: Plastic Laminate

Bench Height: 36"

Shelving: Yes

Drawer Units: Yes

White Boards: No

Tack Boards: Yes

PLUMBING / GASES

Sinks: 2 Large w/ special traps

Pure Water: None

HotCold Water: Yes

Floor Drain: No

HoseBib: No

Waste: None

Eyewash: Yes

Emerg Shower: No

Air: 1 per bench

Lab Gas: No

CO2: Cylinder

Nitrogen: Cylinder

Vacuum: 1 per bench

Other Gas:

Fire Protection: Standard

COPYRIGHT © 2009 CRSA

USU Agriculture Building

ROOM DATA SHEET DETAIL **Plants, Soils, & Climate**

PSC Research Lab Support

5.5.14 Soils Physics Shop **Basement Level**

HVAC / ELECTRICAL

Total Air Changes:	Standard	**Power:**	110v + 220v
Pressure:		**Lighting:**	Direct/indirect fluorescent
Temp Requirement:	Not Specified	**Fixture Mount:**	Recessed
Relative Humidity:	Not Specified	**Occ. Sensors:**	Yes w/manual override
Local Exhaust:	Standard	**Task Light:**	Yes
Air Filtration:	Standard	**Em Power:**	No
CO2 Sensor:	No	**UPS:**	No
Other HVAC:			

COMMUNICATIONS / SPECIAL CONSIDERATIONS

Phone Outlets:	1 per lab	**Light Controls:**	Not Required
Data Outlets:	1 per lab	**Visual Control:**	Not Required
Network:	Yes	**Structural Control:**	Not Required
AV Requirements:	None	**Security:**	Proximity card lock
Clocks:	Yes	**Shielding:**	Not Required

EQUIPMENT AND FURNISHINGS

Equipment:

Owner provided equipment
(1) Sieve shaker
(1) Scroll saw
(1) Rotary tool
(1) Toaster oven
(1) Small refrigerator
(1) Lathe
(2) Drill press
(1) Belt sander
(1) Jigsaw - handheld
(1) Belt sander - handheld
(1) Router
(2) Battery chargers
(1) Bench grinder
(3) Soldering irons
(1) Vacuum
(1) Band saw - 9"
(2) Vacuum pumps - plumb to lab for high vacuum
(1) Compressor - plumb to lab for high pressure
(1) Water bath
(1) Lapidary system

Furnishings:

New Built-in cabinetry
(64) lf Wood base w/plastic laminate countertop - 30" deep
(44) lf Wood upper w/adjustable shelves - 15" deep

COPYRIGHT © 2009 CRSA

BLANK

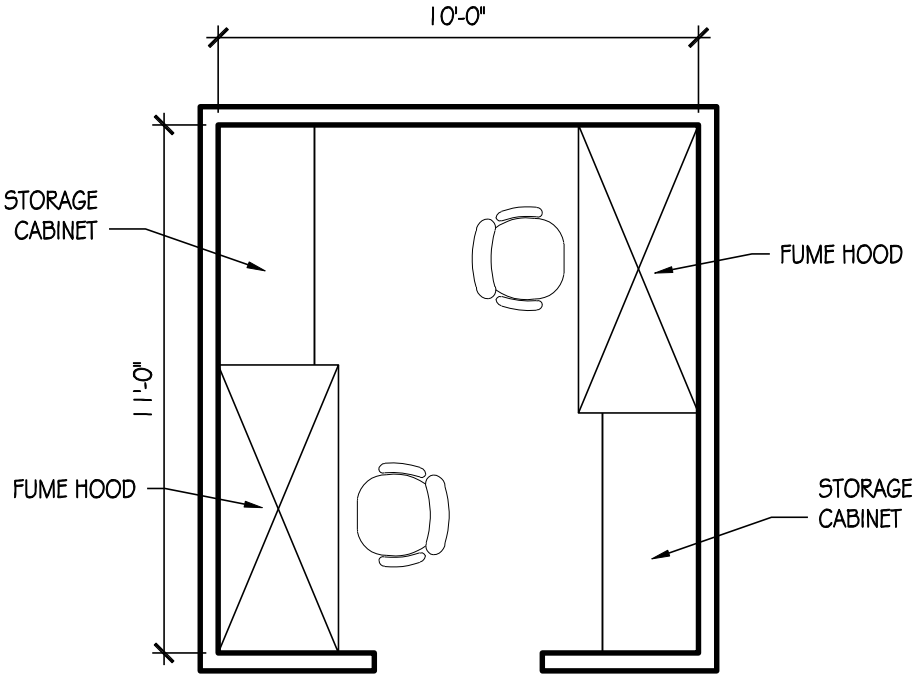

FUME HOOD ALCOVE
110 SF

USU Agriculture Building

ROOM DATA SHEET DETAIL — **Plants, Soils, & Climate**

PSC Research Lab Support

5.5.15 Fume Hood alcove — **Third Level**

SPACE INFORMATION

Room Function: Research activities requiring a fume hood

Adjacencies: Distribute to provide (1) Fume hood per (3) lab bays

Special Requirements:

Access: All lab users

Room Utilization: 7 days a week, 24 hours a day

General Notes:

ROOM SIZE AND CAPACITY

Proposed Area:	110 NSF	**Room/Space Quantity:**	3	**Total Area:**	330
Assigned Capacity:	0 Occupant(s)	**Unassigned Capacity:**	1 Guest(s)	**Total Capacity:**	1

FINISHES, DOORS, AND WINDOWS

Floor Finish:	Vinyl Composite Tile (VCT)	**Ceiling Treatment:**	Gypsum board (painted)
Wall Finish:	Gypsum board (painted)	**Ceiling Height:**	10'
Base Finish:	Coved	**Acoustic Treatment:**	Not Required
Doors:		**Windows:**	

Type:	None	**Height:**	84"	**Natural Lighting:**	Not required
Width:	42"	**Vision Panel:**	Not Required	**Room Skylight:**	Not Acceptable

CASEWORK / FURNISHINGS

Wall Cabinets:	None	**Shelving:**	No
Base Cabinets:	None	**Drawer Units:**	Yes
Bench Top:	None	**White Boards:**	No
Bench Height:		**Tack Boards:**	No

PLUMBING / GASES

Sinks:	None	**Air:**	@ Fume hood(s)
Pure Water:	None	**Lab Gas:**	No
HotCold Water:	No	**CO2:**	No
Floor Drain:	No	**Nitrogen:**	No
HoseBib:	No	**Vacuum:**	@ Fume hood(s)
Waste:		**Other Gas:**	
Eyewash:	No	**Fire Protection:**	Lab Standard
Emerg Shower:	Yes		

COPYRIGHT © 2009 CRSA

USU Agriculture Building

ROOM DATA SHEET DETAIL **Plants, Soils, & Climate**

PSC Research Lab Support

5.5.15 Fume Hood alcove **Third Level**

HVAC / ELECTRICAL

Total Air Changes:	10 ACH	**Power:**	110v
Pressure:	Negative	**Lighting:**	Direct/indirect fluorescent
Temp Requirement:	Lab Standard	**Fixture Mount:**	Recessed
Relative Humidity:	Lab Standard	**Occ. Sensors:**	No
Local Exhaust:	Lab Standard	**Task Light:**	Yes
Air Filtration:	Lab Standard	**Em Power:**	No
CO2 Sensor:	Yes	**UPS:**	No
Other HVAC:			

COMMUNICATIONS / SPECIAL CONSIDERATIONS

Phone Outlets:	0	**Light Controls:**	Not Required
Data Outlets:	None	**Visual Control:**	Not Required
Network:	No	**Structural Control:**	Not Required
AV Requirements:	None	**Security:**	Not Required
Clocks:	No	**Shielding:**	Not Required

EQUIPMENT AND FURNISHINGS

Equipment:

New equipment
(2) 6' Particle/Fume hoods w/ chemical storage base stands

Furnishings:

New furnishings
(2) Adjustable height lab stools w/ lumbar support
(2) 60" x 24" x 84" Storage cabinets for chemicals

COPYRIGHT © 2009 CRSA

BLANK

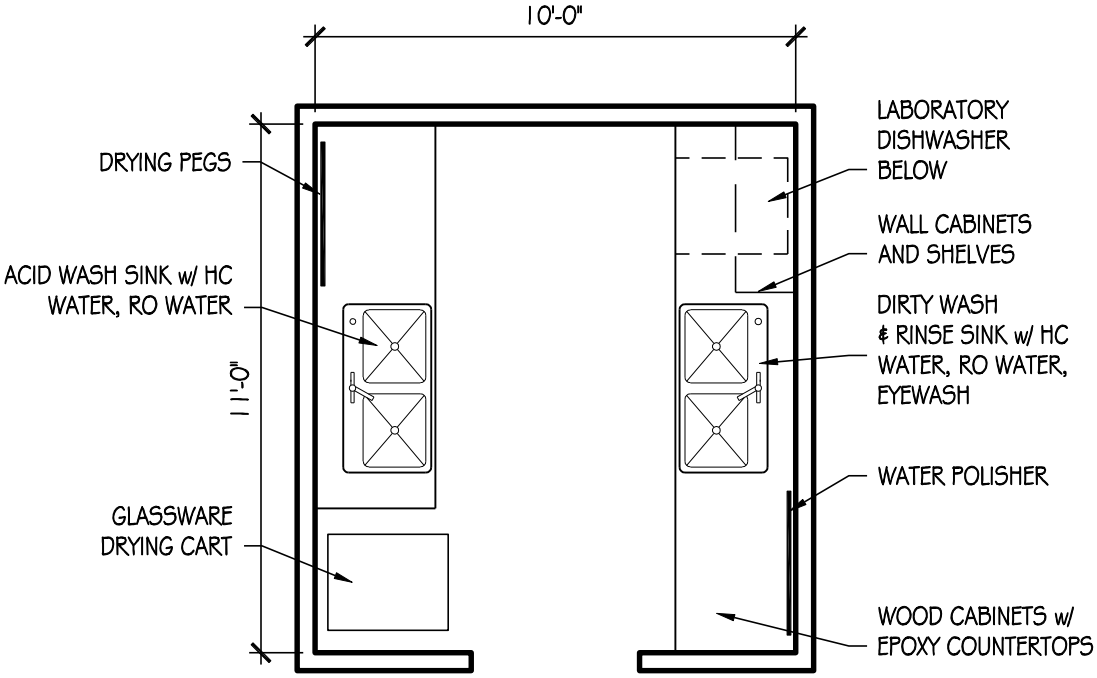

GLASSWARE WASH ALCOVE
110 SF

USU Agriculture Building

ROOM DATA SHEET DETAIL — **Plants, Soils, & Climate**

PSC Research Lab Support

5.5.16 Glassware Wash alcove — Third Level

SPACE INFORMATION

Room Function: Glassware cleaning

Adjacencies: (1) Adjacent to Soils Microbiology Lab (5.4.1.1) & Soils Chemistry Lab (5.4.1.2)
(1) Adjacent to Plant Agronomy Lab (5.4.1.6) & Crop Physiology Lab (5.4.1.4)

Special Requirements:

Access: All lab users

Room Utilization: 7 days a week, 24 hours a day

General Notes:

ROOM SIZE AND CAPACITY

Proposed Area:	110 NSF	**Room/Space Quantity:**	2	**Total Area:**	220
Assigned Capacity:	0 Occupant(s)	**Unassigned Capacity:**	1 Guest(s)	**Total Capacity:**	1

FINISHES, DOORS, AND WINDOWS

Floor Finish:	Vinyl Composite Tile (VCT)	**Ceiling Treatment:**	Gypsum board (painted)
Wall Finish:	Gypsum board (painted)	**Ceiling Height:**	10'
Base Finish:	Coved	**Acoustic Treatment:**	Not Required
Doors:		**Windows:**	
Type:	None	**Natural Lighting:**	Not required
Width:	42"	**Room Skylight:**	Acceptable

Height:	84"		
Vision Panel:	Not Required		

CASEWORK / FURNISHINGS

Wall Cabinets:	None	**Shelving:**	Drying Pegs
Base Cabinets:	Wood - Certified	**Drawer Units:**	Yes
Bench Top:	Epoxy Resin	**White Boards:**	No
Bench Height:	36"	**Tack Boards:**	No

PLUMBING / GASES

Sinks:	2 Large two basin w/ special traps	**Air:**	No
Pure Water:	RO	**Lab Gas:**	No
HotCold Water:	Yes	**CO2:**	No
Floor Drain:	No	**Nitrogen:**	No
HoseBib:	No	**Vacuum:**	No
Waste:	Lab/pH neutralization	**Other Gas:**	
Eyewash:	Yes	**Fire Protection:**	Standard
Emerg Shower:	No		

COPYRIGHT © 2009 CRSA

USU Agriculture Building

ROOM DATA SHEET DETAIL **Plants, Soils, & Climate**

PSC Research Lab Support

5.5.16 Glassware Wash alcove **Third Level**

HVAC / ELECTRICAL

Total Air Changes:	10 ACH	**Power:**	110v
Pressure:	Negative	**Lighting:**	Direct/indirect fluorescent
Temp Requirement:	Lab Standard	**Fixture Mount:**	Recessed
Relative Humidity:	Lab Standard	**Occ. Sensors:**	No
Local Exhaust:	Lab Standard	**Task Light:**	Yes
Air Filtration:	Lab Standard	**Em Power:**	No
CO2 Sensor:	No	**UPS:**	No
Other HVAC:			

COMMUNICATIONS / SPECIAL CONSIDERATIONS

Phone Outlets:	0	**Light Controls:**	Not Required
Data Outlets:	None	**Visual Control:**	Not Required
Network:	No	**Structural Control:**	Not Required
AV Requirements:	None	**Security:**	Not Required
Clocks:	No	**Shielding:**	Not Required

EQUIPMENT AND FURNISHINGS

Equipment:

Owner provided equipment
(1) Glassware drying cart

New equipment
(1) Laboratory dishwasher
(1) Water polisher

Furnishings:

New Built-in cabinetry
(20) lf Wood base w/epoxy countertop - 30" deep
(4) lf Wood upper w/adjustable shelves - 15" deep
(1) 3'x4' Drying peg rack

COPYRIGHT © 2009 CRSA

BLANK

GENERAL CLASS LAB
1 200 SF

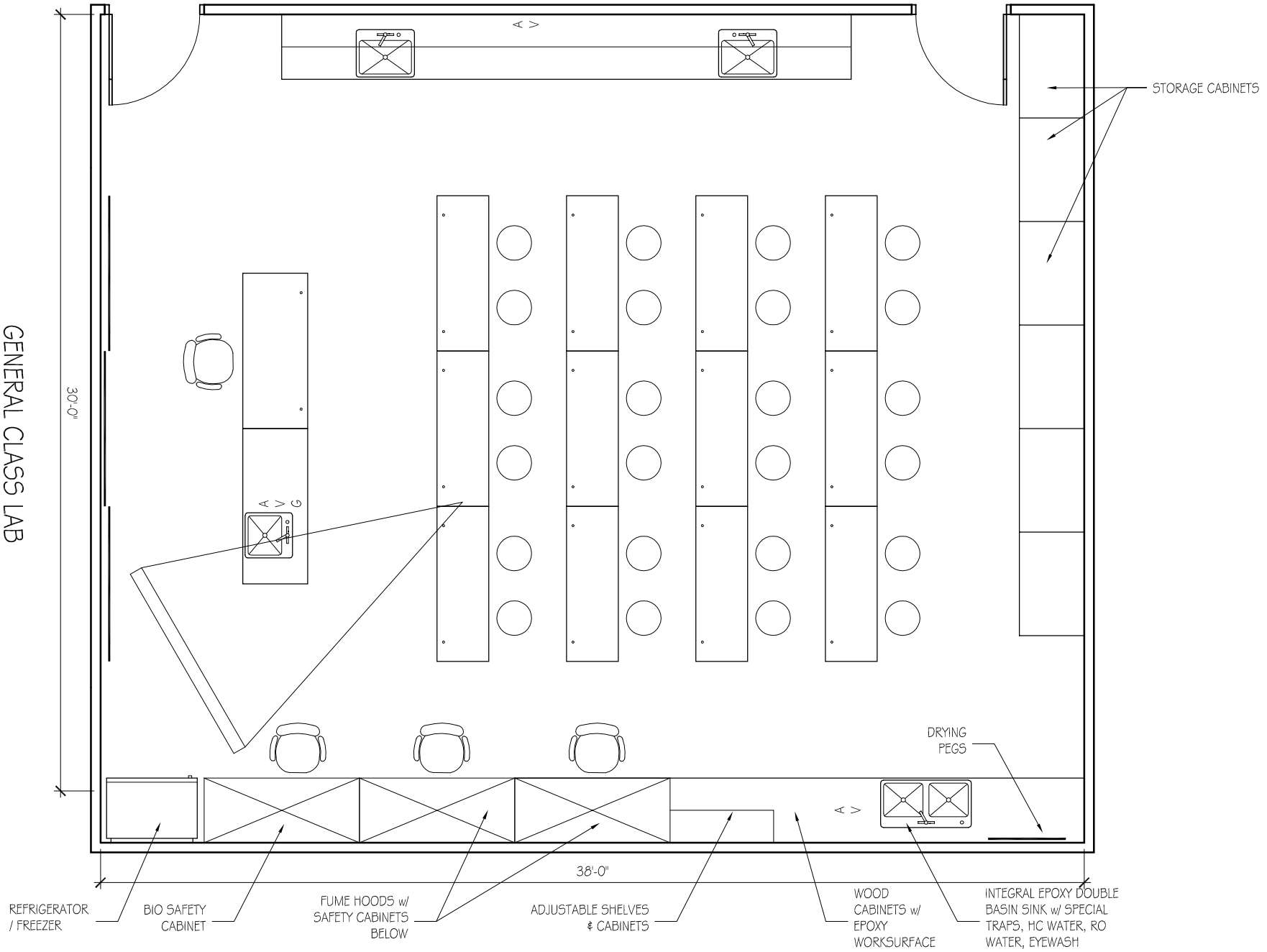

USU Agriculture Building

ROOM DATA SHEET DETAIL **Plants, Soils, & Climate**

PSC Class Labs

5.6.1 General Lab Classroom **First Level**

SPACE INFORMATION

Room Function: General teaching lab

Adjacencies: Advanced Class Lab (5.6.2)

Special Requirements:
IT setup for distance learning. Projector, camera, etc.

Access: Students & Staff

Room Utilization: 5 days a week, 6:00 AM to 8:00 PM

General Notes: Grossl

ROOM SIZE AND CAPACITY

Proposed Area:	1200 NSF	**Room/Space Quantity:**	1	**Total Area:**	1200
Assigned Capacity:	0 Occupant(s)	**Unassigned Capacity:**	25 Guest(s)	**Total Capacity:**	25

FINISHES, DOORS, AND WINDOWS

Floor Finish:	Vinyl Composite Tile (VCT)	**Ceiling Treatment:**	Suspended vinyl-faced lay-in panels
Wall Finish:	Gypsum board (painted)	**Ceiling Height:**	10'
Base Finish:	Rubber	**Acoustic Treatment:**	As needed
Doors:		**Windows:**	
Type:	Single	**Natural Lighting:**	Not required
Width:	42"	**Room Skylight:**	Acceptable

Doors:

Type:	Single	**Height:**	84"
Width:	42"	**Vision Panel:**	Not Required

CASEWORK / FURNISHINGS

Wall Cabinets:	Wood - Certified	**Shelving:**	Yes
Base Cabinets:	Wood - Certified	**Drawer Units:**	Yes
Bench Top:	Epoxy Resin	**White Boards:**	(3) 4'x6' Sliding
Bench Height:	36"	**Tack Boards:**	No

PLUMBING / GASES

Sinks:	1 Large two basin, 2 Large single basin, 1 Small w/sp	**Air:**	1 per bench
Pure Water:	RO	**Lab Gas:**	1 per lab
HotCold Water:	Yes	**CO2:**	Cylinder
Floor Drain:	No	**Nitrogen:**	No
HoseBib:	No	**Vacuum:**	1 per bench
Waste:		**Other Gas:**	
Eyewash:	Yes	**Fire Protection:**	Lab Standard
Emerg Shower:	Yes		

COPYRIGHT © 2009 CRSA

USU Agriculture Building

ROOM DATA SHEET DETAIL **Plants, Soils, & Climate**

PSC Class Labs

5.6.1 General Lab Classroom

First Level

HVAC / ELECTRICAL

Total Air Changes:	8 ACH	**Power:**	110v
Pressure:		**Lighting:**	Direct/indirect fluorescent
Temp Requirement:	Lab Standard	**Fixture Mount:**	Recessed
Relative Humidity:	Lab Standard	**Occ. Sensors:**	No
Local Exhaust:	Lab Standard	**Task Light:**	No
Air Filtration:	Lab Standard	**Em Power:**	No
CO2 Sensor:	Yes	**UPS:**	No
Other HVAC:			

COMMUNICATIONS / SPECIAL CONSIDERATIONS

Phone Outlets:	0	**Light Controls:**	On Dimmer
Data Outlets:	1 per lab	**Visual Control:**	Not Required
Network:	Yes	**Structural Control:**	Not Required
AV Requirements:	As needed	**Security:**	Keyed lock at entrance doors
Clocks:	Yes	**Shielding:**	Not Required

EQUIPMENT AND FURNISHINGS

Equipment:

Owner provided equipment
(6) Spectrometers
(1) Refrigerator
(10) Balances
(4) EC meter
(1) Pressure transducer

New equipment
(2) 4' Particle / Fume hoods w/ chemical storage base stands
(1) 5' Class II / A2 Bio Safety Cabinet
(1) 25 cf Lab refrigerator
(1) Overhead projector
(1) Projector screen

Furnishings:

New Built-in cabinetry
(56) lf Wood base w/epoxy countertop - 30" deep
(34) lf Wood upper w/adjustable shelves - 15" deep
(6) 48"'x 30" x 96" Wood storage cabinets w/ shelves
(72) lf Plastic Laminate worksurface - 24" deep, open below w/ integrated AC receptacles and connecting holes for equipment rods.
(1) 3'x4' Drying peg rack

New furnishings
(3) Adjustable height lab stools w/ lumbar support
(24) Adjustable height lab stools

COPYRIGHT © 2009 CRSA

BLANK

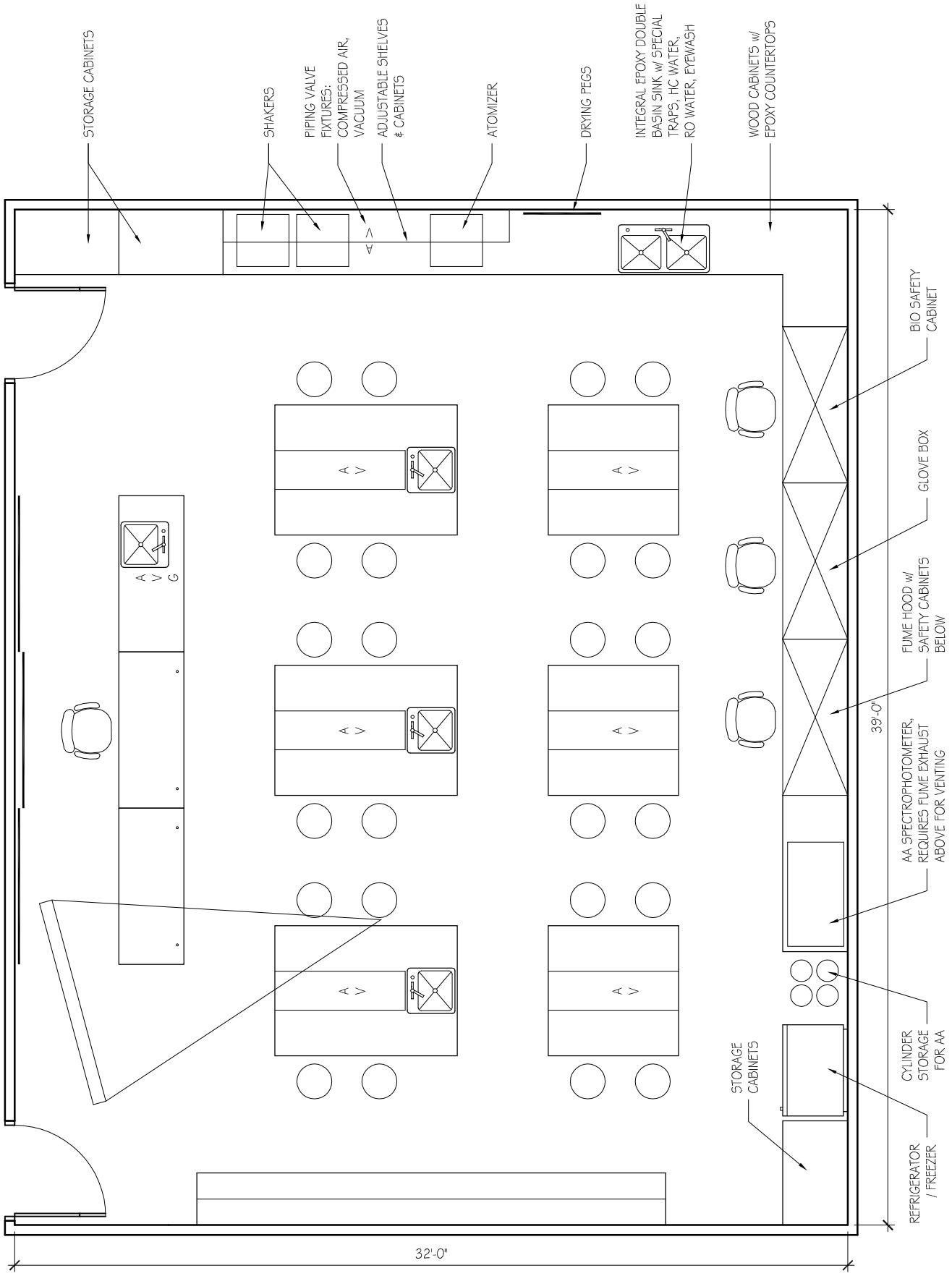

ADVANCED CLASS LAB
1200 SF

USU Agriculture Building

ROOM DATA SHEET DETAIL **Plants, Soils, & Climate**

PSC Class Labs

5.6.2 Advanced Lab Classroom **First Level**

SPACE INFORMATION

Room Function: Advanced teaching lab

Adjacencies: General Class Lab (5.6.1)

Special Requirements:

Access: Students & Staff

Room Utilization: 5 days a week, 6:00 AM to 8:00 PM

General Notes: Grossl

ROOM SIZE AND CAPACITY

Proposed Area:	1200 NSF	**Room/Space Quantity:**	1	**Total Area:**	1200
Assigned Capacity:	0 Occupant(s)	**Unassigned Capacity:**	25 Guest(s)	**Total Capacity:**	25

FINISHES, DOORS, AND WINDOWS

Floor Finish:	Vinyl Composite Tile (VCT)	**Ceiling Treatment:**	Suspended vinyl-faced lay-in panels
Wall Finish:	Gypsum board (painted)	**Ceiling Height:**	10'
Base Finish:	Rubber	**Acoustic Treatment:**	As needed
Doors:		**Windows:**	
Type:	Single	**Natural Lighting:**	Not required
Width:	42"	**Room Skylight:**	Acceptable

Doors:

Type:	Single	**Height:**	84"
Width:	42"	**Vision Panel:**	Not Required

CASEWORK / FURNISHINGS

Wall Cabinets:	Wood - Certified	**Shelving:**	Yes
Base Cabinets:	Wood - Certified	**Drawer Units:**	Yes
Bench Top:	Epoxy Resin	**White Boards:**	(2) 4'x6' Sliding
Bench Height:	36"	**Tack Boards:**	No

PLUMBING / GASES

Sinks:	1 Large two basin, 3 Small w/special traps	**Air:**	1 per bench
Pure Water:	RO	**Lab Gas:**	1 per lab
HotCold Water:	Yes	**CO2:**	Cylinder
Floor Drain:	No	**Nitrogen:**	Cylinder
HoseBib:	No	**Vacuum:**	1 per bench
Waste:		**Other Gas:**	Helium, Argon, Acetylene
Eyewash:	Yes	**Fire Protection:**	Lab Standard
Emerg Shower:	Yes		

COPYRIGHT © 2009 CRSA

USU Agriculture Building

ROOM DATA SHEET DETAIL **Plants, Soils, & Climate**

PSC Class Labs

5.6.2 Advanced Lab Classroom **First Level**

HVAC / ELECTRICAL

Total Air Changes:	8 ACH	**Power:**	110v
Pressure:		**Lighting:**	Direct/indirect fluorescent
Temp Requirement:	Lab Standard	**Fixture Mount:**	Recessed
Relative Humidity:	Lab Standard	**Occ. Sensors:**	No
Local Exhaust:	Lab Standard	**Task Light:**	No
Air Filtration:	Lab Standard	**Em Power:**	On select outlets
CO2 Sensor:	Yes	**UPS:**	No
Other HVAC:			

COMMUNICATIONS / SPECIAL CONSIDERATIONS

Phone Outlets:	0	**Light Controls:**	On Dimmer
Data Outlets:	1 per lab	**Visual Control:**	Not Required
Network:	Yes	**Structural Control:**	Not Required
AV Requirements:	None	**Security:**	Keyed lock at entrance doors
Clocks:	Yes	**Shielding:**	Not Required

EQUIPMENT AND FURNISHINGS

Equipment:

Owner provided equipment
(5) pH meters
(6) Stir plates
(1) Vacuum pump
(1) Vacuum system
(2) Shakers
(1) Auto extractor
(1) Vortex
(1) Distiller
(1) Balance
(1) Atomic absorption spectrophotometer
(1) Atomizer
(1) Transformer
(1) Titrator

New equipment
(1) 4' Particle/ Fume hood w/ chemical storage base stands
(1) 5' Class II / A2 Bio Safety Cabinet
(1) Glove box

Furnishings:

New Built-in cabinetry
(108) lf Wood base w/epoxy countertop - 30" deep
(50) lf Wood upper w/adjustable shelves - 15" deep
(1) 3'x4' Drying peg rack

New furnishings
(3) Adjustable height lab stools w/ lumbar support
(16) Adjustable height lab stools

COPYRIGHT © 2009 CRSA

BLANK

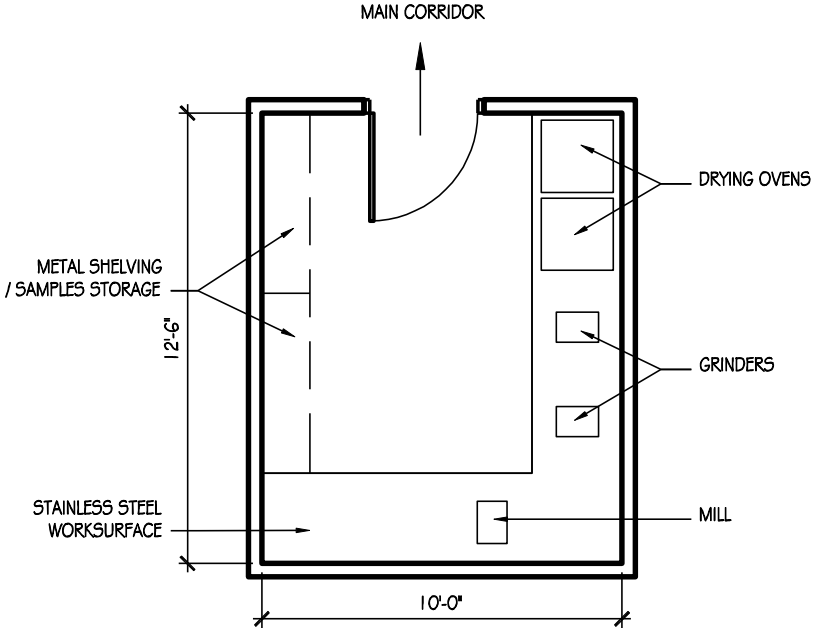

GRINDING / DRYING / PREP
120 SF

USU Agriculture Building

ROOM DATA SHEET DETAIL **Plants, Soils, & Climate**

PSC Class Labs

5.6.3 Grinding / Drying / Prep room **First Level**

SPACE INFORMATION

Room Function:

Adjacencies: Soils Class Lab (5.6.1), Horticulture Class Lab (5.6.2)

Access: Students & Staff

Room Utilization: 5 days a week, 6:00 AM to 8:00 PM

General Notes: Grossl

Special Requirements:

100% exhaust for grinders / mills. Increased air changes with fresh air intake.

ROOM SIZE AND CAPACITY

Proposed Area:	120 NSF	**Room/Space Quantity:**	1	**Total Area:**	120
Assigned Capacity:	0 Occupant(s)	**Unassigned Capacity:**	3 Guest(s)	**Total Capacity:**	3

FINISHES, DOORS, AND WINDOWS

Floor Finish:	Concrete (sealed)	**Ceiling Treatment:**	Suspended acoustical lay-in tiles
Wall Finish:	Gypsum board (painted)	**Ceiling Height:**	10'
Base Finish:	Rubber	**Acoustic Treatment:**	Suppress equipment generated noise
Doors:		**Windows:**	
Type:	Single	**Natural Lighting:**	Not required
Width:	36"	**Room Skylight:**	Not Acceptable

Height:	84"		
Vision Panel:	Not Required		

CASEWORK / FURNISHINGS

Wall Cabinets:	None	**Shelving:**	Yes
Base Cabinets:	None	**Drawer Units:**	Yes
Bench Top:	Stainless Steel	**White Boards:**	No
Bench Height:	36"	**Tack Boards:**	No

PLUMBING / GASES

Sinks:	None	**Air:**	By Compressor
Pure Water:	None	**Lab Gas:**	No
HotCold Water:	No	**CO2:**	No
Floor Drain:	No	**Nitrogen:**	No
HoseBib:	No	**Vacuum:**	No
Waste:		**Other Gas:**	
Eyewash:	No	**Fire Protection:**	Standard
Emerg Shower:	No		

COPYRIGHT © 2009 CRSA

USU Agriculture Building

ROOM DATA SHEET DETAIL **Plants, Soils, & Climate**

PSC Class Labs

5.6.3 Grinding / Drying / Prep room **First Level**

HVAC / ELECTRICAL

Total Air Changes:	8 ACH	**Power:**	110v
Pressure:	Negative	**Lighting:**	Direct/indirect fluorescent
Temp Requirement:	Standard	**Fixture Mount:**	Recessed
Relative Humidity:	Lab Standard	**Occ. Sensors:**	Yes w/manual override
Local Exhaust:	Lab Standard	**Task Light:**	No
Air Filtration:	Lab Standard	**Em Power:**	No
CO2 Sensor:	No	**UPS:**	No
Other HVAC:			

COMMUNICATIONS / SPECIAL CONSIDERATIONS

Phone Outlets:	0	**Light Controls:**	Not Required
Data Outlets:	None	**Visual Control:**	Not Required
Network:	No	**Structural Control:**	Not Required
AV Requirements:	None	**Security:**	Not Required
Clocks:	No	**Shielding:**	Not Required

EQUIPMENT AND FURNISHINGS

Equipment:

Owner provided equipment
(2) Grinders
(1) Mill
(2) Drying ovens

Furnishings:

New Built-in cabinetry
(20) lf Stainless steel worksurface - 30" deep

New furnishings
(2) 60" x 18" x 96" Metal adjustable shelving units

COPYRIGHT © 2009 CRSA

BLANK

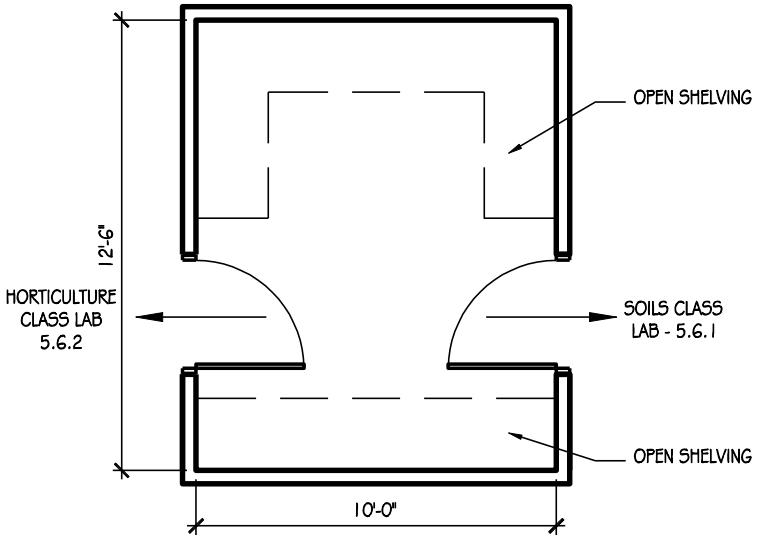

CLASSROOM SUPPLY
120 SF

USU Agriculture Building

ROOM DATA SHEET DETAIL — **Plants, Soils, & Climate**

PSC Class Labs

5.6.4 Classroom supply storage — First Level

SPACE INFORMATION

Room Function:

Adjacencies: Soils Class Lab (5.6.1), Horticulture Class Lab (5.6.2)

Special Requirements:

Access: Staff only

Room Utilization: 5 days a week, 6:00 AM to 8:00 PM

General Notes: Grossl

ROOM SIZE AND CAPACITY

Proposed Area:	120 NSF	**Room/Space Quantity:**	1	**Total Area:**	120
Assigned Capacity:	0 Occupant(s)	**Unassigned Capacity:**	1 Guest(s)	**Total Capacity:**	1

FINISHES, DOORS, AND WINDOWS

Floor Finish:	Concrete (sealed)	**Ceiling Treatment:**	Suspended acoustical lay-in tiles
Wall Finish:	Gypsum board (painted)	**Ceiling Height:**	10'
Base Finish:	Rubber	**Acoustic Treatment:**	Not Required
Doors:		**Windows:**	
Type:	Single	**Natural Lighting:**	Not required
Width:	36"	**Room Skylight:**	Not Acceptable

Doors: Height: 84"; Vision Panel: Not Required

CASEWORK / FURNISHINGS

Wall Cabinets:	Wood - Certified	**Shelving:**	Yes
Base Cabinets:	None	**Drawer Units:**	No
Bench Top:	None	**White Boards:**	No
Bench Height:		**Tack Boards:**	No

PLUMBING / GASES

Sinks:	None	**Air:**	No
Pure Water:	None	**Lab Gas:**	No
HotCold Water:	No	**CO2:**	No
Floor Drain:	No	**Nitrogen:**	No
HoseBib:	No	**Vacuum:**	No
Waste:		**Other Gas:**	
Eyewash:	No	**Fire Protection:**	n/a
Emerg Shower:	No		

COPYRIGHT © 2009 CRSA

HVAC / ELECTRICAL

Total Air Changes:	Standard	**Power:**	110v
Pressure:		**Lighting:**	Direct/indirect fluorescent
Temp Requirement:	Not Specified	**Fixture Mount:**	Recessed
Relative Humidity:	Not Specified	**Occ. Sensors:**	No
Local Exhaust:	Standard	**Task Light:**	No
Air Filtration:	Standard	**Em Power:**	No
CO2 Sensor:	No	**UPS:**	No
Other HVAC:			

COMMUNICATIONS / SPECIAL CONSIDERATIONS

Phone Outlets:	0	**Light Controls:**	Not Required
Data Outlets:	None	**Visual Control:**	Not Required
Network:	No	**Structural Control:**	Not Required
AV Requirements:	None	**Security:**	Keyed lock at entrance doors
Clocks:	No	**Shielding:**	Not Required

EQUIPMENT AND FURNISHINGS

Equipment:

Furnishings:

New Built-in cabinetry
(26) lf Wood adjustable shelving, 8 shelves high - 24" deep

COPYRIGHT © 2009 CRSA

BLANK

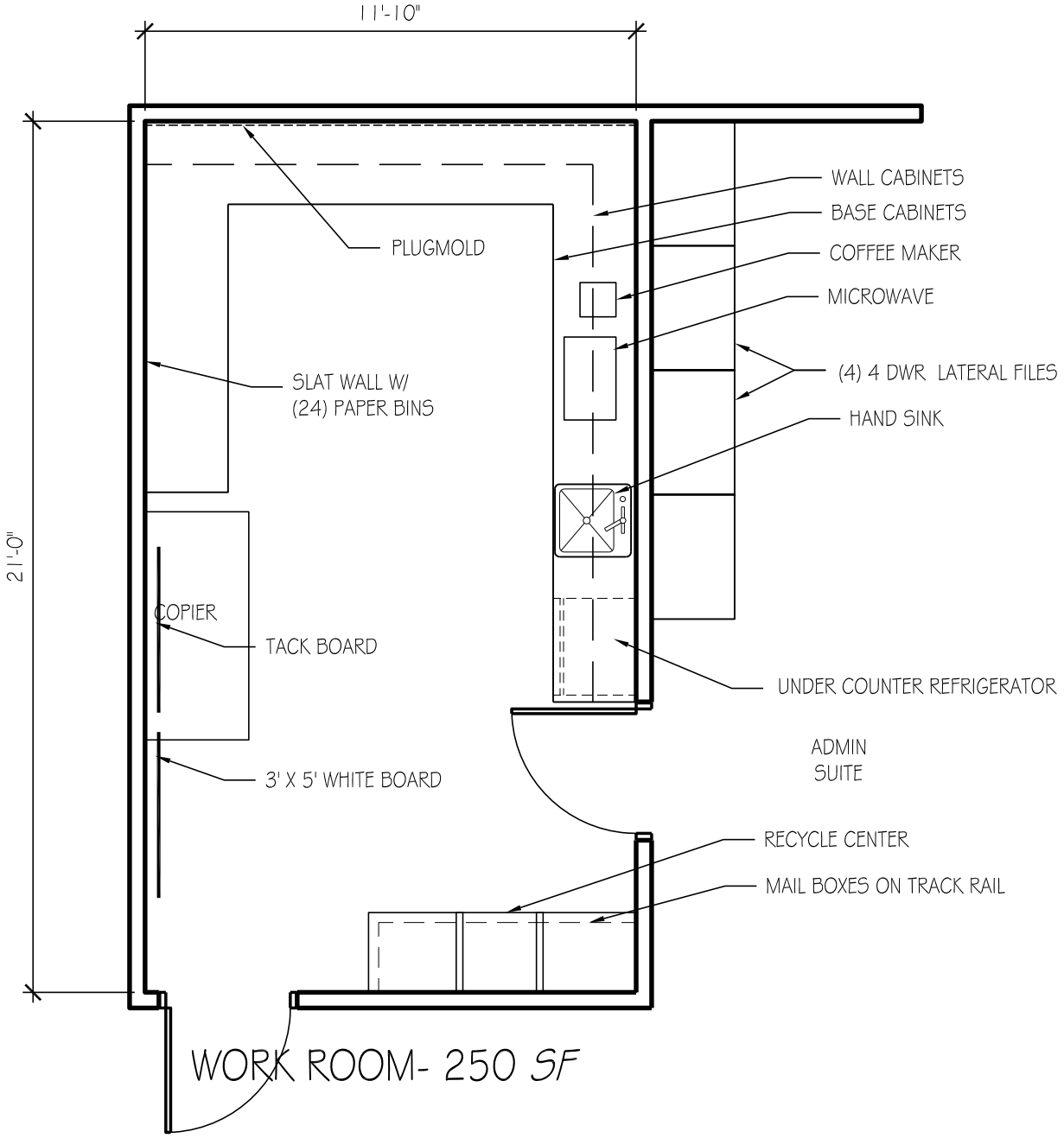

WORK ROOM- 250 SF

USU Agriculture Building

ROOM DATA SHEET DETAIL **COA - Plants, Soils and Climate**

PSC Support Area

5.7.1 Copy/Mail/Workroom/Storage -

SPACE INFORMATION

Room Function: Copy, work, prep, storage

Adjacencies:

Special Requirements:
None

Access: Public

Room Utilization: 5 days a week, 8:00 AM to 5:00 PM

General Notes: None

ROOM SIZE AND CAPACITY

Proposed Area:	250 NSF	**Room/Space Quantity:**	1	**Total Area:**	250
Assigned Capacity:	1 Occupant(s)	**Unassigned Capacity:**	1 Guest(s)	**Total Capacity:**	2

FINISHES, DOORS, AND WINDOWS

Floor Finish: Carpet-tile

Wall Finish: Gypsum board (painted)

Base Finish: Integral Coved

Doors:

Type:	Single	**Height:**	84"
Width:	36"	**Vision Panel:**	N/A

Ceiling Treatment: Suspended acoustical lay-in tiles

Ceiling Height: 8' minimum

Acoustic Treatment: Acoustic seperation from adjacent spaces

Windows:

Natural Lighting:	Not required
Room Skylight:	None

MECHANICAL/ELECTRICAL

HVAC:	Standard	**AV Requirements:**	None
Plumbing:	None	**Wire Management:**	Wall outlets
Fire Protection:	Smoke detector, sprinkler, and visual alarm	**Data Management:**	Tele/data outlet(s)
Security:	Keyed lock at entrance doors	**Artificial Lighting:**	Direct/indirect fluorescent
Electrical:	120V wall outlets	**Telephone:**	Wall mounted telephone jack

EQUIPMENT AND FURNISHINGS

Equipment

(1) Copier (provided by owner)
(1) Refrigerator
(1) Microwave
(1) Coffee maker

Furniture

(1) 10 LF task slatwall
(1) 26 LF base cabinets
(1) 20 LF wall cabinets - lockable
(45) Mail slots
(1) 4'x4' Tack board
(1) 4'x4' White board
(4) 4 Drawer lateral file
(1) Ten gallon waste receptacle
(1) 3 Compartment recycling bin
(1) 10 LF task slatwall
(24) Paper trays

COPYRIGHT © 2009 CRSA

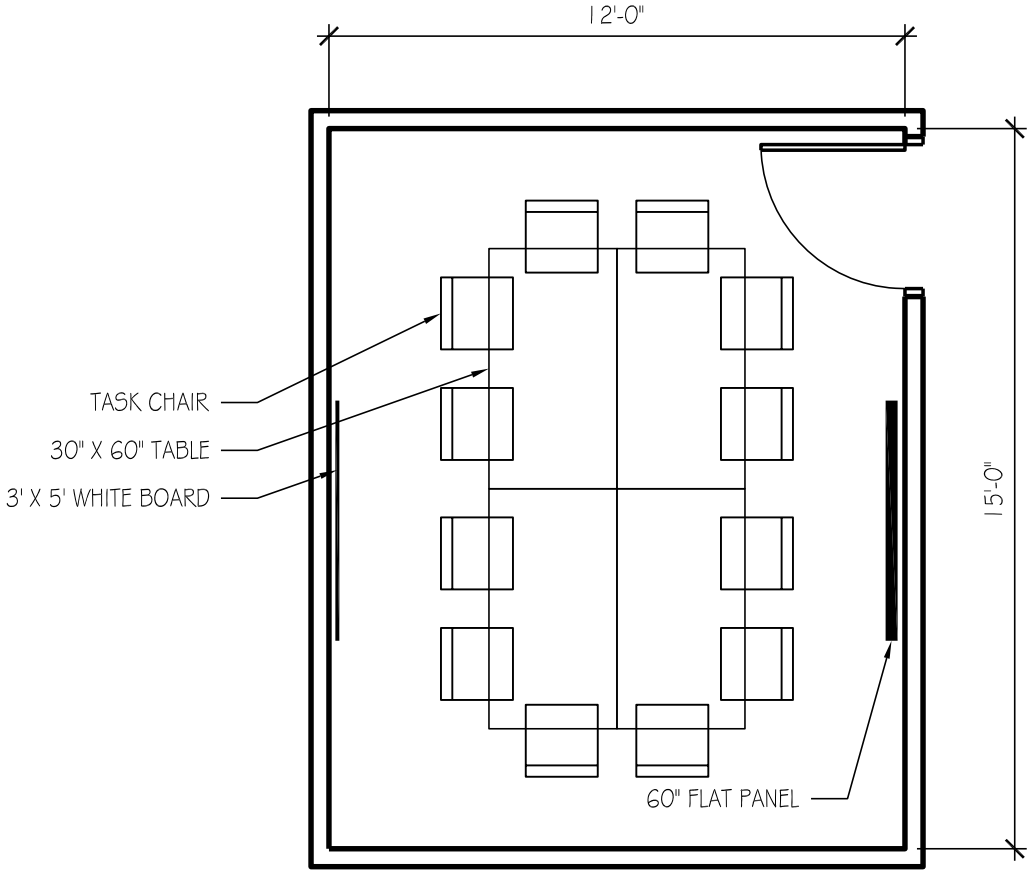

CONFERENCE ROOM - 180 SF

USU Agriculture Building

ROOM DATA SHEET DETAIL **COA - Plants, Soils and Climate**

PSC Support Area

5.7.2 Small Conference Room -

SPACE INFORMATION

Room Function: Group meetings, presentation

Adjacencies:

Special Requirements:
Chair rail around perimeter

Access: Public

Room Utilization: 5 days a week, 8:00 AM to 5:00 PM

General Notes: None

ROOM SIZE AND CAPACITY

Proposed Area:	180 NSF	**Room/Space Quantity:**	1	**Total Area:**	180
Assigned Capacity:	1 Occupant(s)	**Unassigned Capacity:**	12 Guest(s)	**Total Capacity:**	13

FINISHES, DOORS, AND WINDOWS

Floor Finish: Carpet-tile

Wall Finish: Gypsum board (painted)

Base Finish: Integral Coved

Doors:

Type:	Single	**Height:**	84"
Width:	36"	**Vision Panel:**	Frosted

Ceiling Treatment: Suspended acoustical lay-in tiles

Ceiling Height: 8' minimum

Acoustic Treatment: Acoustic seperation from adjacent spaces

Windows:

Natural Lighting:	Not required
Room Skylight:	Vision Panel

MECHANICAL/ELECTRICAL

HVAC:	Standard, space temperature control	**AV Requirements:**	None
Plumbing:	None	**Wire Management:**	Wall outlets
Fire Protection:	Smoke detector, sprinkler, and visual alarm	**Data Management:**	Tele/data outlet(s)
Security:	Keyed lock at entrance doors	**Artificial Lighting:**	Direct/indirect fluorescent and task lighting
Electrical:	120V wall outlets	**Telephone:**	Telephone outlets per occupant

EQUIPMENT AND FURNISHINGS

Equipment

(1) Conference telephone
(1) 60" Flat panel TV

Furniture

(4) 30" x 60" Table
(12) Task chair
(1) 3' x 5' White board

COPYRIGHT © 2009 CRSA

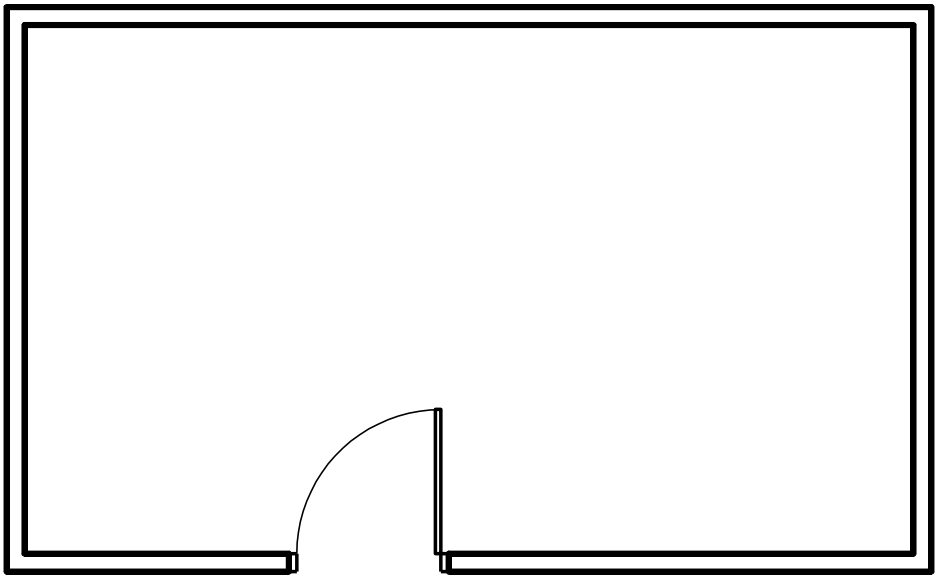

PSC STORAGE
200 SF

USU Agriculture Building

ROOM DATA SHEET DETAIL — **Plants, Soils, & Climate**

PSC Research Lab Support

5.7.3 PSC Lab storage — **Basement Level**

SPACE INFORMATION

Room Function:

Adjacencies:

Special Requirements:

Access: Staff only

Room Utilization: 7 days a week, 24 hours a day

General Notes:

ROOM SIZE AND CAPACITY

Proposed Area:	200 NSF	**Room/Space Quantity:**	3	**Total Area:**	600
Assigned Capacity:	0 Occupant(s)	**Unassigned Capacity:**	2 Guest(s)	**Total Capacity:**	2

FINISHES, DOORS, AND WINDOWS

Floor Finish:	Concrete (sealed)	**Ceiling Treatment:**	Suspended acoustical lay-in tiles
Wall Finish:	Gypsum board (painted)	**Ceiling Height:**	10'
Base Finish:	Rubber	**Acoustic Treatment:**	Not Required
Doors:		**Windows:**	

Type:	Single	**Height:**	84"	**Natural Lighting:**	Not required
Width:	36"	**Vision Panel:**	Not Required	**Room Skylight:**	Not Acceptable

CASEWORK / FURNISHINGS

Wall Cabinets:	None	**Shelving:**	Yes
Base Cabinets:	None	**Drawer Units:**	No
Bench Top:	None	**White Boards:**	No
Bench Height:		**Tack Boards:**	No

PLUMBING / GASES

Sinks:	None	**Air:**	No
Pure Water:	None	**Lab Gas:**	No
HotCold Water:	No	**CO2:**	No
Floor Drain:	No	**Nitrogen:**	No
HoseBib:	No	**Vacuum:**	No
Waste:		**Other Gas:**	
Eyewash:	No	**Fire Protection:**	Standard
Emerg Shower:	No		

COPYRIGHT © 2009 CRSA

USU Agriculture Building

ROOM DATA SHEET DETAIL **Plants, Soils, & Climate**

PSC Research Lab Support

5.7.3 PSC Lab storage **Basement Level**

HVAC / ELECTRICAL

Total Air Changes:	Standard	**Power:**	110v
Pressure:		**Lighting:**	Direct/indirect fluorescent
Temp Requirement:	Not Specified	**Fixture Mount:**	Surface or Recessed
Relative Humidity:	Not Specified	**Occ. Sensors:**	Yes w/manual override
Local Exhaust:	Standard	**Task Light:**	No
Air Filtration:	Standard	**Em Power:**	No
CO2 Sensor:	No	**UPS:**	No
Other HVAC:			

COMMUNICATIONS / SPECIAL CONSIDERATIONS

Phone Outlets:	0	**Light Controls:**	Not Required
Data Outlets:	None	**Visual Control:**	Not Required
Network:	No	**Structural Control:**	Not Required
AV Requirements:	None	**Security:**	Keypad at entrance doors
Clocks:	No	**Shielding:**	Not Required

EQUIPMENT AND FURNISHINGS

Equipment:

Furnishings:

COPYRIGHT © 2009 CRSA

BLANK

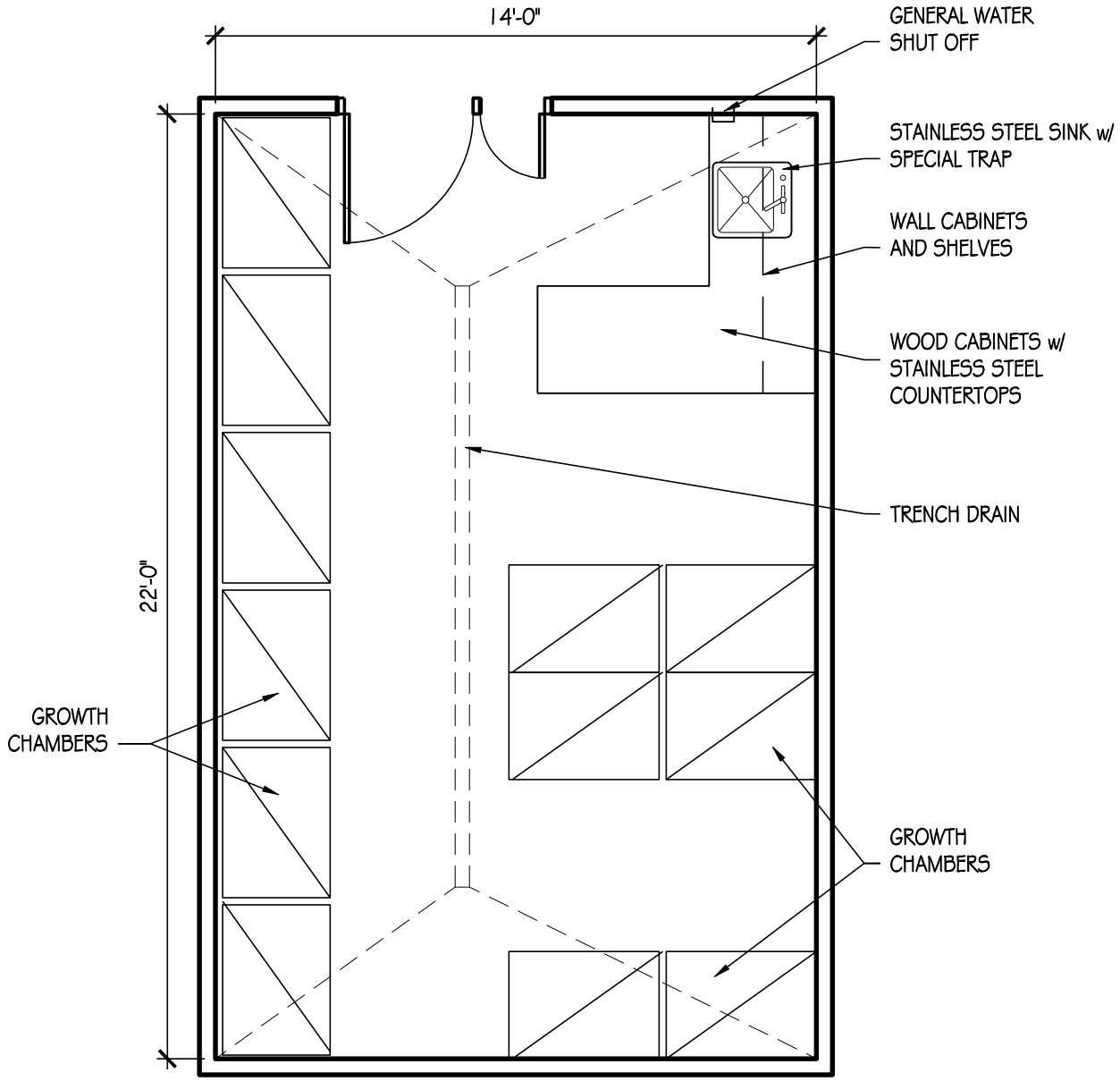

GROWTH CHAMBER ROOM
300 SF

USU Agriculture Building

ROOM DATA SHEET DETAIL — **Plants, Soils, & Climate**

PSC Research Lab Support

5.7.4 Growth Chamber room — Basement Level

SPACE INFORMATION

Room Function:

Adjacencies:

Access:

Room Utilization: 7 days a week, 24 hours a day

General Notes:

Special Requirements:

General water shut off
Pendant power from above
Plumbing from overhead

ROOM SIZE AND CAPACITY

Proposed Area:	300 NSF	**Room/Space Quantity:**	1	**Total Area:**	300
Assigned Capacity:	0 Occupant(s)	**Unassigned Capacity:**	2 Guest(s)	**Total Capacity:**	2

FINISHES, DOORS, AND WINDOWS

Floor Finish:	Concrete (sealed)	**Ceiling Treatment:**	Suspended acoustical lay-in tiles
Wall Finish:	Gypsum board (painted)	**Ceiling Height:**	10'
Base Finish:	Rubber	**Acoustic Treatment:**	Not Required
Doors:		**Windows:**	
Type:	Unequal	**Natural Lighting:**	Not required
Width:	36" + 18" Expan	**Room Skylight:**	Acceptable

Height: 84"
Vision Panel: Not Required

CASEWORK / FURNISHINGS

Wall Cabinets:	Wood - Certified	**Shelving:**	Yes
Base Cabinets:	Wood - Certified	**Drawer Units:**	Yes
Bench Top:	Plastic Laminate	**White Boards:**	No
Bench Height:	36"	**Tack Boards:**	No

PLUMBING / GASES

Sinks:	1 Small	**Air:**	No
Pure Water:	None	**Lab Gas:**	No
HotCold Water:	Cold only	**CO2:**	No
Floor Drain:	Yes	**Nitrogen:**	No
HoseBib:	No	**Vacuum:**	No
Waste:		**Other Gas:**	
Eyewash:	No	**Fire Protection:**	Lab Standard
Emerg Shower:	No		

COPYRIGHT © 2009 CRSA

USU Agriculture Building

ROOM DATA SHEET DETAIL **Plants, Soils, & Climate**

PSC Research Lab Support

5.7.4 Growth Chamber room **Basement Level**

HVAC / ELECTRICAL

Total Air Changes:	Standard	**Power:**	110v + 220v
Pressure:		**Lighting:**	Direct/indirect fluorescent
Temp Requirement:	Not Specified	**Fixture Mount:**	Surface or Recessed
Relative Humidity:	Not Specified	**Occ. Sensors:**	Yes w/manual override
Local Exhaust:	Standard	**Task Light:**	Yes
Air Filtration:	Standard	**Em Power:**	Yes
CO2 Sensor:	No	**UPS:**	No
Other HVAC:			

COMMUNICATIONS / SPECIAL CONSIDERATIONS

Phone Outlets:	0	**Light Controls:**	Not Required
Data Outlets:	1 per lab	**Visual Control:**	Not Required
Network:	No	**Structural Control:**	Not Required
AV Requirements:	None	**Security:**	Proximity card lock
Clocks:	No	**Shielding:**	Not Required

EQUIPMENT AND FURNISHINGS

Equipment:

Owner provided equipment
(6-8) Reach-in Growth Chambers

Furnishings:

New Built-in cabinetry
(12) lf Wood base w/epoxy countertop - 30" deep
(6) lf Wood upper w/adjustable shelves - 15" deep

COPYRIGHT © 2009 CRSA

BLANK

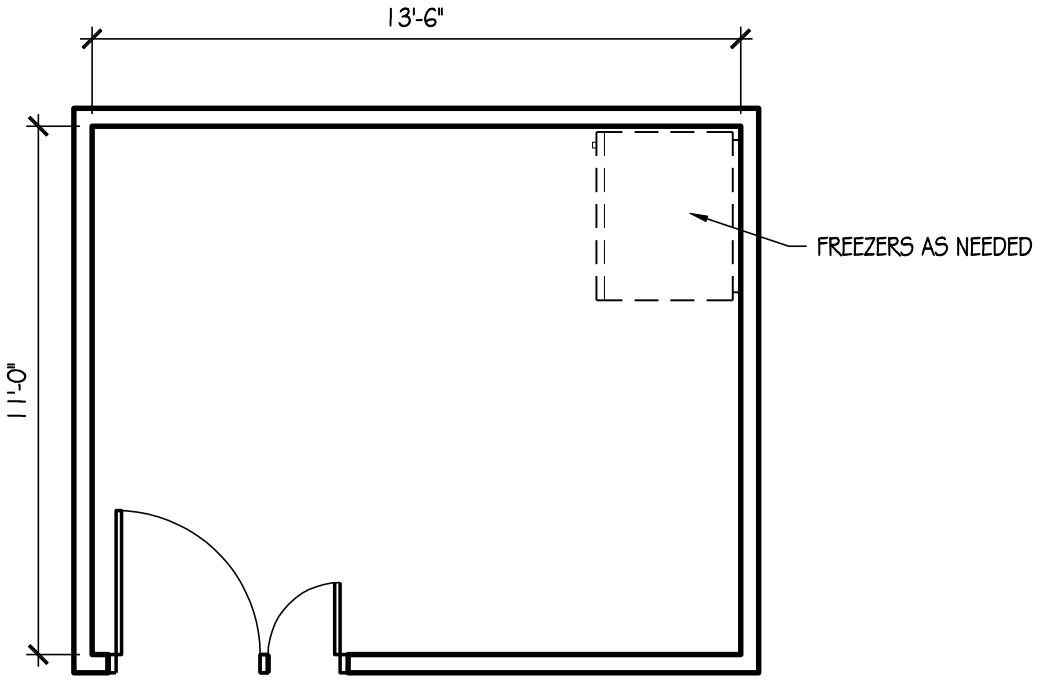

FREEZER STORAGE ROOM
150 SF

USU Agriculture Building

ROOM DATA SHEET DETAIL — **Plants, Soils, & Climate**

PSC Research Lab Support

5.7.5 Freezer Storage room — Basement Level

SPACE INFORMATION

Room Function: Chest freezer storage room

Adjacencies:

Special Requirements:
Heat exhaust
Pendant power from above

Access: All lab users

Room Utilization: 7 days a week, 24 hours a day

General Notes:

ROOM SIZE AND CAPACITY

Proposed Area:	150 NSF	**Room/Space Quantity:**	1	**Total Area:**	150
Assigned Capacity:	0 Occupant(s)	**Unassigned Capacity:**	2 Guest(s)	**Total Capacity:**	2

FINISHES, DOORS, AND WINDOWS

Floor Finish:	Concrete (sealed)	**Ceiling Treatment:**	Exposed structure
Wall Finish:	Gypsum board (painted)	**Ceiling Height:**	10'
Base Finish:	Rubber	**Acoustic Treatment:**	Not Required
Doors:		**Windows:**	
Type:	Unequal	**Natural Lighting:**	None
Width:	36" + 18" Expan	**Room Skylight:**	Not Acceptable

Height: 84"
Vision Panel: Not Required

CASEWORK / FURNISHINGS

Wall Cabinets:	None	**Shelving:**	Yes
Base Cabinets:	None	**Drawer Units:**	No
Bench Top:	Plastic Laminate	**White Boards:**	No
Bench Height:	36"	**Tack Boards:**	No

PLUMBING / GASES

Sinks:	None	**Air:**	No
Pure Water:	None	**Lab Gas:**	No
HotCold Water:	No	**CO2:**	No
Floor Drain:	No	**Nitrogen:**	No
HoseBib:	No	**Vacuum:**	No
Waste:	None	**Other Gas:**	
Eyewash:	No	**Fire Protection:**	Standard
Emerg Shower:	No		

COPYRIGHT © 2009 CRSA

USU Agriculture Building

ROOM DATA SHEET DETAIL **Plants, Soils, & Climate**

PSC Research Lab Support

5.7.5 Freezer Storage room **Basement Level**

HVAC / ELECTRICAL

Total Air Changes:	Standard	**Power:**	110v + 220v
Pressure:		**Lighting:**	Direct/indirect fluorescent
Temp Requirement:	Not Specified	**Fixture Mount:**	Surface or Recessed
Relative Humidity:	Not Specified	**Occ. Sensors:**	Yes w/manual override
Local Exhaust:	Standard	**Task Light:**	No
Air Filtration:	Standard	**Em Power:**	Yes
CO2 Sensor:	No	**UPS:**	No
Other HVAC:			

COMMUNICATIONS / SPECIAL CONSIDERATIONS

Phone Outlets:	0	**Light Controls:**	Not Required
Data Outlets:	None	**Visual Control:**	Not Required
Network:	No	**Structural Control:**	Not Required
AV Requirements:	None	**Security:**	Not Required
Clocks:	No	**Shielding:**	Not Required

EQUIPMENT AND FURNISHINGS

Equipment:

Owner provided equipment
Chest freezer - Norton
Chest freezer - Jacobsen

Furnishings:

COPYRIGHT © 2009 CRSA

SECTION 6

SPACE SUMMARY

6	**DEPARTMENT OF APPLIED ECONOMICS**			**2,822**
6.1	APEC Administration			612
6.1.1	Department Head	1	160	160
6.1.2	APEC Administration Office	1	120	120
6.1.3	Staff Assistant	1	100	100
6.1.4	SA/Extension Educator	1	64	64
6.1.5	Accountant	1	100	100
6.1.6	Staff Assistant - open workstations	1	68	68
6.2	APEC Faculty			1,080
6.2.1	Faculty Office	5	120	600
6.2.2	Faculty Office	2	120	240
6.2.3	Faculty Office	1	120	120
6.2.4	Faculty Office	1	120	120
6.3	APEC Students			700
6.3.1	Graduate Student Suite	20	25	500
6.3.2	Collaborative Grad Student Support	2	100	200
6.4	APEC Support Area			430
6.4.1	Copy/Mail/Workroom/Storage	1	250	250
6.4.2	Small Conference Room	1	180	180

BLANK

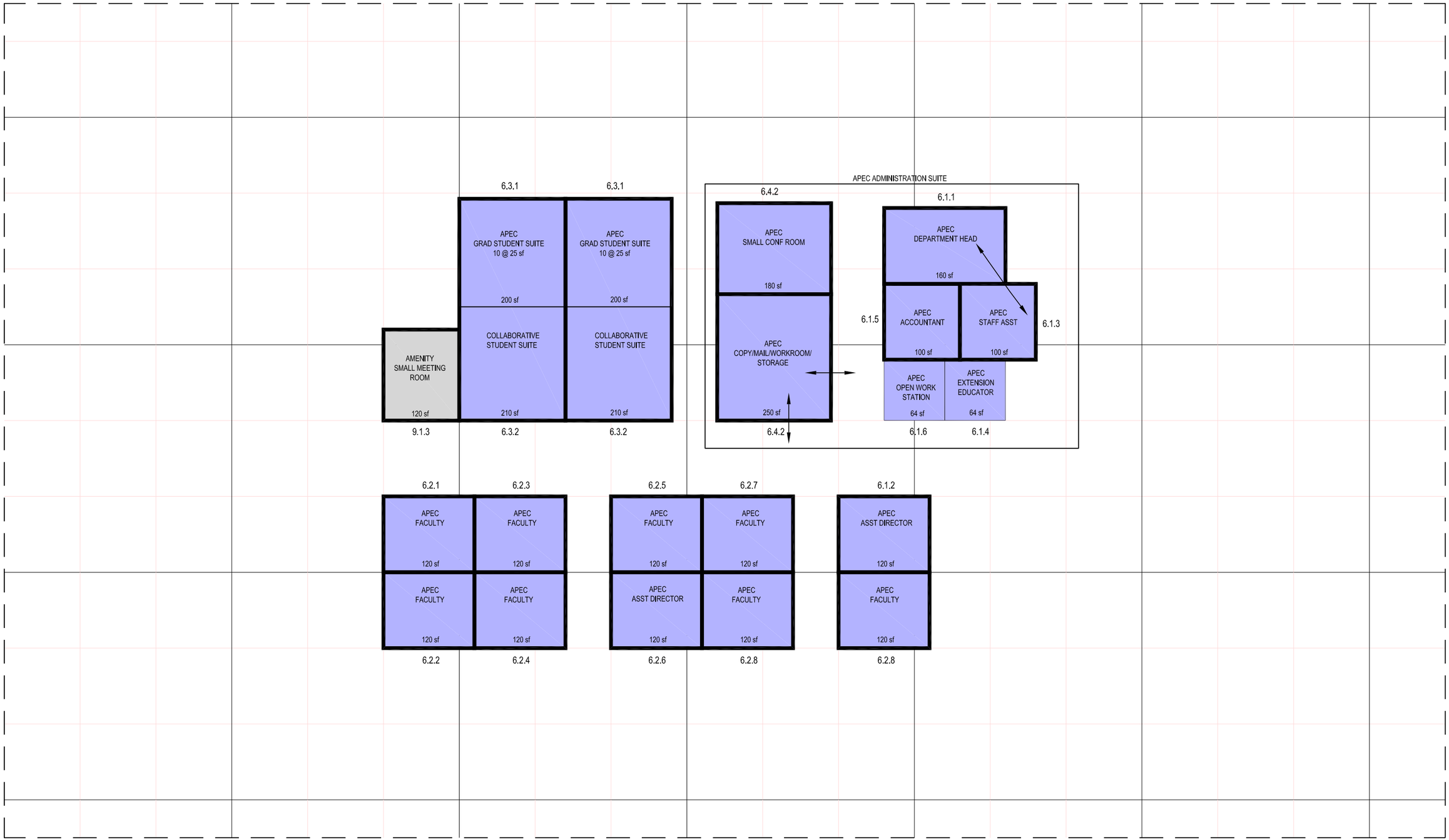

HDR CUH2A CRSA

USU COA/ARS PROGRAM - APEC AFFINITY MATRIX

BLANK

BLANK

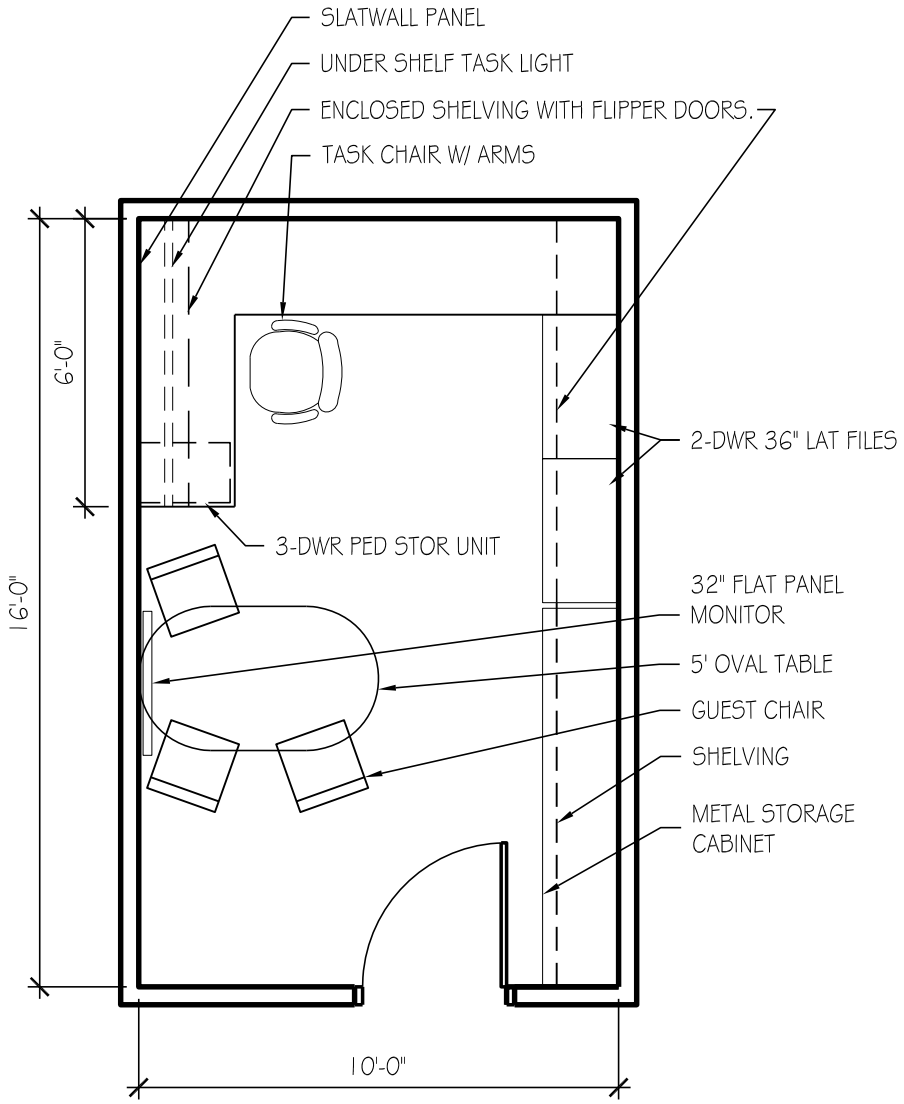

OFFICE - 160 SF

USU Agriculture Building

ROOM DATA SHEET DETAIL **Department of Applied Economics**

APEC Administration

6.1.1 Department Head -

SPACE INFORMATION

Room Function: General office work

Adjacencies:

Special Requirements:
None

Access: Public

Room Utilization: 5 days a week, 8:00 AM to 5:00 PM

General Notes: None

ROOM SIZE AND CAPACITY

Proposed Area:	160 NSF	**Room/Space Quantity:**	1	**Total Area:**	160
Assigned Capacity:	1 Occupant(s)	**Unassigned Capacity:**	3 Guest(s)	**Total Capacity:**	4

FINISHES, DOORS, AND WINDOWS

Floor Finish: Carpet-tile

Wall Finish: Gypsum board (painted)

Base Finish: Integral Coved

Doors:

Type:	Single	**Height:**	84"
Width:	36"	**Vision Panel:**	Frosted

Ceiling Treatment: Suspended acoustical lay-in tiles

Ceiling Height: 8' minimum

Acoustic Treatment: Acoustic seperation from adjacent spaces

Windows:

Natural Lighting: Required (provide shades for control)

Room Skylight: Frosted Panel

MECHANICAL/ELECTRICAL

HVAC: Standard, space temperature control

Plumbing: None

Fire Protection: Sprinkler

Security: Keyed lock at entrance doors

Electrical: 120V wall outlets

AV Requirements: None

Wire Management: Wall outlets

Data Management: Tele/data outlet(s)

Artificial Lighting: Direct/indirect fluorescent and task lighting

Telephone: Telephone outlets per occupant

EQUIPMENT AND FURNISHINGS

Equipment

(1) Computer system (provided by owner)
(1) Printer (provided by owner)
(1) 32" Flat panel monitor

Furniture

(1) 16 LF Work surface, system furniture
(1) 5' Oval conference table on casters
(1) Task chair
(3) Guest chair
(1) 3 Drawer PED file
(2) 2 Drawer 36" lateral file, s.f.
(1) 48 LF Adjustable height shelving
(1) 24 LF 12-1/2" Deep open shelving with flipper doors, s.f.
(1) Under shelf task light
(1) 8 LF task slatwall
(1) Task slatwall accessories package
(1) Door mounted coat rack
(1) Waste receptacle
(1) Desk task light
(1) 8 LF metal base cabinet

COPYRIGHT © 2009 CRSA

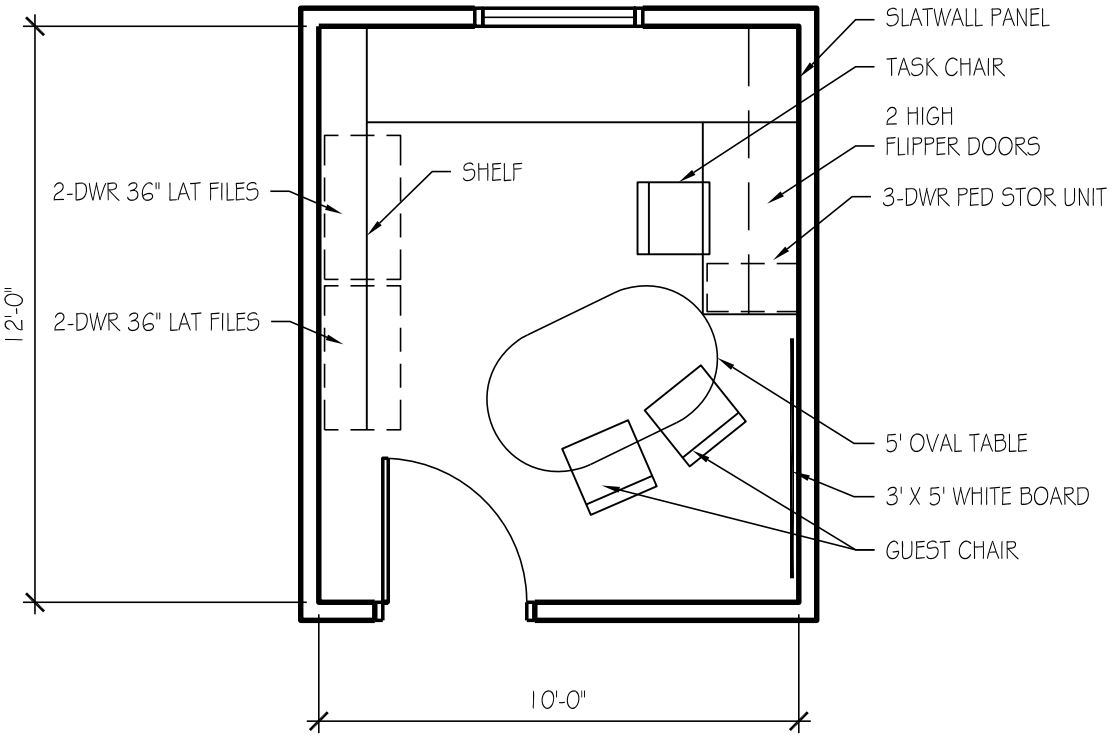

OFFICE A - 120 SF

USU Agriculture Building

ROOM DATA SHEET DETAIL **Department of Applied Economics**

APEC Administration

6.1.2 Assistant Director -

SPACE INFORMATION

Room Function: General office work

Adjacencies:

Special Requirements:

None

Access: Public

Room Utilization: 5 days a week, 8:00 AM to 5:00 PM

General Notes: None

ROOM SIZE AND CAPACITY

Proposed Area:	120 NSF	**Room/Space Quantity:**	1	**Total Area:**	120
Assigned Capacity:	1 Occupant(s)	**Unassigned Capacity:**	2 Guest(s)	**Total Capacity:**	3

FINISHES, DOORS, AND WINDOWS

Floor Finish: Carpet-tile

Wall Finish: Gypsum board (painted)

Base Finish: Integral Coved

Doors:

Type:	Single	**Height:**	84"
Width:	36"	**Vision Panel:**	Frosted

Ceiling Treatment: Suspended acoustical lay-in tiles

Ceiling Height: 8' minimum

Acoustic Treatment: Acoustic seperation from adjacent spaces

Windows:

Natural Lighting:	Preferred, glare and brightness control
Room Skylight:	Vision Panel

MECHANICAL/ELECTRICAL

HVAC:	Standard, space temperature control	**AV Requirements:**	None
Plumbing:	None	**Wire Management:**	Wall outlets
Fire Protection:	Sprinkler	**Data Management:**	Tele/data outlet(s)
Security:	Keyed lock at entrance doors	**Artificial Lighting:**	Direct/indirect fluorescent and task lighting
Electrical:	120V wall outlets	**Telephone:**	Telephone outlets per occupant

EQUIPMENT AND FURNISHINGS

Equipment

(1) Computer system (provided by owner)
(1) Printer (provided by owner)

Furniture

(1) 13 LF of work surface
(2) 36" 2 drawer lateral file
(1) 3 drawer PED file
(1) 5' Oval on casters
(1) Task chair
(2) Guest chairs
(2) 6 LF 15-1/2" deep enclosed shelving with flipper doors, s.f.
(1) 8 LF open shelving
(1) Whiteboard
(1) Wall mounted coat rack
(1) Waste receptacle
(1) 6 LF task slatwall
(1) Task slatwall accessories package

COPYRIGHT © 2009 CRSA

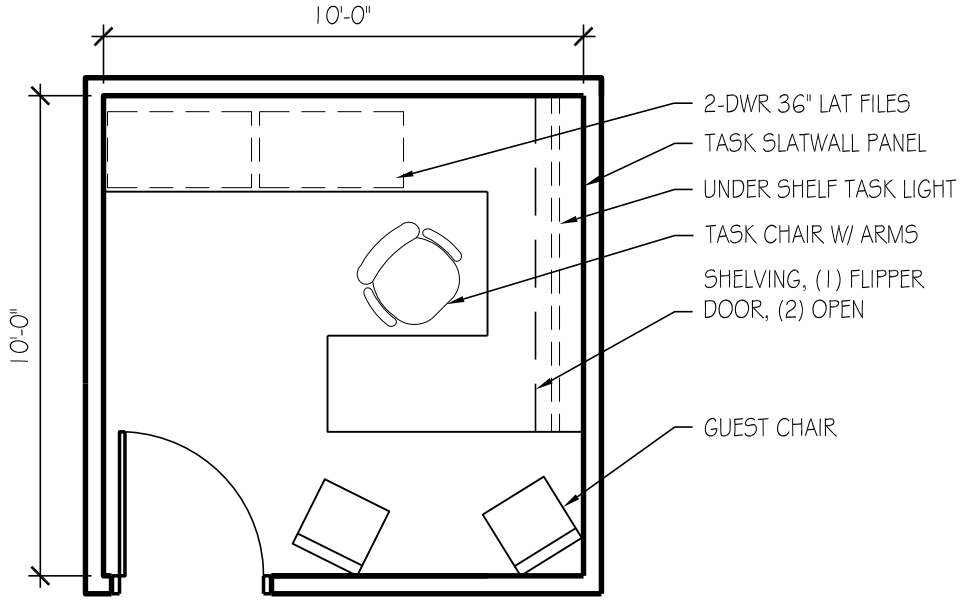

WORKSTATION

100 SF

USU Agriculture Building

ROOM DATA SHEET DETAIL **Department of Applied Economics**

APEC Administration

6.1.3 Staff Assistant -

SPACE INFORMATION

Room Function: General office work

Adjacencies:

Special Requirements:
None

Access: Public

Room Utilization: 5 days a week, 8:00 AM to 5:00 PM

General Notes: None

ROOM SIZE AND CAPACITY

Proposed Area:	100 NSF	**Room/Space Quantity:**	1	**Total Area:**	100
Assigned Capacity:	1 Occupant(s)	**Unassigned Capacity:**	1 Guest(s)	**Total Capacity:**	2

FINISHES, DOORS, AND WINDOWS

Floor Finish: Carpet-tile

Wall Finish: Gypsum board (painted)

Base Finish: Integral Coved

Doors:

Type:	Single	**Height:**	84"
Width:	36"	**Vision Panel:**	Frosted

Ceiling Treatment: Suspended acoustical lay-in tiles

Ceiling Height: 8' minimum

Acoustic Treatment: Acoustic seperation from adjacent spaces

Windows:

Natural Lighting:	Not required
Room Skylight:	Vision Panel

MECHANICAL/ELECTRICAL

HVAC:	Standard, space temperature control	**AV Requirements:**	None
Plumbing:	None	**Wire Management:**	Wall outlets
Fire Protection:	Sprinkler	**Data Management:**	Tele/data outlet(s)
Security:	Keyed lock at entrance doors	**Artificial Lighting:**	Direct/indirect fluorescent and task lighting
Electrical:	120V wall outlets	**Telephone:**	Telephone outlets per occupant

EQUIPMENT AND FURNISHINGS

Equipment

(1) Computer system (provided by owner)
(1) Printer (provided by owner)

Furniture

(1) 18 LF Work surface
(1) Task chair
(2) Guest chair
(2) 2 Drawer 36" lateral file
(1) 7 LF task slatwall
(1) Task slatwall accessories package
(1) 14 LF 12-1/2" Deep open shelving, s.f.
(1) 7 LF 15-1/2" Deep enclosed shelving with flipper door, s.f.
(1) Under shelf task light
(1) Door mounted coat rack
(1) Waste receptacle

COPYRIGHT © 2009 CRSA

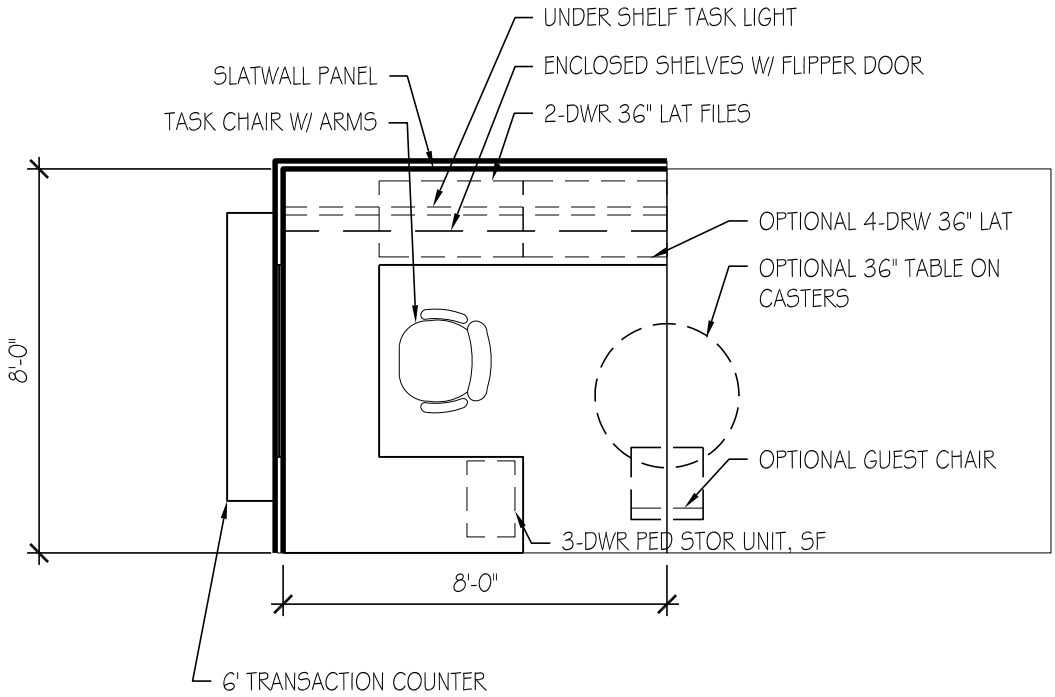

OPEN WORKSTATION

64 SF

USU Agriculture Building

ROOM DATA SHEET DETAIL **Department of Applied Economics**

APEC Administration

6.1.4 SA/Extension Educator -

SPACE INFORMATION

Room Function: General office work

Adjacencies:

Special Requirements:
None

Access: Public

Room Utilization: 5 days a week, 8:00 AM to 5:00 PM

General Notes: None

ROOM SIZE AND CAPACITY

Proposed Area:	64 NSF	**Room/Space Quantity:**	2	**Total Area:**	128
Assigned Capacity:	1 Occupant(s)	**Unassigned Capacity:**	29 Guest(s)	**Total Capacity:**	30

FINISHES, DOORS, AND WINDOWS

Floor Finish: Carpet-tile

Wall Finish: Systems furniture

Base Finish: Systems Furniture

Doors:

Type:	N/A	**Height:**	None
Width:	None	**Vision Panel:**	N/A

Ceiling Treatment: Suspended acoustical lay-in tiles

Ceiling Height: 8' minimum

Acoustic Treatment: Systems Furniture

Windows:

Natural Lighting:	Desired, but not required
Room Skylight:	Vision Panel

MECHANICAL/ELECTRICAL

HVAC:	Standard, space temperature control	**AV Requirements:**	None
Plumbing:	None	**Wire Management:**	Wall outlets
Fire Protection:	Sprinkler	**Data Management:**	Tele/data outlet(s)
Security:	Keyed lock at entrance doors	**Artificial Lighting:**	Direct/indirect fluorescent and task lighting
Electrical:	120V wall outlets	**Telephone:**	Telephone outlets per occupant

EQUIPMENT AND FURNISHINGS

Equipment

(1) Computer system (provided by owner)
(1) Printer (provided by owner)

Furniture

(1) 13 LF work surface
(1) 3 Drawer PED file
(1) Task chair
(2) 36" 2 drawer lateral file
(1) 8 LF 15-1/2" deep enclosed shelving with flipper door, s.f.
(1) Under shelf task light, s.f.
(1) 8 LF task slatwall
(1) Task slatwall accessories package
(1) Waste receptacle
(1) Optional guest chair
(1) Optional 36" table on casters
(1) Optional 36" 4 drawer lateral file
(1) Optional 6 LF transaction counter

COPYRIGHT © 2009 CRSA

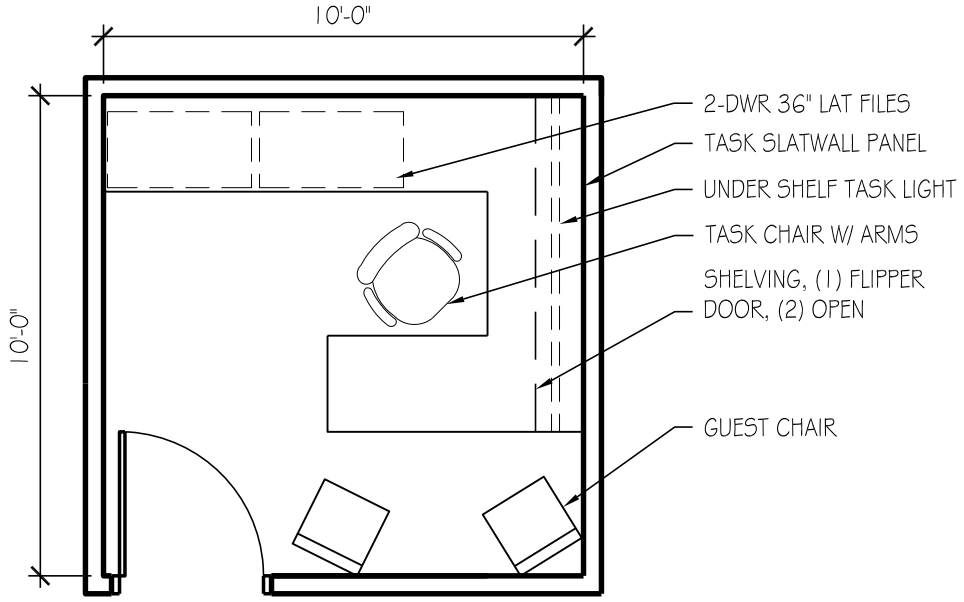

WORKSTATION

100 SF

USU Agriculture Building

ROOM DATA SHEET DETAIL **Department of Applied Economics**

APEC Administration

6.1.5 Accountant -

SPACE INFORMATION

Room Function: General office work

Adjacencies:

Special Requirements:
None

Access: Public

Room Utilization: 5 days a week, 8:00 AM to 5:00 PM

General Notes: None

ROOM SIZE AND CAPACITY

Proposed Area:	100 NSF	**Room/Space Quantity:**	1	**Total Area:**	100
Assigned Capacity:	1 Occupant(s)	**Unassigned Capacity:**	1 Guest(s)	**Total Capacity:**	2

FINISHES, DOORS, AND WINDOWS

Floor Finish: Carpet-tile

Wall Finish: Gypsum board (painted)

Base Finish: Integral Coved

Doors:

Type:	Single	**Height:**	84"
Width:	36"	**Vision Panel:**	Frosted

Ceiling Treatment: Suspended acoustical lay-in tiles

Ceiling Height: 8' minimum

Acoustic Treatment: Acoustic seperation from adjacent spaces

Windows:

Natural Lighting:	Desired, but not required
Room Skylight:	Vision Panel

MECHANICAL/ELECTRICAL

HVAC: Standard, space temperature control

Plumbing: None

Fire Protection: Sprinkler

Security: Keyed lock at entrance doors

Electrical: 120V wall outlets

AV Requirements: None

Wire Management: Wall outlets

Data Management: Tele/data outlet(s)

Artificial Lighting: Direct/indirect fluorescent and task lighting

Telephone: Telephone outlets per occupant

EQUIPMENT AND FURNISHINGS

Equipment

(1) Computer system (provided by owner)
(1) Printer (provided by owner)

Furniture

(1) 18 LF Work surface
(1) Task chair
(2) Guest chair
(2) 2 Drawer 36" lateral file
(1) 7 LF task slatwall
(1) Task slatwall accessories package
(1) 14 LF 12-1/2" Deep open shelving, s.f.
(1) 7 LF 15-1/2" Deep enclosed shelving with flipper door, s.f.
(1) Under shelf task light
(1) Door mounted coat rack
(1) Waste receptacle

COPYRIGHT © 2009 CRSA

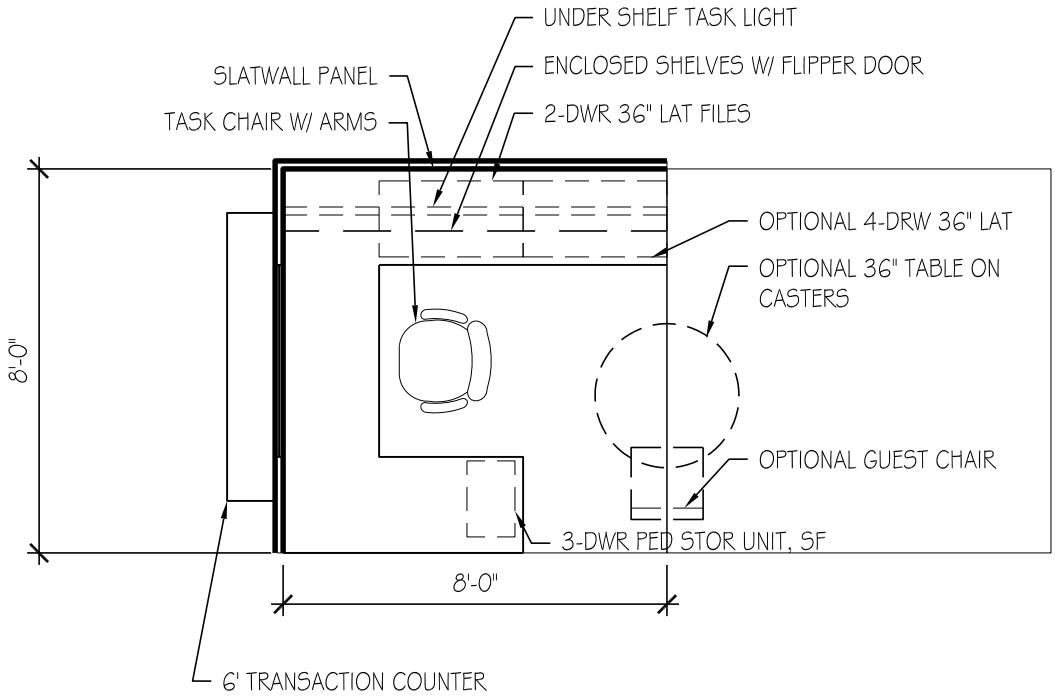

OPEN WORKSTATION

64 SF

USU Agriculture Building

ROOM DATA SHEET DETAIL **Department of Applied Economics**

APEC Administration

6.1.6 Staff Assistant Open Workstation -

SPACE INFORMATION

Room Function: General office work

Adjacencies:

Special Requirements:
None

Access: Public

Room Utilization: 5 days a week, 8:00 AM to 5:00 PM

General Notes: None

ROOM SIZE AND CAPACITY

Proposed Area:	64 NSF	**Room/Space Quantity:**	2	**Total Area:**	128
Assigned Capacity:	1 Occupant(s)	**Unassigned Capacity:**	29 Guest(s)	**Total Capacity:**	30

FINISHES, DOORS, AND WINDOWS

Floor Finish: Carpet-tile

Wall Finish: Systems furniture

Base Finish: Systems Furniture

Doors:

Type:	N/A	**Height:**	None
Width:	None	**Vision Panel:**	N/A

Ceiling Treatment: Suspended acoustical lay-in tiles

Ceiling Height: 8' minimum

Acoustic Treatment: Systems Furniture

Windows:

Natural Lighting:	Not required
Room Skylight:	N/A

MECHANICAL/ELECTRICAL

HVAC:	Standard	**AV Requirements:**	None
Plumbing:	None	**Wire Management:**	Wall outlets
Fire Protection:	Sprinkler	**Data Management:**	Tele/data outlet(s)
Security:	Keyed lock on all securable storage devices	**Artificial Lighting:**	Direct/indirect fluorescent and task lighting
Electrical:	120V wall outlets	**Telephone:**	Telephone outlets per occupant

EQUIPMENT AND FURNISHINGS

Equipment

(1) Computer system (provided by owner)

Furniture

(1) 13 LF work surface
(1) 3 Drawer PED file
(1) Task chair
(2) 36" 2 drawer lateral file
(1) 8 LF 15-1/2" deep enclosed shelving with flipper door, s.f.
(1) Under shelf task light, s.f.
(1) 8 LF task slatwall
(1) Task slatwall accessories package
(1) Waste receptacle
(1) Optional guest chair
(1) Optional 36" table on casters
(1) Optional 36" 4 drawer lateral file
(1) Optional 6 LF transaction counter

COPYRIGHT © 2009 CRSA

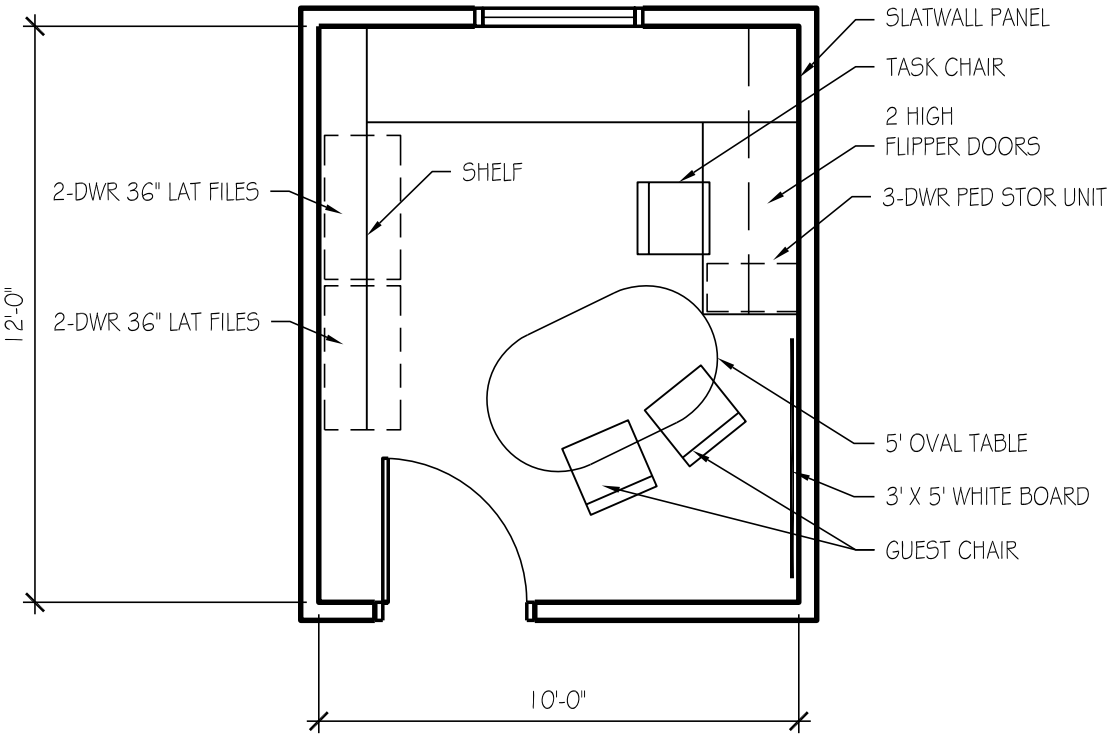

OFFICE A - 120 SF

USU Agriculture Building

ROOM DATA SHEET DETAIL **Department of Applied Economics**

APEC Faculty

6.2.1 Faculty Office A -

SPACE INFORMATION

Room Function: General office work

Adjacencies:

Special Requirements:
None

Access: Public

Room Utilization: 5 days a week, 8:00 AM to 5:00 PM

General Notes: None

ROOM SIZE AND CAPACITY

Proposed Area:	120 NSF	**Room/Space Quantity:**	5	**Total Area:**	600
Assigned Capacity:	1 Occupant(s)	**Unassigned Capacity:**	1 Guest(s)	**Total Capacity:**	2

FINISHES, DOORS, AND WINDOWS

Floor Finish: Carpet-tile

Wall Finish: Gypsum board (painted)

Base Finish: Integral Coved

Doors:

Type:	Single	**Height:**	84"
Width:	36"	**Vision Panel:**	Frosted

Ceiling Treatment: Suspended acoustical lay-in tiles

Ceiling Height: 8' minimum

Acoustic Treatment: Acoustic seperation from adjacent spaces

Windows:

Natural Lighting: Required (provide shades for control)

Room Skylight: Frosted Panel

MECHANICAL/ELECTRICAL

HVAC: Standard, space temperature control

Plumbing: None

Fire Protection: Sprinkler

Security: Keyed lock at entrance doors

Electrical: 120V wall outlets

AV Requirements: None

Wire Management: Wall outlets

Data Management: Tele/data outlet(s)

Artificial Lighting: Direct/indirect fluorescent and task lighting

Telephone: Telephone outlets per occupant

EQUIPMENT AND FURNISHINGS

Equipment

(1) Computer system (provided by owner)
(1) Printer (provided by owner)

Furniture

(1) 13 LF of work surface
(2) 36" 2 drawer lateral file
(1) 3 drawer PED file
(1) 5' Oval on casters
(1) Task chair
(2) Guest chairs
(2) 6 LF 15-1/2" deep enclosed shelving with flipper doors, s.f.
(1) 8 LF open shelving
(1) Whiteboard
(1) Wall mounted coat rack
(1) Waste receptacle
(1) 6 LF task slatwall
(1) Task slatwall accessories package

COPYRIGHT © 2009 CRSA

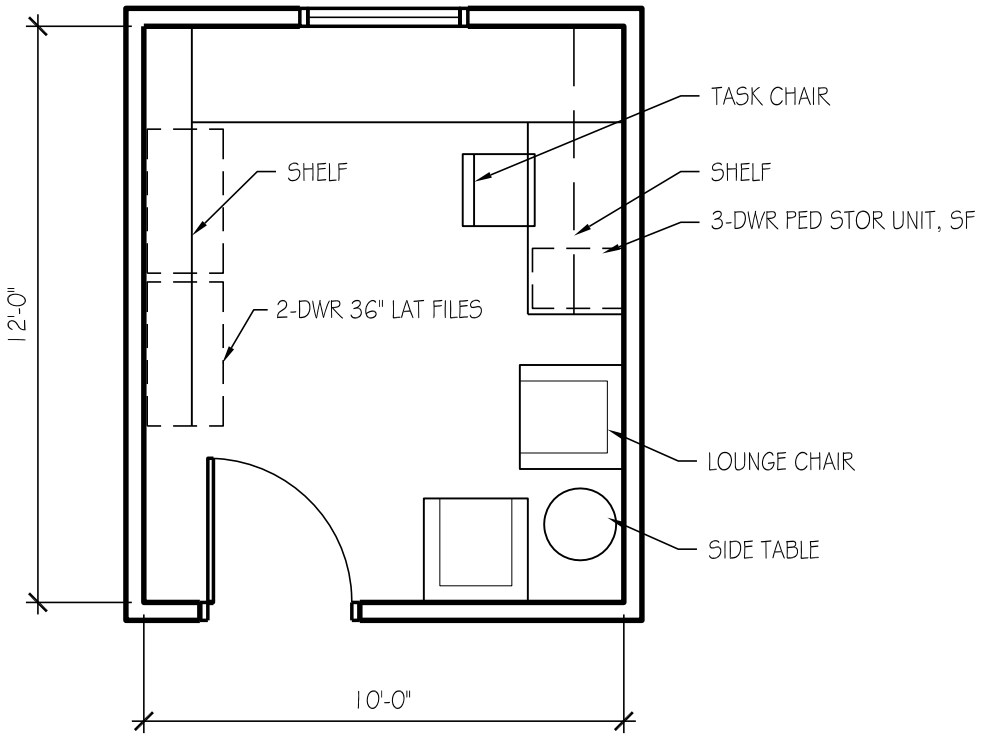

OFFICE B - 120 SF

USU Agriculture Building

ROOM DATA SHEET DETAIL **Department of Applied Economics**

APEC Faculty

6.2.2 Faculty Office B -

SPACE INFORMATION

Room Function: General office work

Adjacencies:

Special Requirements:
None

Access: Public

Room Utilization: 5 days a week, 8:00 AM to 5:00 PM

General Notes: None

ROOM SIZE AND CAPACITY

Proposed Area:	120 NSF	**Room/Space Quantity:**	1	**Total Area:**	120
Assigned Capacity:	1 Occupant(s)	**Unassigned Capacity:**	1 Guest(s)	**Total Capacity:**	2

FINISHES, DOORS, AND WINDOWS

Floor Finish: Carpet-tile

Wall Finish: Gypsum board (painted)

Base Finish: Integral Coved

Doors:

Type:	Single	**Height:**	84"
Width:	36"	**Vision Panel:**	Frosted

Ceiling Treatment: Suspended acoustical lay-in tiles

Ceiling Height: 8' minimum

Acoustic Treatment: Acoustic seperation from adjacent spaces

Windows:

Natural Lighting: Required (provide shades for control)

Room Skylight: Frosted Panel

MECHANICAL/ELECTRICAL

HVAC: Standard, space temperature control

Plumbing: None

Fire Protection: Sprinkler

Security: Keyed lock at entrance doors

Electrical: 120V wall outlets

AV Requirements: None

Wire Management: Wall outlets

Data Management: Tele/data outlet(s)

Artificial Lighting: Direct/indirect fluorescent and task lighting

Telephone: Telephone outlets per occupant

EQUIPMENT AND FURNISHINGS

Equipment

(1) Computer system (provided by owner)
(1) Printer (provided by owner)

Furniture

(1) 13 LF of work surface
(1) 36" 2 drawer lateral file
(1) 3 drawer PED file
(1) Task chair
(2) Upholstered lounge chair
(1) 8 LF open shelving
(1) 12 LF enclosed shelving with flipper doors, s.f.
(1) 6 LF task slatwall
(1) Task slatwall accessories package
(1) Whiteboard
(1) Wall mounted coat rack
(1) Waste receptacle
(1) Under shelf task light, s.f.

COPYRIGHT © 2009 CRSA

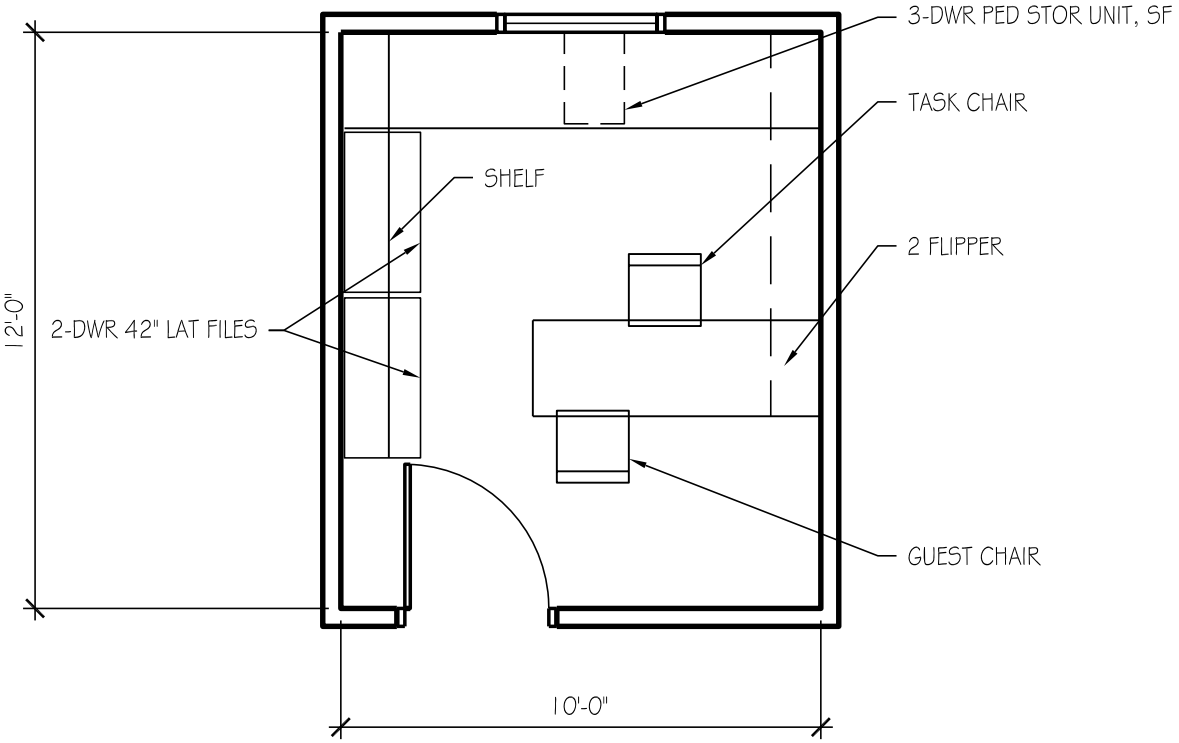

OFFICE C - 120 SF

USU Agriculture Building

ROOM DATA SHEET DETAIL **Department of Applied Economics**

APEC Faculty

6.2.3 Faculty Office C -

SPACE INFORMATION

Room Function: General office work

Adjacencies:

Special Requirements:
None

Access: Public

Room Utilization: 5 days a week, 8:00 AM to 5:00 PM

General Notes: None

ROOM SIZE AND CAPACITY

Proposed Area:	120 NSF	**Room/Space Quantity:**	2	**Total Area:**	240
Assigned Capacity:	1 Occupant(s)	**Unassigned Capacity:**	1 Guest(s)	**Total Capacity:**	2

FINISHES, DOORS, AND WINDOWS

Floor Finish: Carpet-tile

Wall Finish: Gypsum board (painted)

Base Finish: Integral Coved

Doors:

Type:	Single	**Height:**	84"
Width:	36"	**Vision Panel:**	Frosted

Ceiling Treatment: Suspended acoustical lay-in tiles

Ceiling Height: 8' minimum

Acoustic Treatment: Acoustic seperation from adjacent spaces

Windows:

Natural Lighting:	Required (provide shades for control)
Room Skylight:	Frosted Panel

MECHANICAL/ELECTRICAL

HVAC: Standard, space temperature control

Plumbing: None

Fire Protection: Sprinkler

Security: Keyed lock at entrance doors

Electrical: 120V wall outlets

AV Requirements: None

Wire Management: Wall outlets

Data Management: Tele/data outlet(s)

Artificial Lighting: Direct/indirect fluorescent and task lighting

Telephone: Telephone outlets per occupant

EQUIPMENT AND FURNISHINGS

Equipment

(1) Computer system (provided by owner)
(1) Printer (provided by owner)

Furniture

(1) 11 LF of work surface
(2) 36" 2 drawer lateral file
(1) 3 drawer PED file
(1) Task chair
(1) Guest chairs
(1) 8 LF Bookshelves
(1) 16 LF enclosed shelving with flipper doors, s.f.
(1) 6 LF task slatwall
(1) Task slatwall accessories package
(1) Door mounted coat rack
(1) Waste receptacle
(1) Under shelf task light, s.f.

COPYRIGHT © 2009 CRSA

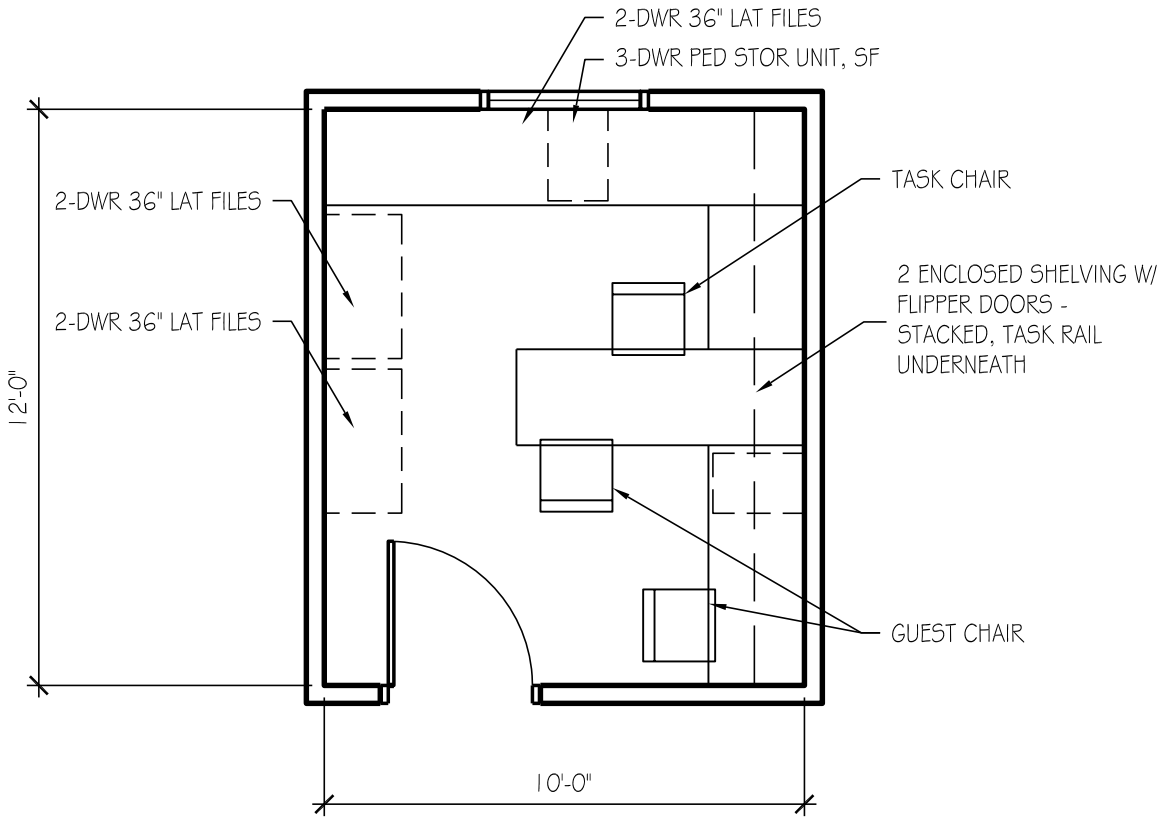

OFFICE D - 120 SF

USU Agriculture Building

ROOM DATA SHEET DETAIL | **Department of Applied Economics**

APEC Faculty

6.2.4 Faculty Office D -

SPACE INFORMATION

Room Function: General office work

Adjacencies:

Special Requirements: None

Access: Public

Room Utilization: 5 days a week, 8:00 AM to 5:00 PM

General Notes: None

ROOM SIZE AND CAPACITY

Proposed Area:	120 NSF	**Room/Space Quantity:**	1	**Total Area:**	120
Assigned Capacity:	1 Occupant(s)	**Unassigned Capacity:**	1 Guest(s)	**Total Capacity:**	2

FINISHES, DOORS, AND WINDOWS

Floor Finish: Carpet-tile

Wall Finish: Gypsum board (painted)

Base Finish: Carpet

Doors:

Type:	Single	**Height:**	84"
Width:	36"	**Vision Panel:**	Frosted

Ceiling Treatment: Suspended acoustical lay-in tiles

Ceiling Height: 8' minimum

Acoustic Treatment: Acoustic seperation from adjacent spaces

Windows:

Natural Lighting:	Required (provide shades for control)
Room Skylight:	Frosted Panel

MECHANICAL/ELECTRICAL

HVAC:	Standard, space temperature control	**AV Requirements:**	None
Plumbing:	None	**Wire Management:**	Wall outlets
Fire Protection:	Sprinkler	**Data Management:**	Tele/data outlet(s)
Security:	Keyed lock at entrance doors	**Artificial Lighting:**	Direct/indirect fluorescent and task lighting
Electrical:	120V wall outlets	**Telephone:**	Telephone outlets per occupant

EQUIPMENT AND FURNISHINGS

Equipment

(1) Computer system (provided by owner)
(1) Printer (provided by owner)

Furniture

(1) 21 LF of work surface
(2) 36" 2 drawer lateral file
(1) 3 drawer PED file
(1) Task chair
(2) Guest chairs
(1) 8 LF of bookshelves
(1) 12 LF enclosed shelving with flipper doors, s.f.
(1) 6 LF task slatwall
(1) Task slatwall accessories package
(1) Under shelf task light
(1) Door mounted coat rack
(1) Waste receptacle

COPYRIGHT © 2009 CRSA

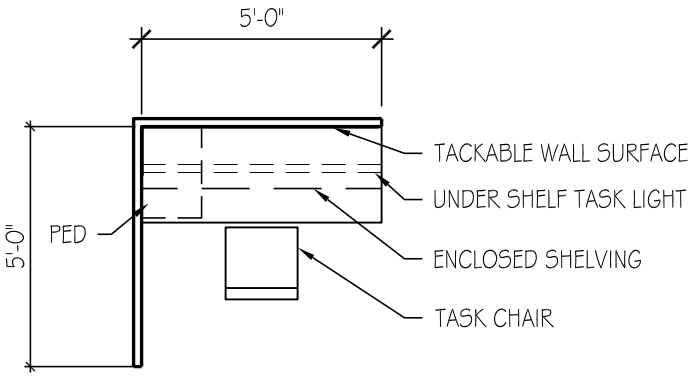

GRAD STUDENT OPEN
WORKSTATION- *25 SF*

USU Agriculture Building

ROOM DATA SHEET DETAIL **Department of Applied Economics**

APEC Students

6.3.1 Graduate Student Suite -

SPACE INFORMATION

Room Function: General office work

Adjacencies:

Access: Public

Room Utilization: 5 days a week, 8:00 AM to 5:00 PM

General Notes: None

Special Requirements:

All system furniture is panel hung.
Locks on all securable storage devices.

ROOM SIZE AND CAPACITY

Proposed Area:	25 NSF	**Room/Space Quantity:**	20	**Total Area:**	500
Assigned Capacity:	1 Occupant(s)	**Unassigned Capacity:**	1 Guest(s)	**Total Capacity:**	2

FINISHES, DOORS, AND WINDOWS

Floor Finish: Carpet-tile

Wall Finish: Gypsum board (painted)

Base Finish: Systems Furniture

Doors:

Type: N/A **Height:** None

Width: None **Vision Panel:** N/A

Ceiling Treatment: Suspended acoustical lay-in tiles

Ceiling Height: 8' minimum

Acoustic Treatment: Systems Furniture

Windows:

Natural Lighting: Not required

Room Skylight: N/A

MECHANICAL/ELECTRICAL

HVAC: Standard, space temperature control

Plumbing: None

Fire Protection: Sprinkler

Security: Keyed lock on all securable storage devices

Electrical: 120V wall outlets

AV Requirements: None

Wire Management: Wall outlets

Data Management: Tele/data outlet(s)

Artificial Lighting: Direct/indirect fluorescent and task lighting

Telephone: Telephone outlets per occupant

EQUIPMENT AND FURNISHINGS

Equipment

(1) Computer system (provided by owner)
(1) Printer (provided by owner)

Furniture

(1) 5 LF 24" Deep work surface, s.f.
(1) Task chairs
(1) 2 Drawer PED file, s.f.
(1) 5 LF 15-1/2" Deep enclosed shelving with flipper doors, s.f.
(1) Under shelf task light
(1) 5 LF task slatwall
(1) Task slatwall accessories package
(1) Waste receptacle

COPYRIGHT © 2009 CRSA

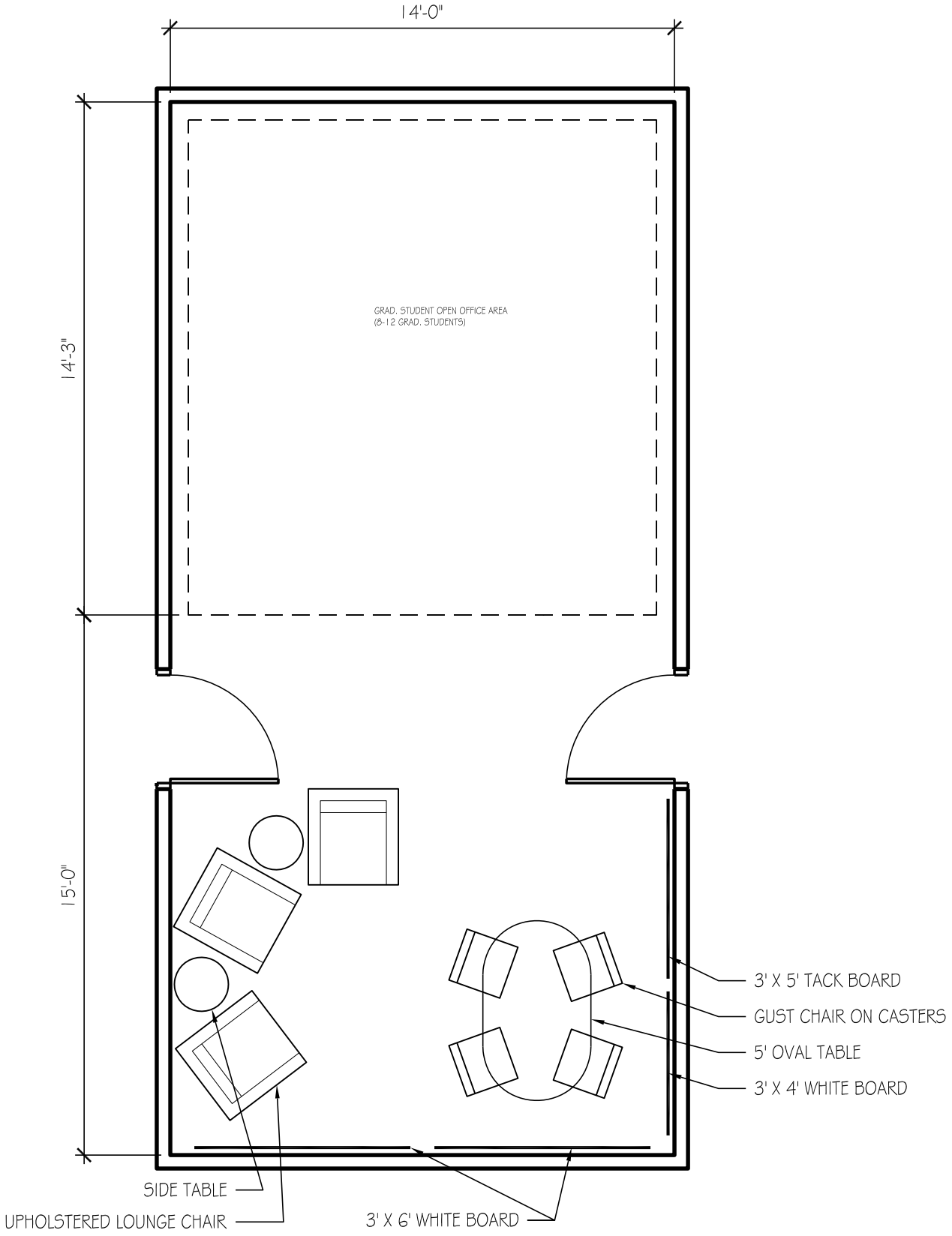

COLLABORATIVE GRAD STUDENT SUPPORT- 210 SF

USU Agriculture Building

ROOM DATA SHEET DETAIL **Department of Applied Economics**

APEC Students

6.3.2 Collaborative Grad Student Support -

SPACE INFORMATION

Room Function: Group collaboration

Adjacencies: Grad Student Suite (6.3.1)

Special Requirements:

Access: Public

Room Utilization: 5 days a week, 8:00 AM to 5:00 PM

General Notes: None

ROOM SIZE AND CAPACITY

Proposed Area:	210 NSF	**Room/Space Quantity:**	2	**Total Area:**	420
Assigned Capacity:	1 Occupant(s)	**Unassigned Capacity:**	1 Guest(s)	**Total Capacity:**	2

FINISHES, DOORS, AND WINDOWS

Floor Finish: Carpet-tile

Wall Finish: Gypsum board (painted)

Base Finish: Integral Coved

Doors:

Type:	Single	**Height:**	84"
Width:	36"	**Vision Panel:**	Frosted

Ceiling Treatment: Suspended acoustical lay-in tiles

Ceiling Height: 8' minimum

Acoustic Treatment: Acoustic seperation from adjacent spaces

Windows:

Natural Lighting:	Not required
Room Skylight:	Vision Panel

MECHANICAL/ELECTRICAL

HVAC:	Standard	**AV Requirements:**	None
Plumbing:	None	**Wire Management:**	Wall outlets
Fire Protection:	Smoke detector, sprinkler, and visual alarm	**Data Management:**	None
Security:	Keyed lock at entrance doors	**Artificial Lighting:**	Direct/indirect fluorescent
Electrical:	120V wall (grounded) outlet	**Telephone:**	None

EQUIPMENT AND FURNISHINGS

Equipment

Furniture

(1) 5' Oval table
(3) Guest chair on casters
(3) Upholstered lounge chair
(2) Side table
(2) 3' x 6' Tack board
(1) 10 LF Tackable wall surface

COPYRIGHT © 2009 CRSA

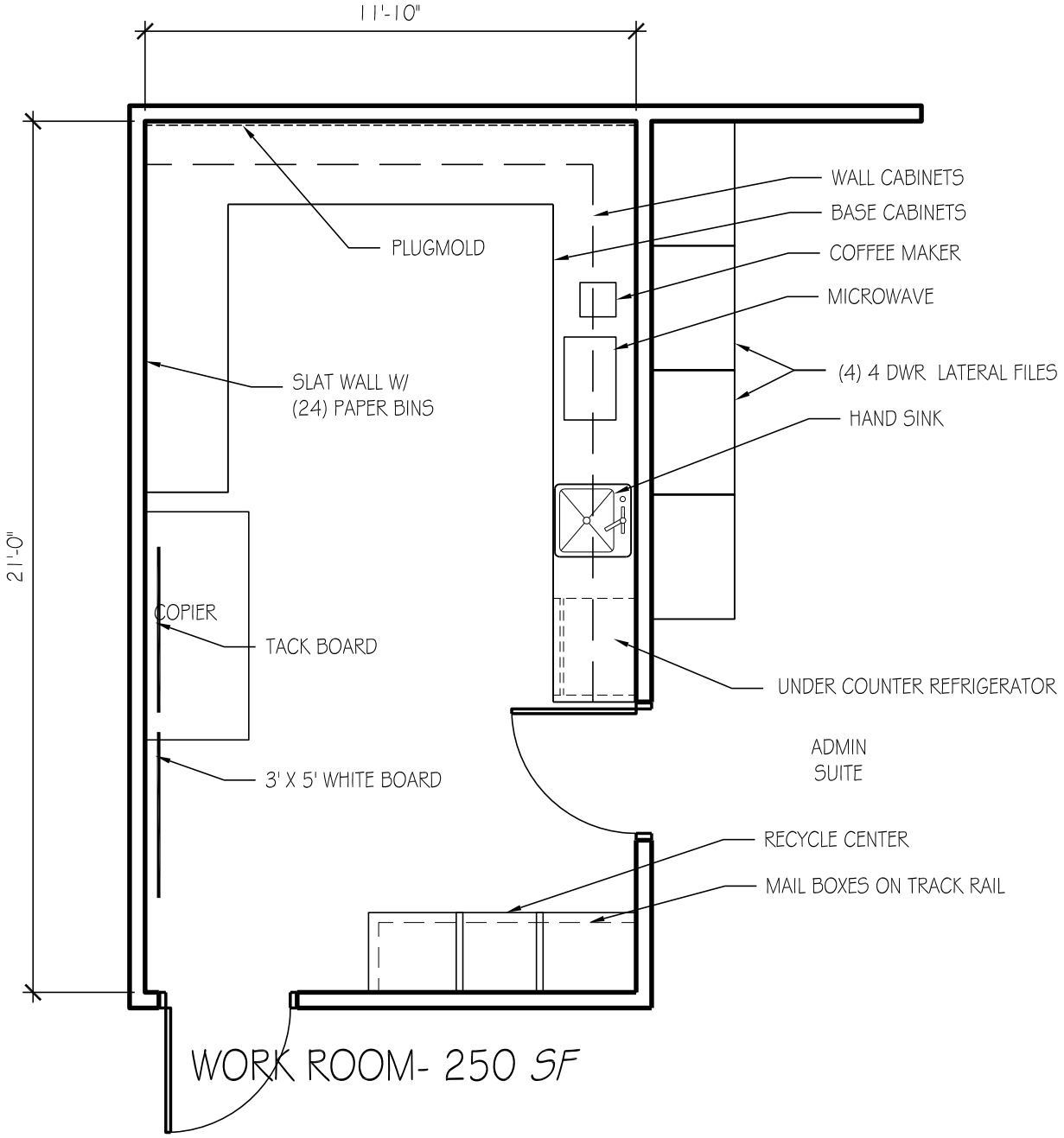

WORK ROOM- 250 SF

USU Agriculture Building

ROOM DATA SHEET DETAIL **Department of Applied Economics**

APEC Support Area

6.4.1 Copy/Mail/Workroom/Storage -

SPACE INFORMATION

Room Function: Copy, work, prep, storage

Adjacencies:

Special Requirements:
None

Access: Public

Room Utilization: 5 days a week, 8:00 AM to 5:00 PM

General Notes: None

ROOM SIZE AND CAPACITY

Proposed Area:	250 NSF	**Room/Space Quantity:**	1	**Total Area:**	250
Assigned Capacity:	1 Occupant(s)	**Unassigned Capacity:**	1 Guest(s)	**Total Capacity:**	2

FINISHES, DOORS, AND WINDOWS

Floor Finish: Carpet-tile

Wall Finish: Gypsum board (painted)

Base Finish: Integral Coved

Doors:

Type:	Single	**Height:**	84"
Width:	36"	**Vision Panel:**	N/A

Ceiling Treatment: Suspended acoustical lay-in tiles

Ceiling Height: 8' minimum

Acoustic Treatment: Acoustic seperation from adjacent spaces

Windows:

Natural Lighting:	Not required
Room Skylight:	None

MECHANICAL/ELECTRICAL

HVAC: Standard

Plumbing: None

Fire Protection: Smoke detector, sprinkler, and visual alarm

Security: Keyed lock at entrance doors

Electrical: 120V wall outlets

AV Requirements: None

Wire Management: Wall outlets

Data Management: Tele/data outlet(s)

Artificial Lighting: Direct/indirect fluorescent and task lighting

Telephone: Wall mounted telephone jack

EQUIPMENT AND FURNISHINGS

Equipment

(1) Copier (provided by owner)
(1) Refrigerator
(1) Microwave
(1) Coffee maker

Furniture

(1) 10 LF task slatwall
(1) 26 LF base cabinets
(1) 20 LF wall cabinets - lockable
(45) Mail slots
(1) 4'x4' Tack board
(1) 4'x4' White board
(4) 4 Drawer lateral file
(1) Ten gallon waste receptacle
(1) 3 Compartment recycling bin
(1) 10 LF task slatwall
(24) Paper trays

COPYRIGHT © 2009 CRSA

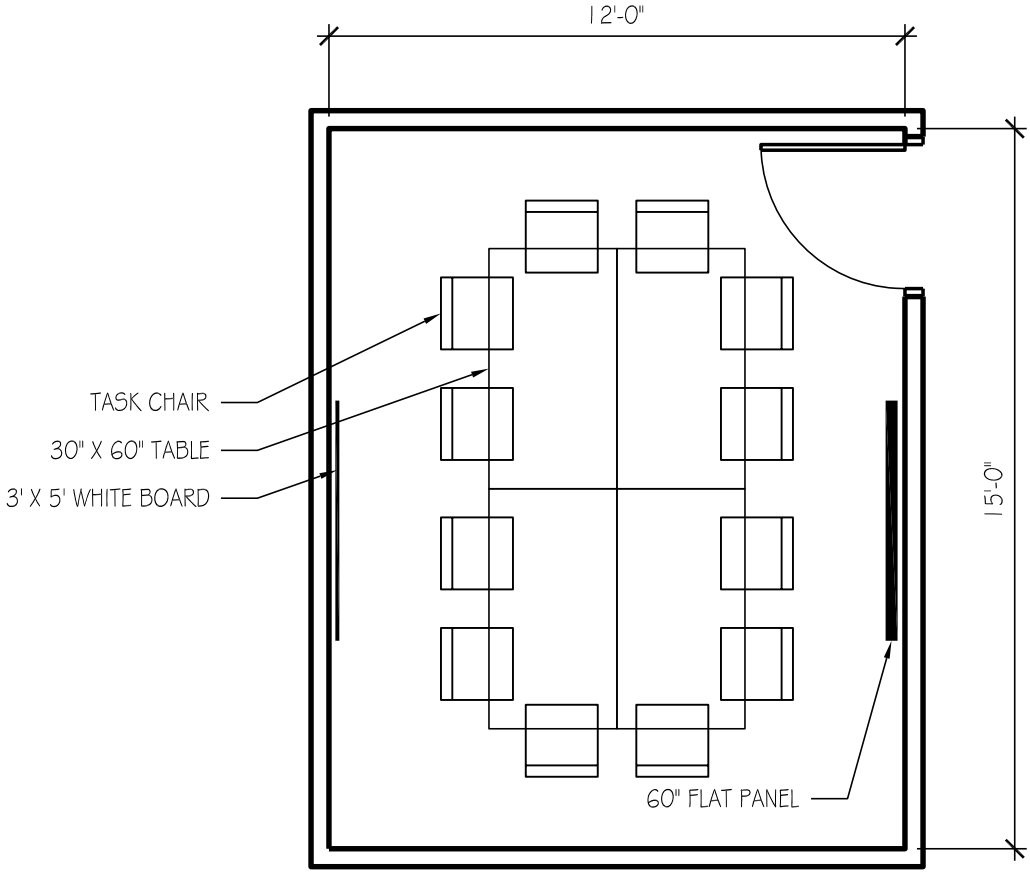

CONFERENCE ROOM - 180 SF

USU Agriculture Building

ROOM DATA SHEET DETAIL **Department of Applied Economics**

APEC Faculty

6.4.2 Small Conference Room -

SPACE INFORMATION

Room Function: Group meetings, presentation

Adjacencies:

Special Requirements:
Chair rail around perimeter

Access: Public

Room Utilization: 5 days a week, 8:00 AM to 5:00 PM

General Notes: None

ROOM SIZE AND CAPACITY

Proposed Area:	180 NSF	**Room/Space Quantity:**	1	**Total Area:**	180
Assigned Capacity:	1 Occupant(s)	**Unassigned Capacity:**	12 Guest(s)	**Total Capacity:**	13

FINISHES, DOORS, AND WINDOWS

Floor Finish: Carpet-tile

Wall Finish: Gypsum board (painted)

Base Finish: Integral Coved

Doors:

Type:	Single	**Height:**	84"
Width:	36"	**Vision Panel:**	Frosted

Ceiling Treatment: Suspended acoustical lay-in tiles

Ceiling Height: 8' minimum

Acoustic Treatment: Acoustic seperation from adjacent spaces

Windows:

Natural Lighting:	Not required
Room Skylight:	Vision Panel

MECHANICAL/ELECTRICAL

HVAC:	Standard, space temperature control	**AV Requirements:**	None
Plumbing:	None	**Wire Management:**	Wall outlets
Fire Protection:	Smoke detector, sprinkler, and visual alarm	**Data Management:**	Tele/data outlet(s)
Security:	Keyed lock at entrance doors	**Artificial Lighting:**	Direct/indirect fluorescent
Electrical:	120V wall outlets	**Telephone:**	Wall mounted telephone jack

EQUIPMENT AND FURNISHINGS

Equipment

(1) Conference telephone
(1) 60" flat panel TV

Furniture

(4) 30" x 60" Table
(12) Task chair
(1) 3' x 5' White board

COPYRIGHT © 2009 CRSA

BLANK

SECTION 6

SPACE SUMMARY

7	**DEPARTMENT OF MATH & STATISTICS**			**6,378**
7.1	Math/Stats Administration			708
7.1.1	Department Head	1	160	160
7.1.2	Assistant Department Head	1	120	120
7.1.3	Sr. Staff Assistant	3	100	300
7.1.4	Staff Assistant - open workstation	2	64	128
7.2	Faculty			3,840
7.2.1	Faculty Office	26	120	3,120
7.2.2	Faculty Office	3	120	360
7.2.3	Faculty Office	2	120	240
7.2.4	Faculty Office	1	120	120
7.3	Staff / Students			1,400
7.3.1	Graduate Student Suite	44	25	1,100
7.3.2	Collaborative Grad Student Support	3	100	300
7.4	Math & Stats Support Area			430
7.4.1	Conference Room, Small	1	180	180
7.4.2	Copy/Mail/Workroom/Storage	1	250	250

BLANK

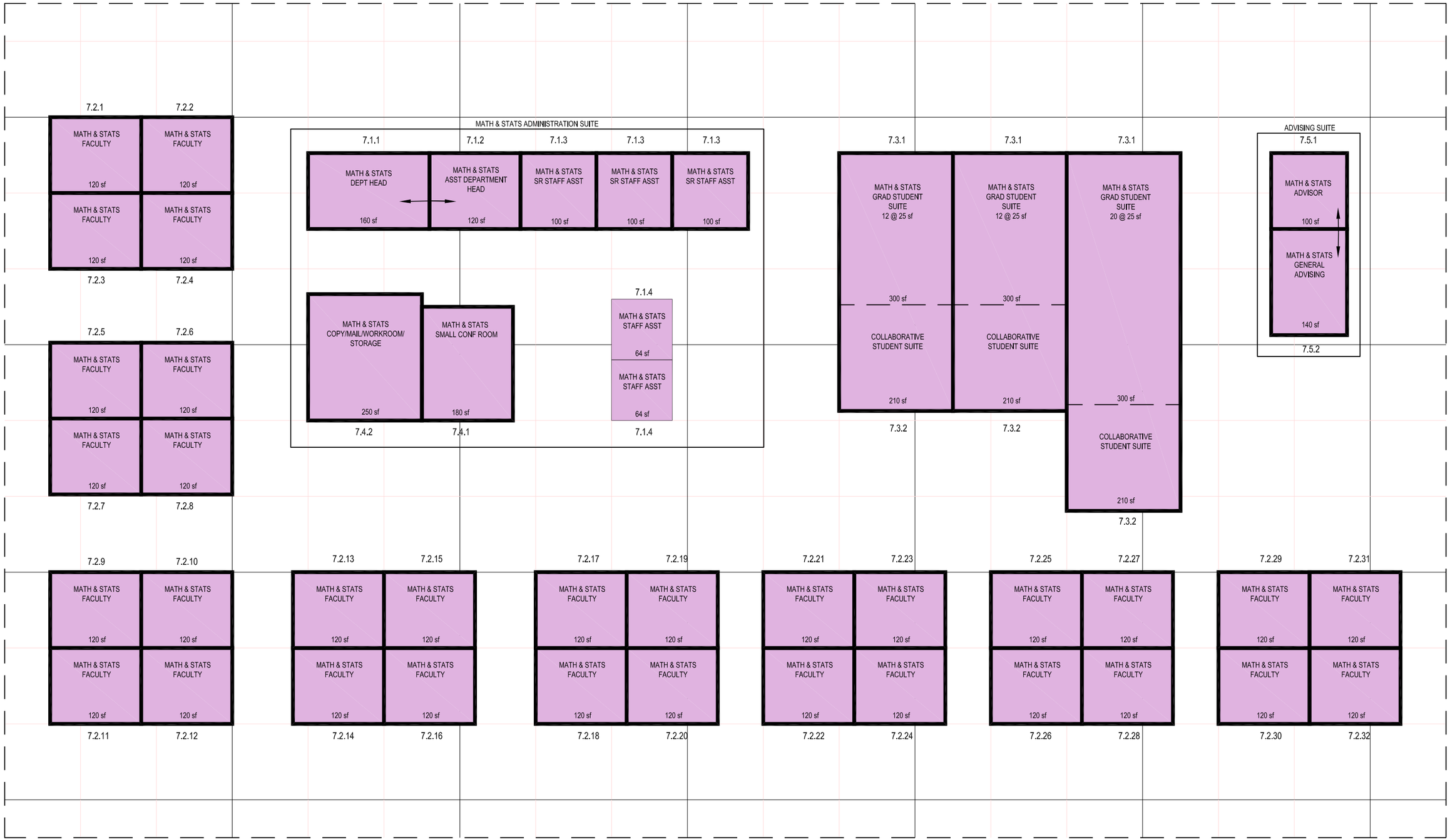

USU COA/ARS PROGRAM - MATH & STATS AFFINITY MATRIX

BLANK

BLANK

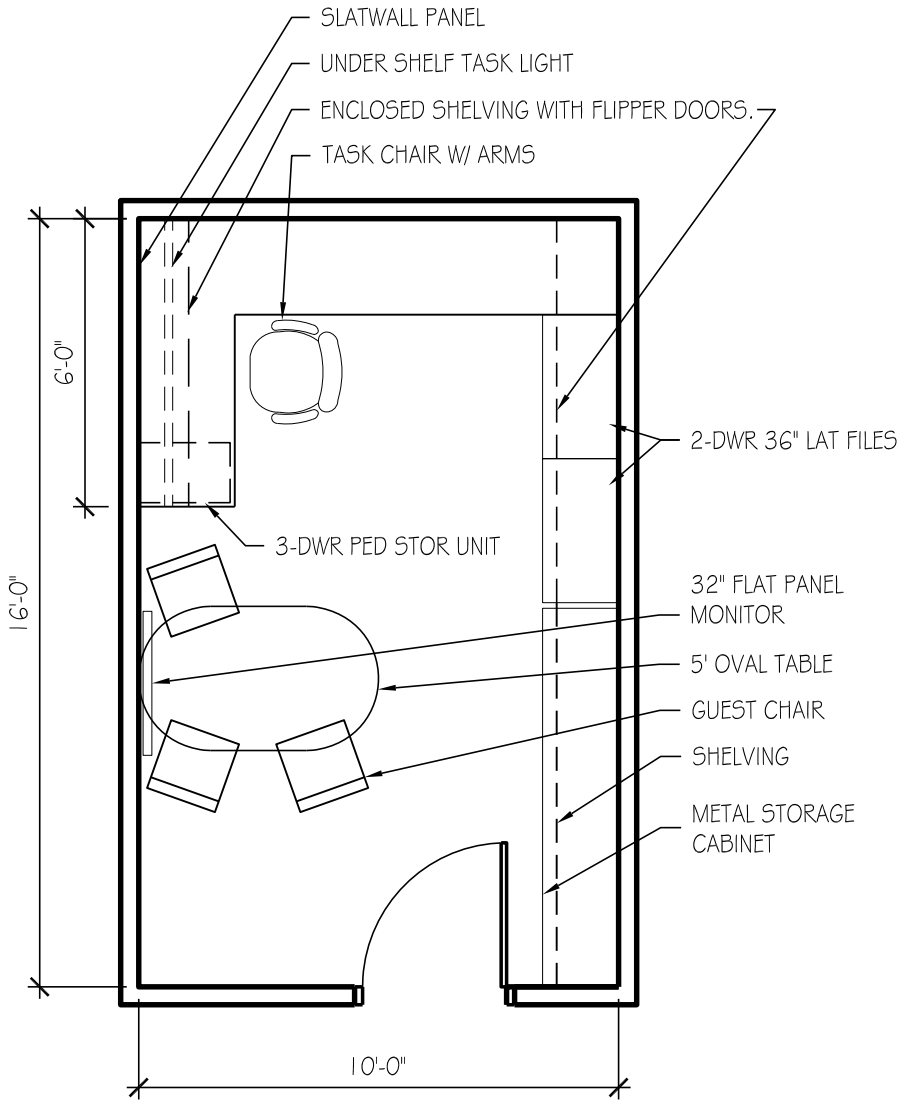

OFFICE - 160 SF

USU Agriculture Building

ROOM DATA SHEET DETAIL **Department of Math and Statistics**

Math/Stats Administration

7.1.1 Department Head -

SPACE INFORMATION

Room Function: General office work

Adjacencies:

Special Requirements:
None

Access: Public

Room Utilization: 5 days a week, 8:00 AM to 5:00 PM

General Notes: None

ROOM SIZE AND CAPACITY

Proposed Area:	160 NSF	**Room/Space Quantity:**	1	**Total Area:**	160
Assigned Capacity:	1 Occupant(s)	**Unassigned Capacity:**	3 Guest(s)	**Total Capacity:**	4

FINISHES, DOORS, AND WINDOWS

Floor Finish: Carpet-tile

Wall Finish: Gypsum board (painted)

Base Finish: Integral Coved

Doors:

Type:	Single	**Height:**	84"
Width:	36"	**Vision Panel:**	Frosted

Ceiling Treatment: Suspended acoustical lay-in tiles

Ceiling Height: 8' minimum

Acoustic Treatment: Acoustic seperation from adjacent spaces

Windows:

Natural Lighting: Preferred, glare and brightness control

Room Skylight: Frosted Panel

MECHANICAL/ELECTRICAL

HVAC: Standard, space temperature control

Plumbing: None

Fire Protection: Sprinkler

Security: Keyed lock at entrance doors

Electrical: 120V wall outlets

AV Requirements: None

Wire Management: Wall outlets

Data Management: Tele/data outlet(s)

Artificial Lighting: Direct/indirect fluorescent and task lighting

Telephone: Telephone outlets per occupant

EQUIPMENT AND FURNISHINGS

Equipment

(1) Computer system (provided by owner)
(1) Printer (provided by owner)
(1) 32" Flat panel monitor

Furniture

(1) 16 LF Work surface, system furniture
(1) 5' Oval conference table on casters
(1) Task chair
(3) Guest chair
(1) 3 Drawer PED file
(2) 2 Drawer 36" lateral file, s.f.
(1) 48 LF Adjustable height shelving
(1) 24 LF 12-1/2" Deep open shelving with flipper doors, s.f.
(1) Under shelf task light
(1) 8 LF task slatwall
(1) Task slatwall accessories package
(1) Door mounted coat rack
(1) Waste receptacle
(1) Desk task light
(1) 8 LF metal base cabinet

COPYRIGHT © 2009 CRSA

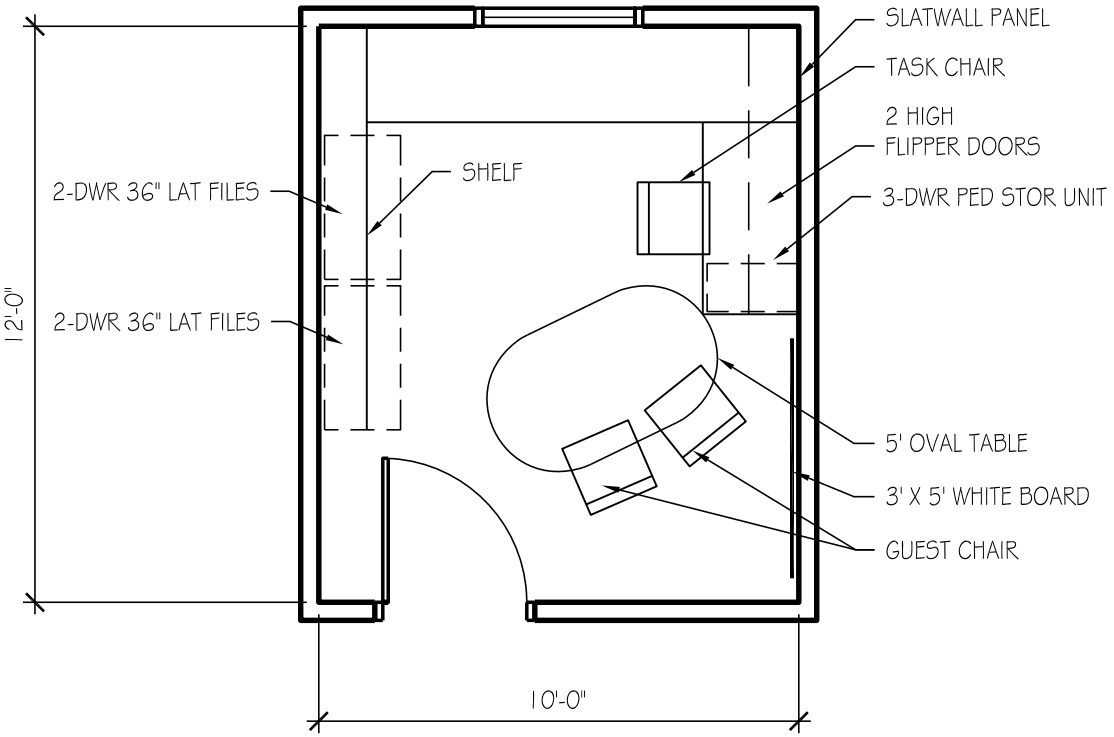

OFFICE A - 120 SF

USU Agriculture Building

ROOM DATA SHEET DETAIL | **Department of Math and Statistics**

Math/Stats Administration

7.1.2 Assistant Department Head -

SPACE INFORMATION

Room Function: General office work

Adjacencies:

Special Requirements: None

Access: Public

Room Utilization: 5 days a week, 8:00 AM to 5:00 PM

General Notes: None

ROOM SIZE AND CAPACITY

Proposed Area:	120 NSF	**Room/Space Quantity:**	1	**Total Area:**	120
Assigned Capacity:	1 Occupant(s)	**Unassigned Capacity:**	2 Guest(s)	**Total Capacity:**	3

FINISHES, DOORS, AND WINDOWS

Floor Finish: Carpet-tile

Wall Finish: Gypsum board (painted)

Base Finish: Integral Coved

Doors:

Type:	Single	**Height:**	84"
Width:	36"	**Vision Panel:**	Frosted

Ceiling Treatment: Suspended acoustical lay-in tiles

Ceiling Height: 8' minimum

Acoustic Treatment: Acoustic seperation from adjacent spaces

Windows:

Natural Lighting: Preferred, glare and brightness control

Room Skylight: Vision Panel

MECHANICAL/ELECTRICAL

HVAC: Standard, space temperature control

Plumbing: None

Fire Protection: Sprinkler

Security: Keyed lock at entrance doors

Electrical: 120V wall outlets

AV Requirements: None

Wire Management: Wall outlets

Data Management: Tele/data outlet(s)

Artificial Lighting: Direct/indirect fluorescent and task lighting

Telephone: Telephone outlets per occupant

EQUIPMENT AND FURNISHINGS

Equipment

(1) Computer system (provided by owner)
(1) Printer (provided by owner)

Furniture

(1) 13 LF of work surface
(2) 36" 2 drawer lateral file
(1) 3 drawer PED file
(1) 5' Oval on casters
(1) Task chair
(2) Guest chairs
(2) 6 LF 15-1/2" deep enclosed shelving with flipper doors, s.f.
(1) 8 LF open shelving
(1) Whiteboard
(1) Wall mounted coat rack
(1) Waste receptacle
(1) 6 LF task slatwall
(1) Task slatwall accessories package

COPYRIGHT © 2009 CRSA

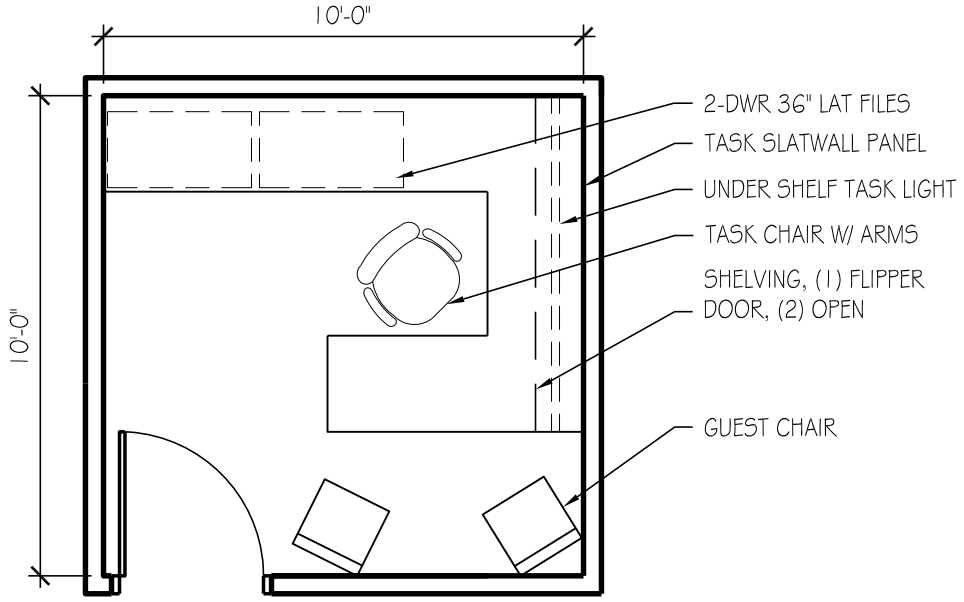

WORKSTATION

100 SF

USU Agriculture Building

ROOM DATA SHEET DETAIL **Department of Math and Statistics**

Math/Stats Administration

7.1.3 Sr. Staff Assistant -

SPACE INFORMATION

Room Function: General office work

Adjacencies:

Special Requirements:
None

Access: Public

Room Utilization: 5 days a week, 8:00 AM to 5:00 PM

General Notes: None

ROOM SIZE AND CAPACITY

Proposed Area:	100 NSF	**Room/Space Quantity:**	3	**Total Area:**	300
Assigned Capacity:	1 Occupant(s)	**Unassigned Capacity:**	1 Guest(s)	**Total Capacity:**	2

FINISHES, DOORS, AND WINDOWS

Floor Finish: Carpet-tile

Wall Finish: Gypsum board (painted)

Base Finish: Integral Coved

Doors:

Type:	Single	**Height:**	84"
Width:	36"	**Vision Panel:**	Frosted

Ceiling Treatment: Suspended acoustical lay-in tiles

Ceiling Height: 8' minimum

Acoustic Treatment: Acoustic seperation from adjacent spaces

Windows:

Natural Lighting:	Not required
Room Skylight:	Vision Panel

MECHANICAL/ELECTRICAL

HVAC:	Standard	**AV Requirements:**	None
Plumbing:	None	**Wire Management:**	Wall outlets
Fire Protection:	Sprinkler	**Data Management:**	Tele/data outlet(s)
Security:	Keyed lock at entrance doors	**Artificial Lighting:**	Direct/indirect fluorescent and task lighting
Electrical:	120V wall outlets	**Telephone:**	Telephone outlets per occupant

EQUIPMENT AND FURNISHINGS

Equipment

(1) Computer system (provided by owner)
(1) Printer (provided by owner)

Furniture

(1) 18 LF Work surface
(1) Task chair
(2) Guest chair
(2) 2 Drawer 36" lateral file
(1) 7 LF task slatwall
(1) Task slatwall accessories package
(1) 14 LF 12-1/2" Deep open shelving, s.f.
(1) 7 LF 15-1/2" Deep enclosed shelving with flipper door, s.f.
(1) Under shelf task light
(1) Door mounted coat rack
(1) Waste receptacle

COPYRIGHT © 2009 CRSA

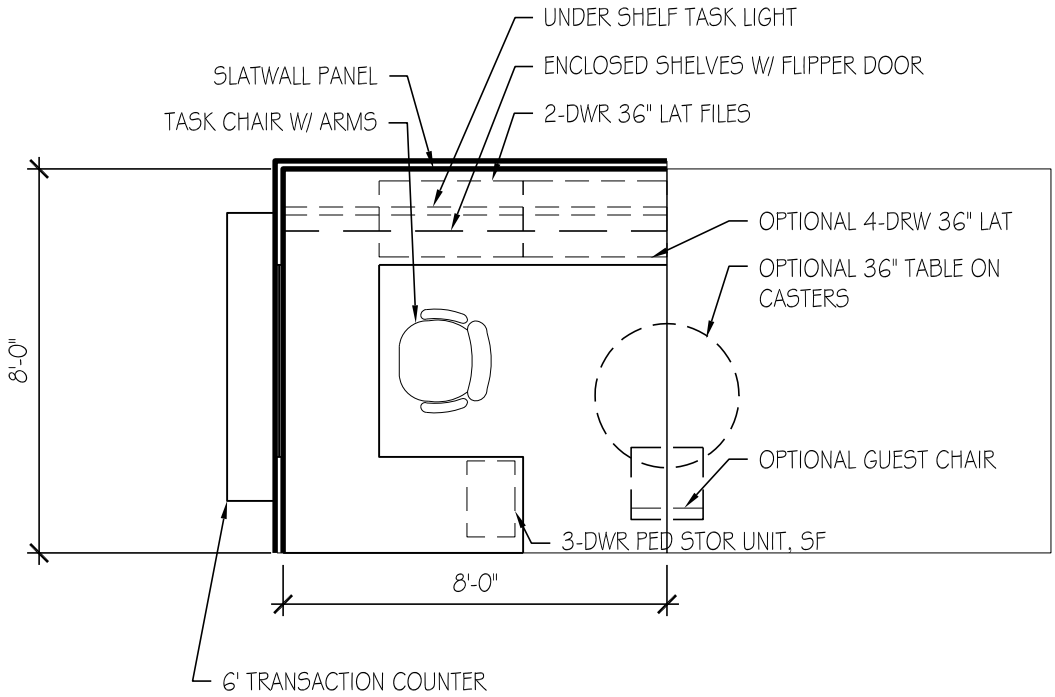

OPEN WORKSTATION

64 SF

USU Agriculture Building

ROOM DATA SHEET DETAIL **Department of Math and Statistics**

Math/Stats Administration

7.1.4 Staff Assistant - Open Workstation -

SPACE INFORMATION

Room Function: General office work

Adjacencies:

Special Requirements:
None

Access: Public

Room Utilization: 5 days a week, 8:00 AM to 5:00 PM

General Notes: None

ROOM SIZE AND CAPACITY

Proposed Area:	64 NSF	**Room/Space Quantity:**	2	**Total Area:**	128
Assigned Capacity:	1 Occupant(s)	**Unassigned Capacity:**	1 Guest(s)	**Total Capacity:**	2

FINISHES, DOORS, AND WINDOWS

Floor Finish: Carpet-tile

Wall Finish: Systems furniture

Base Finish: Systems Furniture

Doors:

Type:	N/A	**Height:**	None
Width:	None	**Vision Panel:**	N/A

Ceiling Treatment: Suspended acoustical lay-in tiles

Ceiling Height: 8' minimum

Acoustic Treatment: Systems Furniture

Windows:

Natural Lighting:	Not required
Room Skylight:	N/A

MECHANICAL/ELECTRICAL

HVAC:	Standard	**AV Requirements:**	None
Plumbing:	None	**Wire Management:**	Wall outlets
Fire Protection:	Sprinkler	**Data Management:**	Tele/data outlet(s)
Security:	Keyed lock on all securable storage devices	**Artificial Lighting:**	Direct/indirect fluorescent and task lighting
Electrical:	120V wall outlets	**Telephone:**	Telephone outlets per occupant

EQUIPMENT AND FURNISHINGS

Equipment

(1) Computer system (provided by owner)

Furniture

(1) 13 LF work surface
(1) 3 Drawer PED file
(1) Task chair
(2) 36" 2 drawer lateral file
(1) 8 LF 15-1/2" deep enclosed shelving with flipper door, s.f.
(1) Under shelf task light, s.f.
(1) 8 LF task slatwall
(1) Task slatwall accessories package
(1) Waste receptacle
(1) Optional guest chair
(1) Optional 36" table on casters
(1) Optional 36" 4 drawer lateral file
(1) Optional 6 LF transaction counter

COPYRIGHT © 2009 CRSA

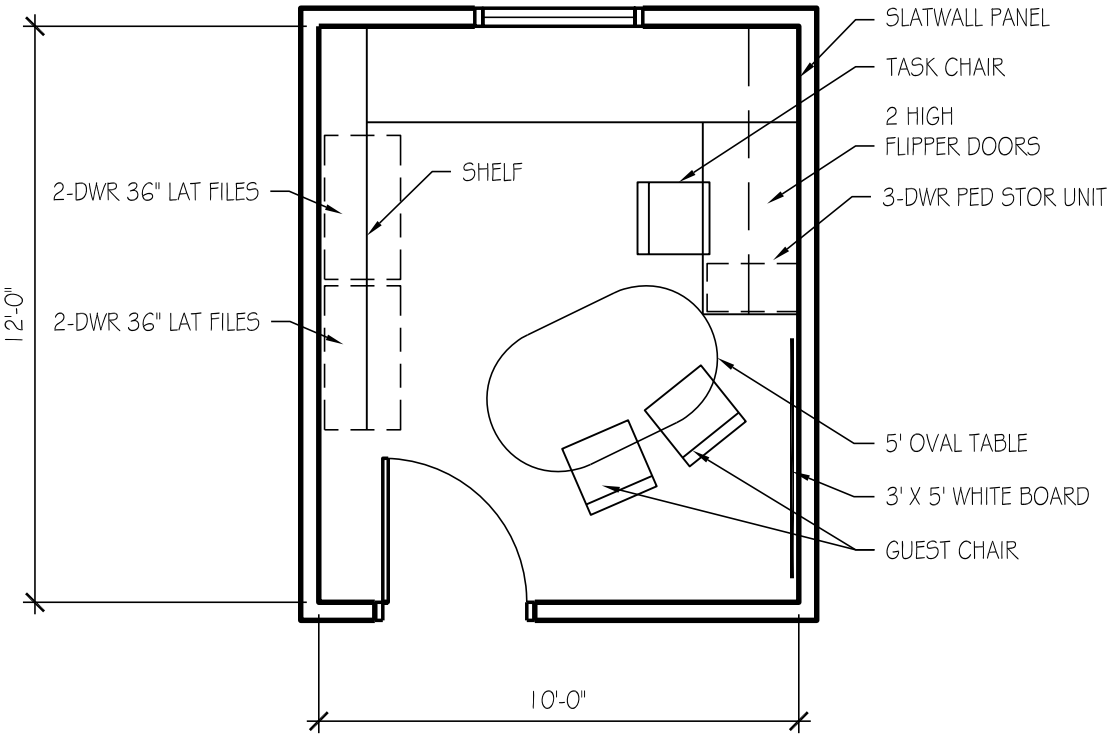

OFFICE A - 120 SF

USU Agriculture Building

ROOM DATA SHEET DETAIL **Department of Math and Statistics**

Math/Stats Faculty

7.2.1 Faculty Office A -

SPACE INFORMATION

Room Function: General office work

Adjacencies:

Special Requirements:
None

Access: Public

Room Utilization: 5 days a week, 8:00 AM to 5:00 PM

General Notes: None

ROOM SIZE AND CAPACITY

Proposed Area:	120 NSF	**Room/Space Quantity:**	20	**Total Area:**	2400
Assigned Capacity:	1 Occupant(s)	**Unassigned Capacity:**	2 Guest(s)	**Total Capacity:**	3

FINISHES, DOORS, AND WINDOWS

Floor Finish: Carpet-tile

Wall Finish: Gypsum board (painted)

Base Finish: Integral Coved

Doors:

Type:	Single	**Height:**	84"
Width:	36"	**Vision Panel:**	Frosted

Ceiling Treatment: Suspended acoustical lay-in tiles

Ceiling Height: 8' minimum

Acoustic Treatment: Acoustic seperation from adjacent spaces

Windows:

Natural Lighting:	Preferred, glare and brightness control
Room Skylight:	Frosted Panel

MECHANICAL/ELECTRICAL

HVAC:	Standard, space temperature control	**AV Requirements:**	None
Plumbing:	None	**Wire Management:**	Wall outlets
Fire Protection:	Sprinkler	**Data Management:**	Tele/data outlet(s)
Security:	Keyed lock at entrance doors	**Artificial Lighting:**	Direct/indirect fluorescent and task lighting
Electrical:	120V wall outlets	**Telephone:**	Telephone outlets per occupant

EQUIPMENT AND FURNISHINGS

Equipment

(1) Computer system (provided by owner)
(1) Printer (provided by owner)

Furniture

(1) 13 LF of work surface
(2) 36" 2 drawer lateral file
(1) 3 drawer PED file
(1) 5' Oval on casters
(1) Task chair
(2) Guest chairs
(2) 6 LF 15-1/2" deep enclosed shelving with flipper doors, s.f.
(1) 8 LF open shelving
(1) Whiteboard
(1) Wall mounted coat rack
(1) Waste receptacle
(1) 6 LF task slatwall
(1) Task slatwall accessories package

COPYRIGHT © 2009 CRSA

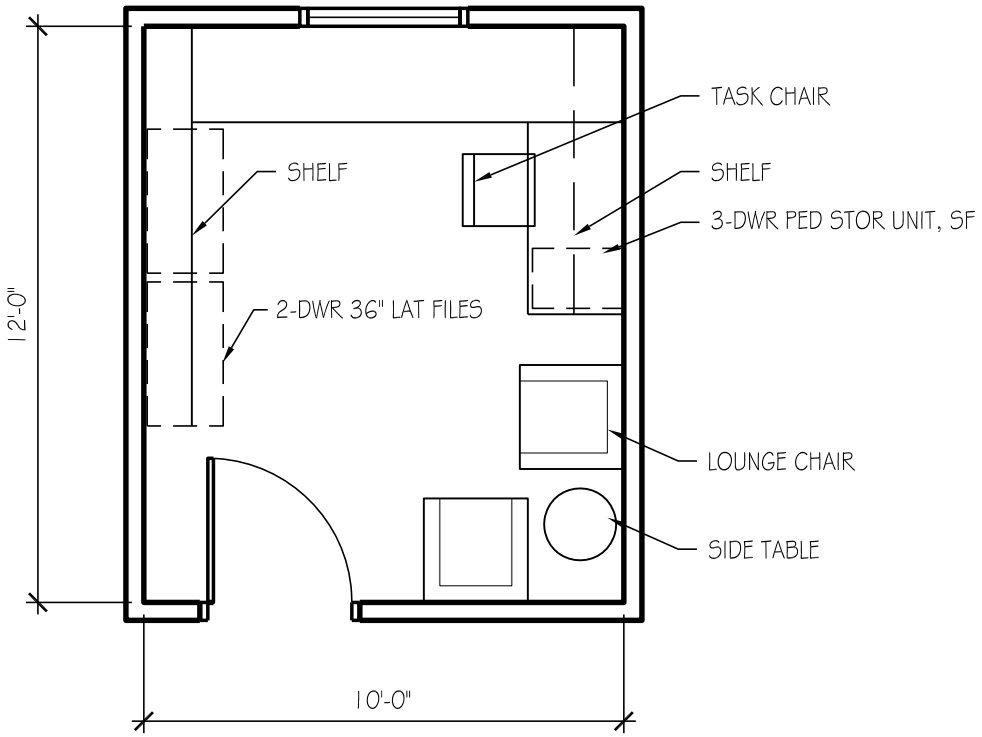

OFFICE B - 120 SF

USU Agriculture Building

ROOM DATA SHEET DETAIL **Department of Math and Statistics**

Math/Stats Faculty

7.2.2 Faculty Office B -

SPACE INFORMATION

Room Function: General office work

Adjacencies:

Special Requirements:

None

Access: Public

Room Utilization: 5 days a week, 8:00 AM to 5:00 PM

General Notes: None

ROOM SIZE AND CAPACITY

Proposed Area:	120 NSF	**Room/Space Quantity:**	5	**Total Area:**	600
Assigned Capacity:	1 Occupant(s)	**Unassigned Capacity:**	2 Guest(s)	**Total Capacity:**	3

FINISHES, DOORS, AND WINDOWS

Floor Finish: Carpet-tile

Wall Finish: Gypsum board (painted)

Base Finish: Integral Coved

Doors:

Type:	Single	**Height:**	84"
Width:	36"	**Vision Panel:**	Frosted

Ceiling Treatment: Suspended acoustical lay-in tiles

Ceiling Height: 8' minimum

Acoustic Treatment: Acoustic seperation from adjacent spaces

Windows:

Natural Lighting:	Preferred, glare and brightness control
Room Skylight:	Frosted Panel

MECHANICAL/ELECTRICAL

HVAC:	Standard, space temperature control	**AV Requirements:**	None
Plumbing:	None	**Wire Management:**	Wall outlets
Fire Protection:	Sprinkler	**Data Management:**	Tele/data outlet(s)
Security:	Keyed lock at entrance doors	**Artificial Lighting:**	Direct/indirect fluorescent and task lighting
Electrical:	120V wall outlets	**Telephone:**	Telephone outlets per occupant

EQUIPMENT AND FURNISHINGS

Equipment

(1) Computer system (provided by owner)
(1) Printer (provided by owner)

Furniture

(1) 13 LF of work surface
(1) 36" 2 drawer lateral file
(1) 3 drawer PED file
(1) Task chair
(2) Upholstered lounge chair
(1) 8 LF open shelving
(1) 12 LF enclosed shelving with flipper doors, s.f.
(1) 6 LF task slatwall
(1) Task slatwall accessories package
(1) Whiteboard
(1) Wall mounted coat rack
(1) Waste receptacle
(1) Under shelf task light, s.f.

COPYRIGHT © 2009 CRSA

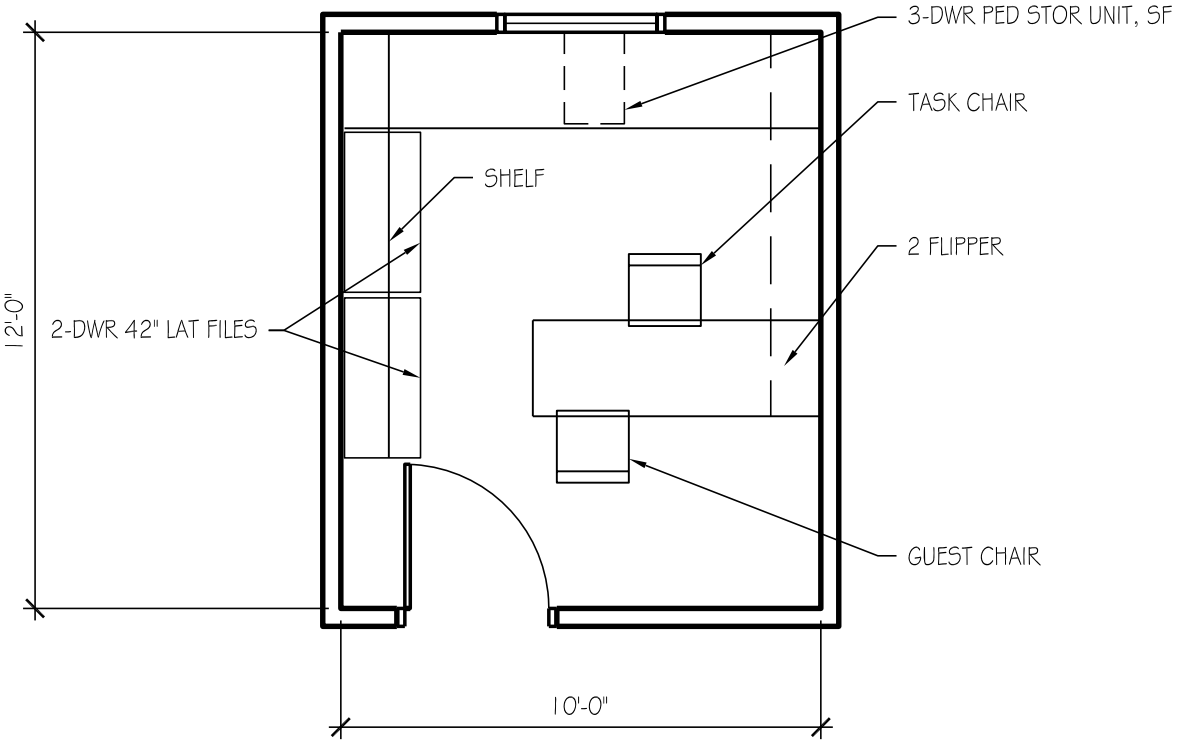

OFFICE C - 120 SF

USU Agriculture Building

ROOM DATA SHEET DETAIL **Department of Math and Statistics**

Math/Stats Faculty

7.2.3 Faculty Office C -

SPACE INFORMATION

Room Function: General office work

Adjacencies:

Special Requirements:

None

Access: Public

Room Utilization: 5 days a week, 8:00 AM to 5:00 PM

General Notes: None

ROOM SIZE AND CAPACITY

Proposed Area:	120 NSF	**Room/Space Quantity:**	5	**Total Area:**	600
Assigned Capacity:	1 Occupant(s)	**Unassigned Capacity:**	1 Guest(s)	**Total Capacity:**	2

FINISHES, DOORS, AND WINDOWS

Floor Finish: Carpet-tile

Wall Finish: Gypsum board (painted)

Base Finish: Integral Coved

Doors:

Type:	Single	**Height:**	84"
Width:	36"	**Vision Panel:**	Frosted

Ceiling Treatment: Suspended acoustical lay-in tiles

Ceiling Height: 8' minimum

Acoustic Treatment: Acoustic seperation from adjacent spaces

Windows:

Natural Lighting:	Preferred, glare and brightness control
Room Skylight:	Frosted Panel

MECHANICAL/ELECTRICAL

HVAC:	Standard, space temperature control	**AV Requirements:**	None
Plumbing:	None	**Wire Management:**	Wall outlets
Fire Protection:	Sprinkler	**Data Management:**	Tele/data outlet(s)
Security:	Keyed lock at entrance doors	**Artificial Lighting:**	Direct/indirect fluorescent and task lighting
Electrical:	120V wall outlets	**Telephone:**	Telephone outlets per occupant

EQUIPMENT AND FURNISHINGS

Equipment

(1) Computer system (provided by owner)
(1) Printer (provided by owner)

Furniture

(1) 11 LF of work surface
(2) 36" 2 drawer lateral file
(1) 3 drawer PED file
(1) Task chair
(1) Guest chairs
(1) 8 LF Bookshelves
(1) 16 LF enclosed shelving with flipper doors, s.f.
(1) 6 LF task slatwall
(1) Task slatwall accessories package
(1) Door mounted coat rack
(1) Waste receptacle
(1) Under shelf task light, s.f.

COPYRIGHT © 2009 CRSA

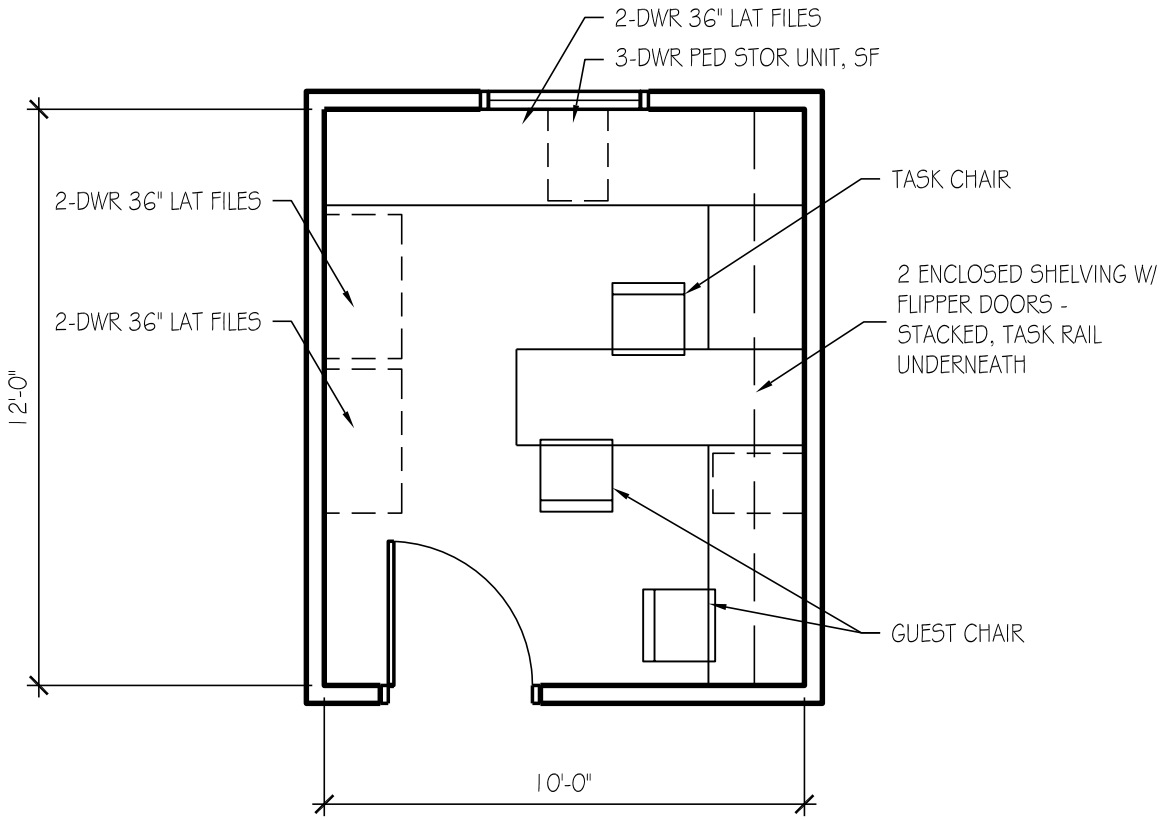

OFFICE D - 120 SF

USU Agriculture Building

ROOM DATA SHEET DETAIL | **Department of Math and Statistics**

Math/Stats Faculty

7.2.4 Faculty Office D -

SPACE INFORMATION

Room Function: General office work

Adjacencies:

Special Requirements:
None

Access: Public

Room Utilization: 5 days a week, 8:00 AM to 5:00 PM

General Notes: None

ROOM SIZE AND CAPACITY

Proposed Area:	120 NSF	**Room/Space Quantity:**	4	**Total Area:**	480
Assigned Capacity:	1 Occupant(s)	**Unassigned Capacity:**	2 Guest(s)	**Total Capacity:**	3

FINISHES, DOORS, AND WINDOWS

Floor Finish: Carpet-tile

Wall Finish: Gypsum board (painted)

Base Finish: Carpet

Doors:

Type:	Single	**Height:**	84"
Width:	36"	**Vision Panel:**	Frosted

Ceiling Treatment: Suspended acoustical lay-in tiles

Ceiling Height: 8' minimum

Acoustic Treatment: Acoustic seperation from adjacent spaces

Windows:

Natural Lighting:	Preferred, glare and brightness control
Room Skylight:	Frosted Panel

MECHANICAL/ELECTRICAL

HVAC:	Standard, space temperature control	**AV Requirements:**	None
Plumbing:	None	**Wire Management:**	Wall outlets
Fire Protection:	Sprinkler	**Data Management:**	Tele/data outlet(s)
Security:	Keyed lock at entrance doors	**Artificial Lighting:**	Direct/indirect fluorescent and task lighting
Electrical:	120V wall outlets	**Telephone:**	Telephone outlets per occupant

EQUIPMENT AND FURNISHINGS

Equipment

(1) Computer system (provided by owner)
(1) Printer (provided by owner)

Furniture

(1) 21 LF of work surface
(2) 36" 2 drawer lateral file
(1) 3 drawer PED file
(1) Task chair
(2) Guest chairs
(1) 8 LF of bookshelves
(1) 12 LF enclosed shelving with flipper doors, s.f.
(1) 6 LF task slatwall
(1) Task slatwall accessories package
(1) Under shelf task light
(1) Door mounted coat rack
(1) Waste receptacle

COPYRIGHT © 2009 CRSA

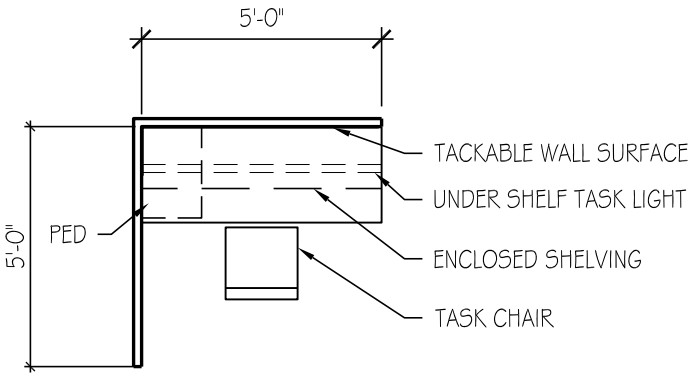

GRAD STUDENT OPEN
WORKSTATION- *25 SF*

USU Agriculture Building

ROOM DATA SHEET DETAIL **Department of Math and Statistics**

Staff/Students

7.3.1 Graduate Student Suite -

SPACE INFORMATION

Room Function: General office work

Adjacencies:

Access: Public

Room Utilization: 5 days a week, 8:00 AM to 5:00 PM

General Notes: None

Special Requirements:

All system furniture is panel hung.
Locks on all securable storage devices.

ROOM SIZE AND CAPACITY

Proposed Area:	25 NSF	**Room/Space Quantity:**	44	**Total Area:**	1100
Assigned Capacity:	1 Occupant(s)	**Unassigned Capacity:**	1 Guest(s)	**Total Capacity:**	2

FINISHES, DOORS, AND WINDOWS

Floor Finish:	Carpet-tile	**Ceiling Treatment:**	Suspended acoustical lay-in tiles
Wall Finish:	Gypsum board (painted)	**Ceiling Height:**	8' minimum
Base Finish:	Systems Furniture	**Acoustic Treatment:**	Systems Furniture
Doors:		**Windows:**	
Type:	N/A	**Natural Lighting:**	Not required
Height:	None	**Room Skylight:**	N/A
Width:	None		
Vision Panel:	N/A		

MECHANICAL/ELECTRICAL

HVAC:	Standard, space temperature control	**AV Requirements:**	None
Plumbing:	None	**Wire Management:**	Wall outlets
Fire Protection:	Sprinkler	**Data Management:**	Tele/data outlet(s)
Security:	Keyed lock on all securable storage devices	**Artificial Lighting:**	Direct/indirect fluorescent and task lighting
Electrical:	120V wall outlets	**Telephone:**	Telephone outlets per occupant

EQUIPMENT AND FURNISHINGS

Equipment

(1) Computer system (provided by owner)
(1) Printer (provided by owner)

Furniture

(1) 5 LF 24" Deep work surface, s.f.
(1) Task chairs
(1) 2 Drawer PED file, s.f.
(1) 5 LF 15-1/2" Deep enclosed shelving with flipper doors, s.f.
(1) Under shelf task light
(1) 5 LF task slatwall
(1) Task slatwall accessories package
(1) Waste receptacle

COPYRIGHT © 2009 CRSA

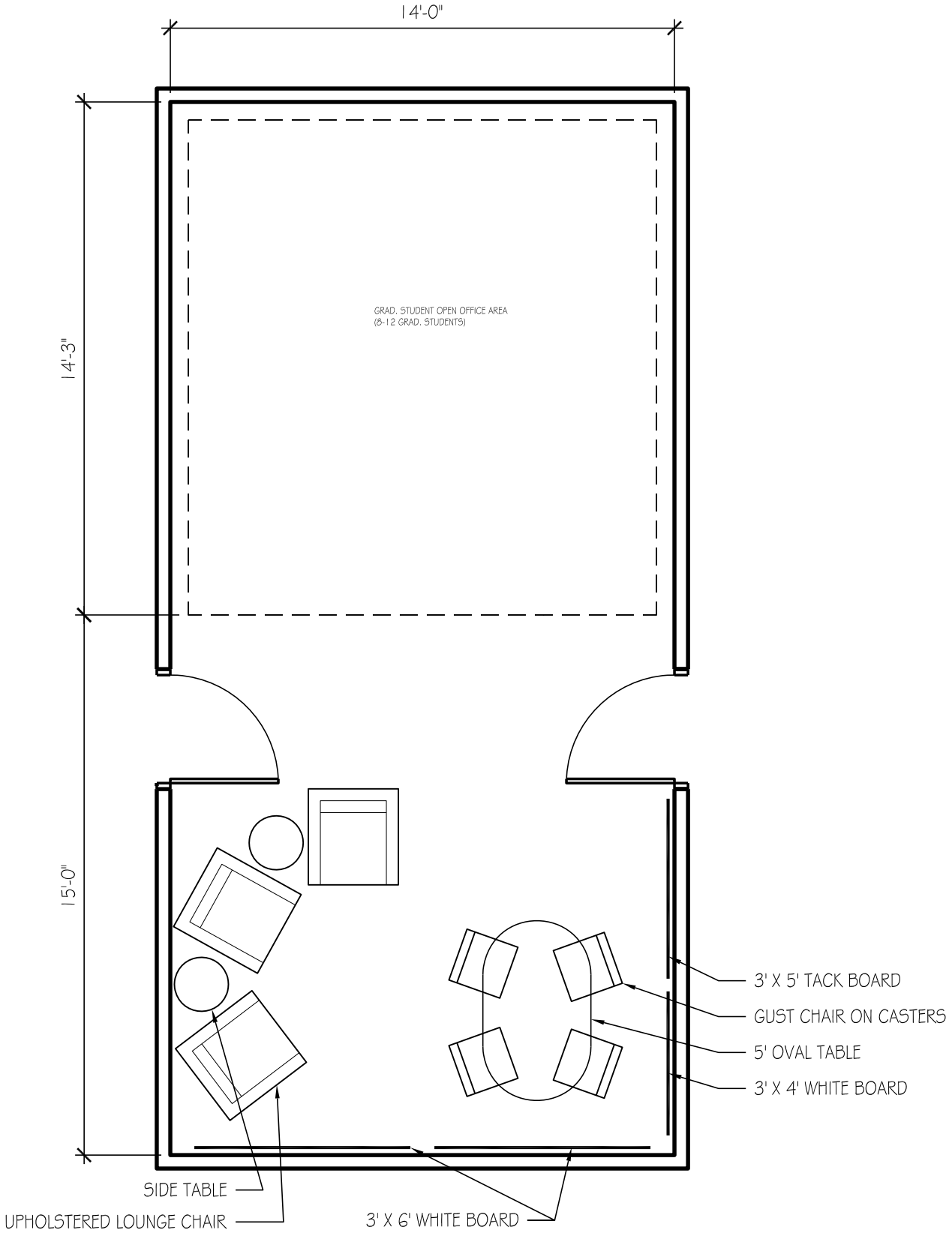

COLLABORATIVE GRAD STUDENT SUPPORT- 210 SF

USU Agriculture Building

ROOM DATA SHEET DETAIL **Department of Math and Statistics**

Staff/Students

7.3.2 Collaborative Grad Student Support -

SPACE INFORMATION

Room Function: Group collaboration

Adjacencies: Grad Student Suite (7.3.1)

Special Requirements:

Access: Public

Room Utilization: 5 days a week, 8:00 AM to 5:00 PM

General Notes: None

ROOM SIZE AND CAPACITY

Proposed Area:	210 NSF	**Room/Space Quantity:**	3	**Total Area:**	630
Assigned Capacity:	1 Occupant(s)	**Unassigned Capacity:**	1 Guest(s)	**Total Capacity:**	2

FINISHES, DOORS, AND WINDOWS

Floor Finish: Carpet-tile

Wall Finish: Gypsum board (painted)

Base Finish: Integral Coved

Doors:

Type:	Single	**Height:**	84"
Width:	36"	**Vision Panel:**	Frosted

Ceiling Treatment: Suspended acoustical lay-in tiles

Ceiling Height: 8' minimum

Acoustic Treatment: Acoustic seperation from adjacent spaces

Windows:

Natural Lighting:	Not required
Room Skylight:	Vision Panel

MECHANICAL/ELECTRICAL

HVAC:	Standard	**AV Requirements:**	None
Plumbing:	None	**Wire Management:**	Wall outlets
Fire Protection:	Smoke detector, sprinkler, and visual alarm	**Data Management:**	Tele/data outlet(s)
Security:	Keyed lock at entrance doors	**Artificial Lighting:**	Direct/indirect fluorescent
Electrical:	120V wall (grounded) outlet	**Telephone:**	None

EQUIPMENT AND FURNISHINGS

Equipment

Furniture

(1) 5' Oval table
(3) Guest chair on casters
(3) Upholstered lounge chair
(2) Side table
(2) 3' x 6' Tack board
(1) 10 LF Tackable wall surface

COPYRIGHT © 2009 CRSA

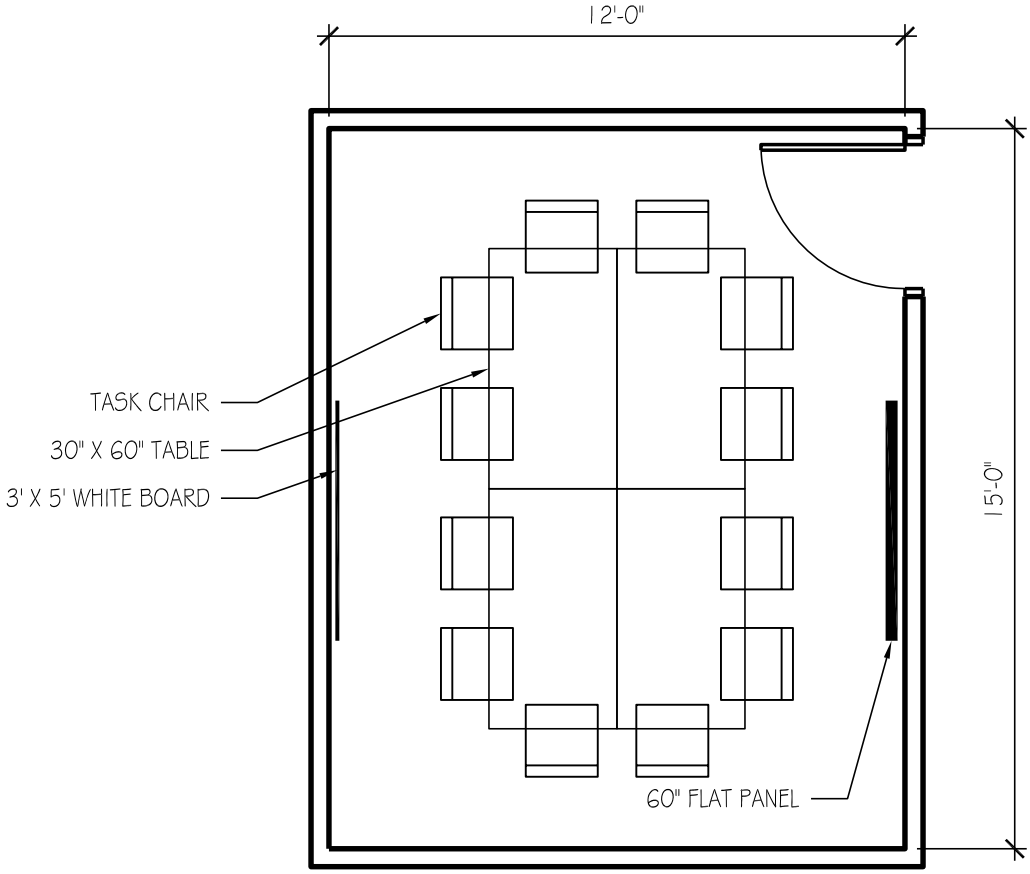

CONFERENCE ROOM - 180 SF

USU Agriculture Building

ROOM DATA SHEET DETAIL **Department of Math and Statistics**

Math/Stats Support Area

7.4.1 Small Conference Room -

SPACE INFORMATION

Room Function: Group meetings, presentation

Adjacencies:

Special Requirements:
Chair rail around perimeter

Access: Public

Room Utilization: 5 days a week, 8:00 AM to 5:00 PM

General Notes: None

ROOM SIZE AND CAPACITY

Proposed Area:	180 NSF	**Room/Space Quantity:**	1	**Total Area:**	180
Assigned Capacity:	8 Occupant(s)	**Unassigned Capacity:**	12 Guest(s)	**Total Capacity:**	20

FINISHES, DOORS, AND WINDOWS

Floor Finish: Carpet-tile

Wall Finish: Gypsum board (painted)

Base Finish: Integral Coved

Doors:

Type:	Single	**Height:**	84"
Width:	36"	**Vision Panel:**	Frosted

Ceiling Treatment: Suspended acoustical lay-in tiles

Ceiling Height: 8' minimum

Acoustic Treatment: Acoustic seperation from adjacent spaces

Windows:

Natural Lighting:	Not required
Room Skylight:	Vision Panel

MECHANICAL/ELECTRICAL

HVAC:	Standard, space temperature control	**AV Requirements:**	As needed
Plumbing:	None	**Wire Management:**	Wall outlets
Fire Protection:	Sprinkler	**Data Management:**	Tele/data outlet(s)
Security:	Keyed lock at entrance doors	**Artificial Lighting:**	Direct/indirect fluorescent
Electrical:	120V wall outlets	**Telephone:**	Wall mounted telephone jack

EQUIPMENT AND FURNISHINGS

Equipment

(1) Conference phone (provided by owner)
(1) 60" Flat panel TV

Furniture

(4) 30" x 60" Table
(12) Task chair
(1) 3' x 5' White board

COPYRIGHT © 2009 CRSA

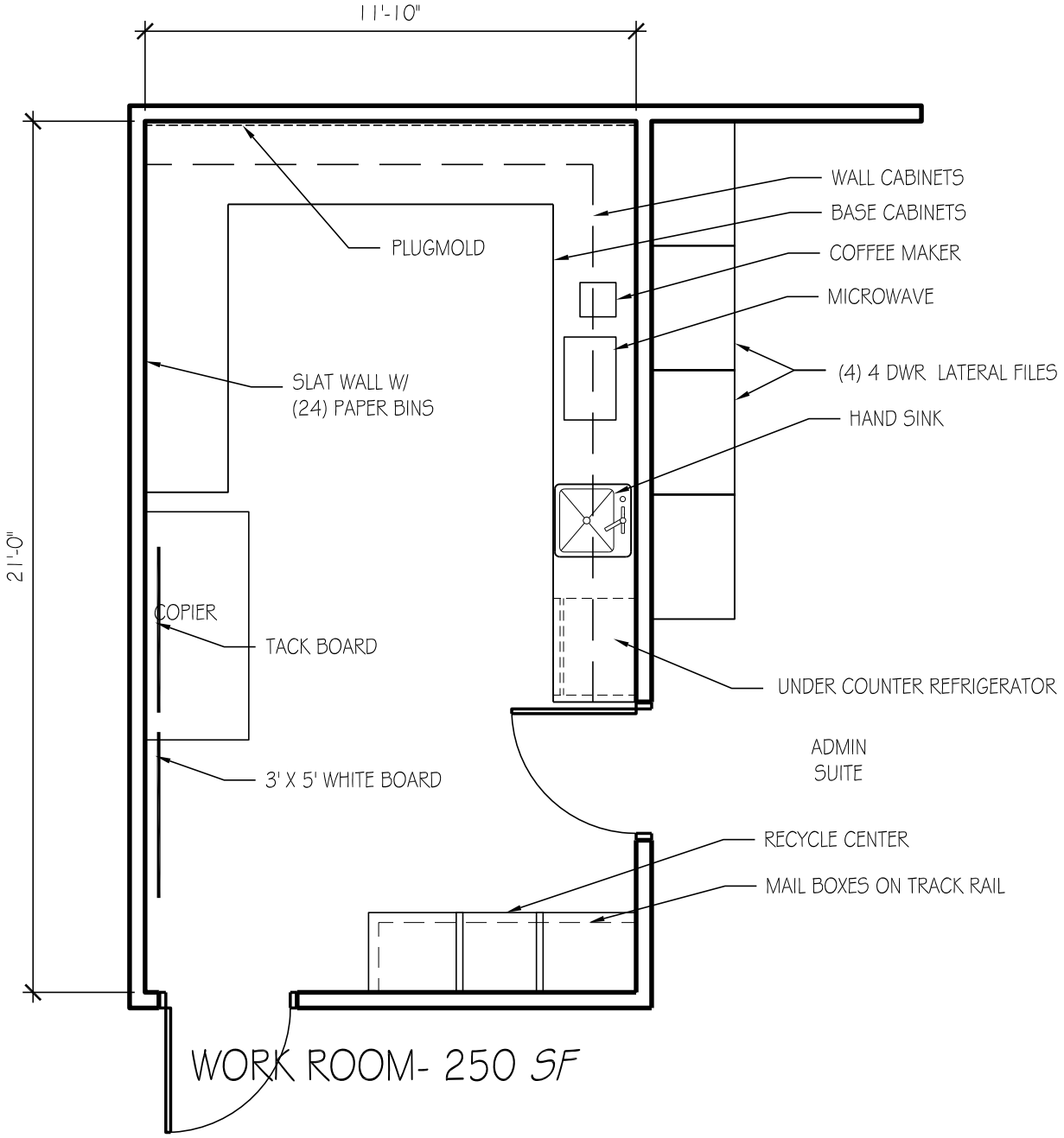

WORK ROOM- 250 SF

USU Agriculture Building

ROOM DATA SHEET DETAIL **Department of Math and Statistics**

Math/Stats Support Area

7.4.2 Copy/Mail/Workroom/Storage -

SPACE INFORMATION

Room Function: Copy, work, prep, storage

Adjacencies:

Special Requirements:
None

Access: Public

Room Utilization: 5 days a week, 8:00 AM to 5:00 PM

General Notes: None

ROOM SIZE AND CAPACITY

Proposed Area:	250 NSF	**Room/Space Quantity:**	1	**Total Area:**	250
Assigned Capacity:	1 Occupant(s)	**Unassigned Capacity:**	1 Guest(s)	**Total Capacity:**	2

FINISHES, DOORS, AND WINDOWS

Floor Finish: Carpet-tile

Wall Finish: Gypsum board (painted)

Base Finish: Integral Coved

Doors:

Type:	Single	**Height:**	84"
Width:	36"	**Vision Panel:**	N/A

Ceiling Treatment: Suspended acoustical lay-in tiles

Ceiling Height: 8' minimum

Acoustic Treatment: Acoustic seperation from adjacent spaces

Windows:

Natural Lighting:	Not required
Room Skylight:	None

MECHANICAL/ELECTRICAL

HVAC:	Standard	**AV Requirements:**	None
Plumbing:	None	**Wire Management:**	Wall outlets
Fire Protection:	Smoke detector, sprinkler, and visual alarm	**Data Management:**	Tele/data outlet(s)
Security:	Keyed lock at entrance doors	**Artificial Lighting:**	Direct/indirect fluorescent
Electrical:	120V wall outlets	**Telephone:**	None

EQUIPMENT AND FURNISHINGS

Equipment

(1) Copier (provided by owner)
(1) Refrigerator
(1) Microwave
(1) Coffee maker

Furniture

(1) 10 LF task slatwall
(1) 26 LF base cabinets
(1) 20 LF wall cabinets - lockable
(45) Mail slots
(1) 4'x4' Tack board
(1) 4'x4' White board
(4) 4 Drawer lateral file
(1) Ten gallon waste receptacle
(1) 3 Compartment recycling bin
(1) 10 LF task slatwall
(24) Paper trays

COPYRIGHT © 2009 CRSA

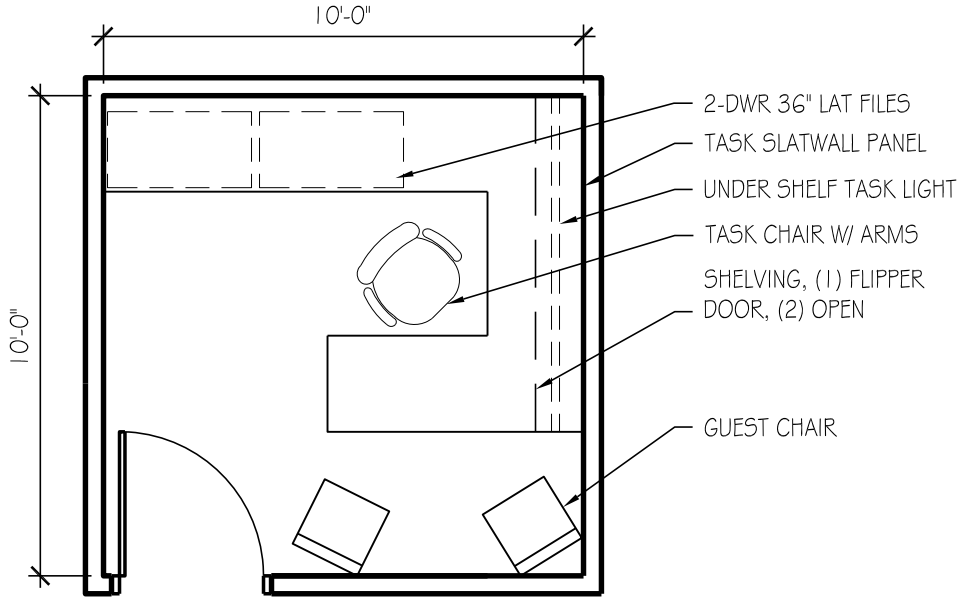

WORKSTATION

100 SF

USU Agriculture Building

ROOM DATA SHEET DETAIL — **Department of Math and Statistics**

Advising

7.5.1 Advisor -

SPACE INFORMATION

Room Function: Advising and general office work

Adjacencies: General Advising (7.5.2)

Special Requirements: None

Access: Public

Room Utilization: 5 days a week, 8:00 AM to 5:00 PM

General Notes: None

ROOM SIZE AND CAPACITY

Proposed Area:	100 NSF	**Room/Space Quantity:**	1	**Total Area:**	100
Assigned Capacity:	1 Occupant(s)	**Unassigned Capacity:**	2 Guest(s)	**Total Capacity:**	3

FINISHES, DOORS, AND WINDOWS

Floor Finish: Carpet-tile

Wall Finish: Gypsum board (painted)

Base Finish: Integral Coved

Doors:

Type:	Single	**Height:**	84"
Width:	36"	**Vision Panel:**	Clear

Ceiling Treatment: Suspended acoustical lay-in tiles

Ceiling Height: 8' minimum

Acoustic Treatment: Acoustic seperation from adjacent spaces

Windows:

Natural Lighting:	Not required
Room Skylight:	Vision Panel

MECHANICAL/ELECTRICAL

HVAC: Standard, space temperature control

Plumbing: None

Fire Protection: Sprinkler

Security: Keyed lock at entrance doors

Electrical: 120V wall outlets

AV Requirements: As needed

Wire Management: Wall outlets

Data Management: Tele/data outlet(s)

Artificial Lighting: Direct/indirect fluorescent and task lighting

Telephone: Telephone outlets per occupant

EQUIPMENT AND FURNISHINGS

Equipment

(1) Computer system (provided by owner)
(1) Printer (provided by owner)

Furniture

(1) 18 LF Work surface
(1) Task chair
(2) Guest chair
(2) 2 Drawer 36" lateral file
(1) 7 LF task slatwall
(1) Task slatwall accessories package
(1) 14 LF 12-1/2" Deep open shelving, s.f.
(1) 7 LF 15-1/2" Deep enclosed shelving with flipper door, s.f.
(1) Under shelf task light
(1) Door mounted coat rack
(1) Waste receptacle

COPYRIGHT © 2009 CRSA

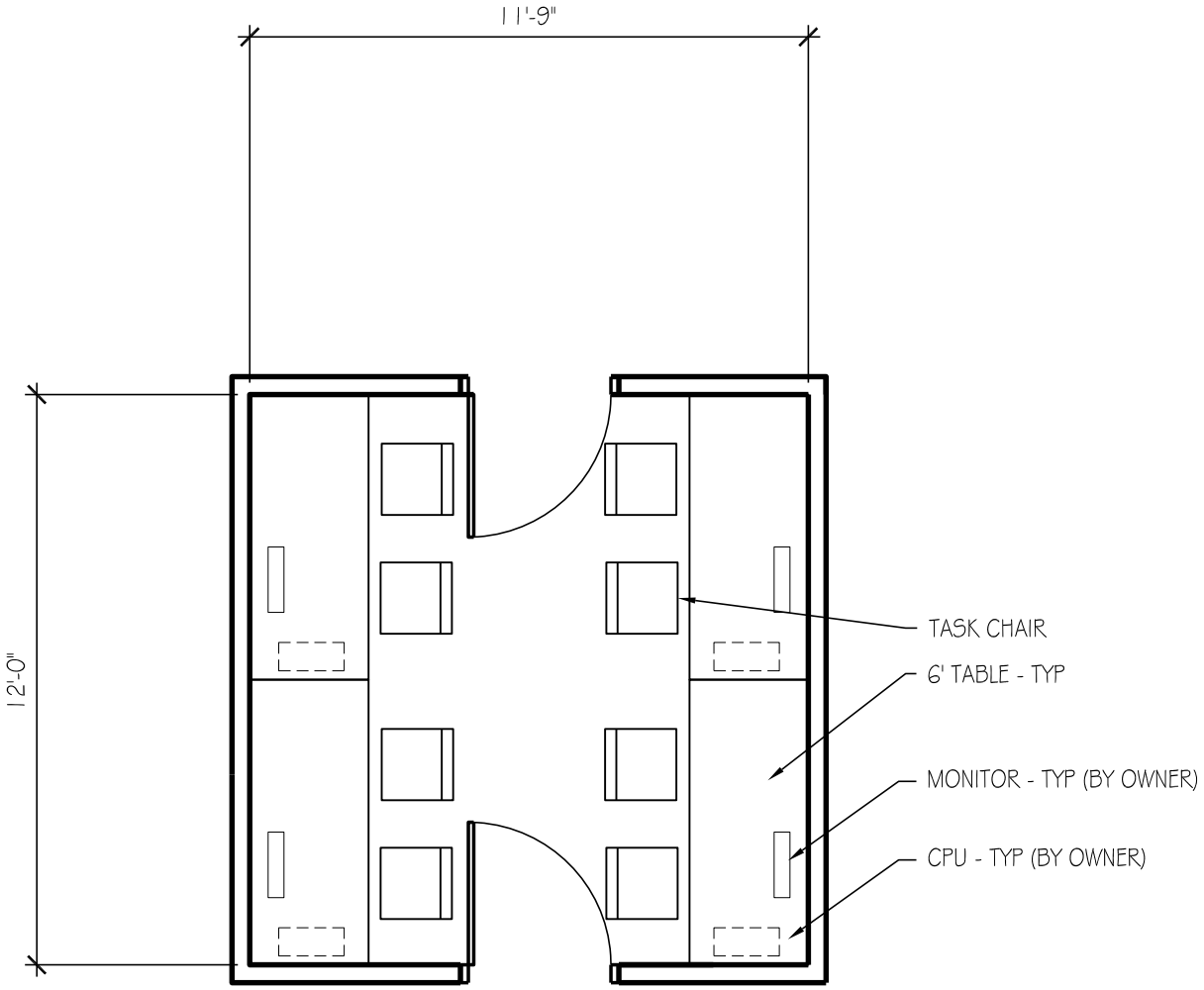

GENERAL MATH &
STATS AVISING
140 SF

USU Agriculture Building

ROOM DATA SHEET DETAIL | **Department of Math and Statistics**

Advising

7.5.2 General Advising -

SPACE INFORMATION

Room Function: Advising

Adjacencies: Advisor (7.5.1)

Special Requirements: None

Access: Public

Room Utilization: 5 days a week, 8:00 AM to 5:00 PM

General Notes: None

ROOM SIZE AND CAPACITY

Proposed Area:	140 NSF	**Room/Space Quantity:**	1	**Total Area:**	140
Assigned Capacity:	1 Occupant(s)	**Unassigned Capacity:**	1 Guest(s)	**Total Capacity:**	2

FINISHES, DOORS, AND WINDOWS

Floor Finish: Carpet-tile

Wall Finish: Ceramic tile, gypsum board (painted)

Base Finish: Integral Coved

Doors:

- **Type:** Single
- **Height:** 84"
- **Width:** 36"
- **Vision Panel:**

Ceiling Treatment: Suspended acoustical lay-in tiles

Ceiling Height: 8' minimum

Acoustic Treatment: Acoustic seperation from adjacent spaces

Windows:

- **Natural Lighting:** Not required
- **Room Skylight:**

MECHANICAL/ELECTRICAL

HVAC:	Standard, space temperature control	**AV Requirements:**	As needed
Plumbing:	None	**Wire Management:**	Wall outlets
Fire Protection:	Sprinkler	**Data Management:**	Tele/data outlet(s)
Security:	Keyed lock at entrance door and turnstile	**Artificial Lighting:**	Direct/indirect fluorescent
Electrical:	120V wall outlets	**Telephone:**	Wall mounted telephone jack

EQUIPMENT AND FURNISHINGS

Equipment

(4) Computers (by owner)

Furniture

(8) Task chair
(4) 30" x 72" Table

COPYRIGHT © 2009 CRSA

BLANK

SECTION 6

SPACE SUMMARY

8	**UNIVERSITY RESOURCES**			**8,000**
8.1	Classrooms			8,000
8.1.1	80-seat Classroom	1	1,400	1,400
8.1.2	34-seat Classroom	4	800	3,200
8.1.3	46-seat Classroom	2	800	1,600
8.1.4	50-station Computer Classroom	1	1,400	1,400
8.1.5	Table and Chair Storage	1	400	400

BLANK

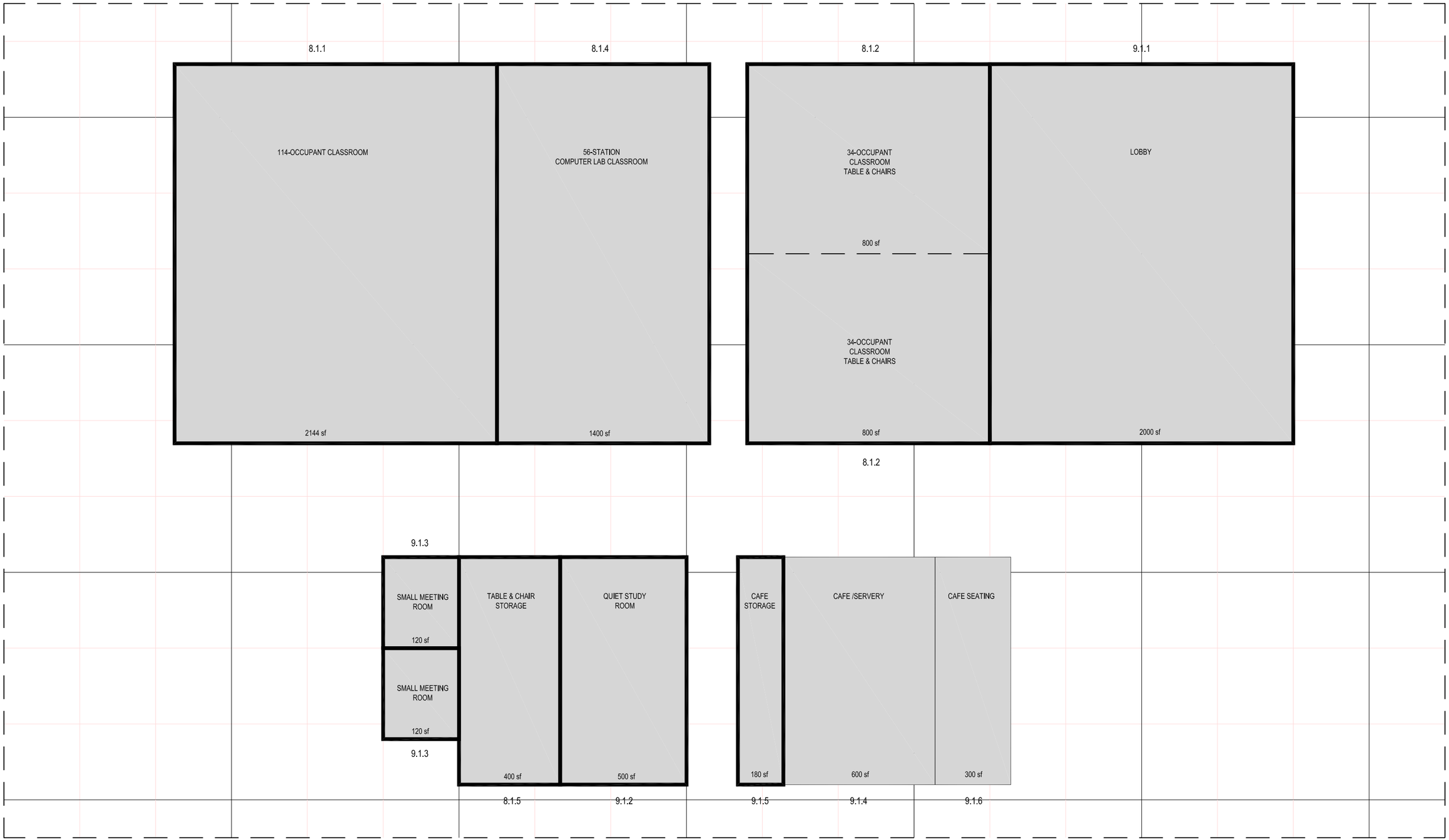

USU COA/ARS PROGRAM - RESOURCE & LOBBY AFFINITY MATRIX

BLANK

BLANK

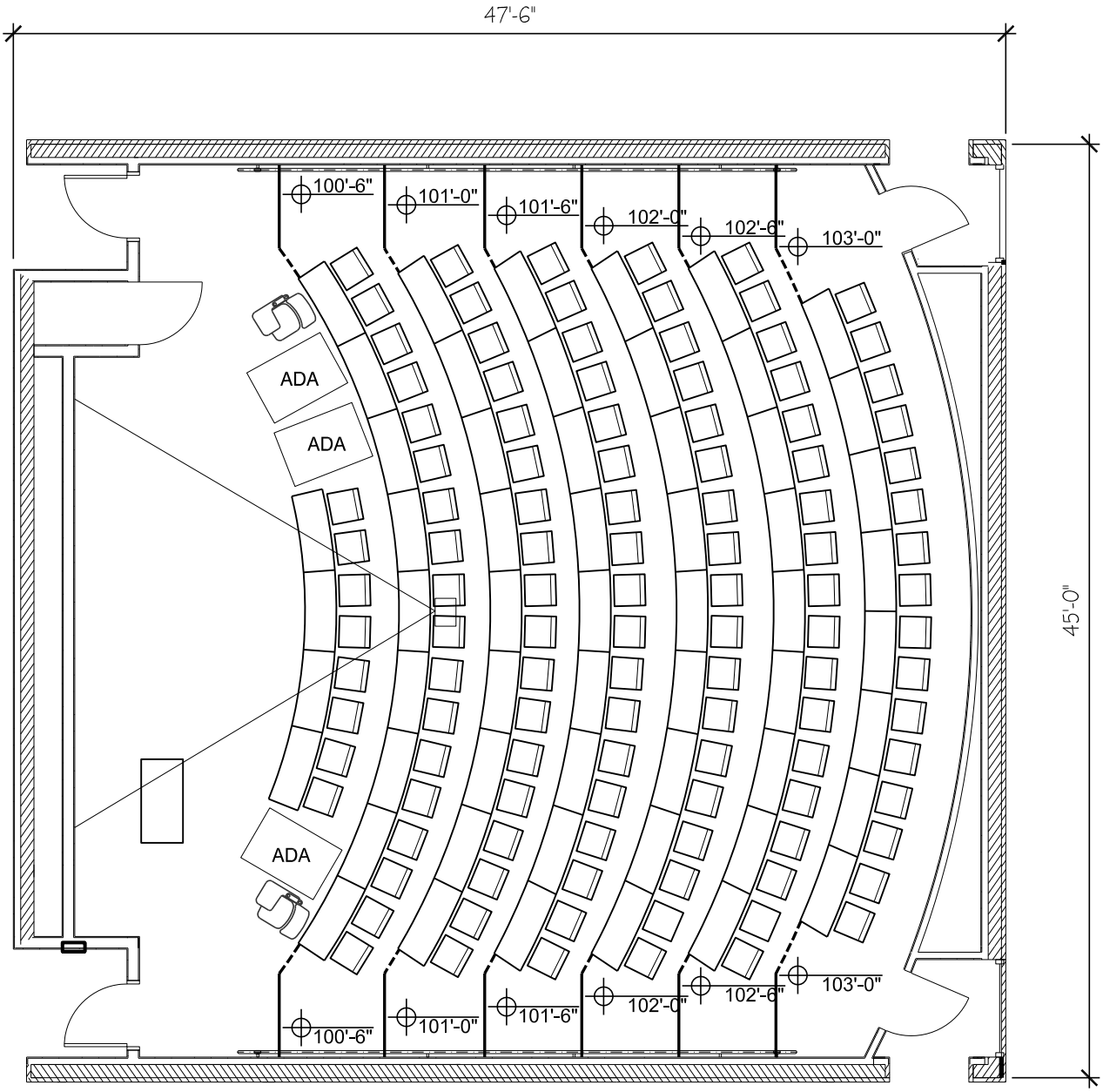

114 SEAT CLASSROOM- 2144 SF

Fixed tables, movable seating
Tiered floor
Fixed projection screen mounted above white boards
Instructor podium - portable

USU Agriculture Building

ROOM DATA SHEET DETAIL **University Resources**

Classrooms

8.1.1 114 Seat Classroom **First Level**

SPACE INFORMATION

Room Function: Lecture, presentations, note taking

Adjacencies:

Special Requirements:
None

Access: Public

Room Utilization: 5 days a week, 8:00 AM to 5:00 PM

General Notes: None

ROOM SIZE AND CAPACITY

Proposed Area:	2144 NSF	**Room/Space Quantity:**	1	**Total Area:**	2144
Assigned Capacity:	114 Occupant(s)	**Unassigned Capacity:**	1 Guest(s)	**Total Capacity:**	115

FINISHES, DOORS, AND WINDOWS

Floor Finish: Carpet-tile

Wall Finish: Gypsum board (painted)

Base Finish: Integral Coved

Doors:

Type:	Single	**Height:**	84"
Width:	36"	**Vision Panel:**	Clear

Ceiling Treatment: Suspended acoustical lay-in tiles

Ceiling Height: 8' minimum

Acoustic Treatment: Acoustic seperation from adjacent spaces

Windows:

Natural Lighting:	Not required
Room Skylight:	Vision Panel

MECHANICAL/ELECTRICAL

HVAC:	Standard, space temperature control	**AV Requirements:**	Ceiling mounted projector
Plumbing:	None	**Wire Management:**	Wall outlets
Fire Protection:	Sprinkler	**Data Management:**	Tele/data outlet(s)
Security:	Keyed lock at entrance doors	**Artificial Lighting:**	Direct/indirect fluorescent
Electrical:	120V wall outlets	**Telephone:**	None

EQUIPMENT AND FURNISHINGS

Equipment

(1) Projector
(1) 72" Projection screen
(1) Computer system

Furniture

(112) Chair
(57) 24" x 60" fixed tables
(2) Tablet arm desk
(1) Portable instructor podium
(3) 3' x 6' white board
(1) Waste receptacle

COPYRIGHT © 2009 CRSA

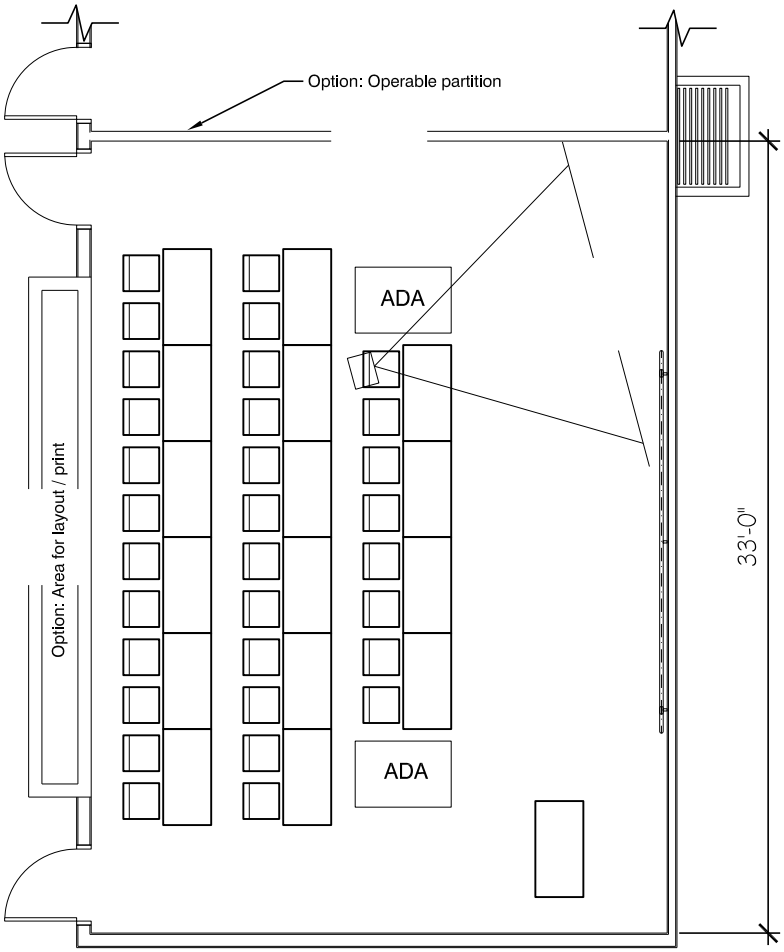

34 SEAT CLASSROOM- 800 SF

Movable tables & chairs
Flat floor
Instructor podium - portable

USU Agriculture Building

ROOM DATA SHEET DETAIL **University Resources**

Classrooms

8.1.2 34 Seat Classroom **First Level**

SPACE INFORMATION

Room Function: Lecture, presentations, note taking

Adjacencies:

Special Requirements:
None

Access: Public

Room Utilization: 5 days a week, 8:00 AM to 5:00 PM

General Notes: None

ROOM SIZE AND CAPACITY

Proposed Area:	800 NSF	**Room/Space Quantity:**	4	**Total Area:**	3200
Assigned Capacity:	34 Occupant(s)	**Unassigned Capacity:**	1 Guest(s)	**Total Capacity:**	35

FINISHES, DOORS, AND WINDOWS

Floor Finish: Carpet-tile

Wall Finish: Gypsum board (painted)

Base Finish: Integral Coved

Doors:

Type:	Single	**Height:**	84"
Width:	36"	**Vision Panel:**	Frosted

Ceiling Treatment: Suspended acoustical lay-in tiles

Ceiling Height: 8' minimum

Acoustic Treatment: Acoustic seperation from adjacent spaces

Windows:

Natural Lighting:	Not required
Room Skylight:	Vision Panel

MECHANICAL/ELECTRICAL

HVAC:	Standard, space temperature control	**AV Requirements:**	Ceiling mounted projector
Plumbing:	None	**Wire Management:**	Wall outlets
Fire Protection:	Sprinkler	**Data Management:**	Tele/data outlet(s)
Security:	Keyed lock at entrance doors	**Artificial Lighting:**	Direct/indirect fluorescent
Electrical:	120V wall outlets	**Telephone:**	None

EQUIPMENT AND FURNISHINGS

Equipment

(1) Projector
(1) 72" Projection screen
(1) Computer system

Furniture

(34) Chairs
(16) 24" x 60" table
(1) Portable instructor podium
(1) Waste receptacle
(1) 3' x 6' White board

COPYRIGHT © 2009 CRSA

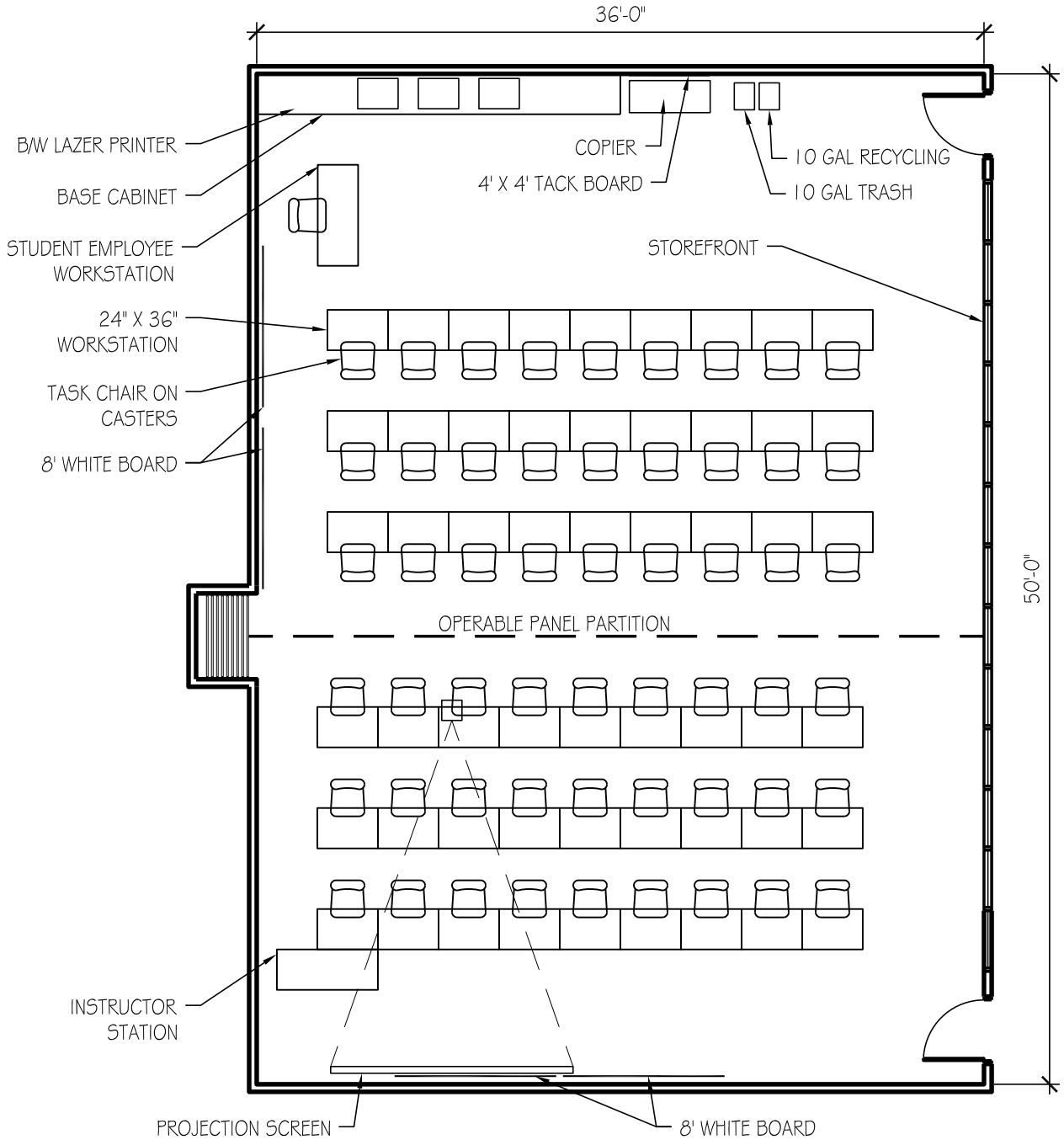

COMPUTER LAB/CLASSROOM - 1800 SF

56 SEATS

USU Agriculture Building

ROOM DATA SHEET DETAIL **University Resources**

Classrooms

8.1.3 56 Station Computer Classroom — First Level

SPACE INFORMATION

Room Function: Computer work, class

Adjacencies:

Special Requirements:
Divisible configuration desired

Access: Public

Room Utilization: 5 days a week, 8:00 AM to 5:00 PM

General Notes: None

ROOM SIZE AND CAPACITY

Proposed Area:	1800 NSF	**Room/Space Quantity:**	1	**Total Area:**	1800
Assigned Capacity:	56 Occupant(s)	**Unassigned Capacity:**	1 Guest(s)	**Total Capacity:**	57

FINISHES, DOORS, AND WINDOWS

Floor Finish: Carpet-tile

Wall Finish: Gypsum board (painted)

Base Finish: Integral Coved

Doors:

Type:	Single	**Height:**	84"
Width:	36"	**Vision Panel:**	Clear

Ceiling Treatment: Suspended acoustical lay-in tiles

Ceiling Height: 8' minimum

Acoustic Treatment: Acoustic seperation from adjacent spaces

Windows:

Natural Lighting:	Not required
Room Skylight:	Vision Panel

MECHANICAL/ELECTRICAL

HVAC:	Standard, space temperature control	**AV Requirements:**	As needed
Plumbing:	None	**Wire Management:**	Wall outlets
Fire Protection:	Sprinkler	**Data Management:**	Tele/data outlet(s)
Security:	Keyed lock at entrance doors	**Artificial Lighting:**	Direct/indirect fluorescent
Electrical:	120V wall outlets	**Telephone:**	None

EQUIPMENT AND FURNISHINGS

Equipment

(42) Computer system (provided by owner)
(3) Black/white printer (provided by owner)
(1) Color multi-function copier/scanner/fax
(1) Projector
(1) 12' Projection screen

Furniture

(28) 36" x 60" tables
(57) Chair on casters
(1) 24 LF white board
(1) Portable instructors podium
(1) 10 gallon waste receptacle
(1) 10 gallon recycling
(1) tack board

COPYRIGHT © 2009 CRSA

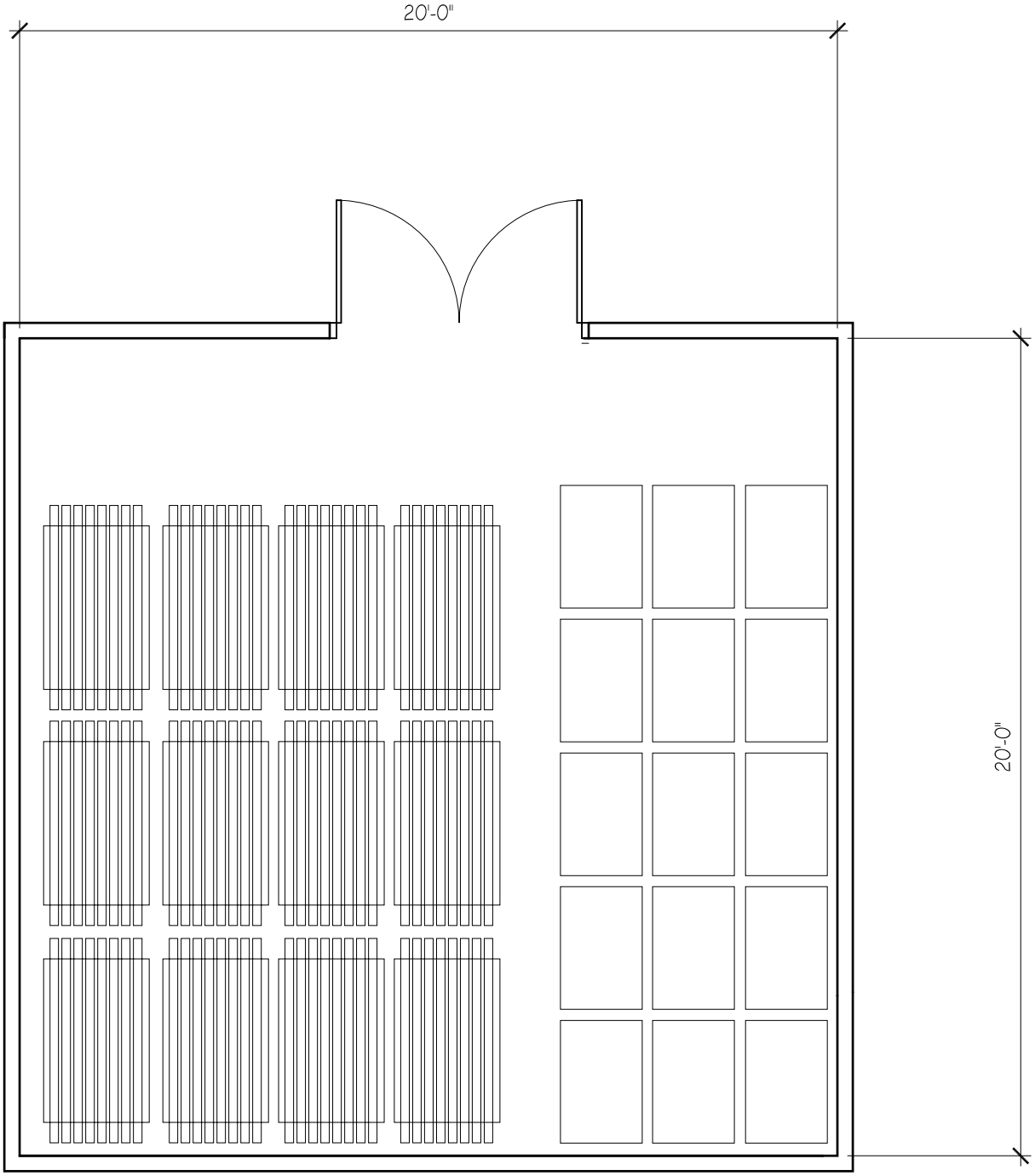

TABLE & CHAIR
STORAGE
400 SF

USU Agriculture Building

ROOM DATA SHEET DETAIL | **University Resources**

Classrooms

8.1.4 Table and Chair Storage — First Level

SPACE INFORMATION

Room Function: Store tables and chairs

Adjacencies: Classrooms (8.1.1, 8.1.2, 8.1.3)

Special Requirements:

Access: Public

Room Utilization: 5 days a week, 8:00 AM to 5:00 PM

General Notes: None

ROOM SIZE AND CAPACITY

Proposed Area:	400 NSF	**Room/Space Quantity:**	1	**Total Area:**	400
Assigned Capacity:	1 Occupant(s)	**Unassigned Capacity:**	1 Guest(s)	**Total Capacity:**	2

FINISHES, DOORS, AND WINDOWS

Floor Finish: Concrete

Wall Finish: Gypsum board (painted)

Base Finish: Rubber

Doors:

- **Type:** Single
- **Height:** 84"
- **Width:** 36"
- **Vision Panel:** Clear

Ceiling Treatment: Suspended acoustical lay-in tiles

Ceiling Height: 8' minimum

Acoustic Treatment: As needed

Windows:

- **Natural Lighting:** Not required
- **Room Skylight:** N/A

MECHANICAL/ELECTRICAL

HVAC: Standard

Plumbing: None

Fire Protection: Sprinkler

Security: Keyed lock at entrance doors

Electrical: 120V wall (grounded) outlet

AV Requirements: None

Wire Management: Wall outlets

Data Management: None

Artificial Lighting: Direct/indirect fluorescent

Telephone: None

EQUIPMENT AND FURNISHINGS

Equipment

Furniture

(12) Table storage carts
(15) Chair storage carts

COPYRIGHT © 2009 CRSA

BLANK

SECTION 6

SPACE SUMMARY

9	**AMENITY SPACES**			**5,500**
9.1				5,500
9.1.1	Lobby	1	2,000	2,000
9.1.2	Quiet Study Room	1	500	500
9.1.3	Small Meeting Rooms	16	120	1,920
9.1.4	Café Servery	1	600	600
9.1.5	Café Storage	1	180	180
9.1.5	Café Seating	1	300	300

BLANK

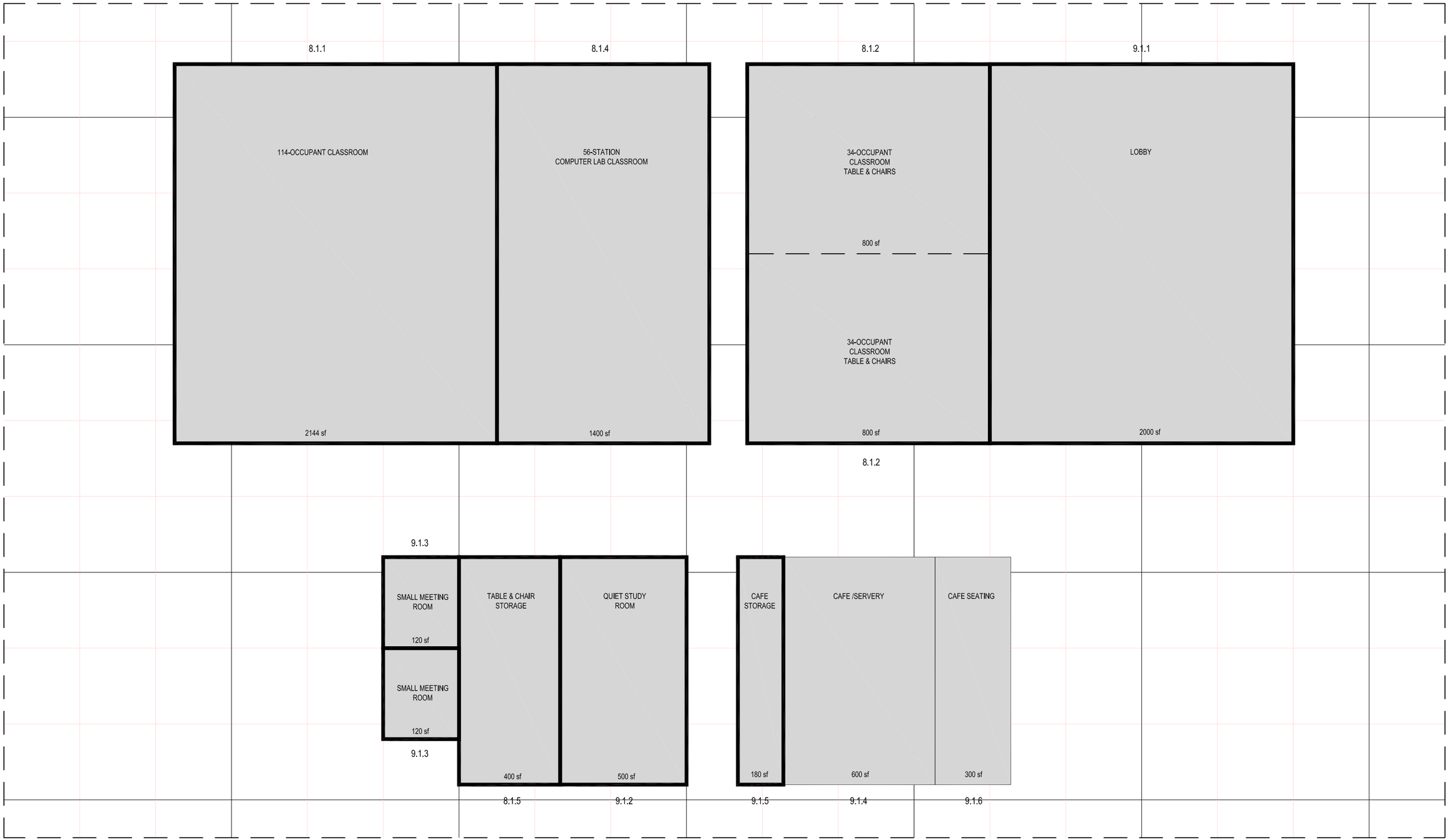

USU COA/ARS PROGRAM - RESOURCE & LOBBY AFFINITY MATRIX

BLANK

BLANK

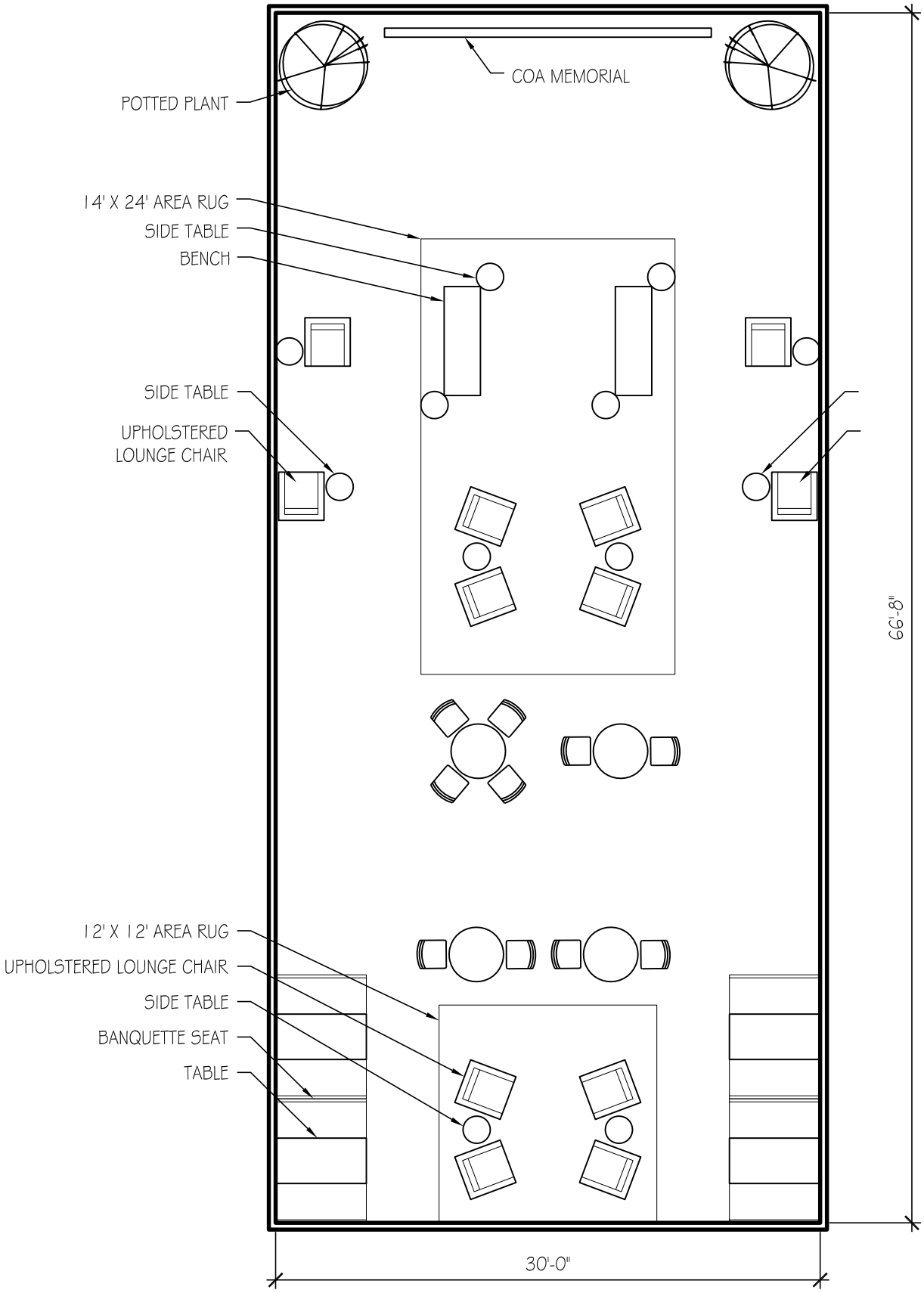

LOBBY - 2000 SF.

USU Agriculture Building

ROOM DATA SHEET DETAIL **Amenity Spaces**

COA Amenity Space

9.1.1 Lobby **First Level**

SPACE INFORMATION

Room Function: Gathering, studying, eating

Adjacencies:

Special Requirements:

None

Access: Public

Room Utilization: 5 days a week, 8:00 AM to 5:00 PM

General Notes: None

ROOM SIZE AND CAPACITY

Proposed Area:	2000 NSF	**Room/Space Quantity:**	1	**Total Area:**	2000
Assigned Capacity:	1 Occupant(s)	**Unassigned Capacity:**	1 Guest(s)	**Total Capacity:**	2

FINISHES, DOORS, AND WINDOWS

Floor Finish: Carpet-tile

Wall Finish: Gypsum board (painted)

Base Finish: Integral Coved

Doors:

Type:	N/A	**Height:**	None
Width:	None	**Vision Panel:**	N/A

Ceiling Treatment: Suspended acoustical lay-in tiles

Ceiling Height: 8' minimum

Acoustic Treatment: Acoustic seperation from adjacent spaces

Windows:

Natural Lighting:	Preferred, glare and brightness control
Room Skylight:	N/A

MECHANICAL/ELECTRICAL

HVAC:	Standard	**AV Requirements:**	As needed
Plumbing:	None	**Wire Management:**	Wall outlets
Fire Protection:	Smoke detector, sprinkler, and visual alarm	**Data Management:**	Tele/data outlet(s)
Security:	None	**Artificial Lighting:**	Direct/indirect fluorescent
Electrical:	120V wall outlets	**Telephone:**	None

EQUIPMENT AND FURNISHINGS

Equipment

Furniture

(12) Upholstered lounge chair
(10) Side Table
(4) 6' Bench, upholstered
(8) 5' Banquet seat
(4) 30" x 60" Table
(1) 14' x 24' Area rug
(1) 12' x 12' Area rug
(4) 48" round table
(8) Chair

COPYRIGHT © 2009 CRSA

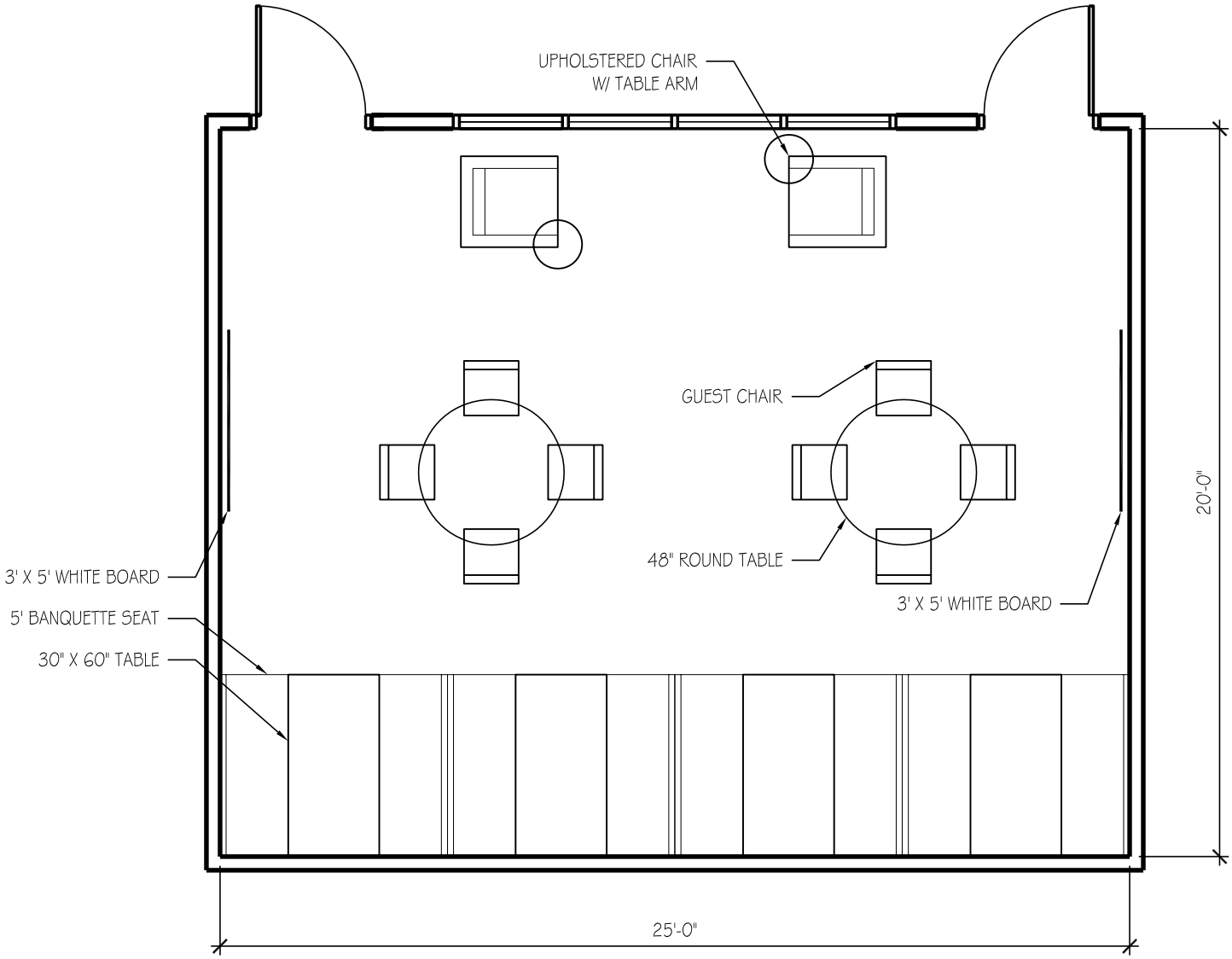

9.1.2 QUIET STUDY RM- 500 SF.

USU Agriculture Building

ROOM DATA SHEET DETAIL **Amenity Spaces**

COA Amenity Space

9.1.2 Quiet Study Room **Third Level**

SPACE INFORMATION

Room Function: Collaboration, meeting, studying

Adjacencies:

Special Requirements:

None

Access: Public

Room Utilization: 5 days a week, 8:00 AM to 5:00 PM

General Notes: None

ROOM SIZE AND CAPACITY

Proposed Area:	500 NSF	**Room/Space Quantity:**	1	**Total Area:**	500
Assigned Capacity:	0 Occupant(s)	**Unassigned Capacity:**	21 Guest(s)	**Total Capacity:**	21

FINISHES, DOORS, AND WINDOWS

Floor Finish: Carpet-tile

Wall Finish: Gypsum board (painted)

Base Finish: Integral Coved

Doors:

Type:	Single	**Height:**	84"
Width:	36"	**Vision Panel:**	Clear

Ceiling Treatment: Suspended acoustical lay-in tiles

Ceiling Height: 8' minimum

Acoustic Treatment: Acoustic seperation from adjacent spaces

Windows:

Natural Lighting:	Not required
Room Skylight:	Vision Panel

MECHANICAL/ELECTRICAL

HVAC:	Standard	**AV Requirements:**	None
Plumbing:	None	**Wire Management:**	Wall and floor outlets
Fire Protection:	Sprinkler	**Data Management:**	Tele/data outlet(s)
Security:	Keyed lock at entrance doors	**Artificial Lighting:**	Direct/indirect fluorescent
Electrical:	120V wall outlets	**Telephone:**	None

EQUIPMENT AND FURNISHINGS

Equipment

Furniture

(2) Upholstered lounge chair, with table arm
(2) 48" Round table
(8) Guest chair
(2) 48" x 72" White board
(8) 5' Banquet seat
(4) 30" x 60" Table

COPYRIGHT © 2009 CRSA

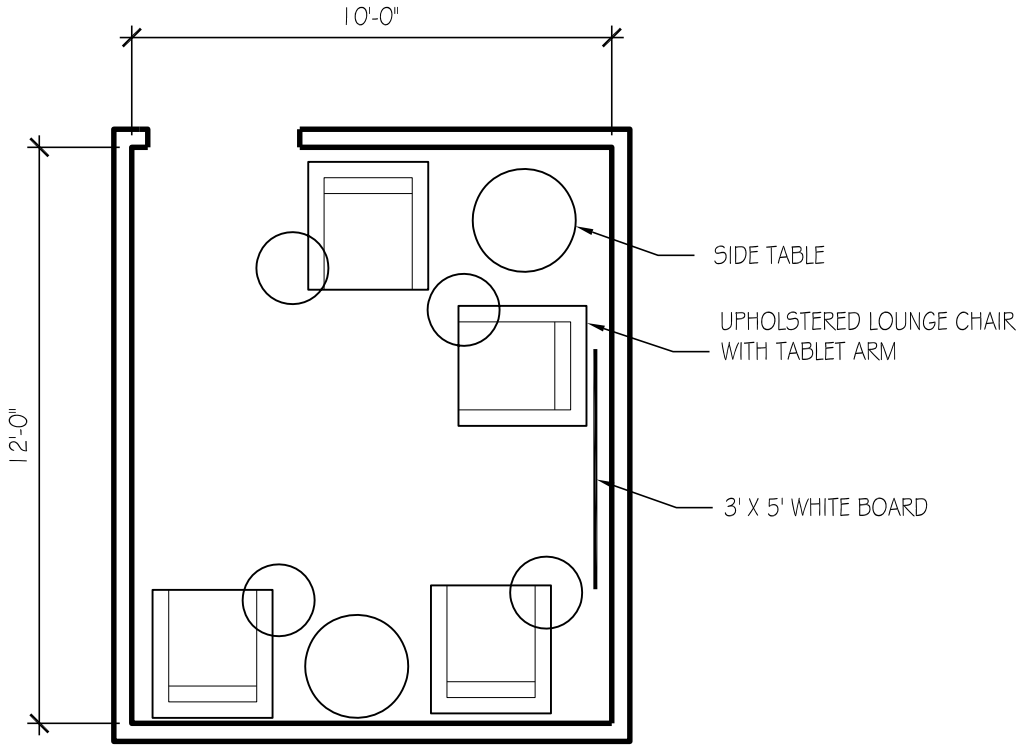

B

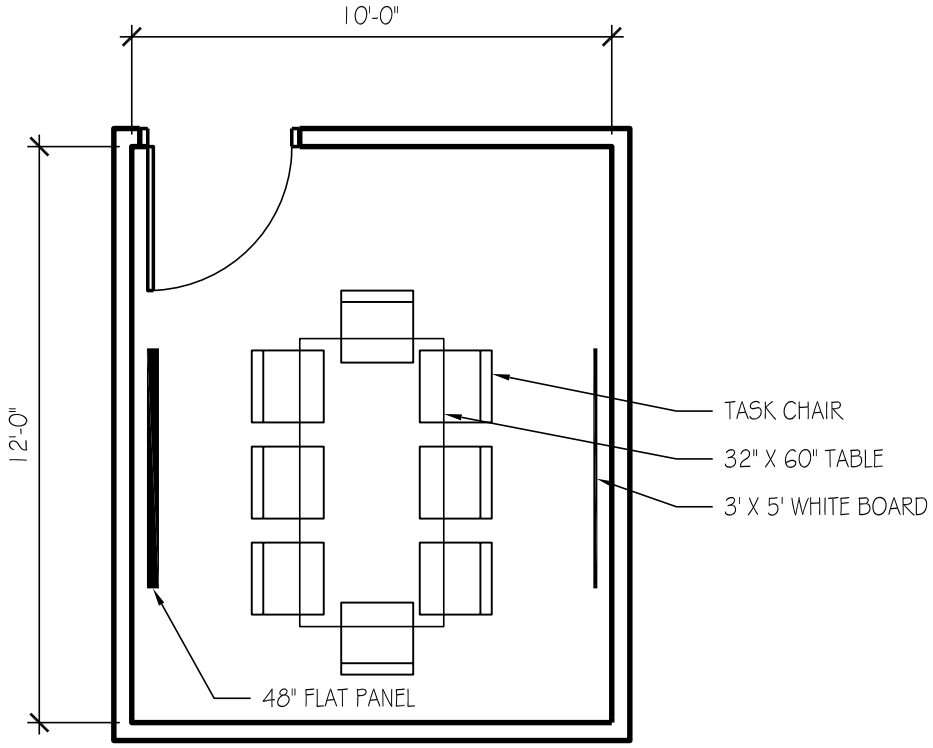

A

SMALL MEETING ROOMS - 120 SF

USU Agriculture Building

ROOM DATA SHEET DETAIL **Amenity Spaces**

COA Amenity Space

9.1.3 Small Meeting Rooms **Third Level**

SPACE INFORMATION

Room Function: Group meetings, collaboration

Adjacencies:

Special Requirements:
None

Access: Public

Room Utilization: 5 days a week, 8:00 AM to 5:00 PM

General Notes: None

ROOM SIZE AND CAPACITY

Proposed Area:	120 NSF	**Room/Space Quantity:**	14	**Total Area:**	1680
Assigned Capacity:	1 Occupant(s)	**Unassigned Capacity:**	1 Guest(s)	**Total Capacity:**	2

FINISHES, DOORS, AND WINDOWS

Floor Finish: Carpet-tile

Wall Finish: Gypsum board (painted)

Base Finish: Integral Coved

Doors:

Type:	Single	**Height:**	84"
Width:	36"	**Vision Panel:**	Clear

Ceiling Treatment: Suspended acoustical lay-in tiles

Ceiling Height: 8' minimum

Acoustic Treatment: Acoustic seperation from adjacent spaces

Windows:

Natural Lighting:	Not required
Room Skylight:	Vision Panel

MECHANICAL/ELECTRICAL

HVAC:	Standard, space temperature control	**AV Requirements:**	None
Plumbing:	None	**Wire Management:**	Wall outlets
Fire Protection:	Smoke detector, sprinkler, and visual alarm	**Data Management:**	Tele/data outlet(s)
Security:	Keyed lock at entrance doors	**Artificial Lighting:**	Direct/indirect fluorescent
Electrical:	120V wall outlets	**Telephone:**	None

EQUIPMENT AND FURNISHINGS

Equipment

(1) 48" Flat panel monitor
(1) Conference telephone

Furniture

Option A:
(1) 30" x 60"
(1) Task chair
(1) 3' x 5' white board
(1) Waste receptacle
Option B:
(4) Upholstered lounge chair
(2) Side table
(1) 3' x 5' White board
(1) Waste receptacle

COPYRIGHT © 2009 CRSA

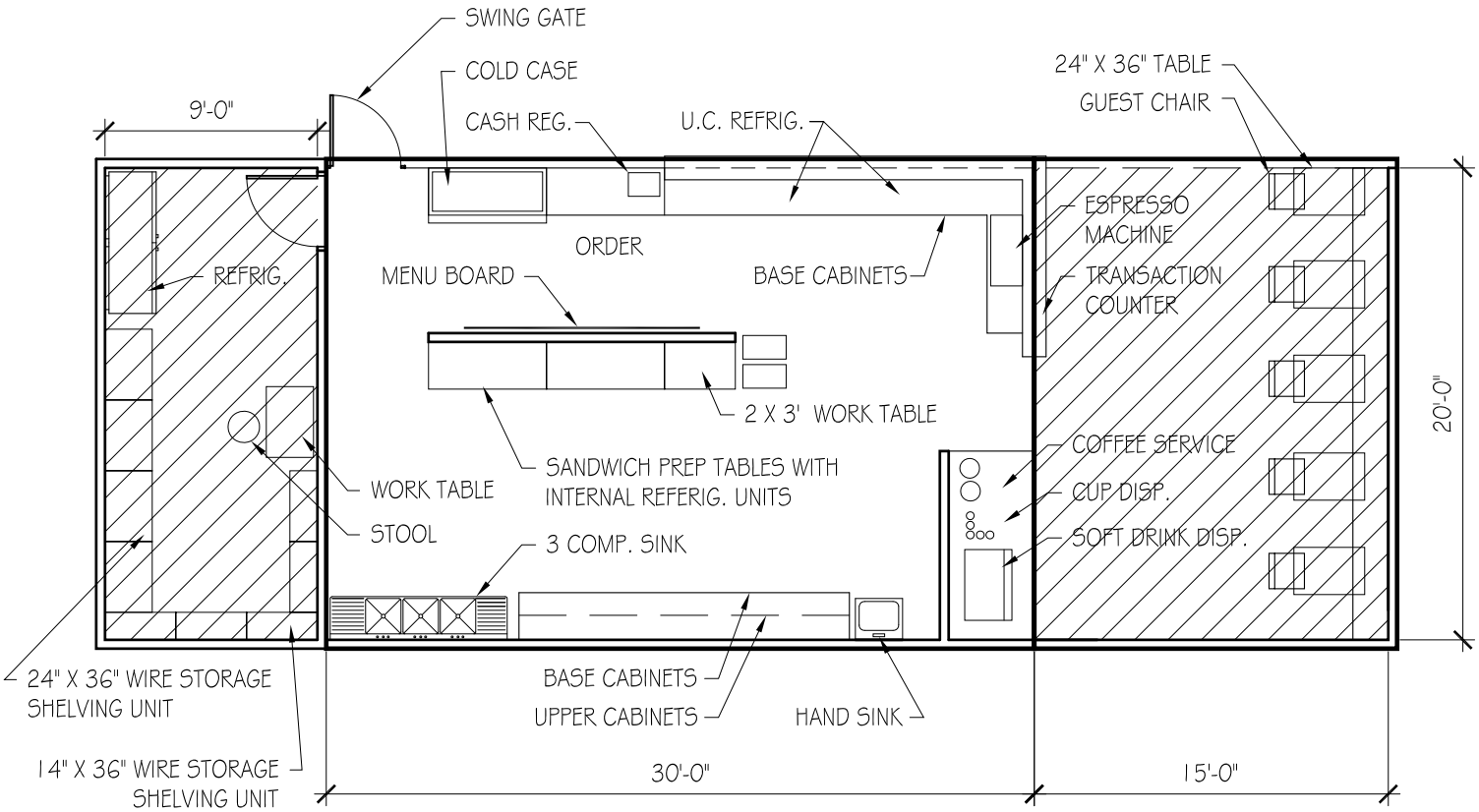

9.1.5 CAFE STORAGE- 180 SF.

9.1.4 CAFE SERVERY- 600 SF.

9.1.6 CAFE SEATING- 300 SF.

USU Agriculture Building

ROOM DATA SHEET DETAIL **Amenity Spaces**

COA Amenity Space

9.1.4 Café Servery **First Level**

SPACE INFORMATION

Room Function: Food Service

Adjacencies:

Special Requirements:
None

Access: Public

Room Utilization: 5 days a week, 8:00 AM to 5:00 PM

General Notes: None

ROOM SIZE AND CAPACITY

Proposed Area:	600 NSF	**Room/Space Quantity:**	1	**Total Area:**	600
Assigned Capacity:	0 Occupant(s)	**Unassigned Capacity:**	4 Guest(s)	**Total Capacity:**	4

FINISHES, DOORS, AND WINDOWS

Floor Finish: Ceramic tile

Wall Finish: Plastic laminate over gypsum board

Base Finish: Ceramic Tile

Doors:

Type:	N/A	**Height:**	None
Width:	None	**Vision Panel:**	N/A

Ceiling Treatment: Suspended acoustical lay-in tiles with kevlar fini

Ceiling Height: 8' minimum

Acoustic Treatment: Acoustic seperation from adjacent spaces

Windows:

Natural Lighting:	Not required
Room Skylight:	N/A

MECHANICAL/ELECTRICAL

HVAC:	Standard, space temperature control	**AV Requirements:**	None
Plumbing:	As required	**Wire Management:**	Wall outlets
Fire Protection:	Smoke detector, sprinkler, and visual alarm	**Data Management:**	None
Security:	Keyed lock at entrance doors	**Artificial Lighting:**	Direct/indirect fluorescent
Electrical:	120V wall outlets	**Telephone:**	Wall mounted telephone jack

EQUIPMENT AND FURNISHINGS

Equipment

(2) Computer workstation with touch screen monitor, CPU, and cash drawer
(2) 6' Commercial refrigerator
(1) Espresso machine
(1) Soft drink dispenser
(1) Cup dispenser
(1) Coffee maker
(1) 3 Compartment sink
(1) Wall mounted sink
(3) Warming ovens
(1) 4 burner gas oven
(1) Hood

Furniture

(1) Cold case
(1) 18 LF transaction counter
(1) 36" x 60" Sandwich table with integral refrigerator unit
(1) 24" x 36" Stainless steel work table
(1) 10 LF menu board
(1) 25 LF base cabinet
(1) 14 LF base cabinet, ss counter
(1) 14 LF wall cabinet

COPYRIGHT © 2009 CRSA

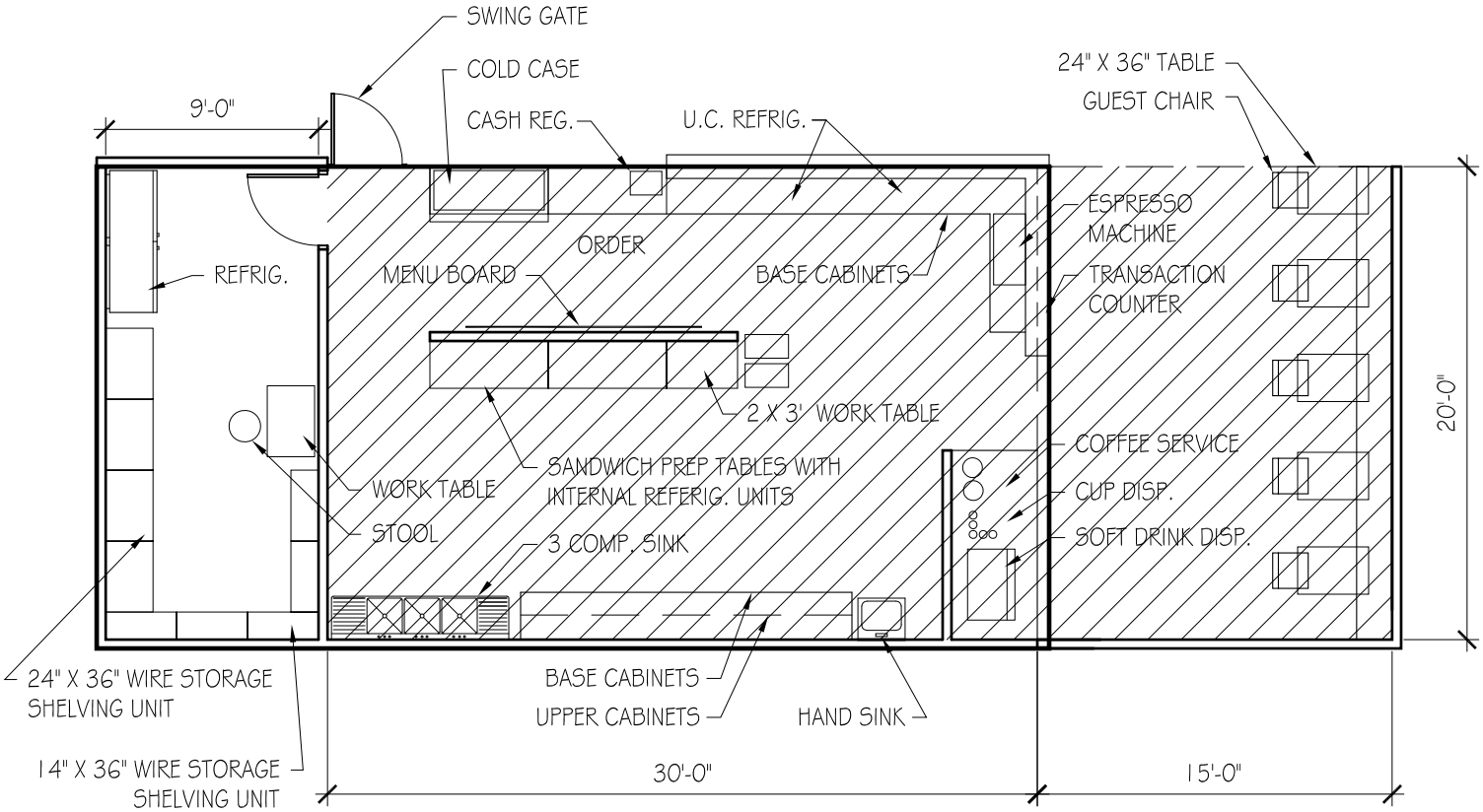

9.1.5 CAFE STORAGE- 180 SF.

9.1.4 CAFE SERVERY- 600 SF.

9.1.6 CAFE SEATING- 300 SF.

USU Agriculture Building

ROOM DATA SHEET DETAIL **Amenity Spaces**

COA Amenity Space

9.1.5 Café Storage

First Level

SPACE INFORMATION

Room Function: Food and supply storage

Adjacencies:

Special Requirements:

None

Access: Public

Room Utilization: 5 days a week, 8:00 AM to 5:00 PM

General Notes: None

ROOM SIZE AND CAPACITY

Proposed Area:	180 NSF	**Room/Space Quantity:**	1	**Total Area:**	180
Assigned Capacity:	0 Occupant(s)	**Unassigned Capacity:**	1 Guest(s)	**Total Capacity:**	1

FINISHES, DOORS, AND WINDOWS

Floor Finish: Ceramic tile

Wall Finish: Gypsum board (painted)

Base Finish: Ceramic Tile

Doors:

Type:	Single	**Height:**	84"
Width:	36"	**Vision Panel:**	N/A

Ceiling Treatment: Suspended acoustical lay-in tiles with kevlar fini

Ceiling Height: 8' minimum

Acoustic Treatment: Acoustic seperation from adjacent spaces

Windows:

Natural Lighting:	Not required
Room Skylight:	N/A

MECHANICAL/ELECTRICAL

HVAC:	Standard	**AV Requirements:**	None
Plumbing:	None	**Wire Management:**	Wall outlets
Fire Protection:	Sprinkler	**Data Management:**	None
Security:	Keyed lock at entrance doors	**Artificial Lighting:**	Direct/indirect fluorescent
Electrical:	120V wall outlets	**Telephone:**	None

EQUIPMENT AND FURNISHINGS

Equipment

(1) Commercial refrigerator with sliding doors
(1) 6' commercial refrigerator

Furniture

(1) 24" x 48" Work table
(1) Stool
(3) 14" x 36" Wire storage shelving unit
(4) 24" x 36" Wire storage shelving unit

COPYRIGHT © 2009 CRSA

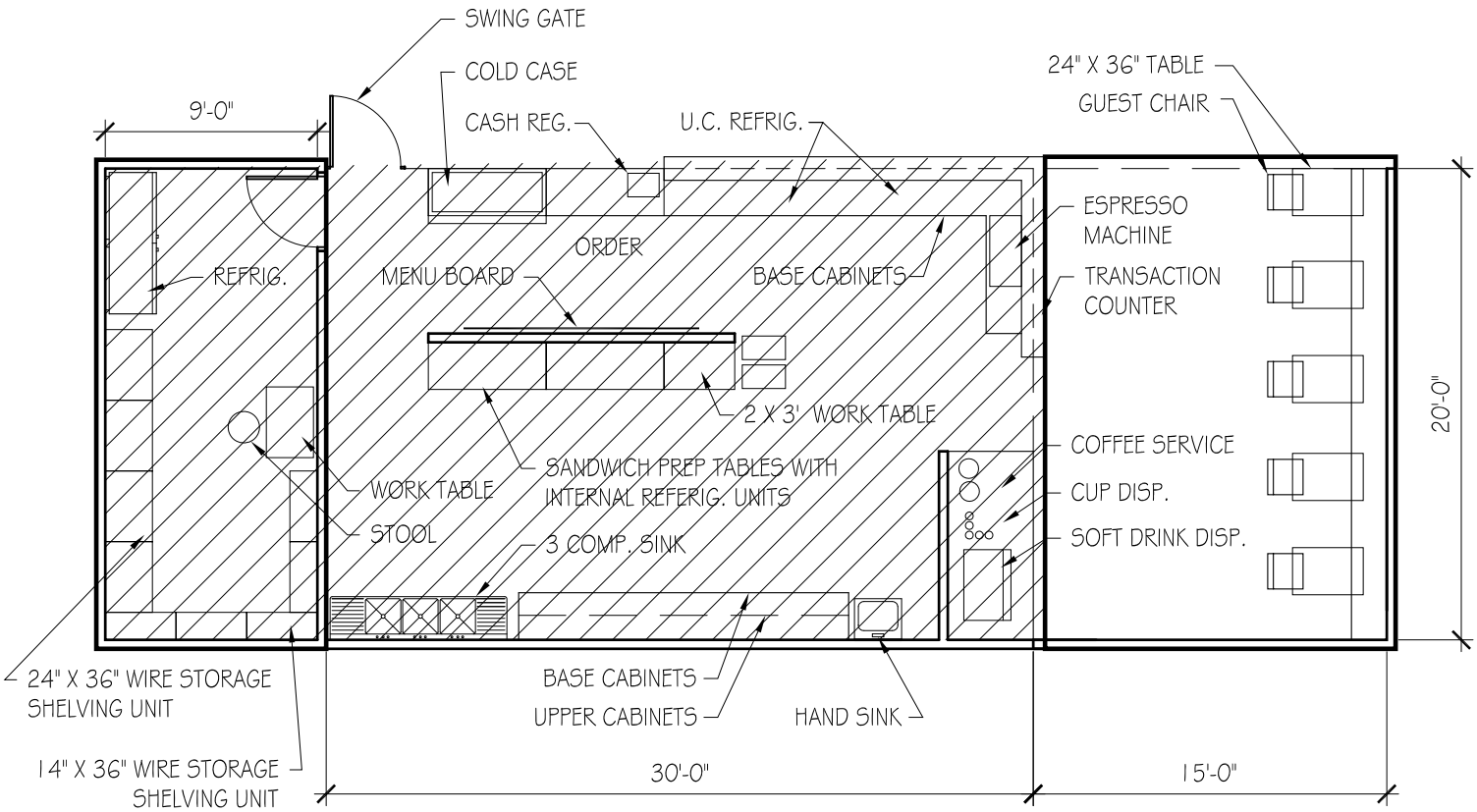

9.1.5 CAFE STORAGE- 180 SF.

9.1.4 CAFE SERVERY- 600 SF.

9.1.6 CAFE SEATING- 300 SF.

USU Agriculture Building

ROOM DATA SHEET DETAIL **Amenity Spaces**

COA Amenity Space

9.1.6 Café Seating **First Level**

SPACE INFORMATION

Room Function: Sitting, eating

Adjacencies: Café Servery (9.1.4)

Special Requirements: Durable wall surface to 6'

Access: Public

Room Utilization: 5 days a week, 8:00 AM to 5:00 PM

General Notes: None

ROOM SIZE AND CAPACITY

Proposed Area:	300 NSF	**Room/Space Quantity:**	1	**Total Area:**	300
Assigned Capacity:	0 Occupant(s)	**Unassigned Capacity:**	10 Guest(s)	**Total Capacity:**	10

FINISHES, DOORS, AND WINDOWS

Floor Finish: Ceramic tile

Wall Finish: Gypsum board (painted)

Base Finish: Ceramic Tile

Doors:

Type:	N/A	**Height:**	None
Width:	None	**Vision Panel:**	N/A

Ceiling Treatment: Suspended acoustical lay-in tiles

Ceiling Height: 8' minimum

Acoustic Treatment: Acoustic seperation from adjacent spaces

Windows:

Natural Lighting:	Not required
Room Skylight:	None

MECHANICAL/ELECTRICAL

HVAC:	Standard	**AV Requirements:**	None
Plumbing:	None	**Wire Management:**	Wall outlets
Fire Protection:	Smoke detector, sprinkler, and visual alarm	**Data Management:**	None
Security:	Keyed lock at entrance doors	**Artificial Lighting:**	Direct/indirect fluorescent
Electrical:	120V wall outlets	**Telephone:**	None

EQUIPMENT AND FURNISHINGS

Equipment

Furniture

(2) Banquette seat set
(5) 24" x 36" table
(5) chair

COPYRIGHT © 2009 CRSA

BLANK

SECTION 6

SPACE SUMMARY

10	**BUILDING SUPPORT**			**1,960**
10.1				1,960
10.1.1	Loading Dock / Service	1	500	500
10.1.2	COA Remote Storage/Workroom	1	1,460	1,460

BLANK

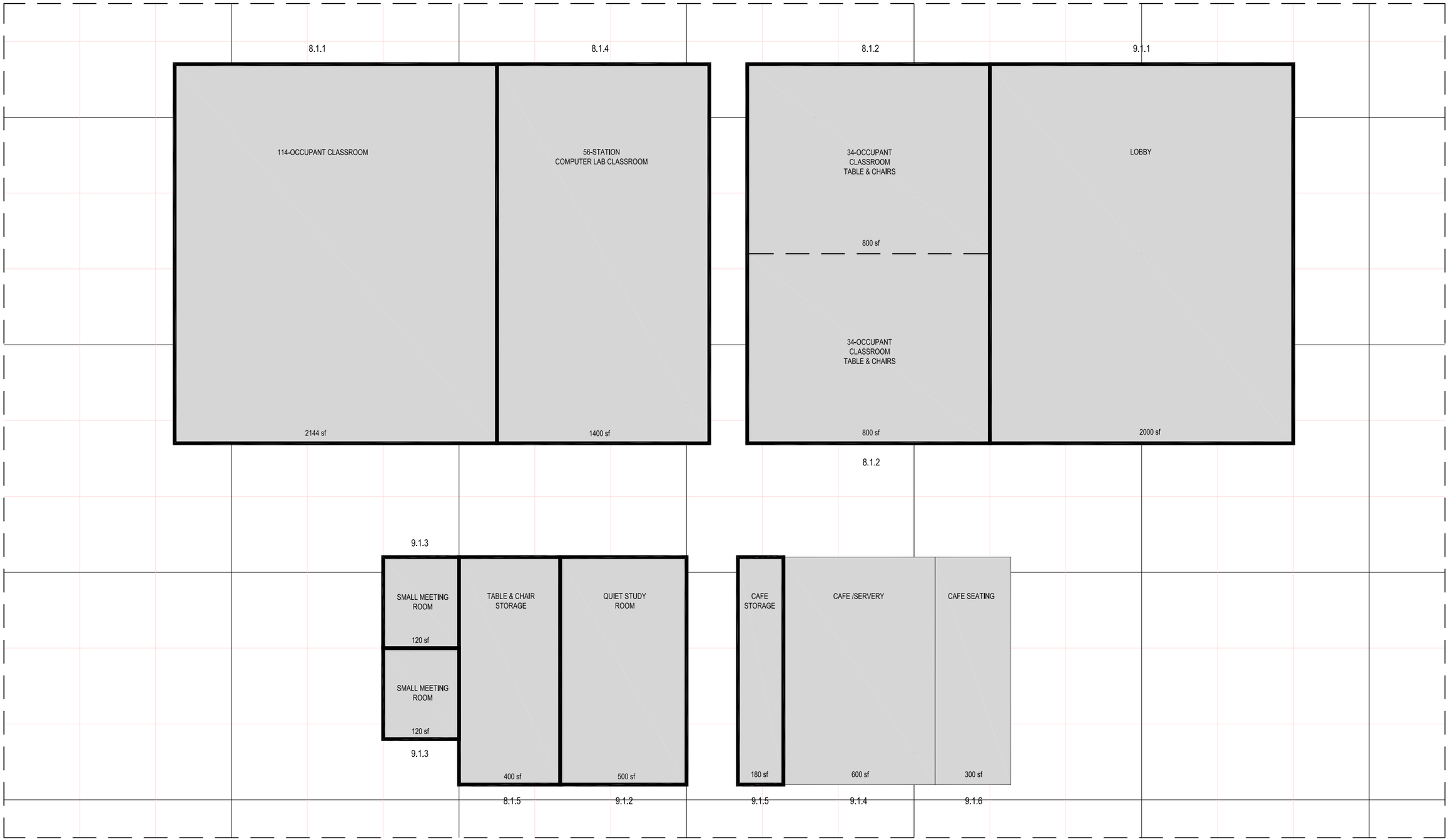

USU COA/ARS PROGRAM - RESOURCE & LOBBY AFFINITY MATRIX

BLANK

BLANK

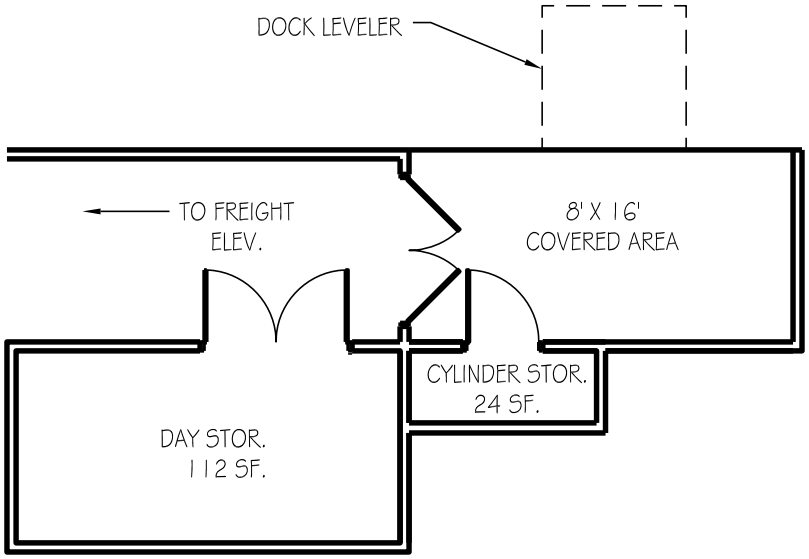

LOADING SERVICE
DOCK - 396 SF

USU Agriculture Building

ROOM DATA SHEET DETAIL **Building Support**

COA Building Support

10.1.1 Loading Dock/Service -

SPACE INFORMATION

Room Function: Loading, storage, cylinder drop/pick-up

Adjacencies: COA Remote Storage/Workroom (10.1.2)

Special Requirements: Corner guards

Access: Public

Room Utilization: 5 days a week, 8:00 AM to 5:00 PM

General Notes: None

ROOM SIZE AND CAPACITY

Proposed Area:	396 NSF	**Room/Space Quantity:**	1	**Total Area:**	396
Assigned Capacity:	0 Occupant(s)	**Unassigned Capacity:**	29 Guest(s)	**Total Capacity:**	29

FINISHES, DOORS, AND WINDOWS

Floor Finish: Concrete

Wall Finish: Gypsum board (painted)

Base Finish: Rubber

Doors:

Type:	Single	**Height:**	84"
Width:	36"	**Vision Panel:**	N/A

Ceiling Treatment: Exposed structure

Ceiling Height: 8' minimum

Acoustic Treatment: As needed

Windows:

Natural Lighting:	Not required
Room Skylight:	N/A

MECHANICAL/ELECTRICAL

HVAC:	Standard	**AV Requirements:**	None
Plumbing:	None	**Wire Management:**	Wall outlets
Fire Protection:	Sprinkler	**Data Management:**	None
Security:	Card Key Access	**Artificial Lighting:**	Direct/indirect fluorescent
Electrical:	120V wall outlets	**Telephone:**	None

EQUIPMENT AND FURNISHINGS

Equipment

(1) 72" x 60" Dock leveler

Furniture

COPYRIGHT © 2009 CRSA

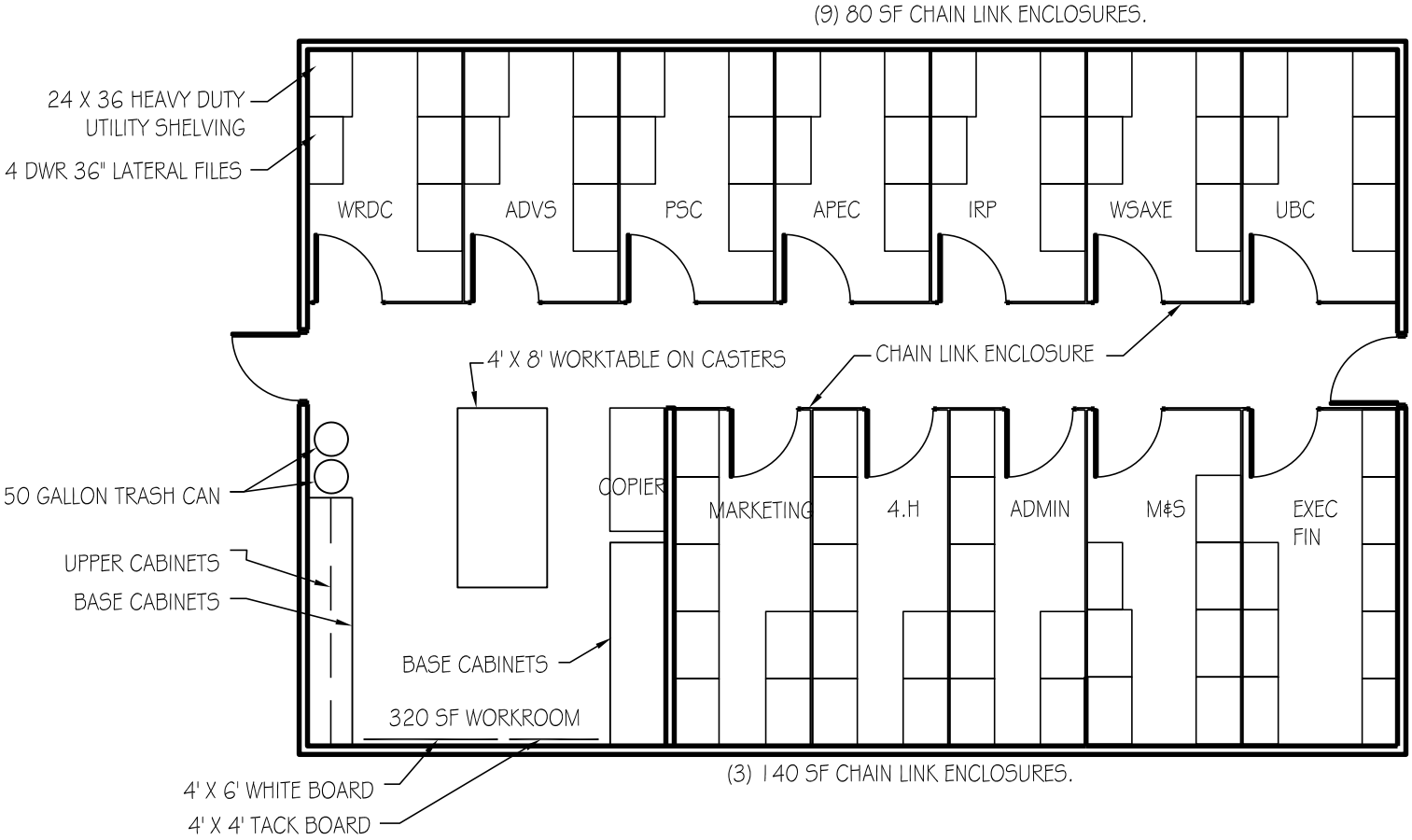

REMOTE STORAGE/
WORKROOM- 1512 SF

USU Agriculture Building

ROOM DATA SHEET DETAIL **Building Support**

COA Building Support

10.1.2 COA Remote Storage/Workroom -

SPACE INFORMATION

Room Function: Storage, preparation, layout and work

Adjacencies: Loading Dock/Service (10.1.1)

Special Requirements:
12 Chain link enclosures with workroom

Access: Public

Room Utilization: 5 days a week, 8:00 AM to 5:00 PM

General Notes: None

ROOM SIZE AND CAPACITY

Proposed Area:	1512 NSF	**Room/Space Quantity:**	1	**Total Area:**	1512
Assigned Capacity:	0 Occupant(s)	**Unassigned Capacity:**	3 Guest(s)	**Total Capacity:**	3

FINISHES, DOORS, AND WINDOWS

Floor Finish: Linoleum

Wall Finish: Gypsum board (painted)

Base Finish: Rubber

Doors:

Type:	Single	**Height:**	84"
Width:	36"	**Vision Panel:**	Frosted

Ceiling Treatment: Suspended acoustical lay-in tiles

Ceiling Height: 8' minimum

Acoustic Treatment: Acoustic seperation from adjacent spaces

Windows:

Natural Lighting:	Not required
Room Skylight:	Vision Panel

MECHANICAL/ELECTRICAL

HVAC:	Standard, space temperature control	**AV Requirements:**	None
Plumbing:	None	**Wire Management:**	Wall outlets
Fire Protection:	Smoke detector, sprinkler, and visual alarm	**Data Management:**	Tele/data outlet(s)
Security:	Keyed lock at entrance doors	**Artificial Lighting:**	Direct/indirect fluorescent
Electrical:	120V wall outlets	**Telephone:**	Wall mounted telephone jack

EQUIPMENT AND FURNISHINGS

Equipment

(1) Copier (provided by owner)

Furniture

(1) 18 LF Base cabinet
(1) 10 LF, 15-1/2" Deep adjustable height wall shelves
(15) 4 Drawer, 36" Lateral file
(54) 24" x 36" Heavy duty utility shelving units (i.e. gorilla racks)
(2) 50 Gallon trash cans
(1) 4' x 6' White board
(1) 4' x 4' Tack board
(1) 4' x 10' Work table on casters
(1) 8 LF task slatwall
(2) Task slatwall accessories package

COPYRIGHT © 2009 CRSA

BLANK

SECTION 7

FURNISHINGS, FIXTURES AND EQUIPMENT

FF&E SUMMARY	UNIT COST	QUANTITY	TOTAL COST	# SPACES	TOTAL OFFICE GROUP COST
			Grand Total:		**$3,503,451.00**
			Escalation to 2012 - 8% (included)		
Typical Office A - 120 SF:	**Unit Cost**	**Quantity**	**$5,217.00**	**44**	**$229,548.00**
13 lf work surface	$45.00	13	$585.00		
36" 2 drawer lateral file	$387.00	2	$774.00		
3 drawer PED file	$258.00	1	$258.00		
5 lf oval table on casters	$237.00	1	$237.00		
task chair	$741.00	1	$741.00		
guest chair	$297.00	2	$594.00		
12 lf bookshelves	$30.00	18	$540.00		
12 lf enclosed shelving with flipper doors	$55.00	12	$660.00		
6 lf task slatwall	$24.00	6	$144.00		
task slatwall accessory package	$170.00	1	$170.00		
under shelf task light	$120.00	1	$120.00		
whiteboard	$354.00	1	$354.00		
door mounted coat rack	$25.00	1	$25.00		
waste receptacle	$15.00	1	$15.00		
Typical Office B - 120 SF:	**Unit Cost**	**Quantity**	**$4,932.00**	**8**	**$39,456.00**
13 lf work surface	$45.00	13	$585.00		
36" 2 drawer lateral file	$387.00	2	$774.00		
3 drawer PED file	$258.00	1	$258.00		
task chair	$741.00	1	$741.00		
lounge chair	$600.00	2	$1,200.00		
8 lf bookshelves	$30.00	8	$240.00		
12 lf enclosed shelving with flipper doors	$55.00	12	$660.00		
6 lf task slatwall	$24.00	6	$144.00		
task slatwall accessory package	$170.00	1	$170.00		
under shelf task light	$120.00	1	$120.00		
door mounted coat rack	$25.00	1	$25.00		
waste receptacle	$15.00	1	$15.00		
Typical Office C - 120 SF:	**Unit Cost**	**Quantity**	**$4,159.00**	**24**	**$99,816.00**
11 lf work surface	$45.00	11	$495.00		
36" 2 drawer lateral file	$387.00	2	$774.00		
3 drawer PED file	$258.00	1	$258.00		
task chair	$741.00	1	$741.00		
guest chair	$297.00	1	$297.00		
8 lf bookshelves	$30.00	8	$240.00		
16 lf enclosed shelving with flipper doors	$55.00	16	$880.00		
6 lf task slatwall	$24.00	6	$144.00		
task slatwall accessory package	$170.00	1	$170.00		
under shelf task light	$120.00	1	$120.00		
door mounted coat rack	$25.00	1	$25.00		
waste receptacle	$15.00	1	$15.00		

Typical Office D - 120 SF:	Unit Cost	Quantity	$4,476.00	20	$89,520.00
21 lf work surface	$45.00	21	$945.00		
36" 2 drawer lateral file	$387.00	2	$774.00		
3 drawer PED file	$258.00	1	$258.00		
task chair	$741.00	1	$741.00		
guest chair	$297.00	2	$594.00		
8 lf bookshelves	$30.00	1	$30.00		
12 lf enclosed shelving with flipper doors	$55.00	12	$660.00		
6 lf task slatwall	$24.00	6	$144.00		
task slatwall accessory package	$170.00	1	$170.00		
under shelf task light	$120.00	1	$120.00		
door mounted coat rack	$25.00	1	$25.00		
waste receptacle	$15.00	1	$15.00		
220 SF Office - Dean:	**Unit Cost**	**Quantity**	**$13,898.00**	**1**	**$13,898.00**
30" x 72" table	$2,500.00	1	$2,500.00		
22 lf work surface	$65.00	22	$1,430.00		
task chair	$741.00	1	$741.00		
guest chair	$297.00	4	$1,188.00		
36" 2 drawer lateral file	$465.00	2	$930.00		
3 drawer PED file	$340.00	1	$340.00		
6 lf task slatwall	$24.00	6	$144.00		
task slatwall accessory package	$175.00	1	$175.00		
shelf organizer	$25.00	4	$100.00		
11 lf 15-1/2" deep open shelving	$80.00	11	$880.00		
68 lf fixed bookshelves	$75.00	68	$5,100.00		
under shelf task light	$120.00	1	$120.00		
desk task light	$200.00	1	$200.00		
door mounted coat rack	$30.00	1	$30.00		
waste receptacle	$20.00	1	$20.00		
Typical Workstation - 100 SF:	**Unit Cost**	**Quantity**	**$4,222.00**	**14**	**$59,108.00**
18 lf work surface	$45.00	18	$810.00		
task chair	$741.00	1	$741.00		
guest chair	$297.00	2	$594.00		
36" 2 drawer lateral file	$387.00	2	$774.00		
7 lf 15-1/2" deep enclosed shelving with flipper door	$55.00	7	$385.00		
14 lf open shelving	$30.00	14	$420.00		
under shelf task light	$120.00	1	$120.00		
7 lf task slatwall	$24.00	7	$168.00		
task slatwall accessory package	$170.00	1	$170.00		
door mounted coat rack	$25.00	1	$25.00		
waste receptacle	$15.00	1	$15.00		
1.1.3 Workstation - 100 SF:	**Unit Cost**	**Quantity**	**$4,222.00**	**1**	**$4,222.00**
18 lf work surface	$45.00	18	$810.00		
task chair	$741.00	1	$741.00		
guest chair	$297.00	2	$594.00		
36" 2 drawer lateral file	$387.00	2	$774.00		
14 lf 15-1/2" deep open shelving	$30.00	14	$420.00		
7 lf 15-1/2" deep enclosed shelving with flipper door	$55.00	7	$385.00		
under shelf task light	$120.00	1	$120.00		
7 lf task slatwall	$24.00	7	$168.00		
task slatwall accessory package	$170.00	1	$170.00		
door mounted coat rack	$25.00	1	$25.00		
waste receptacle	$15.00	1	$15.00		

Typical Office - 160 SF:	Unit Cost	Quantity	$12,599.00	12	$151,188.00
16 lf work surface	$65.00	1	$65.00		
5 lf oval conference table on casters	$400.00	1	$400.00		
task chair	$741.00	1	$741.00		
guest chair	$297.00	3	$891.00		
3 drawer PED file	$350.00	1	$350.00		
36" 2 drawer lateral file	$450.00	2	$900.00		
48 lf adjustable height shelving	$75.00	48	$3,600.00		
24 lf 12-1/2" deep enclosed shelving with flipper door	$80.00	24	$1,920.00		
under shelf task light	$120.00	1	$120.00		
8 lf task slatwall	$24.00	8	$192.00		
task slatwall accessory package	$170.00	1	$170.00		
desk task light	$190.00	1	$190.00		
door mounted coat rack	$25.00	1	$25.00		
waste receptacle	$15.00	1	$15.00		
32" flat panel monitor	$1,500.00	1	$1,500.00		
8 lf metal base cabinet with adjustable shelving	$190.00	8	$1,520.00		
3.1.1 Office - 160 SF:	**Unit Cost**	**Quantity**	**$13,508.00**	**12**	**$162,096.00**
23 lf work surface	$65.00	23	$1,495.00		
task chair	$741.00	1	$741.00		
guest chair	$297.00	2	$594.00		
3 drawer PED file	$350.00	1	$350.00		
36" 2 drawer lateral file	$450.00	2	$900.00		
48 lf adjustable height shelving	$75.00	48	$3,600.00		
24 lf 15-1/2" deep enclosed shelving with flipper door	$80.00	24	$1,920.00		
under shelf task light	$120.00	1	$120.00		
12 lf task slatwall	$24.00	12	$288.00		
task slatwall accessory package	$170.00	1	$170.00		
desk task light	$190.00	1	$190.00		
door mounted coat rack	$25.00	1	$25.00		
waste receptacle	$15.00	1	$15.00		
32" flat panel monitor	$1,500.00	1	$1,500.00		
42" metal storage cabinet with adjustable shelving	$800.00	2	$1,600.00		
Typical Open Workstation - 80 SF:	**Unit Cost**	**Quantity**	**$7,053.00**	**13**	**$91,689.00**
15 lf work surface	$275.00	15	$4,125.00		
36" 2 drawer lateral file	$387.00	2	$774.00		
3 drawer PED file	$258.00	1	$258.00		
7 lf 15-1/2" deep enclosed shelving with flipper door	$55.00	7	$385.00		
under shelf task light	$120.00	1	$120.00		
7 lf task slatwall	$24.00	7	$168.00		
task slatwall accessory package	$170.00	1	$170.00		
task chair	$741.00	1	$741.00		
guest chair	$297.00	1	$297.00		
waste receptacle	$15.00	1	$15.00		
Typical Open Workstation - 36 SF:	**Unit Cost**	**Quantity**	**$3,428.00**	**2**	**$6,856.00**
6 lf work surface	$275.00	6	$1,650.00		
3 drawer PED file	$258.00	1	$258.00		
task chair	$741.00	1	$741.00		
6 lf 15-1/2" deep enclosed shelving with flipper door	$55.00	6	$330.00		
under shelf task light	$120.00	1	$120.00		
6 lf task slatwall	$24.00	6	$144.00		
task slatwall accessory package	$170.00	1	$170.00		
waste receptacle	$15.00	1	$15.00		

Typical Open Workstation - 64 SF:	Unit Cost	Quantity	$7,947.00	33	$262,251.00
13 lf work surface	$275.00	13	$3,575.00		
3 drawer PED file	$258.00	1	$258.00		
task chair	$741.00	1	$741.00		
36" 2 drawer lateral file	$387.00	2	$774.00		
8 lf 15-1/2" deep enclosed shelving with flipper door	$55.00	8	$440.00		
under shelf task light	$120.00	1	$120.00		
8 lf task slatwall	$24.00	8	$192.00		
task slatwall accessory package	$170.00	1	$170.00		
waste receptacle	$15.00	1	$15.00		
optional guest chair	$297.00	1	$297.00		
optional 36" table on casters	$225.00	1	$225.00		
optional 36" 4 drawer lateral file	$435.00	2	$870.00		
optional 6 lf transaction counter	$45.00	6	$270.00		
Hoteling Space - 120 SF:	**Unit Cost**	**Quantity**	**$9,687.00**	**1**	**$9,687.00**
30" x 60" table	$440.00	1	$440.00		
task chair	$741.00	8	$5,928.00		
3' x 5' white board	$354.00	1	$354.00		
waste receptacle	$15.00	1	$15.00		
48" flat panel monitor	$2,500.00	1	$2,500.00		
conference telephone	$450.00	1	$450.00		
Small Meeting Room A - 120 SF:	**Unit Cost**	**Quantity**	**$9,687.00**	**8**	**$77,496.00**
30" x 60" table	$440.00	1	$440.00		
task chair	$741.00	8	$5,928.00		
3' x 5' white board	$354.00	1	$354.00		
waste receptacle	$15.00	1	$15.00		
48" flat panel monitor	$2,500.00	1	$2,500.00		
conference telephone	$450.00	1	$450.00		
Small Meeting Room B - 120 SF:	**Unit Cost**	**Quantity**	**$6,969.00**	**6**	**$41,814.00**
upholstered lounge chairs with tablet arm	$1,500.00	4	$6,000.00		
side table	$300.00	2	$600.00		
3' x 5' white board	$354.00	1	$354.00		
waste receptacle	$15.00	1	$15.00		
1.3.4.3 Workstation - Reception - 140 SF:	**Unit Cost**	**Quantity**	**$5,066.00**	**1**	**$5,066.00**
8 lf work surface	$45.00	8	$360.00		
8 lf transaction counter	$45.00	5	$225.00		
task chair	$741.00	2	$1,482.00		
guest chair	$297.00	4	$1,188.00		
36" 2 drawer lateral file	$387.00	2	$774.00		
8 lf task slatwall	$24.00	8	$192.00		
task slatwall accessory package	$170.00	2	$340.00		
8 lf 15-1/2" deep enclosed shelving with flipper doors	$55.00	1	$55.00		
under shelf task light	$120.00	1	$120.00		
waste receptacle	$15.00	2	$30.00		
side table	$300.00	1	$300.00		
Peer to Peer Hoteling - 120 SF:	**Unit Cost**	**Quantity**	**$5,718.00**	**1**	**$5,718.00**
guest chair	$297.00	3	$891.00		
task chair	$741.00	3	$2,223.00		
10 lf work surface	$45.00	10	$450.00		
10 lf enclosed shelving with flipper doors	$55.00	10	$550.00		
under shelf task light	$120.00	1	$120.00		
10 lf task slatwall	$24.00	10	$240.00		
task slatwall accessory package	$170.00	3	$510.00		
48" round table	$380.00	1	$380.00		
3' x 5' white board	$354.00	1	$354.00		

3.7.1 Reception - 180 SF:	Unit Cost	Quantity	$2,737.00	1	$2,737.00
11 lf work surface	$45.00	11	$495.00		
side table	$300.00	1	$300.00		
upholstered lounge chairs	$600.00	2	$1,200.00		
table lamp	$200.00	1	$200.00		
42" 2 drawer lateral file	$425.00	1	$425.00		
8 lf transaction counter	$81.00	1	$81.00		
3 drawer PED file	$258.00	2	$516.00		
waste receptacle	$15.00	1	$15.00		
1.6.1 Reception - 180 SF:	**Unit Cost**	**Quantity**	**$4,150.00**	**1**	**$4,150.00**
side table	$300.00	1	$300.00		
upholstered lounge chairs	$600.00	4	$2,400.00		
table lamp	$200.00	2	$400.00		
11 lf tackable wall surface	$50.00	11	$550.00		
under counter refrigerator	$500.00	1	$500.00		
Work Room - 250 SF:	**Unit Cost**	**Quantity**	**$16,392.00**	**6**	**$98,352.00**
10 lf task slatwall	$24.00	10	$240.00		
paper tray	$18.00	24	$432.00		
mail slots	$18.00	45	$810.00		
4' x 4' tack board	$162.00	1	$162.00		
4' x 4' white board	$354.00	1	$354.00		
36" 4 drawer lateral file	$756.00	4	$3,024.00		
refrigerator	$800.00	1	$800.00		
microwave	$275.00	1	$275.00		
coffee maker	$150.00	1	$150.00		
ten gallon recycling bin	$40.00	3	$120.00		
ten gallon waste receptacle	$25.00	1	$25.00		
copier	$10,000.00	1	$10,000.00		
Staff Break Area - 100 SF:	**Unit Cost**	**Quantity**	**$1,800.00**	**1**	**$1,800.00**
refrigerator	$800.00	1	$800.00		
microwave	$275.00	1	$275.00		
coffee maker	$150.00	1	$150.00		
apartment size dishwasher	$550.00	1	$550.00		
10 gallon waste receptacle	$25.00	1	$25.00		
Catering Prep - 80 SF:	**Unit Cost**	**Quantity**	**$2,685.00**	**1**	**$2,685.00**
12 lf open shelving	$30.00	12	$360.00		
refrigerator	$800.00	1	$800.00		
ice maker	$1,500.00	1	$1,500.00		
10 gallon waste receptacle	$25.00	1	$25.00		
Conference Room - 420 SF:	**Unit Cost**	**Quantity**	**$24,003.00**	**1**	**$24,003.00**
30" x 60" table	$440.00	6	$2,640.00		
task chair	$741.00	20	$14,820.00		
guest chair	$297.00	14	$4,158.00		
4' x 6' whiteboard	$380.00	2	$760.00		
conference telephone	$450.00	1	$450.00		
72" projection screen, electric	$500.00	1	$500.00		
projector	$675.00	1	$675.00		
Conference Room - 768 SF:	**Unit Cost**	**Quantity**	**$32,850.00**	**1**	**$32,850.00**
30" x 60" table	$440.00	8	$3,520.00		
task chair	$741.00	20	$14,820.00		
guest chair - stackable	$297.00	41	$12,177.00		
72" projection screen, electric	$500.00	1	$500.00		
projector	$675.00	1	$675.00		
3' x 5' white board	$354.00	2	$708.00		
conference telephone	$450.00	1	$450.00		

Conference Room - 360 SF:	Unit Cost	Quantity	$18,847.00	1	$18,847.00
30" x 60" table	$440.00	7	$3,080.00		
task chair	$741.00	18	$13,338.00		
conference telephone	$450.00	1	$450.00		
3' x 5' white board	$354.00	1	$354.00		
conference telephone	$450.00	1	$450.00		
72" projection screen, electric	$500.00	1	$500.00		
projector	$675.00	1	$675.00		
Marketing/Video/Multi-use Studio - 360 SF:	**Unit Cost**	**Quantity**	**$16,860.00**	**1**	**$16,860.00**
30" x 60" table	$440.00	4	$1,760.00		
stackable chair on casters	$265.00	12	$3,180.00		
10 lf tack board	$42.00	10	$420.00		
50" flat screen television	$2,200.00	1	$2,200.00		
HD pan and tilt HD conferencing cameras	$1,800.00	3	$5,400.00		
moveable lights	$2,500.00	1	$2,500.00		
8' x 10' roll up back drop and frames	$700.00	2	$1,400.00		
Webcast Production/Photo Studio - 220 SF:	**Unit Cost**	**Quantity**	**$9,741.00**	**1**	**$9,741.00**
30" x 60" table on casters	$440.00	2	$880.00		
stackable chair on casters	$265.00	8	$2,120.00		
task chair	$741.00	1	$741.00		
26.75" x 16.75" adjustable podium	$700.00	1	$700.00		
60" x 24" deep news anchor desk	$1,700.00	1	$1,700.00		
50" flat screen television	$1,800.00	2	$3,600.00		
Multi-Media Mixing Room - 120 SF:	**Unit Cost**	**Quantity**	**$4,476.00**	**1**	**$4,476.00**
21 lf work surface	$45.00	21	$945.00		
36" 2 drawer lateral file	$387.00	2	$774.00		
3 drawer PED file	$258.00	1	$258.00		
task chair	$741.00	1	$741.00		
guest chair	$297.00	2	$594.00		
8 lf bookshelves	$30.00	1	$30.00		
12 lf enclosed shelving with flipper doors	$55.00	12	$660.00		
6 lf task slatwall	$24.00	6	$144.00		
task slatwall accessory package	$170.00	1	$170.00		
under shelf task light	$120.00	1	$120.00		
door mounted coat rack	$25.00	1	$25.00		
waste receptacle	$15.00	1	$15.00		
Open Workstation - 42 SF:	**Unit Cost**	**Quantity**	**$4,253.00**	**8**	**$34,024.00**
9 lf work surface	$275.00	9	$2,475.00		
task chair	$741.00	1	$741.00		
3 drawer PED file	$258.00	1	$258.00		
6 lf enclosed shelving with flipper doors	$55.00	6	$330.00		
under shelf task light	$120.00	1	$120.00		
6 lf task slatwall	$24.00	6	$144.00		
task slatwall accessory package	$170.00	1	$170.00		
waste receptacle	$15.00	1	$15.00		
Conference Room - 180 SF:	**Unit Cost**	**Quantity**	**$14,456.00**	**6**	**$86,736.00**
30" x 60" table	$440.00	4	$1,760.00		
task chair	$741.00	12	$8,892.00		
3' x 5' white board	$354.00	1	$354.00		
60" flat screen television	$3,000.00	1	$3,000.00		
conference telephone	$450.00	1	$450.00		

Lab Tech - 48 SF:	Unit Cost	Quantity	$6,347.00	16	$101,552.00
12 lf work surface	$315.00	12	$3,780.00		
task chair	$741.00	1	$741.00		
2 drawer PED file	$258.00	1	$258.00		
36" 2 drawer lateral file	$387.00	2	$774.00		
6 lf task slatwall	$24.00	6	$144.00		
task slatwall accessory package	$170.00	1	$170.00		
12 lf open shelving	$30.00	12	$360.00		
under shelf task light	$120.00	1	$120.00		
Post Doc Suite Workstation - 60 SF:	**Unit Cost**	**Quantity**	**$7,517.00**	**14**	**$105,238.00**
14 lf work surface	$315.00	14	$4,410.00		
task chair	$741.00	1	$741.00		
2 drawer PED file	$258.00	1	$258.00		
36" 2 drawer lateral file	$387.00	2	$774.00		
6 lf task slatwall	$24.00	6	$144.00		
task slatwall accessory package	$170.00	1	$170.00		
30 lf open shelving	$30.00	30	$900.00		
under shelf task light	$120.00	1	$120.00		
Grad Student Open Workstation - 25 SF:	**Unit Cost**	**Quantity**	**$3,059.00**	**116**	**$354,844.00**
5 lf work surface	$275.00	5	$1,375.00		
5 lf enclosed shelving with flipper doors	$55.00	5	$275.00		
5 lf task slatwall	$24.00	5	$120.00		
task slatwall accessory package	$170.00	1	$170.00		
task chair	$741.00	1	$741.00		
under shelf task light	$120.00	1	$120.00		
2 drawer PED file	$258.00	1	$258.00		
Collaborative Grad Student Support - 210 SF:	**Unit Cost**	**Quantity**	**$4,921.00**	**9**	**$44,289.00**
5 lf oval table on casters	$237.00	1	$237.00		
guest chair on casters	$265.00	4	$1,060.00		
upholstered lounge chairs	$600.00	3	$1,800.00		
side table	$300.00	2	$600.00		
tack board	$162.00	1	$162.00		
3' x 6' white board	$354.00	3	$1,062.00		
114 Seat Classroom - 2144 SF:	**Unit Cost**	**Quantity**	**$47,761.00**	**1**	**$47,761.00**
24" x 60" fixed tables	$490.00	57	$27,930.00		
chair	$117.00	112	$13,104.00		
tablet arm desk	$745.00	2	$1,490.00		
72" projection screen, electric	$500.00	1	$500.00		
projector	$675.00	1	$675.00		
portable instructor podium	$3,000.00	1	$3,000.00		
3' x 6' white board	$354.00	3	$1,062.00		
34 Seat Classroom - 800 SF:	**Unit Cost**	**Quantity**	**$17,055.00**	**1**	**$17,055.00**
24" x 60" tables	$490.00	16	$7,840.00		
chair	$117.00	34	$3,978.00		
72" projection screen, electric	$500.00	1	$500.00		
projector	$675.00	1	$675.00		
portable instructor podium	$3,000.00	1	$3,000.00		
3' x 6' white board	$354.00	3	$1,062.00		

Computer Lab/Classroom - 1800 SF:	Unit Cost	Quantity	$66,764.00	1	$66,764.00
36" x 60" tables	$540.00	28	$15,120.00		
chair on casters	$486.00	57	$27,702.00		
72" projection screen, electric	$500.00	1	$500.00		
projector	$675.00	1	$675.00		
24 lf white board	$85.00	24	$2,040.00		
portable instructor podium	$3,000.00	1	$3,000.00		
10 gallon waste receptacle	$25.00	1	$25.00		
10 gallon recycling	$40.00	1	$40.00		
tack board	$162.00	1	$162.00		
copier	$10,000.00	1	$10,000.00		
printer	$2,500.00	3	$7,500.00		
Table and Chair Storage - 400 SF:	**Unit Cost**	**Quantity**	**$6,600.00**	**1**	**$6,600.00**
table storage carts	$300.00	12	$3,600.00		
chair storage carts	$200.00	15	$3,000.00		
Lobby - 200 SF:	**Unit Cost**	**Quantity**	**$80,720.00**	**1**	**$80,720.00**
upholstered lounge chairs	$600.00	12	$7,200.00		
bench	$1,200.00	2	$2,400.00		
side table	$300.00	10	$3,000.00		
48" round table	$380.00	4	$1,520.00		
chair	$300.00	8	$2,400.00		
banquette table and two benches	$5,800.00	4	$23,200.00		
14' x 24' area rug	$28,000.00	1	$28,000.00		
12' x 12' area rug	$12,000.00	1	$12,000.00		
potted plant	$500.00	2	$1,000.00		
Quiet Study Room - 500 SF:	**Unit Cost**	**Quantity**	**$30,668.00**	**1**	**$30,668.00**
upholstered lounge chairs with tablet arm	$1,500.00	2	$3,000.00		
side table	$300.00	2	$600.00		
48" round table	$380.00	2	$760.00		
chair	$300.00	8	$2,400.00		
banquette table and two benches	$5,800.00	4	$23,200.00		
3' x 5' white board	$354.00	2	$708.00		
Café Storage - 180 SF:	**Unit Cost**	**Quantity**	**$5,250.00**	**1**	**$5,250.00**
24" x 36" wire storage shelving	$200.00	4	$800.00		
14" x 36" wire storage shelving	$150.00	3	$450.00		
6' commercial refrigerator	$3,500.00	1	$3,500.00		
24" x 48" work table	$400.00	1	$400.00		
stool	$100.00	1	$100.00		
Café Servery - 600 SF:	**Unit Cost**	**Quantity**	**$48,710.00**	**1**	**$48,710.00**
cold case	$4,500.00	1	$4,500.00		
18 lf transaction counter	$45.00	18	$810.00		
36" x 60" sandwich table with integral refrigerator unit	$2,000.00	1	$2,000.00		
24" x 36" stainless steel work table	$600.00	1	$600.00		
10 lf menu board	$2,000.00	1	$2,000.00		
computer with touch screen monitor, cpu and cash drawer	$1,800.00	1	$1,800.00		
6' commercial refrigerator	$3,500.00	1	$3,500.00		
espresso machine	$2,500.00	1	$2,500.00		
soft drink dispenser	$5,000.00	1	$5,000.00		
commercial coffee maker	$3,000.00	1	$3,000.00		
3 compartment sink	$1,700.00	1	$1,700.00		
wall mounted hand sink	$600.00	1	$600.00		
warming ovens	$5,000.00	3	$15,000.00		
4 burner gas stove	$3,700.00	1	$3,700.00		
hood	$2,000.00	1	$2,000.00		

Café Seating - 300 SF:	Unit Cost	Quantity	$10,200.00	1	$10,200.00
banquette seat set	$3,000.00	2	$6,000.00		
24" x 36" table	$540.00	5	$2,700.00		
chair	$300.00	5	$1,500.00		
Loading Service Dock - 396 SF:	**Unit Cost**	**Quantity**	**$1,200.00**	**1**	**$1,200.00**
24" x 36" wire storage shelving	$200.00	6	$1,200.00		
Remote Storage/Workroom - 1512 SF:	**Unit Cost**	**Quantity**	**$42,820.00**	**1**	**$42,820.00**
4' x 10" table on casters	$800.00	1	$800.00		
10 lf adjustable height wall shelves	$30.00	10	$300.00		
36" 4 drawer lateral file	$756.00	15	$11,340.00		
24" x 36" heavy duty shelving	$350.00	54	$18,900.00		
50 gallon garbage cans	$150.00	2	$300.00		
4' x 6' whiteboard	$486.00	1	$486.00		
4' x 4' tack board	$162.00	1	$162.00		
8 lf task slatwall	$24.00	8	$192.00		
task slatwall accessory package	$170.00	2	$340.00		
copier	$10,000.00	1	$10,000.00		
General Math & Stats Advising - 140 SF:	**Unit Cost**	**Quantity**	**$4,800.00**		
task chair	$300.00	8	$2,400.00		
30" x 72" table	$600.00	4	$2,400.00		
Floor Lobbies and Corridors:	**Unit Cost**	**Quantity**	**$43,400.00**	**1**	**$43,400.00**
upholstered lounge chairs	$600.00	4	$2,400.00		
ottoman	$350.00	3	$1,050.00		
tablet arm chair	$1,400.00	4	$5,600.00		
planter	$600.00	2	$1,200.00		
vending machines	$800.00	1	$800.00		
display cases	$800.00	2	$1,600.00		
240 lf display rails in corridors	$40.00	240	$9,600.00		
48" flat panel monitor	$2,500.00	4	$10,000.00		
free standing workstation	$1,200.00	4	$4,800.00		
computer workstation (monitor, keyboard, cpu)	$1,500.00	4	$6,000.00		
literature racks	$275.00	10	$2,750.00		
Miscellaneous:	**Unit Cost**	**Quantity**	**$6,290.00**	**1**	**$6,290.00**
three compartment recycling bins	$225.00	8	$1,800.00		
30 gallon garbage cans	$125.00	10	$1,250.00		
battery operated clocks	$90.00	36	$3,240.00		

IT Equipment	Unit Cost	Quantity	$19,740.00	1	$19,740.00
Projector	$2,800.00	1	$2,800.00		
Projector Lamp (Spare)	$500.00	1	$500.00		
Projector Mount	$160.00	1	$160.00		
Speaker w/ Bracket (Black)	$160.00	2	$320.00		
Extron 5BNCF to VGAM	$35.00	2	$70.00		
Extron 5BNCM to VGAM	$35.00	1	$35.00		
Extron VGA-A 90M-M MD/3	$65.00	1	$65.00		
Extron Interface Plate	$145.00	1	$145.00		
Sony DVD Player	$300.00	1	$300.00		
Crestron Control Processor	$1,200.00	1	$1,200.00		
Crestron Control Touch Panel (Black)	$1,600.00	1	$1,600.00		
Crestron IRP-2 IR Transmitter	$35.00	2	$70.00		
Altinex DA Splitter	$265.00	1	$265.00		
Audio Amplifier	$650.00	1	$650.00		
Extron Presentation Switcher	$1,300.00	1	$1,300.00		
Raxxess 2RU Shelf	$35.00	2	$70.00		
Raxxess 3RU Space Drawer	$145.00	1	$145.00		
Middle Atlantic Power Distributor	$135.00	2	$270.00		
Dell PC w/Monitor	$1,500.00	1	$1,500.00		
Samsung Digital Doc Cam	$1,000.00	1	$1,000.00		
Misc Wire & Connectors	$500.00	1	$500.00		
IT Engineering & Installation @ $55 per hr	$55.00	20	$1,100.00		
Capture Card	$1,100.00	1	$1,100.00		
Sony HD Camera	$4,000.00	1	$4,000.00		
Shure Wireless Mic SLX 14/93 freq J3	$575.00	1	$575.00		
Signage	**Unit Cost**	**Quantity**	**$14,685.00**	**1**	**$14,685.00**
ADA/Code Required Signage	$35.00	65	$2,275.00		
Main Lobby Directory	$1,800.00	1	$1,800.00		
3 Floor Lobby Directory	$900.00	3	$2,700.00		
Interior Building Signs	$35.00	226	$7,910.00		
Lab Casework:	**Unit Cost**	**Quantity**	**$16,650**	**1**	**$16,650.00**
Systems Furniture (cost per LF)					
LF work surface, 30" deep - Systems furniture	$45	144	$6,480		
LF lockable binder bins, 15" deep - Systems furniture	$55	90	$4,950		
LF Taskrail and components - Systems furniture	$24	90	$2,160		
Task Slatwall accessories package	$170	18	$3,060		
Lab Equipment:	**Unit Cost**	**Quantity**	**$685,315**	**1**	**$685,315.00**
4' Fume Hood - freestanding	$6,330	2	$12,660		
6' Fume Hood - freestanding	$7,845	16	$125,520		
5' Class II/A2 Bio Safety Cabinet - freestanding	$10,635	7	$74,445		
4' Class II/B2 Bio Safety Cabinet - freestanding	$13,080	4	$52,320		
6' Class II/B2 Bio Safety Cabinet - freestanding	$15,260	5	$76,300		
4' PCR Hood	$6,625	1	$6,625		
6' Perchlorate / Acid Washdown Hood - freestanding	$20,365	1	$20,365		
GloveBox	$6,035	1	$6,035		
250 Liter capacity Autoclave - freestanding	$44,725	3	$134,175		
450 Liter capacity Autoclave - freestanding	$61,350	1	$61,350		
Steamscrubber Glassware Washer - under counter	$7,300	3	$21,900		
Water polisher/purifier - PS/HPLC Polishing station	$5,120	3	$15,360		
Lab Refrigerator , 25 cubic feet - replacement allowance	$3,145	2	$6,290		
Lab -20 Freezer , 25 cubic feet - replacement allowance	$2,595	2	$5,190		
Lab -80 Freezer , 25 cubic feet - replacement allowance	$7,090	2	$14,180		
Walk-in cold room 8x10 - 4 degrees C	$13,150	4	$52,600		

Lab Furnishings:	Unit Cost	Quantity	$67,010	1	$67,010.00
STORAGE					
File Cabinet					
3-drawer mobile pedestal	$258	18	$4,644		
Other storage					
36" x 24" x 84" locking two door cabinet - metal	$590	4	$2,360		
36" x 24" x 84" locking two door cabinet - wood	$964	8	$7,712		
30" x 18" x 84" shelving unit - metal	$446	4	$1,784		
24" x 24" x 84" cabinet w/fan - stainless	$1,124	6	$6,744		
36" x 48" glassware drying peg rack	$273	4	$1,092		
SEATING					
Chairs					
Adjustable height lab chair w/casters, lumbar support - desk	$642	9	$5,778		
Adjustable height lab stool w/casters, lumbar support - cour	$411	48	$19,728		
Lab chairs (for classroom) - adjustable height, desk height	$288	16	$4,608		
Lab stools (for classroom) - adjustable height, counter heigl	$222	24	$5,328		
WALL MOUNT					
4'x3' Whiteboard	$248	19	$4,712		
4'x6' Whiteboard	$420	6	$2,520		
				Grand Total:	**$3,503,451.00**
				Escalation to 2012 - 8% (included)	

BLANK

SECTION 8

COST ESTIMATE – COA

The cost model used in this facilities program is based on the conceptual building design prepared by the programming and conceptual design team of HDR/CUH2A in association with HDR. The conceptual design graphics, see Section 4.4, have been reviewed and approved by the Executive Committee of the College of Agriculture Building project.

The preliminary visualization process was an integrated component of the programming and conceptual design phase. Graphic illustrations served as check to the programming efforts. In addition, as the project form developed in concert with discussions with President Albrecht, USU Planning, Design and Construction, and the USU Operations teams to inform and improve the program.

With respect to construction cost, the conceptual design graphics and the underlying design concepts represent a reasonable indicator of the quality of the building sought by USU and the College of Agriculture for the new College of Agriculture Building.

During the course of the programming and conceptual design effort, the uncertainties of the current construction market in Utah were a recurring topic of discussion. We are award that the State of Utah, as well as the nation, is in the midst of a recession. With that said, it is difficult to know if there will be inflation in the coming year or to what level An inflation rate of 4% per annum was used, based on an estimated bid date of Summer 2012.

This programming effort has moved in parallel with the cost estimate. In 2008, the Utah Legislature approved the total project cost of $43,118,000 for the College of Agriculture building. Bond approval is currently tied to the approval of federal funding of the USDA ARS component of the project. While funding-related decisions that could be made to this point have been made, significant uncertainty remains because of two factors that will remain unknown until after this program is complete:

- The actual date for design and construction funding of the USDA ARS building.
- The actual construction cost increases that occur between now and the time of bidding.

The following pages present the cost estimate. It includes site development for the new College Agriculture building, less the footprint of the ARS building, utility tunnel extension, and paving, landscape and irrigation. In addition, the estimate summarizes the project by area as well as specification division breakdown. This effort allows the team to illustrate the development costs of lab and non-lab spaces.

Total Project Cost – 110,000 gsf Building

College of Agriculture	
Building	$ 27,048,210
General Conditions	$ 1,622,893
Bonding	$ 270,482
Contractor Overhead and Profit	$ 1,352,411
Design Contingency	$ 2,704,821
	$ 32,998,817
Escalation	$ 1,081,928
College of Agriculture (Building Construction Estimate)	$ 34,080,745
College of Agriculture (Building Budget)	$ 31,346,638
Building Construction Overage	**$ 2,734,107**
Site Development	$ 3,147,762
Soft Costs (20% of overall project budget)	$ 8,623,600
Total Project Construction Estimate	$ 45,852,107
Overall Project Budget	$ 43,118,000
Overall Project Overage	**$ 2,734,107**

PROJECT COST ESTIMATE

PROJECT S U M M A R Y

SECTION	AREA	UNIT	COST/SF	COST
PROJECT COST:				
OVERALL PROJECT BUDGET				$43,118,000
SOFT COST ALLOWANCE			20.0%	$8,623,600
SITE DEVELOPMENT ESTIMATE	115,000	SF	27.37	$3,147,762
BUILDING BUDGET TOTAL				$31,346,638
BUILDING CONSTRUCTION ESTIMATE	107,160	GSF	318.04	$34,080,745
BUILDING CONSTRUCTION OVERAGE				$2,734,107

NOTES: Costs are for Construction only.
Costs are for a "LEED Silver" Facility.
Costs are Based on a Competitive Bid Basis.
Costs are Based on a Construction Start of Summer 2010.

PROGRAM CONSTRUCTION COST ESTIMATE

MASTER SUMMARY

SECTION	AREA	UNIT	COST/SF	COST
CONSTRUCTION COST:				
BUILDING	107,160	GSF	318.04	$34,080,745
SITE DEVELOPMENT	115,000	SF	27.37	$3,147,762
TOTAL (Construction)				$37,228,507

NOTES: Costs are for Construction only.
Costs are for a "LEED Silver" Facility.
Costs are Based on a Competitive Bid Basis.
Costs are Based on a Construction Start of Summer 2010.

PROGRAM CONSTRUCTION COST ESTIMATE

BUILDING SUMMARY

SECTION		AREA	UNIT	COST/SF	COST
ARCHITECTURAL		107,160	GSF	106.95	$11,460,475
STRUCTURAL		107,160	GSF	45.71	$4,898,810
MECHANICAL		107,160	GSF	66.98	$7,177,480
ELECTRICAL		107,160	GSF	32.77	$3,511,445
SUB TOTAL		107,160	GSF	252.41	$27,048,210
GENERAL CONDITIONS	6.0%				$1,622,893
BONDING	1.0%				$270,482
OVERHEAD & PROFIT	5.0%				$1,352,411
SUB TOTAL		107,160	GSF	282.70	$30,293,995
DESIGN CONTINGENCY	10.0%				$2,704,821
INFLATION TO BID DATE (Summer 2010)	4.0%				$1,081,928
TOTAL (Construction)		107,160	GSF	318.04	$34,080,745

NOTES: Costs are for Construction only.
Costs are for a "LEED Silver" Facility.
Costs are Based on a Competitive Bid Basis.
Costs are Based on a Construction Start of Summer 2010.

PROGRAM CONSTRUCTION COST ESTIMATE

BUILDING DETAIL

SECTION	QUANTITY	UNIT	UNIT COST	COST
ARCHITECTURAL				
ROOF				
Membrane Roofing System, Rigid Insul & Flashings	28,600	SF	9.00	$257,400
Skylight System	970	SF	100.00	$97,000
			3.31	**$354,400**
EXTERIOR WALLS				
Foundation Waterproofing w/ Rigid Insulation	3,060	SF	6.50	$19,890
Stone/Brick Veneer, Metal Studs, Batt Insul, Gyp Bd	31,360	SF	40.00	$1,254,400
Metal Panels, Metal Studs, Batt Insulation & Gypsum Board (Penthouse)	6,080	SF	25.00	$152,000
			13.31	**$1,426,290**
INTERIOR WALLS				
Metal Studs, Sound Insulation & Gypsum Board	114,390	SF	8.50	$972,315
			9.07	**$972,315**

PROGRAM CONSTRUCTION COST ESTIMATE

B U I L D I N G D E T A I L

SECTION	QUANTITY	UNIT	UNIT COST	COST
ARCHITECTURAL - Continued				
DOORS AND WINDOWS				
Aluminum Windows / Curtainwall w/ Glass	37,120	SF	75.00	$2,784,000
Sun Shading Devices	7,420	SF	90.00	$667,800
Interior Windows / Sidelights	4,950	SF	40.00	$198,000
Man Doors w/ Hardware	260	LEAF	1,600	$416,000
			37.94	**$4,065,800**
FINISHES				
Floor Finishes	107,160	SF	6.50	$696,540
Wall Finishes	239,600	SF	1.50	$359,400
Ceiling Finishes	107,160	SF	4.50	$482,220
			14.35	**$1,538,160**
SPECIALTIES				
Cabinets	880	LF	285.00	$250,800
Bath Accessories	10	EA	4,200	$42,000
Misc Specialties	107,160	SF	2.00	$214,320
			4.73	**$507,120**

PROGRAM CONSTRUCTION COST ESTIMATE

B U I L D I N G D E T A I L

SECTION	QUANTITY	UNIT	UNIT COST	COST
ARCHITECTURAL - Continued				
EQUIPMENT				
Lab Casework	2,930	LF	435.00	$1,274,550
Lab Equipment	34,950	SF	18.00	$629,100
Misc Equipment	107,160	SF	1.50	$160,740
			19.26	**$2,064,390**
CONVEYING SYSTEM				
Elevators	14	STOP	38,000	$532,000
			4.96	**$532,000**

PROGRAM CONSTRUCTION COST ESTIMATE

BUILDING DETAIL

SECTION	QUANTITY	UNIT	UNIT COST	COST
STRUCTURAL				
FOUNDATION				
Excavation and Backfill, Foundation	3,670	CY	23.00	$84,410
Concrete Footings, Reinf	560	CY	385.00	$215,600
Concrete Basement / Foundation Walls, Reinf	5,920	SF	24.00	$142,080
			4.13	**$442,090**
FLOORS				
Concrete Slab on Grade w/ Reinf	28,600	SF	5.00	$143,000
Steel Structure, Fireproofing, Steel Deck w/ Conc Slab	78,560	SF	37.00	$2,906,720
Steel Pan Stairs w/ Railings	11	FLT	22,000	$242,000
			30.72	**$3,291,720**
COLUMNS				
Steel Columns / Bracing w/ Fireproofing	107,160	SF	4.00	$428,640
			4.00	**$428,640**

PROGRAM CONSTRUCTION COST ESTIMATE

B U I L D I N G D E T A I L

SECTION	QUANTITY	UNIT	UNIT COST	COST
STRUCTURAL - Continued				
ROOF				
Steel Structure, Decking & Fireproofing	28,600	SF	20.00	$572,000
			5.34	**$572,000**
INTERIOR WALLS				
CMU Interior Walls	11,740	SF	14.00	$164,360
			1.53	**$164,360**

PROGRAM CONSTRUCTION COST ESTIMATE

B U I L D I N G D E T A I L

SECTION	QUANTITY	UNIT	UNIT COST	COST
MECHANICAL				
FIRE PROTECTION				
Fire Sprinkler System	107,160	SF	3.50	$375,060
			3.50	**$375,060**
PLUMBING				
Plumbing Fixtures w/ Piping	170	EA	3,300	$561,000
Plumbing Equipment & Specialties	107,160	SF	2.50	$267,900
Lab Piping System	34,950	SF	6.00	$209,700
			9.69	**$1,038,600**
HVAC				
HVAC Ductwork & Insulation	128,600	LB	7.00	$900,200
HVAC Grilles, Registers & Diffusers	1,190	EA	120.00	$142,800
HVAC VAV Boxes	152	EA	1,600	$243,200
HVAC Equipment	107,160	SF	18.00	$1,928,880
HVAC Piping & Specialties	107,160	SF	6.00	$642,960
HVAC Control System	107,160	SF	5.00	$535,800
Lab Systems	34,950	SF	30.00	$1,048,500
Test, Balance & Commissioning	107,160	SF	3.00	$321,480
			53.79	**$5,763,820**

PROGRAM CONSTRUCTION COST ESTIMATE

B U I L D I N G D E T A I L

SECTION	QUANTITY	UNIT	UNIT COST	COST
ELECTRICAL				
ELECTRICAL				
Light Fixtures	1,785	EA	265.00	$473,025
Devices (Outlets & Switches)	2,380	EA	100.00	$238,000
Gear (Panels & Transformers)	107,160	SF	4.00	$428,640
Emergency Generator	1	EA	175,000	$175,000
Feeder & Branch Circuitry	107,160	SF	7.00	$750,120
Fire Alarm System	107,160	SF	2.00	$214,320
Phone / Data System	107,160	SF	3.50	$375,060

PROGRAM CONSTRUCTION COST ESTIMATE

B U I L D I N G D E T A I L

SECTION		QUANTITY	UNIT	UNIT COST	COST
ELECTRICAL - Continued					
ELECTRICAL - Continued					
Security System		107,160	SF	4.00	$428,640
Special Systems		107,160	SF	3.00	$321,480
Electrical Specialties		107,160	SF	1.00	$107,160
				32.77	**$3,511,445**
SUB TOTAL		**107,160**	**GSF**	**252.41**	**$27,048,210**
GENERAL CONDITIONS	**6.0%**				**$1,622,893**
BONDING	**1.0%**				**$270,482**
OVERHEAD & PROFIT	**5.0%**				**$1,352,411**
SUB TOTAL		**107,160**	**GSF**	**282.70**	**$30,293,995**
DESIGN CONTINGENCY	**10.0%**				**$2,704,821**
INFLATION TO BID DATE (Summer 2010)	**4.0%**				**$1,081,928**
TOTAL (Construction)		**107,160**	**GSF**	**318.04**	**$34,080,745**

NOTES: Costs are for Construction only.
Costs are for a "LEED Silver" Facility.
Costs are Based on a Competitive Bid Basis.
Costs are Based on a Construction Start of Summer 2010.

PROGRAM CONSTRUCTION COST ESTIMATE

S I T E S U M M A R Y

SECTION		AREA	UNIT	COST/SF	COST
SITE DEVELOPMENT		115,000	SF	21.72	$2,498,224
SUB TOTAL		115,000	SF	21.72	$2,498,224
GENERAL CONDITIONS	6.0%				$149,893
BONDING	1.0%				$24,982
OVERHEAD & PROFIT	5.0%				$124,911
SUB TOTAL		115,000	SF	24.33	$2,798,011
DESIGN CONTINGENCY	10.0%				$249,822
INFLATION TO BID DATE (Summer 2010)	4.0%				$99,929
TOTAL (Construction)		115,000	SF	27.37	$3,147,762

NOTES: Costs are for Construction only.
Costs are for a "LEED Silver" Facility.
Costs are Based on a Competitive Bid Basis.
Costs are Based on a Construction Start of Summer 2010.

PROGRAM CONSTRUCTION COST ESTIMATE

S I T E D E T A I L

SECTION	QUANTITY	UNIT	UNIT COST	COST
SITE DEVELOPMENT				
ON-SITE				
Clear & Grade	115,000	SF	1.00	$115,000
Landscaping & Irrigation	55,200	SF	4.00	$220,800
Landscaping & Irrigation (Green Space)	10,900	SF	4.00	$43,600
Concrete Paving	13,200	SF	7.00	$92,400
Asphalt Driveway	7,100	SF	7.00	$49,700
Site Specialties	1	LS	75,000	$75,000
Demo Ag Science Building / Lund Hall	91,954	SF	6.00	$551,724

PROGRAM CONSTRUCTION COST ESTIMATE

S I T E D E T A I L

SECTION		QUANTITY	UNIT	UNIT COST	COST
ON-SITE - Continued					
Tunnel w/ Utilities		250	LF	4,000	$1,000,000
Utility Work		1	LS	300,000	$300,000
Site Lighting		1	LS	50,000	$50,000
				21.72	**$2,498,224**
SUB TOTAL		**115,000**	**SF**	**21.72**	**$2,498,224**
GENERAL CONDITIONS	**6.0%**				**$149,893**
BONDING	**1.0%**				**$24,982**
OVERHEAD & PROFIT	**5.0%**				**$124,911**
SUB TOTAL		**115,000**	**SF**	**24.33**	**$2,798,011**
DESIGN CONTINGENCY	**10.0%**				**$249,822**
INFLATION TO BID DATE (Summer 2010)	**4.0%**				**$99,929**
TOTAL (Construction)		**115,000**	**SF**	**27.37**	**$3,147,762**

NOTES: Costs are for Construction only.
Costs are for a "LEED Silver" Facility.
Costs are Based on a Competitive Bid Basis.
Costs are Based on a Construction Start of Summer 2010.

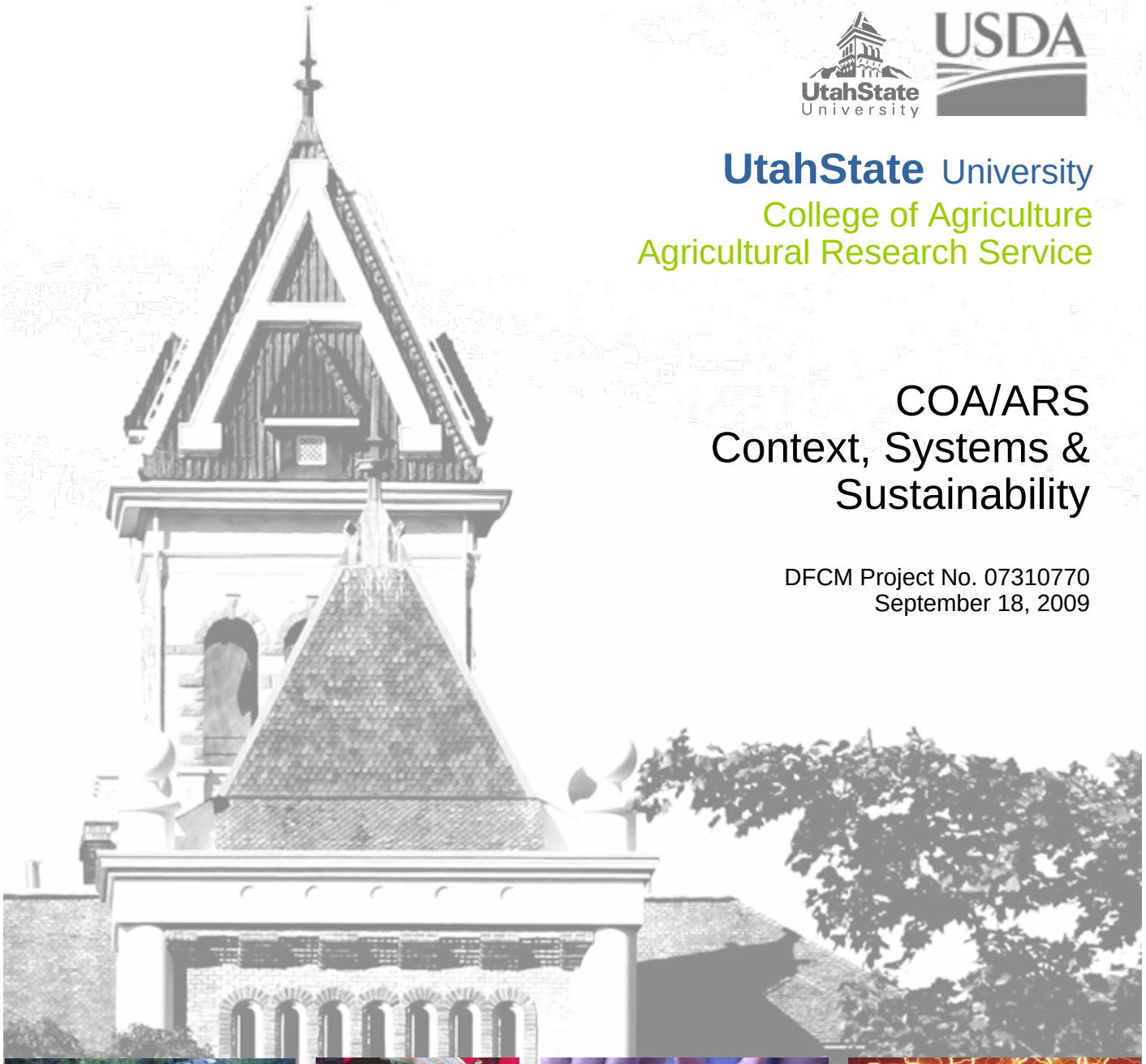

UtahState University
College of Agriculture
Agricultural Research Service

COA/ARS Context, Systems & Sustainability

DFCM Project No. 07310770
September 18, 2009

UtahState University
College of Agriculture
Agricultural Research Service
Logan, Utah

BLANK

APPROVALS

July 2009

APPROVAL SIGNATURES

Stan L. Albrecht, President Date

Darrell E. Hart, Director of Facilities Date

Noelle Cockett, Vice President/Dean Date

Dave McKay, DFCM Project Manager Date

BLANK

ACKNOWLEDGEMENTS

CORE TEAM

The programming team would like to thank the Utah State University College of Agriculture Executive Committee and Working Group for their valuable input and direction, without which it would not have been possible to prepare this facilities program. These groups made themselves available throughout the process as often as needed to provide answers and feedback. They were essential to making the difficult decisions necessary to prepare a realistic and relevant planning document that will be the basis for the design of the new College of Agriculture building.

These groups included the following members:

Executive Committee

Stan L. Albrecht	President
Darrell E. Hart	Associate Vice President for Facilities
Noelle Cockett	Vice President/Dean
Tom C. Peterson	COA Project Manager
John Fitch	USU Project Manager
David McKay	DFCM Project Coordinator
Ben Barrett	Director, Planning, Design & Construction
Stanley Kane	Director, Operations

Working Group

Scott Boyer	Director of Marketing
David Anderson	UBC Director
DeeVon Bailey	Associate VP Research
Don E. Albrecht	WRDC Director
Phil Rasmussen	Western SARE Director
Kevin Kesler	4H Director
Ken White	ADVS Director
Teryl Roper	PSC Department Head
Paul Jakus	APEC Department Head
Richard Culter	Math & Stats Department Head
Mary Hubbard	Dean, College of Science
Tom Graham	Planning, Design & Construction
Jordy Guth	Planning, Design & Construction

COMPREHENSIVE LIST OF PARTICIPANTS

Programming this new facility required input from a broad range of individuals in addition to the members of the two groups listed above. Such involvement ranged from attending meetings to working with programmers one-on-one to describe and review specific space requirements. The following list includes those who made a critical contribution to the programming and conceptual design process.

College of Agriculture, Centers and Division Staff

Miriam Cajal	Former Assistant to the Vice President
Tammy Firth	Assistant to the Vice President
Mike Whitesides	Marketing Manager
Dora Brunson	IRC Program Coordinator
Betsy Newman	WRDC Writer/Editor/Designer
Kristy Jensen	Western SARE Contracts Mgr.
Debra Jones	4H Youth Specialists
Jean Edwards	ADVS Sr. Staff Assistant
Keren Williams	PSC Sr. Staff Assistant
John Carmen	PSC, Lab Committee
Jenny Norton	PSC, Lab Committee
Lee Rickords	ADVS, Lab Committee
Chris Davies	ADVS, Lab Committee
Ben Session	ADVS, Lab Committee
Tracy Hatfield	ADVS, Lab Committee
Jung Su Eun	ADVS, Lab Committee
Francis Bhushan	ADVS, Lab Committee

Programming and Conceptual Design Team

Jim Nielson	Managing Principal, CRSA
Kathy Wheadon	Principal Programmer, CRSA
Kevin DeKold	Project Manager, CRSA
Michael Smyser	Managing Principal, HDR/CUH2A
Steve Smith	Project Manager, HDR/CUH2A
Brian Kowalchuk	Principal Designer, HDR/CUH2A
Brian Norkus	Senior Project Designer, HDR/CUH2A
Jim Wermes	Mechanical Consultant, HDR/CUH2A
Kelly Hartshorn	Electrical Consultant, HDR/CUH2A
Martin Farach	Sr. Laboratory Consultant, HDR/CUH2A
Lance Anderson	Civil Engineer, Cache Landmark
Ronald Dunn	Structural Engineer, Dunn Associates
Jim Gramoll	Construction Consultant, Gramoll Const.
J.R. Anzer	Cost Estimator, Parametrix

TABLE OF CONTENTS – **COA / ARS CONTEXT, SYSTEMS AND SUSTAINABILITY**

Approval Signatures
Acknowledgements
Table of Contents

Section 1 INTRODUCTION
1.1 Context, Systems and Sustainability Overview
1.2 Standards and Codes
1.3 Client Team Requirements
. Utah State University – Design Requirements
. Agriculture
. ARS

Section 2 CONTEXT
2.1 Good Neighbor
2.2 Distinct Design
2.3 Site
2.4 Site
. Location
. Site Circulation
. Site Utilities
. Views
. Solar Exposure
. Climate
. USU Master Plan
. Access and Parking
. Service and Emergency Access
2.4 Landscaping

Section 3 ENERGY, ENVIRONMENT AND RESOURCE CONSERVATION
3.1 Existing Conditions and Factors
3.2 Project Goals
. USU Sustainability Goals
. COA USGBC LEED Certification
DFCM High Performance Building Rating System
.ARS USGBC LEED Silver Performance Goals
3.3 Recommendations

Section 4 CODE REVIEW (Reserved for later submittal)

Section 5 CIVIL / UTILITIES (Reserved for later submittal)

Section 6 STRUCTURAL (Reserved for later submittal)

Section 7 MECHANICAL / PLUMBING
7.1 Heating, Ventilation and Air Conditioning (HVAC) General
7.1.1.1 Design Criteria
7.1.1.2 Outdoor Design Considerations
7.1.1.3 Indoor Temperatures and Humidity Conditions

7.1.1.4 Heating and Cooling Loads
7.1.1.5 Ventilation Loads
7.1.1.6 Fume Hood and Biosafety Cabinet Performance Criteria
7.1.1.7 Noise Criteria
7.1.1.8 Pressure Relationships
7.1.1.9 Indoor Air Quality Control Methods
7.1.1.10 Outdoor Air Quality Control Methods
7.1.1.11 Air Distribution System Criteria
7.1.1.12 Room Air Distribution
7.1.1.13 Pipe Sizing Criteria
7.1.1.14 Seismic Criteria
7.1.1.15 Air Handling Unit Sizing Diversity
7.2 Systems Descriptions
7.2.1.1 Office and Support Central Air Handling System
7.2.1.2 Laboratory and Laboratory Support Central Air Handling System
7.2.1.3 Life Cycle Cost Analysis
7.2.1.4 Central Laboratory Exhaust System
7.2.1.5 Perchloric Exhaust System
7.2.1.6 Laboratory and Fume Hood Airflow Control Systems
7.2.1.7 Campus Utility Tunnel Extension
7.2.1.8 Chilled Water System
7.2.1.9 Equipment Cooling Water System
7.2.1.10 Heating Hot Water System
7.2.1.11 Glycol Water Heating System
7.2.1.12 Energy Recover System
7.2.1.13 Steam and Condensate System
7.2.1.14 Humidification
7.2.1.15 Cold Room Cooling System
7.2.1.16 Smoke Evacuation
7.3 Mechanical System Load Calculations
7.3.1.1 Load Calculations
7.4 Instrumental and Control System
7.4.1 Building Automation System (BAS)
7.4.2 Laboratory Control System
7.4.3 Data Acquisition/Monitoring/Alarm System
7.5 Plumbing Systems
7.5.1 Plumbing Criteria
7.5.1.1 Applicable Codes, Guidelines and Standards
7.5.1.2 Seismic Criteria
7.5.2 Potable Hot and Cold Water
7.5.2.1 System Description
7.5.2.2 Equipment and Materials
7.5.2.3 Reserve Capacity and Redundancy
7.5.3 Industrial Water
7.5.3.1 System Description
7.5.3.2 Equipment and Materials
7.5.3.3 Reserve Capacity and Redundancy
7.5.4 High Purity Water Distribution System
7.5.4.1 System Description

7.5.4.2 Equipment and Materials
7.5.4.3 Reserve Capacity and Redundancy
7.5.5 Laboratory Vacuum
7.5.5.1 System Description
7.5.5.2 Equipment and Materials
7.5.5.3 Reserve Capacity and Redundancy
7.5.6 Compressed Air
7.5.6.1 System Description
7.5.6.2 Equipment and Materials
7.5.6.3 Reserve Capacity and Redundancy
7.5.7 Specialty Gases
7.5.7.1 System Description
7.5.7.2 Equipment and Materials
7.5.7.3 Reserve Capacity and Redundancy
7.5.8 Nitorgen
7.5.8.1 System Description
7.5.9 Carbon Dioxide
7.5.9.1 System Description
7.5.10 Natural Gas
7.5.10.1 System Descirption
7.5.11 Sanitary Waste
7.5.11.1 System Description
7.5.11.2 Equipment and Materials
7.5.11.3 Reserve Capacity and Redundancy
7.5.12 Storm Water
7.5.12.1 System Description
7.5.12.2 Equipment Materials
7.5.12.3 Reserve Capacity and Redundancy
7.5.13 Laboratory Waste
7.5.13.1 System Description
7.5.13.2 Equipment and Materials
7.5.13.3 Reserve Capacity and Redundancy
7.5.14 Fuel Oil System
7.6 Fir Protection
7.6.1 Fire Protection
7.6.1.1 System Description
7.6.1.2 Equipment and Materials
7.6.1.3 Reserve Capacity and Redundancy

Section 8 ELECTRICAL / TECHNOLOGY
8.1 Base Systems Design
8.1.1 Base Design Criteria
8.1.1.1 Applicable codes, Guidelines and Standards
8.1.1.2 Load Calculation Criteria
8.1.1.3 Equipment Sizing Criteria
8.2 Systems Descriptions
8.2.1 System Descriptions
8.2.1.1 Normal Power Service and Distribution System
8.2.1.2 Standby/Emergency Service and Distribution System

8.2.1.3 Alternate Energy Sources
8.2.1.4 Point of Use Power Distribution System
8.2.1.5 Grounding System
8.2.1.6 Lighting Systems
8.2.1.7 Fire Alarm System
8.3 Security / Access Control
. Fire Alarm
. Security System
8.4 Lighting
8.5 Telecommunications
8.5.1 Telecommunications
8.5.1.1 Standards
8.5.1.2 Codes
8.5.1.3 Background
8.5.1.4 Outside Plant Distribution
8.5.1.5 Communications Room
8.5.1.6 Interior Distribution Topologies
8.5.1.7 Outside Horizontal Distribution
8.5.1.8 Wireless LAN Technology 802.11
8.5.1.9 Labeling
8.5.1.10 Testing Strategy
8.6 Technology
. Codes and Standards
. Structured Cabling Systems
. Audio Visual Systems
. Clock Systems

Section 9 FOOD SERVICE / ELEVATOR / ACOUSTICAL

Section 10 DESIGN AND CONSTRUCTION SCHEDULE AND PHASING PLAN
10.1 Summary
. Design
. Construction
10.2 Detailed Schedule

Section 11 EXPANSION STRATEGIES

Section 12 TOTAL PROJECT ESTIMATE OF COST
12.1 Construction Cost
12.2 Total Project Cost
. Infrastructure
. College of Agriculture
. Agricultural Research Service

Section 13 APPENDICES
13.1 Recommended Stacking and Zoning Diagrams
13.2 Programming Process
13.3 Detailed Code Analysis
13.4 USU Master Plan
13.5 Glossary

SECTION 1

INTRODUCTION

1.1 CONTEXT, SYSTEMS AND SUSTAINABILITY OVERVIEW

The purpose of this section is to provide reference materials for the design team to understand base standards for each program area, their inter-relations and their conflicts. As the College of Agriculture (COA) and the Agricultural Research Services (ARS) programming projects will most likely not run simultaneously, it is important for the team to be able to reference in this “link” documents the requirements of their partnered organization. This document will be updated to include the requirements of the Federal/ARS requirements as they become available to the programming team. This document is not a stand alone document, but rather a reference for both the COA and ARS Programs.

This document will consider the site and its development in Section 2 Context. Section 3 references the standards for crafting a sustainable building, although sustainable design solutions are included in each section specific to building systems. The remainder of the document looks at the needs of the building the responses needed from building systems. In addition, an overview of code requirements, food service criteria, acoustical requirements and building connectivity strategies will be addressed.

1.2 STANDARDS AND CODES

The College of Agriculture will need to comply with the standards and codes applicable to the project. The design team should coordinate with the State Building Official, USU Fire Marshall and other oversight mechanisms to confirm current codes, code amendments and review requirements prior to the design kick-off meeting.

1.3 CLIENT REQUIREMENTS

Utah State University provided to the programming and conceptual design team the existing campus design requirements. As the campus is in the midst of some updates to campus design standards, review of most current guidelines is required of the design team prior tot the kick-off of the design phase. The USU Project Manager is an invaluable resource to campus guidelines, operations staff and standard practices and should be an integral part of the design review process.

During the programming and conceptual design phase the College of Agriculture helped establish a number of work groups which assisted the team in crafting the document you are now reading. As work continues through design the lab working committee, which was invaluable in crafting a conceptual design response to the project, should be advised that their input and review may be needed. The College of Agriculture Project Manager provided invaluable insight, access to key decision makers, personal perspective and grounded reason to the programming and conceptual design team and should remain a valued advisor to the design team as the project moves forward.

The requirements of the Agricultural Research Service (ARS) will be forth coming and added to the document as it is defined,

SECTION 2

2.1 Good Neighbor

As the newest building on the USU campus, and the first building built on the historic quad since 1890, the College of Agriculture Building will become part of a coherent existing college with a unified look and feel. The architectural expression of the various structures has reinforced the connection between them, the structural module, material and forms of buildings have a level of consistency within this part of the campus.

Old Main, the historic icon of the quad, will create the center point to the new structure. The new COA office tower will be centered on Old Main, anchoring the quad as a gateway of transition from old to new.

2.2 Distinct Design

The new College of Agriculture Building will be significant on this part of campus in terms of gross square footage. At four to five stories, it will also have a distinctive height on the quad. As President Albrecht has said, the new College of Agriculture Building will represent a new hot spot of the institution's scholarly and research endeavors and as such, must be grounded in the history of this place but also embody the college's hopes and dreams for the future.

In order to emphasize the importance of the College of Agriculture mission, the institution has made a goal to create a new building that will be a high-quality, distinctive facility, while working within the existing context. The intent is to preserve and incorporate those most vital and apparent aspects of campus character while at the same time enriching the mix through its distinct nature.

So it is expected that the building will not turn its back on existing campus architecture and planning principles. It should connect to, and maintain, the look and feel of the campus in every way possible. At the same time, it should stand out in a way that emphasizes its singular mission as the campus center for academic learning and investigation.

2.3 Site

The site for the proposed building is on the eastern side of the historic quad. To the north east are existing campus buildings and to the south is found U.S. Route 89.

The site's iconic location allows the new COA to anchor the historic quad while providing spectacular views to the Rocky Mountains to the South while maintaining direct contact with the historic evergreens to the North.

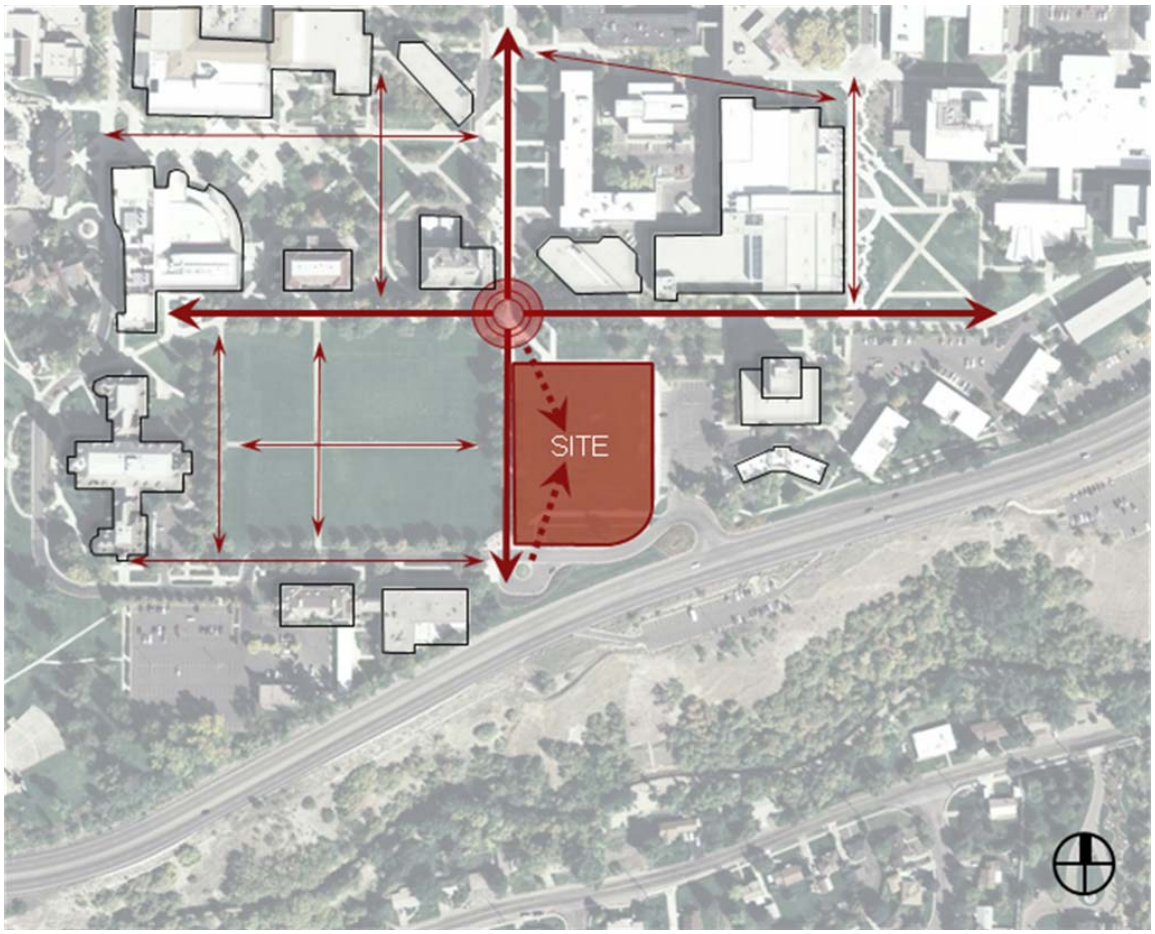

2.3.1 Pedestrian Circulation:

The site currently borders on two main axial circulation movements. These axis's run on the north and west side of the site. The placement of our building re-defines this axial intersection and creates a circulation node. This node may act as an outdoor destination as well as for circulation.

The historic quad to the west has minor axial circulation running through the Quad as well as circulation along the edge of the Quad. These walks help define the Quad as well as providing the connectivity and linkages to the buildings around the Quad.

Overall the building is being nestled into the contextual fabric and circulation patterns of the existing site.

2.3.2 Site Utilities:

The proposed site has close proximity to all necessary utilities either as buried lines or raceways through the campus-wide concourse system. The utilities schematically link in and layout in symbiosis with the circulation patterns. Chilled water and steam will be supplied by the campus district heating and cooling system. The diagram (above) reflects both the existing (blue) and future (orange) chilled water and steam distribution patterns for this portion of USU's campus.

Potable water will be supplied by the existing campus water loop in the walkway north and west of the building with waste directed to the existing sewer to the west.

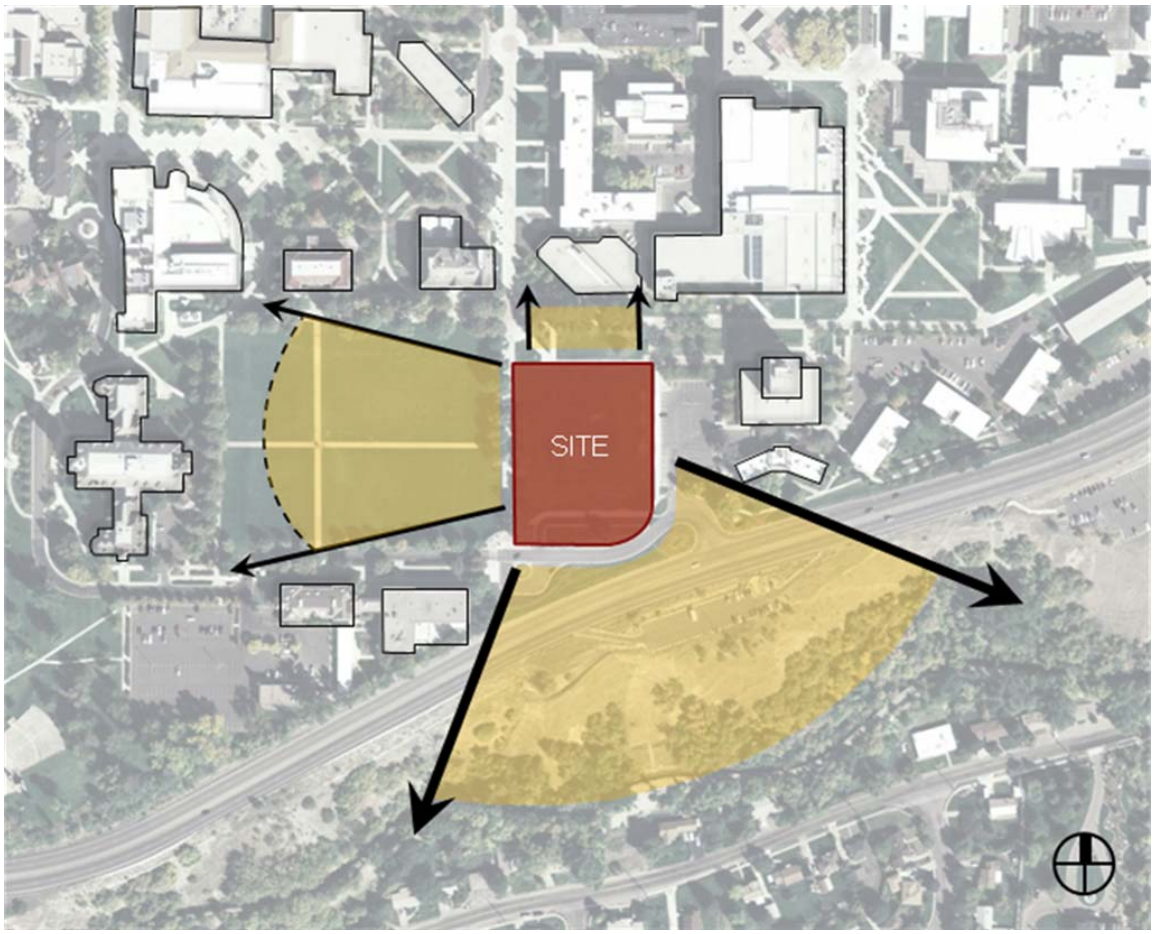

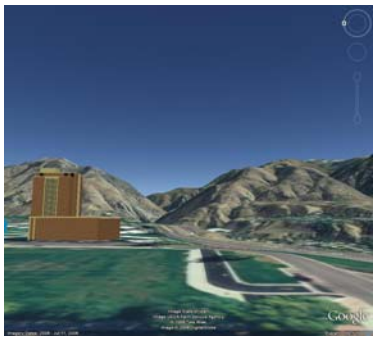
Site looking East

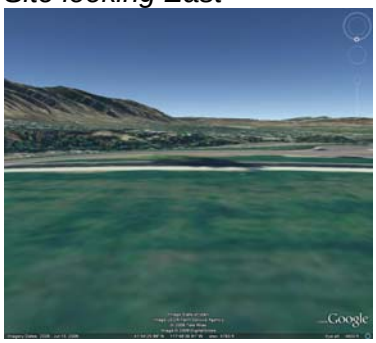
Site looking South

2.3.3 Site Views:

The site has a wonderful plethora of views in almost every direction. To the west, long views look out across the Historic Quad to the other campus buildings and architecture. To the north are short views across the green circulation corridor into campus, and long views along Champ Drive deeper into the campus.
To the south the views are long again across a major highway into an existing greenbelt along the whole horizon. Beyond this greenbelt, the topography lowers, giving way to breath-taking views of the valley below and the Rocky Mountains beyond.

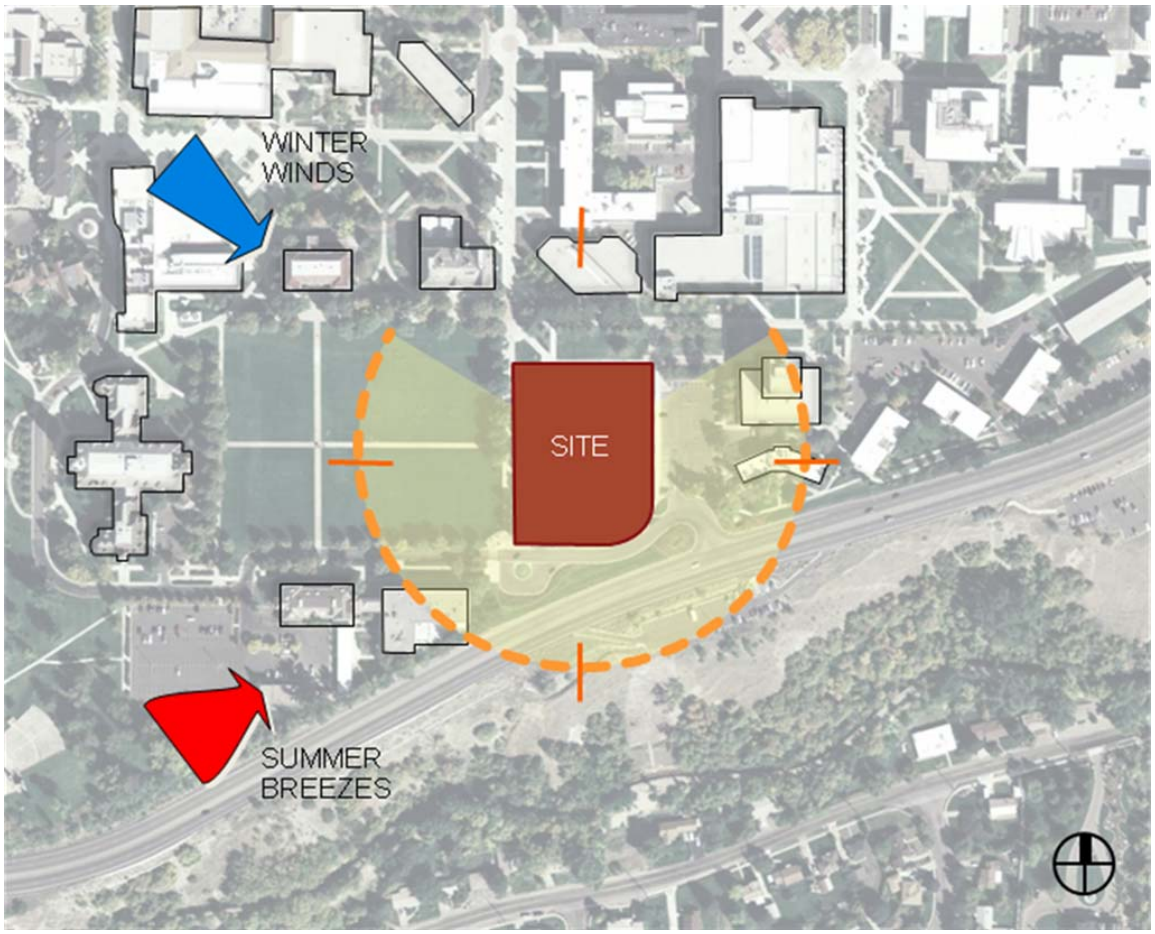

2.3.4 Site Climate Conditions:

The prominent location of the site on the Utah State University campus allows for optimal conditions of solar orientation for the new COA. The anticipated design reflects an elongated southern façade and substantially less east/west façade surface. This strategy takes high consideration of solar mitigation by allowing the design to passively respond to solar heat gain strategies. Climactically, the winter in Logan is less severe than that of Salt Lake City but snow and ice are still a factor. The summer, both hot and dry, allows for a substantial temperature range throughout the year while proximity of buildings and the open quad create varying microclimates around the site.

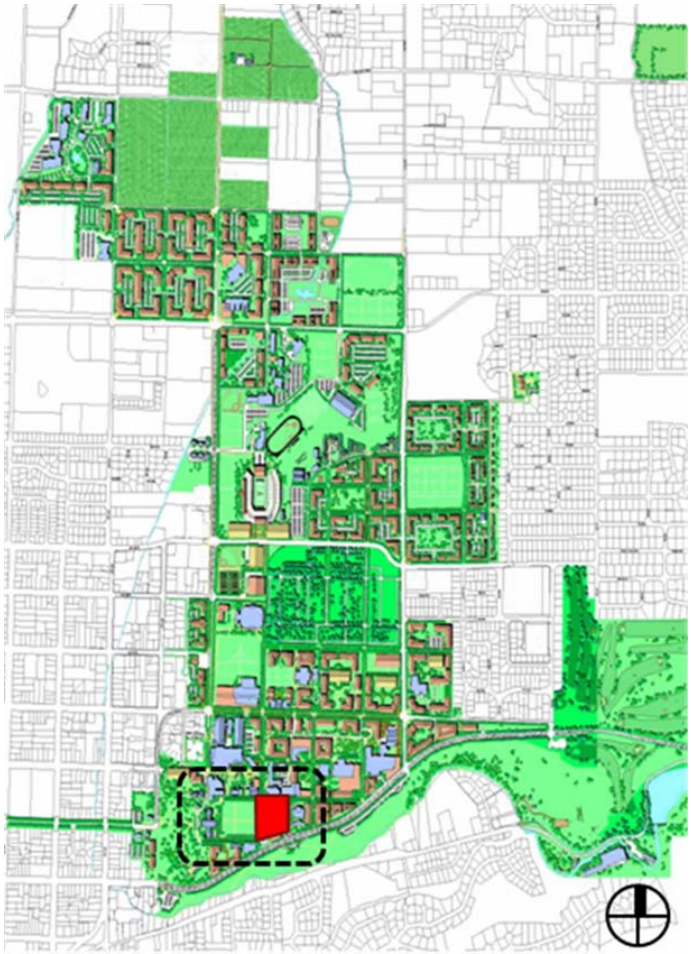

2.3.5 Campus Master Plan:

Identified through the master plan process, the site's location heralds it as a new beacon of science and technology.
By completing the historic quad, Linking the business school and library with the quad beyond, and creating an architectural presence at the south end of Champ drive which responds to that of the Stadium to the north, the new COA building joins multiple parts of the campus together as a gateway element to both the campus and surrounding community

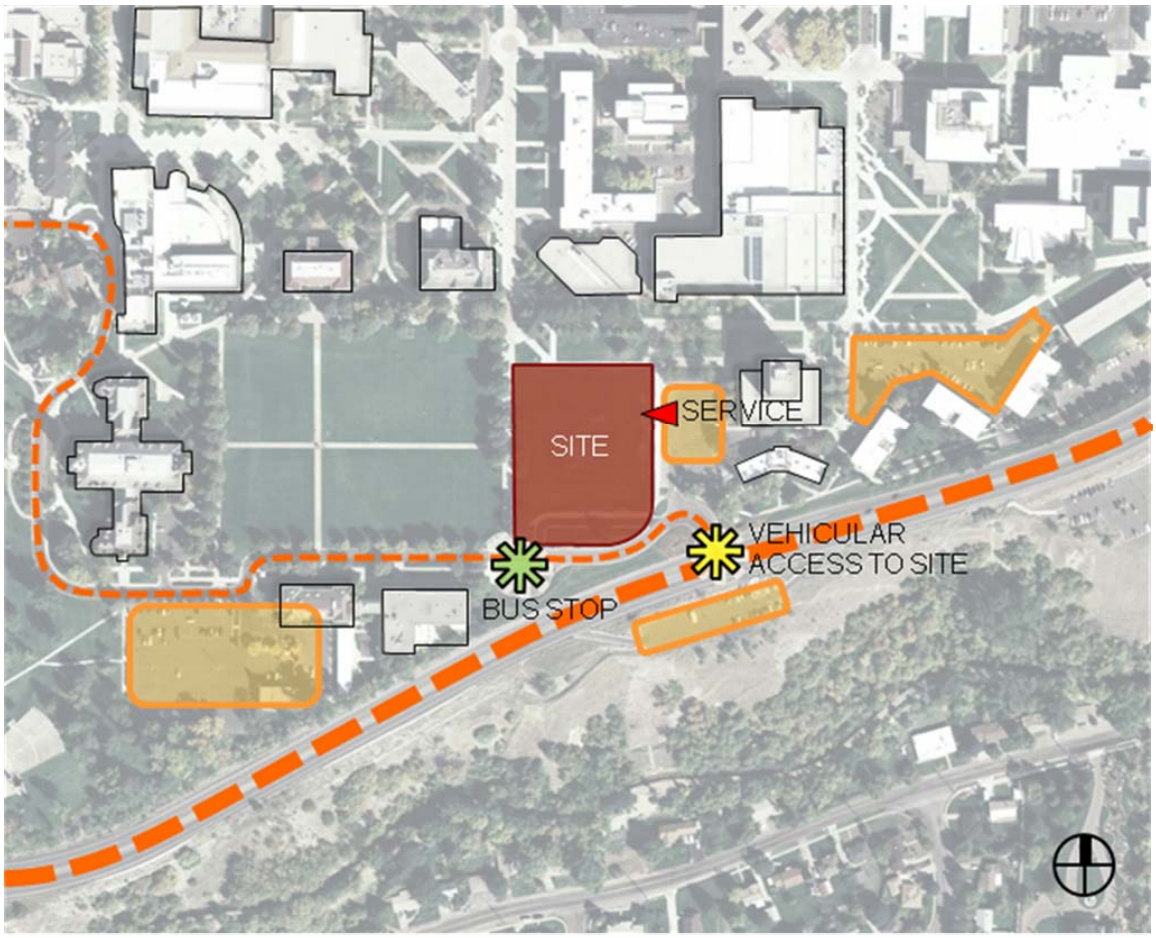

2.3.6 Vehicular Circulation:

There is existing vehicular access and drop-off in the southwest corner of the building and Quad. This node also allows for the shuttle bus drop-off.

Service will be brought in from the east side of the building. There will be a small parking area associated with this.

Emergency access from the site is directly fed from US Route 89 and remains unaffected from previous conditions. Each side of the building will have walkways which allow for emergency vehicles to have 360 degree access to the building's exterior.

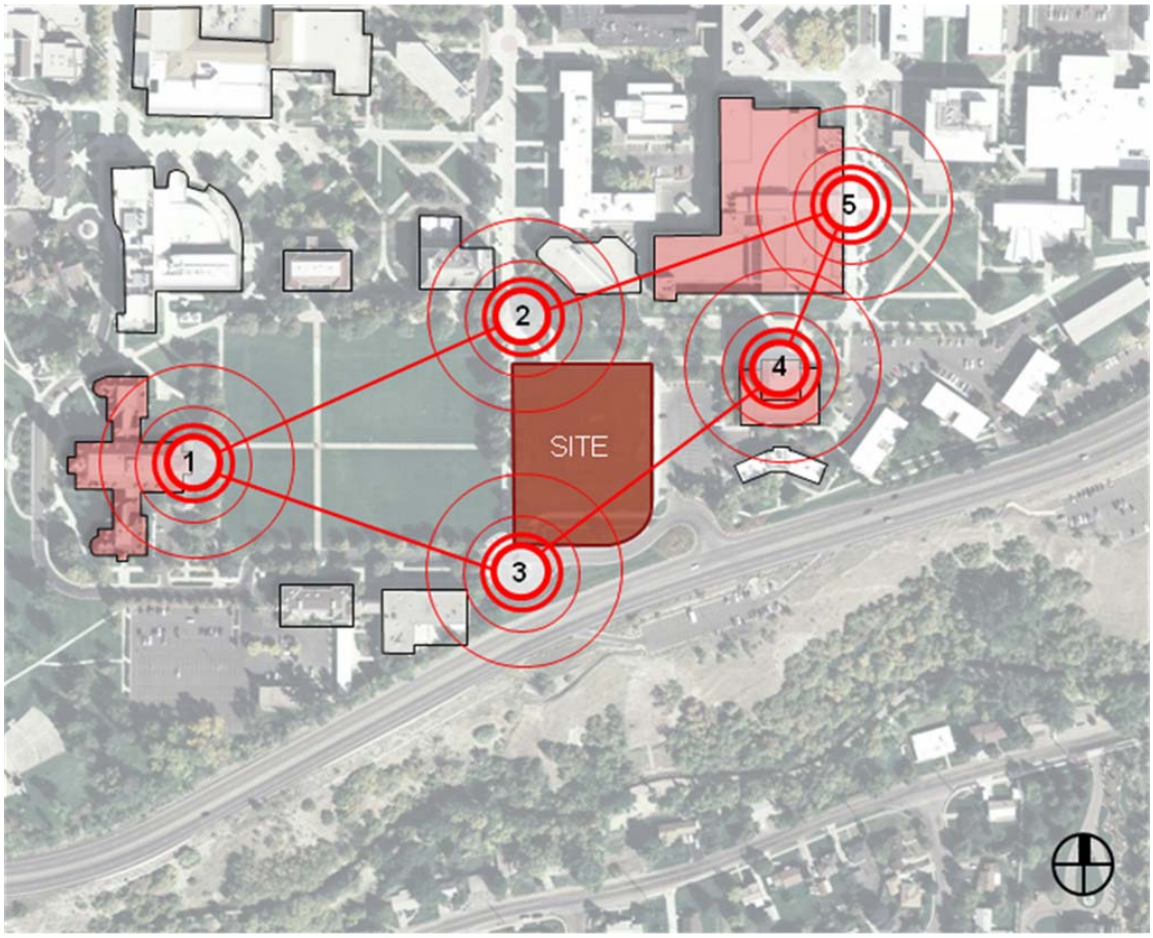

2.3.7 Site Nodes:

The site's placement allows some synergies between the other buildings. Here these linkages can connect into different nodes and provide the interconnectivity that is being fostered.

- Interaction with pedestrian
- Impact from afar
- Gateway between parts of campus
- Acts as Node at end of champ drive
- Complimentary node of old main at quad

2.4 Landscape Architecture

The site has a visually prominent position being located on the east side of the historic quad and directly across from the Old Main Building on the west side of the quad. Its connection to the major campus pedestrian walkways, both east/west and north/south offers this site opportunities to create human scale spaces that can be unique gathering/meeting places that relate both to the campus and the proposed building. As the former location for the original library, the site is now turf with a row of historic conifer trees on each side of the north walkway and a row of deciduous trees on each side of the west walkway (east walkway of the quad).

During the extension of the utility tunnel south from its existing position to the new building the deciduous trees along the west walkway on the west side of the walk will need to be removed. USU and HDR will determine the species for the replacement trees. Species to be considered include oaks, birches, and native elms resistant to Dutch elm disease. The historic evergreen trees will not be disturbed. A maintenance program is required to ensure that the health of the evergreen trees is preserved during all phases of construction.

The overall site planning design concept for the north side of the building is to allow as much natural sunlight into this area for a year round courtyard experience with the deciduous trees to the west side and the evergreens to the north which serve to frame and enclose this space. The geometric hardscape and softscape treatment will provide and direct student access to the northwest entry of the building. These geometric forms are set by the current campus circulation. There will be small intimidate hardscape areas for gathering and/or transversing of circulation direction.

An outdoor seating terrace/area to the west of the building will be designed with the replacement deciduous trees along the main north/south walkway and include landscape planting for year round interest. This will provide a foreground interest and activity at the building entry as well as anchoring the building into the landscape. There will be openings and views out and both physical and visual connectivity to the Historic Quad and Old Main.

The landscape area on the south side of the building will be designed as teaching or demonstration garden/agricultural plots. These gardens will be highly visible to travelers along Highway 89 as well as from the faculty offices. These gardens will convey and link historic ties to the agricultural industry as well as highlight the importance and benefits of agriculture to the campus and global communities.

Landscape plantings along the eastern edge of the project site will connect to the existing campus landscape fabric and context. The screening of delivery and refuse collection areas will be considered and may include both hardscape screen walls and softscape evergreen mass plantings. As with all areas, campus security officials will need to be engaged during design to review security protocols as well as for areas which may be considered hiding places, or considered unsafe to users in off hours.

A possible green roof area has been discussed at the roof area around the penthouse. The concept will be explored further as the building design and budget are developed, although the program cost estimate does not include this design feature.

All landscape design strategies will be carefully coordinated with Utah State University Facilities and ground maintenance requirements as well as the State of Utah Division of Facilities Construction and Management Design Requirements. With the goal of having the building certified at a minimum of LEED Silver rating, methods to reduce water usage, ground water return, storm water run-off migration and other conservation-minded and sustainable design methods will be reviewed and developed in the next phases of the project. All plant materials will conform to the culture and environment with emphasis on native vegetation, native adaptive communities, and be selected for their low water-use, drought tolerance, disease resistance and maintenance requirements.

SECTION 3

ENERGY, ENVIRONMENT AND RESOURCE CONSERVATION

3.1 EXISTING CONDITIONS AND FACTORS

The recommendations proposed for the COA/ARS Buildings have been tailored to accommodate the needs of the students, faculty and staff at USU and ARS. Consequently, the design recommendations incorporate a high level of environmental and energy performance. High-performance design would provide the COA/ARS Buildings with better maintenance efficiency and reduced operations costs, as well as providing the owners with an opportunity to promote and showcase the benefits of sustainable design.

3.2 PROJECT GOALS

The new buildings should be designed to minimize its impact on the environment, reduce the use of energy and natural resources, and lower life-cycle costs for building materials and systems. The project design should follow the State High Performance Building Rating System (HPBRS) which has been updated to include LEED™ Silver certification. The program will incorporate principles of sustainability, environmental quality, resource conservation, and energy efficiency, while maintaining a reasonable project cost.

3.3 RECOMMENDATIONS

The following are concepts recommended to the building designers by the team for consideration in order to achieve these goals. Most of the concepts and the order in which they are arranged are based on the U.S. Green Building Council's LEED™ certification checklist and many of the goals of the HPBRS.

Sensible Site Development

- Public transportation access.
- No added parking.
- Light colored roofing,
- Trees to shade paved areas, where possible.
- Site lighting with no up-light component.
- Light colored paving.

Water Conservation

- Drought-tolerant plantings where possible.

Energy and Environmental Conservation

- Non-CFC refrigerants.
- Maximum use of outside air for cooling wherever possible.
- Automatic dimming of electric lights tied to daylight sensors.
- Reduced ambient light levels with supplemental task lighting.

- Occupant sensors.
- High-efficiency motors.
- Variable frequency drives.
- Best Practice Commissioning: rigorous verification that the entire building is designed, constructed, and calibrated to operate as intended.

Renewable and Responsible Materials

- Storage and collection of recyclables.
- Construction waste management—more than half of construction salvaged or recycled.
- Reuse of building materials—as much as possible.
- Recycled content of construction materials—as much as possible.
- Local/regional materials—to minimize transportation impacts—as much as possible.

High-Quality Indoor Environment

- Carbon-dioxide monitoring in appropriate areas
- Construction Indoor Air Quality Management Plan.
- Two-week post-construction building flush-out.
- Low-VOC adhesive, sealers, paints, and coatings.
- Carpet, pad, and adhesive systems that minimize off-gassing.
- Wood and natural products with no added urea-formaldehyde.
- Vented janitorial closets, bathrooms, copy rooms & chemical mixing rooms, with appropriate drainage for disposal of wastes.
- Useable daylight in as many occupied spaces as possible.
- Shade devices on fenestration to mitigate glare and summer heat.

Innovation

- Education/outreach regarding energy and environmental issues for building visitors.
- Energy, environmental, and resource conservation measures exposed to view where possible and documented with interpretive materials as a part of a learning function.

Other Possible Considerations

Before incorporating any of the following additional measures, the design team must give careful consideration to whether they are feasible, given site and budget constraints, and whether they will provide sufficient and measurable benefits to offset all associated costs.

- Maximization of open space within limited site.
- Possibility of high-efficiency landscape irrigation technology.
- Reduced water use at faucets, toilets, and showers—below EPA requirements.
- Use of self-supplied, renewable energy from PV arrays, or wind power technologies.

- Provision for ongoing monitoring and optimization of building performance over time.
- Rapidly-renewable materials in such areas as flooring or millwork in appropriate places.
- Possibility of natural ventilation (operable windows) with mechanical system override. This should only be considered in areas not accessible by the general public.

The project has been evaluated for potential contributions to the HPBRS. Points to be reviewed in design are as follows:

DFCM High Performance Building Rating System- USU COA ARS

5.4 Design and Technology Charrette

	Possible Points	Confidence
A. Conduct a design charrette to review requirements and to integrate energy efficiency and environmental measures. Consider:		
1. Natural shade of parking to reduce heat island effect	**recom'd**	70%
2. Shielded or reduced parking and façade lighting	**recom'd**	70%
3. Reuse of existing building	**recom'd**	n/a
4. Avoid sewer and waterway contamination	**recom'd**	90%
5. Use local building materials and products	**recom'd**	90%
6. Encourage the use of public transportation	**recom'd**	90%
7. Protect wet-lands and green spaces	**recom'd**	90%
8. Provide recycling center	**recom'd**	50%

5.5 Prerequisites

	Expected Points	Confidence
A. Fundamental Building Systems Commissioning	**req'd**	95%
B. Life-Cycle Cost Analysis	**req'd**	60%
Designer to use life-cycle cost analysis in making decisions about products, services, construction to lower cost, energy and water use.		
C. CFC Reduction	**req'd**	90%
D. Ventilation Systems	**req'd**	90%
Design mechanical ventilation system to Standard 62. System shall have capacity to operate continuously during occupancy and not to be easily shut-down or defeated.		
E. Drainage Systems	**req'd**	90%
Design surface grades, storm drainage system, HVAC system and other systems to avoid accumulation of standing water.		
F. Landscape & Irrigation Systems	**req'd**	70%
Design according to DFCM Guidelines for Landscape & Irrigation Standard		
G. Fundamental Lighting Design	**req'd**	70%
Design the lighting system according to IESNA Lighting Handbook		
H. Mold Prevention during Construction	**req'd**	90%
Protect propus building materials from moisture to prevent bold and bacterial growth. Replace mold affected materials and building insulation damp for 72		
I. Filtration Media replacement before Occupancy	**req'd**	90%
Replace filtration media prior to occupancy		
J. Thermal Comfort	**req'd**	90%
Ensure that thermal comfort requirements are met according to Standard 55		

5.6 Energy Efficiency Requirements

	Expected Points	Confidence
A. Energy Performance		
1. Engage an Energy Specialist to perform energy analysis according to Appendix G of Standard 90.1.	**req'd**	90%
2. Commissioning Agent shall ensure the selected energy efficiency measures are installed and calibrated to operate as intended.	**req'd**	80%
B. Small Buildings Prescriptive Energy	**recom'd**	n/a
Design the building envelope, lighting system, HVAC system, and service water heating system according to the recommended performance levels shown in Tables 1-4 in compliance with Standard 90.1		

5.7 Sustainability Credits

	Expected Points	Confidence
A. Daylighting Credits		
1. Daylighting- 6 points possible	**3**	60%
B. Energy Credits		
1. Evaporative Cooling- 2 points possible	**2**	70%
2. Demand-Controlled Ventilation using CO2 Sensors- 1 point possible	**1**	60%
3. Underfloor Air Distribution	**0**	30%
C. Renewable Energy Credits		
1. Renewable Energy	**0**	10%
D. Indoor Air Quality Credits		
1. Low-Emitting Materials		
LEED-NC EQ 4.1 Adhesives & Sealants- 1 point possible	**1**	70%
LEED-NC EQ 4.2 Paints & Primers- 1 point possible	**1**	70%
LEED-NC EQ 4.3 Carpet Systems- 1 point possible	**1**	70%
LEED-NC EQ 4.4 No Added Urea-Formaldehyde- 1 point possible	**1**	70%
2. Pollutant Source Control		
Ventilation Systems & Separation Walls- 1 point possible	**1**	70%
HVAC System Design- 1 point possible	**?**	50%
Particle Arrestance Filtration- 1 point possible	**1**	70%
3. Construction Indoor Air Quality Management Plan- 1 point possible	**1**	70%
15 Day Building Flush with 100% outside Air- 1 point possible	**1**	70%

E. Commissioning & Training Credits		
1. Additional Commissioning- 2 points possible	**2**	70%
F. Acoustics Credits		
1. Improve Acoustical Performance- 2 points possible	**1**	70%
G. Sustainable Material Credit		
1. Recycled Content- 2 points possible	**1**	90%
H. Waste Reduction Credits		
1. Site Waste Reduction- 2 points possible	**?**	50%
I. Water Reduction Credits		
1. Water Efficient Fixtures & Appliances- 2 points possible	**2**	70%
J. Performance Measurement & Verification Credits		
1. Building performance monitoring on multi-building campus- 1 point possible	**1**	50%
2. System Performance Monitoring- 1 point possible	**?**	10%
K. Innovation in Design		
1. Exceptional energy or environmental measures- 4 points possible	**1**	

Total possible points **22**

Target: 20

The following chart has been supplied to show other credits that the project could pursue with relative ease to receive the HPBRS requirement of LEED Silver Certification.

26-32 Certified 33-38 Silver 39-51 Gold 52-69 Platinum	LEED	HPBRS
SUSTAINABLE SITES		
Site Selection	I	-
Development Density and Community Connectivity	I	-
Alternative Transportation -Public Transportation Access	I	-
Alternative Transportation -Bicycle Storage & Changing Rooms	I	-
Site Development -Maximize open space	I	-
Heat Island Effect - Non Roof	I	-
Heat Island Effect - Roof	I	-
Light Pollution Reduction	I	-
ENERGY & ATMOSPHERE		
Enhanced Refrigerant Management	I	-
Green Power	I	-
MATERIALS AND RESOURCES		
Regional Materials - 10%/20%	I	Y
Certified Wood	I	-
INDOOR ENVIRONMENTAL QUALITY		
Outdoor Air Delivery Monitoring	I	Y
Increased Ventilation	I	Y
Controllability of Systems - Lighting	I	-
Thermal Comfort - Verification	I	-
Daylight & Views - Views 90%	I	Y
INNOVATION & DESIGN PROCESS		
Education	I	-
Exemplary Performance EA 6.0	I	-
LEED Accredited Professional	I	-
TOTALS:	20	
potential points contributed by HPBRS	18	
total:	38	

BLANK

SECTION 4

CODE ANALYSIS

Preliminary Code Information for Concept Design

Note: A full code analysis as required by DFCM Design Standards will be performed during the course of design.

- Governing Codes
  - 2006 International Building Code with State of Utah Amendments
  - 2006 International Energy Conservation Code with State of Utah Amendments
  - 2006 International Fire Code
  - Code of Federal Regulations – ADA Standards for Accessible Design
  - ANSI/ASME A17.1 Safety Code for Elevators and Escalators, 2007 edition with amendments administered by Labor-Industrial Commission of Utah, Department of Occupational Safety and Health Elevator Division.

COLLEGE OF AGRICULTURE BUILDING

Proposed Square Footage

Basement:	5,585 SF (unoccupied)
1st Level:	28,828 SF
2nd Level:	30,116 SF
3rd Level:	30,116 SF
4th Level:	21,323 SF
Penthouse:	4,871 SF (unoccupied)
Total: (Including Basement & Penthouse)	120,219 SF
Total: (Excluding Basement & Penthouse)	109,763 SF

Occupancy Types

Offices:	B
Laboratories:	B (depending on the amounts of chemicals some could be H)
Teaching Lab:	A-3

Construction Type

Type 1-B Fully Sprinkled

Allowable Area

Unlimited (based on most restrictive occupancy)
Total Area (Including Basement & Penthouse) = 120,219 SF

BUILDING IS ALLOWABLE AS TYPE 1-B FULLY SPRINKLED

One hour rated separation is required between A-3 and B occupancies. Per table 1701.1, the corridors are not required to be rated since the building is fully sprinkled.

Programmed Occupant Load

Basement:	19
1st Level:	1075
2nd Level:	511
3rd Level:	511
4th Level:	214
Penthouse:	17
Total:	2347

Exiting

Level	Max. Occupant Load	Exit Width Required (Sprinkled Building)
Basement:	19	2.85"
1st Level:	1075	161.25"
2nd Level:	511	76.65"
3rd Level:	511	76.65"
4th Level:	214	32.1"
Penthouse:	17	2.55"
Total:	2347	
Stair Width Required:		102.2"

Plumbing Fixture Required (2006 International Building Code)

Level	Urinals	Men's WC's	Lavs	Women's WC's	Lavs	Drinking Fountains
Basement:	--	--	--	--	--	--
1st Level:	3	3	5	10	5	3
2nd Level:	3	3	6	6	6	6
3rd Level:	3	3	6	6	6	6
4th Level:	2	1	3	3	3	3
Penthouse:	--	--	--	--	--	--
Total:	11	10	20	25	20	18

Atrium Space

Smoke control is required, since the atrium connects more than two stories. The atrium space shall be separated from adjacent spaces by a 1 hour fire barrier or a glass wall forming a smoke partition where automatic sprinklers are located on both sides of the separation wall. Smoke control equipment will be on standby power. Smoke control system shall be installed in accordance to Section 909 of the 2006 International Building Code.

BLANK

Section 5

Civil/Utilities

Background

Utah State University (USU) is planning to construct a new building for the College of Agriculture (COA). The new building is proposed on the east side of the Quad the former site of the Merrill Library. Additionally, it is understood that the Agriculture Research Service (ARS) building may be sited to the east of the COA and west of the existing College of Business building.

The site is currently an open turf grass area flanked by pedestrian walkways on all four sides. There is an existing limited access parking lot directly east of the site, it is anticipated that this will be replaced with service access and loading dock area with some potential limited parking to remain. An existing vehicular drop off zone and campus roadway (Champ Drive) are adjacent to the south of the site, it is anticipated that changes to this area will be limited however, there is potential to expand the drop off zones and potential off-set some of the lost parking in this area.

All necessary utilities, including water, power, sewer, and communications are within reasonable proximity to the site. Individual elements of the civil design program are identified and described below in greater detail. This information is based upon infrastructure information provided by USU and site survey data collected and mapped in January of 2009 (by Cache-Landmark Engineering). See Figure 5.0 for existing contour and utility information.

Grading

The proposed COA site is sloped from the northeast to the southwest at an average slope of 1% with slopes ranging from .7% to 2.2%. Although these grades are relatively flat the site is large enough that there is a total of 3.5 feet of elevation change across this area.

The proposed grading of the site has been analyzed and it is recommended that the elevation of the COA finished floor be established at or near 4,785 feet (See Figure C5.1). This will allow the ability to meet existing sidewalk grades on the west (Quad) and limit the slope of walks on the north (Entrance to the Building). This analysis has been conducted keeping in mind the future Agriculture Research Service (ARS) Building to the east. At this elevation it would be necessary to “step” the elevation of the ARS building from the COA in order to have reasonable slopes for pedestrian access to the ARS from the north pedestrian sidewalks. It is anticipated that some site retaining walls may be required between the COA and the ARS building as well as potential for walls between the ARS building and the existing College of Business building. See Sheet C5.0 for proposed grading.

Storm Water

Storm water in the COA site area is currently not collected or detained on site. It sheet flows across the site and ultimately into the Quad area where it can dissipate and infiltrate.

Storm water in the adjacent limited parking area is collected in a storm drain box inlet on the southwest corner of the parking area. The drain box is connected to a sump, which has an open bottom and due to the gravelly soils and high percolation rates allows the storm water to infiltrate in this location. It is anticipated that a system of subsurface drainage pipe will be necessary to convey the surface collected storm water to new sumps for infiltration. The roof drain systems from the proposed buildings would also connect to this pipe network or individual sumps providing the necessary discharge of storm water.

Sanitary Sewer
Sanitary sewer from the former Library is a 6" sewer line that discharges into an existing manhole northwest of the proposed building. The depth of the sewer lateral is unknown, however the sewer manhole is approximately ten feet deep. The depth of the existing sewer will require a sump pump in the proposed basement. The sewer north of the building is an 8" concrete pipe. At the mentioned manhole the University recently upsized the sewer line to a 10" PVC pipe (pipe burst) to the west.

Additionally there is an existing sewer pipe (south of proposed site) that services Lund Hall. This sewer line is a 4" line that increases in size east of Ray B West to a 6" concrete pipe. The line continues down Champ Drive to Old Main. The size of sewer line does not allow this building to connect into this line. See Figure C5.4

Consideration needs to be taken with the expansion of the steam tunnel that will service this building, the future ARS, and future Business building. The steam tunnel is planned to cross the existing sewer line, which will require the sewer line to have a siphon or lift station. A siphon will work if the flows are sufficient to create a siphon. During design the flows from this building will need to be considered on the upstream side of the siphon to ensure adequate design of the siphon. If the siphon does not require the flows from this building the existing sewer lateral from the Merrill Library could be utilized if the steam tunnel does not displace the existing sewer manhole where the sewer lateral is connected. See Figure C5.4.

Irrigation Water
An existing network of lateral irrigation lines exists throughout the site and will need to be removed. This system is serviced by a 6" steel main line that runs north to south on the west side of the site. It is anticipated that the shut off valve servicing the site can be maintained the new system will be connected at this point. See Figure C5.3

Culinary and Fire Suppression Water
Existing culinary mains surround the proposed site to provide culinary water and fire suppression. The former library site had an existing 2" water service with a 3" fire suppression. It is recommend the building use the existing 2" water service for connection and install a new fire suppression connection. The

recommended location of the fire connection is at the same location as the existing 3" connection.

The main water line north of the COA building, where the water service and fire line will connect is a 12" cast iron pipe.

The proposed site has adequate water pressure and fire flows. The University performed fire flow tests on five hydrants surrounding the site. The table below shows the results from the fire flow test. The fire hydrant locations are shown on C5.2

Flow Test Results

Hydrant Number	**Static Water Pressure @ FH**	**Residual Pressure @ FH**	**Residual Pressure @ Adjacent FH**	**Observed Flow (gpm)**	**Available Flow (gpm)**
10	79	73	72	1,202	3,802
11	84	80	75	1,404	4,049
12	75	62	72	1,126	5,414
13	75	70	70	1,244	4,543
14	75	70	70	1,126	4,109

Additional Utilities
See mechanical and electrical sections for additional information on communication lines, power, and steam lines.

Site Considerations

Utilities
The proposed COA site was the former site of the Merrill Library and is located next to the Quad allowing the new COA building to utilize the existing utilities surrounding the site. The proposed building location has close proximity to all necessary utilities. See Section 5 for detailed information on utilities and see Figure 5.0 for existing utilities and surface conditions.

Access and Parking
Currently parking and access are provided on a limited basis (restricted access) to the parking area, primarily servicing the College of Business building and the Merrill Cazier Library. This parking area will be impacted by the proposed COA and the future ARS buildings. Several parking stalls will be lost or will be required to be relocated with the location of the service entrance on the east side of the COA building. Some of this parking loss may be offset by making some adjustments to the drop off area south of the COA site. A series of temporary or meter stalls may be sited adjacent to the campus access road.

Service and Emergency Access

The service entrance for the COA building is recommended on the east side of the building, where the existing parking lot connects to Champ Drive. The existing soil conditions will allow for a full dock to be installed if required. The future ARS & Business service areas also could utilize the service area and entrance.

SECTION 6

STRUCTURAL

Codes and Standards

The minimum codes and standards that apply to the design of new buildings include current editions of the following:

- International Building Code (Current Edition)
- American Institute of Steel Construction (AISC) with Commentary
- ACI 318 Building Code Requirements for Reinforced Concrete
- American Iron and Steel Institute (AISI) specifications for the Design of Cold Formed Steel Structural Members
- American Welding Society ANSI/AWS D1.1 Structural Welding codes
- Steel Joist Institute (SJI) for Joists and Girders
- Steel Deck Institute (SDI)

Site Specific Requirements

The structural systems in the facility shall also be designed to meet specific site driven requirements. These requirements vary from location to location. Some of these requirements include:

- Soil bearing pressure characteristics based on a site specific. Geotechnical Investigation for the referenced site.
- Wind velocity 90 MPH, Exposure C.
- Roof snow loads 40 PSF roof snow load. Also implementing snowdrift requirements.
- Soil profile characteristics for ground acceleration - used for design.
- Seismic criteria, with soil profile as directed in the Soils Report.

Basic Design

The building will be 4 and/or 5 stories in height and may be divided into different wings each housing specific functions. The column spacing should be based on the most efficient layout for the various functions. It is important that these functions stack in some efficient manor such that similar floor loading and vibration requirements are best satisfied. The floor to floor heights are also related to the functions. Different grid spacing ideas are discussed below.

The structural framing system and framing components can vary depending upon different architectural requirements, service load needs, desired performance and availability and economics of material. Additionally, column spacing is usually dictated by occupancy and functional needs. Different column spacing can offer different framing scenarios.

Gravity Loading Criteria

Ground Floor:

Ground floor of the structure is anticipated to have a slab-on-grade type floor. It is not anticipated that a basement is programmed into this space. Should a basement be implemented similar on grade assumptions as below can apply.

The slab-on-grade shall be designed to satisfy all characteristics of the geotechnical report for the given site. Care should be taken to minimize surface cracks as well as to prevent moisture from permeating from below the slab. In the classroom or office locations it is not anticipated the slab-on-grade will experience loads that would exceed that of a similar facility, thereby permitting normal reinforcing. It is assumed that a 4 or 5 inch slab with #4 at 18" each way (or fiber reinforced concrete) would satisfy these loading requirements. For ground floor slabs where no structural loading is anticipated, CFP fiber reinforcing will be used in lieu of #4 at 18" each way.

Locations where labs are programmed will require additional slab depths and reinforcing. The typical lab requirements identified require 125 pounds per square foot be designed into the slab. This will depend on specific direction obtained in a soils report but should be satisfied with a 5 or 6 inch slab with the same reinforcing.

Specialized lab space with loads identified as 4,000 pounds per square foot will require significant structural support. Such loads must be on the ground level and should be isolated all around with a construction joint. This slab could be between 12 and 16 inches thick depending upon point and line loads from the equipment. A totally uniform load could result in a slab only 10" thick. Slabs of this thickness should have two layers of reinforcing of #6 bars at 12" on center each way.

The foundation systems are not yet resolved pending additional information from the soils engineer.

Steel Floor Framing: (option)

The general framing system could consists of steel wide-flange composite beams supporting a 3" steel deck. It is suggested that the deck span 10' +/- to maximize the decks efficiency. This will result in the steel framing to be spaced approximately 10' apart. (11' apart at lab modules)

A concrete fill would be placed on the deck which can provide the necessary fire rating requirements. The concrete will be reinforced to mitigate cracking. Saw cutting the slab for crack control is not desired.

Two options are to be evaluated including 7-1/2" total concrete thickness (normal weight concrete) or 6-1/4" total concrete thickness (light weight concrete). Our initial suggestion would be to use a 3" deck with 3-1/4" light weight concrete over the top for a total depth of 6-1/4". The availability of lightweight concrete in the region is an important factor in evaluating cost.

Classroom and office area type occupancies could utilize 3-1/4" of light weight concrete over a 3" steel deck. This would provide a 2 hour rating through the floor and not require the deck to be sprayed with fireproofing. Should lightweight concrete not be desired, 4-1/2" of normal weight concrete would be required over the top of a 3" steel deck. (7-1/2" total thickness) This will provide the same fire rating.

The advantages of light weight concrete can be realized in the foundation design and the steel tonnage if all things are equal. Light weight concrete is not as desirable in vibration sensitive areas and those areas where the concrete floors are exposed.

Beams will have minimal camber. If camber is determined to be more efficient in some of the floor beams the camber will be limited to 75% of the DL deflection. If elevated floor slabs are not exposed and act as finished surfaces, saw-cutting of these slabs would not be required. Nominal reinforcing will be provided directly over the gird line beams to assist in crack mitigation.

Steel wide flange columns will support the gravity loads.

Typical framing sizes for office areas: (approx.)

Filler beams	W18 x 35 (10' oc)
Girders & Perimeter Beams	W24 x 76 (30' oc)
Braced Frame Beams	W14 x 233 (avg.)
Moment Frame Beam	W24 x 146 (avg.)
Columns	5 psf/building area

In regions where floor loads are in excess of 100 psf and vibration requirements are desired to be at 2,000 micro- inches per second the premium to the steel could reach 20%-30% above that of office areas.

Concrete Floor Framing: (option)

The general framing system could consist of cast in place concrete slabs and concrete beams. With the potential column spacing of approximately 33 feet on center each way, such column spacing would be conducive to a flat plate system utilizing either waffle or rectangular pan construction. A pan system could reduce the volume of concrete, compared to a flat plate system and provide the necessary depth of slab to efficiently use the reinforcing bars and mitigate vibration. A flat plate system could potentially be more economically efficient.

The overall thickness of the structural slabs can be varied depending upon the loading criteria of each area. It is recommended however that the same depth of dome or pan be used throughout the building to achieve maximum cost efficiency.

Classroom and office areas could utilize 14 inch pans or domes with a 4 inch topping slab. This would result in a efficient and stiff structural slab. Laboratory areas which require live loads in excess of 125 psf could efficiently be framed with

20 inch domes with a 4 inch topping slab. This slab thickness would also provide an excellent floor resulting in a vibration control of 2,000 micro inches per second or slightly better. If the column spacing were reduced to 33' x 22' then the pan depth could be reduced from 20 inches to 14 inches and produce the same vibration control.

Column sizes would range from 18 inch square to 22 inch square depending upon loading conditions.

The floor systems for both steel and concrete will be evaluated to minimize vibration from both foot traffic as well as mechanical and laboratory equipment and other sources of vibration. Code allowable vibrations and deflection constraints may not be appropriate for the desired performance of the floor system. Other methods of vibration control include the placement of a rubber mat directly over the slab. This controls localized heal drop vibration induced movements.

Steel Roof Framing:

Roof framing members could be a combination of open-web steel joists and joist girders. Steel wide-flange beams could also be used where fabrication costs of joist girders are excessive or heavy concentrated loads are required to be supported. Steel wide-flange sections will also be used at all braced frame and moment frame beam lines and around the perimeter. It is unknown how many penetrations, (skylights) will be used at the roof level, what penthouse requirements may exist or other ornamental features supported by the roof, parapets etc.

Concrete housekeeping pads may be required below mechanical equipment. Such locations are more efficiently framed with wide flange sections.

If the roof system is framed with steel sections it is our recommendation to use only wide flange sections. This will simplify the fireproofing requirements and provide a clean surface from which to suspend HVAC loads.

Typical framing members for the roof level would consist of:

Filler Beams	6 x 26 (10' oc.)
Girders	W 24 x 68 (30' oc.)

Concrete Roof Framing:

It would be suggested that the 14 inch domes or pans be used on the roof with a 3 inch topping slab. A 4 inch topping slab may be required to satisfy fire code requirements.

It is noted that a steel roof framing system could be utilized with a building framed with concrete floors as described above. Continuing the concrete framing at the roof level could be determined to be more economical.

The roof framing shall provide adequate slope to sufficiently drain the water from the roof. Care should be taken to prevent ponding on the roof's surface.

Consideration should be given to adequate insulation for both thermal and noise characteristics.

Wall Systems:

None of the interior or exterior wall systems will be used to support gravity or lateral loads. They will be designed to support those required loads specified in the code with reference to wind loads, etc. Exterior panels will be supported from the structure.

Seismic Loading Criteria

Typically, seismic loads will govern a building design of this type. This is true for both a structural steel building and concrete frame building. However, it is important that various elements of the structure be properly designed to resist the prevailing wind loads. These elements may include overhangs, roof projections, exterior cladding systems, window mullions, etc.

The seismic loads enter a building by way of ground accelerations. These ground accelerations are absorbed by the lateral force resisting system of a building. Several different types of structural systems can satisfy these lateral forces. The number of bays requiring frames and/or shear walls are different for each system. The code restricts this number in order to ensure appropriate redundancy.

STEEL FRAME STRUCTURE

Steel Moment Frames:

It may not be possible to locate acceptable locations for braced frames in the longitudinal direction. As an alternative steel moment frames can be placed along at least two column grid lines. These lines should be as symmetrical as possible and preferably along the outside grids.

Steel Braced Frames:

Braced frame locations will be in areas where they have minimal impact on the architectural characteristics of the building. They should be able to be located in the transverse direction without compromise. These lines may be located along core areas, mechanical room walls or stair towers. In all cases the braced frames must stack from the roof level to the foundation level. State of the art frame design incorporates Buckling Restrained Braces (BRB's). These braces look similar in appearance to steel braces, however they are a hybrid of steel and concrete that exceptional performance resisting lateral loads. As locations for braced frames become inefficient (due to location) the costs rapidly approach that of moment frames.

It is not practical to combine moment frames and braced frames in the same direction. With all things equal the premium for moment frames could be $1.00 - $1.50 per square foot.

CONCRETE FRAME STRUCTURE

Concrete Moment Frames:

It may not be possible to locate acceptable locations for shear walls. As an alternative concrete moment frames can be placed along column grid lines. These lines should be as symmetrical as possible and preferably along the outside grids. Moment frames will provide ultimate flexibility for building layout.

Concrete moment frames can be used provided concrete beams be located along the frame lines. These beams may not be required with a flat plate design and thus would be an added cost. It is not suggested that a frame system be the primary lateral resisting system.

Concrete Shear Walls:

Concrete structures are best satisfied by concrete cast in place shear walls. Shear wall locations will be in areas where they have minimal impact on the architectural characteristics of the building. These lines may be located along core areas, mechanical room walls or stair towers. In all cases the shear walls must stack vertically from the roof level to the foundation level.

It is not practical to combine moment frames and shear walls in the same direction.

Structural Costs:

The structural systems shall be selected based on experience and familiarity for similar type structures. A comparison of the building construction time and the impact on the construction schedule between various structural systems should also be considered when choosing the final system for the building. Time of year for construction could be a significant factor. Lead times for certain structural components should also be investigated.

All cost comparisons between structural systems should include interface costs between other building components and systems including architectural, mechanical and electrical. Life cycle costs may be significant when considering the possibility of a seismic event.

Floor to Floor Heights:

The most significant costs associated with increasing the floor to floor heights are reflected in the lateral framing system.

Grid Spacing:

It has been determined that an appropriate lab module spacing is a multiple of 11' x 33'. This could result in a column spacing of 33' in each direction. In those areas where additional loads are required or vibration sensitive equipment is located we have the option of positioning an additional column at 11' or 22' in the one direction.

Columns placed at 33' in each direction provide an economical spacing in the classroom and office areas.

Plan Configuration:

Locating the various functions of the project in localized areas will result in efficient framing. Locations which require vibration constraints not only influence framing in that particular location but also in adjacent framing bays. Transfer beams above grade are not efficient for vertical framing.

SECTION 7

MECHANICAL AND PLUMBING

7.1. HEATING, VENTILATION AND AIR CONDITIONING (HVAC) GENERAL

The new Utah State University College of Agriculture Building will be located in Logan, Utah. The building design will therefore include design criteria from the University, the State of Utah Division of Facilities Construction and Management Standards (DFCM) and the Utah State Building Codes. For any conflicts identified between the University Standards and the DFCM requirements, the University Standards shall prevail.

7.1.1. Design Criteria

The design of the heating, ventilating and air conditioning system will be in conformance with the following applicable codes and guidelines:

- The International Mechanical Code - 2006 with Utah State Amendments
- State of Utah DFCM 12/04/2008
- Leadership for Energy & Environmental Design (LEED) Silver Certification
- ANSI/ASHRAE Standard 62-2004 Ventilation for Acceptable Indoor Air Quality
- ANSI/AIHA Z9.5-2003 - Standards for Laboratory Ventilation
- ANSI/ASHRAE 110-1995 Method of Testing Performance of Laboratory Fume Hoods
- ANSI/ASHRAE: Standard 55 - 2004 Thermal Environmental Conditions for Human Occupancy
- ANSI/ASHRAE 90.1 - 2004 Energy Standard for Buildings
- Sheet Metal and Air Conditioning Contractors' National Association (SMACNA) standards

7.1.2. Outside Design Conditions

ASHRAE Climate Data -1993 Fundamentals Handbook 24.14

For Logan, Utah

Elevation	4785 FT ASL
Summer Design Dry Bulb Temperature (ASHRAE 1%)	93° Fahrenheit
Summer Design Mean Coincident Wet Bulb Temperature (ASHRAE 1%)	62° Fahrenheit
Cooling Tower Wet Bulb Temperature (ASHRAE 1%)	65° Fahrenheit
Winter Design Dry Bulb Temperature (ASHRAE 99%)	-3° Fahrenheit
Winter Design Dry Bulb Temperature (University Std)	-20° Fahrenheit

7.1.3. Indoor Temperature and Humidity Design Conditions

The design conditions will be as follows:

- Office, Conference, and Administrative Support Areas:
  Dry Bulb Temp. - Summer: 72°F +/– 4°F
  - Winter: 68°F +/– 4°F
  Relative Humidity (not controlled): 59% Maximum

- Laboratory and Laboratory Support:
  Dry Bulb Temp. - Summer: 72°F +/– 2°F
  - Winter: 70°F +/– 2°F
  Relative Humidity (controlled): 30% to 59%

- Cold Rooms:
  Dry Bulb Temp. - Year Round: 4°C +/– 1°C (39°F +/– 2°F)
  Relative Humidity (controlled): Non-condensing

- Mechanical Rooms, Electrical Rooms, and Elevator Machines Rooms:
  Dry Bulb Temp. - Summer: Ventilation Only
  - Winter: 65°F minimum
  Relative Humidity: No requirement

- Tele/Data and Fire/Security Rooms:
  Dry Bulb Temp. - Year Round: 85°F
  Relative Humidity: No requirement

- Unoccupied Spaces:
  Dry Bulb Temp. 65 - 95°F
  Relative Humidity: No control

Active humidity control will not be provided for the non laboratory portions of the building.

7.1.4. Heating and Cooling Loads

7.1.4.1. Internal:

The loads for the mechanical system will be based on the following combined electrical and equipment loading for the various spaces:

- Office, Conference, and Administrative Support Areas
  Lighting = 1.0 watts per square foot
  Equipment = 3 watts per square foot

- Lobby, Record and Building Storage Areas
  Lighting = 1.0 watts per square foot
  Equipment = 0 watts per square foot

- Laboratories

Lighting	=	1.5 watts per square foot
Equipment	=	10 watts per square foot (8 to air 2 to water)

- Laboratory Support Areas

Lighting	=	1.5 watts per square foot
Equipment	=	15 watts per square foot (6 to air 9 to water)

- Freezer Equipment Room

Lighting	=	1.5 watts per square foot
Equipment	=	30 watts per square foot

Some of the spaces will have internal loads which exceed the values previously noted. The internal loading for these spaces will be determined based on the electrical and process requirements of the equipment to be located in these spaces.

7.1.4.2. Occupancy:

The occupancy heat rejection will be as follows:

Sensible	=	255 Btuh/person
Latent	=	255 Btuh/person

The number of occupants in each space will be based on the actual occupant density listed in the facility program.

7.1.4.3. Infiltration:

The building heat loss calculations will include an infiltration load based on 1.5 CFM of infiltration air per linear foot of exterior wall with windows and 1.0 CFM of infiltration air per linear foot of exterior wall without windows.

7.1.4.4. Design Calculations:

- The heating capacity will be sized on parametrically based undiversified calculated heating load for space and process.
- The cooling capacity will be sized on parametrically based undiversified calculated Cooling load for space and process.
- The heating and cooling loads will include a 5% safety factor.

7.1.5. Ventilation Loads

The minimum ventilation rates and space classifications for each occupancy type will be as follows:

- All Areas:
  Outside air per person (ASHRAE 62 STD)

- Laboratory and Laboratory Support Areas:
  Occupied: Minimum 8 air changes per hour
  Unoccupied: Minimum 4 air changes per hour

- Office, Administrative and Lobby Areas:
  Occupied: Minimum 2 air changes per hour at all times.
  Unoccupied: Minimum 0.1 air changes per hour.
  Toilets: Minimum 10 air changes per hour at all times.

7.1.6. Fume Hood and Biosafety Cabinet Performance Criteria

7.1.6.1. Fume Hoods:

The hoods will be variable air volume restricted bypass type due to the low hood density in most rooms and the need to maintain minimum air change rates within these rooms. The associated exhaust system will be sized with the capability to produce an average 100 FPM face velocity (measured over the entire face) at an 18" sash height at the chemical fume hoods. These criteria correspond to the following exhaust rates at the listed fume hood types:

- 4' Chemical Fume Hood (18" sash height) 480 CFM
- 5' Chemical Fume Hood (18" sash height) 630 CFM
- 6' Chemical Fume Hood (18" sash height) 780 CFM
- 8' Chemical Fume Hood (18" sash height) 1080 CFM
- 6' Perchloric Acid Hood (full open sash) 1545 CFM
- Snorkel (6" ϕ) 150 CFM
- Equipment Vent (4" ϕ) 50 CFM

7.1.6.2. Biosafety Cabinets:

Biosafety cabinets (BSC) classification is Class 2, Type A (100% recirculation, 0% exhaust).

7.1.7. Noise Criteria

The design will target the following average noise levels. The average noise levels in the laboratory areas are based on measurements taken three feet in front of a six foot fume hood. These noise levels do not include noise from equipment or personnel located within these spaces. Actual noise levels may exceed the design noise levels due to the actual type of equipment purchased, installation compromises, workmanship, etc.

- Laboratory Areas with Fume Hoods or BSCs: NC = 50 - 55
- Laboratory Areas without Fume Hoods or BSCs: NC = 45 - 50
- Laboratory Support Areas: NC = 50 - 55
- Open Offices: NC = 40 - 45
- Private Offices: NC = 30 - 35
- Conference Rooms: NC = 25 – 30
- Classrooms (without Fume Hoods): NC = 25 – 30
- Classrooms (with Fume Hoods): NC = 50 - 55
- Circulation Space, Lobby: NC = 35 - 40

7.1.8. Pressure Relationships

- Building: Positive to ambient
- Laboratories: Negative to adjacent spaces

- Corridors: Positive to laboratory
- Offices: Neutral or positive to adjacent spaces
- Cold Rooms: No requirement
- Toilet Rooms: Negative to adjacent spaces

Pressure relationships will be maintained by offsets between supply and exhaust air flow rates.

7.1.9. Indoor Air Quality Control Methods

Indoor air quality will be addressed by three principal means:

- Filtration – MERV 7 (30-35% efficient) pre-filters and MERV 14 (90-95% efficient) final filters at all supply air handling units with space allocated for future carbon filters and dust filers for carbon filter change out.
- No fibrous media exposed to the airstream will be allowed in the supply ductwork downstream of any air handling unit's final filter bank. Sound attenuating flexible ducts at the diffusers will have interior lining.
- Demand control ventilation with active CO2 Monitoring in common return
- Space demand control ventilation with active CO2 Monitoring in all high occupancy spaces (i.e. classrooms conference rooms)

7.1.10. Outdoor Air Quality Control Methods

Outdoor air intakes will be located to minimize cross-contamination between supply and exhaust air streams. During the design development phase a wind tunnel computer simulation shall be performed for this project to refine the locations and determine minimum exhaust stack heights. Laboratory exhaust stack discharges will be a minimum of 10 feet above the roof with a minimum velocity of 3000 FPM Air Handling Unit Component Sizing

Maximum allowable nominal face velocities for all air handling unit components are as follows:

- Air Intake Louvers (through free area): 500 FPM
- Air Discharge Louvers (through free area): 1000 FPM
- Heating Coils: 600 FPM
- Reheat Coils (Duct Mounted) 1000 FPM
- Energy Recovery Coils 600 FPM
- Cooling Coils: 450 FPM
- Filters: 450 FPM

7.1.11. Air Distribution System Criteria

7.1.11.1. Air velocity at occupied levels will be limited to:

- General: 50 FPM
- Laboratory and Support Spaces: 35 FPM
- Near Hood Openings: 35 FPM

7.1.11.2. Supply and Return Ductwork Sizing (based on undiversified CFM):

Pressure Loss (IN WG) and Maximum Velocity

• From Air Handling Unit through Chase to Supply Main at each floor:	0.25"/100' and 2,500 FPM
• Supply Main to Air Terminal (AT) Device:	0.25"/100' and 2,000 FPM (Duct size to AT device = AT inlet size within 15' of AT)
Air Terminal Device to Supply Diffuser:	0.1"/100' and 1500 FPM
Air Handling Unit to Open plenum Return:	0.1"/100' and 1500 FPM
Return/ Transfer Boots	500 FPM

7.1.11.3. General and Fume Exhaust, Ductwork (based on undiversified CFM):

Pressure Loss (IN WG) and Maximum Velocity

• Grille to Exhaust Valve (EV):	0.1"/100' and 1500 FPM
• Hood or Biosafety Cabinet (BSC) to EAV:	0.25"/100' and 2,000 FPM
• From EAV to Branch Main or Main:	Equal to EAV Outlet Connection size
• From Exhaust Branch Main or Main to Chase:	0.25"/100' and 2,000 FPM
• In Chase to Exhaust Air Plenum:	0.25"/100' and 2,500 FPM;

7.1.11.4. Miscellaneous Exhaust Systems:

Pressure Loss (IN WG) and Maximum Velocity

- General Exhaust Ventilation: 0.1"/100' and 1500 FPM

7.1.12. Room Air Distribution

7.1.12.1. Offices:

- Linear slot diffusers.
- Louvered face return grilles.

7.1.12.2. Laboratories and Support Spaces:

- Standard perforated face diffuser when CFM/FT2<4.5.
- Titus Tria-tech type diffuser when CFM/FT2≥4.5 or when within six feet of a fume hood.
- Louvered face exhaust grilles.

7.1.12.3. Other Room Types:

- Linear bar grilles or ceiling diffusers as dictated by architectural design and desired performance.

7.1.13. Pipe Sizing Criteria

7.1.13.1. Preheat Hot Water, Heating Hot Water and Chilled Water:

- 2.5 FPS minimum velocity and 7 FPS maximum velocity over occupied space. 10 FPS in unoccupied spcaes
- Maximum pressure drop of 4 FT. per 100 ft.

7.1.14. Seismic Criteria

Seismic design will be based on SMACNA "Seismic Restraint Manual Guidelines for Mechanical Systems", First Edition, 1991; Seismic Hazard Level "A", Connection Level 1.

- Equipment mounted on isolators will be seismically braced using loose cables, telescoping pipes or box sections, angles or flat plates used as limit stops or snubbers, either integral to or separate from the isolators. Non-rotating, fixed equipment will be bolted directly to the floor or structure.
- Rectangular and flat oval ductwork with cross-sectional area greater than six square feet and round ductwork with a diameter of at least 28 inches will be restrained, unless suspended by hangers within 12 inches of the supporting structure.
- The following piping will be braced:
  Gas, vacuum and compressed air piping 1" and larger, unless hanger length is 6" or less.
  All piping in mechanical rooms 1-1/4" and larger, unless hanger length is 6" or less.
  All piping 2-1/2" and larger, unless hanger length is 6" or less.
  All pipe racks.

- A seismic brace will be provided at a minimum of every second hanger where the hanger length exceeds 6".

7.1.15. Air Handling Unit Sizing Diversity

An overall diversity of 25%(75% of calculated value) shall be applied to the block parametric load calculations to cooling load and heating loads for sizing of air handling units.

7.2. SYSTEM DESCRIPTIONS

7.2.1. Office and Support Central Air Handling System

7.2.1.1. System Description:

The Office and Support areas will be served by four 25,000 CFM variable air volume (VAV) custom factory-fabricated air handling units located in the penthouse with 2" thick double wall construction. The units will be manifolded together and will share a common discharge plenum, return plenum outside air intake and relief air discharge. The supply air to the office areas will be returned to the units.

The air handling units will be designed as heating-cooling, single duct, reheat type to provide minimum outside air with a 100% outside air economizer on a variable air volume basis. The units will operate 24 hours per day, 365 days per year. Supply fans will be multiple plenum plug type and return fans will be multiple plenum plug type or in-line. Variable frequency drives will provide supply and return fan volume control in response to a signal from duct mounted static pressure sensors (one per floor). Air handling unit supply and return fan speeds will be modulated simultaneously as required by building load.

The supply distribution system will consist of high-pressure externally insulated galvanized steel ductwork with pressure independent electrically actuated supply VAV or Constant Volume (CV) air terminal devices, hot water reheat coils, low pressure externally insulated ductwork downstream of air terminals, and diffusers. Sound attenuating flexible ductwork with internal lining will be provided at the supply diffusers to control noise. One terminal unit/thermostat will serve each hard walled office or interior space serving a maximum of maximum 600 SF, with similar heating and cooling loads.

Constant cooling loads such as the Freezer Farm, MDF and IDFs will be served by four pipe fan coils units for 24/7/365 cooling.

Ductwork will be constructed in accordance with SMACNA standards and duct leakage shall not exceed 0.5% of the design volumetric flow rate for high pressure ductwork low pressure ductwork. The use of sound attenuating flexible duct at diffusers and grilles will be limited to six feet in total length to minimize duct static pressure losses.

7.2.1.2. Equipment and Materials:

The air handling units will be of double wall galvanized steel construction with perforated inner liner in fan sections and plenum section. The units will consist of the following components:

- Return plenum
- Return fan section
- Economizer section with: relief, economizer OSA and minimum OSA with air flow monitor
- Prefilter bank (MERV 7).
- Rack for future carbon filter
- Prefilter bank (Carbon Dust)
- Glycol preheat coil.
- Chilled water cooling coil.
- Supply fan section
- Discharge air sound attenuator.
- Final filter bank (MERV 14).
- Isolation/smoke damper.
- Variable frequency drives to modulate fan air flows.

7.2.1.3. Reserve Capacity and Redundancy:

The office and support air handling system consists of three air handling units. If one of the supply or return fans fails, the remaining fan will be able to provide at least 75% of the supply and return systems' design capacity.

7.2.2. Laboratory and Laboratory Support Central Air Handling System

7.2.2.1. System Description:

The building will be served by six 26,000 CFM variable air volume (VAV) custom factory-fabricated air handling units, located in the penthouse, with 2" thick double walls. The units will be manifolded together and will share a common discharge plenum to serve the laboratories and a common outside air intake.

The air handling units will be designed as heating-cooling, single duct, hot water reheat type to provide 100% outside air on a variable air volume basis. The units will operate 24 hours per day, 365 days per year. Supply fans will be multiple plenum plug type. Variable frequency drives will provide supply fan volume control in response to a signal from a duct mounted static pressure sensors (one per floor). Air handling unit fan speeds will be modulated simultaneously as required by building load.

The supply distribution system will consist of high-pressure externally insulated galvanized steel ductwork with pressure independent electrically actuated supply VAV or CV venturi air valves devices, reheat coils, low pressure externally insulated ductwork downstream of air terminals, and diffusers. Sound attenuators at the air terminal devices will not be provided. Instead, sound attenuating flexible ductwork with internal lining will be provided at the supply diffusers to control noise.

Ductwork will be constructed in accordance with SMACNA standards and duct leakage shall not exceed 0.5% of the design volumetric flow rate for high pressure and low pressure ductwork. The use of sound attenuating flexible duct at diffusers and grilles will be limited to six feet in total length to minimize duct static pressure losses.

7.2.2.2. Equipment and Materials:

The air handling units will be of galvanized steel construction. The units will consist of the following components:

- Outside air intake
- Prefilter bank (MERV 7).
- Energy recovery coil (Run-Around)
- Space for future carbon filter
- Prefilter bank (Carbon Dust)
- Glycol preheat coil.
- Direct clean steam humidifier
- Chilled water cooling coil.
- Supply fan section
- Discharge air sound attenuator.
- Final filter bank (MERV 14).
- Isolation/smoke damper.
- Variable frequency drives to modulate fan air flows.

7.2.2.3. Reserve Capacity and Redundancy:

The laboratory air handling system consists of six air handling units. If one of the units fails, the remaining units will be able to provide at more than 80% of the systems' design capacity. One air handling unit will be on emergency power to provide minimum make-up air to the fume hoods during normal power failure or during fire alarm conditions.

7.2.3. Life Cycle Cost Analysis

A in the design development phase life cycle cost analysis shall be performed on the Heating Ventilating and Air Conditioning (HVAC) systems.

7.2.3.1. Systems for Consideration

7.2.3.1.1. Office and Support Space

- Base systems described above
- In-slab high temperature cooling, low temperature heating
- Active and passive chilled beams
- Sensible energy recovery (plate or wheel) with bypass dampers.
- Total energy recovery (wheel) with bypass dampers
- Adiabatic (evaporative) cooling
- Individual ventilation control
- Individual thermal control

7.2.3.1.2. Laboratory and Laboratory Support Space

- Base systems described above
- Active chilled beams
- Adiabatic (evaporative) cooling
- Convertible labs (once through to recirculated)
- Fume hood occupancy control
- Decommissioning (long term inactive) control
- Active air quality management
- Powered plume dilution air (Loren Cook Power Plume Fan)

7.2.4. Central Laboratory Exhaust System:

7.2.4.1. System Description:

The building will be served by one combined central laboratory exhaust system serving fume hood exhaust, snorkel exhaust, and general laboratory exhaust requirements. Combined fume and general exhaust duct risers from each floor will connect in a shaft to a common plenum exhausted by six 25,000 centrifugal fans.

The general exhaust terminals served by the central exhaust system are variable volume devices, and therefore the central exhaust fans operate at variable volume to maintain a variable stack discharge minimum velocity of 3000 feet per minute (FPM) maximum. A static pressure sensor in the exhaust plenum will provide a control signal to control the speed of the exhaust fans, and to control the outside air bypass damper(s) that allows makeup air into the fume exhaust plenum during times of very low exhaust airflow and during supply air shut-off due to fire/ smoke damper closure.

The laboratory exhaust fans will discharge a minimum of 10 feet above the roof or as determined by wind tunnel testing.

Pressure independent, high speed electronically actuated, aluminum body, venturi type, variable air volume exhaust air valves will be provided to serve general exhaust grilles in lab areas. Pressure independent, high speed electronically actuated, coated aluminum venturi type variable volume exhaust air terminal devices will be provided for the fume hoods. The exhaust volume shall vary to match the sash position. 304 stainless welded high pressure/high velocity exhaust ductwork will be utilized between the fume hood and the exhaust air valve and the exhaust plenum.

7.2.4.2. Equipment and Materials:

The in-line mixed flow exhaust fans will be of spark-proof construction with bearings and motors out of the airstream. Fans will have baked or air dried epoxy or heresite chemical resistant coating. All central exhaust ductwork and the common plenum will be of G-90 galvanized steel construction. The central exhaust system will consist of the following components:

- Acoustical exhaust manifold
- Energy recovery coil (Run-Around)
- Isolation damper at each fan inlet.

- Bypass air inlet and bypass damper.
- Centrifugal exhaust fans.
- Exhaust stacks with Isokinetic sampling port
- Variable frequency drives.

7.2.4.3. Reserve Capacity and Redundancy:

Six fans lab exhaust fans will be provided to serve the common exhaust plenum each sized at 16% of the load. If one of the fans fails, the remaining fans will be able to provide more than 80% of the common exhaust system's design capacity. One of the fans in the will be on emergency power. Note that fume hood face velocities will drop below 60 FPM when on emergency power.

7.2.5. Perchloric Exhaust System

7.2.5.1. System Description:

Each perchloric hood will be served by a dedicated constant air volume exhaust system. The exhaust system will operate whenever the hood is in use and will be turned off during wash down.

The exhaust fan will be located on the roof with as few ductwork bends as possible. Water spray nozzles will be located in the ductwork and at the fan to minimize build-up of perchloric acids. The ductwork will contain no dampers.

7.2.5.2. Equipment and Materials:

The induced flow centrifugal exhaust fan will be constructed of 316 stainless steel. All exhaust ductwork will be of fully welded 316 stainless steel water-tight construction. The perchloric hood exhaust system will consist of the following components:

- Constant volume centrifugal exhaust fan with intake
- Venturi for inducing perchloric fume exhaust flow
- Duct wash down system
- Exhaust stack.

7.2.5.3. Reserve Capacity and Redundancy:

One exhaust fan will be provided for each exhaust system which is dedicated to one fume hood, which provides no redundancy, except for the fact that there are two perchloric fume hoods. Both fans will be on emergency power.

7.2.6. Laboratory and Fume Hood Airflow Control Systems

7.2.6.1. System Description:

- Fume Hood Control
  All laboratories and the fume hoods will be exhausted on a variable volume basis using restricted bypass type variable volume fume hoods.

- Laboratory Airflow Control
  The laboratories will be variable air volume supply and exhaust. The control method employed for achieving laboratory air volume control will be airflow tracking type control with adaptive offset. The exhaust rate from the fume hoods

and general exhaust will be totaled for each laboratory. The associated supply air valve will be modulated to maintain an adjustable offset between the supply and exhaust air quantity. The pressure differential between the laboratory and the corridor will be measured to adjust the flow offset to maintain the proper pressure relationship.

- Equipment and Materials:
  The fume hood and laboratory airflow control system will consist of the following components:
  - General exhaust air valves
  - Fume hood exhaust air valves
  - Fume hood sash position or velocity sensors
  - Equipment exhaust air valves
  - Direct digital room pressure and temperature controllers
  - Room pressure monitors
  - Room temperature sensors
  - Supply air valves
  - Hot water reheat coils.

7.2.6.2. Reserve Capacity and Redundancy:

No redundancy will be provided for the control system. Each lab will be individually powered and controlled. The control system will be on emergency power.

7.2.7. Campus Utility Tunnel Extension

7.2.7.1. System Description:

Cooling and heating for the building will provided through an extension of the campus utility tunnel, chilled water system and medium pressure steam system. It is currently anticipated that the tunnel and utilities will be extended approximately 200 feet to the south, with a node connection at the walkway intersection north of the building for future tunnel extensions to the west and approximately 200 feet to the east with a connection to the north east corner of the building and a future node connection for the future Business Building.

Due to the congestion of underground utilities immediately south of the existing tunnel, it is anticipated that either the tunnel will need to connect to the bottom of the existing tunnel or that there will be a significant rework of the existing utilities possibly including sanitary lift stations, storm water lift stations, electrical duct bank relocations, water system relocations, steam system relocations and chilled water system relocations.

7.2.8. Chilled Water System

7.2.8.1. System Description:

Cooling for the building will be provided by the campus district chilled water system. Chilled water will be drawn directly from the campus chilled water through an air separator/strainer and distributed to the building fan coils and air-handling units. A variable flow pumping distribution system will be used. All air handling units and fan coils will be controlled with two way flow control valves. Two chilled water pumps

(100% capacity each) will provide variable flow (as dictated by building load) to the units. A pressure differential sensor at each floor in the loop will vary the AFD pumps speed to maintain a constant pressure differential across the chilled water system using low select logic. Chilled water will be supplied to the air-handling units at a maximum of 45°F with a 14°F temperature rise.

Rooms not supplied by the main air handling unit that require 24 hour, year round cooling (electrical rooms with transformers, freezer farms, MDF and IDF rooms) will be provided their own chilled water fan coil cooling systems.

7.2.8.2. Equipment and Materials:

The chilled water piping system will utilize copper or threaded carbon steel for pipe up to 2” and welded carbon steel piping for sizes above 2”. Pipe insulation will be rigid glass fiber. The system will include the following equipment:

- Base mounted, end suction, centrifugal primary pumps.
- Pump variable frequency drives.
- Appropriate valving and piping specialties.
- Bladder type expansion tank and air separator.
- Chemical pot feeder for the chilled water system.
- BTU meter including flow and temperature differential

7.2.8.3. Reserve Capacity and Redundancy:

Two variable speed chilled water pumps have been sized to provide 100% of the design flow rate each. If one of the pumps were to fail, the other remaining pump will provide 100% redundancy. The chilled water system is not on emergency power.

7.2.9. Equipment Cooling Water System

7.2.9.1. System Description:

An equipment cooling water system is anticipated for this project. Any laboratory equipment that requires cooling can be directly cooled by this system, avoiding impacting the room air flow rates. An allowance of 50 tons and 86 GPM at 14°F temperature rise has been made for equipment cooling.

7.2.10. Heating Hot Water System

7.2.10.1. System Description:

Heating and reheat heating hot water will be generated from campus steam by heat exchangers located in the basement of the building. The heat and reheat water system will be designed to generate water at 140°F with a 20°F temperature differential for reheat coils, terminal heating devices, and unit heaters.

The heat/reheat water system will consist of a variable flow water loop. Two base mounted, variable volume pumps will be utilized for the water circulation. A variable frequency drive will be provided at each pump to save energy and minimize system pressure fluctuations at varying flow conditions. Two pressure differential sensors at each floor in the loop will vary the AFD pumps speed to maintain a constant pressure differential across the heating water system using low select logic.

7.2.10.2. Equipment and Materials:

The combined heat and reheat water system will utilize copper or threaded carbon steel piping for pipe sizes up to 2” and welded carbon steel piping for sizes above 2”. Pipe insulation type will be rigid glass fiber. The system will include the following equipment:

- Base mounted, end suction centrifugal pumps.
- Pump variable frequency drives.
- Bladder type expansion tank and air separator.
- Chemical pot feeder.
- Make-up water assembly.
- Appropriate valving and piping specialties.

7.2.10.3. Reserve Capacity and Redundancy:

Two equally sized steam to hot water heat exchangers (100% Capacity each) are provided to accommodate the total heating/reheat load plus an additional 20% extra capacity added to the block heating load. If one hot heat exchanger fails, the other one will provide 100% of the total load requirement. Two variable speed primary pumps will be sized at 100% of design flow rate each. If one pump fails, the remaining pump will be able to provide 100% of the design capacity. One heating water pump will be on emergency power

7.2.11. Glycol Water Heating System

7.2.11.1. System Description:

Preheat heating glycol water will be generated from campus steam by heat exchangers located in the basement of the building. The preheat water system will be designed to generate water at 180°F with a 40°F temperature differential for air handlers preheat coils and blend down to 100°F for snow melt systems.

The preheat water system will consist of a variable flow water loop. Two base mounted, variable volume pumps will be utilized for the water circulation. A variable frequency drive will be provided at each pump to save energy and minimize system pressure fluctuations at varying flow conditions. A pressure differential sensor in the penthouse loop will vary the AFD pumps speed to maintain a constant pressure differential across the heating water system using low select logic.

The snowmelt system will utilize a blended loop off of the pre-heat system with two base mounted, variable volume pumps will be utilized for the water circulation. A variable frequency drive will be provided at each pump to save energy and minimize system pressure fluctuations at varying flow conditions. A pressure differential sensor in the penthouse loop will vary the AFD pumps speed to maintain a constant pressure differential across the heating water system using low select logic.

7.2.11.2. Equipment and Materials:

The glycol preheat system will utilize welded carbon steel piping for all pipe sizes. Threaded connections are only permitted at valves piping specialties using stringent cleaning and sealant methods. Pipe insulation type will be rigid glass fiber. The system will include the following equipment:

- Primary base mounted, end suction centrifugal pumps.
- Primary pump variable frequency drives.
- Bladder type expansion tank and air separator.
- Glycol feed system.
- Make-up water connection.
- Appropriate valving and piping specialties.

7.2.11.3. Reserve Capacity and Redundancy:

Two equally sized steam to glycol heat exchangers (100% Capacity each) are provided to accommodate the total preheat/snowmelt load plus an additional 20% extra capacity added to the block heating load. If one hot heat exchanger fails, the other one will provide 100% of the total load requirement. For the pre-heat system two variable speed primary pumps will be sized at 100% of design flow rate each. If one pump fails, the remaining pump will be able to provide 100% of the design capacity. One pump will be on emergency power. For the snow melt system two variable speed primary pumps will be sized at 50% of design flow rate each. If one pump fails, the remaining pump will be able to provide 50% of the design capacity. One snow melt pump will be on emergency power

7.2.12. Energy Recover System

7.2.12.1. System Description:

The energy recovery system will consist of heat recovery coils in the laboratory exhaust system and the laboratory make up air units and a run-around glycol loop to transfer the heat from one system to the other.

The energy recovery system will consist of a variable flow glycol loop. Two base mounted, variable volume pumps will be utilized for the glycol circulation. A variable frequency drive will be provided at each pump to save energy and minimize system pressure fluctuations at varying flow conditions. A pressure differential sensor in the penthouse loop will vary the AFD pumps speed to maintain a constant pressure differential across the heating water system using low select logic.

7.2.12.2. Equipment and Materials:

The energy recovery system will utilize welded carbon steel piping for all pipe sizes. Threaded connections are only permitted at valves piping specialties using stringent cleaning and sealant methods. Pipe insulation type will be rigid glass fiber. The system will include the following equipment:

- Primary base mounted, end suction centrifugal pumps.
- Primary pump variable frequency drives.
- Bladder type expansion tank and air separator.
- Glycol feed system.
- Make-up water connection.
- Appropriate valving and piping specialties.

7.2.12.3. Reserve Capacity and Redundancy:

Two variable speed primary pumps will be sized at 100% of design flow rate each. If one pump fails, the remaining pump will be able to provide 100% of the design capacity. One pump will be on emergency power.

7.2.13. Steam and Condensate System

7.2.13.1. System Description:

Steam for space heating, re-heat, preheat and snowmelt, domestic water heating, humidification, autoclaves and glasswash will be provided by the campus district heating system. Steam will be provided directly from the campus medium pressure steam system through moisture separator and distributed to the building pressure reducing station, clean steam generator and to the autoclaves and glasswashers. A two stage x 1/3 + 2/3 pressure reducing station will be provided to reduce the campus steam pressure to 15 PSI for heat transfer. Steam will be provided to the building at 85 PSI maximum (65 PSI minimum in the summer) by the campus system with a 15 PSI backpressure for condensate return.

7.2.13.2. Equipment and Materials:

The medium and low pressure steam piping system will utilize threaded standard weight carbon steel for pipe up to 2” and welded standard weight carbon steel piping for sizes above 2” and will be rated for 300 PSI proof pressure. Gravity and pumped condensate system will utilize threaded schedule 80 carbon steel for pipe up to 2” and welded schedule 80 carbon steel piping for sizes above 2” Pipe insulation will be rigid glass fiber. The system will include the following equipment:

- Pressure reducing station
- Inlet steam flow meter
- Electric condensate pumps (in Building)
- Electric condensate transfer pumps (to Campus)
- Condensate flow meter

7.2.13.3. Reserve Capacity and Redundancy:

The two stage 1/3 + 2/3 pressure reducing station will be sized to provide 100% of the design flow rate each through the use of manual bypass valves around each Pressure Reducing Valve (PRV). If one of the PRVs were to fail, the other remaining PRV will provide a minimum of 33% capacity. Full capacity can be restored through the use of a manual bypass. The condensate return system is on emergency power.

7.2.14. Humidification

7.2.14.1. System Description:

A steam to clean steam generator will be utilized to provide humidification to the laboratories. Medium pressure campus steam and reverse osmosis water will be used to generate clean steam for direct injection into the laboratory air handling units. Clean steam generator will be constructed from 304 stainless steel.

7.2.14.2. Equipment and Materials:

The clean steam piping system will utilize threaded standard weight 304 stainless steel for pipe up to 2” and welded stainless steel piping for sizes above 2” and will be rated for 300 PSI proof pressure. Condensate will be recovered for toilet flushing Pipe insulation will be rigid glass fiber. The system will include the following equipment:

- Clean steam generator
- Inlet water flow meter

7.2.14.3. Reserve Capacity and Redundancy:

One clean steam generator will be provided. No redundancy is provided.

7.2.15. Cold Room Cooling System

7.2.15.1. System Description:

Cold rooms will be designed to maintain 4°C ± 1°C. Ventilation air is not required by code since the rooms are used for storage and not continuously occupied. However, a minimum amount of supply air for ventilation will be provided. Humidity levels in the cold rooms will be actively controlled and should range from 60-90%, non-condensing.

The cold rooms will be cooled by DX type unit coolers which include a refrigerant DX coil and air cooled condensing unit.

Humidity will be controlled by moisture removal at the DX cooling coil by use of hot gas defrost or electric defrost.

Room temperature will be centrally monitored by the building management system and locally monitored by digital recorders at each individual room. Both central and local alarms will be annunciated if the temperature in any cold room nears a critical level.

7.2.15.2. Equipment and Materials:

- Premanufactured cold rooms.
- DX type unit coolers (provided by the cold room manufacturer).
- Rooftop air cooled condensing units (provided by the cold room manufacturer).

7.2.15.3. Reserve Capacity and Redundancy:

The cold rooms will not have any redundancy. If the cooling system fails in one room, the room contents will have to be moved to another room. The cold room systems will be on emergency power.

7.2.16. Smoke Evacuation

7.2.16.1. System Description:

Smoke ventilation and evacuation system will be capable of removing smoke from the atrium in the event of a fire. System controls (separate stand alone panel) and power wiring will be protected and the control system will be connected to emergency power to provide smoke ventilation and evacuation. The smoke

ventilation system includes four makeup air fans, air intakes, ductwork and discharge grilles. The smoke evacuation system consist of two smoke exhaust fans air intake grilles, ductwork and exhaust discharge.

7.2.16.2. Equipment and Materials:

- Smoke ventilation fans
- Smoke exhaust fans
- Smoke control systems
- Penetrations of smoke barriers.
- Penetrations of shaft enclosures.
- Penetrations of area or occupancy separation walls.
- In air systems with a capacity greater than 2,000 cubic feet/minute to isolate the air handling equipment.

7.2.16.3. Reserve Capacity and Redundancy:

No redundancy is provided. Smoke ventilation fans and smoke evacuations fans will be on emergency power.

7.3. MECHANICAL SYSTEM LOAD CALCULATIONS

7.3.1. Load Calculations

The preliminary load calculations can be found in the Appendix.

7.4. INSTRUMENTATION AND CONTROL SYSTEM

7.4.1. Building Automation System (BAS):

The mechanical systems will be controlled and monitored through a DDC based Building Automation System (BAS) with distributed processing at the local level. Electric actuation will be utilized for all control valves and dampers so that instrument air is not required. Controls will be on cabinet by cabinet UPS and emergency power.

System software and firmware will provide the following functions:

- Proportional, integral and derivative (PID) control to allow faster and closer control to system setpoints.
- Adaptive tuning to adjust PID loop constants to ensure that control system response remains accurate and reliable over a wide range of dynamic operating conditions.
- Monitoring to read value of measured variables; to read control loop setpoints, to monitor control signals to actuators; and to indicate status of equipment, alarms and overrides.
- Energy management including optimum start/stop, duty cycling, temperature reset, demand limiting, the time totalization, etc.

- Data management including continuous data base updating, alarm reporting trend logging and report generation.
- System programming to add, delete or change points, setpoints, schedules, control algorithms, report formats, etc.

System software will allow building operators to graphically monitor and control building operations and provide the functions listed above. Graphics will include site plans, overall building plans, floor plans and individual system graphics.

The BAS system specified will be compatible with the campus BAS system installed.

7.4.2. Laboratory Control System:

The laboratory mechanical systems will be controlled and monitored through dedicated DDC based laboratory automation and control system with distributed processing at the local level. Electric actuation will be utilized for all control valves and dampers so that instrument air is not required. Controls will be on a cabinet by cabinet UPS and emergency power.

System software and firmware will provide the following functions:

- Independent control on a lab by lab basis.
- Proportional, integral and derivative (PID) control to allow faster and closer control to system setpoints.
- Adaptive tuning to adjust PID loop constants to ensure that control system response remains accurate and reliable over a wide range of dynamic operating conditions.
- Monitoring to read value of measured variables; to read control loop setpoints, to monitor control signals to actuators; and to indicate status of equipment, alarms and overrides.
- Data management including continuous data base updating, alarm reporting trend logging and report generation.
- System programming to add, delete or change points, setpoints, schedules, control algorithms, report formats, etc.
- Integration with fume hood monitor/controllers

System software will allow building operators to graphically monitor and control laboratory operations and provide the functions listed above through the BAS. Graphics will include site plans, overall building plans, floor plans and individual system graphics.

The Laboratory Control System specified will be compatible with the campus BAS system installed.

7.4.3. Data Acquisition/Monitoring/Alarming System:

An independent SCADA based data acquisition, monitoring, and alarming system will be provided for cold room/warm room temperatures, freezer temperatures, incubators, and other critical system items and alarms.

7.5. PLUMBING SYSTEMS

7.5.1. Plumbing Criteria

7.5.1.1. Applicable Codes, Guidelines and Standards:

The latest edition or approved year of the following codes or combination codes and guidelines will govern Plumbing Systems, Fire Protection, and other piping systems design. The systems will be designed to meet or exceed these standards.

- The International Plumbing Code - 2006 with Utah State Amendments
- Leadership for Energy & Environmental Design (LEED) Silver Certification
- State of Utah DFCM 12/04/2008
- State of Utah Fire Marshall's Rule R710

Other local and State codes and USDA standards will be adhered to where applicable and available.

7.5.1.2. Seismic Criteria:

Seismic design will be based on SMACNA "Seismic Restraint Manual Guidelines for Mechanical Systems", First Edition, 1991; Seismic Hazard Level "A", Connection Level 1.

- Equipment mounted on isolators will be seismically braced using loose cables, telescoping pipes or box sections, angles or flat plates used as limit stops or snubbers, either integral to or separate from the isolators. Non-rotating, fixed equipment will be bolted directly to the floor or structure.
- The following piping will be braced:
  Gas, vacuum and compressed air piping 1" and larger, unless hanger length is 6" or less.
- All piping in mechanical rooms 1-1/4" and larger, unless hanger length is 6" or less.
- All piping 2-1/2" and larger, unless hanger length is 6" or less.
  All pipe racks.
- A seismic brace will be provided at a minimum of every second hanger where the hanger length exceeds 6".
- All pipe racks and vertical risers.

The fire protection piping requiring seismic bracing shall be installed following the non-insulated single hanger or trapeze supported piping methods listed in the SMACNA Guidelines, or per the NFPA 13 requirements.

Equipment, mounted on isolators will be seismically braced using loose cables, telescoping pipes or box sections, angles or flat plates used as limit stops or snubbers, either integral to or separate from the isolators. Non-rotating, fixed equipment will be bolted directly to the floor or structure.

Other local and State codes and standards will be adhered to for seismic requirements.

7.5.2. Potable Hot and Cold Water

7.5.2.1. System Description:

Potable hot and cold water will be provided for all toilet rooms, showers, emergency shower/eyewash units, and all other fixtures and devices that require a potable water supply. All building source water will extend from the campus water distribution system.

The building water distribution system will be isolated from the city or campus water system by providing parallel reduced pressure backflow preventers (RPBP) located inside the building. Meter and service to within 5 feet of building and connected to Building Automation System.

Currently there is no need for a booster pump because adequate pressure is provided at the site. Preliminary flow test for the hydrant at the northwest corner of the building site indicates a static pressure of 79 PSI and an available flow of 3802 GPM at a residual flow of 73 PSI. Minimum pressure to furthest outlet will be designed for 30 psig.

Tempered water will be provided to emergency shower/eyewash units.

7.5.2.2. Equipment and Materials:

Two steam-fired semi-instantaneous, double walled U tube bundle heaters will be provided to produce potable hot water at 140° degrees Fahrenheit. A central mixing valve will be provided to reduce the temperature to 120°F. for potable hot water and to 102°F. for Tempered water for emergency shower/eyewash supply.

The domestic hot and cold water distribution piping will be Type L copper with lead free soldered joints and wrought copper fittings. Piping will be sized for a maximum velocity of 6 fps for cold water and 4 fps for hot water. Hot water will be continuously circulated to maintain water temperature. Heat trace will not be used, unless exposed outdoors. Water conserving faucets and fixtures will be utilized to meet and/or exceed all required code minimums.

All domestic cold, tempered or hot water piping will be insulated. The only domestic water piping not requiring insulation is the fixture supplied connection (approximately 12 inches).

7.5.2.3. Reserve Capacity and Redundancy:

Each of the parallel RPBP's will be sized for the 50% estimated peak flow. Each water heater will be sized for the 75% demand of all the hot water. The distribution piping serving each floor will be sized for the current building program with an additional 20% load provided to accommodate for an adaptable laboratory concept and for renovation flexibility.

7.5.3. Industrial Water

7.5.3.1. System Description:

Industrial hot and cold water will be provided to serve all laboratory and process related fixtures, lab sinks, cup sinks and devices that require an industrial water supply. The industrial hot and cold water distribution systems are isolated from the potable water system by providing separate parallel reduced pressure backflow preventers (RPBP) within the mechanical room.

7.5.3.2. Equipment and Materials:

Two steam-fired semi-instantaneous, double walled U-tube bundle heaters will be provided to produce hot water at 140° degree Fahrenheit. A central mixing valve will be provided to reduce the temperature to 120°F. Both the industrial cold water and the industrial hot water will be distributed through their own separate piping systems in the building.

The industrial hot and cold water distribution piping will be Type L copper with lead free soldered joints and wrought copper fittings. Brazed joints are also an option. Piping will be sized for a maximum velocity of 6 fps for the cold water and 4 fps for hot water. The industrial hot water distribution piping will be continuously circulated to maintain water temperature. Heat trace will not be used. Flow control devices at points of use will be utilized for water conservation to meet or exceed all required code minimums.

Industrial hot water piping will be insulated. Industrial cold water will not be insulated, except in mechanical rooms and other unconditioned spaces of the facility.

7.5.3.3. Reserve Capacity and Redundancy:

Each of the parallel RPBP will be sized for the 100% estimated peak flow. Each water heater will be sized for the 75% demand of all the hot water. The distribution piping serving each floor will be sized for the current building program with an additional 20% load provided to accommodate for an adaptable laboratory concept and for renovation flexibility.

7.5.4. Pure Water Distribution System

7.5.4.1. System Description:

The Pure Water Distribution System will provide a single grade of Pure Water to all points of use throughout the Labs. The system shall be designed to maintain the quality of water equal to Reagent Grade, Type II.

The water quality requirements at the use points are as follows:

- Resistivity (minimum): 1 megohm-cm
- Conductivity (maximum): 0.5 micromhos/cm
- Bacteria (maximum): 1000 CFU/100 ml

The distribution system will be designed to continuously circulate water at 3 to 7 feet per second under maximum or no draw off conditions. A minimum velocity of 3 feet per second will be kept in the circulating loops under maximum draw off conditions.

High purity water (10-18 megohm) will be produced by local polishers at one location per floor or in the labs provided by users. Each lab sink will be provided with a capped T for a future local polisher.

The system will be sized using the following criteria:

- One GPM per lab outlet
- 10 gallons per day per lab outlet
- Diversity factor of 0.2 (dependent on the number of outlets)

The tank capacity will be 300 gallons.

This capacity will supply purified water to all users for 8 hrs in case of head end equipment shutdown.

7.5.4.2. Equipment and Materials:

The Pure Water system equipment will consist of a multimedia filter, duplex water softeners, exchangeable carbon filters, reverse osmosis system with TFC membranes. FDA vinylester-lined fiberglass tank equipped with 0.2 micron hydrophobic filter, 316L stainless steel centrifugal distribution pumps, resistivity monitored mixed bed exchange columns, hydrophilic 0.45 micron water filters, 254 nanometer ultraviolet light, hydrophilic 0.2 micron final water filter, and a 185 nanometer UV light (TOC reducing) in the return lines of the distribution loop.

The distribution system loop will be Schedule 80 Polypropylene piping with socket fusion welded joints.

The pipe will be continuously supported with sheet metal V. Expansion loops or offsets will be installed in straight run as required. The distribution mains and laterals will be direct return. Each lab distribution loop will employ series loop layout. The distribution pump discharge pressure will be limited to maximum of 100 psi.

Distribution piping will allow continuous circulation to all points of use observing no more than 6 pipe diameters dead leg to a drainable manual diaphragm valve outlet connection.

Based on water usage and high purity water storage tank turnover, cooling of the distribution loops is not currently anticipated. Should actual water usage be significantly less than design basis, an automatic distribution water dump system based on high loop water temperature can be added in the future.

Chemical sanitation will be used.

The system will be controlled by a PLC. The local control panel will house an Allen Bradley PLC and Panelview and will display the tank level, system resistivity, and loop flow rates. The PLC will send a discrete alarm signal to the Building Management System (BMS) and SCADA System. The BMS and SCADA will not provide any system control functions.

7.5.4.3. Reserve Capacity and Redundancy:

The storage tank will provide 8 hours reserve capacity in case of head end equipment shutdown. 100% redundant distribution pumps will be installed in case of pump failure. Space will be reserved in the mechanical room for future polishing units (DI bottles), if desired.

7.5.5. Laboratory Vacuum

7.5.5.1. System Description:

The central laboratory vacuum system will provide laboratory vacuum to all vacuum inlets and/or laboratory equipment.

The system will be designated to extract 0.5 SCFM of air from each lab inlets @ 20" of vacuum, with diversity factor that is based on the number of inlets. The piping will be sized so that the total uniform friction loss does not exceed 2" Hg, and will not exceed a velocity of 6,000 fpm.

7.5.5.2. Equipment and Materials:

The central system will include rotary vane type triplex pumps, a receiver tank, controls, and distribution piping. System controls shall be designed to periodically operate the vacuum pump on a purge cycle, which shall be isolated from the process, to purge any condensed vapors from the oil. The purge cycle will be maintained for at least 15-minutes of operation. The cycle of all pumps shall be timed to provide even wear on the system.

The lab vacuum piping system will be type L copper with wrought solder joints and wrought copper fittings. Equipment vacuum piping in sizes larger than 3" size will have drainage fittings.

7.5.5.3. Reserve Capacity and Redundancy:

All pumps will serve as a backup in case of failure of a single pump and during maintenance and purge cycles. It will also serve for alternation, as well, as to satisfy moderate overloads. 100% stand-by capacity will be available when one pump is in operation.

7.5.6. Compressed Air

7.5.6.1. System Description:

The central laboratory air system will provide laboratory air to all air outlets and laboratory equipment for the facility.

The compressed air will be distributed throughout all floors at 100 psig. Each laboratory suite will also be provided with a pressure reducing valve at the outlet which reduces the pressure to a user defined level of 30-35 psi. The system will be designed to provide 1 SCFM of air per each lab outlet @ 100 psig. A diversity factor will be used that will be determined based on the number of outlets. All continuous use equipment will be designed at 100% of demand @ 100 psig. Branch lines will be taken off the top of the mains.

The compressed air system piping will connect to the compressor skid in the mechanical equipment room and rise through the building in the main pipe chases. The distribution system will follow main pipe chases vertically and follow the general piping scheme of horizontal floor distribution, following the corridors. The distribution system will be sized so that the uniform friction loss does not exceed 10% of the delivered pressure and the velocity does not exceed 4,000 feet per minute. Branch lines will be taken off the top of the mains. As an option, regulators can be placed at all outlets in lieu of a PRV at each suite to facilitate various pressure requirements.

7.5.6.2. Equipment and Materials:

The central system will consist of duplex compressors, desiccant dryers, a receiver and filters. Compressed air will be dried to a -12°F dew point. The compressed air system will be filtered to remove hydrocarbons and particulates. The system controls for the compressors and dryers will operate to alternate each compressor for even wear on the system.

The compressed air piping system will be Type L, ACR copper pipe and wrought copper fittings with soldered or brazed joints.

7.5.6.3. Reserve Capacity and Redundancy:

Each of the compressors will be sized to handle 75% of the load. Each pump will serve as a backup in case of failure of a single pump. The distribution piping serving each floor will be sized for the current building program with an additional 20% load provided to accommodate for an adaptable laboratory concept and for renovation flexibility.

7.5.7. Specialty Gases

7.5.7.1. System Description:

Special gases can include CO2, natural gas, helium and ultra pure, high pressure nitrogen. Services will be provided to all instrument rooms and laboratories as programmed.

7.5.7.2. Equipment and Materials:

Special gases will be provided by local gas cylinder stations located in designated closets adjacent to laboratories. Multi-station manifolds with regulators and wall brackets will be provided. Manifolds will be provided with provisions to send low and or high gas pressure alarms to BMS, should it be desired. Each outlet will be assigned a load value of 1.0 sCFM per outlet.

Special gases will be distributed in copper type L tubing, ACR cleaned and capped fittings with silver solder brazed joints.

7.5.7.3. Reserve Capacity and Redundancy:

Spare cylinders for each specialty gas type will be provided at each location, or in the gas cylinder storage room.

7.5.8. Nitrogen

7.5.8.1. System Description:

A central nitrogen system will not be provided. All nitrogen will be supplied by local cylinders. See specialty gas systems above.

7.5.9. Carbon Dioxide

7.5.9.1. System Description:

A central carbon dioxide system will not be provided. All carbon dioxide will be supplied by local cylinders. See specialty gas systems above.

7.5.10. Natural Gas

7.5.10.1. System Description:

A central natural gas system will not be provided. Natural gas is not available on or near the site. All natural gas will be supplied by local cylinders. See specialty gas systems above.

7.5.11. Sanitary Waste

7.5.11.1. System Description:

A sanitary waste and vent system will be provided for potable waste producing fixtures and equipment, with all fixtures trapped and vented to atmosphere. Emergency showers will spill directly on the floor with no provisions for drainage. Any discharge will be remediated by hand with pigs, mops and buckets. Eyewash drains will be collected through the sanitary waste system.

The building system is anticipated to flow by gravity to the exterior, and then flow to the campus sanitary sewer. No treatment is expected for sanitary waste.

7.5.11.2. Equipment and Materials:

Sanitary waste and vent piping above and below ground will be service weight cast iron pipe. Couplings for below ground installation will be cast-iron hub and spigot and above ground will be heavy duty stainless steel no-hub couplings.

7.5.11.3. Reserve Capacity and Redundancy:

Sanitary waste will be sized per the International Plumbing Code.

7.5.12. Storm Water

7.5.12.1. System Description:

A storm water drainage system will be provided for the facility to convey rain water from roof drains.

Sub-soil drainage piping installed below the ground floor will flow by gravity to sediment collection pits and sumps, then flow by gravity to local drywells

7.5.12.2. Equipment and Materials:

Storm water piping materials will be similar to the sanitary waste system.

7.5.12.3. Reserve Capacity and Redundancy:

Only the use of overflow roof drains will be considered a redundancy in the Storm Water Drainage System.

7.5.13. Laboratory Waste

7.5.13.1. System Description:

Laboratory waste is produced by lab sinks, floor drains and lab appliances. It is anticipated that this lab waste is primarily clear water from washing and rinsing and dilution functions, generally without solids and will eventually flow by gravity to the municipal sanitary sewer system.

7.5.13.2. Equipment and Materials:

Piping material will be flame retardant corrosion resistant Schedule 40 polypropylene with mechanical joints for above ground, fusion welded couplings and schedule 80 polypropylene piping for below ground. Duriron piping with cast iron couplings will be used for discharges from Autoclave, sterilizers, and glasswashers for a distance of 25 feet minimum for heat dissipation.

There will be no cup sinks in fume hoods. All wast from the fume hoods will be can collected and disposed of through the campus chemical management system. Emergency showers will spill directly on the floor with no provisions for drainage. Any discharge will be remediated by hand with pigs, mops and buckets. Eyewash drains will be collected through the sanitary waste system.

An active neutralization system (packaged flow through type system with caustic and acid injection) will be located in the basement of the building. The neutralization system will have the either the capacity to treat the normal flow or the storage capacity to buffer the flow to be treated at a reduced volume.

A sampling pit or manhole will be provided prior to connection to the municipal or campus sewer. The parameters for acceptable pH levels in the building effluent will be coordinated with the local wastewater utility.

7.5.13.3. Reserve Capacity and Redundancy:

Branches will be sized to allow some future load capability.

7.5.14. Fuel Oil System

All fuel oil will be contained in the belly tank of the emergency generator.

7.6. FIRE PROTECTION

7.6.1. Fire Protection

7.6.1.1. System Description:

All areas of the building will be fully sprinklered by a total coverage hydraulically designed automatic sprinkler system. The building fire protection system will be supplied from the campus distribution system on site. The system will be designed in accordance with NFPA-13 guidelines. Preliminary fire flow test for the hydrant at the northwest corner of the building site indicates a static pressure of 79 PSI and an available flow of 3802 GPM at a residual flow of 73 PSI.

The entire building area will be covered. The design densities for sprinklers are anticipated to be (Ordinary Hazard Group 2) 0.16 GPM per square foot over the most remote 1,500 square feet of area. If applicable, any H occupancy areas are (Extra Hazard) 0.30 GPM per square foot over the most remote 2,500 square feet of area.

7.6.1.2. Equipment and Materials:

Piping for the sprinkler and standpipe systems will be Schedule 10 black steel with malleable iron threaded fittings.

7.6.1.3. Reserve Capacity and Redundancy:

No provisions will be made.

BLANK

SECTION 8

ELECTRICAL SYSTEMS

8.1. BASE SYSTEMS DESIGN

8.1.1. Base Design Criteria

8.1.1.1. Applicable Codes, Guidelines and Standards

The latest edition of approved year of the following codes or combination codes and guidelines will govern the Electrical Systems and associated support system design. The systems will be designed to meet or exceed these standards.

- ADA
- ANSI
- ASHRE 90.1 Energy Code
- DFCM Electrical Design Requirements
- IBC 2006
- IECC 2006
- IEEE
- IESNA (9th Edition)
- IPEA
- Life Safety Code
- NEC 2008
- NECA
- NEMA
- NFPA
- ASTM
- UL
- USU Electrical Design Requirements
- Utah State Fire Marshals rules R710

All other local and State codes and USDA and USU standards will be adhered to where applicable and available.

8.1.1.2. Load Calculation Criteria

8.1.1.2.1. Design Voltages:

- Primary Voltage - 12.47kV, 3 phase, 3 wire
- Secondary Voltage - 480Y/277V, 3 phase, 4 wire
  - 208Y/120V, 3 phase, 4 wire
- Standby/Emergency - 480Y/277V, 3 phase, 4 wire
  - 208Y/120V, 3 phase, 4 wire

8.1.1.2.2. Design Loads:

The loads are estimated from historical demand data and square footages. Final calculations shall be confirmed with the completed design data and actual loads.

480 V Building Load Calculation

Estimated Building Load Calculations	VA/SF	Conn KVA	Demand Factor	Demand KVA
Laboratory Space	**NSF =**	**29,683**	**SF**	
Lighting	2.00	59.37	1.25	74.21
Office & Seminar Space	**NSF =**	**72,053**	**SF**	
Lighting	1.50	108.08	0.60	64.85
Building Support Areas	**NSF =**	**2,167**	**SF**	
Lighting	1.50	3.25	1.25	4.06
Circulation Areas	**NSF =**	**9,167**	**SF**	
Lighting	1.00	9.17	1.25	11.46
Mechanical Loads		**1,391**	1.00	1391.00
Elevator - (3) 50HP		162.05	1.00	162.05

Total Load - KVA	**1733 kVA**	**1708 kVA**
Total Load - Amps	**2086 Amp**	**2056 Amp**

480/277 V Service Transformer: 2000kVA

208V Building Load Calculation

Estimated Building Load Calculations	VA/SF	Conn KVA	Demand Factor	Demand KVA
Laboratory Space	**NSF =**	**29,683**	**SF**	
Receptacle	1.50	44.53	*	27.26
Equipment	10.00	296.83	0.60	178.10
Office & Seminar Space	**NSF =**	**72,053**	**SF**	
Receptacle	1.50	108.08	*	59.04

Equipment	3.00	216.16	0.60	129.70
Building Support Areas	**NSF =**	**2,167**	**SF**	
Receptacle	1.50	3.25	*	6.63
Equipment	2.00	4.33	0.60	2.60
Circulation Areas	**NSF =**	**9,167**	**SF**	
Receptacle	1.00	9.17	*	9.17
Equipment	0.50	4.58	0.60	2.75

Total Load - KVA	**687 kVA**	**416 kVA**
Total Load - Amps	**827 Amp**	**500 Amp**

208/120 V Service Transformer: 500kVA

* First 10KVA @100%, the remaining KVA @50%.

Stand-By Generator Sizing Calculation

Estimated Bldg Emergency Load Calc	Conn KVA	Demand Factor	Demand KVA
Life Safety - Egress and Exit Lighting **	17.99	1.25	22.48
Fire Alarm, Security, HVAC Controls	15.00	1.00	15.00
Lab Equipment ***	296.83	0.20	59.37
Mechanical Loads	1391.00	0.20	278.20

Total Load - KVA	**1721 kVA**	**376 kVA**
Total Load - Amps	**2071 Amp**	**453 Amp**
Total KW @ 0.8pf	**1377 kW**	**301 kW**
Size of Generator		**500 kW**

** Egress and exit lighting are assume to be 10% of total lighting.

*** Assume 20% of the lab equipment connected load to be on emergency power.

8.1.1.3. Equipment Sizing Criteria

8.1.1.3.1. Minimum Bus Sizes:

- 480/277V Distribution Boards - 400A
- 208/277V Distribution Boards - 400A
- 480Y/277V Normal and Emergency Lighting Panels - 100A
- 480Y/277V Normal and Emergency Equipment Panels - 225A
- 208Y/120V Lab Equipment Panels - 225A
- 208Y/120V General Receptacle Panels - 225A
- 480V Motor Control Centers - 600A

8.1.1.3.2. Feeder Sizes:

Feeders from service entrance to distribution panels to be sized the same as the distribution panel bus size.

Feeders from distribution panels to secondary panels to be sized the same as the secondary panel bus size.

8.1.1.3.3. Design Lighting Levels

Average Maintained Footcandles:

- Laboratory 60-75FC
- Class Rooms 50FC
- Private office with conventional furniture 50FC
- Private offices with task lighting 30FC
- Open offices with task lighting 30FC
- Conference rooms 50FC
- Telecommunication Closets 40FC
- Mechanical Rooms 40FC
- Electrical rooms 40FC
- Corridors 10FC
- Storage rooms 10FC
- Restrooms 20FC

8.2. SYSTEMS DESCRIPTIONS

8.2.1. System Descriptions

8.2.1.1. Normal Power Service and Distribution System

8.2.1.1.1. System Description:

Primary Power:

USU is currently fed from the City of Logan power company and has onsite cogeneration for partial campus back up. The COA building will be feed from the campus 12470V underground distribution system. The point of connection is still to be determined. The primary conductors will be routed through concrete encased duct bank to a manhole located adjacent to the building. Six way G&W submersible primary switches located in the manhole will be used for maintaining the looped campus distribution system and the radial feeds into the building. The building service will consist of a 480/277V bank and a 208/120V bank of 3 Envirotemp Bio oil filled transformers. Each of the transformers will have primary switching and fault protection though G&W solid dielectric switches. The service transformers will be located in a below grade vault and feed directly into a basement main electrical service entrance room.

Building will be served with both a 480/277V service and a 208/120V service.

Building distribution will be through feeders from the service equipment to local distribution boards located in electrical closets near the loads being served. The power will be distributed as follows:

- 480V, 3 phase, 3 wire; Motors 1/2 HP and larger
- 480Y/277V, 3 phase, 4 wire; Fluorescent lighting, large laboratory equipment
- 208Y/120V, 3 phase, 4 wire; Receptacles, specialized lights, motors under 1/2 HP and small equipment

There will be no 208/120V step down transformer used for distribution unless required for power isolation.

Electrical rooms will be stacked vertically through the building and located on each floor. They will be sized to 100 – 150 square feet and will have 25% spare wall space for future growth.

208Y/120V panels will be located to minimize branch circuit length. Branch panel boards will be located in floor electrical rooms/closets or non-rated corridors on the same floor as the area served.

Motor control centers serving mechanical equipment will be located in proximity to the equipment being served.

A central Uninterruptible Power Supply (UPS) system will not be designed for installation under this project.

A central power conditioning system will not be designed for installation under this project.

A TVSS (transient voltage surge suppression) will be installed at all distribution panel boards.

8.2.1.1.2. Equipment and Materials:

Primary Sectionalized Switch

Sectionalized switch will be 600A, 15kV rated, 3 phase, 6-way submersible G&W solid dielectric type located in an adjacent manhole.

The service transformers primary switch and fault protection will be G&W solid dielectric type.

Transformers will consist of a 480/277V bank and a 208/120V bank of 3 Envirotemp Bio oil filled transformers. They will have copper winding, over-temperature protection and station class arrestors on primary. Transformers will have 115 degree C with 220 degree C insulation, 95kV BIL primary, with fan rating of 33%. Sound levels will conform to NEMA standards.

The secondary switchgear will consist of 100% duty rated power circuit breakers with time current shaping features. All circuit breakers will be draw-out type and will have ground fault protection. Switchgear will be provided with one spare circuit breaker and two spaces. All switchgear bussing will be copper. Metering will be provided on the main for voltage, amperage, power factor, demand and energy.

Distribution Panelboards

Distribution panelboards will be dead front, totally enclosed in NEMA 1 enclosure. Copper bussing will be provided for all distribution panelboards. Main circuit breaker will be equipped with solid state, true RMS reading trip unit. Feeder circuit breakers will be group mounted front accessible bolt-on thermal-magnetic molded case type with adjustable magnetic trip settings.

Lighting and Receptacle Panelboards

All Lighting and Receptacle panelboards will have 42 poles per section. Minimum interrupting capacity will be 10,000 AIC for 120/208 volts and 14,000 AIC for 277/480 volts. Copper bussing will be provided. Main circuit breaker will be provided in select panelboards. Circuit breakers will be molded case quick-make, quick-break, with thermal magnetic trip, bolt-on type.

Transformers

There are no distribution step down transformers except as needed for the emergency system.

Motor Control Centers (MCC)

Pre-assembled MCC assemblies will include prefabricated steel structure which will house a combination of motor circuit protectors (MCP) and full voltage or solid state reduced voltage type motor starters, control transformers, thermal-magnetic molded-case feeder circuit breakers, auxiliary contacts and other accessories as required to make the units complete.

The MCC power main horizontal buses will be minimum 600A copper, braced for minimum of 65,000 amps RMS symmetrical. A copper neutral bus rated at 100% capacity and copper ground bus rated at 50% capacity will be furnished over the entire length of the MCC.

Each MCC starter will have a separate fused control transformer (480-120V) rated to supply the connected loads plus 100 percent spare capacity, three (3) thermal overloads, surge suppressor across the coil, and two (2) normally-open and two (2) normally-closed auxiliary contacts. Operator interface devices will include H-O-A selector switches, red "run" pilot lights and green "ready" pilot lights.

Each starter and feeder circuit breaker will be padlockable in the "off" position.

8.2.1.1.3. Reserve Capacity and Redundancy:

The normal power service equipment is sized and configured to serve the anticipated demand load of the building plus:

- 35% spare ampacity for branch panelboards serving receptacles
- 25% spare ampacity for branch panelboards serving lighting
- 35% spare ampacity for distribution panels
- 25% spare ampacity for main switchgear

8.2.1.2. Standby/Emergency Service and Distribution System

8.2.1.2.1. System Description:

Standby/Emergency power will be derived from a single diesel engine generator set sized for the calculated demand and distributed as follows:

Emergency Power (legally required)

- 480Y/277V, 3 phase, 4 wire; Life Safety loads including emergency egress and exit lighting,
- 480Y/277V, 3 phases, 3 wire; Smoke evacuation fan motors if required.

Standby Power (not legally required)

- 480V, 3 phase, 3 wire; Motors 1/2 HP and larger
- 480Y/277V, 3 phase, 4 wire; Fluorescent lighting, large laboratory and mechanical equipment identified for
- 208Y/120V, 3 phase, 4 wire; Telecom, laboratory receptacles, laboratory freezers and other equipment deemed essential, motors under 1/2 HP, small equipment and select control equipment including sump pumps in essential areas, security alarm systems, HVAC controls.

Generator's voltage will be 480Y/277 volt, 3 phase, 4 wire. Generator will be located below grade in a vault located adjacent to the building.

The emergency/standby power will be distributed to two (3) automatic transfer switches, one for emergency life-safety loads, one for code required equipment loads, and one for non-code required standby loads.

Emergency switchboard will be used to distribute emergency/standby power to the loads**.** Emergency/standby power distribution transformers will transform voltage from 480V to 208Y/120V between the emergency lighting panels and the emergency branch circuit panelboards.

Emergency switchboard, transfer switches, emergency/standby distribution panels, and emergency/standby power distribution transformers will be located in a separate 2 hour fire rated room separate from the normal power switchboard room.

As required by NEC, the feeders and branch circuit wiring to emergency loads will be in dedicated raceway.

8.2.1.2.2. Equipment and Materials:

Emergency Generator

Emergency generator will consist of engine, generator, controls, UL listed sub-base double wall fuel tank which will provide 8 hours of full load engine operation, exhaust system, radiator, muffler, batteries, starting system, and generator power circuit breaker with ground fault protection. Remote annunciator panel will be provided at location indicated on drawings. The diesel exhaust will be designed to be routed above the roof level to prevent exhaust discharge from polluting the building.

Automatic Transfer Switch (ATS)

The automatic transfer switches used to switch from normal power to generator power will be 4-pole, 4-wire. The emergency ATS will be isolation bypass type, while standby ATS will be normal type. The switch shall transfer the load from normal to emergency or standby when any phase of the normal voltage drops below 90%, and shall automatically restore the load to normal when all phases of the normal source are 95% of nominal line voltage rating. Transition from emergency generator to normal source will be open type.

Reserve Capacity and Redundancy:

Emergency generator and emergency/standby distribution equipment will be sized for sufficient capacity to carry anticipated demand load of the building, plus 25 percent.

8.2.1.3. Alternate Energy Sources

There are no alternate energy sources anticipated as part of this project. Any alternate energy would be of larger systems to support overall campus energy requirements. This is to gain the efficiencies and cost savings associated with the economies of scale.

8.2.1.4. Point of Use Power Distribution System

8.2.1.4.1. System Description:

A complete wiring system will be provided to distribute power to all loads, including surface mounted raceway, receptacles, lighting fixtures, mechanical equipment, laboratory equipment, etc.

8.2.1.4.2. Equipment and Materials:

Receptacle Design Criteria

- Laboratory, Lab Support and Technical Areas

Surface mounted raceway (similar to Wiremold) will be installed at center island benches, around perimeter of room at laboratory benches or where equipment is located in laboratory support areas. 120V, 20A duplex receptacles will be mounted in the raceway. Duplex receptacle spacing will typically be 18" on center.

In general, circuits serving laboratory areas will have (2) to (4) duplex receptacles per circuit, with adjacent receptacles connected to alternate circuits.

Selected equipment, including fumehoods, biosafety cabinets incubators and refrigerators, will be served with dedicated receptacles. Special power receptacles will be located as defined by the users.

Receptacles located within 3'-0" of sinks will be GFI type.

- Offices

Enclosed offices will be provided with one (1) 120V, 20A duplex receptacle per wall.

- Conference Rooms & Common Areas

At least one (1) 120V, 20A duplex receptacle will be provided per wall, 12'-0" on center minimum.

- Corridors

One (1) 120V, 20A duplex receptacle shall be provided every 40'-0" on center minimum.

- Building Support (Equipment Rooms and Areas, Storage)

One (1) 120V, 20A duplex receptacle per wall or one every 150 square feet, whichever is greater. At least one receptacle will be connected to emergency power.

Branch Circuit Design Criteria

- 120V branch circuit design will be based upon a maximum load of 1,600 volt-amperes per 20 ampere branch circuit.

- 277V branch circuit design will be based upon a maximum load of 3,200 volt-amperes per 20 ampere branch circuit. All branch circuit wiring must be installed overhead and concealed above the ceiling space of the same floor of the load served. Unless specifically required, the installation of branch circuit wiring in concrete floor slabs is unacceptable.
- All dedicated branch circuits will be equipped with separate neutral and equipment grounding conductors.
- Minimum conductor size shall be #12, minimum conduit size shall be 3/4".
- EMT conduit with setscrew fittings shall be provided in concealed spaces. MC cable is also approved for use in concealed office areas. In labs, EMT conduit shall be used throughout.
- PVC conduit with IMC elbows shall be provided for underground conduit ductbanks.
- In wash down areas and in outdoor locations, conduit entry to enclosure shall be side or bottom with Meyer hubs. No top entry is permitted.

8.2.1.5. Grounding System

8.2.1.5.1. System Description:

Grounding system will be designed in accordance with NEC article 250 and will be based on equi-potential grounding with voice/data system bonded to the building ground system.

System resistance to ground will be 5.0 ohms or less. System ground resistance will be tested at the main service entrance to ground by means of a three point "fall-of-potential testing method".

All conduit terminations at panelboards, cabinets and gutters will have grounding bushings with bonding jumpers interconnecting all conduits and panelboards, gutters etc.

Grounding system will extend from building service transformers to the branch circuit load or device. Grounding electrode system will include underground water lines, structural steel, building counterpoise supplemented with driven ground rods, and Ufer ground.

Bonding jumpers will be provided as required across pipe connections to water meters, dielectric couplings in metallic cold water system, and across expansion/deflection couplings in conduit and piping system.

All metal flagpoles and metal stacks either attached to building buildings or free standing shall be grounded for lightning protection.

A lightning protection is required. The system will include air terminals, down conductors, and bond equipment as required. The system shall receive a "master label" when installation is complete.

All parts of the power distribution system will be provided with an equipment ground conductor sized per NEC.

Grounding bars will be provided in all electrical rooms/closets, telecom closets, and near laboratories.

8.2.1.5.2. Equipment and Materials:

The reference ground for the equipment grounding system will be established from a structural ground grid as follows:

A No. 4/0 AWG bare copper ground wire will be installed at 30" below grade around the entire perimeter of the building. 3/4" x 20' driven copper ground rods will be installed and connected to this ground loop at not greater than 200 foot intervals with a No. 4/0 AWG bare copper conductor. Steel columns in exterior walls will also be connected to this ground loop at intervals not to exceed 60 feet. Test wells will be provided at each corner of the building. Interior steel columns will be connected to the exterior ground loop on each side of the building at intervals not to exceed 200 feet with a No. 4/0 AWG bare copper conductor.

A UFER ground will be provided in the footing of the building consisting of 50' of 500kcmil wire located 3" from the bottom of the footing.

Wall mounted copper ground bus will be located in the main electrical room and floor electrical rooms. Main electrical room ground bus will be connected to exterior ground loop and UFER ground.

A separate insulated ground wire in conduit will be provided from main electrical room ground bus to each floor electrical room ground bus, if applicable.

The main service entrance neutral will be bonded to the system ground bar within switchboard by removable bus bar link.

A code sized unbroken bond leader will connect electrical room ground bar to Xo terminal of the local transformers.

A No. 4/0 AWG bare copper grounding electrode conductor will be extended to all voice/data rooms, so that those systems can be properly bonded to the building ground system.

All connections to grounding electrode system will be made utilizing exothermic welding method.

A separate ground wire will be provided in all conduits, in accordance with NEC Article 250, Table 250-95.

8.2.1.6. Lighting Systems

8.2.1.6.1. System Description:

A complete lighting system for all indoor and site illumination will be provided. The indoor lighting system will consist primarily of energy-efficient fluorescent fixtures. High intensity discharge lighting will be used in select indoor locations such as loading dock and large mechanical spaces. Incandescent lighting will be used only as requested by the Owner or where aesthetics is of prime importance. The outdoor lighting system will consist of high intensity discharge (HID) fixtures. All outdoor fixtures will have full cut off reflectors and no wall mounted fixtures.

In general, indoor lighting controls will consist of low voltage switches controlled by lighting control system. Enclosed offices will utilize room occupancy sensors. Outdoor lighting controls will utilize photocells and time switches with line voltage manual override switches. Photo sensors will be used to harvesting day lighting switching off fixtures or dual ballast fixtures.

Emergency/night lighting will be provided by unswitched branch circuits. These unswitched branch circuits will be fed from emergency lighting panel.

8.2.1.6.2. Equipment and Materials:

Lighting Fixture Types

- Office; direct/indirect fluorescent 2' x 2', 2, 3 lamp recessed fluorescent troffers, or pendent mounted direct/indirect fixtures.
- Common Area; Premium quality architectural fluorescent lighting.
- Laboratory/ Laboratory Support; Direct/Indirect pendant mounted fluorescent fixtures or 2' x 4' 3 or 4 lamp lensed fluorescent troffers
- BSL Areas; Sealed and gasketed fluorescent fixtures with smooth side down for ease of cleaning
- Technical Support Areas; 2' x 4', 2, 3, or 4 lamp lensed fluorescent troffers.
- Circulation; Recessed fluorescent fixtures or wall mounted compact fluorescent sconces.
- Storage; 2 lamp lensed fluorescent troffers.
- Mechanical/ Electrical Rooms/ Telephone Closets; 2 lamp fluorescent, surface or pendant mounted, open industrial strip fixture.
- Exterior; HID fixtures to match USU campus standards

EXIT signs will be State Fire Marshal approved LED type, located in all paths of egress in accordance with requirements Life Safety Code.

Lamps and Ballasts

In general, fluorescent lamps will be T8 HO, 3500 degrees Kelvin color temperature, with a color rendering index (CRI) of 82 or greater.

Metal halide lamps will be clear with a color rendering index (CRI) of 60 or greater. High pressure sodium lamps will be clear.

Fluorescent ballasts will be high frequency electronic type with less than 10% total harmonic distortion. High intensity discharge ballasts will be high power factor, constant wattage type.

Lighting Control

All lighting will be controlled to meet or exceed the requirements of ASHRE 90.1

Occupancy sensors will be of the passive infrared or combination infrared/ultrasonic type.

Photo sensors will be provided in areas of the building with outdoor natural light available. The sensors will switch off fixtures or dual ballasts when sufficient natural light is available to support the ambient light levels.

Dimmers will be provided in conference rooms and other locates required by Owner. All corridor lighting, except life safety branch lighting, will be controlled by time clock.

A programmable low voltage control system will be provided. It will consist of low voltage switching and relays and will control all lighting excluding interstitial, mechanical and janitorial spaces. The system will be software based and will provide flexible control of automatic and manual on/off, recording, and reporting functions.

8.2.1.7. Fire Alarm System

8.2.1.7.1. System Description:

The fire alarm system shall be an electronically multiplexed voice communication system as manufactured by Notifier to match USU campus standard. Remote transponder panels shall be used to provide supervised amplifiers and signal circuits for audio/visual devices and magnetic door holders. The system shall utilize individual addressable photoelectric smoke detectors, heat detectors, addressable manual pull stations, and addressable monitor and control modules. The system shall monitor all sprinkler supervisory and water flow switches and shall interface with elevators, HVAC smoke control and smoke fire dampers. A remote campus alarm will be transmitted to a central station over the phone line. The fire responder's main panel will be located in main lobby.

8.2.1.7.2. Equipment and Materials:

A main fire alarm control panel will be located within the main electrical room unless specified elsewhere by the Owner.

A fire alarm annunciator panel will be mounted at the main building entrance.

Audio/Visual devices shall be installed in all areas of the building in accordance with the NFPA and the ADA guidelines. Fire Alarm bell and smoke detector will be installed above each fire alarm station.

Smoke detectors shall be installed as required by the NFPA, UBC and UFC. Smoke detectors shall be installed in, but not limited to, the following locations: air handling units, elevator lobbies (if applicable), elevator machine rooms (if applicable), corridors, meeting rooms, storage rooms and mechanical/electrical equipment rooms.

Heat detectors shall be installed in areas which are not feasible for smoke detectors.

Manual Pull Stations shall be installed adjacent to all exit doors and in each elevator lobby (if applicable) and with maximum 200' or travel distance from the next pull station.

The fire alarm system will be linked to the campus central system. The fire alarm system should be able to communicate with the existing campus fire alarm control system. It should be able to be remotely monitored and controlled by physical plant personnel using hardware that is fully compatible with existing systems and would not require the purchase of additional software.

All wiring shall be installed in conduit. Minimum size is 3/4".

8.2.1.7.3. Reserve Capacity and Redundancy:

Fire alarm system reserve capacity will be identified during detailed design.

8.3. SECURITY / ACCESS CONTROL

8.3.1. Intrusion Detection

It is not anticipated the intrusion detection is required for this building.

8.3.2. Access Control

The new COA building will have an access control card reader system. The building is to have card readers at the building entrances, lab corridor entrances and other security sensitive areas. Other public areas shall not require any access control. Provide back boxes and empty conduits for the card reader system.

Emergency communications stations may be provided for remote areas for emergency notification.

8.3.3. Close Circuit Television (CCTV)

Closed Circuit Television systems shall be installed for the computing lab requiring surveillance.

8.3.4. Security Equipment Room

The Security Equipment Room shall be sized to accommodate the installation of security equipment as designed for the facility and site complying with NEC and local codes.

8.4. TELECOMMUNICATIONS

8.4.1. Codes and Standards

The design of the telecommunications system will comply with the following standards:

- ANSI/TIA/EIA 568-B, Commercial Building Telecommunication Cabling Standard
- ANSI/TIA/EIA 569, Commercial Building Standard for Telecommunication Pathways and Spaces
- ANSI/TIA/EIA 606, Administration Standard for Telecommunications Infrastructure of Commercial Building
- ANSI/TIA/EIA 607, Commercial Building Grounding and Bonding Requirements for Telecommunications
- (NEC) National Electrical Code
- NEC Article 800 Entrance Cable Protection Standards
- Telecommunication Industry Association, (TIA) Standards of Practice
- Building Industries Consulting Services, International (BICSI) Telecommunications Distribution Methods Manual (TDMM)
- TSB 67, Transmission Performance Specifications for Field Testing of Unshielded Twisted Pair Cabling Systems
- TSB 72, Centralized Optical Fiber Cabling Guidelines
- TSB 70 Additional Specifications for Open Office Cabling
- WAC 296-46 Laws, Rules, and Regulations for Installing Electric Wires & Equipment.

- NFPA 78 Lightning Protection Code.
- TIA/EIA SP-4195: Proposed Addendum No. 5 to TIA/EIA-568-B Additional Transmission Performance Specifications for 4-Pair 100-Ohm Enhanced Category 5 Cabling.
- Customer Owned Outside Plant Telecommunication Cabling Standard, TIA/EIA 758
- Telecommunication Industry Association, (TIA) Standards of Practice.
- Building Industries Consulting Services, International (BICSI) Telecommunications Distribution Methods Manual (TDMM).
- National Fire Protection Agency (NFPA) - 70, National Electrical Code (NEC)

UCU is in the process of updating a campus design standard and shall be used for the final design of the system.

8.4.2. System Description

The University will design and install the structured cabling system for the building. Pathways, spaces and grounding for the building shall be included as scope under building construction.

8.4.3. Main Distribution Frame (MDF) Room

The MDF shall be installed in the first phase and be the new point of distribution for the voice and data circuits. The room shall be no less that 300 sf.

Telecommunications equipment shall not be located in or directly adjacent to space readily accessible to the public and shall be adequately protected. A MDF will be provided in the ground or basement level of the building for the voice and data systems. All walls shall be lined with 4’ x 8’ x ¾” trade size Fire Resistant A/C Plywood painted with fire retardant paint.

The temperature for the MDF Room will be controlled between 18 Deg. C to 24 Deg. C. Relative humidity will be kept between 30 and 50 percent The lighting level will be no less than 50 foot candles at 1 meter above the finished floor.

Each telecommunications room (TR) will be equipped with power outlets that are dedicated for use by telecommunications equipment and other key equipment shall be supplemented with a generator. TRs shall also be equipped with standard power outlets that are available for use with non-telecommunications equipment.

The Main Distribution Facility in the building shall be equipped with a Telecommunications Main Ground Bus Bar (TMGB). The TMGB will be 4” wide, ¼” thick and no less than 6” in length. This grounding bar will an extension of the building main grounding electrode system and will be dedicated to the telecom infrastructure.

Four 4” conduits will be installed from the MDF to the central tunnel. These are to accommodate the fiber and copper building service.

.

8.4.4. Telecommunications Rooms (TR)

Telecommunications rooms will be provided on each floor or in each remote building to support voice and data distribution. The telecommunication rooms will be centrally located and meet the EIA/TIA 569 standard for space requirements containing no outside walls or windows. Five 4" floor sleeves will be provided in every closet for vertical riser cables. Rooms shall not be co-located with any type of electrical room, mechanical room or closet, and shall not be located directly adjacent to these rooms or closets or within twenty feet of electrical transformers with a winding rated at greater than 480Vrms.

The TRs shall be sized for the floor area being served so that:

- 10' X 8' serves an area of less than 5,000 sf.
- 10' X 9' serves and area of less than 8,000 sf.
- 10' X 11' serves and area of less than 10,000 sf.
- Floor spaces over 10,000 sf will require additional TRs

All walls shall be lined with 1.2m x 2.4m x 2.7cm trade size Fire Resistant A/C Plywood.

Each LAN system cable will terminate in the floor telecommunications closet. The length of each horizontal cable will not exceed 90 meters.

Stand by generator power outlets shall be provided for exclusive use by telecommunications related electronic equipment. Convenience outlets (120VAC, 15 Ampere) shall be installed for use with power tools and testing equipment. Each IDF shall be provided with a Telecommunications Ground Bus Bar (TGB). The TGB will be 2" wide, ¼" thick and no less than 6" in length.

8.4.5. Cable Tray

Each telecom room shall be designed to be equipped with a minimum 12 inch wide cable tray addition that extends over and attaches to the equipment racks. . Cable tray shall be installed with the appropriate corner clamp assemblies, threaded rods, fencing, ceiling hanger brackets, tray clips, radius dropouts, grounding devices and junction plates and other appurtenances as may be necessary to complete the cable tray to rack system. Ladder type tray shall be mounted at 7 feet A.F.F over the racks. Cable trays shall not be shared with power cables and shall maintain the minimum separation distances from power conduits.

Cable tray shall be installed in main corridors leading to TRs for support of cable bundles. Cable trays shall be 18 inches wide, center hung to allow easy installation. Cable trays shall not be shared with power cables and shall maintain the minimum separation distances.

8.4.6. Conduit Raceway

All cabling will be installed in conduit concealed in walls or ceiling spaces whenever possible. Any exposed cable run of more than 3 feet will be enclosed in an appropriate raceway.

8.4.7. Wall Penetrations

Cable penetrations of fire rated walls will be sleeved with fireproof assemblies packed with fire stopping material in compliance with NEC and local fire codes. There shall be provided and installed, additional fire stop assemblies where necessary for cable routing if available pathways or conduit sleeves do not exist. There shall be provided a seal completely filling all annular spaces to prevent the passage of flame, smoke and gases through the opening in the fire separation in which it is installed.

8.4.8. Outlet Location

TOs shall be located on walls and bench tops, floor outlets should be avoided where possible. Each TO should utilize a 4” square by minimum 2-1/8” deep junction box with a single-gang mud ring. Two ¾” conduits should be run from each junction box to the nearest cable tray and a protective bushing should be provided at the end of the conduit at the cable tray.

SECTION 9

FOOD SERVICE / ELEVATOR / ACOUSTICAL

9.1 Food Service

The program for the College of Agriculture Building includes a café with a food preparation and serving area as described in the individual space outlines. Utah State University's Food Services will be consulted in the review and development of these spaces. In addition, USU may request that the design team include a food service consultant to design kitchen/food preparation/serving areas with input from campus food service. Furnishing and installing food service equipment would be included in the contract for construction.

9.2 Elevators

During schematic design the project team, including the construction manager, should evaluate whether to obtain the services of an independent elevator consultant to include the elevators in the initial bid package. In order to minimize coordination difficulties, it will be important to have an independent consultant or the selected vendor on board as part of the project team prior to the beginning of construction documents for the main bid package. See Section 6.10 of the College of Agriculture Program for programmatic elevator requirements.

9.3 Acoustics

In order to validate and achieve the goals outlines in this section, an acoustical engineer should be included a part of the project team. The engineer may be hired either by the owner or the design team, as negotiated.

To become the hub of student activity on the USU campus, the COA Building must successfully balance the need for the social and interactive aspects of the student experience with the quiet, contemplative needs of student life. In order to accommodate numerous types of public and private space with differing acoustical needs in a single building, the new building must take into account the appropriate sound absorption, acoustical separation, and background noise control measures needed to maintain quiet study spaces while allowing comfortable group study and gathering to occur in the entry and other designated areas of the building.

In order to ensure that the acoustics in each space are optimal for their use, and to ensure the acoustical separation of differing spaces within the building, designers must consider three essential components of sound transmission: the source of sounds, the path of sound waves, and the perception of the receiver. The perception of the receiver can be influenced, and unwanted noise eliminated, by carefully planning the source and path of sound waves. This planning involves a delicate balance of space considerations, background noise, acoustical absorption and acoustical isolation.

Acoustical separation can be accomplished to a great extent through effective space planning. For example, the COA program zoning diagram positions many of the noisiest areas of the building, such as the café, lobby, and classrooms, together in the entry area of the building. Because plans for the design of the COA Building include a move toward

more interactive spaces, and because meeting rooms are interspersed throughout the building, each subdivision of space must also be considered individually.
The amount of background noise in a space can have significant impact on the comfort level of its users; too much background noise can be distracting, while too little will only accentuate the noises of conversation, computer keys clicking, and other sounds created through general use. Recommended *Noise Criteria* (*NC*) for library/collegiate spaces are as follows:

Space Type	**NC Rating**
Open Public Areas (Circulation, Reference)	35-40
Children's Room (Family Study)	35-40
Computer Work Areas	40
Private Offices	30-35
Open Staff Work Areas	35-40
Copy Rooms	40
Teleconference Rooms	max 25
Reading Rooms	25-30
Classrooms, Training Rooms	25-30
Assistive Devices Lab	30-35

Salter, Charles M. "Acoustics for Libraries." Libris Design Project, <http://www.librisdesign.org/>

Designers may need to consider both sound absorption and sound isolation in the design process to achieve their NC targets. Interior finish materials are the principal contributors to sound absorption. Typically, suspended acoustical ceiling tiles are programmed to prevent sound reflection off the ceiling. The sound absorption properties of typical finish materials, expressed in terms of *Noise Reduction Coefficient* (*NRC*), are listed in the following table:

Sound Absorption (Common Building and Furnishing Materials)	**NRC**
Walls	
Unglazed Brick	0.00
Gypsum Board, ½ inch	0.05
Coarse concrete block	0.35
Shredded wood fiberboard (2 inches on concrete)	0.75
Floors	
Wood	0.10
Carpet on concrete (no underlay)	0.30
Carpet on foam rubber	0.55
Ceilings	

Plaster on lath	0.05
Suspended acoustical tile, ¾ inch thick	0.95

Cohen, Aaron and Elaine. Designing and Space Planning for Libraries. R.R. Bowker Co: New York, 1979.

While sound absorption helps control the noise level within a space, sound isolation helps control the transmission of sound from one space to another. As with sound absorption, STC-rated walls should be used to reduce sound transmission into some spaces and out of others. We recommend STC-rated partitions surrounding or separating programmed spaces in accordance with the following table:

Space Type	**STC**
Open Public Areas (Public Services, Research Assistance)	40-45
Children's Room (Family Study)	50-55
Computer Work Areas	40-45
Private Offices	45-50
Open Staff Work Areas	45-50
Copy Rooms	50-55
Teleconference Rooms	45-50
Reading Rooms	45-50
Instruction Rooms, Training Rooms	40-45
Lab for Assistive Devices	40-45
Mechanical Rooms	55-65
Elevator Rooms	55-65
Restrooms	55-65

Impact noise or structure-borne vibration can contribute as much to poor acoustics as airborne sound. Such concerns within the COA Building include the sounds of footstep on hard surfaces and vibrations created by mechanical and laboratory equipment. Impact and vibration are expressed in terms of *Impact Isolation Class* (*IIC*). We recommend using floor/ceiling assemblies above and/or below the listed spaces having the following IIC ratings:

Space Type	**IIC**
Open Public Areas (Circulation, Reference)	50
Computer Work Areas	50
Private Offices	50
Open Staff Work Areas	50

Copy Rooms	55
Teleconference Rooms	50
Reading Rooms	50
Instruction Rooms, Training Rooms	50
Lab for Assistive Devices	55
Mechanical Rooms/Penthouse	65*
Elevator Rooms	65*
Restrooms	55

* If this IIC cannot be achieved, design to minimum IIC of 55 and isolate all vibration producing equipment.

Certain areas within the College of Agriculture Building will be more acoustically problematic, particularly if they are areas that require acoustical separation, but are located adjacent to noisy areas. Careful attention to the materials used to finish and furnish each room, acoustical seals and sweeps separating the spaces, and airborne noise from mechanical equipment must be planned for and mitigated.

SECTION 10

DESIGN AND CONSTRUCTION SCHEDULE AND PHASING PLAN

Please refer to Section 2.4 for the COA design and construction schedule.

BLANK

SECTION 11

EXPANSION STRATEGIES

Expansion strategies summary to come.

BLANK

SECTION 12

TOTAL PROJECT ESTIMATE OF COST

See Section 8 of the College of Agriculture program for the College of Agriculture costs.

Additional ARS component costs to come.

BLANK

SECTION 13

APPENDICES

Materials Clarification

According to the design standards of USU, all carpeted areas are to have carpet base. Also, a sustainable material such as linoleum should be used in areas that require a resilient durable floor covering. The room data sheets currently show that carpeted areas have an integral cove base but to clarify, this will be an integral carpet cove. VCT will be used in lieu of linoleum in areas where chemicals will be used as the Lab Consultant advises against it. Areas where harsh chemicals will not be used will have linoleum as the floor covering.

IT/AV Clarification

The following information was received from Willie Gilchrist, Field Engineer for USU.

Telecom Rooms (TR sizing under normal conditions)

10’ x 8’ serves an area of less than 5,000 square ft.
10’ x 9’ serves an area of less than 8,000 square ft.
10’ x 11’ serves an area of less than 10,000 square ft.
If the area is greater than 10,000 square ft, a second room will be required

When buildings have a usable floor space of 5,000 square ft. or less a shallow or walk-in room may be used
Shallow room must be at least 2’ deep and 8.5’ wide
Walk-in rooms must be at least 4’ x 6’

1) All TRs should be vertically stacked within a building wherever possible
2) All TRs should be lined with ¾” A/C or better plywood extending 8’ high with outlets extending flush with the surface of the wood.
3) All TRs should be tied to Emergency power with dedicated HVAC controls
4) Must be at least one Telecom space per floor. (All com outlets should be feed from a TR on the same floor)
5) All conduits extending from the floor should extend 1-3” AFF and no more than 2” off any wall.
6) Conduit rows should not exceed two deep
7) Conduits that enter a TR should terminate near the corners to allow for proper racking.
8) All pathways must not exceed 295’ from the TR to the com/outlet

Acceptable conduit runs
1) Must not have a bend over 90 degrees or an aggregate of bends in excess of 180 degrees between pull points.
2) No conduit segments will exceed 100’ without a pull point.
3) Conduit runs should be limited to less than 150’
4) All conduits should be equipped with a pull cord that has a minimum rating of 200lbs.

5) 3/4 " conduit is suitable for up to a 4 port location for more than a 4-port location a minimum of 1" conduit is required
6) Wireless locations should be at least 10" below the ceiling to accommodate antennas

Pathways and Cable support

1) Pathways must have adequate support to withstand pulling the cables
2) Pathways should be installed at least 3" of clear vertical space above the ceiling tiles and T-bars to ensure accessibility, and should at no point rest or be supported by any component of the suspended ceiling
3) J-hooks should at no point exceed 5' for adequate support
4) For areas exceeding 75 com cables a cable tray system should be used for adequate support

Cable Trays / Basket Tray

1) All cable trays must be installed to meet national and local building codes
2) The inside of a cable tray must be free of burrs, sharp edges, or projections that can damage the cable during installation
3) Elevation changes and offsets must be kept to a minimum
4) Tray should extend at least 1" into the TR then waterfall to 8' to accommodate internal racking
5) When a tray is used conduit should be provided from 4-8" above the tray to the telecom outlet.
6) Trays should be supported every 5' and within 24" on each side of a fitting (unless otherwise noted by the manufacture)
7) All metallic cable trays must be grounded, marked and all sections bonded in accordance with applicable codes, standards and regulations
8) Pathways should be kept in common areas to avoid future maintenance occurring in private work areas.
9) Trays should be sized to be at 40% fill at the end of the initial install, and no more than 60% fill at project completion

Grounding and Bonding

1) If there is a conflict between Local safety code, USU, or the manufactures requirements, the conflict should be resolved with the AHJ before proceeding
2) Entrance Facility (EF) must contain the TMGB (4" wide 1/4 " thick and no less than 6"in length) this will serve as the dedicated extension of the building ac grounding electrode system for the telecom infrastructure
3) The placement of this bus-bar must be in close proximity to the primary/ secondary surge protection, cable sheaths, and entrance conduits.
4) TRs must contain TGBs (2" wide ¼" thick and no less than 6" in length)
5) Each TGB or TMGB must have an effective bonding connection to the nearest approved building grounding electrode and the equipment grounding system.
6) The installation of the telecom bonding backbone(connects the TMGB to TGBs and should be run as short and straight as possible
7) If the TBB is to be used and is less than 13' use 6-AWG,(13'-20' use 4AWG),(20'-26' use 3AWG), (26'-33' use 2AWG), (33'-44' use 1AWG), (44'-52' use 1/0 AWG), (52'-66' use 2/0 AWG), if greater than 66' use 3/0 AWG

Outside Plant

1) Outside communications raceways should be (4”) schedule 40 PVC conduit
2) Outside communications raceways should not exceed 600’ between manholes or pull points
3) All comm. raceways will have a pull rope installed during initial installation (200lb)
4) Underground or buried entrances must be piped directly to the EF
5) Conduit stubs entering a building must extend no less than 5’ into undisturbed earth
6) All outside communication raceways should be 36” below grade and no less than 24”
7) If the 24” of cover cannot be met the raceway should be encased in concrete
8) Warning tape should be placed 12” below grade over all comm. raceways
9) Separation from power or other foreign conduit (3” if encased in concrete or 12” if direct buried
10) Separation from Gas, oil, water, (6” when crossing and 12” when parallel
11) When outside comm. pathways cross any road (paved or dirt) a minimum depth of 40” must be maintained
12) A minimum of 4 - 4” conduits should be used for building entrances
13) Underground entrances should not have more than 2 -90 degree bends between pull points
14) Size and placement of all manholes will be determined by the USU IT planning and design team